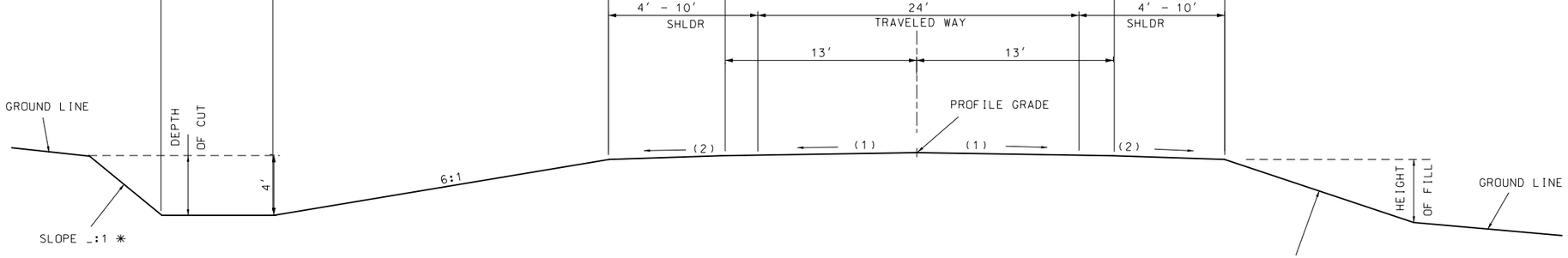

SECTION ON TANGENT
TYPICAL SECTION RTE. XX
STA. XXX.XX TO STA. XXX.XX

CROSS SLOPE

(1) 2.0%
(2) 2.0% FOR PAVED SHOULDERS
4.0% FOR AGGREGATE SHOULDERS
(3) S.E. SLOPE IF GREATER THAN
4.0% FOR AGGREGATE SHOULDERS
S.E. SLOPE FOR PAVED SHOULDERS

SEE STANDARDS 203.20, 606.00 AND 609.40 FOR SHOULDER WIDENING.

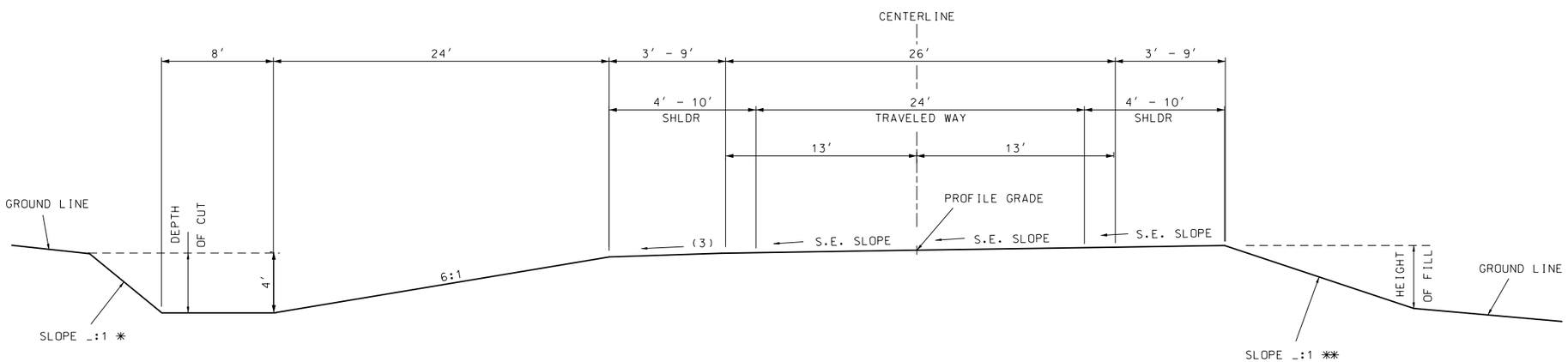

SECTION ON SUPERELEVATED CURVE
TYPICAL SECTION RTE. XX
STA. XXX.XX TO STA. XXX.XX

SHOULDER WIDTH IS 4′ TO 10′ BASED UPON TRAFFIC VOLUME, PERCENT TRUCKS AND THE CONTEXT SURROUNDING THE ROAD.

✳ BACKSLOPE DETERMINED BY SOIL SURVEY.

✳✳ THE FILL SLOPE SHALL BE 6:1 OR FLATTER WHEN THE FILL HEIGHT IS EQUAL TO OR LESS THAN 4 FEET (I.E., THE OFFSET FROM THE TOE OF FILL TO THE SHOULDER POINT IS A MINIMUM OF 24 FEET). THE SLOPE MAY VARY TO MEET THIS REQUIREMENT. FOR FILL HEIGHTS GREATER THAN 4 FEET, THE SLOPE SHALL NOT EXCEED THE MAXIMUM SLOPE DETERMINED BY THE SOIL SURVEY.

D-60E	
FUNCTION	RURAL MAJOR ROUTE- 2-LANE
ADT	NA
TRAVELED WAY WIDTH	24′
ROADBED WIDTH	32 - 44′
FORESLOPE	6:1
DITCH	4′

"THIS MEDIA SHOULD NOT BE CONSIDERED A CERTIFIED DOCUMENT."

DATE PREPARED	
11/23/2016	
ROUTE	STATE MO
DISTRICT	SHEET NO.
COUNTY	
JOB NO.	
CONTRACT ID.	
PROJECT NO.	
BRIDGE NO.	

DESCRIPTION	DATE

MISSOURI HIGHWAYS AND TRANSPORTATION COMMISSION

105 WEST CAPITOL
JEFFERSON CITY, MO 65102
1-888-ASK-MODOT (1-888-275-6636)

IF A SEAL IS PRESENT ON THIS SHEET IT HAS BEEN ELECTRONICALLY SEALED AND DATED.