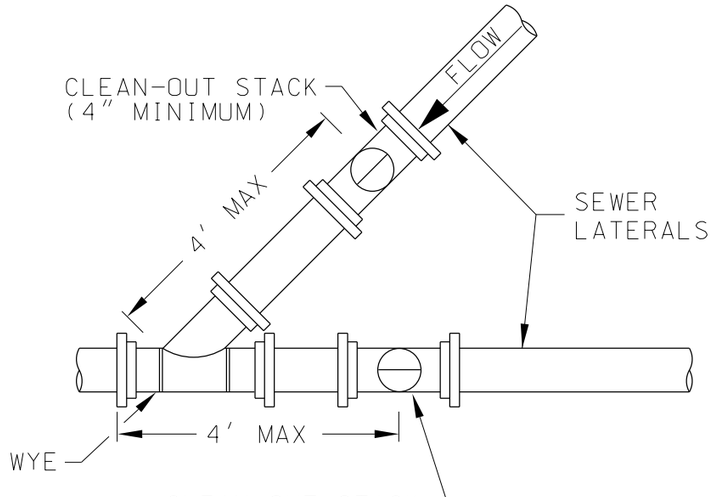

WYE CONNECTION & CLEAN-OUT STACK PLAN

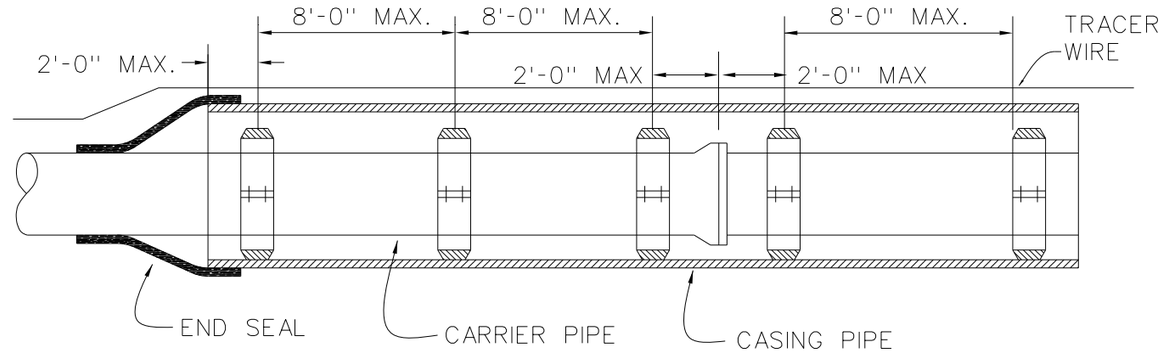

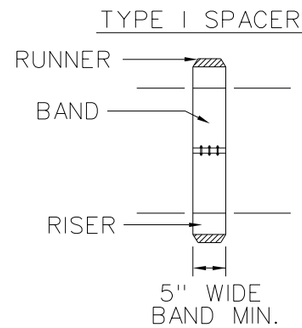

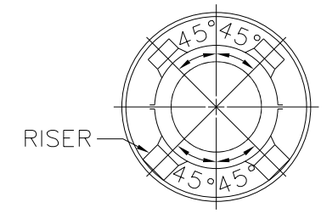

PIPE ENCASEMENT DETAIL

SCALE: N.T.S.

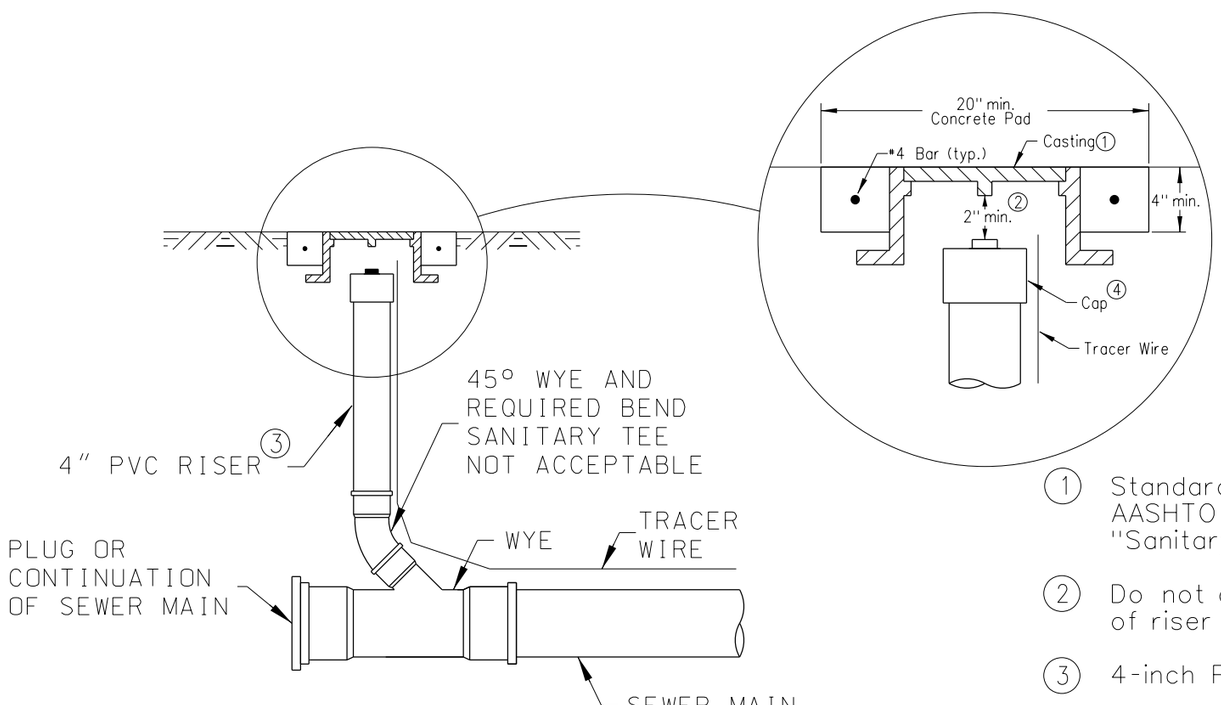

CLEAN-OUT STACK DETAILS

SCALE: N.T.S.

1. Standard duty casting complying with AASHTO M 306. Mark lid with "Sanitary" or "Sanitary C.O."
2. Do not allow casting to bear on top of riser pipe.
3. 4-inch PVC Service Pipe
4. Threaded PVC cap

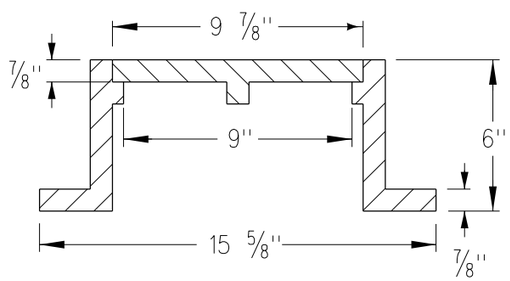

CASTING①

(Dimensions are nominal)

"THIS MEDIA SHOULD NOT BE CONSIDERED A CERTIFIED DOCUMENT."

DATE PREPARED	5/29/2013
ROUTE 21	STATE MO
DISTRICT SE	SHEET NO. 4
COUNTY	REYNOLDS
JOB NO.	ELLINGTONSEW
CONTRACT ID.	
PROJECT NO.	
BRIDGE NO.	

DATE	DESCRIPTION

MISSOURI HIGHWAYS AND TRANSPORTATION COMMISSION

105 WEST CAPITOL
JEFFERSON CITY, MO 65102
1-888-ASK-MODOT (1-888-275-6636)

IF A SEAL IS PRESENT ON THIS SHEET IT HAS BEEN ELECTRONICALLY SEALED AND DATED.