MISSOURI DEPARTMENT OF TRANSPORTATION
I-29 REST AREA SEWER IMPROVEMENTS
DEARBORN, MISSOURI

T54N, R35W, SECTION 24

UTILITY LOCATIONS ON THESE PLANS HAVE NOT BEEN FIELD VERIFIED. IT IS THE RESPONSIBILITY OF THE CONTRACTOR TO CONTACT DIG-RITE BEFORE PROCEEDING WITH CONSTRUCTION.

PROJECT LOCATION

PROJECT VICINITY MAP
(NO SCALE)

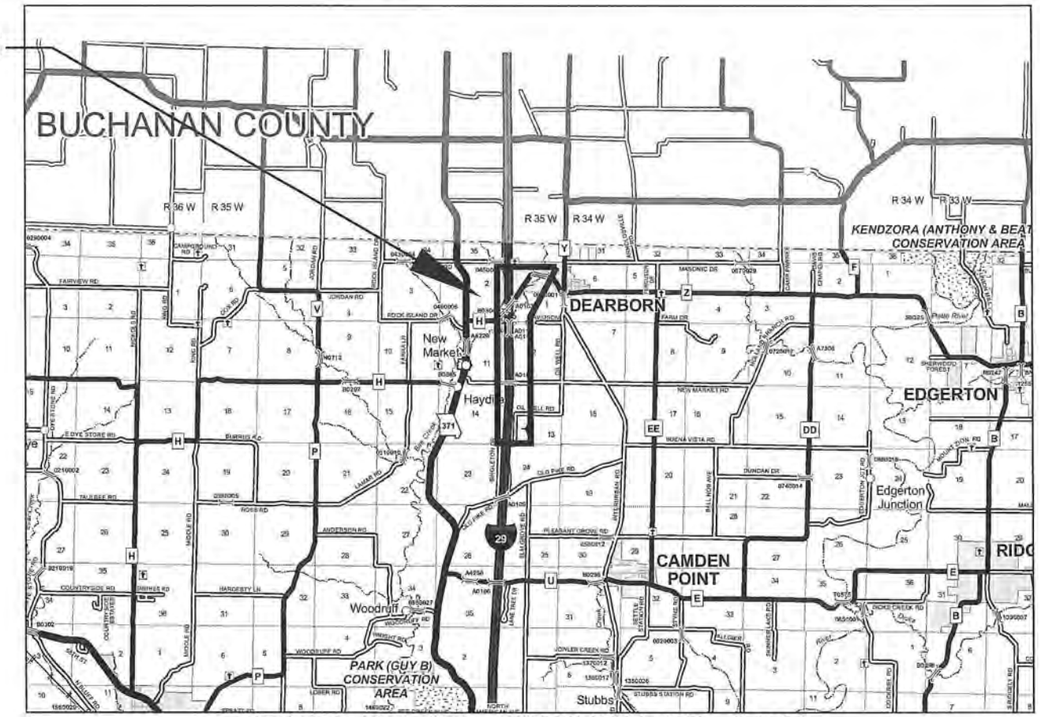

PROJECT VICINITY MAP
(NO SCALE)

TELEPHONE
CENTURYLINK
1-800-786-6272

WATER
PLATTE COUNTY PWSD 9
1-816-992-8710
PLATTE COUNTY PWSD 2
1-816-280-3187
CITY OF DEARBORN
1-816-992-3576

ELECTRICITY
KANSAS CITY POWER & LIGHT
1-888-544-4852
PLATTE-CLAY ELECTRIC COOP
1-816-628-3121

SEWER
CITY OF DEARBORN
1-816-992-3576

GAS
MISSOURI GAS ENERGY
1-800-582-0000
SOUTHERN STAR CENTRAL GAS
1-800-324-9696

BENCHMARK

TBM:
TOP OF SSMH LID BY PROPOSED WETWELL.
ELEV = 962.96
TOP OF SSMH LID AT TIE-IN POINT IN DEARBORN.
ELEV = 879.20

GENERAL NOTES

1. THE ENGINEERING INFORMATION SHOWN ON THESE PLANS IS FROM STUDIES MADE IN THE FIELD AND REPRESENTS THE BEST INFORMATION AVAILABLE TO SHAFER, KLINE AND WARREN, INC.
2. ALL GRASSED AREA DISTURBED BY THE CONTRACTOR SHALL BE FERTILIZED, SEEDED, AND MULCHED UNLESS OTHERWISE NOTED ON THE PLANS.
3. ALL UTILITIES AND THEIR CONNECTIONS SHALL BE MOVED OR ADJUSTED BY THE CONTRACTOR TO FIT THE NEW CONSTRUCTION UNLESS OTHERWISE NOTED ON THE PLANS.
4. CONTRACTOR SHALL CONTACT UTILITY COMPANIES AT LEAST THREE WORKING DAYS, BUT NO MORE THAN TEN WORKING DAYS, PRIOR TO DIGGING BY CALLING DIGRITE AT 1-800-344-7483
5. IT IS THE CONTRACTOR'S RESPONSIBILITY TO COORDINATE THE ADJUSTMENT OF THE VARIOUS UTILITIES BY THE RESPECTIVE COMPANIES.
6. THERE SHALL BE A MINIMUM DISTANCE OF 18" VERTICAL CLEARANCE BETWEEN THE FORCE MAIN AND WATER LINES. SEE SPECIFICATIONS.
7. ALL ROADS, DRIVEWAYS, CULVERTS, FENCING, LANDSCAPE, STRUCTURES & OTHER IMPROVEMENTS DAMAGED DURING CONSTRUCTION SHALL BE REPAIRED OR REPLACED TO EQUAL OR BETTER CONDITION.
8. CONTRACTOR TO ONLY REMOVE TREES & SHRUBS AS NEEDED FOR ACTUAL CONSTRUCTION OF UTILITIES. PRESERVE EXISTING VEGETATION TO THE MAXIMUM EXTENT PRACTICAL. PROTECT ALL TREES NOT DESIGNATED FOR REMOVAL. DO NOT DRIVE OR STORE EQUIPMENT UNDER DRIPLINE.
9. ALL SIGNS DAMAGED OR REMOVED DURING CONSTRUCTION SHALL BE REPLACED.
10. THE LOCATIONS OF UTILITY MAINS, STRUCTURES & SERVICE CONNECTIONS PLOTTED ON THESE DRAWINGS ARE APPROXIMATE ONLY AND WERE OBTAINED FROM RECORDS MADE AVAILABLE TO SHAFER, KLINE & WARREN INC. (SKW). THERE MAY BE OTHER EXISITNG UTILITY MAINS, STRUCTURES & SERVICE CONNECTIONS NOT KNOWN TO SKW AND NOT SHOWN ON THE DRAWINGS. THE VERIFICATION OF THE EXISTENCE AND THE DETERMINATION OF THE EXACT LOCATION OF UTILITY MAINS, STRUCTURES & SERVICE CONNECTIONS SHALL BE THE RESPONSIBILTY OF THE CONSTRUCTION CONTRACTOR(S).
11. SITE CLEAN UP ON A DAILY BASIS.
12. ALL OPEN EXCAVATIONS SHALL BE PROTECTED.
13. REPLACE ANY PROPERTY MONUMENTS REMOVED OR DESTROYED BY CONSTRUCTION. ALL MONUMENTS SHALL BE SET BY A SURVEYOR LICENSED IN THE STATE OF MISSOURI.
14. CONTRACTOR IS TO COORDINATE ELECTRICAL POWER INSTALLATION WITH ELECTRICAL UTILITY.

LEGEND

IB_E	= EXIST IRON BAR
IBPC_E	= EXIST. IRON BAR W/ PLASTIC
FPST	= FENCE POST
FO	= FIBER OPTIC MARKER
FH	= FIRE HYDRANT
G	= GAS MARKER
GTPST	= GATE POST
GA	= GUY ANCHOR
H&V	= CONTROL POINT
LP	= LIGHT POLE
MS	= METAL SIGN
PP	= POWER POLE
RW	= R/W MARKER
SSMH	= SANITARY SEWER MANHOLE
STMH	= STORM MANHOLE
	= STUMP
TEP	= TELEPHONE PEDESTAL
TBM	= TEMP BENCHMARK
	= TREE

EXIST MAJOR CONTOUR	
EXIST MINOR CONTOUR	
EXIST FLOW LINE	
TREE LINE	
EXIST BUILDING	
EXIST EASMENT	
EXIST EDGE OF ASPHALT	
EXIST EDGE OF GRAVEL	
EXIST GRAVEL SHOULDER	
EXIST CHAINLINK FENCE	O
EXIST OVERHEAD POWER	OHP
EXIST STORM PIPE	
EXIST PROPERTY LINE	
EXIST SEWER PIPE	SAN
EXIST GAS LINE	G
EXIST POWER	P
EXIST TELEPHONE LINE	T
EXIST WATER LINE	
EXIST EDGE OF WATER	
PROPOSED FORCEMAIN	

INDEX

DESCRIPTION	SHEET NO
COVER SHEET	1
GENERAL LAYOUT	2
FORCEMAIN PLAN & PROFILE	3-17
DETAILS	18-20
PUMP STATION DETAILS	21-22
BORE DETAILS	23
ELECTRICAL IMPROVEMENTS	24

STATE OF MISSOURI
PHILIP RYAN WILSON
NUMBER PE-2008019618
PROFESSIONAL ENGINEER
4/17/13

NO.	DATE	REVISIONS	BY	APP'D
1				
2				
3				
4				
5				

COPYRIGHT © 2012 - SHAFER, KLINE & WARREN INC.
MISSOURI CERTIFICATE OF AUTHORITY: F001-30800

Designed By: PW
Drawn By: JMR
Checked By: PW
Issue Date:

SHAFER, KLINE & WARREN, INC.
107 Butler Street, Macon, MO 63552-1628
660/385-6441 FAX: 660/385-6614
OFFICE LOCATIONS: Macon, MO Columbia, MO Houston, TX
Iola, KS Lenexa, KS Tulsa, OK
North Kansas City, MO

MODOT REST AREA
DEARBORN, MO

SEWER IMPROVEMENTS
COVER

120339
SHEET NO.
1 OF 24

L:\120339-001_CAD\CIVIL\120339 COVER.DWG
LAYOUT: SHT-1 | BY: JREIGELSBERGER | DATE: 4/16/2013
XREF DWG1: NONE | XREF DWG2: NONE
XREF DWG3: NONE | XREF DWG4: NONE

STATE OF MISSOURI
PHILIP RYAN WILSON
NUMBER PE-2008019618
PROFESSIONAL ENGINEER
4/17/13

NO.	DATE	REVISIONS	BY	APPD
1				
2				
3				
4				
5				

Designed By: PW
Drawn By: JWR
Checked By: PW
Issue Date:

COPYRIGHT ©-2012 -SHAFER, KLINE & WARREN INC.
MISSOURI CERTIFICATE OF AUTHORITY: F001380500

SHAFER, KLINE & WARREN, INC.
107 Butler Street, Macon, MO 63552-1628
660/385-6441 FAX: 660/385-6614
OFFICE LOCATIONS: Macon, MO Columbia, MO Houston, TX Iola, KS Lenexa, KS Tulsa, OK North Kansas City, MO
CIVIL ENGINEERS ELECTRICAL ENGINEERS MECHANICAL ENGINEERS STRUCTURAL ENGINEERS LANDSCAPE ARCHITECTS LAND SURVEYORS LAND PLANNERS

MODOT REST AREA
DEARBORN, MO

SEWER IMPROVEMENTS
GENERAL LAYOUT

120339

SHEET NO.
2 OF 24

L:\120339-020_CAD\GML\120339 GEN LAYOUT.DWG
LAYOUT: GL-2 | BY: JREIGELSBERGER | DATE: 4/17/2013
XREF DWG1: NONE | XREF DWG2: NONE
XREF DWG3: NONE | XREF DWG4: NONE

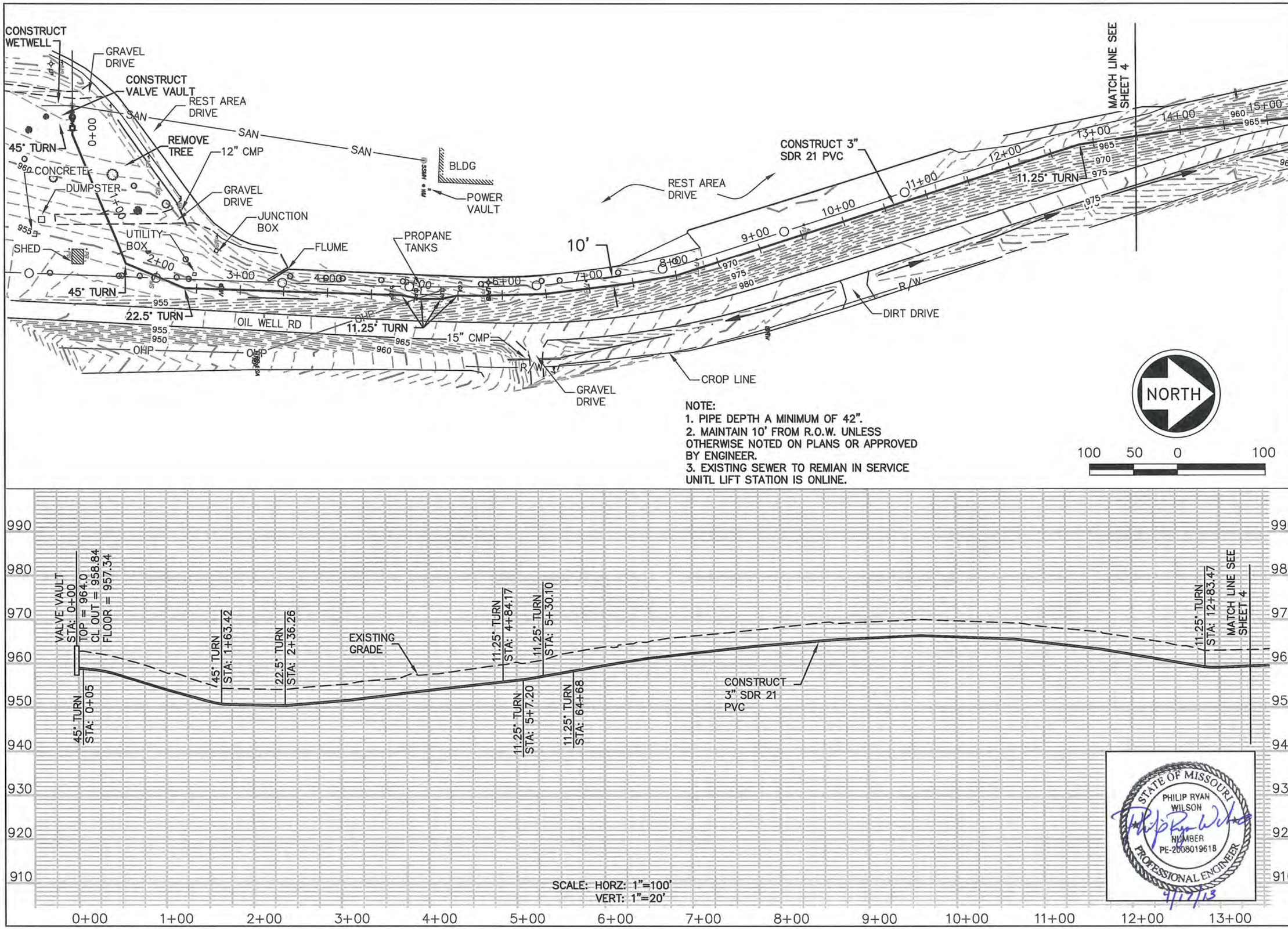

NOTE:
1. PIPE DEPTH A MINIMUM OF 42".
2. MAINTAIN 10' FROM R.O.W. UNLESS OTHERWISE NOTED ON PLANS OR APPROVED BY ENGINEER.
3. EXISTING SEWER TO REMIAN IN SERVICE UNITL LIFT STATION IS ONLINE.

SCALE: HORZ: 1"=100'
VERT: 1"=20'

STATE OF MISSOURI
PHILIP RYAN WILSON
NUMBER PE-2008019618
PROFESSIONAL ENGINEER
4/17/13

NO.	DATE	REVISIONS	BY	APP'D
5				
4				
3				
2				
1				

Designed By: PW
Drawn By: JWR
Checked By: PW
Issue Date:

COPYRIGHT ©-2013 -SHAFER, KLINE & WARREN INC.
MISSOURI CERTIFICATE OF AUTHORITY: F001369050

SHAFER, KLINE & WARREN, INC.
107 Butler Street, Macon, MO 63552-1628
660/385-6441 FAX: 660/385-6614
OFFICE LOCATIONS: Macon, MO Columbia, MO Houston, TX
Iola, KS Lenexa, KS Tulsa, OK
North Kansas City, MO
CIVIL ENGINEERS ELECTRICAL ENGINEERS MECHANICAL ENGINEERS STRUCTURAL ENGINEERS MISSOURI ARCHITECTS LAND SURVEYORS LAND PLANNERS

MODOT REST AREA
DEARBORN, MO

SEWER IMPROVEMENTS
FORCEMAIN PLAN & PROFILE

120339

SHEET NO. 3 OF 24

L:\120339-020_CAD\CIVIL\120339 SITE.DWG
LAYOUT: SHT 3 | BY: JREIGELSBERGER | DATE: 4/17/2013
XREF DWG1: NONE | XREF DWG2: NONE
XREF DWG3: NONE | XREF DWG4: NONE

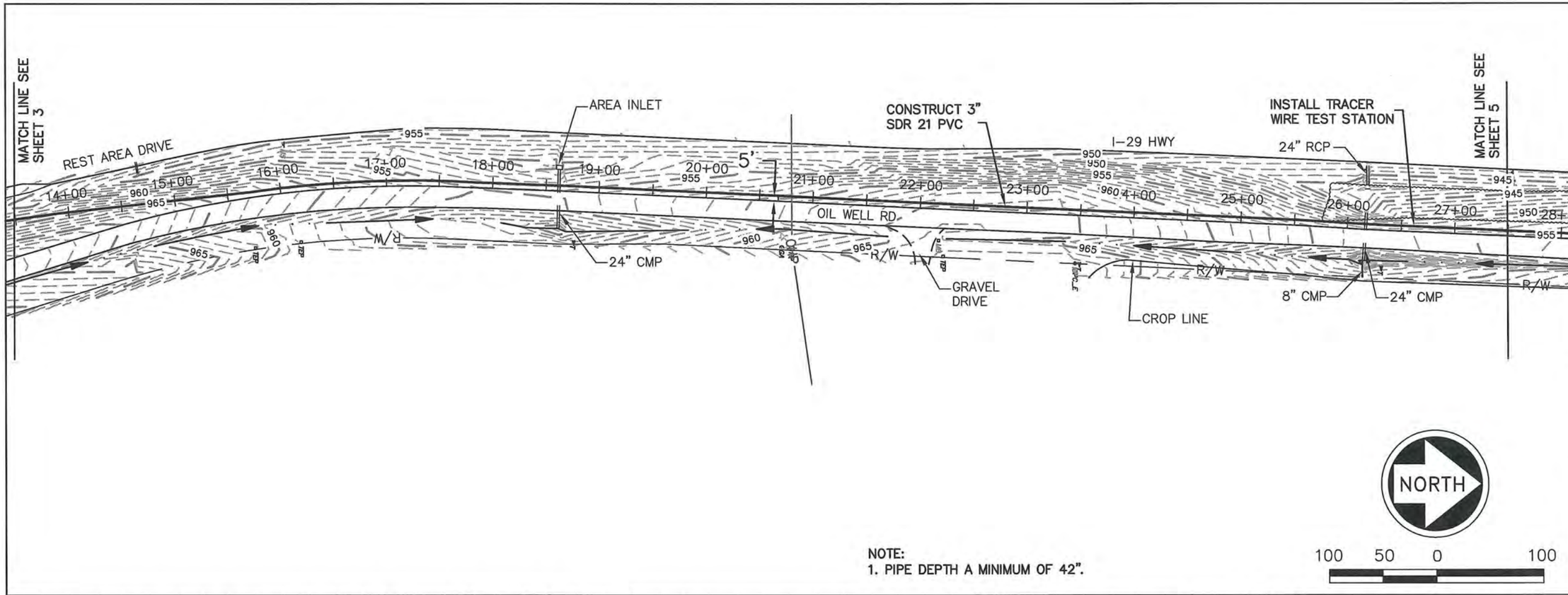

NOTE:
1. PIPE DEPTH A MINIMUM OF 42".

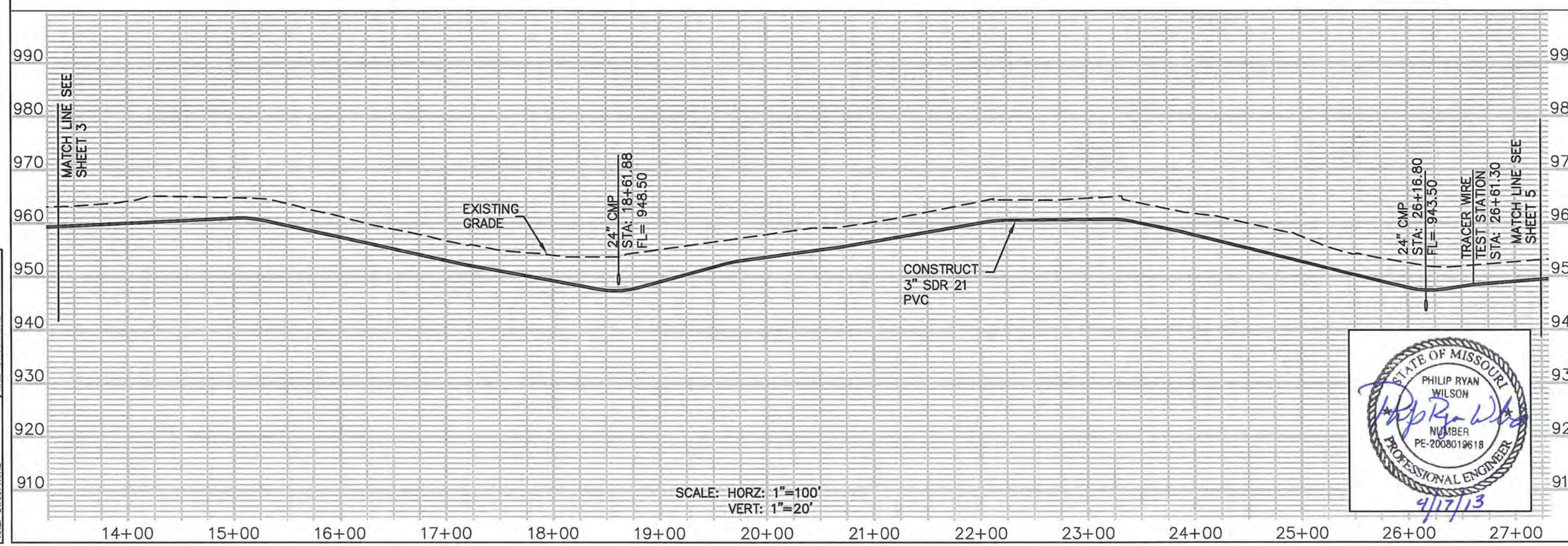

STATE OF MISSOURI
PHILIP RYAN WILSON
NUMBER PE-2008019618
PROFESSIONAL ENGINEER
9/17/13

NO.	DATE	REVISIONS	BY	APP'D
5				
4				
3				
2				
1				

Designed By: PW
Drawn By: JMR
Checked By: PW
Issue Date:

COPYRIGHT ©-2013 -SHAFER, KLINE & WARREN INC.
MISSOURI CERTIFICATE OF AUTHORITY: F0013850

SHAFER, KLINE & WARREN, INC.
107 Butler Street, Macon, MO 63552-1628
660/385-6441 FAX: 660/385-6614
OFFICE LOCATIONS: Macon, MO Columbia, MO Houston, TX Ida, KS Lenexa, KS Tulsa, OK
CIVIL ENGINEERS ELECTRICAL ENGINEERS MECHANICAL ENGINEERS STRUCTURAL ENGINEERS MISSOURI ARCHITECTS LAND SURVEYORS LAND PLANNERS
North Kansas City, MO

MODOT REST AREA
DEARBORN, MO

SEWER IMPROVEMENTS
FORCEMAIN PLAN & PROFILE

120339

SHEET NO. 4 OF 24

L:\120339-020_CAD\CIVIL\120339 SITE.DWG
LAYOUT: SHT 4 | BY: JREIGELSBERGER | DATE: 4/17/2013
XREF DWG1: NONE | XREF DWG2: NONE
XREF DWG3: NONE | XREF DWG4: NONE

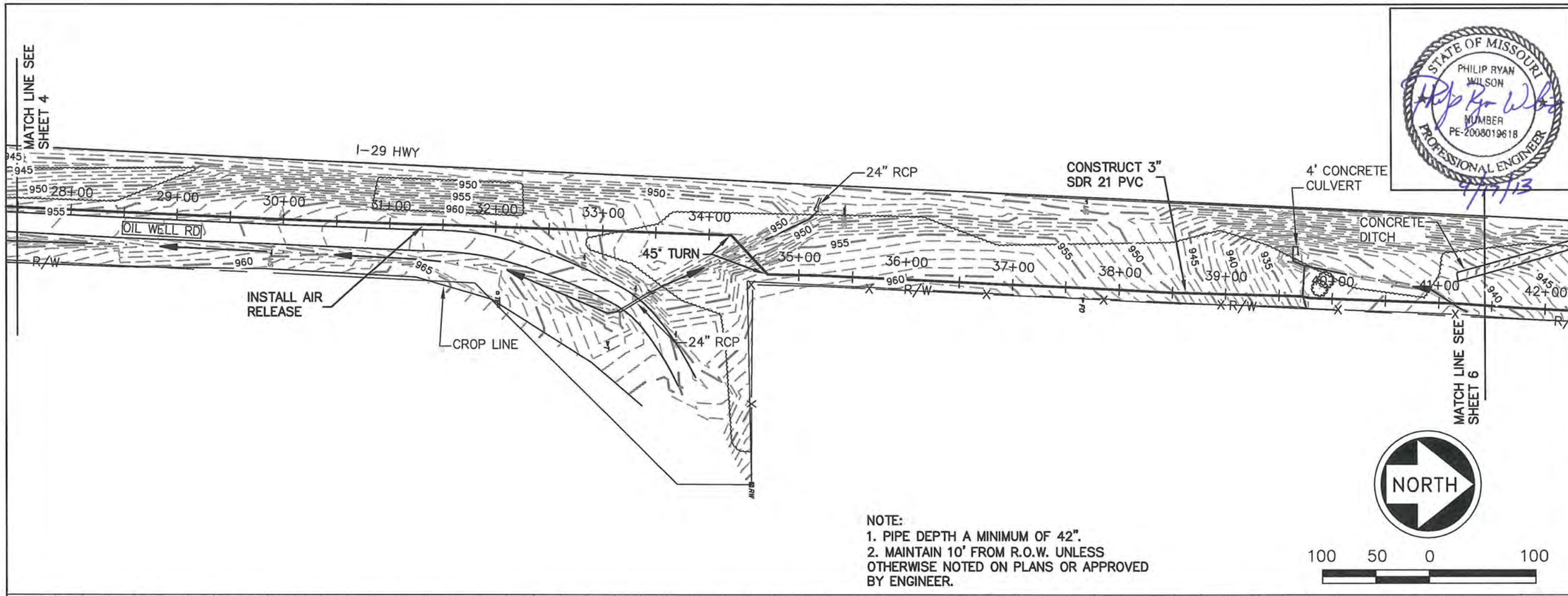

NOTE:
1. PIPE DEPTH A MINIMUM OF 42".
2. MAINTAIN 10' FROM R.O.W. UNLESS OTHERWISE NOTED ON PLANS OR APPROVED BY ENGINEER.

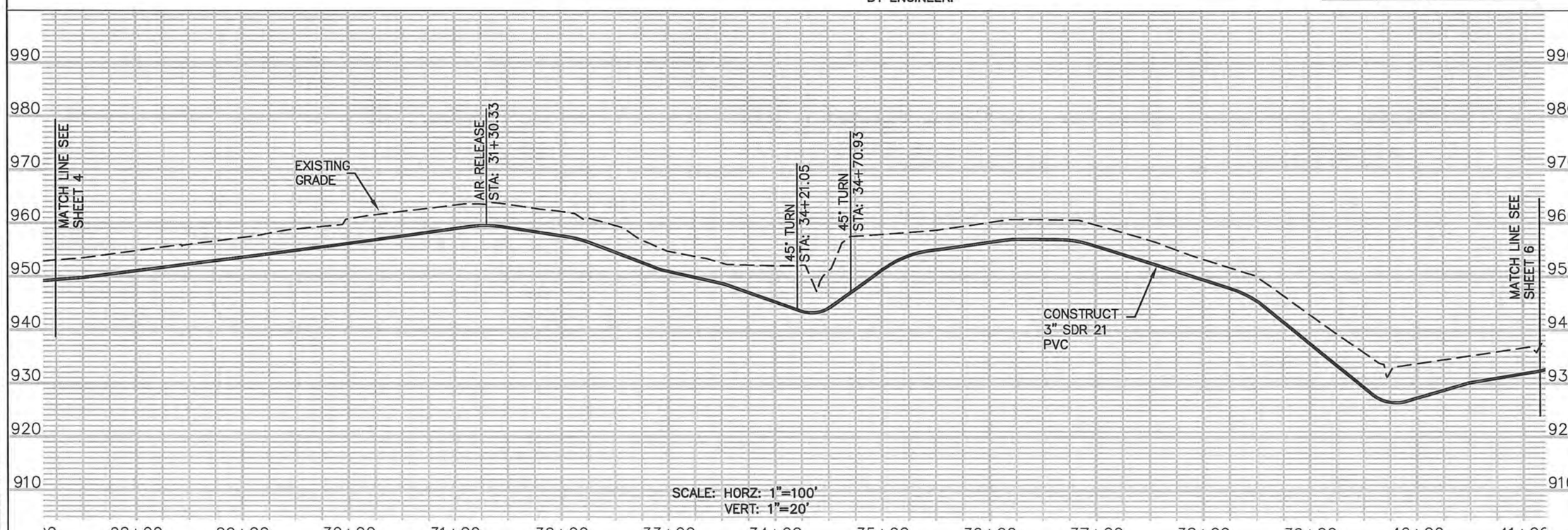

STATE OF MISSOURI
PHILIP RYAN WILSON
NUMBER PE-2008019618
PROFESSIONAL ENGINEER
4/17/13

NO.	DATE	REVISIONS	BY	APP'D
5				
4				
3				
2				
1				

Designed By: PW
Drawn By: JWR
Checked By: PW
Issue Date:

COPYRIGHT © 2013 SHAFER, KLINE & WARREN INC.
MISSOURI CERTIFICATE OF AUTHORITY: F00139850

SHAFER, KLINE & WARREN, INC.
107 Butler Street, Macon, MO 63552-1628
660/385-6441 FAX: 660/385-6614
OFFICE LOCATIONS: Macon, MO Columbia, MO Houston, TX Iola, KS Lenexa, KS Tulsa, OK North Kansas City, MO
CIVIL ENGINEERS ELECTRICAL ENGINEERS MECHANICAL ENGINEERS STRUCTURAL ENGINEERS LANDSCAPE ARCHITECTS LAND SURVEYORS LAND PLANNERS

MODOT REST AREA
DEARBORN, MO

SEWER IMPROVEMENTS
FORCEMAIN PLAN & PROFILE

120339
SHEET NO.
5 OF 24

L:\120339-020_CAD\CIVIL\120339 SITE.DWG
LAYOUT: SHT 5 | BY: JREIGELSBERGER | DATE: 4/17/2013
XREF DWG1: NONE | XREF DWG2: NONE
XREF DWG3: NONE | XREF DWG4: NONE

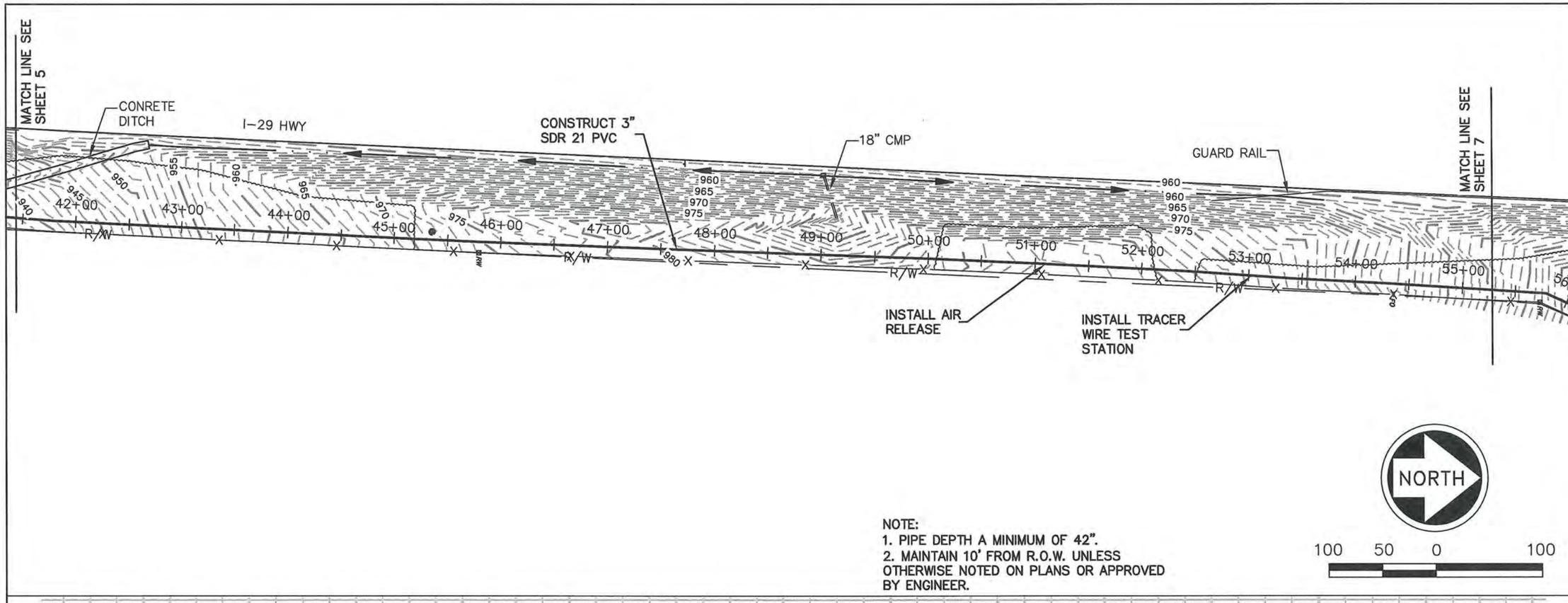

NOTE:
1. PIPE DEPTH A MINIMUM OF 42".
2. MAINTAIN 10' FROM R.O.W. UNLESS OTHERWISE NOTED ON PLANS OR APPROVED BY ENGINEER.

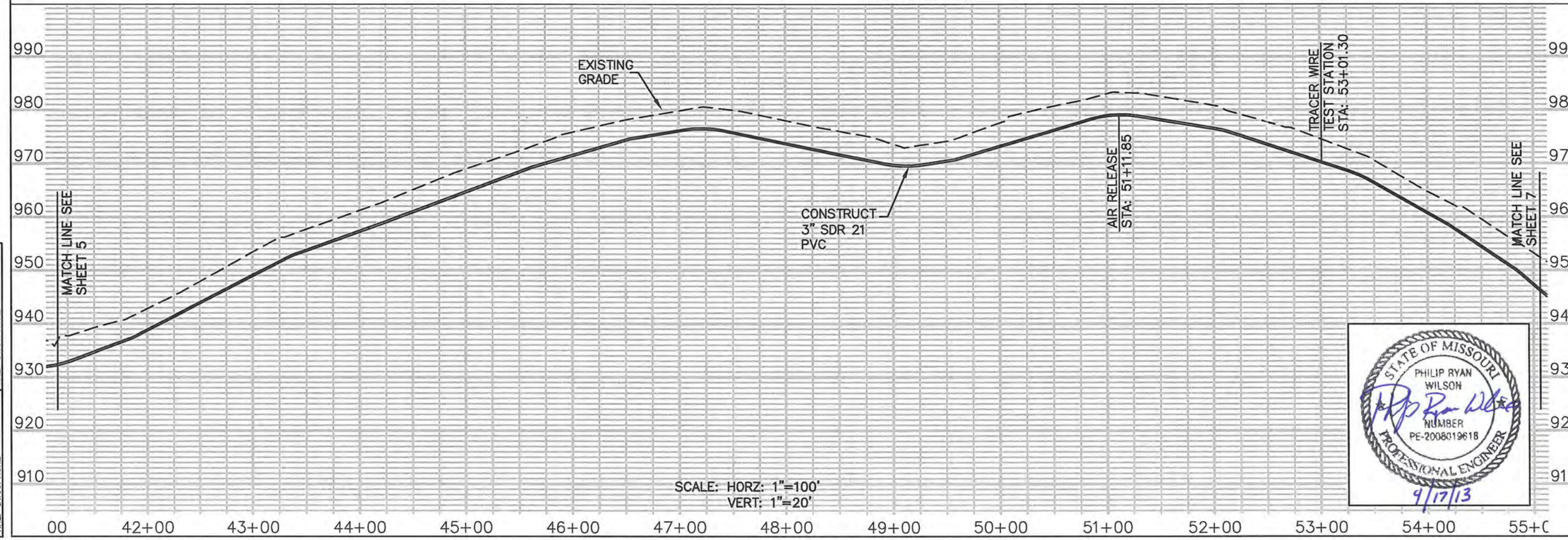

SCALE: HORZ: 1"=100'
VERT: 1"=20'

STATE OF MISSOURI
PHILIP RYAN WILSON
NUMBER PE-2008019618
PROFESSIONAL ENGINEER
9/17/13

NO.	DATE	REVISIONS	BY	APPD
5				
4				
3				
2				
1				

Designed By: PW
Drawn By: JWR
Checked By: PW
Issue Date:

COPYRIGHT ©-2013 -SHAFER, KLINE & WARREN INC.
MISSOURI CERTIFICATE OF AUTHORITY: F0013060

SHAFER, KLINE & WARREN, INC.
107 Butler Street, Macon, MO 63552-1628
660/385-6441 FAX: 660/385-6614
OFFICE LOCATIONS: Macon, MO Columbia, MO Houston, TX Idaho, KS Lenexa, KS Tulsa, OK
North Kansas City, MO
CIVIL ENGINEERS ELECTRICAL ENGINEERS MECHANICAL ENGINEERS STRUCTURAL ENGINEERS LAND SURVEYORS LAND PLANNERS

MODOT REST AREA
DEARBORN, MO

SEWER IMPROVEMENTS
FORCEMAIN PLAN & PROFILE

120339

SHEET NO. 6 OF 24

L:\120339-020_CAD\CWL\120339 SITE.DWG
LAYOUT: SHT 6 | BY: JREIGELSBERGER | DATE: 4/17/2013
XREF DWG1: NONE | XREF DWG2: NONE
XREF DWG3: NONE | XREF DWG4: NONE

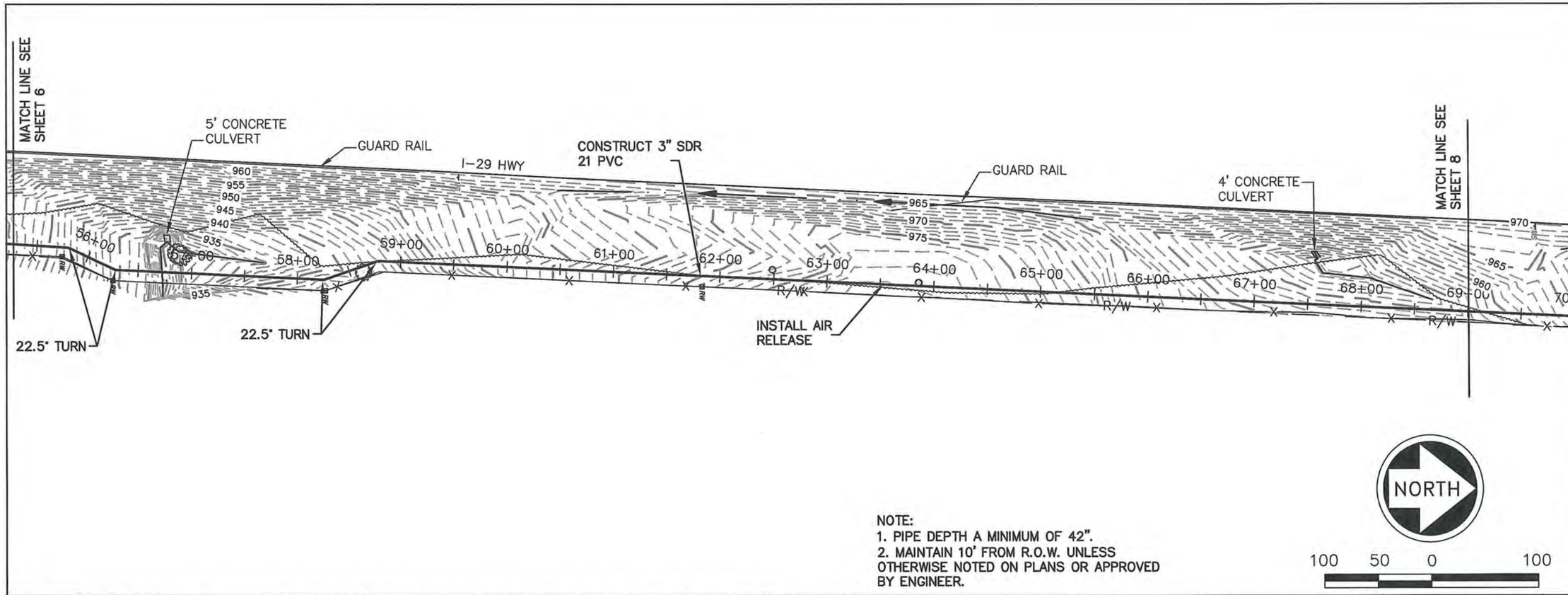

NOTE:
1. PIPE DEPTH A MINIMUM OF 42".
2. MAINTAIN 10' FROM R.O.W. UNLESS OTHERWISE NOTED ON PLANS OR APPROVED BY ENGINEER.

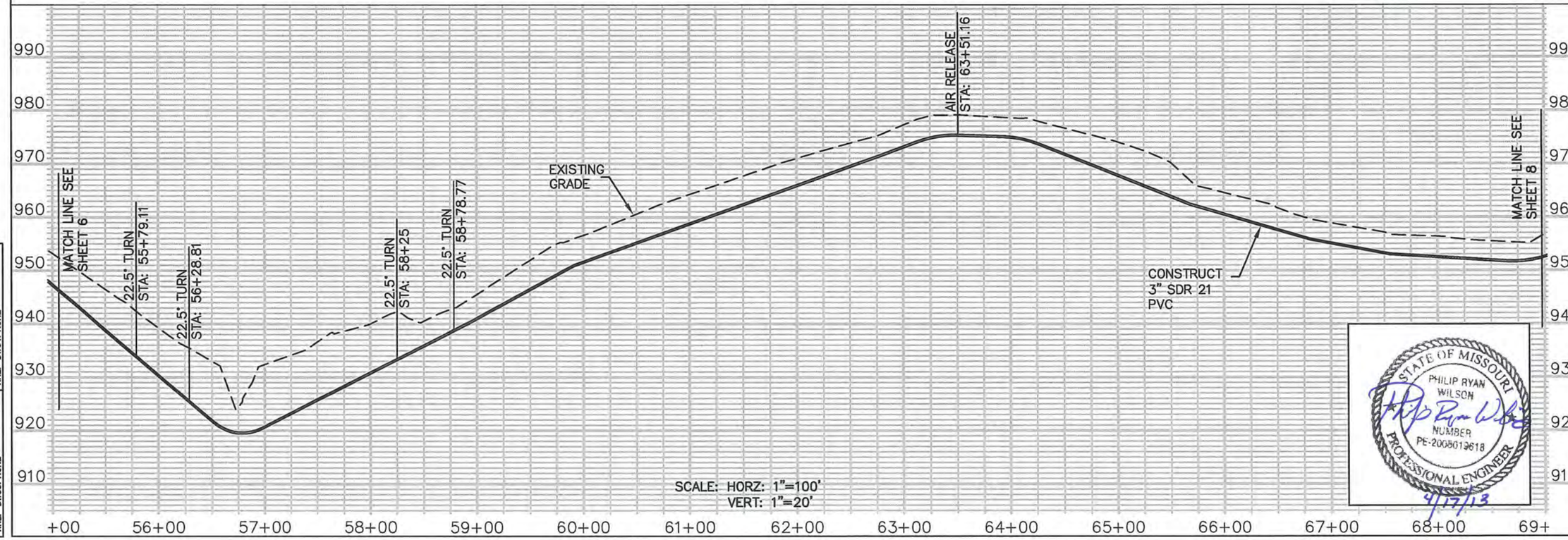

SCALE: HORZ: 1"=100'
VERT: 1"=20'

STATE OF MISSOURI
PHILIP RYAN WILSON
NUMBER PE-2008013618
PROFESSIONAL ENGINEER
4/17/13

NO.	DATE	REVISIONS	BY	APP'D
5				
4				
3				
2				
1				

Designed By: PW
Drawn By: JWR
Checked By: PW
Issue Date:

COPYRIGHT ©-2013 -SHAFER, KLINE & WARREN INC.
MISSOURI CERTIFICATE OF AUTHORITY: F001336850

SHAFER, KLINE & WARREN, INC.
107 Butler Street, Macon, MO 63552-1628
660/385-6441 FAX: 660/385-6614
OFFICE LOCATIONS: Macon, MO Columbia, MO Houston, TX
Iola, KS Lenexa, KS Tulsa, OK
North Kansas City, MO
CIVIL ENGINEERS ELECTRICAL ENGINEERS MECHANICAL ENGINEERS STRUCTURAL ENGINEERS MISSOURI ARCHITECTS LAND SURVEYORS LAND PLANNERS

MODOT REST AREA
DEARBORN, MO

SEWER IMPROVEMENTS
FORCEMAIN PLAN & PROFILE

120339

SHEET NO. 7 OF 24

L:\120339-020_CAD\CIVIL\120339 SITE.DWG
LAYOUT: SHT 7 | BY: JREDGELSBERGER | DATE: 4/17/2013
XREF DWG1: NONE | XREF DWG2: NONE
XREF DWG3: NONE | XREF DWG4: NONE

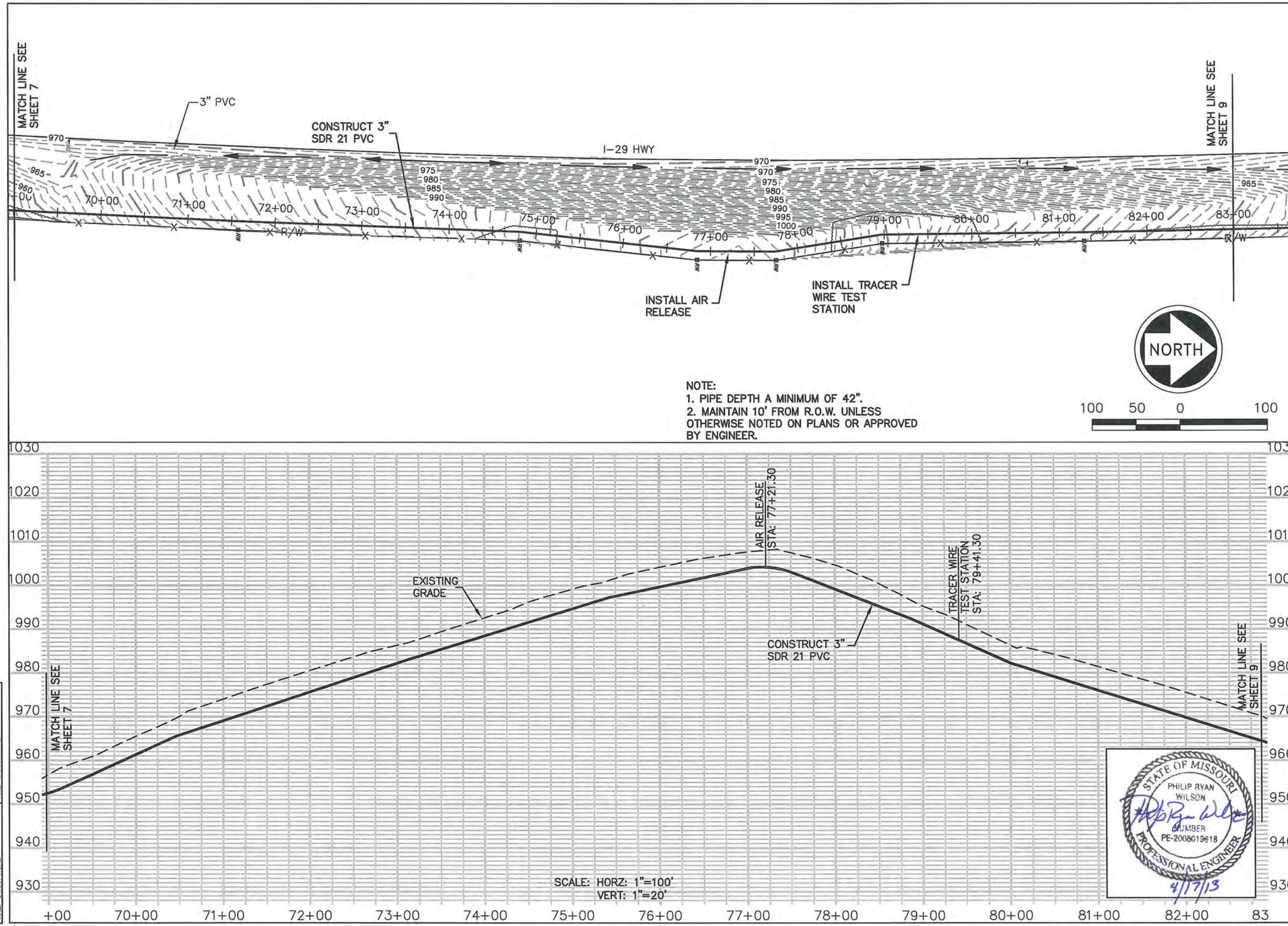

NO.	DATE	REVISIONS	BY	APPD
5				
4				
3				
2				
1				

COPYRIGHT ©-2013 -SHAFER, KLINE & WARREN INC.
MISSOURI CERTIFICATE OF AUTHORITY: F0013650

Designed By: PW
Drawn By: JMR
Checked By: PW
Issue Date:

SHAFER, KLINE & WARREN, INC.
107 Butler Street, Macon, MO 63552-1628
660/385-6441 FAX: 660/385-6614
OFFICE LOCATIONS: Macon, MO Columbia, MO Houston, TX Iola, KS Lansing, KS Tulsa, OK
North Kansas City, MO
CIVIL ENGINEERS ELECTRICAL ENGINEERS MECHANICAL ENGINEERS STRUCTURAL ENGINEERS LAND SURVEYORS LAND PLANNERS

MODOT REST AREA
DEARBORN, MO

SEWER IMPROVEMENTS
FORCEMAIN PLAN & PROFILE

120339

SHEET NO. 8 OF 24

L:\120339-020_CAD\CIVIL\120339 SITE.DWG
LAYOUT: SHT 8 | BY: JREIGELSBERGER | DATE: 4/17/2013
XREF DWG1: NONE | XREF DWG2: NONE
XREF DWG3: NONE | XREF DWG4: NONE

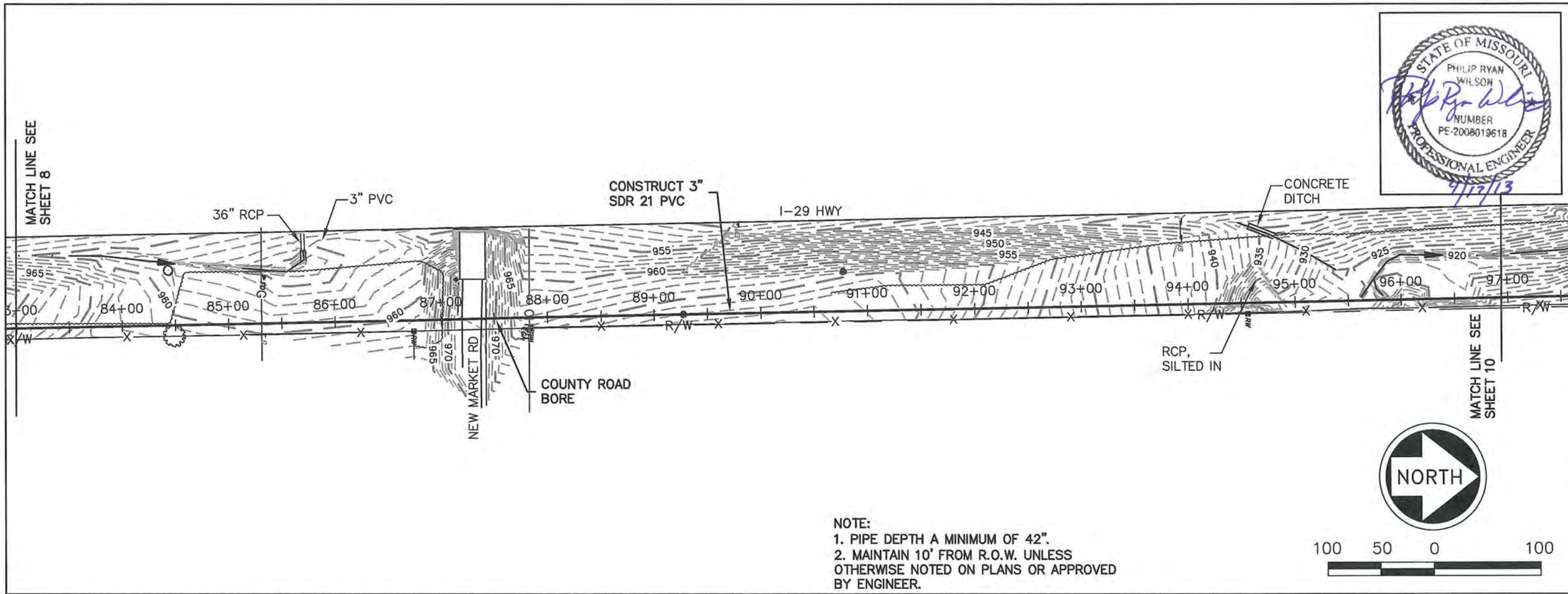

NOTE:
1. PIPE DEPTH A MINIMUM OF 42".
2. MAINTAIN 10' FROM R.O.W. UNLESS OTHERWISE NOTED ON PLANS OR APPROVED BY ENGINEER.

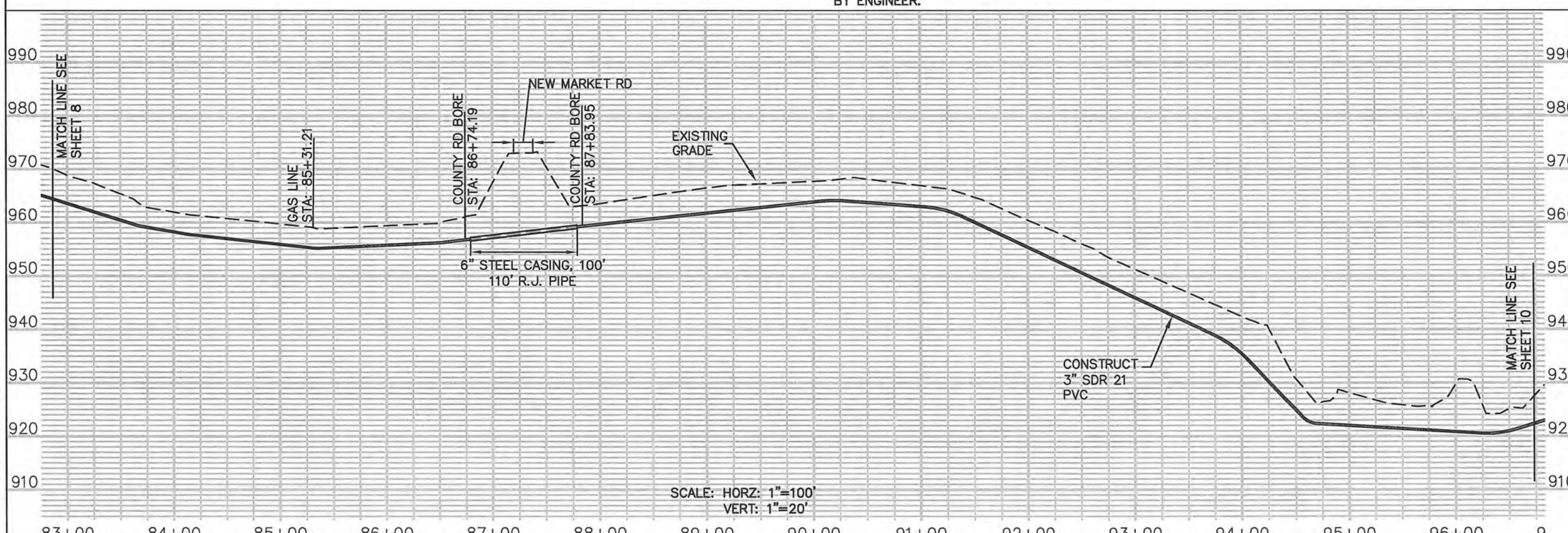

STATE OF MISSOURI
PHILIP RYAN WILSON
NUMBER PE-2008019618
PROFESSIONAL ENGINEER
4/17/13

NO.	DATE	REVISIONS	BY	APP'D
5				
4				
3				
2				
1				

Designed By: PW
Drawn By: JWR
Checked By: PW
Issue Date:

COPYRIGHT © 2013 SHAFER, KLINE & WARREN INC.
MISSOURI CERTIFICATE OF AUTHORITY: F00139650

SHAFER, KLINE & WARREN, INC.
107 Butler Street, Macon, MO 63552-1628
660/385-6441 FAX: 660/385-6614
OFFICE LOCATIONS: Macon, MO Columbia, MO Houston, TX Iola, KS Lenexa, KS Tulsa, OK North Kansas City, MO
CIVIL ENGINEERS ELECTRICAL ENGINEERS MECHANICAL ENGINEERS STRUCTURAL ENGINEERS LANDSCAPE ARCHITECTS LAND SURVEYORS LAND PLANNERS

MODOT REST AREA
DEARBORN, MO

SEWER IMPROVEMENTS
FORCEMAIN PLAN & PROFILE

120339

SHEET NO.
9 OF 24

L:\120339-020_CAD\CIVIL\120339 SITE.DWG
LAYOUT: SHT 9 | BY: JREIGELSBERGER | DATE: 4/17/2013
XREF DWG1: NONE | XREF DWG2: NONE
XREF DWG3: NONE | XREF DWG4: NONE

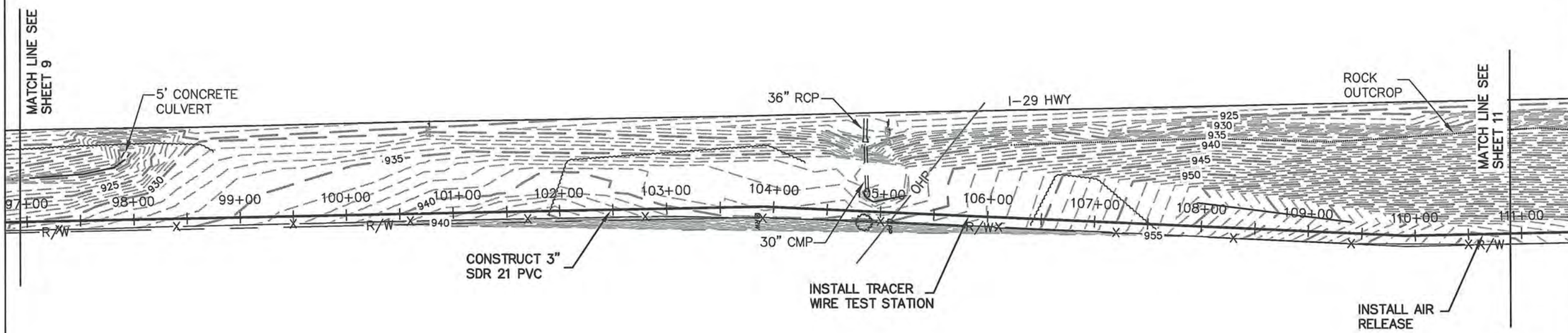

NORTH

100 50 0 100

NOTE:
1. PIPE DEPTH A MINIMUM OF 42".
2. MAINTAIN 10' FROM R.O.W. UNLESS OTHERWISE NOTED ON PLANS OR APPROVED BY ENGINEER.

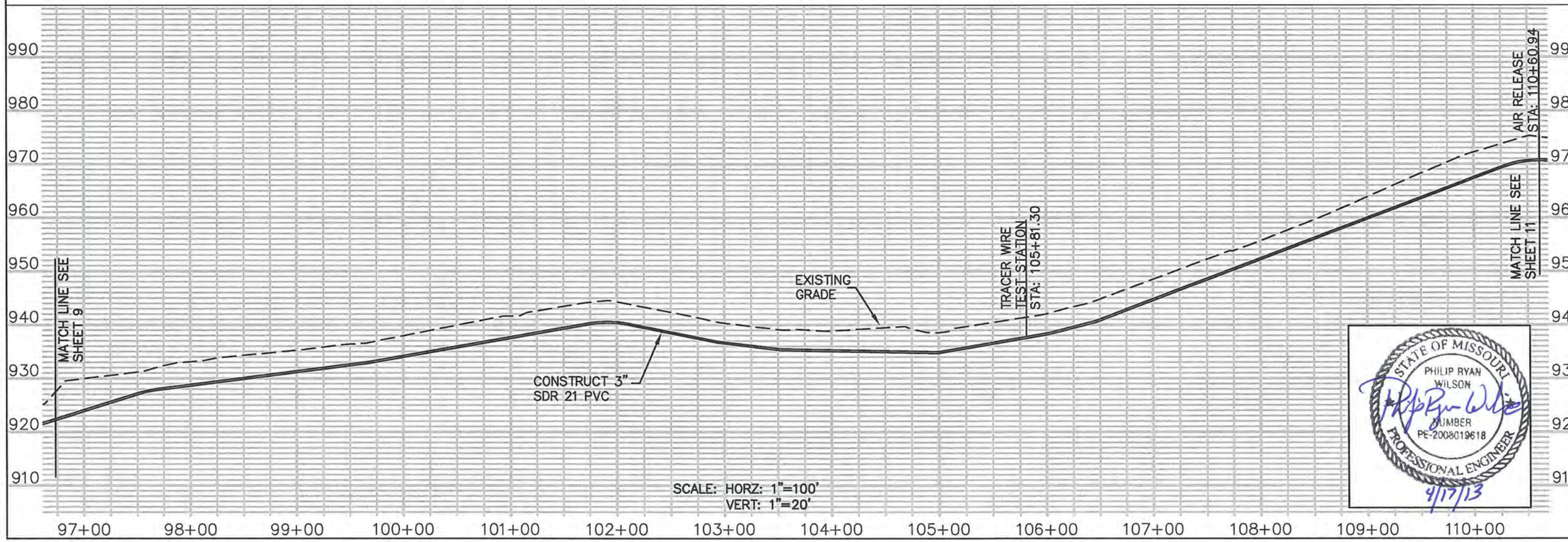

SCALE: HORZ: 1"=100'
VERT: 1"=20'

STATE OF MISSOURI
PHILIP RYAN WILSON
NUMBER
PE-2008019618
PROFESSIONAL ENGINEER
4/17/13

NO.	DATE	REVISIONS	BY	APP'D
5				
4				
3				
2				
1				

Designed By: PW
Drawn By: JWR
Checked By: PW
Issue Date:

COPYRIGHT ©-2013 -SHAFER, KLINE & WARREN INC.
MISSOURI CERTIFICATE OF AUTHORITY: F0013050

SHAFER, KLINE & WARREN, INC.
107 Butler Street, Macon, MO 63552-1628
660/385-6441 FAX: 660/385-6614
OFFICE LOCATIONS: Macon, MO Columbia, MO Houston, TX Ida, KS Lenexa, KS Tulsa, OK
North Kansas City, MO
CIVIL ENGINEERS ELECTRICAL ENGINEERS MECHANICAL ENGINEERS STRUCTURAL ENGINEERS MISSOURI ARCHITECTS LAND SURVEYORS LAND PLANNERS

MODOT REST AREA
DEARBORN, MO

SEWER IMPROVEMENTS
FORCEMAIN PLAN & PROFILE

120339

SHEET NO.
10 OF 24

L:\120339-020_CAD\CIVIL\120339 SITE.DWG
LAYOUT: SHT 10 | BY: JREIGELSBERGER | DATE: 4/17/2013
XREF DWG1: NONE | XREF DWG2: NONE
XREF DWG3: NONE | XREF DWG4: NONE

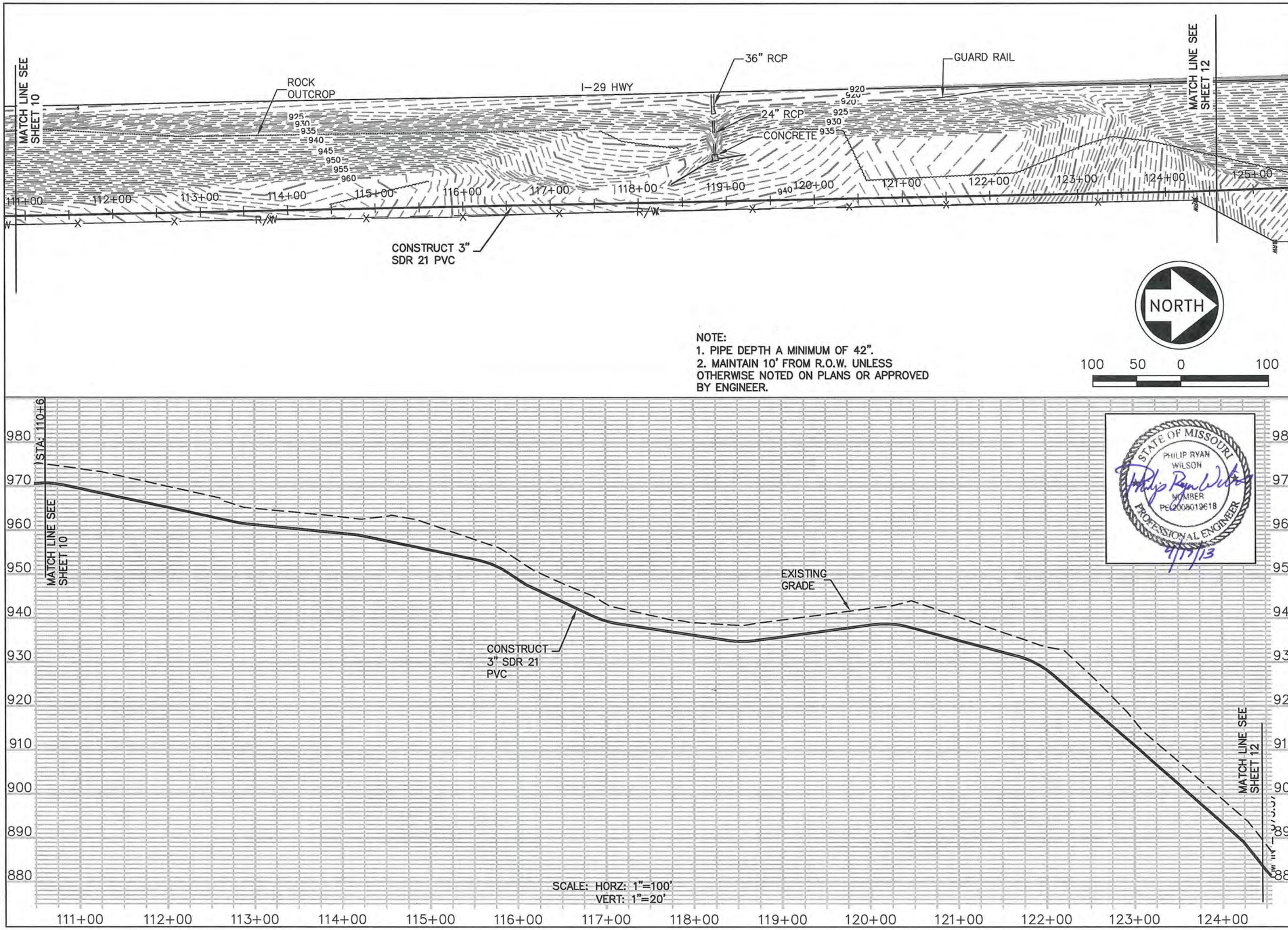

NOTE:
1. PIPE DEPTH A MINIMUM OF 42".
2. MAINTAIN 10' FROM R.O.W. UNLESS OTHERWISE NOTED ON PLANS OR APPROVED BY ENGINEER.

STATE OF MISSOURI
PHILIP RYAN WILSON
NUMBER PE2005019618
PROFESSIONAL ENGINEER
4/17/13

NO.	DATE	REVISIONS	BY	APPD
5				
4				
3				
2				
1				

COPYRIGHT © -2013 -SHAFER, KLINE & WARREN INC.
MISSOURI CERTIFICATE OF AUTHORITY: F0013050

Designed By: PW
Drawn By: JMR
Checked By: PW
Issue Date:

SHAFER, KLINE & WARREN, INC.
107 Butler Street, Macon, MO 63552-1628
660/385-6441 FAX: 660/385-6614
OFFICE LOCATIONS: Macon, MO Columbia, MO Houston, TX Iola, KS Lenexa, KS Tulsa, OK
North Kansas City, MO
CIVIL ENGINEERS ELECTRICAL ENGINEERS MECHANICAL ENGINEERS STRUCTURAL ENGINEERS LAND SURVEYORS LAND PLANNERS

MODOT REST AREA
DEARBORN, MO

SEWER IMPROVEMENTS
FORCEMAIN PLAN & PROFILE

120339

SHEET NO. 11 OF 24

L:\120339-020_CAD\CIVIL\120339 SITE.DWG
LAYOUT: SHT 11 | BY: JREIGELSBERGER | DATE: 4/17/2013
XREF DWG1: NONE | XREF DWG2: NONE
XREF DWG3: NONE | XREF DWG4: NONE

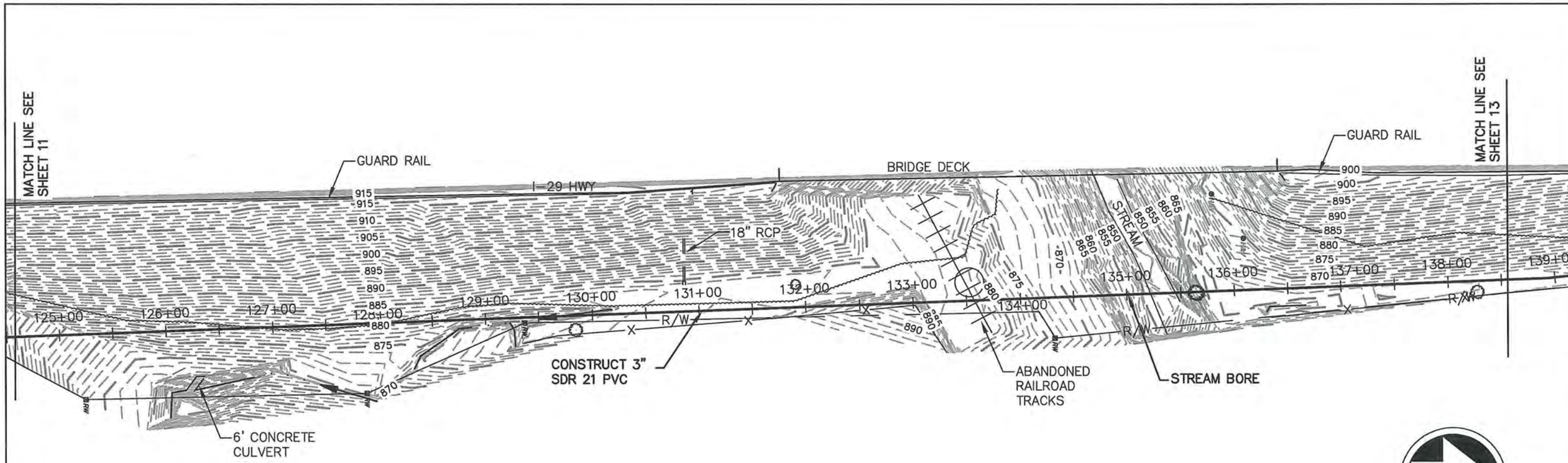

NORTH

100 50 0 100

NOTE:
1. PIPE DEPTH A MINIMUM OF 42".
2. MAINTAIN 10' FROM R.O.W. UNLESS OTHERWISE NOTED ON PLANS OR APPROVED BY ENGINEER.

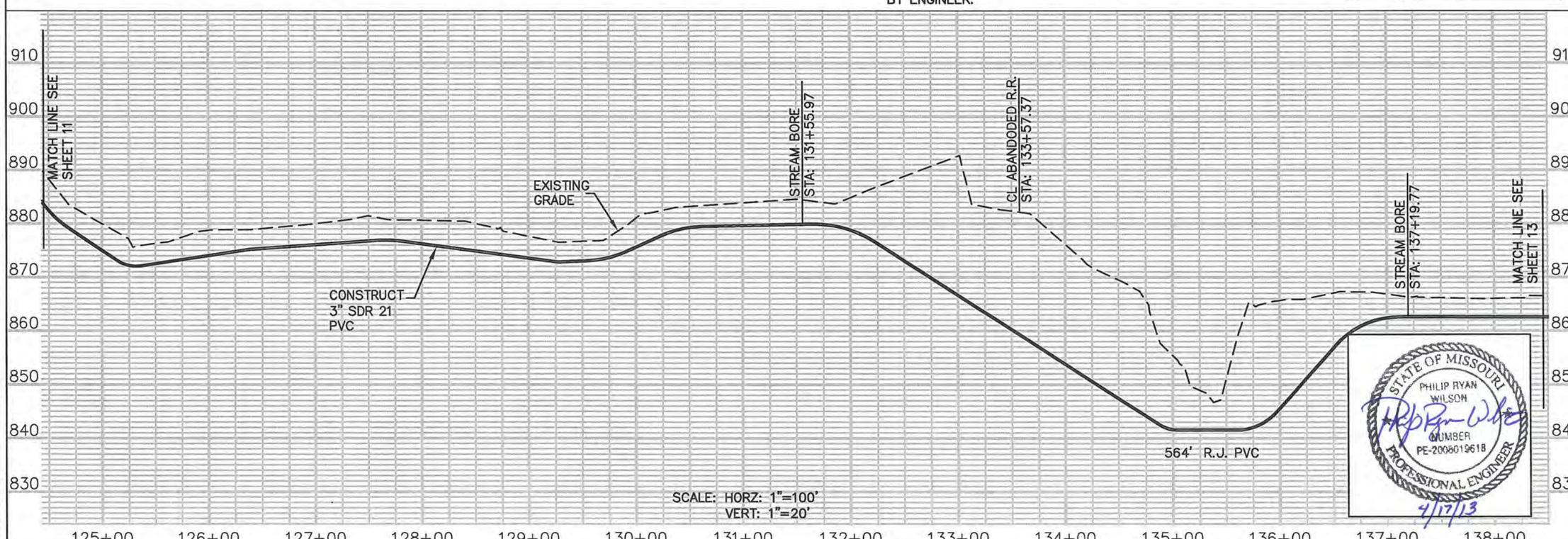

SCALE: HORZ: 1"=100'
VERT: 1"=20'

STATE OF MISSOURI
PHILIP RYAN WILSON
NUMBER PE-2008019618
PROFESSIONAL ENGINEER
4/17/13

NO.	DATE	REVISIONS	BY	APP'D
5				
4				
3				
2				
1				

Designed By: PW
Drawn By: JMR
Checked By: PW
Issue Date:

COPYRIGHT © 2013 - SHAFER, KLINE & WARREN INC.
MISSOURI CERTIFICATE OF AUTHORITY: F001 30850

SHAFER, KLINE & WARREN, INC.
107 Butler Street, Macon, MO 63552-1628
660/385-6441 FAX: 660/385-6614
OFFICE LOCATIONS: Macon, MO Columbia, MO Houston, TX Iola, KS Lamesa, KS Tulsa, OK
North Kansas City, MO
CIVIL ENGINEERS ELECTRICAL ENGINEERS MECHANICAL ENGINEERS STRUCTURAL ENGINEERS LAND SURVEYORS LAND PLANNERS

MODOT REST AREA
DEARBORN, MO

SEWER IMPROVEMENTS
FORCEMAIN PLAN & PROFILE

120339

SHEET NO. 12 OF 24

L:\120339-020_CAD\CIVIL\120339 SITE.DWG
LAYOUT: SHT 12 | BY: JREIGELSBERGER | DATE: 4/17/2013
XREF DWG1: NONE | XREF DWG2: NONE
XREF DWG3: NONE | XREF DWG4: NONE

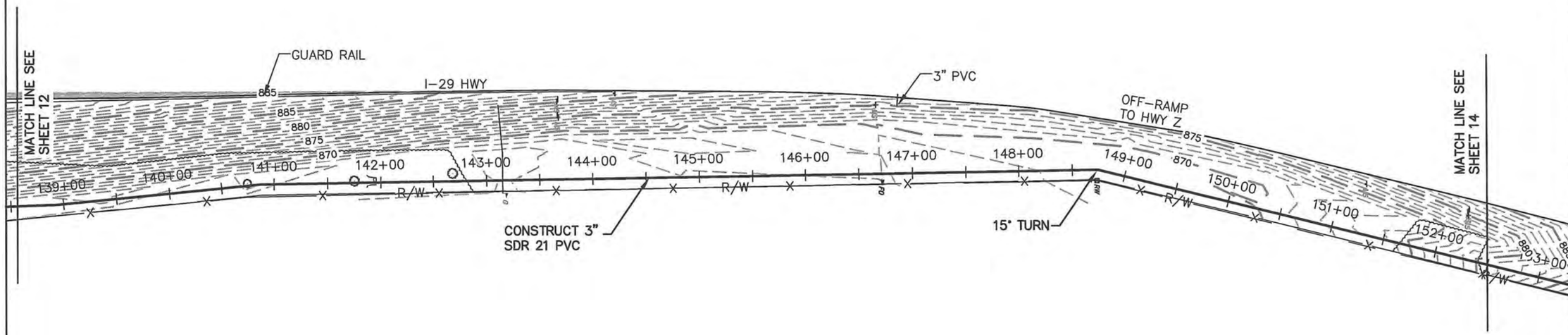

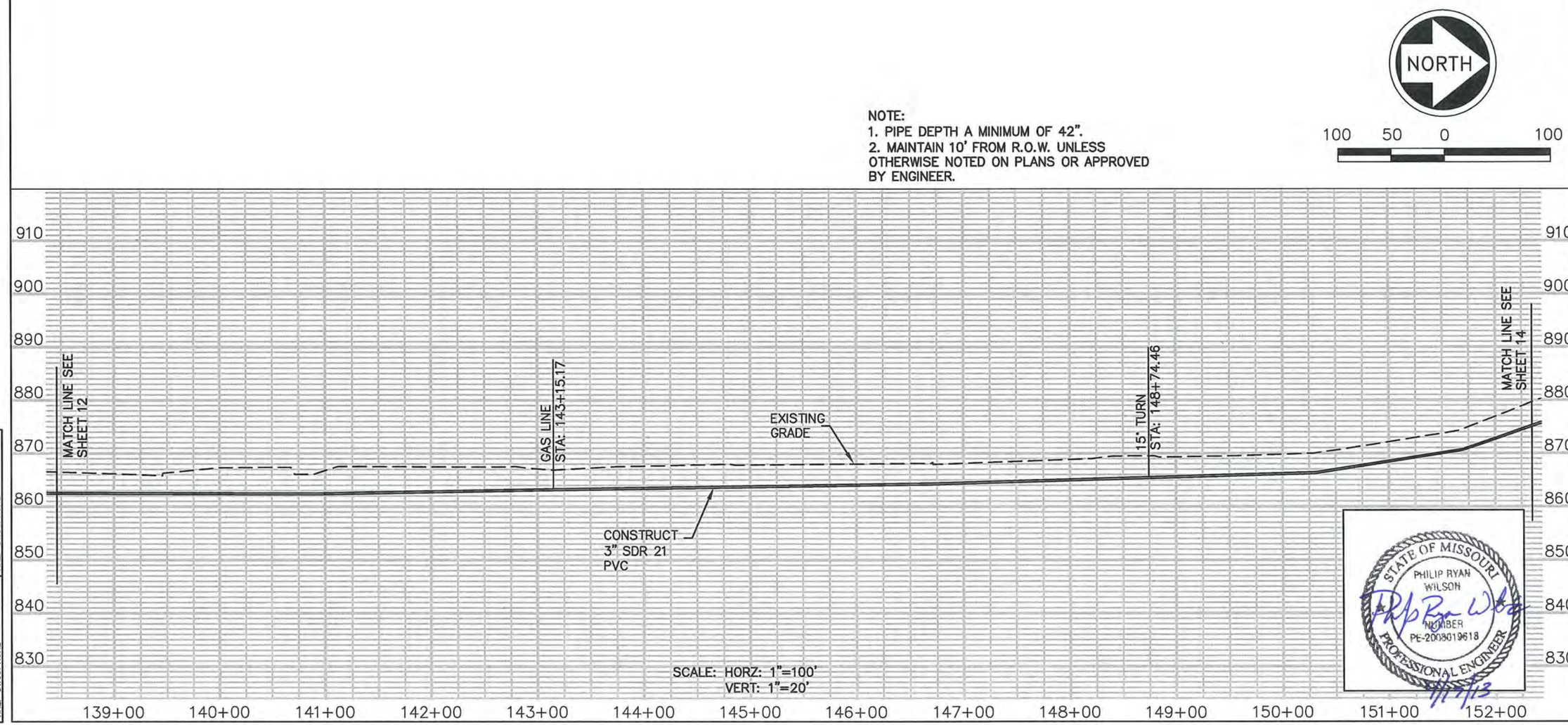

NOTE:
1. PIPE DEPTH A MINIMUM OF 42".
2. MAINTAIN 10' FROM R.O.W. UNLESS OTHERWISE NOTED ON PLANS OR APPROVED BY ENGINEER.

SCALE: HORZ: 1"=100'
VERT: 1"=20'

STATE OF MISSOURI
PHILIP RYAN WILSON
NUMBER PE-2008019618
PROFESSIONAL ENGINEER
4/17/13

NO.	DATE	REVISIONS	BY	APP'D
5				
4				
3				
2				
1				

Designed By: PW
Drawn By: JWR
Checked By: PW
Issue Date:

COPYRIGHT © 2013 SHAFER, KLINE & WARREN INC.
MISSOURI CERTIFICATE OF AUTHORITY: FD0139850

SHAFER, KLINE & WARREN, INC.
107 Butler Street, Macon, MO 63552-1628
660/385-6441 FAX: 660/385-6614
OFFICE LOCATIONS: Macon, MO Columbia, MO Houston, TX Iola, KS Lenexa, KS Tulsa, OK North Kansas City, MO

MODOT REST AREA
DEARBORN, MO

SEWER IMPROVEMENTS
FORCEMAIN PLAN & PROFILE

120339
SHEET NO.
13 OF 24

L:\120339-020_CAD\CIVIL\120339 SITE.DWG
LAYOUT: SHT 13 | BY: JREIGELSBERGER | DATE: 4/17/2013
XREF DWG1: NONE | XREF DWG2: NONE
XREF DWG3: NONE | XREF DWG4: NONE

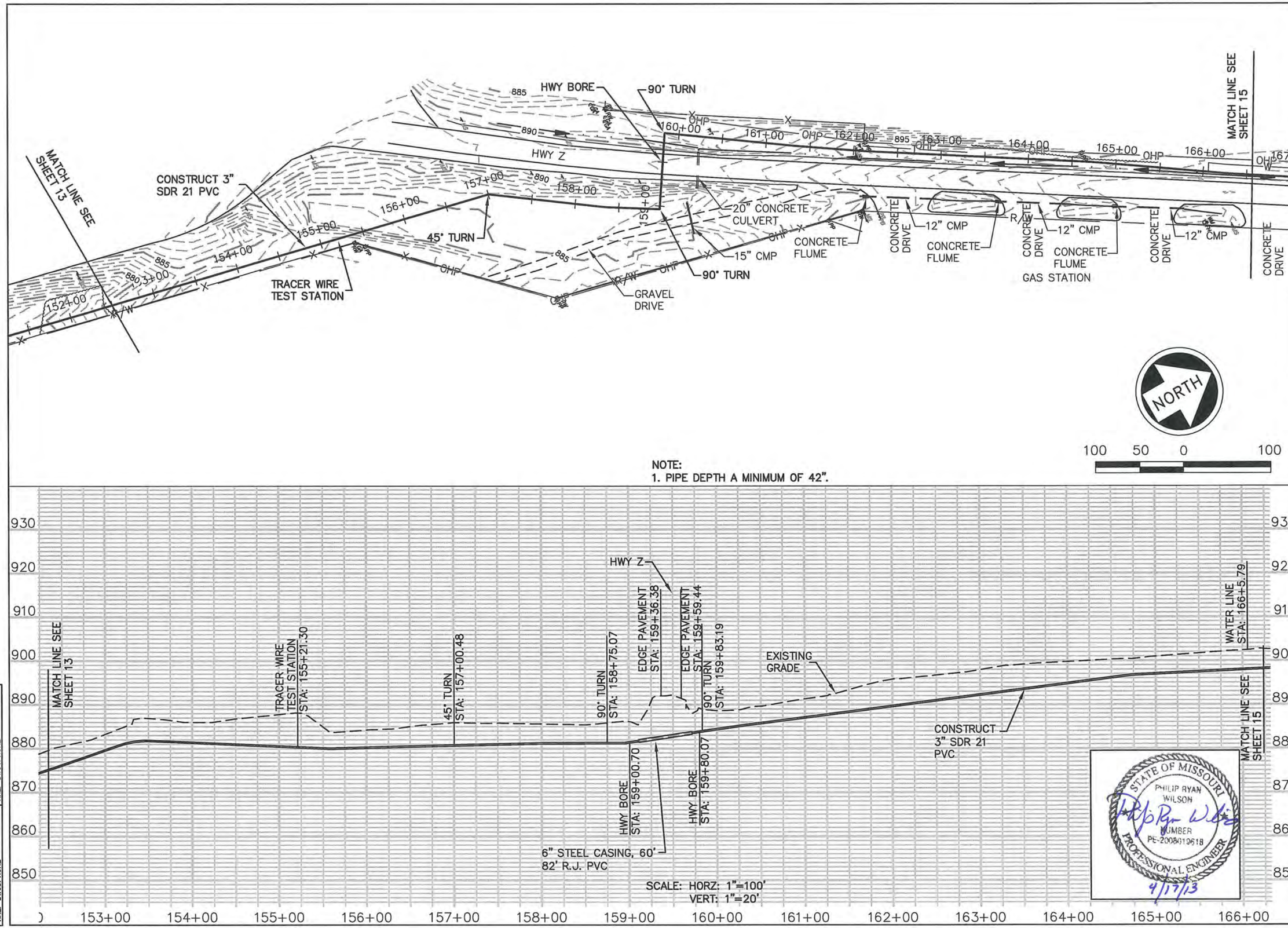

NO.	DATE	REVISIONS	BY	APP'D
5				
4				
3				
2				
1				

Designed By: PW
Drawn By: JWR
Checked By: PW
Issue Date:

COPYRIGHT © 2013 - SHAFER, KLINE & WARREN INC.
MISSOURI CERTIFICATE OF AUTHORITY: F0013850

SHAFER, KLINE & WARREN, INC.
107 Butler Street, Macon, MO 63552-1628
660/385-6441 FAX: 660/385-6614
OFFICE LOCATIONS: Macon, MO Columbia, MO Houston, TX Iola, KS Lenexa, KS Tulsa, OK North Kansas City, MO
CIVIL ENGINEERS ELECTRICAL ENGINEERS MECHANICAL ENGINEERS STRUCTURAL ENGINEERS LANDSCAPE ARCHITECTS LAND SURVEYORS LAND PLANNERS

MODOT REST AREA
DEARBORN, MO

SEWER IMPROVEMENTS
FORCEMAIN PLAN & PROFILE

120339

SHEET NO. 14 OF 24

LAYOUT: SHT 14 | BY: JREIGELSBERGER | DATE: 4/17/2013
L:\120339-020_CAD\CIVIL\120339 SITE.DWG
XREF DWG1: NONE | XREF DWG2: NONE
XREF DWG3: NONE | XREF DWG4: NONE

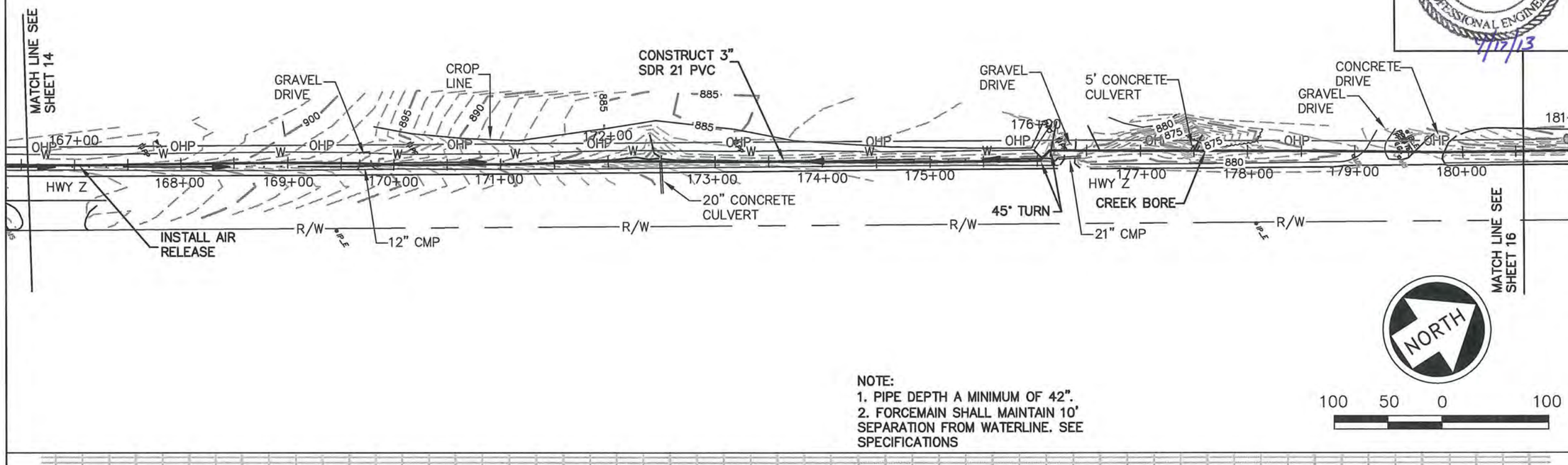

NOTE:
1. PIPE DEPTH A MINIMUM OF 42".
2. FORCEMAIN SHALL MAINTAIN 10' SEPARATION FROM WATERLINE. SEE SPECIFICATIONS

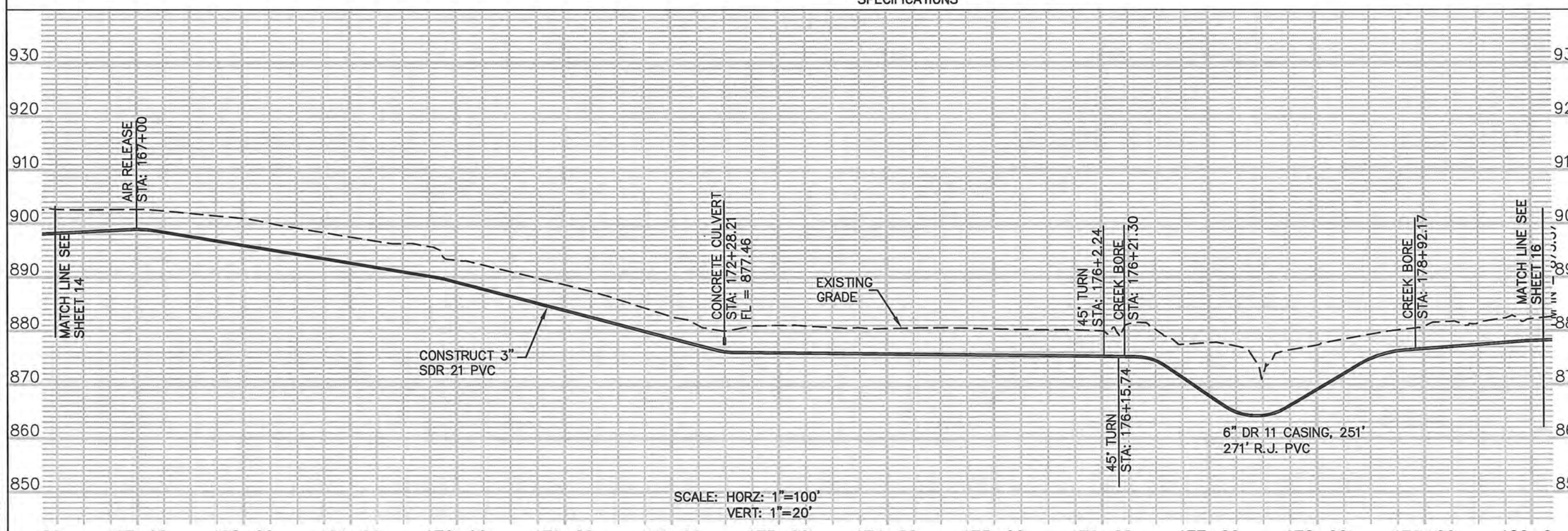

NO.	DATE	REVISIONS	BY	APP'D
5				
4				
3				
2				
1				

COPYRIGHT ©-2013 -SHAFER, KLINE & WARREN INC.
MISSOURI CERTIFICATE OF AUTHORITY: F2013000050

Designed By: PW
Drawn By: JWR
Checked By: PW
Issue Date:

SHAFER, KLINE & WARREN, INC.
107 Butler Street, Macon, MO 63552-1628
660/385-6441 FAX: 660/385-6614
OFFICE LOCATIONS: Macon, MO Columbia, MO Houston, TX Iola, KS Lenexa, KS Tulsa, OK North Kansas City, MO
CIVIL ENGINEERS ELECTRICAL ENGINEERS MECHANICAL ENGINEERS STRUCTURAL ENGINEERS LANDSCAPE ARCHITECTS LAND SURVEYORS LAND PLANNERS

MODOT REST AREA
DEARBORN, MO

SEWER IMPROVEMENTS
FORCEMAIN PLAN & PROFILE

120339

SHEET NO. 15 OF 24

L:\120339-020_CAD\CIVIL\120339 SITE.DWG
LAYOUT: SHT 15 | BY: JREIGELSBERGER | DATE: 4/17/2013
XREF DWG1: NONE | XREF DWG2: NONE
XREF DWG3: NONE | XREF DWG4: NONE

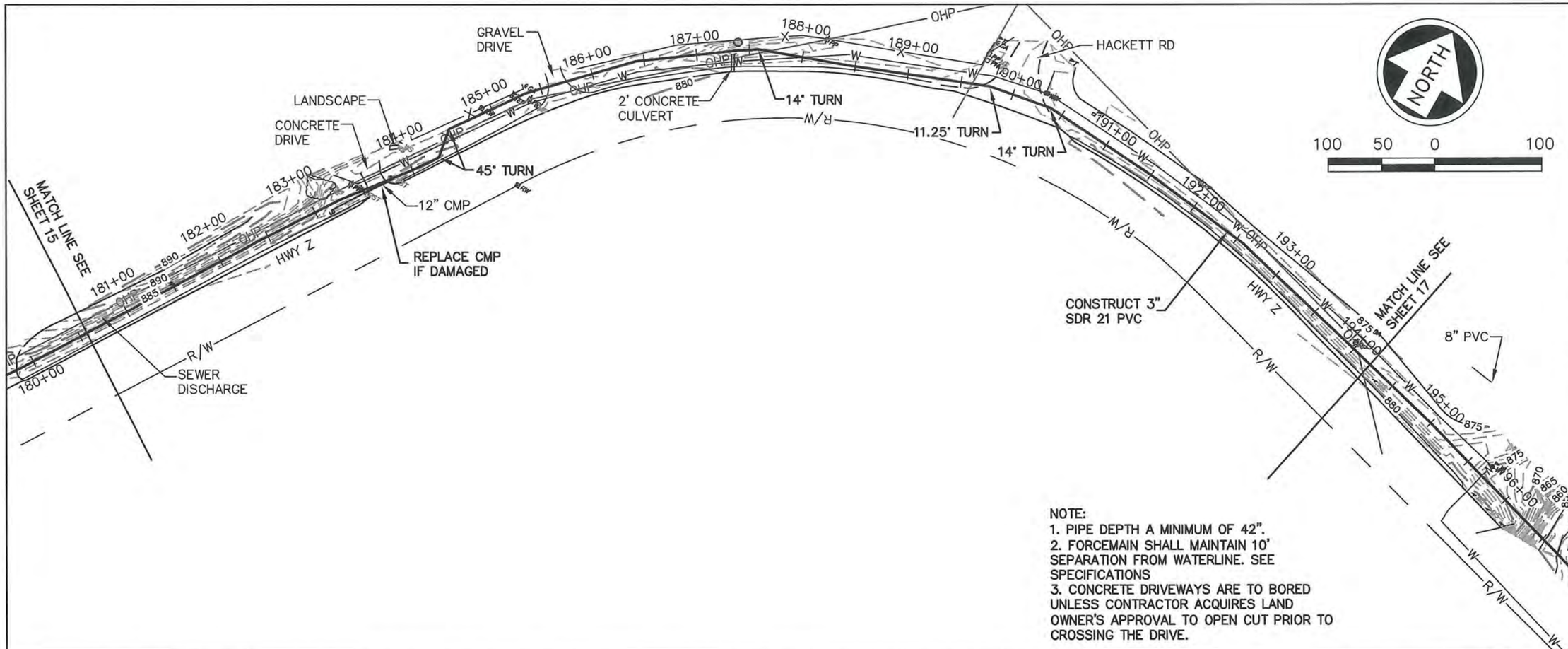

NOTE:
1. PIPE DEPTH A MINIMUM OF 42".
2. FORCEMAIN SHALL MAINTAIN 10' SEPARATION FROM WATERLINE. SEE SPECIFICATIONS
3. CONCRETE DRIVEWAYS ARE TO BORED UNLESS CONTRACTOR ACQUIRES LAND OWNER'S APPROVAL TO OPEN CUT PRIOR TO CROSSING THE DRIVE.

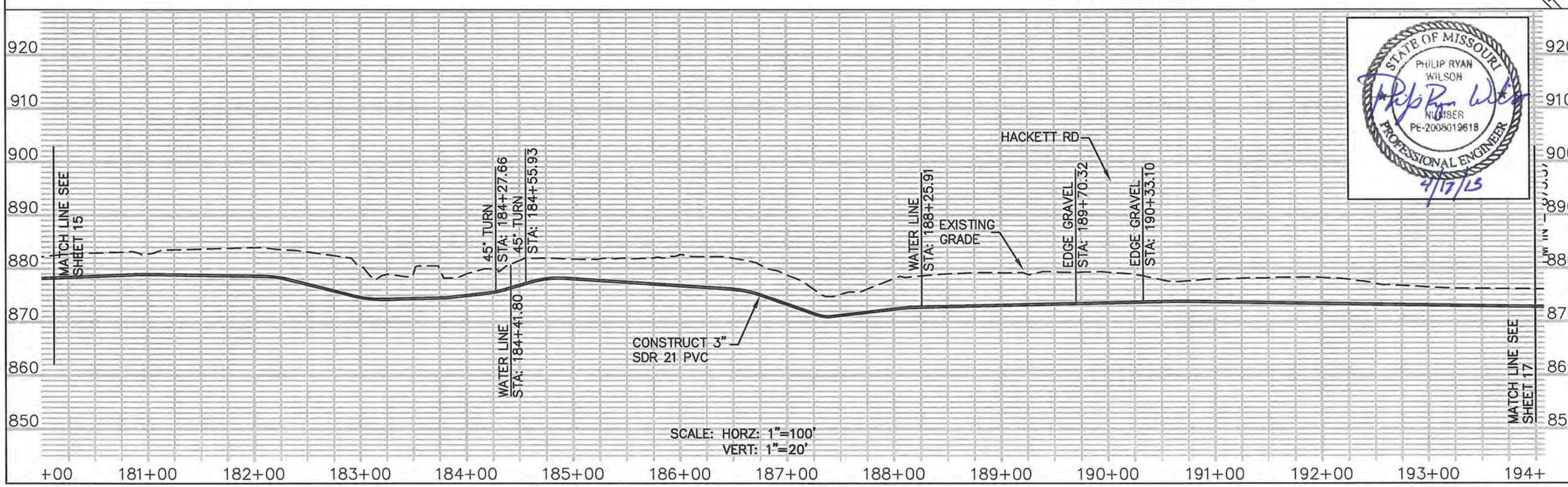

STATE OF MISSOURI
PHILIP RYAN WILSON
NUMBER PE-2005019618
PROFESSIONAL ENGINEER
4/17/13

NO.	DATE	REVISIONS	BY	APP'D
5				
4				
3				
2				
1				

Designed By: PW
Drawn By: JMR
Checked By: PW
Issue Date:

COPYRIGHT ©-2013 -SHAFER, KLINE & WARREN INC.
MISSOURI CERTIFICATE OF AUTHORITY: F001308SO

SHAFER, KLINE & WARREN, INC.
107 Butler Street, Macon, MO 63552-1628
660/385-6441 FAX: 660/385-6614
OFFICE LOCATIONS: Macon, MO Columbia, MO Houston, TX Iola, KS Lenexa, KS Tulsa, OK
North Kansas City, MO
CIVIL ENGINEERS ELECTRICAL ENGINEERS MECHANICAL ENGINEERS STRUCTURAL ENGINEERS LAND SURVEYORS LAND PLANNERS

MODOT REST AREA
DEARBORN, MO

SEWER IMPROVEMENTS
FORCEMAIN PLAN & PROFILE

120339

SHEET NO. 16 OF 24

L:\120339-020_CAD\CIVIL\120339 SHT.DWG
LAYOUT: SHT 16 | BY: JREIGELSBERGER | DATE: 4/17/2013
XREF DWG1: NONE | XREF DWG2: NONE
XREF DWG3: NONE | XREF DWG4: NONE

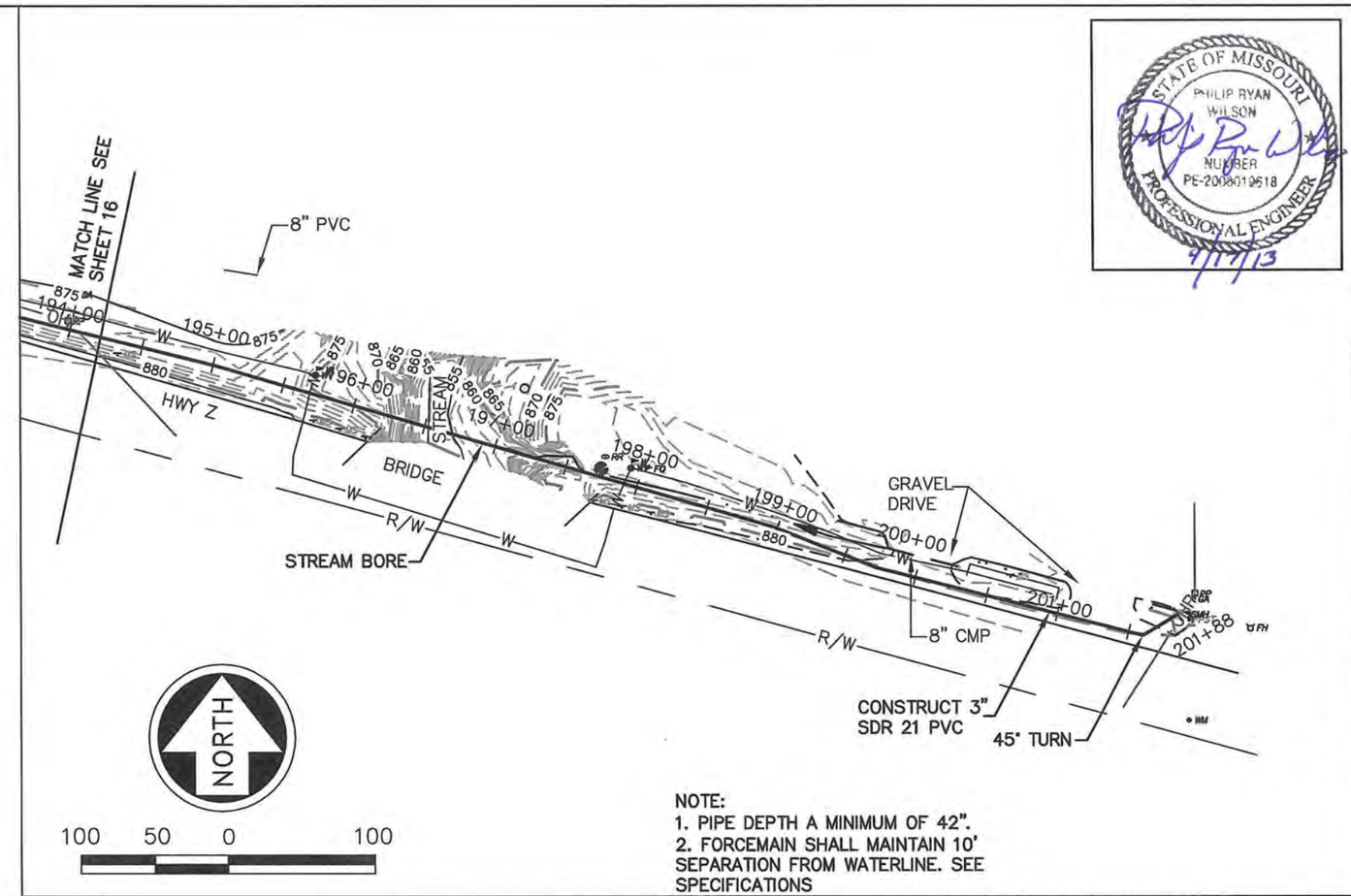

NOTE:
1. PIPE DEPTH A MINIMUM OF 42".
2. FORCEMAIN SHALL MAINTAIN 10' SEPARATION FROM WATERLINE. SEE SPECIFICATIONS

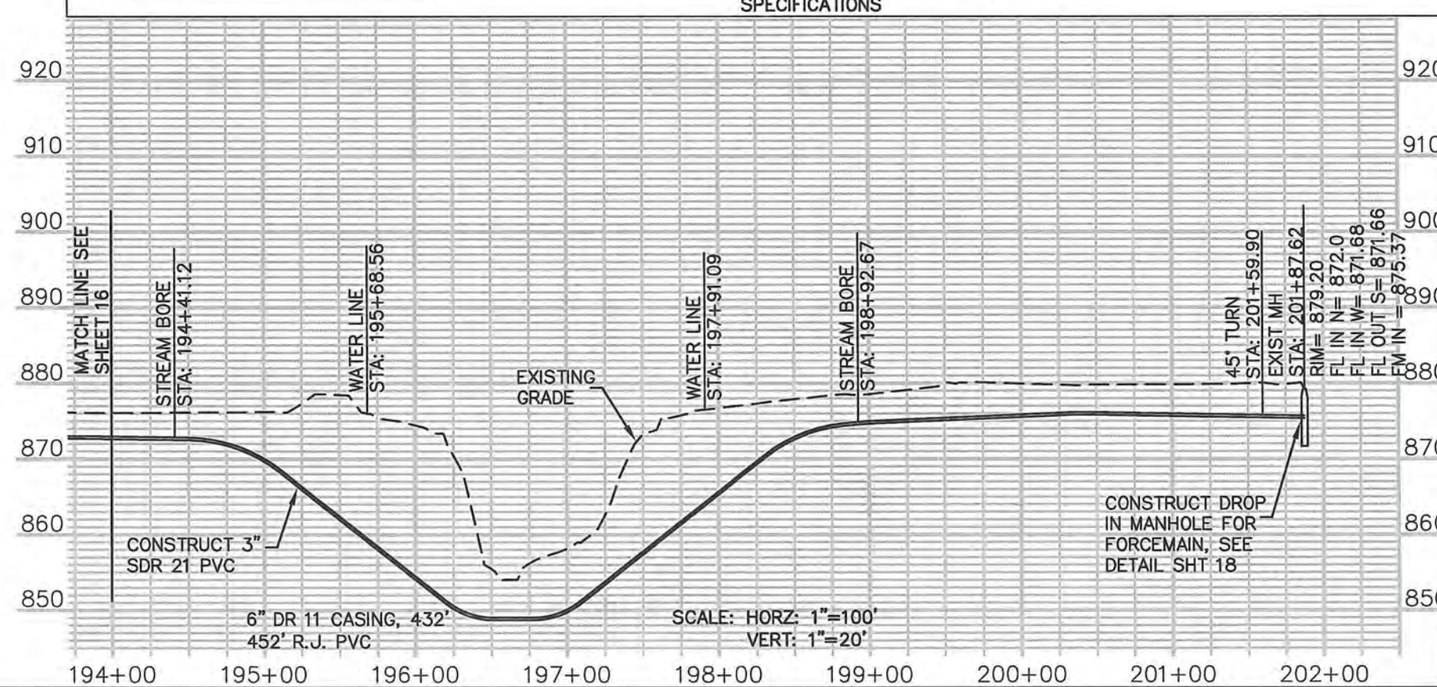

STATE OF MISSOURI
PHILIP RYAN WILSON
NUMBER PE-2008019618
PROFESSIONAL ENGINEER
4/17/13

NO.	DATE	REVISIONS	BY	APP'D
1				
2				
3				
4				
5				

Designed By: PW
Drawn By: JWR
Checked By: PW
Issue Date:

COPYRIGHT ©-2013 -SHAFER, KLINE & WARREN INC.
MISSOURI CERTIFICATE OF AUTHORITY: F00130950

SHAFER, KLINE & WARREN, INC.
107 Butler Street, Macon, MO 63552-1628
660/385-6441 FAX: 660/385-6614
OFFICE LOCATIONS: Macon, MO Columbia, MO Houston, TX Iola, KS Lenexa, KS Tulsa, OK North Kansas City, MO
CIVIL ENGINEERS ELECTRICAL ENGINEERS MECHANICAL ENGINEERS STRUCTURAL ENGINEERS ARCHITECTS LAND SURVEYORS LAND PLANNERS

MODOT REST AREA
DEARBORN, MO

SEWER IMPROVEMENTS
FORCEMAIN PLAN & PROFILE

120339

SHEET NO. 17 OF 24

L:\120339-020_CAD\CIVIL\120339 SITE.DWG
LAYOUT: SHT 17 | BY: JREIGELSBERGER | DATE: 4/17/2013
XREF DWG1: NONE | XREF DWG2: NONE
XREF DWG3: NONE | XREF DWG4: NONE

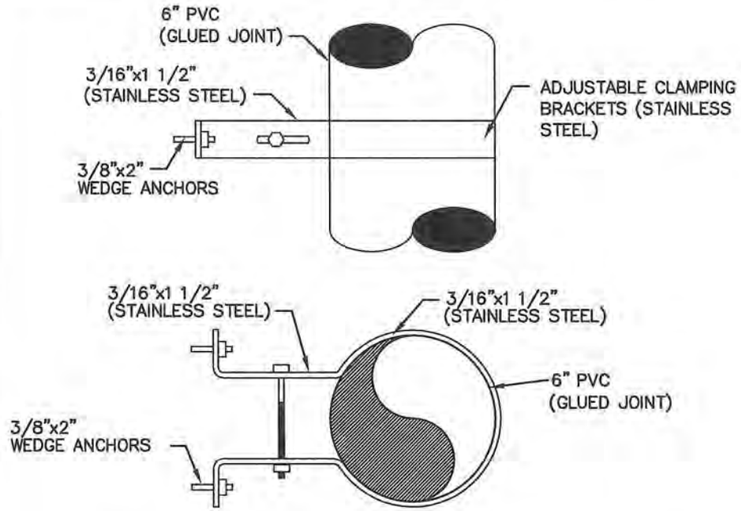

STAINLESS STEEL CLAMPING BRACKETS

SCALE: N.T.S.

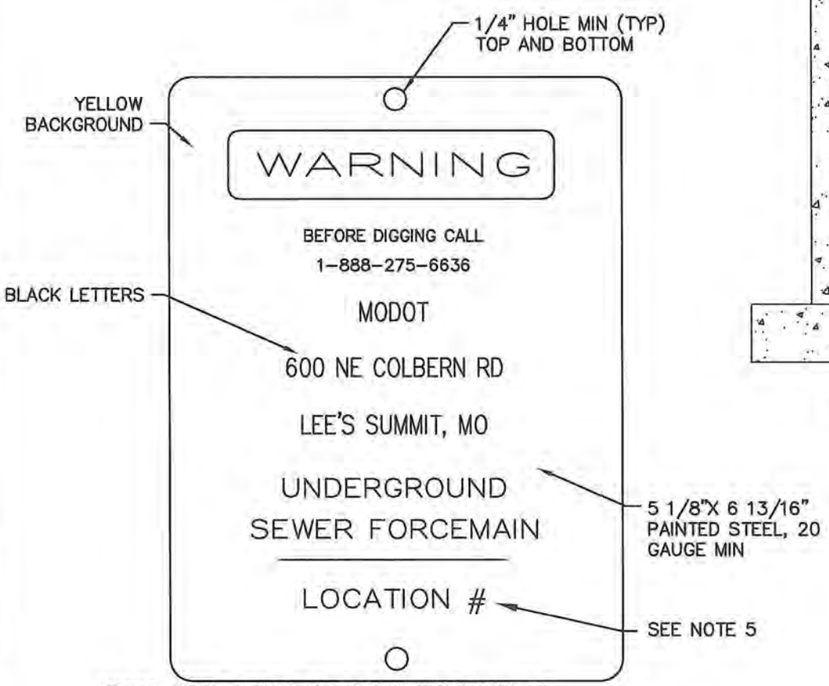

NOTES: NAME PLATES AND SEWER LINE MARKERS

1) NAME PLATES SHALL BE PLACED IN ALL FENCE CROSSINGS.
2) NAME PLATES AND POSTS SHALL BE PLACED ON BOTH SIDES OF ALL ROAD CROSSINGS AND CREEK/STREAM CROSSINGS.
3) NAME PLATES AND POSTS SHALL BE PLACED AT ALL WATER LINE APPURTENANCES. I.E. GATE VALVES, AIR RELEASE VALVES, TEST STATIONS...
4) 48" MINUMIM CLEARANCE BETWEEN BOTTOM OF SIGN AND EXISTING GROUND LEVEL.
5) COORDINATE WITH OWNER FOR LOCATION NUMBERS ON NAME PLATE.

NAME PLATE DETAIL

SCALE: N.T.S.

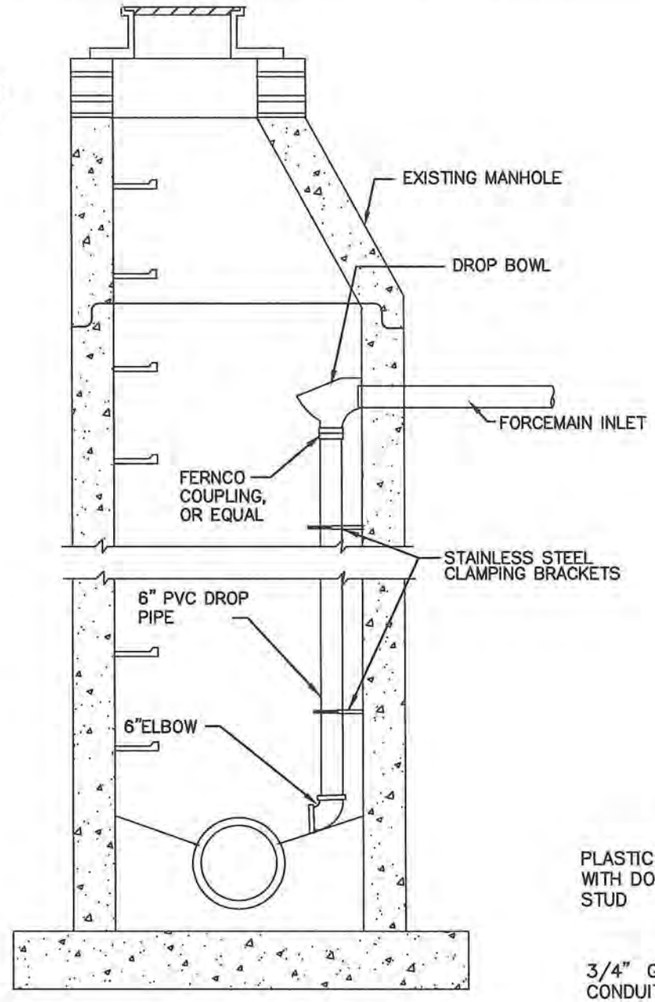

INSIDE DROP MANHOLE

SCALE: N.T.S.

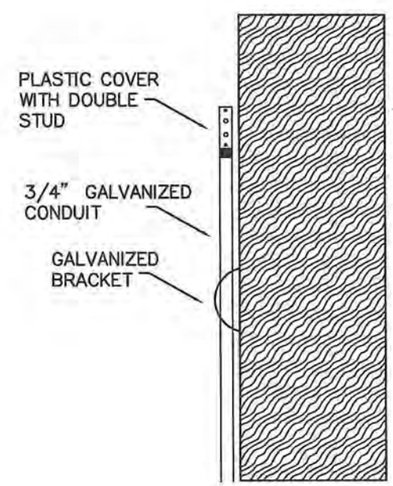

TEST STATION

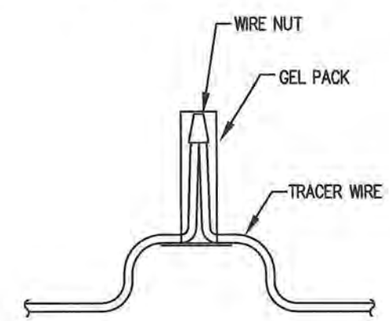

SPLICE TRACER WITH WIRE NUT, THEN INSERT SPLICE INTO GEL PACK

TRACER WIRE SPLICE

NOTE:

1. TRACER WIRE TEST STATIONS SHALL BE PLACED NEAR FENCE OR POWER POLES, IF POSSIBLE. MAXIMUM SPACING OF TEST STATIONS SHALL BE 2640' FEET UNLESS NOTED OTHERWISE ON PLANS.

TRACER WIRE DETAILS

SCALE: N.T.S.

STATE OF MISSOURI
PHILIP RYAN WILSON
NUMBER PE-2008019618
PROFESSIONAL ENGINEER
7/17/13

NO.	DATE	REVISIONS	BY	APPD
1				
2				
3				
4				
5				

COPYRIGHT ©-2013 -SHAFER, KLINE & WARREN INC.
MISSOURI CERTIFICATE OF AUTHORITY: F001-30850

Designed By: PW
Drawn By: MR
Checked By: PW
Issue Date:

SHAFER, KLINE & WARREN, INC.
107 Butler Street, Macon, MO 63552-1628
660/385-6441 FAX: 660/385-6614
OFFICE LOCATIONS: Macon, MO Columbia, MO Houston, TX Iola, KS Lenexa, KS Tulsa, OK
North Kansas City, MO
CIVIL ENGINEERS ELECTRICAL ENGINEERS MECHANICAL ENGINEERS STRUCTURAL ENGINEERS LANDSCAPE ARCHITECTS LAND SURVEYORS LAND PLANNERS

MODOT REST AREA
DEARBORN, MO

SEWER IMPROVEMENTS
DETAILS

120339

SHEET NO.
18 OF 24

L:\120339-020_CAD\CIVIL\120339 DETAILS.DWG
LAYOUT: SHT 18 | BY: JREIGELSBERGER | DATE: 4/17/2013
XREF DWG1: NONE | XREF DWG2: NONE
XREF DWG3: NONE | XREF DWG4: NONE

TRENCH WIDTH			
PIPE SIZE (INCHES)	MIN. TRENCH WIDTH IN EARTH (INCHES)	MAX. TRENCH WIDTH IN EARTH (INCHES)	MIN. TRENCH WIDTH IN ROCK (INCHES)
< 4	20	26	20
4 – 6	22	30	24
8	22	30	24
10	24	32	24
12	30	35	26

NOTE:
WHEN ANY TRENCH IS AT EDGE OF PAVEMENT, BACKFILL TRENCH WITH COMPACTED ROLL STONE BASE ROCK, AFTER BEDDING.

NOTES: PIPE INSTALLATION/BEDDING (FORCEMAIN)

1) PIPE SHALL BE BURIED TO A MINIMUM DEPTH OF 42" TO THE TOP OF THE MAIN LINE AND SERVICES

2) PVC PIPE SHALL BE SLIP JOINT SDR21 AND SHALL MEET REQUIREMENTS OF ASTM 2241. JOINTS SHALL BE 20' IN LENGTH UNLESS PREAPPROVED BY THE ENGINEER

3) ALL CHANGES IN THE MAIN LINE DIRECTION GREATER THAN 11.25° SHALL BE ACCOMPLISHED USING STANDARD FITTINGS

5) TRACER WIRE SHALL BE TYPE UF #12 SOLID CONDUCTOR

6) TRACER WIRE SHALL BE INSTALLED WITH ALL MAIN LINES AND SERVICE LINES

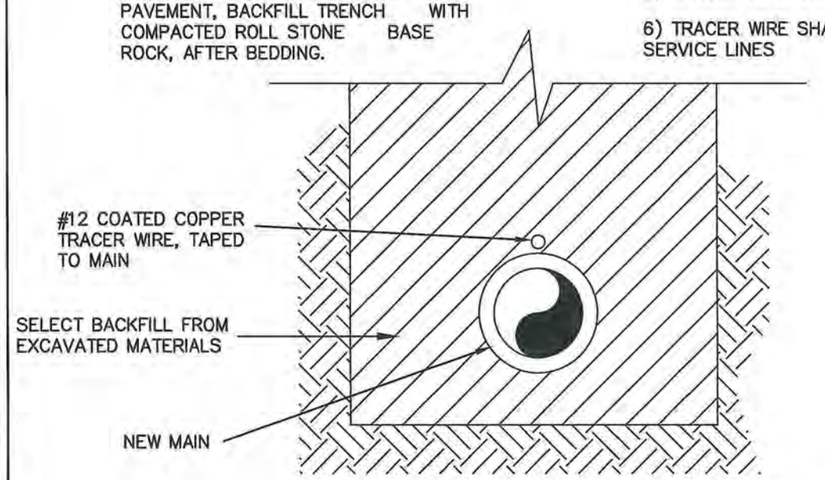

EXCAVATE AND REPLACE SOFT OR UNSUITABLE TRENCH BOTTOM AND REPLACE WITH GRANULAR EMBEDMENT MATERIAL OR GRANULAR BACKFILL MATERIAL, AS REQUIRED BY THE EARTHWORK SPECIFICATIONS.

NON-PAVED AND NON-GRAVELED SURFACE AREA (FORCEMAIN)

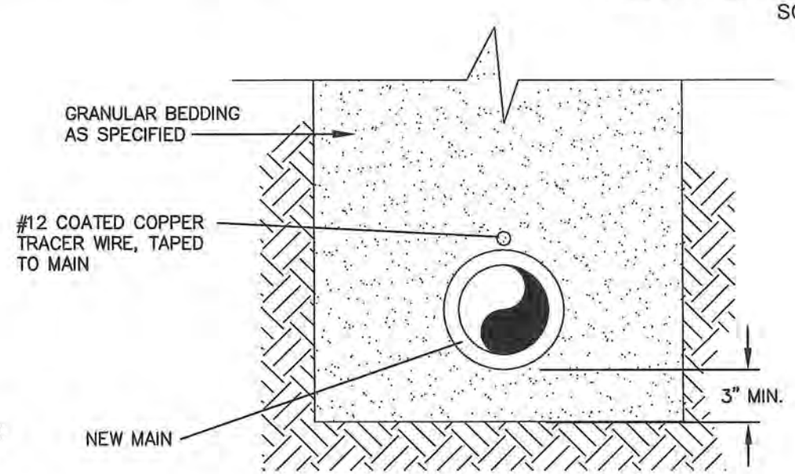

IN DRIVING SURFACES (FORCEMAIN)

TYPICAL PIPE INSTALLATION/BEDDING DETAILS

SCALE: N.T.S.

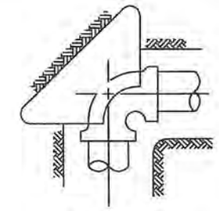

90° BEND

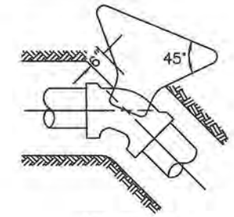

45° BEND OR LESS

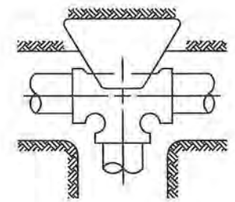

TEE

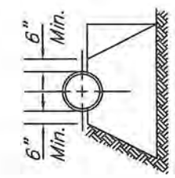

TYPICAL SECTION

THRUST BLOCK AREA TABLE

PIPE SIZE	24"	20"	18"	16"	14"	12"	10"	8"	6"	4" & UNDER
90° BEND	40	30	25	20		12	8	5	3	1
45° BEND	24	16	14	12		7	5	3	1 1/2	1
22 1/2° BEND	12	8	7	5 1/2		3 1/2	2 1/2	1 1/2	1	1
11 1/4° BEND	6	4	3 1/2	3		2	1 1/2	1	1	1
TEE	30	22	18	14		8	6	3 1/2	2	1

*TABLE GIVES REQUIRED AREA OF BEARING IN SQUARE FEET BETWEEN CONCRETE AND UNDISTURBED TRENCH WALL.

NOTE:
1. THRUST BLOCKS SHALL BE POURED CONCRETE.
2. THRUST BLOCKS SHALL BE PLACED AT EVERY FITTING.

TYPICAL CONCRETE THRUST BLOCKS

SCALE: N.T.S.

STATE OF MISSOURI
PHILIP RYAN WILSON
NUMBER PE-2008019618
PROFESSIONAL ENGINEER
4/17/13

NO.	DATE	REVISIONS	BY	APPD
1				
2				
3				
4				
5				

Designed By: PW
Drawn By: JWR
Checked By: PW
Issue Date:

COPYRIGHT © 2013 - SHAFER, KLINE & WARREN INC.
MISSOURI CERTIFICATE OF AUTHORITY: F001.30650

SHAFER, KLINE & WARREN, INC.
107 Butler Street, Macon, MO 63552-1628
660/385-6441 FAX: 660/385-6614
OFFICE LOCATIONS: Macon, MO Columbia, MO Houston, TX Iola, KS Lamoni, IA Tulsa, OK
North Kansas City, MO
CIVIL ENGINEERS ELECTRICAL ENGINEERS MECHANICAL ENGINEERS STRUCTURAL ENGINEERS LANDSCAPE ARCHITECTS LAND SURVEYORS LAND PLANNERS

MODOT REST AREA
DEARBORN, MO

SEWER IMPROVEMENTS
DETAILS

120339

SHEET NO. 19 OF 24

L:\120339-001_CAD\CIVIL\120339 DETAILS.DWG
LAYOUT: SHT 19 | BY: JREIGELSBERGER | DATE: 4/17/2013
XREF DWG1: NONE | XREF DWG2: NONE
XREF DWG3: NONE | XREF DWG4: NONE

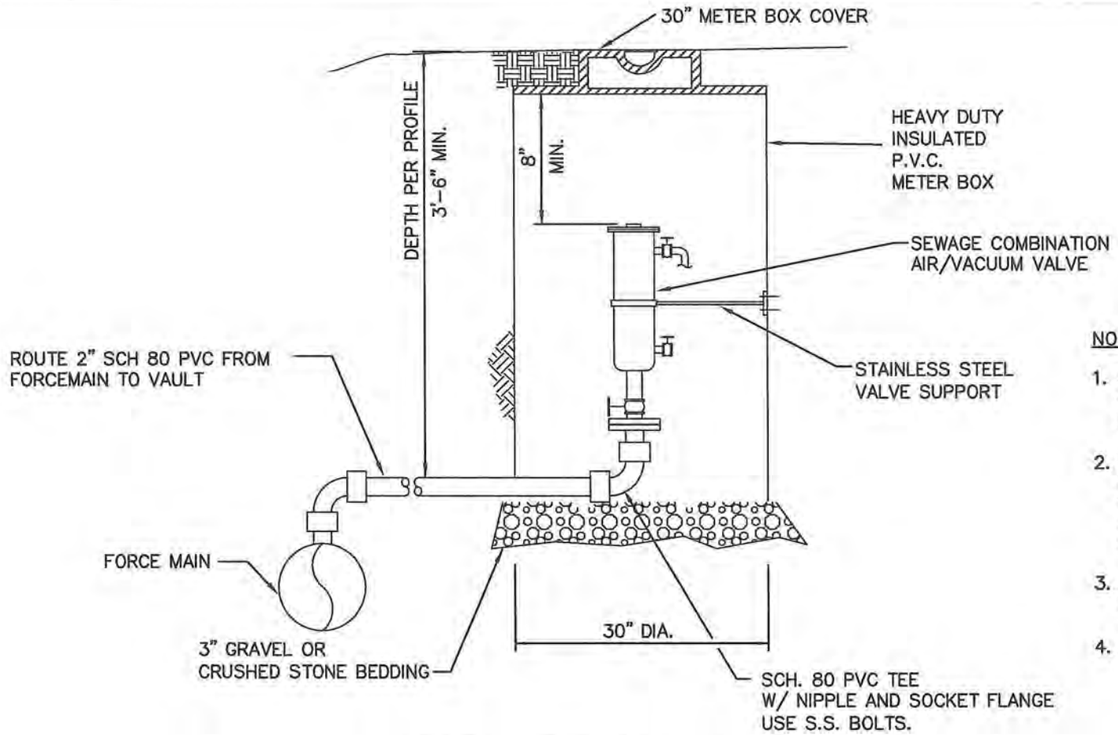

AIR/VACUUM RELEASE VALVE & VAULT

SCALE: N.T.S.

NOTES

1. SEWAGE AIR CONTROL VALVE INLETS SHALL BE 2" NPT. UNLESS OTHERWISE NOTED ON THE PLANS OR PROFILES, OUTLET SIZE SHALL BE 1/2" NPT AND AIR RELEASE ORIFICE SHALL BE 3/16".
2. IF HEIGHT OF VAULT CAUSES FRAME AND COVER TO BE ABOVE GRADE, PERFORM GRADING TO PROVIDE A SMOOTH TRANSITION. DO NOT LOCATE VAULT TO OBSTRUCT DITCH. IF NECESSARY, OFFSET ALIGNMENT AT VAULT TO AVOID PLACING THE STRUCTURE IN DITCH FLOWLINE OR ROADWAY.
3. PLACE 4"x4" POST BESIDE VALVE BOX. SHALL BE 4' IN GROUND & 4' ABOVE GROUND.
4. INSTALL TRACER WIRE TEST STATION BESIDE EACH AIR RELEASE VAULT

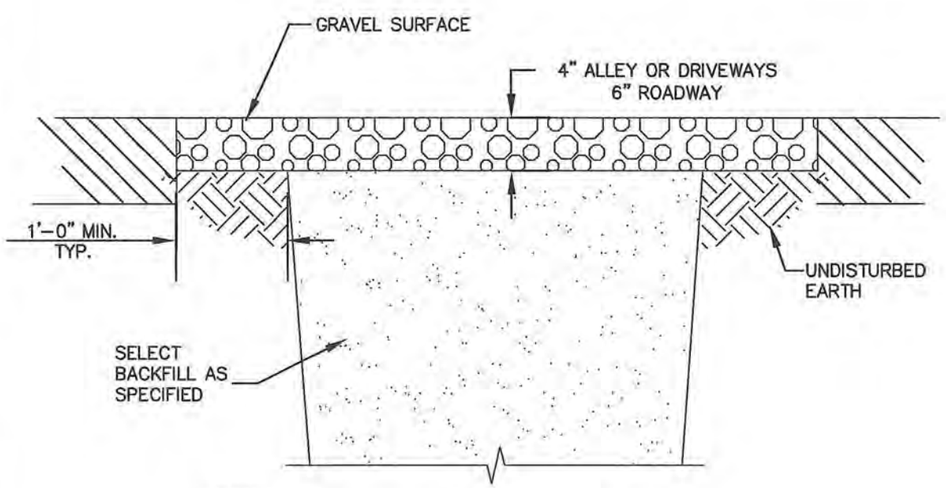

NOTE:
ROADWAYS TO BE BACKFILLED WITH 1" BASE ROCK

GRAVEL SURFACED AREA

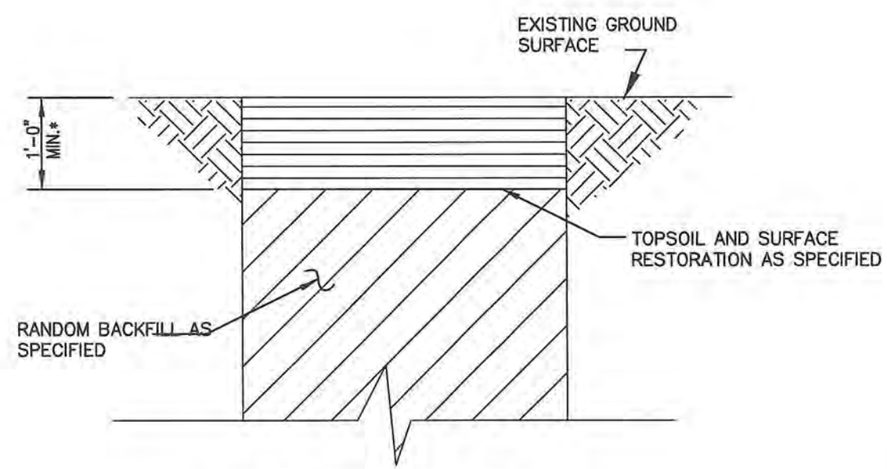

* 2'-0" MINIMUM IN ESTABLISHED GARDENS

NON-PAVED AND NON-GRAVELED SURFACE AREA

TYPICAL TRENCH BACKFILL & SURFACE RESTORATION DETAILS

SCALE: N.T.S.

STATE OF MISSOURI
PHILIP RYAN WILSON
NUMBER PE-2008019618
PROFESSIONAL ENGINEER
4/17/13

L:\120339-020_CAD\CIVIL\120339 DETAILS.DWG
LAYOUT: SHT 20 | BY: JREIGELSBERGER | DATE: 4/17/2013
XREF DWG1: NONE | XREF DWG2: NONE
XREF DWG3: NONE | XREF DWG4: NONE

Designed By: PW
Drawn By: JMR
Checked By: PW
Issue Date:

NO.	DATE	REVISIONS	BY	APP'D
1				
2				
3				
4				
5				

COPYRIGHT © 2013 - SHAFER, KLINE & WARREN INC.
MISSOURI CERTIFICATE OF AUTHORITY: F001330050

SHAFER, KLINE & WARREN, INC.
107 Butler Street, Macon, MO 63552-1628
660/385-6441 FAX: 660/385-6614
OFFICE LOCATIONS: Macon, MO Columbia, MO Houston, TX Iola, KS Lenexa, KS Tulsa, OK North Kansas City, MO
CIVIL ENGINEERS ELECTRICAL ENGINEERS STRUCTURAL ENGINEERS LANDSCAPE ARCHITECTS LAND SURVEYORS LAND PLANNERS

MODOT REST AREA
DEARBORN, MO

SEWER IMPROVEMENTS
DETAILS

120339

SHEET NO.
20 OF 24

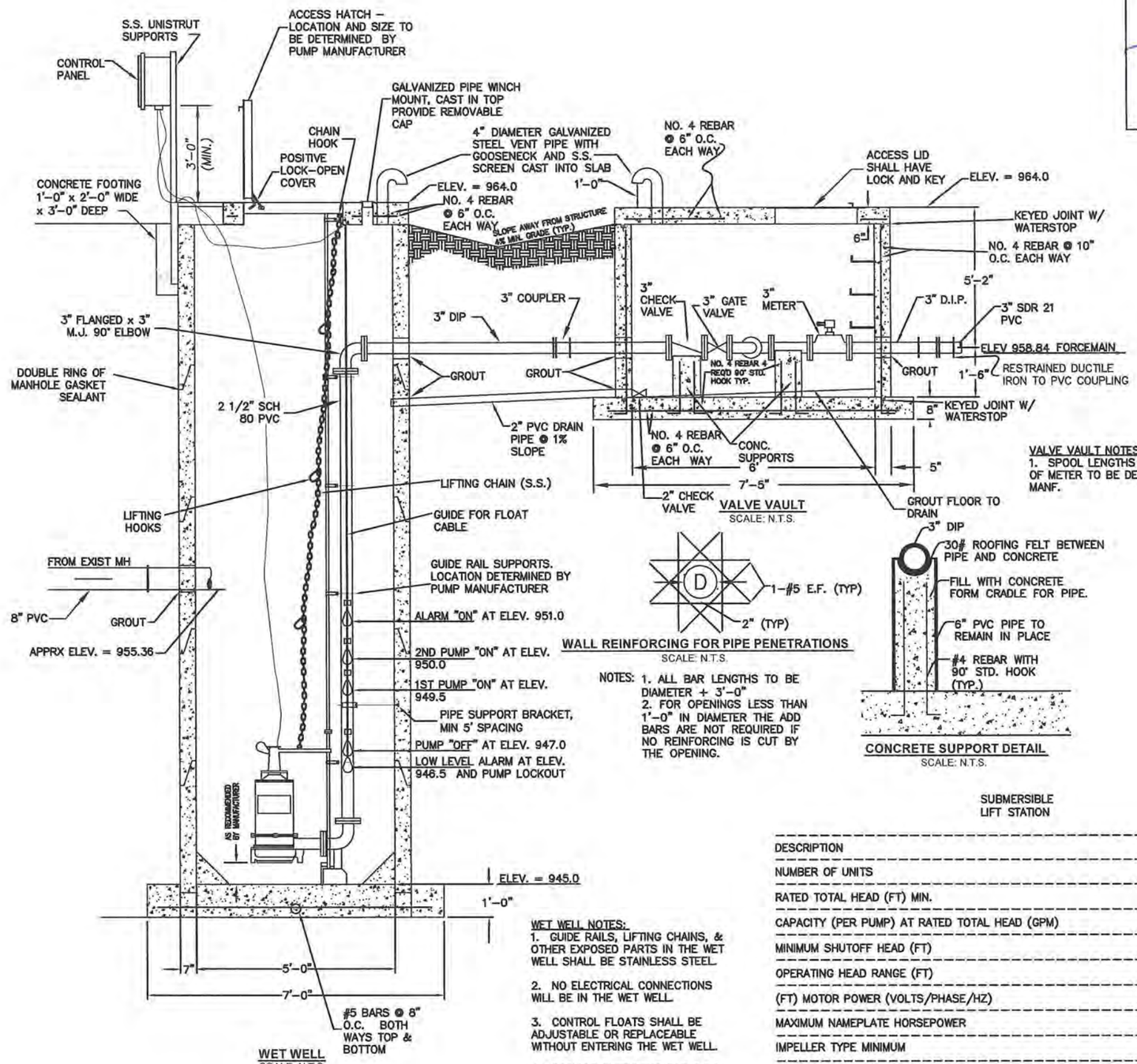

VALVE VAULT
SCALE: N.T.S.

WALL REINFORCING FOR PIPE PENETRATIONS
SCALE: N.T.S.

NOTES: 1. ALL BAR LENGTHS TO BE DIAMETER + 3'-0"
2. FOR OPENINGS LESS THAN 1'-0" IN DIAMETER THE ADD BARS ARE NOT REQUIRED IF NO REINFORCING IS CUT BY THE OPENING.

CONCRETE SUPPORT DETAIL
SCALE: N.T.S.

VALVE VAULT NOTES:
1. SPOOL LENGTHS ON EITHER SIDE OF METER TO BE DETERMINED BY MANF.

WET WELL
SCALE: N.T.S.

WET WELL NOTES:
1. GUIDE RAILS, LIFTING CHAINS, & OTHER EXPOSED PARTS IN THE WET WELL SHALL BE STAINLESS STEEL.
2. NO ELECTRICAL CONNECTIONS WILL BE IN THE WET WELL.
3. CONTROL FLOATS SHALL BE ADJUSTABLE OR REPLACEABLE WITHOUT ENTERING THE WET WELL.
4. PROVIDE SUFFICIENT CABLE TO ALLOW DISCONNECTION WITHOUT ENTERING INTERIOR OF LIFT STATION.
5. ACCESS HATCH SHALL HAVE LOCK & KEY.

SUBMERSIBLE LIFT STATION

DESCRIPTION	STORAGE POND LIFT STATION
NUMBER OF UNITS	2
RATED TOTAL HEAD (FT) MIN.	203
CAPACITY (PER PUMP) AT RATED TOTAL HEAD (GPM)	50
MINIMUM SHUTOFF HEAD (FT)	221
OPERATING HEAD RANGE (FT)	190–208
(FT) MOTOR POWER (VOLTS/PHASE/HZ)	230/3/60
MAXIMUM NAMEPLATE HORSEPOWER	10
IMPELLER TYPE MINIMUM	GRINDER
DISCHARGE SIZE (INCHES)	2 1/2"

NOTE: MAX (NOMINAL) PUMP OPERATING SPEED AT RATED HEAD SHALL BE 3450 R.P.M.

STATE OF MISSOURI
PHILIP RYAN WILSON
NUMBER PE-2008019618
PROFESSIONAL ENGINEER
4/17/13

NO.	DATE	REVISIONS	BY	APP'D
5				
4				
3				
2				
1				

COPYRIGHT © 2013 SHAFER, KLINE & WARREN, INC.
MISSOURI CERTIFICATE OF AUTHORITY: F001336500

Designed By: PW
Drawn By: JRR
Checked By: PW
Issue Date:

SHAFER, KLINE & WARREN, INC.
107 Butler Street, Macon, MO 63552-1628
660/385-6441 FAX: 660/385-6614
OFFICE LOCATIONS: Macon, MO Columbia, MO Houston, TX
Iola, KS Lenexa, KS Tulsa, OK
North Kansas City, MO
CIVIL ENGINEERS ELECTRICAL ENGINEERS MECHANICAL ENGINEERS STRUCTURAL ENGINEERS LANDSCAPE ARCHITECTS LAND SURVEYORS LAND PLANNERS

MODOT REST AREA
DEARBORN, MO

SEWER IMPROVEMENTS
PUMP STATION DETAILS

120339

SHEET NO.
21 OF 24

L:\120339-001\CAD\CIVIL\120339 DETAILS.DWG
LAYOUT: SHT 21 | BY: JREIGELSBERGER | DATE: 4/17/2013
XREF DWG1: NONE | XREF DWG2: NONE
XREF DWG3: NONE | XREF DWG4: NONE

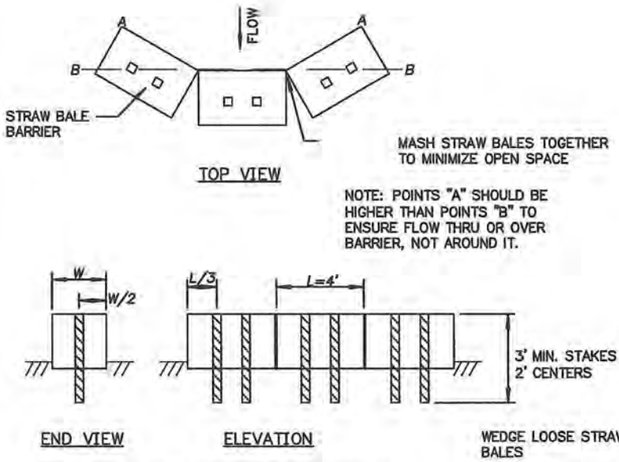

TEMPORARY STRAW BALE DITCH CHECK

N.T.S.

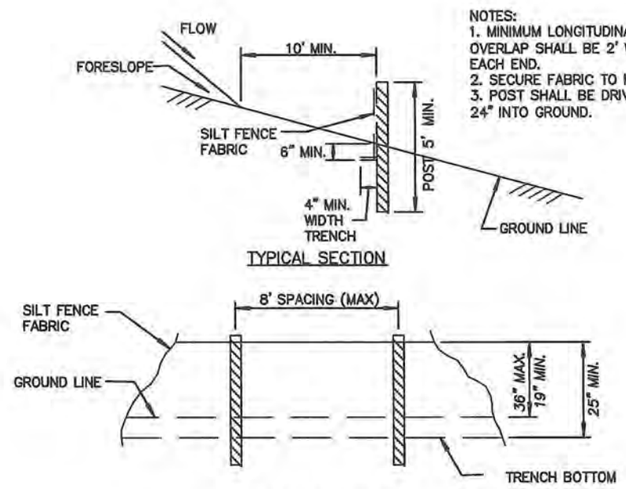

NOTES:
1. MINIMUM LONGITUDINAL SPLICE OVERLAP SHALL BE 2' WITH A POST AT EACH END.
2. SECURE FABRIC TO METAL POST.
3. POST SHALL BE DRIVEN A MINIMUM 24" INTO GROUND.

SILT FENCE DETAIL

N.T.S.

NOTES: EROSION CONTROL
1. CONTRACTOR SHALL INSTALL TEMPORARY EROSION CONTROLS WHERE CONSTRUCTION WORK MAY CAUSE SEDIMENT TO LEAVE THE CONSTRUCTION SITE DURING RAIN EVENTS.
2. THE TEMPORARY EROSION CONTROLS SHALL REMAIN IN PLACE UNTIL FINAL GRADING, SEEDING & MULCHING HAVE BEEN COMPLETED AND COVER HAS BEEN ESTABLISHED.
3. IT SHALL BE THE CONTRACTOR'S RESPONSIBILITY TO CONTROL EROSION AND PREVENT POLLUTION FOR ALL WORK IN WHICH THEY ARE DIRECTLY INVOLVED.

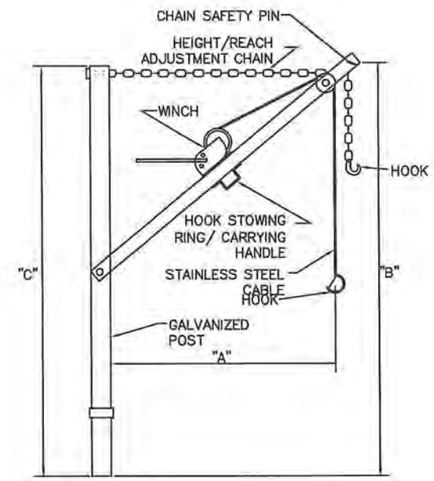

ITEM	LIFTING CAPACITY	"A" MIN	"A" MAX	"B" MIN	"B" MAX	"C"
LIFT STATION PUMP HOIST	1000 lb	14"	36"	36"	69"	72"

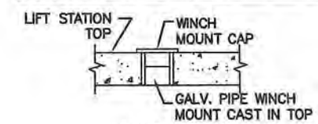

WINCH DETAIL

SCALE: N.T.S.

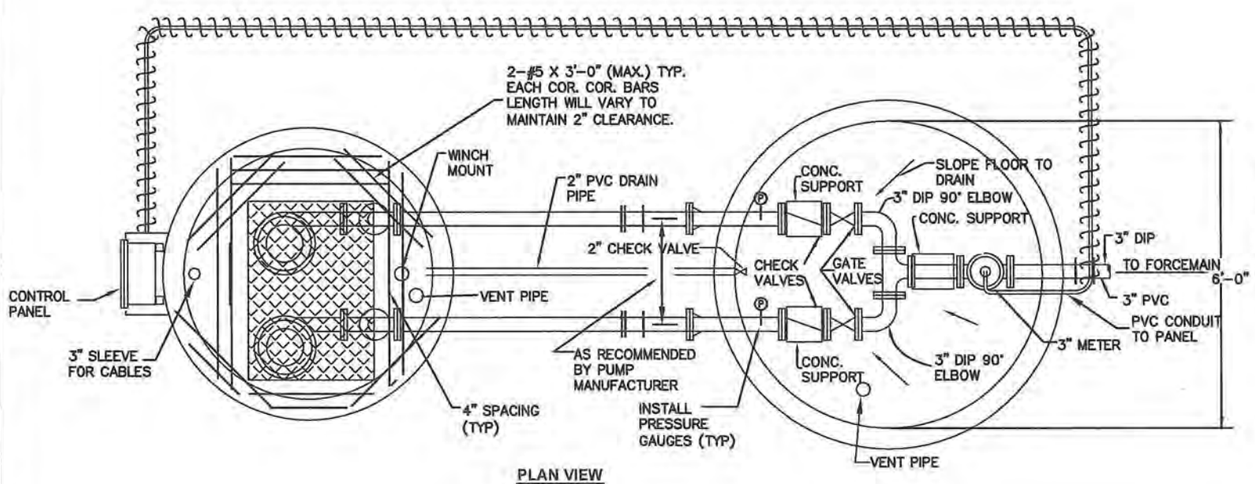

PLAN VIEW

SCALE: N.T.S.

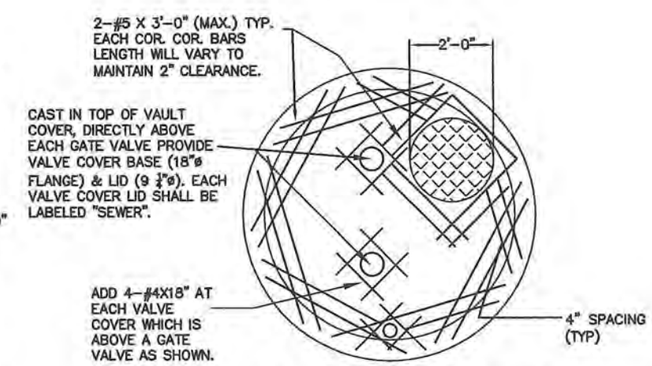

NOTE: REINFORCING STEEL AT OPENINGS IS IN ADDITION TO THE #4 @ 6" O.C. EACH WAY SHOWN IN THE SECTIONAL VIEW.

VALVE VAULT ACCESS LID

SCALE: N.T.S.

STATE OF MISSOURI
PHILIP RYAN WILSON
NUMBER PE-2008010618
PROFESSIONAL ENGINEER
4/17/13

NO.	DATE	REVISIONS	BY	APP'D
1				
2				
3				
4				
5				

Designed By: PW
Drawn By: JMR
Checked By: PW
Issue Date:

COPYRIGHT ©-2013 -SHAFER, KLINE & WARREN INC.

MISSOURI CERTIFICATE OF AUTHORITY: F001398SO

SHAFER, KLINE & WARREN, INC.
107 Butler Street, Macon, MO 63552-1628
660/385-6441 FAX: 660/385-6614
North Kansas City, MO
OFFICE LOCATIONS: Macon, MO Columbia, MO Houston, TX
Iola, KS Lawrence, KS Tulsa, OK
CIVIL ENGINEERS ELECTRICAL ENGINEERS MECHANICAL ENGINEERS STRUCTURAL ENGINEERS LANDSCAPE ARCHITECTS LAND SURVEYORS LAND PLANNERS

MODOT REST AREA
DEARBORN, MO

SEWER IMPROVEMENTS
PUMP STATION DETAILS

120339

SHEET NO. 22 OF 24

L:\120339-120_CAD\CIVIL\120339 DETAILS.DWG
LAYOUT: SHT 22 | BY: JREIGELSBERGER | DATE: 4/17/2013
XREF DWG1: NONE | XREF DWG2: NONE
XREF DWG3: NONE | XREF DWG4: NONE

NOTES: MODOT ROAD CROSSINGS
1. CASING SHALL EXTEND FROM R/W TO R/W UNLESS OTHERWISE NOTED ON PLAN SHEETS.
2. CASING SHALL BE SMOOTH WALL, WELDED–STEEL, SEE WALL THICKNESSES BELOW.
3. INSTALL HDPE CASING SPACERS AND END SEALS PER THE MANUFACTURERS RECOMMENDATIONS BASED ON CARRIER AND CASING SIZES. CASING SPACERS SHALL BE A MAX OF 9' APART WITH A MINIMUM OF 3 RUNNERS & HOLD THE CARRIER PIPE IN THE CENTER OF THE CASING. CASING ENDS SHALL BE SEALED WITH SYNTHETIC RUBBER, WRAP–AROUND END SEALS W/ STAINLESS STEEL BANDS, CASCADE WATERWORKS MFG. "MODEL CCES", ADVANCE PRODUCTS & SYSTEMS, INC. "MODEL AW" OR ENGINEER APPROVED EQUAL.
4. CARRIER PIPE SHALL BE PVC CL200 RESTRAINED JOINT. CARRIER PIPE SHALL EXTEND A MINIMUM OF 10 LF PAST EACH END OF CASING IF MAIN LINE IS A DIFFERENT MATERIAL.

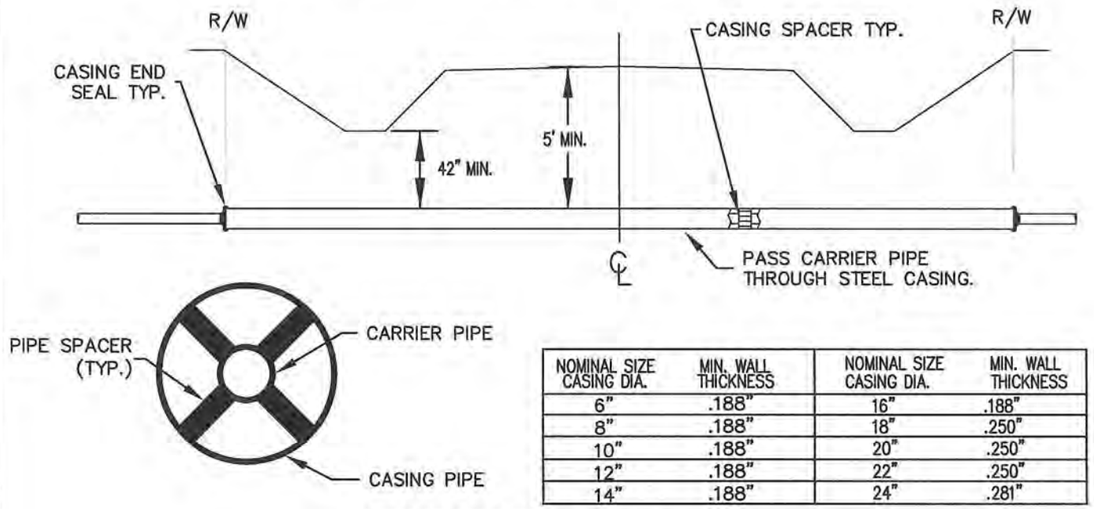

NOMINAL SIZE CASING DIA.	MIN. WALL THICKNESS	NOMINAL SIZE CASING DIA.	MIN. WALL THICKNESS
6"	.188"	16"	.188"
8"	.188"	18"	.250"
10"	.188"	20"	.250"
12"	.188"	22"	.250"
14"	.188"	24"	.281"

HIGHWAY BORE DETAIL
SCALE: N.T.S.

NOTES: COUNTY ROAD CROSSINGS
1) CARRIER PIPE BETWEEN COUPLINGS TO BE RESTRAINED JOINT; PIPING TO MEET ASTM D 2241. CROSSINGS LESS THAN 80 L.F. MAY BE SLIP JOINT PVC
2) FOR ALL PIPELINES 2" OR GREATER, MINIMUM CASING LENGTH SHALL BE FROM RIGHT–OF–WAY TO RIGHT–OF–WAY
3) INSTALL HDPE CASING SPACERS AND END SEALS PER THE MANUFACTURERS RECOMMENDATIONS BASED ON CARRIER PIPE AND CASING SIZES. CASING SPACERS SHALL BE A MAX OF 9' APART WITH A MINIMUM OF 3 RUNNERS & HOLD THE CARRIER PIPE IN THE CENTER OF THE CASING. CASING ENDS SHALL BE SEALED WITH SYNTHETIC RUBBER, WRAP–AROUND END SEALS W/ STAINLESS STEEL BANDS, CASCADE WATERWORKS MFG. "MODEL CCES", ADVANCE PRODUCTS & SYSTEMS, INC. "MODEL AW" OR ENGINEER APPROVED EQUAL.
4) GRAVELED COUNTY ROADS MAY BE OPEN CUT UNLESS OTHERWISE NOTED ON PLANS OR COUNTY PERMITS
5) COUNTY ROAD PERMITS AND REGULATIONS SHALL BE FOLLOWED AND WILL SUPERCEDE CONTRACT PLANS AND SPECIFICATIONS

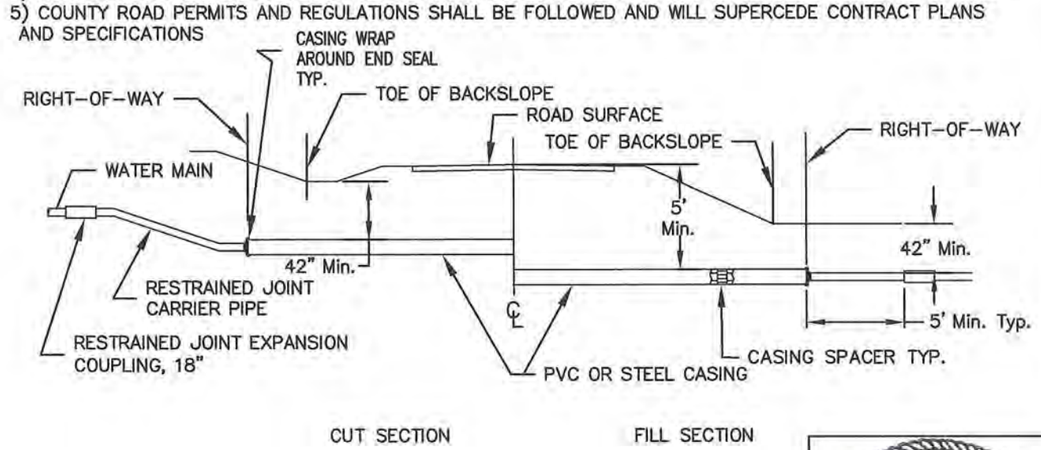

COUNTY ROAD BORE DETAIL
SCALE: N.T.S.

STATE OF MISSOURI
PHILIP RYAN WILSON
NUMBER PE-2008031961d
PROFESSIONAL ENGINEER
4/17/13

NOTES: CREEK BORE
1) CARRIER PIPE SHALL BE CL200 PVC RESTRAINED JOINT AND SHALL EXTEND 10 L.F. PAST EACH END OF CASING.
2) CASING SHALL EXTEND TO POINT OF MINIMUM COVER ON BOTH SIDES OF CHANNEL.
3) GRADING & SEEDING WILL BE REQUIRED, TO PREVENT EROSION.
4) COMPACT BACKFILL TO 90% OF MAXIMUM PROCTOR DENSITY.
5) INSTALL HDPE CASING SPACERS AND END SEALS PER MANUFACTURERS RECOMMENDATIONS. SPACERS TO BE MODEL CI AND END SEAL TO BE MODEL "AC" OR "AW" AS MANUFACTURED BY ADVANCE PRODUCT AND SYSTEMS, INC. OR APPROVED EQUAL.

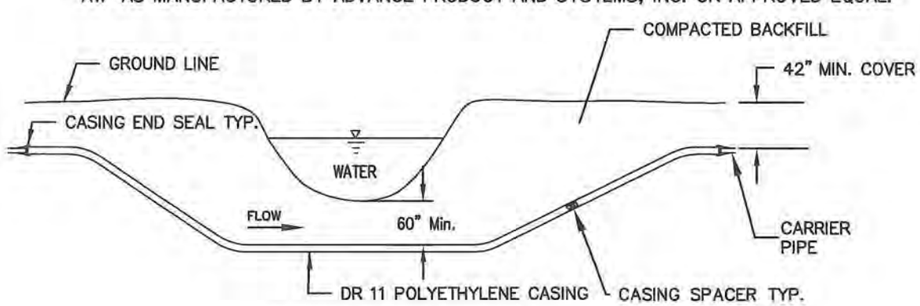

CREEK BORE DETAIL
SCALE: N.T.S.

NOTES: STREAM BORE
1) 1 GATE VALVES & 1 CORP STOP AT EACH END OF THE BORE
2) CARRIER PIPE BETWEEN GATE VALVES/COUPLINGS TO BE CL200 PVC RESTRAINED JOINT & EXTEND 10 L.F. PAST EACH END OF CASING.
3) CASING SHALL EXTEND TO POINT OF MINIMUM COVER ON BOTH SIDES OF CHANNEL.
4) GRADING & SEEDING WILL BE REQUIRED, TO PREVENT EROSION.
5) COMPACT BACKFILL TO 90% STANDARD DENSITY BETWEEN VALVES.
6) INSTALL HDPE CASING SPACERS AND END SEALS PER THE MANUFACTURERS RECOMMENDATIONS BASED ON CARRIER PIPE AND CASING SIZES. SPACERS TO BE MODEL CI AND END SEAL TO BE MODEL "AC" OR "AW" AS MANUFACTURED BY ADVANCE PRODUCT AND SYSTEMS, INC. OR APPROVED EQUAL.

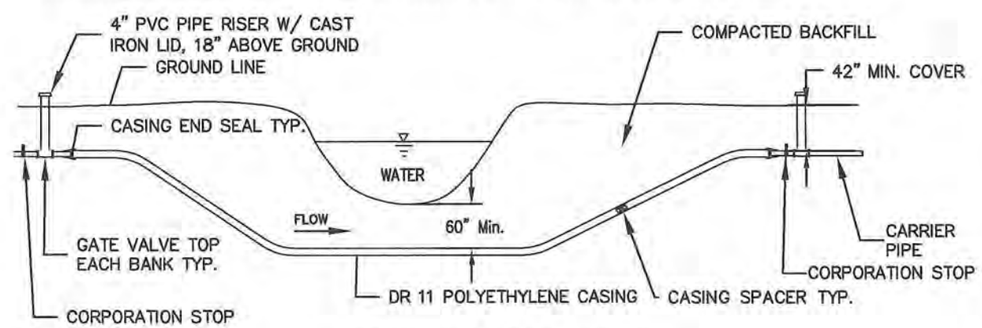

STREAM BORE DETAIL
SCALE: N.T.S.

NO.	DATE	REVISIONS	BY	APP'D
1				
2				
3				
4				
5				

Designed By: PW
Drawn By: MR
Checked By: PW
Issue Date:

COPYRIGHT ©2013 SHAFER, KLINE & WARREN INC.
MISSOURI CERTIFICATE OF AUTHORITY: F001368050

SHAFER, KLINE & WARREN, INC.
107 Butler Street, Macon, MO 63552–1628
660/385–6441 FAX: 660/385–6614
OFFICE LOCATIONS: Macon, MO Columbia, MO Houston, TX
Iola, KS Lenexa, KS Tulsa, OK
North Kansas City, MO
CIVIL SERVICES ELECTRICAL SERVICES MECHANICAL SERVICES STRUCTURAL SERVICES LABORATORY SERVICES LAND SURVEYING

MODOT REST AREA
DEARBORN, MO

SEWER IMPROVEMENTS
BORE DETAILS

120339

SHEET NO. 23 OF 24

L:\120339-020_CAD\CIVIL\120339 DETAILS.DWG
LAYOUT: SHT 23 | BY: JREIGELSBERGER | DATE: 4/17/2013
XREF DWG1: NONE | XREF DWG2: NONE
XREF DWG3: NONE | XREF DWG4: NONE

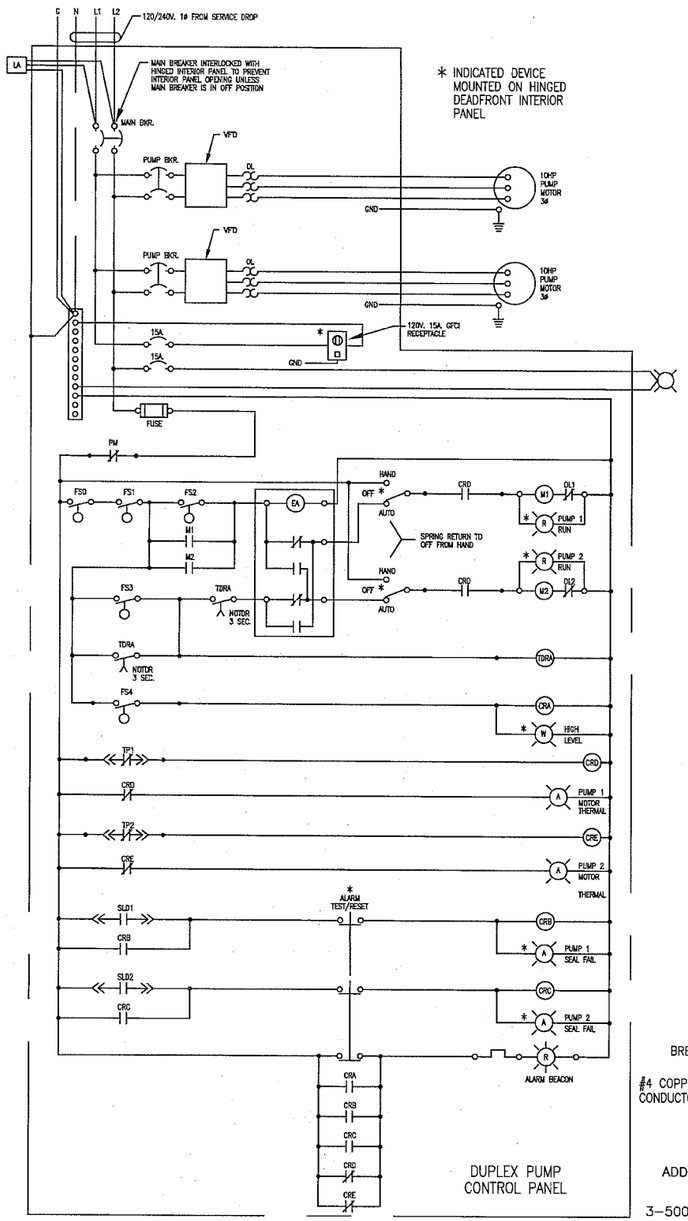

LEGEND

M1,M2	– RUN RELAYS
OL1,OL2	– OVERLOADS
TP1,TP2	– THERMAL PROTECTORS
SLD1,SLD2	– SEAL LEAK DETECTORS
GND	– EQUIP. GROUND
EA	– ELECTRIC ALTERNATOR
CRA	– CONTROL RELAY A– HIGH LEVEL ALARM
CRB	– CONTROL RELAY B– PUMP 1 SEAL ALARM
CRC	– CONTROL RELAY B– PUMP 2 SEAL ALARM
CRD	– CONTROL RELAY D– PUMP 1 MOTOR THERMAL SWITCH
CRE	– CONTROL RELAY E– PUMP 2 MOTOR THERMAL SWITCH
FS0	– FLOAT SWITCH 0– LOW LEVEL ALARM
FS1	– FLOAT SWITCH 1– PUMP OFF
FS2	– FLOAT SWITCH 2– PUMP ON
FS3	– FLOAT SWITCH 3– LAG PUMP ON
FS4	– FLOAT SWITCH 4– HIGH LEVEL ALARM

WIRING WITHIN PANEL
FIELD WIRING
CONTROL PANEL TERMINALS
EQUIP. TERMINALS
LA — LIGHTING ARRESTOR
* — INDICATED DEVICE MOUNTED ON HINGED DEADFRONT INTERIOR
DELAY TO MAKE
FLASHER
DUSK TO DAWN LIGHT 65 WATT FLUORESCENT
R — ALARM BEACON

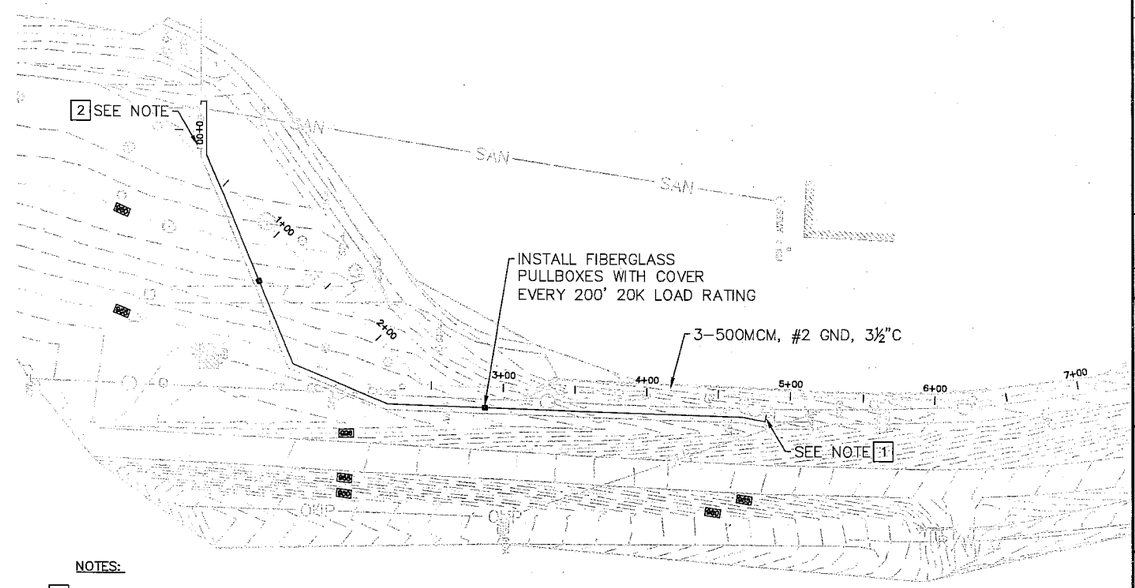

NOTES:

1. EXISTING SERVICE TO BE UPGRADED TO 400A, 240V, SINGLE PHASE. THE EXISTING DISCONNECT TO THE REST AREA TO REMAIN. A 200A BREAKER DISCONNECT SHALL BE INSTALLED FOR THE NEW LIFT STATION. RECONNECT THE EXISTING 200A BREAKER. UTILITY WILL RELOCATE THE EXISTING SERVICE. DROP POLE TO ALLOW CONTRACTOR TO INSTALL RACK. CONTRACTOR TO INSTALL UNISTRUT RACK. UTILITY CONTACT IS JARED WOLTERS OF PLATTE CLAY ELECTRIC COOPERATIVE, 816–903–7370.
2. ROUTE 2c #18 SHIELDED TWISTED PAIR IN 1"C FROM STARTER/CONTROL PANEL TO FLOW METER.
3. LINK SEAL AT WALL FOR CONDUIT INSTALL INTO VAULT. UTILIZE LIQUID TIGHT FLEXIBLE CONDUIT FROM WALL TO FLOWMETER.

100 50 0 100

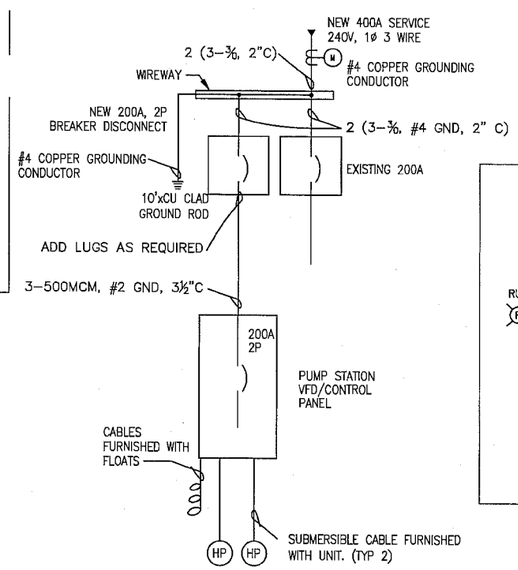

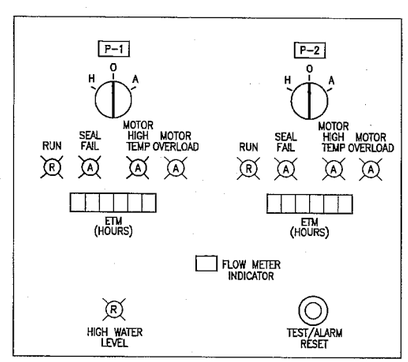

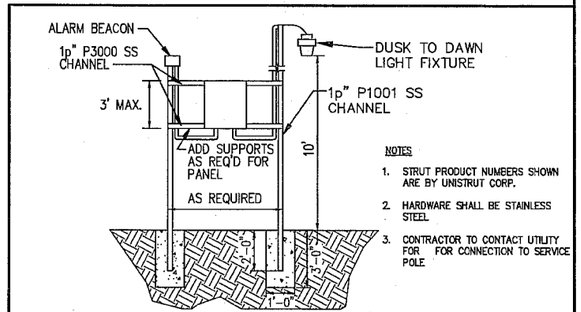

DUPLEX CONTROL PANEL RACK

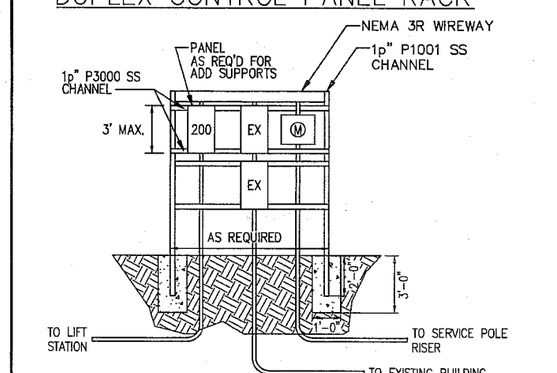

SERVICE RACK

NOTES:

SERVICE IS 240V SINGLE PHASE. MOTORS ARE 240V THREE PHASE.RGW VFD IS PROVIDING THE CONVERSION. BREAKERS FOR PANEL AND PUMPS ARE TO BE PER VFD MANUFACTURERS RECOMMENDATION.

NO.	DATE	REVISIONS	BY	APP'D
1				
2				
3				
4				
5				

Designed By: HS
Drawn By: JOJ
Checked By: HS
Issue Date:

STATE OF MISSOURI DALE L. DICKSON NUMBER E-23358 REGISTERED PROFESSIONAL ENGINEER 4/17/13

SHAFER, KLINE & WARREN, INC.
107 Butler Street, Macon, MO 63552–1628
660/385–6441 FAX: 660/385–6614
OFFICE LOCATIONS: Macon, MO Columbia, MO Houston, TX
Iola, KS Lawrence, KS Tulsa, OK
CIVIL ENGINEERS ELECTRICAL ENGINEERS MECHANICAL ENGINEERS STRUCTURAL ENGINEERS LANDSCAPE ARCHITECTS LAND SURVEYORS LAND PLANNERS

COPYRIGHT © 2013 –SHAFER, KLINE & WARREN INC.
MISSOURI CERTIFICATE OF AUTHORITY: F0013950

MODOT REST AREA
DEARBORN, MO

SEWER IMPROVEMENTS
ELECTRICAL

120339

SHEET NO.
24 OF 24

\\LE-PROJECT\PROJECTS\120339-020_CAD\CIVIL\120339 ELECTRICAL IMPROVEMENTS.DWG
LAYOUT: SHT 3 | BY: JOJOHNSON | DATE: 4/17/2013
XREF DWG1: NONE | XREF DWG2: NONE
XREF DWG3: NONE | XREF DWG4: NONE