MAINTAINER AND LOADER BLADES MGS-91-03J

1.0 Description. This specification covers maintainer and loader blades fabricated from plate steel meeting the requirements and dimensions specified herein.

2.0 Materials.

2.1 Chemical Composition. When sampled and tested in accordance with the designated methods set forth in ASTM E 30 and/or TM 57, the following chemical requirements shall apply.

Maintainer Blades	Min.	Max.
Carbon, Percent, (Direct Combustion Method)	0.75	0.98
Manganese, Percent, (Bismuthate Method)	0.60	0.90
Phosphorus, Percent, (Alkalimetric Method)	----	0.04
Sulfur, Percent, (Evolution Method)	----	0.05
Silicon, Percent, (Sulfuric Acid Method)	----	0.30

Loader Blades	Min.	Max.
Carbon, Percent, (Direct Combustion Method)	0.55	0.98
Manganese, Percent, (Bismuthate Method)	0.60	1.30
Phosphorus, Percent, (Alkalimetric Method)	----	0.04
Sulfur, Percent, (Evolution Method)	----	0.05
Silicon, Percent, (Sulfuric Acid Method)	----	0.30

2.2 Physical Requirements.

2.2.1 Brinell Hardness, (ASTM E10).
Maintainer Blades: 250 minimum, 325 maximum.
Loader Blades: 220 minimum, 325 maximum.

2.2.2 Punching. The blades are to be punched in accordance with the detailed drawings which are attached and made a part of these specifications.

2.2.2.1 Moldboards are punched with holes 1/8 inch larger than the blade bolts. Accordingly, blade punching will be of such accuracy, both for the spacing between the holes and for the spacing between the end hole and the end of the blade, that the blades will fit the moldboards, thus making the blade sections interchangeable.

2.2.3 Dimensions.

2.2.3.1 Maintainer Blades. Maintainer blades are to be curved, top edge beveled to fit the moldboard, lower and both ends square. The following dimensions and tolerances shall apply.

Width	8 inches ± 1/8 inch
Length	as requisitioned with tolerance of ± 1/8 inch
Thickness	5/8 inch ± 1/16 inch

2.2.3.2 Loader Blades. Loader blades shall be straight, bottom edge and both ends square, top edge beveled to fit the moldboard. The following dimensions and tolerances shall apply.

Thickness:	1 inch ± 1/16 inch
Width:	10 inches ± 1/8 inch
Length:	As requisitioned with tolerance of ±1/8 inch
Thickness of Tip of Cutting Edge:	1/8 inch ± 1/16 inch

2.2.3.3 The blades are to have hole spacings and dimensions in accordance with the standard cutting edge punchings as shown on the attached drawings.

2.2.3.1 The finished blades shall not be twisted and shall be free from flaws and injurious defects and shall have good workmanlike finish. Longitudinal warp is allowed but shall not deviate more than 1/8 inch per foot of blade length and shall be uniformly distributed over the length of the blade. For a 6 foot long blade a 3/4 inch warp would be allowed. The cutting edge that rests upon the pavement shall be straight and true. The longitudinal warp and the alignment of the cutting edge shall be measured by extending a straight edge from one end of the blade to the other measuring from the straight edge to the blade at the mid-point of length.

2.2.4 Weight. Maintainer blades shall have a weight per linear foot of 12.5 pounds with a 5 percent minus tolerance. Eight inch by 3/4 inch loader blades shall have a weight per linear foot of 18.5 pounds with a 5 percent minus tolerance. Ten inch by 1 inch loader blades shall have a weight per linear foot of 31.0 pounds with a 5 percent minus tolerance. To determine the weight per linear foot not less than ten or more than twenty blades of identical sizes may be selected at random from a shipment and weighed on accurate scales.

2.2.5 Any paint used to coat the blades shall be dry prior to shipment and shall not smear or track during handling.

3.0 Certification and Acceptance.

3.1 Prior to approval and use of any material delivered, the manufacturer shall submit to the State Materials Engineer, P. O. Box 270, Jefferson City, Missouri 65102, a certification in triplicate certifying the blades supplied conform to all requirements of these specifications.

3.1.1 The "Certification Statement" form shown in Section 4.0 is to be used when certifying. The certification shall include or have attached specific results of tests performed on the blades for chemical composition, hardness and weight per linear foot. The certification shall show the purchase order number, destination, quantity of material represented at each destination and shipping date.

3.2 Acceptance of the blades shall be based on the manufacturer's certification and upon results of such tests as may be performed on samples of the material. When samples are taken, one complete blade of each length shall be taken to represent the shipment. A shipment will be considered as all blades represented on one certification and shipped on one date, regardless of various destinations. If a blade fails to meet any of the specified requirements, two additional blades will be selected for retest from the same quantity represented by that certification. Both of these retest samples must meet

all requirements or the entire quantity will be rejected.

3.3 If the blades are rejected, no payment will be made and the cost of blades destroyed during sampling and testing shall be borne by the supplier.

4.0 Certification Statement.

CERTIFICATION STATEMENT
MAINTAINER AND LOADER BLADES

State Materials Engineer
P. O. Box 270
Jefferson City, Missouri 65102

Dear Sir:

We hereby certify that the maintainer and loader blades described below comply with all requirements of Specification MGS-91-03J and in accordance with Bid Request No. _____.

The following blades manufactured by _____are covered by this certification.

Purchase Order No.	Destination	Quantity & Size	Shipping Date

Following are results of test performed on these blades:

Chemical Composition
Percent C _____
Percent Mn _____
Percent P _____
Percent S _____
Percent Si _____

Brinell Hardness_____

Weight Per Linear Foot _____

CertifiedBy: _____

Title: _____

Date:_____

Results of tests may be shown on attachments rather than on this form, if preferred.

This form is to be completed, signed, and submitted in triplicate for each shipment, at the same time as blades are shipped. A shipment is defined as all blades represented on one certification and shipped on one date, regardless of various destinations.

MISSOURI DEPARTMENT OF TRANSPORTATION
STANDARD CUTTING EDGE PUNCHINGS FOR MAINTAINER BLADES

S.H.5

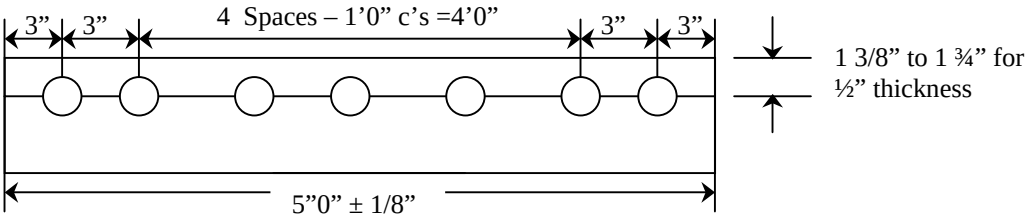

S.H.6

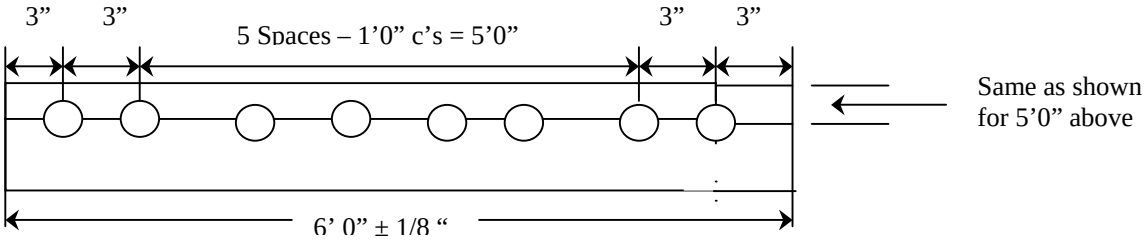

S.H.7

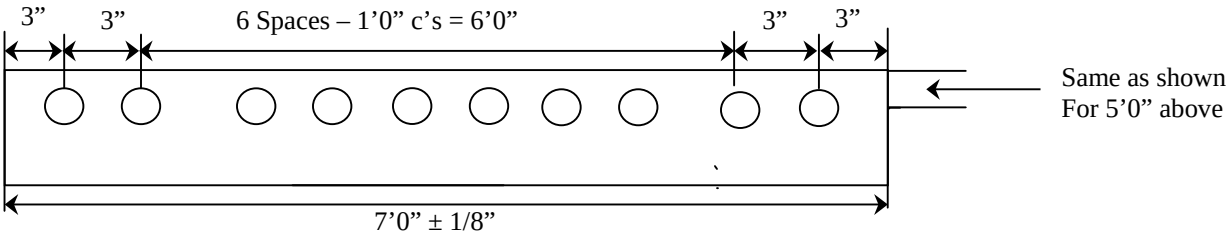

S.H.8

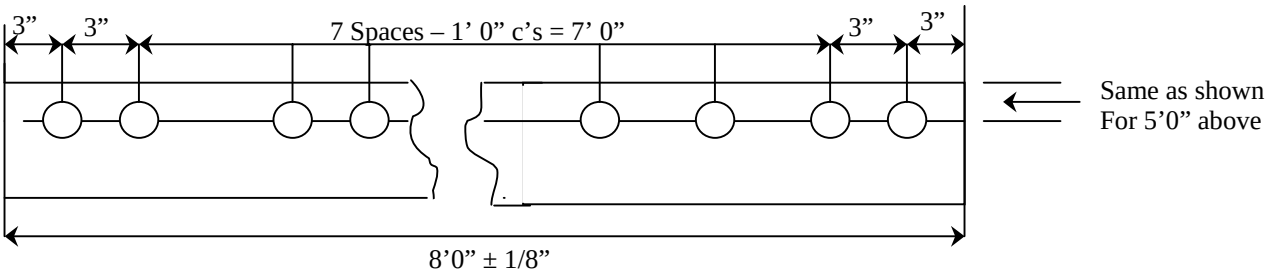

S.H10

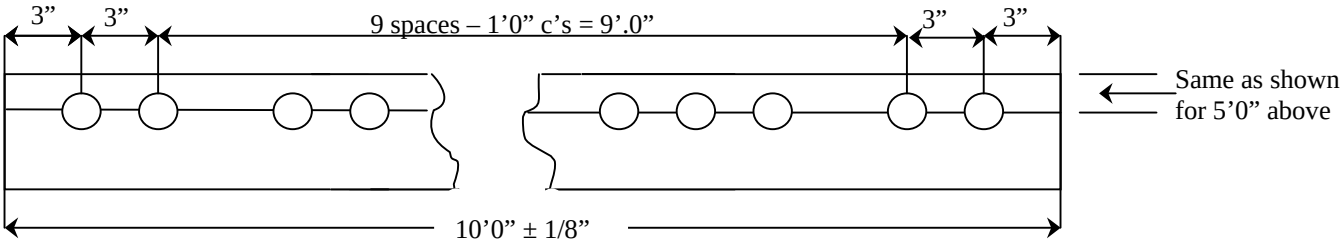

Blades of odd 66”lengths to be punched similar to above except that the 12”spaces nearest the ends of blade becomes 9”spaces.
i.e.,5’6” blade hole spacing is 3”-3”9”-12”-12”-9”-3”-3”.
For blades over 10’0” length use two shorter lengths.

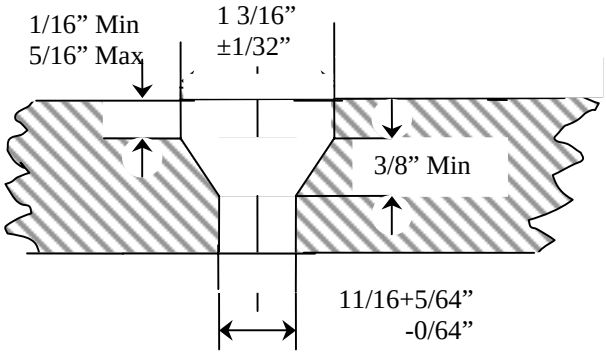

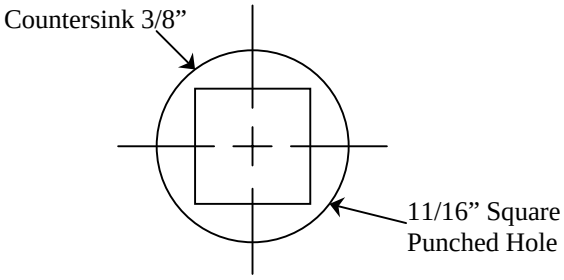

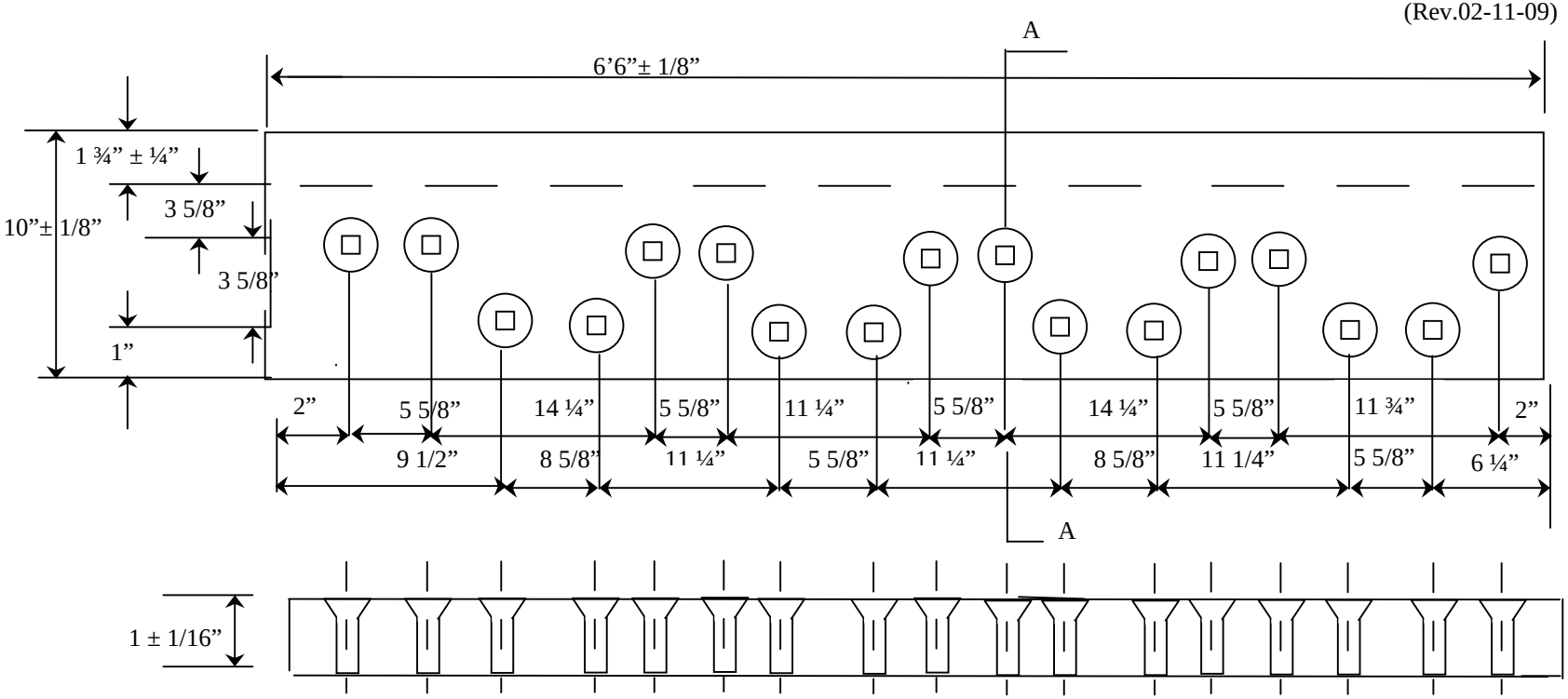

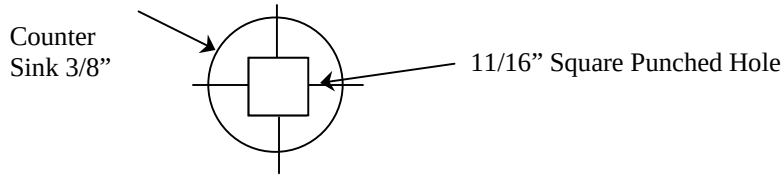

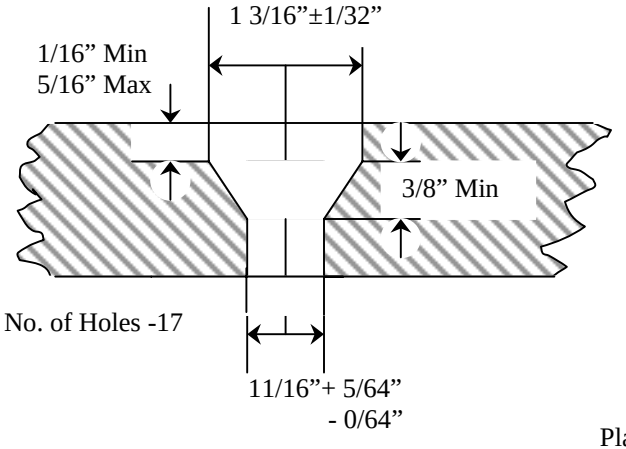

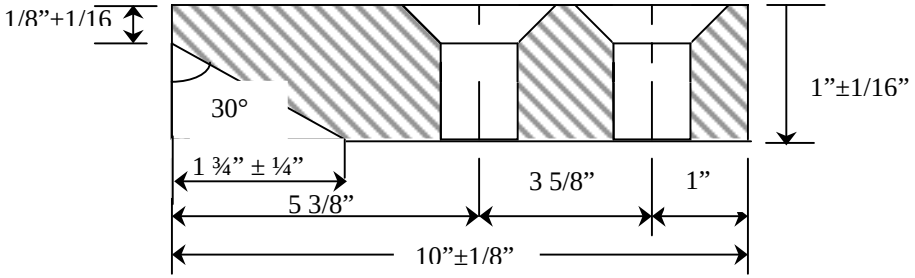

Plan of Front-End Loader Blade

NOTE: This drawing not to scale. Follow Dimensions

NOTE: For Use of 5/8" x 2" or 3" Square Deep Countersunk No.3 Head Plow Bolt

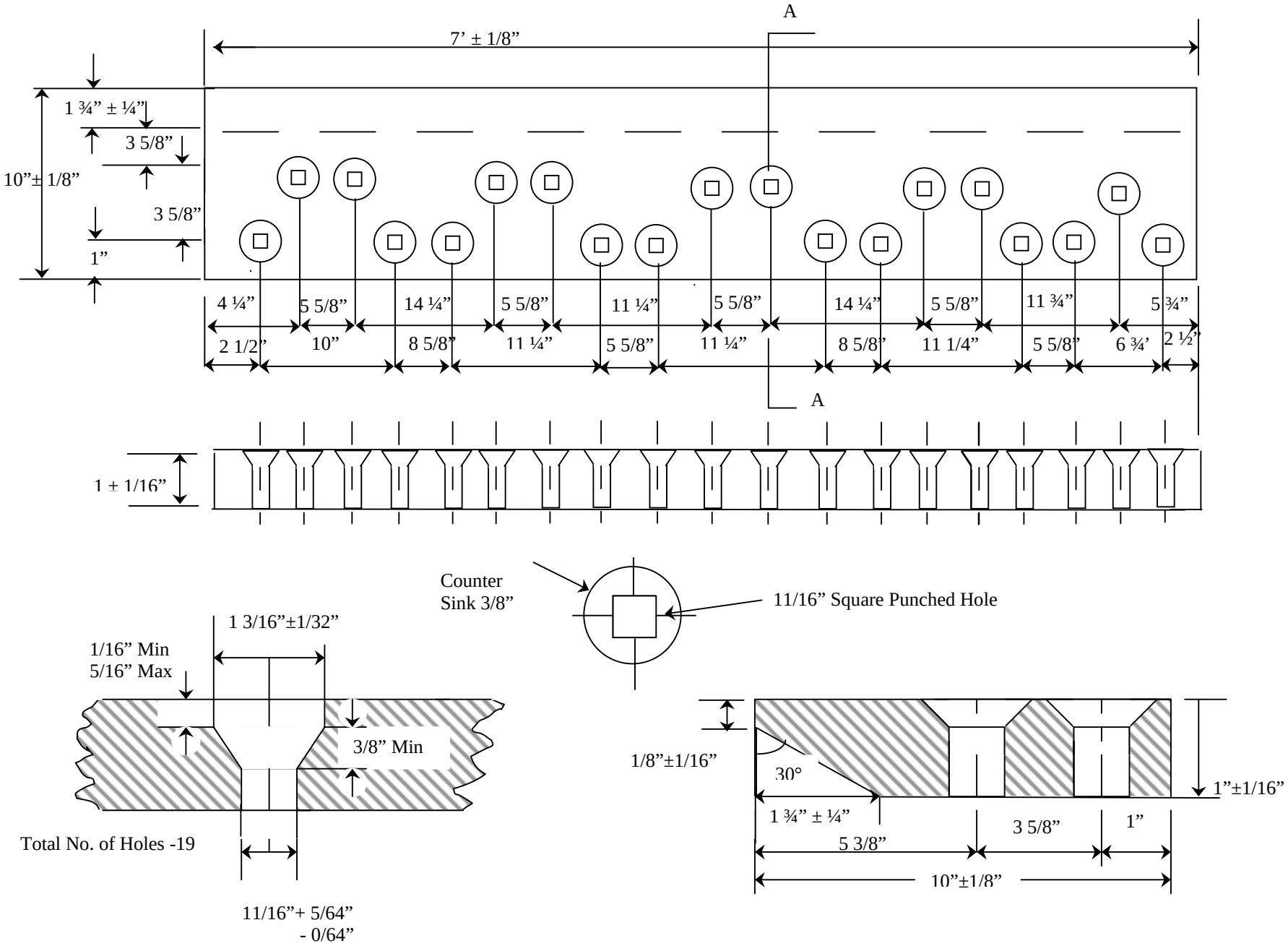

NOTE: This drawing not to scale. Follow Dimensions

Plan of Front-End Loader Blade

NOTE: For Use of 5/8" x 2" or 3" Square Deep Countersunk No.3 Head Plow Bolt

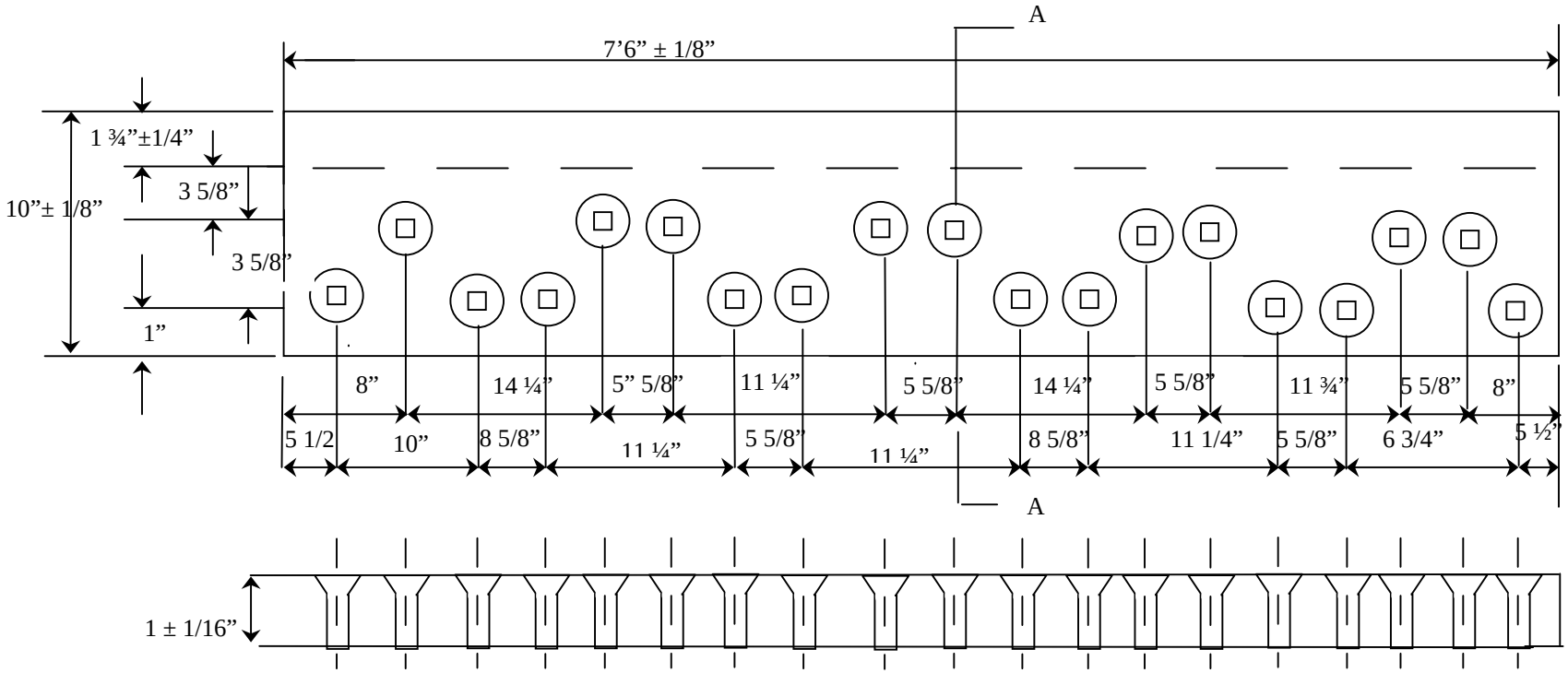

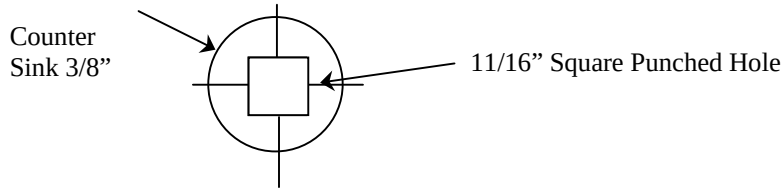

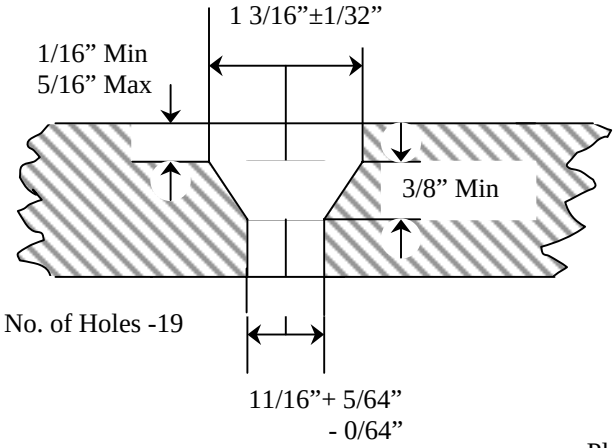

SECTION A - A

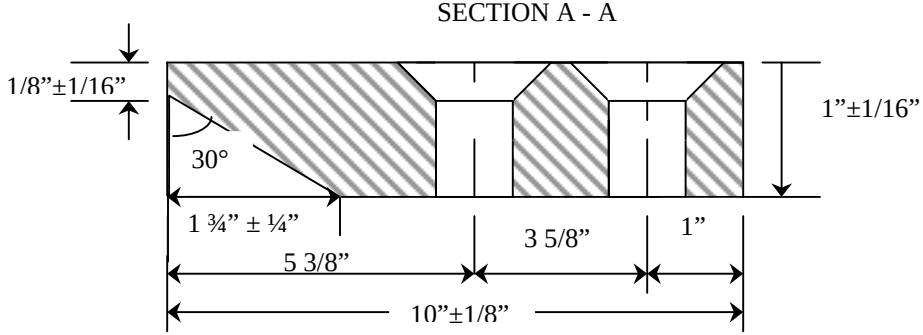

NOTE: This drawing not to scale. Follow Dimensions

Plan of Front-End Loader Blade

NOTE: For Use of 5/8" x 2" or 3" Square Deep Countersunk No.3 Head Plow Bolt

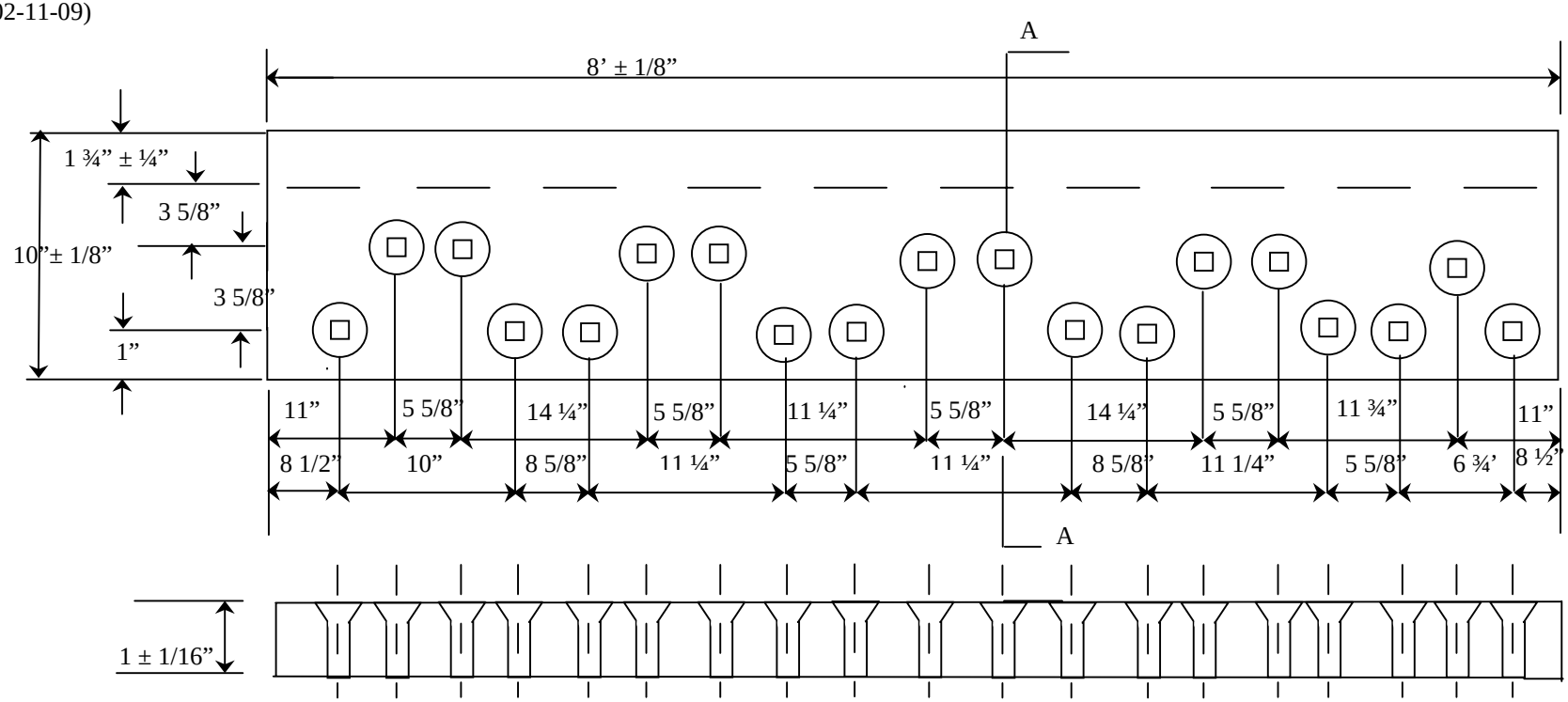

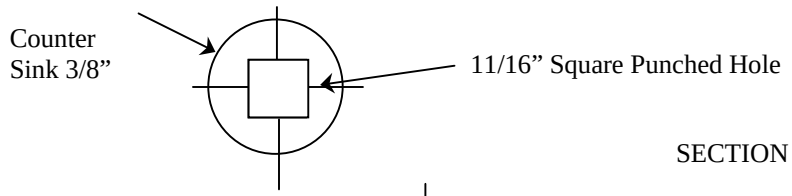

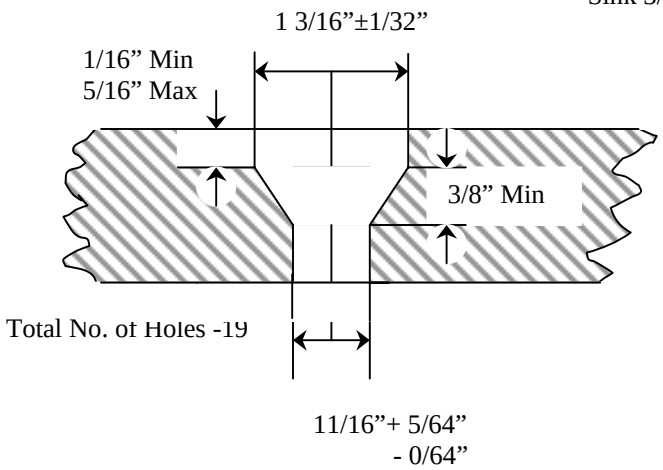

SECTION A - A

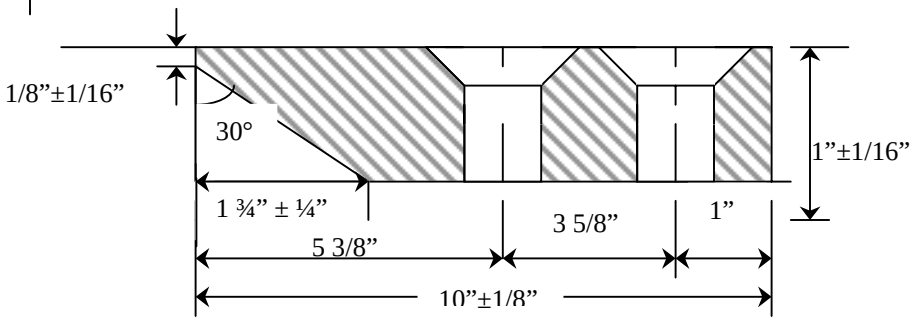

NOTE: This drawing not to scale. Follow Dimensions

Plan of Front-End Loader Blade

NOTE: For Use of 5/8" x 2" or 3" Square Deep Countersunk No.3 Head Plow Bolt

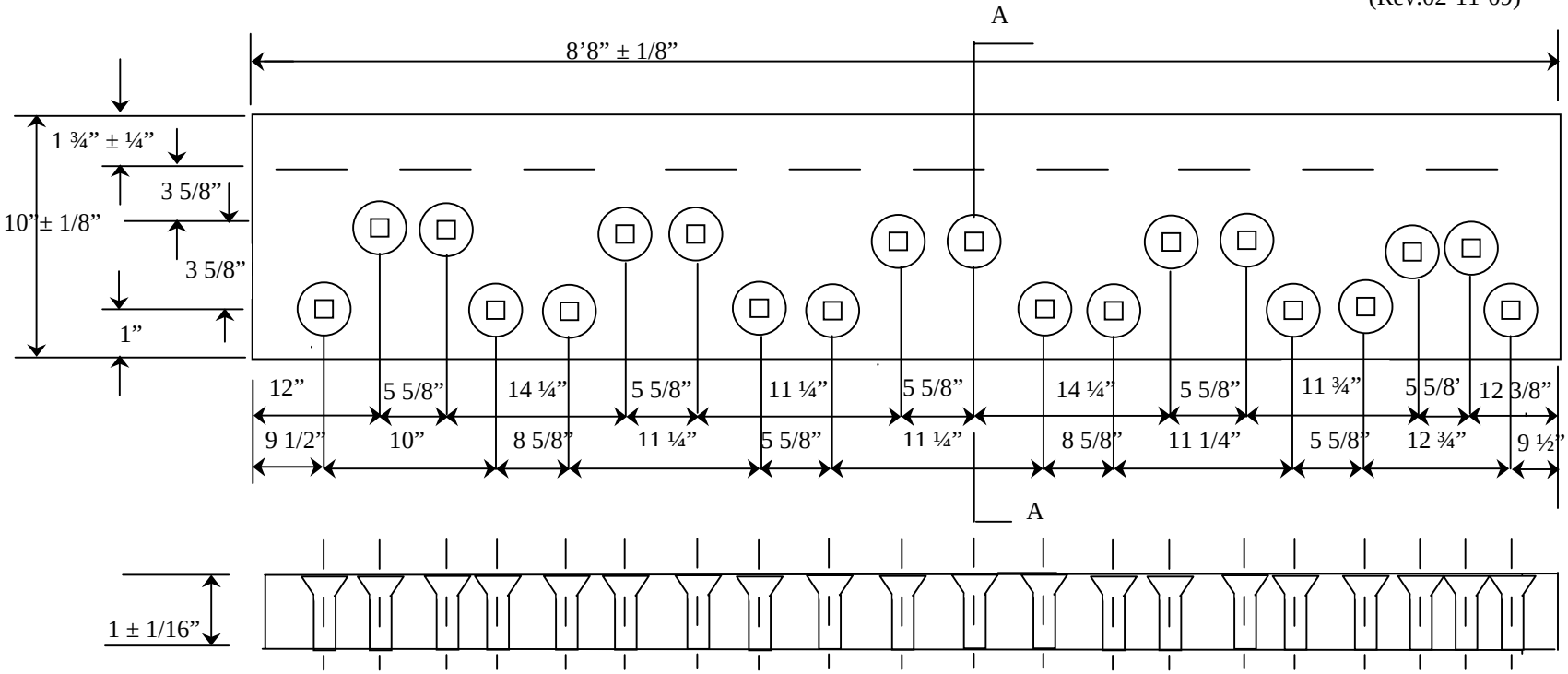

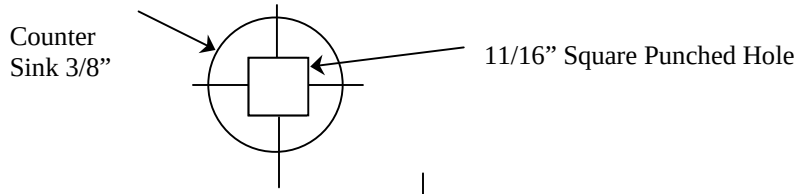

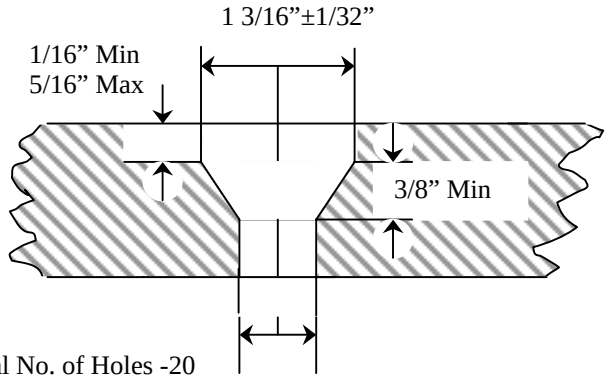

Total No. of Holes -20

11/16"+ 5/64"
- 0/64"

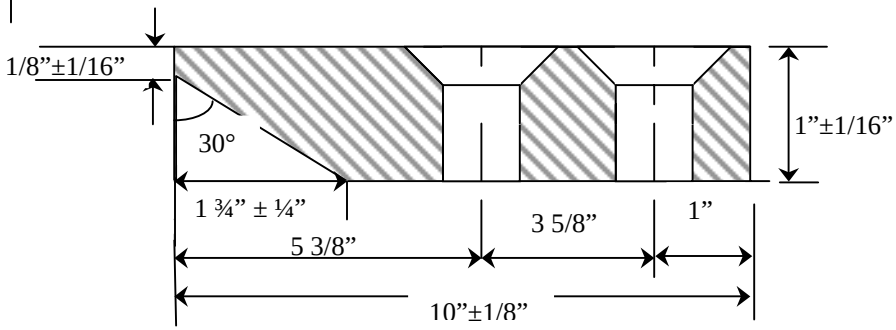

NOTE: This drawing not to scale. Follow Dimensions

Plan of Front-End Loader Blade

NOTE: For Use of 5/8" x 2" or 3" Square Deep Countersunk No.3 Head Plow Bolt