CARBIDE TIPPED SNOWPLOW BLADES MGS-91-01Q

1.0 DESCRIPTION. This specification covers steel snowplow blades with tungsten carbide inserts.

2.0 MATERIALS.

2.1 Steel. The blades shall be fabricated from hot rolled carbon steel meeting the requirements of either ASTM A 576-90b or ASTM A 575-89 within the range of Grades 1020 through 1044.

2.2 Tungsten Carbide Inserts. The inserts shall be a high shock WC Grade of tungsten carbide.

2.2.1 The inserts shall meet Virgin Tungsten Carbide quality specifications and shall meet the following requirements.

2.2.1.1 Insert Characteristics:

Specification	Requirement
Cobalt Content, percent	10.5 - 12.5
Density, g/cm^3 (ASTM B 311)	14.1 - 14.6
Hardness (ASTM B 294, Rockwell A Scale)	87.0 - 89.0

2.2.2 The inserts shall be rectangular design with the following dimensions:

2.2.2.1 Insert Dimensions:

Specification	Requirement
Height, inch	0.760 $\pm$ 0.010
Width, inch	0.365 $\pm$ 0.010
Length, inch, nominal	1

2.3 Finished Blades.

2.3.1 Insert Placement. The groove for the carbide shall be milled in the center of the steel blade edge. The grove shall be milled to a depth that will allow the inserts to be brazed flush with the bottom edge of the blade. The tungsten carbide inserts shall be positioned in the milled groove with approximately 0.010-inch space between the inserts the entire length of each cutting edge section. Each insert shall be one-inch nominal length. It may be necessary for some of the inserts to be different than the one-inch nominal length to make up for the spacing between the inserts. The number of inserts shall be no less than one or more than three from the number required for one insert per inch of blade length.

2.3.2 Brazing. The inserts shall be brazed on all contact surfaces consistent with sound brazing practice with no evidence of voids or use of shims. Brazing shall be of such strength and quality as required to prevent movement or loss of the inserts during use.

2.3.3 Physical Requirements. All blades shall be straight and free from flaws and injurious defects, and shall have workmanlike finish. All inserts shall be flush with the bottom angle of the

blade with a tolerance of ±1/32 inch.

2.3.3.1 The finished blade sections shall be free of warpage and longitudinal deviation shall not exceed 5/32 inch in a five-foot long blade section, 1/8 inch in a four-foot long blade section or 3/32 inch in a three-foot long blade section. The edge that rests upon the pavement shall be straight and true. The longitudinal warp and the alignment of this edge shall be measured by extending a straight edge from one end of the blade to the other and measuring from the straight edge to the blade at the mid-point of length.

2.3.3.2 The difference between the highest and lowest insert shall not exceed 1/32 inch on any given blade assembly.

2.3.3.3 Punching shall be 11/16-inch square holes with a 1-5/32 inch diameter countersink 3/8 inch deep to receive 5/8-inch diameter plow bolts. Details, location, and spacing of the holes shall be as shown on the attached drawing.

2.3.3.4 Moldboards are punched with holes 1/8 inch larger than the blade bolts. Accordingly, blade punching will be of such accuracy, both for the spacing between holes and for the spacing between the end hole and the end of the blade, that the blades will fit the moldboards, thus making the blade sections interchangeable.

2.3.4 Any paint used to coat the blades shall be dry prior to shipment and shall not smear or track during handling.

3.0 CERTIFICATION AND ACCEPTANCE.

3.1 Prior to approval and use of any material delivered, the manufacturer shall submit to State Construction and Materials Engineer, P.O. Box 270, Jefferson City, Missouri 65102, (Fax 573-751-8682) a certification in duplicate certifying the grade of steel used in fabricating the blade and certifying that the blades supplied conform to all requirements of these specifications. (See certification statement)

3.1.1 The "Certification Statement" form shown in Section 5.0 is to be used when certifying. The certification shall include or have attached specific results of test performed on the tungsten carbide inserts for cobalt content, density, and hardness and showing the standard test designation of the test specified for each of these properties. The certification shall show the purchase order number, destination, and quantity of material represented at each destination and shipping date.

3.2 Acceptance of the blades and carbide tip inserts shall be based on the manufacturer's certification and upon the results of tests as may be performed on random samples of the material. When samples are taken, one complete blade of each length shall be taken to represent the shipment. A shipment will be considered as all blades represented on one certification and shipped on one date, regardless of various destinations. The carbide tip inserts shall be sampled from the blades selected for testing.

3.2.1 If a blade fails to meet any of the specified requirements, two additional blades will be selected for retest from the same quantity represented by that certification. Both of these retest samples must meet all requirements or the entire quantity will be rejected.

3.2.2 If the carbide tip inserts fail to meet any of the specified requirements, two additional samples will be selected either from the original blade sampled or from other blades contained in the same quantity represented by that certification. Both of these retest samples must meet all requirements or the entire quantity will be rejected.

3.3 If the blades are rejected, no payment will be made and the cost of blades destroyed during sampling and testing shall be borne by the supplier.

4.0 TEST METHOD MODOT T21 DETERMINATION OF COBALT IN TUNGSTEN CARBIDE INSERTS.

4.1 This method describes a procedure for determining the percent of Cobalt in Tungsten Carbide Inserts used in Snowplow Blades, using a Inductively Coupled Plasma Optical Emmission Spectrophotometer (ICP-OES). The specification may be accessed at

http://epg.modot.mo.gov/index.php?title=106.7.21_TM21%2C_Determination_of_Cobalt_in_Tungsten_Carbide_Inserts

5.0 CERTIFICATION STATEMENT/BILL OF LADING.

CERTIFICATION STATEMENT
CARBIDE TIPPED SNOWPLOW BLADES

Send to:
State Construction and Materials Engineer
P.O. Box 270
Jefferson City, MO 65102
Fax – 573-751-8682

Dear Sir:

We hereby certify that the carbide tipped snowplow blades described below comply with all requirements of Specification MGS-91-01Q and in accordance with bid request No. _____.

The following blades manufactured by _____are covered by this certification.

Bill of Lading

Purchase Order No.	Destination	Quantity & Size	Shipping Date

Following are results of tests performed on these blades:

Certification Grade of Steel in the Blade: _____

Cobalt Content in Carbide Tip: _____ Test Method: _____

Density of Carbide Tip: _____ Test Method: _____

Hardness of Carbide Tip: _____ Test Method: _____

Certified By: _____

Title: _____

Date: _____

Results of tests may be shown on attachments rather than on this form, if preferred.

This form is to be completed, signed, and submitted in duplicate for each shipment (send to address above), at the same time as blades are shipped. A shipment is defined as all blades represented on one certification and shipped on one date, regardless of various destinations.

2 – 12-inch Spaces for 3-foot Blade
3 – 12-inch Spaces for 4-foot Blade
4 – 12-inch Spaces for 5-foot Blade

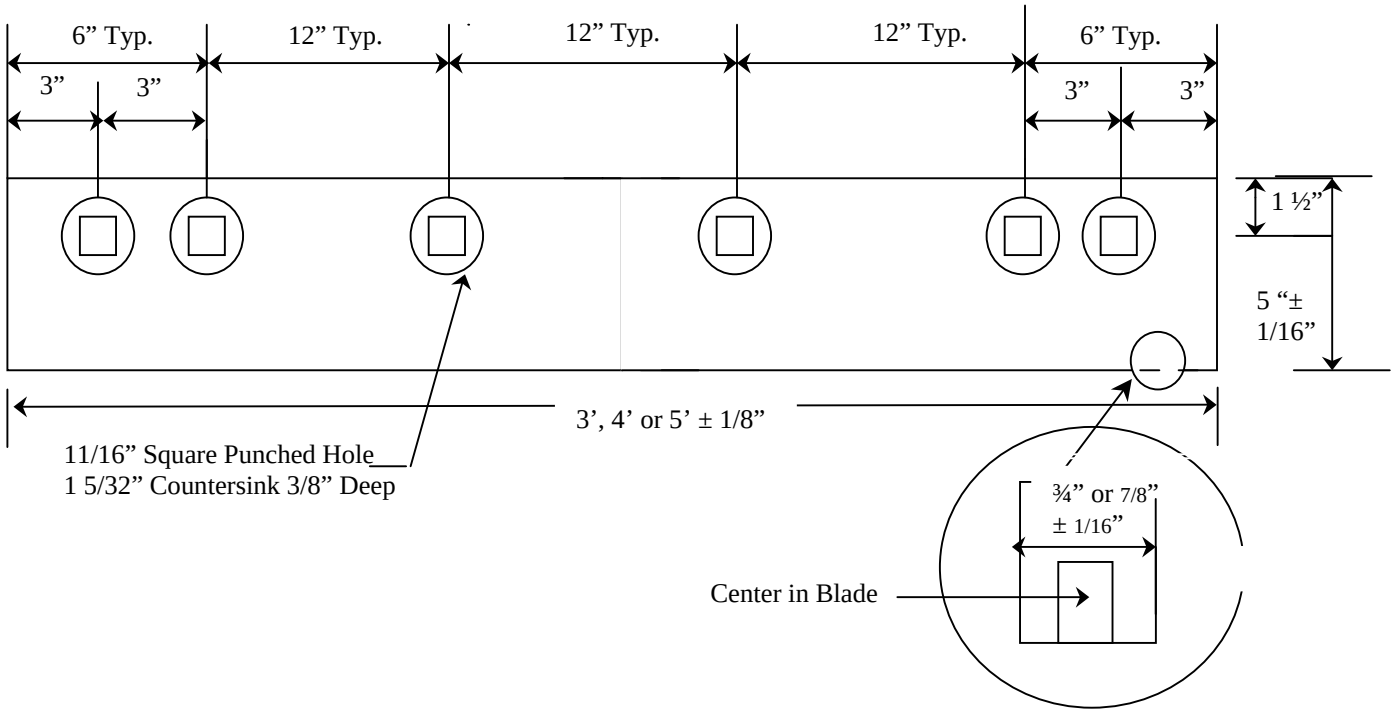

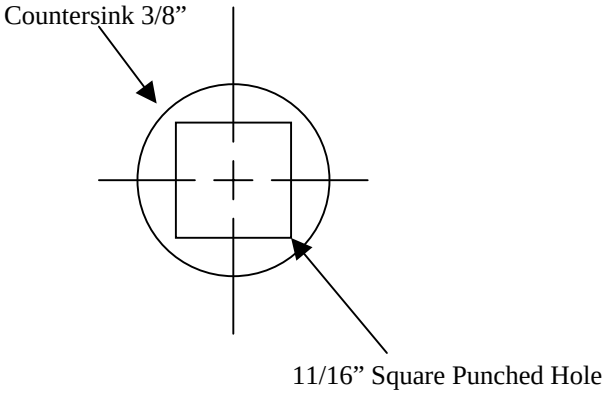

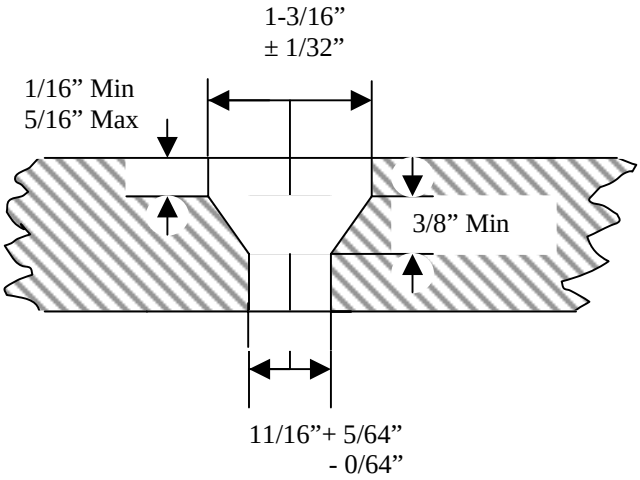

NOTE: This drawing not to scale.
Follow Dimensions.

Plan of Carbide Tipped Snow Plow