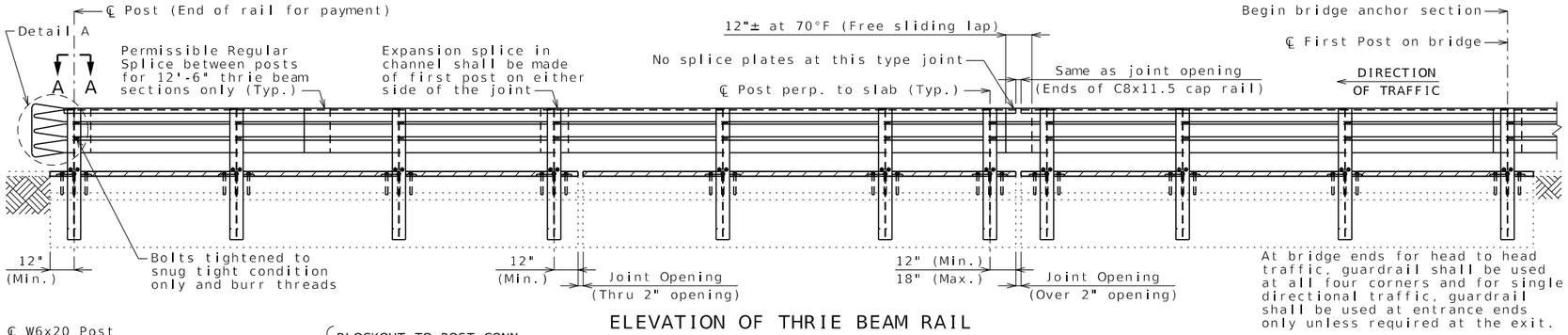

ELEVATION OF THRIE BEAM RAIL

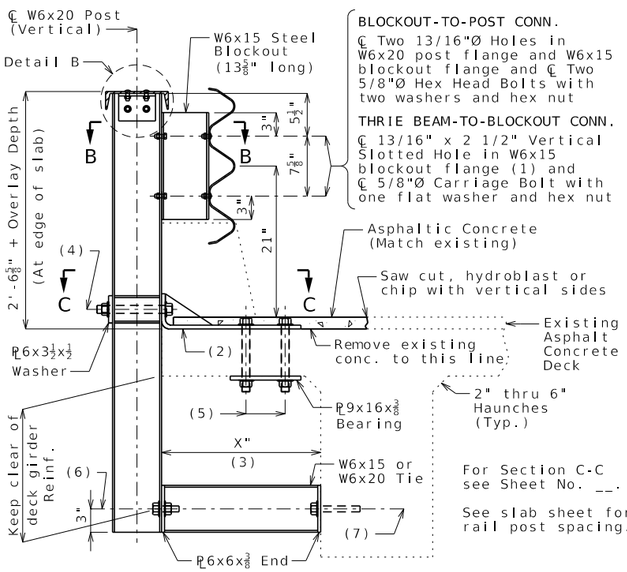

PART SECTION AT RAIL POST

For Section C-C see Sheet No. __.

See slab sheet for rail post spacing.

(1) Required on one side of web only, but may be provided on both sides of web at the contractor's option.

(2) ½" Bent Plate (Level with qualified special mortar, see Sec 704)

(3) Cantilever may vary.

(4) POST-TO-BENT PLATE CONNECTION
- ℄ Two 1"Ø ASTM F3125 Grade A325 Type 1 Bolts with hardened washers and hex nuts
- ℄ Two 1 1/16"x 1 1/2" Vertical Slotted Holes in both post flanges
- ℄ Two 1 1/16"Ø Holes in washer plate & bent plate

(5) BENT PLATE-TO-DECK CONNECTION
- ℄ Three 1"Ø ASTM F3125 Grade A325 Type 1 Bolts with hex nuts and hardened locking washers
- ℄ Three 1 1/4"Ø Holes in bent plate and bearing plate
- ℄ Three 1 1/8"Ø (Min.) Drilled Holes in slab

(6) POST-TO-TIE CONNECTION
- ℄ Two 3/4"Ø ASTM F3125 Grade A325 Type 1 Bolts with hex nuts and hardened washers
- ℄ Two 15/16"Ø Holes in inside post flange and end plate

(7) TIE-TO-GIRDER CONNECTION
℄ Two Resin Anchor Systems each to include:
- 7/8"Ø (Min.) Drilled Hole in girder or as recommended by manufacturer
- 1"Ø Hole in end plate
- 3/4"Ø ASTM A449 Type 1 Threaded Rod snug tight and embedded 5 inches in girder
- Hex Nut and Hardened Locking Washer

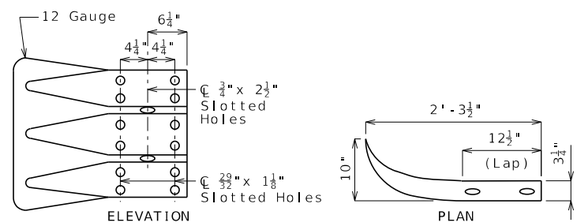

DETAIL A

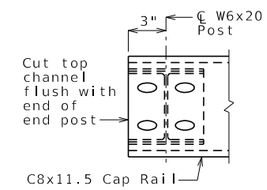

PLAN A-A

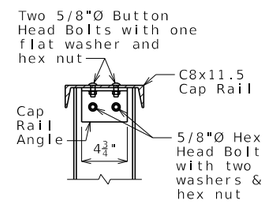

DETAIL B

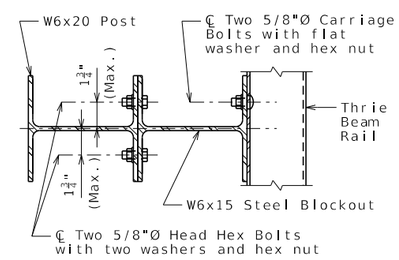

SECTION B-B

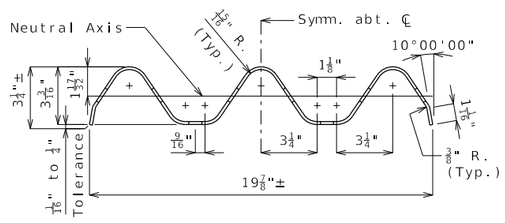

SECTION THRU THRIE BEAM RAIL

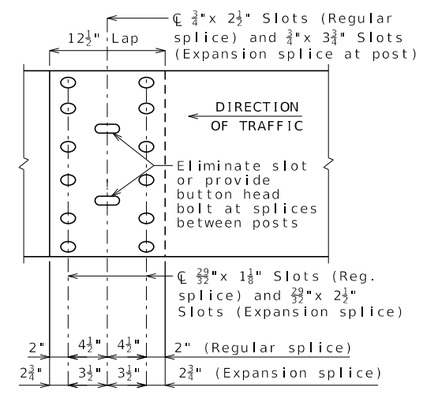

THRIE BEAM RAIL SPLICE

General Notes:

Design Specifications: 2002 AASHTO LFD (17th Ed.)
Standard Specifications

Guardrail delineators shall be attached to the top of the guardrail and shall similarly use the delineator details of Missouri Standard Plan 617.10, except that the delineator body shall be attached to the top of the cap rail using galvanized anchorage as shown on Missouri Standard Plan 606.00. Delineators on bridges with two-lane, two-way traffic shall have retroreflective sheeting on both sides. Guardrail delineators will be considered completely covered by the contract unit price for Bridge Guardrail (Thrie Beam).

Panel lengths of channel members shall be attached continuously to a minimum of four posts and a maximum of six posts (except at end bents).

All bolts, nuts, washers and plates will be considered completely covered by the contract unit price for Bridge Guardrail (Thrie Beam).

All steel connecting bolts and fasteners for posts and railing, and all resin anchor bolts, nuts, washers and plates shall be galvanized after fabrication. Protective coating and material requirement of steel railing shall be in accordance with Sec 1040.

Rail posts shall be set perpendicular to roadway profile grade, vertically in cross section and aligned in accordance with Sec 713 except that the rail posts shall be aligned by the use of 3 x 1 3/4-inch shims such that the post deviates not more than 1/2 inch from true horizontal alignment after final adjustment. The shims shall placed between the blockout and the thrie beam rail. The thickness of the shims shall be determined by the contractor and verified by the engineer before ordering material for this work.

At the expansion slots in the thrie beam rails and channels, the bolts shall be tightened and backed off one-half turn and the threads shall be burred.

At the thrie beam connection to blockout on wings, the bolts shall be tightened and backed off one-half turn and the threads shall be burred.

Minimum length of thrie beam sections is equal to one post space.

A 5/8-inch diameter button-head, oval shoulder bolt with a minimum 3/8-inch thick hex nut shall be used at all slots.

Thrie beam guardrail on the bridge shall be 12-guage steel.

Posts, cap rail angles, bent plates, blockouts, channels and channel splice plates shall be fabricated from ASTM A709 Grade 36 steel and galvanized.

Flat washers 3 x 1 3/4 x 3/16-inch minimum shall be used at all post bolts between the bolt head and beam. The washers shall be rectangular in shape with an 11/16 x 1-inch slot, or when necessary of such design as to fit the contour of the beam. Rectangular washers 3 x 1 3/4 x 5/8-inch shall be used between the blockout and the thrie beam rail.

Special drilling of the thrie beam may be required at the splices. All drilling details shall be shown on the shop drawings.

Fabrication of structural steel shall be in accordance with Sec 1080.

Expansion splices in the thrie beam rail shall be made at either the first or second post on either side of the joint and on structure at bridge ends. When the splice is made at the second post, an expansion slot shall be provided in the thrie beam rail for connection to the first post to allow for movement.

In addition to the expansion provisions at the expansion joints, expansion splices in the thrie beam rail and the channel shall be provided at other locations so that the maximum length without expansion provisions does not exceed 200 feet.

Shim plates 6 x 6 x 1/16-inch may be used between the top of the post and the channel member as required for vertical alignment.

Shim plates shall be galvanized after fabrication.

Contractor shall verify all dimensions in field before finalizing the shop drawings.

See Missouri Standard Plan 606.00 for details not shown.

DATE PREPARED	7/10/2024
ROUTE	STATE MO
DISTRICT	SHEET NO. 11
COUNTY	
JOB NO.	
CONTRACT ID.	
PROJECT NO.	
BRIDGE NO.	

DESCRIPTION

DATE

MISSOURI HIGHWAYS AND TRANSPORTATION COMMISSION
105 WEST CAPITOL
JEFFERSON CITY, MO 65102
1-888-ASK-MODOT (1-888-275-6636)

Detailed
Checked

Note: This drawing is not to scale. Follow dimensions.