MISSOURI HIGHWAYS AND TRANSPORTATION COMMISSION

SEC/SUR 10 TWP 21N RGE 32W

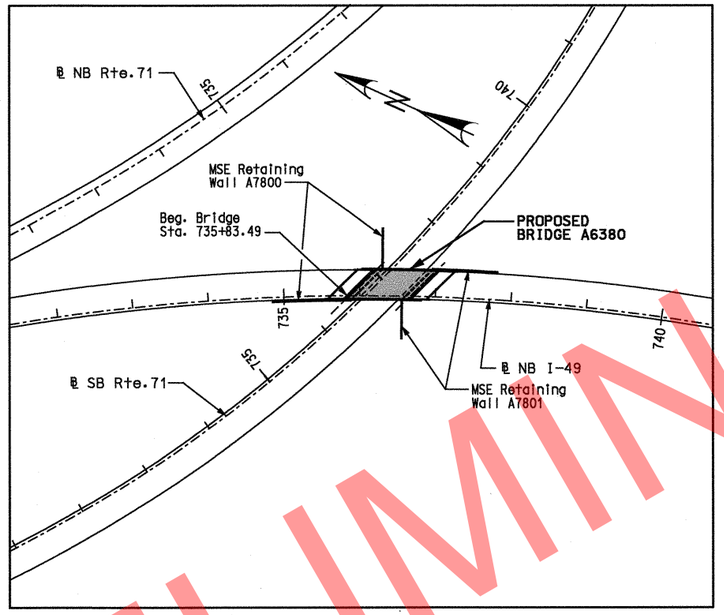

INDEX OF DRAWINGS

1 Title Sheet
2 General Plan and Elevation
3 General Notes and Estimated Quantities
4 Boring Data
5 Boring Data
6 Substructure Layout and Slab Curve Ordinates
7 End Bent 1
8 End Bent 1 Details
9 End Bent 1 Details
10 End Bent 2
11 End Bent 2 Details
12 End Bent 2 Details
13 Vertical Drain at End Bents
14 Framing Plan and Steel Intermediate Diaphragm Details
15 Girder Details - Span (1-2)
16 Slab Plan
17 Details of Precast Prestressed Panels
18 Theoretical Slab Haunching Diagram and Bottom of Slab Elevations
19 Safety Barrier Curb Details
20 Safety Barrier Curb Details
21 Optional Slip-form Bridge Safety Barrier Curb
22 Bridge Approach Slab - End Bent 1
23 Bridge Approach Slab - End Bent 2
24 Bill of Reinforcing Steel
25 Bill of Reinforcing Steel
26 As-Built Pile Data

BRIDGE: NB RTE. I-49 OVER SB RTE. 71

STATE ROAD FROM RTE. H TO STATE LINE
ABOUT 2.6 MILES NORTH OF RTE. 90
STA. 735+83.49 (RTE. I-49)

STD. 609.00
STD. 617.10
STD. 706.35

Designed JUL 2009
Detailed AUG 2009
Checked AUG 2009

Note: This drawing is not to scale. Follow Dimensions.

STATE OF MISSOURI
GINA D. HORNER
NUMBER E-30413
REGISTERED PROFESSIONAL ENGINEER
3-9-10

DATE PREPARED 08/06/09
ROUTE I-49 STATE MO
DISTRICT BR SHEET NO. 1
COUNTY McDONALD
JOB NO. J7P0601
CONTRACT ID.
PROJECT NO.
BRIDGE NO. A6380

DATE	DESCRIPTION

MISSOURI HIGHWAYS AND TRANSPORTATION COMMISSION
105 WEST CAPITOL
JEFFERSON CITY, MO 65102
1-888-ASK-MODOT (1-888-275-6636)

HNTB
715 KIRK DRIVE
KANSAS CITY, MO 64105-1310
TELEPHONE (816) 472-1201
CERTIFICATE OF AUTHORITY
NO. 001270

IF A SFAI IS PRESENT ON THIS SHEET IT HAS BEEN ELECTRONICALLY SEALED AND DATED.

REV.

USER: TThompson
PLOTTED: 08-MAR-2010 14:58 \\kcow00\Jobs\49259\Bridges\Plans\CDtoMoDotA6380_03-05-10\J7P0601\A6380-dgn\ZPLOT_A01.dgn

(83′) SIMPLE SPAN COMPOSITE PRESTRESSED CONCRETE I-GIRDER SPAN

Note:
Bents are parallel.

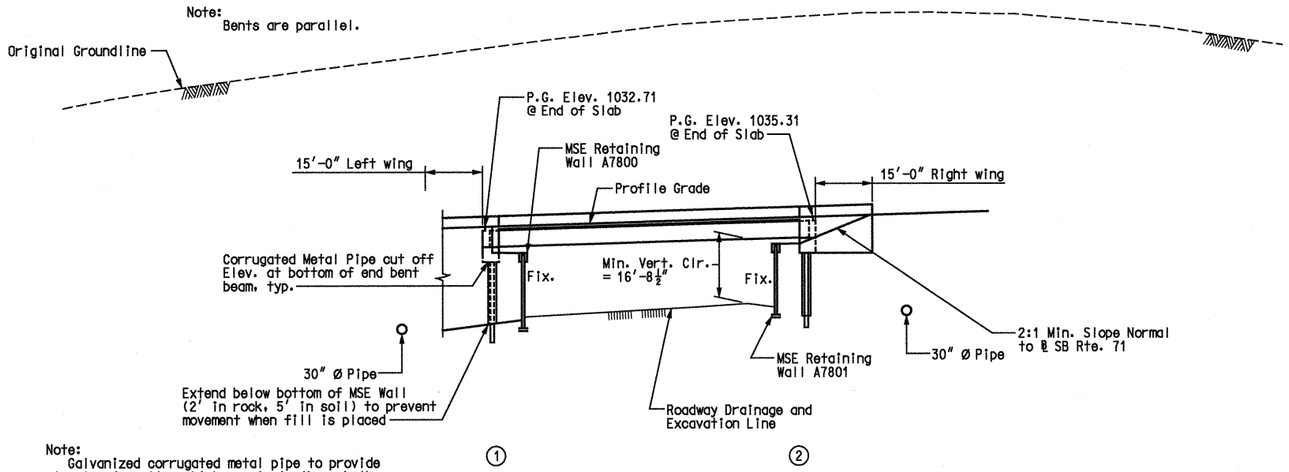

Note:
Galvanized corrugated metal pipe to provide sleeving for piles which penetrate through the mechanically stabilized earth wall fill. See special provisions. Galvanized corrugated metal culvert pipe in accordance with Sec. 1020.

ELEVATION

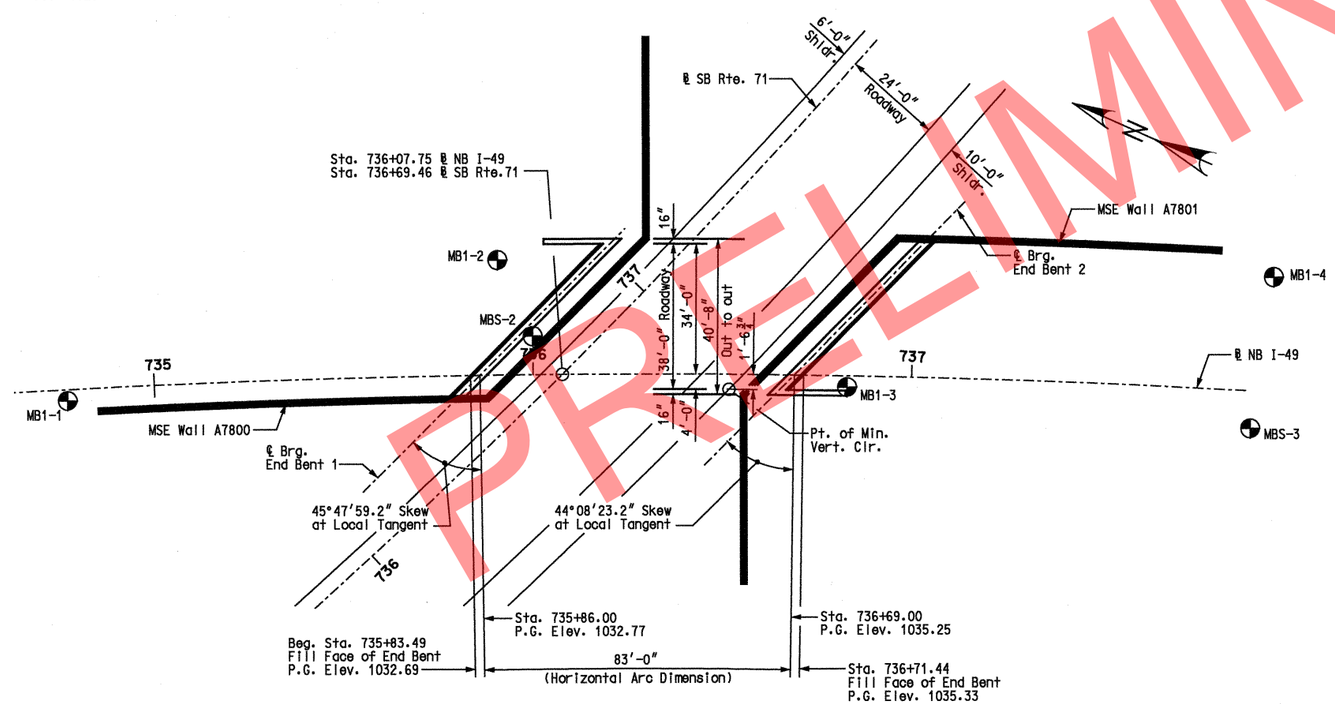

PLAN

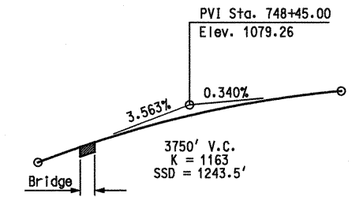

PROFILE GRADE – NB I-49

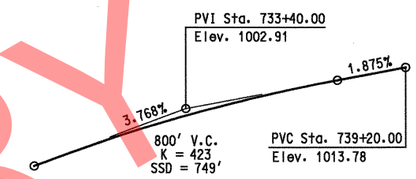

PROFILE GRADE – SB RTE. 71

CURVE DATA
NB I-49

P.I. Sta. = 739+20.393
△ = 44°43′02″ (Rt.)
D = 2°00′00.0″
L = 2235.86′
T = 1178.36
R = 2864.79′
SE = 6.3%

CURVE DATA
SB RTE. 71

P.I. Sta. = 736+04.58
△ = 66°31′00″ (Lt.)
Lc = 1987.22′
Ts = 1368.30′
R = 1909.86′
D = 3°00′00″
Ls = 230.00′
Θs = 3°27′00″ (Lt.)
Xs = 229.92′
Ys = 4.62′
SE = 7.9%

Notice and disclaimer regarding Boring Log Data:
The locations of all subsurface borings for this structure are shown on the bridge plan sheets for this structure. Boring data for the numbered locations is shown on Sheets No. 4 thru 5. The boring data for all locations indicated, as well as any other boring logs or other factual records of subsurface data and investigations performed by the department for the design of the project, will be provided in the bridge electronic deliverable file or will be available from the Project Contact upon written request. No greater significance or weight should be given to the boring data depicted on the plan sheets than is subsurface data available from the district or elsewhere.

The Commission does not represent or warrant that any such boring data accurately depicts the conditions to be encountered in constructing this project. A contractor assumes all risks it may encounter in basing its bid prices, time or schedule of performance on the boring data depicted here or those available from the district, or on any other documentation not expressly warranted, which the contractor may obtain from the Commission.

Notes:
Denotes boring location.
For pile locations, see Sheets No. 7 and 10.

BENCHMARKS

BM-71-99-97 R.R. spike in West face of corner post 0.9 mi. South of Rte. H on county road SW of H-21, East of county road.
Elev. 925.19

BM-49-01-01 R.R. spike East of root of 1.2′ wild cherry with blazed "△" West side of county road SW H-21. West of Gardner's chicken houses. BM is 1.475 miles South of Rte. H.
Elev. 949.43

GENERAL PLAN AND ELEVATION

PRELIMINARY

STATE OF MISSOURI
GINA D. HORNER
NUMBER E-30413
REGISTERED PROFESSIONAL ENGINEER
Gina D. Horner 3-9-10

DATE PREPARED	7/28/09
ROUTE	I-49
STATE	MO
DISTRICT	BR
SHEET NO.	2
COUNTY	McDONALD
JOB NO.	J7P0601
CONTRACT ID.	
PROJECT NO.	
BRIDGE NO.	A6380

DESCRIPTION

DATE

MISSOURI HIGHWAYS AND TRANSPORTATION COMMISSION
105 WEST CAPITOL
JEFFERSON CITY, MO 65102
1-888-ASK-MODOT (1-888-275-6636)

HNTB
715 KIRK DRIVE
KANSAS CITY, MO 64105-1310
TELEPHONE (816) 472-1201
CERTIFICATE OF AUTHORITY
NO. 001270

IF A SEAL IS PRESENT ON THIS SHEET IT HAS BEEN ELECTRONICALLY SEALED AND DATED.

REV.

USER: TThompson
PLOTTED: 08-MAR-2010 14:58 \\kcow00\Jobs\49259\Bridges\Plans\CDtoMoDotA6380_03-05-10\J7P0601\A6380-dgn\ZPLOT_A02.dgn

Detailed JUL 2009
Checked JUL 2009

Note: This drawing is not to scale. Follow Dimensions.

ESTIMATED QUANTITIES

ITEM		SUBSTR.	SUPERSTR.	TOTAL
Bridge Approach Slab (Bridge)	sq. yard	——	220	220
Structural Steel Piles (12 in.)	linear foot	456	——	456
Pre-Bore for Piling	linear foot	88	——	88
Class B Concrete (Substructure)	cu. yard	44.7	——	44.7
Slab on Concrete I-Girder	sq. yard	——	391	391
* Safety Barrier Curb	linear foot	——	254	254
Type 6 (54 in.) Prestressed Concrete I-Girder	linear foot	——	413	413
Steel Intermediate Diaphragm for P/S Concrete Girders	each	——	4	4
Vertical Drain at End Bents	each	2	——	2
Laminated Neoprene Bearing Pad (Tapered)	each	——	10	10
Corrugated Metal Pipe Pile Spacers	each	16	——	16

Notes:
The cost of furnishing, fabricating and installing Neoprene Bearing Pads (Tapered), complete-in-place, will be paid for at the contract unit price for Laminated Neoprene Bearing Pad (Tapered) per each.
* Safety barrier curb shall be cast-in-place option or slip-form option.
All reinforcement in the end bents is included in the Estimated Quantities for Slab on Concrete I-Girder.
All concrete above the construction joint in the end bents is included in the Estimated Quantities for Slab on Concrete I-Girder.

PILE AND FOOTING DATA

BENT NO.			1	2
Bearing Pile	Type		Foundation	Foundation
	Kind		HP12x53	HP12x53
	Number		8	8
	Approximate Length	Ft.	30	27
	Pile Driving Verification Method		Dynamic Bearing Formula	Dynamic Bearing Formula
	Pre-bore Elevation		1000.0	1005.0
	Design Bearing	Kips	140	140
	Hammer Energy Required	Lb-Ft	15750	15750

Notes:
Minimum energy requirement of hammer is based on plan length and design bearing value of piles.
Prebore to elevations shown in data table.

ESTIMATED QUANTITIES FOR SLAB ON CONCRETE I-GIRDER

ITEM		TOTAL
Class B-2 Concrete	cu. yard	144.1
Reinforcing Steel	pound	10,570
Reinforcing Steel (Epoxy Coated)	pound	20,570

Notes:
The table of Estimated Quantities for Slab on Concrete I-Girder represents the quantities used by the State in preparing the cost estimate for concrete slabs. The area of the concrete slab will be measured to the nearest square yard with the horizontal dimensions as shown on the plan of slab. Payment for prestressed panels, stay-in-place forms, conventional forms, all concrete and coated and uncoated reinforcing steel will be considered completely covered by the contract unit price for the slab. Variations may be encountered in these estimated quantities but the variations cannot be used for adjustment in the contract unit price.
Method of forming the slab shall be as shown on the plans and in accordance with Sec 703. All hardware for forming the slab left in place as a permanent part of the structure shall be coated in accordance with ASTM A123 or ASTM B633 with a thickness class SC 4 and a finish type I, II or III.
Class B-2 Concrete quantity is based on minimum top flange thickness and minimum joint material thickness.
The prestressed panel quantities are not included in the table of Estimated Quantities for Slab on Concrete I-Girder.
Slab shall be cast-in-place with conventional and precast prestressed panel forming. Stay-in-place corrugated metal forms will not be permitted.

GENERAL NOTES:

DESIGN SPECIFICATIONS:
2007 - AASHTO LRFD 4th Edition (Superstructure)
Load and Resistance Factor Design
Seismic Design Category = A
Seismic Peak Horizontal Ground Acceleration = 0.04

2002 - AASHTO 17th Edition (Substructure)
Load Factor Design
Seismic Performance Category A
Acceleration Coefficient = 0.04

DESIGN LOADINGS:
HL-93 (LRFD Superstructure, LFD Substructure)
35#/Sq. Ft. Future Wearing Surface.
Defense Transporter Erector Loading
Earth 120#/Cu. Ft., Equivalent Fluid Pressure = 45#/Cu. Ft.
Superstructure: Simply-Supported, non-composite for dead load.
Continuous composite for live load.

DESIGN UNIT STRESSES:
Class B Concrete (Substructure) f'c = 3,000 psi.
Class B-1 Concrete (Safety Barrier) f'c = 4,000 psi
Class B-2 Concrete (Superstructure, except Prestressed Girders and Safety Barrier) f'c = 4,000 psi.
Reinforcing Steel Grade 60 Fy = 60,000 psi.
Structural Carbon Steel (ASTM A709 Grade 36) fy = 36,000 psi.
Steel Pile (ASTM A709 Grade 50) fb = 9,000 psi fy=50,000 psi.
For precast prestressed panel stresses, see Sheet No. 17.
For prestressed girder stresses, see Sheet No. 15.

NEOPRENE PADS:
Neoprene Elastomeric Pads shall be 60 durometer.
Laminated Neoprene Bearing Pads (Tapered) shall be in accordance with Sec 716.

JOINT FILLER:
All joint filler shall be in accordance with Sec 1057 for preformed sponge rubber expansion and partition joint filler, except as noted.

REINFORCING STEEL:
Minimum clearance to the reinforcing steel shall be 1-1/2", unless otherwise shown.

MISCELLANEOUS:
"Sec" refers to the sections in the standard and supplemental specifications unless specified otherwise.

PILES:
All piles shall be placed in pre-bored holes. After insertion of pile, pre-bored hole shall be filled with concrete (Class B) up to Elev. 1005.00 for End Bent 1 and Elev. 1010.00 for End Bent 2. Piles shall be driven (seated) into rock prior to concrete set. Corrugated metal pile spacers shall be installed over the pile and backfilled with sand as the MSE Wall backfill is placed. Cost of concrete backfill shall be included in the cost of "Pre-bore For Piling". Cost of sand backfill shall be included in cost of "Corrugated Metal Pipe Pile Spacers."

STATE OF MISSOURI
GINA D. HORNER
NUMBER E-30413
REGISTERED PROFESSIONAL ENGINEER
3-9-10

DATE PREPARED	
07/28/09	
ROUTE I-49	STATE MO
DISTRICT BR	SHEET NO. 3
COUNTY McDONALD	
JOB NO. J7P0601	
CONTRACT ID.	
PROJECT NO.	
BRIDGE NO. A6380	

DESCRIPTION	DATE

MISSOURI HIGHWAYS AND TRANSPORTATION COMMISSION
105 WEST CAPITOL
JEFFERSON CITY, MO 65102
1-888-ASK-MODOT (1-888-275-6636)

HNTB
715 KIRK DRIVE
KANSAS CITY, MO 64105-1310
TELEPHONE (816) 472-1201
CERTIFICATE OF AUTHORITY
NO. 001270

IF A SFAI IS PRESENT ON THIS SHEET IT HAS BEEN ELECTRONICALLY SEALED AND DATED.

REV.

GENERAL NOTES AND
ESTIMATED QUANTITIES

Detailed JUL 2009
Checked JUL 2009

Note: This drawing is not to scale. Follow Dimensions.

TYPICAL BORING

QU(TSF)
P-Penet.
E-Equiv.
L-Labor.

STANDARD PENETRATION TEST

DEPTH	BLOWS/6"
2.0	3-2-3
657.6 L	3.5
7.0	50/3"

ROCK CORE

DEPTH	REC%	RQD%
15.0	82	0

ELEV. 902.2

ELEV. 892.2

ELEV. 887.2

Ground surface elevation

Unconfined Compressive Strength in tons per square foot as determined by P- Pocket Penetrometer, E- Equivalent or L- Laboratory Unconfined Compression Test. Depth of sample is indicated at top of the sampling interval.

Interval of Undistubed Sample (Thin Walled Tube). Depth of sample is indicated at top of the sample interval.

Ground Water Level as measured at hours indicated after completion of boring.

Standard Penetration Test Results. The number of blows of a 140 lb. hammer falling 30" required to drive a 1-3/8" I.D., 2" O.D. split barrel sampler 6". Penetration of less than 6" is shown as 50/3"-Blows/penteration in inches. Depth of sample is indicated at top of the sample interval.

Stratum Line-Material Change

Elevation of Material Change

Interval of bedrock that was sampled with double tube core barrel. Depth of sample is indicated at the bottom of the sample interval.

RQD-(Rock Quality Designation) a modified core recovery in per cent used as an index to rock quality.

RQD(%)	Rock Quality Designation
0-25	Very Poor
25-50	Poor
50-75	Fair
75-90	Good
90-100	Excellent

Core Run (REC%)- Core Recovery in per cent for the indicated interval.

Boring No. B-4
Bent 2

Substructure Unit Number

Boring No.

QU(TSF)
P-Penet.
E-Equiv.
L-Labor.

STANDARD PENETRATION TEST

DEPTH	BLOWS/6"
3.5	10-8-15
8.5	50/0"
13.5	20-50/0"

ROCK CORE

DEPTH	REC%	RQD%
19.0	50	0
24.0	0	0
29.0	50	5
34.0	98	96
39.0	100	72
44.0	100	68
49.0	100	72
54.0	100	73
56.0	100	73

713L
526L

ELEV. 1064.4

GRAVEL, trace clay, light brown and white, medium dense, moist.

ELEV. 1055.9

CHERT GRAVEL/HIGHLY WEATHERED LIMESTONE, trace clay seams, white and light brown, very dense.

ELEV. 1040.4

LIMESTONE, stratified, abundant chert seams and inclusions, trace clay seams, light gray and gray, medium bedded, fine grained, weathered to slightly weathered, hard, solid.

ELEV. 1035.4

CHERT, stratified, abundant limestone seams, light gray and gray, medium bedded, fine grained, fresh, hard, solid.

ELEV. 1008.4

Boring No. MB1-1
End Bent 1 (Core)

STANDARD PENETRATION TEST

DEPTH	BLOWS/6"
3.5	15-28-50/4"
8.5	3-40-20
13.0	50/1"

ELEV. 1081.5

GRAVELLY SILT, light grayish brown, dry

ELEV. 1078.0

CHERT GRAVEL/HIGHLY WEATHERED CHERT, with clay seams, light reddish brown and white, dense to very dense, dry

ELEV. 1068.0

WEATHERED CHERT, white, hard

Auger refusal on chert at 14.3'

ELEV. 1067.2

Boring No. MBS-2
End Bent 1

GENERAL NOTES:

The borings shown on this drawing were drilled for the Missouri Department of Transportation, on October 14, 2002 and between June 10 and 27, 2006, by Terracon, Inc. under the direction of HNTB.

For boring locations in plan, see Sheet No. 2.

The ground water levels shown were recorded during time of drilling. Porosity of soil strata, weather conditions, seasonal changes, site topography, etc., may cause changes in the water levels reported.

The boring information shown on this drawing is abbreviated. A complete copy of boring logs and test results are available upon request to the Department.

For notice and disclaimer regarding boring log data, see Sheet No. 2.

BORING DATA

Detailed JUL 2009
Checked JUL 2009

Note: This drawing is not to scale. Follow Dimensions.

STATE OF MISSOURI
GINA D. HORNER
NUMBER E-30413
REGISTERED PROFESSIONAL ENGINEER
3-9-10

DATE PREPARED	04/13/09
ROUTE	I-49
STATE	MO
DISTRICT	BR
SHEET NO.	4
COUNTY	McDONALD
JOB NO.	J7P0601
CONTRACT ID.	
PROJECT NO.	
BRIDGE NO.	A6380

DESCRIPTION

DATE

MISSOURI HIGHWAYS AND TRANSPORTATION COMMISSION

105 WEST CAPITOL
JEFFERSON CITY, MO 65102
1-888-ASK-MODOT (1-888-275-6636)

HNTB
715 KIRK DRIVE
KANSAS CITY, MO 64105-1310
TELEPHONE (816) 472-1201
CERTIFICATE OF AUTHORITY
NO. 001270

IF A SFAI IS PRESENT ON THIS SHEET IT HAS BEEN ELECTRONICALLY SEALED AND DATED.

REV.

USER: TThompson
PLOTTED: 08-MAR-2010 14:58 \\kcow00\Jobs\49259\Bridges\Plans\CDtoMoDotA6380_03-05-10\J7P0601\A6380-dgn\ZPLOT_A04.dgn

Boring No. MB1-2 End Bent 1 (Core)

ELEV. 1080.7

STANDARD PENETRATION TEST DEPTH	BLOWS/6"
3.5	18-29-37
8.5	24-36-15

SANDY GRAVEL, trace clay seams, light brown and white, very dense, moist.

ELEV. 1065.7

ROCK CORE DEPTH	REC%	RQD%
16.0	95	100
21.0	100	70
26.0	100	85
31.0	97	45
36.0	100	50
41.0	100	90
46.0	95	70
51.0	100	80
56.0	90	90
61.0	100	90
66.0	100	90
71.0	100	65
76.0	100	100
81.0	100	75
86.0	100	100
91.0	100	65

CHERT, stratified, with limestone seams, trace clay seams, light gray and gray, medium bedded, fine grained, fresh, hard, solid.

ELEV. 1059.7

CHERT, stratified, with limestone seams, light gray and gray, thick bedded, very fine to fine grained, fresh, very hard, solid.

ELEV. 1014.7

LIMESTONE, stratified, abundant chert seams and inclusions, trace shale laminations, light gray, gray and dark gray, medium bedded, very fine grained, fresh, hard, solid.

ELEV. 1004.7

LIMESTONE, stratified, abundant chert seams and inclusions, with shale laminations, light gray, gray and dark gray, thick bedded, very fine grained, fresh, very hard, solid.

666L
1133L
900L
667L

ELEV. 989.7

Boring No. MB1-3 End Bent 2 (Core)

ELEV. 1088.5

STANDARD PENETRATION TEST DEPTH	BLOWS/6"
3.5	23-11-22
8.5	50/4"

GRAVEL, with clay seams dark brown to light brown, red and white, dense, moist.

ELEV. 1080.0

SANDY GRAVEL, light brown and white, dense, moist.

ELEV. 1077.5

ROCK CORE DEPTH	REC%	RQD%
15.5	78	73
20.5	90	66
25.5	100	85
31.0	98	67
36.0	100	71
41.0	100	96
46.0	100	85
51.0	100	75
52.5	98	89
60.0	98	33
65.0	90	90
70.0	99	78
75.0	100	82
80.0	100	93
85.0	100	93
90.0	100	70
95.0	100	70
99.0	100	90

LIMESTONE, stratified, abundant chert seams and inclusions, light gray and gray, thick bedded, very fine grained, fresh, hard, solid.

ELEV. 1063.0

CHERT, stratified, with limestone seams, light gray and gray, medium bedded, very fine to fine grained, fresh, hard, solid.

ELEV. 1052.5

CHERT, stratified, trace to with limestone seams, light gray and gray, medium to thick bedded, very fine grained, fresh, very hard, solid.

ELEV. 1031.0

LIMESTONE, stratified, abundant chert seams and inclusions, trace clay seams, light gray and gray, medium to thick bedded, very fine grained, fresh to slightly weathered, very hard, solid.

830L
444L

ELEV. 1013.5

CHERT, stratified, trace chert seams and inclusions, abundant shale laminations, light gray, gray and dark gray, thick bedded, fine grained, fresh, very hard, solid.

ELEV. 1003.5

CHERT, stratified, trace limestone seams, light gray and gray, thick bedded, very fine to fine grained, fresh, very hard, solid.

ELEV. 989.5

Boring No. MB1-4 End Bent 2 (Core)

ELEV. 1081.1

STANDARD PENETRATION TEST DEPTH	BLOWS/6"
3.5	50/6"
8.5	50/3"

SANDY GRAVEL, trace clay seams, light brown and white, very dense, moist.

ELEV. 1071.1

ROCK CORE DEPTH	REC%	RQD%
11.0	90	90
16.0	100	80
21.0	100	41
26.0	100	40
31.0	100	55
36.0	100	73
41.0	100	90
46.0	100	90
51.0	100	43
56.0	100	85
61.0	100	75
63.5	100	100

CHERT, stratified, trace to with limestone seams, light gray, gray, and dark gray, medium to thick bedded, fine to very fine grained, fresh, hard, solid.

ELEV. 1020.1

LIMESTONE, stratified, abundant chert seams and inclusions, light gray and gray, medium bedded, fine grained, fresh, hard, solid.

ELEV. 1017.6

ELEV. 1080.6

PAD FILL-GRAVEL, light grayish brown

ELEV. 1077.1

GRAVELLY LEAN CLAY, with sand, reddish brown, very stiff, dry

ELEV. 1075.6

SANDY GRAVEL/HIGHLY WEATHERED CHERT, light brown, very dense, dry

Auger refusal on chert at 12.3'

ELEV. 1068.3

Boring No. MBS-3 End Bent 2

NOTE:

For Typical Boring and General Notes, see Sheet No. 4.

BORING DATA

Detailed JUL 2009
Checked JUL 2009

Note: This drawing is not to scale. Follow Dimensions.

STATE OF MISSOURI — GINA D. HORNER — NUMBER E-30413 — REGISTERED PROFESSIONAL ENGINEER — 3-9-10

DATE PREPARED	04/13/09
ROUTE	I-49
STATE	MO
DISTRICT	BR
SHEET NO.	5
COUNTY	McDONALD
JOB NO.	J7P0601
CONTRACT ID.	
PROJECT NO.	
BRIDGE NO.	A6380

DESCRIPTION | DATE

MISSOURI HIGHWAYS AND TRANSPORTATION COMMISSION
105 WEST CAPITOL
JEFFERSON CITY, MO 65102
1-888-ASK-MODOT (1-888-275-6636)

HNTB
715 KIRK DRIVE
KANSAS CITY, MO 64105-1310
TELEPHONE (816) 472-1201
CERTIFICATE OF AUTHORITY NO. 001270

IF A SFAI IS PRESENT ON THIS SHEET IT HAS BEEN ELECTRONICALLY SEALED AND DATED.

REV.

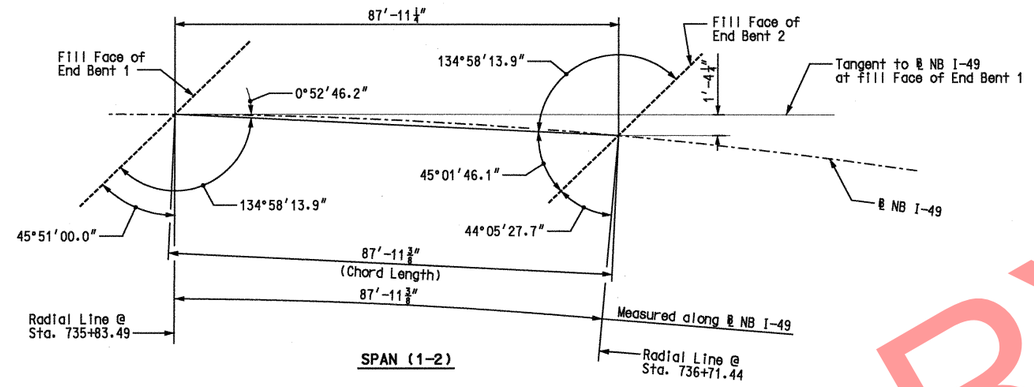

SPAN (1-2)

SUBSTRUCTURE LAYOUT

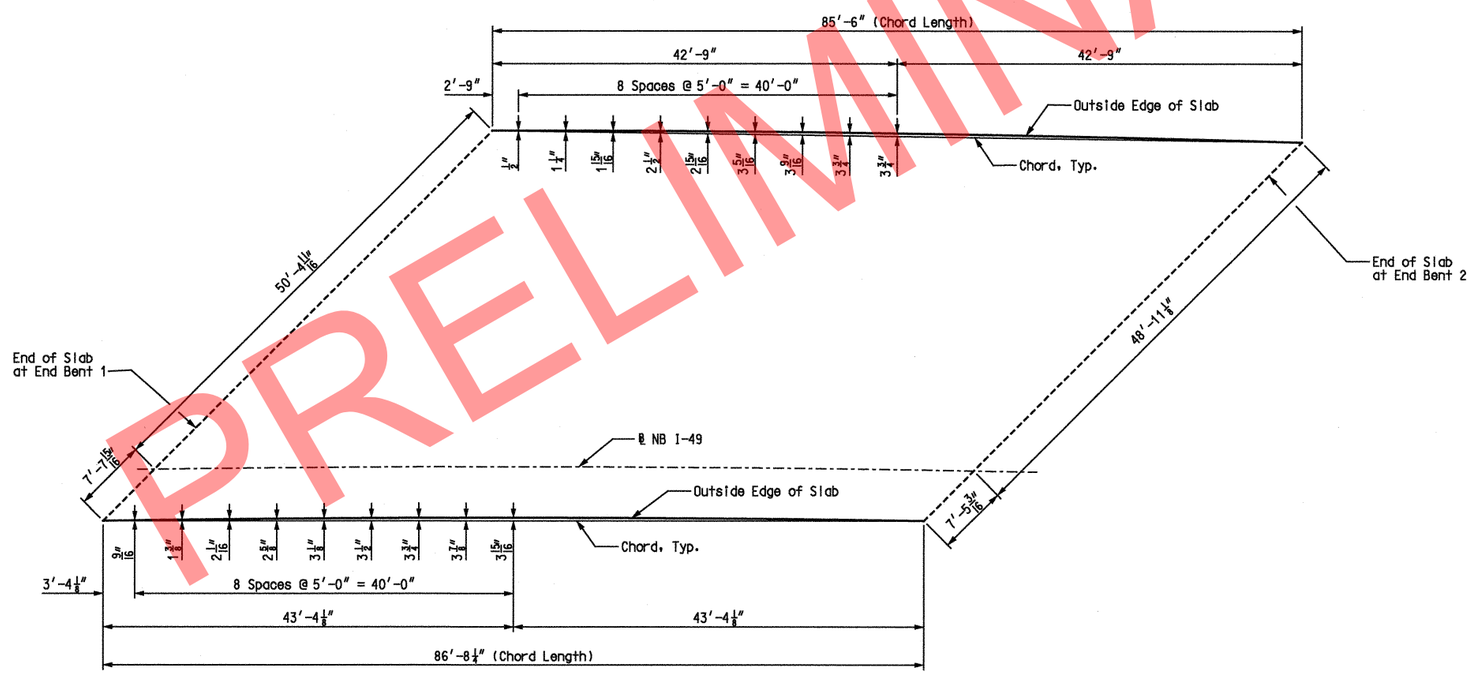

SPAN (1-2)

SLAB CURVE ORDINATES

PRELIMINARY

SUBSTRUCTURE LAYOUT AND SLAB CURVE ORDINATES

STATE OF MISSOURI
GINA D. HORNER
NUMBER E-30413
REGISTERED PROFESSIONAL ENGINEER
3-9-10

DATE PREPARED	
07/28/09	
ROUTE I-49	STATE MO
DISTRICT BR	SHEET NO. 6
COUNTY McDONALD	
JOB NO. J7P0601	
CONTRACT ID.	
PROJECT NO.	
BRIDGE NO. A6380	

DATE	DESCRIPTION

MISSOURI HIGHWAYS AND TRANSPORTATION COMMISSION
105 WEST CAPITOL
JEFFERSON CITY, MO 65102
1-888-ASK-MODOT (1-888-275-6636)

HNTB
715 KIRK DRIVE
KANSAS CITY, MO 64105-1310
TELEPHONE (816) 472-1201
CERTIFICATE OF AUTHORITY NO. 001270

IF A SEAL IS PRESENT ON THIS SHEET IT HAS BEEN ELECTRONICALLY SEALED AND DATED.

REV.

USER: TThompson
PLOTTED: 08-MAR-2010 14:59 \\kcow00\Jobs\49259\Bridges\Plans\CDtoMoDotA6380_03-05-10\J7P0601\A6380-dgn\ZPLOT_A06.dgn

Detailed JUL 2009
Checked JUL 2009

Note: This drawing is not to scale. Follow Dimensions.

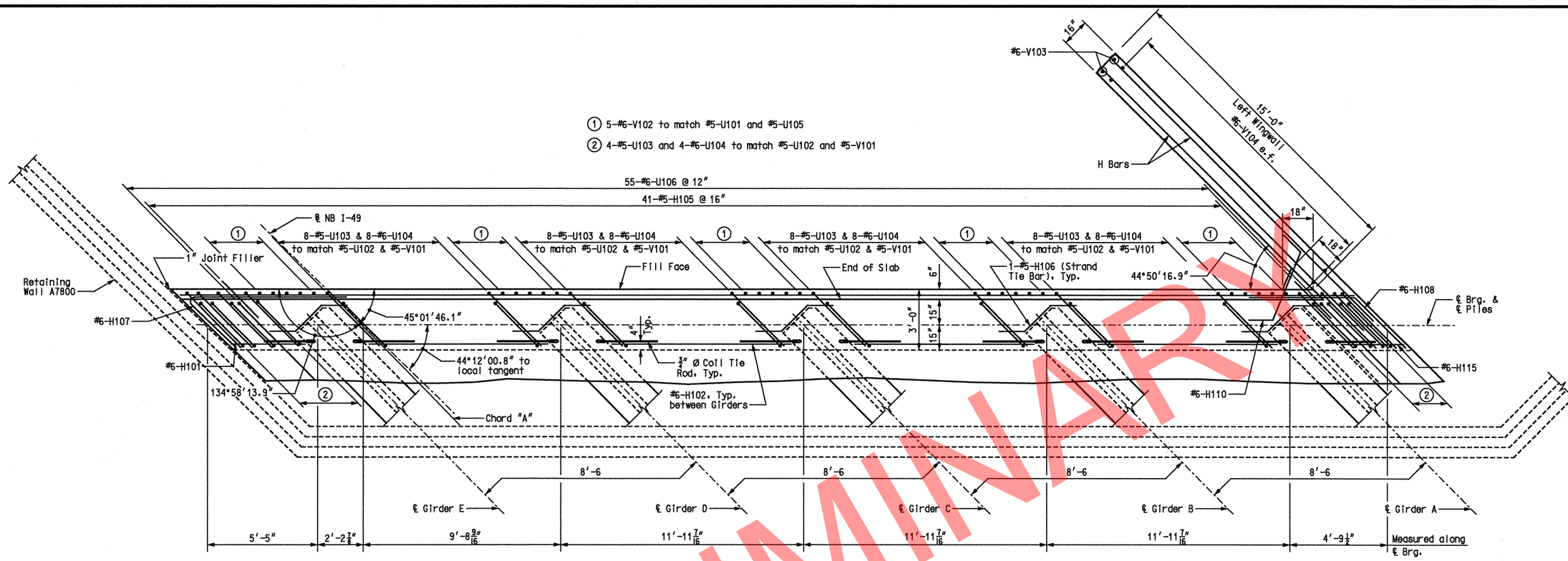

PLAN

Notes:
All piles shall be HP12x53.
e.f. denotes each face.
All vertical reinforcing bars in the substructure beams or caps shall be field adjusted to clear piles by at least 1 1/2".
All concrete in the end bent above top of beam and below top of slab shall be Class B-2.
Strands at end of the girder shall be field bent or, if neccessary, cut in field to maintain 1 1/2" minimum clearance to fill face of end bent.
For reinforcement of the safety barrier curb, see Sheets No. 19 & 20.
For details of Retaining Wall A7800, see Retaining Wall plans.
For Bearing Pad Detail, see Sheet No. 9.
For Detail of Steel Pile Splice, see Sheet No. 9.
For additional End Bent 1 Details, see Sheets No. 8 & 9.

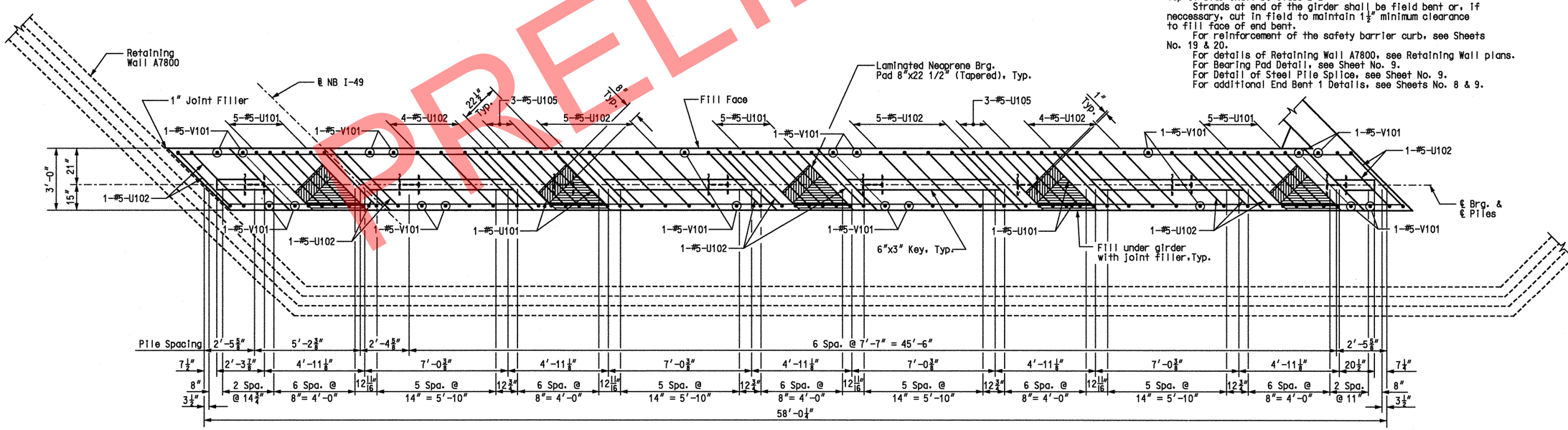

PLAN OF BEAM

END BENT 1

Detailed JUL 2009
Checked JUL 2009

Note: This drawing is not to scale. Follow Dimensions.

Sheet No. 7 of 26

STATE OF MISSOURI
GINA D. HORNER
NUMBER E-30413
REGISTERED PROFESSIONAL ENGINEER
3-9-10

DATE PREPARED	7/24/09
ROUTE	I-49
STATE	MO
DISTRICT	BR
SHEET NO.	7
COUNTY	McDONALD
JOB NO.	J7P0601
CONTRACT ID.	
PROJECT NO.	
BRIDGE NO.	A6380

DATE	DESCRIPTION

MISSOURI HIGHWAYS AND TRANSPORTATION COMMISSION
105 WEST CAPITOL
JEFFERSON CITY, MO 65102
1-888-ASK-MODOT (1-888-275-6636)

HNTB
715 KIRK DRIVE
KANSAS CITY, MO 64105-1310
TELEPHONE (816) 472-1201
CERTIFICATE OF AUTHORITY NO. 001270

IF A SFAI IS PRESENT ON THIS SHEET IT HAS BEEN ELECTRONICALLY SEALED AND DATED.

REV.

USER: TThompson
PLOTTED: 08-MAR-2010 14:59

\\kcow00\Jobs\49259\Bridges\Plans\CDtoMoDotA6380_03-05-10\J7P0601\A6380-dgn\ZPLOT_A07.dgn

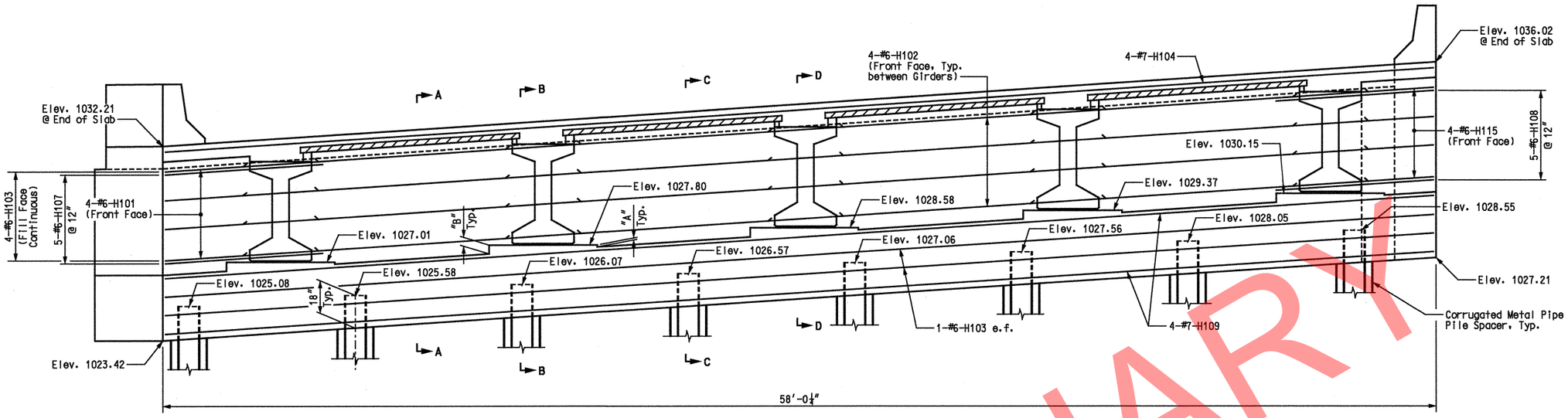

ELEVATION

BRG. PAD HEIGHTS		
GIRDER	"A"	"B"
A	1"	4⅞"
B	1⅛"	5"
C	1"	4⅞"
D	1⅛"	5"
E	1"	4⅞"

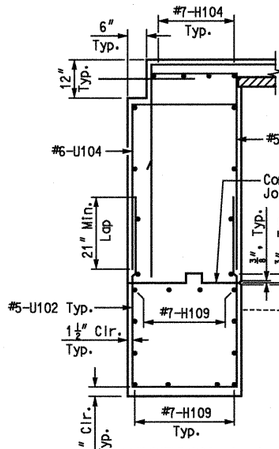

SECTION A-A

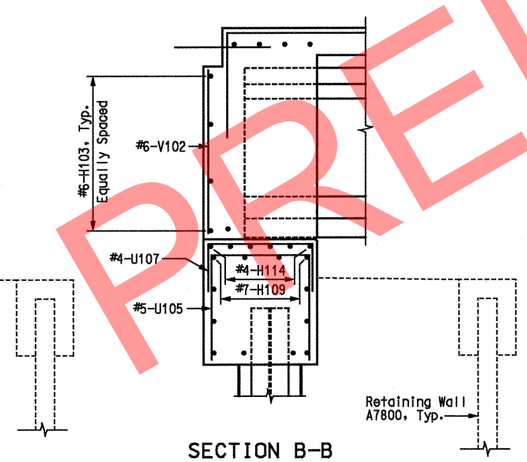

SECTION B-B

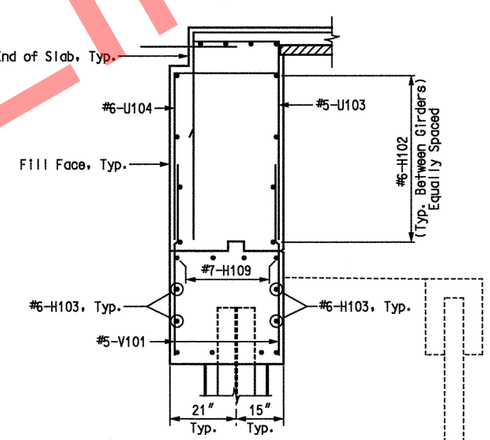

SECTION C-C

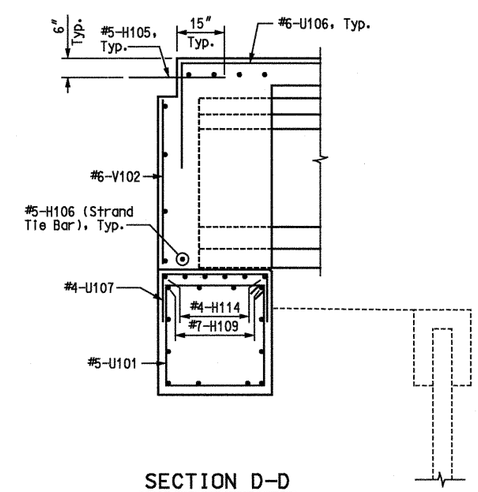

SECTION D-D

Notes:
e.f. denotes each face.
For additional notes and details, see Sheets No. 7 and 9.

END BENT 1 DETAILS

PRELIMINARY

STATE OF MISSOURI
GINA D. HORNER
NUMBER E-30413
REGISTERED PROFESSIONAL ENGINEER
3-9-10

DATE PREPARED	7/24/09
ROUTE I-49	STATE MO
DISTRICT BR	SHEET NO. 8
COUNTY	McDONALD
JOB NO.	J7P0601
CONTRACT ID.	
PROJECT NO.	
BRIDGE NO.	A6380

DESCRIPTION

DATE

MISSOURI HIGHWAYS AND TRANSPORTATION COMMISSION
105 WEST CAPITOL
JEFFERSON CITY, MO 65102
1-888-ASK-MODOT (1-888-275-6636)

HNTB
715 KIRK DRIVE
KANSAS CITY, MO 64105-1310
TELEPHONE (816) 472-1201
CERTIFICATE OF AUTHORITY
NO. 001270

IF A SEAL IS PRESENT ON THIS SHEET IT HAS BEEN ELECTRONICALLY SEALED AND DATED.

REV.

USER: TThompson
PLOTTED: 08-MAR-2010 14:59 \\kcow00\Jobs\49259\Bridges\Plans\CDtoMoDotA6380_03-05-10\J7P0601\A6380-dgn\ZPLOT_A08.dgn

Detailed JUL 2009
Checked JUL 2009

Note: This drawing is not to scale. Follow Dimensions.

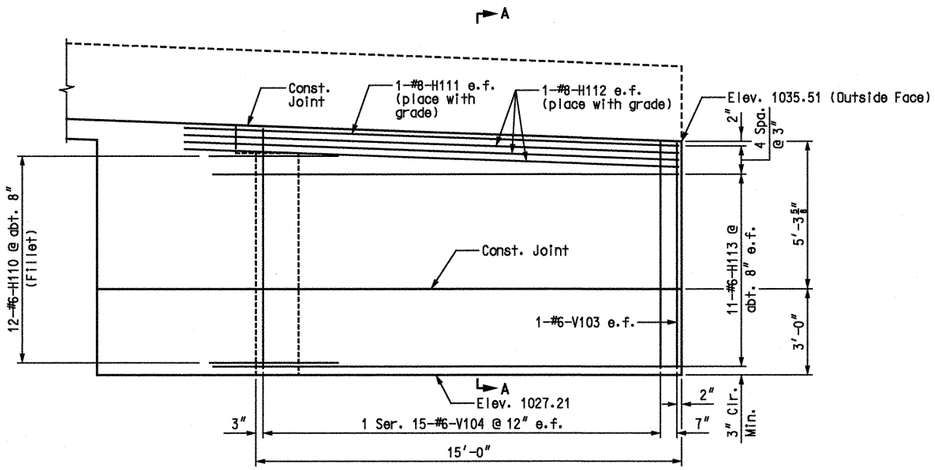

WINGWALL ELEVATION

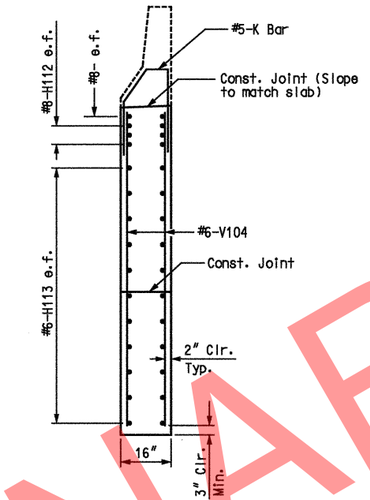

SECTION A-A

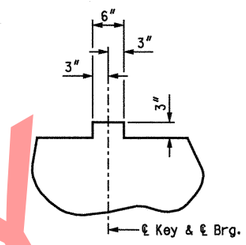

TYPICAL SECTION THRU KEY

SUBSTRUCTURE QUANTITY TABLE FOR END BENT 1		
ITEM		QUANTITY
Structural Steel Piles (12 in.)	linear foot	240
Pre-Bore for Piling	linear foot	203
Class B Concrete (Substructure)	cu. yard	22.6
Corrugated Metal Pipe Pile Spacers	each	8

Note:
These quantities are included in the Estimated Quantities table on Sheet No. 3.

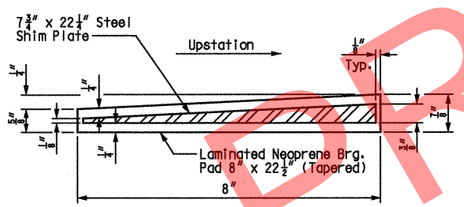

DETAIL OF LAMINATED NEOPRENE BEARING PAD (TAPERED)

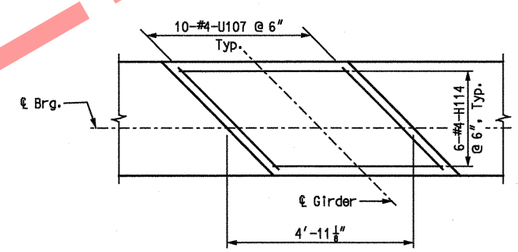

BEARING PAD DETAIL

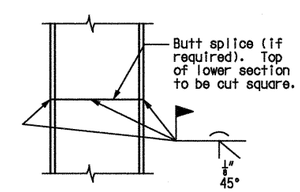

DETAIL OF STEEL PILE SPLICE

Notes:
e.f. denotes each face.
For additional notes and details, see Sheets No. 7 and 8.

END BENT 1 DETAILS

STATE OF MISSOURI
GINA D. HORNER
NUMBER E-30413
REGISTERED PROFESSIONAL ENGINEER
3-9-10

DATE PREPARED	7/24/09
ROUTE	I-49
STATE	MO
DISTRICT	BR
SHEET NO.	9
COUNTY	McDONALD
JOB NO.	J7P0601
CONTRACT ID.	
PROJECT NO.	
BRIDGE NO.	A6380

DATE	DESCRIPTION

MISSOURI HIGHWAYS AND TRANSPORTATION COMMISSION
105 WEST CAPITOL
JEFFERSON CITY, MO 65102
1-888-ASK-MODOT (1-888-275-6636)

HNTB
715 KIRK DRIVE
KANSAS CITY, MO 64105-1310
TELEPHONE (816) 472-1201
CERTIFICATE OF AUTHORITY NO. 001270

IF A SEAL IS PRESENT ON THIS SHEET IT HAS BEEN ELECTRONICALLY SEALED AND DATED.

REV.

USER: TThompson
PLOTTED: 08-MAR-2010 14:59 \\kcow00\Jobs\49259\Bridges\Plans\CDtoMoDotA6380_03-05-10\J7P0601\A6380-dgn\ZPLOT_A09.dgn

Detailed JUL 2009
Checked JUL 2009

Note: This drawing is not to scale. Follow Dimensions.

① 5-#6-V202 to match #5-U201 and #5-U205

② 3-#5-U203 and 3-#6-U204 to match #5-U202 and #5-V201

③ 4-#5-U203 and 4-#6-U204 to match #5-U202 and #5-V201

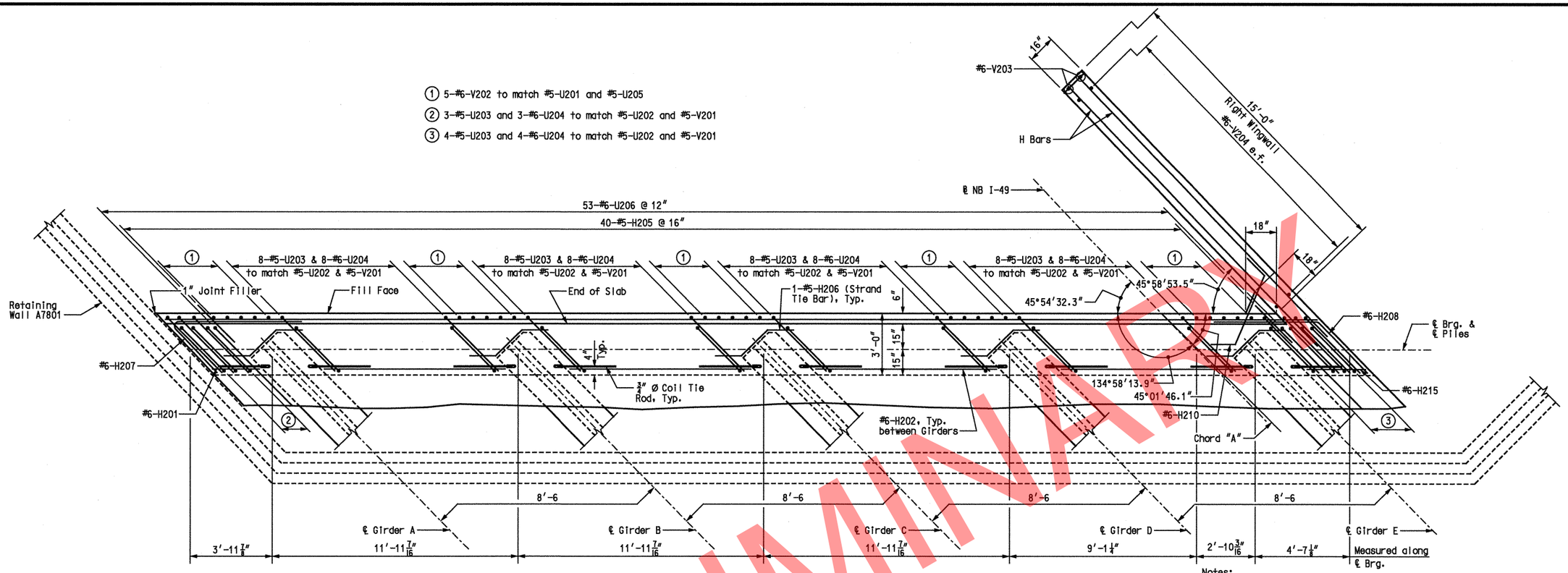

PLAN

Notes:

All piles shall be HP12x53.

e.f. denotes each face.

All vertical reinforcing bars in the substructure beams or caps shall be field adjusted to clear piles by at least 1½".

All concrete in the end bent above top of beam and below top of slab shall be Class B-2.

Strands at end of the girder shall be field bent or, if neccessary, cut in field to maintain 1½" minimum clearance to fill face of end bent.

For reinforcement of the safety barrier curb, see Sheets No. 19 & 20.

For details of Retaining Wall A7801, see Retaining Wall plans.

For Bearing Pad Detail, see Sheet No. 12.

For Detail of Steel Pile Splice, see Sheet No. 12.

For additional End Bent 2 Details, see Sheets No. 11 & 12.

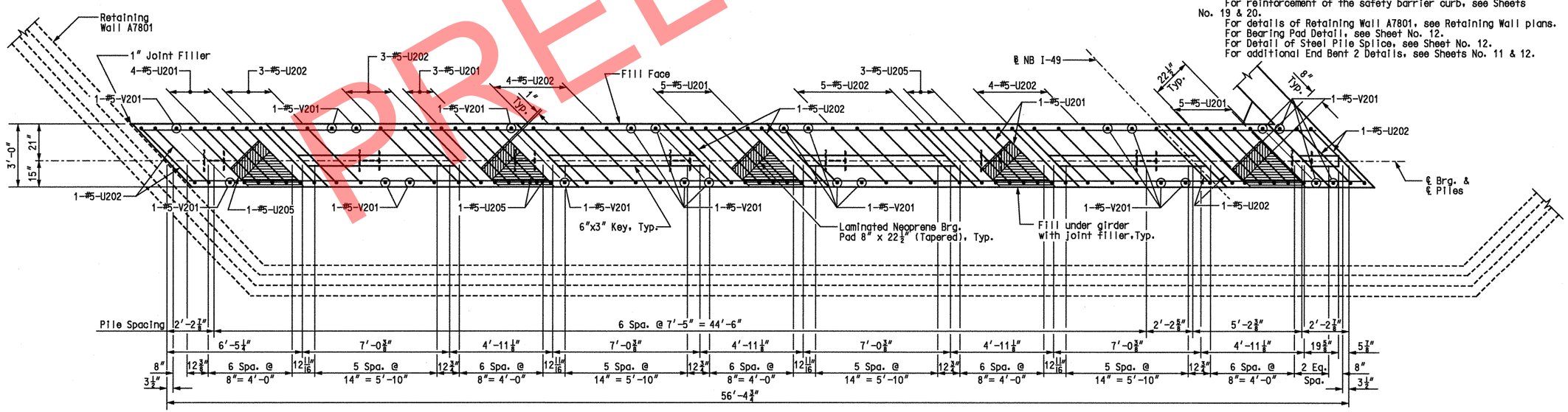

PLAN OF BEAM

END BENT 2

Detailed JUL 2009
Checked AUG 2009

Note: This drawing is not to scale. Follow Dimensions.

Sheet No. 10 of 26

STATE OF MISSOURI
GINA D. HORNER
NUMBER E-30413
REGISTERED PROFESSIONAL ENGINEER
3-9-10

DATE PREPARED	7/31/09
ROUTE	I-49
STATE	MO
DISTRICT	BR
SHEET NO.	10
COUNTY	McDONALD
JOB NO.	J7P0601
CONTRACT ID.	
PROJECT NO.	
BRIDGE NO.	A6380

DATE	DESCRIPTION

MISSOURI HIGHWAYS AND TRANSPORTATION COMMISSION
105 WEST CAPITOL
JEFFERSON CITY, MO 65102
1-888-ASK-MODOT (1-888-275-6636)

HNTB
715 KIRK DRIVE
KANSAS CITY, MO 64105-1310
TELEPHONE (816) 472-1201
CERTIFICATE OF AUTHORITY
NO. 001270

IF A SEAL IS PRESENT ON THIS SHEET IT HAS BEEN ELECTRONICALLY SEALED AND DATED.

REV.

USER: TThompson
PLOTTED: 08-MAR-2010 14:59 \\kcow00\Jobs\49259\Bridges\Plans\CDtoMoDotA6380_03-05-10\J7P0601\A6380-dgn\ZPLOT_A10.dgn

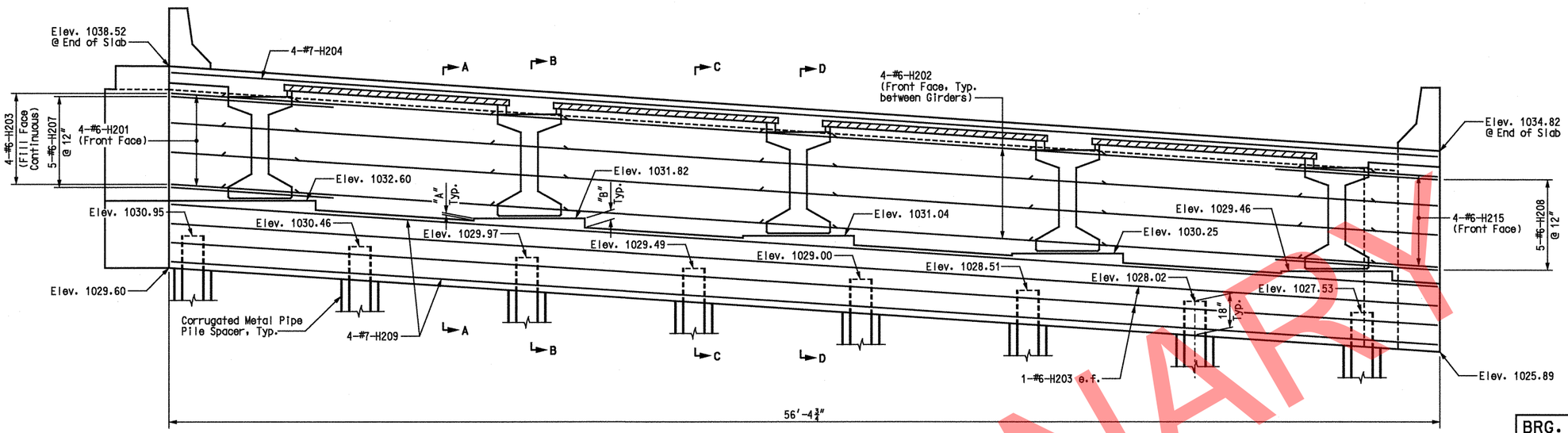

ELEVATION

BRG. PAD HEIGHTS		
GIRDER	"A"	"B"
A	—	4⅞"
B	1"	4⅞"
C	1⅛"	5"
D	1"	4⅞"
E	1"	4⅞"

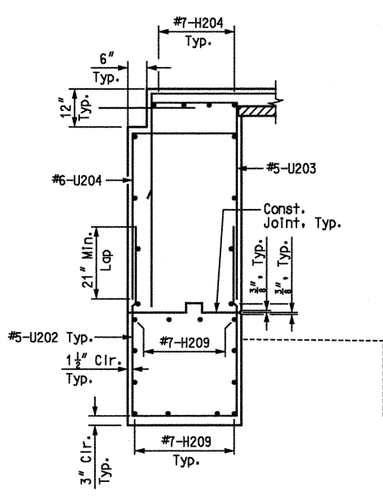

SECTION A-A

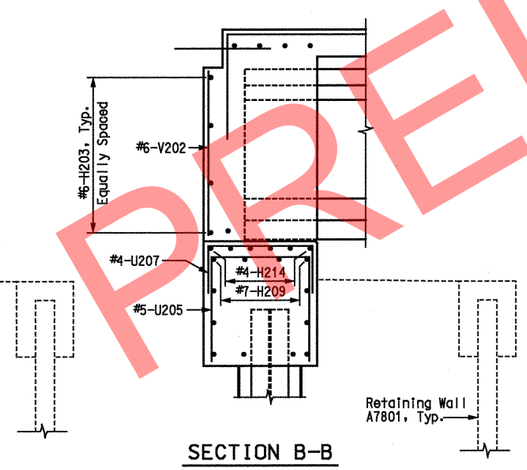

SECTION B-B

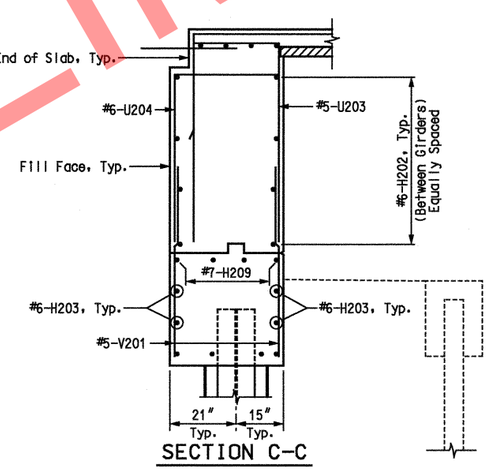

SECTION C-C

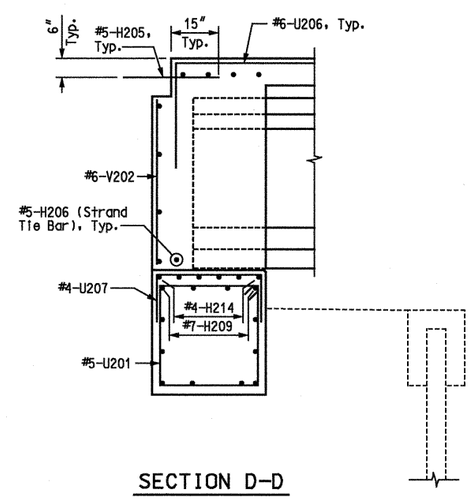

SECTION D-D

Notes:
e.f. denotes each face.
For additional notes and details, see Sheets No. 10 and 12.

END BENT 2 DETAILS

PRELIMINARY

STATE OF MISSOURI
GINA D. HORNER
NUMBER E-30413
REGISTERED PROFESSIONAL ENGINEER
3-9-10

DATE PREPARED	7/31/09
ROUTE	I-49
STATE	MO
DISTRICT	BR
SHEET NO.	11
COUNTY	McDONALD
JOB NO.	J7P0601
CONTRACT ID.	
PROJECT NO.	
BRIDGE NO.	A6380

DESCRIPTION | DATE

MISSOURI HIGHWAYS AND TRANSPORTATION COMMISSION
105 WEST CAPITOL
JEFFERSON CITY, MO 65102
1-888-ASK-MODOT (1-888-275-6636)

HNTB
715 KIRK DRIVE
KANSAS CITY, MO 64105-1310
TELEPHONE (816) 472-1201
CERTIFICATE OF AUTHORITY
NO. 001270

IF A SEAL IS PRESENT ON THIS SHEET IT HAS BEEN ELECTRONICALLY SEALED AND DATED.

USER: TThompson
PLOTTED: 08-MAR-2010 14:59 \\kcow00\Jobs\49259\Bridges\Plans\CDtoMoDotA6380_03-05-10\J7P0601\A6380-dgn\ZPLOT_A11.dgn

Detailed JUL 2009
Checked AUG 2009

Note: This drawing is not to scale. Follow Dimensions.

REV.

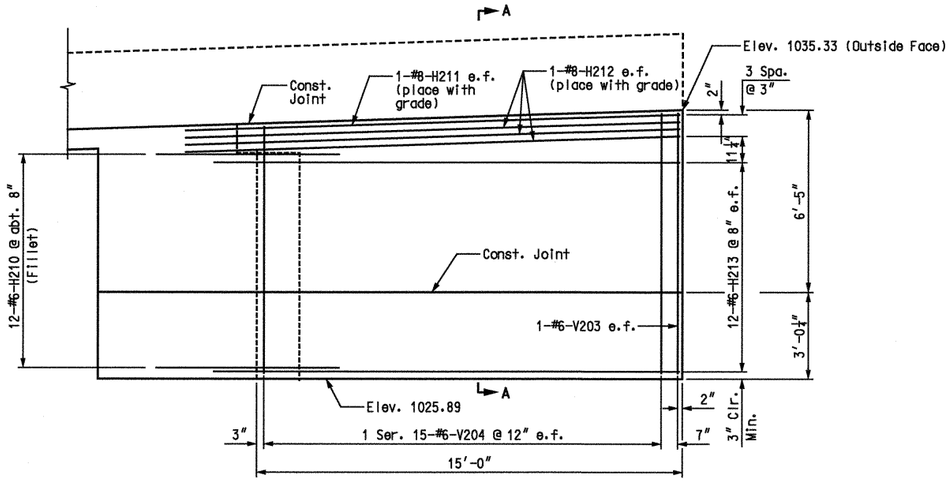

WINGWALL ELEVATION

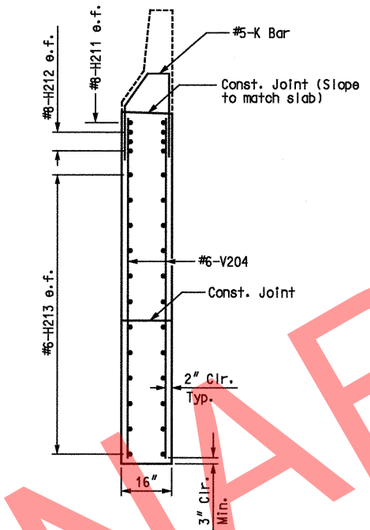

SECTION A-A

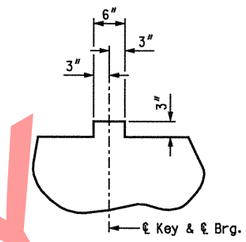

TYPICAL SECTION THRU KEY

SUBSTRUCTURE QUANTITY TABLE FOR END BENT 2		
ITEM		QUANTITY
Structural Steel Piles (12 in.)	linear foot	216
Pre-Bore for Piling	linear foot	182
Class B Concrete (Substructure)	cu. yard	22.1
Corrugated Metal Pipe Pile Spacers	each	8

Note:
These quantities are included in the Estimated Quantities table on Sheet No. 3.

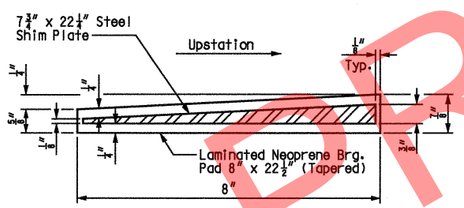

DETAIL OF LAMINATED NEOPRENE BEARING PAD (TAPERED)

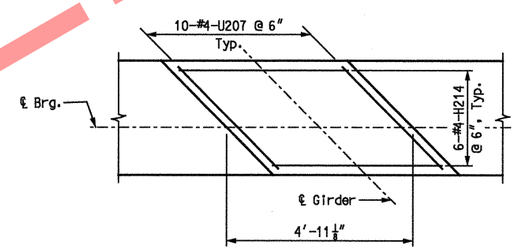

BEARING PAD DETAIL

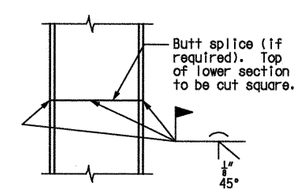

DETAIL OF STEEL PILE SPLICE

Notes:
e.f. denotes each face.
For additional notes and details, see Sheets No. 10 and 11.

END BENT 2 DETAILS

STATE OF MISSOURI
GINA D. HORNER
NUMBER E-30413
REGISTERED PROFESSIONAL ENGINEER
3-9-10

DATE PREPARED 7/31/09
ROUTE I-49 | STATE MO
DISTRICT BR | SHEET NO. 12
COUNTY McDONALD
JOB NO. J7P0601
CONTRACT ID.
PROJECT NO.
BRIDGE NO. A6380

DATE	DESCRIPTION

MISSOURI HIGHWAYS AND TRANSPORTATION COMMISSION
105 WEST CAPITOL
JEFFERSON CITY, MO 65102
1-888-ASK-MODOT (1-888-275-6636)

HNTB
715 KIRK DRIVE
KANSAS CITY, MO 64105-1310
TELEPHONE (816) 472-1201
CERTIFICATE OF AUTHORITY NO. 001270

IF A SEAL IS PRESENT ON THIS SHEET IT HAS BEEN ELECTRONICALLY SEALED AND DATED.

REV.

USER: TThompson
PLOTTED: 08-MAR-2010 14:59 \\kcow00\Jobs\49259\Bridges\Plans\CDtoMoDotA6380_03-05-10\J7P0601\A6380-dgn\ZPLOT_A12.dgn

Detailed JUL 2009
Checked AUG 2009

Note: This drawing is not to scale. Follow Dimensions.

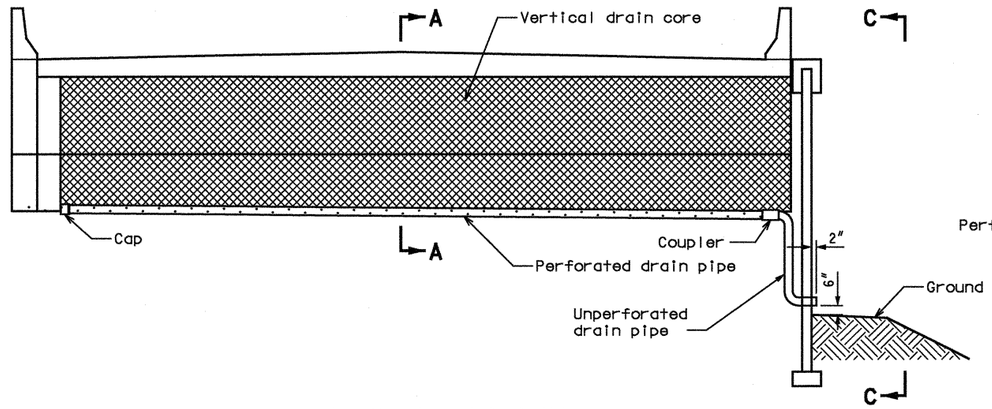

ELEVATION AT END BENT

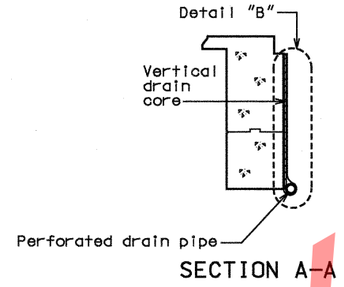

SECTION A-A

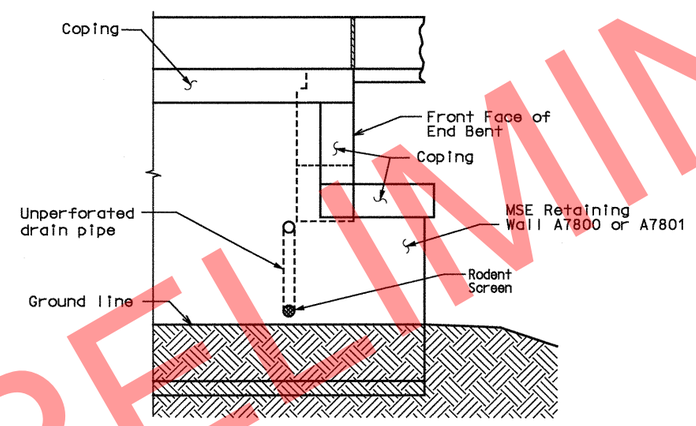

VIEW C-C

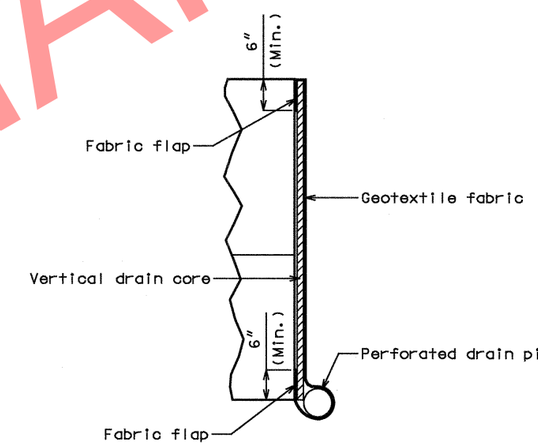

DETAIL "B"

Note:
Drain pipe may be either 6" diameter corrugated metallic-coated steel pipe underdrain, 4" diameter corrugated polyvinyl chloride (PVC) drain pipe, or 4" diameter corrugated polyethylene (PE) drain pipe.

Place drain pipe at fill face of end bent and slope to exit. (See elevation at end bent.)

Perforated pipe shall be placed at fill face side at the bottom of end bent and plain pipe shall be used where the vertical drain ends to the exit.

VERTICAL DRAIN AT END BENTS

STATE OF MISSOURI
GINA D. HORNER
NUMBER E-30413
REGISTERED PROFESSIONAL ENGINEER
3-9-10

DATE PREPARED	07/28/09
ROUTE	I-49
STATE	MO
DISTRICT	BR
SHEET NO.	13
COUNTY	McDONALD
JOB NO.	J7P0601
CONTRACT ID.	
PROJECT NO.	
BRIDGE NO.	A6380

DATE	DESCRIPTION

MISSOURI HIGHWAYS AND TRANSPORTATION COMMISSION
105 WEST CAPITOL
JEFFERSON CITY, MO 65102
1-888-ASK-MODOT (1-888-275-6636)

HNTB
715 KIRK DRIVE
KANSAS CITY, MO 64105-1310
TELEPHONE (816) 472-1201
CERTIFICATE OF AUTHORITY
NO. 001270

IF A SEAL IS PRESENT ON THIS SHEET IT HAS BEEN ELECTRONICALLY SEALED AND DATED.

USER: TThompson
PLOTTED: 08-MAR-2010 15:00 \\kcow00\Jobs\49259\Bridges\Plans\CDtoMoDotA6380_03-05-10\J7P0601\A6380-dgn\ZPLOT_A13.dgn

Detailed APR 2009
Checked JUL 2009

Note: This drawing is not to scale. Follow Dimensions.

REV.

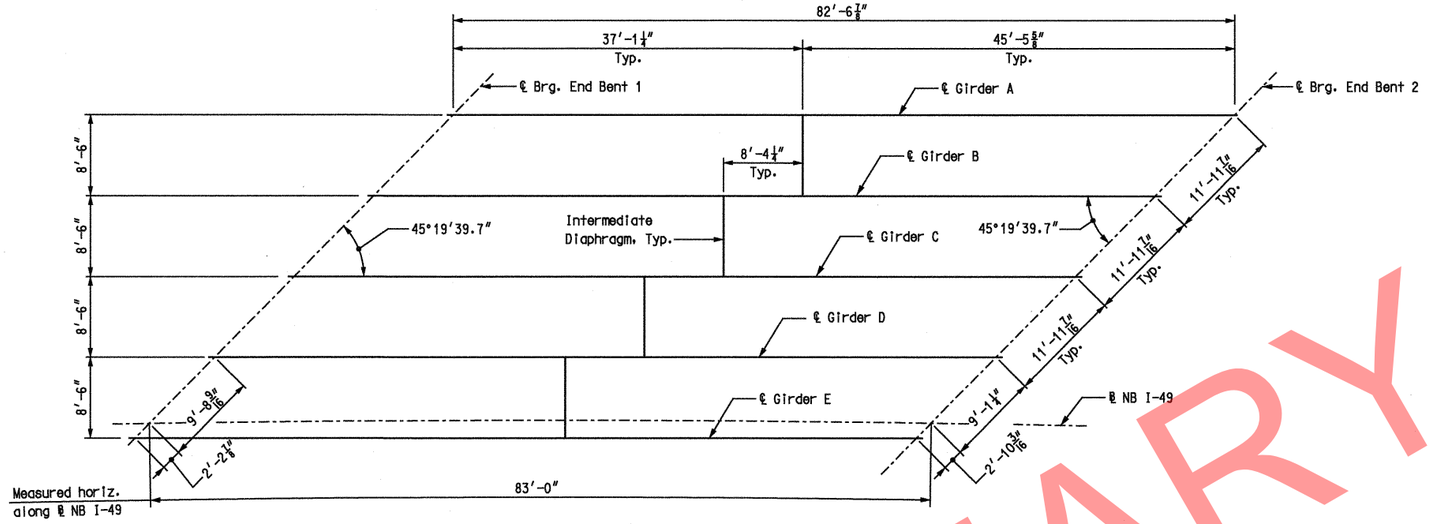

SPAN (1-2)

FRAMING PLAN

Note: Dimensions shown are horizontal.

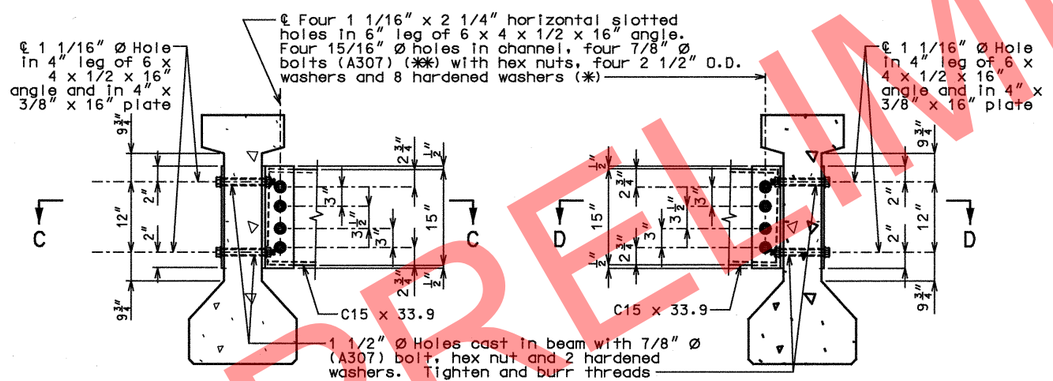

DETAIL "A" DETAIL "B"

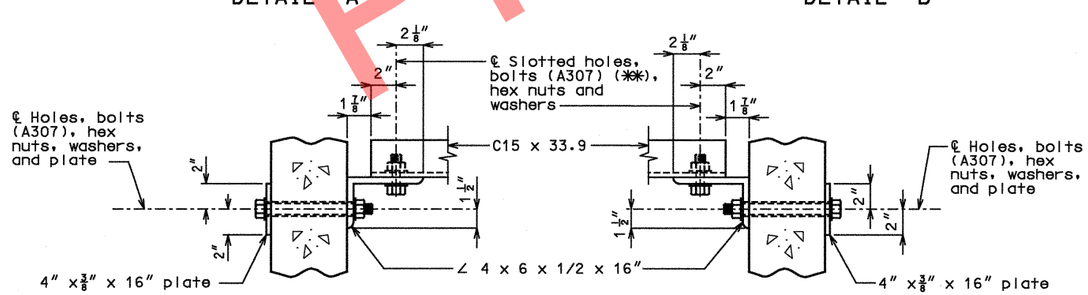

SECTION C-C SECTION D-D

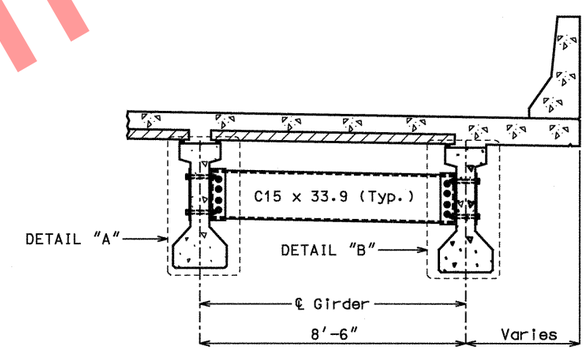

PART SECTION SHOWING INTERMEDIATE DIAPHRAGMS

STEEL DIAPHRAGM NOTES:

(✱) In lieu of 2 1/2″ outside diameter washers, contractor may substitute a 3/16″ (Min. thickness) plate with four 15/16″ Ø holes and one hardened washer per bolt.

(✱✱) Bolts shall be tightened to provide a tension of one-half that specified in Sec 712 for high strength bolt installation. A325 bolts may be substituted for and installed in accordance with the requirements for the specified A307 bolts.

All diaphragm materials including bolts, nuts, and washers shall be galvanized.

Fabricated structural steel shall be ASTM A709 Grade 36 except as noted.

Payment for furnishing and installing steel intermediate diaphragms will be considered completely covered by the contract unit price for Steel Intermediate Diaphragm for P/S Concrete Girders.

Shop drawings will not be required for steel intermediate diaphragms and angle connections.

FRAMING PLAN AND
STEEL INTERMEDIATE DIAPHRAGM DETAILS

STATE OF MISSOURI
GINA D. HORNER
NUMBER E-30413
REGISTERED PROFESSIONAL ENGINEER
3-9-10

DATE PREPARED	7/16/09
ROUTE	I-49
STATE	MO
DISTRICT	BR
SHEET NO.	14
COUNTY	McDONALD
JOB NO.	J7P0601
CONTRACT ID.	
PROJECT NO.	
BRIDGE NO.	A6380

DESCRIPTION | DATE

MISSOURI HIGHWAYS AND TRANSPORTATION COMMISSION
105 WEST CAPITOL
JEFFERSON CITY, MO 65102
1-888-ASK-MODOT (1-888-275-6636)

HNTB
715 KIRK DRIVE
KANSAS CITY, MO 64105-1310
TELEPHONE (816) 472-1201
CERTIFICATE OF AUTHORITY NO. 001270

REV.

Detailed JUL 2009
Checked JUL 2009

Note: This drawing is not to scale. Follow Dimensions.

Concrete for prestressed girders shall be Class A-1 with f'c = 6,000 psi and f'ci = 4,500 psi.

(+) indicates prestressing strand.

Use 28 strands with an initial prestress force of 867.5 kips.

Prestressing tendons shall be uncoated, seven-wire, low-relaxation strands, 1/2 inch diameter in accordance with AASHTO M 203, Grade 270. Pretensioned members shall be in accordance with Sec 1029.

✱✱ At the contractor's option the location for bent-up strands may be varied from that shown. The total number of bent-up strands shall not be changed. One strand tie bar is required for each layer of bent-up strands except at end bents which require one bar on the bottom layer of strands only. No additional payment will be made if additional strand tie bars are required.

✱✱✱ At contractor's option a 1 1/2" to 1 3/4" smooth finish strip is permitted to facilitate placement of preformed fiber expansion joint material or expanded or extruded polystyrene bedding material for the prestressed panels.

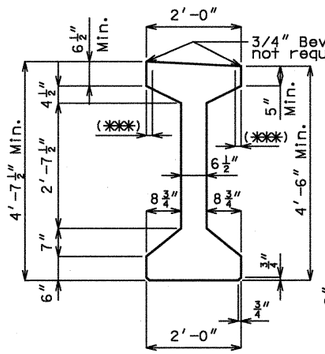

GIRDER DIMENSIONS

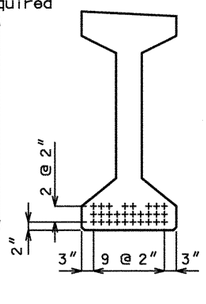

℄ GIRDER

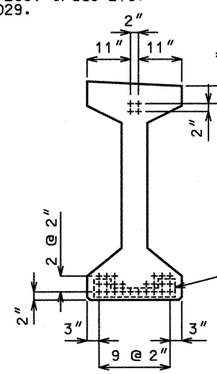

END OF GIRDER

STRAND ARRANGEMENTS

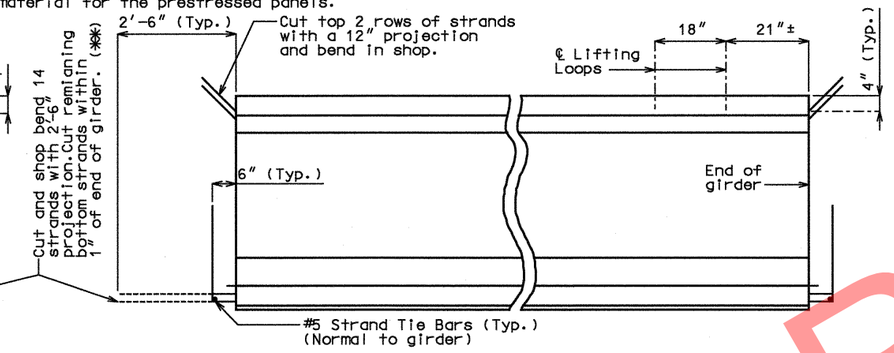

END BENT

LOCATION OF LIFTING LOOPS

STRAND DETAILS AT GIRDER ENDS

BILL OF REINFORCING STEEL - EACH GIRDER				
NO.	SIZE & MARK	ACTUAL LENGTH	SHAPE	BENDING DIAGRAM
4	6 A1	43'-1"	20	
146	4 B1	6'-0"	11	
16	6 B2	5'-6"	11	
80	4 B3	6'-1"	11	
121	4 C1	2'-2"	10	
242	4 D1	3'-0"	9	

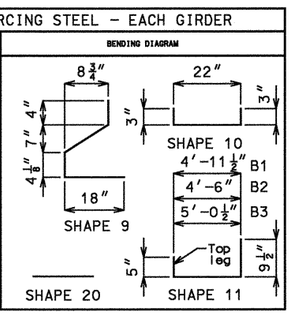

All dimensions are out to out.

Hooks and bends shall be in accordance with the CRSI Manual of Standard Practice for Detailing Reinforced Concrete Structures, Stirrup and Tie Dimensions.

Actual lengths are measured along centerline of bar to the nearest inch.

Minimum clearance to reinforcing shall be 1".

All reinforcement shall be Grade 60.

The two D1 bars may be furnished as one bar at the fabricator's option.

All B1 bars shall be epoxy coated.

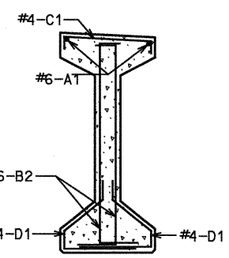

SECTION A-A

Strands not shown for clarity.

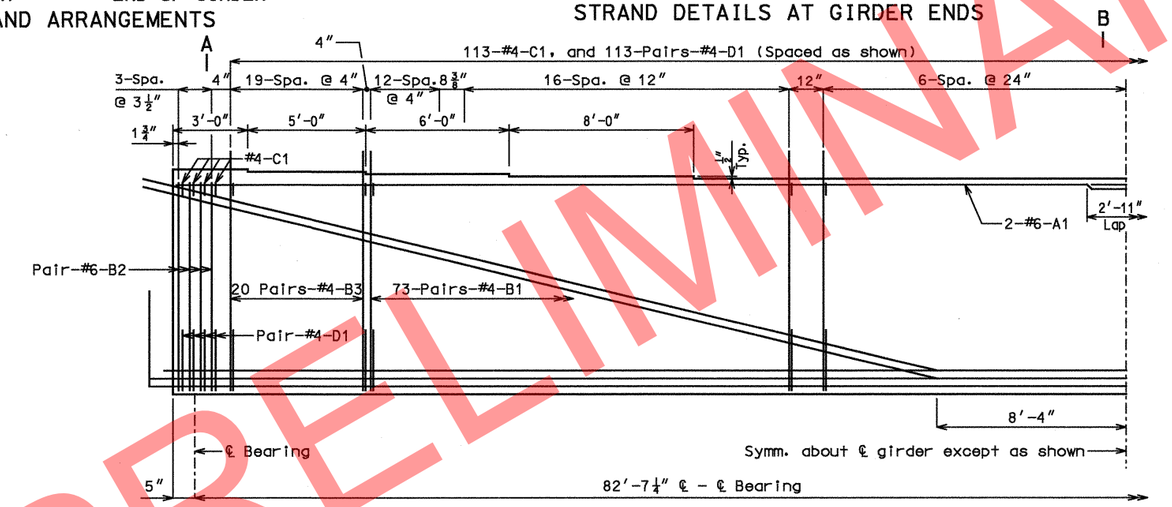

HALF ELEVATION OF GIRDER

Exterior and interior girders are the same, except for coil ties.

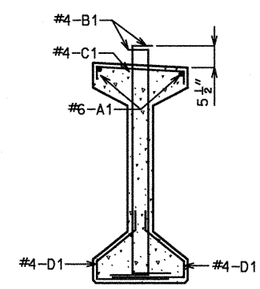

SECTION B-B

Strands not shown for clarity.

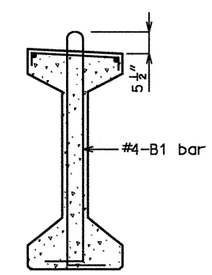

B1 BAR PERMISSIBLE ALTERNATE SHAPE

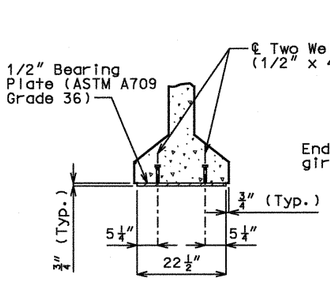

SECTION C-C

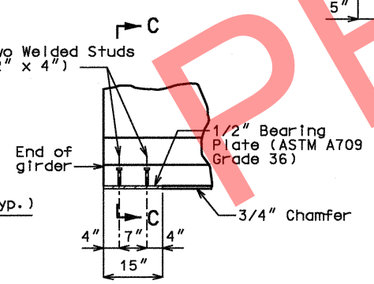

PART ELEVATION AT END OF GIRDER

BEARING PLATE DETAILS

Galvanize the 1/2" bearing plate (ASTM A709 Grade 36) in accordance with ASTM A123.

Cost of furnishing, galvanizing, and installing the 1/2" bearing plate (ASTM A709 Grade 36) and welded studs in the prestressed girder will be considered completely covered by the contract unit price for Prestressed Concrete I-Girder.

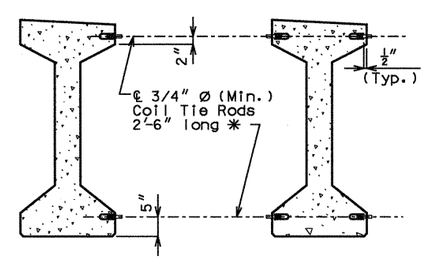

EXTERIOR GIRDERS AT INT. BENTS

EXTERIOR GIRDERS AT END BENTS
INTERIOR GIRDERS AT ALL BENTS

DETAILS OF COIL TIES

Cost of 3/4" Ø coil tie rods placed in diaphragms will be considered completely covered by the contract unit price for Prestressed Concrete I-Girder.

Coil ties shall be held in place in the forms by slotted wire-setting-studs projecting through forms. Studs are to be left in place or replaced with temporary plugs until girders are erected, then replaced by coil tie rods.

For location of coil ties, see Sheets No. 7 & 10.

The 1 1/2" Ø holes shall be cast in the web for steel intermediate diaphragms. Drilling is not allowed.

For Girder Camber Diagram, see Sheet No. 18.

✱ Length of coil tie rods at exterior girders at end bents = 2'-0".

GIRDER DETAILS - SPAN (1-2)

STATE OF MISSOURI GINA D. HORNER NUMBER E-30413 REGISTERED PROFESSIONAL ENGINEER 3-9-10

DATE PREPARED	
7/21/09	
ROUTE I-49	STATE MO
DISTRICT BR	SHEET NO. 15
COUNTY McDONALD	
JOB NO. J7P0601	
CONTRACT ID.	
PROJECT NO.	
BRIDGE NO. A6380	

DATE	DESCRIPTION

MISSOURI HIGHWAYS AND TRANSPORTATION COMMISSION
105 WEST CAPITOL
JEFFERSON CITY, MO 65102
1-888-ASK-MODOT (1-888-275-6636)

HNTB
715 KIRK DRIVE
KANSAS CITY, MO 64105-1310
TELEPHONE (816) 472-1201
CERTIFICATE OF AUTHORITY NO. 001270

REV.

Detailed JUL 2009
Checked JUL 2009

Note: This drawing is not to scale. Follow Dimensions.

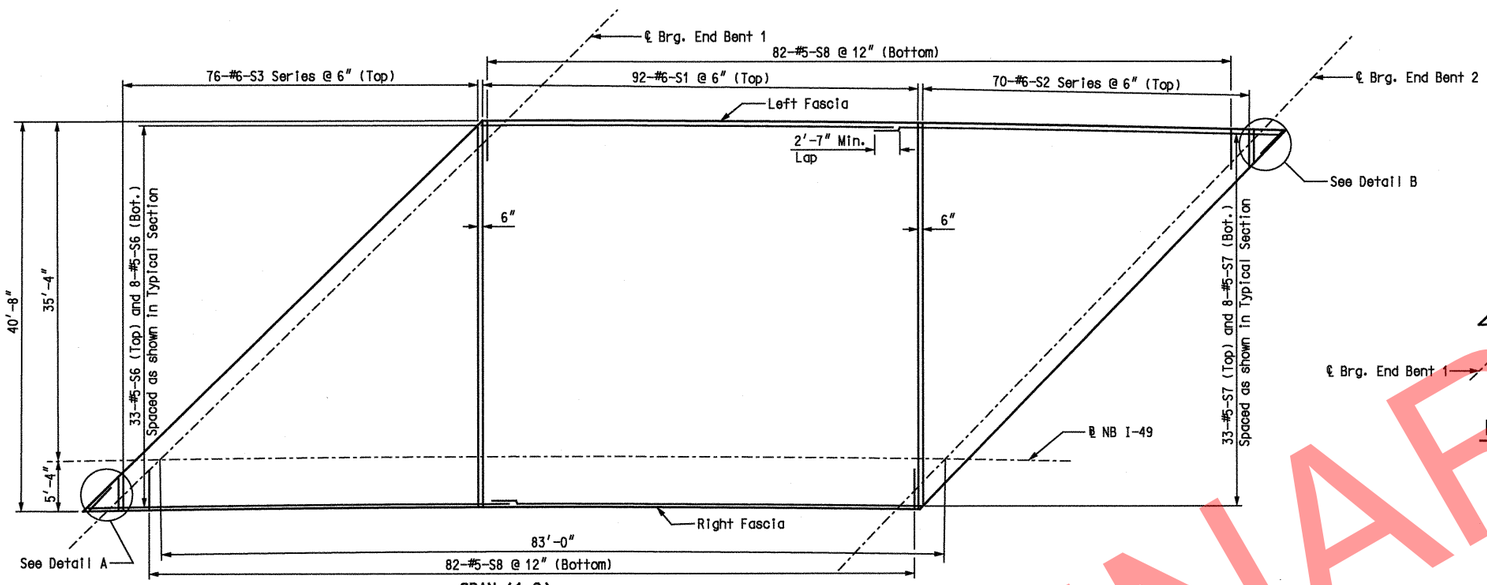

SPAN (1-2)

SLAB PLAN

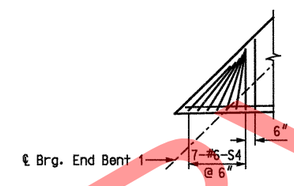

DETAIL A

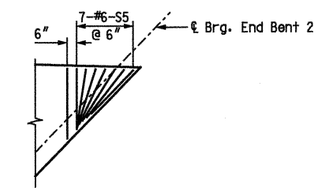

DETAIL B

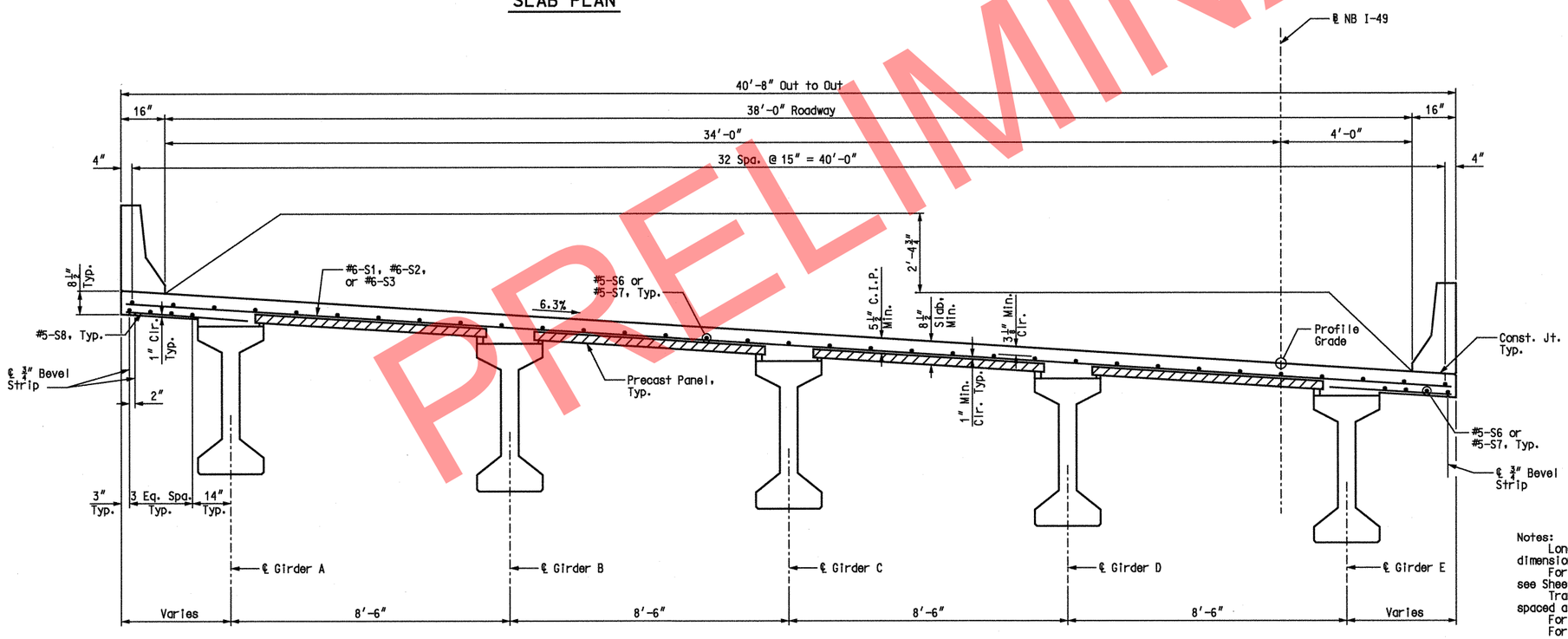

TYPICAL SECTION

Notes:
Longitudinal dimensions shown are horizontal arc dimensions along ℄ NB I-49.
For details and reinforcing of Safety Barrier Curbs, see Sheets No. 19 and 20.
Transverse reinforcing shall be placed radial to and spaced along the Left Fascia.
For Framing Plan, see Sheet No. 14.
For Precast Panel Details, see Sheet No. 17.

SLAB PLAN

STATE OF MISSOURI
GINA D. HORNER
NUMBER E-30413
REGISTERED PROFESSIONAL ENGINEER
3-9-10

DATE PREPARED	7/16/09
ROUTE	I-49
STATE	MO
DISTRICT	BR
SHEET NO.	16
COUNTY	McDONALD
JOB NO.	J7P0601
CONTRACT ID.	
PROJECT NO.	
BRIDGE NO.	A6380

DESCRIPTION	DATE

IF A SFAI IS PRESENT ON THIS SHEET IT HAS BEEN ELECTRONICALLY SEALED AND DATED.

MISSOURI HIGHWAYS AND TRANSPORTATION COMMISSION
105 WEST CAPITOL
JEFFERSON CITY, MO 65102
1-888-ASK-MODOT (1-888-275-6636)

HNTB
715 KIRK DRIVE
KANSAS CITY, MO 64105-1310
TELEPHONE (816) 472-1201
CERTIFICATE OF AUTHORITY NO. 001270

REV.

USER: TThompson
PLOTTED: 08-MAR-2010 15:00 \\kcow00\Jobs\49259\Bridges\Plans\CDtoMoDotA6380_03-05-10\J7P0601\A6380-dgn\ZPLOT_A17.dgn

Detailed JUL 2009
Checked JUL 2009

Note: This drawing is not to scale. Follow Dimensions.

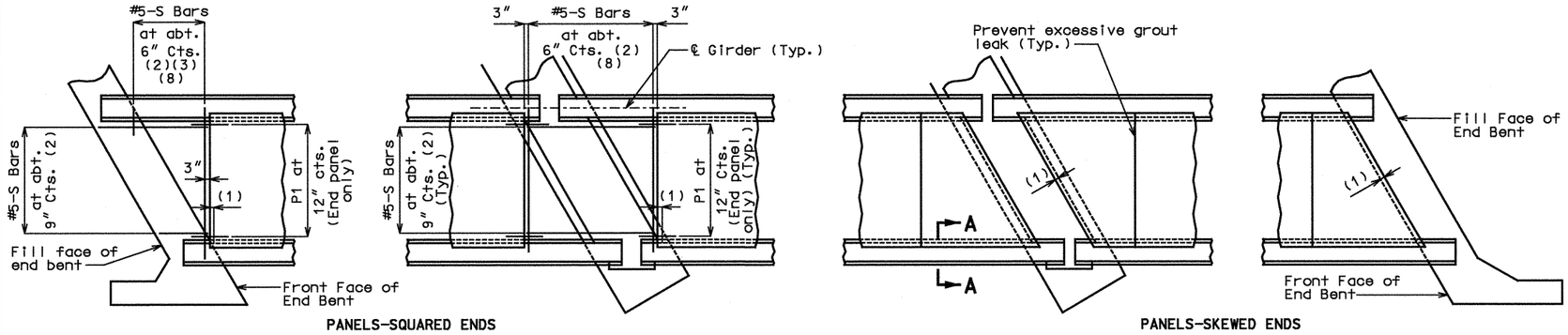

PANELS-SQUARED ENDS

PANELS-SKEWED ENDS

PLAN OF PRECAST PRESTRESSED PANELS PLACEMENT

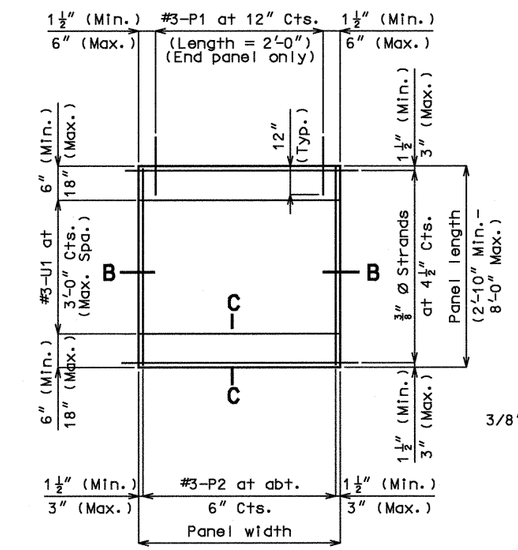

PLAN OF PRECAST PRESTRESSED PANEL

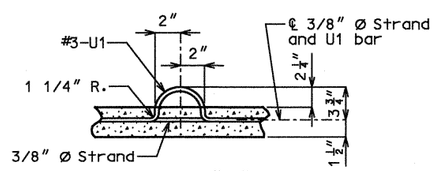

DETAIL "A"

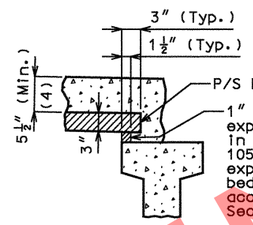

SECTION A-A

Note: Use slab haunching diagram on Sheet No. 18 for determining thickness of preformed fiber expansion joint material or polystyrene bedding material within the limits noted in general notes.

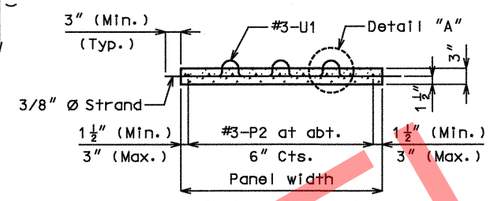

SECTION B-B

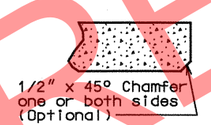

SECTION C-C

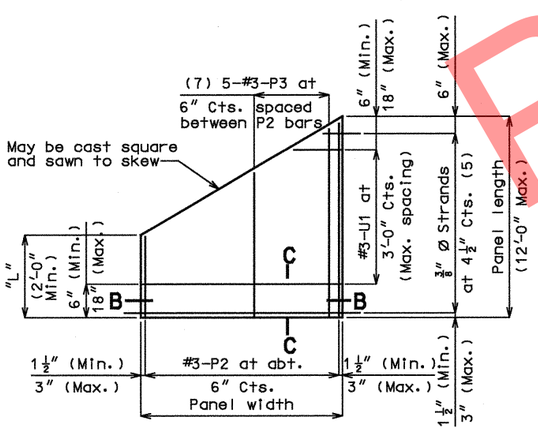

PLAN OF PRECAST PRESTRESSED PANEL
(SKEWED END-OPTIONAL)

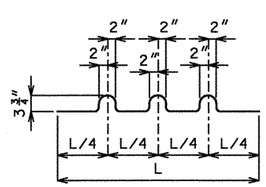

BENDING DIAGRAM FOR U1 BAR
(U1 Bars may be oriented at right angles to location and spacing shown. U1 Bars shall be placed between P1 bars).

NOTES:

Welded wire fabric or welded deformed bar mats providing a minimum area of reinforcing perpendicular to strands of 0.22 sq. in./ft., with spacing parallel to strands sufficient to insure proper handling, may be used in lieu of the #3-P2 bars shown. Wire or bar diameter shall not be larger than 0.375 inches. The above alternative reinforcement criteria may be used in lieu of the #3-P3 bars, when required, and placed over a width not less than 2 feet.

The reinforcing steel shall be tied securely to the 3/8"Ø strands with the following maximum spacing in each direction:
#3-P2 bars at 16 inches.
Welded wire fabric or welded deformed bar mats at 2'-0".

Tie the #3-U1 bars to the #3-P2 bars, to the welded wire fabric or the welded deformed bar mats at about 3'-0" centers.

All reinforcement other than prestressing strands shall be epoxy coated.

Precast panels may be in contact with stirrup reinforcing in diaphragms.

Cost of S-bars will be considered completely covered by the contract unit price for the slab.

S-bars are not listed in the bill of reinforcing.

(1) End panels shall be dimensioned 1" min. to 1 1/2" max. from the inside face of diaphragm.

(2) S-bars shown are bottom steel in slab between panels and used with squared end panels only.

(3) Extend S-Bars 18 inches beyond the front face of end bents only.

(4) In order to maintain minimum slab thickness, it may be necessary to raise the grade uniformly throughout the structure. No payment will be made for additional labor or materials required for necessary grade adjustment.

(5) Any strand 2'-0" or shorter shall have a #4 reinforcing bar on each side of it, centered between strands. Strands 2'-0" or shorter may then be debonded at the fabricator's option.

(6) All panel support pads shall be glued to the girder. When support thickness exceeds 1 1/2 inches, the pads shall be glued top and bottom. The glue used shall be the type recommended by the panel support pads manufacturer.

(7) Use #3-P3 bars if panel is skewed 45° or greater.

(8) Minimum reinforcement steel length shall be 2'-0".

GENERAL NOTES:

PRESTRESSED PANELS:
Concrete for prestressed panels shall be Class A-1 with f'c = 6,000 psi, f'ci = 4,000 psi.

The top surface of all panels shall receive a scored finish with a depth of scoring of 1/8" perpendicular to the prestressing strands in the panels.

Prestressing tendons shall be high-tensile strength uncoated seven-wire, low-relaxation strands for prestressed concrete in accordance with AASHTO M 203 Grade 270, with nominal diameter of strand = 3/8" and nominal area = 0.085 sq. in.and minimum ultimate strength = 22.95 kips (270 ksi). Larger strands may be used with the same spacing and initial tension.

Initial prestressing force = 17.2 kips/strand.

The method and sequence of releasing the strands shall be shown on the shop drawings.

Suitable anchorage devices for lifting panels may be cast in panels, provided the devices are shown on the shop drawings and approved by the engineer. Panel lengths shall be determined by the contractor and shown on the shop drawings.

When square end panels are used at skewed bents, the skewed portion shall be cast full depth. No separate payment will be made for additional concrete and reinforcing required.

Support from diaphragm forms is required under the optional skewed end until cast-in-place concrete has reached 3,000 psi compressive strength.

Minimum preformed fiber expansion joint material or polystyrene bedding material thickness shall be 1 inch. Thicker material may be used on one or both sides of the girder to reduce cast-in-place concrete thickness, to within tolerances. No more than 2 inches total thickness shall be used.

The same thickness of preformed fiber expansion joint material shall be used under any one edge of any panel except at locations where top flange thickness may be stepped. The maximum change in thickness between adjacent panels shall be 1/4 inch. The polystyrene bedding material may be cut with a transition to match haunch height above top of flange.

Slab thickness over prestressed panels varies due to girder camber.

At the contractor's option, the variation in slab thickness over prestressed panels may be eliminated or reduced by increasing and varying the girder top flange thickness. Dimensions shall be shown on the shop drawings.

REINFORCING STEEL:
All dimensions are out to out.

Minimum clearance to reinforcing steel shall be 1 1/2", unless otherwise shown.

Hooks and bends shall be in accordance with the CRSI Manual of Standard Practice for Detailing Reinforced Concrete Structures, Stirrup and Tie Dimensions.

Actual lengths are measured along centerline of bar to the nearest inch.

The prestressed panel quantities are not included in the table of estimated quantities for slab.

If U1 bars interfere with placement of slab steel, U1 loops may be bent over, as necessary, to clear slab steel.

DETAILS OF PRECAST PRESTRESSED PANELS

STATE OF MISSOURI
GINA D. HORNER
NUMBER E-30413
REGISTERED PROFESSIONAL ENGINEER
3-9-10

DATE PREPARED	
2/28/09	
ROUTE I-49	STATE MO
DISTRICT BR	SHEET NO. 17
COUNTY McDONALD	
JOB NO. J7P0601	
CONTRACT ID.	
PROJECT NO.	
BRIDGE NO. A6380	

DESCRIPTION | DATE

MISSOURI HIGHWAYS AND TRANSPORTATION COMMISSION
105 WEST CAPITOL
JEFFERSON CITY, MO 65102
1-888-ASK-MODOT (1-888-275-6636)

HNTB
715 KIRK DRIVE
KANSAS CITY, MO 64105-1310
TELEPHONE (816) 472-1201
CERTIFICATE OF AUTHORITY NO. 001270

IF A SEAL IS PRESENT ON THIS SHEET IT HAS BEEN ELECTRONICALLY SEALED AND DATED.

REV.

USER: TThompson
PLOTTED: 08-MAR-2010 15:00 \\kcow00\Jobs\49259\Bridges\Plans\CDtoMoDotA6380_03-05-10\J7P0601\A6380-dgn\ZPLOT_A19.dgn

Detailed FEB 2009
Checked JUL 2009

Note: This drawing is not to scale. Follow Dimensions.

Girder A	$2\frac{1}{16}$	$2\frac{3}{8}$	$2\frac{1}{4}$	$2\frac{1}{4}$	$1\frac{15}{16}$	$1\frac{13}{16}$	$1\frac{15}{16}$	$2\frac{1}{4}$	$2\frac{1}{4}$	$2\frac{3}{8}$	$2\frac{1}{16}$
Girder B	2	$2\frac{5}{16}$	$2\frac{3}{16}$	$2\frac{3}{16}$	$1\frac{15}{16}$	$1\frac{13}{16}$	$1\frac{15}{16}$	$2\frac{1}{4}$	$2\frac{3}{16}$	$2\frac{5}{16}$	2
Girder C	2	$2\frac{5}{16}$	$2\frac{3}{16}$	$2\frac{3}{16}$	$1\frac{7}{8}$	$1\frac{13}{16}$	$1\frac{15}{16}$	$2\frac{3}{16}$	$2\frac{3}{16}$	$2\frac{5}{16}$	2
Girder D	2	$2\frac{5}{16}$	$2\frac{3}{16}$	$2\frac{3}{16}$	$1\frac{7}{8}$	$1\frac{13}{16}$	$1\frac{7}{8}$	$2\frac{3}{16}$	$2\frac{3}{16}$	$2\frac{5}{16}$	2
Girder E	$2\frac{1}{16}$	$2\frac{3}{8}$	$2\frac{1}{4}$	$2\frac{1}{4}$	$1\frac{15}{16}$	$1\frac{13}{16}$	$1\frac{15}{16}$	$2\frac{1}{4}$	$2\frac{1}{4}$	$2\frac{3}{8}$	$2\frac{1}{16}$

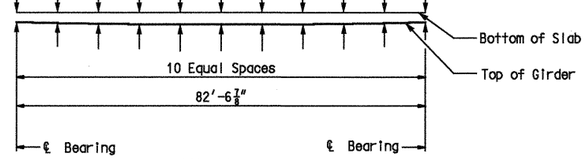

SPAN (1-2)

THEORETICAL SLAB HAUNCHING DIAGRAM

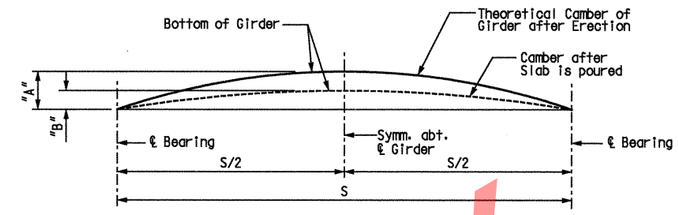

GIRDER CAMBER DIAGRAM

Conversion Factors for Girder Camber
0.1 PT.=0.314 x 0.5 PT.
0.2 PT.=0.593 x 0.5 PT.
0.3 PT.=0.813 x 0.5 PT.
0.4 PT.=0.952 x 0.5 PT.

GIRDER	SPAN (1-2)	
	"A"	"B"
A	3"	$2\frac{1}{8}$"
B	3"	$2\frac{1}{16}$"
C	3"	$2\frac{1}{16}$"
D	3"	$2\frac{1}{16}$"
E	3"	$2\frac{1}{8}$"

Notes:
If Girder Camber is different from that shown in the Camber Diagram, it shall be necessary to adjust the slab haunches, increase the slab thickness or raise the grade uniformly throughout the structure. No payment will be made for additional labor or materials required for variation in haunching, slab thickness or grade adjustment.
Concrete in the slab haunches is included in the Estimated Quantities for Slab on Concrete I-Girder.
Slab haunching values are given in inches.

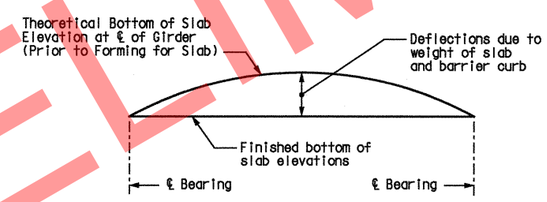

TYPICAL SLAB ELEVATIONS DIAGRAM

Theoretical Bottom of Slab Elevations at CL of Girder (Prior to Forming for Slab) **

	Span (1-2)										
	℄ brg.	.10	.20	.30	.40	.50	.60	.70	.80	.90	℄ brg.
Girder A	1035.05	1035.29	1035.53	1035.77	1036.02	1036.26	1036.51	1036.76	1037.00	1037.25	1037.50
Girder B	1034.26	1034.50	1034.75	1034.99	1035.23	1035.48	1035.73	1035.97	1036.22	1036.47	1036.72
Girder C	1033.48	1033.72	1033.96	1034.21	1034.45	1034.69	1034.94	1035.19	1035.43	1035.68	1035.93
Girder D	1032.70	1032.94	1033.18	1033.42	1033.66	1033.91	1034.15	1034.40	1034.65	1034.90	1035.15
Girder E	1031.91	1032.15	1032.39	1032.64	1032.88	1033.12	1033.37	1033.61	1033.86	1034.11	1034.36

** Elevations are based on a constant slab thickness of $8\frac{1}{2}$" and include allowance for theoretical dead load deflections due to weight of slab and barrier curb.

THEORETICAL SLAB HAUNCHING DIAGRAM
AND BOTTOM OF SLAB ELEVATIONS

Detailed JUL 2009
Checked AUG 2009

Note: This drawing is not to scale. Follow Dimensions.

STATE OF MISSOURI
GINA D. HORNER
NUMBER E-30413
REGISTERED PROFESSIONAL ENGINEER
3-9-10

DATE PREPARED 07/31/09
ROUTE I-49 | STATE MO
DISTRICT BR | SHEET NO. 18
COUNTY McDONALD
JOB NO. J7P0601
CONTRACT ID.
PROJECT NO.
BRIDGE NO. A6380

DATE	DESCRIPTION

MISSOURI HIGHWAYS AND TRANSPORTATION COMMISSION
105 WEST CAPITOL
JEFFERSON CITY, MO 65102
1-888-ASK-MODOT (1-888-275-6636)

HNTB
715 KIRK DRIVE
KANSAS CITY, MO 64105-1310
TELEPHONE (816) 472-1201
CERTIFICATE OF AUTHORITY
NO. 001270

IF A SFAI IS PRESENT ON THIS SHEET IT HAS BEEN ELECTRONICALLY SEALED AND DATED.

REV.

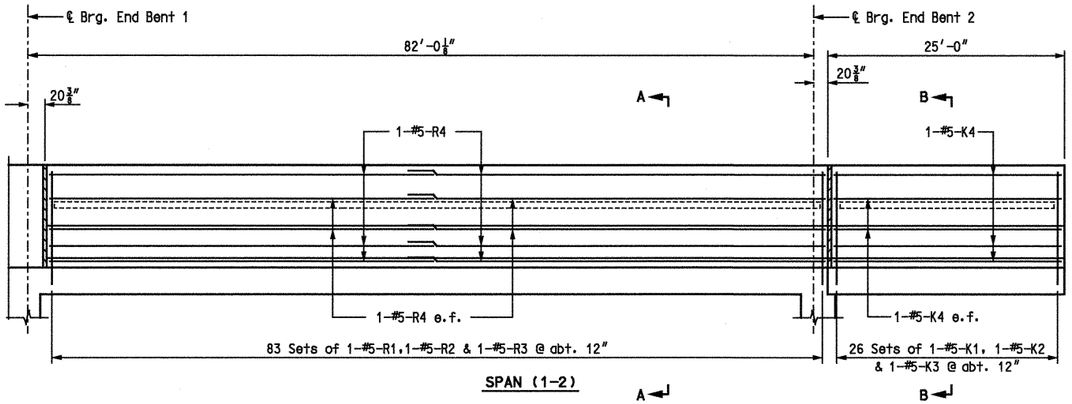

ELEVATION
(Left Barrier Curb)

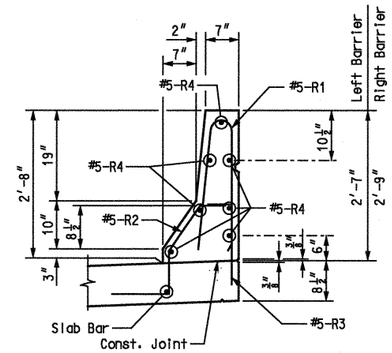

SECTION A-A

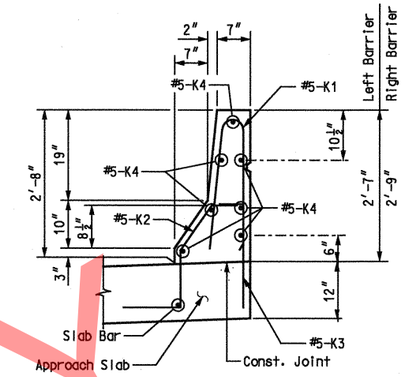

SECTION B-B

Notes:
The cross sectional area above slab = 2.28 sq. ft. Right Barrier and 2.23 sq. ft. Left Barrier

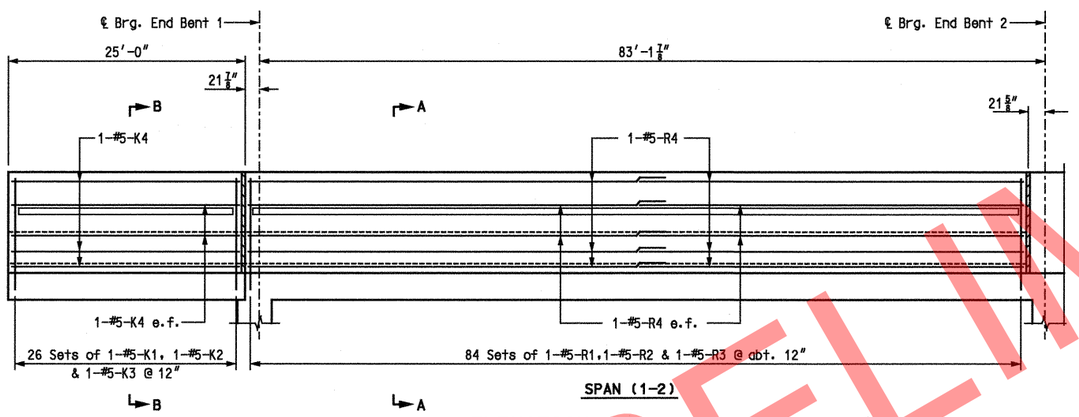

ELEVATION
(Right Barrier Curb)

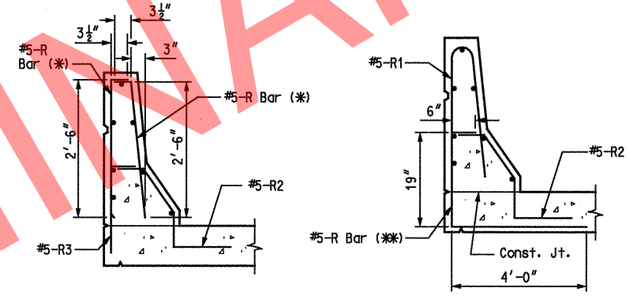

R-BAR PERMISSIBLE ALTERNATE SHAPE

(*) The R1 bar may be seperated into two bars as shown, at the contractor's option, only when slip forming is not used. (All dimensioins are out to out.)

(**) The R3 bar and #5 bottom transverse slab bar in cantilever (P/S panels only) combination may be furnished as one bar as shown, at the contractor's option.

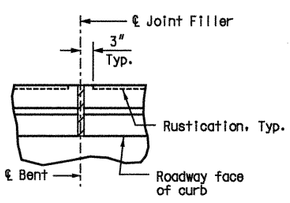

PART PLAN SHOWING
SAFETY BARRIER CURB JOINT

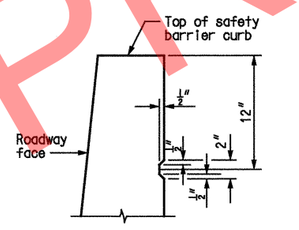

PART SECTION SHOWING
RUSTICATION DETAIL

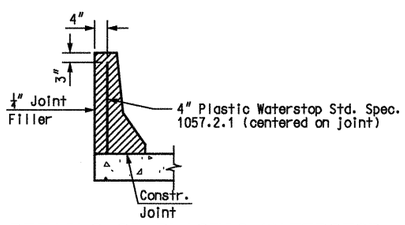

DETAILS OF PLASTIC WATERSTOP

Notes:
Plastic waterstop shall be placed in all safety barrier curb filled joints. (except structures with superelevation, use on all lower safety barrier curb joints only.)
Cost of plastic waterstop complete in place will be considered completely covered by the contract unit price for safety barrier curb.

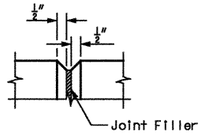

FILLED JOINT DETAIL

Notes:
e.f. denotes each face.
Use a minimum lap of 2'-11" for #5 horizontal barrier curb bars.
Top of safety barrier curb shall be built parallel to grade with barrier curb joints (except at end bents) normal to grade.
All exposed edges of safety barrier curb shall have either a 1/2" radius or a 3/4" bevel, unless otherwise noted.
Payment for all concrete and reinforcement, complete-in-place, will be considered completely covered by the contract unit price for safety barrier curb per linear foot.
Concrete in the safety barrier curb shall be Class B-1.
Measurement of safety barrier curb is to the nearest linear foot for each structure, measured along the outside top of slab from end of curb to end of curb.
Concrete traffic barrier delineators shall be placed on top of safety barrier curb (Type C) as shown on Missouri Standard Plans 617.10 and in accordance with Sec 617. Concrete traffic barrier delineators will be considered completely covered by the contract unit price for "Safety Barrier Curb (Type C)".
The curb shall be cured by application of Type 1-D or Type 2 Liquid Membrane-Forming Compound in accordance with Sec 1055. Surface sealing for concrete in accordance with Sec 703 is not required. Application of linseed oil at the contractor's expense is permitted.

SAFETY BARRIER CURB DETAILS

STATE OF MISSOURI
GINA D. HORNER
NUMBER E-30413
REGISTERED PROFESSIONAL ENGINEER
3-9-10

DATE PREPARED	07/22/09
ROUTE	I-49
STATE	MO
DISTRICT	BR
SHEET NO.	19
COUNTY	McDONALD
JOB NO.	J7P0601
CONTRACT ID.	
PROJECT NO.	
BRIDGE NO.	A6380

DATE	DESCRIPTION

MISSOURI HIGHWAYS AND TRANSPORTATION COMMISSION
105 WEST CAPITOL
JEFFERSON CITY, MO 65102
1-888-ASK-MODOT (1-888-275-6636)

HNTB
715 KIRK DRIVE
KANSAS CITY, MO 64105-1310
TELEPHONE (816) 472-1201
CERTIFICATE OF AUTHORITY NO. 001270

REV.

USER: TThompson
PLOTTED: 08-MAR-2010 15:00 \\kcow00\Jobs\49259\Bridges\Plans\CDtoMoDotA6380_03-05-10\J7P0601\A6380-dgn\ZPLOT_A22.dgn

Detailed JUL 2009
Checked JUL 2009

Note: This drawing is not to scale. Follow Dimensions.

\\kcow00\Jobs\49259\Bridges\Plans\CDtoMoDotA6380_03-05-10\J7P0601\A6380-dgn\ZPLOT_A22.dgn 08-MAR-2010 15:00

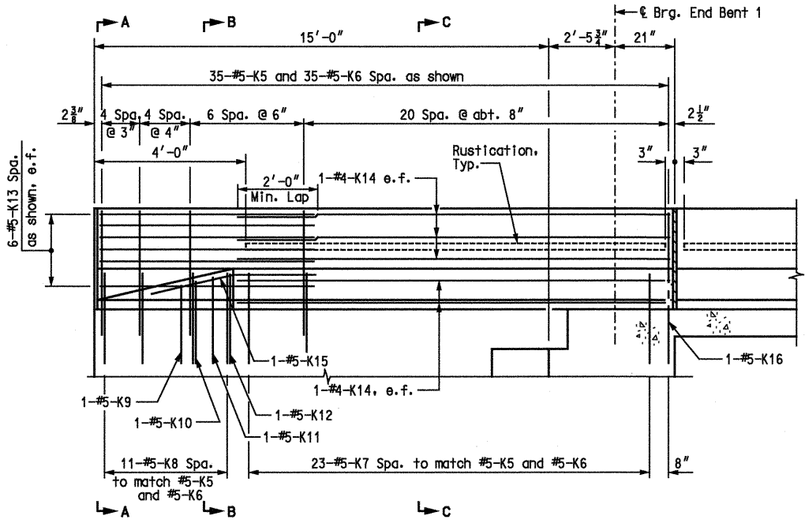

ELEVATION AT END BENT 1
(Left Barrier Curb)

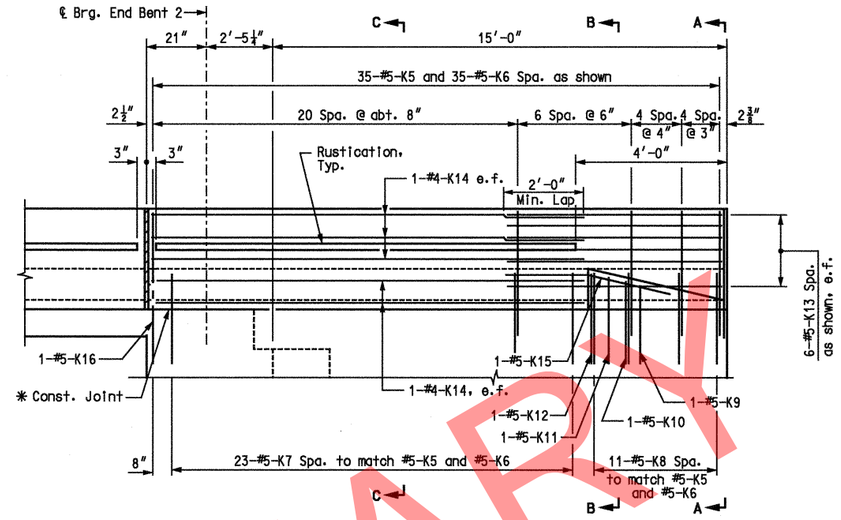

ELEVATION AT END BENT 2
(Right Barrier Curb)

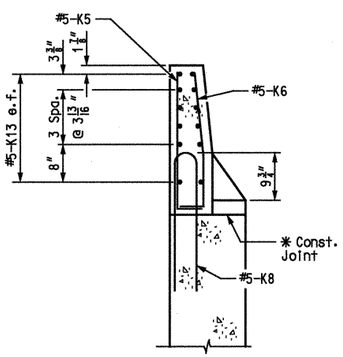

SECTION A-A
Scale: ¾"=1'-0"

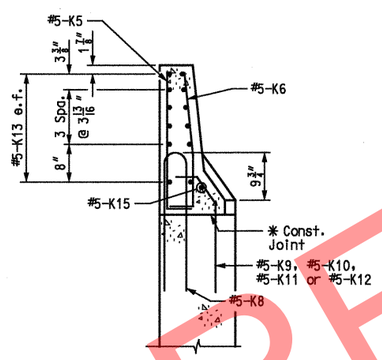

SECTION B-B
Scale: ¾"=1'-0"

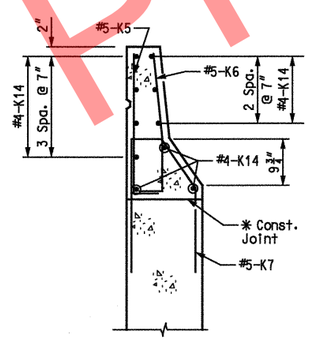

SECTION C-C
Scale: ¾"=1'-0"

The top two K13 or K14 bars shall be kept with position close to those shown in Sections A-A thru C-C

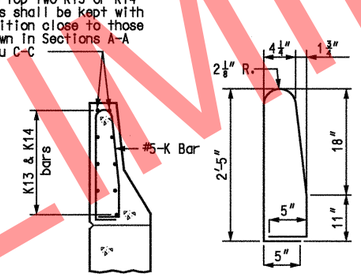

(K7 or K8 thru K12 bars not shown for clarity)

K5-K6 BAR PERMISSIBLE ALTERNATE SHAPE (✱✱✱)

(✱✱✱) The K5 and K6 bar combination may be furnished as one bar as shown, at the contractor's option.

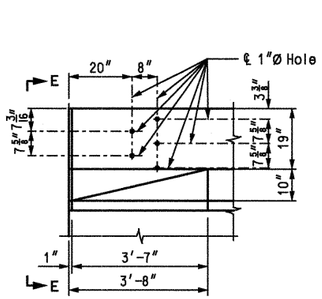

PART ELEVATION

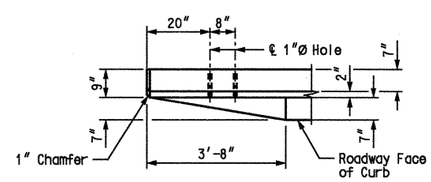

PART PLAN

DETAILS OF GUARD RAIL ATTACHMENT
Scale: ½"=1'-0"

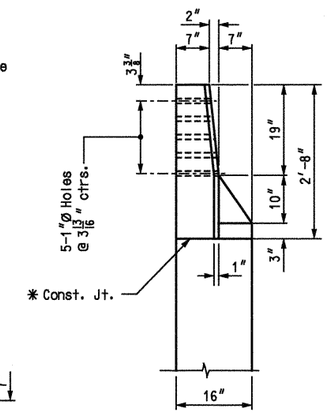

SECTION E-E

Notes:
e.f. denotes each face.
✱ Slope to match slope of roadway.
Sections A-A, B-B and C-C are shown for End Bent 2. End Bent 1 is identical except opposite hand.

SAFETY BARRIER CURB DETAILS

PRELIMINARY

STATE OF MISSOURI — GINA D. HORNER — NUMBER E-30413 — REGISTERED PROFESSIONAL ENGINEER — 3-9-10

DATE PREPARED	7/22/08
ROUTE	I-49
STATE	MO
DISTRICT	BR
SHEET NO.	20
COUNTY	McDONALD
JOB NO.	J7P0601
CONTRACT ID.	
PROJECT NO.	
BRIDGE NO.	A6380

DESCRIPTION | DATE

MISSOURI HIGHWAYS AND TRANSPORTATION COMMISSION
105 WEST CAPITOL
JEFFERSON CITY, MO 65102
1-888-ASK-MODOT (1-888-275-6636)

HNTB
715 KIRK DRIVE
KANSAS CITY, MO 64105-1310
TELEPHONE (816) 472-1201
CERTIFICATE OF AUTHORITY NO. 001270

IF A SFAI IS PRESENT ON THIS SHEET IT HAS BEEN ELECTRONICALLY SEALED AND DATED.

REV.

Detailed JUL 2009
Checked JUL 2009

Note: This drawing is not to scale. Follow Dimensions.

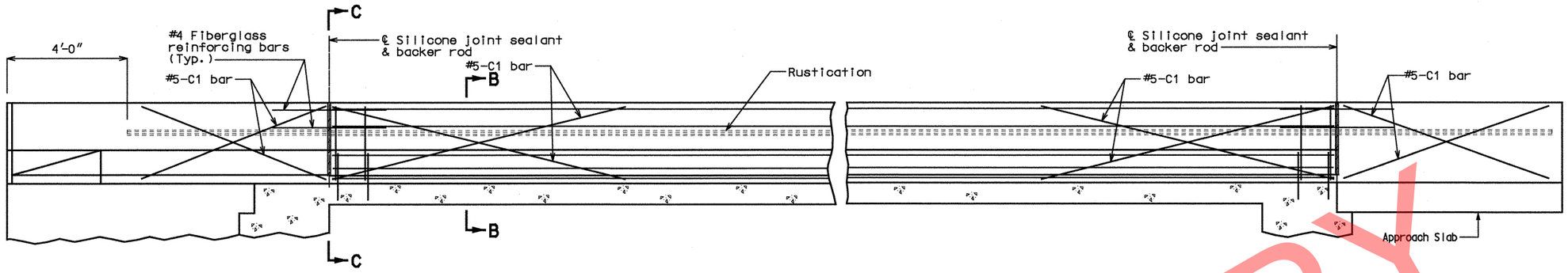

TYPICAL SECTION NEAR LEFT SAFETY BARRIER CURB AT SUPPORT LOCATIONS
(OPTIONAL SLIP-FORM BRIDGE SAFETY BARRIER CURB)

Note:
Left barrier curb shown, right barrier curb similar.

Notes:

Top of safety barrier curb shall be built parallel to grade with barrier curb joints (except at end bents) normal to grade.

Payment for all concrete and reinforcement, complete-in-place, will be considered completely covered by the contract unit price for safety barrier curb per linear foot.

Concrete in the safety barrier curb shall be Class B-1.

Measurement of safety barrier curb is to the nearest linear foot for each structure, measured along the outside top of slab from end of curb to end of curb.

The curb shall be cured by application of Type 1-D or Type 2 Liquid Membrane-Forming Compound in accordance with Sec 1055. Surface sealing for concrete in accordance with Sec 703 is not required. Application of linseed oil at the contractor's expense is permitted.

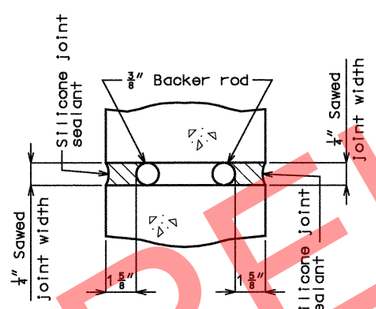

SECTION A-A

Notes:

Joint sealant and backer rods shall be used on all slip-form barrier curbs instead of joint filler and shall be in accordance with Sec 717 for silicone joint sealant for saw cut and formed joints.

Plastic waterstop shall not be used with slip-form option.

C Bars (Slip-form option only) shall be used in addition to cast-in-place conventional forming reinforcement for bridge safety barrier curb.

For Slip-Form option, all sides of the safety barrier curb shall have a vertically broomed finish and the curb top shall have a transversely broomed finish.

Concrete traffic barrier delineators shall be placed on top of the safety barrier curb (Type C) as shown on Missouri Standard Plans 617.10 and in accordance with Sec 617. Concrete traffic barrier delineators will be considered completely covered by the contract unit price for "Safety Barrier Curb (Type C)".

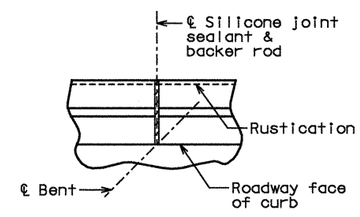

PART PLAN SHOWING SAFETY BARRIER CURB JOINT

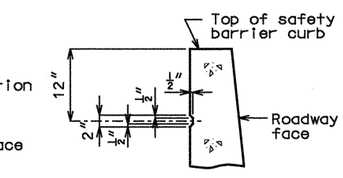

PART SECTION SHOWING RUSTICATION DETAILS

RUSTICATION DETAIL

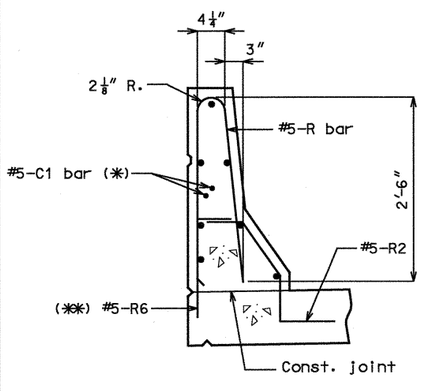

Notes:
(*) Each side of joint location.

(**) The R6 bar and #5 bottom transverse slab bar in cantilever (P/S panels only) combination may be furnished as one bar at the contractor's option.

PART SECTION B-B

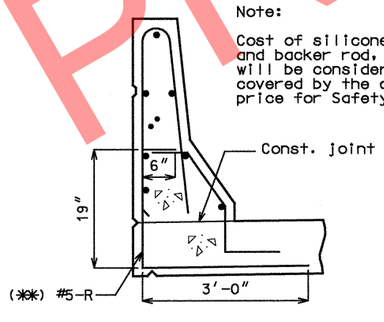

PART SECTION B-B
(Optional #5-R bar shown)

Note:

Cost of silicone joint sealant and backer rod, complete-in-place, will be considered completely covered by the contract unit price for Safety Barrier Curb.

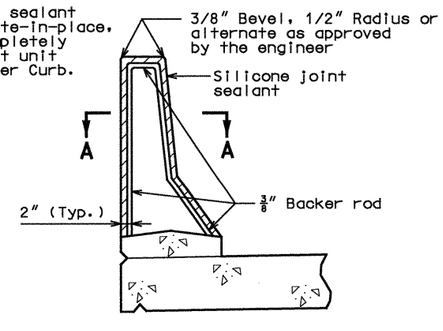

SECTION THRU JOINT

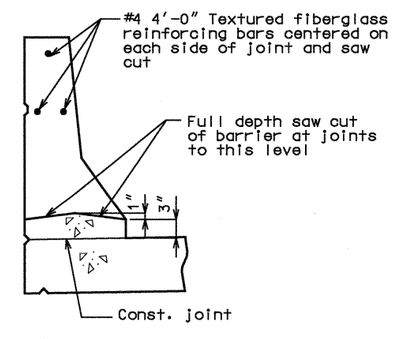

PART SECTION C-C

OPTIONAL SLIP-FORM BRIDGE SAFETY BARRIER CURB

Detailed JUL 2009
Checked JUL 2009

Note: This drawing is not to scale. Follow Dimensions.

STATE OF MISSOURI
GINA D. HORNER
NUMBER E-30413
REGISTERED PROFESSIONAL ENGINEER
3-9-10

DATE PREPARED	
7/17/09	
ROUTE I-49	STATE MO
DISTRICT BR	SHEET NO. 21
COUNTY McDONALD	
JOB NO. J7P0601	
CONTRACT ID.	
PROJECT NO.	
BRIDGE NO. A6380	

DESCRIPTION	DATE

IF A SFAI IS PRESENT ON THIS SHEET IT HAS BEEN ELECTRONICALLY SEALED AND DATED.

MISSOURI HIGHWAYS AND TRANSPORTATION COMMISSION
105 WEST CAPITOL
JEFFERSON CITY, MO 65102
1-888-ASK-MODOT (1-888-275-6636)

HNTB
715 KIRK DRIVE
KANSAS CITY, MO 64105-1310
TELEPHONE (816) 472-1201
CERTIFICATE OF AUTHORITY NO. 001270

REV.

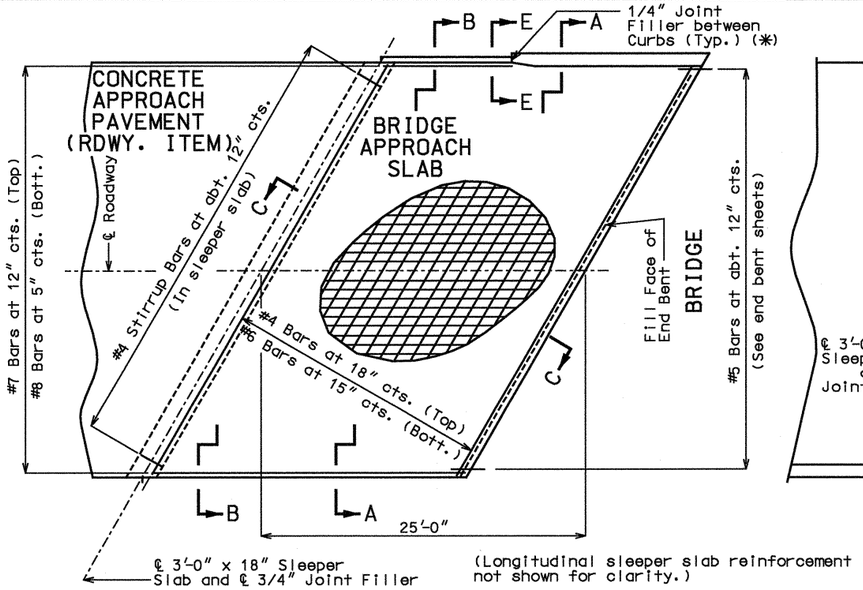

PART PLAN SHOWING REINFORCEMENT

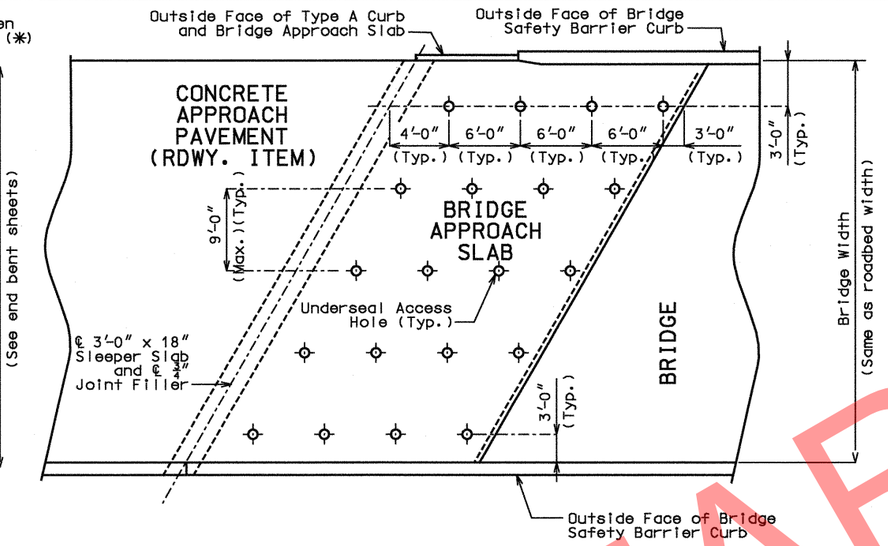

PART PLAN
(SHOWING TYPICAL UNDERSEAL ACCESS HOLE LOCATIONS)

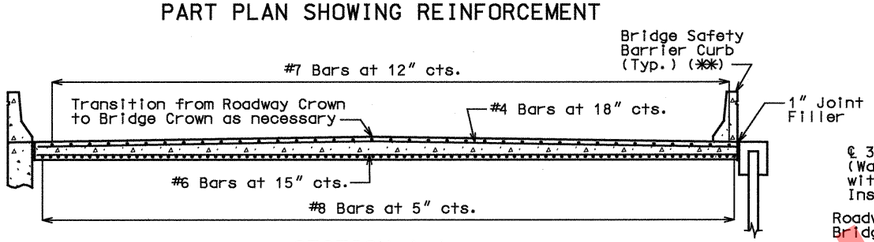

SECTION A-A
(✱✱) For Safety Barrier Curb dimensions and reinforcing, see Sheet No. 19.

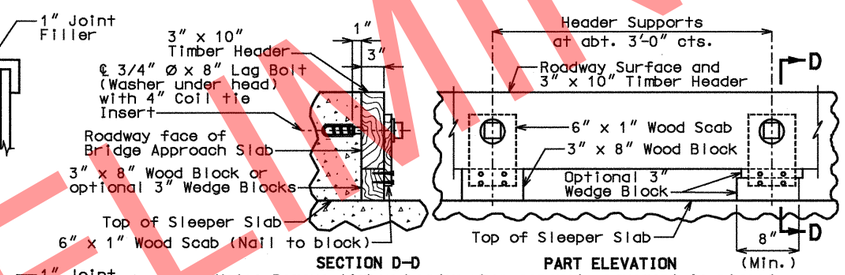

SECTION D-D PART ELEVATION

Note: Remove timber header when concrete pavement is placed.

DETAILS OF TIMBER HEADER

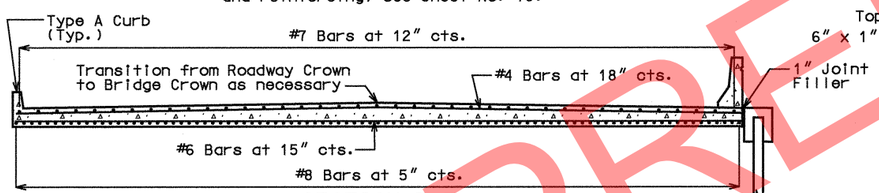

SECTION B-B

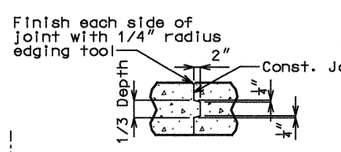

CONST. JOINT DETAIL
(IF REQUIRED)

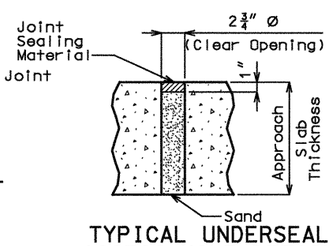

TYPICAL UNDERSEAL ACCESS HOLE DETAIL

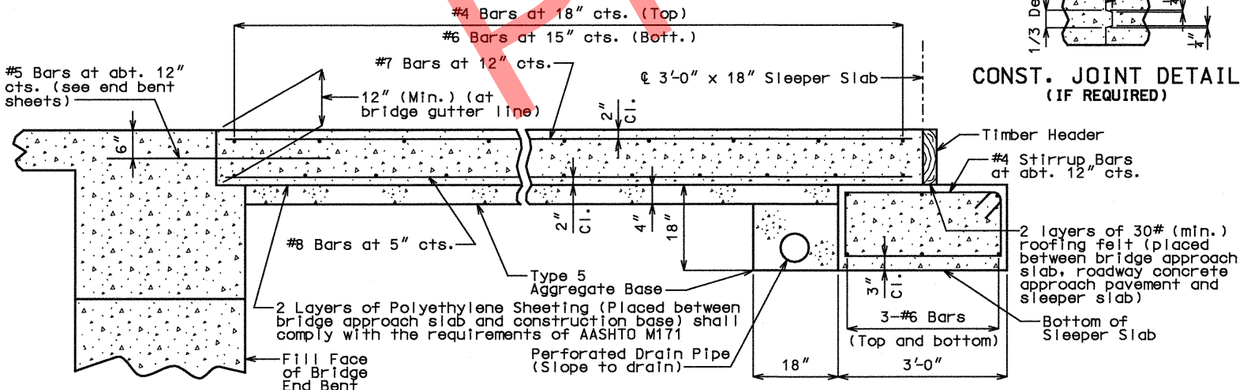

SECTION C-C

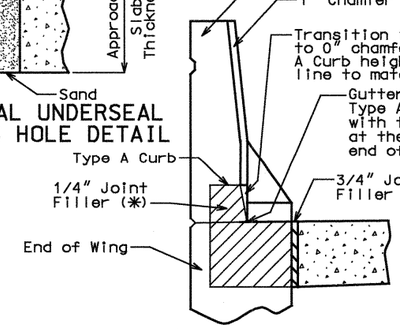

SECTION E-E
(BETWEEN CURBS)

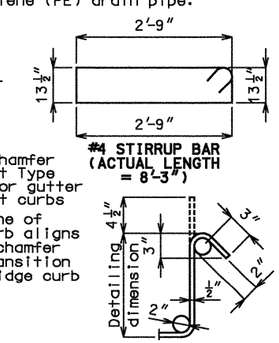

TYPICAL 135° STIRRUP HOOK DIMENSIONS BENDING DIAGRAM

Note:
Nominal lengths are based on out to out dimensions shown in bending diagram and are listed for fabricators use (nearest inch).

GENERAL NOTES:

All concrete for the bridge approach slab and sleeper slab shall be in accordance with Sec 503 (f'c = 4,000 psi).

All joint filler shall be in accordance with Sec 1057 for preformed fiber expansion joint filler, except as noted.

The reinforcing steel in the bridge approach slab and the sleeper slab shall be epoxy coated Grade 60 with Fy = 60,000 psi.

Minimum clearance to reinforcing steel shall be 1½", unless otherwise shown.

The reinforcing steel in the bridge approach slab and the sleeper slab shall be continuous. The transverse reinforcing steel may be made continuous by lap splicing the #4 & #6 bars 18" and 2'-2", respectively.

Mechanical bar splices shall be in accordance with Sec 706.

(✱) Seal joint between vertical face of approach slab and wing with "Silicone Joint Sealant for Saw Cut and Formed Joints" in accordance with Sec 717.

Hooks and bends shall be in accordance with the CRSI Manual of Standard Practice for Detailing Reinforced Concrete Structures, Stirrup and Tie Dimensions.

The contractor shall pour and satisfactorily finish the bridge or semi-deep slab before pouring the bridge approach slabs.

Longitudinal construction joints in approach slab and sleeper slab shall be aligned with longitudinal construction joints in bridge or semi-deep slab.

Payment for furnishing all materials, labor and excavation necessary to construct the approach slab, including the timber header, sleeper slab, underdrain, Type 5 aggregate base, joint filler and all other appurtenances and incidental work as shown on this sheet, complete in place, will be considered completely covered by the contract unit price for Bridge Approach Slab (Bridge) per square yard.

For Concrete Approach Pavement details, see roadway plans.

See Missouri Standard Plans Drawings 609.00 for details of Type A Curb.

At the contractor's option, Grade 40 reinforcement may be substituted for the Grade 60 #5 dowel bars connecting the bridge approach slab to the bridge abutment. No additional payment will be made for this substitution.

When Grade 40 reinforcement is substituted for the Grade 60 #5 dowel bars connecting the bridge approach slab to the bridge abutment, the reinforcement may be bent up to 90 degrees with a 2" minimum radius near the abutment to allow compaction of the backfill material near the abutment. Damage to epoxy coating shall be repaired in accordance with Sec 710.

Drain pipe may be either 6" diameter corrugated metallic-coated pipe underdrain, 4" diameter corrugated polyvinyl chloride (PVC) drain pipe, or 4" diameter corrugated polyethylene (PE) drain pipe.

STATE OF MISSOURI — GINA D. HORNER — NUMBER E-30413 — REGISTERED PROFESSIONAL ENGINEER — 3-9-10

DATE PREPARED	07/23/09
ROUTE I-49	STATE MO
DISTRICT BR	SHEET NO. 22
COUNTY McDONALD	
JOB NO. J7P0601	
CONTRACT ID.	
PROJECT NO.	
BRIDGE NO. A6380	

DATE	DESCRIPTION

MISSOURI HIGHWAYS AND TRANSPORTATION COMMISSION
105 WEST CAPITOL
JEFFERSON CITY, MO 65102
1-888-ASK-MODOT (1-888-275-6636)

HNTB
715 KIRK DRIVE
KANSAS CITY, MO 64105-1310
TELEPHONE (816) 472-1201
CERTIFICATE OF AUTHORITY NO. 001270

IF A SFAI IS PRESENT ON THIS SHEET IT HAS BEEN ELECTRONICALLY SEALED AND DATED.

BRIDGE APPROACH SLAB – END BENT 1

Detailed JUL 2009
Checked JUL 2009

Note: This drawing is not to scale. Follow Dimensions.

USER: TThompson
PLOTTED: 08-MAR-2010 15:01

\\kcow00\Jobs\49259\Bridges\Plans\CDtoMoDotA6380_03-05-10\J7P0601\A6380-dgn\ZPLOT_A25.dgn

REV.

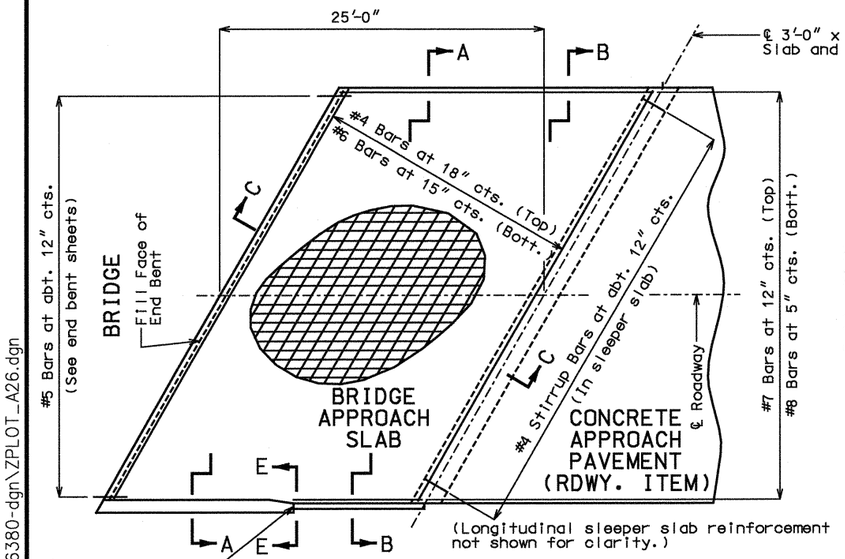

PART PLAN SHOWING REINFORCEMENT

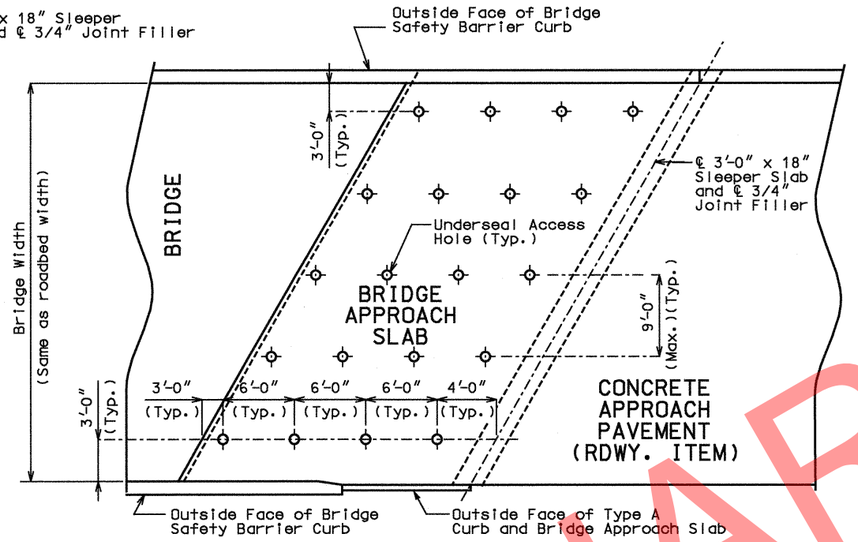

PART PLAN
(SHOWING TYPICAL UNDERSEAL ACCESS HOLE LOCATIONS)

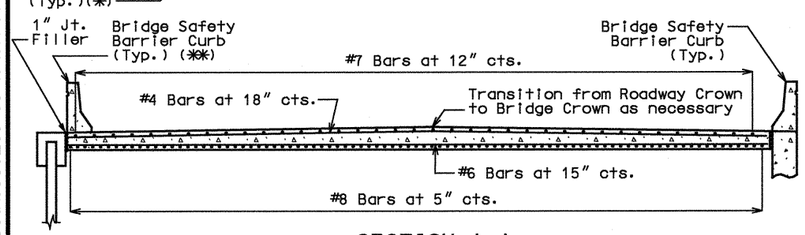

SECTION A-A
(✱✱) For Safety Barrier Curb dimensions and reinforcing, see Sheet No. 19.

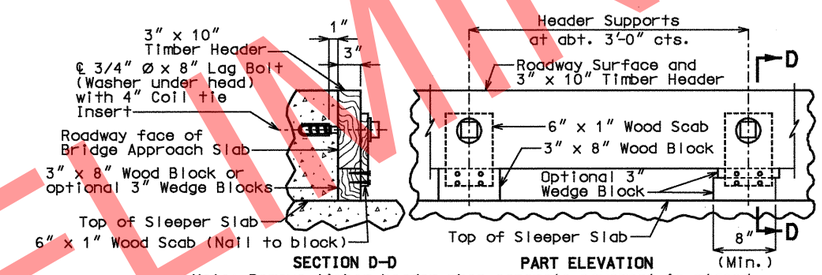

SECTION D-D PART ELEVATION

Note: Remove timber header when concrete pavement is placed.

DETAILS OF TIMBER HEADER

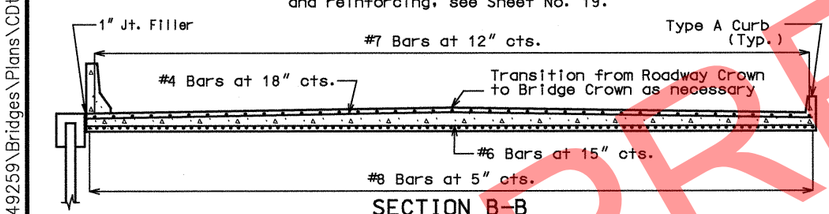

SECTION B-B

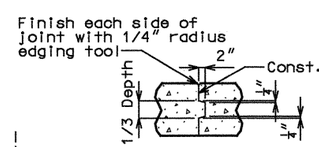

CONST. JOINT DETAIL
(IF REQUIRED)

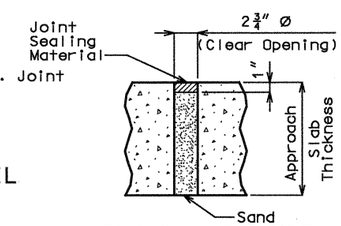

TYPICAL UNDERSEAL ACCESS HOLE DETAIL

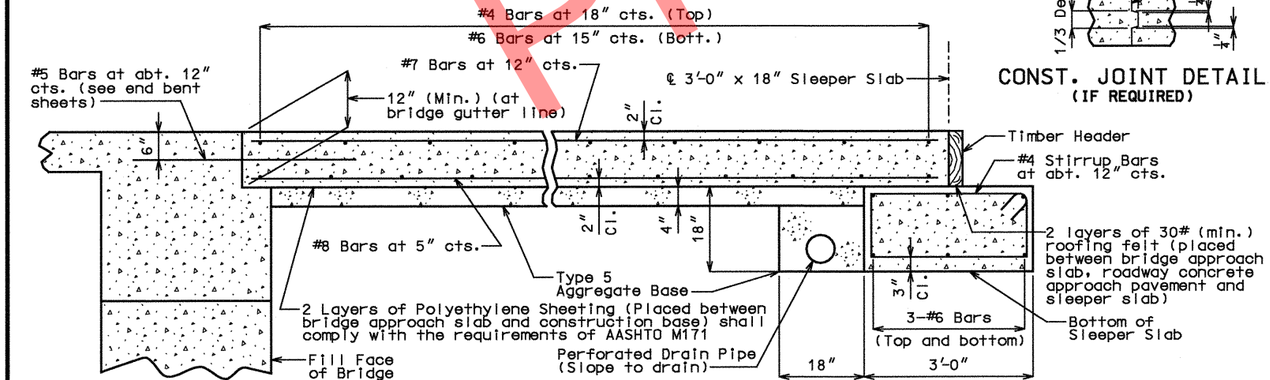

SECTION C-C

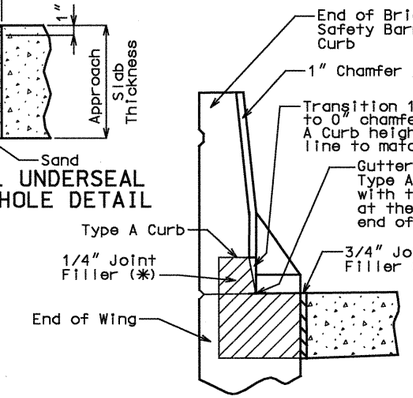

SECTION E-E
(BETWEEN CURBS)

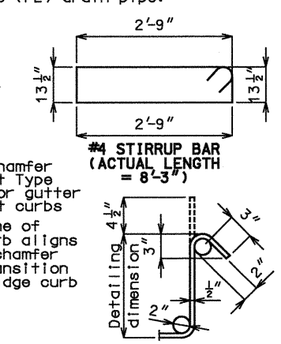

TYPICAL 135° STIRRUP HOOK DIMENSIONS BENDING DIAGRAM

Note:
Nominal lengths are based on out to out dimensions shown in bending diagram and are listed for fabricators use (nearest inch).

GENERAL NOTES:

All concrete for the bridge approach slab and sleeper slab shall be in accordance with Sec 503 (f'c = 4,000 psi).

All joint filler shall be in accordance with Sec 1057 for preformed fiber expansion joint filler, except as noted.

The reinforcing steel in the bridge approach slab and the sleeper slab shall be epoxy coated Grade 60 with Fy = 60,000 psi.

Minimum clearance to reinforcing steel shall be 1 1/2", unless otherwise shown.

The reinforcing steel in the bridge approach slab and the sleeper slab shall be continuous. The transverse reinforcing steel may be made continuous by lap splicing the #4 & #6 bars 18" and 2'-2", respectively.

Mechanical bar splices shall be in accordance with Sec 706.

(✱) Seal joint between vertical face of approach slab and wing with "Silicone Joint Sealant for Saw Cut and Formed Joints" in accordance with Sec 717.

Hooks and bends shall be in accordance with the CRSI Manual of Standard Practice for Detailing Reinforced Concrete Structures, Stirrup and Tie Dimensions.

The contractor shall pour and satisfactorily finish the bridge or semi-deep slab before pouring the bridge approach slabs.

Longitudinal construction joints in approach slab and sleeper slab shall be aligned with longitudinal construction joints in bridge or semi-deep slab.

Payment for furnishing all materials, labor and excavation necessary to construct the approach slab, including the timber header, sleeper slab, underdrain, Type 5 aggregate base, joint filler and all other appurtenances and incidental work as shown on this sheet, complete in place, will be considered completely covered by the contract unit price for Bridge Approach Slab (Bridge) per square yard.

For Concrete Approach Pavement details, see roadway plans.

See Missouri Standard Plans Drawing 609.00 for details of Type A Curb.

At the contractor's option, Grade 40 reinforcement may be substituted for the Grade 60 #5 dowel bars connecting the bridge approach slab to the bridge abutment. No additional payment will be made for this substitution.

When Grade 40 reinforcement is substituted for the Grade 60 #5 dowel bars connecting the bridge approach slab to the bridge abutment, the reinforcement may be bent up to 90 degrees with a 2" minimum radius near the abutment to allow compaction of the backfill material near the abutment. Damage to epoxy coating shall be repaired in accordance with Sec 710.

Drain pipe may be either 6" diameter corrugated metallic-coated pipe underdrain, 4" diameter corrugated polyvinyl chloride (PVC) drain pipe, or 4" diameter corrugated polyethylene (PE) drain pipe.

STATE OF MISSOURI
GINA D. HORNER
NUMBER E-30413
REGISTERED PROFESSIONAL ENGINEER
3-9-10

DATE PREPARED	
07/23/09	
ROUTE I-49	STATE MO
DISTRICT BR	SHEET NO. 23
COUNTY McDONALD	
JOB NO. J7P0601	
CONTRACT ID.	
PROJECT NO.	
BRIDGE NO. A6380	

DATE	DESCRIPTION

IF A SEAL IS PRESENT ON THIS SHEET IT HAS BEEN ELECTRONICALLY SEALED AND DATED.

MISSOURI HIGHWAYS AND TRANSPORTATION COMMISSION
105 WEST CAPITOL
JEFFERSON CITY, MO 65102
1-888-ASK-MoDOT (1-888-275-6636)

HNTB
715 KIRK DRIVE
KANSAS CITY, MO 64105-1310
TELEPHONE (816) 472-1201
CERTIFICATE OF AUTHORITY NO. 001270

USER: TThompson
PLOTTED: 08-MAR-2010 15:01
\\kcow00\Jobs\49259\Bridges\Plans\CDtoMoDotA6380_03-05-10\J7P0601\A6380-dgn\ZPLOT_A26.dgn

Detailed JUL 2009
Checked JUL 2009

Note: This drawing is not to scale. Follow Dimensions.

BRIDGE APPROACH SLAB - END BENT 2

REV.

BILL OF REINFORCING STEEL

NO. REQ'D.	MARK NO. SIZE	MARK NO. MARK	LOCATION	EPOXY (E)	SHAPE NO.	STIRRUP (S)	SUBSTR. (X)	VARIES (V)	NO. EACH	B FT. IN.	C FT. IN.	D FT. IN.	E FT. IN.	F FT. IN.	H FT. IN.	K FT. IN.	NOMINAL LENGTH FT. IN.	ACTUAL LENGTH FT. IN.	WEIGHT LBS.
			SUPERSTRUCTURE																
			END BENT 1																
4	6H101		Diaphragm		20					3′-6″							3′-6″	3′-6″	21
16	6H102		Diaphragm		20					8′-9″							8′-9″	8′-9″	210
8	6H103		Diaphragm & Beam		20					57′-10″							57′-10″	57′-10″	695
4	7H104		Diaphragm	E	20					57′-10″							57′-10″	57′-10″	473
41	5H105		Diaphragm	E	20					2′-6″							2′-6″	2′-6″	107
5	5H106		Diaphragm		23	S				15″	2′-0″	15″	10½″	10¾″	10½″	10¾″	4′-6″	4′-6″	23
5	6H107		Diaphragm		38	S				8′-3″	3′-10″				2′-8″	2′-9″	12′-1″	12′-1″	91
5	6H108		Diaphragm		2					5′-1″	3′-8″				2′-7⅛″	2′-7⅛″	8′-9″	8′-9″	66
8	7H109		Beam		20					57′-10″							57′-10″	57′-10″	946
12	6H110		Fillet		15	S				14″	3′-10″	14″	12⅞″	5⅜″	12⅞″	5⅜″	6′-2″	6′-2″	111
2	8H111		Wingwall	E	20					17′-5″							17′-5″	17′-5″	93
6	8H112		Wingwall		20					17′-5″							17′-5″	17′-5″	279
22	6H113		Wingwall		20					16′-5″							16′-5″	16′-5″	542
30	4H114		Bearing Pad		20					4′-7″							4′-7″	4′-7″	92
4	6H115		Diaphragm		20					3′-0″							3′-0″	3′-0″	18
19	5U101		Beam		53	S				3′-10″	2′-7″						13′-9″	13′-6″	268
30	5U102		Beam		5	S				3′-10″	4′-10″	4′-10″					13′-6″	13′-3″	415
40	5U103		Diaphragm	E	5	S				3′-2″	5′-4″	5′-4″					13′-10″	13′-7″	567
40	6U104		Diaphragm		19	S				4′-4″	3′-10″						8′-2″	8′-1″	486
6	5U105		Beam		5	S				3′-10″	2′-7″	2′-7″					9′-0″	8′-9″	55
57	6U106		Diaphragm	E	19	S				3′-0″	14′-0″						17′-0″	16′-11″	1,448
50	4U107		Bearing Pad		5	S				3′-9″	15″	15″					6′-3″	6′-1″	203
20	5V101		Beam		20					4′-10″							4′-10″	4′-10″	101
25	6V102		Diaphragm		20					4′-4″							4′-4″	4′-4″	163
2	6V103		Wingwall		20					7′-9″							7′-9″	7′-9″	23
30	6V104		Wingwall		20			V	2	7′-10″							7′-10″	7′-10″	366
			Increment = ½″							8′-5″							8′-5″	8′-5″	

Notes:
Two additional #6-U106 are included in the Bill of Reinforcing Steel for testing.

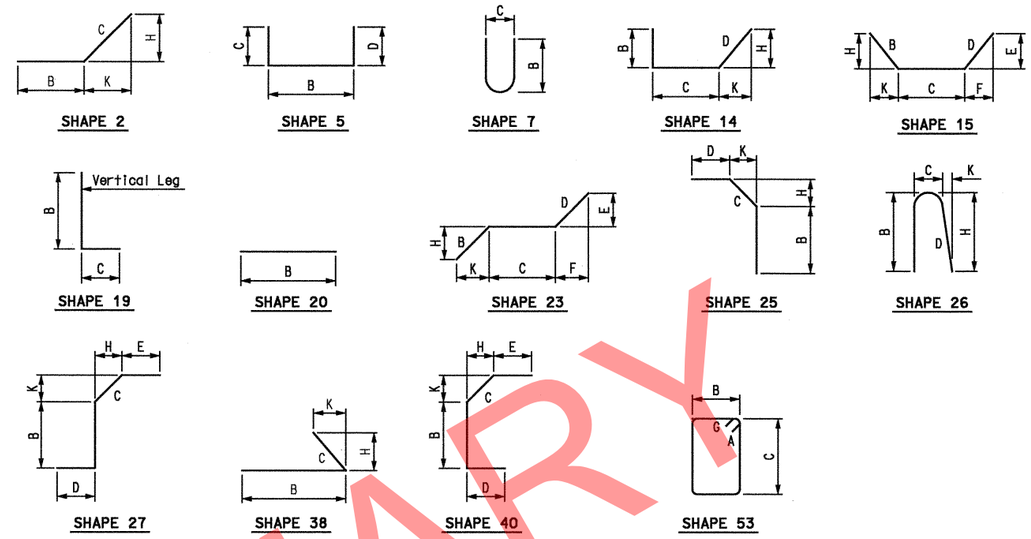

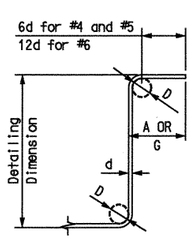

90° STIRRUP

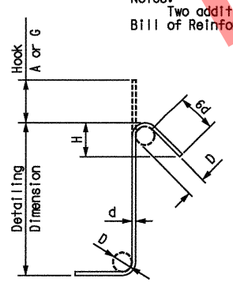

135° STIRRUP

STIRRUP HOOK DIMENSIONS

GRADES 40 - 50 - 60 KSI				
BAR SIZE	D (IN.)	90° HOOK	135° HOOK	
		HOOK A OR G	HOOK A OR G	APPROX. H
#4	2″	4½″	4½″	3″
#5	2½″	6″	5½″	3¾″
#6	4½″	12″	8″	4½″

Note:
Unless otherwise noted, diameter "D" is the same for all bends and hooks on a bar.

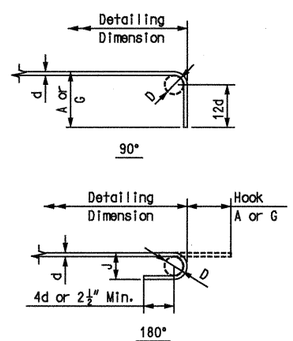

END HOOK DIMENSIONS

BAR SIZE	D (IN.)	ALL GRADES		
		180° HOOKS		90° HOOKS
		HOOK A OR G	J	HOOK A OR G
#3	2¼″	5″	3″	6″
#4	3″	6″	4″	8″
#5	3¾″	7″	5″	10″
#6	4½″	8″	6″	12″
#7	5¼″	10″	7″	14″
#8	6″	11″	8″	16″
#9	9½″	15″	11¾″	19″
#10	10¾″	17″	13¼″	22″
#11	12″	19″	14¾″	2′-0″
#14	18¼″	2′-3″	21¾″	2′-7″

Notes:
All standard hooks and bends other than 180 degree are to be bent with the same procedure as for 90 degree standard hooks.
Hooks and bends shall be in accordance with the procedures as shown on this sheet.
E = Epoxy coated reinforcement.
S = Stirrup.
X = Bar is included in substructure quantities.
V = Bar dimensions vary in equal increments between dimensions shown on this line and the following line.
No. Each = Number of bars of each length.
Nominal lengths are based on out to out dimensions shown in bending diagrams and are listed for fabricators use. (Nearest inch)
Actual lengths are measured along centerline bar to the nearest inch.
Payweights are based on actual lengths.
Reinforcing Steel (Grade 60) fy = 60,000 psi.

BILL OF REINFORCING STEEL

PRELIMINARY

Detailed AUG 2009
Checked AUG 2009

Note: This drawing is not to scale. Follow Dimensions.

STATE OF MISSOURI
GINA D. HORNER
NUMBER E-30413
REGISTERED PROFESSIONAL ENGINEER
3-9-10

DATE PREPARED	08/08/09
ROUTE I-49	STATE MO
DISTRICT BR	SHEET NO. 24
COUNTY	McDONALD
JOB NO.	J7P0601
CONTRACT ID.	
PROJECT NO.	
BRIDGE NO.	A6380

DATE	DESCRIPTION

MISSOURI HIGHWAYS AND TRANSPORTATION COMMISSION
105 WEST CAPITOL
JEFFERSON CITY, MO 65102
1-888-ASK-MODOT (1-888-275-6636)

HNTB
715 KIRK DRIVE
KANSAS CITY, MO 64105-1310
TELEPHONE (816) 472-1201
CERTIFICATE OF AUTHORITY NO. 001270

IF A SEAL IS PRESENT ON THIS SHEET IT HAS BEEN ELECTRONICALLY SEALED AND DATED.

REV.

BILL OF REINFORCING STEEL

NO. REQ'D.	MARK NO. SIZE MARK	LOCATION	EPOXY (E)	SHAPE NO.	STIRRUP (S)	SUBSTR. (X)	VARIES (V)	NO. EACH	B FT. IN.	C FT. IN.	D FT. IN.	E FT. IN.	F FT. IN.	H FT. IN.	K FT. IN.	NOMINAL LENGTH FT. IN.	ACTUAL LENGTH FT. IN.	WEIGHT LBS.
		END BENT 2																
4	6H201	Diaphragm		20					2′-3″							2′-3″	2′-3″	14
16	6H202	Diaphragm		20					8′-9″							8′-9″	8′-9″	210
8	6H203	Diaphragm & Beam		20					56′-3″							56′-3″	56′-3″	676
6	7H204	Diaphragm	E	20					56′-3″							56′-3″	56′-3″	690
40	5H205	Diaphragm	E	20					2′-6″							2′-6″	2′-6″	104
5	5H206	Diaphragm		23	S				15″	2′-0″	15″	10½″	10¾″	10½″	10¾″	4′-6″	4′-6″	23
5	6H207	Diaphragm		38	S				6′-8″	3′-8″				2′-7⅞″	2′-6¼″	10′-4″	10′-4″	78
5	6H208	Diaphragm		2					4′-10″	3′-8″				2′-7⅛″	2′-7⅛″	8′-6″	8′-6″	64
8	7H209	Beam		20					56′-3″							56′-3″	56′-3″	920
12	6H210	Fillet		15	S				14″	3′-10″	14″	12⅞″	5⅜″	12⅞″	5⅜″	6′-2″	6′-2″	111
4	8H211	Wingwall	E	20					18′-8″							18′-8″	18′-8″	199
6	8H212	Wingwall		20					18′-8″							18′-8″	18′-8″	299
24	6H213	Wingwall		20					16′-5″							16′-5″	16′-5″	592
30	4H214	Bearing Pad		20					4′-7″							4′-7″	4′-7″	92
4	6H215	Diaphragm		20					2′-9″							2′-9″	2′-9″	17
19	5U201	Beam		53	S				3′-10″	2′-7″						13′-9″	13′-6″	268
27	5U202	Beam		5	S				3′-10″	4′-10″	4′-10″					13′-6″	13′-3″	373
39	5U203	Diaphragm	E	5	S				3′-2″	5′-4″	5′-4″					13′-10″	13′-7″	553
39	6U204	Diaphragm		5	S				3′-10″	4′-4″	4′-4″					12′-6″	12′-3″	718
6	5U205	Beam		5	S				3′-10″	2′-7″	2′-7″					9′-0″	8′-9″	55
53	6U206	Diaphragm	E	19	S				14′-0″	3′-0″						17′-0″	16′-11″	1,347
50	4U207	Bearing Pad		5	S				3′-9″	15″	15″					6′-3″	6′-1″	203
24	5V201	Beam		20					4′-10″							4′-10″	4′-10″	121
25	6V202	Diaphragm		20					4′-4″							4′-4″	4′-4″	163
2	6V203	Wingwall		20					9′-0″							9′-0″	9′-0″	27
30	6V204	Wingwall		20			V	2	7′-6″							7′-6″	7′-6″	370
		Increment = 1¼″							8′-11″							8′-11″	8′-11″	
		SLAB																
92	6S1	Slab, Top	E	20					40′-5″							40′-5″	40′-5″	5,585
70	6S2	Slab, Top	E	20			V	1	3′-8″							3′-8″	3′-8″	2,296
		Increment = 6⅜″							39′-11¼″							40′-0″	40′-0″	
76	6S3	Slab, Top	E	20			V	1	3′-7¾″							3′-8″	3′-8″	2,483
		Increment = 5¾″							39′-9⅜″							39′-10″	39′-10″	
7	6S4	Slab, Top	E	20					3′-2″							3′-2″	3′-2″	33
7	6S5	Slab, Top	E	20					3′-2″							3′-2″	3′-2″	33
41	5S6	Slab, Top & Bot.	E	20					45′-2″							45′-2″	45′-2″	1,931
41	5S7	Slab, Top & Bot.	E	20					45′-4″							45′-4″	45′-4″	1,939
164	5S8	Slab, Bot.	E	20					4′-0″							4′-0″	4′-0″	684
		BARRIER																
16	5C1	Slip Form Barrier	E	20					10′-0″							10′-0″	10′-0″	167
52	5K1	Barrier	E	26					2′-6″	4¼″	2′-6″			2′-6″	3″	5′-2″	5′-2″	280
52	5K2	Barrier	E	27	S				7″	11″	12″	6″		6⅜″	9¼″	3′-0″	2′-9″	149
52	5K3	Barrier	E	19	S				17″	6″						23″	22″	99
16	5K4	Barrier	E	20					24′-8″							24′-8″	24′-8″	412
70	5K5	Barrier	E	19	S				2′-5″	5″						2′-10″	2′-9″	201
70	5K6	Barrier	E	14	S				5″	11⅛″	18″			2″	17⅞″	2′-11″	2′-9″	201
46	5K7	Barrier	E	40	S				5⅛″	12″	3′-0″	2′-2⅛″		9⅞″	6⅞″	6′-8″	6′-4″	304
22	5K8	Barrier	E	7					3′-0″	6″						6′-3″	6′-3″	143
2	5K9	Barrier	E	25	S				2′-2¾″	11¼″	4⅜″			9¼″	6½″	3′-7″	3′-5″	7
2	5K10	Barrier	E	25	S				2′-4½″	9⅜″	4⅜″			7⅞″	5⅛″	3′-7″	3′-5″	7
2	5K11	Barrier	E	25	S				2′-5½″	7⅛″	4⅜″			6½″	4½″	3′-6″	3′-5″	7
2	5K12	Barrier	E	25	S				2′-6½″	6¾″	4⅜″			5½″	4″	3′-6″	3′-4″	7
24	5K13	Barrier	E	20					5′-8″							5′-8″	5′-8″	142
22	4K14	Barrier	E	20					14′-9″							14′-9″	14′-9″	217
2	5K15	Barrier	E	2	S				2′-2″	2′-2″				2′-2″	2⅜″	4′-4″	4′-4″	9
2	5K16	Barrier	E	27	S				7″	11″	12″	6″		6⅜″	9¼″	3′-0″	2′-9″	6
167	5R1	Barrier	E	26					2′-6″	4¼″	2′-6″			2′-6″	3″	5′-2″	5′-2″	900
167	5R2	Barrier	E	27	S				7″	11″	12″	6″		6⅜″	9¼″	3′-0″	2′-9″	479
167	5R3	Barrier	E	19	S				17″	6″						23″	22″	319
28	5R4	Barrier	E	20					42′-11″							42′-11″	42′-11″	1,253

BILL OF REINFORCING STEEL

NO. REQ'D.	MARK NO. SIZE MARK	LOCATION	EPOXY (E)	SHAPE NO.	STIRRUP (S)	SUBSTR. (X)	VARIES (V)	NO. EACH	B FT. IN.	C FT. IN.	D FT. IN.	E FT. IN.	F FT. IN.	H FT. IN.	K FT. IN.	NOMINAL LENGTH FT. IN.	ACTUAL LENGTH FT. IN.	WEIGHT LBS.
	4	**TOTALS**																590
	4		E															217
	5																	1,702
	5		E															10,977
	6																	5,832
	6		E															13,225
	7																	1,866
	7		E															1,163
	8																	578
	8		E															292
		TOTAL																10,568
		TOTAL E																25,874
		SLAB ON CONCRETE I-GIRDER																
	4																	590
	5																	1,702
	5		E															5,885
	6																	5,832
	6		E															13,225
	7																	1,866
	7		E															1,163
	8																	578
	8		E															292
		TOTAL																10,568
		TOTAL E																20,565
		BARRIER CURB																
	4		E															217
	5		E															4,925
		SLIP FORM OPTION																
	5		E															167

Notes:
For Bar Bending Diagrams, see Sheet 24.
Two additional #7-H204, #8-H211, #5-K4, and #4-K14 are included in the Bill of Reinforcing Steel for testing.

BILL OF REINFORCING STEEL

Detailed AUG 2009
Checked AUG 2009

Note: This drawing is not to scale. Follow Dimensions.

STATE OF MISSOURI
GINA D. HORNER
NUMBER E-30413
REGISTERED PROFESSIONAL ENGINEER

DATE PREPARED 08/08/09
ROUTE I-49 | STATE MO
DISTRICT BR | SHEET NO. 25
COUNTY McDONALD
JOB NO. J7P0601
CONTRACT ID.
PROJECT NO.
BRIDGE NO. A6380

DESCRIPTION	DATE

MISSOURI HIGHWAYS AND TRANSPORTATION COMMISSION
105 WEST CAPITOL
JEFFERSON CITY, MO 65102
1-888-ASK-MODOT (1-888-275-6636)

HNTB
715 KIRK DRIVE
KANSAS CITY, MO 64105-1310
TELEPHONE (816) 472-1201
CERTIFICATE OF AUTHORITY NO. 001270

IF A SEAL IS PRESENT ON THIS SHEET IT HAS BEEN ELECTRONICALLY SEALED AND DATED.

REV.

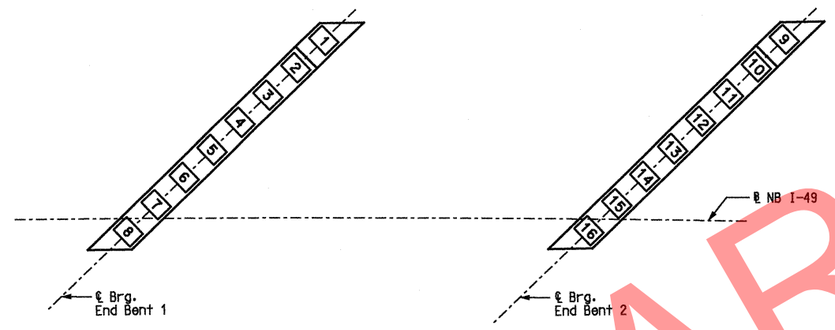

"AS BUILT PILE" DATA

PILE NO.	LENGTH IN PLACE (FT.)	COMPUTED BEARING (KIPS)	REMARKS
END BENT 1			
1			
2			
3			
4			
5			
6			
7			
8			
END BENT 2			
9			
10			
11			
12			
13			
14			
15			
16			

Notes:
Indicate in the remarks column:
A. If pilings were driven to practical refusal.
B. If pile batter is other than shown on the Bent Detail Sheet.
C. Type of piling used.

NOTE:
THIS SHEET TO BE COMPLETED BY MoDOT CONSTRUCTION PERSONNEL.

AS-BUILT PILE DATA

STATE OF MISSOURI
GINA D. HORNER
NUMBER E-30413
REGISTERED PROFESSIONAL ENGINEER
7-7-10

DATE PREPARED	
07/23/09	
ROUTE I-49	STATE MO
DISTRICT BR	SHEET NO. 26
COUNTY McDONALD	
JOB NO. J7P0601	
CONTRACT ID.	
PROJECT NO.	
BRIDGE NO. A6380	

DATE	DESCRIPTION

MISSOURI HIGHWAYS AND TRANSPORTATION COMMISSION
105 WEST CAPITOL
JEFFERSON CITY, MO 65102
1-888-ASK-MODOT (1-888-275-6636)

HNTB
715 KIRK DRIVE
KANSAS CITY, MO 64105-1310
TELEPHONE (816) 472-1201
CERTIFICATE OF AUTHORITY
NO. 001270

IF A SEAL IS PRESENT ON THIS SHEET IT HAS BEEN ELECTRONICALLY SEALED AND DATED.

REV.

Detailed JUL 2009
Checked JUL 2009

Note: This drawing is not to scale. Follow Dimensions.

MISSOURI HIGHWAYS AND TRANSPORTATION COMMISSION

SEC/SUR 22 TWP 21N RGE 32W

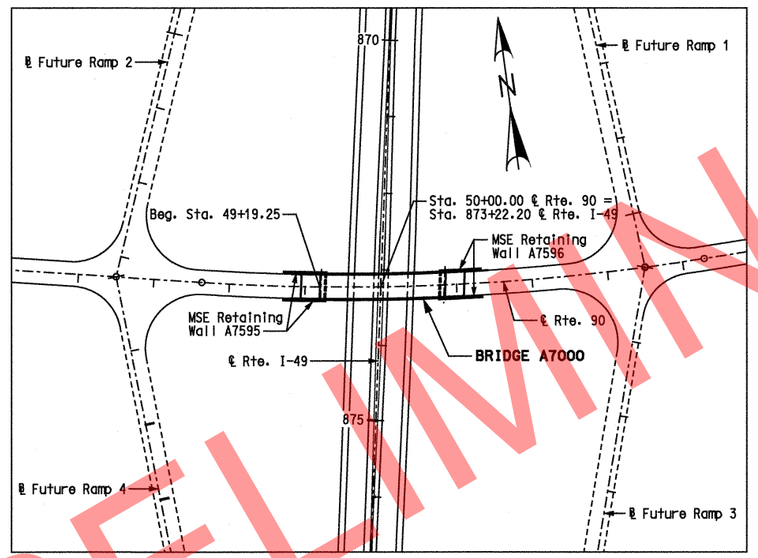

INDEX OF DRAWINGS

1 Title Sheet
2 General Plan and Elevation
3 General Notes and Estimated Quantities
4 Boring Data
5 Boring Data
6 Substructure Layout
7 End Bent 1
8 End Bent 1 Details
9 Bent 2
10 Bent 2 Details
11 End Bent 3
12 End Bent 3 Details
13 Vertical Drain at End Bents
14 Framing Plan and Steel Intermediate Diaphragm Details
15 Girder Details - Span (1-2)
16 Girder Details - Span (2-3)
17 Bent 2 Diaphragm Details
18 Slab Plan
19 Theoretical Slab Haunching Diagram & Slab Pouring Sequence
20 Details of Precast Prestressed Panels
21 Bottom of Slab Elevations and Slab Curve Ordinates
22 Slab Drain Details
23 Safety Barrier Curb Details
24 Optional Slip-Form Bridge Safety Barrier Curb
25 Bill of Reinforcing Steel
26 Bill of Reinforcing Steel
27 As-Built Pile Data

BRIDGE: RTE. 90 OVER RTE. I-49

STATE ROAD FROM RTE. H TO STATE LINE
ABOUT 8.0 MILES EAST OF RTE. 59
STA. 49+19.25 (RTE. 90)

STD. 609.00
STD. 617.10
STD. 706.35

Designed JUL 2009
Detailed JUL 2009
Checked AUG 2009

Note: This drawing is not to scale. Follow Dimensions.

STATE OF MISSOURI
GINA D. HORNER
NUMBER E-30413
REGISTERED PROFESSIONAL ENGINEER
3-9-10

DATE PREPARED 07/31/09
ROUTE I-49 STATE MO
DISTRICT BR SHEET NO. 1
COUNTY McDONALD
JOB NO. J7P0601
CONTRACT ID.
PROJECT NO.
BRIDGE NO. A7000

DATE	DESCRIPTION

MISSOURI HIGHWAYS AND TRANSPORTATION COMMISSION
105 WEST CAPITOL
JEFFERSON CITY, MO 65102
1-888-ASK-MODOT (1-888-275-6636)

HNTB
715 KIRK DRIVE
KANSAS CITY, MO 64105-1310
TELEPHONE (816) 472-1201
CERTIFICATE OF AUTHORITY
NO. 001270

IF A SEAL IS PRESENT ON THIS SHEET IT HAS BEEN ELECTRONICALLY SEALED AND DATED.

REV.

USER: TThompson
PLOTTED: 08-MAR-2010 15:13 \\kcow00\Jobs\49259\Bridges\Plans\CDtoMoDotA7000_03-05-10\J7P0601\A7000-dgn\ZPLOT_B01.dgn

(79′-84′) PRESTRESSED CONCRETE I-GIRDER SPANS

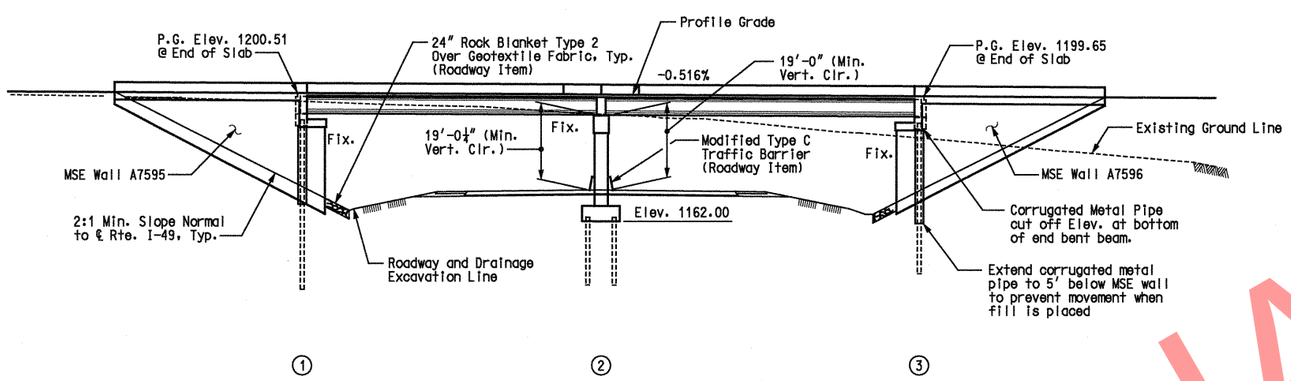

ELEVATION

Note:
Galvanized corrugated metal pipe to provide sleeving for piles which penetrate through the mechanically stabilized earth wall fill. See Special Provisions. Galvanized Corrugated Metal Culvert Pipe in accordance with Sec 1020.

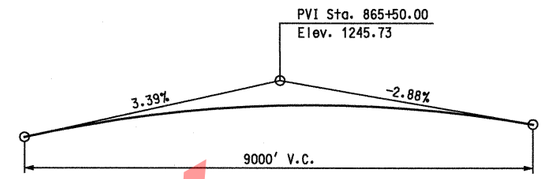

PROFILE GRADE - RTE. I-49

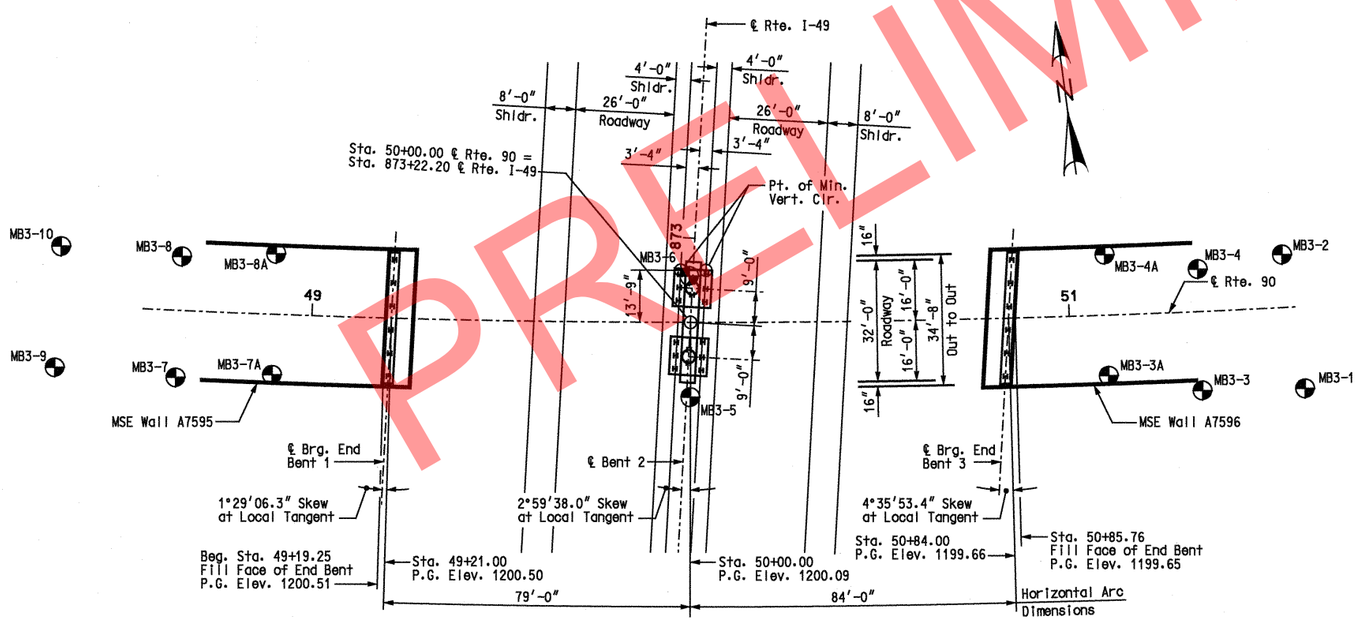

PLAN

Notice and disclaimer regarding Boring Log Data:

The locations of all subsurface borings for this structure are shown on the bridge plan sheets for this structure. Boring data for the numbered locations is shown on Sheets No. 4 thru 5. The boring data for all locations indicated, as well as any other boring logs or other factual records of subsurface data and investigations performed by the department for the design of the project, will be provided in the bridge electronic deliverable file or will be available from the Project Contact upon written request. No greater significance or weight should be given to the boring data depicted on the plan sheets than is subsurface data available from the district or elsewhere.

The Commission does not represent or warrant that any such boring data accurately depicts the conditions to be encountered in constructing this project. A contractor assumes all risks it may encounter in basing its bid prices, time or schedule of performance on the boring data depicted here or those available from the district, or on any other documentation not expressly warranted, which the contractor may obtain from the Commission.

CURVE DATA - ROUTE 90

P.I. Sta. = 50+97.57
△ = 12°42′24.7″ (Lt.)
D = 1°54′35.5″
L = 665.33′
T = 334.04′
R = 3000.00′
SE = 3.7%

Notes:
Denotes boring location.
For pile locations, see Sheets No. 7, 9 and 11.

BENCHMARKS

BM-49-01-10 R.R. Spike 0.8′ above ground, East side of a 14″ red oak @ the NW quadrant of RTE 90 and SW 90-21
Elev. 1206.10

BM-49-01-11 1½″ Aluminum disk set in concrete, concrete flush with ground, 4.6′ from edge of county road 9′(+/-) south of 16″ black-jack oak, east side of county road SW 90-21, 60′(+/-) south of Don/Fern mail box #102, 0.3 miles(+/-) south of Rt. 90.
Elev. 1123.70

GENERAL PLAN AND ELEVATION

STATE OF MISSOURI
GINA D. HORNER
NUMBER E-30413
REGISTERED PROFESSIONAL ENGINEER
3-9-10

DATE PREPARED	07/28/09
ROUTE	I-49
STATE	MO
DISTRICT	BR
SHEET NO.	2
COUNTY	McDONALD
JOB NO.	J7P0601
CONTRACT ID.	
PROJECT NO.	
BRIDGE NO.	A7000

DESCRIPTION | DATE

MISSOURI HIGHWAYS AND TRANSPORTATION COMMISSION
105 WEST CAPITOL
JEFFERSON CITY, MO 65102
1-888-ASK-MODOT (1-888-275-6636)

HNTB
715 KIRK DRIVE
KANSAS CITY, MO 64105-1310
TELEPHONE (816) 472-1201
CERTIFICATE OF AUTHORITY
NO. 001270

REV.

ESTIMATED QUANTITIES

ITEM		SUBSTR.	SUPERSTR.	TOTAL
Class 1 Excavation	cu. yard	164	——	164
Structural Steel Piles (12 in.)	linear foot	826	——	826
Pre-Bore for Piling	linear foot	176	——	176
Pile Point Reinforcement	each	30	——	30
Class B Concrete (Substructure)	cu. yard	88.4	——	88.4
Slab on Concrete I-Girder	sq. yard	——	637	637
* Safety Barrier Curb	linear foot	——	331	331
Type 6 (54 in.) Prestressed Concrete I-Girder	linear foot	——	652	652
Reinforcing Steel (Bridges)	pound	8,400	——	8,400
Reinforcing Steel (Epoxy Coated)	pound	3,570	——	3,570
Steel Intermediate Diaphragm for P/S Concrete Girders	each	——	6	6
Slab Drain	each	——	6	6
Vertical Drain at End Bents	each	2	——	2
Laminated Neoprene Bearing Pad	each	——	16	16
Corrugated Metal Pipe Pile Spacers	each	14	——	14

Notes:
The cost of furnishing, fabricating and installing Neoprene Bearing Pads , complete-in-place, will be paid for at the contract unit price for Laminated Neoprene Bearing Pad per each.
* Safety barrier curb shall be cast-in-place option or slip-form option.
All reinforcement in the end bents is included in the Estimated Quantities for Slab on Concrete I-Girder.
All reinforcement in the intermediate bent concrete diaphragms except reinforcement embedded in the beam cap is included in the Estimated Quantities for Slab on Concrete I-Girder.
All concrete above the intermediate bent cap is included in the Estimated Quantites for Slab on Concrete I-Girder.
All concrete above the construction joint in the end bents is included in the Estimated Quantities for Slab on Concrete I-Girder.

PILE AND FOOTING DATA

BENT NO.			1	2	3
Bearing Pile	Type		Foundation	Foundation	Foundation
	Kind		HP12x53	HP12x53	HP12x53
	Number		7	16	7
	Approximate Length	Ft.	44	14	42
	Pile Driving Verification Method		Dynamic Bearing Formula	Dynamic Bearing Formula	Dynamic Bearing Formula
	Pre-bore Elevation		——	1151.0	——
	Design Bearing	Kips	124	140	124
	Hammer Energy Required	Lb-Ft	13950	16875	13950

Notes:
Minimum energy requirement of hammer is based on plan length and design bearing value of piles.
Prebore to elevations shown in data table.
Manufactured pile point reinforcement shall be used on all piles in this structure.

ESTIMATED QUANTITIES FOR SLAB ON CONCRETE I-GIRDER

ITEM		TOTAL
Class B-2 Concrete	cu. yard	164.5
Reinforcing Steel	pound	4,180
Reinforcing Steel (Epoxy Coated)	pound	36,230

Notes:
The table of Estimated Quantities for Slab on Concrete I-Girder represents the quantities used by the State in preparing the cost estimate for concrete slabs. The area of the concrete slab will be measured to the nearest square yard with the horizontal dimensions as shown on the plan of slab. Payment for prestressed panels, stay-in-place forms, conventional forms, all concrete and coated and uncoated reinforcing steel will be considered completely covered by the contract unit price for the slab. Variations may be encountered in these estimated quantities but the variations cannot be used for adjustment in the contract unit price.
Method of forming the slab shall be as shown on the plans and in accordance with Sec 703. All hardware for forming the slab left in place as a permanent part of the structure shall be coated in accordance with ASTM A123 or ASTM B633 with a thickness class SC 4 and a finish type I, II or III.
Class B-2 Concrete quantity is based on minimum top flange thickness and minimum joint material thickness.
The prestressed panel quantities are not included in the table of Estimated Quantities for Slab on Concrete I-Girder.
Slab shall be cast-in-place with conventional and precast prestressed panel forming. Stay-in-place corrugated metal forms will not be permitted.

GENERAL NOTES:

DESIGN SPECIFICATIONS:
2007 - AASHTO LRFD 4th Edition (Superstructure)
Load and Resistance Factor Design
Seismic Design Category = A
Seismic Peak Horizontal Ground Acceleration = 0.04

2002 - AASHTO 17th Edition (Substructure)
Load Factor Design
Seismic Performance Category A
Acceleration Coefficient = 0.04

DESIGN LOADINGS:
HL-93 (LRFD Superstructure, LFD Substructure)
35#/Sq. Ft. Future Wearing Surface.
Defense Transporter Erector Loading
Earth 120#/Cu. Ft., Equivalent Fluid Pressure = 45#/Cu. Ft.
Superstructure: Simply-Supported, non-composite for dead load.
Continuous composite for live load.

DESIGN UNIT STRESSES:
Class B Concrete (Substructure) f'c = 3,000 psi.
Class B-1 Concrete (Safety Barrier) f'c = 4,000 psi
Class B-2 Concrete (Superstructure, except Prestressed Girders and Safety Barrier) f'c = 4,000 psi.
Reinforcing Steel Grade 60 Fy = 60,000 psi.
Structural Carbon Steel (ASTM A709 Grade 36) fy = 36,000 psi.
Steel Pile (ASTM A709 Grade 50) fb = 9,000 psi fy=50,000 psi.
For precast prestressed panel stresses, see Sheet No. 20.
For prestressed girder stresses, see Sheets No. 15 & 16.

NEOPRENE PADS:
Neoprene Elastomeric Pads shall be 60 durometer.
Laminated Neoprene Bearing Pads shall be in accordance with Sec 716.

JOINT FILLER:
All joint filler shall be in accordance with Sec 1057 for preformed sponge rubber expansion and partition joint filler, except as noted.

REINFORCING STEEL:
Minimum clearance to the reinforcing steel shall be 1-1/2", unless otherwise shown.

MISCELLANEOUS:
"Sec" refers to the sections in the standard and supplemental specifications unless specified otherwise.

PILES:
The piles for Bent 2 shall be placed in prebored holes. Driving and backfill shall be in accordance with Section 702.

GENERAL NOTES AND
ESTIMATED QUANTITIES

Detailed JUL 2009
Checked AUG 2009

Note: This drawing is not to scale. Follow Dimensions.

STATE OF MISSOURI
GINA D. HORNER
NUMBER E-30413
REGISTERED PROFESSIONAL ENGINEER
3-9-10

DATE PREPARED	
7/28/09	
ROUTE I-49	STATE MO
DISTRICT BR	SHEET NO. 3
COUNTY McDONALD	
JOB NO. J7P0601	
CONTRACT ID.	
PROJECT NO.	
BRIDGE NO. A7000	

DATE	DESCRIPTION

MISSOURI HIGHWAYS AND TRANSPORTATION COMMISSION
105 WEST CAPITOL
JEFFERSON CITY, MO 65102
1-888-ASK-MODOT (1-888-275-6636)

HNTB
715 KIRK DRIVE
KANSAS CITY, MO 64105-1310
TELEPHONE (816) 472-1201
CERTIFICATE OF AUTHORITY
NO. 001270

IF A SEAL IS PRESENT ON THIS SHEET IT HAS BEEN ELECTRONICALLY SEALED AND DATED.

REV.

Boring Number MB3-7
End Bent 1 (Core)

QU(TSF) P-Penet. E-Equiv. L-Labor.	STANDARD PENETRATION TEST DEPTH	BLOWS/6"	
			ELEV. 1199.7
1.0P	3.5	6-7-8	LEAN CLAY, with sand and gravel, red, medium stiff, moist
	8.5	20-15-15	ELEV. 1191.2
	13.5	10-9-8	
	18.5	10-8-6	SANDY CHERT GRAVEL, with clay seams, red and white, medium dense, moist
	23.5	6-6-7	
1.0P	28.5	8-4-6	ELEV. 1171.2
0.5P	33.5	2-2-2	LEAN CLAY, with to abundant gravel, red, soft to medium stiff, moist to wet
	38.5	5-2-50/1"	ELEV. 1160.2

ROCK CORE DEPTH	REC%	RQD%	
			LIMESTONE, stratified, with chert seams and inclusions, light gray and gray, very fine to fine grained, thick bedded, fresh, hard, solid
46.0	90	84	
51.0	100	84	ELEV. 1148.7

Boring Number MB3-7A
End Bent 1

QU(TSF) P-Penet. E-Equiv. L-Labor.	STANDARD PENETRATION TEST DEPTH	BLOWS/6"	
			ELEV. 1199.3
			LEAN CLAY, with organics, dark brown, moist
			ELEV. 1198.3
4.0P	3	8-13-10	
4.25+P	8	11-23-40	FAT CLAY, with chert gravel and sand, red, very stiff to hard, moist
2.0P	13	7-11-9	
			ELEV. 1183.8
3.25P	18	15-14-11	
2.5P	23	10-8-7	LEAN CLAY, with chert gravel, red and white, very stiff to hard, moist
3.0P	28	8-9-11	
4.25+P	33	7-21-19	
			ELEV. 1161.3

Auger refusal on Limestone at 38.0'

Boring Number MB3-8A
End Bent 1

QU(TSF) P-Penet. E-Equiv. L-Labor.	STANDARD PENETRATION TEST DEPTH	BLOWS/6"	
			ELEV. 1198.7
			LEAN CLAY, with organics, dark brown, moist
			ELEV. 1198.2
4.25+P	3	5-7-8	
			LEAN CLAY, light brown, moist
			ELEV. 1196.2
			FAT CLAY, trace chert gravel, red, hard, moist
3.25P	8	49-17-17	ELEV. 1192.7
1.75P	13.5	11-12-13	LEAN CLAY, with chert gravel and sand, red and white, hard to stiff, moist
			ELEV. 1182.2
	18.5	17-18-12	
	23.5	8-13-14	SANDY CHERT GRAVEL, with clay seams, red and white, dense to medium dense, moist
	28.5	7-9-13	
	33.5	6-11-10	
1.75P	38.5	9-8-6	ELEV. 1161.2
1.25P	43.5	8-21-5	LEAN CLAY, with chert gravel, red, brown, stiff, moist
	48.5	8-50/3"	ELEV. 1149.4

Auger refusal on apparent Limestone at 49.3'

TYPICAL BORING

QU(TSF) P-Penet. E-Equiv. L-Labor. | STANDARD PENETRATION TEST DEPTH | BLOWS/6"

ELEV. 902.2 — Ground surface elevation

2.0 | 3-2-3

657.6 L | 3.5

7.0 | 50/3"

ROCK CORE DEPTH | REC% | RQD%

ELEV. 892.2

15.0 | 82 | 0

ELEV. 887.2

Unconfined Compressive Strength in tons per square foot as determined by P- Pocket Penetrometer, E- Equivalent or L- Laboratory Unconfined Compression Test. Depth of sample is indicated at top of the sampling interval.

Interval of Undistubed Sample (Thin Walled Tube). Depth of sample is indicated at top of the sample interval.

Ground Water Level as measured at hours indicated after completion of boring. WD indicates water level as measured while drilling.

Standard Penetration Test Results. The number of blows of a 140 lb. hammer falling 30" required to drive a 1-3/8" I.D., 2" O.D. split barrel sampler 6". Penetration of less than 6" is shown as 50/3"-Blows/penteration in inches. Depth of sample is indicated at top of the sample interval.

Stratum Line-Material Change

Elevation of Material Change

Interval of bedrock that was sampled with double tube core barrel. Depth of sample is indicated at the bottom of the sample interval.

RQD-(Rock Quality Designation) a modified core recovery in per cent used as an index to rock quality.

RQD(%)	Rock Quality Designation
0-25	Very Poor
25-50	Poor
50-75	Fair
75-90	Good
90-100	Excellent

Core Run (REC%)- Core Recovery in per cent for the indicated interval.

Boring No. B-4 — Boring No.

Substructure Unit Number — Bent 2

GENERAL NOTES:

The borings shown on this drawing were drilled for the Missouri Department of Transportation, between May 20 and 30, 2003 and on May 3, 2006, by Terracon, Inc. under the direction of HNTB.

For boring locations in plan, see Sheet No. 2.

The ground water levels shown were recorded during time of drilling. Porosity of soil strata, weather conditions, seasonal changes, site topography, etc., may cause changes in the water levels reported.

The boring information shown on this drawing is abbreviated. A complete copy of boring logs and test results are available upon request to the Department.

For notice and disclaimer regarding boring log data, see Sheet No. 2.

BORING DATA

Detailed JUL 2009
Checked JUL 2009

Note: This drawing is not to scale. Follow Dimensions.

STATE OF MISSOURI — GINA D. HORNER — NUMBER E-30413 — REGISTERED PROFESSIONAL ENGINEER — 3-9-10

DATE PREPARED	04/13/09
ROUTE	I-49
STATE	MO
DISTRICT	BR
SHEET NO.	4
COUNTY	McDONALD
JOB NO.	J7P0601
CONTRACT ID.	
PROJECT NO.	
BRIDGE NO.	A7000

DATE | DESCRIPTION

MISSOURI HIGHWAYS AND TRANSPORTATION COMMISSION
105 WEST CAPITOL
JEFFERSON CITY, MO 65102
1-888-ASK-MODOT (1-888-275-6636)

HNTB
715 KIRK DRIVE
KANSAS CITY, MO 64105-1310
TELEPHONE (816) 472-1201
CERTIFICATE OF AUTHORITY NO. 001270

IF A SEAL IS PRESENT ON THIS SHEET IT HAS BEEN ELECTRONICALLY SEALED AND DATED.

REV.

USER: TThompson
PLOTTED: 08-MAR-2010 15:13

\\kcow00\Jobs\49259\Bridges\Plans\CDtoMoDotA7000_03-05-10\J7P0601\A7000-dgn\ZPLOT_B04.dgn

QU(TSF) P-Penet. E-Equiv. L-Labor.	STANDARD PENETRATION TEST DEPTH	BLOWS/6"	
			ELEV. 1194.6
1.0P	3.5	6-8-12	FAT CLAY, trace chert seams, red, stiff, moist
2.0P	8.5	11-7-12	ELEV. 1186.1
	13.5	21-14-7	LEAN CLAY, trace to abundant chert seams, red and white, very stiff, moist
3.0P	18.5	16-12-45	
3.0P	23.5	12-7-7	ELEV. 1171.1
	28.5	12-14-16	FAT CLAY, abundant chert seams, red, very stiff, moist ELEV. 1166.1
	33.5	6-11-4	SANDY GRAVEL, abundant clay seams, red and white, medium dense, moist
	38.5	50/0"	ELEV. 1154.6 WD CHERT, light gray and gray, very fine to fine grained, thick bedded, weathered, hard, trace vugs

ROCK CORE DEPTH	REC%	RQD%	
			ELEV. 1153.6 APPARENT CLAY LAYER, no recovery ELEV. 1151.6
45.0	83	53	CHERT, stratified, with limetone seams, light gray and gray, very fine to fine grained, thick bedded, weathered, hard, trace vugs
50.0	92	89	
54.3	100	97	ELEV. 1140.3

Boring Number MB3-5
Bent 2 (Core)

QU(TSF) P-Penet. E-Equiv. L-Labor.	STANDARD PENETRATION TEST DEPTH	BLOWS/6"	
			ELEV. 1195.4
	3.5	12-17-13	GRAVEL, scattered clay seams, red and white, dense, moist
	8.5	35-25-15	
	13.5	20-13-8	ELEV. 1181.9 FAT CLAY, abundant gravel, red, stiff to very stiff, moist
	18.5	19-18-50	ELEV. 1176.9 LEAN CLAY, abundant gravel, red, hard, moist
	23.5	12-12-12	ELEV. 1171.9
	28.5	14-13-13	SANDY GRAVEL, with clay, red and white, medium dense to dense, moist
	33.5	18-15-15	
			ELEV. 1157.4 Auger refusal on apparent Chert at 38.0'

Boring Number MB3-6
Bent 2

QU(TSF) P-Penet. E-Equiv. L-Labor.	STANDARD PENETRATION TEST DEPTH	BLOWS/6"	
			ELEV. 1188.7 LEAN CLAY, with organics, dark brown, brown, moist ELEV. 1187.7
3.5P	3.5	13-14-15	
2.25P	8.5	10-12-14	
2.5P	13.5	10-11-9	LEAN CLAY, with chert gravel and sand, red, very stiff to stiff, moist
1.75P	18.5	10-15-14	
1.75P	23.5	8-8-8	
1.25P	28.5	8-9-7	
			ELEV. 1156.7 LEAN CLAY, with chert gravel, red, brown, stiff, moist ELEV. 1155.2 Auger refusal on Limestone at 33.5'

Boring Number MB3-4A
End Bent 3

QU(TSF) P-Penet. E-Equiv. L-Labor.	STANDARD PENETRATION TEST DEPTH	BLOWS/6"	
			ELEV. 1185.5 LEAN CLAY, with organics, dark brown, moist ELEV. 1184.5
3.25P	3.5	11-12-27	LEAN CLAY, with chert gravel and sand, red, very stiff, moist ELEV. 1178.5
	8.5	40-34-30	SANDY CHERT GRAVEL, trace clay seams, red and white, very dense, moist ELEV. 1173.5
3.25P	13.5	9-12-12	
3.75P	18.5	8-11-9	LEAN CLAY, with chert gravel, red, very stiff to stiff, moist
1.5P	23.5	11-14-16	
1.0P	28.5	4-6-6	WD ELEV. 1154.5 Auger refusal on Limestone at 31.0'

Boring Number MB3-3A
End Bent 3

QU(TSF) P-Penet. E-Equiv. L-Labor.	STANDARD PENETRATION TEST DEPTH	BLOWS/6"	
			ELEV. 1186.1
	3.5	12-10-10	LEAN CLAY, abundant sand, with to abundant gravel, red, very stiff, moist
2.0P	8.5	10-12-8	
	13.5	22-16-16	ELEV. 1172.6
	18.5	9-11-11	SANDY GRAVEL, with clay seams, red and white, medium dense to dense, moist
1.0P	23.5	6-8-8	ELEV. 1162.6
	28.5	50/0"	LEAN CLAY, abundant gravel, red and white, medium stiff, moist

ROCK CORE DEPTH	REC%	RQD%	
			ELEV. 1157.1
31.0	91	80	LIMESTONE, stratified, trace chert seams and inclusions, light gray and gray, medium to thick bedded, fine grained, slightly weathered to fresh, hard, solid.
38.5	100	85	
39.0	100	68	ELEV. 1147.1

Boring Number MB3-4
End Bent 3 (Core)

NOTE:
For Typical Boring and General Notes, see Sheet No. 4.

BORING DATA

STATE OF MISSOURI
GINA D. HORNER
NUMBER E-30413
REGISTERED PROFESSIONAL ENGINEER
3-9-10

DATE PREPARED	
04/13/09	
ROUTE I-49	STATE MO
DISTRICT BR	SHEET NO. 5
COUNTY McDONALD	
JOB NO. J7P0601	
CONTRACT ID.	
PROJECT NO.	
BRIDGE NO. A7000	

DATE	DESCRIPTION

MISSOURI HIGHWAYS AND TRANSPORTATION COMMISSION
105 WEST CAPITOL
JEFFERSON CITY, MO 65102
1-888-ASK-MODOT (1-888-275-6636)

HNTB
715 KIRK DRIVE
KANSAS CITY, MO 64105-1310
TELEPHONE (816) 472-1201
CERTIFICATE OF AUTHORITY
NO. 001270

IF A SEAL IS PRESENT ON THIS SHEET IT HAS BEEN ELECTRONICALLY SEALED AND DATED.

REV.

USER: TThompson
PLOTTED: 08-MAR-2010 15:13 \\kcow00\Jobs\49259\Bridges\Plans\CDtoMoDotA7000_03-05-10\J7P0601\A7000-dgn\ZPLOT_B05.dgn

Detailed JUL 2009
Checked JUL 2009

Note: This drawing is not to scale. Follow Dimensions.

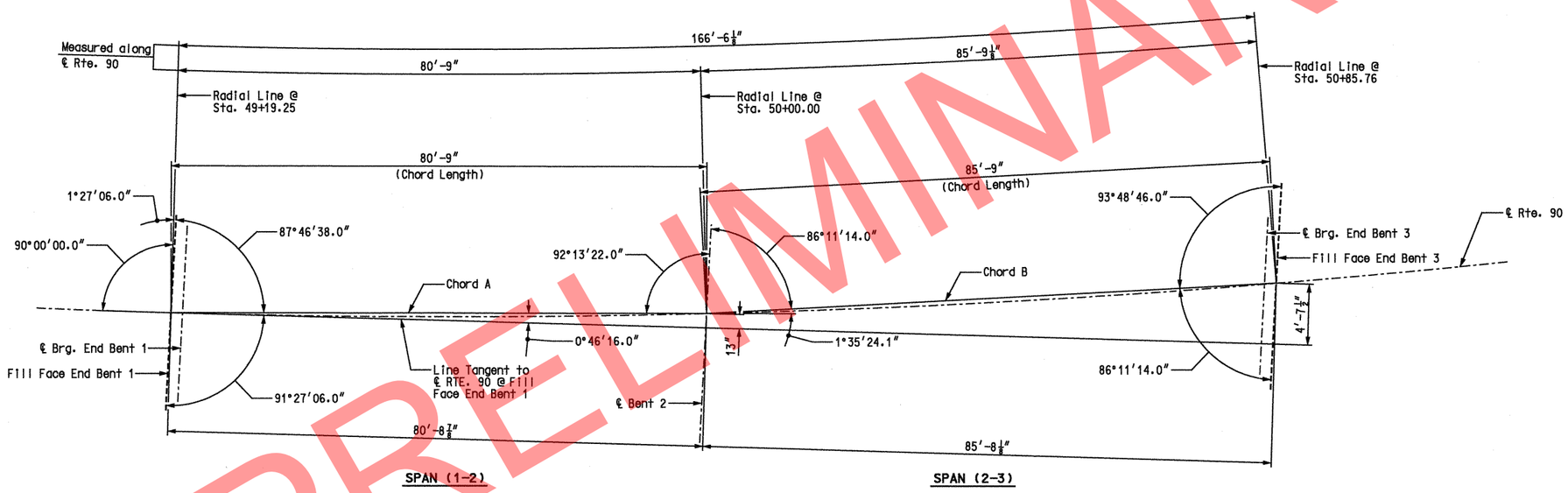

SUBSTRUCTURE LAYOUT

Detailed APR 2009
Checked APR 2009

Note: This drawing is not to scale. Follow Dimensions.

Sheet No. 6 of 27

STATE OF MISSOURI
GINA D. HORNER
NUMBER E-30413
REGISTERED PROFESSIONAL ENGINEER
3-9-10

DATE PREPARED	4/13/09
ROUTE	I-49
STATE	MO
DISTRICT	BR
SHEET NO.	6
COUNTY	McDONALD
JOB NO.	J7P0601
CONTRACT ID.	
PROJECT NO.	
BRIDGE NO.	A7000

DATE	DESCRIPTION

MISSOURI HIGHWAYS AND TRANSPORTATION COMMISSION
105 WEST CAPITOL
JEFFERSON CITY, MO 65102
1-888-ASK-MODOT (1-888-275-6636)

HNTB
715 KIRK DRIVE
KANSAS CITY, MO 64105-1310
TELEPHONE (816) 472-1201
CERTIFICATE OF AUTHORITY
NO. 001270

IF A SEAL IS PRESENT ON THIS SHEET IT HAS BEEN ELECTRONICALLY SEALED AND DATED.

REV.

USER: TThompson
PLOTTED: 08-MAR-2010 15:14 \\kcow00\Jobs\49259\Bridges\Plans\CDtoMoDotA7000_03-05-10\J7P0601\A7000-dgn\ZPLOT_B06.dgn

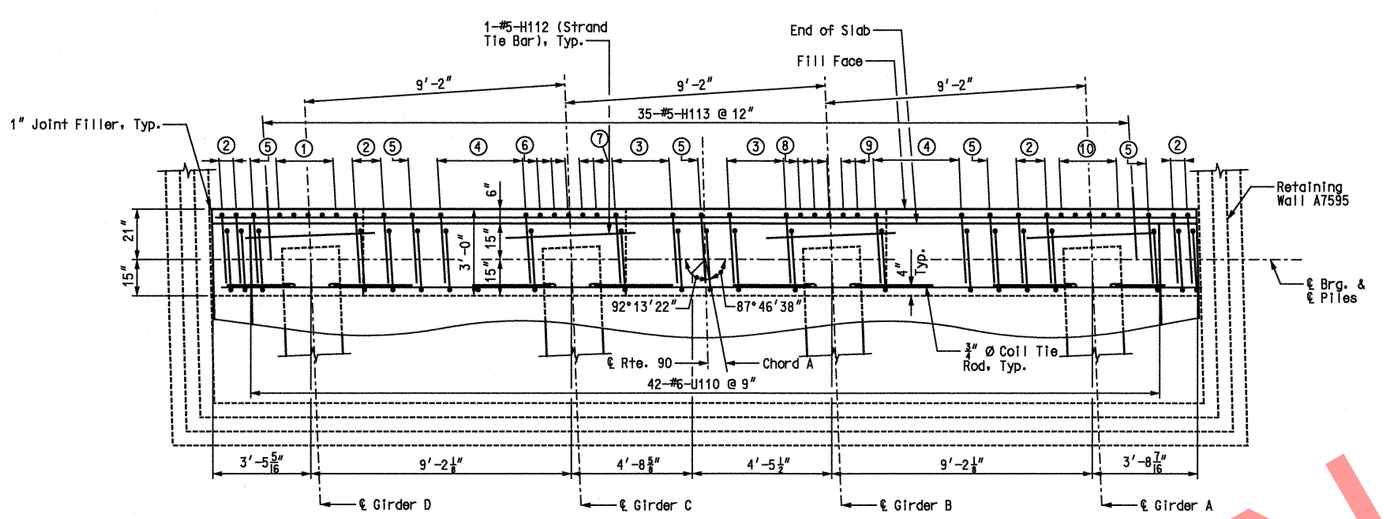

PLAN

① 5-#6-V102 to match #4-U107
② 2-#5-U108 & 2-#6-U109 to match #5-U101
③ 3-#5-U108 & 3-#6-U109 to match #5-U101
④ 4-#5-U108 & 4-#6-U109 to match #5-U101
⑤ 1-#5-U108 & 1-#6-U109 to match #5-V101
⑥ 1-#6-V102 to match #4-U106
⑦ 1-#6-V102 to match #4-U105
⑧ 1-#6-V102 to match #4-U104
⑨ 1-#6-V102 to match #4-U103
⑩ 5-#6-V102 to match #4-U102

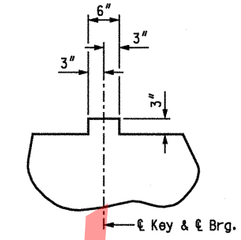

TYPICAL SECTION THRU KEY

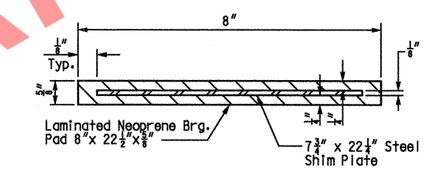

DETAIL OF LAMINATED NEOPRENE BEARING PAD

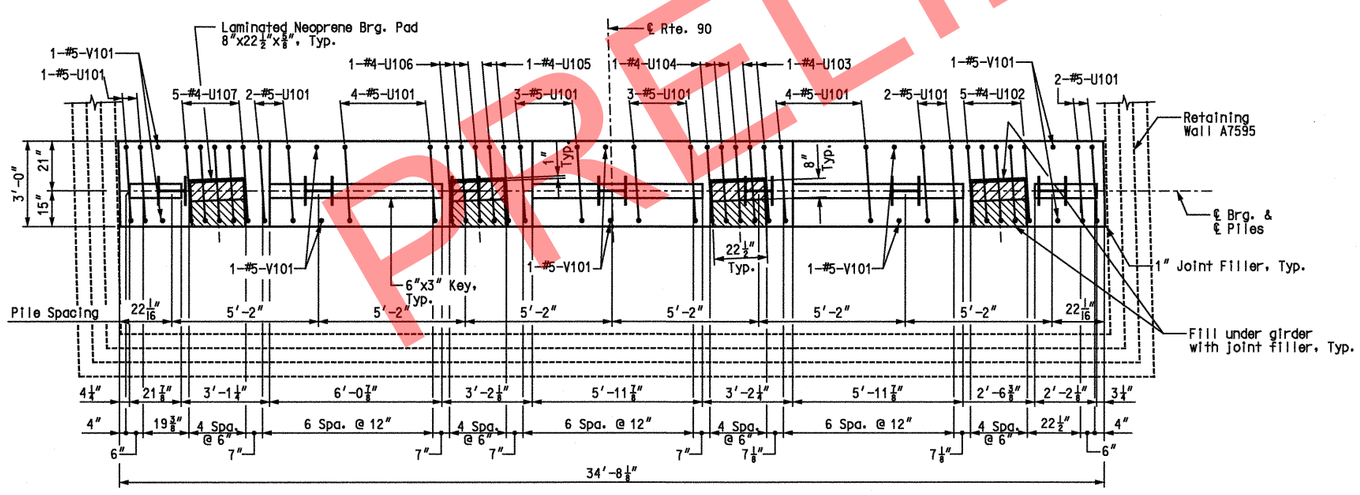

PLAN OF BEAM

Notes:
All piles shall be HP12x53.
All vertical reinforcing bars in the substructure beams or caps shall be field adjusted to clear piles by at least 1½".
Provide a minimum of 9" Cl. from outside edge of pile to face of beam.
All concrete in the end bent above top of beam and below top of slab shall be Class B-2.
For details of Retaining Wall A7595, see Retaining Wall plans.

SUBSTRUCTURE QUANTITY TABLE FOR END BENT 1		
ITEM		QUANTITY
Structural Steel Piles (12 in.)	linear foot	308
Pile Point Reinforcement	each	7
Class B Concrete (Substructure)	cu. yard	13.3
Corrugated Metal Pipe Pile Spacers	each	7

Note:
These quantities are included in the Estimated Quantities table on Sheet No. 3.

END BENT 1

STATE OF MISSOURI
GINA D. HORNER
NUMBER E-30413
REGISTERED PROFESSIONAL ENGINEER
3-9-10

DATE PREPARED	
07/22/09	
ROUTE I-49	STATE MO
DISTRICT BR	SHEET NO. 7
COUNTY McDONALD	
JOB NO. J7P0601	
CONTRACT ID.	
PROJECT NO.	
BRIDGE NO. A7000	

DATE	DESCRIPTION

MISSOURI HIGHWAYS AND TRANSPORTATION COMMISSION
105 WEST CAPITOL
JEFFERSON CITY, MO 65102
1-888-ASK-MODOT (1-888-275-6636)

HNTB
715 KIRK DRIVE
KANSAS CITY, MO 64105-1310
TELEPHONE (816) 472-1201
CERTIFICATE OF AUTHORITY NO. 001270

IF A SEAL IS PRESENT ON THIS SHEET IT HAS BEEN ELECTRONICALLY SEALED AND DATED.

REV.

Detailed JUL 2009
Checked JUL 2009

Note: This drawing is not to scale. Follow Dimensions.

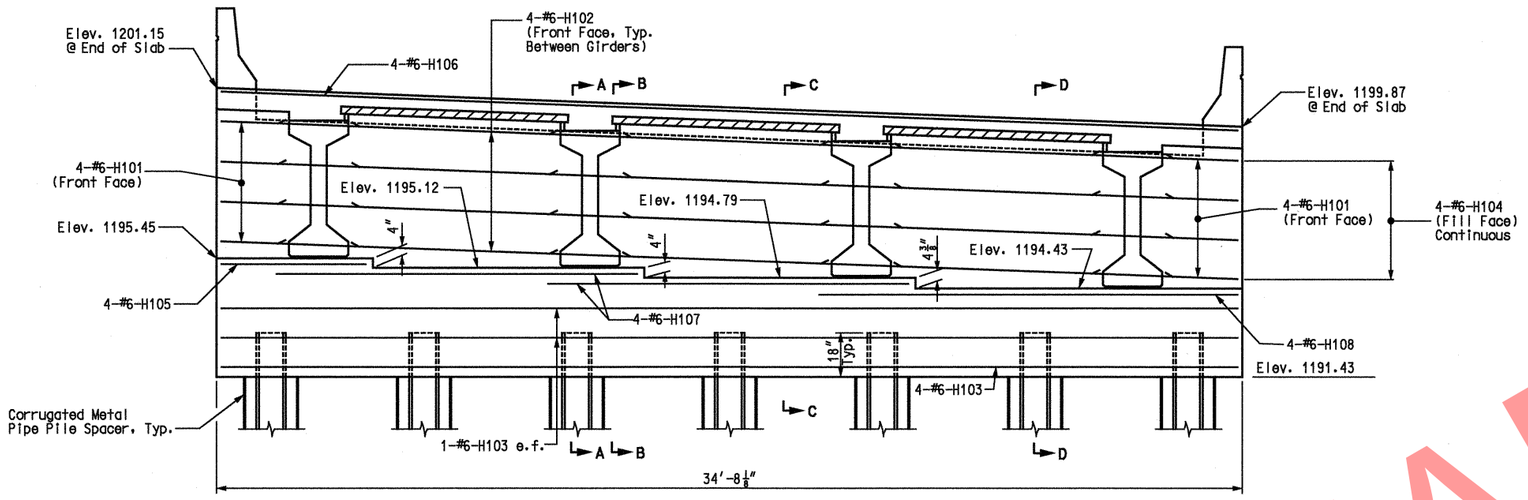

ELEVATION

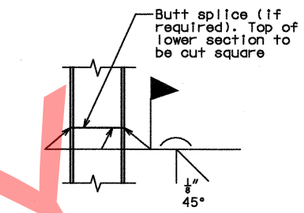

DETAIL OF STEEL
PILE SPLICE

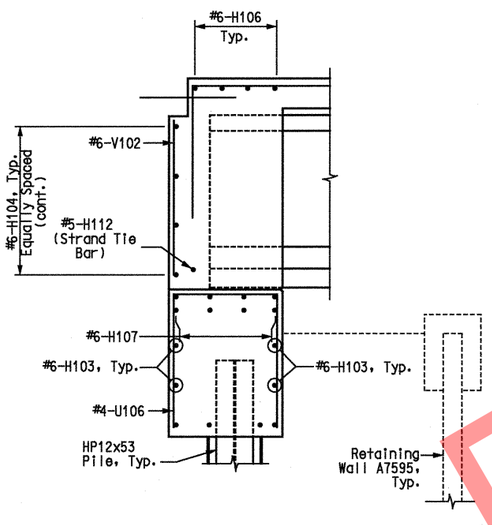

SECTION A-A

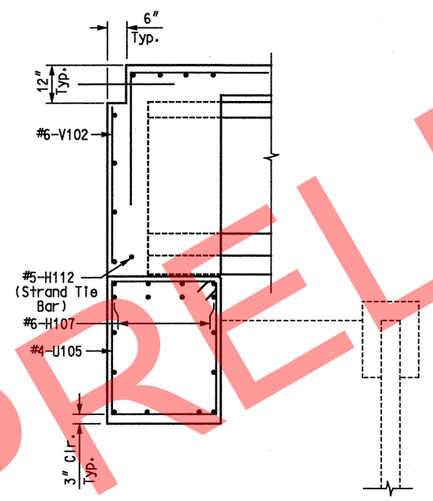

SECTION B-B

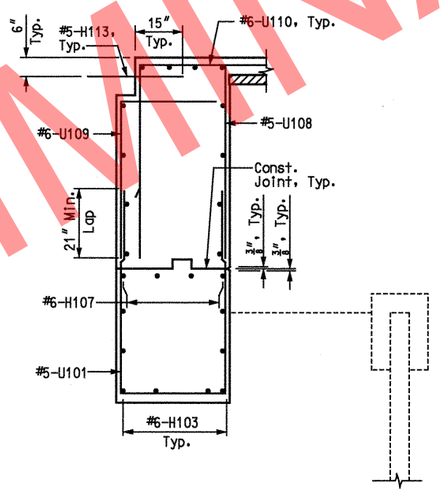

SECTION C-C

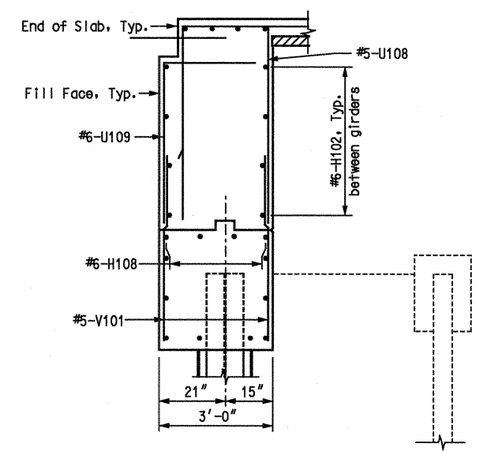

SECTION D-D

Notes:
e.f. denotes each face.
For additional notes and details, see Sheet No. 7.

END BENT 1 DETAILS

Detailed JUL 2009
Checked JUL 2009

Note: This drawing is not to scale. Follow Dimensions.

PRELIMINARY

STATE OF MISSOURI
GINA D. HORNER
NUMBER E-30413
REGISTERED PROFESSIONAL ENGINEER
3-9-10

DATE PREPARED	07/22/09
ROUTE	I-49
STATE	MO
DISTRICT	BR
SHEET NO.	8
COUNTY	McDONALD
JOB NO.	J7P0601
CONTRACT ID.	
PROJECT NO.	
BRIDGE NO.	A7000

DESCRIPTION	DATE

MISSOURI HIGHWAYS AND TRANSPORTATION COMMISSION
105 WEST CAPITOL
JEFFERSON CITY, MO 65102
1-888-ASK-MODOT (1-888-275-6636)

HNTB
715 KIRK DRIVE
KANSAS CITY, MO 64105-1310
TELEPHONE (816) 472-1201
CERTIFICATE OF AUTHORITY
NO. 001270

IF A SFAI IS PRESENT ON THIS SHEET IT HAS BEEN ELECTRONICALLY SEALED AND DATED.

REV.

USER: TThompson
PLOTTED: 08-MAR-2010 15:14 \\kcow00\Jobs\49259\Bridges\Plans\CDtoMoDotA7000_03-05-10\J7P0601\A7000-dgn\ZPLOT_B08.dgn

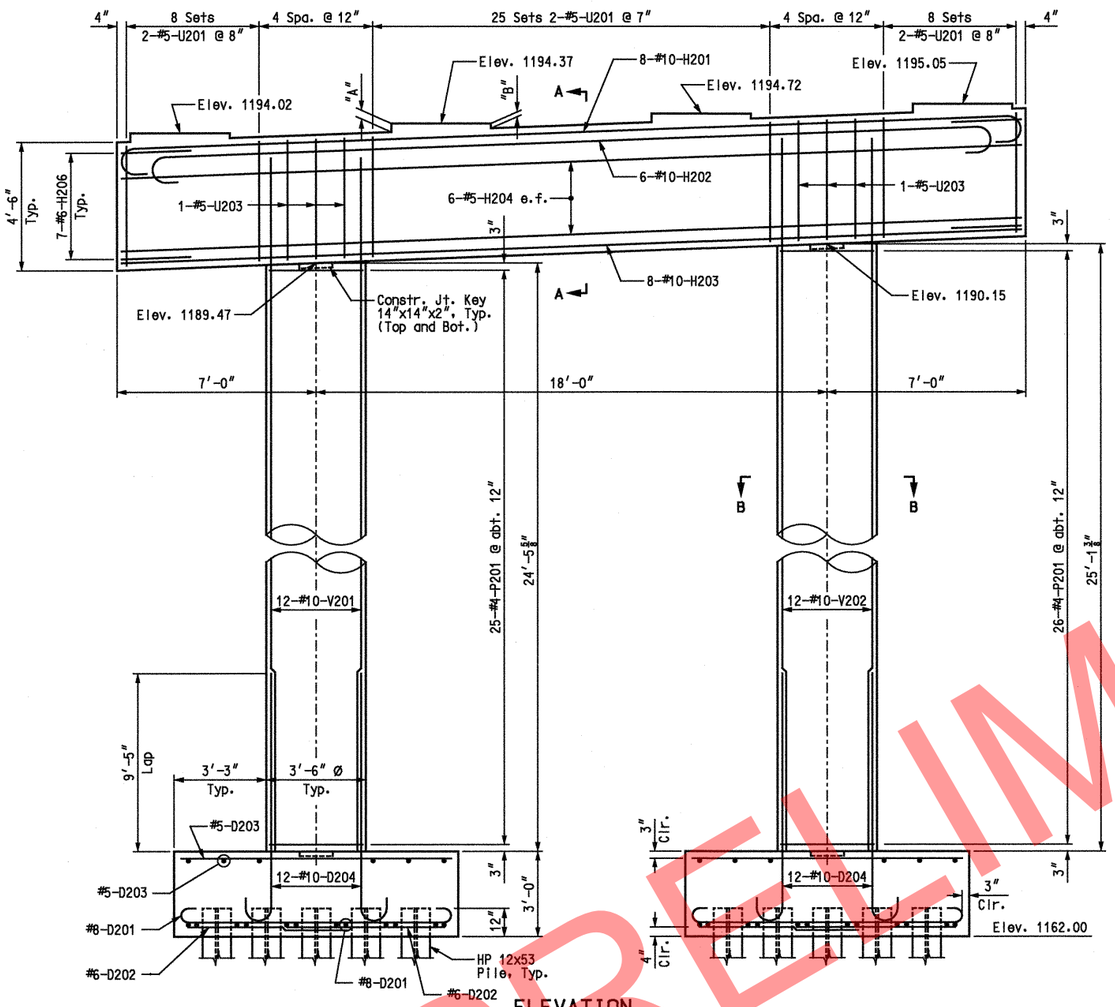

ELEVATION

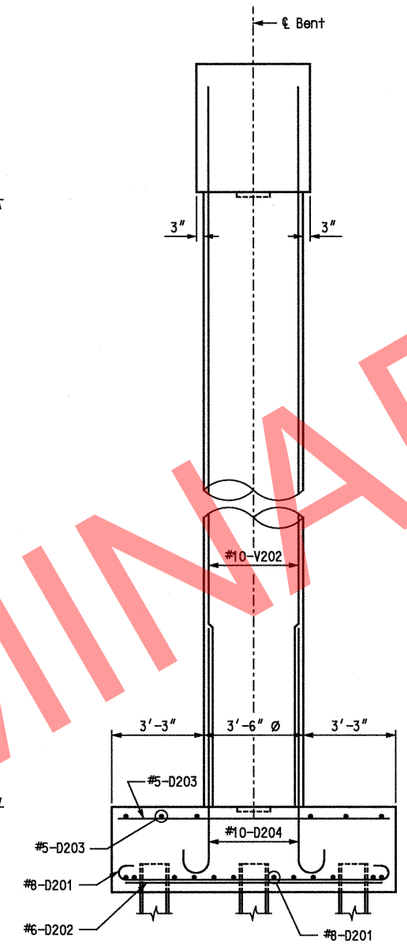

END VIEW

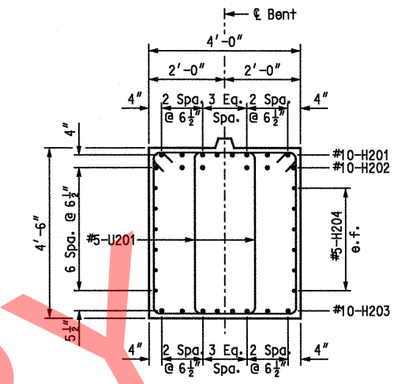

SECTION A-A

Scale: 1/2"=1'-0"

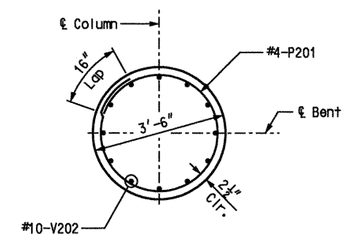

SECTION B-B

Scale: 1/2"=1'-0"

BEARING PAD HEIGHT		
GIRDER	DIMENSION "A"	DIMENSION "B"
A	3 1/2"	2"
B	3 1/2"	2"
C	3 1/2"	2"
D	3 3/8"	1 7/8"

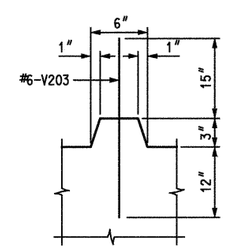

DETAIL OF KEY

Scale: 1 1/2"=1'-0"

Notes:
For details of Laminated Neoprene Bearings, see Sheet No. 10.
For Footing Details, see Sheet No. 10.

BENT 2

DATE PREPARED	4/17/09
ROUTE	I-49
STATE	MO
DISTRICT	BR
SHEET NO.	9
COUNTY	McDONALD
JOB NO.	J7P0601
CONTRACT ID.	
PROJECT NO.	
BRIDGE NO.	A7000

DATE	DESCRIPTION

MISSOURI HIGHWAYS AND TRANSPORTATION COMMISSION
105 WEST CAPITOL
JEFFERSON CITY, MO 65102
1-888-ASK-MODOT (1-888-275-6636)

HNTB
715 KIRK DRIVE
KANSAS CITY, MO 64105-1310
TELEPHONE (816) 472-1201
CERTIFICATE OF AUTHORITY
NO. 001270

REV.

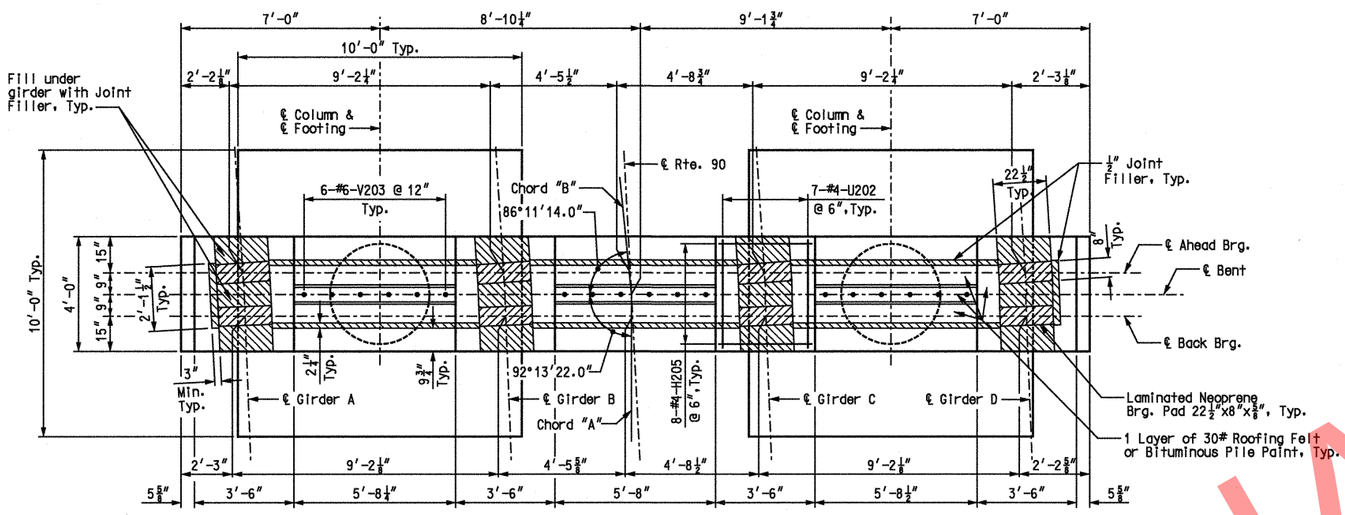

PLAN

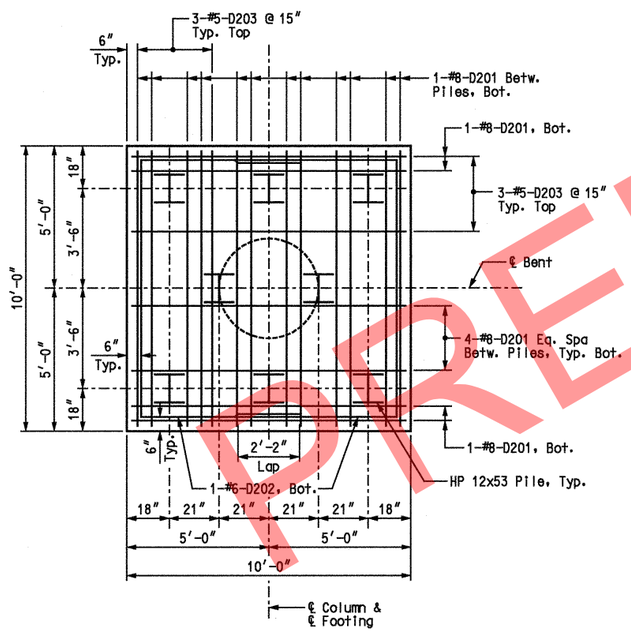

FOOTING PLAN

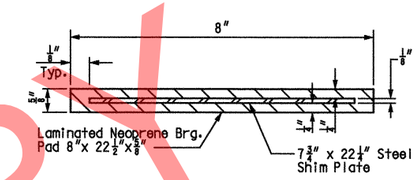

DETAIL OF LAMINATED NEOPRENE BEARING PAD

SUBSTRUCTURE QUANTITY TABLE FOR BENT 2		
ITEM		QUANTITY
Class 1 Excavation	cu. yard	164
Structural Steel Piles (12 in.)	linear foot	224
Pre-Bore for Piling	linear foot	176
Pile Point Reinforcement	each	16
Class B Concrete (Substructure)	cu. yard	61.8
Reinforcing Steel (Bridges)	pound	8,350
Reinforcing Steel (Epoxy Coated)	pound	3,580

Note:
The Substructure Quantities are included in the Estimated Quantities table on Sheet No. 3.

Notes:
For addtional details and notes, see Sheet No. 9.
For detail of steel pile splice, see Sheet No. 8.
For steps 2" or more, use 2¼" x ½" joint filler up vertical face.

BENT 2 DETAILS

STATE OF MISSOURI
GINA D. HORNER
NUMBER E-30413
REGISTERED PROFESSIONAL ENGINEER
3-9-10

DATE PREPARED	
4/21/09	
ROUTE I-49	STATE MO
DISTRICT BR	SHEET NO. 10
COUNTY McDONALD	
JOB NO. J7P0601	
CONTRACT ID.	
PROJECT NO.	
BRIDGE NO. A7000	

DESCRIPTION	DATE

MISSOURI HIGHWAYS AND TRANSPORTATION COMMISSION
105 WEST CAPITOL
JEFFERSON CITY, MO 65102
1-888-ASK-MODOT (1-888-275-6636)

HNTB
715 KIRK DRIVE
KANSAS CITY, MO 64105-1310
TELEPHONE (816) 472-1201
CERTIFICATE OF AUTHORITY NO. 001270

IF A SFAI IS PRESENT ON THIS SHEET IT HAS BEEN ELECTRONICALLY SEALED AND DATED.

USER: TThompson
PLOTTED: 08-MAR-2010 15:14 \\kcow00\Jobs\49259\Bridges\Plans\CDtoMoDotA7000_03-05-10\J7P0601\A7000-dgn\ZPLOT_B10.dgn

Detailed APR 2009
Checked APR 2009

Note: This drawing is not to scale. Follow Dimensions.

REV.

\\kcow00\Jobs\49259\Bridges\Plans\CDtoMoDotA7000_03-05-10\J7P0601\A7000-dgn\ZPLOT_B10.dgn 08-MAR-2010 15:14

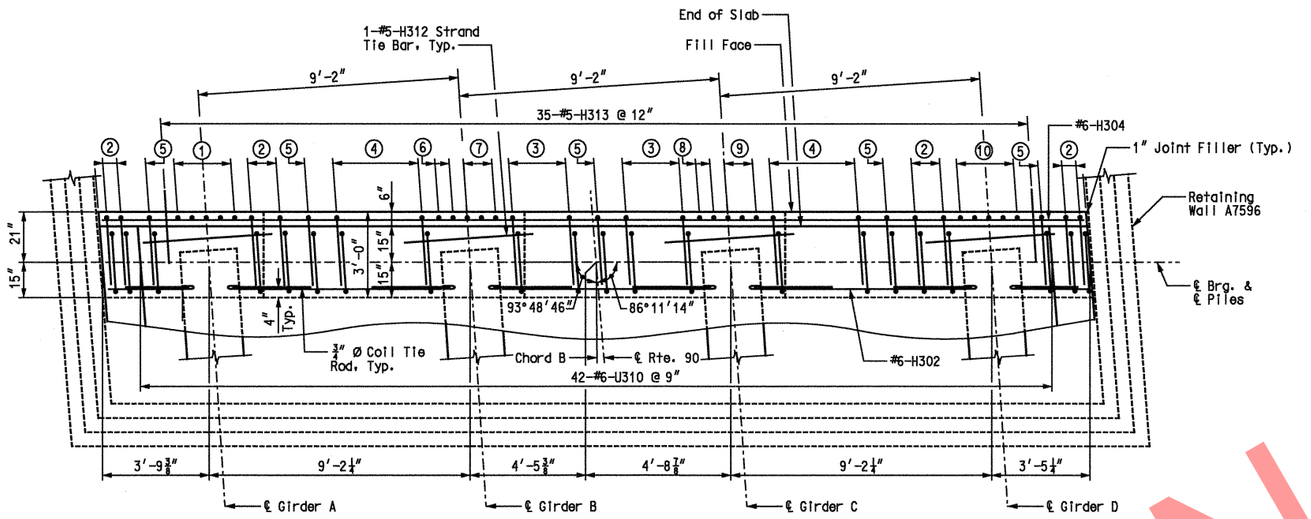

PLAN

① 5-#6-V302 to match #4-U302
② 2-#5-U308 & 2-#6-U309 to match #5-U301
③ 3-#5-U308 & 3-#6-U309 to match #5-U301
④ 4-#5-U308 & 4-#6-U309 to match #5-U301
⑤ 1-#5-U308 & 1-#6-U309 to match #5-V301
⑥ 1-#6-V302 to match #4-U303
⑦ 3-#6-V302 to match #4-U304
⑧ 1-#6-V302 to match #4-U305
⑨ 3-#6-V302 to match #4-U306
⑩ 5-#6-V302 to match #4-U307

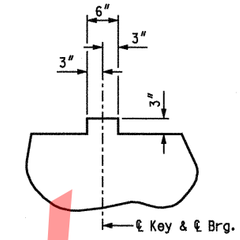

TYPICAL SECTION THRU KEY

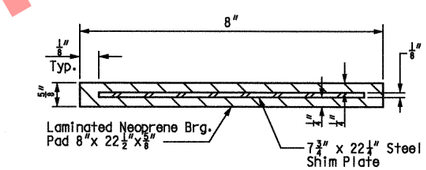

DETAIL OF LAMINATED NEOPRENE BEARING PAD

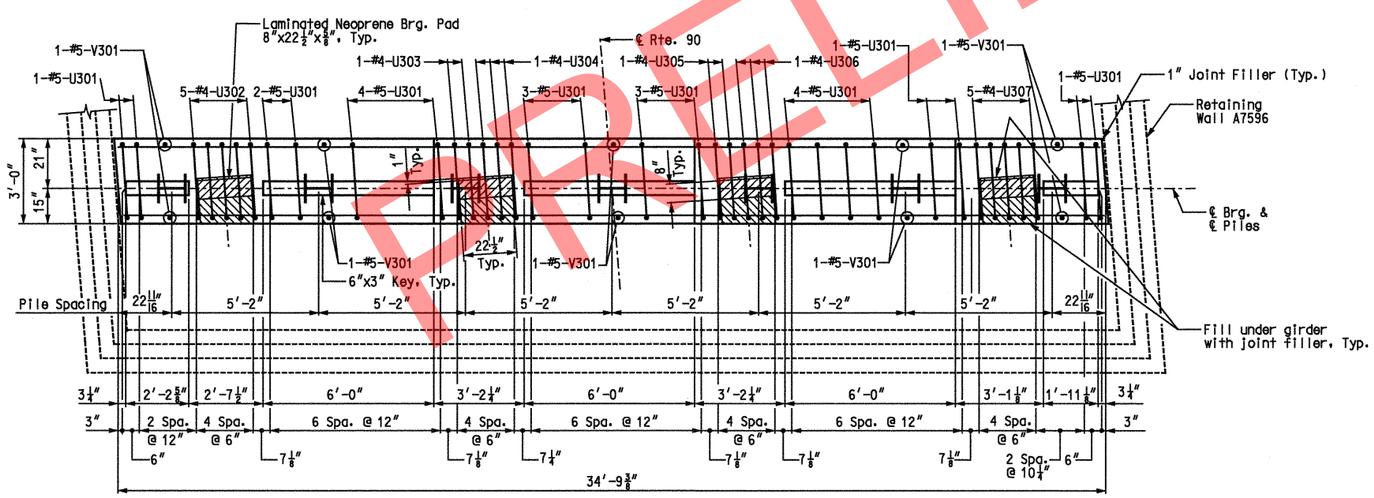

PLAN OF BEAM

Notes:
All piles shall be HP12x53.
All vertical reinforcing bars in the substructure beams or caps shall be field adjusted to clear piles by at least 1 1/2".
Provide a minimum of 9" Cl. from outside edge of pile to face of beam.
All concrete in the end bent above top of beam and below top of slab shall be Class B-2.
For details of Retaining Wall A7596, see Retaining Wall plans.
For detail of steel pile splice, see Sheet No. 8.

SUBSTRUCTURE QUANTITY TABLE FOR END BENT 3

ITEM		QUANTITY
Structural Steel Piles (12 in.)	linear foot	294
Pile Point Reinforcement	each	7
Class B Concrete (Substructure)	cu. yard	13.4
Corrugated Metal Pipe Pile Spacers	each	7

Note:
These quantities are included in the Estimated Quantities table on Sheet No. 3.

END BENT 3

STATE OF MISSOURI
GINA D. HORNER
NUMBER E-30413
REGISTERED PROFESSIONAL ENGINEER
3-9-10

DATE PREPARED	
07/22/08	
ROUTE I-49	STATE MO
DISTRICT BR	SHEET NO. 11
COUNTY McDONALD	
JOB NO. J7P0601	
CONTRACT ID.	
PROJECT NO.	
BRIDGE NO. A7000	

DATE	DESCRIPTION

MISSOURI HIGHWAYS AND TRANSPORTATION COMMISSION
105 WEST CAPITOL
JEFFERSON CITY, MO 65102
1-888-ASK-MODOT (1-888-275-6636)

HNTB
715 KIRK DRIVE
KANSAS CITY, MO 64105-1310
TELEPHONE (816) 472-1201
CERTIFICATE OF AUTHORITY NO. 001270

REV.

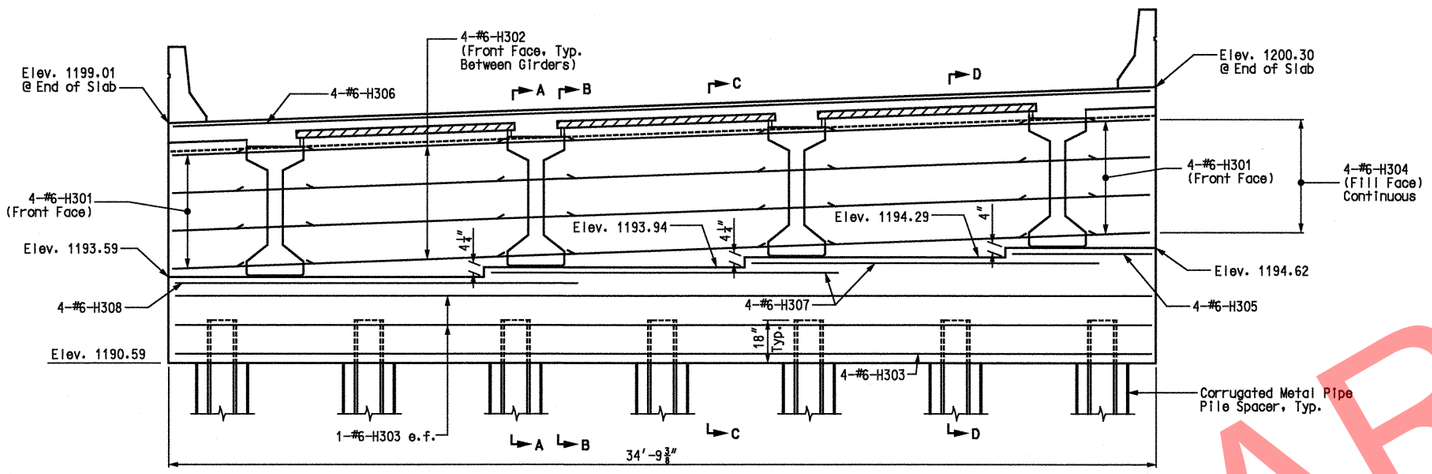

ELEVATION

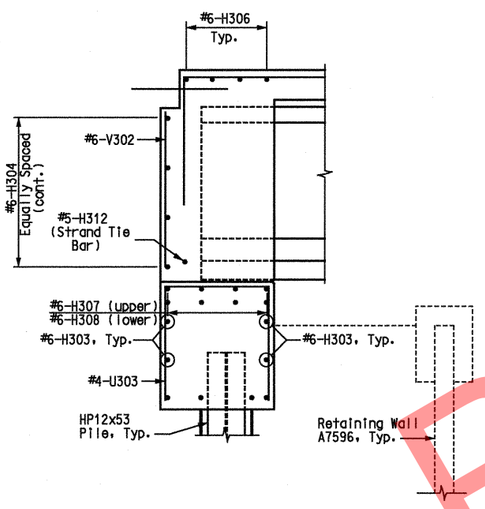

SECTION A-A

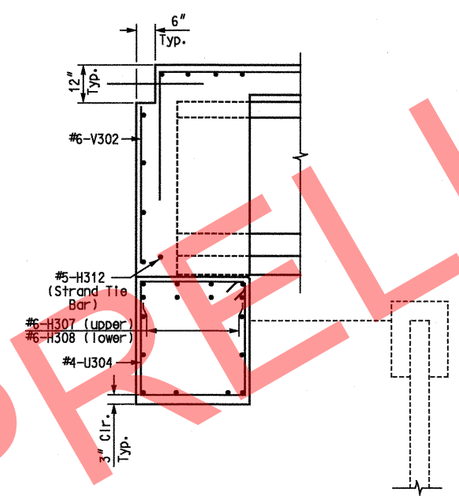

SECTION B-B

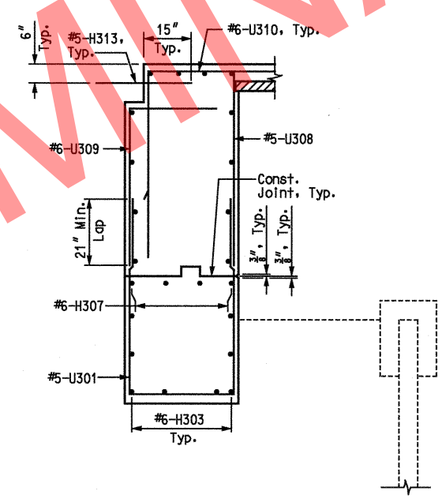

SECTION C-C

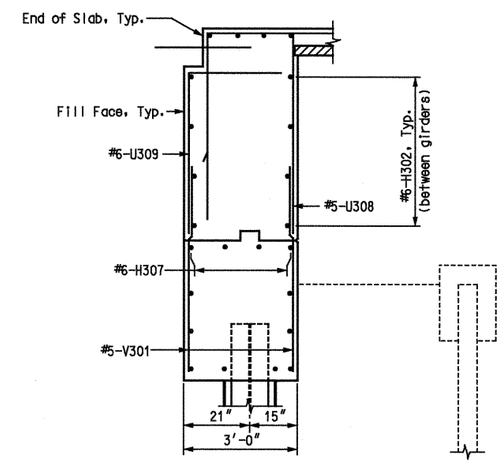

SECTION D-D

Notes:
e.f. denotes each face.
For additional notes and details, see Sheet No. 11.

END BENT 3 DETAILS

STATE OF MISSOURI
GINA D. HORNER
NUMBER E-30413
REGISTERED PROFESSIONAL ENGINEER
3-9-10

DATE PREPARED	07/22/09
ROUTE	I-49
STATE	MO
DISTRICT	BR
SHEET NO.	12
COUNTY	McDONALD
JOB NO.	J7P0601
CONTRACT ID.	
PROJECT NO.	
BRIDGE NO.	A7000

DATE	DESCRIPTION

IF A SFAI IS PRESENT ON THIS SHEET IT HAS BEEN ELECTRONICALLY SEALED AND DATED.

MISSOURI HIGHWAYS AND TRANSPORTATION COMMISSION
105 WEST CAPITOL
JEFFERSON CITY, MO 65102
1-888-ASK-MODOT (1-888-275-6636)

HNTB
715 KIRK DRIVE
KANSAS CITY, MO 64105-1310
TELEPHONE (816) 472-1201
CERTIFICATE OF AUTHORITY
NO. 001270

REV.

USER: TThompson
PLOTTED: 08-MAR-2010 15:14 \\kcow00\Jobs\49259\Bridges\Plans\CDtoMoDotA7000_03-05-10\J7P0601\A7000-dgn\ZPLOT_B12.dgn

Detailed JUL 2009
Checked JUL 2009

Note: This drawing is not to scale. Follow Dimensions.

\\kcow00\Jobs\49259\Bridges\Plans\CDtoMoDotA7000_03-05-10\J7P0601\A7000-dgn\ZPLOT_B12.dgn 08-MAR-2010 15:14

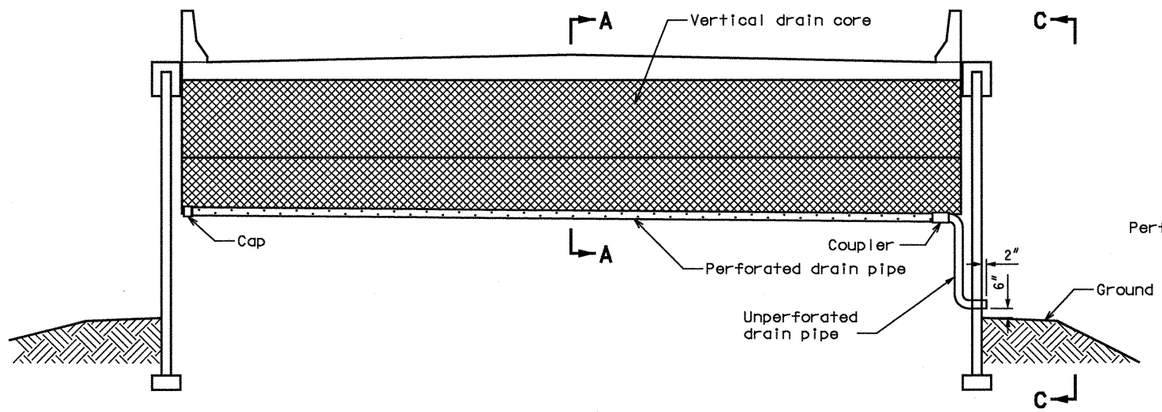

ELEVATION AT END BENT

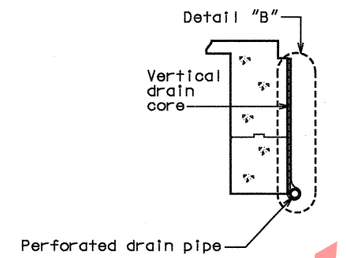

SECTION A-A

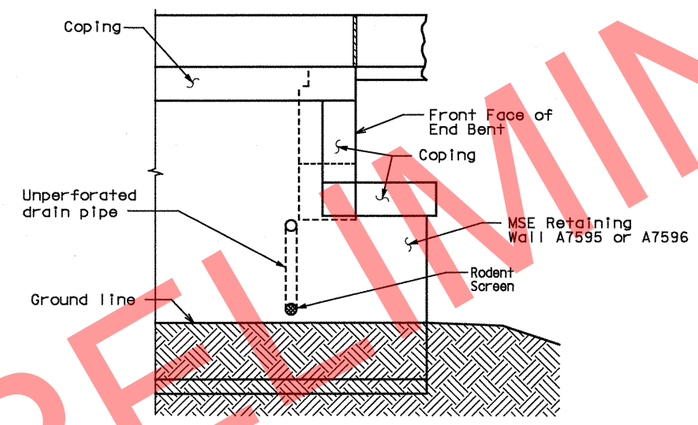

VIEW C-C

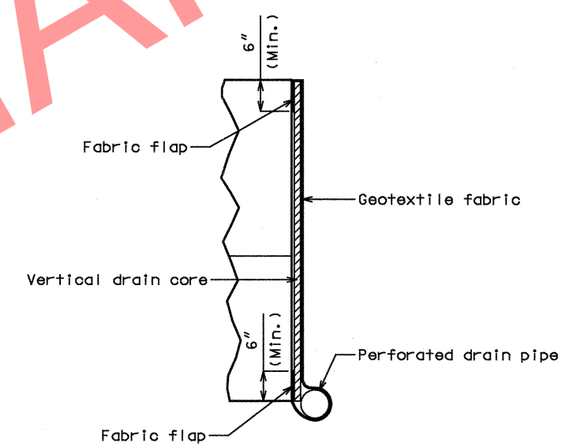

DETAIL "B"

Note:
Drain pipe may be either 6" diameter corrugated metallic-coated steel pipe underdrain, 4" diameter corrugated polyvinyl chloride (PVC) drain pipe, or 4" diameter corrugated polyethylene (PE) drain pipe.

Place drain pipe at fill face of end bent and slope to lowest grade of ground line. (See elevation at end bent.)

Perforated pipe shall be placed at fill face side at the bottom of end bent and plain pipe shall be used where the vertical drain ends to the exit.

VERTICAL DRAIN AT END BENTS

STATE OF MISSOURI
GINA D. HORNER
NUMBER E-30413
REGISTERED PROFESSIONAL ENGINEER
3-9-10

DATE PREPARED	04/23/09
ROUTE	I-49
STATE	MO
DISTRICT	BR
SHEET NO.	13
COUNTY	McDONALD
JOB NO.	J7P0601
CONTRACT ID.	
PROJECT NO.	
BRIDGE NO.	A7000

DESCRIPTION | DATE

MISSOURI HIGHWAYS AND TRANSPORTATION COMMISSION
105 WEST CAPITOL
JEFFERSON CITY, MO 65102
1-888-ASK-MODOT (1-888-275-6636)

HNTB
715 KIRK DRIVE
KANSAS CITY, MO 64105-1310
TELEPHONE (816) 472-1201
CERTIFICATE OF AUTHORITY
NO. 001270

IF A SEAL IS PRESENT ON THIS SHEET IT HAS BEEN ELECTRONICALLY SEALED AND DATED.

REV.

USER: TThompson
PLOTTED: 08-MAR-2010 15:14 \\kcow00\Jobs\49259\Bridges\Plans\CDtoMoDotA7000_03-05-10\J7P0601\A7000-dgn\ZPLOT_B13.dgn

Detailed APR 2009
Checked APR 2009

Note: This drawing is not to scale. Follow Dimensions.

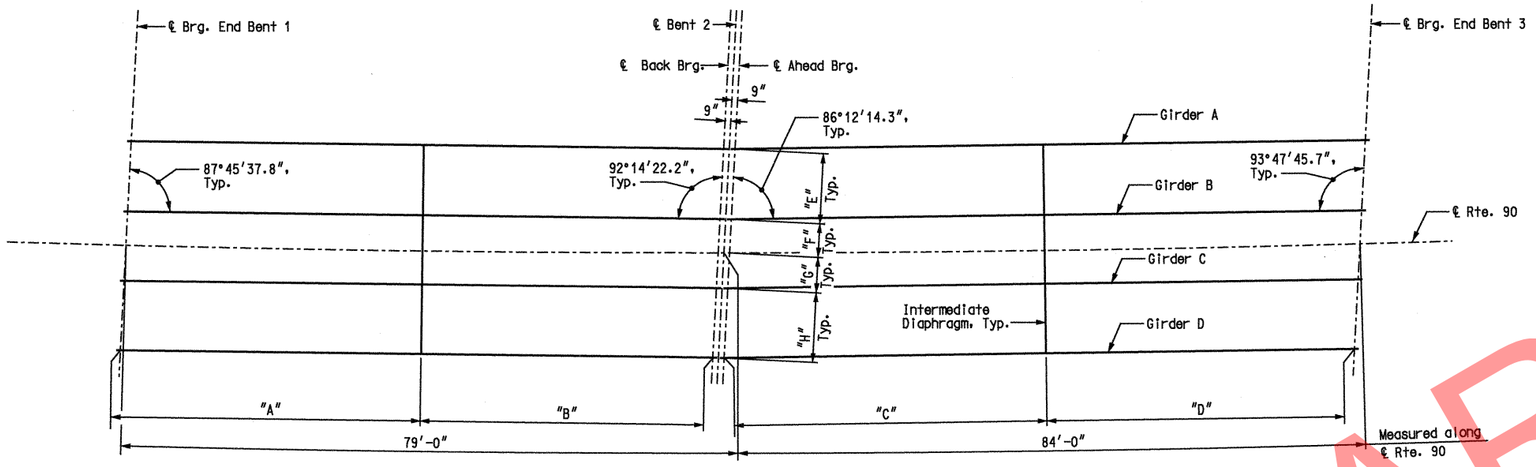

FRAMING PLAN

TABLE OF DIMENSIONS				
DIMENSION	BRG. END BENT 1	BK. BRG. BENT 2	AHD. BRG. BENT 2	BRG. END BENT 3
"E"	9'-2 1/8"	9'-2 1/8"	9'-2 1/4"	9'-2 1/4"
"F"	4'-5 1/2"	4'-5 5/8"	4'-5 1/2"	4'-5 3/8"
"G"	4'-8 5/8"	4'-8 1/2"	4'-8 3/4"	4'-8 7/8"
"H"	9'-2 1/8"	9'-2 1/8"	9'-2 1/4"	9'-2 1/4"

TABLE OF INTERMEDIATE DIAPHRAGM SPACING				
GIRDER	"A"	"B"	"C"	"D"
A	38'-7"	39'-8"	40'-8 1/2"	42'-6 1/2"
B	38'-11 3/8"	39'-3 5/8"	41'-3 7/8"	41'-11 1/8"
C	39'-3 5/8"	38'-11 3/8"	41'-11 1/8"	41'-3 7/8"
D	39'-8"	38'-7"	42'-6 1/2"	40'-8 1/2"

Notes:
Longitudinal dimensions are horizontal.
For Girder Details, see Sheets No. 15 and 16.

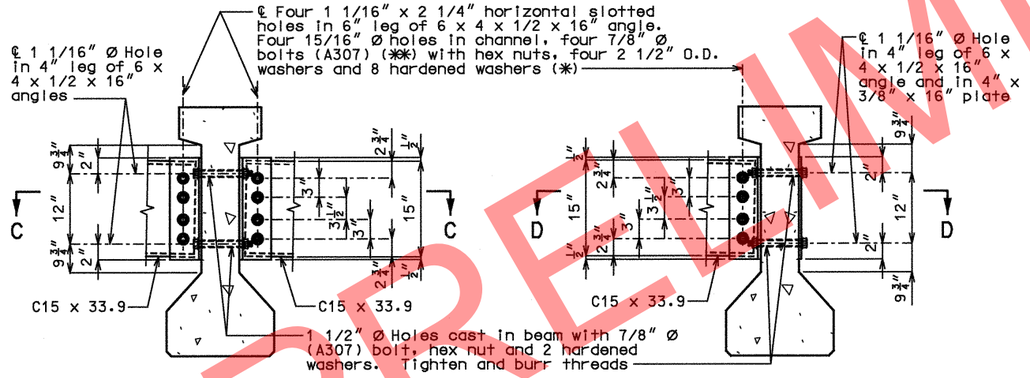

DETAIL "A" DETAIL "B"

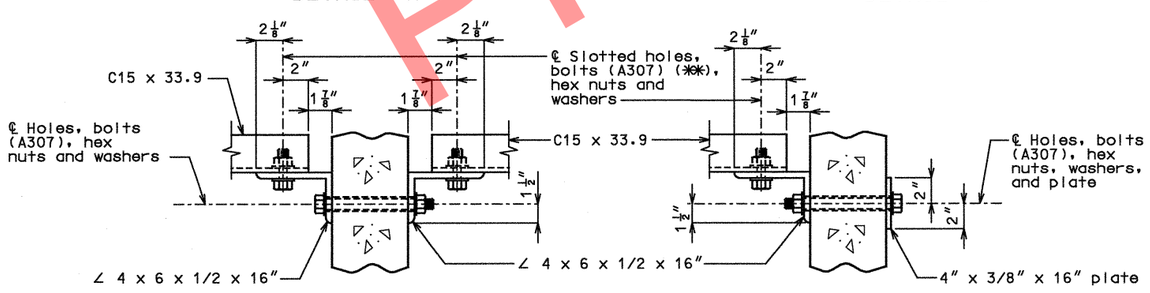

SECTION C-C SECTION D-D

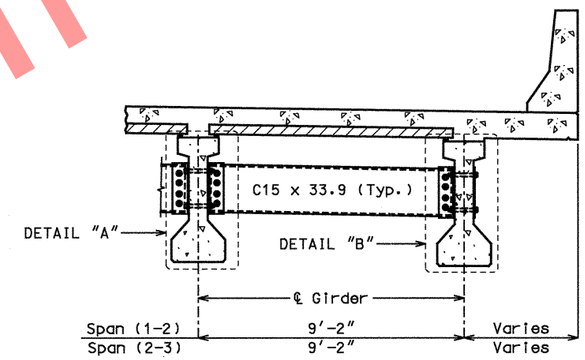

PART SECTION SHOWING INTERMEDIATE DIAPHRAGMS

STEEL DIAPHRAGM NOTES:

(✱) In lieu of 2 1/2" outside diameter washers, contractor may substitute a 3/16" (Min. thickness) plate with four 15/16" Ø holes and one hardened washer per bolt.

(✱✱) Bolts shall be tightened to provide a tension of one-half that specified in Sec 712 for high strength bolt installation. A325 bolts may be substituted for and installed in accordance with the requirements for the specified A307 bolts.

All diaphragm materials including bolts, nuts, and washers shall be galvanized.

Fabricated structural steel shall be ASTM A709 Grade 36 except as noted.

Payment for furnishing and installing steel intermediate diaphragms will be considered completely covered by the contract unit price for Steel Intermediate Diaphragm for P/S Concrete Girders.

Shop drawings will not be required for steel intermediate diaphragms and angle connections.

FRAMING PLAN AND
STEEL INTERMEDIATE DIAPHRAGM DETAILS

STATE OF MISSOURI
GINA D. HORNER
NUMBER E-30413
REGISTERED PROFESSIONAL ENGINEER
3-9-10

DATE PREPARED	4/14/09
ROUTE	I-49
STATE	MO
DISTRICT	BR
SHEET NO.	14
COUNTY	McDONALD
JOB NO.	J7P0601
CONTRACT ID.	
PROJECT NO.	
BRIDGE NO.	A7000

DESCRIPTION | DATE

MISSOURI HIGHWAYS AND TRANSPORTATION COMMISSION
105 WEST CAPITOL
JEFFERSON CITY, MO 65102
1-888-ASK-MODOT (1-888-275-6636)

HNTB
715 KIRK DRIVE
KANSAS CITY, MO 64105-1310
TELEPHONE (816) 472-1201
CERTIFICATE OF AUTHORITY NO. 001270

IF A SFAI IS PRESENT ON THIS SHEET IT HAS BEEN ELECTRONICALLY SEALED AND DATED.

REV.

USER: TThompson
PLOTTED: 08-MAR-2010 15:14 \\kcow00\Jobs\49259\Bridges\Plans\CDtoMoDotA7000_03-05-10\J7P0601\A7000-dgn\ZPLOT_B14.dgn

Detailed APR 2009
Checked APR 2009

Note: This drawing is not to scale. Follow Dimensions.

\\kcow00\Jobs\49259\Bridges\Plans\CDtoMoDotA7000_03-05-10\J7P0601\A7000-dgn\ZPLOT_B14.dgn 08-MAR-2010 15:14

Concrete for prestressed girders shall be Class A-1 with f'c = 6,000 psi and f'ci = 4,500 psi.

(+) indicates prestressing strand.

Use 28 strands with an initial prestress force of 867.5 kips.

Prestressing tendons shall be uncoated, seven-wire, low-relaxation strands, 1/2 inch diameter in accordance with AASHTO M 203, Grade 270. Pretensioned members shall be in accordance with Sec 1029.

✱✱ At the contractor's option the location for bent-up strands may be varied from that shown. The total number of bent-up strands shall not be changed. One strand tie bar is required for each layer of bent-up strands except at end bents which require one bar on the bottom layer of strands only. No additional payment will be made if additional strand tie bars are required.

✱✱✱ At contractor's option a 1 1/2" to 1 3/4" smooth finish strip is permitted to facilitate placement of preformed fiber expansion joint material or expanded or extruded polystyrene bedding material for the prestressed panels.

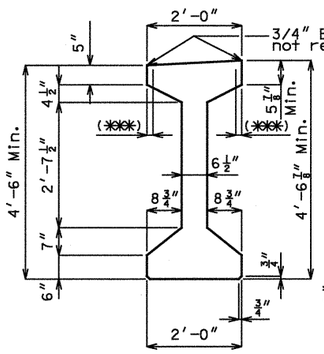

GIRDER DIMENSIONS

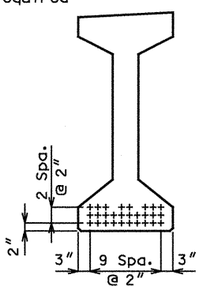

℄ GIRDER

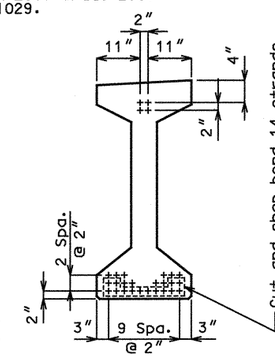

END OF GIRDER

STRAND ARRANGEMENTS

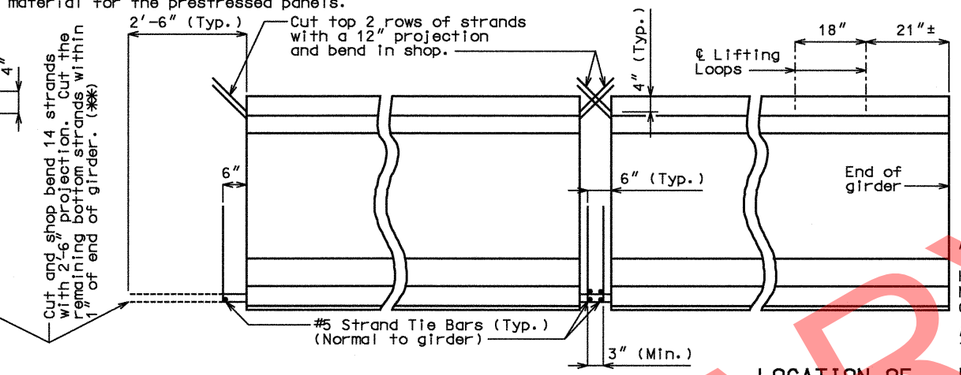

END BENT

INTERMEDIATE BENT

LOCATION OF LIFTING LOOPS

STRAND DETAILS AT GIRDER ENDS

BILL OF REINFORCING STEEL - EACH GIRDER				
NO.	SIZE & MARK	ACTUAL LENGTH	SHAPE	BENDING DIAGRAM
4	6 A1	40'-11"	20	
194	4 B1	6'-0"	11	
16	6 B2	5'-5"	11	
20	4 B3	6'-1"	11	
115	4 C1	2'-2"	10	
230	4 D1	3'-0"	9	

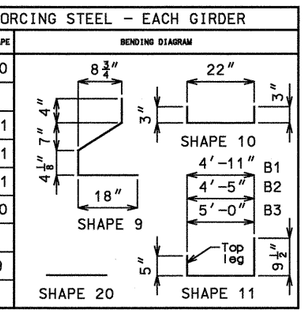

All dimensions are out to out.

Hooks and bends shall be in accordance with the CRSI Manual of Standard Practice for Detailing Reinforced Concrete Structures, Stirrup and Tie Dimensions.

Actual lengths are measured along centerline of bar to the nearest inch.

Minimum clearance to reinforcing shall be 1".

All reinforcement shall be Grade 60.

The two D1 bars may be furnished as one bar at the fabricator's option.

All B1 bars shall be epoxy coated.

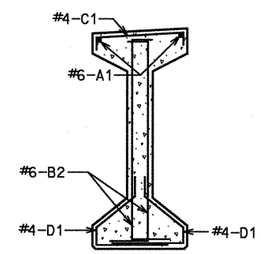

SECTION A-A

Strands not shown for clarity.

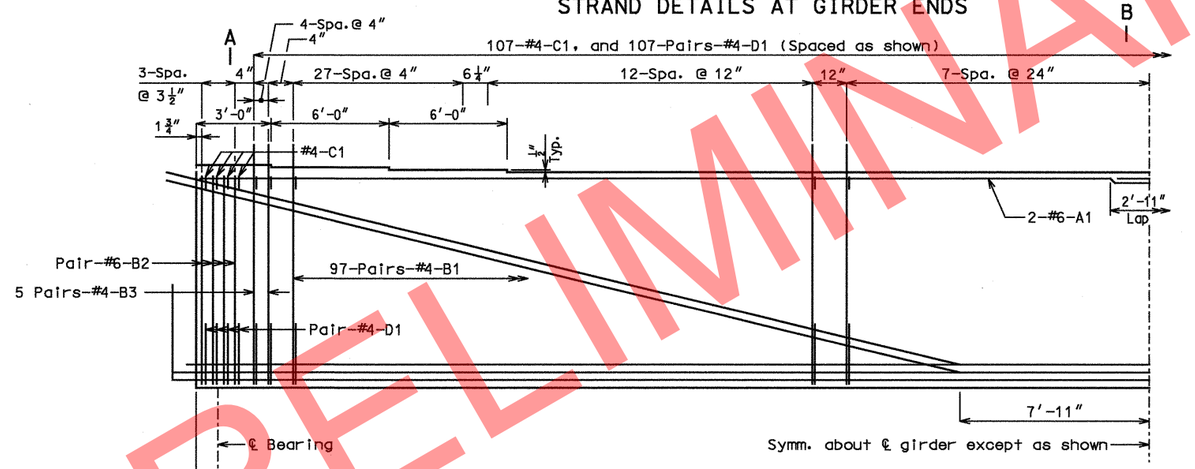

HALF ELEVATION OF GIRDER

Exterior and interior girders are the same, except for coil ties.

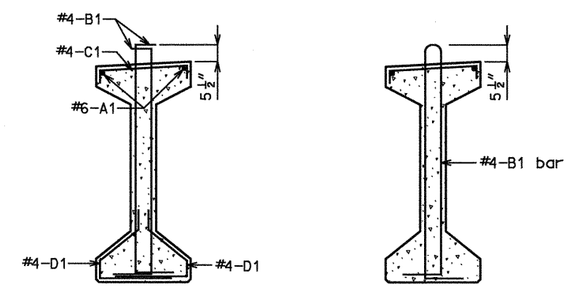

SECTION B-B

Strands not shown for clarity.

B1 BAR PERMISSIBLE ALTERNATE SHAPE

Cost of 3/4" Ø coil tie rods placed in diaphragms will be considered completely covered by the contract unit price for Prestressed Concrete I-Girder.

Coil ties shall be held in place in the forms by slotted wire-setting-studs projecting through forms. Studs are to be left in place or replaced with temporary plugs until girders are erected, then replaced by coil tie rods.

For location of coil inserts at slab drains, see Sheet No. 22.

For location of coil ties, see Sheets No. 7 & 17.

The 1 1/2" Ø holes shall be cast in the web for steel intermediate diaphragms. Drilling is not allowed.

For details of diaphragms, see Sheets No. 14 & 17.

For Girder Camber Diagram, see Sheet No. 19.

✱ Length of coil tie rods at exterior girders at end bents = 2'-0".

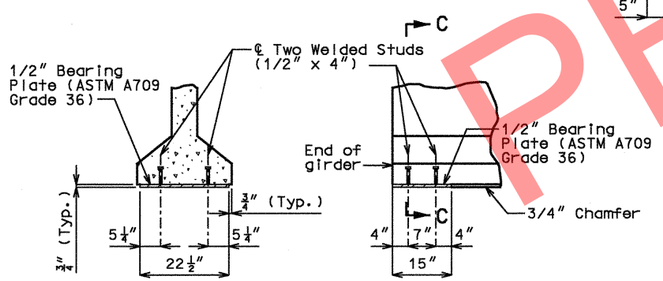

SECTION C-C

PART ELEVATION AT END OF GIRDER

BEARING PLATE DETAILS

Galvanize the 1/2" bearing plate (ASTM A709 Grade 36) in accordance with ASTM A123.

Cost of furnishing, galvanizing, and installing the 1/2" bearing plate (ASTM A709 Grade 36) and welded studs in the prestressed girder will be considered completely covered by the contract unit price for Prestressed Concrete I-Girder.

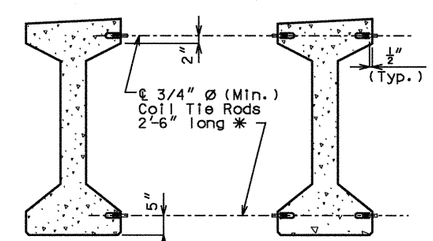

EXTERIOR GIRDERS AT INT. BENTS

EXTERIOR GIRDERS AT END BENTS INTERIOR GIRDERS AT ALL BENTS

DETAILS OF COIL TIES

GIRDER DETAILS - SPAN (1-2)

STATE OF MISSOURI GINA D. HORNER NUMBER E-30413 REGISTERED PROFESSIONAL ENGINEER 3-9-10

DATE PREPARED 7/20/09
ROUTE I-49 STATE MO
DISTRICT BR SHEET NO. 15
COUNTY McDONALD
JOB NO. J7P0601
CONTRACT ID.
PROJECT NO.
BRIDGE NO. A7000

DESCRIPTION DATE

MISSOURI HIGHWAYS AND TRANSPORTATION COMMISSION
105 WEST CAPITOL
JEFFERSON CITY, MO 65102
1-888-ASK-MODOT (1-888-275-6636)

HNTB
715 KIRK DRIVE
KANSAS CITY, MO 64105-1310
TELEPHONE (816) 472-1201
CERTIFICATE OF AUTHORITY NO. 001270

IF A SFAI IS PRESENT ON THIS SHEET IT HAS BEEN ELECTRONICALLY SEALED AND DATED.

REV.

Concrete for prestressed girders shall be Class A-1 with f'c = 6,000 psi and f'ci = 4,500 psi.

(+) indicates prestressing strand.

Use 28 strands with an initial prestress force of 867.5 kips.

Prestressing tendons shall be uncoated, seven-wire, low-relaxation strands, 1/2 inch diameter in accordance with AASHTO M 203, Grade 270. Pretensioned members shall be in accordance with Sec 1029.

✱✱ At the contractor's option the location for bent-up strands may be varied from that shown. The total number of bent-up strands shall not be changed. One strand tie bar is required for each layer of bent-up strands except at end bents which require one bar on the bottom layer of strands only. No additional payment will be made if additional strand tie bars are required.

✱✱✱ At contractor's option a 1 1/2" to 1 3/4" smooth finish strip is permitted to facilitate placement of preformed fiber expansion joint material or expanded or extruded polystyrene bedding material for the prestressed panels.

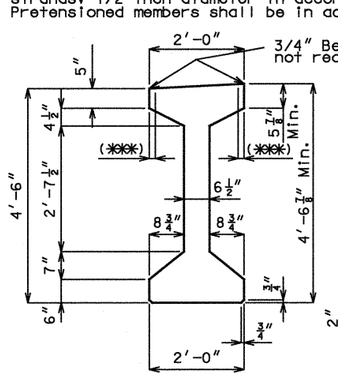

GIRDER DIMENSIONS

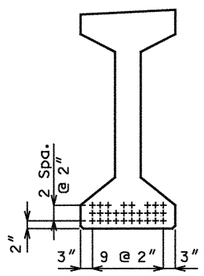

℄ GIRDER

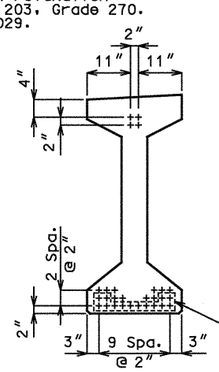

END OF GIRDER

STRAND ARRANGEMENTS

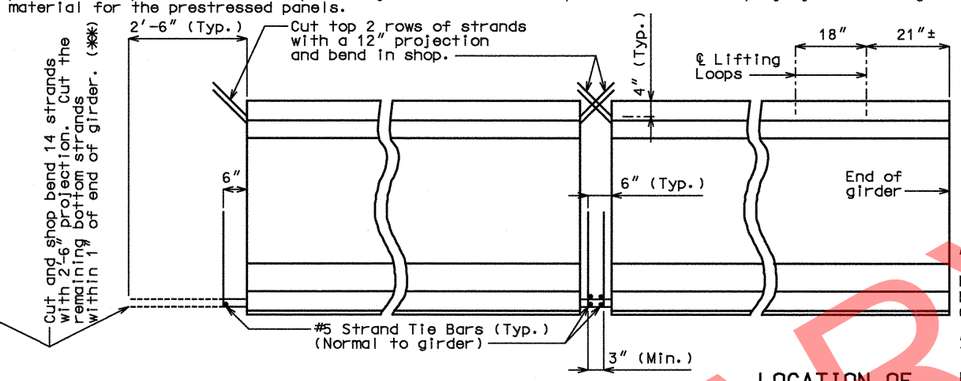

END BENT

INTERMEDIATE BENT

LOCATION OF LIFTING LOOPS

STRAND DETAILS AT GIRDER ENDS

BILL OF REINFORCING STEEL - EACH GIRDER			
NO.	SIZE & MARK	ACTUAL LENGTH	SHAPE
4	6 A1	43'-5"	20
202	4 B1	6'-0"	11
16	6 B2	5'-5"	11
20	4 B3	6'-1"	11
119	4 C1	2'-2"	10
238	4 D1	3'-0"	9

BENDING DIAGRAM

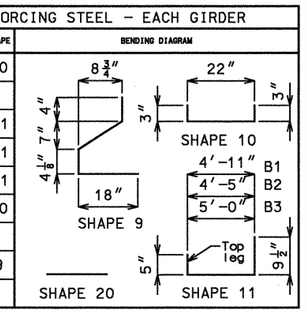

All dimensions are out to out.

Hooks and bends shall be in accordance with the CRSI Manual of Standard Practice for Detailing Reinforced Concrete Structures, Stirrup and Tie Dimensions.

Actual lengths are measured along centerline of bar to the nearest inch.

Minimum clearance to reinforcing shall be 1".

All reinforcement shall be Grade 60.

The two D1 bars may be furnished as one bar at the fabricator's option.

All B1 bars shall be epoxy coated.

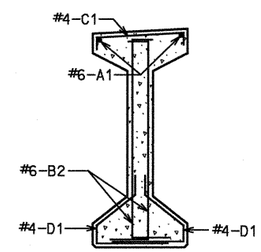

SECTION A-A

Strands not shown for clarity.

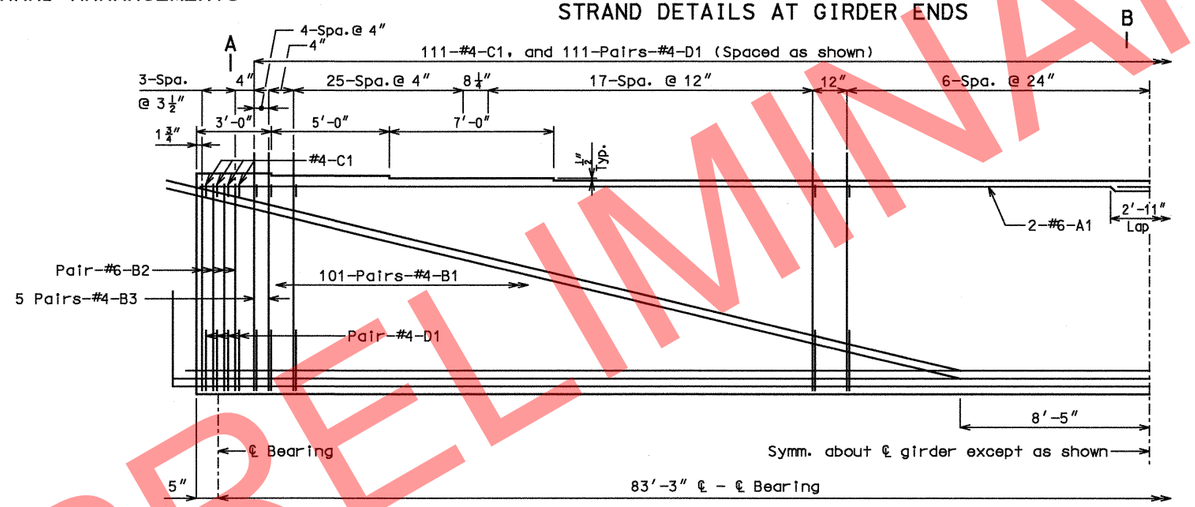

HALF ELEVATION OF GIRDER

Exterior and interior girders are the same, except for coil ties.

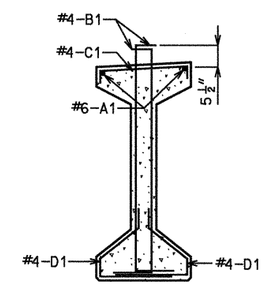

SECTION B-B

Strands not shown for clarity.

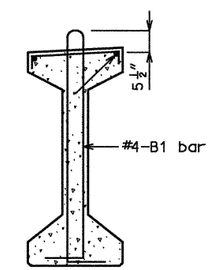

B1 BAR PERMISSIBLE ALTERNATE SHAPE

Cost of 3/4" Ø coil tie rods placed in diaphragms will be considered completely covered by the contract unit price for Prestressed Concrete I-Girder.

Coil ties shall be held in place in the forms by slotted wire-setting-studs projecting through forms. Studs are to be left in place or replaced with temporary plugs until girders are erected, then replaced by coil tie rods.

For location of coil inserts at slab drains, see Sheet No. 22.

For location of coil ties, see Sheets No. 11 & 17.

The 1 1/2" Ø holes shall be cast in the web for steel intermediate diaphragms. Drilling is not allowed.

For details of diaphragms, see Sheets No. 14 & 17.

For Girder Camber Diagram, see Sheet No. 19.

✱ Length of coil tie rods at exterior girders at end bents = 2'-0".

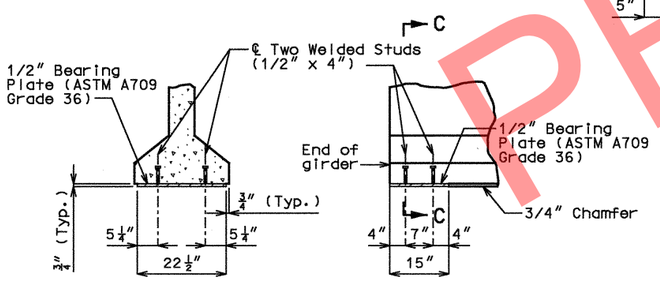

SECTION C-C

PART ELEVATION AT END OF GIRDER

BEARING PLATE DETAILS

Galvanize the 1/2" bearing plate (ASTM A709 Grade 36) in accordance with ASTM A123.

Cost of furnishing, galvanizing, and installing the 1/2" bearing plate (ASTM A709 Grade 36) and welded studs in the prestressed girder will be considered completely covered by the contract unit price for Prestressed Concrete I-Girder.

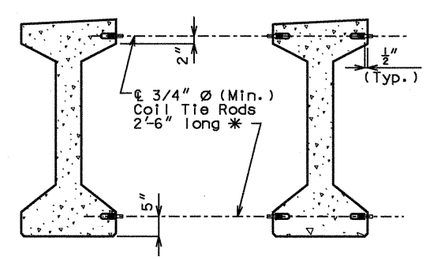

EXTERIOR GIRDERS AT INT. BENTS

EXTERIOR GIRDERS AT END BENTS INTERIOR GIRDERS AT ALL BENTS

DETAILS OF COIL TIES

GIRDER DETAILS - SPAN (2-3)

STATE OF MISSOURI — GINA D. HORNER — NUMBER E-30413 — REGISTERED PROFESSIONAL ENGINEER — 3-9-10

DATE PREPARED	
7/20/09	
ROUTE I-49	STATE MO
DISTRICT BR	SHEET NO. 16
COUNTY McDONALD	
JOB NO. J7P0601	
CONTRACT ID.	
PROJECT NO.	
BRIDGE NO. A7000	

DATE	DESCRIPTION

MISSOURI HIGHWAYS AND TRANSPORTATION COMMISSION

105 WEST CAPITOL, JEFFERSON CITY, MO 65102, 1-888-ASK-MODOT (1-888-275-6636)

HNTB — 715 KIRK DRIVE, KANSAS CITY, MO 64105-1310, TELEPHONE (816) 472-1201, CERTIFICATE OF AUTHORITY NO. 001270

IF A SEAL IS PRESENT ON THIS SHEET IT HAS BEEN ELECTRONICALLY SEALED AND DATED.

REV.

USER: TThompson
PLOTTED: 08-MAR-2010 15:14 \\kcow00\Jobs\49259\Bridges\Plans\CDtoMoDotA7000_03-05-10\J7P0601\A7000-dgn\ZPLOT_B16.dgn

Detailed JUL 2009
Checked JUL 2009

Note: This drawing is not to scale. Follow Dimensions.

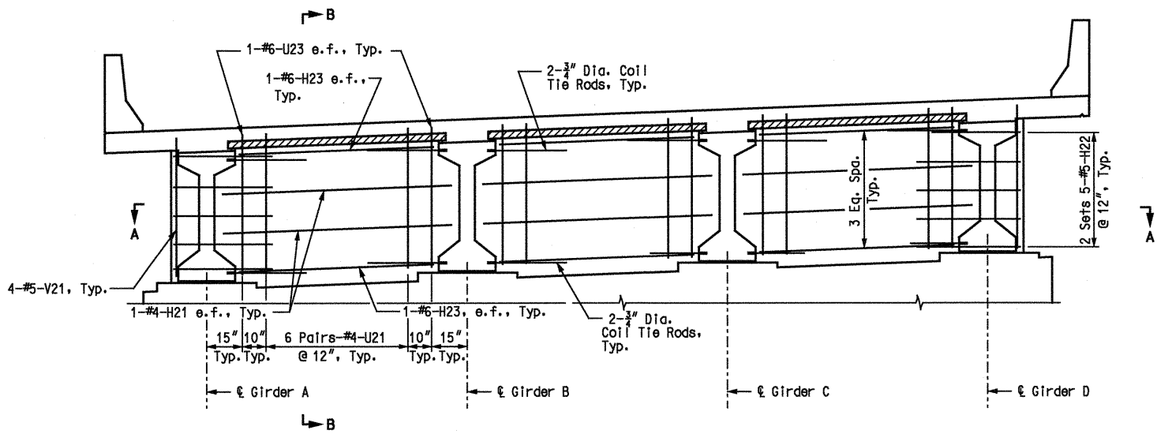

SECTION NEAR INTERMEDIATE BENT

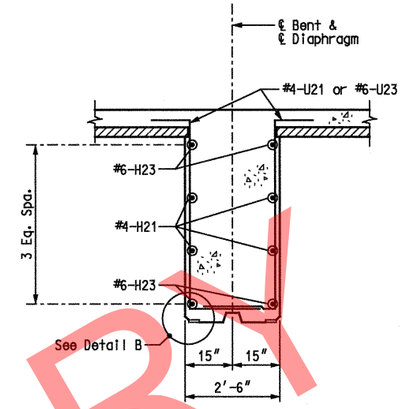

SECTION B-B

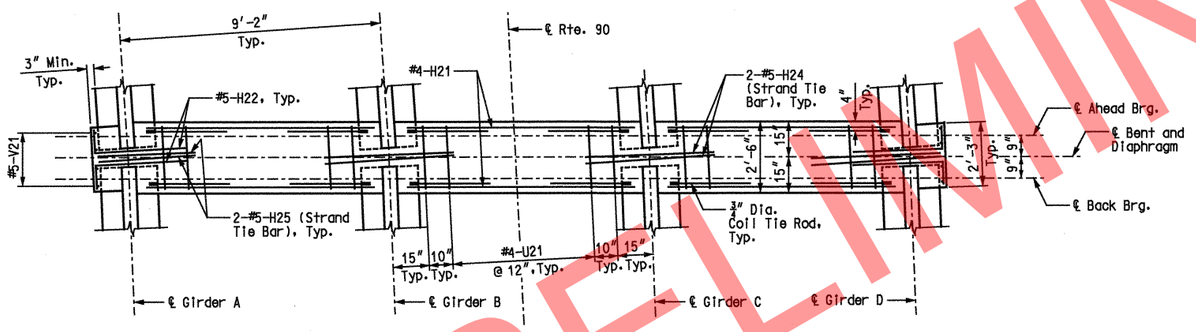

SECTION A-A

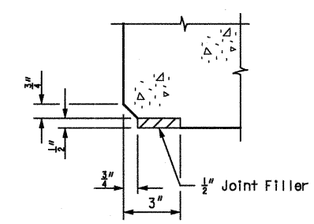

DETAIL B

Note:
Diaphragm shall be built vertical.

BENT 2 DIAPHRAGM DETAILS

STATE OF MISSOURI
GINA D. HORNER
NUMBER E-30413
REGISTERED PROFESSIONAL ENGINEER
3-9-10

DATE PREPARED	4/21/09
ROUTE	I-49
STATE	MO
DISTRICT	BR
SHEET NO.	17
COUNTY	McDONALD
JOB NO.	J7P0601
CONTRACT ID.	
PROJECT NO.	
BRIDGE NO.	A7000

DESCRIPTION	DATE

MISSOURI HIGHWAYS AND TRANSPORTATION COMMISSION
105 WEST CAPITOL
JEFFERSON CITY, MO 65102
1-888-ASK-MODOT (1-888-275-6636)

HNTB
715 KIRK DRIVE
KANSAS CITY, MO 64105-1310
TELEPHONE (816) 472-1201
CERTIFICATE OF AUTHORITY
NO. 001270

IF A SFAI IS PRESENT ON THIS SHEET IT HAS BEEN ELECTRONICALLY SEALED AND DATED.

REV.

USER: TThompson
PLOTTED: 08-MAR-2010 15:15 \\kcow00\Jobs\49259\Bridges\Plans\CDtoMoDotA7000_03-05-10\J7P0601\A7000-dgn\ZPLOT_B18.dgn

Detailed APR 2009
Checked Jul 2009

Note: This drawing is not to scale. Follow Dimensions.

\\kcow00\Jobs\49259\Bridges\Plans\CDtoMoDotA7000_03-05-10\J7P0601\A7000-dgn\ZPLOT_B18.dgn 08-MAR-2010 15:15

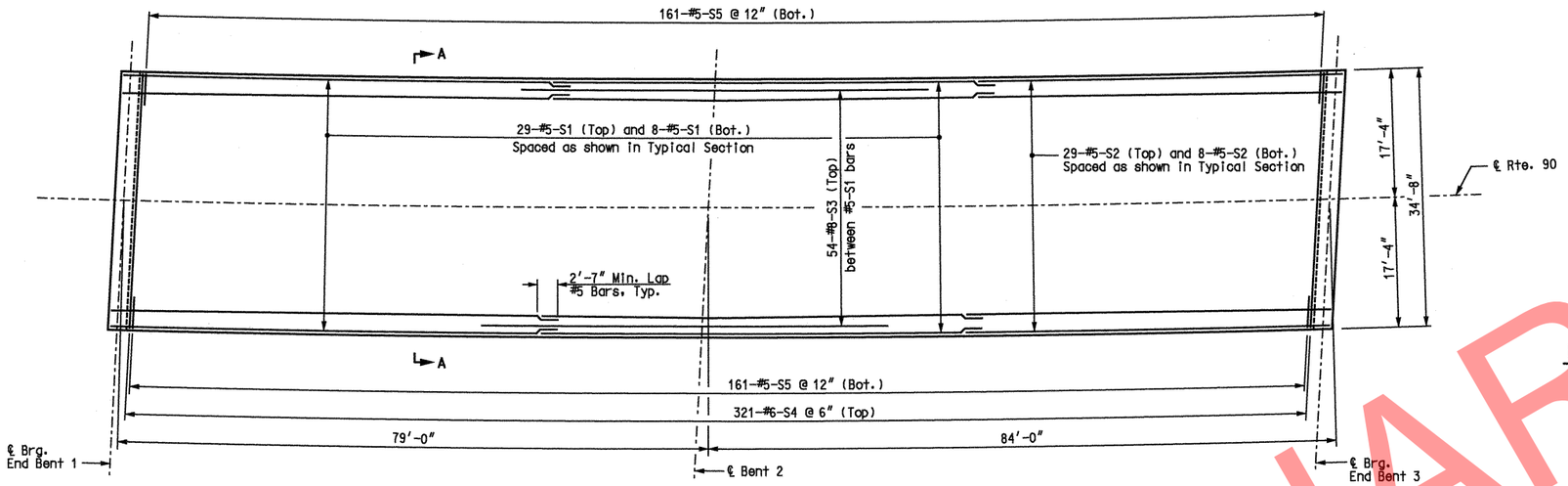

SLAB PLAN

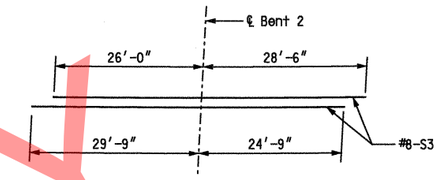

DETAIL OF NEGATIVE MOMENT STEEL STAGGER

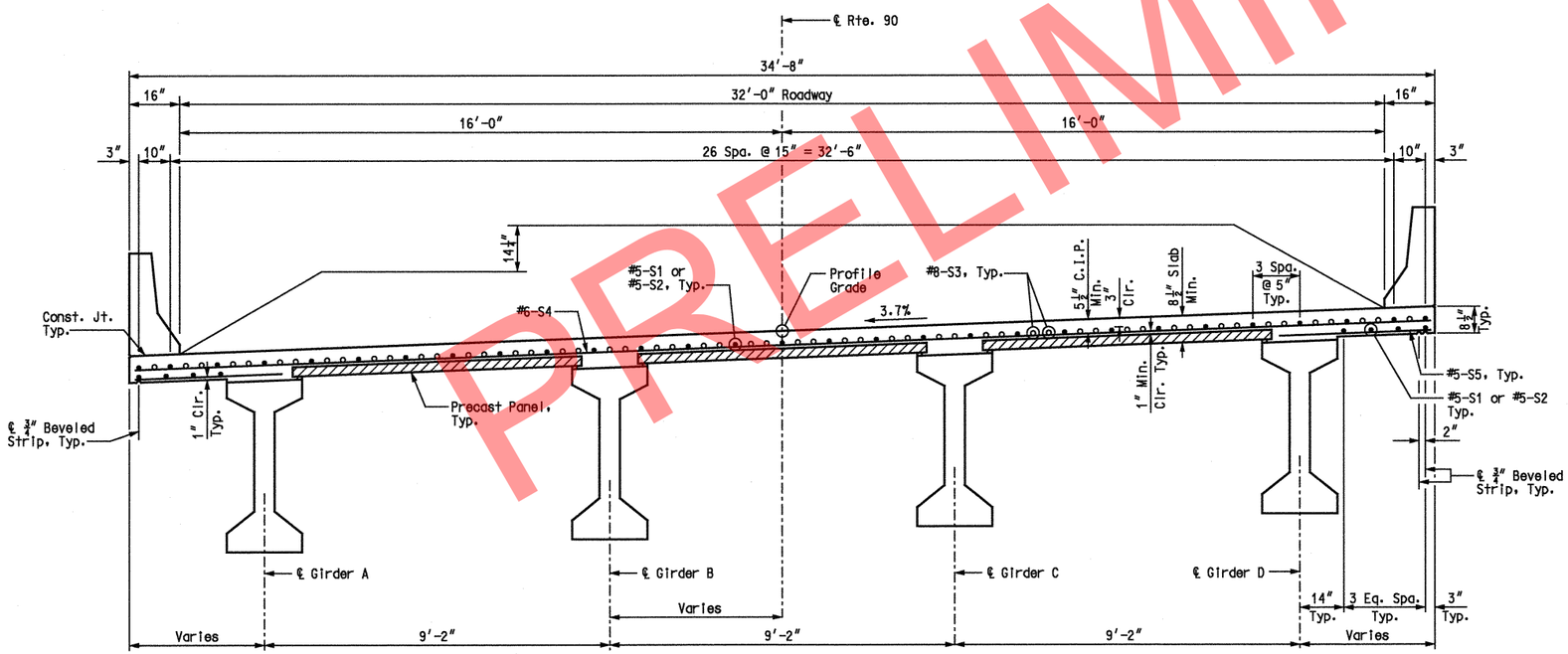

SECTION A-A

Notes:

Longitudinal dimensions shown are horizontal arc dimensions along ℄ Rte. 90.

Transverse reinforcing shall be placed parallel to bents and spaced along the right fascia.

For Location of Slab Drains, see Sheet No. 22.

For details and reinforcing of the Safety Barrier Curbs, see Sheet No. 23 and 24.

For Slab Pouring Sequence and Theoretical Slab Haunching Diagram, see Sheet No. 19.

For Framing Plan, see Sheet No. 14.

For Precast Panel Details, see Sheet No. 20.

For Bottom of Slab Elevations and Slab Curve Ordinates, see Sheet No. 21.

SLAB PLAN

STATE OF MISSOURI
GINA D. HORNER
NUMBER E-30413
REGISTERED PROFESSIONAL ENGINEER
3-9-10

DATE PREPARED	4/9/09
ROUTE	I-49
STATE	MO
DISTRICT	BR
SHEET NO.	18
COUNTY	McDONALD
JOB NO.	J7P0601
CONTRACT ID.	
PROJECT NO.	
BRIDGE NO.	A7000

DESCRIPTION	DATE

MISSOURI HIGHWAYS AND TRANSPORTATION COMMISSION
105 WEST CAPITOL
JEFFERSON CITY, MO 65102
1-888-ASK-MODOT (1-888-275-6636)

HNTB
715 KIRK DRIVE
KANSAS CITY, MO 64105-1310
TELEPHONE (816) 472-1201
CERTIFICATE OF AUTHORITY
NO. 001270

IF A SEAL IS PRESENT ON THIS SHEET IT HAS BEEN ELECTRONICALLY SEALED AND DATED.

REV.

Detailed APR 2009
Checked APR 2009

Note: This drawing is not to scale. Follow Dimensions.

Girder A	2 3/16	2	2 3/8	1 7/8	1 9/16	1 1/2	1 5/8	1 15/16	2 7/16	2 1/16	2 1/4
Girder B	2	1 7/8	2 1/4	1 13/16	1 9/16	1 7/16	1 9/16	1 7/8	2 5/16	1 15/16	2 1/8
Girder C	2 1/16	1 7/8	2 5/16	1 13/16	1 9/16	1 7/16	1 9/16	1 13/16	2 5/16	1 7/8	2 1/16
Girder D	2 3/16	1 15/16	2 3/8	1 7/8	1 9/16	1 7/16	1 9/16	1 7/8	2 3/8	2	2 3/16

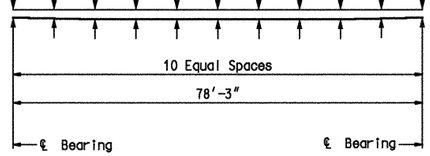

SPAN (1-2)

	2 1/8	2 7/16	2 5/16	1 13/16	1 1/2	1 7/16	1 9/16	1 13/16	2 5/16	2 7/16	2 1/8
	2 1/16	2 3/8	2 5/16	1 7/8	1 9/16	1 7/16	1 9/16	1 13/16	2 1/4	2 3/8	2
	2	2 3/8	2 1/4	1 13/16	1 9/16	1 7/16	1 1/2	1 13/16	2 1/4	2 3/8	2
	2 1/8	2 7/16	2 5/16	1 13/16	1 9/16	1 7/16	1 1/2	1 13/16	2 5/16	2 7/16	2 1/8

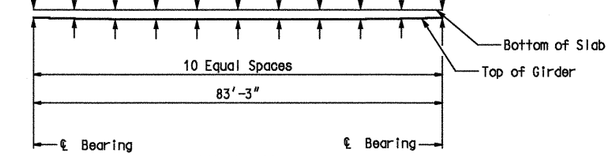

SPAN (2-3)

THEORETICAL SLAB HAUNCHING DIAGRAM

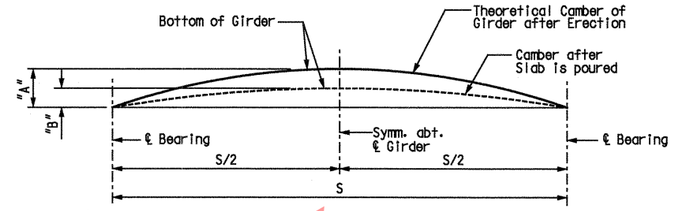

GIRDER CAMBER DIAGRAM

GIRDER	SPAN (1-2) "A"	SPAN (1-2) "B"	SPAN (2-3) "A"	SPAN (2-3) "B"
A	2 13/16"	2 1/8"	3"	2 1/16"
B	2 13/16"	2"	1"	1 15/16"
C	2 13/16"	2"	1"	1 15/16"
D	2 13/16"	2 1/8"	3"	2 1/16"

Conversion Factors for Girder Camber
0.1 PT.=0.314 x 0.5 PT.
0.2 PT.=0.593 x 0.5 PT.
0.3 PT.=0.813 x 0.5 PT.
0.4 PT.=0.952 x 0.5 PT.

Notes:
If Girder Camber is different from that shown in the Camber Diagram, it shall be necessary to adjust the slab haunches. Increase the slab thickness or raise the grade uniformly throughout the structure. No payment will be made for additional labor or materials required for variation in haunching, slab thickness or grade adjustment.
Concrete in the slab haunches is included in the Estimated Quantities for Slab on Concrete I-Girder.
Slab haunching values are given in inches.

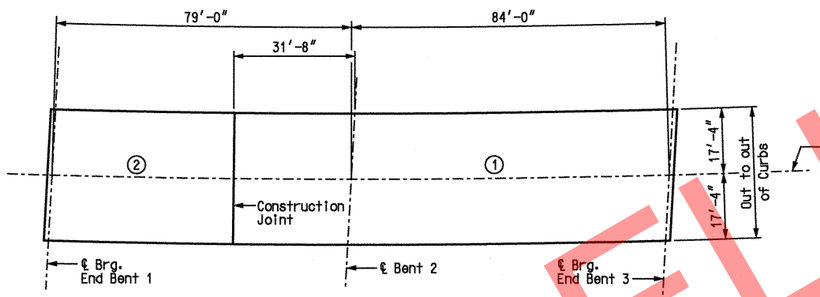

SPAN (1-2) SPAN (2-3)

	Sequence of Pours		Min. rate of pour cu. yds./hr.
	Direction		With retarder
Basic sequence	1 End to 2	2 1 to end	25
Alternate pours to the basic sequence are subject to the approval of the engineer in accordance with Section 703.3.12.4 of Missouri Standard Specifications.			
Alternate "A" pours	1 + 2 End to end		34

SLAB POURING SEQUENCE

Note: The contractor shall furnish an approved retarder to retard the set of the concrete to 2.5 hours, and shall pour and satisfactorily finish the slab pours at the rate given.

The concrete diaphragm at the intermediate bents and integral end bents shall be poured a minimum of 30 minutes and a maximum of 2 hours before the slab is poured.

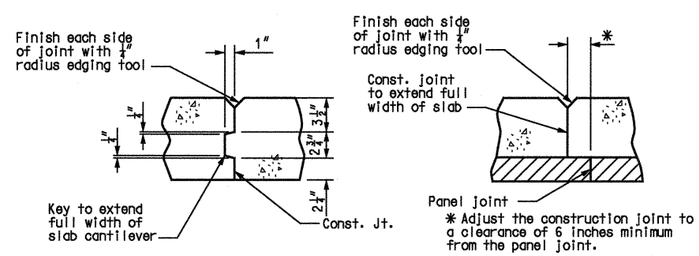

SLAB WITHOUT PRECAST PANELS SLAB ON PRECAST PANELS

SLAB CONSTRUCTION JOINT DETAILS

THEORETICAL SLAB HAUNCHING DIAGRAM
& SLAB POURING SEQUENCE

Detailed JUL 2009
Checked AUG 2009

Note: This drawing is not to scale. Follow Dimensions.

USER: TThompson
PLOTTED: 08-MAR-2010 15:15
\\kcow00\Jobs\49259\Bridges\Plans\CDtoMoDotA7000_03-05-10\J7P0601\A7000-dgn\ZPLOT_B21.dgn

STATE OF MISSOURI
GINA D. HORNER
NUMBER E-30413
REGISTERED PROFESSIONAL ENGINEER
3-9-10

DATE PREPARED 7/24/09
ROUTE I-49
STATE MO
DISTRICT BR
SHEET NO. 19
COUNTY McDONALD
JOB NO. J7P0601
CONTRACT ID.
PROJECT NO.
BRIDGE NO. A7000

DESCRIPTION
DATE

MISSOURI HIGHWAYS AND TRANSPORTATION COMMISSION
105 WEST CAPITOL
JEFFERSON CITY, MO 65102
1-888-ASK-MODOT (1-888-275-6636)

HNTB
715 KIRK DRIVE
KANSAS CITY, MO 64105-1310
TELEPHONE (816) 472-1201
CERTIFICATE OF AUTHORITY
NO. 001270

IF A SEAL IS PRESENT ON THIS SHEET IT HAS BEEN ELECTRONICALLY SEALED AND DATED.

REV.

\\kcow00\Jobs\49259\Bridges\Plans\CDtoMoDotA7000_03-05-10\J7P0601\A7000-dgn\ZPLOT_B21.dgn 08-MAR-2010 15:15

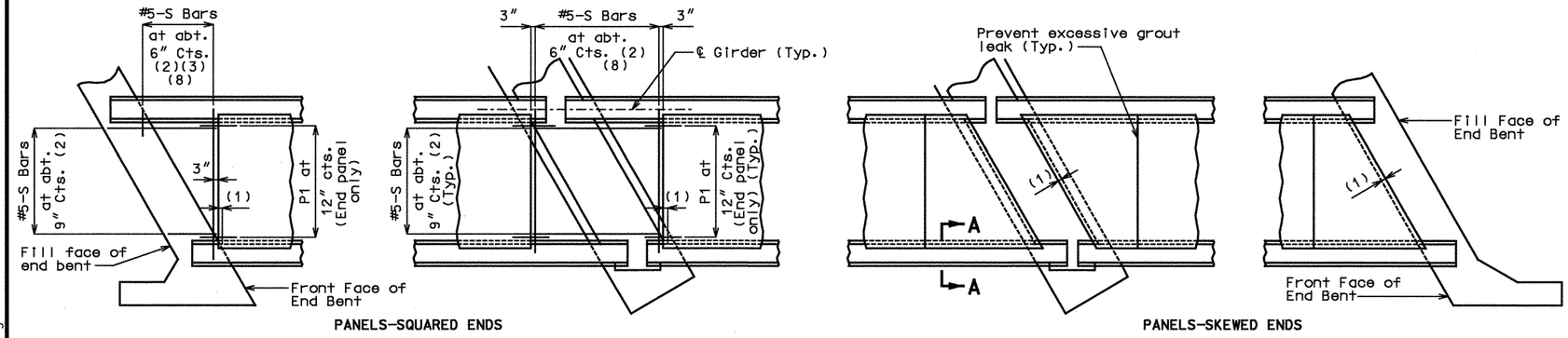

PANELS-SQUARED ENDS

PANELS-SKEWED ENDS

PLAN OF PRECAST PRESTRESSED PANELS PLACEMENT

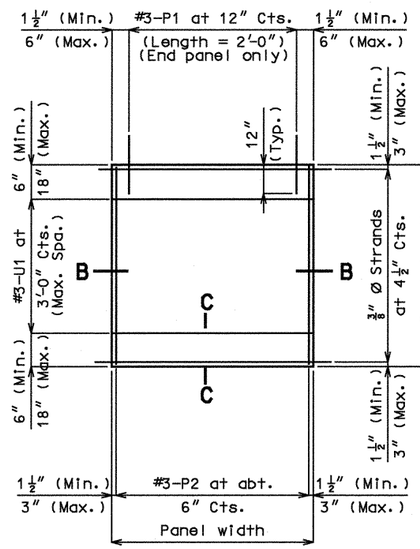

PLAN OF PRECAST PRESTRESSED PANEL

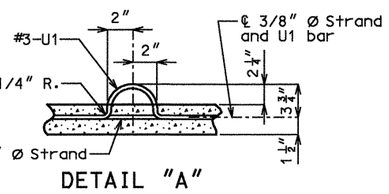

DETAIL "A"

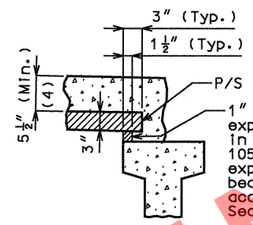

SECTION A-A

Note: Use slab haunching diagram on Sheet No. 19 for determining thickness of preformed fiber expansion joint material or polystyrene bedding material within the limits noted in general notes.

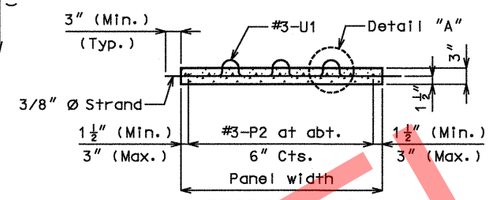

SECTION B-B

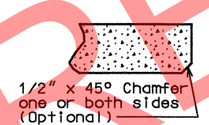

SECTION C-C

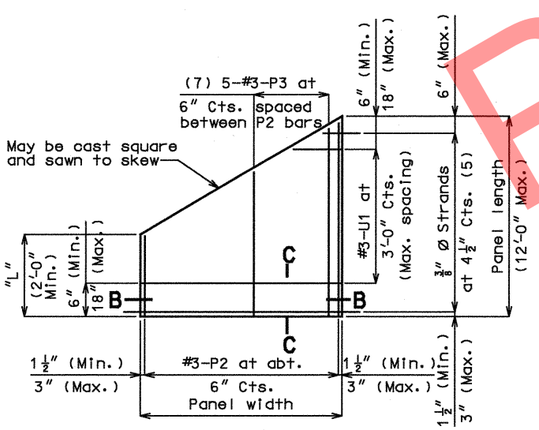

PLAN OF PRECAST PRESTRESSED PANEL
(SKEWED END-OPTIONAL)

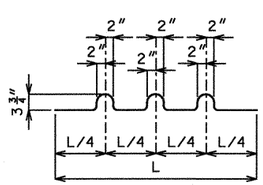

BENDING DIAGRAM FOR U1 BAR
(U1 Bars may be oriented at right angles to location and spacing shown. U1 Bars shall be placed between P1 bars).

NOTES:

Welded wire fabric or welded deformed bar mats providing a minimum area of reinforcing perpendicular to strands of 0.22 sq. in./ft., with spacing parallel to strands sufficient to insure proper handling, may be used in lieu of the #3-P2 bars shown. Wire or bar diameter shall not be larger than 0.375 inches. The above alternative reinforcement criteria may be used in lieu of the #3-P3 bars, when required, and placed over a width not less than 2 feet.

The reinforcing steel shall be tied securely to the 3/8"Ø strands with the following maximum spacing in each direction:
#3-P2 bars at 16 inches.
Welded wire fabric or welded deformed bar mats at 2'-0".

Tie the #3-U1 bars to the #3-P2 bars, to the welded wire fabric or the welded deformed bar mats at about 3'-0" centers.

All reinforcement other than prestressing strands shall be epoxy coated.

Precast panels may be in contact with stirrup reinforcing in diaphragms.

Cost of S-bars will be considered completely covered by the contract unit price for the slab.

S-bars are not listed in the bill of reinforcing.

(1) End panels shall be dimensioned 1" min. to 1 1/2" max. from the inside face of diaphragm.

(2) S-bars shown are bottom steel in slab between panels and used with squared end panels only.

(3) Extend S-Bars 18 inches beyond the front face of end bents only.

(4) In order to maintain minimum slab thickness, it may be necessary to raise the grade uniformly throughout the structure. No payment will be made for additional labor or materials required for necessary grade adjustment.

(5) Any strand 2'-0" or shorter shall have a #4 reinforcing bar on each side of it, centered between strands. Strands 2'-0" or shorter may then be debonded at the fabricator's option.

(6) All panel support pads shall be glued to the girder. When support thickness exceeds 1 1/2 inches, the pads shall be glued top and bottom. The glue used shall be the type recommended by the panel support pads manufacturer.

(7) Use #3-P3 bars if panel is skewed 45° or greater.

(8) Minimum reinforcement steel length shall be 2'-0".

GENERAL NOTES:

PRESTRESSED PANELS:
Concrete for prestressed panels shall be Class A-1 with f'c = 6,000 psi, f'ci = 4,000 psi.

The top surface of all panels shall receive a scored finish with a depth of scoring of 1/8" perpendicular to the prestressing strands in the panels.

Prestressing tendons shall be high-tensile strength uncoated seven-wire, low-relaxation strands for prestressed concrete in accordance with AASHTO M 203 Grade 270, with nominal diameter of strand = 3/8" and nominal area = 0.085 sq. in.and minimum ultimate strength = 22.95 kips (270 ksi). Larger strands may be used with the same spacing and initial tension.

Initial prestressing force = 17.2 kips/strand.

The method and sequence of releasing the strands shall be shown on the shop drawings.

Suitable anchorage devices for lifting panels may be cast in panels, provided the devices are shown on the shop drawings and approved by the engineer. Panel lengths shall be determined by the contractor and shown on the shop drawings.

When square end panels are used at skewed bents, the skewed portion shall be cast full depth. No separate payment will be made for additional concrete and reinforcing required.

Support from diaphragm forms is required under the optional skewed end until cast-in-place concrete has reached 3,000 psi compressive strength.

Minimum preformed fiber expansion joint material or polystyrene bedding material thickness shall be 1 inch. Thicker material may be used on one or both sides of the girder to reduce cast-in-place concrete thickness, to within tolerances. No more than 2 inches total thickness shall be used.

The same thickness of preformed fiber expansion joint material shall be used under any one edge of any panel except at locations where top flange thickness may be stepped. The maximum change in thickness between adjacent panels shall be 1/4 inch. The polystyrene bedding material may be cut with a transition to match haunch height above top of flange.

Slab thickness over prestressed panels varies due to girder camber.

At the contractor's option, the variation in slab thickness over prestressed panels may be eliminated or reduced by increasing and varying the girder top flange thickness. Dimensions shall be shown on the shop drawings.

REINFORCING STEEL:
All dimensions are out to out.

Minimum clearance to reinforcing steel shall be 1 1/2", unless otherwise shown.

Hooks and bends shall be in accordance with the CRSI Manual of Standard Practice for Detailing Reinforced Concrete Structures, Stirrup and Tie Dimensions.

Actual lengths are measured along centerline of bar to the nearest inch.

The prestressed panel quantities are not included in the table of estimated quantities for slab.

If U1 bars interfere with placement of slab steel, U1 loops may be bent over, as necessary, to clear slab steel.

DETAILS OF PRECAST PRESTRESSED PANELS

STATE OF MISSOURI
GINA D. HORNER
NUMBER E-30413
REGISTERED PROFESSIONAL ENGINEER
7-9-10

DATE PREPARED	2/28/09
ROUTE	I-49
STATE	MO
DISTRICT	BR
SHEET NO.	20
COUNTY	McDONALD
JOB NO.	J7P0601
CONTRACT ID.	
PROJECT NO.	
BRIDGE NO.	A7000

DESCRIPTION | DATE

MISSOURI HIGHWAYS AND TRANSPORTATION COMMISSION
105 WEST CAPITOL
JEFFERSON CITY, MO 65102
1-888-ASK-MODOT (1-888-275-6636)

HNTB
715 KIRK DRIVE
KANSAS CITY, MO 64105-1310
TELEPHONE (816) 472-1201
CERTIFICATE OF AUTHORITY NO. 001270

REV.

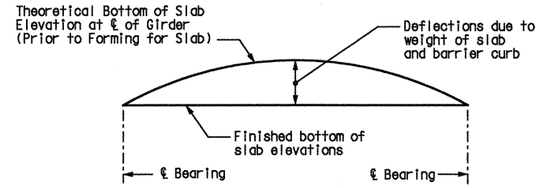

TYPICAL SLAB ELEVATIONS DIAGRAM

Theoretical Bottom of Slab Elevations at CL of Girder (Prior to Forming for Slab) ✱✱

	Span (1-2)											Span (2-3)										
	℄ brg.	.10	.20	.30	.40	.50	.60	.70	.80	.90	℄ brg.	℄ brg.	.10	.20	.30	.40	.50	.60	.70	.80	.90	℄ brg.
Girder A	1199.29	1199.25	1199.20	1199.16	1199.12	1199.08	1199.04	1199.00	1198.96	1198.92	1198.88	1198.88	1198.83	1198.78	1198.74	1198.69	1198.65	1198.61	1198.56	1198.52	1198.48	1198.44
Girder B	1199.63	1199.59	1199.54	1199.50	1199.46	1199.42	1199.38	1199.34	1199.30	1199.26	1199.22	1199.22	1199.17	1199.12	1199.08	1199.04	1198.99	1198.95	1198.91	1198.87	1198.83	1198.79
Girder C	1199.97	1199.93	1199.88	1199.84	1199.80	1199.76	1199.72	1199.68	1199.64	1199.60	1199.57	1199.56	1199.51	1199.47	1199.42	1199.38	1199.33	1199.29	1199.25	1199.21	1199.17	1199.13
Girder D	1200.31	1200.27	1200.22	1200.18	1200.14	1200.10	1200.06	1200.02	1199.98	1199.94	1199.91	1199.90	1199.85	1199.81	1199.76	1199.72	1199.68	1199.63	1199.59	1199.55	1199.51	1199.47

✱✱ Elevations are based on a constant slab thickness of $8\frac{1}{2}''$ and include allowance for theoretical dead load deflections due to weight of slab and barrier curb.

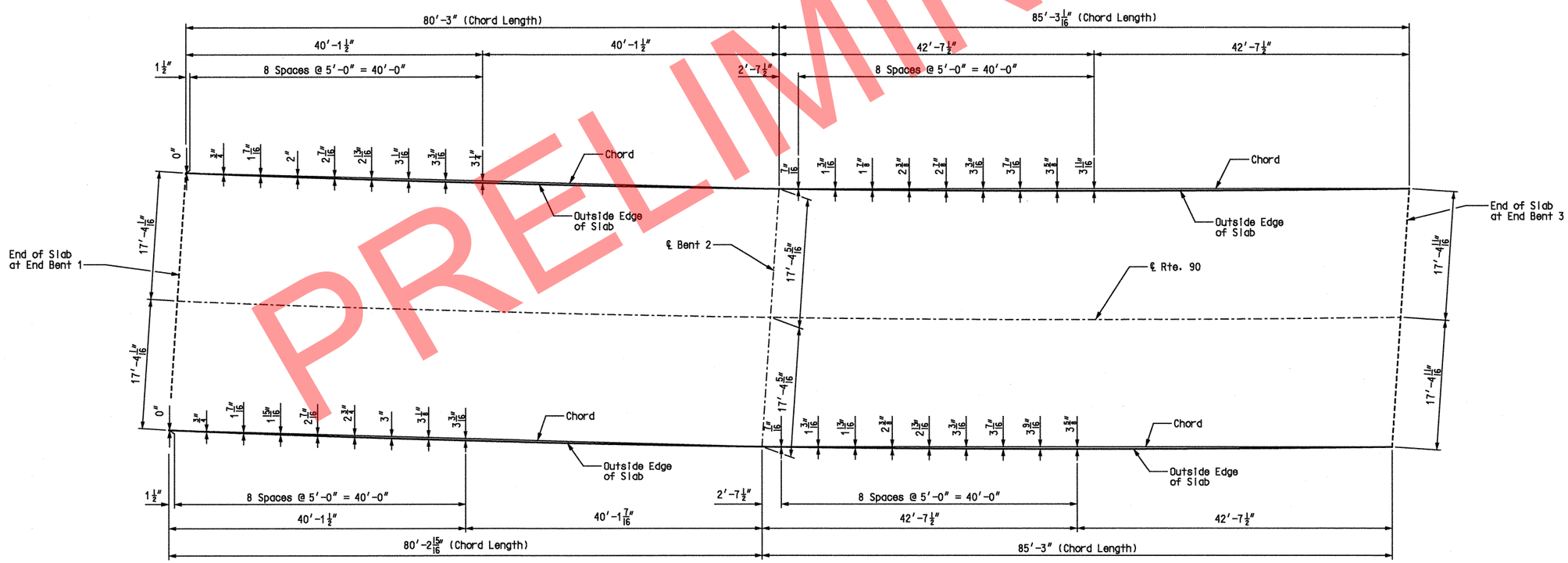

BOTTOM OF SLAB ELEVATIONS AND SLAB CURVE ORDINATES

Detailed JUL 2009
Checked AUG 2009

Note: This drawing is not to scale. Follow Dimensions.

STATE OF MISSOURI
GINA D. HORNER
NUMBER E-30413
REGISTERED PROFESSIONAL ENGINEER
3-9-10

DATE PREPARED	08/04/09
ROUTE	I-49
STATE	MO
DISTRICT	BR
SHEET NO.	21
COUNTY	McDONALD
JOB NO.	J7P0601
CONTRACT ID.	
PROJECT NO.	
BRIDGE NO.	A7000

DESCRIPTION	DATE

MISSOURI HIGHWAYS AND TRANSPORTATION COMMISSION
105 WEST CAPITOL
JEFFERSON CITY, MO 65102
1-888-ASK-MODOT (1-888-275-6636)

HNTB
715 KIRK DRIVE
KANSAS CITY, MO 64105-1310
TELEPHONE (816) 472-1201
CERTIFICATE OF AUTHORITY NO. 001270

IF A SEAL IS PRESENT ON THIS SHEET IT HAS BEEN ELECTRONICALLY SEALED AND DATED.

REV.

USER: TThompson
PLOTTED: 08-MAR-2010 15:15
\\kcow00\Jobs\49259\Bridges\Plans\CDtoMoDotA7000_03-05-10\J7P0601\A7000-dgn\ZPLOT_B23.dgn

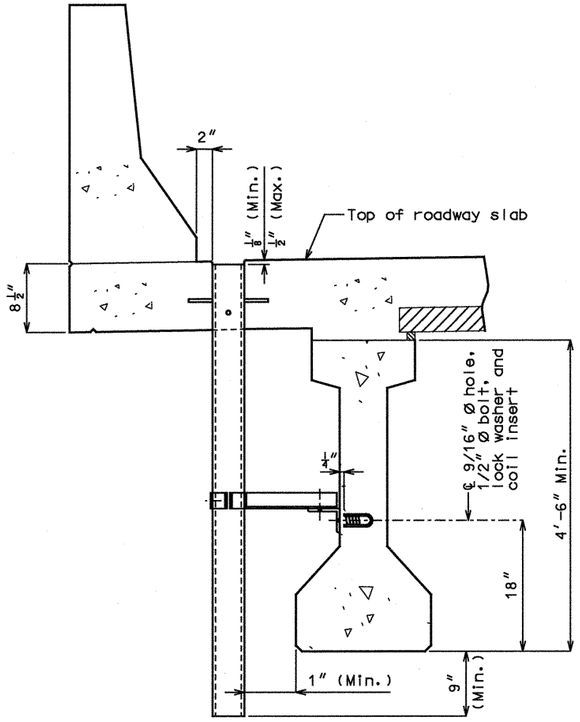

PART SECTION NEAR DRAIN

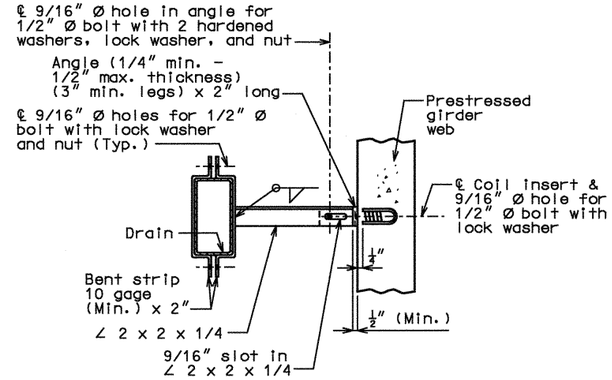

PART SECTION SHOWING BRACKET ASSEMBLY

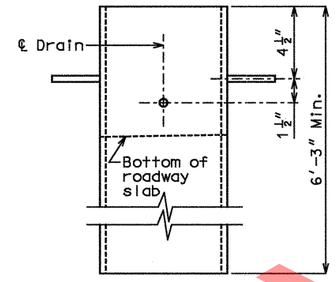

ELEVATION OF DRAIN

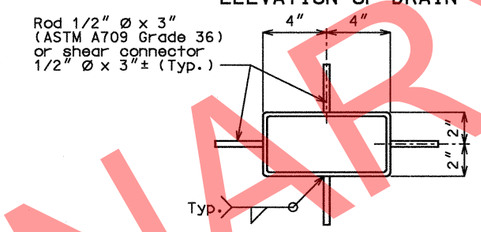

PLAN OF DRAIN

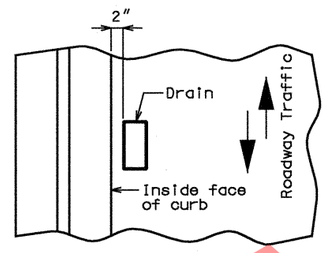

PART PLAN OF SLAB AT DRAIN

DETAILS OF DRAINS PARALLEL TO ROADWAY

Notes:

Slab drains may be fabricated of either 1/4" welded sheets of ASTM A709 Grade 36 steel or from 1/4" structural steel tubing ASTM A500 or A501.

Slab drain bracket assembly shall be ASTM A709 Grade 36 steel.

Outside dimensions of drains are 8" x 4".

Locate drains in slab by dimensions shown in Part Section Near Drain.

Shift reinforcing steel in field where necessary to clear drains.

The drains, coil inserts and bracket assembly shall be galvanized in accordance with ASTM A123.

All bolts, hardened washers, lock washers and nuts shall be galvanized in accordance with ASTM A153.

The coil insert required for the bracket assembly attachment shall be located on the Prestressed I-Girder shop drawings.

Shop drawings will not be required for the slab drains and the bracket assembly.

Coil inserts shall have a concrete pull-out strength (ultimate load) of at least 2,500 pounds in 5,000 psi concrete.

The bolt required to attach the slab drain bracket assembly to the prestressed girder web shall be supplied by the prestressed I-Girder fabricator.

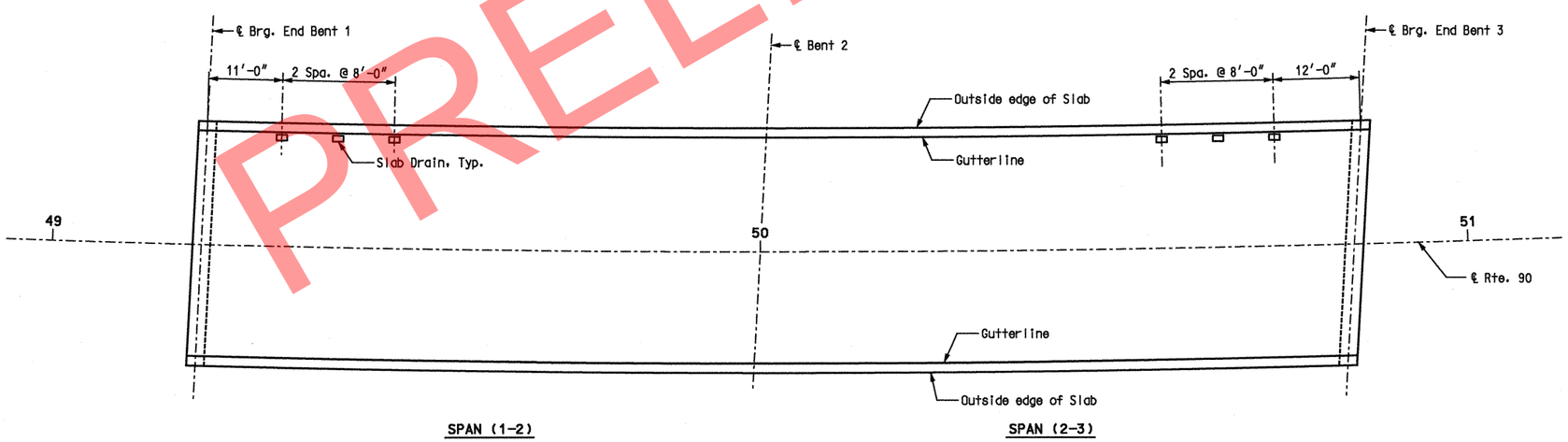

PLAN

Notes:
All longitudinal dimensions shown are horizontal arc dimensions along gutterline.

SLAB DRAIN DETAILS

STATE OF MISSOURI
GINA D. HORNER
NUMBER E-30413
REGISTERED PROFESSIONAL ENGINEER
3-9-10

DATE PREPARED	4/13/09
ROUTE	I-49
STATE	MO
DISTRICT	BR
SHEET NO.	22
COUNTY	McDONALD
JOB NO.	J7P0601
CONTRACT ID.	
PROJECT NO.	
BRIDGE NO.	A7000

DATE	DESCRIPTION

MISSOURI HIGHWAYS AND TRANSPORTATION COMMISSION
105 WEST CAPITOL
JEFFERSON CITY, MO 65102
1-888-ASK-MODOT (1-888-275-6636)

HNTB
715 KIRK DRIVE
KANSAS CITY, MO 64105-1310
TELEPHONE (816) 472-1201
CERTIFICATE OF AUTHORITY NO. 001270

REV.

USER: TThompson
PLOTTED: 08-MAR-2010 15:15 \\kcow00\Jobs\49259\Bridges\Plans\CDtoMoDotA7000_03-05-10\J7P0601\A7000-dgn\ZPLOT_B24.dgn

Detailed APR 2009
Checked APR 2009

Note: This drawing is not to scale. Follow Dimensions.

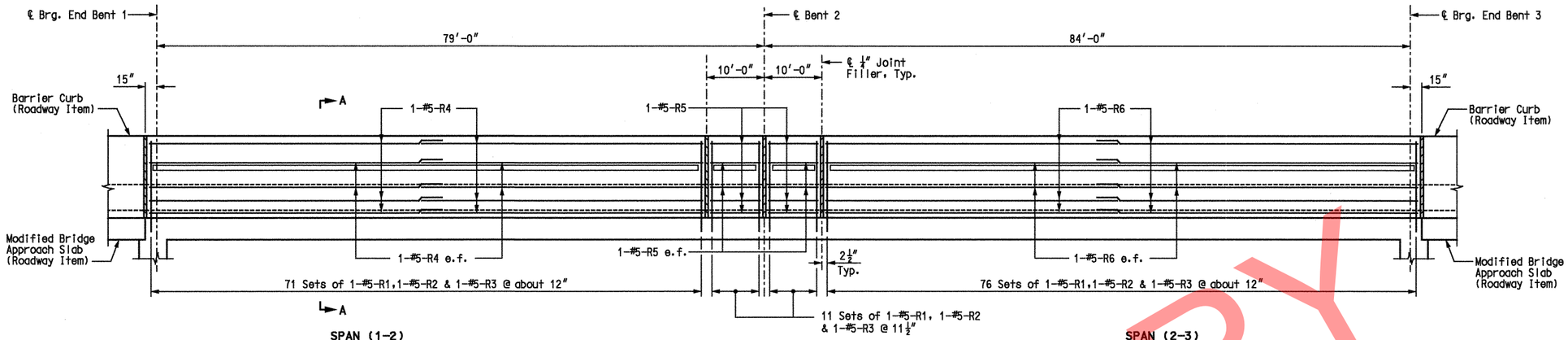

ELEVATION

Note:
Right barrier curb shown, left barrier curb similar.

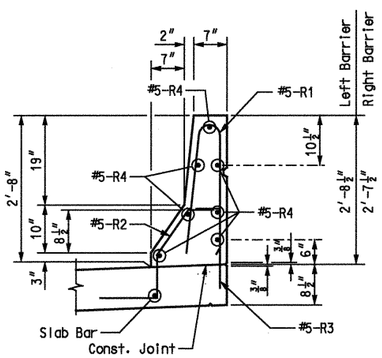

SECTION A-A

Scale: ¾″=1′-0″

Notes:
The cross sectional area above slab = 2.28 sq. ft. Left Barrier and 2.25 sq. ft. Right Barrier

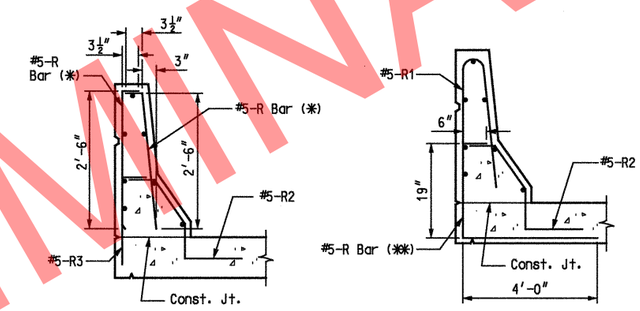

R-BAR PERMISSIBLE ALTERNATE SHAPE

(✱) The R1 bar may be seperated into two bars as shown, at the contractor's option, only when slip forming is not used. (All dimensioins are out to out.)

(✱✱) The R3 bar and #5 bottom transverse slab bar in cantilever (P/S panels only) combination may be furnished as one bar as shown, at the contractor's option.

Notes:
e.f. denotes each face.
(L.B.) denotes Left Barrier.
(R.B.) denotes Right Barrier.
Use a minimum lap of 2′-11″ for #5 horizontal barrier curb bars.
Top of safety barrier curb shall be built parallel to grade with barrier curb joints (except at end bents) normal to grade.
All exposed edges of safety barrier curb shall have either a ½″ radius or a ⅜″ bevel, unless otherwise noted.
Payment for all concrete and reinforcement, complete-in-place, will be considered completely covered by the contract unit price for safety barrier curb per linear foot.
Concrete in the safety barrier curb shall be Class B-1.
Measurement of safety barrier curb is to the nearest linear foot for each structure, measured along the outside top of slab from end of curb to end of curb.
Concrete traffic barrier delineators shall be placed on top of safety barrier curb as shown on Missouri Standard Plans 617.10 and in accordance with Sec 617. Concrete traffic barrier delineators will be considered completely covered by the contract unit price for "Safety Barrier Curb (Type C)".
The curb shall be cured by application of Type 1-D or Type 2 Liquid Membrane-Forming Compound in accordance with Sec 1055. Surface sealing for concrete in accordance with Sec 703 is not required. Application of linseed oil at the contractor's expense is permitted.

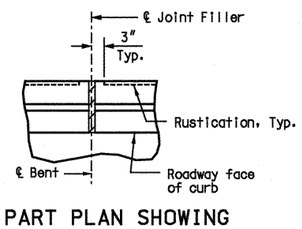

PART PLAN SHOWING SAFETY BARRIER CURB JOINT

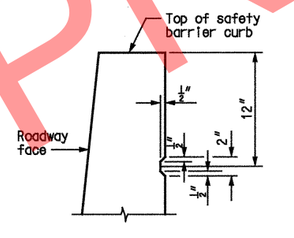

PART SECTION SHOWING RUSTICATION DETAIL

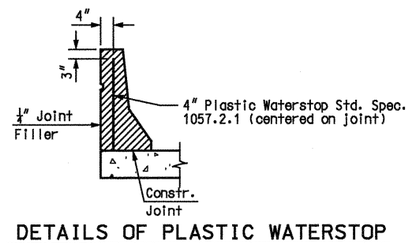

DETAILS OF PLASTIC WATERSTOP

Notes:
Plastic waterstop shall be placed in all safety barrier curb filled joints except structures with superelevation, use on all lower safety barrier curb joints only.
Cost of plastic waterstop complete in place will be considered completely covered by the contract unit price for Safety Barrier Curb.

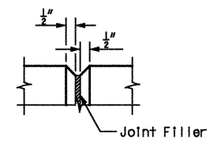

FILLED JOINT DETAIL

SAFETY BARRIER CURB DETAILS

PRELIMINARY

IF A SEAL IS PRESENT ON THIS SHEET IT HAS BEEN ELECTRONICALLY SEALED AND DATED.

STATE OF MISSOURI — GINA D. HORNER — NUMBER E-30413 — REGISTERED PROFESSIONAL ENGINEER — 3-9-10

DATE PREPARED	
4/13/09	
ROUTE I-49	STATE MO
DISTRICT BR	SHEET NO. 23
COUNTY McDONALD	
JOB NO. J7P0601	
CONTRACT ID.	
PROJECT NO.	
BRIDGE NO. A7000	

DATE	DESCRIPTION

MISSOURI HIGHWAYS AND TRANSPORTATION COMMISSION
105 WEST CAPITOL
JEFFERSON CITY, MO 65102
1-888-ASK-MODOT (1-888-275-6636)

HNTB
715 KIRK DRIVE
KANSAS CITY, MO 64105-1310
TELEPHONE (816) 472-1201
CERTIFICATE OF AUTHORITY NO. 001270

USER: TThompson
PLOTTED: 08-MAR-2010 15:15 \\kcow00\Jobs\49259\Bridges\Plans\CDtoMoDotA7000_03-05-10\J7P0601\A7000-dgn\ZPLOT_B25.dgn

Detailed APR 2009
Checked APR 2009

Note: This drawing is not to scale. Follow Dimensions.

REV.

\\kcow00\Jobs\49259\Bridges\Plans\CDtoMoDotA7000_03-05-10\J7P0601\A7000-dgn\ZPLOT_B25.dgn 08-MAR-2010 15:15

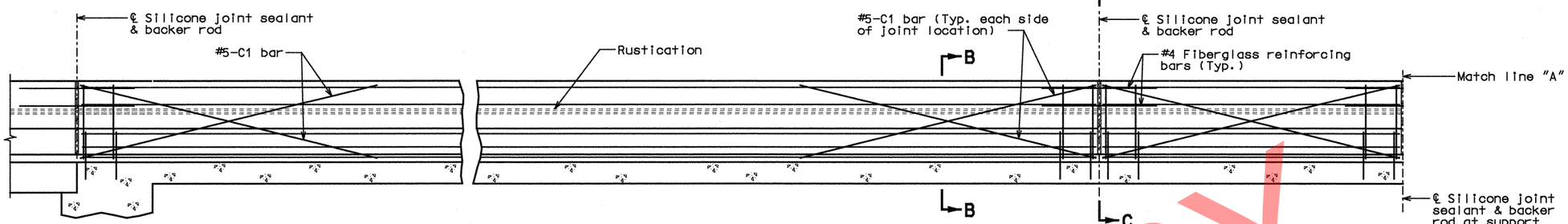

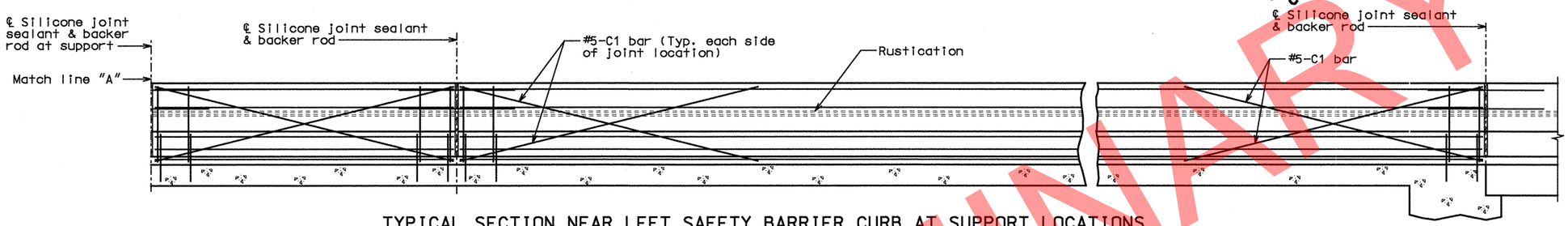

TYPICAL SECTION NEAR LEFT SAFETY BARRIER CURB AT SUPPORT LOCATIONS (OPTIONAL SLIP-FORM BRIDGE SAFETY BARRIER CURB)

Note:
Left barrier curb shown, right barrier curb similar.

Notes:

Top of safety barrier curb shall be built parallel to grade with barrier curb joints (except at end bents) normal to grade.

Payment for all concrete and reinforcement, complete-in-place, will be considered completely covered by the contract unit price for safety barrier curb per linear foot.

Concrete in the safety barrier curb shall be Class B-1.

Measurement of safety barrier curb is to the nearest linear foot for each structure, measured along the outside top of slab from end of curb to end of curb.

The curb shall be cured by application of Type 1-D or Type 2 Liquid Membrane-Forming Compound in accordance with Sec 1055. Surface sealing for concrete in accordance with Sec 703 is not required. Application of linseed oil at the contractor's expense is permitted.

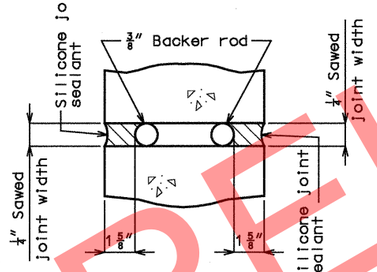

SECTION A-A

Notes:

Joint sealant and backer rods shall be used on all slip-form barrier curbs instead of joint filler and shall be in accordance with Sec 717 for silicone joint sealant for saw cut and formed joints.

Plastic waterstop shall not be used with slip-form option.

C Bars (Slip-form option only) shall be used in addition to cast-in-place conventional forming reinforcement for bridge safety barrier curb.

For Slip-Form option, all sides of the safety barrier curb shall have a vertically broomed finish and the curb top shall have a transversely broomed finish.

Concrete traffic barrier delineators shall be placed on top of the safety barrier curb (Type C) as shown on Missouri Standard Plans 617.10 and in accordance with Sec 617. Concrete traffic barrier delineators will be considered completely covered by the contract unit price for "Safety Barrier Curb (Type C)".

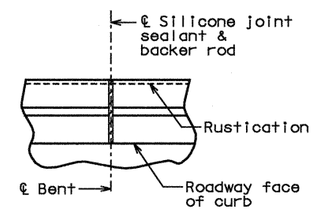

PART PLAN SHOWING SAFETY BARRIER CURB JOINT

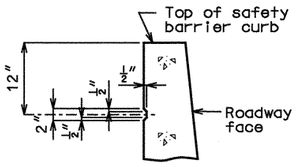

PART SECTION SHOWING RUSTICATION DETAILS

RUSTICATION DETAIL

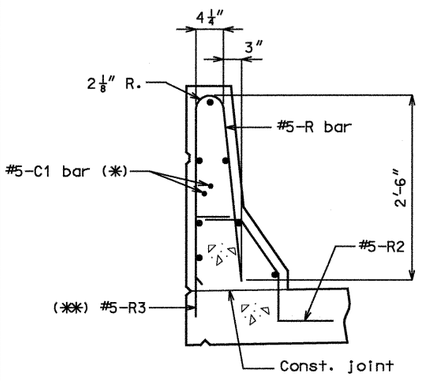

PART SECTION B-B

Notes:
(✱) Each side of joint location.

(✱✱) The R3 bar and #5 bottom transverse slab bar in cantilever (P/S panels only) combination may be furnished as one bar at the contractor's option.

Note:

Cost of silicone joint sealant and backer rod, complete-in-place, will be considered completely covered by the contract unit price for Safety Barrier Curb.

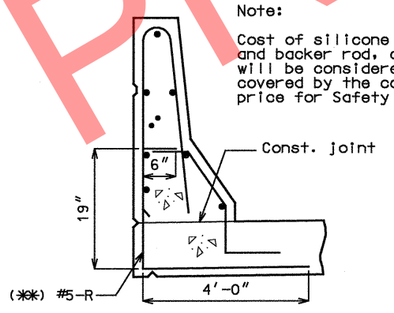

PART SECTION B-B
(Optional #5-R bar shown)

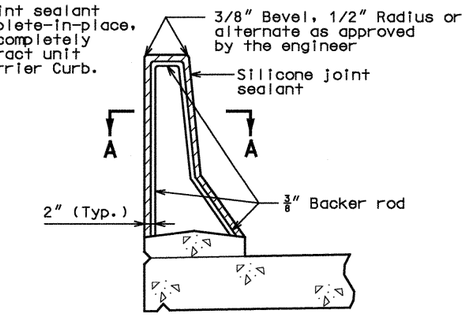

SECTION THRU JOINT

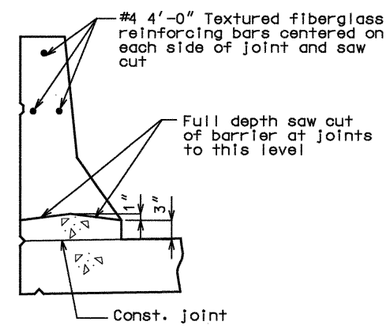

PART SECTION C-C

OPTIONAL SLIP-FORM BRIDGE SAFETY BARRIER CURB

Detailed APR 2009
Checked APR 2009

Note: This drawing is not to scale. Follow Dimensions.

STATE OF MISSOURI
GINA D. HORNER
NUMBER E-30413
REGISTERED PROFESSIONAL ENGINEER
3-9-10

DATE PREPARED	
4/13/09	
ROUTE I-49	STATE MO
DISTRICT BR	SHEET NO. 24
COUNTY McDONALD	
JOB NO. J7P0601	
CONTRACT ID.	
PROJECT NO.	
BRIDGE NO. A7000	

DATE	DESCRIPTION

MISSOURI HIGHWAYS AND TRANSPORTATION COMMISSION
105 WEST CAPITOL
JEFFERSON CITY, MO 65102
1-888-ASK-MODOT (1-888-275-6636)

HNTB
715 KIRK DRIVE
KANSAS CITY, MO 64105-1310
TELEPHONE (816) 472-1201
CERTIFICATE OF AUTHORITY NO. 001270

IF A SFAI IS PRESENT ON THIS SHEET IT HAS BEEN ELECTRONICALLY SEALED AND DATED.

REV.

BILL OF REINFORCING STEEL

NO. REQ'D.	MARK NO. SIZE	MARK NO. MARK	LOCATION	EPOXY (E)	SHAPE NO.	STIRRUP (S)	SUBSTR. (X)	VARIES (V)	NO. EACH	B FT. IN.	C FT. IN.	D FT. IN.	E FT. IN.	F FT. IN.	H FT. IN.	K FT. IN.	NOMINAL LENGTH FT. IN.	ACTUAL LENGTH FT. IN.	WEIGHT LBS.
			SUBSTRUCTURE																
			BENT 2																
48	8D201		Footing		18		X			9'-6"							11'-4"	11'-4"	1,452
4	6D202		Footing		5		X			9'-0"	5'-7"	5'-7"					20'-2"	19'-11"	120
24	5D203		Footing		20		X			9'-6"							9'-6"	9'-6"	238
24	10D204		Footing		17		X			11'-11"							13'-4"	13'-4"	1,377
							X												
8	10H201		Beam		18		X			31'-6"							34'-4"	34'-4"	1,182
6	10H202		Beam		18		X			29'-6"							32'-4"	32'-4"	835
8	10H203		Beam		20		X			31'-6"							31'-6"	31'-6"	1,084
12	5H204		Beam		20		X			31'-6"							31'-6"	31'-6"	394
32	4H205		Beam Seat		20		X			3'-0"							3'-0"	3'-0"	64
14	6H206		Beam		5	S	X			3'-7"	2'-5"	2'-5"					8'-5"	8'-2"	172
51	4P201		Column	E	16		X			3'-1"	16"						11'-1"	11'-1"	378
82	5U201		Beam		53	S	X			2'-8"	4'-3"						14'-9"	14'-6"	1,240
28	4U202		Beam Seat		5	S	X			3'-6"	12"	12"					5'-6"	5'-4"	100
6	5U203		Beam		5	S	X			3'-9"	4'-3"	4'-3"					12'-3"	12'-1"	76
14	10V201		Column	E	20		X			28'-3"							28'-3"	28'-3"	1,702
12	10V202		Column	E	20		X			28'-10"							28'-10"	28'-10"	1,489
18	6V203		Beam		20		X			2'-6"							2'-6"	2'-6"	68
			SUPERSTRUCTURE																
			END BENT 1																
8	6H101		Diaphragm		20					23"							23"	23"	23
12	6H102		Diaphragm		20					6'-8"							6'-8"	6'-8"	120
8	6H103		Beam		20					34'-2"							34'-2"	34'-2"	411
4	6H104		Diaphragm		20					34'-4"							34'-4"	34'-4"	206
4	6H105		Beam		20					4'-11"							4'-11"	4'-11"	30
4	6H106		Diaphragm	E	20					34'-5"							34'-5"	34'-5"	207
8	6H107		Beam		20					12'-2"							12'-2"	12'-2"	146
4	6H108		Beam		20					14'-2"							14'-2"	14'-2"	85
4	5H112		Diaphragm		20					4'-6"							4'-6"	4'-6"	19
35	5H113		Diaphragm	E	20					2'-6"							2'-6"	2'-6"	91
22	5U101		Beam		5	S				2'-8"	5'-1"	5'-1"					12'-10"	12'-7"	289
5	4U102		Beam		53	S				2'-8"	2'-8"						11'-5"	11'-2"	37
2	4U103		Beam		5	S				2'-8"	3'-0"	3'-0"					8'-8"	8'-6"	11
3	4U104		Beam		53	S				2'-8"	3'-0"						12'-1"	11'-10"	24
2	4U105		Beam		53	S				2'-8"	3'-4"						12'-9"	12'-6"	17
3	4U106		Beam		5	S				2'-8"	3'-4"	3'-4"					9'-4"	9'-2"	18
5	4U107		Beam		53	S				2'-8"	3'-8"						13'-5"	13'-2"	44
27	5U108		Diaphragm	E	5	S				2'-2"	5'-2"	4'-11"					12'-3"	12'-0"	338
27	6U109		Diaphragm		19	S				4'-1"	2'-4"						6'-5"	6'-4"	257
42	6U110		Diaphragm	E	19	S				3'-4"	12'-6"						15'-10"	15'-9"	994
10	5V101		Beam		20					5'-5"							5'-5"	5'-5"	56
20	6V102		Diaphragm		20					4'-1"							4'-1"	4'-1"	123

Note:
Two additional #10-V201 are included in the Bill of Reinforcing Steel for testing.

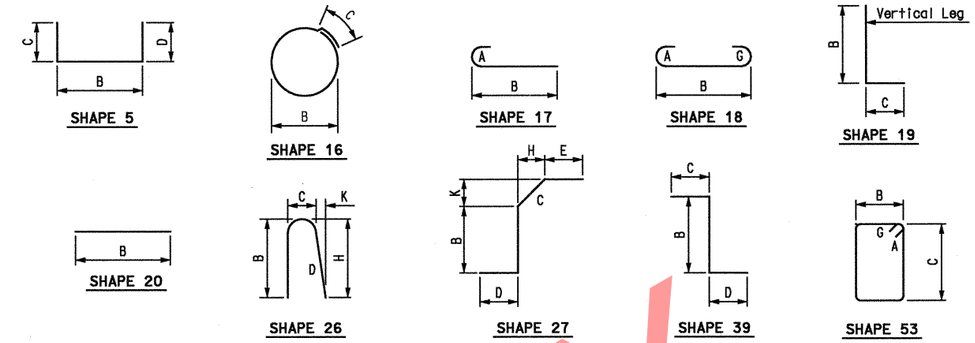

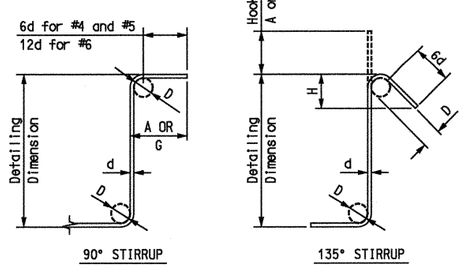

STIRRUP HOOK DIMENSIONS

BAR SIZE	D (IN.)	90° HOOK: HOOK A OR G	135° HOOK: HOOK A OR G	135° HOOK: APPROX. H
	GRADES 40 - 50 - 60 KSI			
#4	2"	$4\frac{1}{2}$"	$4\frac{1}{2}$"	3"
#5	$2\frac{1}{2}$"	6"	$5\frac{1}{2}$"	$3\frac{3}{4}$"
#6	$4\frac{1}{2}$"	12"	8"	$4\frac{1}{2}$"

Note:
Unless otherwise noted, diameter "D" is the same for all bends and hooks on a bar.

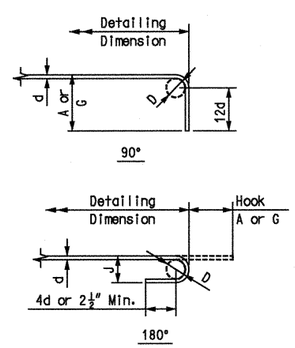

END HOOK DIMENSIONS

BAR SIZE	D (IN.)	ALL GRADES: 180° HOOKS: HOOK A OR G	ALL GRADES: 180° HOOKS: J	ALL GRADES: 90° HOOKS: HOOK A OR G
#3	$2\frac{1}{4}$"	5"	3"	6"
#4	3"	6"	4"	8"
#5	$3\frac{3}{4}$"	7"	5"	10"
#6	$4\frac{1}{2}$"	8"	6"	12"
#7	$5\frac{1}{4}$"	10"	7"	14"
#8	6"	11"	8"	16"
#9	$9\frac{1}{2}$"	15"	$11\frac{1}{4}$"	19"
#10	$10\frac{3}{4}$"	17"	$13\frac{1}{4}$"	22"
#11	12"	19"	$14\frac{3}{4}$"	2'-0"
#14	$18\frac{1}{4}$"	2'-3"	$21\frac{3}{4}$"	2'-7"

Notes:
All standard hooks and bends other than 180 degree are to be bent with the same procedure as for 90 degree standard hooks.
Hooks and bends shall be in accordance with the procedures as shown on this sheet.
E = Epoxy coated reinforcement.
S = Stirrup.
X = Bar is included in substructure quantities.
V = Bar dimensions vary in equal increments between dimensions shown on this line and the following line.
No. Each = Number of bars of each length.
Nominal lengths are based on out to out dimensions shown in bending diagrams and are listed for fabricators use. (Nearest inch)
Actual lengths are measured along centerline bar to the nearest inch.
Payweights are based on actual lengths.
Reinforcing Steel (Grade 60) fy = 60,000 psi.

BILL OF REINFORCING STEEL

Detailed AUG 2009
Checked AUG 2009

Note: This drawing is not to scale. Follow Dimensions.

Sheet No. 25 of 27

STATE OF MISSOURI
GINA D. HORNER
NUMBER E-30413
REGISTERED PROFESSIONAL ENGINEER
3-9-10

DATE PREPARED

ROUTE	STATE
I-49	MO
DISTRICT	SHEET NO.
BR	25

COUNTY: McDONALD
JOB NO.: J7P0601
CONTRACT ID.
PROJECT NO.
BRIDGE NO.: A7000

DESCRIPTION	DATE

MISSOURI HIGHWAYS AND TRANSPORTATION COMMISSION
105 WEST CAPITOL
JEFFERSON CITY, MO 65102
1-888-ASK-MODOT (1-888-275-6636)

HNTB
715 KIRK DRIVE
KANSAS CITY, MO 64105-1310
TELEPHONE (816) 472-1201
CERTIFICATE OF AUTHORITY NO. 001270

IF A SEAL IS PRESENT ON THIS SHEET IT HAS BEEN ELECTRONICALLY SEALED AND DATED.

REV.

USER: TThompson
PLOTTED: 08-MAR-2010 15:15 \\kcow00\Jobs\49259\Bridges\Plans\CDtoMoDotA7000_03-05-10\J7P0601\A7000-dgn\ZPLOT_B30.dgn

BILL OF REINFORCING STEEL

NO. REQ'D.	MARK NO. SIZE MARK	LOCATION	EPOXY (E)	SHAPE NO.	STIRRUP (S)	SUBSTR. (X)	VARIES (V)	NO. EACH	B FT. IN.	C FT. IN.	D FT. IN.	E FT. IN.	F FT. IN.	H FT. IN.	K FT. IN.	NOMINAL LENGTH FT. IN.	ACTUAL LENGTH FT. IN.	WEIGHT LBS.
		END BENT 3																
8	6H301	Diaphragm		20					2′-3″							2′-3″	2′-3″	27
12	6H302	Diaphragm		20					6′-8″							6′-8″	6′-8″	120
8	6H303	Beam		20					34′-4″							34′-4″	34′-4″	413
4	6H304	Diaphragm		20					34′-5″							34′-5″	34′-5″	207
4	6H305	Beam		20					4′-11″							4′-11″	4′-11″	30
4	6H306	Diaphragm	E	20					34′-7″							34′-7″	34′-7″	208
8	6H307	Beam		20					12′-2″							12′-2″	12′-2″	146
4	6H308	Beam		20					14′-2″							14′-2″	14′-2″	85
4	5H312	Diaphragm		20					4′-6″							4′-6″	4′-6″	19
35	5H313	Diaphragm	E	20					2′-6″							2′-6″	2′-6″	91
22	5U301	Beam		5	S				2′-8″	5′-2″	5′-2″					13′-0″	12′-9″	293
5	4U302	Beam		53	S				2′-8″	2′-8″						11′-5″	11′-2″	37
2	4U303	Beam		5	S				2′-8″	3′-0″	3′-0″					8′-8″	8′-6″	11
3	4U304	Beam		53	S				2′-8″	3′-0″						12′-1″	11′-10″	24
2	4U305	Beam		53	S				2′-8″	3′-4″						12′-9″	12′-6″	17
3	4U306	Beam		5	S				2′-8″	3′-4″	3′-4″					9′-4″	9′-2″	18
5	4U307	Beam		53	S				2′-8″	3′-8″						13′-5″	13′-2″	44
27	5U308	Diaphragm	E	5	S				2′-2″	5′-3″	4′-11″					12′-4″	12′-1″	340
27	6U309	Diaphragm		19	S				4′-2″	2′-4″						6′-6″	6′-5″	260
44	6U310	Diaphragm	E	19	S				3′-4″	12′-6″						15′-10″	15′-9″	1,041
10	5V301	Beam		20					5′-5″							5′-5″	5′-5″	56
20	6V302	Diaphragm		20					4′-1″							4′-1″	4′-1″	123
		BENT 2 DIAPH.																
12	4H21	Diaphragm		20					8′-4″							8′-4″	8′-4″	67
20	5H22	Diaphragm		19	S				3′-2″	9″						3′-11″	3′-10″	80
12	6H23	Diaphragm		20					6′-10″							6′-10″	6′-10″	123
8	5H24	Strand Tie Bar		20					4′-6″							4′-6″	4′-6″	38
8	5H25	Strand Tie Bar		20					3′-3″							3′-3″	3′-3″	27
38	4U21	Diaphragm	E	39	S				5′-0″	12″	22″					7′-10″	7′-8″	195
12	6U23	Diaphragm	E	39	S				5′-0″	18″	22″					8′-4″	8′-1″	146
8	5V21	Diaphragm	E	20					5′-0″							5′-0″	5′-0″	42
		SLAB																
74	5S1	Slab, Top & Bot.	E	20					60′-0″							60′-0″	60′-0″	4,631
37	5S2	Slab, Top & Bot.	E	20					52′-5″							52′-5″	52′-5″	2,023
56	8S3	Slab, Top	E	20					54′-6″							54′-6″	54′-6″	8,149
321	6S4	Slab, Top	E	20					34′-0″							34′-0″	34′-0″	16,393
322	5S5	Slab, Bottom	E	20					4′-0″							4′-0″	4′-0″	1,343
		BARRIER																
24	5C1	Slip Form	E	20					10′-0″							10′-0″	10′-0″	250
338	5R1	Barrier Curb	E	26	S				2′-6″	4 1/4″	2′-6 1/8″			2′-6″	3″	5′-2″	5′-2″	1,821
338	5R2	Barrier Curb	E	27	S				7″	11 1/4″	12″	6″		6 3/8″	9 1/4″	3′-1″	2′-9″	969
338	5R3	Barrier Curb	E	19	S				17″	6″						23″	22″	646
28	5R4	Barrier Curb	E	20					36′-6″							36′-6″	36′-6″	1,066
30	5R5	Barrier Curb	E	20					9′-8″							9′-8″	9′-8″	302
28	5R6	Barrier Curb	E	20					39′-0″							39′-0″	39′-0″	1,139

BILL OF REINFORCING STEEL

NO. REQ'D.	MARK NO. SIZE MARK	LOCATION	EPOXY (E)	SHAPE NO.	STIRRUP (S)	SUBSTR. (X)	VARIES (V)	NO. EACH	B FT. IN.	C FT. IN.	D FT. IN.	E FT. IN.	F FT. IN.	H FT. IN.	K FT. IN.	NOMINAL LENGTH FT. IN.	ACTUAL LENGTH FT. IN.	WEIGHT LBS.
		TOTALS																
	4																	533
	4		E															573
	5																	2,825
	5		E															15,092
	6																	3,295
	6		E															18,989
	8																	1,452
	8		E															8,149
	10																	4,478
	10		E															3,191
		TOTAL																12,583
		TOTAL E																45,994
		SLAB ON CONCRETE I-GIRDER																
	4																	369
	4		E															195
	5																	877
	5		E															8,899
	6																	2,935
	6		E															18,989
	8		E															8,149
		TOTAL																4,181
		TOTAL E																36,232
		REINFORCING STEEL (BRIDGES)																
	4																	164
	4		E															378
	5																	1,948
	6																	360
	8																	1,452
	10																	4,478
	10		E															3,191
		TOTAL																8,402
		TOTAL E																3,569
		BARRIER CURB																
	5		E															5,943
		SLIP FORM OPTION																
	5		E															250

Notes:
For Bar Bending Diagrams, see Sheet 25.
Two additional #4-U21, #5-R5, #6-U310, and #8-S3 are included in the Bill of Reinforcing Steel for testing.

BILL OF REINFORCING STEEL

Detailed AUG 2009
Checked AUG 2009

Note: This drawing is not to scale. Follow Dimensions.

STATE OF MISSOURI
GINA D. HORNER
NUMBER E-30413
REGISTERED PROFESSIONAL ENGINEER
3-9-10

DATE PREPARED 08/06/09
ROUTE I-49 | STATE MO
DISTRICT BR | SHEET NO. 26
COUNTY McDONALD
JOB NO. J7P0601
CONTRACT ID.
PROJECT NO.
BRIDGE NO. A7000

DESCRIPTION	DATE

MISSOURI HIGHWAYS AND TRANSPORTATION COMMISSION
105 WEST CAPITOL
JEFFERSON CITY, MO 65102
1-888-ASK-MODOT (1-888-275-6636)

HNTB
715 KIRK DRIVE
KANSAS CITY, MO 64105-1310
TELEPHONE (816) 472-1201
CERTIFICATE OF AUTHORITY
NO. 001270

IF A SEAL IS PRESENT ON THIS SHEET IT HAS BEEN ELECTRONICALLY SEALED AND DATED.

REV.

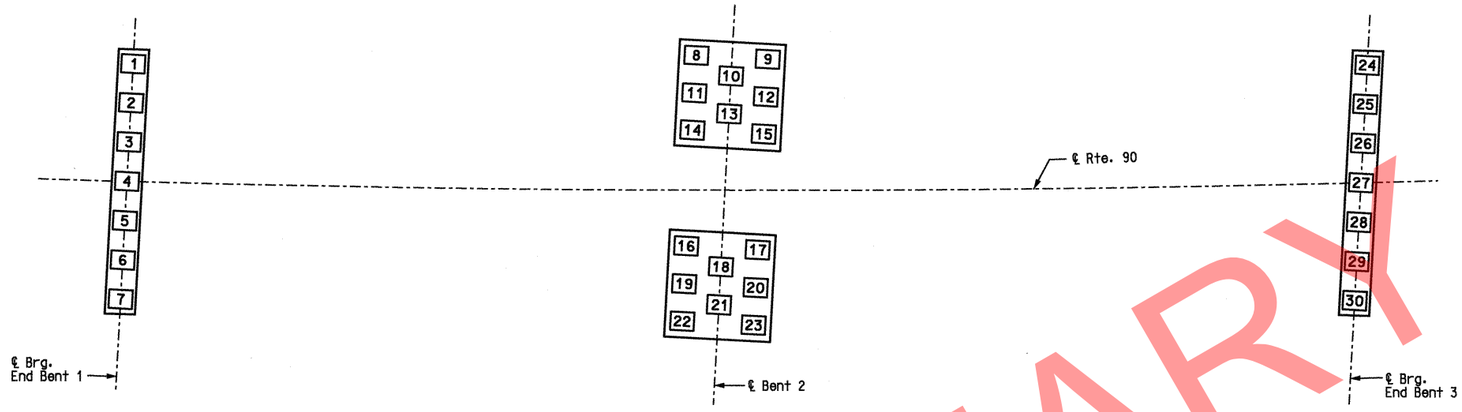

"AS BUILT PILE" DATA

PILE NO.	LENGTH IN PLACE (FT.)	COMPUTED BEARING (KIPS)	REMARKS
END BENT 1			
1			
2			
3			
4			
5			
6			
7			
BENT 2			
8			
9			
10			
11			
12			
13			
14			
15			
16			
17			
18			
19			
20			
21			
22			
23			
END BENT 3			
24			
25			
26			
27			
28			
29			
30			

Notes:
Indicate in the remarks column:
A. If pilings were driven to practical refusal.
B. If pile batter is other than shown on the Bent Detail Sheet.
C. Type of piling used.

NOTE:
THIS SHEET TO BE COMPLETED BY MoDOT CONSTRUCTION PERSONNEL.

AS-BUILT PILE DATA

STATE OF MISSOURI
GINA D. HORNER
NUMBER E-30413
REGISTERED PROFESSIONAL ENGINEER
3-9-10

DATE PREPARED 4/14/09
ROUTE I-49 | STATE MO
DISTRICT BR | SHEET NO. 27
COUNTY McDONALD
JOB NO. J7P0601
CONTRACT ID.
PROJECT NO.
BRIDGE NO. A7000

DESCRIPTION	DATE

IF A SEAL IS PRESENT ON THIS SHEET IT HAS BEEN ELECTRONICALLY SEALED AND DATED.

MISSOURI HIGHWAYS AND TRANSPORTATION COMMISSION
105 WEST CAPITOL
JEFFERSON CITY, MO 65102
1-888-ASK-MODOT (1-888-275-6636)

HNTB
715 KIRK DRIVE
KANSAS CITY, MO 64105-1310
TELEPHONE (816) 472-1201
CERTIFICATE OF AUTHORITY NO. 001270

REV.

USER: TThompson
PLOTTED: 08-MAR-2010 15:15 \\kcow00\Jobs\49259\Bridges\Plans\CDtoMoDotA7000_03-05-10\J7P0601\A7000-dgn\ZPLOT_B33.dgn

Detailed APR 2009
Checked APR 2009

Note: This drawing is not to scale. Follow Dimensions.

MISSOURI HIGHWAYS AND TRANSPORTATION COMMISSION

3 (8′× 8′) CONCRETE BOX CULVERT

SEC/SUR 15 TWP 21N RGE 32W

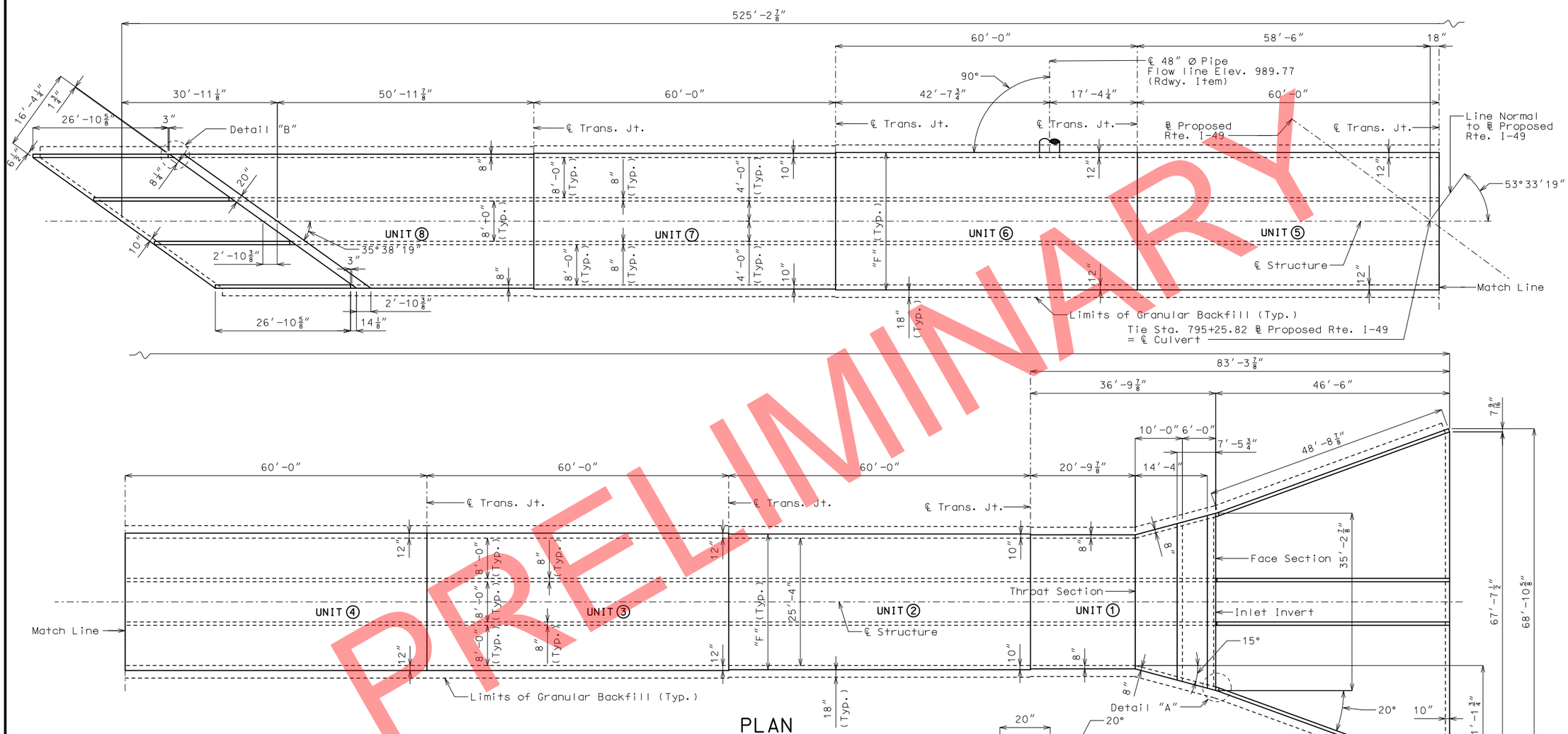

PLAN

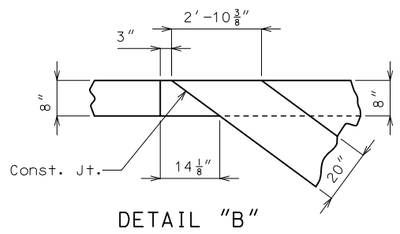

DETAIL "B"

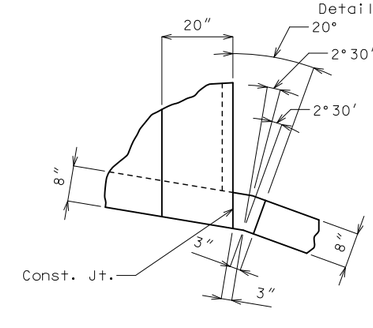

DETAIL "A"

Notes:

For General Notes, Estimated Quantities, Hydrologic Data & Location Sketch, see Sheet No. 2.

For Elevation and End Elevation, see Sheet No. 2.

For Culvert Data Table, see Sheet No. 3.

For Details of Unit No. 1, see Sheets No. 4 thru 6.

B.M.-49-01-04 ELEV. 996.57
N: 140,345.6810 E: 2,822,699.6383
RR SPIKE IN E SIDE OF PP W SIDE OF CO. ROAD. 2′ W OF ROAD. SPIKE IS 0.9′ ABOVE GROUND 2.2 MILES S OF RTE. H

CULVERT-BRIDGE OVER GOODIN HOLLOW TRIBUTARY

STATE ROAD FROM RTE. H TO STATE LINE
ABOUT 4 MILES NORTH OF STATE LINE
STA. 795+25.82

STD. 703.37
STD. 703.60
STD. 703.83
STD. 703.86
STD. 703.87
STD. 706.35

Designed Oct. 2019
Detailed Nov. 2019
Checked Nov. 2019

Note: This drawing is not to scale. Follow dimensions.

STATE OF MISSOURI
CHRISTOPHER M. SHANKS
NUMBER PE-2010019597
PROFESSIONAL ENGINEER
THIS SHEET HAS BEEN SIGNED, SEALED AND DATED ELECTRONICALLY.

DATE PREPARED	
12/9/2019	
ROUTE I-49	STATE MO
DISTRICT BR	SHEET NO. 1
COUNTY McDONALD	
JOB NO. J7P0601	
CONTRACT ID.	
PROJECT NO.	
BRIDGE NO. A7052	

DATE	DESCRIPTION

MISSOURI HIGHWAYS AND TRANSPORTATION COMMISSION
105 WEST CAPITOL
JEFFERSON CITY, MO 65102
1-888-ASK-MODOT (1-888-275-6636)

IF A SEAL IS PRESENT ON THIS SHEET IT HAS BEEN ELECTRONICALLY SEALED AND DATED.

HYDROLOGIC DATA
Drainage Area = 1.3 (sq. mi.)
Design High Water (DHW) Elev. = 996.8
Design High Water Frequency = 100 (year)
Design High Water Discharge = 1550 (cfs)
Estimated Backwater = 0.9 (ft)
Outlet Velocity = 21.0 (ft/sec)
Roadway Overtopping
Overtopping Flood Discharge = N/A
Overtopping Flood Frequency > 500 Years
500 Year Flood Elevation = 998.6

ESTIMATED QUANTITIES			FINAL QUANTITIES
Class 4 Excavation	cu. yard	2,905	
Class B-1 Concrete (Culverts-Bridge)	cu. yard	1,794.2	
Reinforcing Steel (Culverts-Bridge)	pound	215,340	

GENERAL NOTES:

Design Specifications:
2010 - AASHTO LRFD Bridge Design Specifications and 2010 Interim Revisions

Design Unit Stresses:
Class B-1 Concrete (Box Culvert) f'c = 4,000 psi
Reinforcing Steel (Grade 60) fy = 60,000 psi

Design Loading:
HL-93 minus Lane Load
Earth 120 #/ft.^{3}
Equivalent fluid pressure
30 #/ft.^{3} (Min.) - 60 #/ft.^{3} (Max.)

Reinforcing Steel:
Minimum clearance to reinforcing steel shall be 1-1/2", unless otherwise shown.

Miscellaneous:
Provide grading of the channel bottom within the limits of the R/W as needed for culvert flowline elevations and transition of the channel bed to the culvert openings.

Taper channel banks to match end of culvert opening as required. (Roadway Item)

"Sec" refers to the sections in the standard and supplemental specifications unless specified otherwise.

If any part of the barrel is exposed, the roadway fill shall be warped to provide 12 inches minimum cover. (Roadway Item)

Provide an inlet for a 48" Ø pipe on the east wall of structure at ℄ Proposed Rte. I-49 Sta. 794+56.21, offset 33.51' right, Flow line Elev. 989.77. Verify and coordinate location and skew of pipe with roadway plans. For details of Pipe Inlet, see Missouri Standard Plans drawing 703.60.

Traffic Handling:
See Roadway Plans for traffic control.

Precast Option:
The box shown below indicating whether a precast or cip box was used should be checked by MoDOT Construction personnel:

☐ Precast Box used
☐ Cast-in-Place Box used

The use of precast box sections shall not be allowed for Unit 1.

When alternate precast concrete box culvert sections are used, the minimum distance from inside face of headwalls to precast sections measured along the shortest wall shall be 3 feet. Reinforcement and dimensions for wings and headwalls shall be in accordance with Missouri Standard Plans.

CURVE DATA

PI	STA. 808+04.90
Δ	35°20'41.50" RT.
D	1°21'51.1"
R	4200.00'
T	1338.16'
L	2590.91'
SE	VARIES
W =	0.0 FT

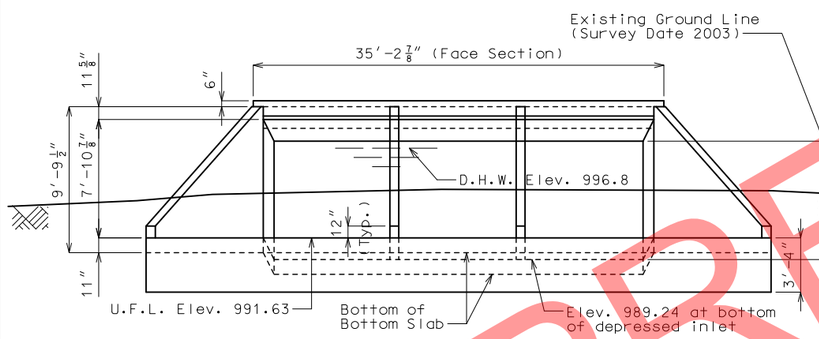

END ELEVATION
(UPSTREAM)

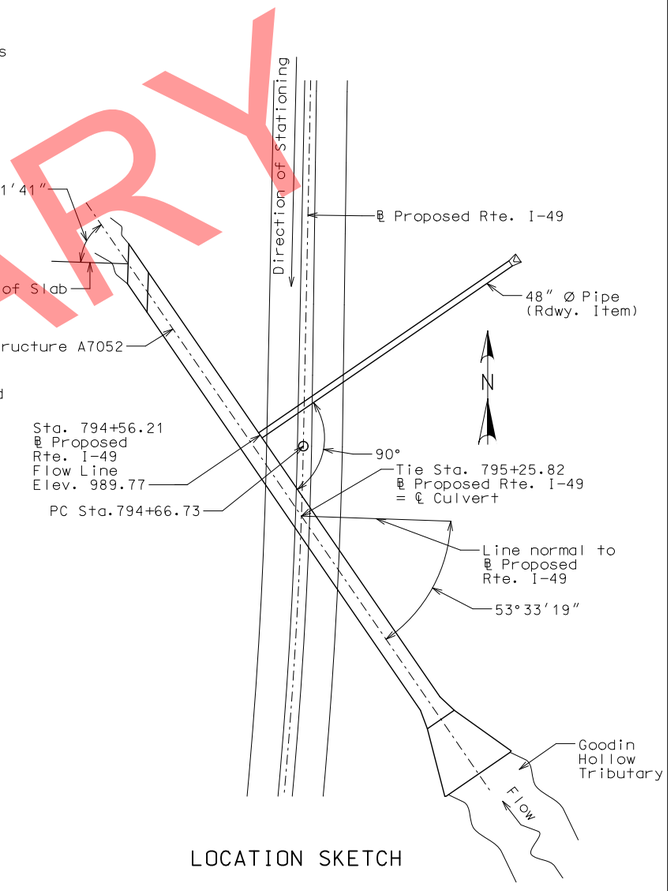

LOCATION SKETCH

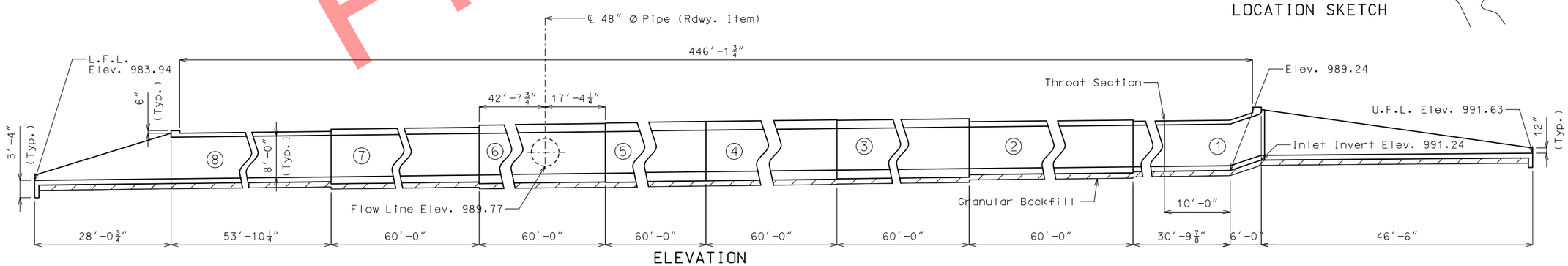

ELEVATION
Note: Dimensions are horizontal along ℄ Structure.

Detailed Nov. 2019
Checked Nov. 2019

Note: This drawing is not to scale. Follow dimensions.

STATE OF MISSOURI
CHRISTOPHER M. SHANKS
NUMBER PE-2010019597
PROFESSIONAL ENGINEER
THIS SHEET HAS BEEN SIGNED, SEALED AND DATED ELECTRONICALLY.

DATE PREPARED 12/9/2019
ROUTE I-49 | STATE MO
DISTRICT BR | SHEET NO. 2
COUNTY McDONALD
JOB NO. J7P0601
CONTRACT ID.
PROJECT NO.
BRIDGE NO. A7052

DESCRIPTION
DATE

MISSOURI HIGHWAYS AND TRANSPORTATION COMMISSION
105 WEST CAPITOL
JEFFERSON CITY, MO 65102
1-888-ASK-MODOT (1-888-275-6636)

IF A SEAL IS PRESENT ON THIS SHEET IT HAS BEEN ELECTRONICALLY SEALED AND DATED.

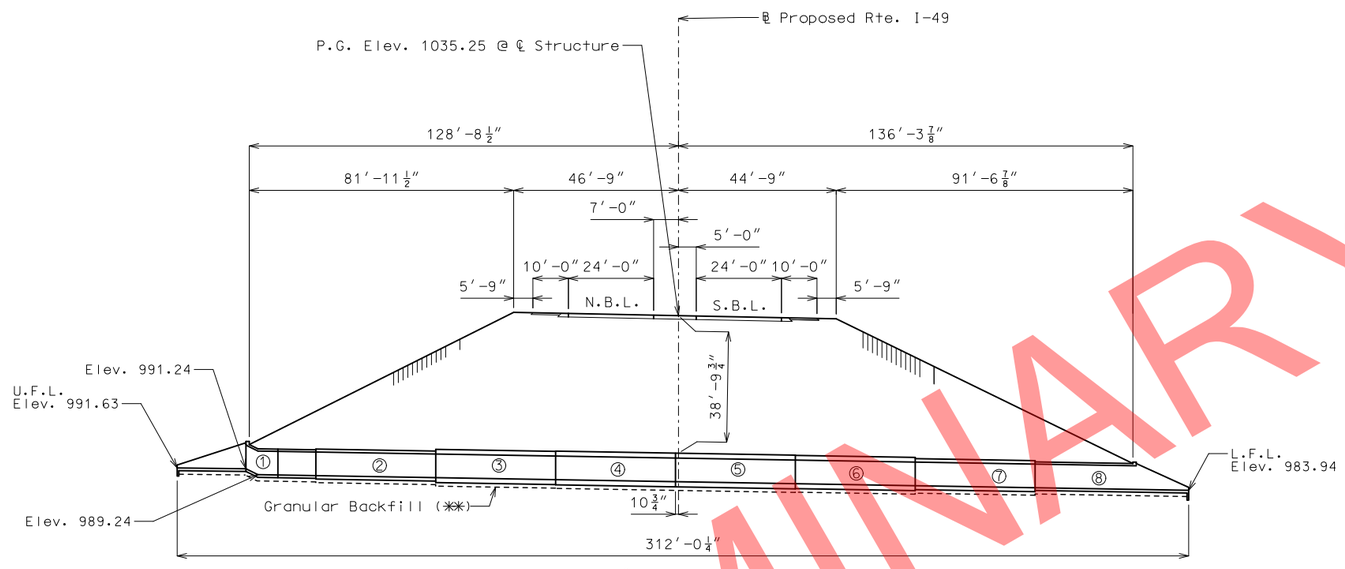

ELEVATION

Note: Dimensions are normal to ℄ Proposed Rte. I-49 @ ℄ Structure.

(✱✱) If unsuitable material is encountered, excavation of unsuitable material and furnishing and placing of granular backfill shall be in accordance with Sec 206.

CONCRETE TRIPLE BOX CULVERT DATA TABLE: SPAN (S) = 8 FT HEIGHT (HT) = 8 FT

REINFORCEMENT TABLE

UNIT	DESIGN FILL (✱)	MEMBER THICKNESS					TOP SLAB BARS														BOTTOM SLAB BARS										WALL BARS				
		"TS"	"BS"	"TX"	"TI"	"F"	A1 Bars		J3 Bars				H1 Bars				H2 Bars				A2 Bars		J4 Bars				H3 Bars				B1 Bars		B2 Bars		
	(ft-in)	Thick	Thick	Thick	Thick		Size	Spa.	Size	Spa.	C1	K2	Size	Spa.	C5	Q8	Size	Spa.	C6	Q9	Size	Spa.	Size	Spa.	C4	K3	Size	Spa.	C7	Q10	Size	Spa.	Size	Spa.	G1
1 & 8	14′-0″	10	11	8	8	26′-8″	5	8	6	6.5	44.1	30.0	5	14	37.0	40.0	5	14	24.0	25.0	5	6.5	6	6	44.9	103	5	6	35.0	39.0	5	12	5	9.5	0
2	23′-6″	14	15	10	8	27′-0″	5	6	5	6.5	40.0	34.0	5	12	34.0	39.0	5	12	22.0	23.0	6	8.5	5	7	40.4	107	6	7	37.0	43.0	5	12	5	8	0
3 & 6	35′-9″	17	19	12	8	27′-4″	6	7	5	6	44.4	37.0	6	14	42.0	47.0	6	14	30.0	31.0	6	7.5	5	6.5	39.3	111	6	6.5	37.0	43.0	5	12	5	8	0
4 & 5	39′-6″	19	20	12	8	27′-4″	6	7	5	6	44.6	39.0	6	14	42.0	47.0	6	14	29.0	30.0	6	6.5	5	6.5	39.6	112	6	6.5	37.0	43.0	5	12	5	7	0
7	27′-5″	15	16	10	8	27′-0″	6	8	5	6.5	43.0	35.0	6	16	42.0	48.0	6	16	30.0	32.0	6	7.5	5	7	38.4	108	6	7	37.0	43.0	5	12	5	8	0

Note:

Dimensions are in inches unless otherwise specified.

For Details and Reinforcement of Unit No. 1, see Sheets No. 4 thru 6.

(✱) Design fill height is the distance from the top of earth fill or roadway to the top of the top slab.

STATE OF MISSOURI
CHRISTOPHER M. SHANKS
NUMBER PE-2010019597
PROFESSIONAL ENGINEER

THIS SHEET HAS BEEN SIGNED, SEALED AND DATED ELECTRONICALLY.

DATE PREPARED	12/9/2019
ROUTE	I-49
STATE	MO
DISTRICT	BR
SHEET NO.	3
COUNTY	McDONALD
JOB NO.	J7P0601
CONTRACT ID.	
PROJECT NO.	
BRIDGE NO.	A7052

DESCRIPTION	DATE

IF A SEAL IS PRESENT ON THIS SHEET IT HAS BEEN ELECTRONICALLY SEALED AND DATED.

MISSOURI HIGHWAYS AND TRANSPORTATION COMMISSION
105 WEST CAPITOL
JEFFERSON CITY, MO 65102
1-888-ASK-MODOT (1-888-275-6636)

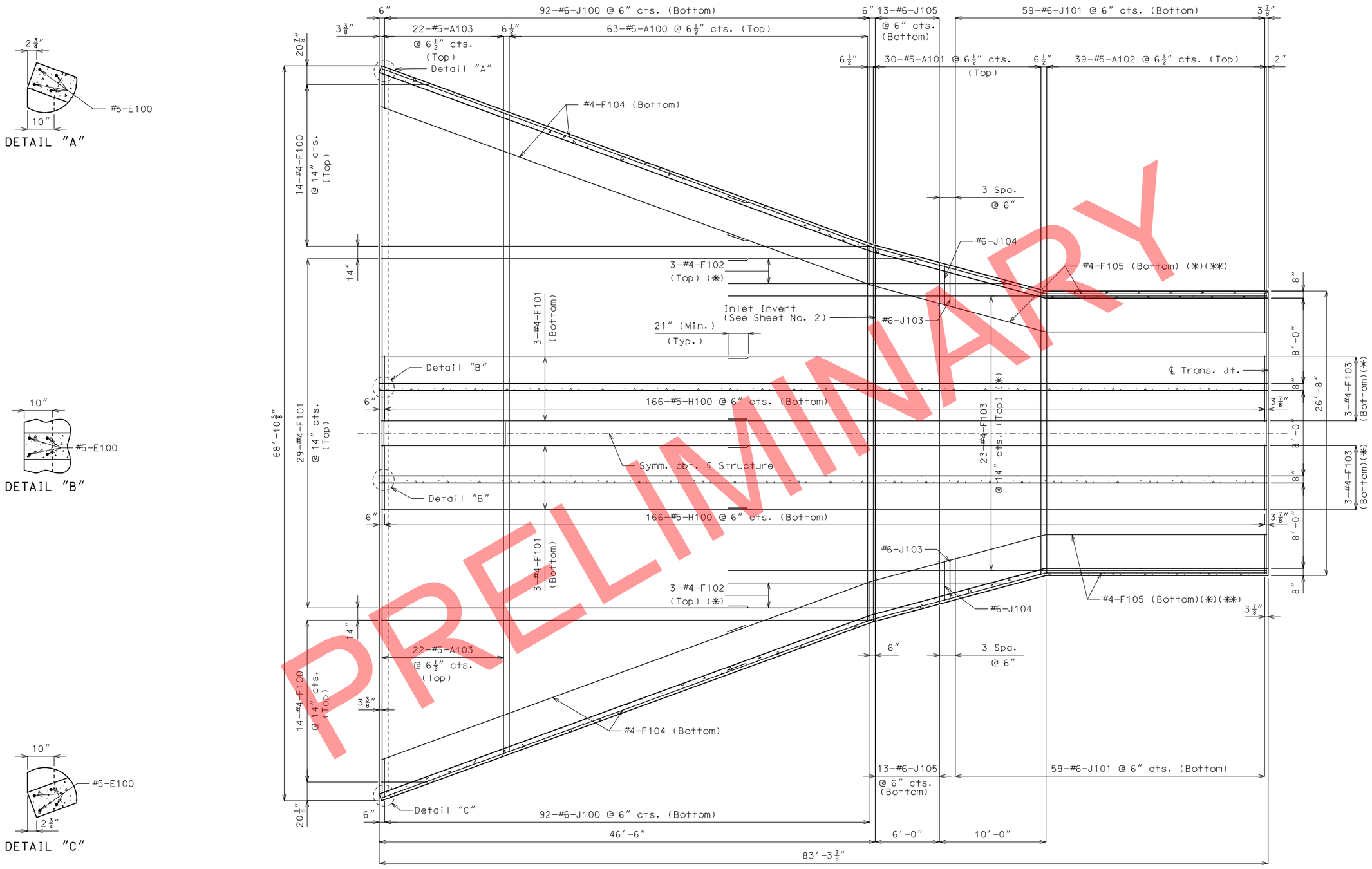

PLAN OF BOTTOM SLAB

DETAILS OF UNIT NO. 1

Notes:
For Plan of Top Slab, see Sheet No. 5.
✱ Top and Bottom slab F-Bars shall be bent in field to follow transition of bottom slab as shown on Sheet No. 6.
✱✱ #4-F105 denoted shall be bent in field as shown.

Detailed Nov. 2019
Checked Nov. 2019

Note: This drawing is not to scale. Follow dimensions.

STATE OF MISSOURI
CHRISTOPHER M. SHANKS
NUMBER PE-2010019597
PROFESSIONAL ENGINEER
THIS SHEET HAS BEEN SIGNED, SEALED AND DATED ELECTRONICALLY.

DATE PREPARED	12/9/2019
ROUTE	I-49
STATE	MO
DISTRICT	BR
SHEET NO.	4
COUNTY	McDONALD
JOB NO.	J7P0601
CONTRACT ID.	
PROJECT NO.	
BRIDGE NO.	A7052

DESCRIPTION
DATE

MISSOURI HIGHWAYS AND TRANSPORTATION COMMISSION
105 WEST CAPITOL
JEFFERSON CITY, MO 65102
1-888-ASK-MODOT (1-888-275-6636)

IF A SEAL IS PRESENT ON THIS SHEET IT HAS BEEN ELECTRONICALLY SEALED AND DATED.

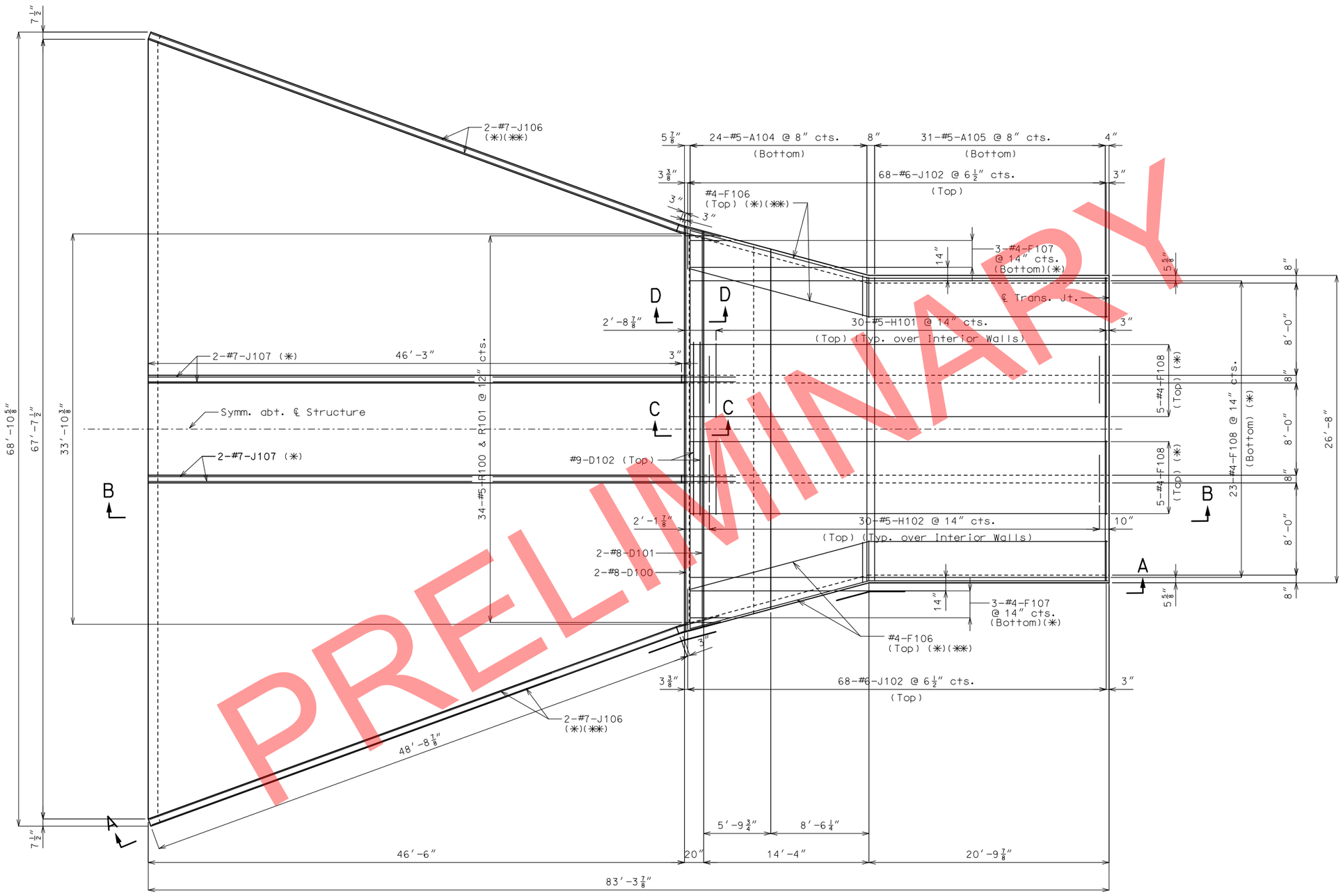

PLAN OF TOP SLAB

DETAILS OF UNIT NO. 1

Notes:

For Plan of Bottom Slab, see Sheet No. 4.

✱ Top and Bottom slab F-Bars & J-Bars shall be bent in field to follow transition of top slab as shown on Sheet No. 6.

✱✱ F-Bars & J-Bars denoted shall be bent in field as shown.

For Developed Elevation A-A, Section B-B, Section C-C and Section D-D, see Sheet No. 6.

Detailed Nov. 2019
Checked Nov. 2019

Note: This drawing is not to scale. Follow dimensions.

STATE OF MISSOURI
CHRISTOPHER M. SHANKS
NUMBER PE-2010019597
PROFESSIONAL ENGINEER

THIS SHEET HAS BEEN SIGNED, SEALED AND DATED ELECTRONICALLY.

DATE PREPARED	12/9/2019
ROUTE	I-49
STATE	MO
DISTRICT	BR
SHEET NO.	5
COUNTY	McDONALD
JOB NO.	J7P0601
CONTRACT ID.	
PROJECT NO.	
BRIDGE NO.	A7052

DATE | DESCRIPTION

MISSOURI HIGHWAYS AND TRANSPORTATION COMMISSION
105 WEST CAPITOL
JEFFERSON CITY, MO 65102
1-888-ASK-MODOT (1-888-275-6636)

IF A SEAL IS PRESENT ON THIS SHEET IT HAS BEEN ELECTRONICALLY SEALED AND DATED.

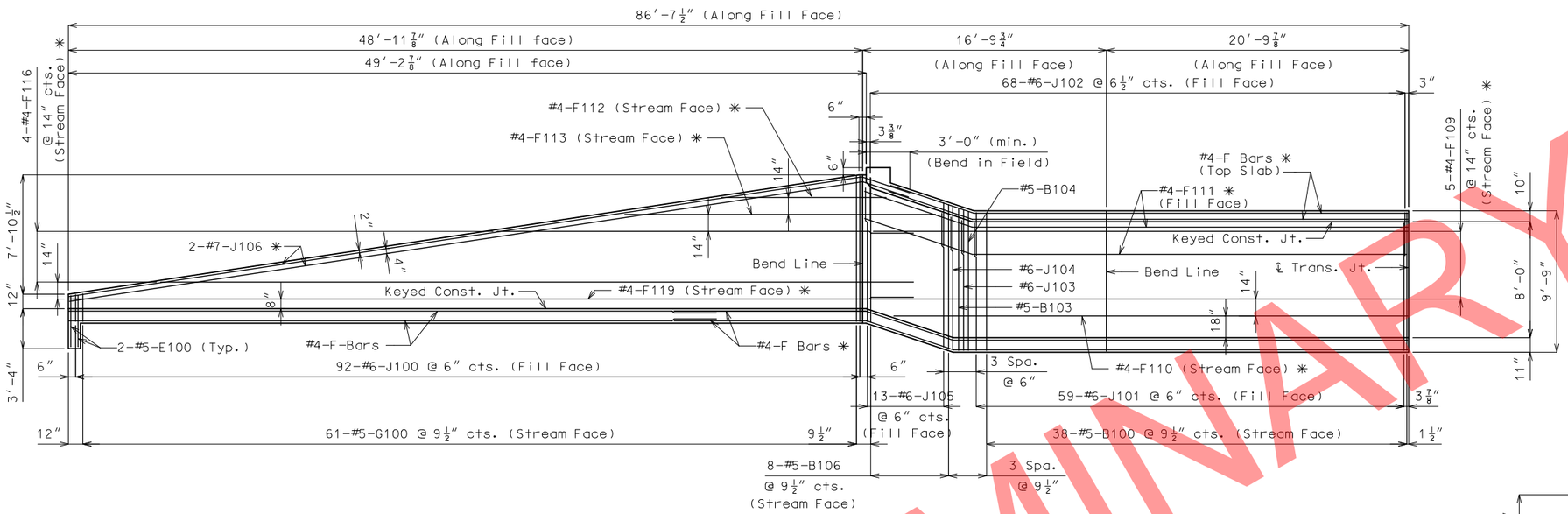

DEVELOPED ELEVATION A-A

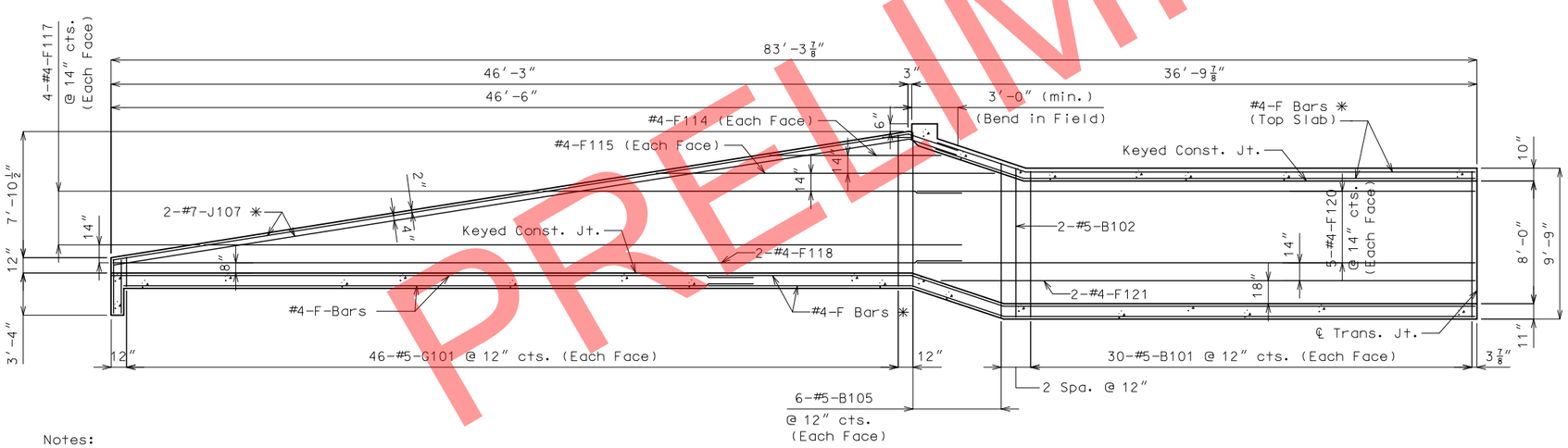

SECTION B-B

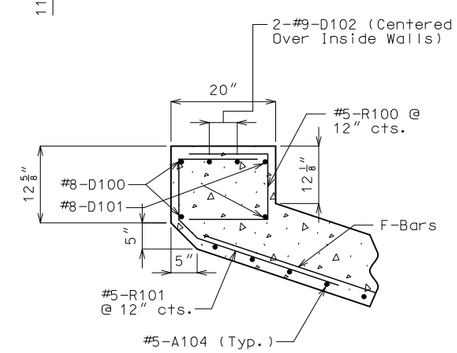

SECTION C-C

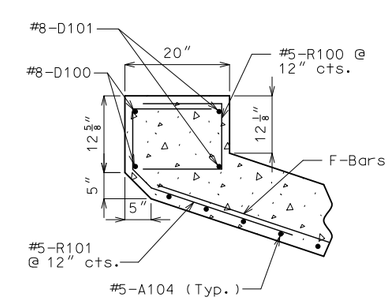

SECTION D-D

Notes:
Spacing for J-Bars is along a line parallel to ℄ Structure (see Plan View).
For location of Developed Elevation A-A and Section B-B, see Sheet No. 5.
For location of Section C-C and Section D-D, see Sheet No. 5.
Keyed Construction Joint not shown for clarity.
✳ F-Bars & J-Bars denoted shall be bent in field as shown.
Lap #4-F-Bars a minimum of 21" at splices.

DETAILS OF UNIT NO. 1

Detailed Nov. 2019
Checked Nov. 2019

Note: This drawing is not to scale. Follow dimensions.

STATE OF MISSOURI
CHRISTOPHER M. SHANKS
NUMBER PE-2010019597
PROFESSIONAL ENGINEER
THIS SHEET HAS BEEN SIGNED, SEALED AND DATED ELECTRONICALLY.

DATE PREPARED	12/9/2019
ROUTE	I-49
STATE	MO
DISTRICT	BR
SHEET NO.	6
COUNTY	McDONALD
JOB NO.	J7P0601
CONTRACT ID.	
PROJECT NO.	
BRIDGE NO.	A7052

DESCRIPTION | DATE

MISSOURI HIGHWAYS AND TRANSPORTATION COMMISSION
105 WEST CAPITOL
JEFFERSON CITY, MO 65102
1-888-ASK-MODOT (1-888-275-6636)

IF A SEAL IS PRESENT ON THIS SHEET IT HAS BEEN ELECTRONICALLY SEALED AND DATED.

BILL OF REINFORCING STEEL

NO. REQ'D.	MARK NO. SIZE	MARK NO. MARK	LOCATION	EPOXY (E)	SHAPE NO.	STIRRUP (S)	SUBSTR. (X)	VARIES (V)	NO. EACH	B FT. IN.	C FT. IN.	D FT. IN.	E FT. IN.	F FT. IN.	H FT. IN.	K FT. IN.	NOMINAL LENGTH FT. IN.	ACTUAL LENGTH FT. IN.	WEIGHT LBS.
			Upper End																
			Section																
			Unit 1																
63	5	A100	Bottom Slab		20			V	1	35 4.000							35 4	35 4	
			INCREMENT =							59 9.000							59 9	59 9	3124
			4.750 INCH																
30	5	A101	Bottom Slab		20			V	1	26 6.000							26 6	26 6	
			INCREMENT =							34 11.000							34 11	34 11	961
			3.500 INCH																
39	5	A102	Bottom Slab		20					26 4.000							26 4	26 4	1071
44	5	A103	Bottom Slab		20			V	2	31 3.000							31 3	31 3	
			INCREMENT =							35 4.000							35 4	35 4	1528
			2.375 INCH																
24	5	A104	Top Slab		20			V	1	26 5.000							26 5	26 5	
			INCREMENT =							34 7.000							34 7	34 7	763
			4.250 INCH																
31	5	A105	Top Slab		20					26 4.000							26 4	26 4	851
76	5	B100	Ext. Wall		20					9 4.000							9 4	9 4	740
120	5	B101	Int. Wall		10						12.000	9 4.000					11 4	11 1	1387
4	5	B102	Int. Wall		10						12.000	9 7.875					11 8	11 5	48
2	5	B103	Ext. Wall		20					9 9.000							9 9	9 9	20
2	5	B104	Ext. Wall		20					9 6.000							9 6	9 6	20
24	5	B105	Int. Wall		10						12.000	9 10.375					11 10	11 7	290
16	5	B106	Ext. Wall		20					9 10.000							9 10	9 10	164
2	8	D100	HEADWALL		20					34 9.000							34 9	34 9	186
2	8	D101	HEADWALL		20					34 1.000							34 1	34 1	182
2	9	D102	HEADWALL		20					17 9.000							17 9	17 9	121
16	5	E100	Toe Wall		20					4 0.000							4 0	4 0	67
28	4	F100	Bottom Slab		20			V	2	4 4.000							4 4	4 4	
			INCREMENT =							46 0.000							46 0	46 0	471
			38.500 INCH																
35	4	F101	Bottom Slab		20					34 4.000							34 4	34 4	803
6	4	F102	Bottom Slab		20			V	2	17 11.000							17 11	17 11	
			INCREMENT =							26 7.000							26 7	26 7	89
			52.000 INCH																
29	4	F103	Bottom Slab		20					50 6.000							50 6	50 6	978
4	4	F104	Bottom Slab		20					36 5.000							36 5	36 5	97
4	4	F105	Bottom Slab		20					52 0.000							52 0	52 0	139
4	4	F106	Top Slab		20					37 1.000							37 1	37 1	99
6	4	F107	Top Slab		20			V	2	3 6.000							3 6	3 6	
			INCREMENT =							12 3.000							12 3	12 3	32
			52.500 INCH																
33	4	F108	Top Slab		20					36 2.000							36 2	36 2	797
10	4	F109	Ext. Wall		20					37 2.000							37 2	37 2	248
2	4	F110	Ext. Wall		20					35 5.000							35 5	35 5	47
4	4	F111	Ext. Wall		20					37 7.000							37 7	37 7	100
2	4	F112	Ext. Wing		20					10 11.000							10 11	10 11	15
2	4	F113	Ext. Wing		20					21 5.000							21 5	21 5	29
4	4	F114	Int. Wing		20					10 2.000							10 2	10 2	27
4	4	F115	Int. Wing		20					20 3.000							20 3	20 3	54
8	4	F116	Ext. Wing		20			V	2	24 7.000							24 7	24 7	
			INCREMENT =							45 3.000							45 3	45 3	187
			82.625 INCH																

BILL OF REINFORCING STEEL

NO. REQ'D.	MARK NO. SIZE	MARK NO. MARK	LOCATION	EPOXY (E)	SHAPE NO.	STIRRUP (S)	SUBSTR. (X)	VARIES (V)	NO. EACH	B FT. IN.	C FT. IN.	D FT. IN.	E FT. IN.	F FT. IN.	H FT. IN.	K FT. IN.	NOMINAL LENGTH FT. IN.	ACTUAL LENGTH FT. IN.	WEIGHT LBS.
16	4	F117	Int. Wing		20			V	4	23 3.000							23 3	23 3	
			INCREMENT =							42 10.000							42 10	42 10	353
			78.375 INCH																
4	4	F118	Int. Wing		20					48 3.000							48 3	48 3	129
2	4	F119	Ext. Wing		20					51 0.000							51 0	51 0	68
20	4	F120	Int. Wall		20					36 7.000							36 7	36 7	489
4	4	F121	Int. Wall		20					34 9.000							34 9	34 9	93
122	5	G100	Ext. Wing		20			V	2	20.000							0 20	0 20	
			INCREMENT =							9 8.000							9 8	9 8	721
			1.625 INCH																
184	5	G101	Int. Wing		20			V	4	20.000							0 20	0 20	
			INCREMENT =							9 8.000							9 8	9 8	1088
			2.125 INCH																
332	5	H100	Bottom Slab		20					6 2.000							6 2	6 2	2135
60	5	H101	Top Slab		20					6 5.000							6 5	6 5	402
60	5	H102	Top Slab		20					4 1.000							4 1	4 1	256
184	6	J100	Ext. Wing		19			V	2	18.000	3 9.000						5 3	5 1	
			INCREMENT =							9 9.000	3 9.000						13 6	13 4	2545
			1.125 INCH																
118	6	J101	Bott. Corner		19					8 7.000	3 9.000						12 4	12 2	2156
136	6	J102	Top Corner		19					2 6.000	3 6.000						6 0	5 10	1192
2	6	J103	Bott. Corner		19					8 8.000	3 9.000						12 5	12 3	37
2	6	J104	Bott. Corner		19					8 10.000	3 9.000						12 7	12 5	37
26	6	J105	Bott. Corner		19					9 0.000	3 9.000						12 9	12 7	491
8	7	J106	Ext. Wing		20					53 0.000							53 0	53 0	867
8	7	J107	Int. Wing		20					50 3.000							50 3	50 3	822
34	5	R100	HEADWALL		10	S					10.500	14.500					3 0	2 9	98
34	5	R101	HEADWALL		50	S				16.000	10.500	4.375	2 3.375	9.125	3.125	3.125	5 0	4 10	171
			UNIT 1																
			TOTALS																
	4																		5344
	5																		15905
	6																		6458
	7																		1689
	8																		368
	9																		121
			UNIT 1 TOTAL																29885

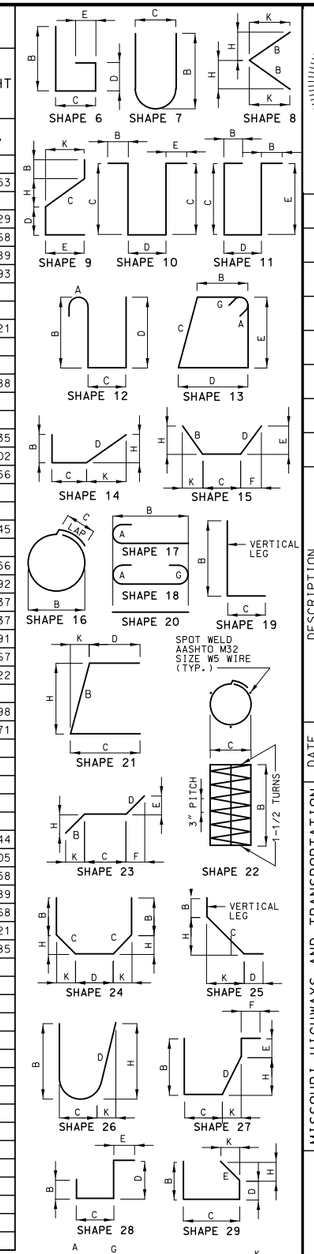

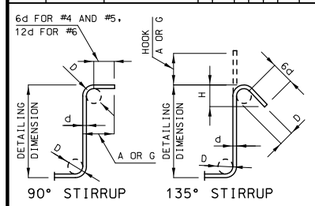

STIRRUP HOOK DIMENSIONS				
GRADES 40 - 50 - 60 KSI				
BAR SIZE	D (IN.)	90° HOOK	135° HOOK	
		HOOK A OR G	HOOK A OR G	APPROX. H
#4	2"	4 1/2"	4 1/2"	3"
#5	2 1/2"	6"	5 1/2"	3 3/4"
#6	4 1/2"	12"	8"	4 1/2"

NOTE: UNLESS OTHERWISE NOTED, DIAMETER "D" IS THE SAME FOR ALL BENDS AND HOOKS ON A BAR.

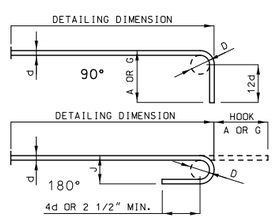

END HOOK DIMENSIONS				
BAR SIZE	D (IN.)	ALL GRADES		
		180° HOOKS		90° HOOKS
		A OR G	J	A OR G
#3	2 1/4"	5"	3"	6"
#4	3"	6"	4"	8"
#5	3 3/4"	7"	5"	10"
#6	4 1/2"	8"	6"	12"
#7	5 1/4"	10"	7"	14"
#8	6"	11"	8"	16"
#9	9 1/2"	15"	11 3/4"	19"
#10	10 3/4"	17"	13 1/4"	22"
#11	12"	19"	14 3/4"	2'-0"
#14	18 1/4"	2'-3"	21 3/4"	2'-7"

NOTE:
ALL STANDARD HOOKS AND BENDS OTHER THAN 180 DEGREE ARE TO BE BENT WITH SAME PROCEDURE AS FOR 90 DEGREE STANDARD HOOKS.
HOOKS AND BENDS SHALL BE IN ACCORDANCE WITH THE PROCEDURES AS SHOWN ON THIS SHEET.
E = EPOXY COATED REINFORCEMENT.
S = STIRRUP.
X = BAR IS INCLUDED IN SUBSTRUCTURE QUANTITIES.
V = BAR DIMENSIONS VARY IN EQUAL INCREMENTS BETWEEN DIMENSIONS SHOWN ON THIS LINE AND THE FOLLOWING LINE.
NO. EA. = NUMBER OF BARS OF EACH LENGTH.
NOMINAL LENGTHS ARE BASED ON OUT TO OUT DIMENSIONS SHOWN IN BENDING DIAGRAMS AND ARE LISTED FOR FABRICATORS USE. (NEAREST INCH)
ACTUAL LENGTHS ARE MEASURED ALONG CENTERLINE BAR TO THE NEAREST INCH.
PAYWEIGHTS ARE BASED ON ACTUAL LENGTHS.
FOUR ANGLE OR CHANNEL SPACERS ARE REQUIRED FOR EACH COLUMN SPIRAL. SPACERS ARE TO BE PLACED ON INSIDE OF SPIRALS. LENGTH AND WEIGHT OF COLUMN SPIRALS DO NOT INCLUDE SPLICES OR SPACERS.
REINFORCING STEEL (GRADE 60) FY = 60,000 PSI.

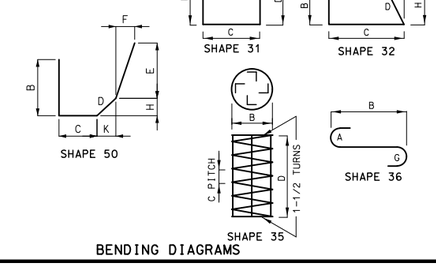

BENDING DIAGRAMS

STATE OF MISSOURI
CHRISTOPHER M. SHANKS
NUMBER PE-2010019597
PROFESSIONAL ENGINEER
THIS SHEET HAS BEEN SIGNED, SEALED AND DATED ELECTRONICALLY.

DATE PREPARED 12/9/2019

ROUTE	STATE
I-49	MO
DISTRICT	SHEET NO.
BR	7

COUNTY: McDONALD
JOB NO.: J7P0601
CONTRACT ID.:
PROJECT NO.:
BRIDGE NO.: A7052

DATE	DESCRIPTION

MISSOURI HIGHWAYS AND TRANSPORTATION COMMISSION
105 WEST CAPITOL
JEFFERSON CITY, MO 65102
1-888-ASK-MODOT (1-888-275-6636)

IF A SEAL IS PRESENT ON THIS SHEET IT HAS BEEN ELECTRONICALLY SEALED AND DATED.

Detailed Nov. 2019
Checked Nov. 2019

Note: This drawing is not to scale. Follow dimensions.

BILL OF REINFORCING STEEL

NO. REQ'D.	MARK NO. SIZE	MARK NO. MARK	LOCATION	SHAPE NO.	STIRRUP (S)	EPOXY (E)	VARIES (V)	NO. EACH	DIMENSIONS B FT.	C FT.	D or F FT.	E FT.	H FT.	K FT.	NOMINAL LENGTH FT. IN.	ACTUAL LENGTH FT. IN.	WEIGHT LBS.
			Barrel Section														
			Unit 2														
121	5	A1	Top Slab	20				1	26.667						26'-8"	26'-8"	3369
86	6	A2	Bottom Slab	20				1	26.667						26'-8"	26'-8"	3448
224	5	J3	Top Corner	19				1	2.833	3.333					6'-2"	6'-0"	1410
208	5	J4	Bottom Corner	19				1	8.917	3.367					12'-3"	12'-2"	2638
244	5	B1	Interior Wall	10				1		1.000	10.000				12'-0"	11'-9"	2988
182	5	B2	Exterior Wall	20				1	10.000						10'-0"	10'-0"	1900
122	5	H1	Top Slab	20				1	6.083						6'-1"	6'-1"	775
120	5	H2	Top Slab	20				1	3.750						3'-9"	3'-9"	470
208	6	H3	Bottom Slab	20				1	6.667						6'-8"	6'-8"	2085
110	4	F1	Temp. Steel	20				1	59.750						59'-9"	59'-9"	4391
			Unit 3														
104	6	A1	Top Slab	20				1	27.000						27'-0"	27'-0"	4221
97	6	A2	Bottom Slab	20				1	27.000						27'-0"	27'-0"	3937
242	5	J3	Top Corner	19				1	3.083	3.700					6'-9"	6'-8"	1680
224	5	J4	Bottom Corner	19				1	9.250	3.275					12'-6"	12'-5"	2897
244	5	B1	Interior Wall	10				1		1.000	10.583				12'-7"	12'-4"	3136
182	5	B2	Exterior Wall	20				1	10.583						10'-7"	10'-7"	2011
104	6	H1	Top Slab	20				1	7.417						7'-5"	7'-5"	1160
104	6	H2	Top Slab	20				1	5.083						5'-1"	5'-1"	795
224	6	H3	Bottom Slab	20				1	6.667						6'-8"	6'-8"	2245
110	4	F1	Temp. Steel	20				1	59.750						59'-9"	59'-9"	4391
			Unit 4														
104	6	A1	Top Slab	20				1	27.000						27'-0"	27'-0"	4221
112	6	A2	Bottom Slab	20				1	27.000						27'-0"	27'-0"	4546
242	5	J3	Top Corner	19				1	3.250	3.717					6'-12"	6'-10"	1726
224	5	J4	Bottom Corner	19				1	9.333	3.300					12'-8"	12'-6"	2923
244	5	B1	Interior Wall	10				1		1.000	10.833				12'-10"	12'-7"	3200
208	5	B2	Exterior Wall	20				1	10.833						10'-10"	10'-10"	2352
104	6	H1	Top Slab	20				1	7.417						7'-5"	7'-5"	1160
104	6	H2	Top Slab	20				1	4.917						4'-11"	4'-11"	769
224	6	H3	Bottom Slab	20				1	6.667						6'-8"	6'-8"	2245
110	4	F1	Temp. Steel	20				1	59.750						59'-9"	59'-9"	4391
			Unit 5														
104	6	A1	Top Slab	20				1	27.000						27'-0"	27'-0"	4221
112	6	A2	Bottom Slab	20				1	27.000						27'-0"	27'-0"	4546
242	5	J3	Top Corner	19				1	3.250	3.717					6'-12"	6'-10"	1726
224	5	J4	Bottom Corner	19				1	9.333	3.300					12'-8"	12'-6"	2923
244	5	B1	Interior Wall	10				1		1.000	10.833				12'-10"	12'-7"	3200
208	5	B2	Exterior Wall	20				1	10.833						10'-10"	10'-10"	2352
104	6	H1	Top Slab	20				1	7.417						7'-5"	7'-5"	1160
104	6	H2	Top Slab	20				1	4.917						4'-11"	4'-11"	769
224	6	H3	Bottom Slab	20				1	6.667						6'-8"	6'-8"	2245
110	4	F1	Temp. Steel	20				1	59.750						59'-9"	59'-9"	4391
			Unit 6														
104	6	A1	Top Slab	20				1	27.000						27'-0"	27'-0"	4221
97	6	A2	Bottom Slab	20				1	27.000						27'-0"	27'-0"	3937
242	5	J3	Top Corner	19				1	3.083	3.700					6'-9"	6'-8"	1680
224	5	J4	Bottom Corner	19				1	9.250	3.275					12'-6"	12'-5"	2897
244	5	B1	Interior Wall	10				1		1.000	10.583				12'-7"	12'-4"	3136
182	5	B2	Exterior Wall	20				1	10.583						10'-7"	10'-7"	2011
104	6	H1	Top Slab	20				1	7.417						7'-5"	7'-5"	1160
104	6	H2	Top Slab	20				1	5.083						5'-1"	5'-1"	795
224	6	H3	Bottom Slab	20				1	6.667						6'-8"	6'-8"	2245
110	4	F1	Temp. Steel	20				1	59.750						59'-9"	59'-9"	4391
			Unit 7														
91	6	A1	Top Slab	20				1	26.667						26'-8"	26'-8"	3648
97	6	A2	Bottom Slab	20				1	26.667						26'-8"	26'-8"	3889
224	5	J3	Top Corner	19				1	2.917	3.583					6'-6"	6'-4"	1488
208	5	J4	Bottom Corner	19				1	9.000	3.200					12'-2"	12'-1"	2620
244	5	B1	Interior Wall	10				1		1.000	10.167				12'-2"	11'-11"	3030
182	5	B2	Exterior Wall	20				1	10.167						10'-2"	10'-2"	1932
92	6	H1	Top Slab	20				1	7.500						7'-6"	7'-6"	1037
90	6	H2	Top Slab	20				1	5.167						5'-2"	5'-2"	699
208	6	H3	Bottom Slab	20				1	6.667						6'-8"	6'-8"	2085
110	4	F1	Temp. Steel	20				1	59.750						59'-9"	59'-9"	4391

BILL OF REINFORCING STEEL

NO. REQ'D.	MARK NO. SIZE	MARK NO. MARK	LOCATION	SHAPE NO.	STIRRUP (S)	EPOXY (E)	VARIES (V)	NO. EACH	DIMENSIONS B FT.	C FT.	D or F FT.	E FT.	H FT.	K FT.	NOMINAL LENGTH FT. IN.	ACTUAL LENGTH FT. IN.	WEIGHT LBS.
			Lower End														
			Section														
			Unit 8														
53	5	A1	Top Slab	20				1	26.333						26'-4"	26'-4"	1456
63	5	A2	Bottom Slab	20				1	26.333						26'-4"	26'-4"	1731
52	5	A3	Top Slab	20			V	1	26.376		Incr =	5.736	inches		26'-5"	26'-5"	771
									2.000						2'-0"	2'-0"	
195	6	J3	Top Corner	19				1	2.500	3.675					6'-2"	6'-0"	1765
221	6	J4	Bottom Corner	19				1	8.583	3.742					12'-4"	12'-2"	4042
220	5	B1	Interior Walls	10				1		1.000	9.333				11'-4"	11'-1"	2541
139	5	B2	Exterior Walls	20				1	9.333						9'-4"	9'-4"	1354
86	5	H1	Top Slab	20				1	6.417						6'-5"	6'-5"	576
86	5	H2	Top Slab	20				1	4.083						4'-1"	4'-1"	366
212	5	H3	Bottom Slab	20				1	6.167						6'-2"	6'-2"	1364
110	4	F1	Temp. Steel	20				1	12.000						12'-0"	12'-0"	883
10	4	F60	Temp. Steel	20				1	25.146						25'-2"	25'-2"	168
1	4	F61	Temp. Steel	20				1	30.271						30'-3"	30'-3"	20
1	4	F62	Temp. Steel	20				1	33.166						33'-2"	33'-2"	22
1	4	F63	Temp. Steel	20				1	34.677						34'-8"	34'-8"	23
14	4	F64	Temp. Steel	20				1	37.466						37'-6"	37'-6"	350
1	4	F65	Temp. Steel	20				1	40.372						40'-4"	40'-4"	27
1	4	F66	Temp. Steel	20				1	42.116						42'-1"	42'-1"	28
1	4	F67	Temp. Steel	20				1	44.905						44'-11"	44'-11"	30
1	4	F68	Temp. Steel	20				1	46.649						46'-8"	46'-8"	31
14	4	F69	Temp. Steel	20				1	49.554						49'-7"	49'-7"	464
1	4	F70	Temp. Steel	20				1	52.344						52'-4"	52'-4"	35
1	4	F71	Temp. Steel	20				1	53.855						53'-10"	53'-10"	36
1	4	F72	Temp. Steel	20				1	56.749						56'-9"	56'-9"	38
20	4	F73	Temp. Steel	20				1	31.896						31'-11"	31'-11"	426
1	4	F74	Temp. Steel	20				1	30.364						30'-4"	30'-4"	20
1	4	F75	Temp. Steel	20				1	33.398						33'-5"	33'-5"	22
1	4	F76	Temp. Steel	20				1	41.999						41'-12"	41'-12"	28
1	4	F77	Temp. Steel	20				1	45.021						45'-0"	45'-0"	30
1	4	F78	Temp. Steel	20				1	53.623						53'-7"	53'-7"	36
1	4	F79	Temp. Steel	20				1	56.656						56'-8"	56'-8"	38
48	4	F80	Temp. Steel	20			V	2	38.730		Incr =	19.163	inches		38'-9"	38'-9"	653
									2.000						2'-0"	2'-0"	
48	4	F81	Temp. Steel	20				1	25.146						25'-2"	25'-2"	806
			Lower Wings														
			and Headwall														
54	5	A2	Bottom Slab	20				1	26.333						26'-4"	26'-4"	1485
63	5	A11	Bottom Slab	20			V	1	26.078		Incr =	4.660	inches		26'-1"	26'-1"	924
									2.000						2'-0"	2'-0"	
2	8	D3	Headwall	20				1	45.337						45'-4"	45'-4"	242
4	9	D4	Headwall	20				1	9.024						9'-0"	9'-0"	123
16	5	E1	Heel	20				1	4.000						4'-0"	4'-0"	67
36	4	F42	Wings	20			V	6	28.316		Incr =	48.055	inches		28'-4"	28'-4"	440
									8.293						8'-4"	8'-4"	
10	4	F44	Bottom Slab	20				1	30.032						30'-0"	30'-0"	201
23	4	F45	Bottom Slab	20				1	30.032						30'-0"	30'-0"	463
112	5	G1	Interior Walls	20			V	4	9.866		Incr =	3.496	inches		9'-10"	9'-10"	694
									2.000						2'-0"	2'-0"	
70	5	G3	Exterior Wings	20			V	2	9.842		Incr =	2.768	inches		9'-10"	9'-10"	433
									2.000						2'-0"	2'-0"	
112	5	H3	Bottom Slab	20				1	6.167						6'-2"	6'-2"	721
4	8	H10	Headwall	20				1	45.337						45'-4"	45'-4"	485
16	7	J1	Wings	20			FB	1	32.185						32'-2"	32'-2"	1054
104	6	J5	Wings	19			V	2	9.429	3.742	Incr =	1.748	inches		13'-2"	13'-0"	1454
									2.000	3.742					5'-9"	5'-7"	
47	5	R3	HeadWall	10	S			1		1.417	1.083				3'-11"	3'-9"	182
			UNITS 2-8														
			Totals														
		4															31664
		5															77135
		6															74750
		7															1054
		8															727
		9															123
		10															0
		11															0
			UNITS 2-8 TOTAL														185450
			UNIT 1														29885
			UNITS 2-8														185450
			TOTAL														215335

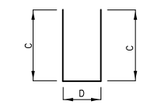

SHAPE 10

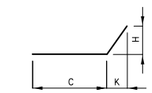

SHAPE 15

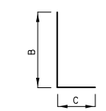

SHAPE 19

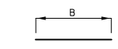

SHAPE 20

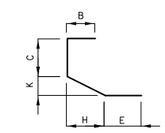

SHAPE 27

SPLICE LENGTH	
BAR SIZE	NON-EPOXY
#4	21 IN.
#5	26 IN.
#6	31 IN.
#7	39 IN.
#8	51 IN.
#9	65 IN.
#10	82 IN.
#11	101 IN.

MAX BAR LENGTH	
BAR SIZE	NON-EPOXY
#4	60 FT.
#5	60 FT.
#6	60 FT.
#7	60 FT.
#8	60 FT.
#9	60 FT.
#10	60 FT.
#11	60 FT.

NOTE:
THE BAR LIST IS BASED ON THE MISSOURI STANDARD PLANS.
THIS BAR LIST IS FOR QUANTITY ESTIMATION PURPOSE ONLY AND SHALL BE VERIFIED OR MODIFIED BY THE CONTRACTOR.

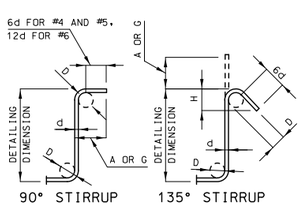

STIRRUP HOOK DIMENSIONS			
BAR SIZE	D (IN.)	90° HOOK: HOOK A OR G	135° HOOK: HOOK A OR G	135° HOOK: APPROX. H
#4	2"	4 1/2"	4 1/2"	3"
#5	2 1/2"	6"	5 1/2"	3 3/4"
#6	4 1/2"	12"	8"	4 1/2"

NOTE: UNLESS OTHERWISE NOTED DIAMETER "D" IS THE SAME FOR ALL BENDS AND HOOKS ON A BAR.

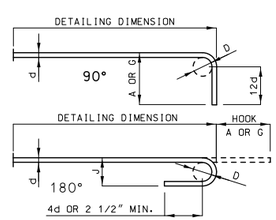

END HOOK DIMENSIONS				
BAR SIZE	D (IN.)	GRADE 60: 180° HOOKS A OR G	GRADE 60: 180° HOOKS J	GRADE 60: 90° HOOKS A OR G
#4	3"	6"	4"	8"
#5	3 3/4"	7"	5"	10"
#6	4 1/2"	8"	6"	12"
#7	5 1/4"	10"	7"	14"
#8	6"	11"	8"	16"
#9	9 1/2"	15"	11 3/4"	19"
#10	10 3/4"	17"	13 1/4"	22"
#11	12"	19"	14 3/4"	24"

NOTE:
ALL STANDARD HOOKS AND BENDS OTHER THAN 180 DEGREE ARE TO BE BENT WITH SAME PROCEDURE AS FOR 90 DEGREE STANDARD HOOKS.
HOOKS AND BENDS SHALL BE IN ACCORDANCE WITH THE PROCEDURES AS SHOWN ON THIS SHEET.
FB = BARS MAY BE BENT IN FIELD TO FIT.
E = EPOXY COATED REINFORCEMENT.
S = STIRRUP.
V = BAR DIMENSIONS VARY IN EQUAL INCREMENTS BETWEEN DIMENSIONS SHOWN ON THIS LINE AND THE FOLLOWING LINE. A BLANK IN THE SECOND LINE REPRESENTS THE SAME BAR DIMENSION AS THAT IN THE FIRST LINE. IT IS THE CONTRACTOR'S RESPONSIBILITY TO ADD A SPLICE LENGTH TO A BAR LENGTH WHICH EXCEEDS ITS MAXIMUM ALLOWABLE LENGTH.
NO. EA. = NUMBER OF BARS OF EACH LENGTH.
NOMINAL LENGTHS ARE BASED ON OUT TO OUT DIMENSIONS SHOWN IN BENDING DIAGRAMS AND ARE LISTED FOR FABRICATORS USE. (NEAREST INCH)
ACTUAL LENGTHS ARE MEASURED ALONG CENTERLINE BAR TO THE NEAREST INCH.
PAYWEIGHTS ARE BASED ON ACTUAL LENGTHS.
REINFORCING STEEL (GRADE 60) FY = 60,000 PSI.

STATE OF MISSOURI
CHRISTOPHER M. SHANKS
NUMBER PE-2010019597
PROFESSIONAL ENGINEER
THIS SHEET HAS BEEN SIGNED, SEALED AND DATED ELECTRONICALLY.

DATE PREPARED 12/9/2019

ROUTE	STATE
I-49	MO
DISTRICT BR	SHEET NO. 8

COUNTY McDONALD
JOB NO. J7P0601
CONTRACT ID.
PROJECT NO.
BRIDGE NO. A7052

DESCRIPTION
DATE

IF A SEAL IS PRESENT ON THIS SHEET IT HAS BEEN ELECTRONICALLY SEALED AND DATED.

MISSOURI HIGHWAYS AND TRANSPORTATION COMMISSION
105 WEST CAPITOL
JEFFERSON CITY, MO 65102
1-888-ASK-MODOT (1-888-275-6636)

Detailed November 2019
Checked November 2019

Note: This drawing is not to scale. Follow dimensions.

SEC/SUR 27 TWP 21N RGE 32W

MISSOURI HIGHWAYS AND TRANSPORTATION COMMISSION

3 (6′ x 7′) CONCRETE BOX CULVERT

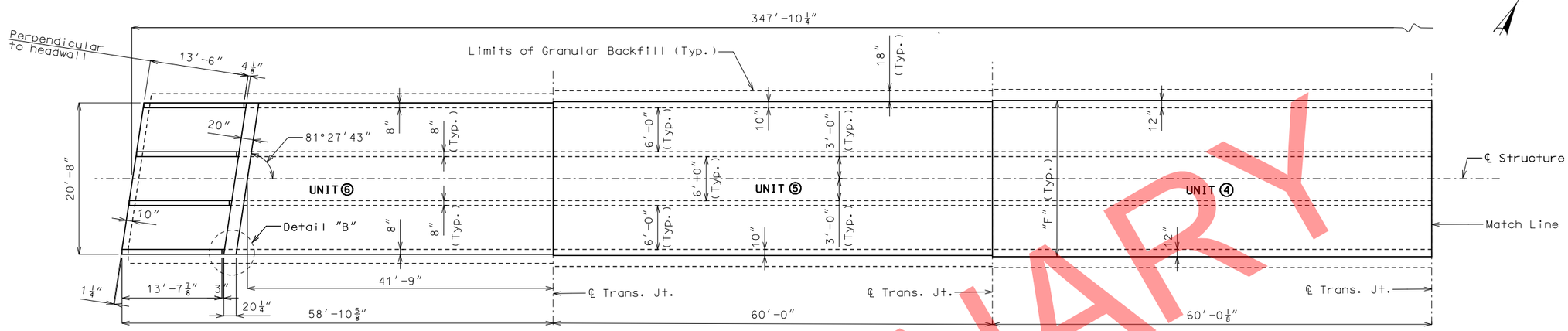

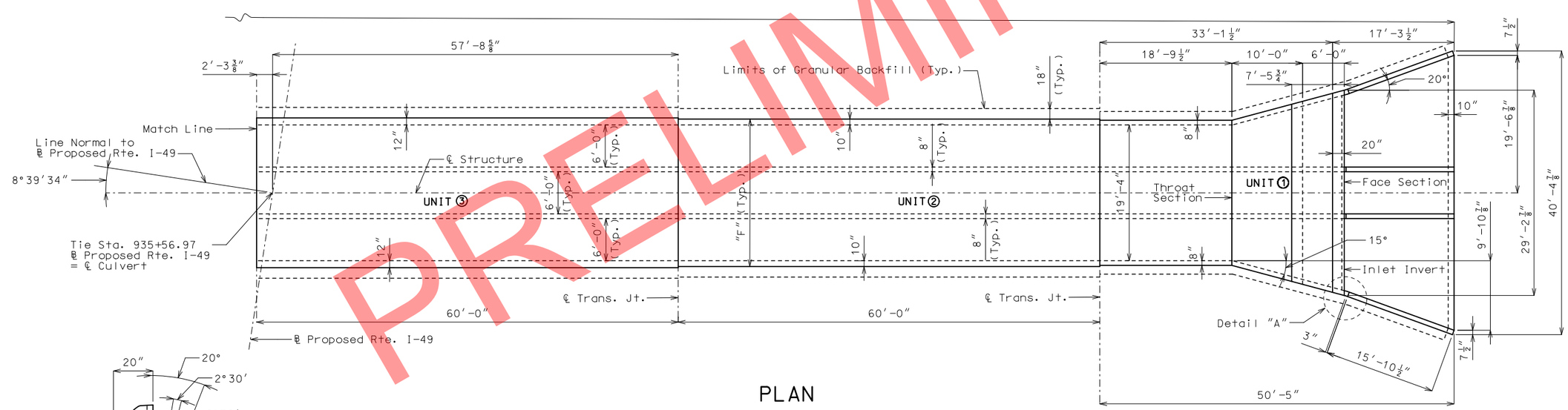

PLAN

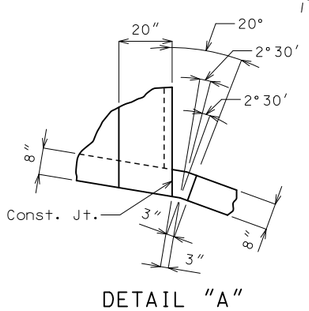

DETAIL "A"

Notes:

For General Notes, Estimated Quantities, Hydrologic Data & Location Sketch, see Sheet No. 2.

For Elevation and End Elevation, see Sheet No. 2.

For Culvert Data Table, see Sheet No. 3.

For Details of Unit No. 1, see Sheets No. 4 thru 6.

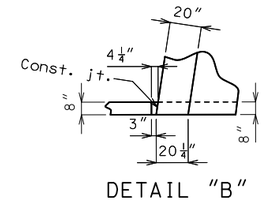

DETAIL "B"

B.M.-49-01-15 ELEV. 991.40
N: 126,431.1081 E: 2,819,624.3799
20d IN 4″ PERSIMMON TREE E OF CREEK CHANNEL ON KELLY PROPERTY SE OF UTILITY SHEDS ON E SIDE OF TREE

CULVERT OVER WHITE OAK HOLLOW CREEK

STATE ROAD FROM RTE. H TO STATE LINE

ABOUT 1.2 MILES NORTH OF STATE LINE

STA. 935+56.97

STD. 703.37
STD. 703.85
STD. 703.86
STD. 703.87
STD. 706.35

Designed Oct. 2019
Detailed Nov. 2019
Checked Nov. 2019

Note: This drawing is not to scale. Follow dimensions.

Sheet No. 1 of 8

STATE OF MISSOURI
CHRISTOPHER M. SHANKS
NUMBER PE-2010019597
PROFESSIONAL ENGINEER
THIS SHEET HAS BEEN SIGNED, SEALED AND DATED ELECTRONICALLY.

DATE PREPARED 12/9/2019	
ROUTE I-49	STATE MO
DISTRICT BR	SHEET NO. 1
COUNTY McDONALD	
JOB NO. J7P0601	
CONTRACT ID.	
PROJECT NO.	
BRIDGE NO. A7053	

DESCRIPTION	DATE

MISSOURI HIGHWAYS AND TRANSPORTATION COMMISSION
105 WEST CAPITOL
JEFFERSON CITY, MO 65102
1-888-ASK-MODOT (1-888-275-6636)

IF A SEAL IS PRESENT ON THIS SHEET IT HAS BEEN ELECTRONICALLY SEALED AND DATED.

$FILE$ $TIME$ 12/9/2019

GENERAL NOTES:

Design Specifications:
2010 - AASHTO LRFD Bridge Design Specifications
and 2010 Interim Revisions

Design Unit Stresses:
Class B-1 Concrete (Box Culvert) f'c = 4,000 psi
Reinforcing Steel (Grade 60) fy = 60,000 psi

Design Loading:
HL-93 minus Lane Load
Earth 120 #/ft.^{3}
Equivalent fluid pressure
30 #/ft.^{3} (Min.) - 60 #/ft.^{3} (Max.)

Reinforcing Steel:
Minimum clearance to reinforcing steel shall be 1-1/2", unless otherwise shown.

Miscellaneous:
Provide grading of the channel bottom within the limits of the R/W as needed for culvert flowline elevations and transition of the channel bed to the culvert openings.

Taper channel banks to match end of culvert opening as required. (Roadway Item)

"Sec" refers to the sections in the standard and supplemental specifications unless specified otherwise.

If any part of the barrel is exposed, the roadway fill shall be warped to provide 12 inches minimum cover. (Roadway Item)

Traffic Handling:
See Roadway Plans for traffic control.

Precast Option:
The box shown below indicating whether a precast or cip box was used should be checked by MoDOT Construction personnel:

☐ Precast Box used
☐ Cast-in-Place Box used

When alternate precast concrete box culvert sections are used, the minimum distance from inside face of headwalls to precast sections measured along the shortest wall shall be 3 feet. Reinforcement and dimensions for wings and headwalls shall be in accordance with Missouri Standard Plans.

HYDROLOGIC DATA
Drainage Area = 0.8 (sq. mi.)
Design High Water (DHW) Elev. = 1024.4
Design High Water Frequency = 100 (year)
Design High Water Discharge = 1380 (cfs)
Estimated Backwater = 0.4 (ft)
Outlet Velocity = 18.2 (ft/sec)
Roadway Overtopping
Overtopping Flood Discharge = N/A
Overtopping Flood Frenquency > 500 Years
500 Year Flood Elevation = 1026.6

CURVE DATA

PI	STA. 910+47.28
Δ	32°40'41.7" LT.
D	0°29'53.6"
R	11,500.00'
T	3371.36'
L	6558.94'
SE	VARIES
W =	0.0 FT

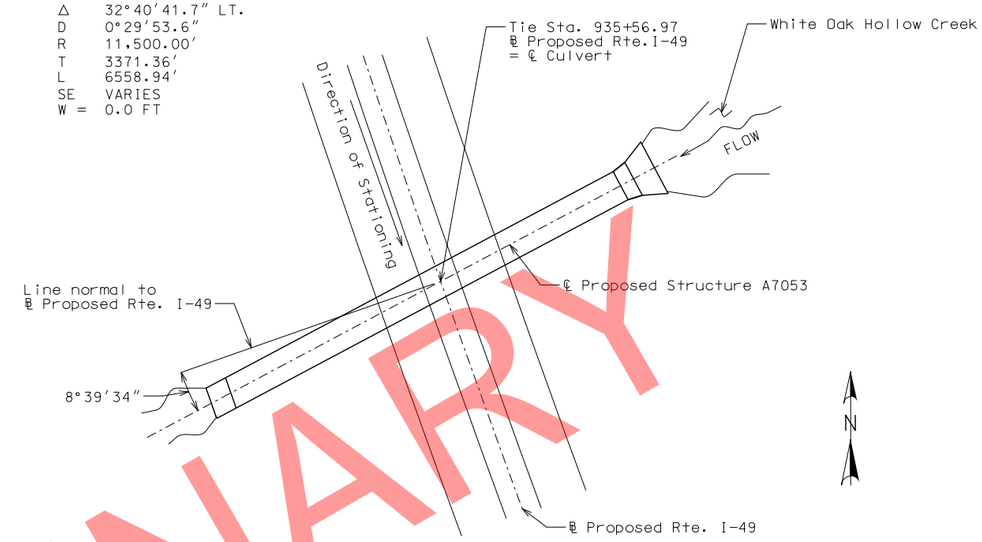

LOCATION SKETCH

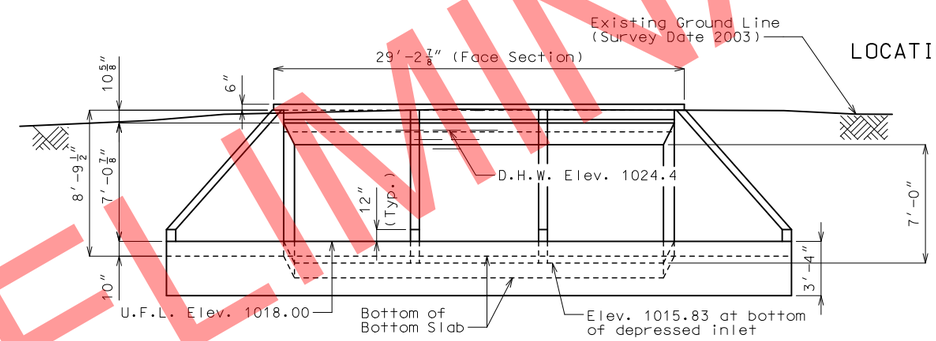

END ELEVATION
(UPSTREAM)

ESTIMATED QUANTITIES			FINAL QUANTITIES
Class 4 Excavation	cu. yard	2,645	
Class B-1 Concrete (Culverts)	cu. yard	945.6	
Reinforcing Steel (Culverts)	pound	108,570	

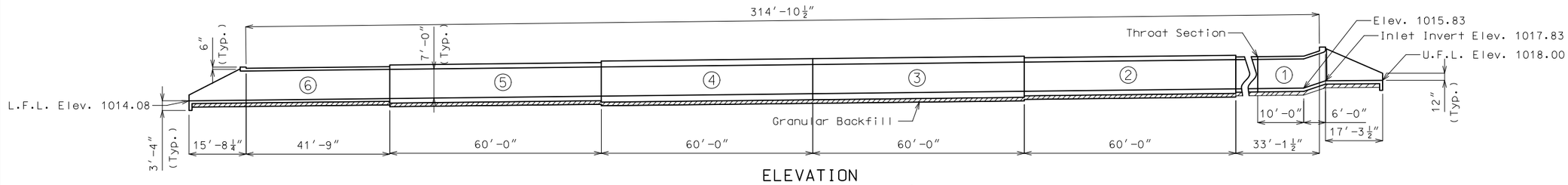

ELEVATION
Note: Dimensions are horizontal along ℄ Structure.

Detailed Nov. 2019
Checked Nov. 2019

Note: This drawing is not to scale. Follow dimensions.

STATE OF MISSOURI
CHRISTOPHER M. SHANKS
NUMBER PE-2010019597
PROFESSIONAL ENGINEER
THIS SHEET HAS BEEN SIGNED, SEALED AND DATED ELECTRONICALLY.

DATE PREPARED	
12/9/2019	
ROUTE	STATE
I-49	MO
DISTRICT	SHEET NO.
BR	2
COUNTY	
McDONALD	
JOB NO.	
J7P0601	
CONTRACT ID.	
PROJECT NO.	
BRIDGE NO.	
A7053	

DATE	DESCRIPTION

IF A SEAL IS PRESENT ON THIS SHEET IT HAS BEEN ELECTRONICALLY SEALED AND DATED.

MISSOURI HIGHWAYS AND TRANSPORTATION COMMISSION
105 WEST CAPITOL
JEFFERSON CITY, MO 65102
1-888-ASK-MODOT (1-888-275-6636)

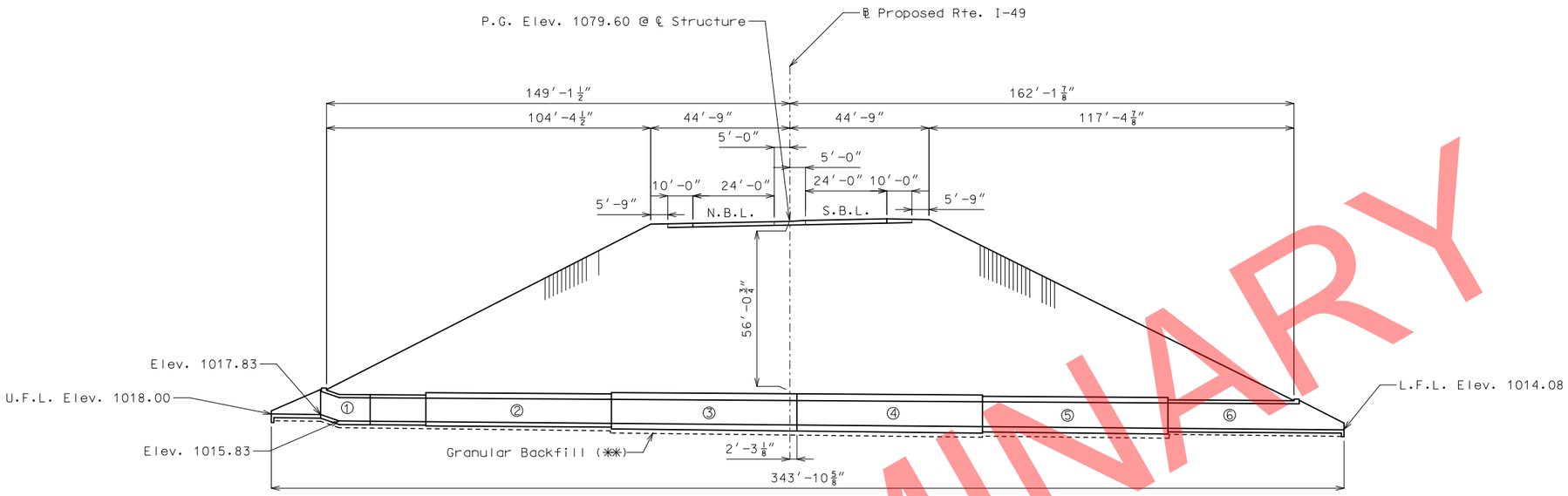

ELEVATION

Note: Dimensions are normal to ℄ Proposed Rte. I-49 @ ℄ Structure.

(✱✱) If unsuitable material is encountered, excavation of unsuitable material and furnishing and placing of granular backfill shall be in accordance with Sec 206.

CONCRETE TRIPLE BOX CULVERT DATA TABLE: SPAN (S) = 6 FT HEIGHT (HT) = 7 FT

REINFORCEMENT TABLE

UNIT	DESIGN FILL (✱)	MEMBER THICKNESS					TOP SLAB BARS														BOTTOM SLAB BARS										WALL BARS				
		"TS"	"BS"	"TX"	"TI"	"F"	A1 Bars		J3 Bars				H1 Bars				H2 Bars				A2 Bars		J4 Bars				H3 Bars				B1 Bars		B2 Bars		
	(ft-in)	Thick	Thick	Thick	Thick		Size	Spa.	Size	Spa.	C1	K2	Size	Spa.	C5	Q8	Size	Spa.	C6	Q9	Size	Spa.	Size	Spa.	C4	K3	Size	Spa.	C7	Q10	Size	Spa.	Size	Spa.	G1
1 & 6	16′-3″	9	10	8	8	20′-8″	5	9	5	6.5	33.4	29.0	5	16	30.0	32.0	5	16	21.0	21.0	5	8	5	6.5	33.6	90	5	6.5	29.0	32.0	5	12	5	12	0
2 & 5	42′-5″	15	17	10	8	21′-0″	5	6.5	5	7.5	38.5	35.0	5	12	33.0	37.0	5	12	24.0	25.0	5	6.5	5	7.5	33.6	97	5	6	29.0	33.0	5	12	5	8.5	0
3 & 4	57′-2″	18	20	12	8	21′-4″	6	8	5	6.5	40.3	38.0	5	12	33.0	35.0	5	12	24.0	24.0	5	6	5	7.5	35.0	100	6	8	32.0	36.0	5	12	5	7.5	0

Note:

Dimensions are in inches unless otherwise specified.

For Details and Reinforcement of Unit No. 1, see Sheets No. 4 thru 6.

(✱) Design fill height is the distance from the top of earth fill or roadway to the top of the top slab.

Detailed Nov. 2019
Checked Nov. 2019

Note: This drawing is not to scale. Follow dimensions.

STATE OF MISSOURI
CHRISTOPHER M. SHANKS
NUMBER PE-2010019597
PROFESSIONAL ENGINEER

THIS SHEET HAS BEEN SIGNED, SEALED AND DATED ELECTRONICALLY.

DATE PREPARED	12/9/2019
ROUTE	I-49
STATE	MO
DISTRICT	BR
SHEET NO.	3
COUNTY	McDONALD
JOB NO.	J7P0601
CONTRACT ID.	
PROJECT NO.	
BRIDGE NO.	A7053

DESCRIPTION

DATE

MISSOURI HIGHWAYS AND TRANSPORTATION COMMISSION

105 WEST CAPITOL
JEFFERSON CITY, MO 65102
1-888-ASK-MODOT (1-888-275-6636)

IF A SEAL IS PRESENT ON THIS SHEET IT HAS BEEN ELECTRONICALLY SEALED AND DATED.

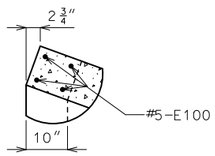

DETAIL "A"

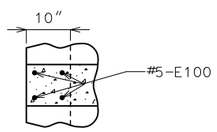

DETAIL "B"

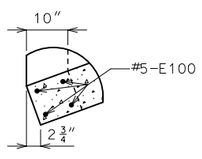

DETAIL "C"

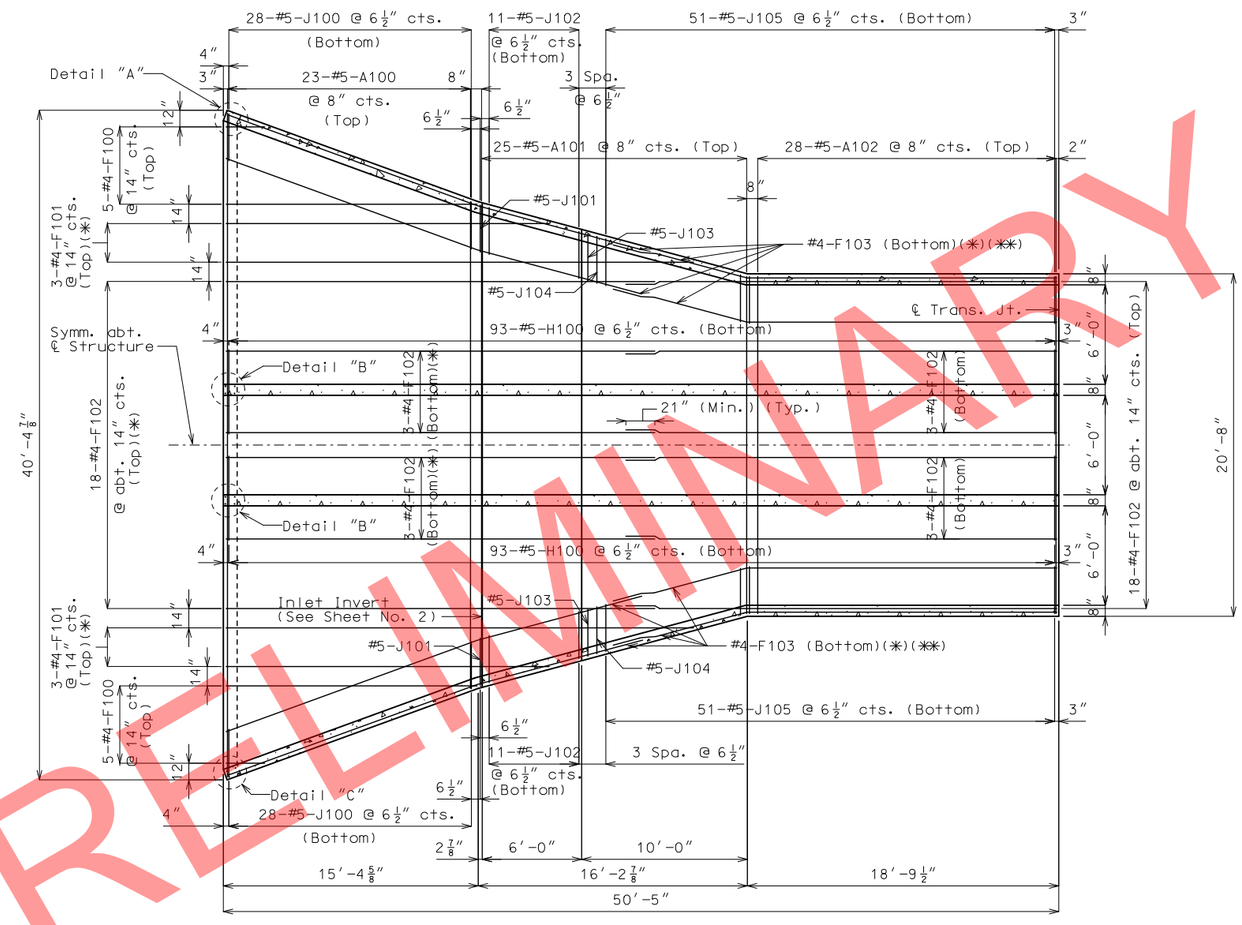

Notes:

For Plan of Top Slab, see Sheet No. 5.

✱ Top and Bottom slab F-Bars shall be bent in field to follow transition of bottom slab as shown on Sheet No. 6.

✱✱ #4-F103 denoted shall be bent in field as shown.

PLAN OF BOTTOM SLAB

DETAILS OF UNIT NO. 1

STATE OF MISSOURI
CHRISTOPHER M. SHANKS
NUMBER PE-2010019597
PROFESSIONAL ENGINEER

THIS SHEET HAS BEEN SIGNED, SEALED AND DATED ELECTRONICALLY.

DATE PREPARED 12/9/2019	
ROUTE I-49	STATE MO
DISTRICT BR	SHEET NO. 4
COUNTY McDONALD	
JOB NO. J7P0601	
CONTRACT ID.	
PROJECT NO.	
BRIDGE NO. A7053	

DATE	DESCRIPTION

MISSOURI HIGHWAYS AND TRANSPORTATION COMMISSION

105 WEST CAPITOL
JEFFERSON CITY, MO 65102
1-888-ASK-MODOT (1-888-275-6636)

IF A SEAL IS PRESENT ON THIS SHEET IT HAS BEEN ELECTRONICALLY SEALED AND DATED.

Detailed Nov. 2019
Checked Nov. 2019

Note: This drawing is not to scale. Follow dimensions.

Notes:

For Plan of Bottom Slab, see Sheet No. 4.

✳ Top and Bottom slab F-Bars & J-Bars shall be bent in field to follow transition of top slab as shown on Sheet No. 6.

✳✳ F-Bars & J-Bars denoted shall be bent in field as shown.

For Developed Elevation A-A, Section B-B, Section C-C and Section D-D, see Sheet No. 6.

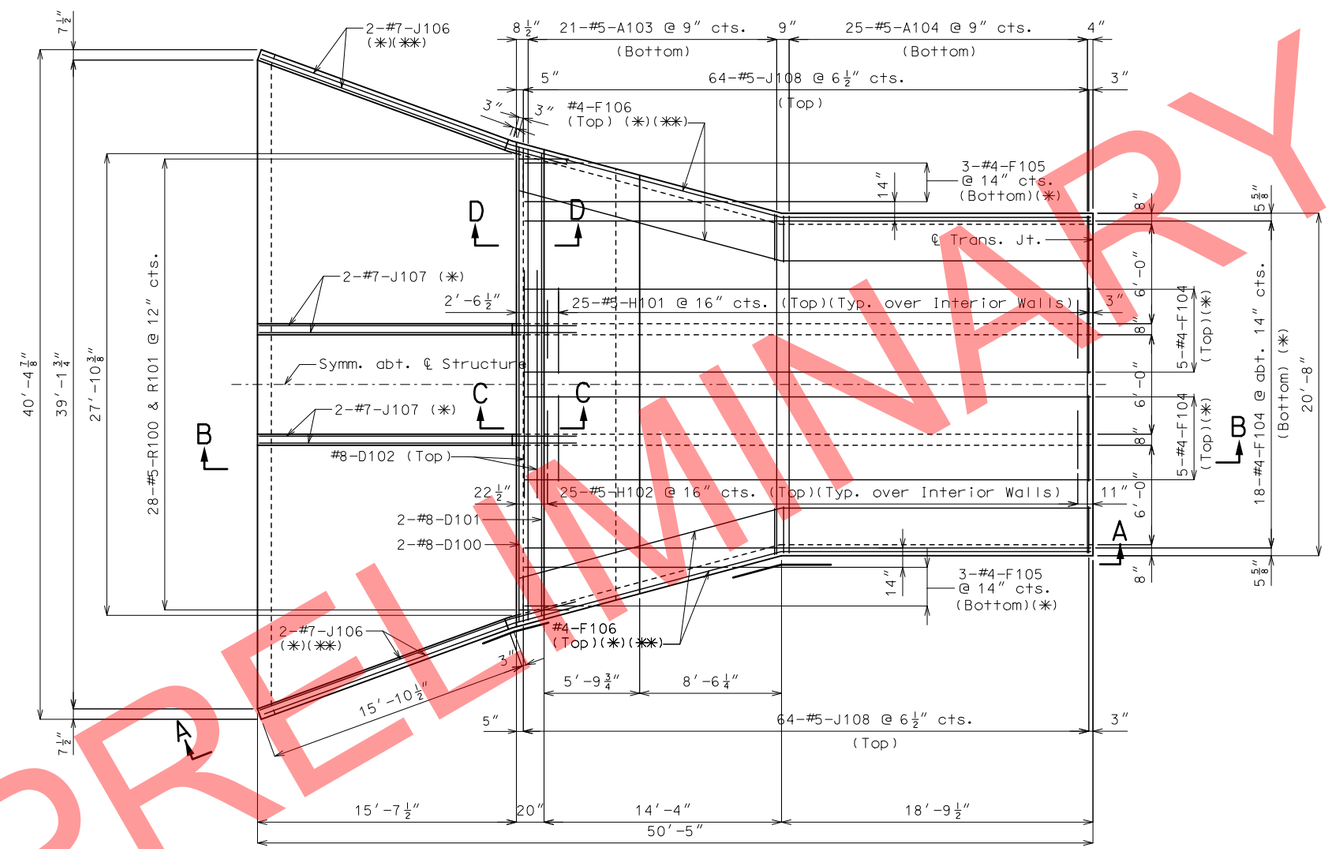

PRELIMINARY

PLAN OF TOP SLAB

DETAILS OF UNIT NO. 1

STATE OF MISSOURI
CHRISTOPHER M. SHANKS
NUMBER PE-2010019597
PROFESSIONAL ENGINEER

THIS SHEET HAS BEEN SIGNED, SEALED AND DATED ELECTRONICALLY.

DATE PREPARED	12/9/2019
ROUTE	I-49
STATE	MO
DISTRICT	BR
SHEET NO.	5
COUNTY	McDONALD
JOB NO.	J7P0601
CONTRACT ID.	
PROJECT NO.	
BRIDGE NO.	A7053

DESCRIPTION

DATE

MISSOURI HIGHWAYS AND TRANSPORTATION COMMISSION

105 WEST CAPITOL
JEFFERSON CITY, MO 65102
1-888-ASK-MODOT (1-888-275-6636)

IF A SEAL IS PRESENT ON THIS SHEET IT HAS BEEN ELECTRONICALLY SEALED AND DATED.

Detailed Nov. 2019
Checked Nov. 2019

Note: This drawing is not to scale. Follow dimensions.

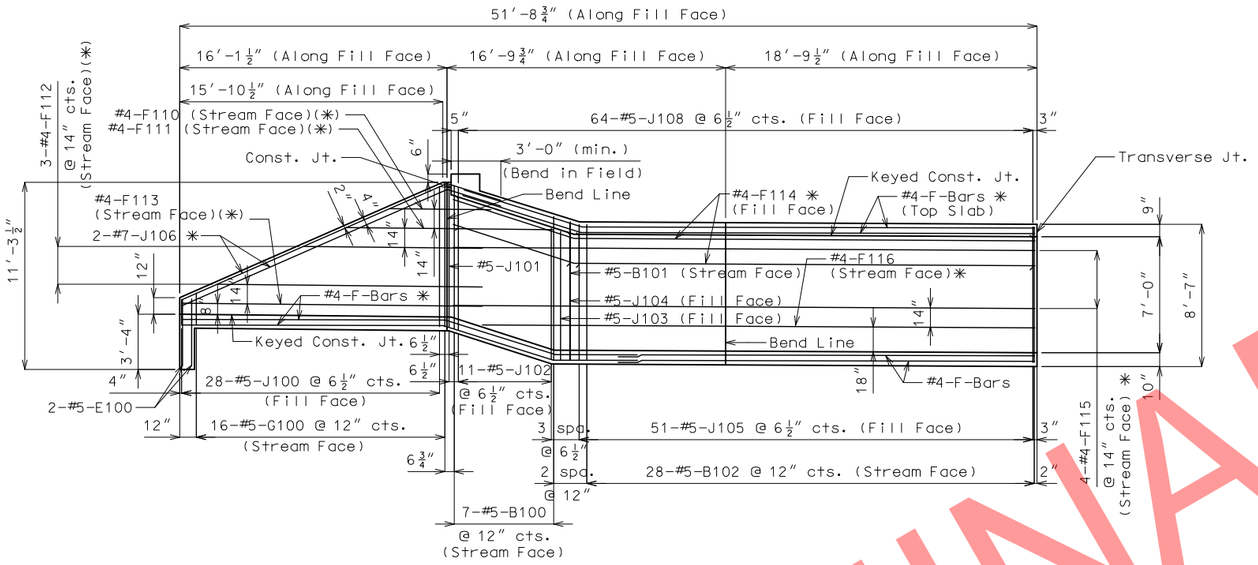

DEVELOPED ELEVATION A-A

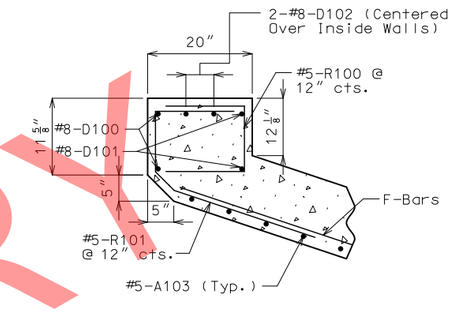

SECTION C-C

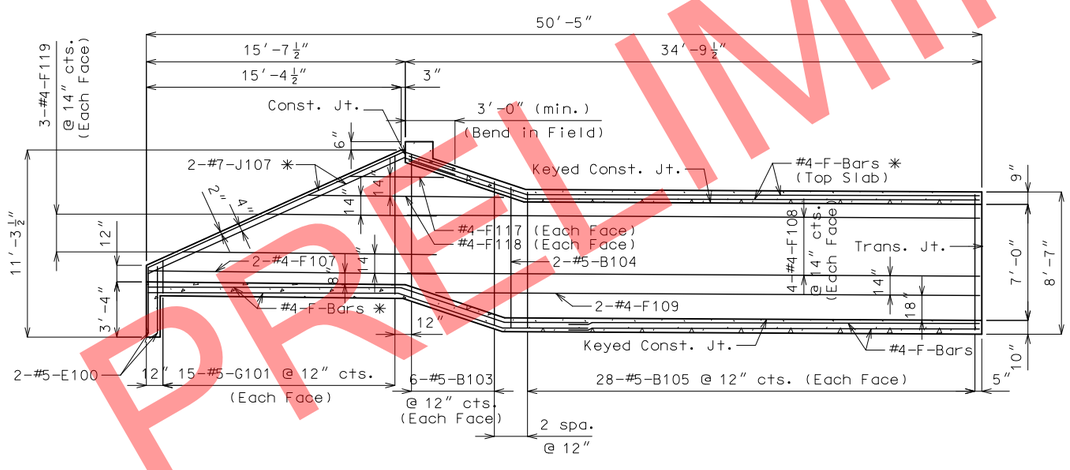

SECTION B-B

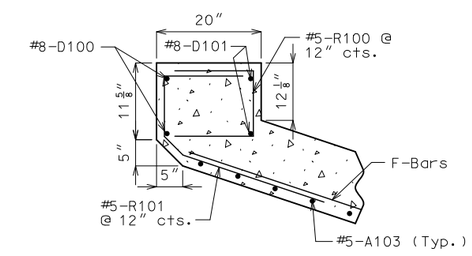

SECTION D-D

Notes:

Spacing for J-Bars is along a line parallel to ℄ Structure (see Plan View).

For location of Developed Elevation A-A and Section B-B, see Sheet No. 5.

For location of Section C-C and Section D-D, see Sheet No. 5.

Keyed Construction Joint not shown for clarity.

✳ F-Bars & J-Bars denoted shall be bent in field as shown. Lap #4-F-Bars a minimum of 21″ at splices.

DETAILS OF UNIT NO. 1

Detailed Nov. 2019
Checked Nov. 2019

Note: This drawing is not to scale. Follow dimensions.

STATE OF MISSOURI
CHRISTOPHER M. SHANKS
NUMBER PE-2010019597
PROFESSIONAL ENGINEER

THIS SHEET HAS BEEN SIGNED, SEALED AND DATED ELECTRONICALLY.

DATE PREPARED	
12/9/2019	
ROUTE I-49	STATE MO
DISTRICT BR	SHEET NO. 6
COUNTY McDONALD	
JOB NO. J7P0601	
CONTRACT ID.	
PROJECT NO.	
BRIDGE NO. A7053	

DATE	DESCRIPTION

IF A SEAL IS PRESENT ON THIS SHEET IT HAS BEEN ELECTRONICALLY SEALED AND DATED.

MISSOURI HIGHWAYS AND TRANSPORTATION COMMISSION
105 WEST CAPITOL
JEFFERSON CITY, MO 65102
1-888-ASK-MODOT (1-888-275-6636)

BILL OF REINFORCING STEEL

NO. REQ'D.	MARK NO. SIZE	MARK NO. MARK	LOCATION	EPOXY (E)	SHAPE NO.	STIRRUP (S)	SUBSTR. (X)	VARIES (V)	NO. EACH	B FT.	B IN.	C FT.	C IN.	D FT.	D IN.	E FT.	E IN.	F FT.	F IN.	H FT.	H IN.	K FT.	K IN.	NOMINAL LENGTH FT.	NOMINAL LENGTH IN.	ACTUAL LENGTH FT.	ACTUAL LENGTH IN.	WEIGHT LBS.
			Upper End																									
			Section																									
			Unit 1																									
23	5	A100	Bottom Slab		20			V	1	29	4.000													29	4	29	4	
			INCREMENT =							40	0.000													40	0	40	0	832
			5.875 INCH																									
25	5	A101	Bottom Slab		20			V	1	20	4.000													20	4	20	4	
			INCREMENT =							28	11.000													28	11	28	11	642
			4.250 INCH																									
28	5	A102	Bottom Slab		20					20	4.000													20	4	20	4	594
21	5	A103	Top Slab		20			V	1	20	5.000													20	5	20	5	
			INCREMENT =							28	6.000													28	6	28	6	536
			4.875 INCH																									
25	5	A104	Top Slab		20					20	4.000													20	4	20	4	530
14	5	B100	Ext. Wall		20					8	7.000													8	7	8	7	125
2	5	B101	Ext. Wall		20					8	4.000													8	4	8	4	17
56	5	B102	Ext. Wall		20					8	2.000													8	2	8	2	477
24	5	B103	Int. Wall		10							12.000		8	7.000									10	7	10	4	259
4	5	B104	Int. Wall		10							12.000		8	5.000									10	5	10	2	42
112	5	B105	Int. Wall		10							12.000		8	2.000									10	2	9	11	1158
2	8	D100	HEADWALL		20					28	9.000													28	9	28	9	154
2	8	D101	HEADWALL		20					28	1.000													28	1	28	1	150
2	8	D102	HEADWALL		20					14	8.000													14	8	14	8	78
16	5	E100	Toewall		20					4	0.000													4	0	4	0	67
10	4	F100	Bottom Slab		20			V	2	2	4.000													2	4	2	4	
			INCREMENT =							15	2.000													15	2	15	2	58
			38.500 INCH																									
6	4	F101	Bottom Slab		20			V	2	19	6.000													19	6	19	6	
			INCREMENT =							28	2.000													28	2	28	2	96
			52.000 INCH																									
48	4	F102	Bottom Slab		20					26	0.000													26	0	26	0	834
8	4	F103	Bottom Slab		20					27	0.000													27	0	27	0	144
28	4	F104	Top Slab		20					34	2.000													34	2	34	2	639
6	4	F105	Top Slab		20			V	2	3	6.000													3	6	3	6	
			INCREMENT =							12	3.000													12	3	12	3	32
			52.500 INCH																									
4	4	F106	Top Slab		20					35	0.000													35	0	35	0	94
4	4	F107	Int. Wing		20					17	4.000													17	4	17	4	46
16	4	F108	Int. Wall		20					34	7.000													34	7	34	7	370
4	4	F109	Int. Wall		20					32	10.000													32	10	32	10	88
2	4	F110	Ext. Wing		20					6	1.000													6	1	6	1	8
2	4	F111	Ext. Wing		20					12	5.000													12	5	12	5	17
6	4	F112	Ext. Wing		20			V	2	10	10.000													10	10	10	10	
			INCREMENT =							16	0.000													16	0	16	0	54
			31.000 INCH																									
2	4	F113	Ext. Wing		20					18	1.000													18	1	18	1	24
4	4	F114	Ext. Wall		20					35	6.000													35	6	35	6	95
8	4	F115	Ext. Wall		20					35	2.000													35	2	35	2	188
2	4	F116	Ext. Wall		20					33	4.000													33	4	33	4	45
4	4	F117	Int. Wing		20					5	8.000													5	8	5	8	15
4	4	F118	Int. Wing		20					11	9.000													11	9	11	9	31
12	4	F119	Int. Wing		20			V	4	10	4.000													10	4	10	4	
			INCREMENT =							15	4.000													15	4	15	4	103
			30.000 INCH																									

BILL OF REINFORCING STEEL

NO. REQ'D.	MARK NO. SIZE	MARK NO. MARK	LOCATION	EPOXY (E)	SHAPE NO.	STIRRUP (S)	SUBSTR. (X)	VARIES (V)	NO. EACH	B FT.	B IN.	C FT.	C IN.	D FT.	D IN.	E FT.	E IN.	F FT.	F IN.	H FT.	H IN.	K FT.	K IN.	NOMINAL LENGTH FT.	NOMINAL LENGTH IN.	ACTUAL LENGTH FT.	ACTUAL LENGTH IN.	WEIGHT LBS.
32	5	G100	Ext. Wing		20			V	2	22.000														0	22	0	22	
			INCREMENT =							8	7.000													8	7	8	7	174
			5.375 INCH																									
60	5	G101	Int. Wing		20			V	4	22.000														0	22	0	22	
			INCREMENT =							8	4.000													8	4	8	4	318
			5.625 INCH																									
186	5	H100	Bottom Slab		20					5	1.000													5	1	5	1	986
50	5	H101	Top Slab		20					5	2.000													5	2	5	2	269
50	5	H102	Top Slab		20					3	6.000													3	6	3	6	183
56	5	J100	Ext. Wing		19			V	2	17.500		2	10.000											4	4	4	2	
			INCREMENT =							8	5.250	2	10.000											11	3	11	2	448
			3.125 INCH																									
2	5	J101	Ext. Wing		19					8	6.500	2	10.000											11	5	11	3	23
22	5	J102	Bott. Corner		19					7	11.000	2	10.000											10	9	10	8	245
2	5	J103	Bott. Corner		19					7	9.000	2	10.000											10	7	10	6	22
2	5	J104	Bott. Corner		19					7	7.000	2	10.000											10	5	10	4	22
102	5	J105	Bott. Corner		19					7	6.000	2	10.000											10	4	10	3	1090
8	7	J106	Ext. Wing		20					21	0.000													21	0	21	0	343
8	7	J107	Int. Wing		20					20	3.000													20	3	20	3	331
128	5	J108	Top Corner		19					2	5.000	2	9.500											5	3	5	1	679
28	5	R100	HEADWALL		10	S						10.500		13.500										2	11	2	8	78
28	5	R101	HEADWALL		50	S				16.000		9.500		4.375		2	3.375	9.125		3.125		3.125		4	11	4	9	139
			UNIT 1																									
			TOTALS																									
	4																											2981
	5																											9955
	7																											674
	8																											382
			UNIT 1 TOTAL																									13992

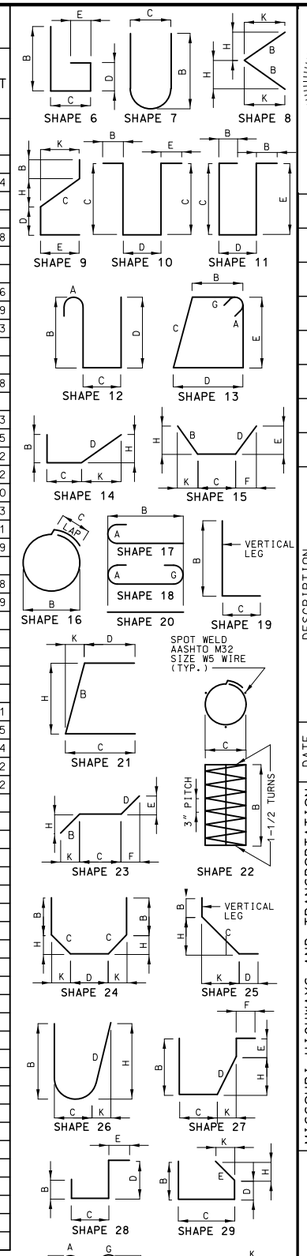

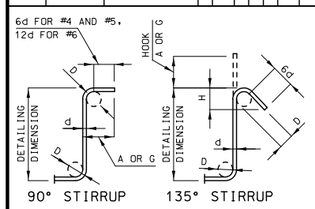

STIRRUP HOOK DIMENSIONS				
GRADES 40 - 50 - 60 KSI				
BAR SIZE	D (IN.)	90° HOOK	135° HOOK	
		HOOK A OR G	HOOK A OR G	APPROX. H
#4	2"	4 1/2"	4 1/2"	3"
#5	2 1/2"	6"	5 1/2"	3 3/4"
#6	4 1/2"	12"	8"	4 1/2"

NOTE: UNLESS OTHERWISE NOTED, DIAMETER "D" IS THE SAME FOR ALL BENDS AND HOOKS ON A BAR.

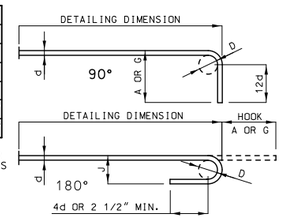

END HOOK DIMENSIONS				
BAR SIZE	D (IN.)	ALL GRADES		
		180° HOOKS		90° HOOKS
		A OR G	J	A OR G
#3	2 1/4"	5"	3"	6"
#4	3"	6"	4"	8"
#5	3 3/4"	7"	5"	10"
#6	4 1/2"	8"	6"	12"
#7	5 1/4"	10"	7"	14"
#8	6"	11"	8"	16"
#9	9 1/2"	15"	11 3/4"	19"
#10	10 3/4"	17"	13 1/4"	22"
#11	12"	19"	14 3/4"	2'-0"
#14	18 1/4"	2'-3"	21 3/4"	2'-7"

NOTE:
ALL STANDARD HOOKS AND BENDS OTHER THAN 180 DEGREE ARE TO BE BENT WITH SAME PROCEDURE AS FOR 90 DEGREE STANDARD HOOKS.
HOOKS AND BENDS SHALL BE IN ACCORDANCE WITH THE PROCEDURES AS SHOWN ON THIS SHEET.
E = EPOXY COATED REINFORCEMENT.
S = STIRRUP.
X = BAR IS INCLUDED IN SUBSTRUCTURE QUANTITIES.
V = BAR DIMENSIONS VARY IN EQUAL INCREMENTS BETWEEN DIMENSIONS SHOWN ON THIS LINE AND THE FOLLOWING LINE.
NO. EA. = NUMBER OF BARS OF EACH LENGTH.
NOMINAL LENGTHS ARE BASED ON OUT TO OUT DIMENSIONS SHOWN IN BENDING DIAGRAMS AND ARE LISTED FOR FABRICATORS USE. (NEAREST INCH)
ACTUAL LENGTHS ARE MEASURED ALONG CENTERLINE BAR TO THE NEAREST INCH.
PAYWEIGHTS ARE BASED ON ACTUAL LENGTHS.
FOUR ANGLE OR CHANNEL SPACERS ARE REQUIRED FOR EACH COLUMN SPIRAL. SPACERS ARE TO BE PLACED ON INSIDE OF SPIRALS. LENGTH AND WEIGHT OF COLUMN SPIRALS DO NOT INCLUDE SPLICES OR SPACERS.
REINFORCING STEEL (GRADE 60) FY = 60,000 PSI.

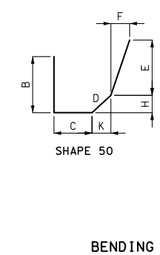

BENDING DIAGRAMS

STATE OF MISSOURI
CHRISTOPHER M. SHANKS
NUMBER PE-2010019597
PROFESSIONAL ENGINEER
THIS SHEET HAS BEEN SIGNED, SEALED AND DATED ELECTRONICALLY.

DATE PREPARED 12/9/2019

ROUTE	STATE
I-49	MO
DISTRICT	SHEET NO.
BR	7

COUNTY MCDONALD
JOB NO. J7P0601
CONTRACT ID.
PROJECT NO.
BRIDGE NO. A7053

DESCRIPTION
DATE

MISSOURI HIGHWAYS AND TRANSPORTATION COMMISSION
105 WEST CAPITOL
JEFFERSON CITY, MO 65102
1-888-ASK-MODOT (1-888-275-6636)

IF A SEAL IS PRESENT ON THIS SHEET IT HAS BEEN ELECTRONICALLY SEALED AND DATED.

Detailed Nov. 2019
Checked Nov. 2019

Note: This drawing is not to scale. Follow dimensions.

BILL OF REINFORCING STEEL

NO. REQ'D.	MARK NO. SIZE	MARK NO. MARK	LOCATION	SHAPE NO.	STIRRUP (S)	EPOXY (E)	VARIES (V)	NO. EACH	DIMENSIONS B FT.	C FT.	D or F FT.	E FT.	H FT.	K FT.	NOMINAL LENGTH FT. IN.	ACTUAL LENGTH FT. IN.	WEIGHT LBS.
			Barrel Section														
			Unit 2														
112	5	A1	Top Slab	20				1	20.667						20′-8″	20′-8″	2416
112	5	A2	Bottom Slab	20				1	20.667						20′-8″	20′-8″	2416
194	5	J3	Top Corner	19				1	2.917	3.208					6′-2″	5′-12″	1213
194	5	J4	Bottom Corner	19				1	8.083	2.800					10′-11″	10′-9″	2177
244	5	B1	Interior Wall	10				1		1.000	9.250				11′-3″	10′-12″	2797
172	5	B2	Exterior Wall	20				1	9.250						9′-3″	9′-3″	1661
122	5	H1	Top Slab	20				1	5.833						5′-10″	5′-10″	743
120	5	H2	Top Slab	20				1	4.083						4′-1″	4′-1″	512
242	5	H3	Bottom Slab	20				1	5.167						5′-2″	5′-2″	1305
94	4	F1	Temp. Steel	20				1	59.750						59′-9″	59′-9″	3753
			Unit 3														
91	6	A1	Top Slab	20				1	21.000						21′-0″	21′-0″	2873
121	5	A2	Bottom Slab	20				1	21.000						21′-0″	21′-0″	2653
224	5	J3	Top Corner	19				1	3.167	3.358					6′-6″	6′-5″	1494
194	5	J4	Bottom Corner	19				1	8.333	2.917					11′-3″	11′-1″	2251
244	5	B1	Interior Wall	10				1		1.000	9.750				11′-9″	11′-6″	2924
194	5	B2	Exterior Wall	20				1	9.750						9′-9″	9′-9″	1975
122	5	H1	Top Slab	20				1	5.667						5′-8″	5′-8″	722
120	5	H2	Top Slab	20				1	4.000						4′-0″	4′-0″	501
182	6	H3	Bottom Slab	20				1	5.667						5′-8″	5′-8″	1550
94	4	F1	Temp. Steel	20				1	59.750						59′-9″	59′-9″	3753
			Unit 4														
91	6	A1	Top Slab	20				1	21.000						21′-0″	21′-0″	2873
121	5	A2	Bottom Slab	20				1	21.000						21′-0″	21′-0″	2653
224	5	J3	Top Corner	19				1	3.167	3.358					6′-6″	6′-5″	1494
194	5	J4	Bottom Corner	19				1	8.333	2.917					11′-3″	11′-1″	2251
244	5	B1	Interior Wall	10				1		1.000	9.750				11′-9″	11′-6″	2924
194	5	B2	Exterior Wall	20				1	9.750						9′-9″	9′-9″	1975
122	5	H1	Top Slab	20				1	5.667						5′-8″	5′-8″	722
120	5	H2	Top Slab	20				1	4.000						4′-0″	4′-0″	501
182	6	H3	Bottom Slab	20				1	5.667						5′-8″	5′-8″	1550
94	4	F1	Temp. Steel	20				1	59.750						59′-9″	59′-9″	3753
			Unit 5														
112	5	A1	Top Slab	20				1	20.667						20′-8″	20′-8″	2416
112	5	A2	Bottom Slab	20				1	20.667						20′-8″	20′-8″	2416
194	5	J3	Top Corner	19				1	2.917	3.208					6′-2″	5′-12″	1213
194	5	J4	Bottom Corner	19				1	8.083	2.800					10′-11″	10′-9″	2177
244	5	B1	Interior Wall	10				1		1.000	9.250				11′-3″	10′-12″	2797
172	5	B2	Exterior Wall	20				1	9.250						9′-3″	9′-3″	1661
122	5	H1	Top Slab	20				1	5.833						5′-10″	5′-10″	743
120	5	H2	Top Slab	20				1	4.083						4′-1″	4′-1″	512
242	5	H3	Bottom Slab	20				1	5.167						5′-2″	5′-2″	1305
94	4	F1	Temp. Steel	20				1	59.750						59′-9″	59′-9″	3753

BILL OF REINFORCING STEEL

NO. REQ'D.	MARK NO. SIZE	MARK NO. MARK	LOCATION	SHAPE NO.	STIRRUP (S)	EPOXY (E)	VARIES (V)	NO. EACH	DIMENSIONS B FT.	C FT.	D or F FT.	E FT.	H FT.	K FT.	NOMINAL LENGTH FT. IN.	ACTUAL LENGTH FT. IN.	WEIGHT LBS.
			Lower End														
			Section														
			Unit 6														
56	5	A1	Top Slab	20				1	20.333						20′-4″	20′-4″	1189
63	5	A2	Bottom Slab	20				1	20.333						20′-4″	20′-4″	1337
4	5	A3	Top Slab	20			V	1	16.987		Incr =	59.948	inches		16′-12″	16′-12″	40
									2.000						2′-0″	2′-0″	
162	5	J3	Top Corner	19				1	2.417	2.783					5′-2″	5′-1″	857
164	5	J4	Bottom Corner	19				1	7.500	2.800					10′-4″	10′-2″	1740
180	5	B1	Interior Walls	10				1		1.000	8.167				10′-2″	9′-11″	1860
89	5	B2	Exterior Walls	20				1	8.167						8′-2″	8′-2″	759
64	5	H1	Top Slab	20				1	5.167						5′-2″	5′-2″	345
64	5	H2	Top Slab	20				1	3.500						3′-6″	3′-6″	234
160	5	H3	Bottom Slab	20				1	5.083						5′-1″	5′-1″	849
9	4	F60	Temp. Steel	20				1	41.658						41′-8″	41′-8″	250
1	4	F61	Temp. Steel	20				1	42.075						42′-1″	42′-1″	28
1	4	F62	Temp. Steel	20				1	42.308						42′-4″	42′-4″	28
1	4	F63	Temp. Steel	20				1	42.421						42′-5″	42′-5″	28
12	4	F64	Temp. Steel	20				1	42.684						42′-8″	42′-8″	342
1	4	F65	Temp. Steel	20				1	42.946						42′-11″	42′-11″	29
1	4	F66	Temp. Steel	20				1	43.084						43′-1″	43′-1″	29
1	4	F67	Temp. Steel	20				1	43.284						43′-3″	43′-3″	29
1	4	F68	Temp. Steel	20				1	43.422						43′-5″	43′-5″	29
12	4	F69	Temp. Steel	20				1	43.684						43′-8″	43′-8″	350
1	4	F70	Temp. Steel	20				1	43.947						43′-11″	43′-11″	29
1	4	F71	Temp. Steel	20				1	44.060						44′-1″	44′-1″	29
1	4	F72	Temp. Steel	20				1	44.292						44′-4″	44′-4″	30
9	4	F73	Temp. Steel	20				1	44.710						44′-9″	44′-9″	269
1	4	F74	Temp. Steel	20				1	42.078						42′-1″	42′-1″	28
1	4	F75	Temp. Steel	20				1	42.321						42′-4″	42′-4″	28
1	4	F76	Temp. Steel	20				1	43.084						43′-1″	43′-1″	29
1	4	F77	Temp. Steel	20				1	43.284						43′-3″	43′-3″	29
1	4	F78	Temp. Steel	20				1	44.047						44′-1″	44′-1″	29
1	4	F79	Temp. Steel	20				1	44.290						44′-3″	44′-3″	30
38	4	F80	Temp. Steel	20			V	2	44.710		Incr =	2.035	inches		44′-9″	44′-9″	1097
									41.658						41′-8″	41′-8″	
			Lower Wings														
			and Headwall														
22	5	A2	Bottom Slab	20				1	20.333						20′-4″	20′-4″	467
4	5	A11	Bottom Slab	20			V	1	15.322		Incr =	53.287	inches		15′-4″	15′-4″	36
									2.000						2′-0″	2′-0″	
2	8	D3	Headwall	20				1	20.645						20′-8″	20′-8″	110
16	5	E1	Heel	20				1	4.000						4′-0″	4′-0″	67
30	4	F42	Wings	20			V	6	14.867		Incr =	28.314	inches		14′-10″	14′-10″	204
									5.429						5′-5″	5′-5″	
10	4	F44	Bottom Slab	20				1	15.878						15′-11″	15′-11″	106
18	4	F45	Bottom Slab	20				1	15.878						15′-11″	15′-11″	190
56	5	G1	Interior Walls	20			V	4	8.428		Incr =	5.934	inches		8′-5″	8′-5″	305
									2.000						2′-0″	2′-0″	
28	5	G3	Exterior Wings	20			V	2	8.428		Incr =	5.934	inches		8′-5″	8′-5″	152
									2.000						2′-0″	2′-0″	
54	5	H3	Bottom Slab	20				1	5.083						5′-1″	5′-1″	287
4	8	H10	Headwall	20				1	20.645						20′-8″	20′-8″	221
16	7	J1	Wings	20			FB	1	18.579						18′-7″	18′-7″	608
48	5	J5	Wings	19			V	2	8.160	2.800	Incr =	3.214	inches		10′-12″	10′-10″	388
									2.000	2.800					4′-10″	4′-8″	
22	5	R3	Headwall	10	S			1		1.417	1.000				3′-10″	3′-8″	83
			UNITS 2-6														
			Totals														
	4																18281
	5																66515
	6																8846
	7																608
	8																331
	9																0
	10																0
	11																0
			UNITS 2-6 TOTAL														94580
			UNIT 1														13992
			UNITS 2-6														94580
			TOTAL														108572

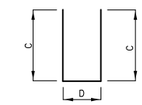

SHAPE 10

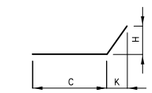

SHAPE 15

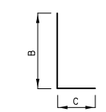

SHAPE 19

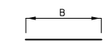

SHAPE 20

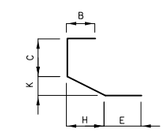

SHAPE 27

SPLICE LENGTH	
BAR SIZE	NON-EPOXY
#4	21 IN.
#5	26 IN.
#6	31 IN.
#7	39 IN.
#8	51 IN.
#9	65 IN.
#10	82 IN.
#11	101 IN.

MAX BAR LENGTH	
BAR SIZE	NON-EPOXY
#4	60 FT.
#5	60 FT.
#6	60 FT.
#7	60 FT.
#8	60 FT.
#9	60 FT.
#10	60 FT.
#11	60 FT.

NOTE:
THE BAR LIST IS BASED ON THE MISSOURI STANDARD PLANS.
THIS BAR LIST IS FOR QUANTITY ESTIMATION PURPOSE ONLY AND SHALL BE VERIFIED OR MODIFIED BY THE CONTRACTOR.

STATE OF MISSOURI
CHRISTOPHER M. SHANKS
NUMBER PE-2010019597
PROFESSIONAL ENGINEER
THIS SHEET HAS BEEN SIGNED, SEALED AND DATED ELECTRONICALLY.

DATE PREPARED 12/9/2019
ROUTE I-49 | STATE MO
DISTRICT BR | SHEET NO. 8
COUNTY McDONALD
JOB NO. J7P0601
CONTRACT ID.
PROJECT NO.
BRIDGE NO. A7053

DESCRIPTION
DATE

IF A SEAL IS PRESENT ON THIS SHEET IT HAS BEEN ELECTRONICALLY SEALED AND DATED.

MISSOURI HIGHWAYS AND TRANSPORTATION COMMISSION
105 WEST CAPITOL
JEFFERSON CITY, MO 65102
1-888-ASK-MODOT (1-888-275-6636)

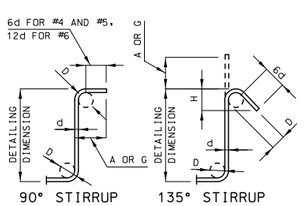

STIRRUP HOOK DIMENSIONS				
BAR SIZE	D (IN.)	90° HOOK	135° HOOK	
		HOOK A OR G	HOOK A OR G	APPROX. H
#4	2″	4 1/2″	4 1/2″	3″
#5	2 1/2″	6″	5 1/2″	3 3/4″
#6	4 1/2″	12″	8″	4 1/2″

NOTE: UNLESS OTHERWISE NOTED DIAMETER "D" IS THE SAME FOR ALL BENDS AND HOOKS ON A BAR.

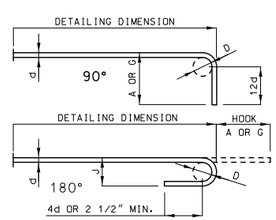

END HOOK DIMENSIONS				
BAR SIZE	D (IN.)	GRADE 60		
		180° HOOKS		90° HOOKS
		A OR G	J	A OR G
#4	3″	6″	4″	8″
#5	3 3/4″	7″	5″	10″
#6	4 1/2″	8″	6″	12″
#7	5 1/4″	10″	7″	14″
#8	6″	11″	8″	16″
#9	9 1/2″	15″	11 3/4″	19″
#10	10 3/4″	17″	13 1/4″	22″
#11	12″	19″	14 3/4″	24″

NOTE:
ALL STANDARD HOOKS AND BENDS OTHER THAN 180 DEGREE ARE TO BE BENT WITH SAME PROCEDURE AS FOR 90 DEGREE STANDARD HOOKS.
HOOKS AND BENDS SHALL BE IN ACCORDANCE WITH THE PROCEDURES AS SHOWN ON THIS SHEET.
FB = BARS MAY BE BENT IN FIELD TO FIT.
E = EPOXY COATED REINFORCEMENT.
S = STIRRUP.
V = BAR DIMENSIONS VARY IN EQUAL INCREMENTS BETWEEN DIMENSIONS SHOWN ON THIS LINE AND THE FOLLOWING LINE. A BLANK IN THE SECOND LINE REPRESENTS THE SAME BAR DIMENSION AS THAT IN THE FIRST LINE. IT IS THE CONTRACTOR'S RESPONSIBILITY TO ADD A SPLICE LENGTH TO A BAR LENGTH WHICH EXCEEDS ITS MAXIMUM ALLOWABLE LENGTH.
NO. EA. = NUMBER OF BARS OF EACH LENGTH.
NOMINAL LENGTHS ARE BASED ON OUT TO OUT DIMENSIONS SHOWN IN BENDING DIAGRAMS AND ARE LISTED FOR FABRICATORS USE. (NEAREST INCH)
ACTUAL LENGTHS ARE MEASURED ALONG CENTERLINE BAR TO THE NEAREST INCH.
PAYWEIGHTS ARE BASED ON ACTUAL LENGTHS.
REINFORCING STEEL (GRADE 60) FY = 60,000 PSI.

Detailed November 2019
Checked November 2019

Note: This drawing is not to scale. Follow dimensions.

MISSOURI HIGHWAYS AND TRANSPORTATION COMMISSION

3 (10′ x 8′) CONCRETE BOX CULVERT

SEC/SUR 34 TWP 21N RGE 32W

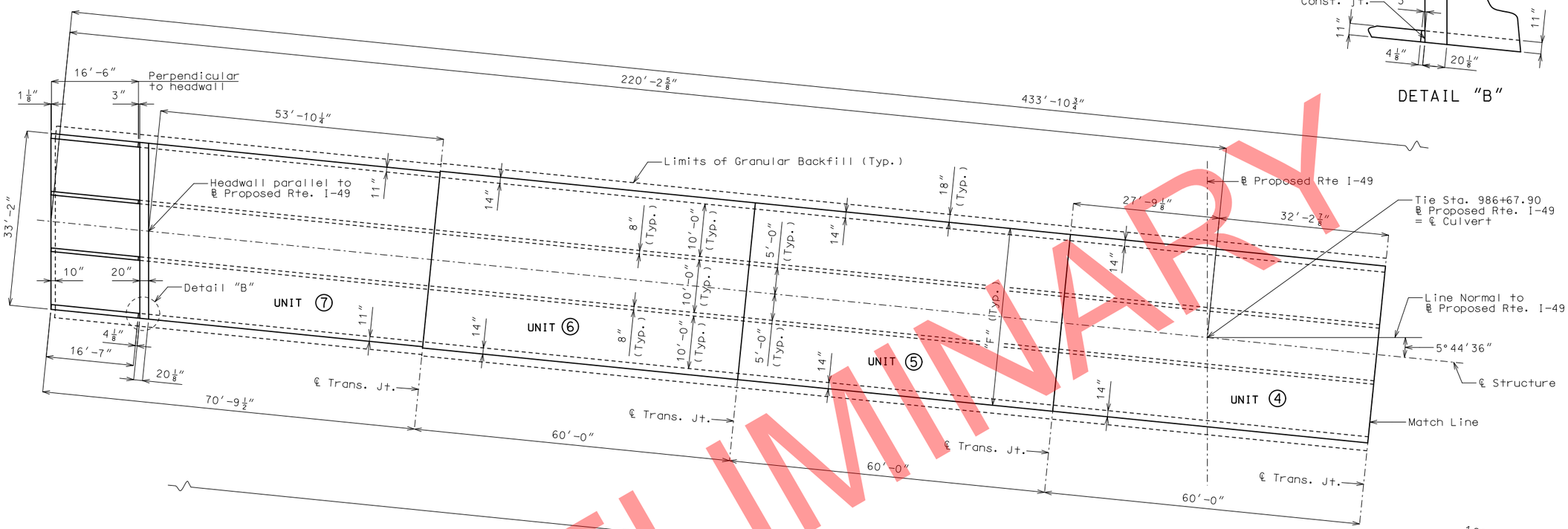

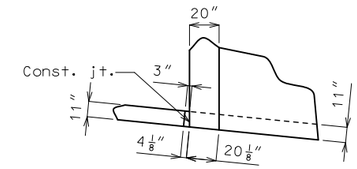

DETAIL "B"

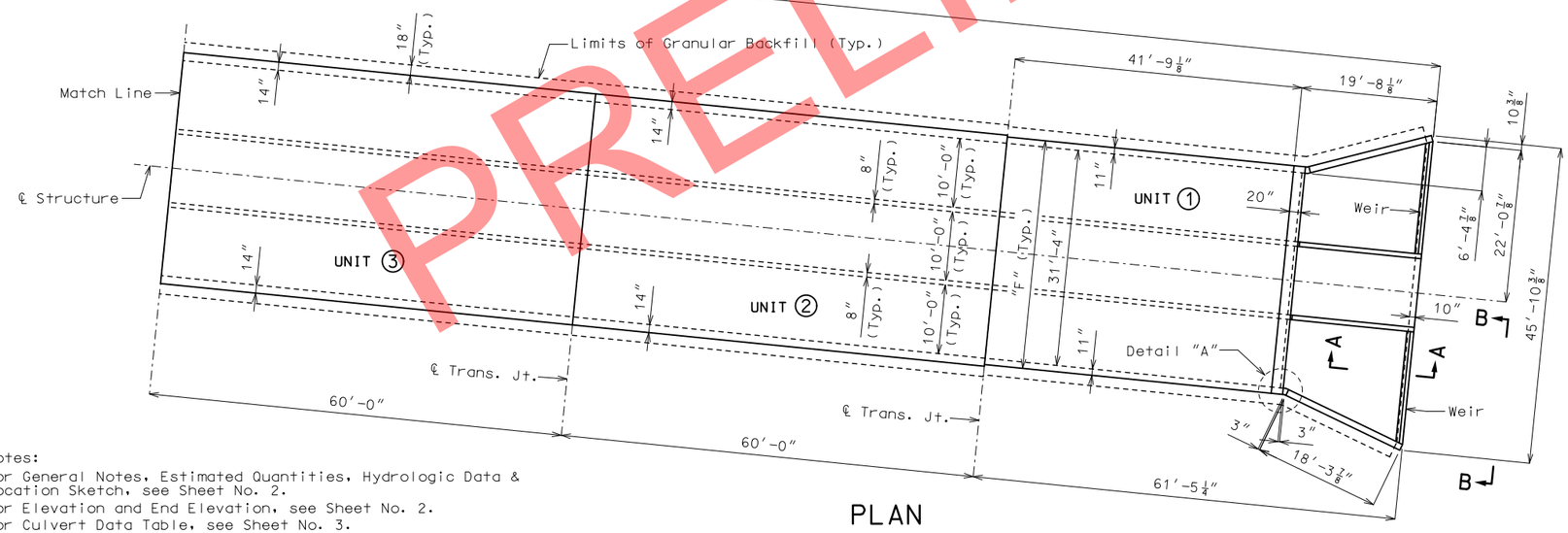

PLAN

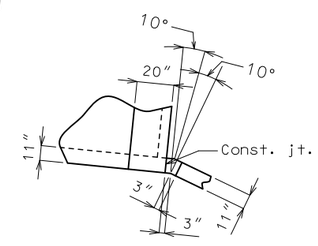

DETAIL "A"

Notes:

For General Notes, Estimated Quantities, Hydrologic Data & Location Sketch, see Sheet No. 2.

For Elevation and End Elevation, see Sheet No. 2.

For Culvert Data Table, see Sheet No. 3.

For Section A-A and Part Elevation B-B showing Details of Weir at Inlet, see Sheet No. 3.

B.M.-49-01-17 ELEV. 1038.73
N: 122,910.2783 E: 2,821,845.2573
1.5″ ALUM. DISK IN LIMEROCK
OUTCROP ± 150′ E/O & 20′ S/O TARGET E

CULVERT-BRIDGE OVER RATTLESNAKE HOLLOW CREEK

STATE ROAD FROM RTE. H TO STATE LINE

AT STATE LINE

STA. 986+67.90

STD. 703.37
STD. 703.83
STD. 703.86
STD. 703.87
STD. 706.35

Designed Oct. 2019
Detailed Nov. 2019
Checked Nov. 2019

Note: This drawing is not to scale. Follow dimensions.

STATE OF MISSOURI
CHRISTOPHER M. SHANKS
NUMBER PE-2010019597
PROFESSIONAL ENGINEER
THIS SHEET HAS BEEN SIGNED, SEALED AND DATED ELECTRONICALLY.

DATE PREPARED	12/9/2019
ROUTE	I-49
STATE	MO
DISTRICT	BR
SHEET NO.	1
COUNTY	McDONALD
JOB NO.	J7P0601
CONTRACT ID.	
PROJECT NO.	
BRIDGE NO.	A7054

DESCRIPTION

DATE

MISSOURI HIGHWAYS AND TRANSPORTATION COMMISSION
105 WEST CAPITOL
JEFFERSON CITY, MO 65102
1-888-ASK-MODOT (1-888-275-6636)

IF A SEAL IS PRESENT ON THIS SHEET IT HAS BEEN ELECTRONICALLY SEALED AND DATED.

GENERAL NOTES:

Design Specifications:
2010 - AASHTO LRFD Bridge Design Specifications
and 2010 Interim Revisions

Design Unit Stresses:
Class B-1 Concrete (Box Culvert) f'c = 4,000 psi
Reinforcing Steel (Grade 60) fy = 60,000 psi

Design Loading:
HL-93 minus Lane Load
Earth 120 #/ft.^{3}
Equivalent fluid pressure
30 #/ft.^{3} (Min.) - 60 #/ft.^{3} (Max.)

Reinforcing Steel:
Minimum clearance to reinforcing steel shall be 1-1/2", unless otherwise shown.

Miscellaneous:
Provide grading of the channel bottom within the limits of the R/W as needed for culvert flowline elevations and transition of the channel bed to the culvert openings.

Taper channel banks to match end of culvert opening as required. (Roadway Item)

"Sec" refers to the sections in the standard and supplemental specifications unless specified otherwise.

If any part of the barrel is exposed, the roadway fill shall be warped to provide 12 inches minimum cover. (Roadway Item)

Traffic Handling:
See Roadway Plans for traffic control.

Precast Option:
The box shown below indicating whether a precast or cip box was used should be checked by MoDOT Construction personnel:

☐ Precast Box used
☐ Cast-in-Place Box used

When alternate precast concrete box culvert sections are used, the minimum distance from inside face of headwalls to precast sections measured along the shortest wall shall be 3 feet. Reinforcement and dimensions for wings and headwalls shall be in accordance with Missouri Standard Plans.

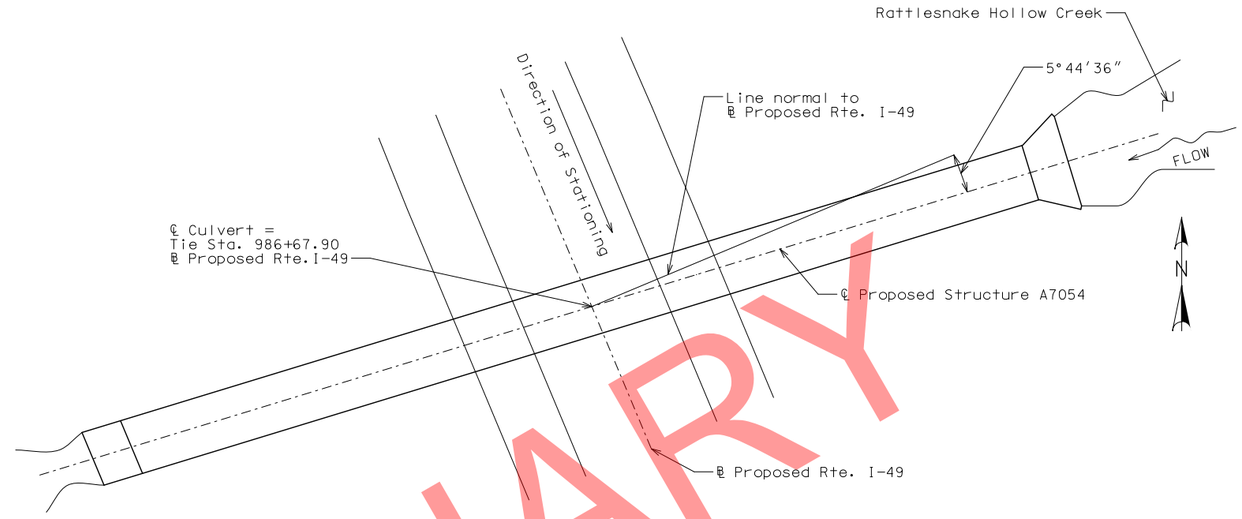

LOCATION SKETCH

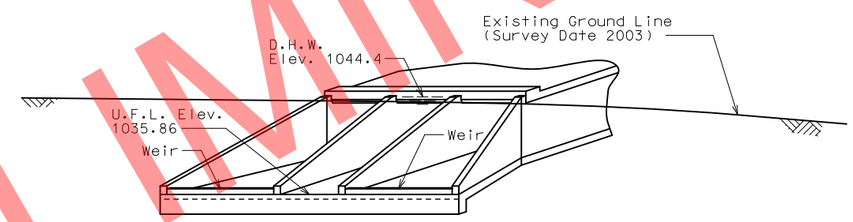

END ELEVATION
(UPSTREAM)

HYDROLOGIC DATA
Drainage Area = 2.1 (sq. mi.)
Design High Water (DHW) Elev.= 1044.4
Design High Water Frequency = 100 (year)
Design High Water Discharge = 2100 (cfs)
Estimated Backwater = 0.3 (ft)
Outlet Velocity = 20.1 (ft/sec)
Roadway Overtopping
Overtopping Flood Discharge = N/A
Overtopping Flood Frequency > 500 Years
500 Year Flood Elevation = 1044.4

ESTIMATED QUANTITIES			FINAL QUANTITIES
Class 4 Excavation	cu. yard	5,405	
Class B-1 Concrete (Culverts-Bridge)	cu. yard	2,690.4	
Reinforcing Steel (Culverts-Bridge)	pound	259,930	

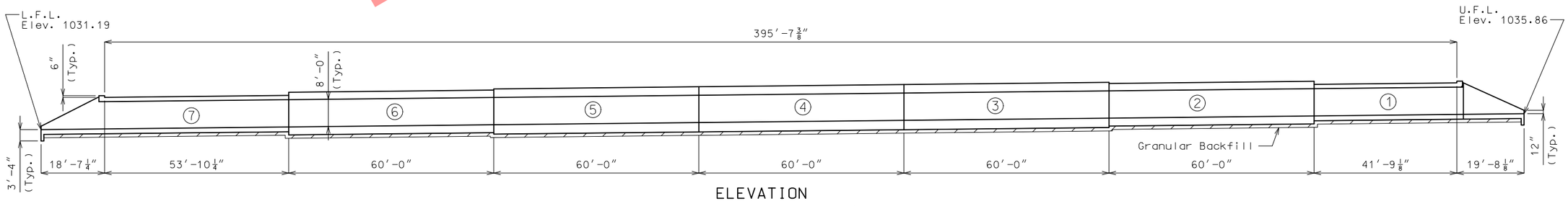

ELEVATION

Note: Dimensions are horizontal along ℄ Structure.

Detailed Nov. 2019
Checked Nov. 2019

Note: This drawing is not to scale. Follow dimensions.

STATE OF MISSOURI
CHRISTOPHER M. SHANKS
NUMBER PE-2010019597
PROFESSIONAL ENGINEER
THIS SHEET HAS BEEN SIGNED, SEALED AND DATED ELECTRONICALLY.

DATE PREPARED	
12/9/2019	
ROUTE I-49	STATE MO
DISTRICT BR	SHEET NO. 2
COUNTY McDONALD	
JOB NO. J7P0601	
CONTRACT ID.	
PROJECT NO.	
BRIDGE NO. A7054	

DATE	DESCRIPTION

IF A SEAL IS PRESENT ON THIS SHEET IT HAS BEEN ELECTRONICALLY SEALED AND DATED.

MISSOURI HIGHWAYS AND TRANSPORTATION COMMISSION
105 WEST CAPITOL
JEFFERSON CITY, MO 65102
1-888-ASK-MODOT (1-888-275-6636)

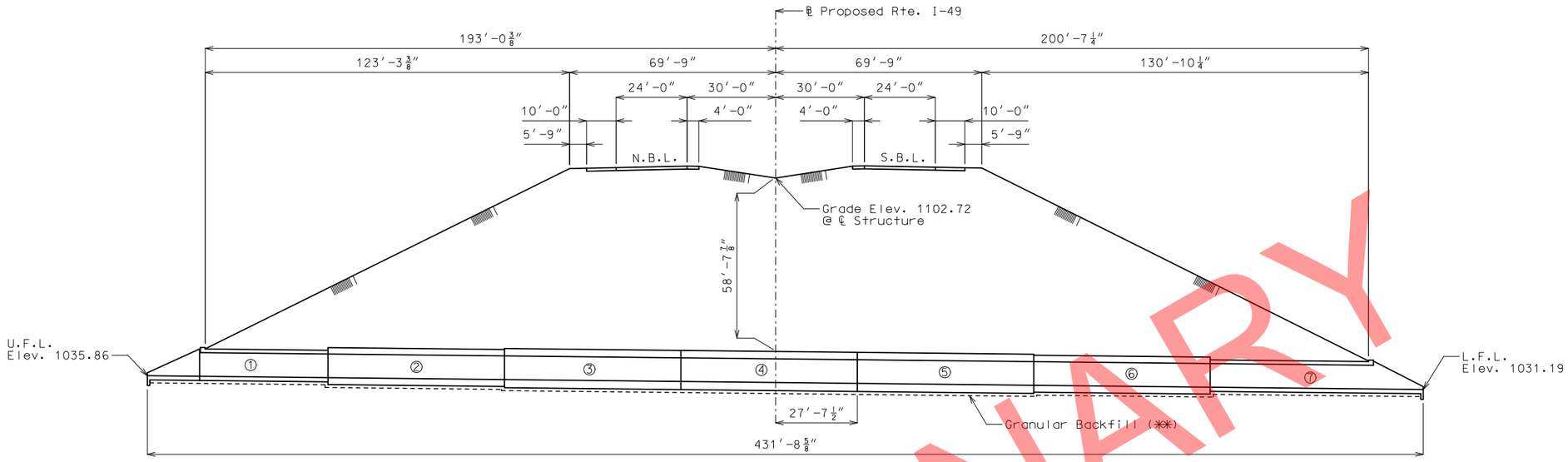

ELEVATION

Note: Dimensions are normal to ℄ Proposed Rte. I-49 @ ℄ Structure.

(✱✱) If unsuitable material is encountered, excavation of unsuitable material and furnishing and placing of granular backfill shall be in accordance with Sec 206.

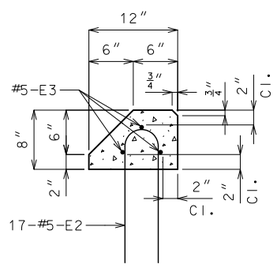

DETAIL "C"
WEIR

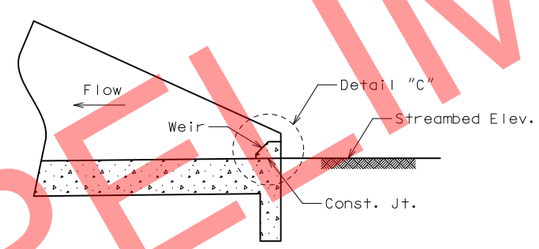

SECTION A-A

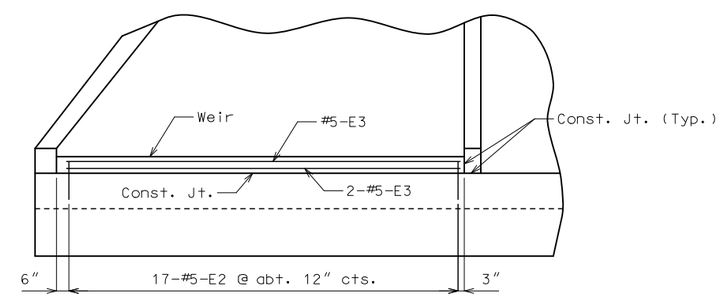

PART ELEVATION B-B

Note:

For location of Section A-A and Part Elevation B-B, see Sheet No. 1.

CONCRETE TRIPLE BOX CULVERT DATA TABLE: SPAN (S) = 10 FT HEIGHT (HT) = 8 FT

REINFORCEMENT TABLE

UNIT	DESIGN FILL (✱)	MEMBER THICKNESS					TOP SLAB BARS														BOTTOM SLAB BARS										WALL BARS				
		"TS"	"BS"	"TX"	"TI"	"F"	A1 Bars		J3 Bars				H1 Bars				H2 Bars				A2 Bars		J4 Bars				H3 Bars				B1 Bars		B2 Bars		
	(ft-in)	Thick	Thick	Thick	Thick		Size	Spa.	Size	Spa.	C1	K2	Size	Spa.	C5	Q8	Size	Spa.	C6	Q9	Size	Spa.	Size	Spa.	C4	K3	Size	Spa.	C7	Q10	Size	Spa.	Size	Spa.	G1
1 & 7	20′-6″	15	17	11	8	33′-2″	6	7.5	5	6	47.1	35.0	6	15	48.0	55.0	6	15	35.0	37.0	6	7	5	7	42.1	109	6	6.5	42.0	50.0	5	12	5	8	0
2 & 6	47′-9″	26	28	14	8	33′-8″	7	7	6	7	51.4	46.0	7	15	51.0	56.0	7	15	35.0	36.0	7	7.5	5	6	42.1	120	7	6.5	45.0	53.0	5	12	5	6	0
3, 4 & 5	63′-2″	30	33	14	8	33′-8″	7	6	6	7.5	45.6	54.0	7	14	49.0	52.0	7	14	35.0	36.0	7	6.5	6	7	38.6	125	7	6	44.0	53.0	5	11	5	6	0

Note:

Dimensions are in inches unless otherwise specified.

(✱) Design fill height is the distance from the top of earth fill or roadway to the top of the top slab.

Detailed Nov. 2019
Checked Nov. 2019

Note: This drawing is not to scale. Follow dimensions.

STATE OF MISSOURI
CHRISTOPHER M. SHANKS
NUMBER PE-2010019597
PROFESSIONAL ENGINEER

THIS SHEET HAS BEEN SIGNED, SEALED AND DATED ELECTRONICALLY.

DATE PREPARED	
12/9/2019	
ROUTE I-49	STATE MO
DISTRICT BR	SHEET NO. 3
COUNTY McDONALD	
JOB NO. J7P0601	
CONTRACT ID.	
PROJECT NO.	
BRIDGE NO. A7054	

DESCRIPTION	DATE

MISSOURI HIGHWAYS AND TRANSPORTATION COMMISSION

105 WEST CAPITOL
JEFFERSON CITY, MO 65102
1-888-ASK-MODOT (1-888-275-6636)

IF A SEAL IS PRESENT ON THIS SHEET IT HAS BEEN ELECTRONICALLY SEALED AND DATED.

BILL OF REINFORCING STEEL

NO. REQ'D.	MARK NO. SIZE	MARK NO. MARK	LOCATION	SHAPE NO.	STIRRUP (S)	EPOXY (E)	VARIES (V)	NO. EACH	DIMENSIONS B FT.	C FT.	D or F FT.	E FT.	H FT.	K FT.	NOMINAL LENGTH FT. IN.	ACTUAL LENGTH FT. IN.	WEIGHT LBS.
			Barrel Section														
			Unit 2														
104	7	A1	Top Slab	20				1	33.333						33'-4"	33'-4"	7093
97	7	A2	Bottom Slab	20				1	33.333						33'-4"	33'-4"	6616
208	6	J3	Top Corner	19				1	3.833	4.283					8'-1"	7'-12"	2489
242	5	J4	Bottom Corner	19				1	10.000	3.508					13'-6"	13'-4"	3379
244	5	B1	Interior Wall	10				1		1.000	12.083				14'-1"	13'-10"	3518
242	5	B2	Exterior Wall	20				1	12.083						12'-1"	12'-1"	3053
98	7	H1	Top Slab	20				1	8.917						8'-11"	8'-11"	1788
96	7	H2	Top Slab	20				1	5.917						5'-11"	5'-11"	1162
224	7	H3	Bottom Slab	20				1	8.167						8'-2"	8'-2"	3743
120	4	F1	Temp. Steel	20				1	59.750						59'-9"	59'-9"	4791
			Unit 3														
121	7	A1	Top Slab	20				1	33.333						33'-4"	33'-4"	8253
112	7	A2	Bottom Slab	20				1	33.333						33'-4"	33'-4"	7639
194	6	J3	Top Corner	19				1	4.500	3.800					8'-4"	8'-2"	2375
208	6	J4	Bottom Corner	19				1	10.417	3.217					13'-8"	13'-6"	4214
268	5	B1	Interior Wall	10				1		1.000	12.833				14'-10"	14'-7"	4074
242	5	B2	Exterior Wall	20				1	12.833						12'-10"	12'-10"	3242
104	7	H1	Top Slab	20				1	8.417						8'-5"	8'-5"	1791
104	7	H2	Top Slab	20				1	5.917						5'-11"	5'-11"	1259
242	7	H3	Bottom Slab	20				1	8.083						8'-1"	8'-1"	4003
120	4	F1	Temp. Steel	20				1	59.750						59'-9"	59'-9"	4791
			Unit 4														
121	7	A1	Top Slab	20				1	33.333						33'-4"	33'-4"	8253
112	7	A2	Bottom Slab	20				1	33.333						33'-4"	33'-4"	7639
194	6	J3	Top Corner	19				1	4.500	3.800					8'-4"	8'-2"	2375
208	6	J4	Bottom Corner	19				1	10.417	3.217					13'-8"	13'-6"	4214
268	5	B1	Interior Wall	10				1		1.000	12.833				14'-10"	14'-7"	4074
242	5	B2	Exterior Wall	20				1	12.833						12'-10"	12'-10"	3242
104	7	H1	Top Slab	20				1	8.417						8'-5"	8'-5"	1791
104	7	H2	Top Slab	20				1	5.917						5'-11"	5'-11"	1259
242	7	H3	Bottom Slab	20				1	8.083						8'-1"	8'-1"	4003
120	4	F1	Temp. Steel	20				1	59.750						59'-9"	59'-9"	4791
			Unit 5														
121	7	A1	Top Slab	20				1	33.333						33'-4"	33'-4"	8253
112	7	A2	Bottom Slab	20				1	33.333						33'-4"	33'-4"	7639
194	6	J3	Top Corner	19				1	4.500	3.800					8'-4"	8'-2"	2375
208	6	J4	Bottom Corner	19				1	10.417	3.217					13'-8"	13'-6"	4214
268	5	B1	Interior Wall	10				1		1.000	12.833				14'-10"	14'-7"	4074
242	5	B2	Exterior Wall	20				1	12.833						12'-10"	12'-10"	3242
104	7	H1	Top Slab	20				1	8.417						8'-5"	8'-5"	1791
104	7	H2	Top Slab	20				1	5.917						5'-11"	5'-11"	1259
242	7	H3	Bottom Slab	20				1	8.083						8'-1"	8'-1"	4003
120	4	F1	Temp. Steel	20				1	59.750						59'-9"	59'-9"	4791
			Unit 6														
104	7	A1	Top Slab	20				1	33.333						33'-4"	33'-4"	7093
97	7	A2	Bottom Slab	20				1	33.333						33'-4"	33'-4"	6616
208	6	J3	Top Corner	19				1	3.833	4.283					8'-1"	7'-12"	2489
242	5	J4	Bottom Corner	19				1	10.000	3.508					13'-6"	13'-4"	3379
244	5	B1	Interior Wall	10				1		1.000	12.083				14'-1"	13'-10"	3518
242	5	B2	Exterior Wall	20				1	12.083						12'-1"	12'-1"	3053
98	7	H1	Top Slab	20				1	8.917						8'-11"	8'-11"	1788
96	7	H2	Top Slab	20				1	5.917						5'-11"	5'-11"	1162
224	7	H3	Bottom Slab	20				1	8.167						8'-2"	8'-2"	3743
120	4	F1	Temp. Steel	20				1	59.750						59'-9"	59'-9"	4791

BILL OF REINFORCING STEEL

NO. REQ'D.	MARK NO. SIZE	MARK NO. MARK	LOCATION	SHAPE NO.	STIRRUP (S)	EPOXY (E)	VARIES (V)	NO. EACH	DIMENSIONS B FT.	C FT.	D or F FT.	E FT.	H FT.	K FT.	NOMINAL LENGTH FT. IN.	ACTUAL LENGTH FT. IN.	WEIGHT LBS.
			Upper End Section Unit 1														
70	6	A1	Top Slab	20				1	32.833						32'-10"	32'-10"	3455
76	6	A2	Bottom Slab	20				1	32.833						32'-10"	32'-10"	3751
174	5	J3	Top Corner	19				1	2.917	3.925					6'-10"	6'-8"	1218
152	5	J4	Bottom Corner	19				1	9.083	3.508					12'-7"	12'-5"	1977
176	5	B1	Interior Walls	10				1		1.000	10.250				12'-3"	11'-12"	2201
132	5	B2	Exterior Walls	20				1	10.250						10'-3"	10'-3"	1412
68	6	H1	Top Slab	20				1	8.583						8'-7"	8'-7"	877
68	6	H2	Top Slab	20				1	6.000						6'-0"	6'-0"	613
162	6	H3	Bottom Slab	20				1	7.667						7'-8"	7'-8"	1867
120	4	F10	Temp. Steel	20				1	42.760						42'-9"	42'-9"	3428
			Upper Wings and Headwall														
30	6	A10	Bottom Slab	20			V	1	45.424		Incr =	5.210	inches		45'-5"	45'-5"	1765
									32.833						32'-10"	32'-10"	
2	8	D1	Headwall	20				1	32.917						32'-11"	32'-11"	176
4	8	D2	Headwall	20				1	8.000						7'-12"	7'-12"	86
16	5	E1	Toe	20				1	4.000						4'-0"	4'-0"	67
34	5	E2	Weir	7				1	1.500	0.375					3'-2"	3'-2"	112
6	5	E3	Weir	20				1	15.833						15'-10"	15'-10"	99
12	4	F50	Flared Wings	15			V	2		17.375	Incr =	31.085	1.071	2.943	20'-6"	20'-6"	112
										4.422			1.071	2.943	7'-7"	7'-6"	
12	4	F51	Bottom Slab	20			V	2	18.027		Incr =	38.465	inches		18'-0"	18'-0"	81
									2.000						2'-0"	2'-0"	
24	4	F52	Straight Wings	20			V	4	19.260		Incr =	29.211	inches		19'-3"	19'-3"	212
									7.089						7'-1"	7'-1"	
6	4	F53	Bottom Slab	20			FB	1	21.327						21'-4"	21'-4"	85
6	4	F54	Bottom Slab	20				1	20.303						20'-4"	20'-4"	81
28	4	F55	Bottom Slab	20				1	20.303						20'-4"	20'-4"	380
72	5	G1	Interior Walls	20			V	4	10.627		Incr =	5.751	inches		10'-8"	10'-8"	493
									2.479						2'-6"	2'-6"	
54	5	G2	Exterior Wings	20			V	2	10.257		Incr =	3.603	inches		10'-3"	10'-3"	358
									2.450						2'-5"	2'-5"	
66	6	H3	Bottom Slab	20				1	7.667						7'-8"	7'-8"	761
8	7	J1	Straight Wings	20			FB	1	22.887						22'-11"	22'-11"	375
8	7	J6	Flared Wings	20				1	23.889						23'-11"	23'-11"	391
60	5	J5	Exterior Wings	19			V	2	10.069	3.508	Incr =	3.153	inches		13'-7"	13'-5"	604
									2.450	3.508					5'-12"	5'-10"	
34	5	R1	HeadWall	27	S			1	1.417	1.156		2.198	0.344	0.344	5'-3"	5'-2"	183
34	5	R2	HeadWall	10	S			1		0.875	1.500				3'-3"	3'-0"	108

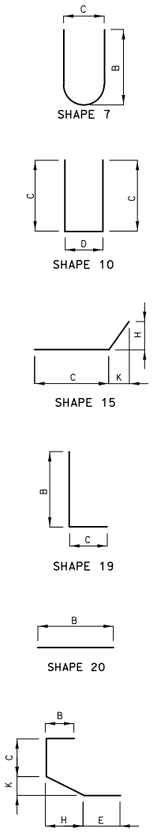

SPLICE LENGTH	
BAR SIZE	NON-EPOXY
#4	21 IN.
#5	26 IN.
#6	31 IN.
#7	39 IN.
#8	51 IN.
#9	65 IN.
#10	82 IN.
#11	101 IN.

MAX BAR LENGTH	
BAR SIZE	NON-EPOXY
#4	60 FT.
#5	60 FT.
#6	60 FT.
#7	60 FT.
#8	60 FT.
#9	60 FT.
#10	60 FT.
#11	60 FT.

NOTE:
THE BAR LIST IS BASED ON THE MISSOURI STANDARD PLANS.
THIS BAR LIST IS FOR QUANTITY ESTIMATION PURPOSE ONLY AND SHALL BE VERIFIED OR MODIFIED BY THE CONTRACTOR.

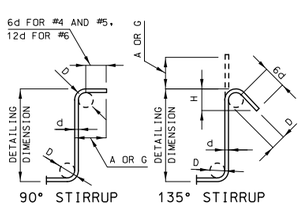

STIRRUP HOOK DIMENSIONS				
BAR SIZE	D (IN.)	90° HOOK	135° HOOK	
		HOOK A OR G	HOOK A OR G	APPROX. H
#4	2"	4 1/2"	4 1/2"	3"
#5	2 1/2"	6"	5 1/2"	3 3/4"
#6	4 1/2"	12"	8"	4 1/2"

NOTE: UNLESS OTHERWISE NOTED DIAMETER "D" IS THE SAME FOR ALL BENDS AND HOOKS ON A BAR.

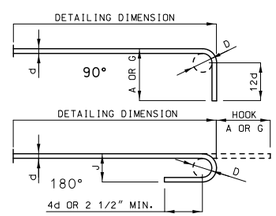

END HOOK DIMENSIONS				
BAR SIZE	D (IN.)	GRADE 60		
		180° HOOKS		90° HOOKS
		A OR G	J	A OR G
#4	3"	6"	4"	8"
#5	3 3/4"	7"	5"	10"
#6	4 1/2"	8"	6"	12"
#7	5 1/4"	10"	7"	14"
#8	6"	11"	8"	16"
#9	9 1/2"	15"	11 3/4"	19"
#10	10 3/4"	17"	13 1/4"	22"
#11	12"	19"	14 3/4"	24"

NOTE:
ALL STANDARD HOOKS AND BENDS OTHER THAN 180 DEGREE ARE TO BE BENT WITH SAME PROCEDURE AS FOR 90 DEGREE STANDARD HOOKS.
HOOKS AND BENDS SHALL BE IN ACCORDANCE WITH THE PROCEDURES AS SHOWN ON THIS SHEET.
FB = BARS MAY BE BENT IN FIELD TO FIT.
E = EPOXY COATED REINFORCEMENT.
S = STIRRUP.
V = BAR DIMENSIONS VARY IN EQUAL INCREMENTS BETWEEN DIMENSIONS SHOWN ON THIS LINE AND THE FOLLOWING LINE. A BLANK IN THE SECOND LINE REPRESENTS THE SAME BAR DIMENSION AS THAT IN THE FIRST LINE. IT IS THE CONTRACTOR'S RESPONSIBILITY TO ADD A SPLICE LENGTH TO A BAR LENGTH WHICH EXCEEDS ITS MAXIMUM ALLOWABLE LENGTH.
NO. EA. = NUMBER OF BARS OF EACH LENGTH.
NOMINAL LENGTHS ARE BASED ON OUT TO OUT DIMENSIONS SHOWN IN BENDING DIAGRAMS AND ARE LISTED FOR FABRICATORS USE. (NEAREST INCH)
ACTUAL LENGTHS ARE MEASURED ALONG CENTERLINE BAR TO THE NEAREST INCH.
PAYWEIGHTS ARE BASED ON ACTUAL LENGTHS.
REINFORCING STEEL (GRADE 60) FY = 60,000 PSI.

STATE OF MISSOURI
CHRISTOPHER M. SHANKS
NUMBER PE-2010019597
PROFESSIONAL ENGINEER
THIS SHEET HAS BEEN SIGNED, SEALED AND DATED ELECTRONICALLY.

DATE PREPARED 12/9/2019
ROUTE I-49 | STATE MO
DISTRICT BR | SHEET NO. 4
COUNTY McDONALD
JOB NO. J7P0601
CONTRACT ID.
PROJECT NO.
BRIDGE NO. A7054

DESCRIPTION | DATE

IF A SEAL IS PRESENT ON THIS SHEET IT HAS BEEN ELECTRONICALLY SEALED AND DATED.

MISSOURI HIGHWAYS AND TRANSPORTATION COMMISSION
105 WEST CAPITOL
JEFFERSON CITY, MO 65102
1-888-ASK-MODOT (1-888-275-6636)

Detailed November 2019
Checked November 2019

Note: This drawing is not to scale. Follow dimensions.

BILL OF REINFORCING STEEL

NO. REQ'D.	MARK NO. SIZE	MARK NO. MARK	LOCATION	SHAPE NO.	STIRRUP (S)	EPOXY (E)	VARIES (V)	NO. EACH	DIMENSIONS B FT.	C FT.	D or F FT.	E FT.	H FT.	K FT.	NOMINAL LENGTH FT. IN.	ACTUAL LENGTH FT. IN.	WEIGHT LBS.
			Lower End														
			Section														
			Unit 7														
86	6	A1	Top Slab	20				1	32.833						32'-10"	32'-10"	4245
92	6	A2	Bottom Slab	20				1	32.833						32'-10"	32'-10"	4541
5	6	A3	Top Slab	20			V	1	26.857		Incr =	74.570	inches		26'-10"	26'-10"	109
									2.000						2'-0"	2'-0"	
224	5	J3	Top Corner	19				1	2.917	3.925					6'-10"	6'-8"	1568
194	5	J4	Bottom Corner	19				1	9.083	3.508					12'-7"	12'-5"	2523
228	5	B1	Interior Walls	10				1		1.000	10.250				12'-3"	11'-12"	2851
169	5	B2	Exterior Walls	20				1	10.250						10'-3"	10'-3"	1808
88	6	H1	Top Slab	20				1	8.583						8'-7"	8'-7"	1135
88	6	H2	Top Slab	20				1	6.000						6'-0"	6'-0"	794
204	6	H3	Bottom Slab	20				1	7.667						7'-8"	7'-8"	2351
10	4	F60	Temp. Steel	20				1	53.628						53'-8"	53'-8"	358
1	4	F61	Temp. Steel	20				1	54.022						54'-0"	54'-0"	36
1	4	F62	Temp. Steel	20				1	54.340						54'-4"	54'-4"	36
1	4	F63	Temp. Steel	20				1	54.449						54'-5"	54'-5"	36
14	4	F64	Temp. Steel	20				1	54.742						54'-9"	54'-9"	512
1	4	F65	Temp. Steel	20				1	55.052						55'-1"	55'-1"	37
1	4	F66	Temp. Steel	20				1	55.203						55'-2"	55'-2"	37
1	4	F67	Temp. Steel	20				1	55.354						55'-4"	55'-4"	37
1	4	F68	Temp. Steel	20				1	55.505						55'-6"	55'-6"	37
14	4	F69	Temp. Steel	20				1	55.815						55'-10"	55'-10"	522
1	4	F70	Temp. Steel	20				1	56.108						56'-1"	56'-1"	37
1	4	F71	Temp. Steel	20				1	56.217						56'-3"	56'-3"	38
1	4	F72	Temp. Steel	20				1	56.535						56'-6"	56'-6"	38
10	4	F73	Temp. Steel	20				1	56.930						56'-11"	56'-11"	380
1	4	F74	Temp. Steel	20				1	53.980						53'-12"	53'-12"	36
1	4	F75	Temp. Steel	20				1	54.390						54'-5"	54'-5"	36
1	4	F76	Temp. Steel	20				1	55.161						55'-2"	55'-2"	37
1	4	F77	Temp. Steel	20				1	55.396						55'-5"	55'-5"	37
1	4	F78	Temp. Steel	20				1	56.167						56'-2"	56'-2"	38
1	4	F79	Temp. Steel	20				1	56.577						56'-7"	56'-7"	38
58	4	F80	Temp. Steel	20			V	2	56.930		Incr =	1.415	inches		56'-11"	56'-11"	2142
									53.628						53'-8"	53'-8"	
			Lower Wings														
			and Headwall														
30	6	A2	Bottom Slab	20				1	32.833						32'-10"	32'-10"	1481
6	6	A11	Bottom Slab	20			V	1	30.999		Incr =	69.599	inches		30'-12"	30'-12"	149
									2.000						2'-0"	2'-0"	
2	8	D3	Headwall	20				1	33.083						33'-1"	33'-1"	177
4	8	D4	Headwall	20				1	8.000						7'-12"	7'-12"	86
16	5	E1	Heel	20				1	4.000						4'-0"	4'-0"	67
36	4	F42	Wings	20			V	6	17.796		Incr =	28.141	inches		17'-10"	17'-10"	287
									6.070						6'-1"	6'-1"	
10	4	F44	Bottom Slab	20				1	18.801						18'-10"	18'-10"	126
28	4	F45	Bottom Slab	20				1	18.801						18'-10"	18'-10"	354
64	5	G1	Interior Walls	20			V	4	9.960		Incr =	5.970	inches		9'-12"	9'-12"	416
									2.497						2'-6"	2'-6"	
48	5	G3	Exterior Wings	20			V	2	10.126		Incr =	3.980	inches		10'-2"	10'-2"	316
									2.497						2'-6"	2'-6"	
66	6	H3	Bottom Slab	20				1	7.667						7'-8"	7'-8"	761
4	8	H10	Headwall	20				1	33.083						33'-1"	33'-1"	354
16	7	J1	Wings	20			FB	1	21.864						21'-10"	21'-10"	716
54	5	J5	Wings	19			V	2	10.043	3.508	Incr =	3.482	inches		13'-7"	13'-5"	544
									2.497	3.508					6'-0"	5'-10"	
34	5	R3	HeadWall	10	S			1		1.417	1.500				4'-4"	4'-2"	146

BILL OF REINFORCING STEEL

NO. REQ'D.	MARK NO. SIZE	MARK NO. MARK	LOCATION	SHAPE NO.	STIRRUP (S)	EPOXY (E)	VARIES (V)	NO. EACH	DIMENSIONS B FT.	C FT.	D or F FT.	E FT.	H FT.	K FT.	NOMINAL LENGTH FT. IN.	ACTUAL LENGTH FT. IN.	WEIGHT LBS.
			Totals														
		4															33606
		5															60919
		6															53400
		7															111121
		8															879
		9															0
		10															0
		11															0
			TOTALS														259930

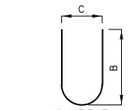

SHAPE 7

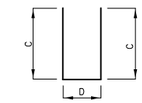

SHAPE 10

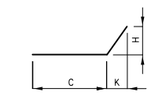

SHAPE 15

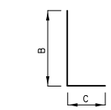

SHAPE 19

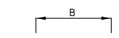

SHAPE 20

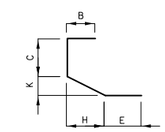

SHAPE 27

SPLICE LENGTH	
BAR SIZE	NON-EPOXY
#4	21 IN.
#5	26 IN.
#6	31 IN.
#7	39 IN.
#8	51 IN.
#9	65 IN.
#10	82 IN.
#11	101 IN.

MAX BAR LENGTH	
BAR SIZE	NON-EPOXY
#4	60 FT.
#5	60 FT.
#6	60 FT.
#7	60 FT.
#8	60 FT.
#9	60 FT.
#10	60 FT.
#11	60 FT.

NOTE:
THE BAR LIST IS BASED ON THE MISSOURI STANDARD PLANS.
THIS BAR LIST IS FOR QUANTITY ESTIMATION PURPOSE ONLY AND SHALL BE VERIFIED OR MODIFIED BY THE CONTRACTOR.

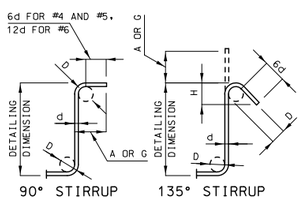

STIRRUP HOOK DIMENSIONS				
BAR SIZE	D (IN.)	90° HOOK	135° HOOK	
		HOOK A OR G	HOOK A OR G	APPROX. H
#4	2"	4 1/2"	4 1/2"	3"
#5	2 1/2"	6"	5 1/2"	3 3/4"
#6	4 1/2"	12"	8"	4 1/2"

NOTE: UNLESS OTHERWISE NOTED DIAMETER "D" IS THE SAME FOR ALL BENDS AND HOOKS ON A BAR.

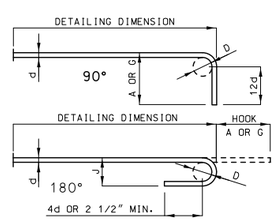

END HOOK DIMENSIONS				
BAR SIZE	D (IN.)	GRADE 60		
		180° HOOKS		90° HOOKS
		A OR G	J	A OR G
#4	3"	6"	4"	8"
#5	3 3/4"	7"	5"	10"
#6	4 1/2"	8"	6"	12"
#7	5 1/4"	10"	7"	14"
#8	6"	11"	8"	16"
#9	9 1/2"	15"	11 3/4"	19"
#10	10 3/4"	17"	13 1/4"	22"
#11	12"	19"	14 3/4"	24"

NOTE:
ALL STANDARD HOOKS AND BENDS OTHER THAN 180 DEGREE ARE TO BE BENT WITH SAME PROCEDURE AS FOR 90 DEGREE STANDARD HOOKS.
HOOKS AND BENDS SHALL BE IN ACCORDANCE WITH THE PROCEDURES AS SHOWN ON THIS SHEET.
FB = BARS MAY BE BENT IN FIELD TO FIT.
E = EPOXY COATED REINFORCEMENT.
S = STIRRUP.
V = BAR DIMENSIONS VARY IN EQUAL INCREMENTS BETWEEN DIMENSIONS SHOWN ON THIS LINE AND THE FOLLOWING LINE. A BLANK IN THE SECOND LINE REPRESENTS THE SAME BAR DIMENSION AS THAT IN THE FIRST LINE. IT IS THE CONTRACTOR'S RESPONSIBILITY TO ADD A SPLICE LENGTH TO A BAR LENGTH WHICH EXCEEDS ITS MAXIMUM ALLOWABLE LENGTH.
NO. EA. = NUMBER OF BARS OF EACH LENGTH.
NOMINAL LENGTHS ARE BASED ON OUT TO OUT DIMENSIONS SHOWN IN BENDING DIAGRAMS AND ARE LISTED FOR FABRICATORS USE. (NEAREST INCH)
ACTUAL LENGTHS ARE MEASURED ALONG CENTERLINE BAR TO THE NEAREST INCH.
PAYWEIGHTS ARE BASED ON ACTUAL LENGTHS.
REINFORCING STEEL (GRADE 60) FY = 60,000 PSI.

STATE OF MISSOURI
CHRISTOPHER M. SHANKS
NUMBER PE-2010019597
PROFESSIONAL ENGINEER
THIS SHEET HAS BEEN SIGNED, SEALED AND DATED ELECTRONICALLY.

DATE PREPARED 12/9/2019
ROUTE I-49 | STATE MO
DISTRICT BR | SHEET NO. 5
COUNTY McDONALD
JOB NO. J7P0601
CONTRACT ID.
PROJECT NO.
BRIDGE NO. A7054

DESCRIPTION
DATE

IF A SEAL IS PRESENT ON THIS SHEET IT HAS BEEN ELECTRONICALLY SEALED AND DATED.

MISSOURI HIGHWAYS AND TRANSPORTATION COMMISSION
105 WEST CAPITOL
JEFFERSON CITY, MO 65102
1-888-ASK-MODOT (1-888-275-6636)

Detailed November 2019
Checked November 2019

Note: This drawing is not to scale. Follow dimensions.

MISSOURI HIGHWAYS AND TRANSPORTATION COMMISSION

SEC/SUR 22 TWP 21N RGE 32W

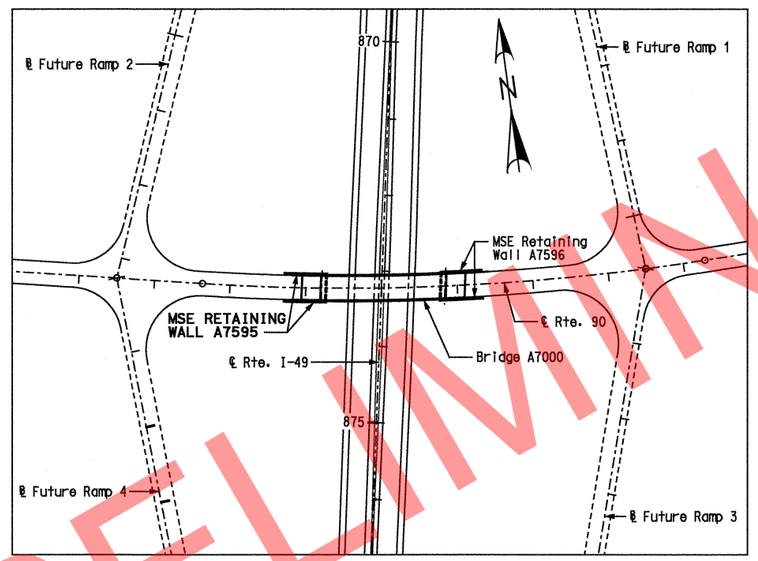

INDEX OF DRAWINGS

1 Title Sheet
2 General Plan and Elevation
3 Typical Sections

RETAINING WALL AT END BENT 1 OF BRIDGE A7000

STATE ROAD FROM RTE. H TO STATE LINE
ABOUT 8.0 MILES EAST OF RTE. 59
STA. 48+71.50 (RTE. 90)

STD. 611.60

Designed JUL 2009
Detailed JUL 2009
Checked AUG 2009

Note: This drawing is not to scale. Follow Dimensions.

Sheet No. 1 of 3

STATE OF MISSOURI
GINA D. HORNER
NUMBER E-30413
REGISTERED PROFESSIONAL ENGINEER
3-9-10

DATE PREPARED 07/28/09
ROUTE I-49 STATE MO
DISTRICT BR SHEET NO. 1
COUNTY McDONALD
JOB NO. J7P0601
CONTRACT ID.
PROJECT NO.
BRIDGE NO. A7595

DATE	DESCRIPTION

MISSOURI HIGHWAYS AND TRANSPORTATION COMMISSION
105 WEST CAPITOL
JEFFERSON CITY, MO 65102
1-888-ASK-MODOT (1-888-275-6636)

HNTB
715 KIRK DRIVE
KANSAS CITY, MO 64105-1310
TELEPHONE (816) 472-1201
CERTIFICATE OF AUTHORITY
NO. 001270

IF A SEAL IS PRESENT ON THIS SHEET IT HAS BEEN ELECTRONICALLY SEALED AND DATED.

REV.

USER: TThompson
PLOTTED: 08-MAR-2010 15:26 \\kcow00\Jobs\49259\Bridges\Plans\CDtoMoDotA7595_03-05-10\J7P0601\A7595-dgn\ZPLOT_C01.dgn

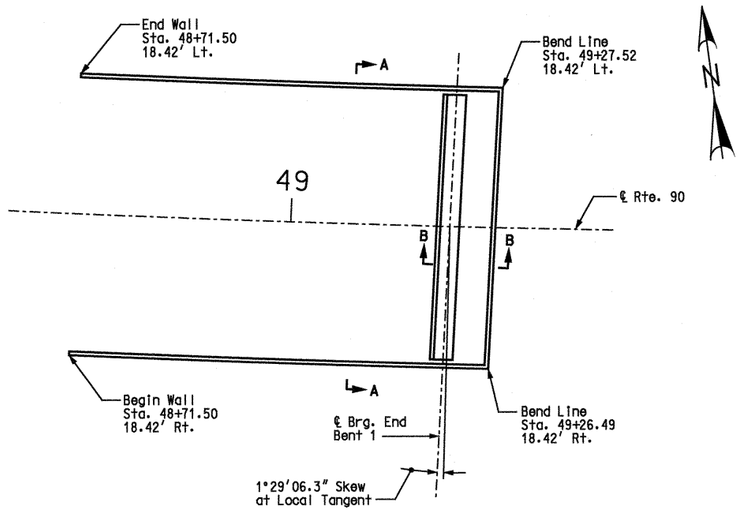

PLAN

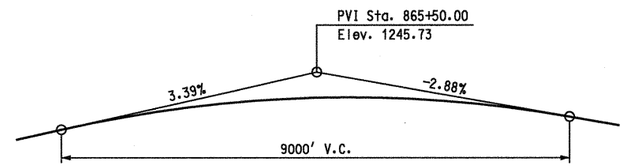

PROFILE GRADE - RTE. I-49

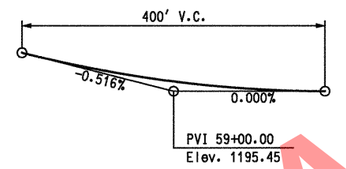

PROFILE GRADE - RTE. 90

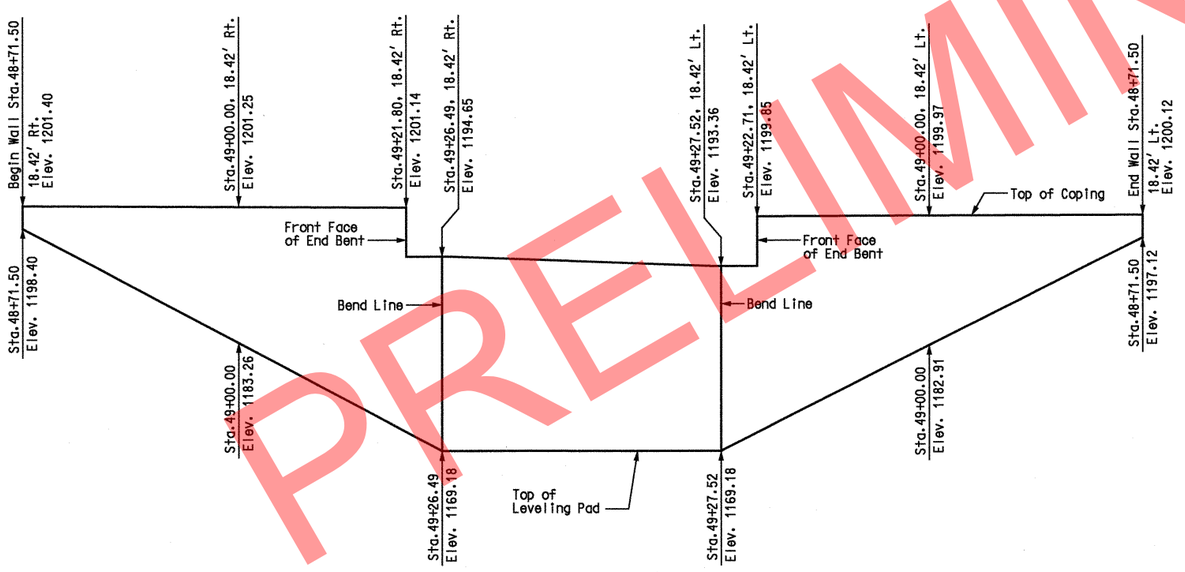

DEVELOPED ELEVATION

Scale: 1" = 10'-0"

MSE WALL SYSTEMS DATA TABLE					
Proprietary Wall Systems		Combination Wall Systems			
Manufacturer	System	Facing Unit Manufacturer	Facing Unit	Geogrid Manufacturer	Geogrid

MSE Wall Systems Data Table is to be completed by MoDOT construction personnel to record the manufacturer of the proprietary wall system or the manufacturers of the combination wall system that was used for constructing the MSE wall.

ESTIMATED QUANTITIES		
ITEM		QUANTITY
Mechanically Stabilized Earth Wall Systems	Sq. Ft.	2,759

CURVE DATA
RTE. 90

P.I. Sta. = 50+97.57
Δ = 12°42'24.7" (Lt.)
D = 1°54'35.5"
L = 665.33'
T = 334.04'
R = 3000.00'
SE = 3.7%

GENERAL NOTES:

Design Specifications:
2002 - AASHTO 17th Edition.
Seismic performance category A.
Acceleration coefficient = 0.05

Factor of safety shall be 2.0 for overturning, 1.5 for sliding and 2.0 for bearing.

For seismic design, the factor of safety shall be 1.5 for overturning and 1.1 for sliding.

Ø = 19° for retained fill material to be retained by the mechanically stabilized earth wall.

Ø = 25° for foundation material the wall is to rest on.

Ø = 34° for selected granular backfill.

Maximum allowable bearing pressure is 4000 psf.

Minimum reinforcement length for MSE wall for global stability:
= 0.8 x H for entire length of wall
(where H = Top of wall to bottom of wall)

All concrete for leveling pad and coping shall be Class B or B-1 with f'c = 4,000 psi.

Panel reinforcement shall be epoxy coated.

A filter cloth meeting the requirements for a Separation Geotextile material shall be placed between the select granular backfill for structural systems and the backfill being retained by the mechanically stabilized earth wall system.

Front face of wall shall be vertical.

All stationing is along ℄ Rte. 90.

The contractor shall be solely responsible to coordinate construction of the wall with bridge and roadway construction and ensure that the bridge and roadway construction, resulting or existing obstructions, shall not impact the construction or performance of the wall. Soil reinforcement shall be designed and placed to avoid damage by pile driving, guardrail post installation, utility and sign foundations. (See Roadway and Bridge plans.)

Coping shall be required on this structure.

The MSE wall system shall be a large block wall system in accordance with Sec 720.

"Sec" refers to the sections in the standard and supplemental specifications unless specified otherwise.

The cost of joint filler, complete-in-place, will be considered completely covered by the contract unit price for Concrete Traffic Barrier (Type B). See roadway plans.

Total Length of wall = 147'-10$\frac{3}{8}$"

Notes:
The boring logs or other factual records of subsurface data and investigations performed by the department for the design of this project are available from the Project Contact upon written request.

For Sections A-A and B-B, see Sheet No. 3.

BENCHMARKS

BM-49-01-10 R.R. Spike 0.8' above ground, East side of a 14" red oak @ the NW quadrant of RTE 90 and SW 90-21
Elev. 1206.10

BM-49-01-11 1$\frac{1}{2}$" Aluminum disk set in concrete, concrete flush with ground, 4.6' from edge of county road 9'(+/-) south of 16" black-jack oak, east side of county road SW 90-21, 60'(+/-) south of Don/Fern mail box #102, 0.3 miles(+/-) south of Rt. 90.
Elev. 1123.70

GENERAL PLAN AND ELEVATION

STATE OF MISSOURI
GINA D. HORNER
NUMBER E-30413
REGISTERED PROFESSIONAL ENGINEER
3-9-10

DATE PREPARED	
4/1/09	
ROUTE	STATE
I-49	MO
DISTRICT	SHEET NO.
BR	2
COUNTY	
McDONALD	
JOB NO.	
J7P0601	
CONTRACT ID.	
PROJECT NO.	
BRIDGE NO.	
A7595	

DATE	DESCRIPTION

MISSOURI HIGHWAYS AND TRANSPORTATION COMMISSION
105 WEST CAPITOL
JEFFERSON CITY, MO 65102
1-888-ASK-MODOT (1-888-275-6636)

HNTB
715 KIRK DRIVE
KANSAS CITY, MO 64105-1310
TELEPHONE (816) 472-1201
CERTIFICATE OF AUTHORITY
NO. 001270

IF A SEAL IS PRESENT ON THIS SHEET IT HAS BEEN ELECTRONICALLY SEALED AND DATED.

REV.

PRELIMINARY

Detailed JUL 2009
Checked AUG 2009

Note: This drawing is not to scale. Follow Dimensions.

Sheet No. 2 of 3

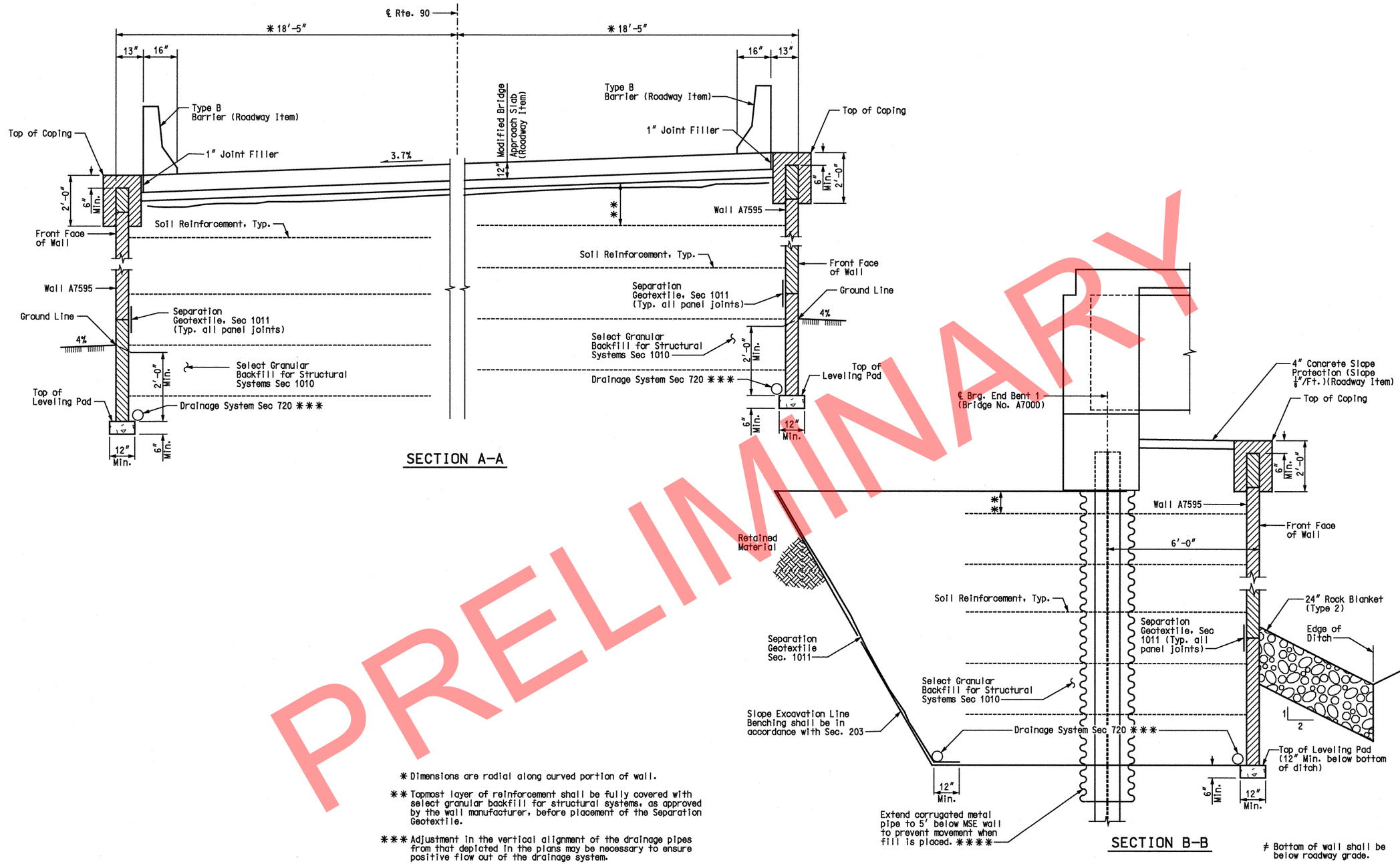

✱ Dimensions are radial along curved portion of wall.

✱✱ Topmost layer of reinforcement shall be fully covered with select granular backfill for structural systems, as approved by the wall manufacturer, before placement of the Separation Geotextile.

✱✱✱ Adjustment in the vertical alignment of the drainage pipes from that depicted in the plans may be necessary to ensure positive flow out of the drainage system.

✱✱✱✱ Included in work for Bridge No. A7000.

Outlet ends of pipes shall be located to avoid clogging or flow into the drainage system.

Note:
For location of Sections A-A and B-B, see Sheet No. 2.

TYPICAL SECTIONS

Detailed JUL 2009
Checked AUG 2009

Note: This drawing is not to scale. Follow Dimensions.

Sheet No. 3 of 3

STATE OF MISSOURI
GINA D. HORNER
NUMBER E-30413
REGISTERED PROFESSIONAL ENGINEER
3-9-10

DATE PREPARED

ROUTE	STATE
I-49	MO
DISTRICT	SHEET NO.
BR	3

COUNTY: McDONALD
JOB NO.: J7P0601
CONTRACT ID.
PROJECT NO.
BRIDGE NO.: A7595

DATE	DESCRIPTION

MISSOURI HIGHWAYS AND TRANSPORTATION COMMISSION
105 WEST CAPITOL
JEFFERSON CITY, MO 65102
1-888-ASK-MODOT (1-888-275-6636)

HNTB
715 KIRK DRIVE
KANSAS CITY, MO 64105-1310
TELEPHONE (816) 472-1201
CERTIFICATE OF AUTHORITY NO. 001270

IF A SEAL IS PRESENT ON THIS SHEET IT HAS BEEN ELECTRONICALLY SEALED AND DATED.

REV.

USER: TThompson
PLOTTED: 08-MAR-2010 15:26 \\kcow00\Jobs\49259\Bridges\Plans\CDtoMoDotA7595_03-05-10\J7P0601\A7595-dgn\ZPLOT_C03.dgn

MISSOURI HIGHWAYS AND TRANSPORTATION COMMISSION

SEC/SUR 22 TWP 21N RGE 32W

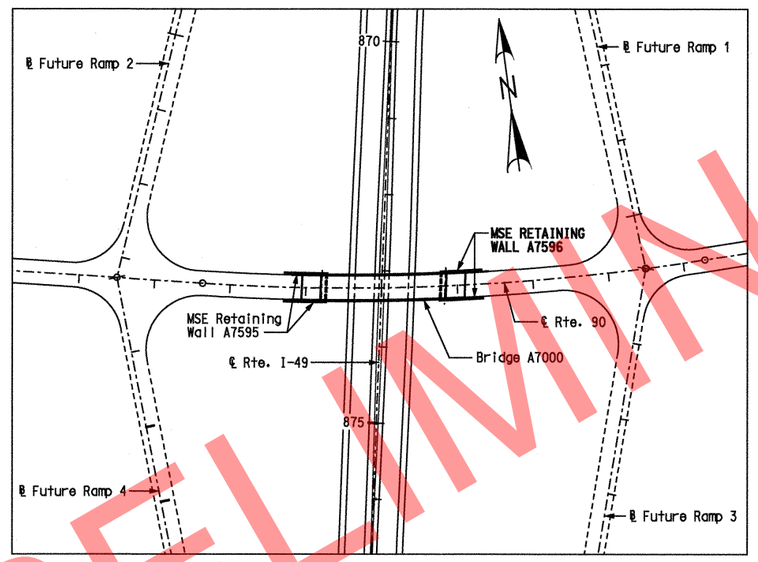

INDEX OF DRAWINGS

1 Title Sheet
2 General Plan and Elevation
3 Typical Sections

RETAINING WALL AT END BENT 3 OF BRIDGE A7000

STATE ROAD FROM RTE. H TO STATE LINE
ABOUT 8.0 MILES EAST OF RTE. 59
STA. 51+33.00 (RTE. 90)

STD. 611.60

Note: This drawing is not to scale. Follow Dimensions.

Sheet No. 1 of 3

Designed JUL 2009
Detailed JUL 2009
Checked AUG 2009

STATE OF MISSOURI
GINA D. HORNER
NUMBER E-30413
REGISTERED PROFESSIONAL ENGINEER
3-9-10

DATE PREPARED

ROUTE	STATE
I-49	MO
DISTRICT	SHEET NO.
BR	1

COUNTY: McDONALD
JOB NO.: J7P0601
CONTRACT ID.:
PROJECT NO.:
BRIDGE NO.: A7596

DATE	DESCRIPTION

MISSOURI HIGHWAYS AND TRANSPORTATION COMMISSION
105 WEST CAPITOL
JEFFERSON CITY, MO 65102
1-888-ASK-MODOT (1-888-275-6636)

HNTB
715 KIRK DRIVE
KANSAS CITY, MO 64105-1310
TELEPHONE (816) 472-1201
CERTIFICATE OF AUTHORITY
NO. 001270

IF A SEAL IS PRESENT ON THIS SHEET IT HAS BEEN ELECTRONICALLY SEALED AND DATED.

REV.

USER: TThompson
PLOTTED: 08-MAR-2010 15:27 \\kcow00\Jobs\49259\Bridges\Plans\CDtoMoDotA7596_03-05-10\J7P0601\A7596-dgn\ZPLOT_D01.dgn

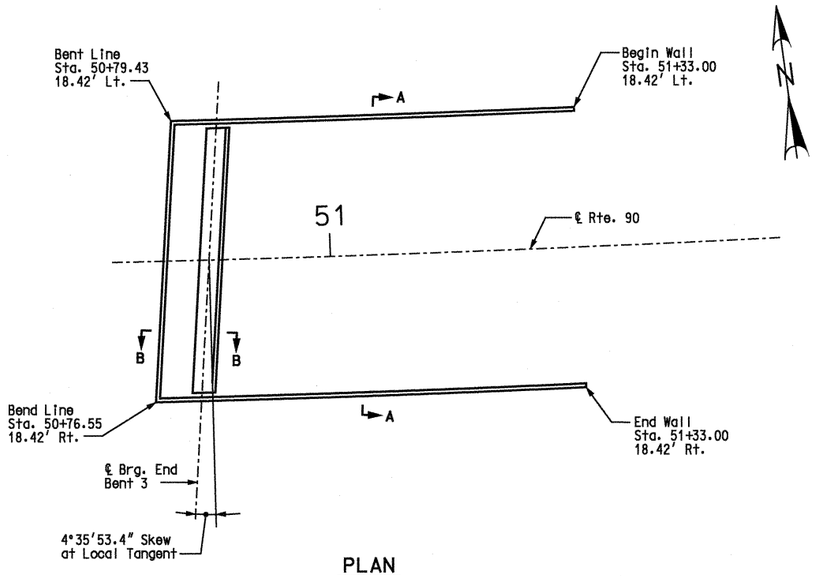

PLAN

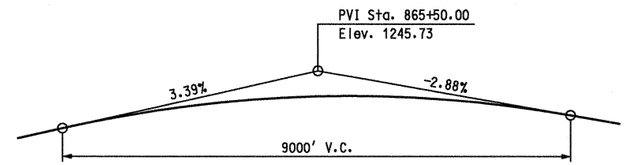

PROFILE GRADE - Rte. I-49

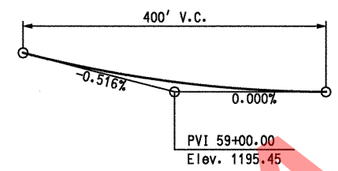

PROFILE GRADE - RTE. 90

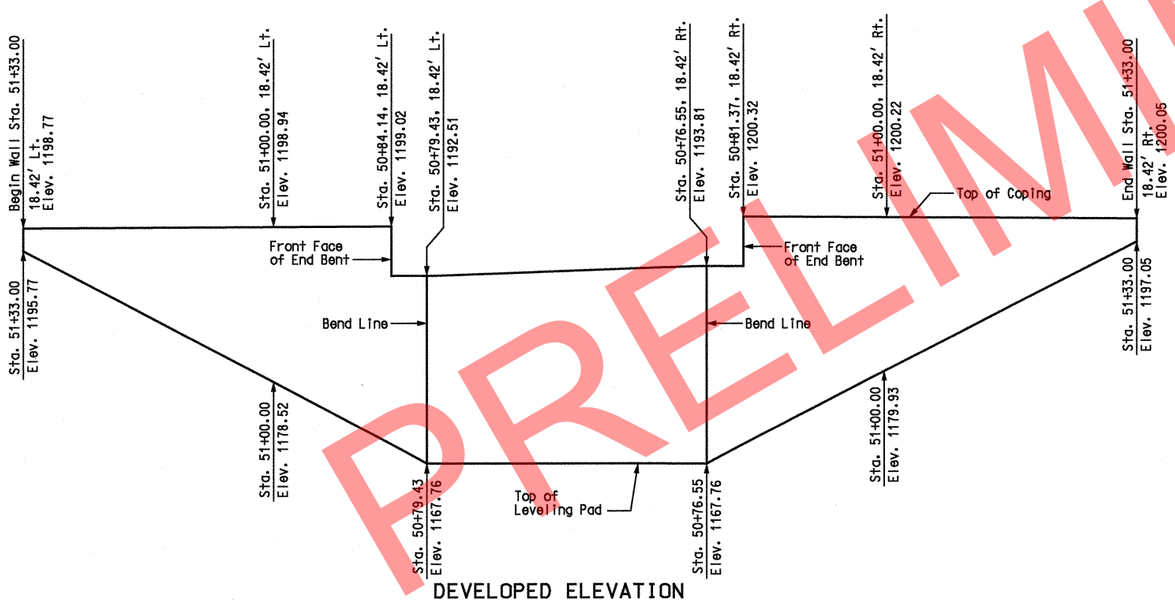

DEVELOPED ELEVATION

Scale: 1" = 10'-0"

GENERAL NOTES:

Design Specifications:
2002 - AASHTO 17th Edition.
Seismic performance category A.
Acceleration coefficient = 0.05

Factor of safety shall be 2.0 for overturning, 1.5 for sliding and 2.0 for bearing.

For seismic design, the factor of safety shall be 1.5 for overturning and 1.1 for sliding.

Ø = 19° for retained fill material to be retained by the mechanically stabilized earth wall.

Ø = 25° for foundation material the wall is to rest on.

Ø = 34° for selected granular backfill.

Maximum allowable bearing pressure is 4000 psf.

Minimum reinforcement length for MSE Wall for global stability:
= 0.8 x H for entire length of wall
(Where H = Top of wall to bottom of wall)

All concrete for leveling pad and coping shall be Class B or B-1 with f'c = 4,000 psi.

Panel reinforcement shall be epoxy coated.

A filter cloth meeting the requirements for a Separation Geotextile material shall be placed between the select granular backfill for structural systems and the backfill being retained by the mechanically stabilized earth wall system.

Front face of wall shall be vertical.

All stationing is along ℄ Rte. 90.

The contractor shall be solely responsible to coordinate construction of the wall with bridge and roadway construction and ensure that the bridge and roadway construction, resulting or existing obstructions, shall not impact the construction or performance of the wall. Soil reinforcement shall be designed and placed to avoid damage by pile driving, guardrail post installation, utility and sign foundations. (See Roadway and Bridge plans.)

Coping shall be required on this structure.

The MSE wall system shall be a large block wall system in accordance with Sec 720.

"Sec" refers to the sections in the standard and supplemental specifications unless specified otherwise.

The cost of joint filler, complete-in-place, will be considered completely covered by the contract unit price for Concrete Traffic Barrier (Type B). See roadway plans.

Total Length of wall = 146'-11⅝"

Notes:
The boring logs or other factual records of subsurface data and investigations performed by the department for the design of this project is available from the Project Contact upon written request.

For Sections A-A and B-B, see Sheet No. 3.

MSE WALL SYSTEMS DATA TABLE

Proprietary Wall Systems		Combination Wall Systems			
Manufacturer	System	Facing Unit Manufacturer	Facing Unit	Geogrid Manufacturer	Geogrid

MSE Wall Systems Data Table is to be completed by MoDOT construction personnel to record the manufacturer of the proprietary wall system or the manufacturers of the combination wall system that was used for constructing the MSE wall.

ESTIMATED QUANTITIES

ITEM		QUANTITY
Mechanically Stabilized Earth Wall Systems	Sq. Ft.	2,800

CURVE DATA
RTE. 90

P.I. Sta. = 50+97.57
△ = 12°42'24.7" (Lt.)
D = 1°54'35.5"
L = 665.33'
T = 334.04'
R = 3000.00'
SE = 3.7%

BENCHMARKS

BM-49-01-10 R.R. Spike 0.8' above ground, East side of a 14" red oak @ the NW quadrant of RTE 90 and SW 90-21
Elev. 1206.10

BM-49-01-11 1½" Aluminum disk set in concrete, concrete flush with ground, 4.6' from edge of county road 9'(+/-) south of 16" black-jack oak, east side of county road SW 90-21, 60'(+/-) south of Don/Fern mail box #102, 0.3 miles(+/-) south of Rt. 90.
Elev. 1123.70

GENERAL PLAN AND ELEVATION

Detailed JUL 2009
Checked AUG 2009

Note: This drawing is not to scale. Follow Dimensions.

Sheet No. 2 of 3

STATE OF MISSOURI
GINA D. HORNER
NUMBER E-30413
REGISTERED PROFESSIONAL ENGINEER
3-9-10

DATE PREPARED

ROUTE	STATE
I-49	MO
DISTRICT	SHEET NO.
BR	2

COUNTY
McDONALD

JOB NO.
J7P0601

CONTRACT ID.

PROJECT NO.

BRIDGE NO.
A7596

DATE	DESCRIPTION

MISSOURI HIGHWAYS AND TRANSPORTATION COMMISSION
105 WEST CAPITOL
JEFFERSON CITY, MO 65102
1-888-ASK-MODOT (1-888-275-6636)

HNTB
715 KIRK DRIVE
KANSAS CITY, MO 64105-1310
TELEPHONE (816) 472-1201
CERTIFICATE OF AUTHORITY
NO. 001270

IF A SEAL IS PRESENT ON THIS SHEET IT HAS BEEN ELECTRONICALLY SEALED AND DATED.

REV.

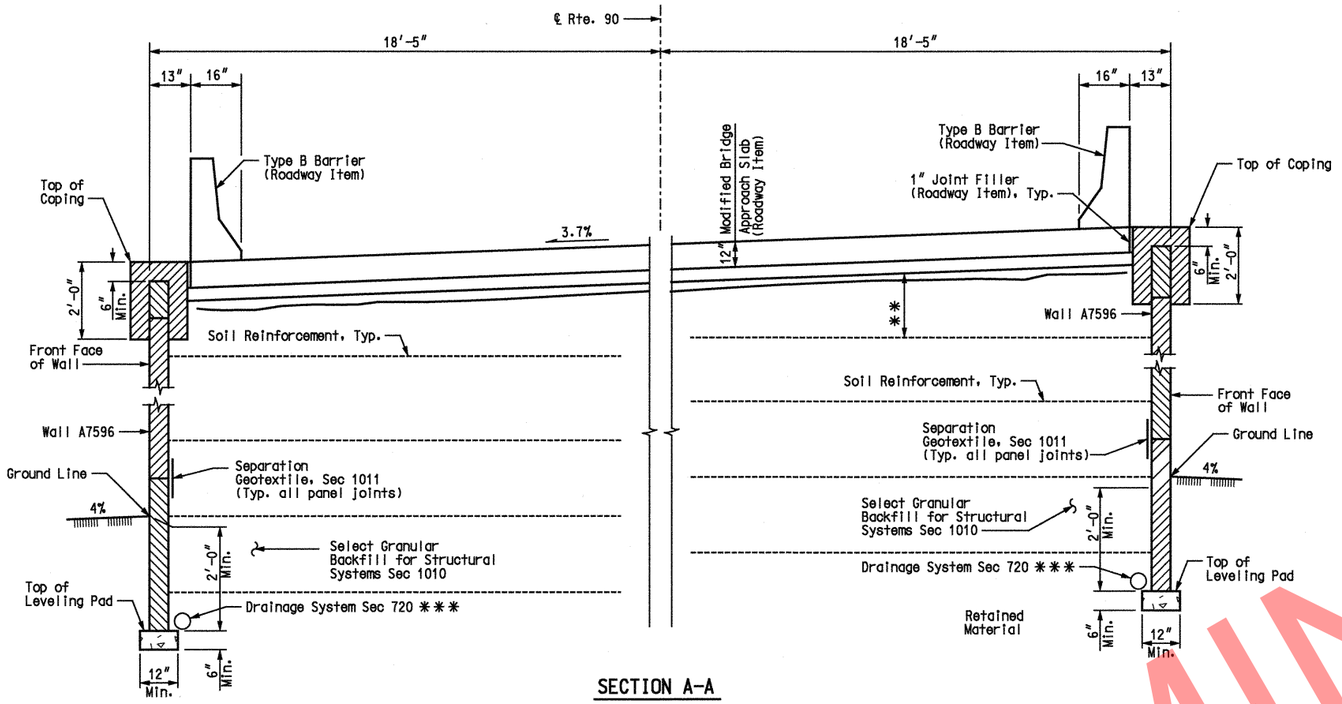

SECTION A-A

* Dimensions are radial along curved portion of wall.

** Topmost layer of reinforcement shall be fully covered with select granular backfill for structural systems, as approved by the wall manufacturer, before placement of the Separation Geotextile.

*** Adjustment in the vertical alignment of the drainage pipes from that depicted in the plans may be necessary to ensure positive flow out of the drainage system.

Outlet ends of pipes shall be located to avoid clogging or flow into the drainage system.

Note:
For location of Sections A-A and B-B, see Sheet No. 2.

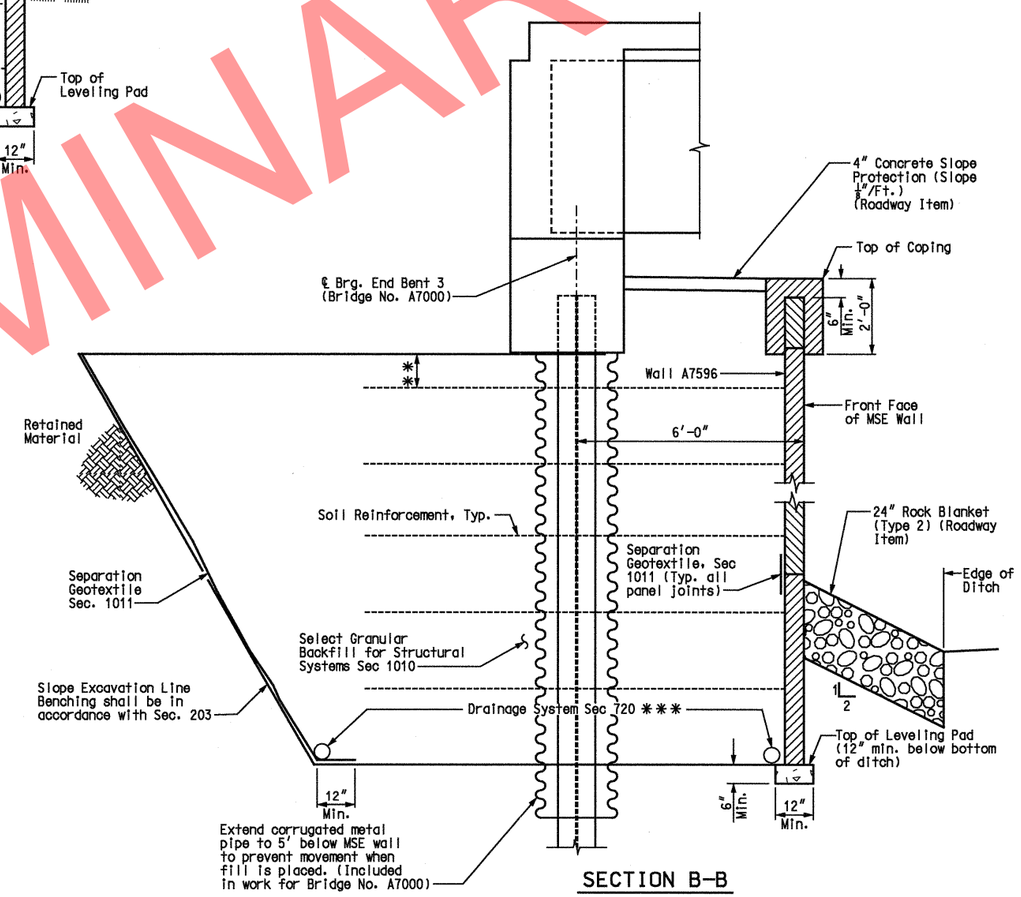

SECTION B-B

TYPICAL SECTIONS

STATE OF MISSOURI
GINA D. HORNER
NUMBER E-30413
REGISTERED PROFESSIONAL ENGINEER
3-9-10

DATE PREPARED	
ROUTE I-49	STATE MO
DISTRICT BR	SHEET NO. 3
COUNTY McDONALD	
JOB NO. J7P0601	
CONTRACT ID.	
PROJECT NO.	
BRIDGE NO. A7596	

DESCRIPTION	DATE

MISSOURI HIGHWAYS AND TRANSPORTATION COMMISSION
105 WEST CAPITOL
JEFFERSON CITY, MO 65102
1-888-ASK-MODOT (1-888-275-6636)

HNTB
715 KIRK DRIVE
KANSAS CITY, MO 64105-1310
TELEPHONE (816) 472-1201
CERTIFICATE OF AUTHORITY NO. 001270

IF A SFAI IS PRESENT ON THIS SHEET IT HAS BEEN ELECTRONICALLY SEALED AND DATED.

REV.

USER: TThompson
PLOTTED: 08-MAR-2010 15:28 \\kcow00\Jobs\49259\Bridges\Plans\CDtoMoDotA7596_03-05-10\J7P0601\A7596-dgn\ZPLOT_D03.dgn

Detailed JUL 2009
Checked AUG 2009

Note: This drawing is not to scale. Follow Dimensions.

Sheet No. 3 of 3

SEC/SUR 22 TWP 21N RGE 32W

MISSOURI HIGHWAYS AND TRANSPORTATION COMMISSION

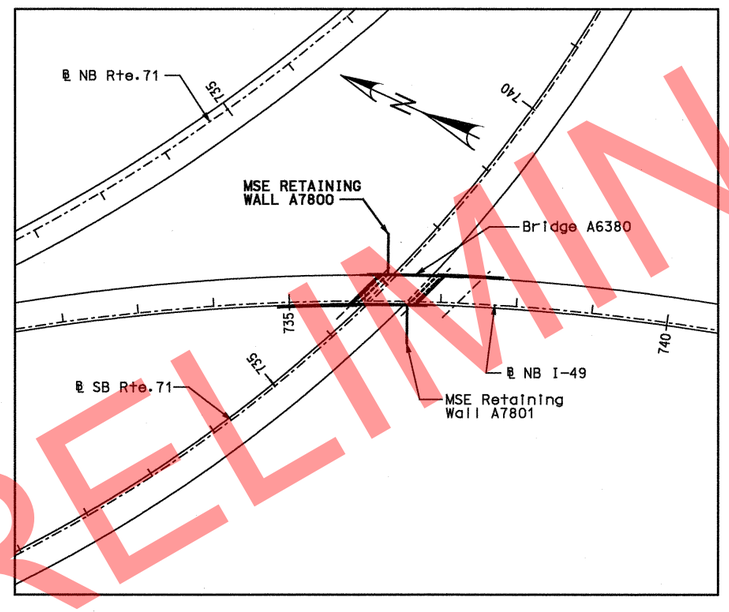

INDEX OF DRAWINGS

1 Title Sheet
2 General Plan and Elevation
3 Typical Sections

RETAINING WALL AT END BENT 1 OF BRIDGE A6380

STATE ROAD FROM RTE. H TO STATE LINE
ABOUT 2.6 MILES NORTH OF RTE. 90
STA. 734+85.00 (RTE. I-49)

STD. 611.60

Designed JUL 2009
Detailed JUL 2009
Checked AUG 2009

Note: This drawing is not to scale. Follow Dimensions.

Sheet No. 1 of 3

STATE OF MISSOURI
GINA D. HORNER
NUMBER E-30413
REGISTERED PROFESSIONAL ENGINEER
3-9-10

DATE PREPARED

ROUTE	STATE
I-49	MO
DISTRICT	SHEET NO.
BR	1

COUNTY: McDONALD
JOB NO.: J7P0601
CONTRACT ID.:
PROJECT NO.:
BRIDGE NO.: A7800

DATE	DESCRIPTION

MISSOURI HIGHWAYS AND TRANSPORTATION COMMISSION
105 WEST CAPITOL
JEFFERSON CITY, MO 65102
1-888-ASK-MODOT (1-888-275-6636)

HNTB
715 KIRK DRIVE
KANSAS CITY, MO 64105-1310
TELEPHONE (816) 472-1201
CERTIFICATE OF AUTHORITY
NO. 001270

IF A SEAL IS PRESENT ON THIS SHEET IT HAS BEEN ELECTRONICALLY SEALED AND DATED.

REV.

USER: TThompson
PLOTTED: 08-MAR-2010 15:29 \\kcow00\Jobs\49259\Bridges\Plans\CDtoMoDotA7800_03-05-10\J7P0601\A7800-dgn\ZPLOT_E01.dgn

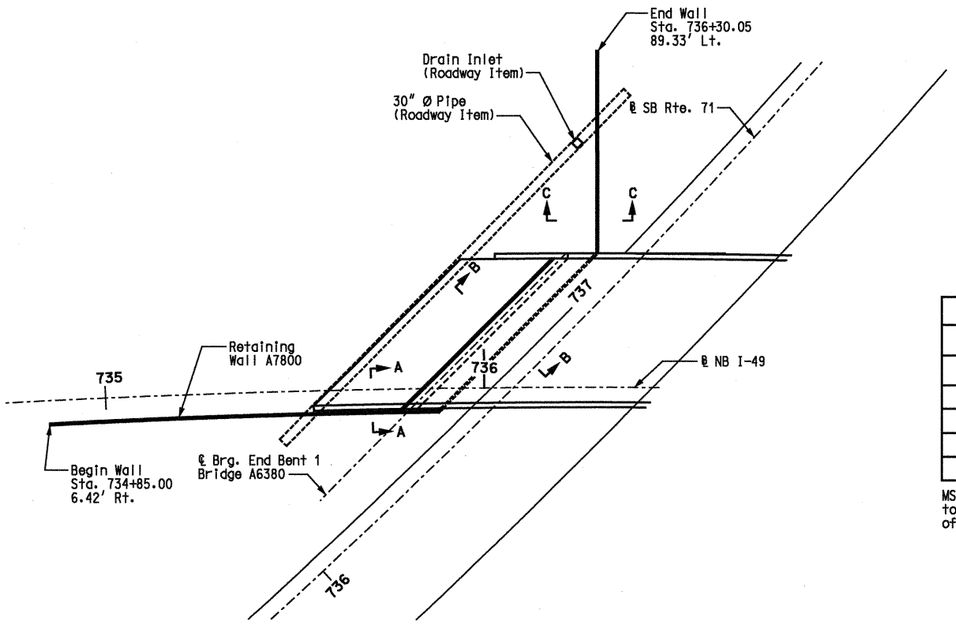

PLAN

MSE WALL SYSTEMS DATA TABLE					
Proprietary Wall Systems		Combination Wall Systems			
Manufacturer	System	Facing Unit Manufacturer	Facing Unit	Geogrid Manufacturer	Geogrid

MSE Wall Systems Data Table is to be completed by MoDOT construction personnel to record the manufacturer of the proprietary wall system or the manufacturers of the combination wall system that was used for constructing the MSE wall.

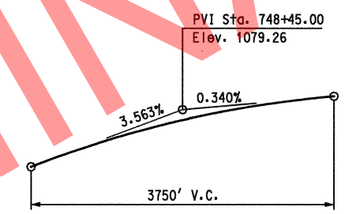

PROFILE GRADE - NB I-49

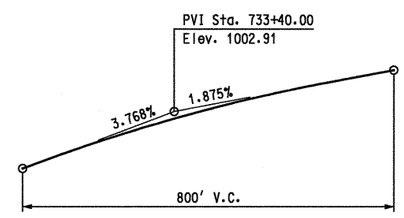

PROFILE GRADE - SB RTE. 71

CURVE DATA NB I-49

P.I. Sta. = 739+20.393
△ = 44°43'02" (Rt.)
D = 2°00'00.0"
L = 2235.86'
T = 1178.36
R = 2864.79'
SE = 6.3%

CURVE DATA SB RTE. 71

P.I. Sta. = 736+04.58
△ = 66°31'00" (Lt.)
Lc = 1987.22'
Ts = 1368.30'
R = 1909.86'
D = 3°00'00"
Ls = 230.00'
Θs = 3°27'00" (Lt.)
Xs = 229.92'
Ys = 4.62'
SE = 7.9%

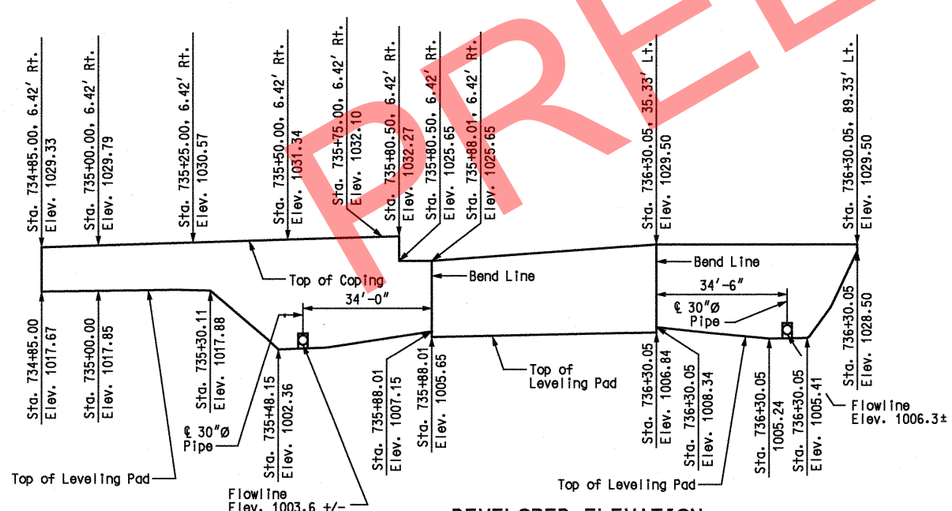

DEVELOPED ELEVATION

GENERAL NOTES:

Design Specifications:
2002 - AASHTO 17th Edition.
Seismic performance category A.
Acceleration coefficient = 0.05

Factor of safety shall be 2.0 for overturning, 1.5 for sliding and 2.0 for bearing.

For seismic design, the factor of safety shall be 1.5 for overturning and 1.1 for sliding.

Ø = 34° for retained fill material to be retained by the mechanically stabilized earth wall.

Ø = 34° for foundation material the wall is to rest on.

Ø = 34° for selected granular backfill.

All concrete for leveling pad and coping shall be Class B or B-1 with f'c = 4,000 psi.

Panel reinforcement shall be epoxy coated.

A filter cloth meeting the requirements for a Separation Geotextile material shall be placed between the select granular backfill for structural systems and the backfill being retained by the mechanically stabilized earth wall system.

Front face of wall shall be vertical.

All stationing is along ℄ NB I-49.

The contractor shall be solely responsible to coordinate construction of the wall with bridge and roadway construction and ensure that the bridge and roadway construction, resulting or existing obstructions, shall not impact the construction or performance of the wall. Soil reinforcement shall be designed and placed to avoid damage by pile driving, guardrail post installation, utility and sign foundations. (See Roadway and Bridge plans.)

Coping shall be required on this structure.

The MSE wall system shall be a large block wall system in accordance with Sec 720.

"Sec" refers to the sections in the standard and supplemental specifications unless specified otherwise.

The cost of joint filler, complete-in-place, will be considered completely covered by the contract unit price for Concrete Traffic Barrier (Type B). See roadway plans.

Total Length of wall = 216'-3 1/8"

ESTIMATED QUANTITIES		
ITEM		QUANTITY
Mechanically Stabilized Earth Wall Systems	Sq. Ft.	4,369

Notes:
The boring logs or other factual records of subsurface data and investigations performed by the department for the design of this project are available from the Project Contact upon written request.

For Section A-A, B-B and C-C, see Sheet No. 3.

BENCHMARKS

BM-71-99-97 R.R. spike in West face of corner post 0.9 mi. South of Rte. H on county road SW of H-21, East of county road. Elev. 925.19

BM-49-01-01 R.R. spike East of root of 1.2' wild cherry with blazed "△" West side of county road SW H-21. West of Gardner's chicken houses. BM is 1.475 miles South of Rte. H. Elev. 949.43

STATE OF MISSOURI
GINA D. HORNER
NUMBER E-30413
REGISTERED PROFESSIONAL ENGINEER
3-9-10

DATE PREPARED	
07/28/09	
ROUTE I-49	STATE MO
DISTRICT BR	SHEET NO. 2
COUNTY McDONALD	
JOB NO. J7P0601	
CONTRACT ID.	
PROJECT NO.	
BRIDGE NO. A7800	

DATE	DESCRIPTION

MISSOURI HIGHWAYS AND TRANSPORTATION COMMISSION
105 WEST CAPITOL
JEFFERSON CITY, MO 65102
1-888-ASK-MODOT (1-888-275-6636)

HNTB
715 KIRK DRIVE
KANSAS CITY, MO 64105-1310
TELEPHONE (816) 472-1201
CERTIFICATE OF AUTHORITY NO. 001270

IF A SFAI IS PRESENT ON THIS SHEET IT HAS BEEN ELECTRONICALLY SEALED AND DATED.

REV.

USER: TThompson
PLOTTED: 08-MAR-2010 15:29 \\kcow00\Jobs\49259\Bridges\Plans\CDtoMoDotA7800_03-05-10\J7P0601\A7800-dgn\ZPLOT_E02.dgn

Detailed JUL 2009
Checked AUG 2009

Note: This drawing is not to scale. Follow Dimensions.

\\kcow00\Jobs\49259\Bridges\Plans\CDtoMoDotA7800_03-05-10\J7P0601\A7800-dgn\ZPLOT_E02.dgn 08-MAR-2010 15:29

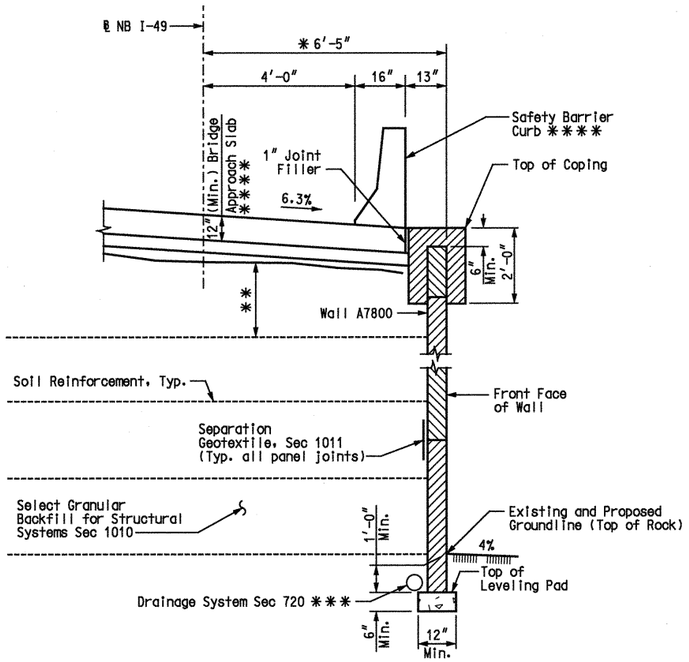

SECTION A-A

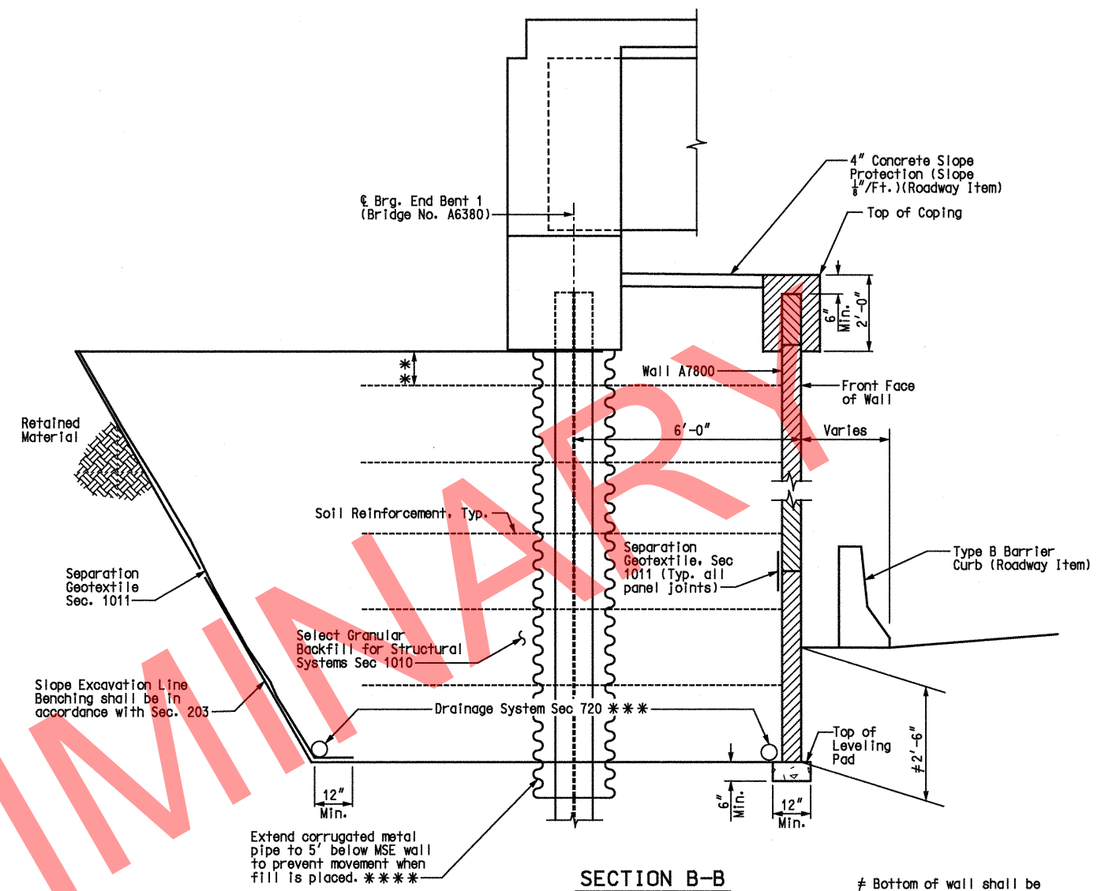

SECTION B-B

≠ Bottom of wall shall be below roadway grade.

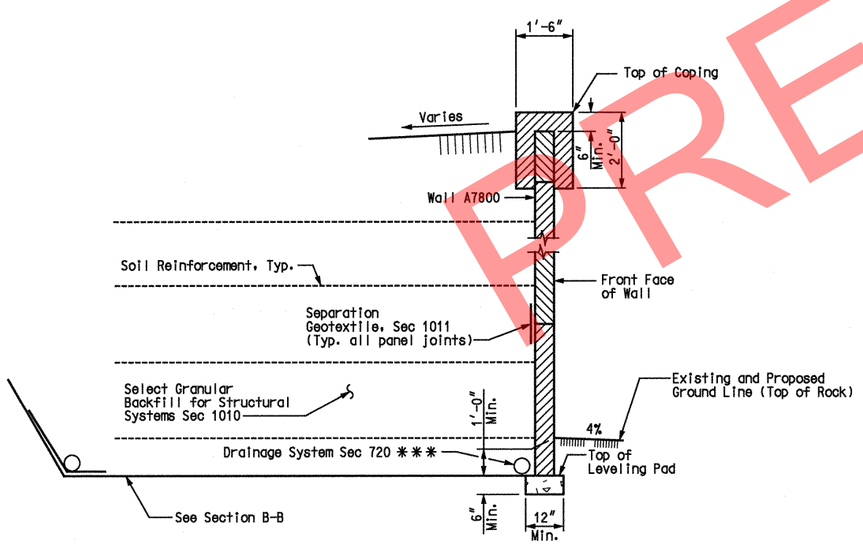

SECTION C-C

✱ Dimensions are radial along curved portion of wall.

✱✱ Topmost layer of reinforcement shall be fully covered with select granular backfill for structural systems, as approved by the wall manufacturer, before placement of the Separation Geotextile.

✱✱✱ Adjustment in the vertical alignment of the drainage pipes from that depicted in the plans may be necessary to ensure positive flow out of the drainage system.

✱✱✱✱ Included in work for Bridge No. A6380

Outlet ends of pipes shall be located to avoid clogging or flow into the drainage system.

Note:
For location of Sections A-A, B-B and C-C, see Sheet No. 2.

TYPICAL SECTIONS

Detailed JUL 2009
Checked AUG 2009

Note: This drawing is not to scale. Follow Dimensions.

Sheet No. 3 of 3

STATE OF MISSOURI
GINA D. HORNER
NUMBER E-30413
REGISTERED PROFESSIONAL ENGINEER
3-9-10

DATE PREPARED	07/28/09
ROUTE	I-49
STATE	MO
DISTRICT	BR
SHEET NO.	3
COUNTY	McDONALD
JOB NO.	J7P0601
CONTRACT ID.	
PROJECT NO.	
BRIDGE NO.	A7800

DESCRIPTION | DATE

MISSOURI HIGHWAYS AND TRANSPORTATION COMMISSION
105 WEST CAPITOL
JEFFERSON CITY, MO 65102
1-888-ASK-MODOT (1-888-275-6636)

HNTB
715 KIRK DRIVE
KANSAS CITY, MO 64105-1310
TELEPHONE (816) 472-1201
CERTIFICATE OF AUTHORITY NO. 001270

IF A SFAI IS PRESENT ON THIS SHEET IT HAS BEEN ELECTRONICALLY SEALED AND DATED.

REV.

PRELIMINARY

USER: TThompson
PLOTTED: 08-MAR-2010 15:29 \\kcow00\Jobs\49259\Bridges\Plans\CDtoMoDotA7800_03-05-10\J7P0601\A7800-dgn\ZPLOT_E03.dgn

MISSOURI HIGHWAYS AND TRANSPORTATION COMMISSION

SEC/SUR 22 TWP 21N RGE 32W

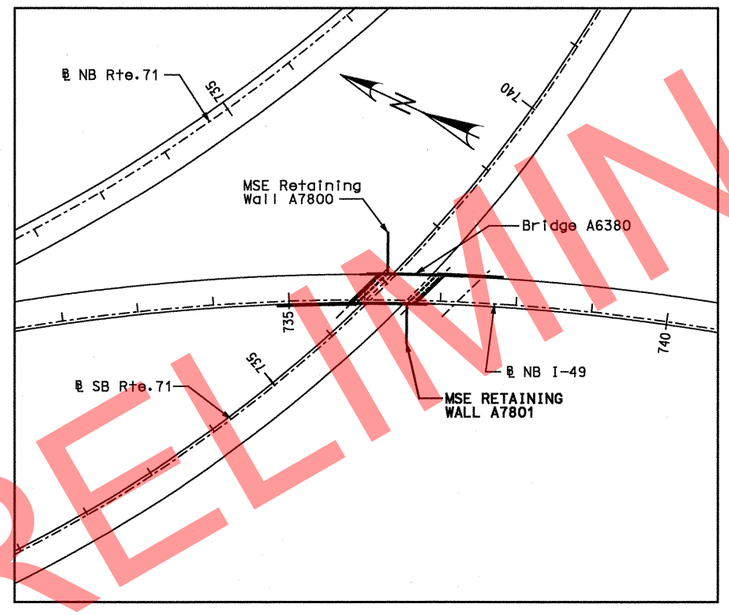

INDEX OF DRAWINGS

1 Title Sheet
2 General Plan and Elevation
3 Typical Sections

RETAINING WALL AT END BENT 2 OF BRIDGE A6380

STATE ROAD FROM RTE. H TO STATE LINE
ABOUT 2.6 MILES NORTH OF RTE. 90
STA. 736+55.41 (RTE. I-49)

STD. 611.60

Designed JUL 2009
Detailed JUL 2009
Checked AUG 2009

Note: This drawing is not to scale. Follow Dimensions.

Sheet No. 1 of 3

STATE OF MISSOURI
GINA D. HORNER
NUMBER E-30413
REGISTERED PROFESSIONAL ENGINEER
3-9-10

DATE PREPARED 07/28/09

ROUTE	STATE
I-49	MO
DISTRICT	SHEET NO.
BR	1

COUNTY McDONALD
JOB NO. J7P0601
CONTRACT ID.
PROJECT NO.
BRIDGE NO. A7801

DATE	DESCRIPTION

MISSOURI HIGHWAYS AND TRANSPORTATION COMMISSION
105 WEST CAPITOL
JEFFERSON CITY, MO 65102
1-888-ASK-MODOT (1-888-275-6636)

HNTB
715 KIRK DRIVE
KANSAS CITY, MO 64105-1310
TELEPHONE (816) 472-1201
CERTIFICATE OF AUTHORITY
NO. 001270

IF A SEAL IS PRESENT ON THIS SHEET IT HAS BEEN ELECTRONICALLY SEALED AND DATED.

REV.

USER: TThompson
PLOTTED: 08-MAR-2010 14:45 \\kcow00\Jobs\49259\Bridges\Plans\CDtoMoDotA7801_03-05-10\J7P0601\A7801-dgn\ZPLOT_F01.dgn

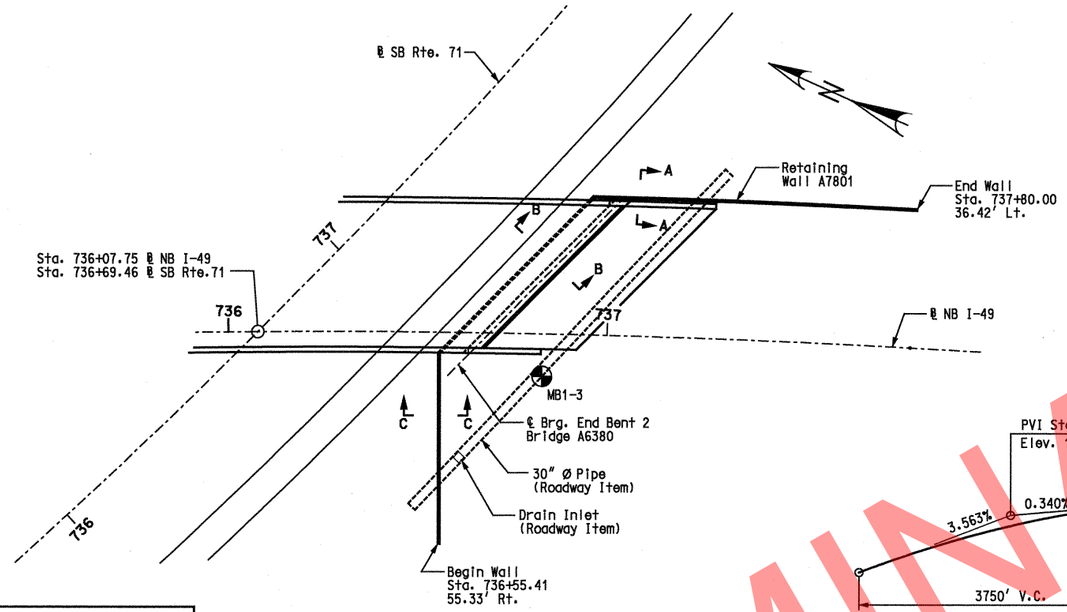

PLAN

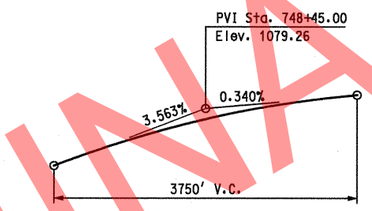

PROFILE GRADE - NB I-49

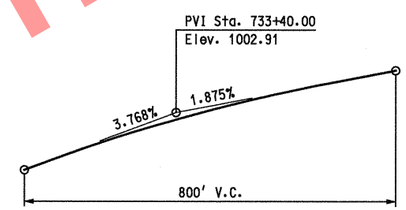

PROFILE GRADE - SB RTE. 71

MSE WALL SYSTEMS DATA TABLE

Proprietary Wall Systems		Combination Wall Systems			
Manufacturer	System	Facing Unit Manufacturer	Facing Unit	Geogrid Manufacturer	Geogrid

MSE Wall Systems Data Table is to be completed by MoDOT construction personnel to record the manufacturer of the proprietary wall system or the manufacturers of the combination wall system that was used for constructing the MSE wall.

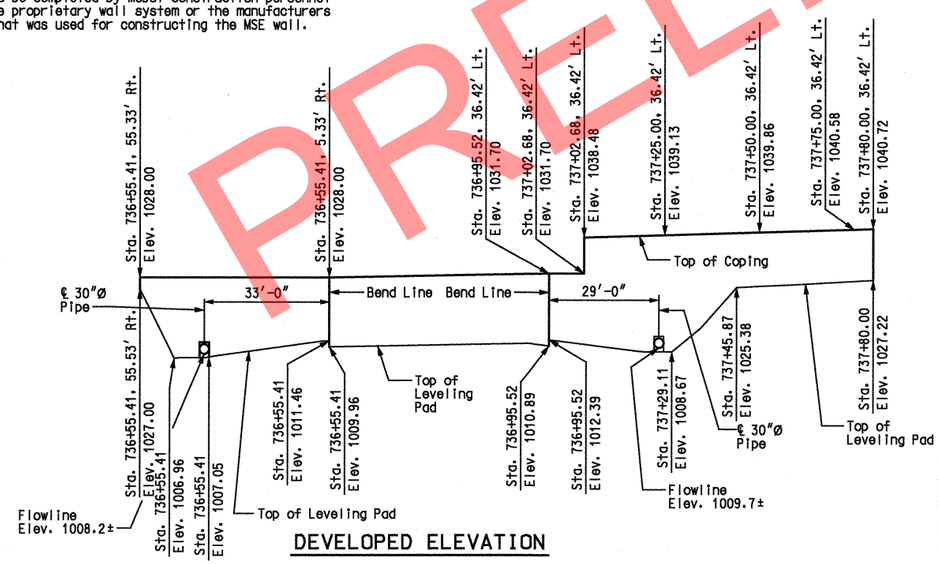

DEVELOPED ELEVATION

CURVE DATA NB I-49

P.I. Sta. = 739+20.393
△ = 44°43'02" (Rt.)
D = 2°00'00.0"
L = 2235.86'
T = 1178.36
R = 2864.79'
SE = 6.3%

CURVE DATA SB RTE. 71

P.I. Sta. = 736+04.58
△ = 66°31'00" (Lt.)
Lc = 1987.22'
Ts = 1368.30'
R = 1909.86'
D = 3°00'00"
Ls = 230.00'
Θs = 3°27'00" (Lt.)
Xs = 229.92'
Ys = 4.62'
SE = 7.9%

GENERAL NOTES:

Design Specifications:
2002 - AASHTO 17th Edition.
Seismic performance category A.
Acceleration coefficient = 0.05

Factor of safety shall be 2.0 for overturning, 1.5 for sliding and 2.0 for bearing.

For seismic design, the factor of safety shall be 1.5 for overturning and 1.1 for sliding.

Ø = 34° for retained fill material to be retained by the mechanically stabilized earth wall.

Ø = 34° for foundation material the wall is to rest on.

Ø = 34° for selected granular backfill.

All concrete for leveling pad and coping shall be Class B or B-1 with f'c = 4,000 psi.

Panel reinforcement shall be epoxy coated.

A filter cloth meeting the requirements for a Separation Geotextile material shall be placed between the select granular backfill for structural systems and the backfill being retained by the mechanically stabilized earth wall system.

Front face of wall shall be vertical.

All stationing is along ℄ NB I-49.

The contractor shall be solely responsible to coordinate construction of the wall with bridge and roadway construction and ensure that the bridge and roadway construction, resulting or existing obstructions, shall not impact the construction or performance of the wall. Soil reinforcement shall be designed and placed to avoid damage by pile driving, guardrail post installation, utility and sign foundations. (See Roadway and Bridge plans.)

Coping shall be required on this structure.

The MSE wall system shall be a large block wall system in accordance with Sec 720.

"Sec" refers to the sections in the standard and supplemental specifications unless specified otherwise.

The cost of joint filler, complete-in-place, will be considered completely covered by the contract unit price for Concrete Traffic Barrier (Type B). See roadway plans.

Total Length of wall = 192'-4½"

ESTIMATED QUANTITIES

ITEM		QUANTITY
Mechanically Stabilized Earth Wall Systems	Sq. Ft.	3,668

Notes:
The boring logs or other factual records of subsurface data and investigations performed by the department for the design of this project are available from the Project Contact upon written request.

For Section A-A, B-B and C-C, see Sheet No. 3.

Denotes boring location.

BENCHMARKS

BM-71-99-97 R.R. spike in West face of corner post 0.9 mi. South of Rte. H on county road SW of H-21. East of county road. Elev. 925.19

BM-49-01-01 R.R. spike East of root of 1.2' wild cherry with blazed "△" West side of county road SW H-21. West of Gardner's chicken houses. BM is 1.475 miles South of Rte. H. Elev. 949.43

STATE OF MISSOURI
GINA D. HORNER
NUMBER E-30413
REGISTERED PROFESSIONAL ENGINEER
3-9-10

DATE PREPARED	
ROUTE I-49	STATE MO
DISTRICT BR	SHEET NO. 2
COUNTY McDONALD	
JOB NO. J7P0601	
CONTRACT ID.	
PROJECT NO.	
BRIDGE NO. A7801	

DATE	DESCRIPTION

MISSOURI HIGHWAYS AND TRANSPORTATION COMMISSION
105 WEST CAPITOL
JEFFERSON CITY, MO 65102
1-888-ASK-MODOT (1-888-275-6636)

HNTB
715 KIRK DRIVE
KANSAS CITY, MO 64105-1310
TELEPHONE (816) 472-1201
CERTIFICATE OF AUTHORITY NO. 001270

IF A SFAI IS PRESENT ON THIS SHEET IT HAS BEEN ELECTRONICALLY SEALED AND DATED.

REV.

PRELIMINARY

USER: TThompson
PLOTTED: 08-MAR-2010 14:45 \\kcow00\Jobs\49259\Bridges\Plans\CDtoMoDotA7801_03-05-10\J7P0601\A7801-dgn\ZPLOT_F02.dgn

Detailed JUL 2009
Checked AUG 2009

Note: This drawing is not to scale. Follow Dimensions.

Sheet No. 2 of 3

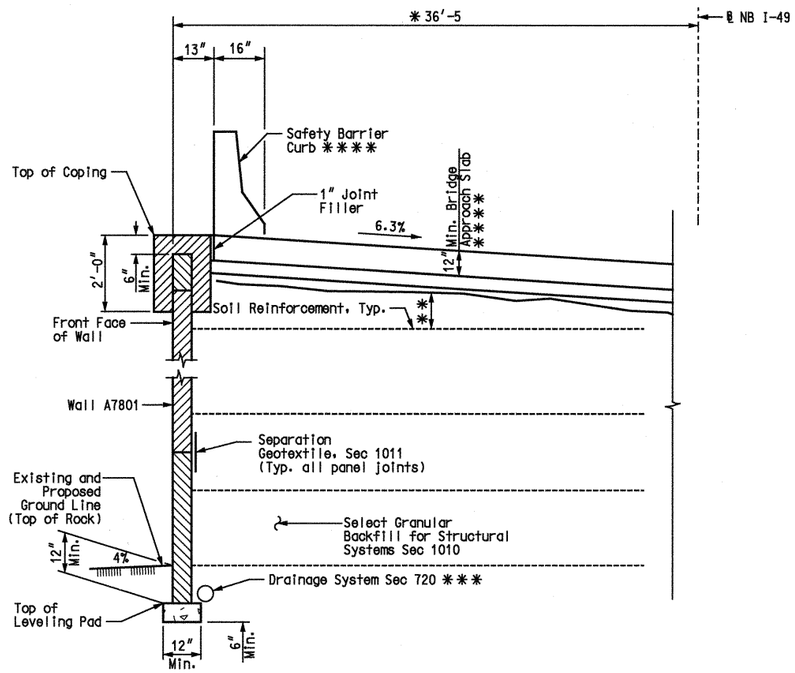

SECTION A-A

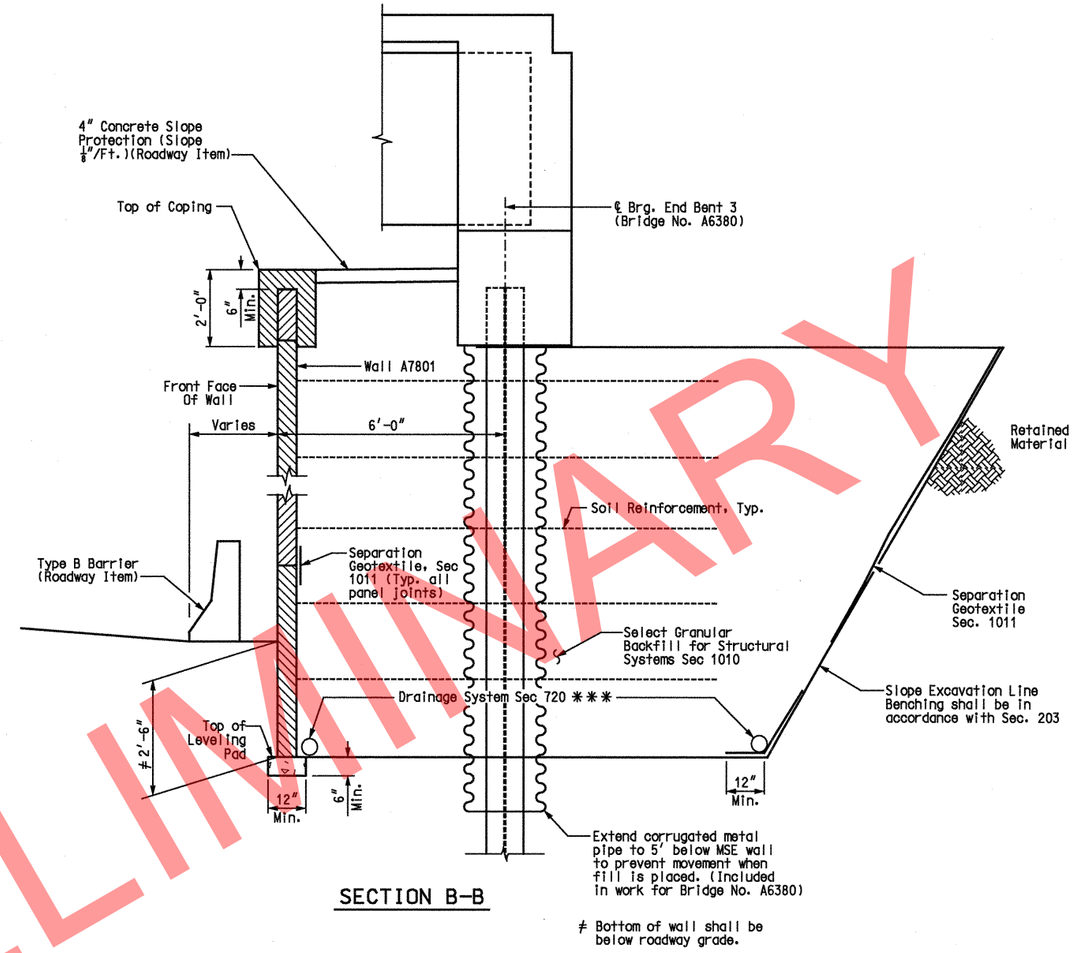

SECTION B-B

≠ Bottom of wall shall be below roadway grade.

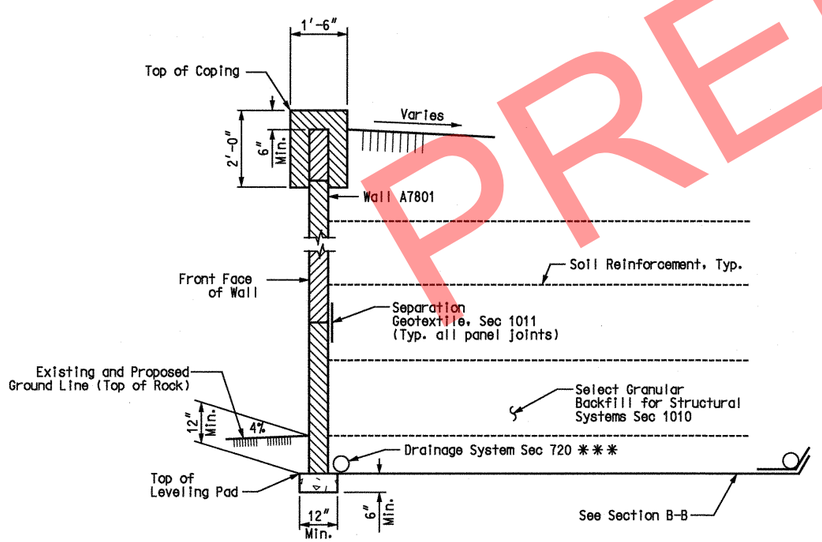

SECTION C-C

✱ Dimensions are radial along curved portion of wall.

✱✱ Topmost layer of reinforcement shall be fully covered with select granular backfill for structural systems, as approved by the wall manufacturer, before placement of the Separation Geotextile.

✱✱✱ Adjustment in the vertical alignment of the drainage pipes from that depicted in the plans may be necessary to ensure positive flow out of the drainage system.

✱✱✱✱ Included in work for Bridge No. A6380

Outlet ends of pipes shall be located to avoid clogging or flow into the drainage system.

Note:
For location of Sections A-A, B-B and C-C, see Sheet No. 2.

TYPICAL SECTIONS

Detailed JUL 2009
Checked AUG 2009

Note: This drawing is not to scale. Follow Dimensions.

STATE OF MISSOURI
GINA D. HORNER
NUMBER E-30413
REGISTERED PROFESSIONAL ENGINEER
3-9-10

DATE PREPARED	07/28/09
ROUTE	I-49
STATE	MO
DISTRICT	BR
SHEET NO.	3
COUNTY	McDONALD
JOB NO.	J7P0601
CONTRACT ID.	
PROJECT NO.	
BRIDGE NO.	A7801

DATE	DESCRIPTION

MISSOURI HIGHWAYS AND TRANSPORTATION COMMISSION
105 WEST CAPITOL
JEFFERSON CITY, MO 65102
1-888-ASK-MODOT (1-888-275-6636)

HNTB
715 KIRK DRIVE
KANSAS CITY, MO 64105-1310
TELEPHONE (816) 472-1201
CERTIFICATE OF AUTHORITY NO. 001270

IF A SFAI IS PRESENT ON THIS SHEET IT HAS BEEN ELECTRONICALLY SEALED AND DATED.

REV.

USER: TThompson
PLOTTED: 08-MAR-2010 14:45 \\kcow00\Jobs\49259\Bridges\Plans\CDtoMoDotA7801_03-05-10\J7P0601\A7801-dgn\ZPLOT_F03.dgn