FEDERAL PROJECT NO. STP-9900(675)

CITY OF SAINT LOUIS

DEPARTMENT OF THE PRESIDENT, BOARD OF PUBLIC SERVICE

****

ADDENDUM NO. 3

TO

PLANS AND SPECIFICATIONS

FOR

REMOVAL & REPLACEMENT OF SOUTHWEST & COLUMBIA BRIDGES

ST. LOUIS, MISSOURI

DATE: **11/24/26**
LETTING NUMBER: **8800**

The following changes and additions shall be made in the plans, specifications, and bid form. The cost thereof shall be included in the proposals submitted by the bidders.

Receipt of this addendum must be acknowledged on Bid Express.

REVISIONS TO THE BID OPENING DATE

- The bidding period is being extended. Bids must be submitted prior to 1:45 PM on Tuesday, December 8, 2026.

CORRECTION TO THE PLANS

- Delete Lighting Note #2 on Plan Sheet C-1000 in its entirety. The project will install the City standard direct-burial concrete pole, per the detail attached to this addendum, and the luminaires shall be GE 84-watt cobra head style fixture, catalog no. ERL1H09B340DGRAY. All cobra head arms will be 6' (1.8M) in length.

- Plan Sheets C-800 through C-809 contain an incorrect MSD project number. The correct MSD project number is 22MSD-00327. Revised plan sheets will not be issued as part of this addendum. Contractors are advised that MSD has assigned a permit fee of $3,699.00 for this project. No direct pay will

be provided for reimbursement of the permit fee, the costs of which shall be considered incidental to sewer-related bid items.

REVISIONS OT THE BID FORM

- **REVISE –** the quantity of Line Item "9011036 – Bracket Arm, 6' or 1.8M" from 8 EA to 16 EA
- **DELETE –** the Line Item "9011110 – Bracket Arm, 10' or 3.0M" in its entirety.
- **DELETE –** the Line Item "9011112 – Bracket Arm, 12' or 3.6M" in its entirety.

END OF ADDENDUM

Attachments:

Concrete Pole Detail #Q-2103056.1 (1 page)

POLE TOP: 5 3/8" FL/FL

REV.	ALTERATION	DATE	BY

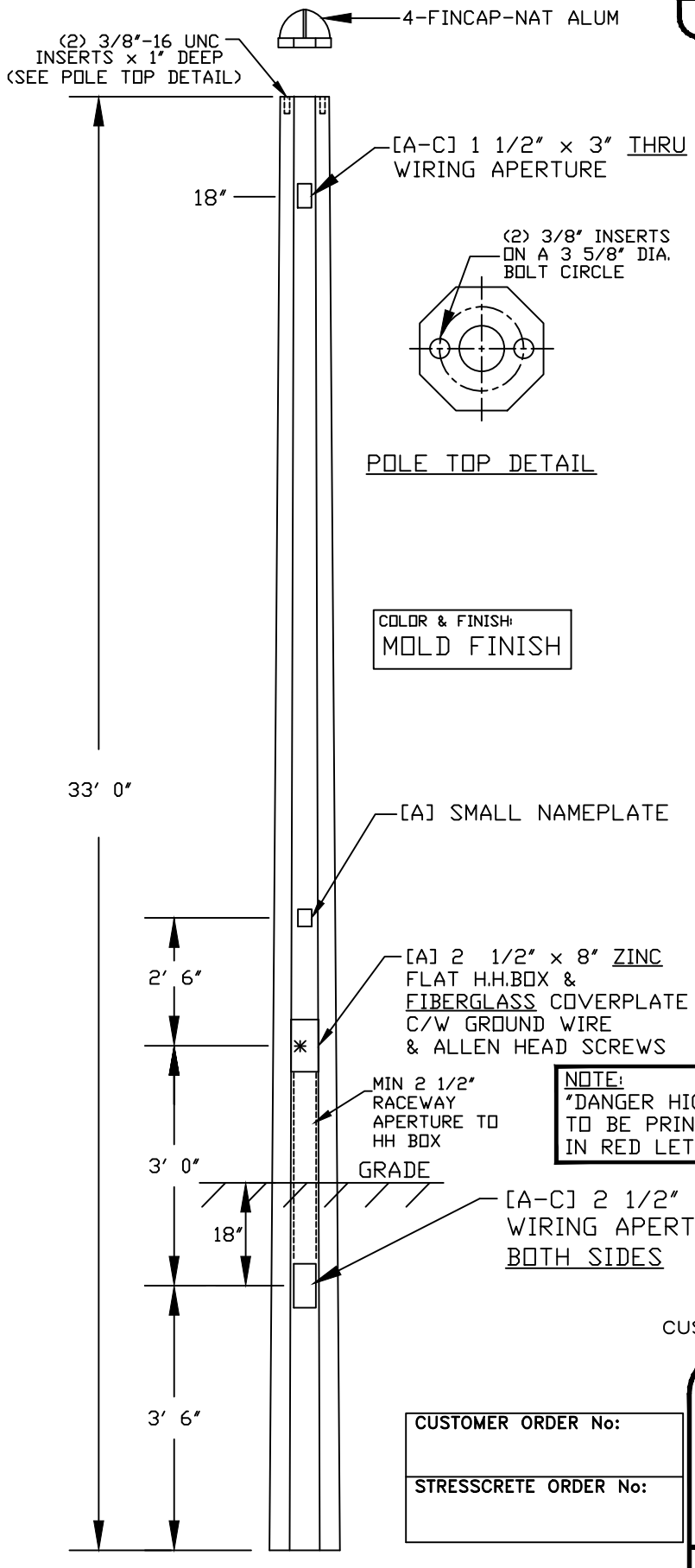

POLE TOP DETAIL

COLOR & FINISH:
MOLD FINISH

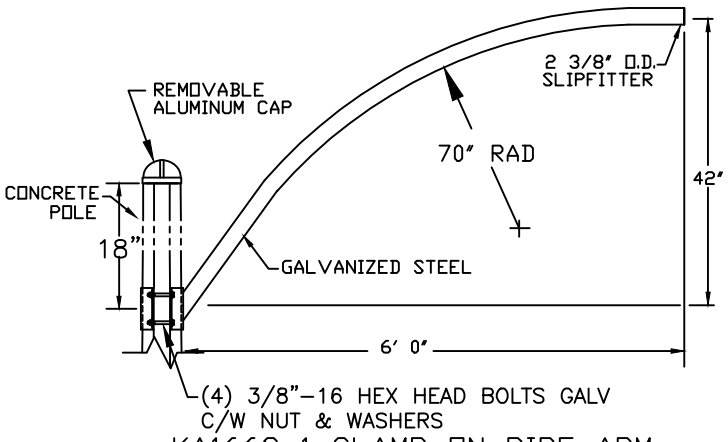

KA166S-1 CLAMP-ON PIPE ARM

CATALOG NO.:	E-330-APO-G-M00 C/W 166S-S-6' & FC
STOCK CODE NO.:	E330APO5.375M00
SECTION:	OCTAGONAL
COLOR:	MOLD FINISH - GRAY
FINISH:	MOLD FINISH
POLE LENGTH:	33' 0"
POLE TOP:	5 3/8" FL/FL
POLE BUTT:	9 1/2" FL/FL
MIN RACEWAY:	1 1/8" DIA - HH TO TOP
MIN RACEWAY:	2 1/2" B/G APER TO HH BOX
APPROX. WGT.:	1,450 LBS
QUANTITY:	

NOTE:
"DANGER HIGH VOLTAGE"
TO BE PRINTED ON COVERPLATE
IN RED LETTERS

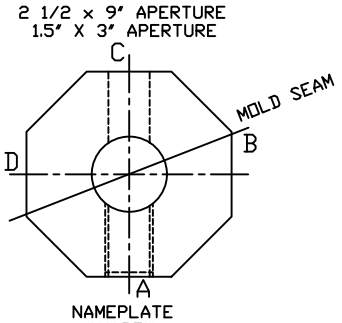

TOP VIEW

CUSTOMER APPROVAL & DATE: _____

CUSTOMER ORDER No:
STRESSCRETE ORDER No:

King Luminaire • StressCrete • Est. 1953

STRESSCRETE GROUP

Manufacturing Locations:

Burlington, Ontario 1-800-268-7809

Northport, Alabama 1-800-435-6563

Atchison, Kansas 1-800-837-1024

Jefferson, Ohio 1-800-268-7809

NOTE:
STRESSCRETE MAKES NO CLAIMS THAT THE REFERENCE EMBEDMENT DEPTH SHOWN IS SUITABLE FOR SUPPORTING THIS STRUCTURE. IT IS RECOMMENDED THAT A STRUCTURAL ENGINEER EVALUATE THE SOILS PRESENT ON SITE TO CONFIRM REQUIRED EMBEDMENT DEPTH AND BACKFILL MATERIAL TO BE USED.

"CONTRACTOR TO INSTALL BURNDY KSU22 6-25 UNIVERSAL SERVIT SPLIT BOLT CONNECTORS (OR EQUIVALENT). CONNECTING THE #6 COPPER WIRE FROM THE POLE TO THE LUMINAIRE GROUND & A SEPARATE CONNECTOR BONDING POLE TO SUPPLY GROUNDING CONDUCTOR."

PROJECT/CUSTOMER:
CITY OF ST. LOUIS STANDARD 33' EMBEDDED POLE WITH KA166S ARM

DRAWN BY:	AT:	CHECKED BY:	DATE:	REVISION:
MJ	SC3		3-12-21	

DRAWING TYPE:	DRAWING NUMBER:
CONCEPT DRAWING	Q-2103056.1