MISSOURI STATE HIGHWAY DEPARTMENT

FED. ROAD DIST. NO.	STATE	FED. AID PROJ. NO.	FISCAL YEAR	SHEET NO.	TOTAL SHEETS
5	MO.		19	61	

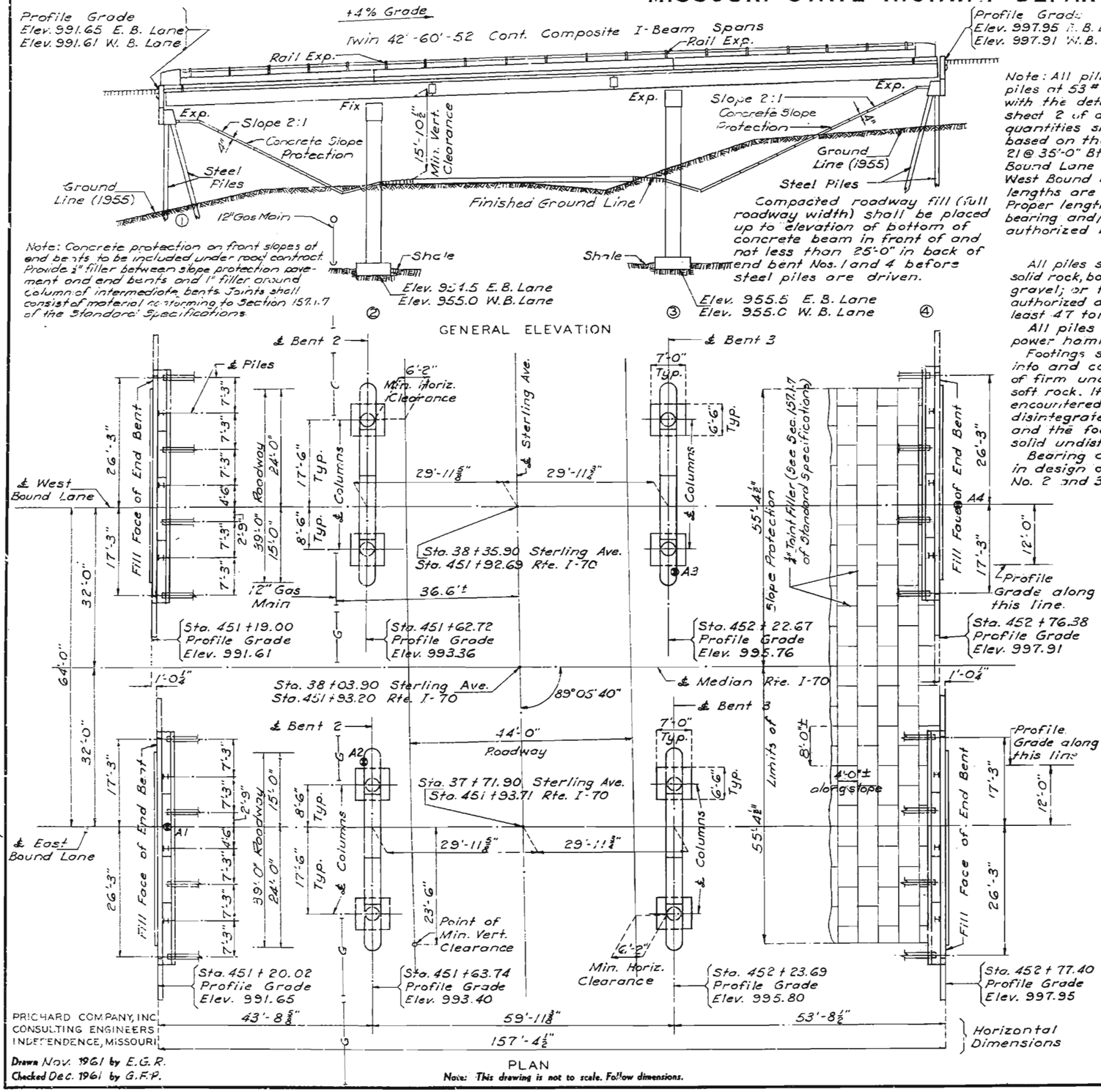

Note: Concrete protection on front slopes of end bents to be included under road contract. Provide ½" filler between slope protection pavement and end bents and 1" filler around column of intermediate bents. Joints shall consist of material conforming to Section 157.1.7 of the Standard Specifications.

Note: All piling shall be 12" bearing piles at 53# and shall conform with the details and notes on sheet 2 of design plans. Estimated quantities shown on plans are based on the following lengths: 21 @ 35'-0" Bt. 1 both lanes and Bt. 4 East Bound Lane and 7 @ 40'-0" Bt. 4 West Bound Lane. These indicated lengths are approximate only. Proper lengths to give required bearing and/or penetration will be authorized by the Engineer.

Compacted roadway fill (full roadway width) shall be placed up to elevation of bottom of concrete beam in front of and not less than 25'-0" in back of end bent Nos. 1 and 4 before steel piles are driven.

All piles shall be driven to or into solid rock, boulders, shale, or cemented gravel; or to not less than full length authorized and to sustain a load of at least 47 ton per pile.

All piles shall be driven with a power hammer.

Footings shall be carried at least 18" into and cast against vertical faces of firm undisturbed shale or other soft rock. If solid hard rock is encountered, all loose, shelly, or disintegrated material shall be removed and the footings placed on hard, solid undisturbed rock.

Bearing of 8 ton per sq. ft. used in design of footing for bents No. 2 and 3.

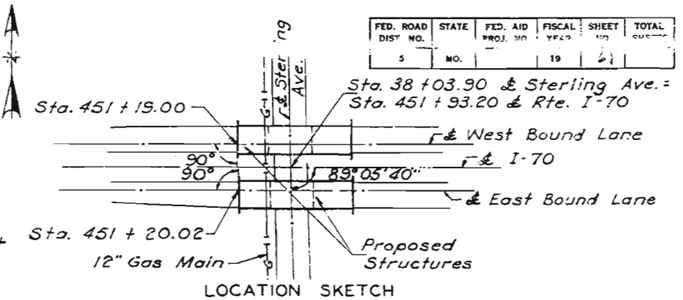

LOCATION SKETCH

ESTIMATED QUANTITIES			
ITEM	SUBSTR.	SUPERSTR.	TOTAL
Class 1 Excavation for Structures Cu.Yd.	395	—	395
Steel Piles in Place (12") Lin. Ft.	931	—	931
Steel Pile Cut-offs (12") Lin. Ft.	84	—	84
Class B Concrete Cu.Yd.	272.6	—	272.6
Class B1 Concrete Cu.Yd.	—	398.2	398.2
Reinforcing Steel Lb.	45,920	129,060	174,980
Fabricated Structural Carbon Steel Lb.	—	241,930	241,930
Painting Ton	—	118.1	118.1
Bridge Rail (Single Tube Type) Lin. Ft.	—	591	591
Conduit System (on Structure) Lump Sum	—	1	1

Note: All excavation for bridge will be paid for as Class 1 Excavation for Structures.

Weight of shear connectors is included in weight of Fabricated Structural Carbon Steel but not included for painting.

GENERAL NOTES:

Design Specifications: A.A.S.H.O.-1961.
Loading: H20-S16-44 (15#/sq.ft. Future Wearing Surface) (Modified 24,000# Tandem Axle)
Structural Steel Stress: ASTM-A36, 20,000#/□"
Structural Steel Stress: ASTM-A7 or A373, 18,000#/□"
Reinforcing Steel Stress: 20,000#/□"
Concrete Class B Stress: 1,200#/□"
Concrete Class B1 Stress: 1,600#/□"

Material for Stringers and cover plates welded to Stringers shall be structural steel conforming to ASTM-A36. Other steel shall be as noted on the plans or A7 steel if not otherwise noted.

Concrete for Substructure shall be Class B air-entrained.

Concrete for Superstructure shall be Class B1 air-entrained.

Superstructure deck to be surface sealed. (See special provisions.)

Rivets ¾"; holes 13/16"; except where otherwise noted.

Field connections may be riveted or bolted with high strength bolts. Final pay weight for Fabricated Structural Carbon Steel will be based on the use of field rivets.

Qualification of welding operators will be required.

Paint: Shop, none; Field, contact surfaces of bolted field connections, except where high strength bolts are used, one coat of red lead and surfaces inaccessible after erection three coats of red lead. All other exposed surfaces first coat red lead, second coat brown, third coat aluminum. Payment for paint, cleaning and painting such surfaces will be included in price bid for Painting.

See Section 52.4.7 of Standard Specifications for required painting of steel piles.

Where joint filler is specified on the plans it shall conform with the requirements of Section 157.2.4 of the Standard Specifications.

Permits must be obtained for all truck loads over legal length.

Note: Class 1 Excavation for Structures will be measured from the ground line (1955) or from the lower limits of roadway excavation, whichever is lower, regardless of the sequence of operations or method of removal.

B.M. No. 21 - Elev. 1010.73 - "X" in S.E. Corner of Headwall N. side Route 40 65' Lt of Sta. 464 + 70

SUBMITTED BY E. LYN CROWLEY

SIGNATURE E. Lyn Crowley
REGISTERED PROFESSIONAL ENGINEER
SERIAL NUMBER E-5993

PRICHARD COMPANY, INC.
CONSULTING ENGINEERS
INDEPENDENCE, MISSOURI

Drawn Nov. 1961 by E.G.R.
Checked Dec. 1961 by G.F.P.

Sheet No. 1 of 8

BRIDGE OVER STERLING AVENUE

STATE ROAD INTERSTATE ROUTE 70

IN KANSAS CITY

PROJECT NO. I-70-1(46)(RT. I-70) **STA.** 451 + 19.00 (W.B LANE) 451 + 20.02 (E. B. LANE)

JACKSON **COUNTY**

SUBMITTED BY D.B. Jenkins BRIDGE ENGINEER DATE 3/14/62

APPROVED BY G.A. Corbett CHIEF ENGINEER DATE 3/14/62

STD. 54.00

L-972

SEE FINAL PLANS BLUEPRINTS

MISSOURI STATE HIGHWAY DEPARTMENT

FED. ROAD DIST. NO.	STATE	FED. AID PROJ. NO.	FISCAL YEAR	SHEET NO.	TOTAL SHEETS
5	MO.		19	2	

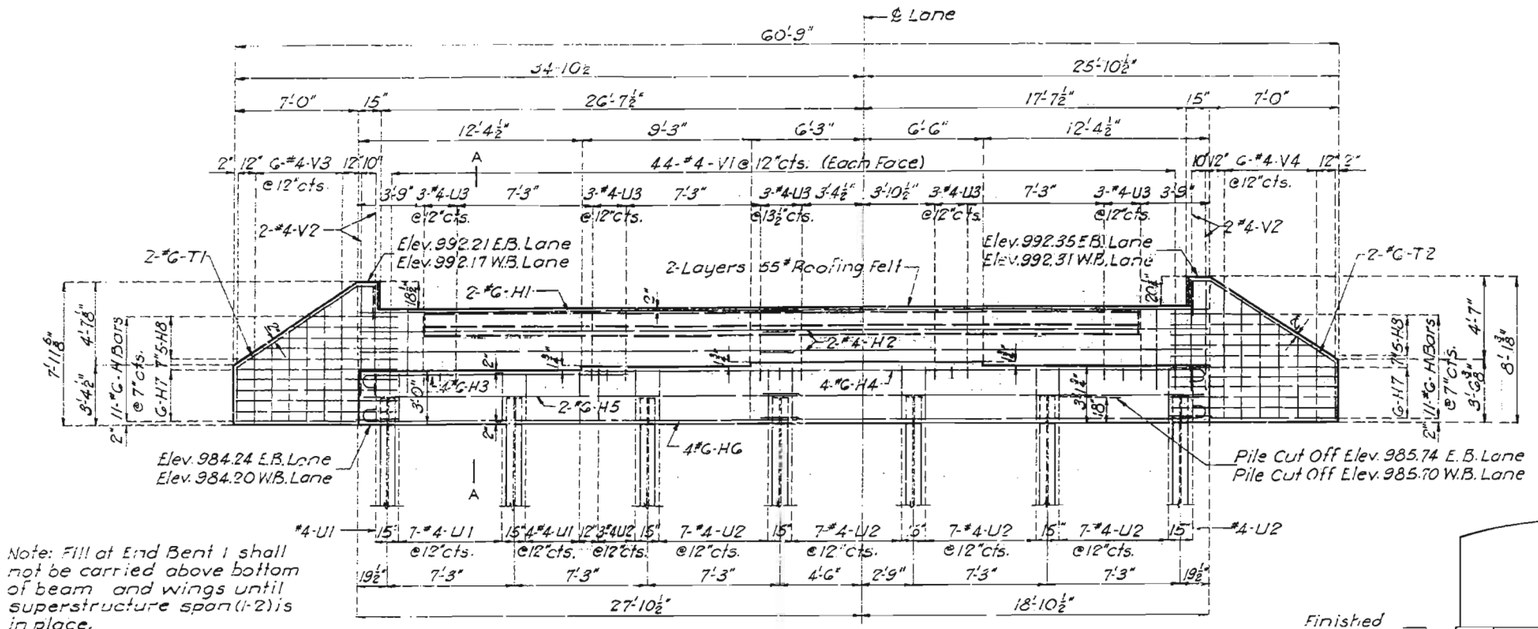

Note: Fill at End Bent 1 shall not be carried above bottom of beam and wings until superstructure span (1-2) is in place.

ELEVATION

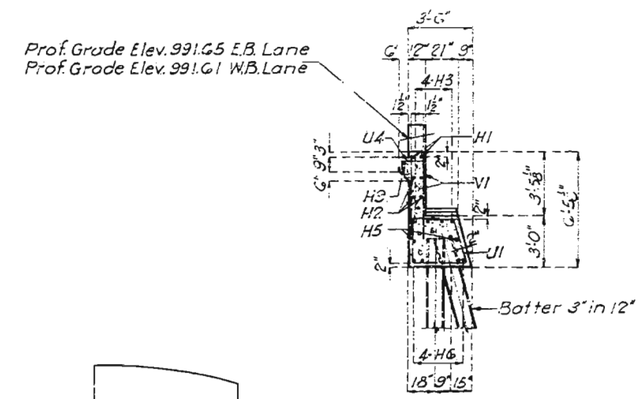

SECTION A-A

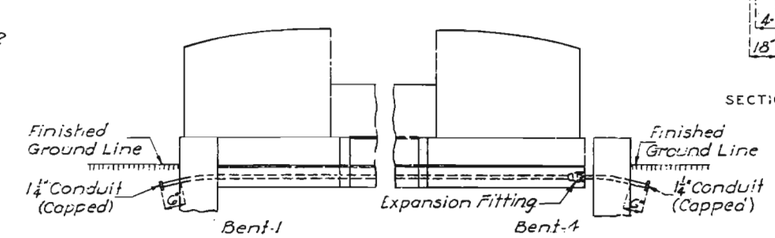

Note: Expansion Fittings O.Z. Mfg. Co. Cat. No. AX125 and Copper Bonding Jumper Cat. No. AJ125 (2-Req.)
Expansion Fittings and Conduit shall be furnished and installed by Contractor. All Conduit shall be Rigid Steel Conduit (Galvanized).

CONDUIT DETAILS

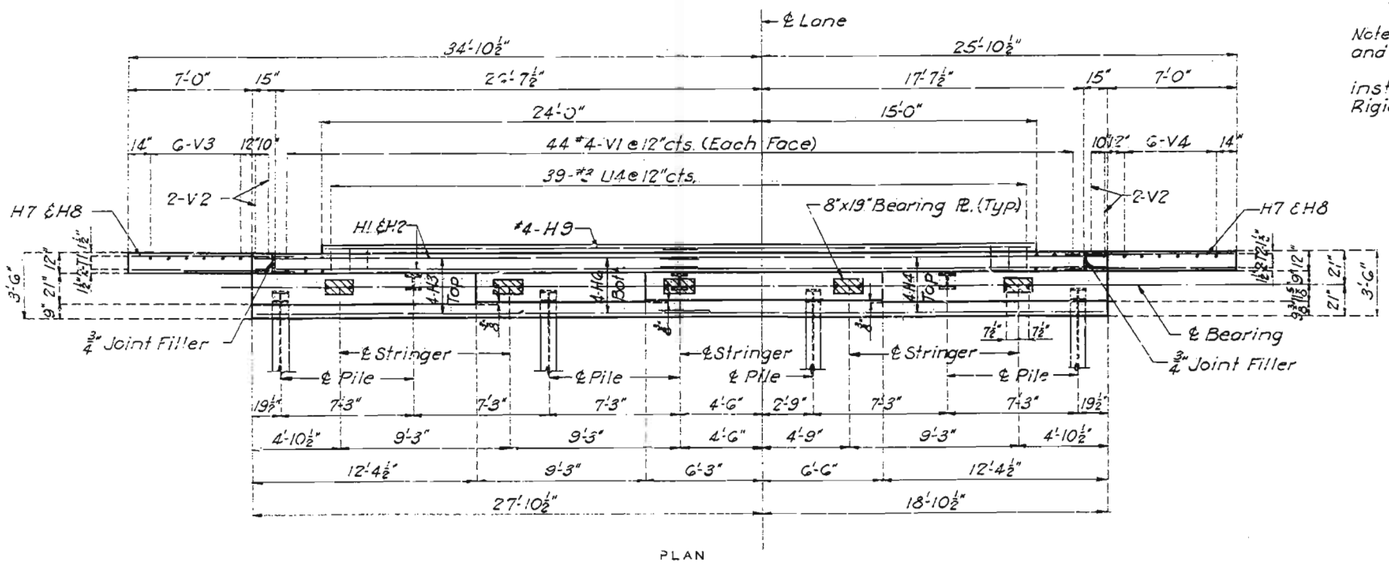

PLAN

DETAILS OF END BENT 1
East Bound Lane Shown, West Bound Lane Opposite Hand

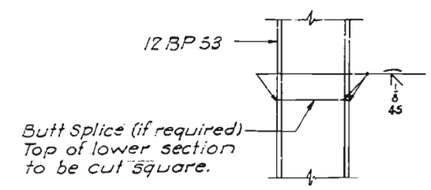

DETAILS OF STEEL PILE SPLICE

BRIDGE OVER STERLING AVENUE

STATE ROAD INTERSTATE ROUTE 70

IN KANSAS CITY

PROJECT NO. I-70-1(46)(RT. I-70) **STA.** 451 + 19.00 (W.B. LANE) / 451 + 20.02 (E.B. LANE)

JACKSON **COUNTY**

Drawn Nov. 1961 by H.H.B.
Checked Dec 1961 by G.F.P.

Note: This drawing is not to scale. Follow dimensions.

Sheet No. 2 of 8

L-972

NO CONSTRUCTION CHANGES

MISSOURI STATE HIGHWAY DEPARTMENT

FED. ROAD DIST. NO.	STATE	FED. AID PROJ. NO.	FISCAL YEAR	SHEET NO.	TOTAL SHEETS
5	Mo.		19	63	

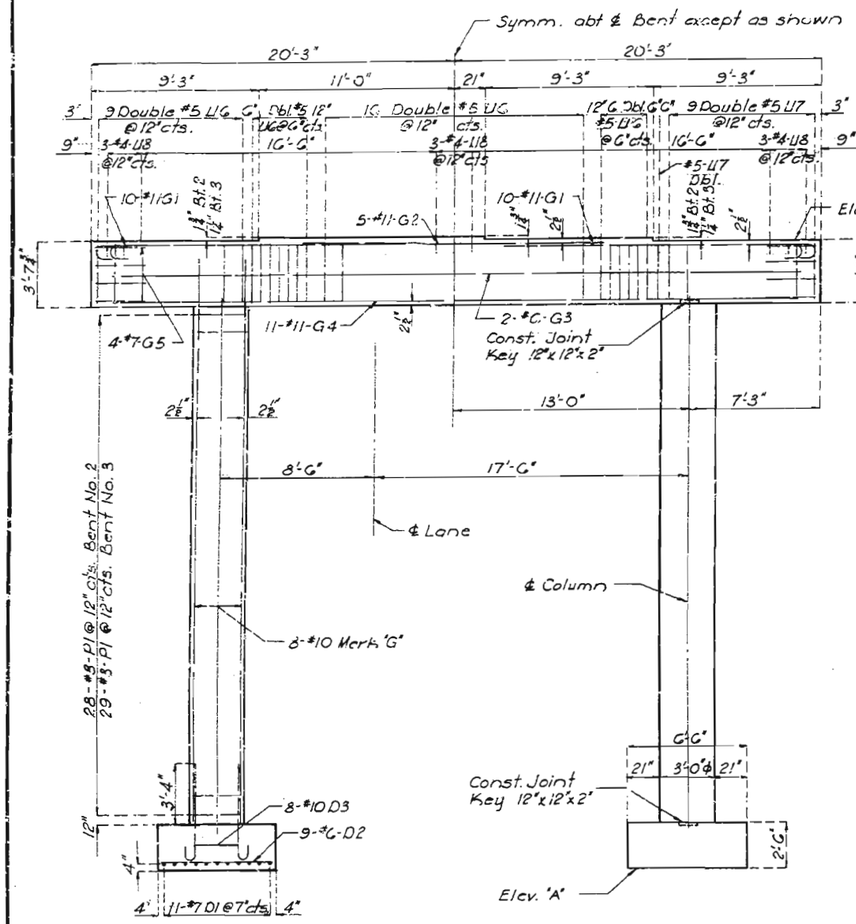

ELEVATION

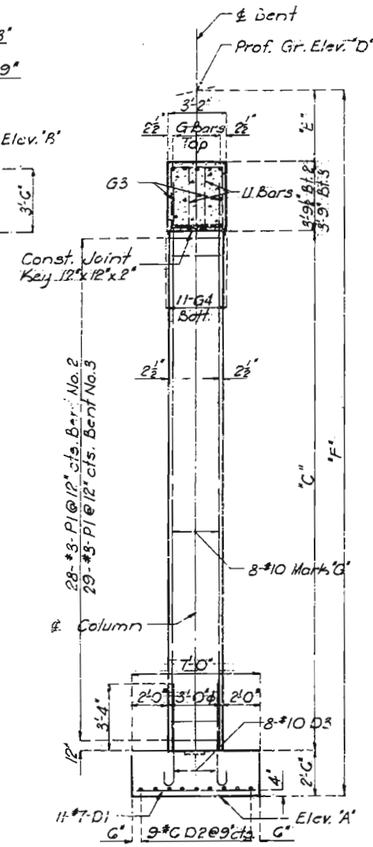

SECTION AT ℄

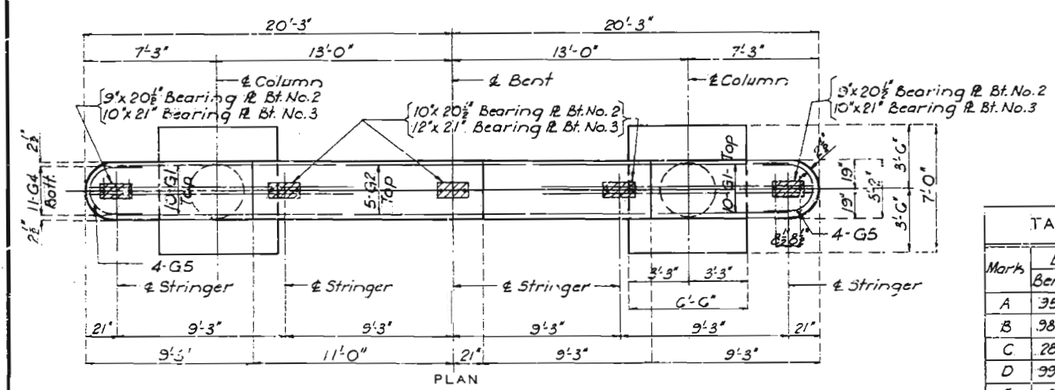

PLAN

DETAILS OF INTERMEDIATE BENTS NO. 2 AND 3
(East Bound Lane Shown, West Bound Lane Opposite Hand)

TABLE OF VARIABLES				
Mark	E. B. Lane		W. B. Lane	
	Bent 2	Bent 3	Bent 2	Bent 3
A	954.50	955.50	955.00	955.00
B	989.20	990.93	989.16	990.95
C	28'-8⅜"	29'-5⅞"	28'-1⅞"	29'-11⅜"
D	993.40	995.80	993.36	995.76
E	3'-10 27/32"	4'-6 3/4"	3'-10 3/8"	4'-6 3/4"
F	38'-10¾"	40'-3⅝"	38'-4¼"	40'-9⅛"
G	P2	P3	P4	P5

COMPLETE BILL OF REINFORCING STEEL

NO.	SIZE	LENGTH	MARK	LOCATION
				SUPERSTRUCTURE
588	#5	4'-0"	C1	Curb
588	#4	2'-9"	C2	Parapet
40	#5	4'-3"	C3	Curb
16	#5	21'-6"	C4	Parapet
24	#5	22'-6"	C5	Curb
40	#5	30'-9"	C6	Curb & Parapet
16	#5	26'-0"	C7	Parapet
24	#5	27'-0"	C8	Curb
8	#5	5'-3"	C9	"
64	#4	3'-9"	R1	End Post
16	#5	8'-0"	R2	" "
8	#5	7'-9"	R3	" "
8	#5	7'-6"	R4	" "
8	#5	7'-0"	R5	" "
1248	#6	28'-3"	S1	Slab
1248	#6	17'-0"	S2	"
224	#4	16'-0"	S3	"
530	#4	32'-3"	S4	"
620	#5	32'-6"	S5	"
				END BENTS
8	#6	24'-3"	H1	backwall
24	#4	24'-0"	H2	"
16	#6	15'-6"	H3	Beam
16	#6	35'-0"	H4	Beam
16	#6	24'-3"	H5	"
32	#6	25'-3"	H6	"
48	#6	9'-0"	H7	Wing
20	#6	13'-6"	H8	"
8	#4	20'-0"	H9	Slab Notch
16	#6	23'-0"	H10	Backwall
8	#6	5'-0"	H11	Wing
4	#6	14'-3"	T1	Wing
4	#6	14'-6"	T2	"
8	#6	15'-3"	T3	"
48	#4	12'-0"	U1	Beam
64	#4	12'-3"	U2	"
60	#4	3'-6"	U3	"
156	#3	21"	U4	Slab Notch
64	#4	12'-3"	U5	Beam
176	#4	4'-9"	V1	Backwall
48	#4	6'-3"	V2	"
6	#4	11'-0"	V3	Wing
6	#4	11'-3"	V4	"
160	#4	5'-9"	V5	Backwall
6	#4	11'-0"	V6	Wing
6	#4	10'-9"	V7	"
40	#2	19'-9"	W1	A.B. Wells
				INTERMEDIATE BENTS NO. 2 & 3
88	#7	6'-6"	D1	Footing
72	#6	6'-0"	D2	"
64	#10	6'-9"	D3	"
80	#11	16'-6"	G1	Beam
20	#11	17'-0"	G2	"
8	#6	38'-0"	G3	"
64	#11	38'-6"	G4	"
32	#7	7'-0"	G5	"
228	#3	9'-6"	P1	Column
16	#10	31'-9"	P2	"
16	#10	32'-6"	P3	"
16	#10	31'-3"	P4	"
16	#10	33'-0"	P5	"
304	#5	11'-6"	U6	Beam
80	#5	11'-0"	U7	"
36	#4	4'-0"	U8	"
40	#2	19'-9"	W1	A.B. Wells

NO.	BENT 1 E.B.	BENT 1 W.B.	BENT 4 E.B.	BENT 4 W.B.
8	4	4		
24	8	8	4	4
16	4	4	4	4
16	4	4	4	4
16	4	4	4	4
32	8	8	8	8
48	12	12	12	12
20	5	5	5	5
8	2	2	2	2
16			8	8
8			4	4
4	2	2		
4	2	2		
8			4	4
48	12	12	12	12
64	32	32		
60	15	15	15	15
156	39	39	39	39
64			32	32
176	88	88		
48	8	8	16	16
6	3	3		
6	3	3		
160			80	80
6			3	3
6			3	3
40	10	10	10	10
	BENT 2 E.B.	BENT 2 W.B.	BENT 3 E.B.	BENT 3 W.B.
88	22	22	22	22
72	18	18	18	18
64	16	16	16	16
80	20	20	20	20
20	5	5	5	5
8	2	2	2	2
64	11	11	11	11
32	8	8	8	8
228	56	56	58	58
16	16			
16			16	
16		16		
16				16
304	76	76	76	76
80	20	20	20	20
36	9	9	9	9
40	10	10	10	10

BENDING SKETCHES & CUTTING DIAGRAMS

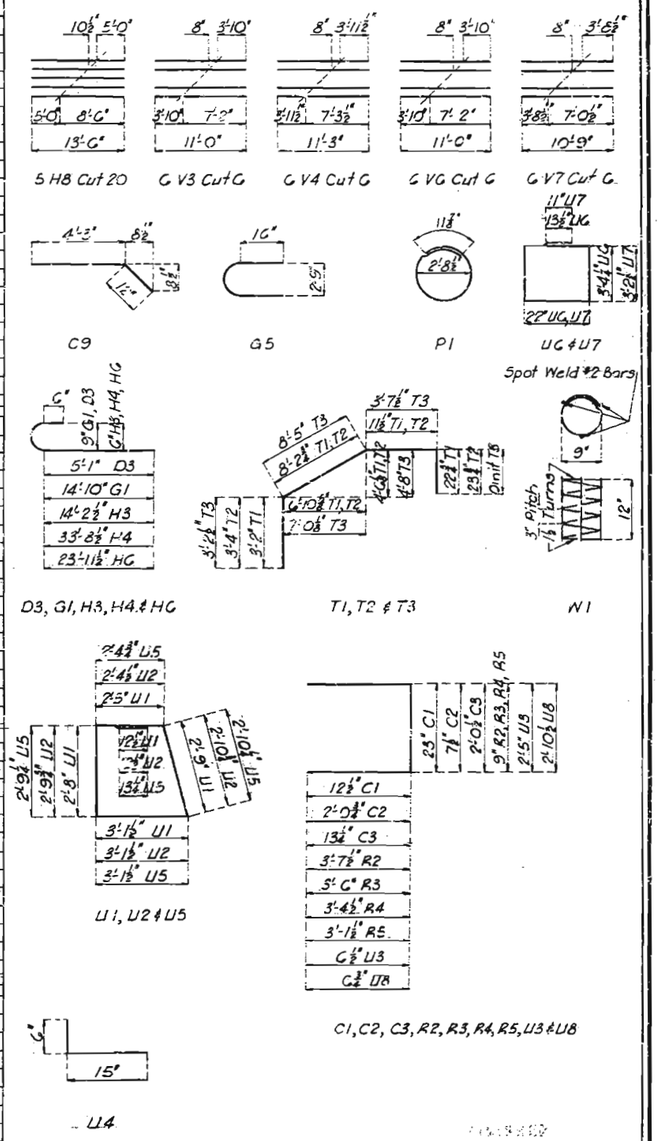

Sheet No. 3 of 8

BRIDGE OVER STERLING AVENUE

STATE ROAD INTERSTATE ROUTE 70

IN KANSAS CITY

PROJECT NO. I-70-1(46)(RT. I-70) **STA.** 451 +19.00 (W.B. LANE) 451 +20.02 (E.B. LANE)

JACKSON **COUNTY**

L-972

Drawn Nov. 1961 by R.E.H.
Checked Dec 1961 by GFP

Note: This drawing is not to scale. Follow dimensions.

SEE FINAL PLANS BROWN-LINES

MISSOURI STATE HIGHWAY DEPARTMENT

FED. ROAD DIST. NO.	STATE	FED. AID PROJ. NO.	FISCAL YEAR	SHEET NO.	TOTAL SHEETS
5	MO.		19	64	

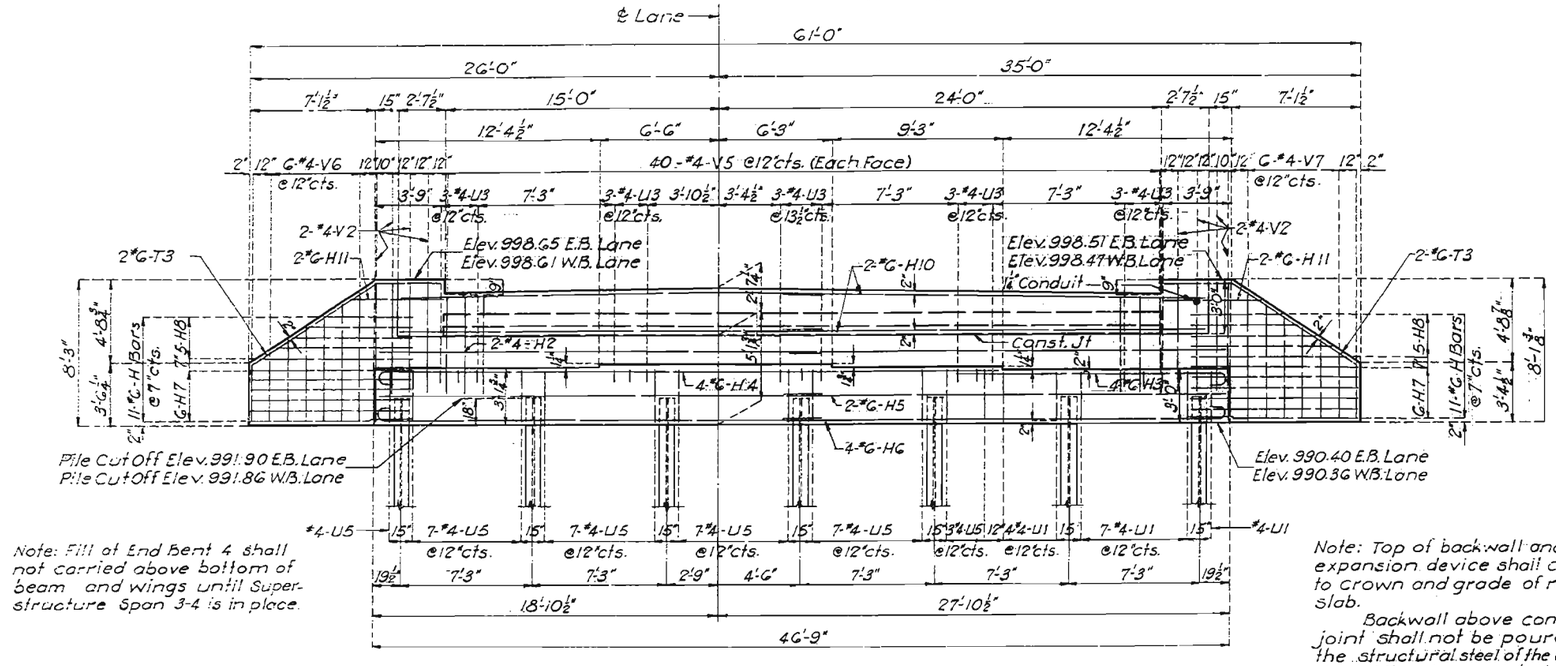

ELEVATION

Note: Fill at End Bent 4 shall not carried above bottom of beam and wings until Superstructure Span 3-4 is in place.

Note: Top of backwall and expansion device shall conform to crown and grade of roadway slab.

Backwall above construction joint shall not be poured until the structural steel of the expansion device has been installed and slab has been poured in adjacent span.

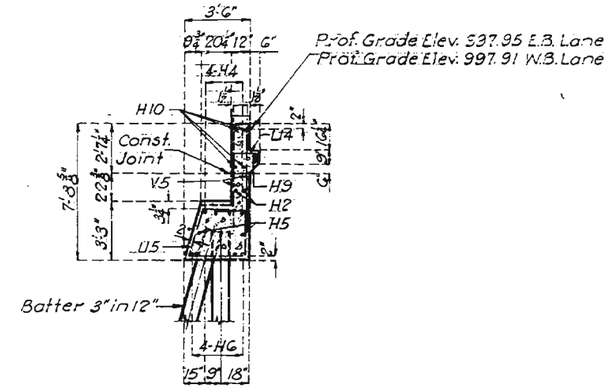

SECTION AT ℄ LANE

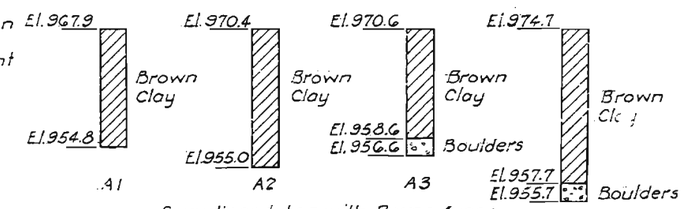

Soundings taken with Power Auger. For locations see Sheet No. 1.

LOG OF SOUNDINGS

Note: Bottom of soundings on rock.

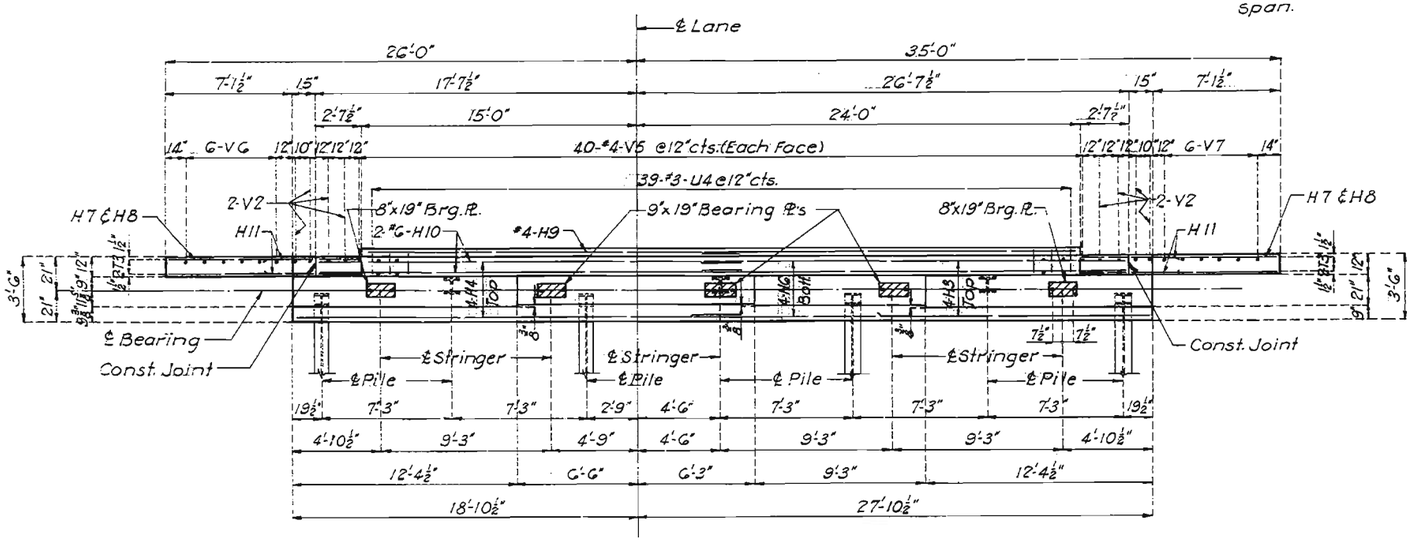

PLAN

DETAILS OF END BENT 4

(East Bound Lane Shown, West Bound Lane Opposite Hand)

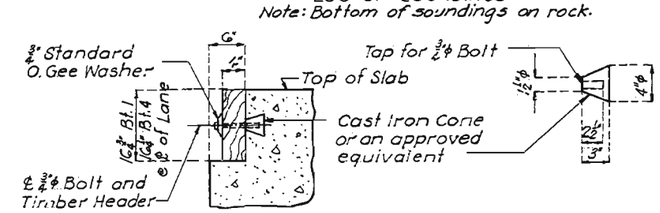

Note: ¾"φ bolt shall be 6½" long with square head, threaded 3" long and placed at about 3'-0" cts.

Cost of timber headers complete in place to be included in price bid for concrete.

DETAILS OF TIMBER HEADER

BRIDGE OVER STERLING AVENUE

STATE ROAD INTERSTATE ROUTE 70

IN KANSAS CITY

PROJECT NO. I-70-1(46)(RT. I-70) **STA.** 451+19.00 (W.B. LANE) 451+20.02 (E.B. LANE)

JACKSON **COUNTY**

Drawn Nov. 1961 by H.H.B.
Checked Dec. 1961 by G.F.P.

Note: This drawing is not to scale. Follow dimensions.

Sheet No. 4 of 8

L-972

NO CONSTRUCTION CHANGES

MISSOURI STATE HIGHWAY DEPARTMENT

FED. ROAD DIST. NO.	STATE	FED. AID PROJ. NO.	FISCAL YEAR	SHEET NO.	TOTAL SHEETS
5	MO.		19	65	

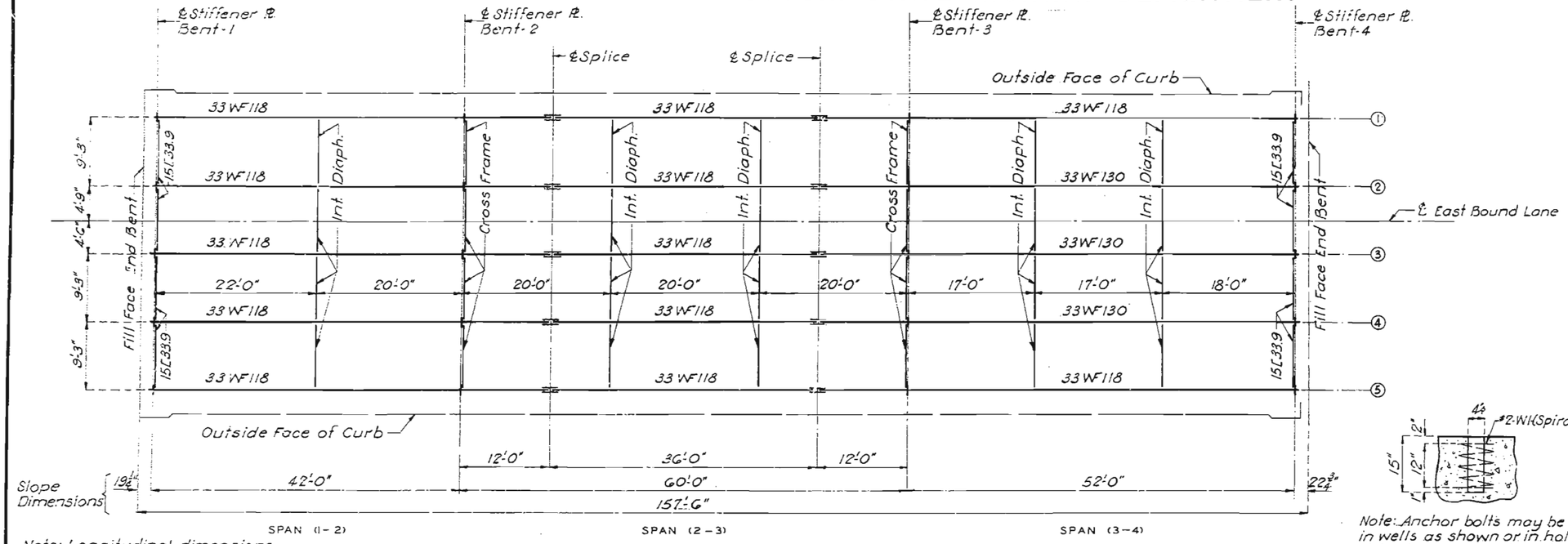

Note: Longitudinal dimensions are parallel to grade of profile grade.

PLAN OF STRUCTURAL STEEL
(East Bound Lane Shown, West Bound Opposite Hand)

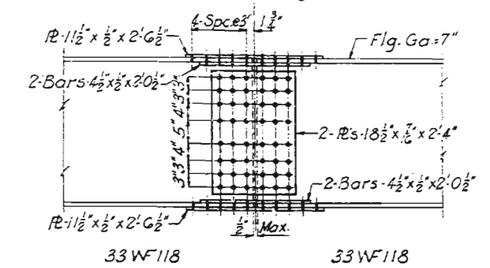

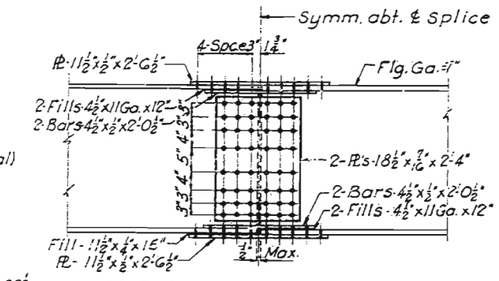

Note: Reamed Holes for 7/8" ϕ Rivets

DETAILS OF FIELD SPLICES

Note: Anchor bolts may be set in wells as shown or in holes drilled into concrete substructure. See Standard Specifications for setting Anchor bolts.

DETAIL OF SPIRAL AROUND ANCHOR BOLTS

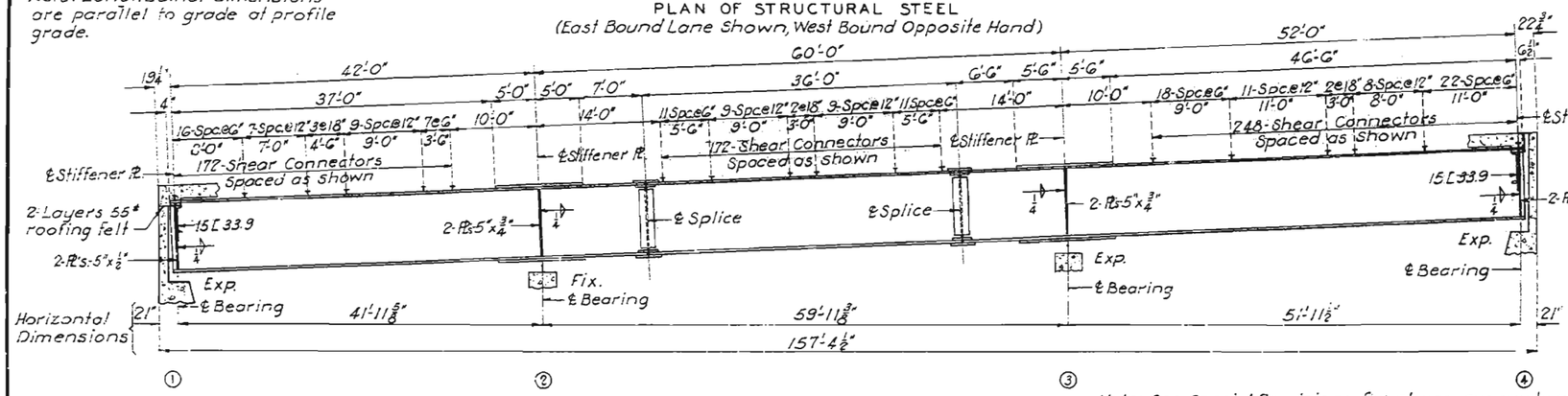

ELEVATION OF STRINGER

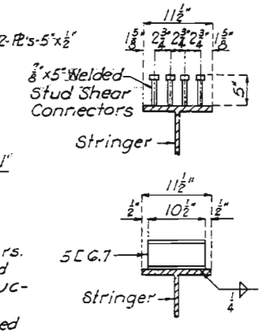

DETAILS OF SHEAR CONNECTORS

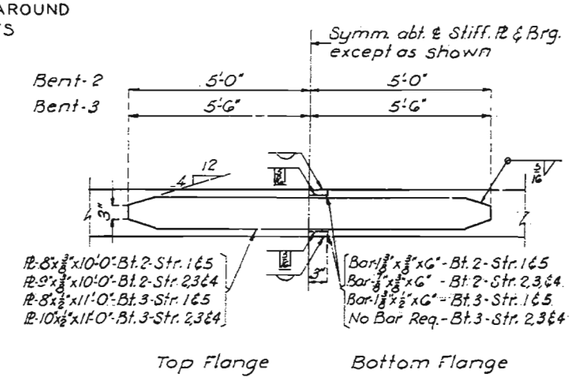

DETAILS OF FLANGE PLATES INT. BENTS 2 & 3

Note: See Special Provisions for shear connectors. Weight of 5800# of shear connectors (based on studs) is included in weight of Fabricated Structural Carbon Steel, but not included in painting. Payweight for shear connectors will be based on weight of type furnished.

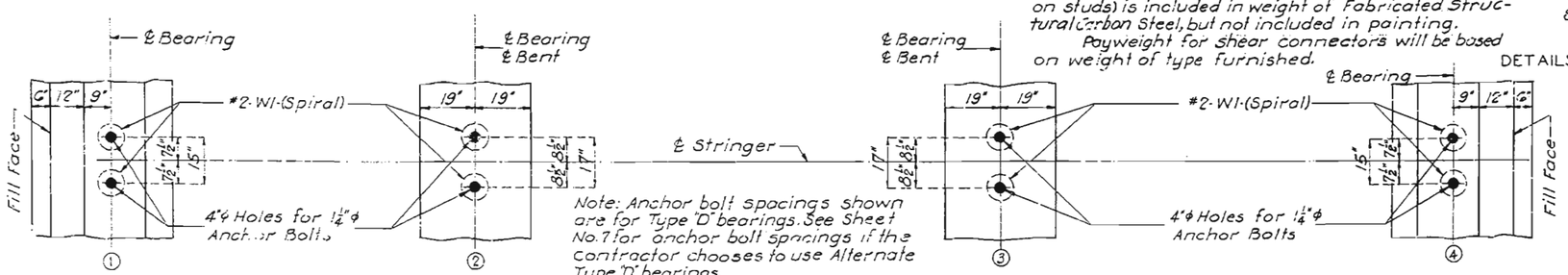

Note: Anchor bolt spacings shown are for Type 'D' bearings. See Sheet No. 7 for anchor bolt spacings if the Contractor chooses to use Alternate Type 'D' bearings.

PART ANCHOR BOLT PLAN
(Typical for all Stringers)

BRIDGE OVER STERLING AVENUE

STATE ROAD INTERSTATE ROUTE 70
IN KANSAS CITY
PROJECT NO. I-70-1(46)(RT. I-70) **STA.** 451+19.00 (W.B. LANE) 451+20.02 (E.B. LANE)

JACKSON **COUNTY**

L-972

Drawn Oct. 1961 by H.H.B.
Checked Dec. 1961 by G.F.P.

Note: This drawing is not to scale. Follow dimensions.

Sheet No. 5 of 8

NO CONSTRUCTION CHANGES

MISSOURI STATE HIGHWAY DEPARTMENT

FED. ROAD DIST. NO.	STATE	FED. AID PROJ. NO.	FISCAL YEAR	SHEET NO.	TOTAL SHEETS
5	MO.		19	66	

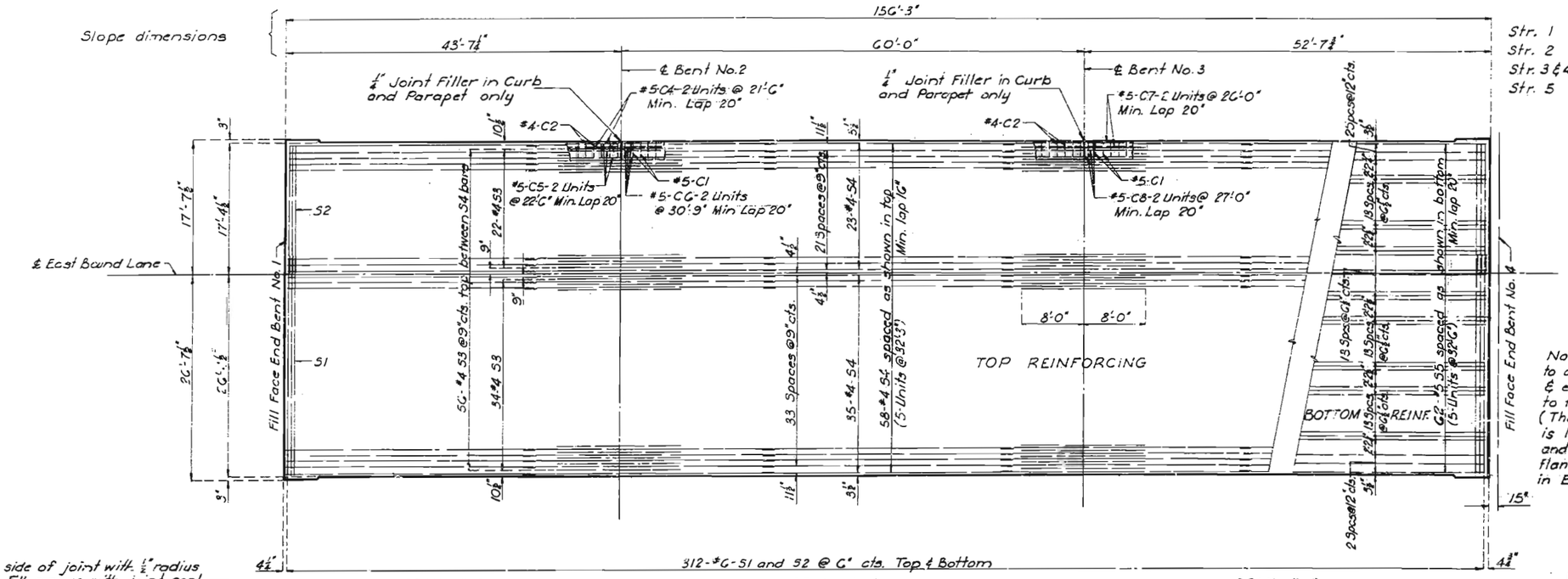

PLAN OF SLAB SHOWING REINFORCING STEEL
(East Bound Lane Shown, West Bound Lane Opposite Hand)

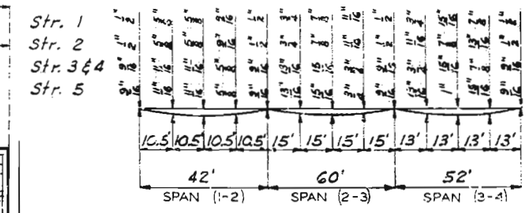

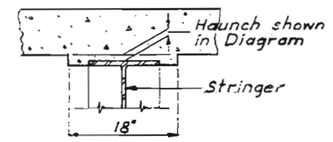

Note: The slab shall be built parallel to grade and to a minimum thickness of 7½". Dead load deflection & end haunch shall be taken care of by haunching to the top of stringers by the dimensions shown. (The dead load deflection of the structural steel is 14% of the difference between the total haunch and end haunch.) The additional concrete (flange, flange plates, and splice plates excluded) is included in Estimated Quantities.

SLAB HAUNCHING DIAGRAM

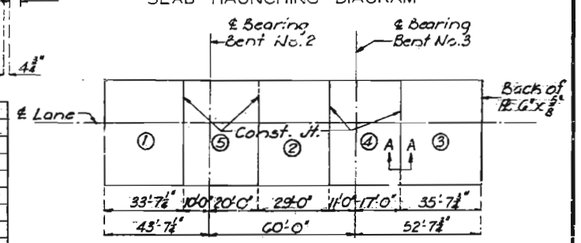

Note: No longitudinal construction joints will be permitted in the roadway slabs and to properly finish the required full slab width, the contractor shall use an approved oscillating screed type, self propelled mechanical finisher.

The "Basic" pouring sequence shall be observed unless the contractor can demonstrate to the satisfaction of the Engineer that he is equipped to pour and satisfactorily finish the bridge slabs at a rate of not less than 30 Cu. Yds. per hour and can maintain this rate throughout the alternate pour he elects to use.

SLAB POURING SEQUENCE

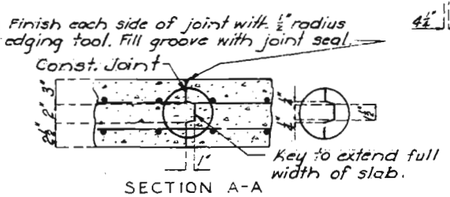

SECTION A-A

	Sequence of Pours				
	Direction				
Basic	1	2	3	4	5
Sequence	Either Direction				
Alternate "A"	1	2+5		3+4	
Pours	Either Dir.	4 to 1		End Bt. to 2	
Alternate "B"	1+5+2			3+4	
Pours	End Bent to 4			End Bent to 2	
Alternate "C"	1+2+3+4+5				
Pours	End Bent to End Bent				

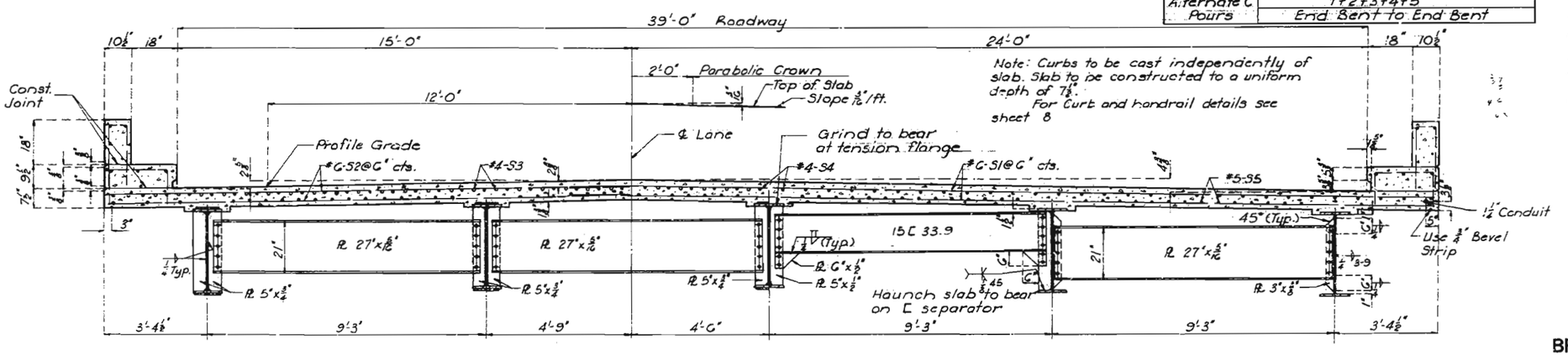

PART SECTION SHOWING CROSS FRAMES

PART SECTION SHOWING END CHANNEL SEPARATOR

PART SECTION SHOWING INTERMEDIATE DIAPHRAGMS

East Bound Lane - West Bound Lane Opposite Hand
(Looking East)

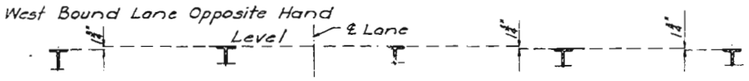

Section Showing Tops of Stringers

BRIDGE OVER STERLING AVENUE

STATE ROAD INTERSTATE ROUTE 70

IN KANSAS CITY

PROJECT NO. I-70-1(46)(RT. I-70) **STA.** 451+19.00 (W.B. LANE) 451+20.02 (E.B. LANE)

JACKSON **COUNTY**

Drawn Oct 1961 by REH
Checked Dec 1961 by GFP

Note: This drawing is not to scale. Follow dimensions.

Sheet No. 6 of 8

L-972

NO CONSTRUCTION CHANGES

MISSOURI STATE HIGHWAY DEPARTMENT

FED. ROAD DIST. NO.	STATE	FED. AID PROJ. NO.	FISCAL YEAR	SHEET NO.	TOTAL SHEETS
5	MO		19	67	

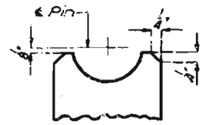

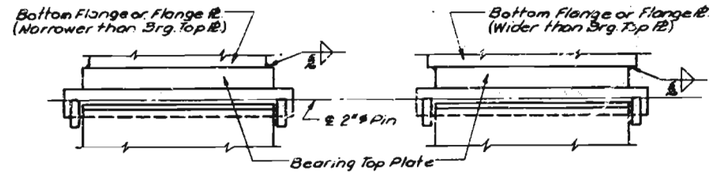

WELDING DETAILS

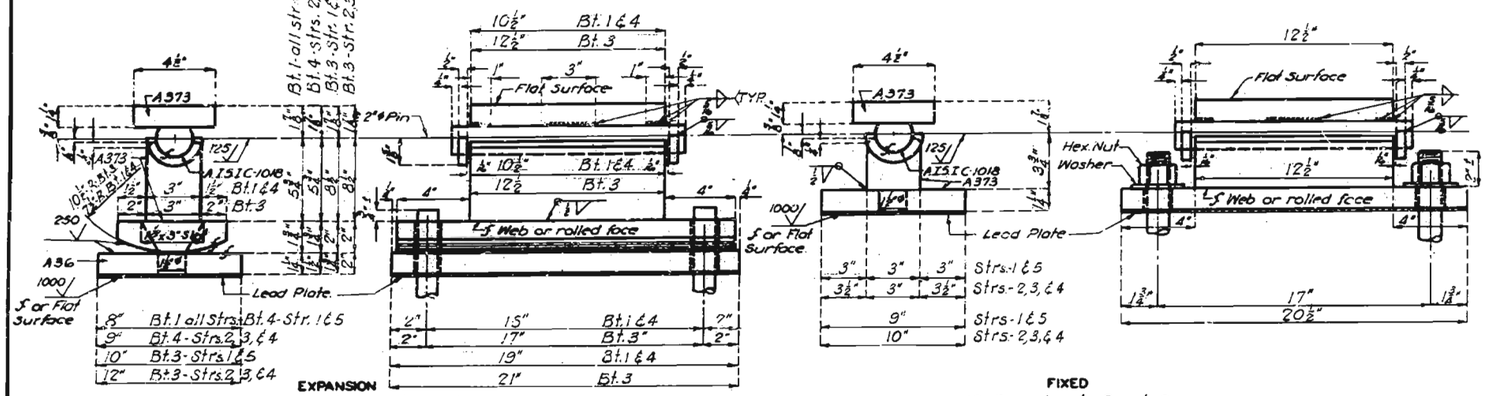

30-Required - Bents 1, 3 & 4

10-Required - Bent-2

TYPE "D" BEARINGS

(Estimated Weight 8,480 Lbs)
Including Anchor Bolts

Note: Finish all surfaces as indicated.

Material for Type "D" Bearings shall be as noted except A.S.T.M. A7 steel meeting the carbon and manganese requirements of A-373 steel may be substituted for A-373.

Material for Alternate Type "D" Bearings shall be as noted.

Anchor Bolts for Type "D" Bearings and alternate Type "D" Bearings shall be 1¼"φ swedged bolts and shall extend 12" into concrete, with hexagon nuts and plain washers for Fixed Bearings, no nuts for Expansion Bearings.

Lead plates under bearings shall be approximately ⅛" thickness and weigh 8#/Sq. Ft. Cost of lead plates shall be included in price bid for other items.

Alternate Type "D" Bearing may be furnished in place of Type "D" Bearing but will be paid for under the same item and weight of the Type "D" Bearing it is substituted for.

Material for Bearings will be paid for as Fabricated Structural Carbon Steel.

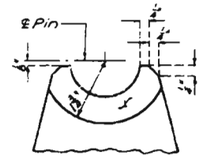

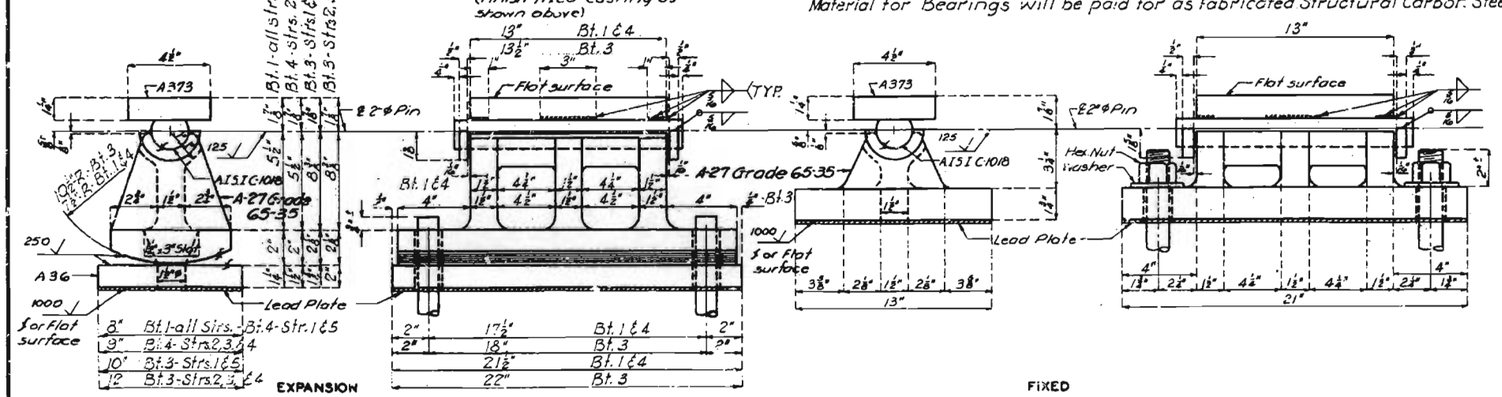

30-Required-Bents 1, 3, & 4

ALTERNATE TYPE "D" BEARINGS

10-Required-Bent-2

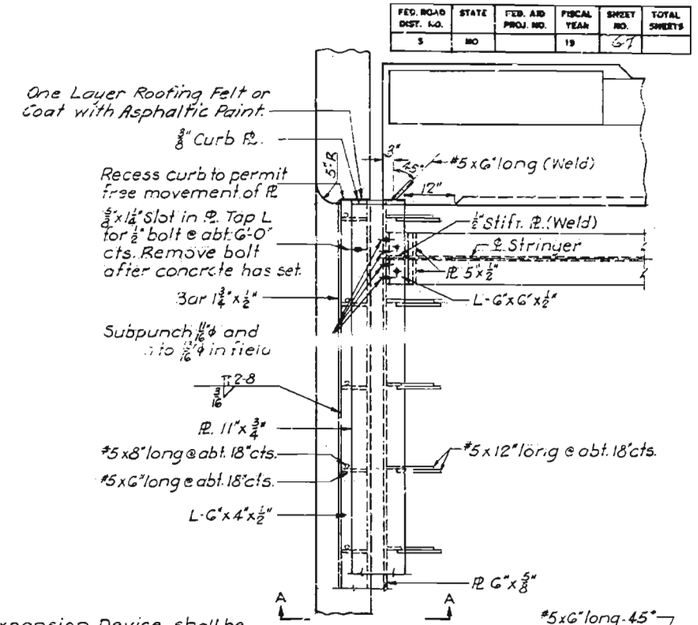

Note: Expansion Device shall be fabricated in one section and shall be bent to conform to crown and grade of roadway.
#5 Bars for expansion device shall be structural grade. Approved stud welded anchors may be used in lieu of #5 bars shown.

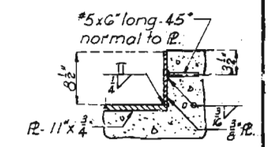

CURB PLATE

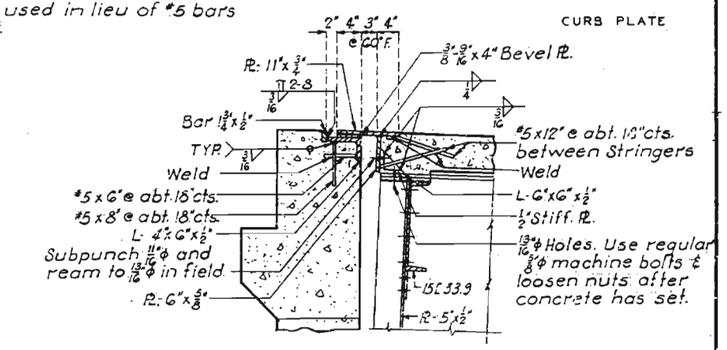

SECTION A-A

DETAILS OF EXPANSION DEVICE AT BENT NO. 4

FINISHED

BRIDGE OVER STERLING AVENUE

STATE ROAD INTERSTATE ROUTE 70

IN KANSAS CITY

PROJECT NO. I-70-1(46)(RT. I-70) **STA.** 451+19.00 (W.B. LANE) 451+20.02 (E.B. LANE)

JACKSON **COUNTY**

FINISHED

FINISHED

Assembled Dec. 1961 by H.H.B.
Checked Dec. 1961 by G.F.P.

Note: This drawing is not to scale. Follow dimensions

Sheet No. 7 of 8

L-972

NO CONSTRUCTION CHANGES

MISSOURI STATE HIGHWAY DEPARTMENT

FED. ROAD DIST. NO.	STATE	FED. AID PROJ. NO.	FISCAL YEAR	SHEET NO.	TOTAL SHEETS
5	MO.		19	62	

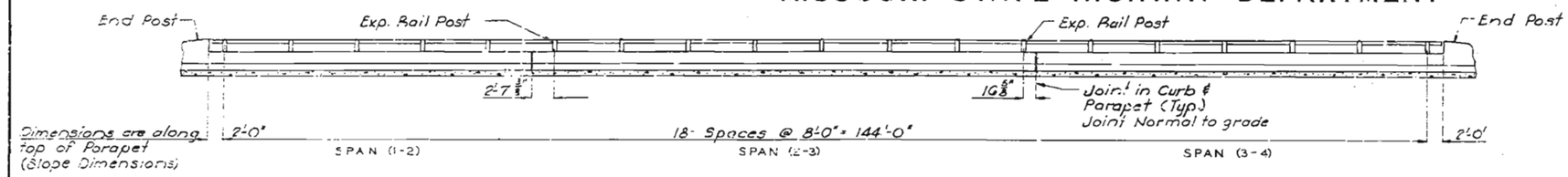

ELEVATION OF HANDRAIL

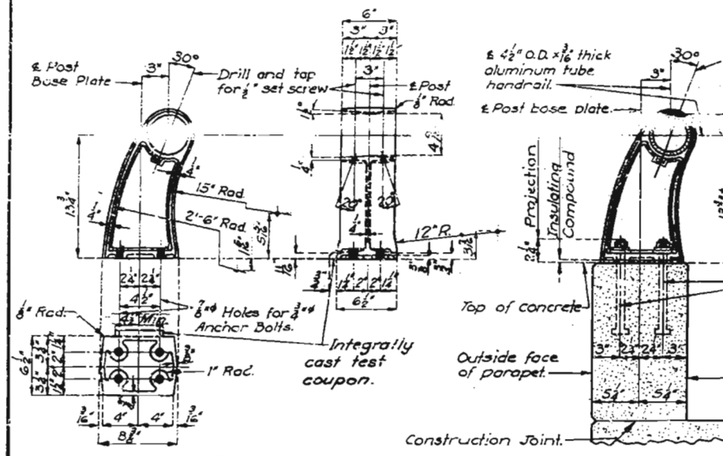

HANDRAIL POST

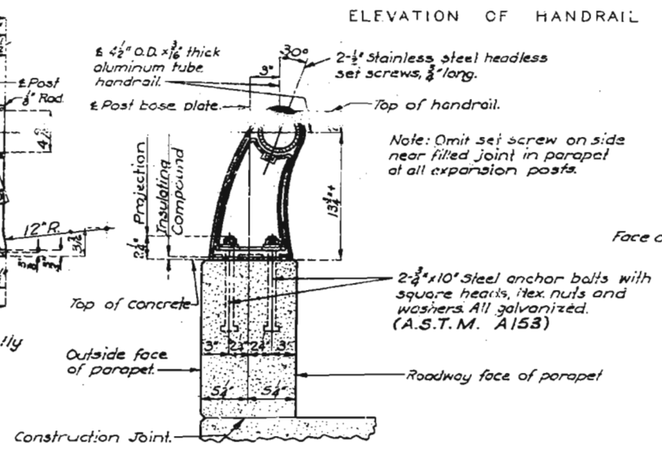

SECTION THRU HANDRAIL

Note: Omit set screw on side near filled joint in parapet at all expansion posts.

SINGLE TUBE ALUMINUM RAILING

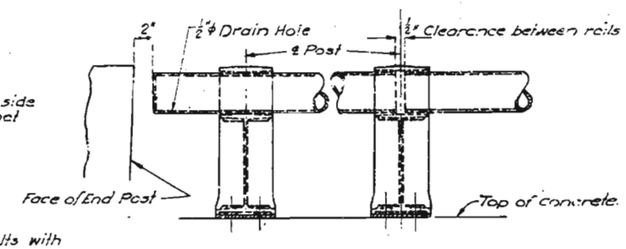

POST RAIL SPLICE OR EXP.

TYPICAL HANDRAIL DETAILS

Note: All handrail posts shall be set normal to grade.

Aluminum tube handrail shall be bent to conform to vertical and horizontal alignment of parapet.

Aluminum washer shims between Insulating Compound and post base may be used for adjusting handrail alignment. Maximum thickness of shims to be 1/8". Where more tilting of post is required for proper alignment, concrete bearing areas shall be ground down.

All parts of handrail, including bolts, nuts washers, and set screws are to be of aluminum material.

The contract unit price per linear foot of "Aluminum Alloy Handrail" shall include furnishing and erecting the handrail complete with anchor bolts, shims and Insulating Compound.

All fillets 1/4" except as noted.

All draft 3° except as noted.

Top of curbs and parapets to be built parallel to grade. Vertical faces of end posts to be vertical.

All exposed edges of end posts and parapets to be beveled 1/2".

Rail to be fabricated in two or three panel lengths unless otherwise approved.

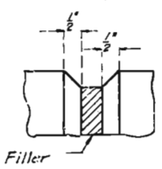

Note: Use bevel as shown for exposed faces of all filled Jts.

DETAIL OF BEVEL FOR FILLED JOINTS

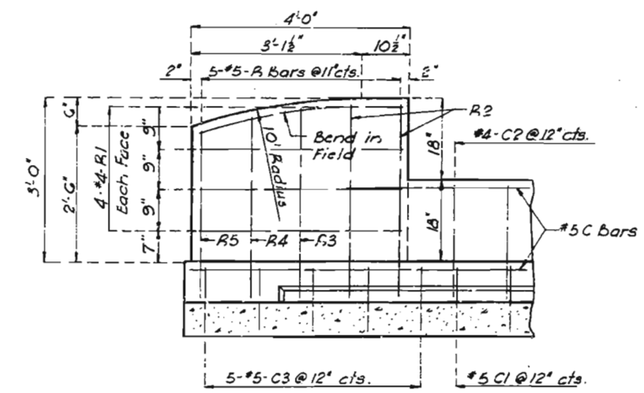

ELEVATION OF END POST

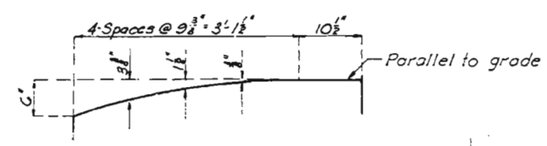

ORDINATES FOR TOP OF END POST

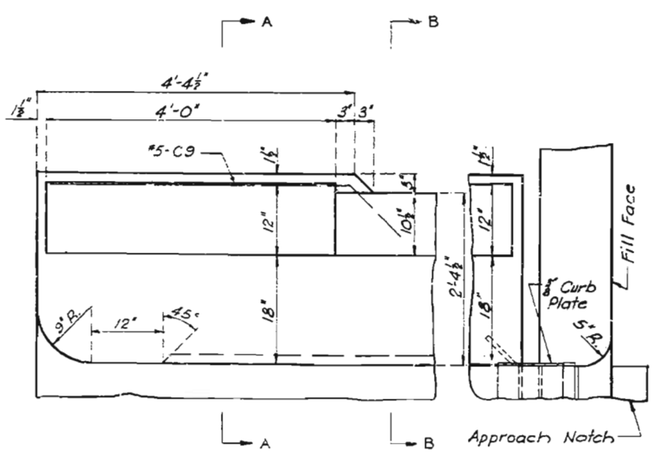

AT BENT NO. 1 AT BENT NO. 4

PLAN OF END POSTS

Note: Omit Curve on curb at end of bridge where drain basin is provided on approach slab.

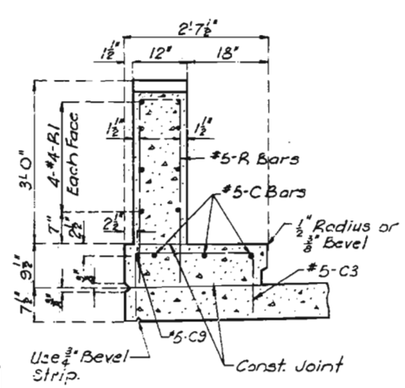

SECTION A-A

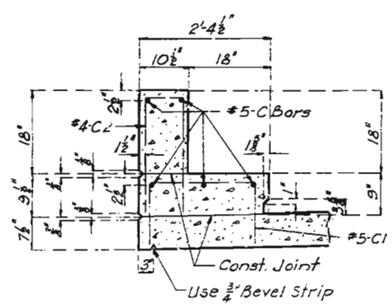

SECTION B-B

FINISHED

BRIDGE OVER STERLING AVENUE

STATE ROAD INTERSTATE ROUTE 70

IN KANSAS CITY

PROJECT NO. I-70-1(46)(RT. I-70) **STA.** 451 + 19.00 (W.B. LANE) 451 + 20.02 (E.B. LANE)

FINISHED JACKSON **COUNTY**

FINISHED

Drawn Oct. 1961 by REH

Checked Dec. 1961 by GFP

Note: This drawing is not to scale. Follow dimensions.

Sheet No. 8 of 8

L-972

110

NO CONSTRUCTION CHANGES

MISSOURI STATE HIGHWAY DEPARTMENT

FINAL PLANS

FED. ROAD DIST. NO.	STATE	FED. AID PROJ. NO.	FISCAL YEAR	SHEET NO.	TOTAL SHEETS
5	MO.		19		

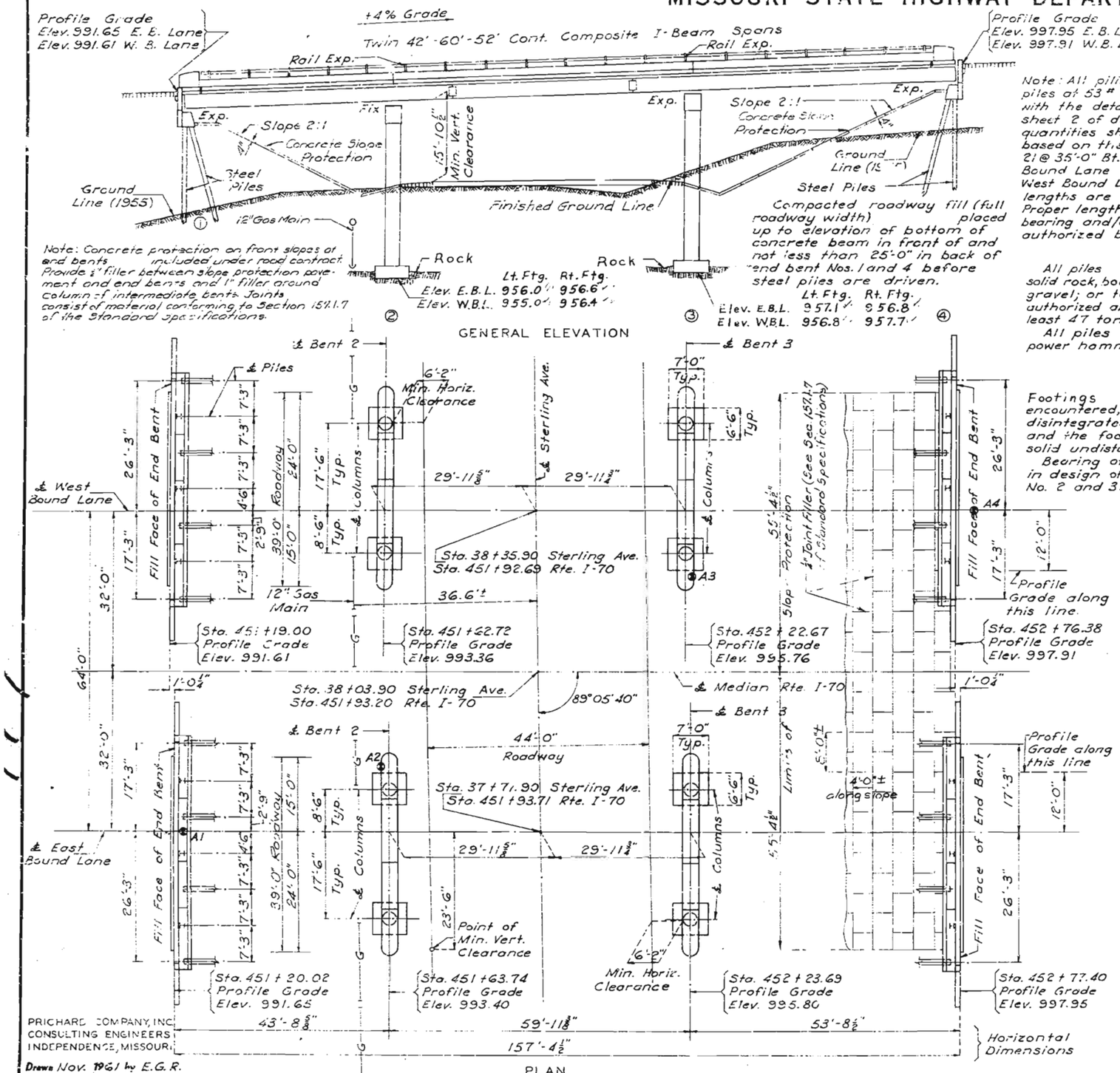

Note: Concrete protection on front slopes of end bents included under road contract. Provide ½" filler between slope protection pavement and end bents and 1" filler around column of intermediate bents. Joints consist of material conforming to Section 157.1.7 of the Standard Specifications.

Compacted roadway fill (full roadway width) placed up to elevation of bottom of concrete beam in front of and not less than 25'-0" in back of end bent Nos. 1 and 4 before steel piles are driven.

Note: All piling 12" bearing piles of 53# and conform with the details and notes on sheet 2 of design plans. Estimated quantities shown on plans are based on the following lengths: 21 @ 35'-0" Bt. 1 both lanes and Bt. 4 East Bound Lane and 7 @ 40'-0" Bt. 4 West Bound Lane. These indicated lengths are approximate only. Proper lengths to give required bearing and/or penetration authorized by the Engineer.

All piles driven to or into solid rock, boulders, shale, or cemented gravel; or to not less than full length authorized and to sustain a load of at least 47 ton per pile.

All piles driven with a power hammer.

Footings solid hard rock encountered, all loose, shelly, or disintegrated material removed and the footings placed on hard, solid undisturbed rock.

Bearing of 8 ton per sq. ft. used in design of footing for bents No. 2 and 3.

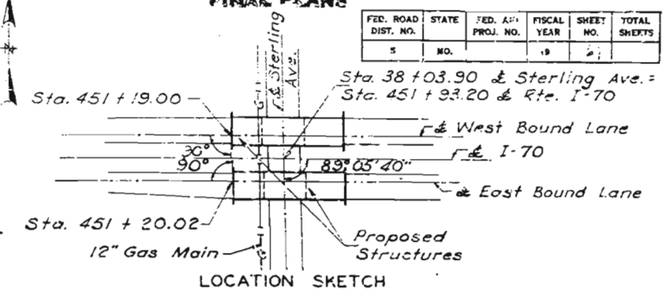

LOCATION SKETCH

QUANTITIES

ITEM		SUBSTR.	SUPERSTR.	TOTAL
Class 1 Excavation for Structures	Cu. Yd.	319.5		319.5
Steel Piles in Place (12")	Lin. Ft.	887		887
Steel Pile Cut-offs (12")	Lin. Ft.	128		128
Class B Concrete	Cu. Yd.	270.6		270.6
Class B1 Concrete	Cu. Yd.		398.2	398.2
Reinforcing Steel	Lb.	45320	129060	174980
Fabricated Structural Carbon Steel	Lb.		244860	244860
Painting	Ton		118.1	118.1
Bridge Rail (Single Tube Type)	Lin. Ft.		591	591
Conduit System (On Structure)	Lump Sum		1	1
* Test Holes	Lin. Ft.	37		37
* Class 1 + 25%	Cu. Yd.	1.0		1.0

Weight of shear connectors is included in weight of Fabricated Structural Carbon Steel but not included for painting.

All excavation for bridge paid for as Class 1 Excavation for Structures.

* Contingent Item

GENERAL NOTES:

Design Specifications: A.A.S.H.O.-1961.
Loading: H20-S16-44 (15#/sq.ft. Future Wearing Surface) (Modified 24,000# Tandem Axle)
Structural Steel Stress: ASTM-A36, 20,000#/□"
Structural Steel Stress: ASTM-A7 or A373, 18,000#/□"
Reinforcing Steel Stress: 20,000#/□"
Concrete Class B Stress: 1,200#/□"
Concrete Class B1 Stress: 1,600#/□"
Material for Stringers and cover plates welded to Stringers structural steel conforming to ASTM-A36. Other steel as noted on the plans or A7 steel if not otherwise noted.
Concrete for Substructure Class B air-entrained.
Concrete for Superstructure Class B1 air-entrained.
Superstructure deck surface sealed. (See special provisions.)
Rivets ¾"; holes 13/16"; except where otherwise noted.
Field connections bolted with high strength bolts. Final pay weight for Fabricated Structural Carbon Steel based on the use of field rivets.
Qualification of welding operators required.

Paint: Shop, none; Field, contact surfaces of bolted field connections, except where high strength bolts are used, one coat of red lead and surfaces inaccessible after erection three coats of red lead. All other exposed surfaces first coat red lead, second coat brown, third coat aluminum. Payment for paint, cleaning and painting such surfaces included in price bid for Painting.
See Section 52.4.7 of Standard Specifications for required painting of steel piles.
Where joint filler is specified on the plans it conform with the requirements of Section 157.2.4 of the Standard Specifications.
Permits obtained for all truck loads over legal length.

Note: Class 1 Excavation for Structures measured from the ground line (1955) or from the lower limits of roadway excavation, whichever is lower, regardless of the sequence of operations or method of removal.

B.M. Conc. Nail S. Wing Bt #1 W.B.L. Elev. 992.34
Conc. Nail S. Wing Bt #4 W.B.L. Elev. 998.64

BRIDGE OVER STERLING AVENUE

STATE ROAD INTERSTATE ROUTE 70
IN KANSAS CITY
PROJECT NO. I-70-1(46)(RT. I-70) STA. 451 + 19.00 (W.B. LANE) / 451 + 20.02 (E.B. LANE)
JACKSON COUNTY

FINISHED

SUBMITTED BY E. LYN CROWLEY FINISHED
SIGNATURE
REGISTERED PROFESSIONAL ENGINEER
SERIAL NUMBER E-5992

SUBMITTED BY _____ BRIDGE ENGINEER DATE _____
APPROVED BY _____ CHIEF ENGINEER DATE _____

FINISHED

PRICHARD COMPANY, INC.
CONSULTING ENGINEERS
INDEPENDENCE, MISSOURI

Drawn Nov. 1961 by E.G.R.
Checked Dec. 1961 by G.F.P.

Sheet No. 1A of 2

STD. 54.00
L-972

FINAL PLANS

MISSOURI STATE HIGHWAY DEPARTMENT

FINAL PLANS

FED. ROAD DIST. NO.	STATE	FED. AID PROJ. NO.	FISCAL YEAR	SHEET NO.	TOTAL SHEETS
3	MO.		19	63	

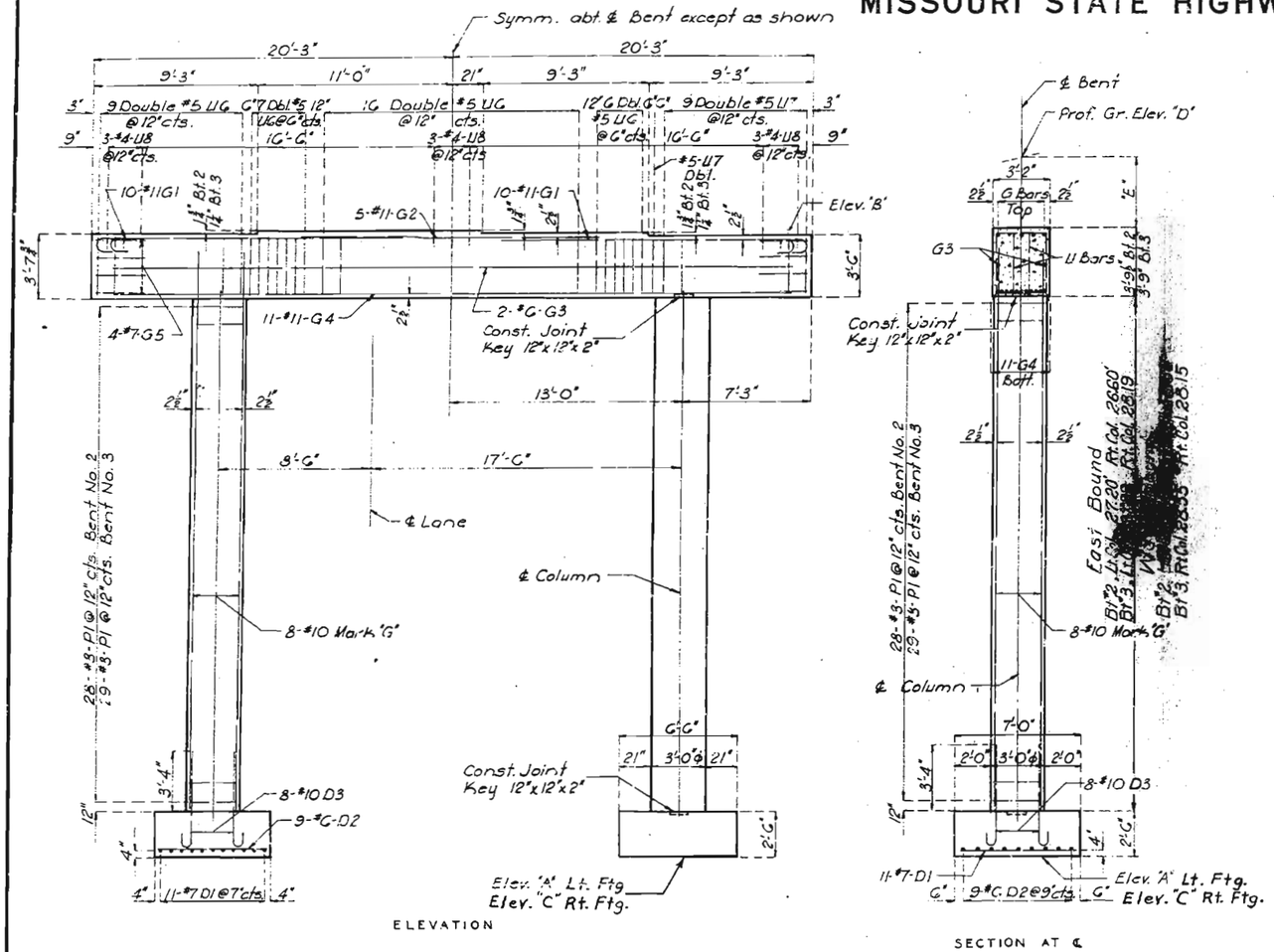

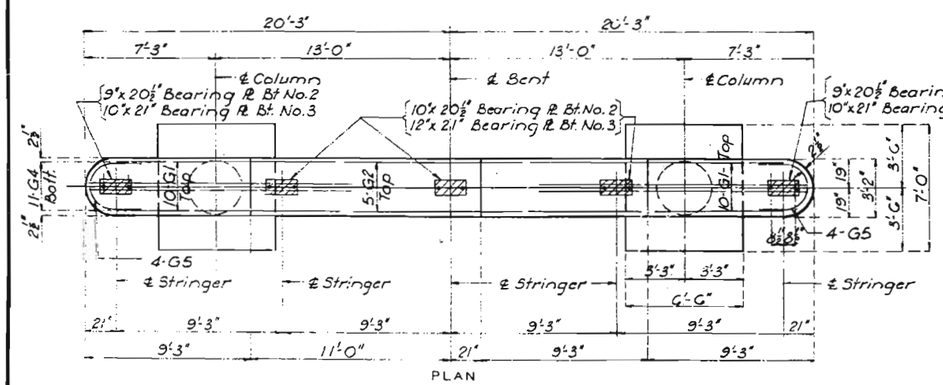

DETAILS OF INTERMEDIATE BENTS NO. 2 AND 3
(East Bound Lane Shown, West Bound Lane Opposite Hand)

Drawn Nov. 19 61 by R.E.H.
Checked Dec 1961 by G.F.P.

Note: This drawing is not to scale. Follow dimensions.

TABLE OF VARIABLES

Mark	E. B. Lane Bent 2	E. B. Lane Bent 3	W. B. Lane Bent 2	W. B. Lane Bent 3
A	956.0	957.1	955.0	956.4
B	989.20	990.99	989.16	990.95
C	956.6	956.8	956.8	956.8
D	993.40	995.80	993.36	995.76
E	3'-10⅞"	4'-6¾"	3'-10⅞"	4'-6¾"
G	P2	P3	P4	P5

COMPLETE BILL OF REINFORCING STEEL

NO.	SIZE	LENGTH	MARK	LOCATION
SUPERSTRUCTURE				
588	#5	4'-0"	C1	Curb
588	#4	4'-9"	C2	Parapet
40	#5	4'-3"	C3	Curb
16	#5	21'-6"	C4	Parapet
24	#5	22'-6"	C5	Curb
40	#5	3'-9"	C6	Curb & Parapet
16	#5	26'-0"	C7	Parapet
24	#5	27'-0"	C8	Curb
8	#5	5'-3"	C9	"
64	#4	3'-9"	R1	End Post
16	#5	8'-0"	R2	" "
8	#5	7'-9"	R3	" "
8	#5	7'-6"	R4	" "
8	#5	7'-0"	R5	" "
1248	#6	28'-3"	S1	Slab
1248	#6	17'-0"	S2	"
224	#4	16'-0"	S3	"
580	#4	32'-3"	S4	"
620	#5	32'-6"	S5	"
END BENTS				
8	#6	24'-3"	H1	Backwall
24	#4	24'-0"	H2	"
16	#6	15'-6"	H3	Beam
16	#6	35'-0"	H4	Beam
16	#6	24'-5"	H5	"
32	#6	25'-3"	H6	Wing
48	#6	9'-0"	H7	Wing
20	#6	13'-6"	H8	"
8	#4	20'-0"	H9	Slab Notch
16	#6	23'-0"	H10	Backwall
8	#6	5'-0"	H11	Wing
4	#6	14'-3"	T1	Wing
4	#6	14'-6"	T2	"
8	#6	15'-3"	T3	"
28	#4	12'-0"	U1	Beam
[illegible]	#4	12'-3"	U2	
60	#4	3'-6"	U3	
156	#3	21"	U4	Slab Notch
64	#4	12'-3"	U5	Beam
[illegible]	#4	4'-9"	V1	Backwall
48	#4	6'-3"	V2	"
6	#4	11'-0"	V3	Wing
6	#4	11'-3"	V4	"
160	#4	5'-9"	V5	Backwall
6	#4	11'-6"	V6	Wing
6	#4	10'-9"	V7	"
40	#2	19'-9"	W1	A.B. Wells
INTERMEDIATE BENTS NO. 2 & 3				
88	#7	6'-6"	D1	Footing
72	#6	6'-0"	D2	"
64	#10	6'-9"	D3	"
80	#11	16'-6"	G1	Beam
20	#11	17'-0"	G2	"
8	#6	33'-0"	G3	"
44	#11	36'-0"	G4	"
32	#7	7'-0"	G5	"
268	#3	9'-6"	P1	Column
16	#10	31'-0"	P2	"
16	#10	32'-6"	P3	"
16	#10	31'-3"	P4	"
16	#10	33'-0"	P5	"
304	#5	11'-6"	U6	Beam
80	#5	11'-0"	U7	"
36	#4	4'-0"	U8	"
40	#2	19'-9"	W1	A.B. Wells

NO.	END BENTS E.B.	END BENTS W.B.	BENT 4 E.B.	BENT 4 W.B.
8	4	4		
8	8	4	4	
4	4	4	4	
4	4	4	4	
4	4	4	4	
8	8	8	8	
12	12	12	12	
5	5	5	5	
2	2	2	2	
		6	8	
		4	4	
2	2			
2	2			
		4	4	
12	12	12	12	
32	32			
15	15	15	15	
39	39	39	39	
		32	32	
88	88			
8	8	16	16	
3	3			
3	3			
		80	80	
		3	3	
		3	3	
10	10	10	10	

NO.	BENT 2 E.B.	BENT 2 W.B.	BENT 3 E.B.	BENT 3 W.B.
22	22	22	22	
18	18	18	18	
16	16	16	16	
20	20	20	20	
5	5	5	5	
2	2	2	2	
11	11	11	11	
8	8	8	8	
56	56	56	56	
16				
		16		
	16			
			16	
76	76	76	76	
20	20	20	20	
9	9	9	9	
10	10	10	10	

BENDING SKETCHES & CUTTING DIAGRAMS

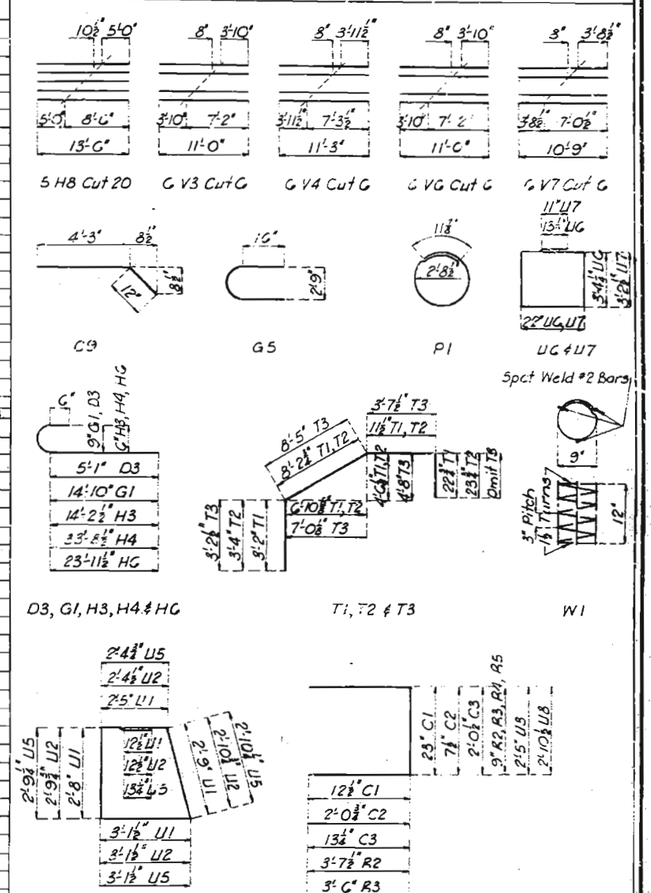

BRIDGE OVER STERLING AVENUE

STATE ROAD INTERSTATE ROUTE 70 FINISHED

FINISHED IN KANSAS CITY

PROJECT NO. I-70-1(46)(RT. 1-70) **STA.** 451 +19.00 (W.B. LANE) 451 +20.02 (E.B. LANE)

JACKSON **COUNTY**

FINISHED

L-972

Sheet No. 3A of 2

FINAL PLANS

MISSOURI HIGHWAY AND TRANSPORTATION COMMISSION

FED. ROAD DIST. NO.	STATE	FED. AID PROJ. NO.	FISCAL YEAR	SHEET NO.	TOTAL SHEETS
5	MO.		19	48	
SEC. / SUR. 21		TWP. 49 N	RGE. 32 W		

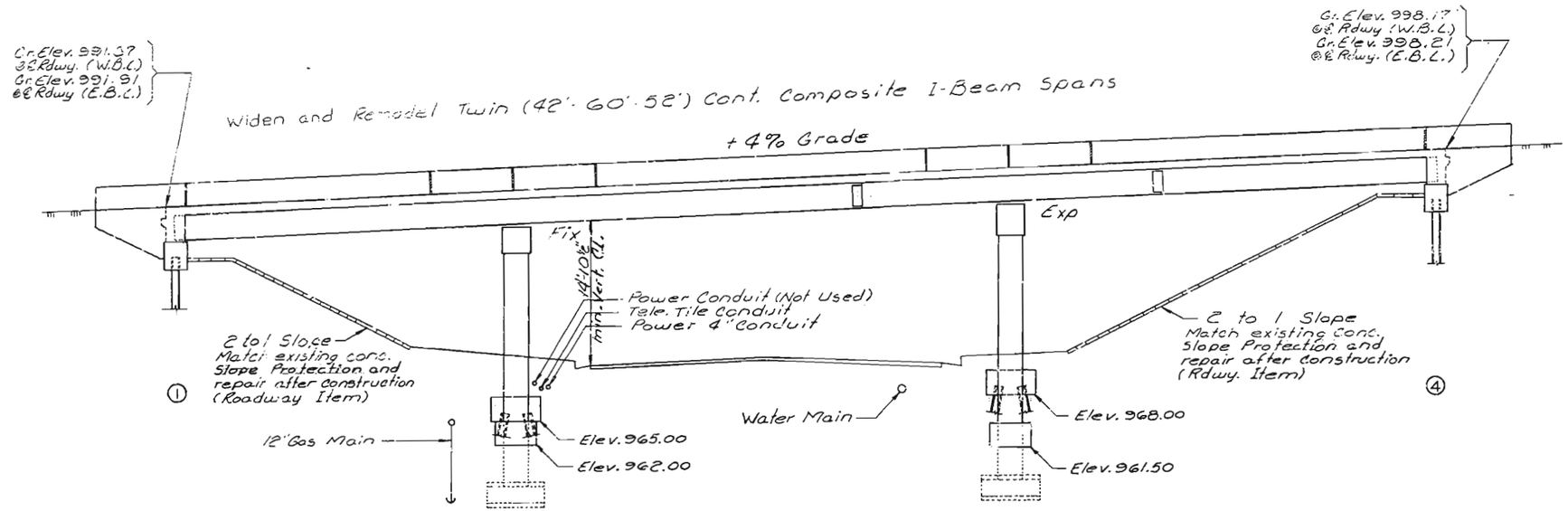

Note: Roadway fill shall be completed to the final roadway section and up to the elevation of the bottom of the conc. beam within the limits of the structure and for not less than 25' in back of the fill face of the end bents before piles are driven for any bents falling within the embankment section.

GENERAL ELEVATION

ESTIMATED QUANTITIES				
ITEM		SUBSTR.	SUPERSTR.	TOTAL
Special Work	Lump Sum			1
Class 1 Excavation	Cu. Yd.	170		170
Class B Concrete	Cu. Yd.	120.0		120.0
Class B2 Concrete	Cu. Yd.		283.4	283.4
Safety Barrier Curb	Lin. Ft.		662	662
Latex Concrete Wearing Surface	Sq. Yd.		1382	1382
Reinforcing Steel	Lb.	15800	24680	40480
Reinforcing Steel (Epoxy Coated)	Lb.		30,130	30,130
Fabricated Structural Carbon Steel	Lb.		126,740	126,740
Painting (System B) Green	Lump Sum			1
Conduit System on Structure	Lump Sum			1
Structural Steel Pile 10"	Lin. Ft.	594		594

Note: All concrete and reinforcement in end bents (except pile cap beam) are included with superstructure quantities.
For Plan of Structure see sheet No. 2

Note:
Outline of old work is indicated by light dashed lines. Heavy lines indicate new work.
Contractor shall verify all dimensions in field before ordering new steel.
Bars bonded in old concrete not removed shall be cleanly stripped and embedded into new concrete where possible. If length is available, old bars shall extend into new concrete at least 40 diameters for smooth bars and 30 diameters for deformed bars.
Anchors shall be of the self drilling expansion type, made of casehardened and drawn carburized steel, with self-cutting annular broaching grooves.
Cost of furnishing and installing hook anchor bolt assemblies shall be included in contract unit price for concrete.
Utility lines in vicinity of Bent 2 to be supported during construction and not relocated. See special Provisions

GENERAL NOTES:

Design Specifications:
A.A.S.H.T.O. - 1977

Design Loading:
HS20-44
15# per Sq. Ft. Future Wearing Surface
Modified 24,000# Tandem Axle
Earth 120#/cu.ft. Equivalent Fluid Pressure 30#/sq.ft.
Fatigue Stress - Case I

Design Unit Stresses:
Class B Concrete (Substructure) fc = 1,200 psi
Class B1 Conc. (Substructure)
Class B2 Concrete (Superstructure except Safety Barrier Curbs) fc = [illegible]
Reinforcing Steel (Grade 60) fy 60,000 psi
Structural Carbon Steel fs 20,000 psi
Steel Pile fb 9,000 psi

Fabricated Steel:
Field connections, High Strength Bolts 3/4" ϕ, holes 13/16" ϕ except as noted.

Joint Filler:
All joint filler shall meet the requirement of Std. Spec. 1057.2.4 except as otherwise noted.

Reinforcing Steel:
Minimum clearance to reinforcing steel shall be 1½" unless otherwise shown.

Paint:
Paint: System B by contractor in accordance with Std. Spec. 712.12. (Color of the final field coat for System B shall be green.)

Areas to be encased in end bent concrete shall be painted one coat of system C primer and scratched or damaged surfaces are to be touched up in field before concrete is poured.

Construction Clearance:
A minimum vertical clearance of 14'-0" from crown of existing lanes and a minimum lateral clearance of 28'-0" centered on Sterling Ave. shall be maintained during construction.

Traffic Maintained:
Traffic over structure to be maintained during construction.

In order to maintain grade and a minimum 1½" Latex Modified Concrete it is anticipated that an average application depth of 1½" will be necessary. No payment will be allowed for additional labor, materials or equipment required for this necessary minimum and / or variable depth of Latex Modified Concrete.

B.M. "1" Elev. 992.39 Conc. nail S. wingwall cent No. 1 W.B.L.

BRIDGE OVER STERLING AVENUE

STATE ROAD FROM RTE. I-435 TO RTE. I-470

ABOUT 2.1 MILES EAST OF RTE. I-435

PROJECT NO. **STA.** 451 + 93.20

JOB NO. 4- I070 - 343 **RTE.** I - 70

JACKSON **COUNTY**

DATE Dec. 14, 1983

STD. 611.60
STD. 706.35
L-972 R

DESIGNED JAN. 1981
DETAILED MAY 1981
CHECKED 198

Note: This drawing is not to scale. Follow dimensions.

Sheet No. 1 of 24

P.W. ROAD DIST. NO.	STATE	FED. AID PROJ. NO.	FISCAL YEAR	SHEET NO.	TOTAL SHEETS
5	MO.		19	49	

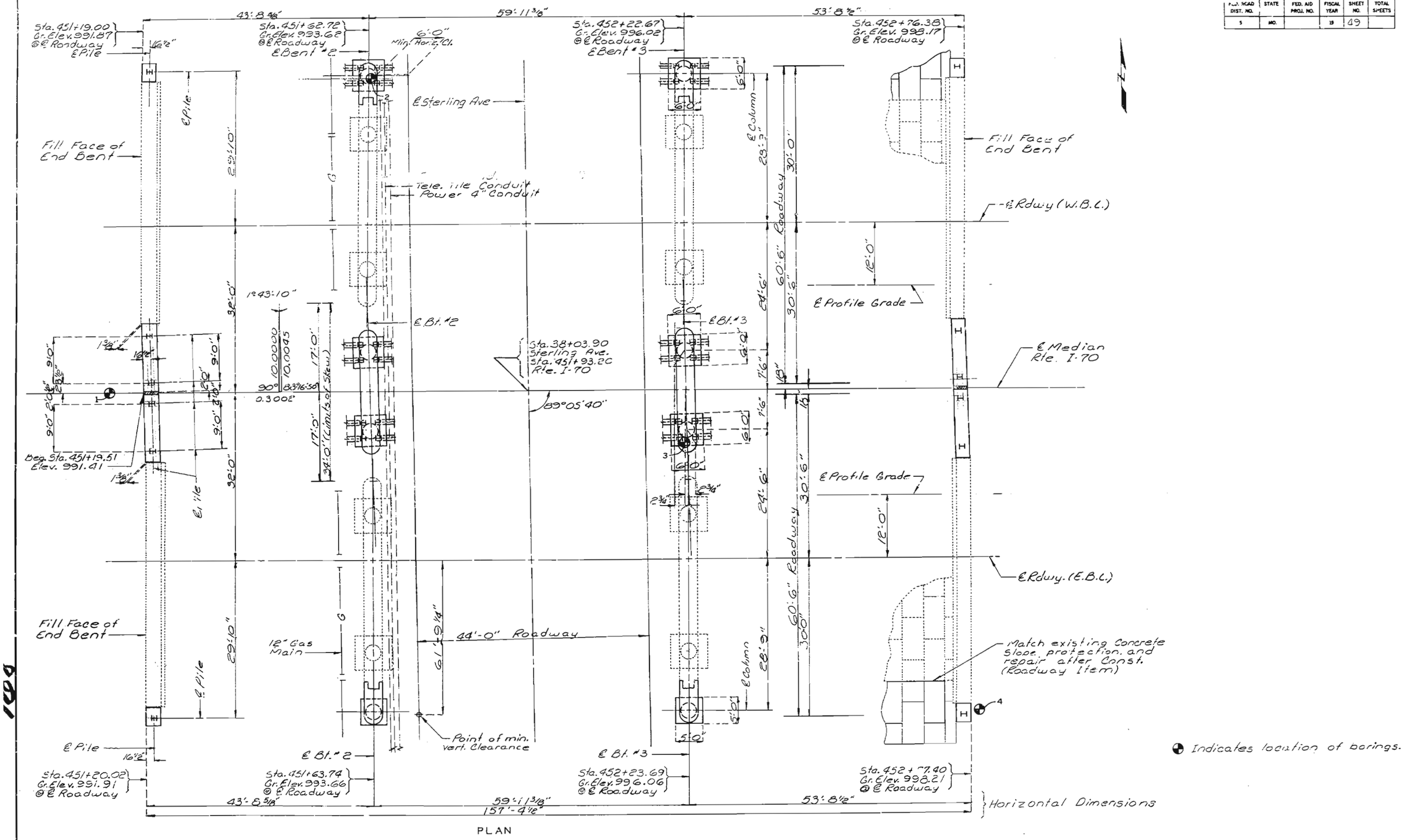

DETAILED JUNE 1981
CHECKED SEPT 1981

Note: This drawing is not to scale. Follow dimensions.

Sheet No. 2 of 2

JACKSON COUNTY

L-972R

FED. ROAD DIST. NO.	STATE	FED. AID PROJ. NO.	FISCAL YEAR	SHEET NO.	TOTAL SHEETS
5	MO.		19	50	

Standard Penetration Test

Depth	Blows/6"	PP (TSF)
5'	3-3-8	2.5
10'	4-7-8	4.0
15'	4-7-8	4.0
20'	5-8-8	3.5
25'	7-8-9	3.0
30'	11-11-11	No Recovery

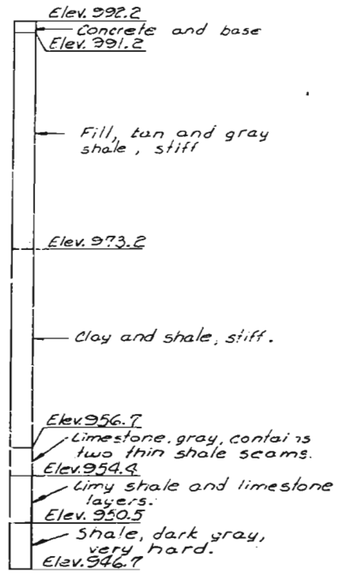

1
(CORE)

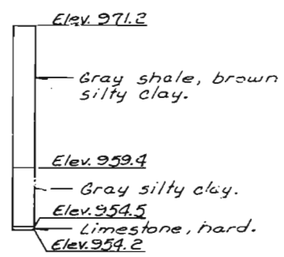

2

Standard Penetration Test

Depth	Blows/6"	PP (TSF)
15.8'	3-21-100+	3.0

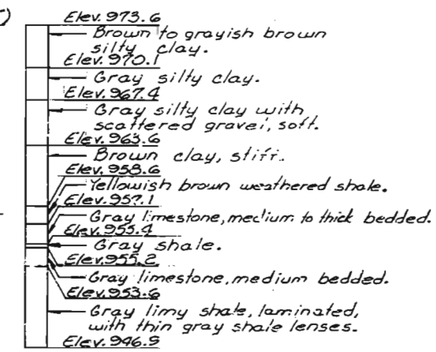

3
(CORE)

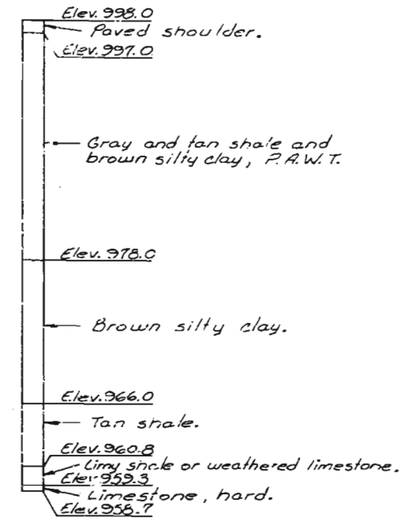

4

BORING DATA

Note: For location of borings see Sheet No. 2

PILE & FOOTING DATA

BENT NO.		1			2			3			4
		EXT. (LT.)	INTERIOR	EXT. (RT.)	EXT. (LT.)	INTERIOR	EXT. (RT.)	EXT. (LT.)	INTERIOR	EXT. (RT.)	
BEARING PILE	PILE TYPE AND SIZE	HP10x42	HP10x42	HP10x42	HP10x42	HP10x42	-	HP10x42	HP10x42	-	HP10x42
	NUMBER	1	4	1	4	8	-	4	8	-	6
	APPROXIMATE LENGTH FT.	25	29	27	11	11	-	12	12	-	25
	DESIGN BEARING TONS	43	43	43	40	40	-	41	41	-	45
	HAMMER ENERGY REQD. FT. LBS.	9600	9600	9600	9400	9400	-	9600	9600	-	10000
SPREAD FOOTINGS	FOUNDATION MATERAL						Shale			Shale	
	DESIGN BEARING TONS / SQ. FT.						4.2			4.2	

Minimum energy requirement of hammer based on plan length and design bearing value of piles.
All pile shall be driven to practical refusal.

DETAILED JUNE 1981
CHECKED SEPT 1981

Note: This drawing is not to scale. Follow dimensions.

Sheet No. 3 of 24.

JACKSON COUNTY

L-972R

FED. ROAD DIST. NO.	STATE	FED. AID PROJ. NO.	FISCAL YEAR	SHEET NO.	TOTAL SHEETS
5	MO.		19	51	

Note: Cost of special dampproofing to be included in price bid for other items.

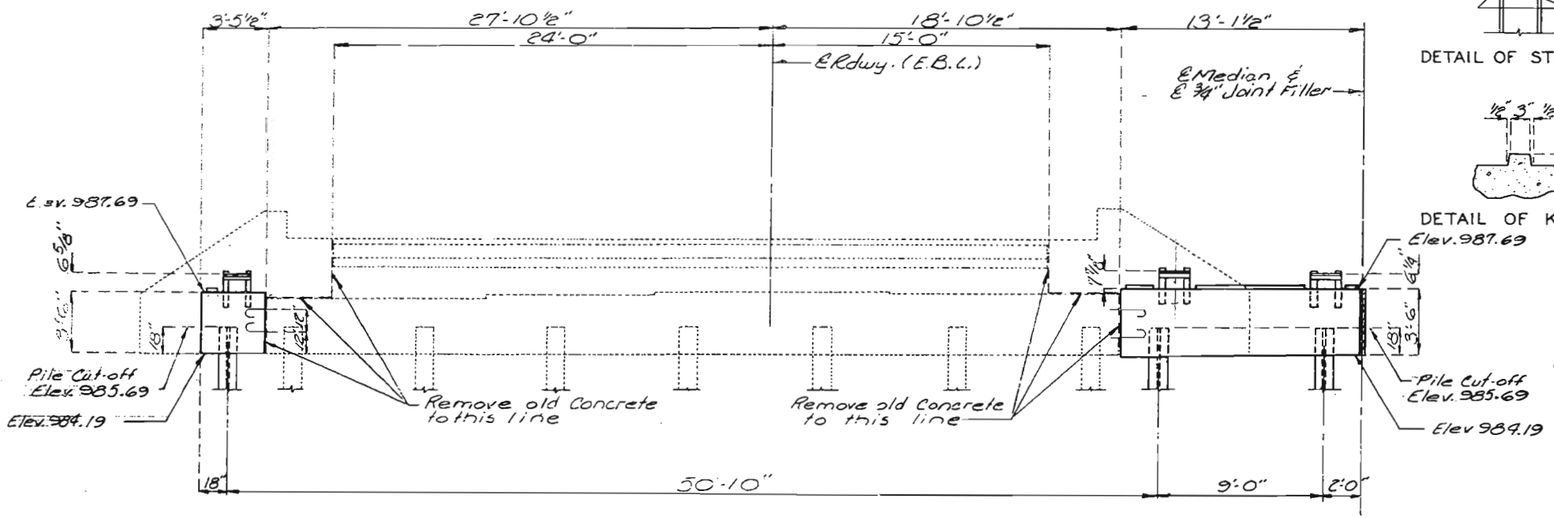

ELEVATION OF SUBSTRUCTURE

Note: For details of ¾" Hooked Anchor Bolts see sheet No. 8

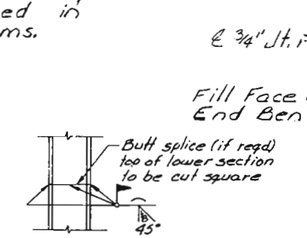

DETAIL OF STEEL PILE SPLICE

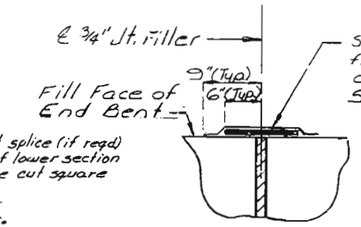

DETAIL Z

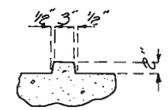

DETAIL OF KEYED CONST. JT.

Note: For location of Detail "Z" see this sheet and sheet No.s 5, 10, and 11.

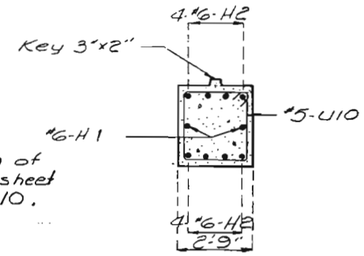

SECTION A-A

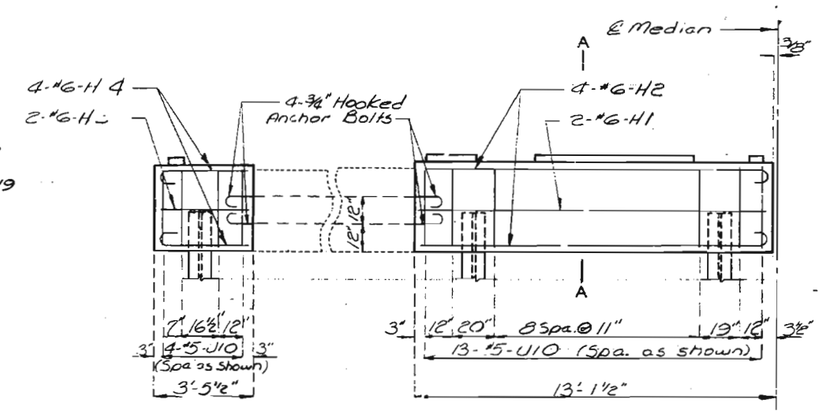

ELEVATION OF SUBSTRUCTURE SHOWING REINFORCEMENT

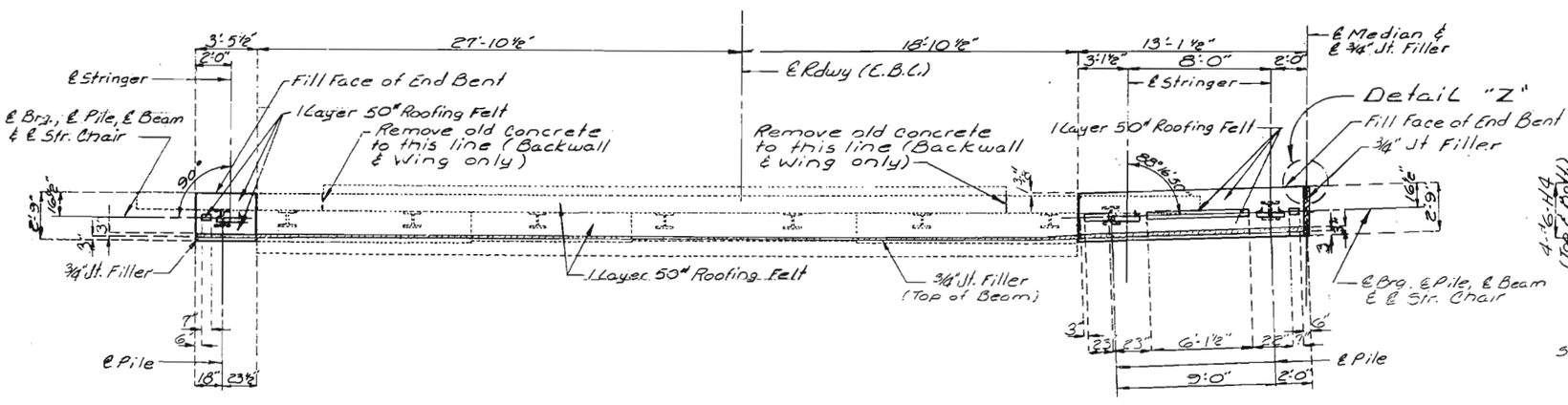

PLAN OF SUBSTRUCTURE

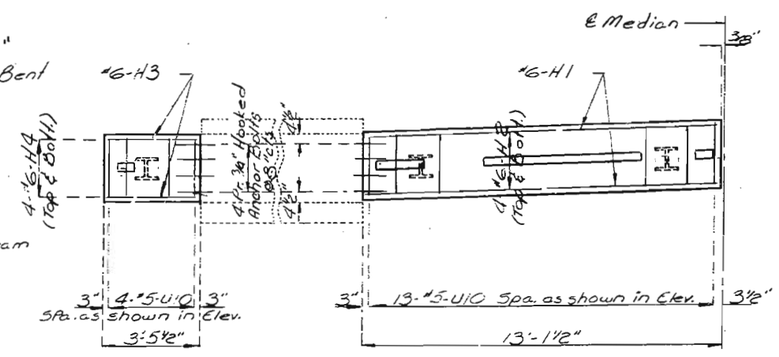

PLAN OF SUBSTRUCTURE SHOWING REINFORCEMENT

DETAILS OF END BENT NO. 1 (EAST BOUND LANE)

DETAILED APR. 1981
CHECKED SEPT. 19--

Note: This drawing is not to scale. Follow dimensions.

Sheet No. 4 of 14.

JACKSON COUNTY

L-972 R

FED. ROAD DIST. NO.	STATE	FED. AID PROJ. NO.	FISCAL YEAR	SHEET NO.	TOTAL SHEETS
5	MO.		19	55	

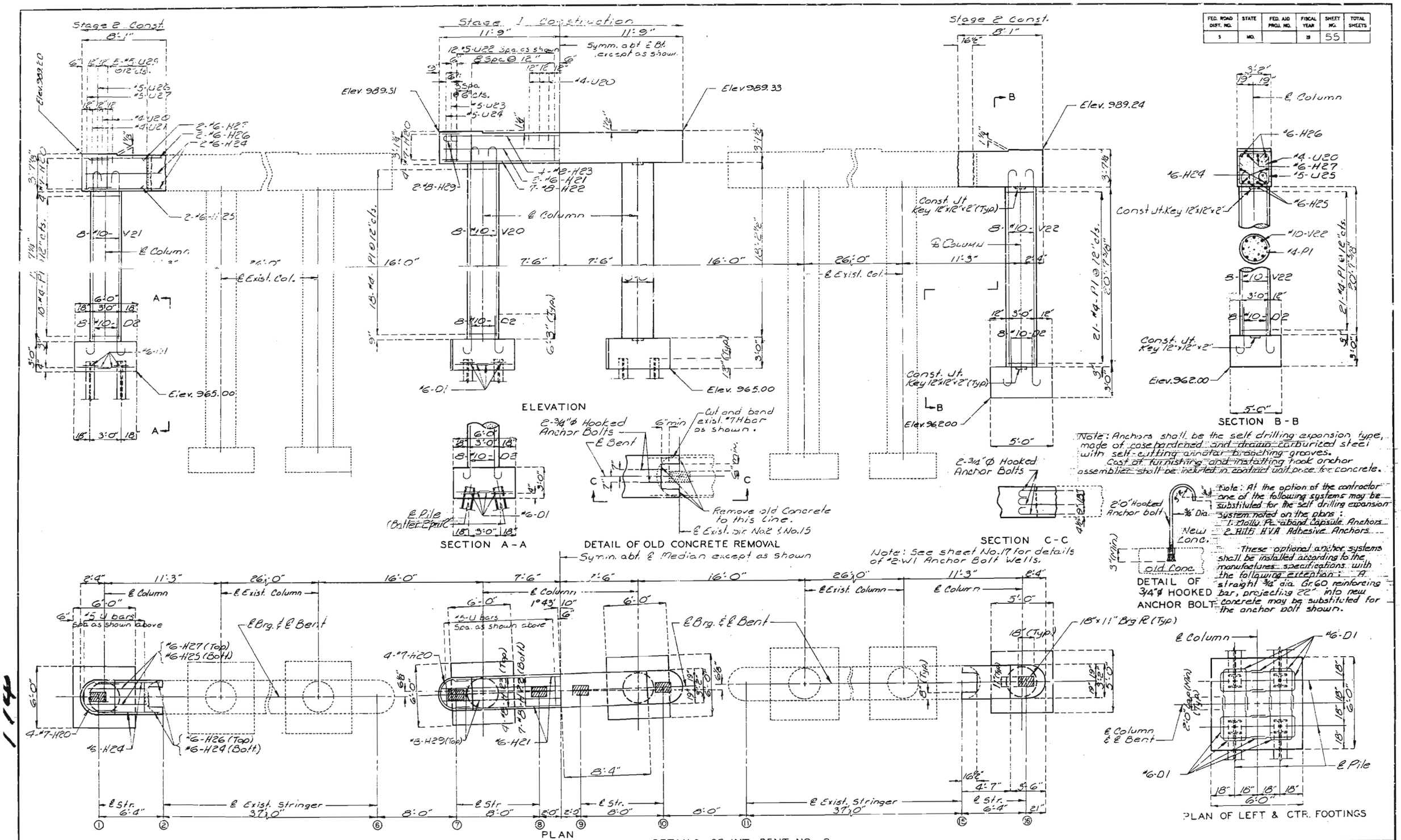

Note: Anchors shall be the self drilling expansion type, made of case hardened and drawn carburized steel with self-cutting and/or broaching grooves. Cost of furnishing and installing hook anchor assemblies shall be included in contract unit price for concrete.

Note: At the option of the contractor one of the following systems may be substituted for the self drilling expansion system noted on the plans:
1. Molly Pc-abond Capsule Anchors
2. Hilti HVA Adhesive Anchors.

These optional anchor systems shall be installed according to the manufactures specifications with the following exception: A straight 3/4" dia. Gr.60 reinforcing bar, projecting 22" into new concrete may be substituted for the anchor bolt shown.

DETAILED MAR. 1981
CHECKED Sept. 1981

Note: This drawing is not to scale. Follow dimensions.

Sheet No. 5 of 14

JACKSON COUNTY

L-972 R

FED. ROAD DIST. NO.	STATE	FED. AID PROJ. NO.	FISCAL YEAR	SHEET NO.	TOTAL SHEETS
5	MO.		19	56	

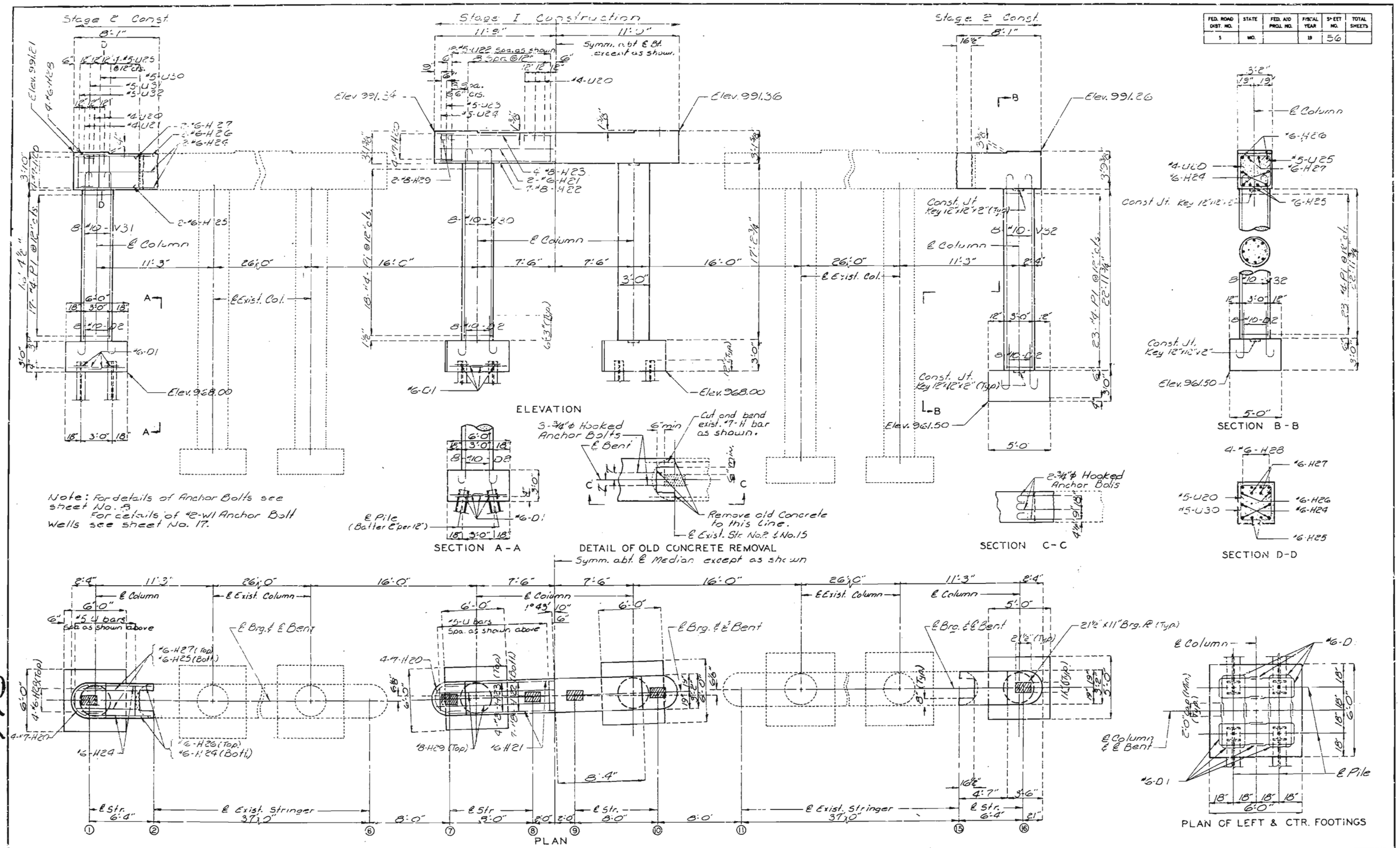

DETAILED MAR. 1981
CHECKED Sept. 1981

Note: This drawing is not to scale. Follow dimensions.

Sheet No. of

DETAILS OF INT. BENT NO. 3

JACKSON COUNTY

L-572 R

175

FED. ROAD DIST. NO.	STATE	FED. AID PROJ. NO.	FISCAL YEAR	SHEET NO.	TOTAL SHEETS
5	MO.		19	57	

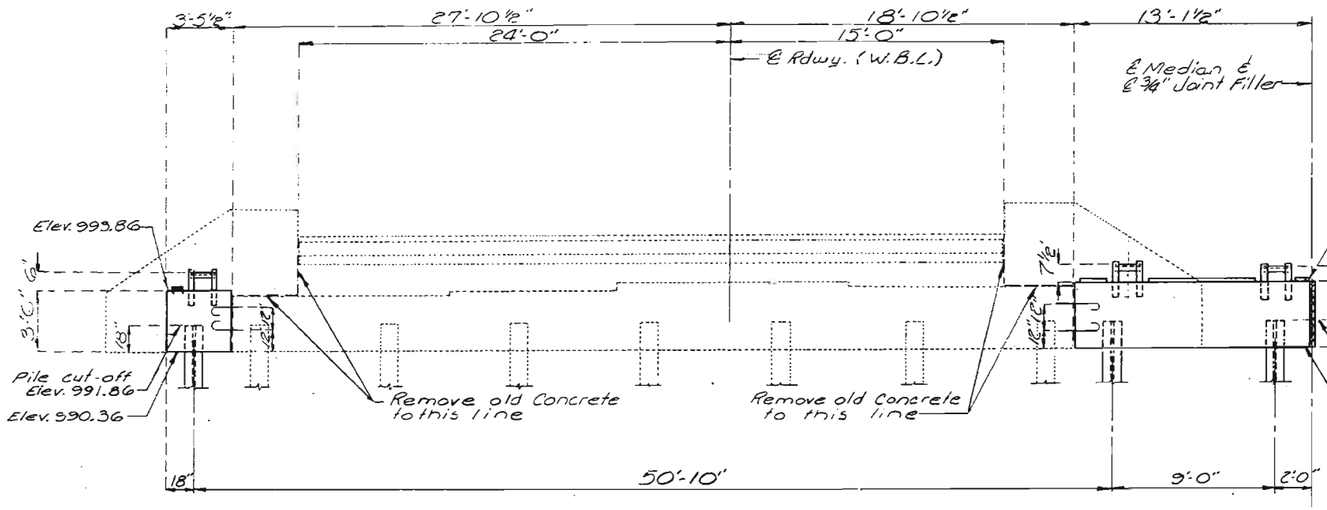

ELEVATION OF SUBSTRUCTURE

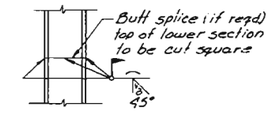

DETAIL OF STEEL PILE SPLICE

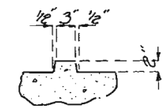

DETAIL OF KEYED CONST. JT.

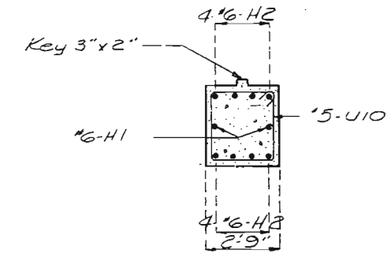

SECTION A-A

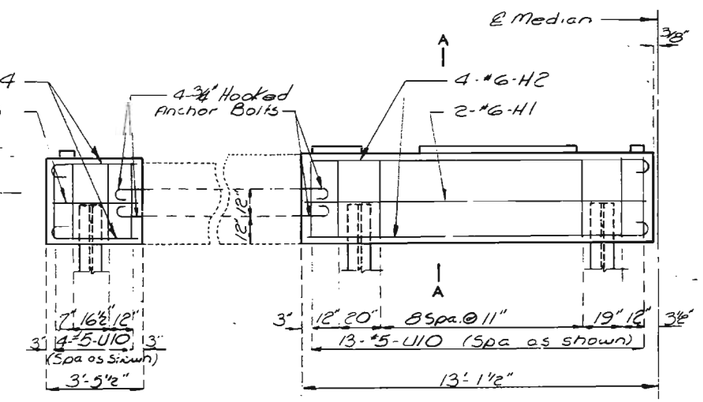

ELEVATION OF SUBSTRUCTURE SHOWING REINFORCEMENT

Note: For detail of ¾" Hooked Anchor Bolts See sheet No. 8

Note: For Detail "Z" see sheet No. 4

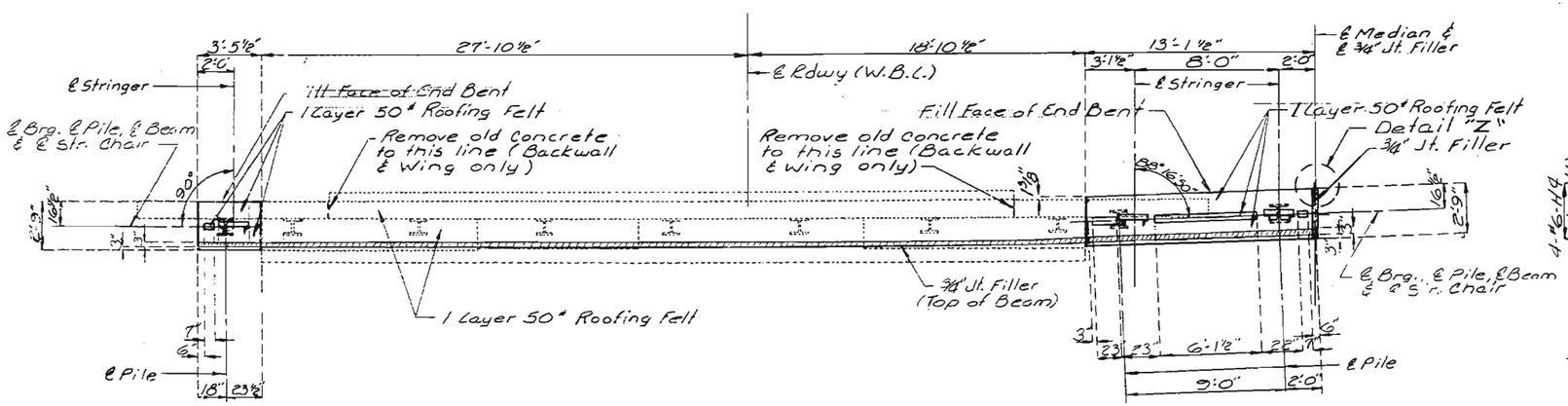

PLAN OF SUBSTRUCTURE

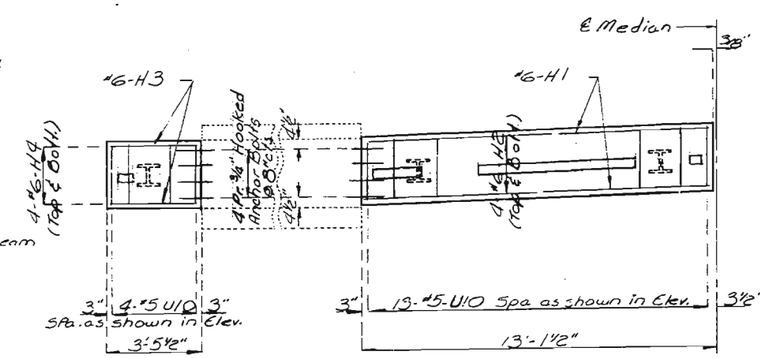

PLAN OF SUBSTRUCTURE SHOWING REINFORCEMENT

DETAILS OF END BENT NO. 4 (WEST BOUND LANE)

DETAILED APR. 1981
CHECKED Sept. 1981

Note: This drawing is not to scale. Follow dimensions.

Sheet No. 10 of 27.

JACKSON COUNTY

L-972 R

1110

FED. ROAD DIST. NO.	STATE	FED. AID PROJ. NO.	FISCAL YEAR	SHEET NO.	TOTAL SHEETS
5	MO.		19	53	

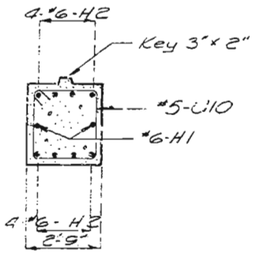

SECTION A-A

Note: For details of 3/4" Hooked Anchor Bolts see sheet No. 8

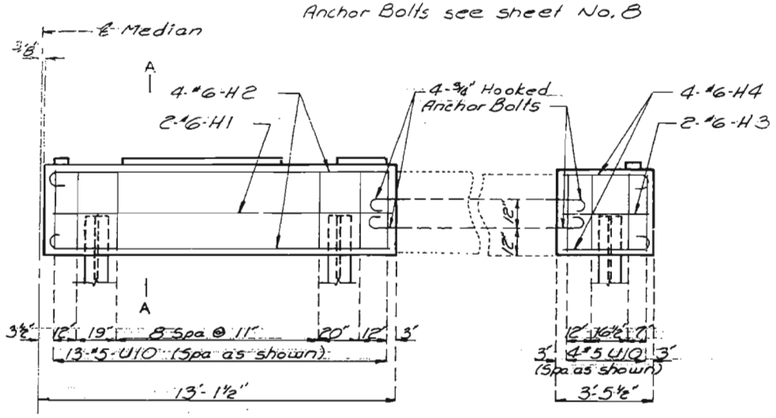

ELEVATION OF SUBSTRUCTURE
SHOWING REINFORCEMENT

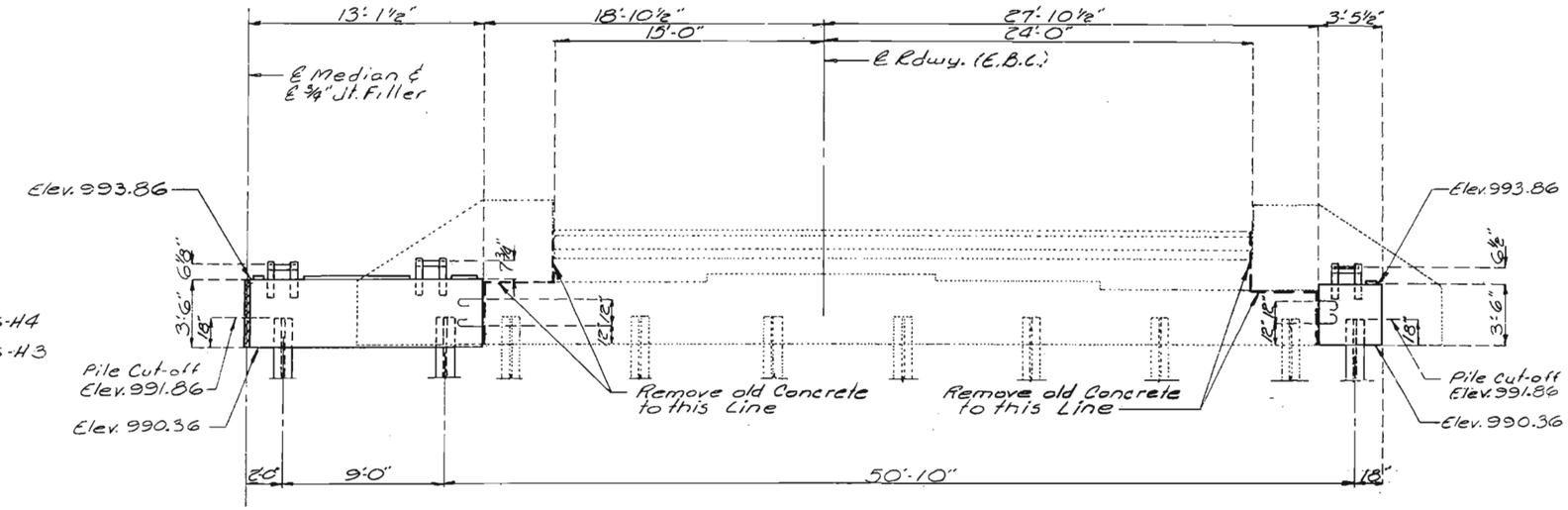

ELEVATION OF SUBSTRUCTURE

Note: for Detail "Z" see sheet No. 4.

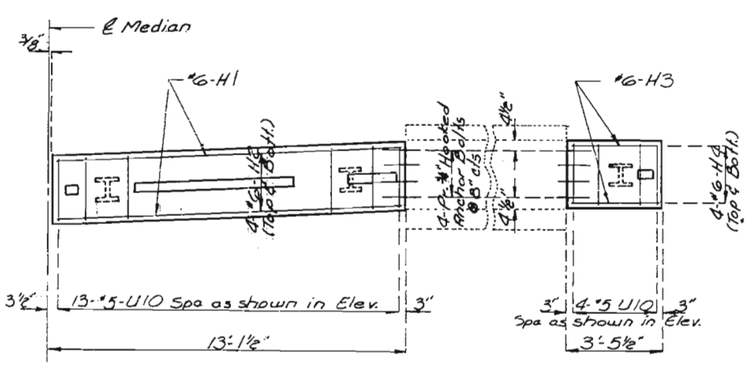

PLAN OF SUBSTRUCTURE
SHOWING REINFORCEMENT

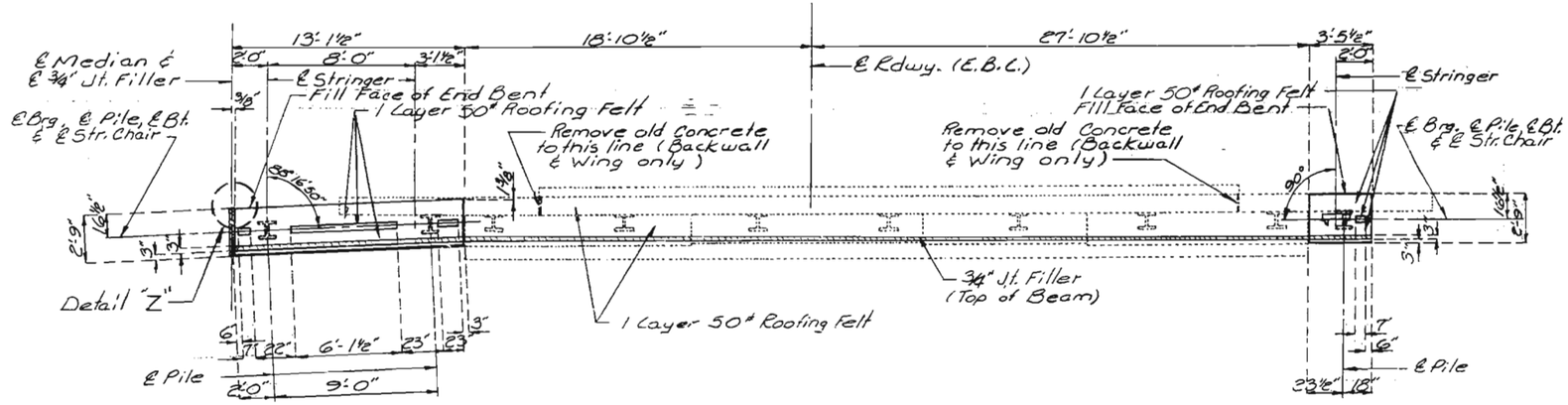

PLAN OF SUBSTRUCTURE

DETAILS OF END BENT NO. 4 (EAST BOUND LANE)

DETAILED APRIL 1981
CHECKED Sept. 1981

Note: This drawing is not to scale. Follow dimensions.

Sheet No. 11 of 14.

JACKSON **COUNTY**

L-972 R

FED. ROAD DIST. NO.	STATE	FED. AID PROJ. NO.	FISCAL YEAR	SHEET NO.	TOTAL SHEETS
5	MO.		19	59	

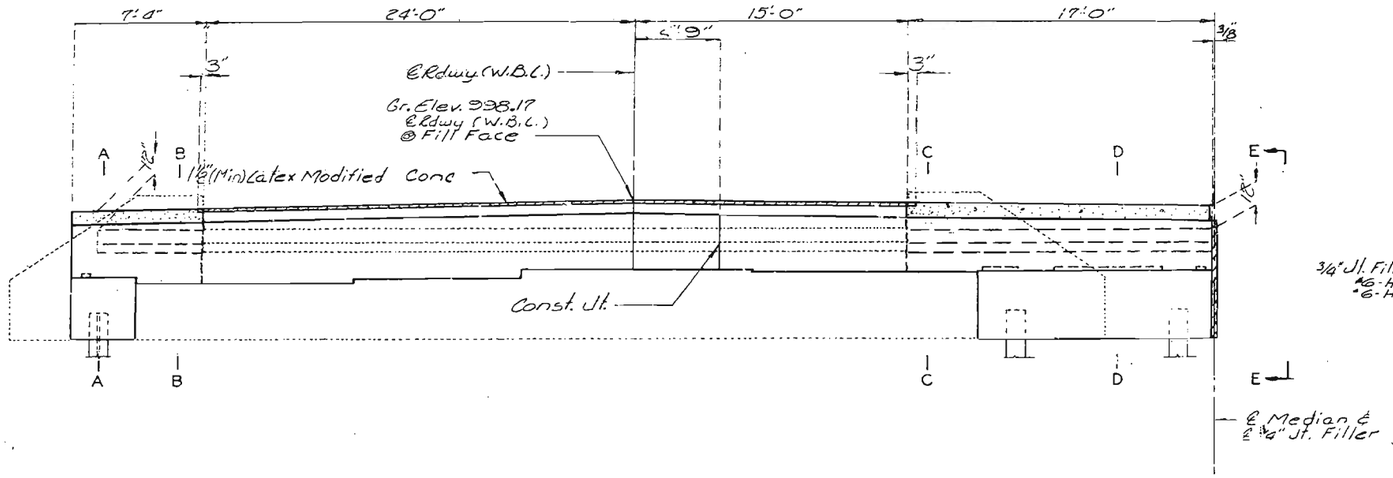

ELEVATION OF SUPERSTRUCTURE (W.B.L.)

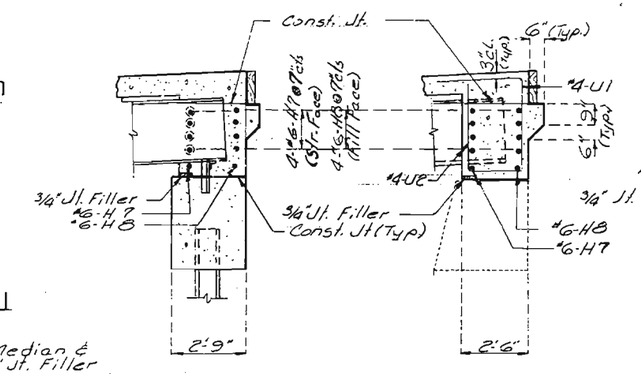

SECTION A-A

SECTION B-B

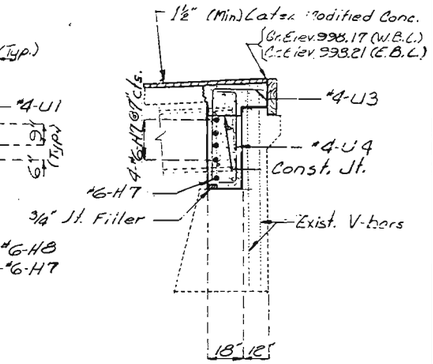

SECTION AT ℄ RDWY.

Note: For Elevation LL See sheet No. 13.
For Sections J-J and K-K see sheet No. 6.
For Location of Sections M-M and N-N see sheets No. 7 & 13.
For details of Timber Header see sheet No. 17.
For Reinforcement not shown see sheet No. 13.

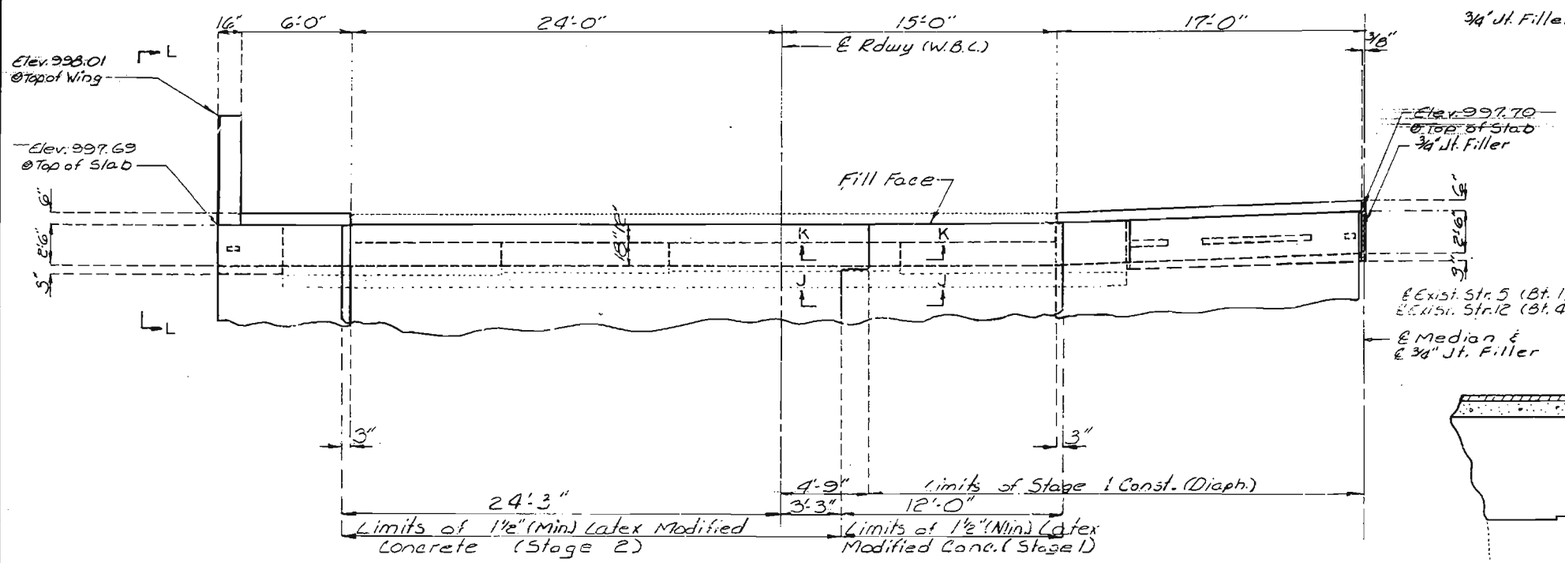

PLAN OF SUPERSTRUCTURE (W.B.L.)

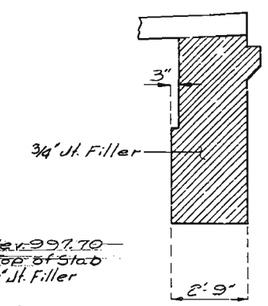

SECTION E-E

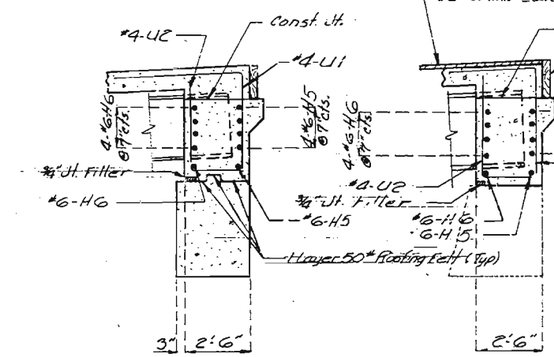

SECTION D-D

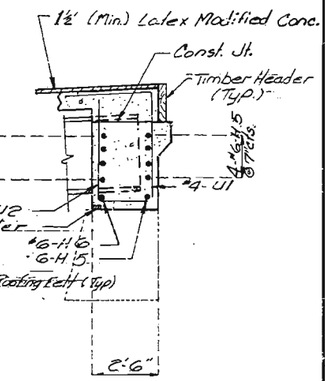

SECTION C-C

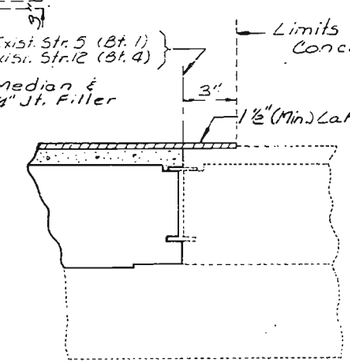

PART SECTION M-M (STAGE I CONST.)

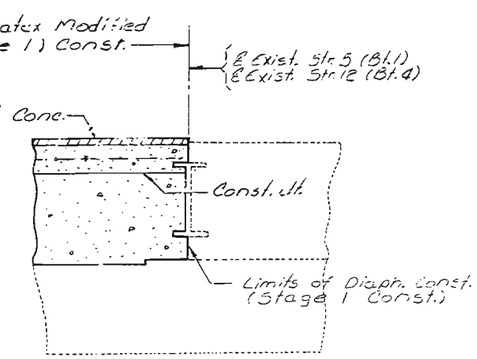

PART SECTION N-N (STAGE I CONST.)

DETAILS OF END BENT NO. 4

DETAILED APR. 1981
CHECKED Sept. 1981

Note: This drawing is not to scale. Follow dimensions.

Sheet No. 12 of 24.

JACKSON COUNTY

L-972 R

178

FED. ROAD DIST. NO.	STATE	FED. AID PROJ. NO.	FISCAL YEAR	SHEET NO.	TO. L SHEETS
5	MO.		19	60	

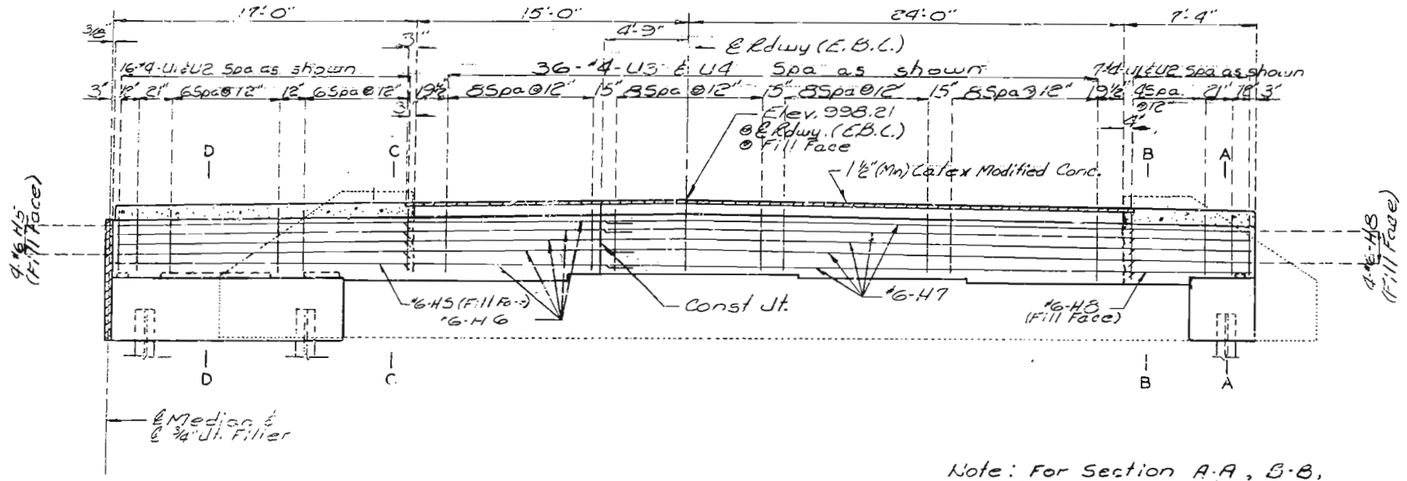

ELEVATION OF SUPERSTRUCTURE (E.B.L.)

Note: For Section A-A, B-B, C-C, D-D, E-E, and at ℄ see sheet No. 12
For location of Elev. L-L see sheet No. 12
For Sections M-M & N-N see sheet No. 12

Note: End Bent reinforcement shown symm. abt. ℄ Median.

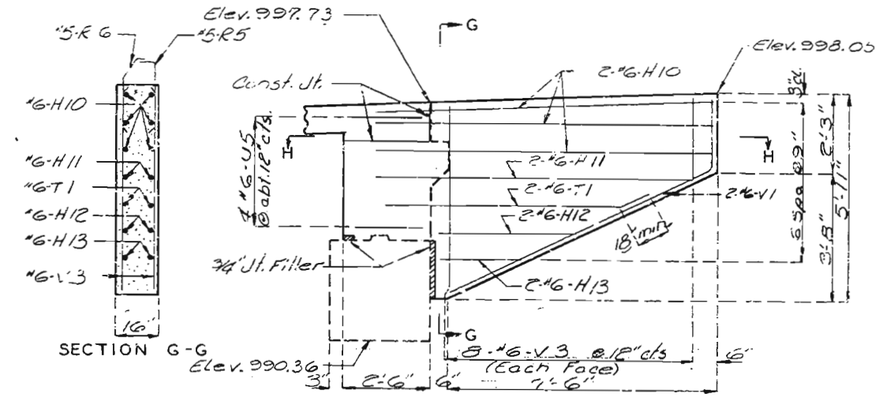

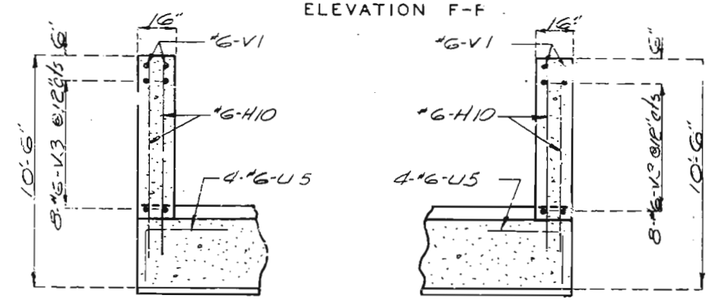

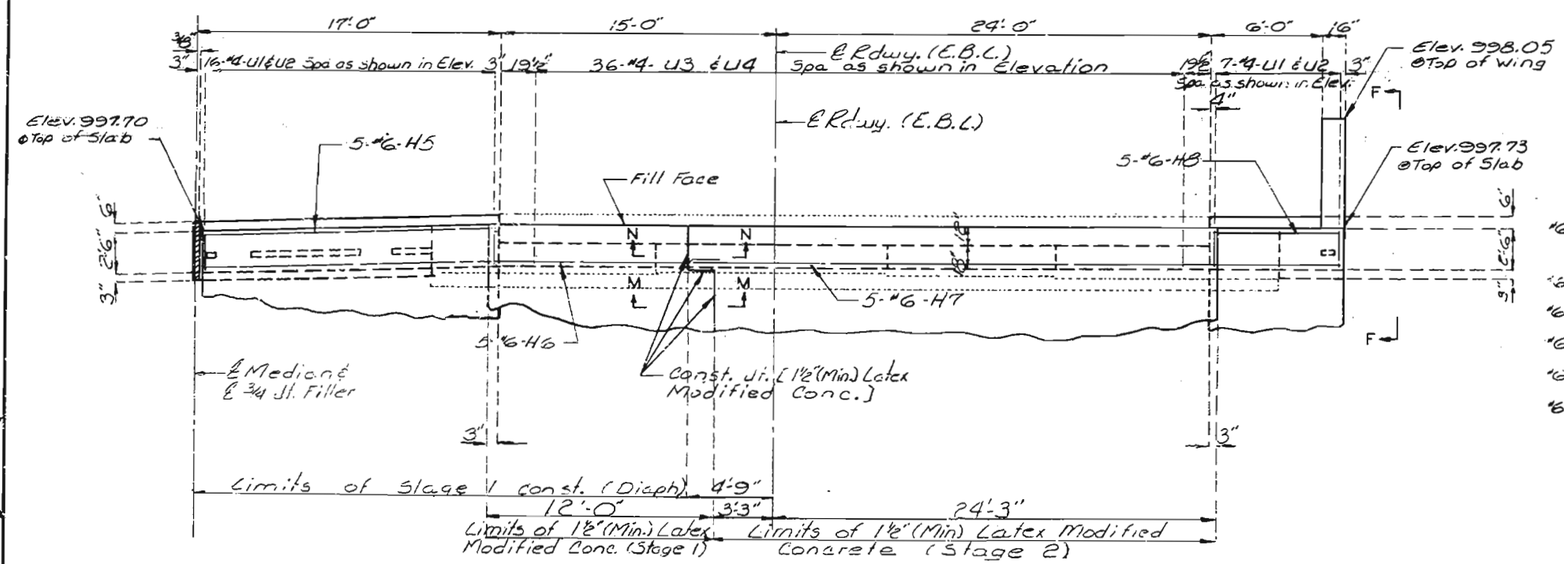

PLAN OF SUPERSTRUCTURE (E.B.L.)

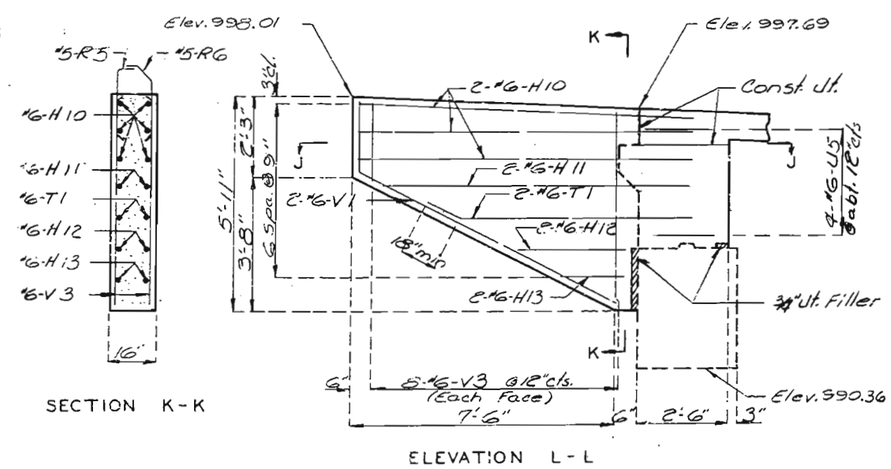

DETAILS OF END BENT NO. 4

Note: For Details of R-bars in Wings see sheet No. 20
For Details of R-bars near ℄ Median see sheet No. 21

DETAILED APRIL 1981
CHECKED Sept. 1981

Note: This drawing is not to scale. Follow dimensions.

Sheet No. 13 of 44.

JACKSON COUNTY

L-972 R

117

FED. ROAD DIST. NO.	STATE	FED. AID PROJ. NO.	FISCAL YEAR	SHEET NO.	TOTAL SHEETS
5	MO.		19	G1	

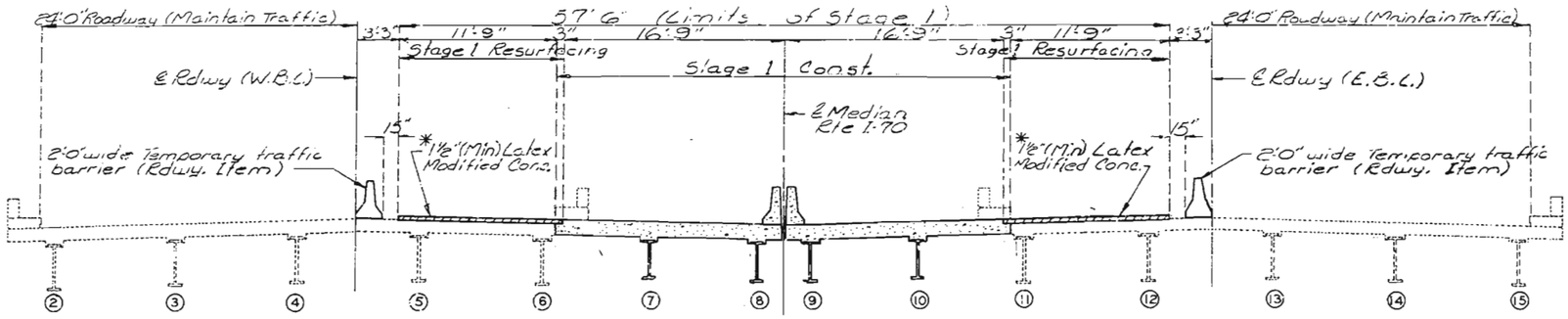

* Scarify ½"(Min) from existing slab surface before placing 1½"(Min) Latex Modified conc.

CONSTRUCTION SEQUENCE - STAGE 1

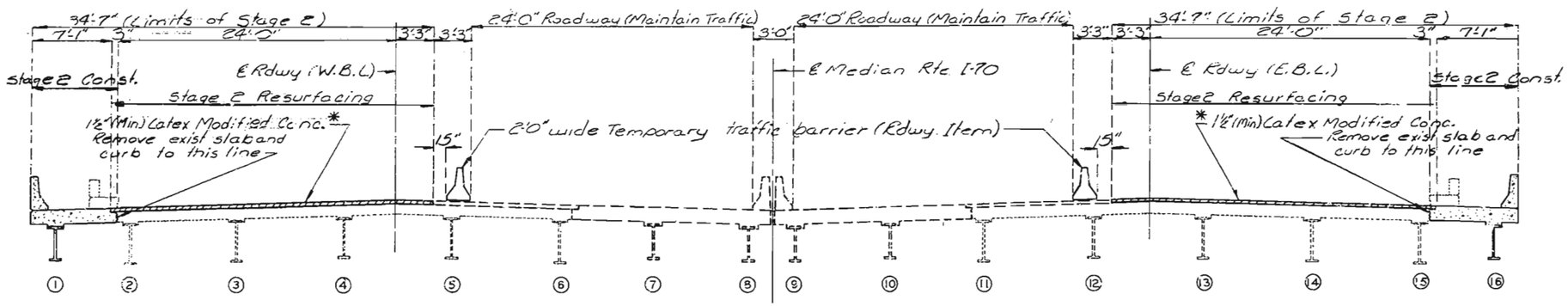

Note: Heavy dashed lines indicate previous Stage 1 construction.
Hatching indicates 1½"(Min.) Latex Modified Concrete.

CONSTRUCTION SEQUENCE - STAGE 2

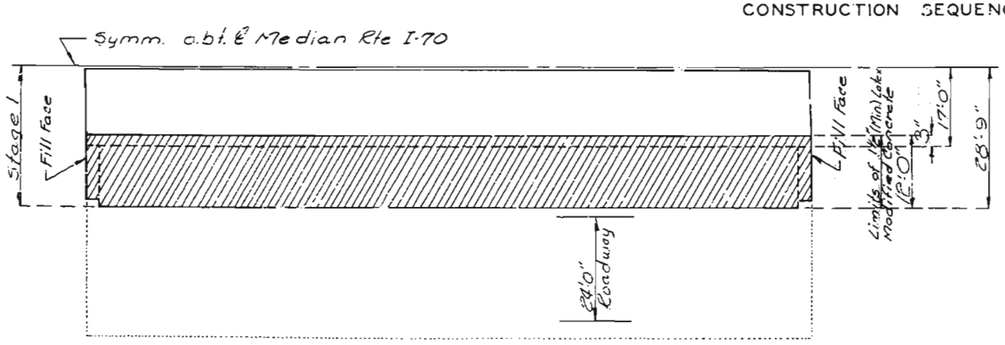

PART PLAN OF SLAB CONSTRUCTION SEQUENCE - STAGE 1

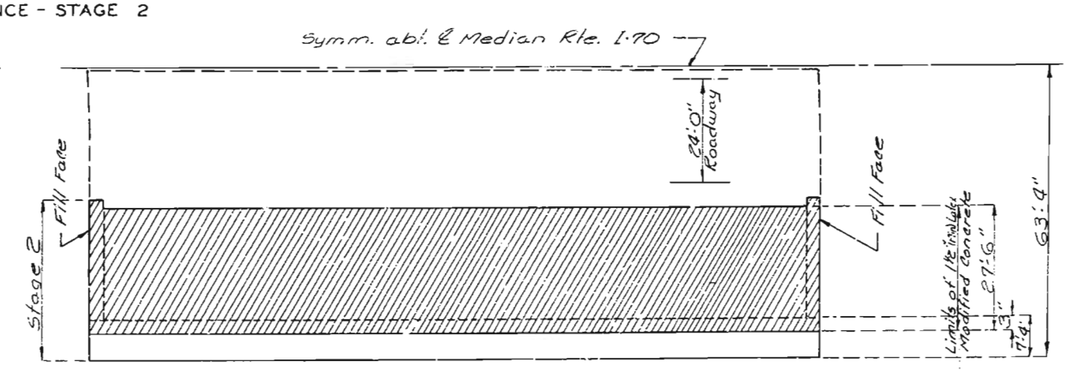

PART PLAN OF SLAB CONSTRUCTION - STAGE 2

DETAILED MAY 1981
CHECKED Sept. 1981

Note: This drawing is not to scale. Follow dimensions.

Sheet No. 14 of 24.

JACKSON COUNTY

L-972 R

180

FED. ROAD DIST. NO.	STATE	FED. AID PROJ. NO.	FISCAL YEAR	SHEET NO.	TOTAL SHEETS
7	MO.		19	62	

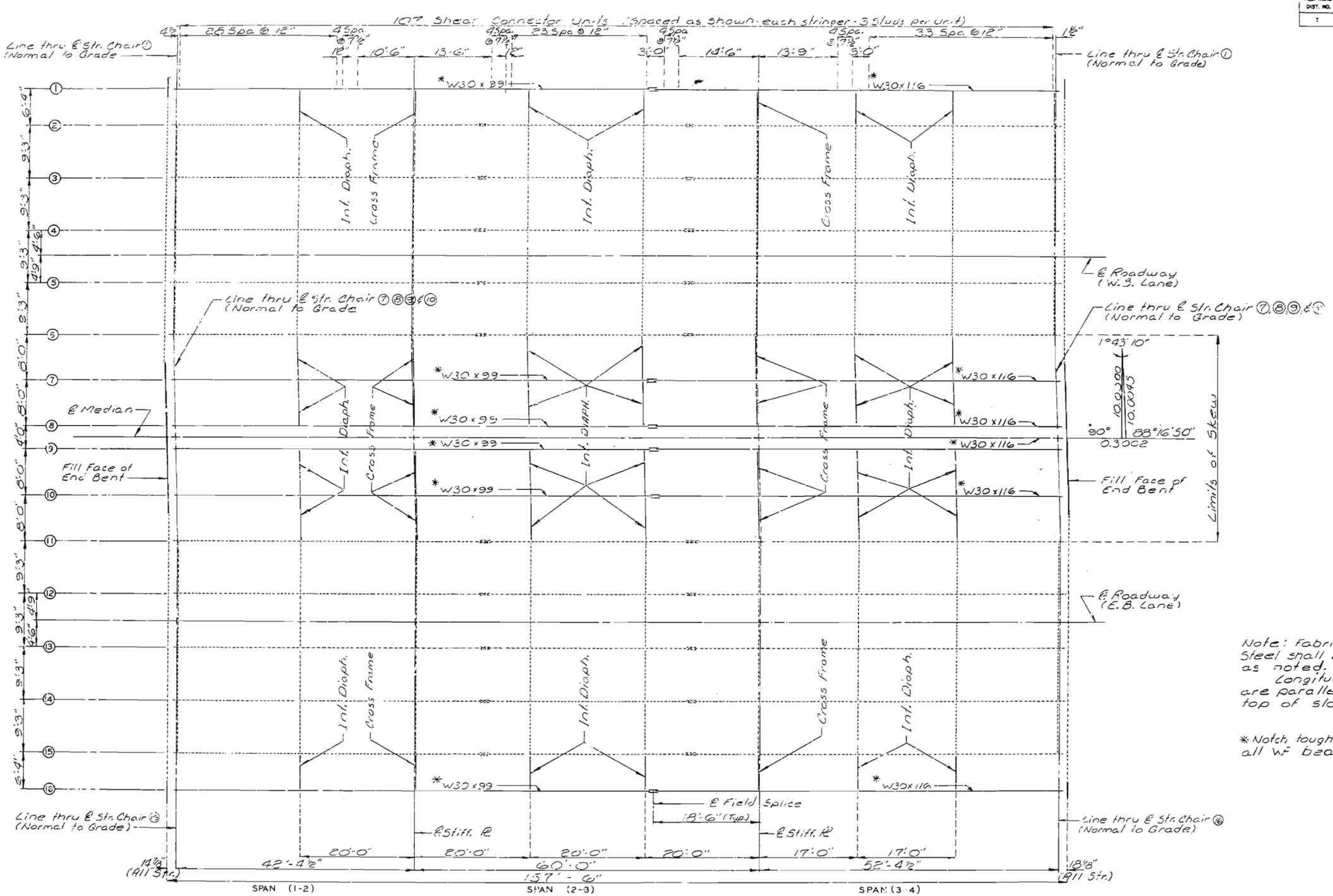

PLAN OF STRUCTURAL STEEL

Note: Fabricated Structural Steel shall be A36 except as noted.
Longitudinal dimensions are parallel to grade at top of slab.

* Notch toughness required for all WF beams.

DETAILED JAN. 1981
CHECKED Sept. 1981

Note: This drawing is not to scale. Follow dimensions.

Sheet No. 12 of 24.

JACKSON COUNTY

L-972R

181

FED. ROAD DIST. NO.	STATE	FED. AID PROJ. NO.	FISCAL YEAR	SHEET NO.	TOTAL SHEETS
5	MO.		19	63	

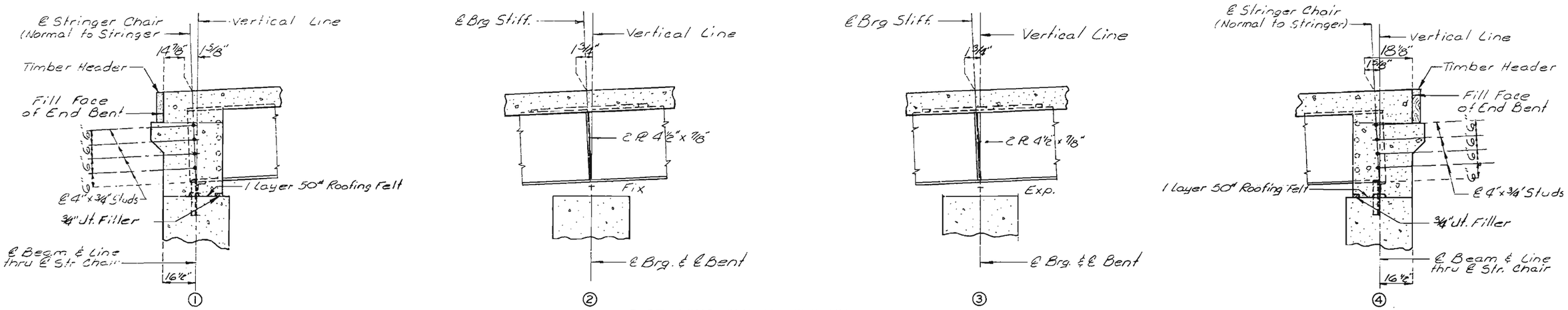

PART LONGITUDINAL SECTION

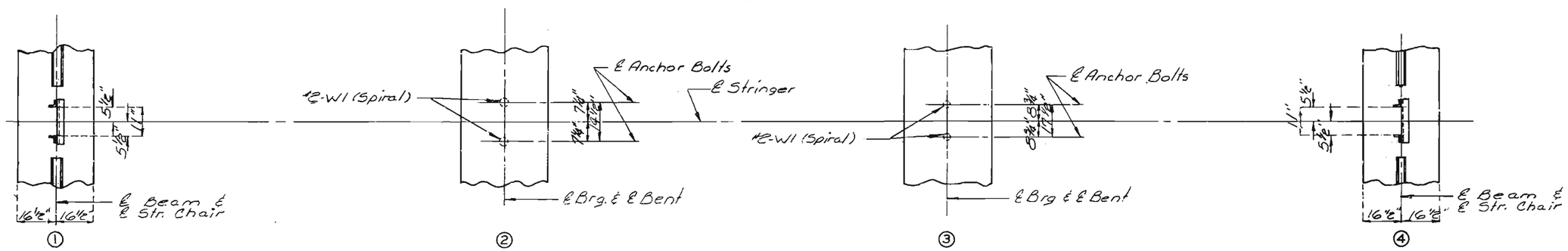

PART STRINGER CHAIR & ANCHOR BOLT PLAN
(STRINGER NO. 1 & NO. 16)

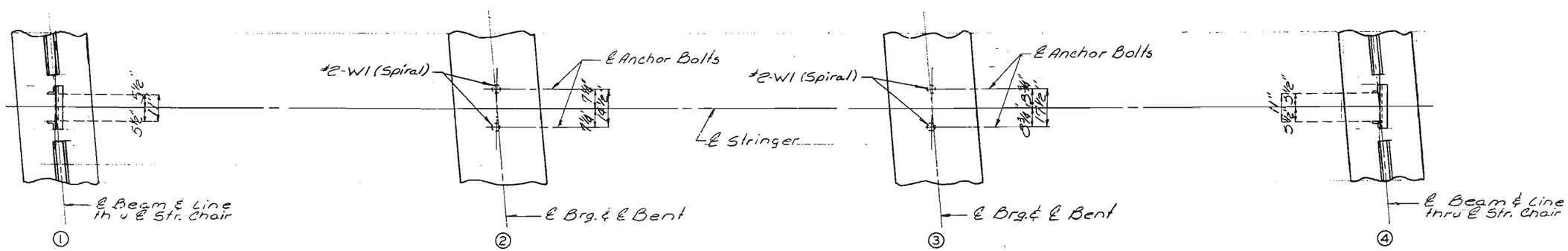

PART STRINGER CHAIR & ANCHOR BOLT PLAN
STRINGER NO. 7, 8, 9, & 10

DETAILED JAN 1981
CHECKED Sep. 1981

Note: This drawing is not to scale. Follow dimensions.

Sheet No. 13 of 24.

JACKSON COUNTY

L-972R

101

FED. ROAD DIST. NO.	STATE	FED. AID PROJ. NO.	FISCAL YEAR	SHEET NO.	TOTAL SHEETS
5	MO.		19	61	

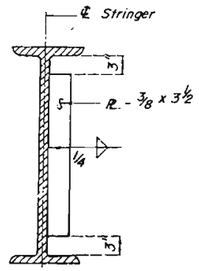

INT. DIAPH.

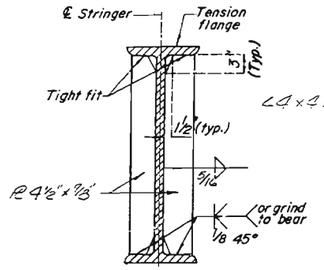

INT. BRG. STIFF.

WELDING DETAILS

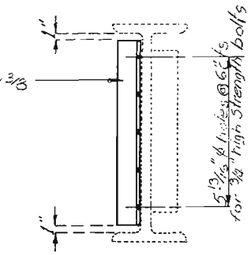

DETAIL OF CONNECTIONS AT DIAPH. OF EXIST. STRINGER NO. 2, NO. 6, NO. 11, & NO. 15

NOTES: TYPE "E" BEARINGS

ANCHOR BOLTS FOR TYPE "E" BEARINGS SHALL BE 1-1/4"ϕ SWEDGED BOLTS AND SHALL EXTEND 12" INTO CONCRETE WITH HEXAGON NUTS AND PLAIN WASHERS FOR FIXED BEARINGS, NO NUTS FOR EXPANSION BEARINGS.

"ESTIMATED WEIGHT" DOES NOT INCLUDE WEIGHT OF ANCHOR BOLTS.

"x" INDICATES MACHINE FINISH SURFACE.

① BONDED LUBRICANT

A LUBRICANT COATING SHALL BE APPLIED IN THE SHOP TO BOTH MATING SURFACES OF THE BEARING ASSEMBLY. THE LUBRICANT, METHOD OF CLEANING, AND APPLICATION SHALL MEET THE REQUIREMENTS OF MIL-L-23398 AND MIL-L-46147 SUCH AS DOW CORNING'S MOLYKOTE 3402 BONDED LUBRICANT. THE COATED AREAS SHALL BE PROTECTED FOR SHIPPING AND ERECTION.

SHOP DRAWINGS ARE NOT REQUIRED FOR LEAD PLATES AND/OR PREFORMED FABRIC PADS.

Note: For Details of Flange Plates at Int. Bts. No 2 & No 3 see sheet No. 18.

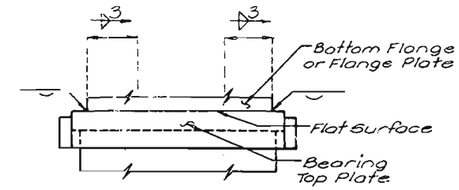

WELDING DETAILS

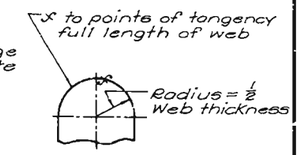

END VIEW OF WEB TYPE "E" BEARINGS

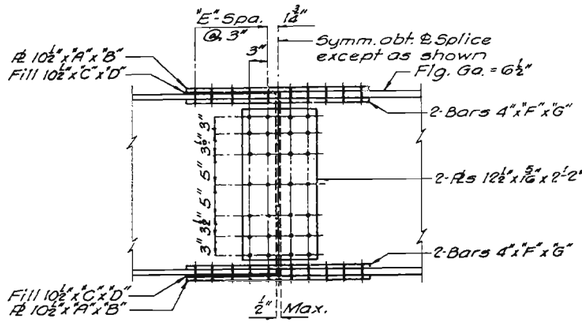

Note: Field drill 13/16" ϕ holes in existing exterior WF 33x118 as shown for attachment of L4 x 4 x 3/8 for diaphragm connection.

Use new diaphragm as a template to drill 13/16" ϕ holes in outstanding leg of L4 x 4 x 3/8 for connection.

Use new cross frame as a template to drill 13/16" ϕ holes in existing 5" x 3/4" bearing stiffeners.

Note: 15/16" reamed holes for 7/8" high strength bolts.

SIZE OF BEAM	A	B	C	D	E	F	G	
W30x99 to 116	3/8"	18 1/2"	3/16"	9"	2"	1/2"	18 1/2"	

DETAIL OF W30 BEAM SPLICE

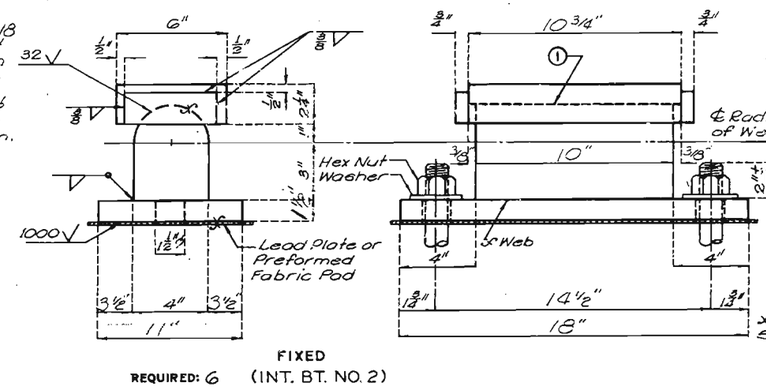

FIXED (INT. BT. NO. 2)

REQUIRED: 6

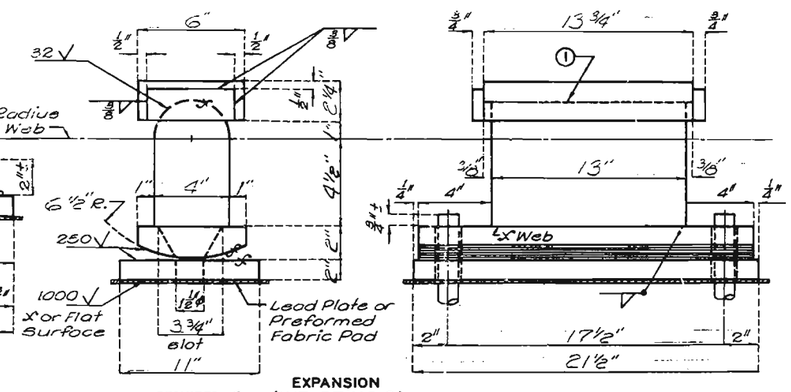

REQUIRED: 6

EXPANSION (INT. BT. NO. 3)

TYPE "E" BEARINGS
(ESTIMATED WEIGHT 2995#)

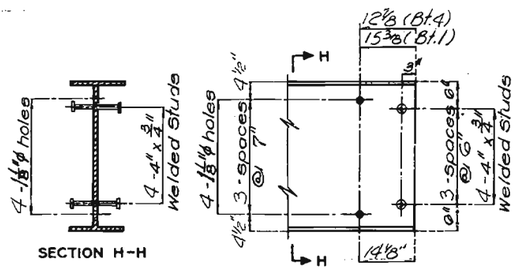

SECTION H-H

WELDED STUD AND WEB HOLE DETAILS AT END BENTS
(W30 Stringers)

Note: Weight of 1560 lbs. of Shear Connectors is included in weight of Fabricated Structural Carbon Steel.

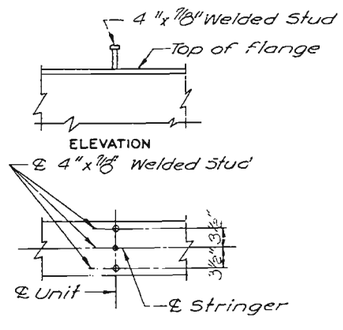

DETAILS OF SHEAR CONNECTORS

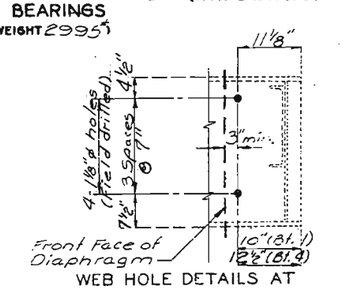

WEB HOLE DETAILS AT END BENTS *
(Existing WF33 Stringers)

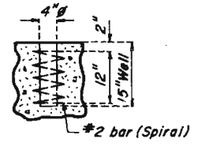

DETAIL OF ANCHOR BOLT WELLS

* Verify 3" min. dimension from face of proposed diaph. to ℄ 1 1/8" ϕ Holes.

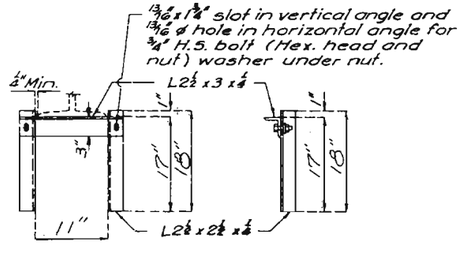

FRONT ELEVATION END ELEVATION

DETAILS OF SUPPORT CHAIR

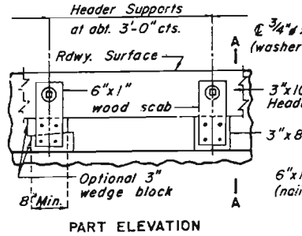

PART ELEVATION

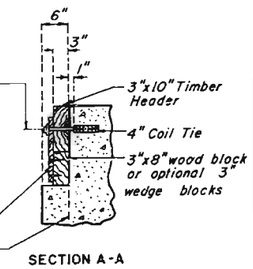

SECTION A-A

Note: Cost of timber headers complete in place to be included in contract unit price for concrete.

DETAILS OF TIMBER HEADER AT END BENTS

183

STD. E.B.	REVISED
MAR. 1973	OCT. 1977

DETAILED JAN. 1981
CHECKED Sept. 1981

Note: This drawing is not to scale. Follow dimensions.

Sheet No. 17 of 24

JACKSON COUNTY

L-972 R

FED. ROAD DIST. NO.	STATE	FED. AID PROJ. NO.	FISCAL YEAR	SHEET NO.	TOTAL SHEETS
5	MO.		19	65	

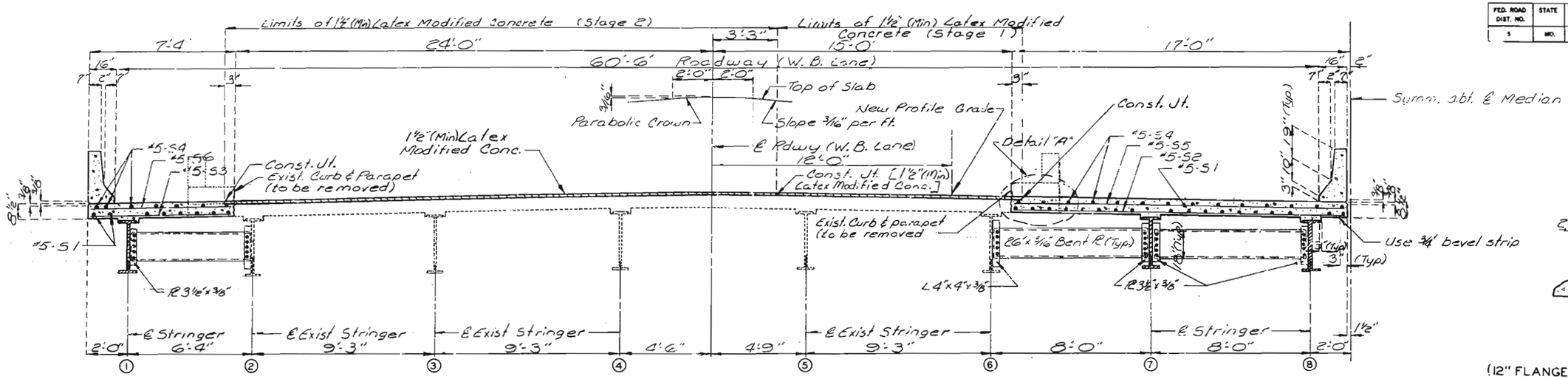

HALF SECTION NEAR ℄ SPAN

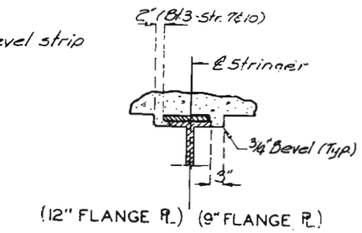

PART SECTION SHOWING HAUNCHING NEAR INT. BENT

Note: For details of Barrier Curb not shown see sheets No. 20 & 21.
** Scarify ½"(Min) from existing slab surface before placing 1½"(Min.) Latex Modified Concrete.

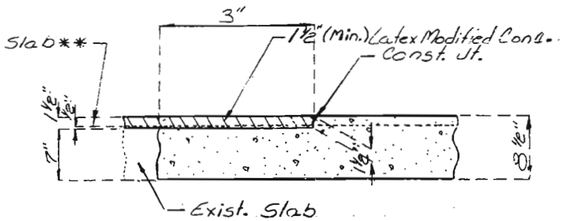

Note: The contractor shall pour and satisfactorily finish the slab pours at a rate of not less than 25 cubic yards per hour and shall furnish an approved retarder to retard the set of concrete to 2.5 hours.
Concrete shall be poured up grade beginning at Bent No. 1.

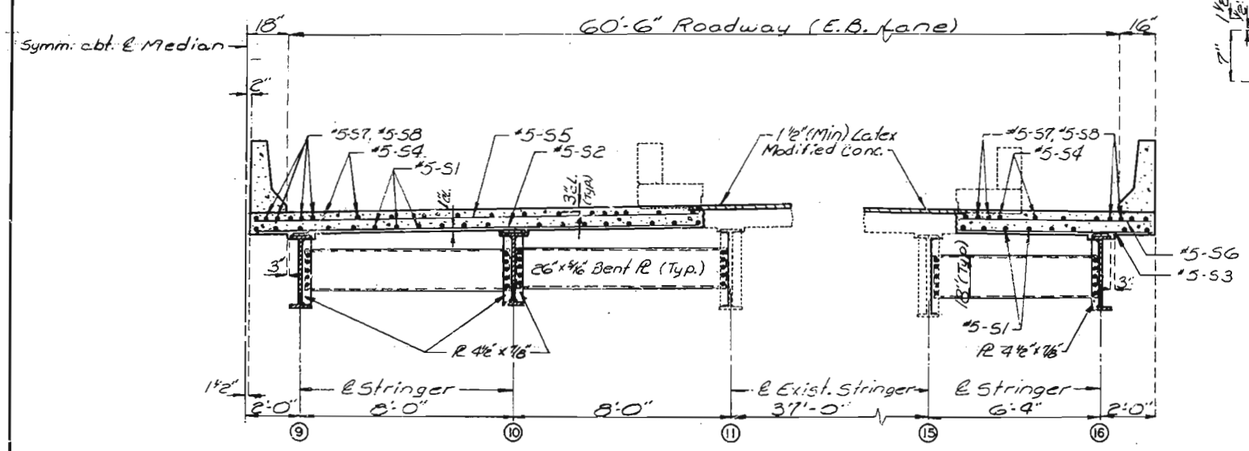

PART SECTION NEAR INT. BENT

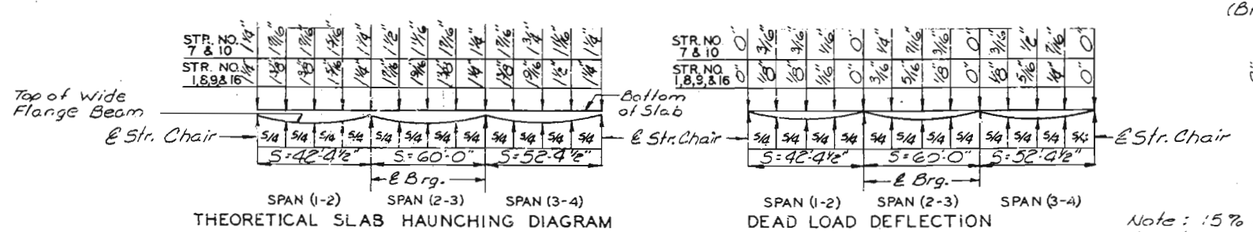

THEORETICAL SLAB HAUNCHING DIAGRAM

DEAD LOAD DEFLECTION

Note: 15% of dead load deflection due to weight of structural steel.

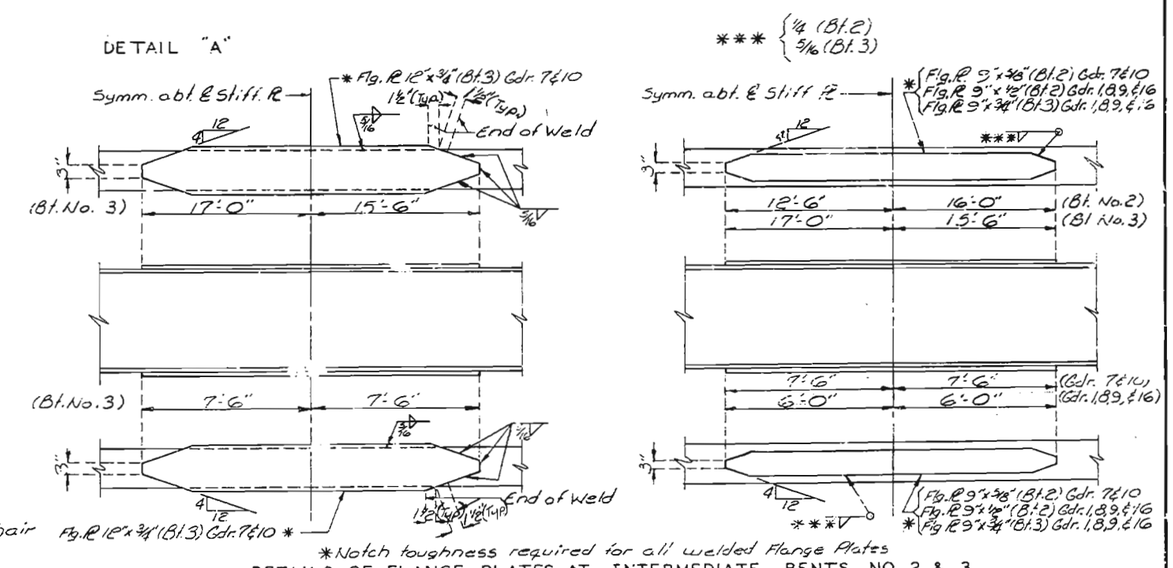

*Notch toughness required for all welded flange plates

DETAILS OF FLANGE PLATES AT INTERMEDIATE BENTS NO. 2 & 3

104

DETAILED Apr. 1981
CHECKED Sept. 1981

Note: This drawing is not to scale. Follow dimensions.

Sheet No. 15 of 24.

JACKSON COUNTY

L-972 R

FED. ROAD DIST. NO.	STATE	FED. AID PROJ. NO.	FISCAL YEAR	SHEET NO.	TOTAL SHEETS
5	MO.		19	66	

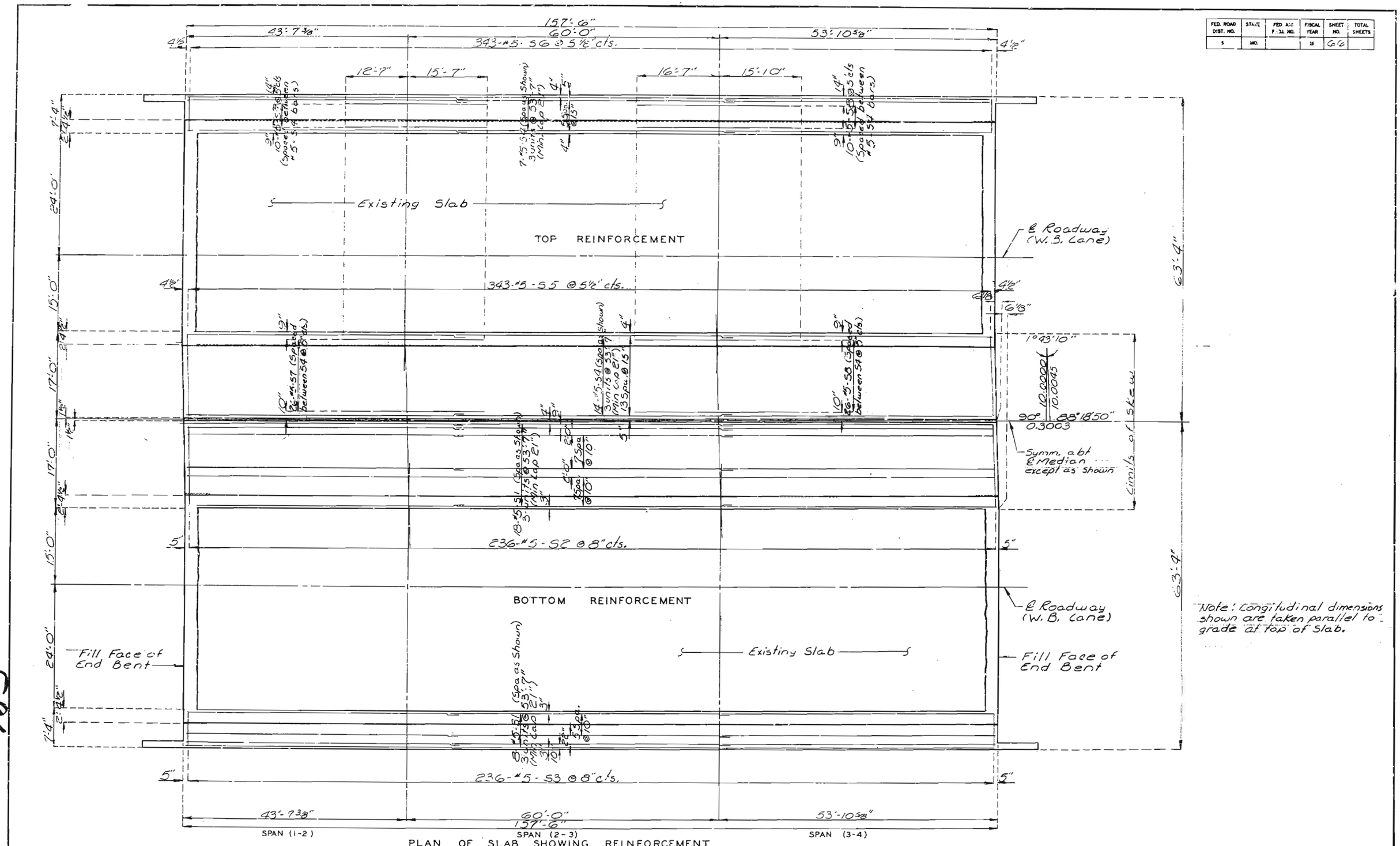

PLAN OF SLAB SHOWING REINFORCEMENT

Note: Longitudinal dimensions shown are taken parallel to grade at top of Slab.

DETAILED JAN. 1981
CHECKED Sept. 1981

Note: This drawing is not to scale. Follow dimensions.

Sheet No. 19 of 24.

JACKSON COUNTY

L-972 R

185

FED. ROAD DIST. NO.	STATE	FED. AID PROJ. NO.	FISCAL YEAR	SHEET NO.	TOTAL SHEETS
5	MO.		19	67	

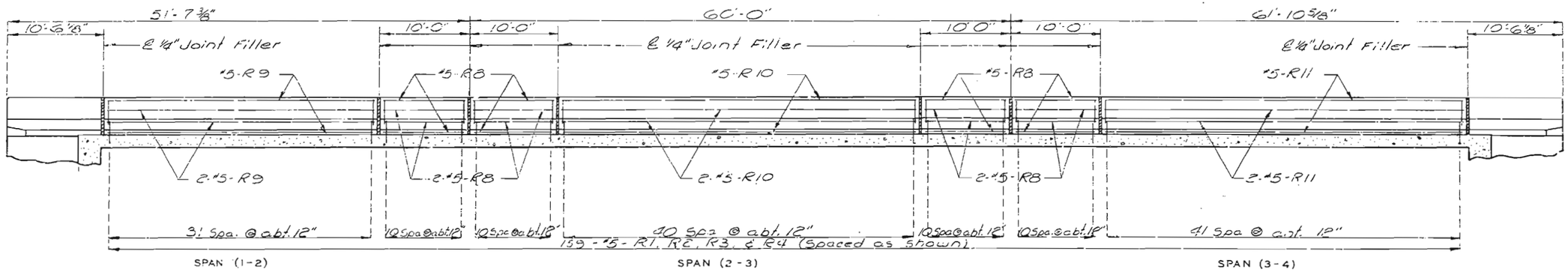

SECTION NEAR LEFT BARRIER CURB

Note: Longitudinal dimensions are along top edge of slab parallel to grade.

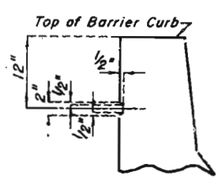

RUSTICATION DETAIL

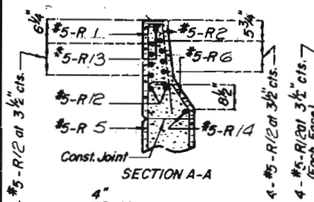

SECTION A-A

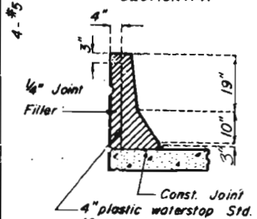

Note: Plastic waterstop shall be placed in all safety barrier curb filled joints.

Cost of plastic waterstop complete in place to be included in unit price bid for concrete.

DETAILS OF PLASTIC WATERSTOP

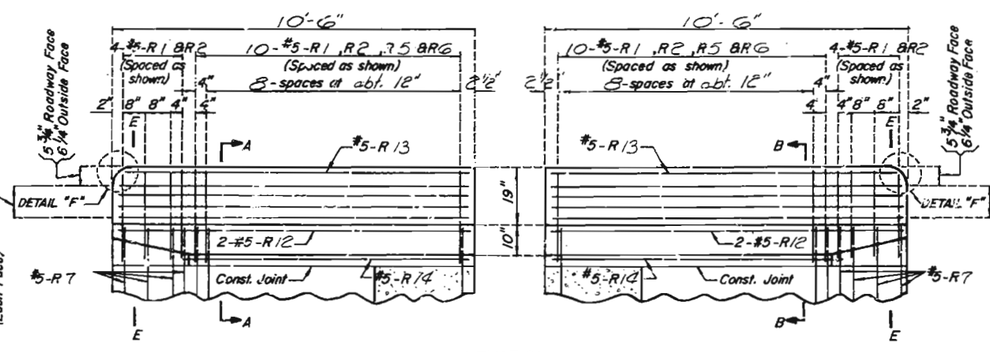

ELEVATION

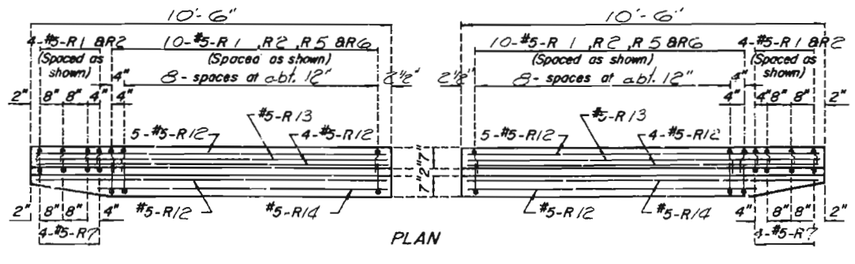

PLAN

NOTES:

Top of barrier curb to be built parallel to grade with barrier curb joints (except at end bents) normal to grade.

All exposed edges of barrier curb shall have 1/2" radius or 3/8" bevel unless otherwise noted.

When the barrier curb is bid by linear feet, the contract unit price shall include the cost of all concrete and reinforcement.

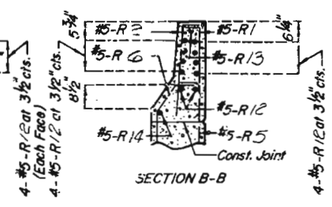

SECTION B-B

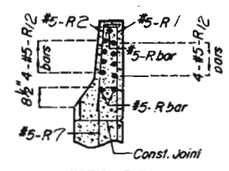

SECTION E-E

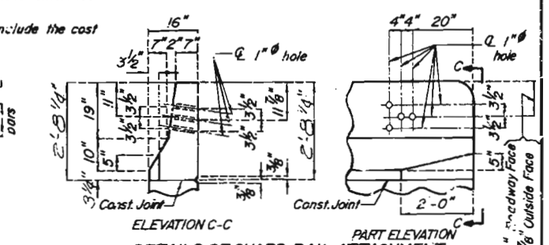

DETAILS OF GUARD RAIL ATTACHMENT

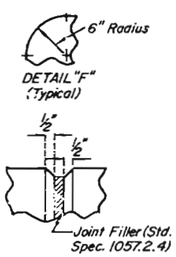

FILLED JOINT DETAIL

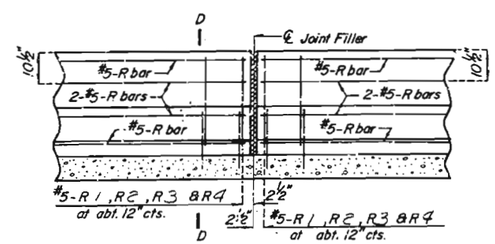

PART SECTION NEAR LEFT BARRIER CURB

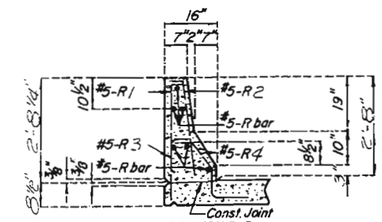

SECTION D-D

Note: Use a minimum lap of 17" for #5 horizontal barrier bars.
The cross-sectional area above the slab = 2.27 sq. ft.

DETAILED MAY 1981
CHECKED Sept 1981

DETAILS OF LEFT & RIGHT BARRIER CURB AT END BENTS NO. 1 & NO. 4

Note: This drawing is not to scale. Follow dimensions.

Sheet No. 20 of 24.

JACKSON COUNTY

L-972 R

186

SPS 1.7.8(1)	AUG. 1978
REVISED	DEC. 1980

FED. ROAD DIST. NO.	STATE	FED. AID PROJ. NO	FISCAL YEAR	SHEET NO.	TOTAL SHEETS
5	MO.		19	63	

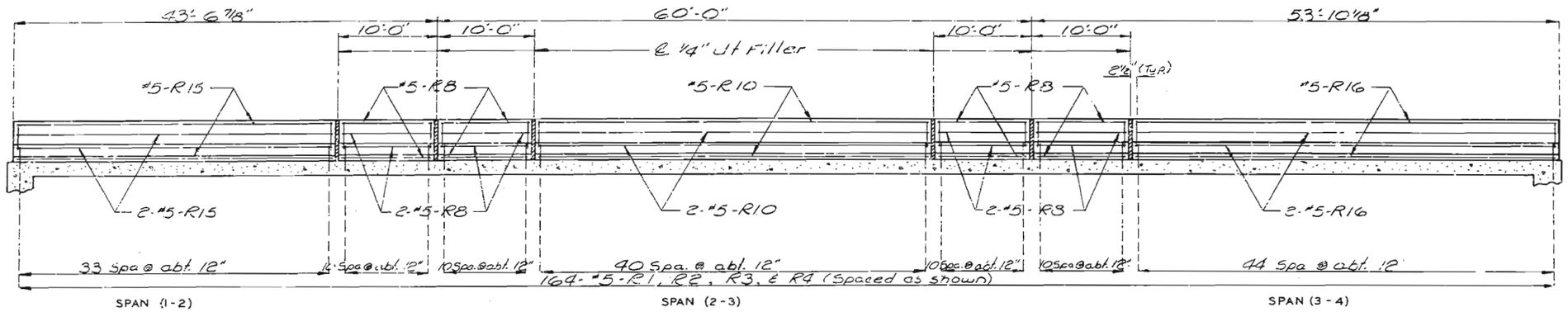

SECTION NEAR DOUBLE FACED MEDIAN BARRIER CURB

Note: Longitudinal dimensions are along top edge of slab parallel to grade.

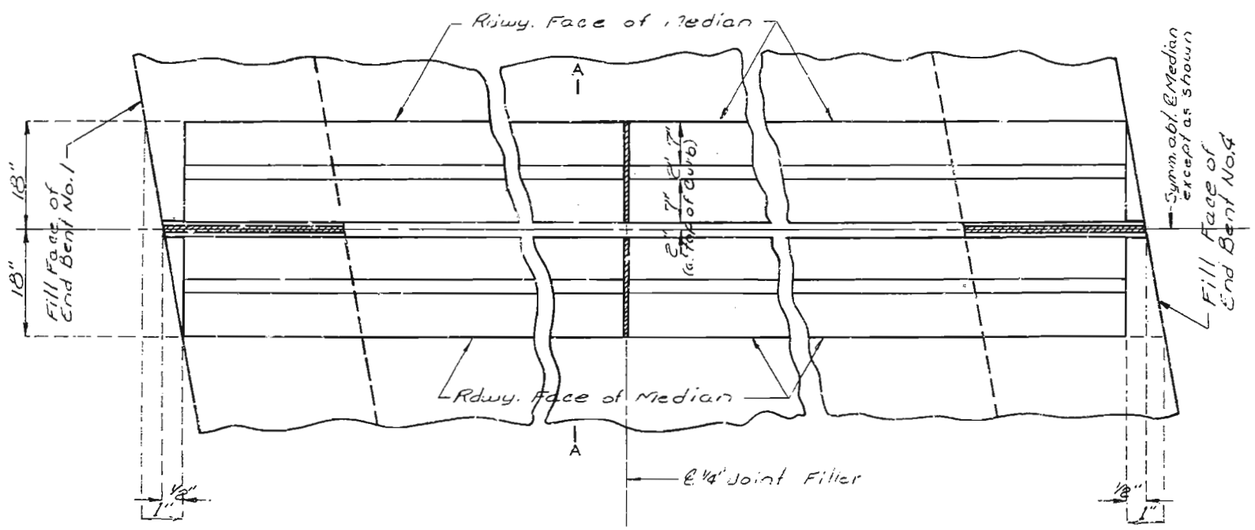

PART PLAN SHOWING DOUBLE FACED MEDIAN BARRIER CURB

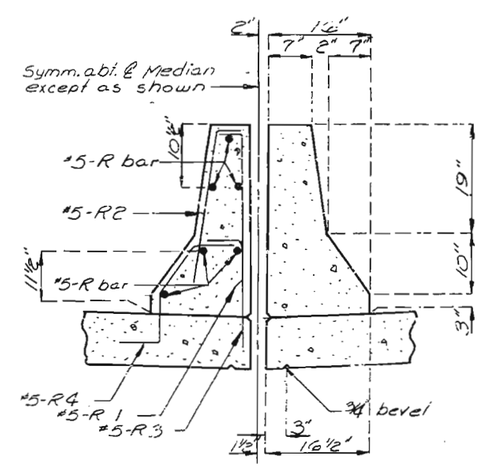

SECTION A-A

Note: Use a minimum lap of 17" for #5 horizontal barrier curb bars.
The cross-sectional area above the slab = 2.33 ft.²

Notes:
Top of median barrier curb to be built parallel to grade with barrier curb joints normal to grade.
All exposed edges of barrier curb shall have 1/2" radius or 3/8" bevel unless otherwise noted.
For Details of Plastic Waterstop and Filled Joint Detail see sheet No. 20.
When the barrier curb is bid by linear feet the contract unit price shall include the cost of all concrete and reinforcement.

187

DETAILED MAY 1981
CHECKED Sept. 1981

Note: This drawing is not to scale. Follow dimensions.

Sheet No. 21 of 24.

JACKSON COUNTY

L-972 R

FED. ROAD DIST. NO.	STATE	FED. AID PROJ. NO.	FISCAL YEAR	SHEET NO.	TOTAL SHEETS
5	MO.		19	69	

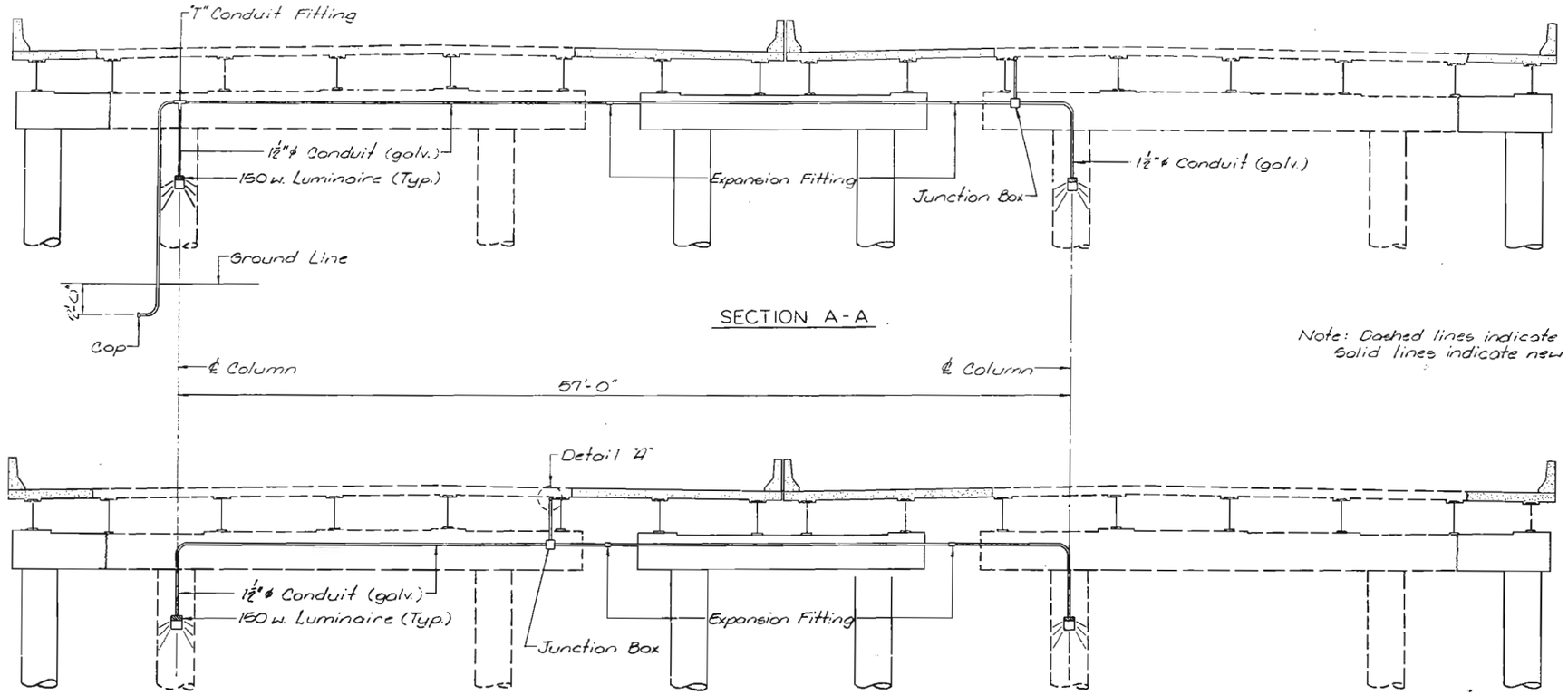

SECTION A-A

Note: Dashed lines indicate existing structure. Solid lines indicate new construction.

SECTION B-B

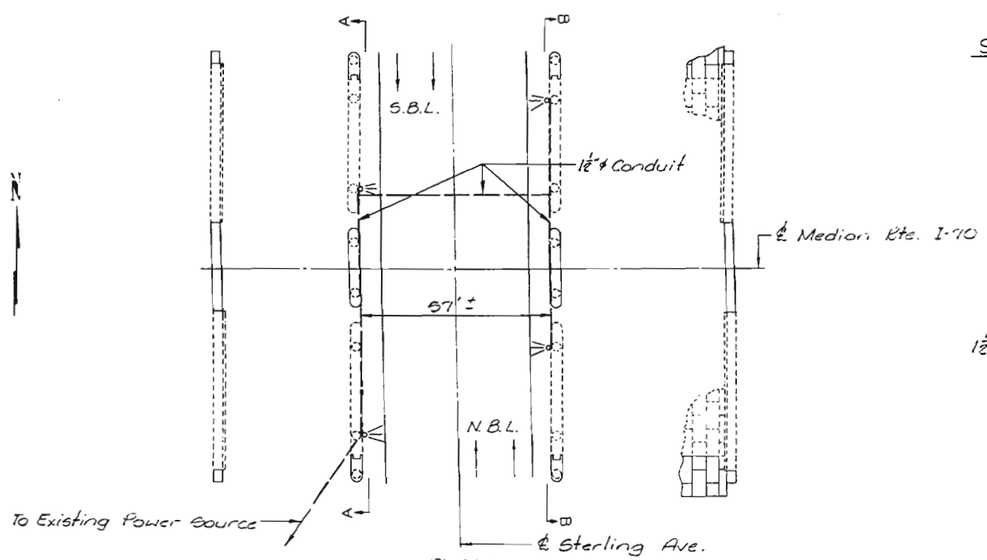

PLAN

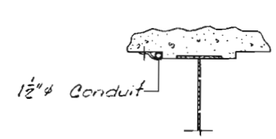

DETAIL "A"

GENERAL NOTES:

All conduit shall be 1½"ϕ rigid steel, galvanized, as shown, complete with all couplings, elbows, expansion fittings, junction boxes, caps and clamps.

Provide 4-1½"ϕ Type "AX" or "AF" expansion fittings as shown. They shall provide a minimum movement of 2" in either direction. They shall be equal to O.Z. Gedney Co. Type "AX" or Spring City Electrical Manufacturing Co. Type "AF".

Provide 2-10"×8"×4" junction boxes as shown. They shall be O.Z. Gedney Co. Type "YH" or Spring City Electrical Manufacturing Co. Type "HF". Wall thickness shall be sufficient to provide 5 full threads for watertight conduit joint.

Conduit shall be secured to the concrete with clamps at about 5'-0" centers.

The conduit system, complete in place, including 4-150 watt high pressure sodium luminaires, shall be paid for as Conduit System on Structure, Lump Sum.

The wiring shall be furnished and installed by others (see Roadway Plans).

1888

DETAILED Feb., 1982
CHECKED Mar., 1982

Note: This drawing is not to scale. Follow dimensions.

Sheet No. 22 of 24.

JACKSON COUNTY

L-972R

COMPLETE BILL OF REINFORCING STEEL

NO. REQD.	MARK NO. (SIZE MARK)	LOCATION	EPOXY (E)	SHAPE NO.	STIRRUP (S)	SUBSTR. (X)	VARIES (V)	NO. EACH	B FT. IN.	C FT. IN.	D FT. IN.	E FT. IN.	F FT. IN.	H FT. IN.	K FT. IN.	NOMINAL LENGTH FT. IN.	ACTUAL LENGTH FT. IN.	WEIGHT LBS.
		SUBSTRUCTURE																
		END BENT NO.1																
4	6H1	BEAM (INTERIOR)		20		X			12 10.000							12 10	12 10	77
16	6H2	BEAM (INTERIOR)		17		X			12 10.000							13 6	13 6	324
4	6H3	BEAM (EXTERIOR)		20		X			3 2.500							3 3	3 3	20
16	6H4	BEAM (EXTERIOR)		17		X			3 2.500							3 11	3 11	94
34	5U10	BEAM		13	S	X			2 6.000	3 3.000	2 6.000	3 3.000				12 5	12 1	428
		INT.BENT NO.2																
24	6D1	FOOTINGS		10	S	X				3 5.000	16.000					8 2	7 10	282
32	1D02	FOOTINGS		17		X			7 10.000							9 3	9 3	1274
16	7H20	BEAM		7		X			4 0.000	2 9.500						9 6	9 6	311
2	6H21	BEAM (INTERIOR)		20		X			20 4.000							20 4	20 4	61
7	8H22	BEAM (INTERIOR)		20		X			20 4.000							20 4	20 4	380
4	8H23	BEAM (INTERIOR)		18		X			20 4.000							22 2	22 2	237
8	6H24	BEAM (EXTERIOR)		20		X			6 5.000							6 5	6 5	77
4	6H25	BEAM (EXTERIOR)		20		X			6 1.000							6 1	6 1	37
4	6H26	BEAM (EXTERIOR)		20		X			6 5.000							6 5	6 5	39
4	6H27	BEAM (EXTERIOR)		20		X			6 1.000							6 1	6 1	37
2	8H29	BEAM (INTERIOR)		18		X			23 2.000							25 0	25 0	134
75	4P1	COLUMNS		16		X			2 9.000							9 6	9 6	476
2	4U21	BEAM (EXTERIOR)		10	S	X				6.000	2 7.500					3 8	3 6	5
10	4U20	BEAMS		10	S	X				6.000	2 11.000					3 11	3 9	25
24	5U22	BEAM (INTERIOR)		13	S	X			2 11.000	2 9.000	2 11.000	2 9.000				12 3	11 11	298
2	5U23	BEAM (INTERIOR)		13	S	X			2 9.500	2 9.000	2 9.500	2 9.000				12 0	11 8	24
2	5U24	BEAM (INTERIOR)		13	S	X			2 4.000	2 9.000	2 4.000	2 9.000				11 1	10 9	22
10	5U25	BEAM (EXTERIOR)		13	S	X			2 11.000	3 3.000	2 11.000	3 3.000				13 3	12 11	135
2	5U26	BEAM (EXTERIOR)		13	S	X			2 10.500	3 3.000	2 10.500	3 3.000				13 2	12 10	27
2	5U27	BEAM (EXTERIOR)		13	S	X			22.000	3 3.000	22.000	3 3.000				11 1	10 9	22
16	10V20	COLUMN		17		X			19 10.000							21 3	21 3	1463
8	10V21	COLUMN		17		X			19 3.000							20 8	20 8	711
8	10V22	COLUMN		17		X			22 3.000							23 6	23 8	815
12	2W1	A.B. WELL		22		X			12.000	9.125						19 9	19 9	40
		INT.BENT NO.3																
24	6D1	FOOTINGS		10	S	X				3 5.000	16.000					8 2	7 10	282
32	1D02	FOOTINGS		17		X			7 10.000							9 3	9 3	1274
16	7H20	BEAM		7		X			4 0.000	2 9.500						9 6	9 6	311
2	6H21	BEAM (INTERIOR)		20		X			20 4.000							20 4	20 4	61
7	8H22	BEAM (INTERIOR)		20		X			20 4.000							20 4	20 4	380
4	8H23	BEAM (INTERIOR)		18		X			20 4.000							22 2	22 2	237
8	6H24	BEAM (EXTERIOR)		20		X			6 5.000							6 5	6 5	77
4	6H25	BEAM (EXTERIOR)		20		X			6 1.000							6 1	6 1	37
4	6H26	BEAM (EXTERIOR)		20		X			6 5.000							6 5	6 5	39
4	6H27	BEAM (EXTERIOR)		20		X			6 1.000							6 1	6 1	37
8	6H28	BEAM (EXTERIOR)		20		X			2 4.000							2 4	2 4	28
2	8H29	BEAM (INTERIOR)		18		X			23 2.000							25 0	25 0	134
76	4P1	COLUMNS		16		X			2 9.000							9 6	9 6	482
10	4U20	BEAMS		10	S	X				6.000	2 11.000					3 11	3 9	25

COMPLETE BILL OF REINFORCING STEEL

NO. REQD.	MARK NO. (SIZE MARK)	LOCATION	EPOXY (E)	SHAPE NO.	STIRRUP (S)	SUBSTR. (X)	VARIES (V)	NO. EACH	B FT. IN.	C FT. IN.	D FT. IN.	E FT. IN.	F FT. IN.	H FT. IN.	K FT. IN.	NOMINAL LENGTH FT. IN.	ACTUAL LENGTH FT. IN.	WEIGHT LBS.
2	4U21	BEAM (EXTERIOR)		10	S	X				6.000	2 7.500					3 8	3 6	5
24	5U22	BEAM (INTERIOR)		13	S	X			2 11.000	2 9.000	2 11.000	2 9.000				12 3	11 11	298
2	5U23	BEAM (INTERIOR)		13	S	X			2 9.500	2 9.000	2 9.500	2 9.000				12 0	11 8	24
2	5U24	BEAM (INTERIOR)		13	S	X			2 4.000	2 9.000	2 4.000	2 9.000				11 1	10 9	22
8	5U25	BEAM (EXTERIOR)		13	S	X			2 11.000	3 3.000	2 11.000	3 3.000				13 3	12 11	108
4	5U30	BEAM (EXTERIOR)		13	S	X			2 11.000	3 6.375	2 11.000	3 6.375				13 10	13 6	58
2	5U31	BEAM (EXTERIOR)		13	S	X			2 10.500	3 6.375	2 10.500	3 6.375				13 9	13 5	29
2	5U32	BEAM (EXTERIOR)		13	S	X			22.000	3 6.375	22.000	3 6.375				11 8	11 4	24
16	10V30	COLUMNS		17		X			19 0.000							20 5	20 5	1406
8	10V31	COLUMN		17		X			18 0.000							19 5	19 5	668
8	10V32	COLUMN		17		X			24 7.000							26 0	26 0	895
12	2W1	A.B. WELL		22		X			12.000	9.125						19 9	19 9	40
		END BENT NO.4																
4	6H1	BEAM (EXT.)		20		X			12 10.000							12 10	12 10	77
16	6H2	BEAM (EXT.)		17		X			12 10.000							13 6	13 6	324
4	6H3	BEAM (INT.)		20		X			3 2.500							3 3	3 3	20
16	6H4	BEAM (INT.)		17		X			3 2.500							3 11	3 11	94
34	5U10	BEAM		13	S	X			2 6.000	3 3.000	2 6.000	3 3.000				12 5	12 1	428
		SUPERSTRUCTURE																
20	6H5	END BT.DIAPH.		20					16 8.000							16 8	16 8	501
20	6H6	END BT.DIAPH.		20					29 10.000							29 10	29 10	896
20	6H7	END BT.DIAPH.		20					35 10.000							35 10	35 10	1076
20	6H8	END BT.DIAPH.		20					7 1.000							7 1	7 1	213
24	6H10	END BT.WINGS		20					9 5.000							9 5	9 5	339
8	6H11	END BT.WINGS		20					8 8.000							8 8	8 8	104
8	6H12	END BT.WINGS		20					3 11.000							3 11	3 11	47
8	6H13	END BT.WINGS		20					2 5.000							2 5	2 5	29
702	5R1	BARRIER CURBS	E	19	S				2 6.000	3.500						2 10	2 8	1952
702	5R2	BARRIER CURBS	E	15	S				2 6.125	3.500				2 6.000	3.000	2 10	2 9	2014
646	5R3	BARRIER CURBS	E	19	S				17.000	6.000						23	22	1235
646	5R4	BARRIER CURBS	E	27	S					6.000	11.125	7.000	12.000	9.125	6.375	3 0	2 10	1909
40	5R5	BARRIER CURB	E	19	S				2 1.000	6.000						2 7	2 6	104
40	5R6	BARRIER CURB	E	27	S					6.000	11.125	15.000		9.125	6.375	2 8	2 7	108
16	5R7	BARRIER CURB	E	10	S					2 1.000	6.000					4 8	4 6	75
96	5R8	BARRIER CURBS	E	20					9 9.000							9 9	9 9	976
12	5R9	BARRIER CURB	E	20					30 10.000							30 10	30 10	386
24	5R10	BARRIER CURBS	E	20					39 9.000							39 9	39 9	995
12	5R11	BARRIER CURB	E	20					41 1.000							41 1	41 1	517
40	5R12	BARRIER CURB	E	20					10 3.000							10 3	10 3	428
4	5R13	BARRIER CURB	E	20					10 0.000							10 0	10 0	42
4	5R14	BARRIER CURB	E	20					8 6.000							8 6	8 6	36
12	5R15	MED.BARRIER CURB	E	20					33 3.000							33 3	33 3	414
12	5R16	MED.BARRIER CURB	E	20					43 7.000							43 7	43 7	545
156	5S1	SLAB		20					53 7.000							53 7	53 7	8718
472	5S2	SLAB		20					16 8.000							16 8	16 8	8205
472	5S3	SLAB		20					7 1.000							7 1	7 1	3487
126	5S4	SLAB	E	20					53 7.000							53 7	53 7	7042
686	5S5	SLAB	E	20					16 8.000							16 8	16 8	11925
688	5S6	SLAB *	E	20					7 1.000							7 1	7 1	5083
72	5S7	SLAB	E	20					28 2.000							28 2	28 2	2115
72	5S8	SLAB	E	20					32 5.000							32 5	32 5	2434

FED. ROAD DIST. NO.	STATE	FED. AID PROJ. NO.	FISCAL YEAR	SHEET NO.	TOTAL SHEETS
5	MO.		19	70	

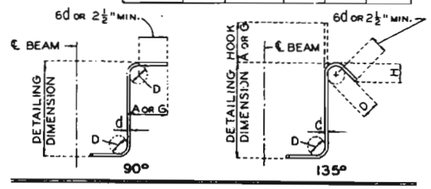

STIRRUP HOOK DIMENSIONS

GRADES 40-50-60 KSI

BAR SIZE	D (IN.)	90° HOOK: HOOK A OR G	135° HOOK: HOOK A OR G	135° HOOK: APPROX. H
#3	1-1/2"	4"	4"	2-1/2"
#4	2"	4-1/2"	4-1/2"	3"
#5	2-1/2"	6"	5-1/2"	3-3/4"
#6	4-1/2"	8"	7"	4-1/2"

NOTE: UNLESS OTHERWISE NOTED DIAMETER "D" IS THE SAME FOR ALL BENDS AND HOOKS ON A BAR.

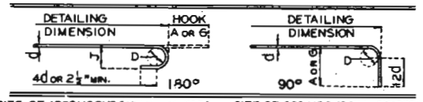

SIZE OF 180° HOOKS (GRADE 40 KSI)

D = 5d FOR #3 THRU #11
D = 10d FOR #14 AND #18

SIZE OF 90° HOOKS (ALL GRADES) AND 180° HOOKS (GRADE 60 KSI)

D = 6d FOR #3 THRU #8
D = 8d FOR #9, #10 AND #11
D = 10d FOR #14 AND #18

END HOOK DIMENSIONS

BAR SIZE	180° HOOKS: GRADE 40 A OR G	180° HOOKS: GRADE 40 J	180° HOOKS: GRADE 60 A OR G	180° HOOKS: GRADE 60 J	90° HOOKS: ALL GRADES A OR G
#3	5"	2-3/4"	5"	3"	6"
#4	6"	3-1/2"	6"	4"	8"
#5	7"	4-1/2"	7"	5"	10"
#6	8"	5-1/4"	8"	6"	12"
#7	9"	6-1/4"	10"	7"	14"
#8	10"	7"	11"	8"	15"
#9	12"	8"	15"	11-1/4"	19"
#10	13"	9"	17"	12-3/4"	22"
#11	14"	10"	19"	14-1/4"	21-0"
#14	21-2"	20-1/2"	21-2"	20-1/2"	21-7"
#18	21-11"	21-3"	21-11"	21-3"	31-5"

NOTES: ALL STANDARD HOOKS AND BENDS OTHER THAN 180 DEG. TO BE BENT WITH SAME PROCEDURE AS FOR 90 DEG. STD. HOOKS.

HOOKS AND BENDS SHALL BE IN ACCORDANCE WITH THE PROCEDURES AS SHOWN ON THIS SHEET.

E - EPOXY COATED REINFORCEMENT.

S - STIRRUP.

X - BAR IS INCLUDED IN SUBSTRUCTURE QUANTITIES.

V - BAR DIMENSIONS VARY IN EQUAL INCREMENTS BETWEEN DIMENSIONS SHOWN ON THIS LINE AND THE FOLLOWING LINE.

NO. EA. - NUMBER OF BARS OF EACH LENGTH.

NOMINAL LENGTHS - ARE BASED ON OUT TO OUT DIMENSIONS SHOWN IN BENDING DIAGRAMS AND ARE LISTED FOR FABRICATORS USE. (NEAREST INCH)

ACTUAL LENGTHS - ARE MEASURED ALONG CENTERLINE BAR TO THE NEAREST INCH.

* Two additional 5-S6 are included in Bar Bill for testing.

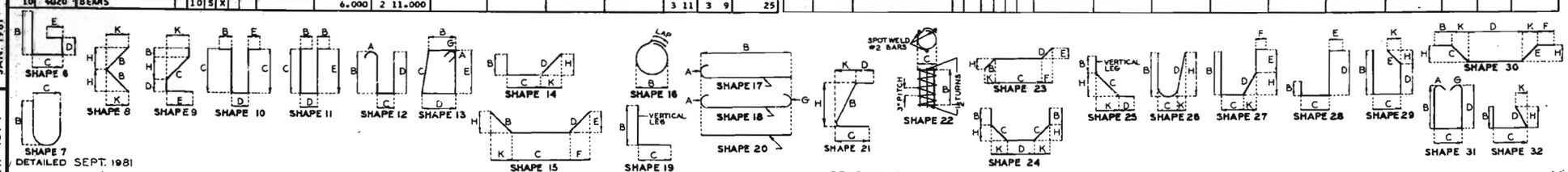

DETAILED SEPT. 1981
CHECKED Sept. 1981

Note: This drawing is not to scale. Follow dimensions.

BENDING DIAGRAMS

Sheet No. 23 of 24.

JACKSON COUNTY

L-972R

STD. 90.8 MAY 1974 REVISED JAN. 1981

189

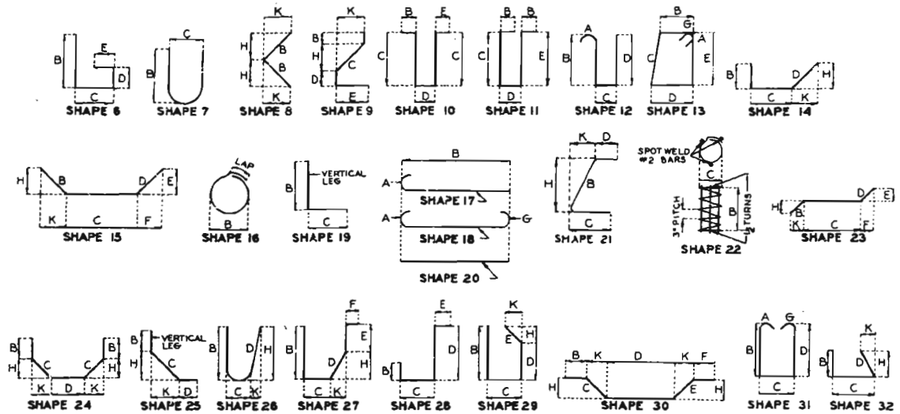

BENDING DIAGRAMS

COMPLETE BILL OF REINFORCING STEEL

NO. REQD.	MARK NO. SIZE	MARK NO. MARK	LOCATION	EPOXY (E)	SHAPE NO.	STIRRUP (S)	SUBSTR. (X)	VARIES (V)	NO. EACH	B FT. IN.	C FT. IN.	D FT. IN.	E FT. IN.	F FT. IN.	H FT. IN.	K FT. IN.	NOMINAL LENGTH FT. IN.	ACTUAL LENGTH FT. IN.	WEIGHT LBS.
8	6T1		END BENT WINGS		23	S				17.000	7 1.000				0.900	17.000	8 6	8 6	102
94	4U1		END BT. DIAPH.*	E	19	S				3 3.000	3 6.000						6 9	6 8	419
92	4U2		END BT. DIAPH.		19	S				3 3.000	2 3.000						5 6	5 5	333
144	4U3		END BT. DIAPH.	E	19	S				3 10.000	2 3.000						6 1	6 0	577
144	4U4		END BT. DIAPH.	E	10	S					15.000	3 10.000					6 4	6 2	593
16	6U5		END BT. DIAPH.		19	S				2 3.000	3 6.000						5 9	5 7	134
8	6V1		END BT. WINGS		23	S				8 0.625	2 1.000				7 3.000	3 6.000	10 2	10 1	121
32	6V2		END BT.1 WINGS		20			V	4	2 3.000							2 3	2 3	
			INCR = 6.250 IN							5 11.000							5 11	5 11	196
32	6V3		END BT.4 WINGS		20			V	4	2 2.000							2 2	2 2	
			INCR = 5.250 IN							5 3.000							5 3	5 3	178
			END OF BAR LIST																

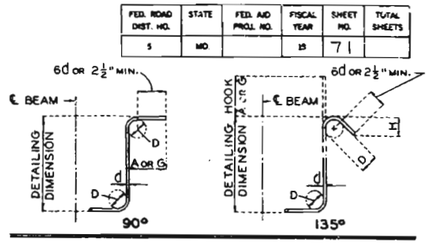

STIRRUP HOOK DIMENSIONS				
GRADES 40-50-60 KSI				
BAR SIZE	D (IN.)	90° HOOK	135° HOOK	
		HOOK A OR G	HOOK A OR G	APPROX. H
#3	1-1/2"	4"	4"	2-1/2"
#4	2"	4-1/2"	4-1/2"	3"
#5	2-1/2"	6"	5-1/2"	3-3/4"
#6	4-1/2"	8"	7"	4-1/2"

NOTE: UNLESS OTHERWISE NOTED DIAMETER "D" IS THE SAME FOR ALL BENDS AND HOOKS ON A BAR.

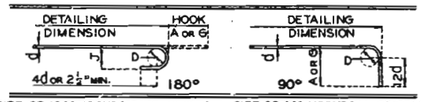

SIZE OF 180° HOOKS (GRADE 40 KSI)

D = 5d FOR #3 THRU #11
D = 10d FOR #14 AND #18

SIZE OF 90° HOOKS (ALL GRADES) AND 180° HOOKS (GRADE 60 KSI)

D = 6d FOR #3 THRU #8
D = 8d FOR #9, #10 AND #11
D = 10d FOR #14 AND #18

END HOOK DIMENSIONS					
BAR SIZE	180° HOOKS				90° HOOKS
	GRADE 40		GRADE 60		ALL GRADES
	A OR G	J	A OR G	J	A OR G
#3	5"	2-3/4"	5"	3"	6"
#4	6"	3-1/2"	6"	4"	8"
#5	7"	4-1/2"	7"	5"	10"
#6	8"	5-1/4"	8"	6"	12"
#7	9"	6-1/4"	10"	7"	14"
#8	10"	7"	11"	8"	16"
#9	12"	8"	15"	11-1/4"	19"
#10	13"	9"	17"	12-3/4"	22"
#11	14"	10"	19"	14-1/4"	21-0"
#14	21-2"	20-1/2"	21-2"	20-1/2"	21-7"
#18	21-11"	21-3"	21-11"	21-3"	21-5"

NOTES: ALL STANDARD HOOKS AND BENDS OTHER THAN 180 DEG. TO BE BENT WITH SAME PROCEDURE AS FOR 90 DEG. STD. HOOKS.

HOOKS AND BENDS SHALL BE IN ACCORDANCE WITH THE PROCEDURES AS SHOWN ON THIS SHEET.

E - EPOXY COATED REINFORCEMENT.

S - STIRRUP.

X - BAR IS INCLUDED IN SUBSTRUCTURE QUANTITIES.

V - BAR DIMENSIONS VARY IN EQUAL INCREMENTS BETWEEN DIMENSIONS SHOWN ON THIS LINE AND THE FOLLOWING LINE.

NO. EA. - NUMBER OF BARS OF EACH LENGTH.

NOMINAL LENGTHS - ARE BASED ON OUT TO OUT DIMENSIONS SHOWN IN BENDING DIAGRAMS AND ARE LISTED FOR FABRICATORS USE. (NEAREST INCH)

ACTUAL LENGTHS - ARE MEASURED ALONG CENTERLINE BAR TO THE NEAREST INCH.

* Two additional #4U1 are included in Bar Bill for testing.

190

STD. 90.8.5	REVISED
MAY 1974	JAN. 1981

DETAILED SEPT. 1981
CHECKED Sept. 1981

Note: This drawing is not to scale. Follow dimensions.

JACKSON COUNTY

L-972 R

MISSOURI HIGHWAY AND TRANSPORTATION COMMISSION

FED. ROAD DIST. NO.	STATE	FED. AID PROJ. NO.	FISCAL YEAR	SHEET NO.	TOTAL SHEETS
5	MO.		19	48	
SEC./SUR. 21	TWP. 49N	RGE. 32W			

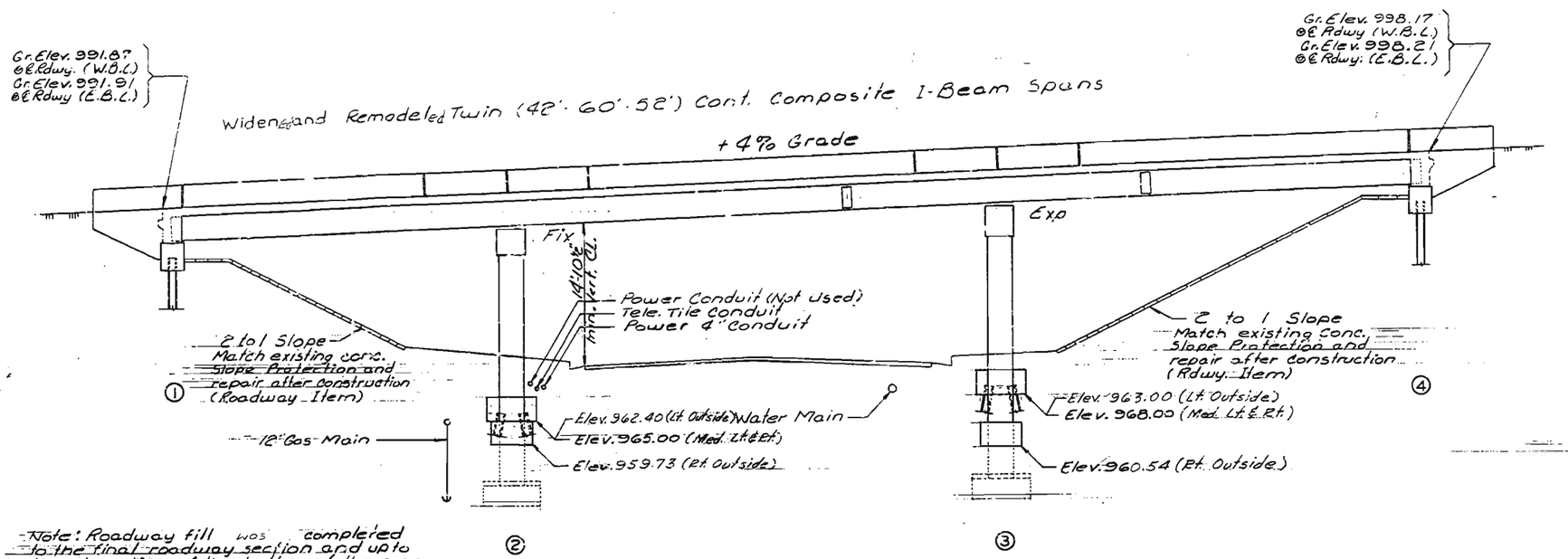

GENERAL ELEVATION

Note: Roadway fill was completed to the final roadway section and up to the elevation of the bottom of the conc. beam within the limits of the structure and for not less than 25' in back of the fill face of the end bents before piles were driven for any bents falling within the embankment section.

FINAL QUANTITIES

ITEM		SUBSTR.	SUPERSTR.	TOTAL
Special Work	Lump Sum			1
Class 1 Excavation	C. Yd.	249		249
Class B Concrete	Cu. Yd.	124.7		124.7
Class B2 Concrete	Cu. Yd.		283.4	283.4
Safety Barrier Curb	Lin. Ft.		662	662
Latex Concrete Wearing Surface	Sq. Yd.		1382	1382
Reinforcing Steel	Lb.	17819	24680	42,499
Reinforcing Steel (Epoxy Coated)	Lb.		30,190	30,190
Fabricated Structural Carbon Steel	Lb.		126,360	126,360
Painting (System B) Green	Lump Sum			1
Conduit System on Structure	Lump Sum			1
Structural Steel Pile 10"	Lin. Ft.	602		602
Conc. Deck Repair (F.A.)	Lump Sum			1

Note: All concrete and reinforcement in end bents (except pile cap beam) are included with superstructure quantities.
For Plan of Structure see sheet No. 2

Note:
Outline of old work is indicated by light dashed lines. Heavy lines indicate new work.
Contractor did verify all dimensions in field before ordering new steel.
Bars bonded in old concrete not removed were cleanly stripped and embedded into new concrete where possible. If length is available, old bars did extend into new concrete at least 40 diameters for smooth bars and 30 diameters for deformed bars.
Anchors were of the self drilling expansion type, made of casehardened and drawn carburized steel, with self-cutting annular broaching grooves.
Cost of furnishing and installing hook anchor bolt assemblies was included in contract unit price for concrete.
Utility lines in vicinity of Bent 2 to were supported during construction and not relocated. See Special Provisions

GENERAL NOTES:

Design Specifications:
A.A.S.H.T.O. - 1977

Design Loading:
HS20-44
15 # per Sq. Ft. Future Wearing Surface
Modified 24,000 # Tandem Axle
Earth 120 #/cu.ft. Equivalent Fluid Pressure 30 #/cu.ft.
Fatigue Stress - Case 1

Design Unit Stresses:
Class B Concrete (Substructure) fc = 1,800 psi
Class B1 Conc. (Safety Barrier & Median Barrier Curb) fc = 1,600 psi
Class B2 Concrete (Superstructure except Safety Barrier Curbs). fc = 1,600 psi
Reinforcing Steel (Grade 60) fy 60,000 psi
Structural Carbon Steel fs 20,000 psi
Steel Pile fb 9,000 psi

Fabricated Steel:
Field connections, High Strength Bolts 3/4" ϕ, holes 13/16" ϕ except as noted.

Joint Filler:
All joint filler did meet the requirement of Std. Spec. 1051.2.4 except as otherwise noted.

Reinforcing Steel:
Minimum clearance to reinforcing steel was 1 1/2" unless otherwise shown.

Paint:
Paint: System B by contractor in accordance with Std. Spec. 712.12. (Color of the final field coat for System B was green.)

Areas to be encased in end bent concrete were painted one coat of system C primer and scratched or damaged surfaces were touched up in field before concrete is poured.

Construction Clearance:
A minimum vertical clearance of 14'-0" from crown of existing lanes and a minimum lateral clearance of 28'-0" centered on Sterling Ave. was maintained during construction.

Traffic Maintained:
Traffic over structure was maintained during construction.

In order to maintain grade and a minimum 1 1/2" Latex Modified Concrete it is anticipated that an average application depth of 1 1/2" was necessary. No payment was allowed for additional labor, materials or equipment required for this necessary minimum and / or variable depth of Latex Modified Concrete.

B.M.
#3 - Elev. 993.89 P.K. nail S.W. Wingwall.
#4 - Elev. 993.89 P.K. nail N.W. Wingwall.
#5 - Elev. 1000.71 P.K. nail S.E. Wingwall.
#6 - Elev. 1000.66 P.K. nail N.E. Wingwall.

BRIDGE OVER STERLING AVENUE

STATE ROAD FROM RTE. I-435 TO RTE. I-470

ABOUT 2.1 MILES EAST OF RTE. I-435

PROJECT NO. **STA.** 451 + 93.20

JOB NO. 4- I070 - 343 **RTE** I - 70

JACKSON **COUNTY**

DATE December 14, 1983

STD. 611.60
STD. 706.35
L-972 R

DESIGNED JAN. 1981
DETAILED MAY 1981
CHECKED SEPT 198

Note: This drawing is not to scale. Follow dimensions.

Sheet No. 1A of 2

191

FED. ROAD DIST. NO.	STATE	FED. AID PROJ. NO.	FISCAL YEAR	SHEET NO.	TOTAL SHEETS
5	MO.		19	55	

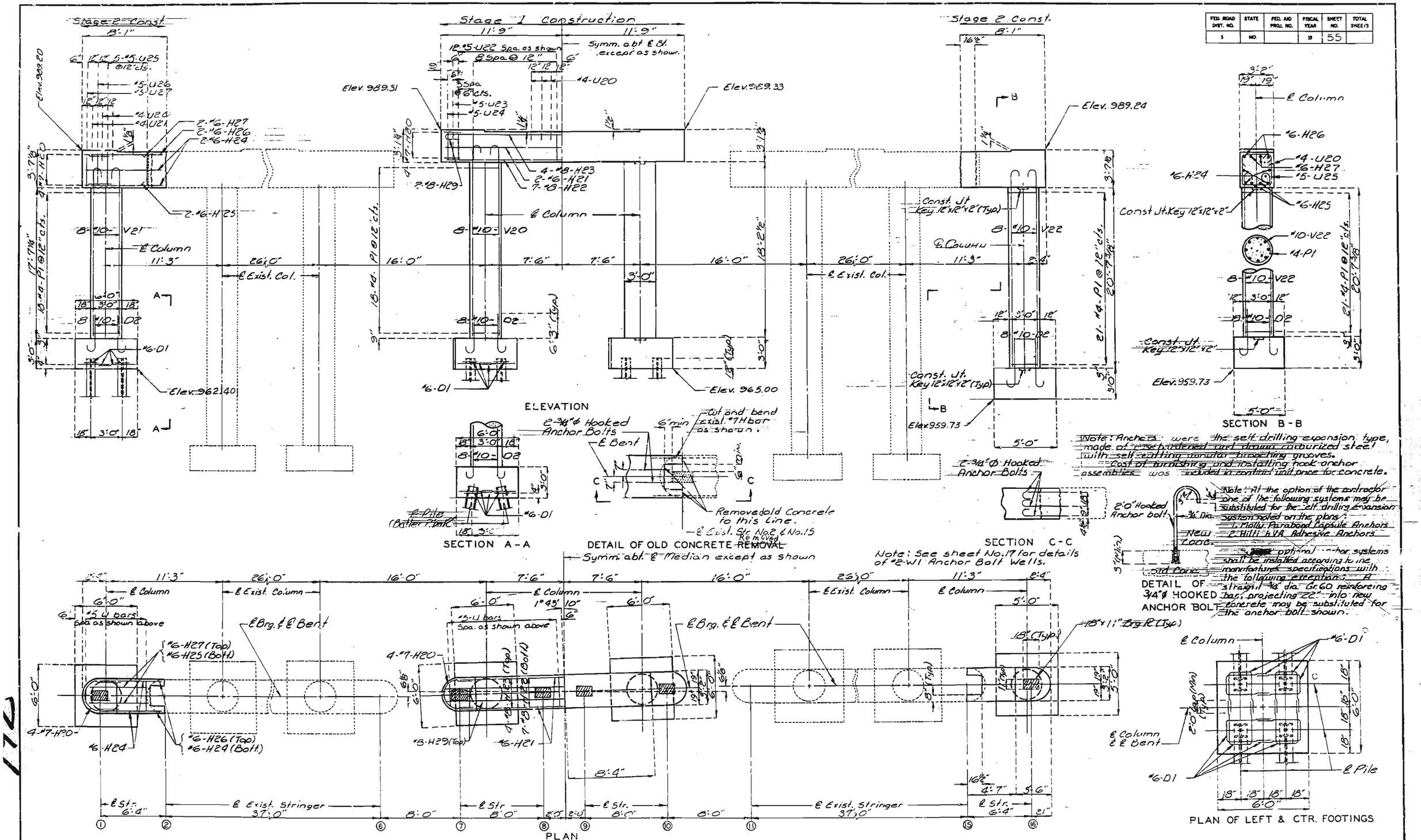

DETAILED MAR. 1981
CHECKED Sept. 1981

Note: This drawing is not to scale. Follow dimensions.

Sheet No. 8 of 22.

JACKSON COUNTY

L-972 R

FED. ROAD DIST. NO.	STATE	FED. AID PROJ. NO.	FISCAL YEAR	SHEET NO.	TOTAL SHEETS
5	MO.		19	56	

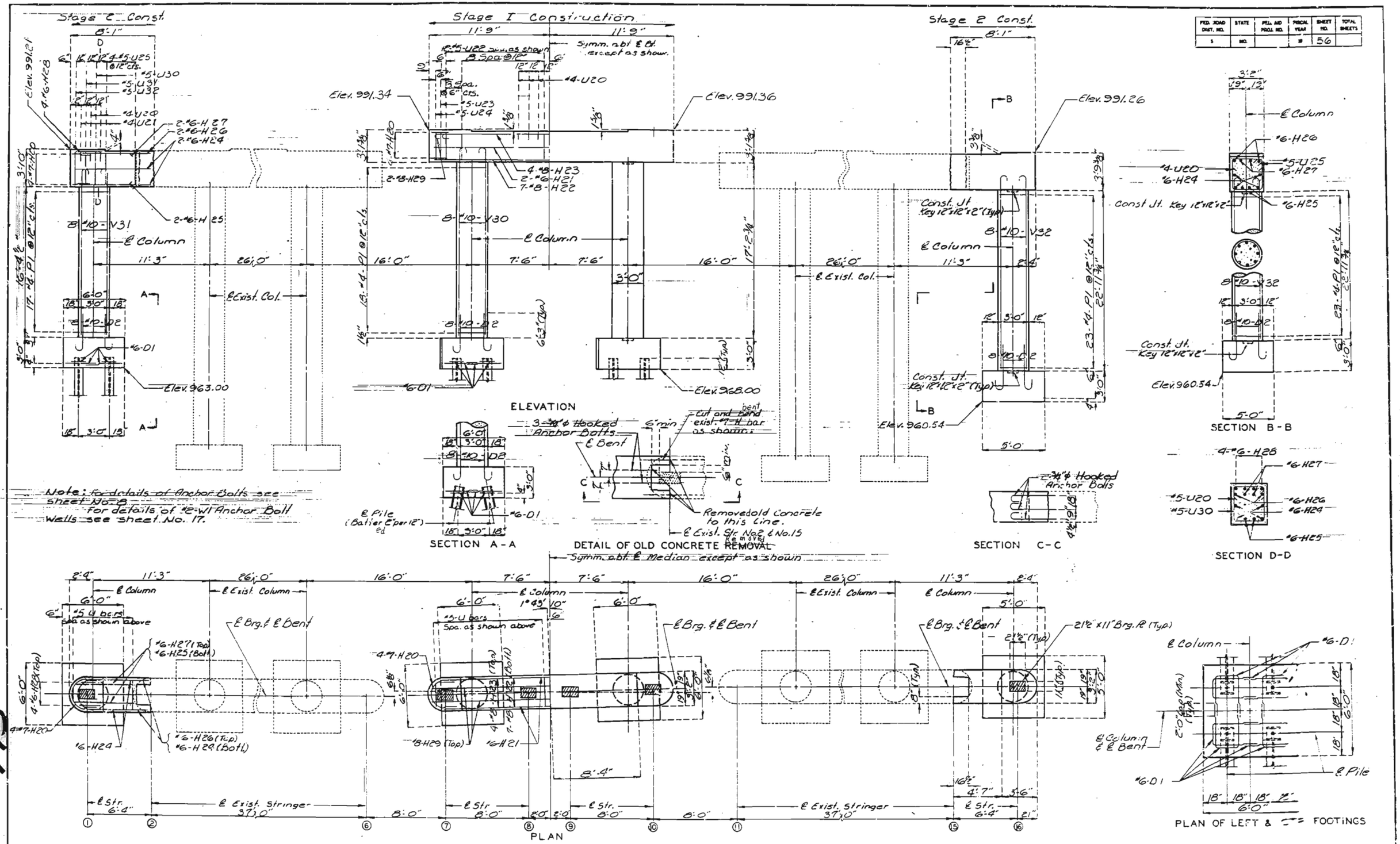

DETAILED MAR. 1981
CHECKED Sept. 1981

Note: This drawing is not to scale. Follow dimensions.

DETAILS OF INT. BENT NO. 3

Sheet No. 4 of 24

JACKSON COUNTY

L-972 R

193

SEC/SUR 21 TWP 49N RGE 32W

MISSOURI HIGHWAYS AND TRANSPORTATION COMMISSION

U.I.P. & REHAB EXIST. (42'-60'-52') CONTINUOUS COMPOSITE WIDE FLANGE BEAM SPANS

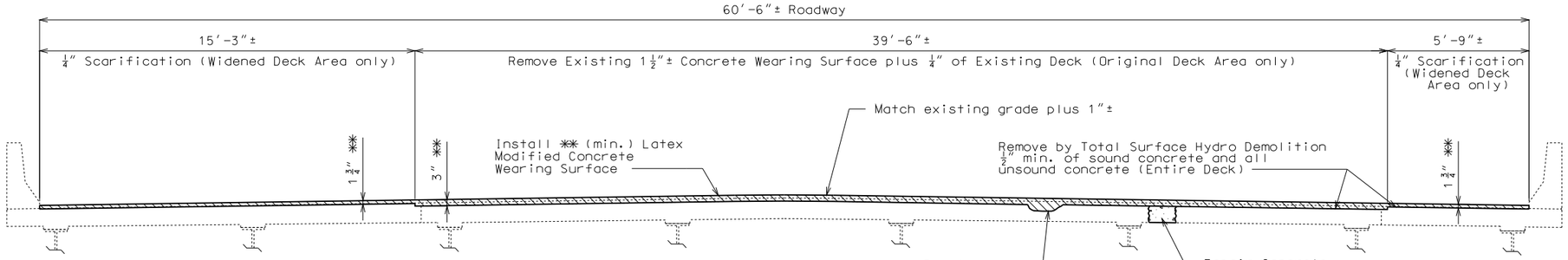

SECTION THRU EXISTING SLAB

General Notes:

Design Specifications:
2002 - AASHTO 17th Edition
Bridge Deck Rating = 4

Structural Steel Protective Coating:
Protective Coating: Calcium Sulfonate System in accordance with Sec 1081.

Protective Coating Limits: The surfaces of all bearings and anchor bolts at Int. Bents No. 2 & 3.

Surface Preparation: Surface preparation of the bearings and anchor bolts shall be in accordance with Sec 1081 for "Overcoating of Structural Steel (Calcium Sulfonate System)".

Topcoat: The color of the topcoat shall be Gray (Federal Standard #26373).

The cost of the complete protective coating system will be considered completely covered by the contract unit price for "Cleaning and Coating Existing Bearings".

Miscellaneous:
Roadway surfacing adjacent to bridge ends shall match bridge overlay (Rdwy. Item).

"Sec" refers to the sections in the standard and supplemental specifications unless specified otherwise.

Outline of old work is indicated by light dashed lines. Heavy lines indicate new work.

Contractor shall verify all dimensions in field before ordering new material.

In order to maintain grade and a minimum thickness of overlay as shown on plans it may be necessary to use additional quantities of overlay at various locations throughout the structure. See Special Provisions for Method of Measurement.

Traffic Control:
Close structure during construction and maintain EB traffic on WB bridge (L09723). See Roadway Plans for Traffic Control.

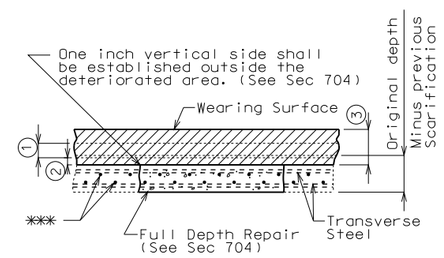

FULL DEPTH REPAIR
(Original Deck Area)

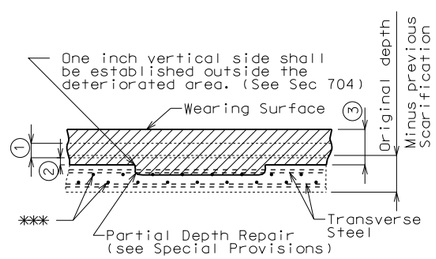

PARTIAL DEPTH REPAIR
(Original Deck Area)

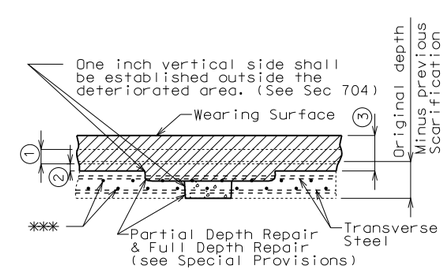

FULL DEPTH AREA IN PARTIAL DEPTH REPAIR
(Original Deck Area)

① Remove existing 1½"± concrete wearing surface plus ¼" of exist. deck.

② Remove by Total Surface Hydro Demolition ½" min. sound concrete and all unsound concrete.

③ 3" (Min.) Latex Modified Concrete Wearing Surface.

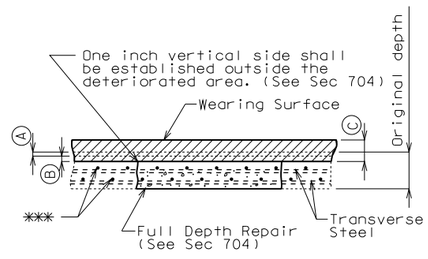

FULL DEPTH REPAIR
(Widened Deck Area)

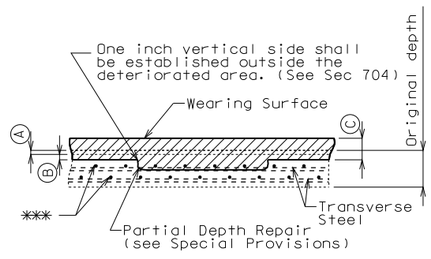

PARTIAL DEPTH REPAIR
(Widened Deck Area)

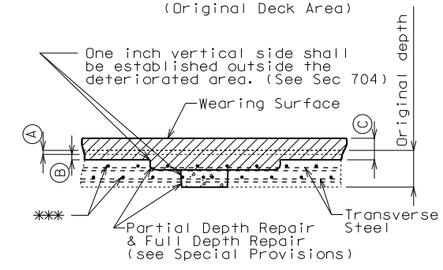

FULL DEPTH AREA IN PARTIAL DEPTH REPAIR
(Widened Deck Area)

Ⓐ Scarify existing slab (¼" min.)

Ⓑ Remove by Total Surface Hydro Demolition ½" min. of sound concrete and all unsound concrete.

Ⓒ 1¾" (min.) Latex Modified Concrete Wearing Surface.

✱✱✱ Longitudinal Steel

Estimated Quantities

Item		Total
Scarification of Bridge Decks	sq. yard	367
Removal of Concrete Wearing Surface	sq. foot	6,216
Latex Modified Concrete Wearing Surface	sq. yard	1,058
Substructure Repair (Unformed)	sq. foot	200
Full Depth Repair	sq. foot	3,750
Total Surface Hydro Demolition	sq. yard	1,058
Cleaning and Coating Existing Bearings	each	16

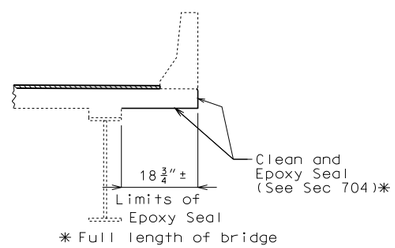

✱ Full length of bridge

SECTION SHOWING EPOXY SEAL AT SLAB EDGE
(Right side only)

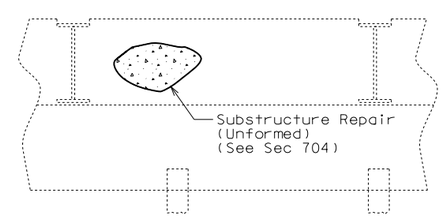

TYPICAL ELEVATION OF END BENTS NO. 1 & 4 SHOWING SUBSTRUCTURE REPAIR

REPAIRS TO BRIDGE: RTE. I-70 EBL OVER STERLING AVENUE

STATE ROAD FROM RTE. I-435 TO RTE. I-470

ABOUT 2.1 MILES EAST OF RTE. I-435

STA. 451+20.02± (Match Exist.)

Detailed July 2010
Checked Sep. 2010

Note: This drawing is not to scale. Follow dimensions.

Sheet No. 1 of 1

STATE OF MISSOURI
DANIEL M. SMITH
NUMBER PE-28985
PROFESSIONAL ENGINEER
THIS SHEET HAS BEEN SIGNED, SEALED AND DATED ELECTRONICALLY.

DATE PREPARED	
12/22/2010	
ROUTE I-70	STATE MO
DISTRICT BR	SHEET NO. 1
COUNTY JACKSON	
JOB NO. J4I1790B	
CONTRACT ID.	
PROJECT NO.	
BRIDGE NO. L09722	

DATE	DESCRIPTION

MISSOURI HIGHWAYS AND TRANSPORTATION COMMISSION
105 WEST CAPITOL
JEFFERSON CITY, MO 65102
1-888-ASK-MODOT (1-888-275-6636)

IF A SEAL IS PRESENT ON THIS SHEET IT HAS BEEN ELECTRONICALLY SEALED AND DATED.

SEC/SUR 21 TWP 49N RGE 32W

MISSOURI HIGHWAYS AND TRANSPORTATION COMMISSION

U.I.P. & REHAB EXIST. (42'-60'-52') CONTINUOUS COMPOSITE WIDE FLANGE BEAM SPANS

FINAL PLANS

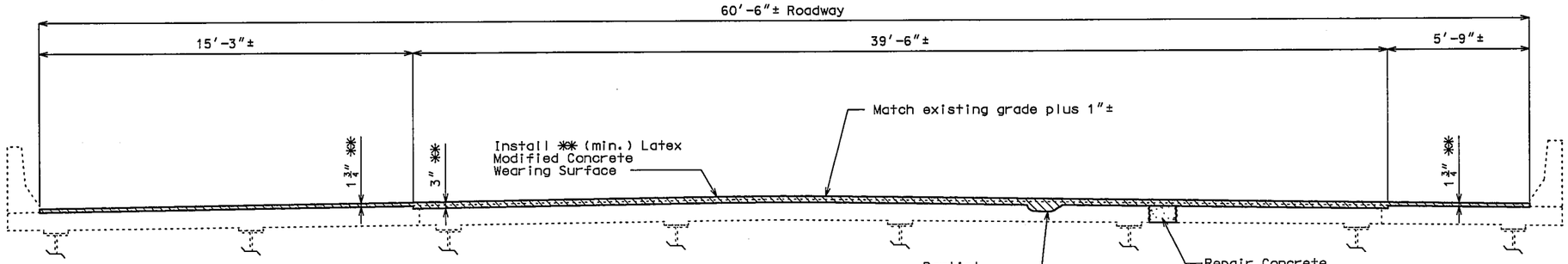

SECTION THRU EXISTING SLAB

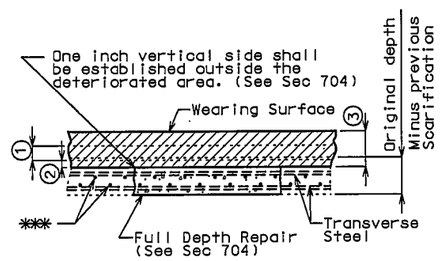

FULL DEPTH REPAIR
(Original Deck Area)

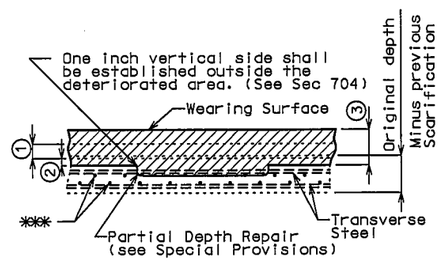

PARTIAL DEPTH REPAIR
(Original Deck Area)

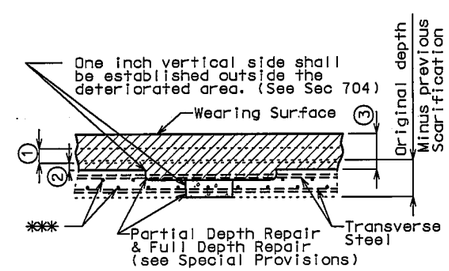

FULL DEPTH AREA IN PARTIAL DEPTH REPAIR
(Original Deck Area)

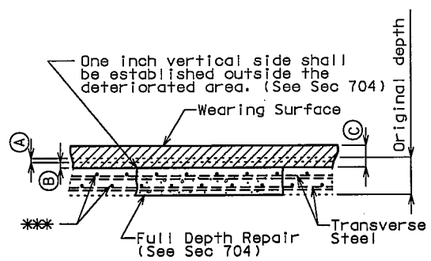

FULL DEPTH REPAIR
(Widened Deck Area)

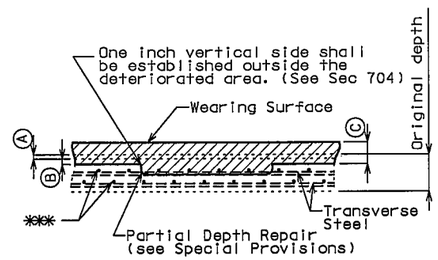

PARTIAL DEPTH REPAIR
(Widened Deck Area)

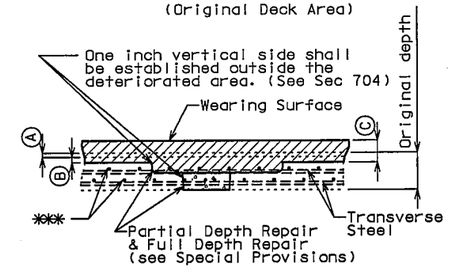

FULL DEPTH AREA IN PARTIAL DEPTH REPAIR
(Widened Deck Area)

✱✱✱ Longitudinal Steel

Final Quantities			
Item		Total	Line No.
Scarification of Bridge Decks	sq. yard	367	0870
Removal of Concrete Wearing Surface	sq. foot	6,216	0880
Latex Modified Concrete Wearing Surface	sq. yard	1,058	0890
Substructure Repair (Unformed)	sq. foot	188	0900
Full Depth Repair	sq. foot	82	0910
Total Surface Hydro Demolition	sq. yard	1,058	0920
Cleaning and Coating Existing Bearings	each	16	0930
Partial Depth Repair Line 5008	cu. yard	55	5008

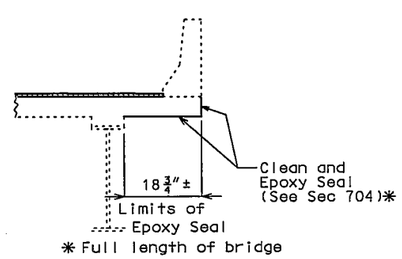

SECTION SHOWING EPOXY SEAL AT SLAB EDGE
(Right side only)

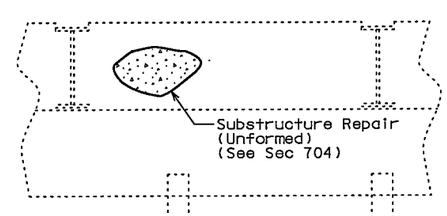

TYPICAL ELEVATION OF END BENTS NO. 1 & 4 SHOWING SUBSTRUCTURE REPAIR

REPAIRS TO BRIDGE: RTE. I-70 EBL OVER STERLING AVENUE

STATE ROAD FROM RTE. I-435 TO RTE. I-470

ABOUT 2.1 MILES EAST OF RTE. I-435

STA. 451+20.02± (Match Exist.)

Detailed July 2010
Checked Sep. 2010

Note: This drawing is not to scale. Follow dimensions.

Sheet No. 1 of 1

"THIS MEDIA SHOULD NOT BE CONSIDERED A CERTIFIED DOCUMENT."

DATE PREPARED	
6/12/2012	
ROUTE I-70	STATE MO
DISTRICT KC	SHEET NO. 1
COUNTY JACKSON	
JOB NO. J4I1790B	
CONTRACT ID. 110218-402	
PROJECT NO. I-70-1 (192)	
BRIDGE NO. L09722	

DATE	DESCRIPTION

MISSOURI HIGHWAYS AND TRANSPORTATION COMMISSION
105 WEST CAPITOL
JEFFERSON CITY, MO 65102
1-888-ASK-MODOT (1-888-275-6636)

IF A SEAL IS PRESENT ON THIS SHEET IT HAS BEEN ELECTRONICALLY SEALED AND DATED.

SEC/SUR 21 TWP 49N RGE 32W

MISSOURI HIGHWAYS AND TRANSPORTATION COMMISSION

U.I.P. & REHAB EXIST. (42'-60'-52') CONTINUOUS COMPOSITE WIDE FLANGE BEAM SPANS

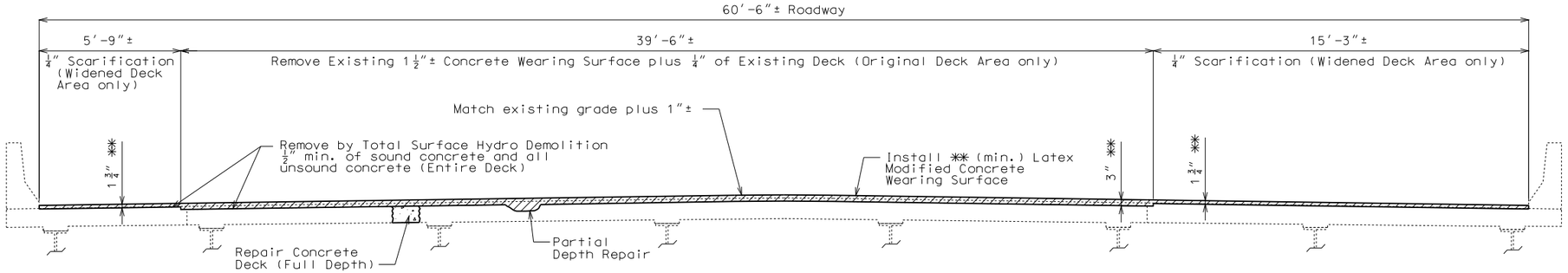

SECTION THRU EXISTING SLAB

General Notes:

Design Specifications:
2002 - AASHTO 17th Edition
Bridge Deck Rating = 4

Structural Steel Protective Coating:
Protective Coating: Calcium Sulfonate System in accordance with Sec 1081.

Protective Coating Limits: The surfaces of all bearings and anchor bolts at Int. Bents No. 2 & 3.

Surface Preparation: Surface preparation of the bearings and anchor bolts shall be in accordance with Sec 1081 for "Overcoating of Structural Steel (Calcium Sulfonate System)".

Topcoat: The color of the topcoat shall be Gray (Federal Standard #26373).

The cost of the complete protective coating system will be considered completely covered by the contract unit price for "Cleaning and Coating Existing Bearings".

Miscellaneous:
Roadway surfacing adjacent to bridge ends shall match bridge overlay (Rdwy. Item).

"Sec" refers to the sections in the standard and supplemental specifications unless specified otherwise.

Outline of old work is indicated by light dashed lines. Heavy lines indicate new work.

Contractor shall verify all dimensions in field before ordering new material.

In order to maintain grade and a minimum thickness of overlay as shown on plans it may be necessary to use additional quantities of overlay at various locations throughout the structure. See Special Provisions for Method of Measurement.

Traffic Control:
Close structure during construction and maintain WB traffic on EB bridge (L09722). See Roadway Plans for Traffic Control.

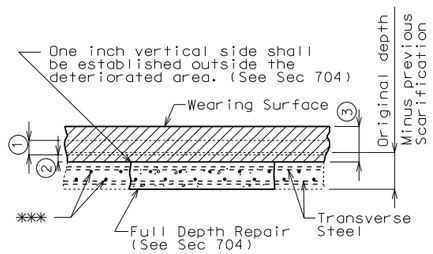

FULL DEPTH REPAIR
(Original Deck Area)

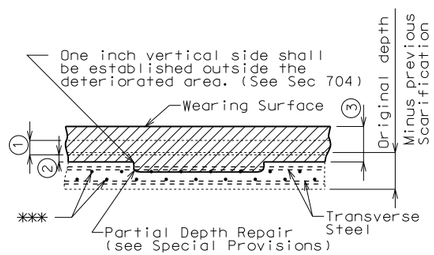

PARTIAL DEPTH REPAIR
(Original Deck Area)

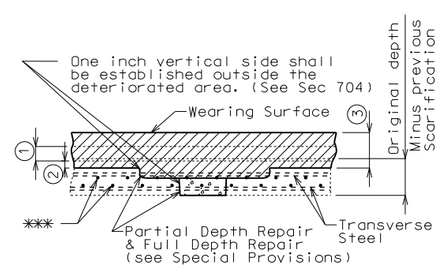

FULL DEPTH AREA IN PARTIAL DEPTH REPAIR
(Original Deck Area)

1. Remove existing 1½"± concrete wearing surface plus ¼" of exist. deck.
2. Remove by Total Surface Hydro Demolition ½" min. of sound concrete and all unsound concrete.
3. 3" (Min.) Latex Modified Concrete Wearing Surface.

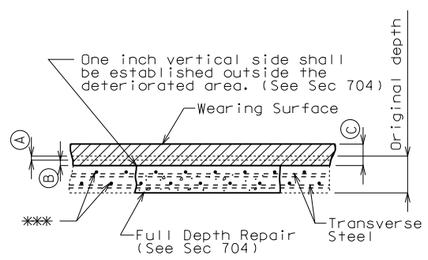

FULL DEPTH REPAIR
(Widened Deck Area)

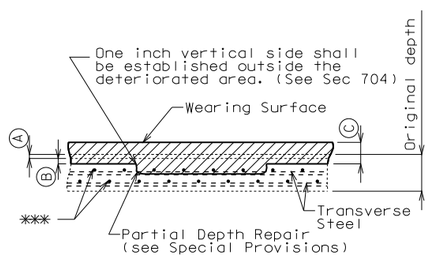

PARTIAL DEPTH REPAIR
(Widened Deck Area)

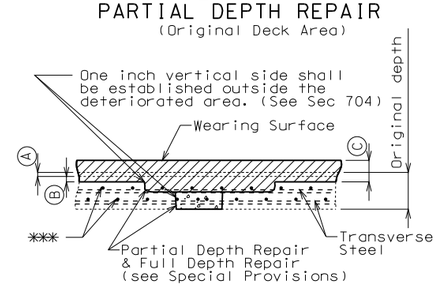

FULL DEPTH AREA IN PARTIAL DEPTH REPAIR
(Widened Deck Area)

A. Scarify existing slab (¼" min.)
B. Remove by Total Surface Hydro Demolition ½" min. of sound concrete and all unsound concrete.
C. 1¾" (min.) Latex Modified Concrete Wearing Surface.

✱✱✱ Longitudinal Steel

Estimated Quantities

Item		Total
Scarification of Bridge Decks	sq. yard	367
Removal of Concrete Wearing Surface	sq. foot	6,216
Latex Modified Concrete Wearing Surface	sq. yard	1,058
Substructure Repair (Unformed)	sq. foot	200
Full Depth Repair	sq. foot	3,750
Total Surface Hydro Demolition	sq. yard	1,058
Cleaning and Coating Existing Bearings	each	16

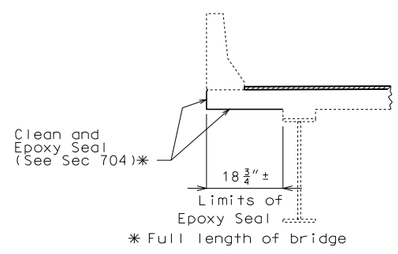

SECTION SHOWING EPOXY SEAL AT SLAB EDGE
(Left side only)

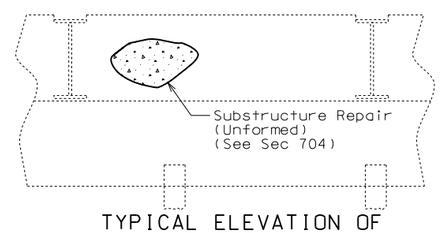

TYPICAL ELEVATION OF END BENTS NO. 1 & 4 SHOWING SUBSTRUCTURE REPAIR

REPAIRS TO BRIDGE: RTE. I-70 WBL OVER STERLING AVENUE

STATE ROAD FROM RTE. I-435 TO RTE. I-470

ABOUT 2.1 MILES EAST OF RTE. I-435

STA. 451+19.00± (Match Exist.)

Detailed July 2010
Checked Sep. 2010

Note: This drawing is not to scale. Follow dimensions.

Sheet No. 1 of 1

STATE OF MISSOURI
DANIEL M. SMITH
NUMBER PE-28985
PROFESSIONAL ENGINEER
THIS SHEET HAS BEEN SIGNED, SEALED AND DATED ELECTRONICALLY.

DATE PREPARED	
12/22/2010	
ROUTE I-70	STATE MO
DISTRICT BR	SHEET NO. 1
COUNTY JACKSON	
JOB NO. J4I1790B	
CONTRACT ID.	
PROJECT NO.	
BRIDGE NO. L09723	

DESCRIPTION

DATE

MISSOURI HIGHWAYS AND TRANSPORTATION COMMISSION
105 WEST CAPITOL
JEFFERSON CITY, MO 65102
1-888-ASK-MODOT (1-888-275-6636)

IF A SEAL IS PRESENT ON THIS SHEET IT HAS BEEN ELECTRONICALLY SEALED AND DATED.

$FILE$

SEC/SUR 21 TWP 49N RGE 32W

MISSOURI HIGHWAYS AND TRANSPORTATION COMMISSION

U.I.P. & REHAB EXIST. (42'-60'-52') CONTINUOUS COMPOSITE WIDE FLANGE BEAM SPANS

FINAL PLANS

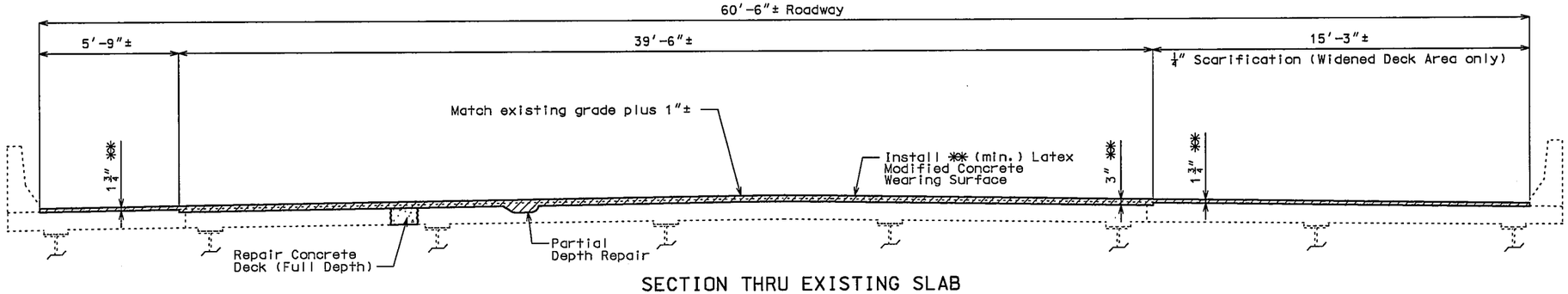

SECTION THRU EXISTING SLAB

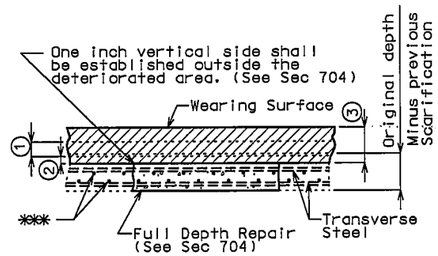

FULL DEPTH REPAIR
(Original Deck Area)

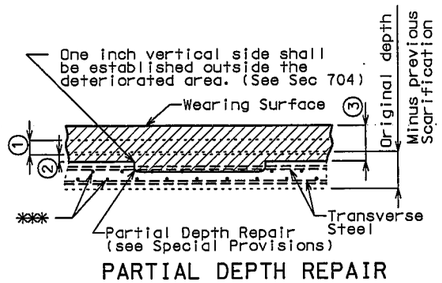

PARTIAL DEPTH REPAIR
(Original Deck Area)

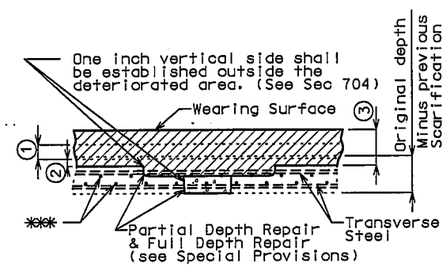

FULL DEPTH AREA IN PARTIAL DEPTH REPAIR
(Original Deck Area)

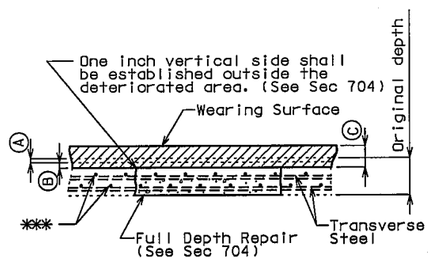

FULL DEPTH REPAIR
(Widened Deck Area)

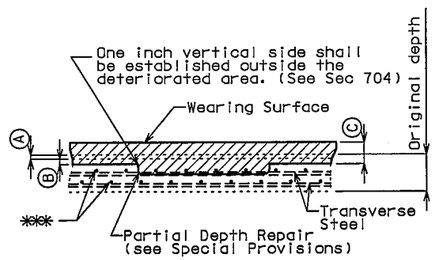

PARTIAL DEPTH REPAIR
(Widened Deck Area)

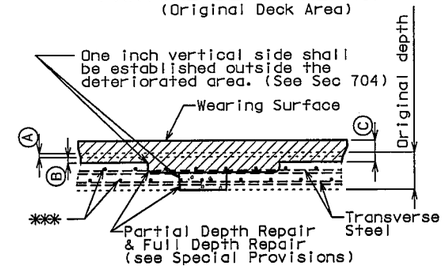

FULL DEPTH AREA IN PARTIAL DEPTH REPAIR
(Widened Deck Area)

✱✱✱ Longitudinal Steel

Final Quantities			
Item		Total	Line No.
Scarification of Bridge Decks	sq. yard	367	0940
Removal of Concrete Wearing Surface	sq. foot	6,216	0950
Latex Modified Concrete Wearing Surface	sq. yard	✱1,058	0960
Substructure Repair (Unformed)	sq. foot	175	0970
Full Depth Repair	sq. foot	3,073	0980
Total Surface Hydro Demolition	sq. yard	✱1,058	0990
Cleaning and Coating Existing Bearings	each	16	1000
Partial Depth Repair	cu. yard	39.5	5011

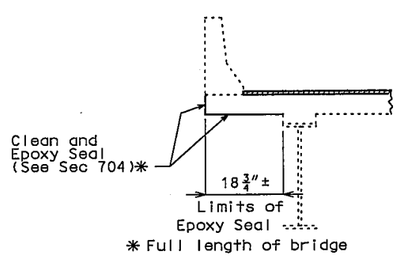

SECTION SHOWING EPOXY SEAL AT SLAB EDGE
(Left side only)

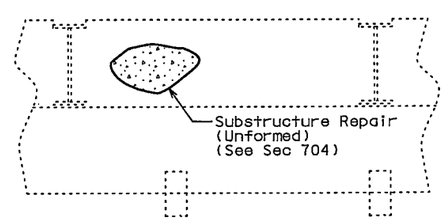

TYPICAL ELEVATION OF END BENTS NO. 1 & 4 SHOWING SUBSTRUCTURE REPAIR

REPAIRS TO BRIDGE: RTE. I-70 WBL OVER STERLING AVENUE

STATE ROAD FROM RTE. I-435 TO RTE. I-470

ABOUT 2.1 MILES EAST OF RTE. I-435

STA. 451+19.00± (Match Exist.)

Detailed July 2010
Checked Sep. 2010

Note: This drawing is not to scale. Follow dimensions.

Sheet No. 1 of 1

"THIS MEDIA SHOULD NOT BE CONSIDERED A CERTIFIED DOCUMENT."

DATE PREPARED	6/12/2012
ROUTE	I-70
STATE	MO
DISTRICT	KC
SHEET NO.	1
COUNTY	JACKSON
JOB NO.	J4I1790B
CONTRACT ID.	110218-402
PROJECT NO.	I-70-1 (192)
BRIDGE NO.	L09723

DATE	DESCRIPTION

MISSOURI HIGHWAYS AND TRANSPORTATION COMMISSION
105 WEST CAPITOL
JEFFERSON CITY, MO 65102
1-888-ASK-MODOT (1-888-275-6636)

IF A SEAL IS PRESENT ON THIS SHEET IT HAS BEEN ELECTRONICALLY SEALED AND DATED.