MISSOURI HIGHWAYS AND TRANSPORTATION COMMISSION
PLANS FOR PROPOSED
STATE HIGHWAY

RIGHT OF WAY PLANS
CAPE GIRARDEAU COUNTY

DESIGN DESIGNATION

AADT - 2021 = 3046
AADT - 2041 = 3204
DHV = 10.05%
T = 7.58%
V = 45/55 MPH
D = 49%/51%

FUNCTIONAL CLASSIFICATION - MAJOR COLLECTOR
MINOR ARTERIAL

CONVENTIONAL SYMBOLS
(USED IN PLANS)

	EXISTING	NEW
BUILDINGS AND STRUCTURES		
GUARD RAIL		
CONCRETE RIGHT-OF-WAY MARKER		
STEEL RIGHT-OF-WAY MARKER		
LOCATION SURVEY MARKER		
UTILITIES		
FIBER OPTICS	—FO—	—FO—
OVERHEAD TELEPHONE	—O—	—●—
UNDERGROUND TELEPHONE	—T—	—T—
OVERHEAD POWER	—□—	—■—
UNDERGROUND POWER	—P—	—P—
GAS	—G—	—G—
WATER	—W—	—W—
MANHOLE	SAN	
FIRE HYDRANT	HYD	
WATER VALVE	WV	
WATER METER	WM	
DROP INLET	DI	
DITCH BLOCK		
GROUND MOUNTED SIGN	SIGN	
LIGHT POLE		
H-FRAME POWER POLE		
TELEPHONE PEDESTAL	PED	
FENCE		
CHAIN LINK	—V—	
WOVEN WIRE	—X—	
GATE POST		
BENCHMARK	BM	

NOTE: DASHED OR OPEN SYMBOLS INDICATE EXISTING FEATURES

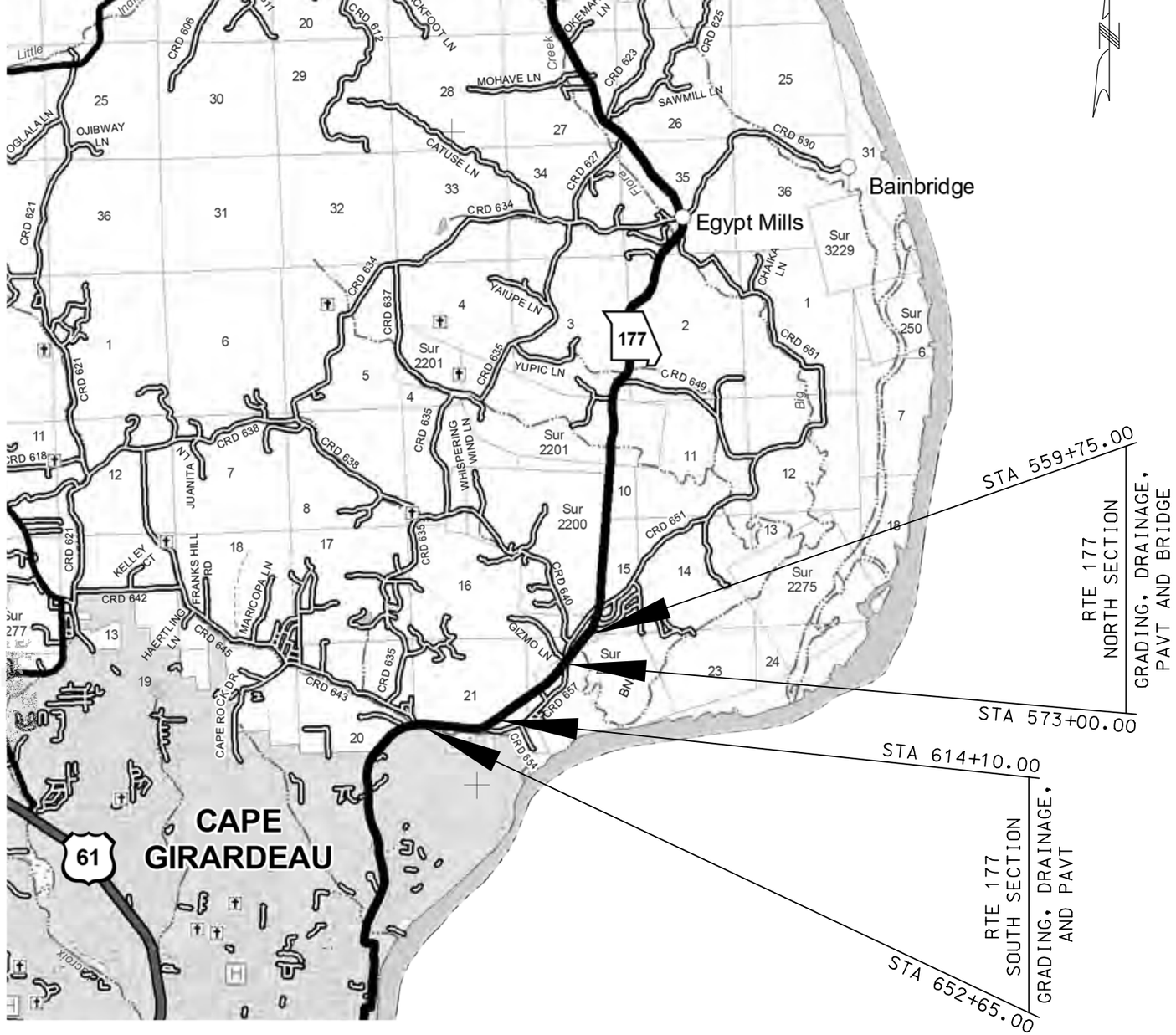

INDEX OF SHEETS

DESCRIPTION	SHEET NUMBER
TITLE SHEET	1
TYPICAL SECTIONS (TS) (4 SHEETS)	2
QUANTITIES (QU) (XX SHEETS)	3
PLAN-PROFILE (PP)	4-14
RIGHT OF WAY (RW)	XX-XX
COORDINATE POINTS (CP)	15

LENGTH OF PROJECT

RTE 177 - NORTH SECTION

BEGINNING OF PROJECT	STA	559+75.00	
END OF PROJECT	STA	573+00.00	
APPARENT LENGTH		1325.00	FEET

RTE 177 - SOUTH SECTION

BEGINNING OF PROJECT	STA	614+10.00	
END OF PROJECT	STA	652+65.00	
APPARENT LENGTH		3855.00	FEET

NET LENGTH OF PROJECT	5180.00	FEET
STATE LENGTH	0.98	MILES

"THIS MEDIA SHOULD NOT BE CONSIDERED A CERTIFIED DOCUMENT."

DATE PREPARED	6/22/2020
ROUTE	177
STATE	MO
DISTRICT	SE
SHEET NO.	1
COUNTY	CAPE GIRARDEAU
JOB NO.	J9S3452
CONTRACT ID.	
PROJECT NO.	
BRIDGE NO.	

DATE	DESCRIPTION

MISSOURI HIGHWAYS AND TRANSPORTATION COMMISSION
105 WEST CAPITOL
JEFFERSON CITY, MO 65102
1-888-ASK-MODOT (1-888-275-6636)

IF A SEAL IS PRESENT ON THIS SHEET IT HAS BEEN ELECTRONICALLY SEALED AND DATED.

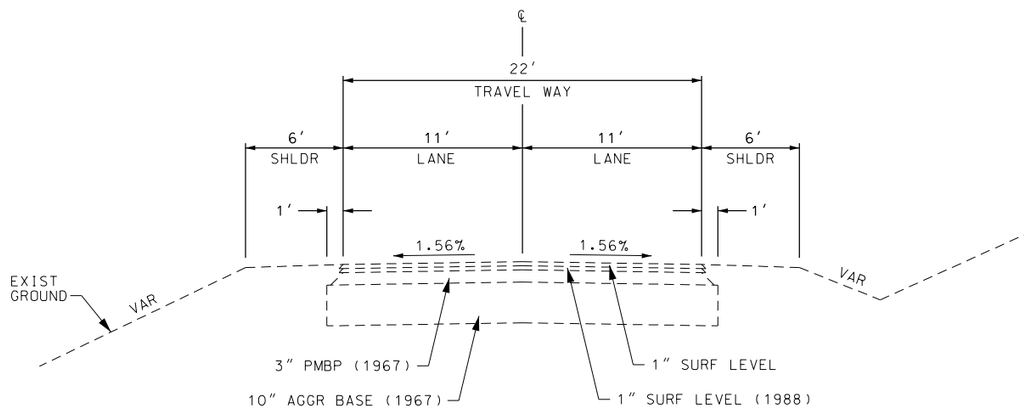

SECTION ON TANGENT

EXISTING TYPICAL SECTION RTE 177

STA 559+75.00 TO STA 573+00.00
STA 614+10.00 TO STA 652+65.00

DRAWING NOT TO SCALE. FOLLOW DIMENSIONS.

"THIS MEDIA SHOULD NOT BE CONSIDERED A CERTIFIED DOCUMENT."

DATE PREPARED	6/22/2020
ROUTE	177
STATE	MO
DISTRICT	SE
SHEET NO.	2
COUNTY	CAPE GIRARDEAU
JOB NO.	J9S3452
CONTRACT ID.	
PROJECT NO.	
BRIDGE NO.	

DESCRIPTION	DATE

MISSOURI HIGHWAYS AND TRANSPORTATION COMMISSION

105 WEST CAPITOL
JEFFERSON CITY, MO 65102
1-888-ASK-MODOT (1-888-275-6636)

TYPICAL SECTION
SHEET 1 OF 4

IF A SEAL IS PRESENT ON THIS SHEET IT HAS BEEN ELECTRONICALLY SEALED AND DATED.

REV.

OPTIONAL PAVEMENT

8.5" HMA
1.75" BP-1 PG 64-22 OVER 6.75" PMBB PG 64-22

8" CONCRETE
8" PCCP (15' JOINTS AND 1.25" DOWELS)

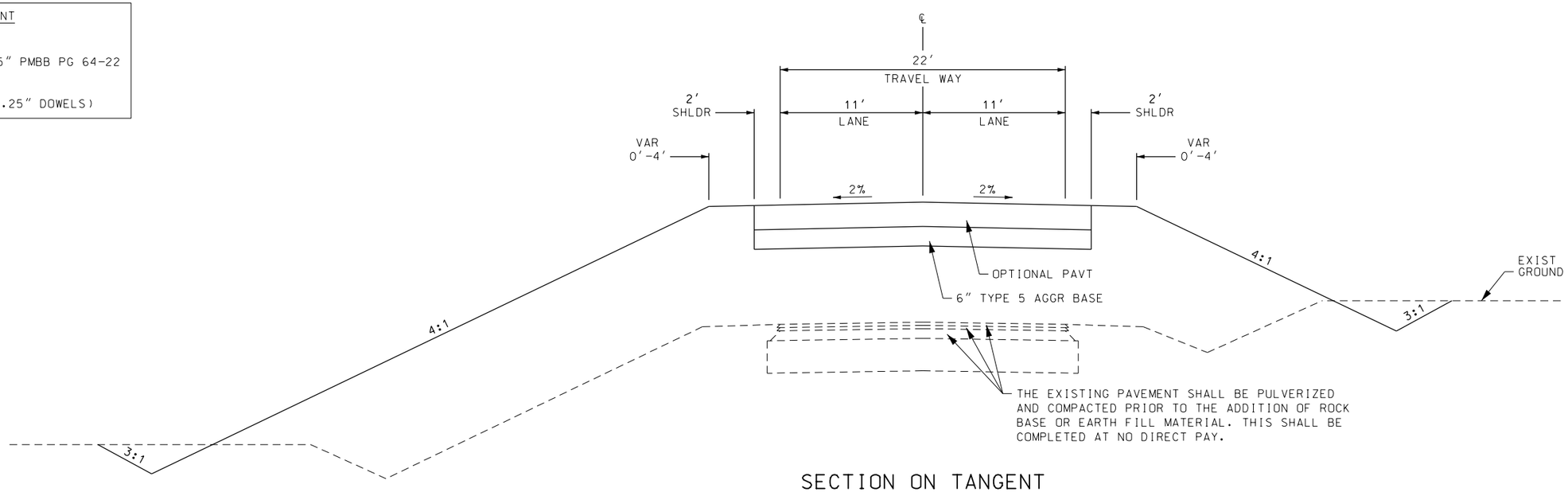

SECTION ON TANGENT
TYPICAL SECTION RTE 177

STA 559+75.00 TO STA 560+00.00 LT
STA 559+75.00 TO STA 560+40.00 RT

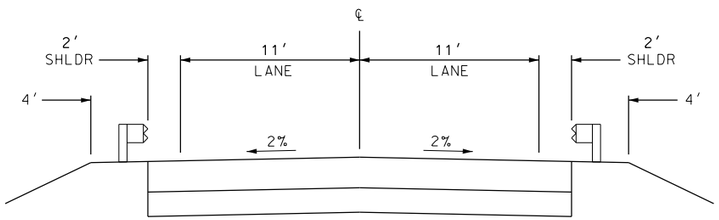

GUARDRAIL LOCATIONS

NOTE: SEE QUANTITY SHEETS FOR STATION LIMITS OF GUARDRAIL.

BR A8752
STA 565+14.49 TO STA 566+18.11

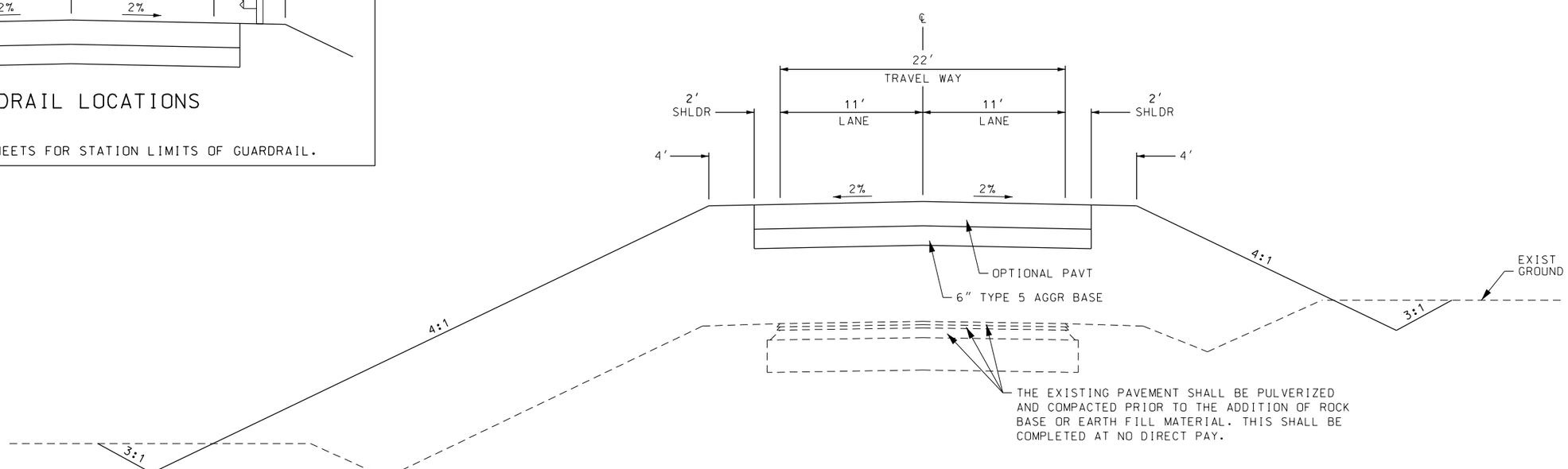

SECTION ON TANGENT
TYPICAL SECTION RTE 177

STA 560+00.00 TO STA 573+00.00 LT
STA 560+40.00 TO STA 573+00.00 RT

DRAWING NOT TO SCALE. FOLLOW DIMENSIONS.

"THIS MEDIA SHOULD NOT BE CONSIDERED A CERTIFIED DOCUMENT."

DATE PREPARED	7/22/2020
ROUTE 177	STATE MO
DISTRICT SE	SHEET NO. 2
COUNTY	CAPE GIRARDEAU
JOB NO.	J9S3452
CONTRACT ID.	
PROJECT NO.	
BRIDGE NO.	

DESCRIPTION	DATE

MISSOURI HIGHWAYS AND TRANSPORTATION COMMISSION
105 WEST CAPITOL
JEFFERSON CITY, MO 65102
1-888-ASK-MODOT (1-888-275-6636)

TYPICAL SECTION
SHEET 2 OF 4

IF A SEAL IS PRESENT ON THIS SHEET IT HAS BEEN ELECTRONICALLY SEALED AND DATED.

REV.

OPTIONAL PAVEMENT

8.5" HMA
1.75" BP-1 PG 64-22 OVER 6.75" PMBB PG 64-22

8" CONCRETE
8" PCCP (15' JOINTS AND 1.25" DOWELS)

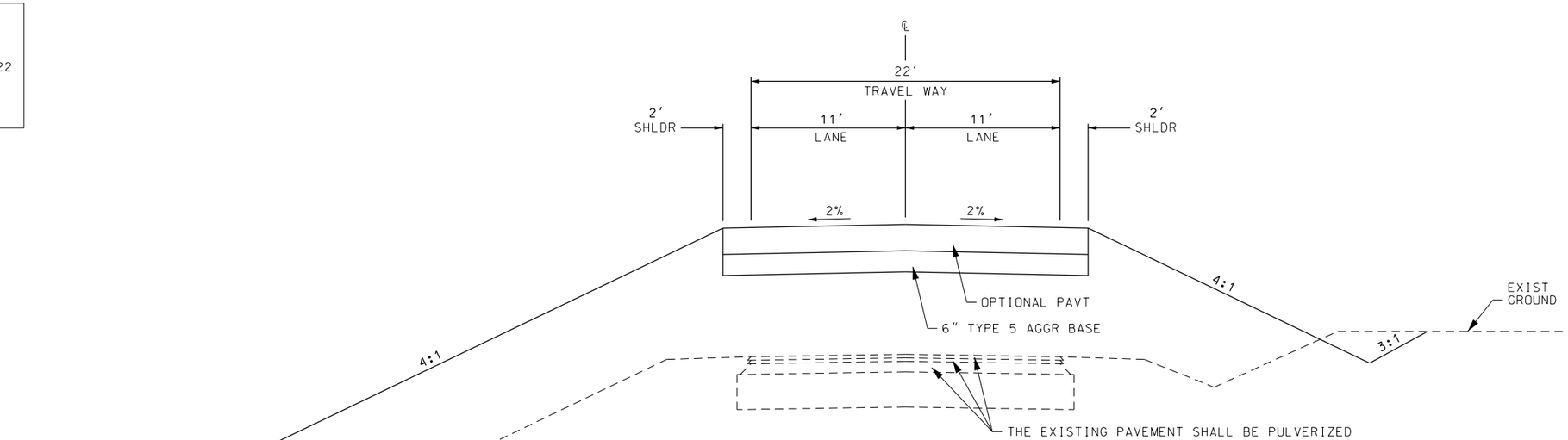

SECTION ON TANGENT
TYPICAL SECTION RTE 177
STA 614+10.00 TO STA 652+65.00

SUPERELEVATION TABLE

STATION	LOC	CROSS SLOPE	REMARKS	LOC	CROSS SLOPE	REMARKS
614+10.00	LT	-0.70%	EXIST CROSS SLOPE	RT	-2.20%	EXIST CROSS SLOPE
614+15.00				RT	-2.00%	TRANSITION FROM EXIST
614+40.00	LT	-2.00%	TRANSITION FROM EXIST			
619+35.51	LT	-2.00%	NORMAL CROWN IN			
619+86.54	LT	0.00%	LEVEL CROWN IN			
620+37.56	LT	2.00%	REVERSE CROWN IN	RT	-2.00%	NORMAL CROWN IN
621+85.54	LT	7.80%	FULL SUPER IN	RT	-7.80%	FULL SUPER IN
628+15.65	LT	-2.00%	FULL SUPER OUT	RT	-7.80%	FULL SUPER OUT
629+63.63	LT	2.00%	REVERSE CROWN OUT	RT	-2.00%	NORMAL CROWN OUT
630+14.65	LT	0.00%	LEVEL CROWN OUT			
630+65.68	LT	-2.00%	NORMAL CROWN OUT			
645+17.28				RT	-2.00%	NORMAL CROWN IN
645+68.15				RT	0.00%	LEVEL CROWN IN
646+19.02	LT	-2.00%	NORMAL CROWN IN	RT	2.00%	REVERSE CROWN IN
646+85.15	LT	-4.60%	FULL SUPER IN	RT	4.60%	FULL SUPER IN
652+20.00	LT	-4.60%	TRANSITION TO EXIST	RT	4.60%	TRANSITION TO EXIST
652+65.00	LT	-5.60%	EXIST CROSS SLOPE	RT	5.20%	EXIST CROSS SLOPE

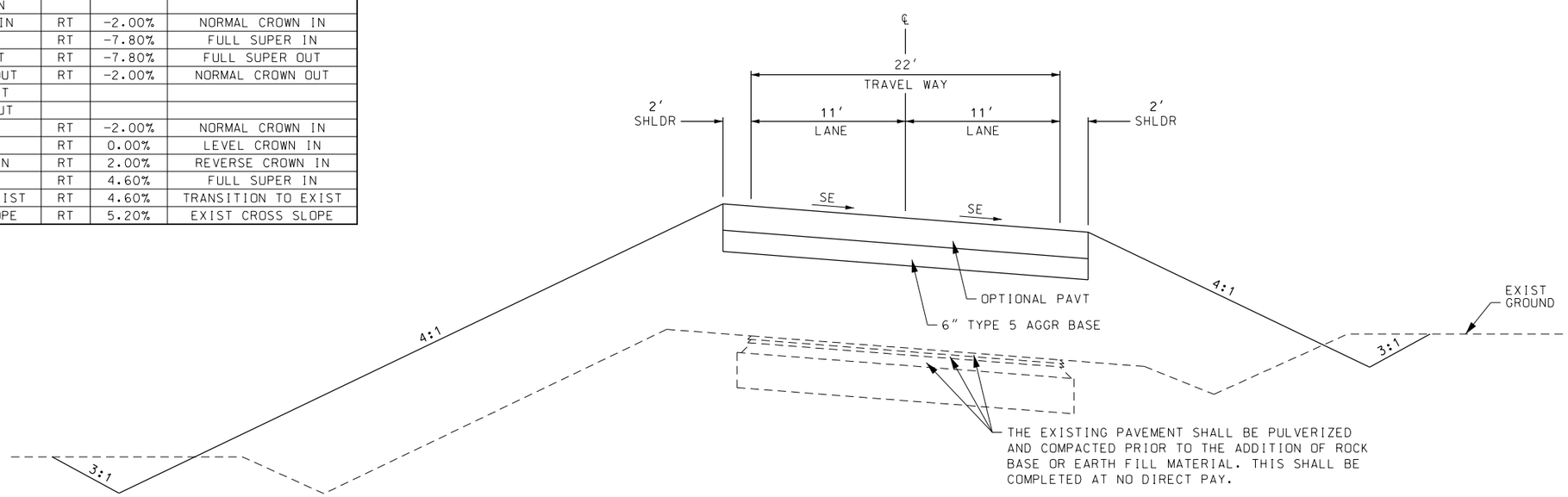

SECTION ON SUPERELEVATED CURVE
TYPICAL SECTION RTE 177
STA 614+10.00 TO STA 652+65.00

DRAWING NOT TO SCALE. FOLLOW DIMENSIONS.

"THIS MEDIA SHOULD NOT BE CONSIDERED A CERTIFIED DOCUMENT."

DATE PREPARED	7/22/2020
ROUTE	177
STATE	MO
DISTRICT	SE
SHEET NO.	2
COUNTY	CAPE GIRARDEAU
JOB NO.	J9S3452
CONTRACT ID.	
PROJECT NO.	
BRIDGE NO.	

DESCRIPTION

DATE

MISSOURI HIGHWAYS AND TRANSPORTATION COMMISSION

105 WEST CAPITOL
JEFFERSON CITY, MO 65102
1-888-ASK-MODOT (1-888-275-6636)

TYPICAL SECTION
SHEET 3 OF 4

IF A SEAL IS PRESENT ON THIS SHEET IT HAS BEEN ELECTRONICALLY SEALED AND DATED.

REV.

OPTIONAL PAVEMENT FOR COUNTY ROAD

7" HMA
1.75" BP-1 PG 64-22 OVER 5.25" PMBB PG 64-22

7"CONCRETE
7" PCCP (10' JOINTS)

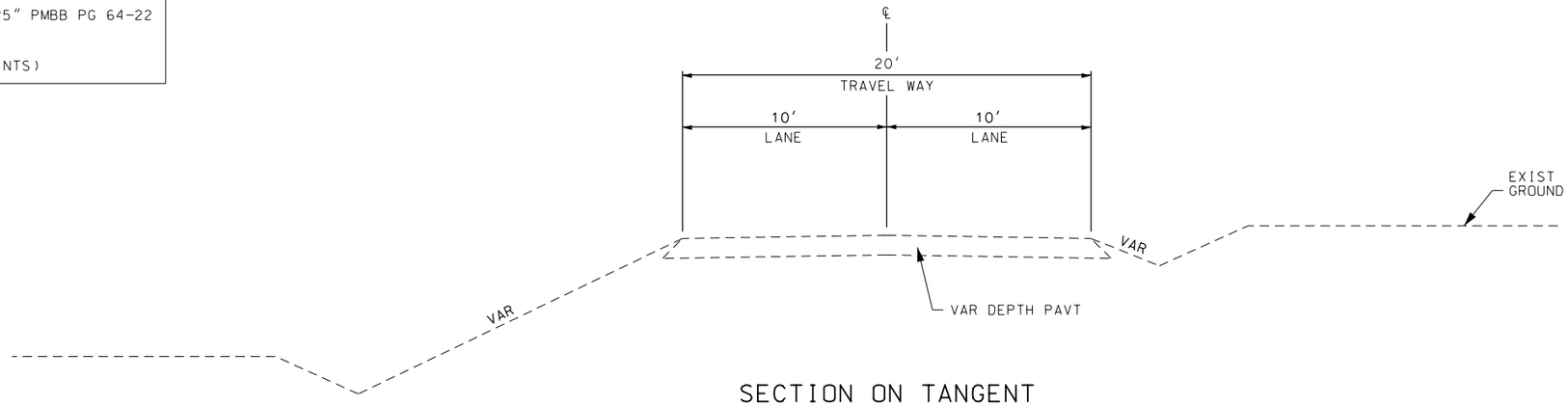

SECTION ON TANGENT
EXISTING TYPICAL SECTION CO RD 657
STA 0+00.00 TO STA 5+35.00

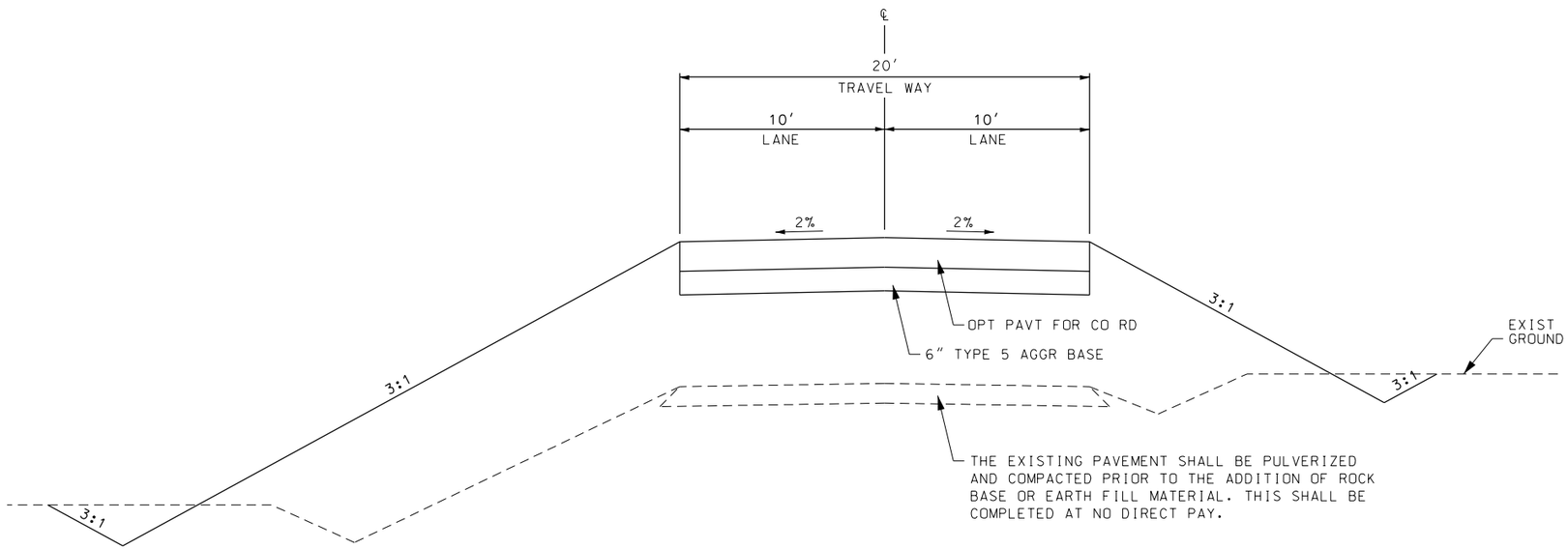

SECTION ON TANGENT
TYPICAL SECTION CO RD 657
STA 0+00.00 TO STA 5+35.00

DRAWING NOT TO SCALE. FOLLOW DIMENSIONS.

"THIS MEDIA SHOULD NOT BE CONSIDERED A CERTIFIED DOCUMENT."

DATE PREPARED	7/22/2020
ROUTE	177
STATE	MO
DISTRICT	SE
SHEET NO.	2
COUNTY	CAPE GIRARDEAU
JOB NO.	J9S3452
CONTRACT ID.	
PROJECT NO.	
BRIDGE NO.	

DESCRIPTION	DATE

MISSOURI HIGHWAYS AND TRANSPORTATION COMMISSION

105 WEST CAPITOL
JEFFERSON CITY, MO 65102
1-888-ASK-MODOT (1-888-275-6636)

TYPICAL SECTION
SHEET 4 OF 4

IF A SEAL IS PRESENT ON THIS SHEET IT HAS BEEN ELECTRONICALLY SEALED AND DATED.

REV.

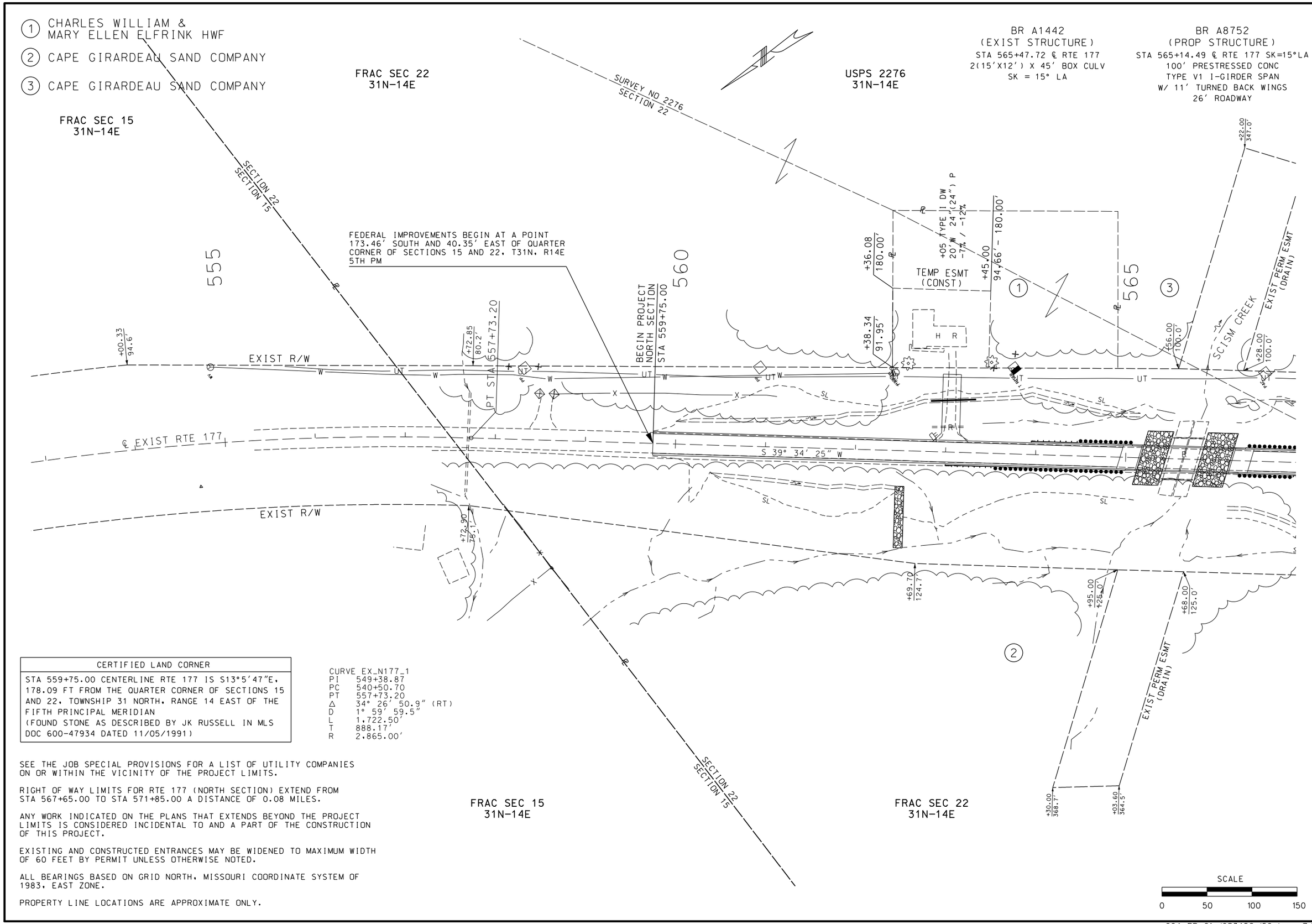

CERTIFIED LAND CORNER
STA 559+75.00 CENTERLINE RTE 177 IS S13°5'47"E, 178.09 FT FROM THE QUARTER CORNER OF SECTIONS 15 AND 22, TOWNSHIP 31 NORTH, RANGE 14 EAST OF THE FIFTH PRINCIPAL MERIDIAN (FOUND STONE AS DESCRIBED BY JK RUSSELL IN MLS DOC 600-47934 DATED 11/05/1991)

CURVE EX_N177_1
PI 549+38.87
PC 540+50.70
PT 557+73.20
Δ 34° 26' 50.9" (RT)
D 1° 59' 59.5"
L 1,722.50'
T 888.17'
R 2,865.00'

SEE THE JOB SPECIAL PROVISIONS FOR A LIST OF UTILITY COMPANIES ON OR WITHIN THE VICINITY OF THE PROJECT LIMITS.

RIGHT OF WAY LIMITS FOR RTE 177 (NORTH SECTION) EXTEND FROM STA 567+65.00 TO STA 571+85.00 A DISTANCE OF 0.08 MILES.

ANY WORK INDICATED ON THE PLANS THAT EXTENDS BEYOND THE PROJECT LIMITS IS CONSIDERED INCIDENTAL TO AND A PART OF THE CONSTRUCTION OF THIS PROJECT.

EXISTING AND CONSTRUCTED ENTRANCES MAY BE WIDENED TO MAXIMUM WIDTH OF 60 FEET BY PERMIT UNLESS OTHERWISE NOTED.

ALL BEARINGS BASED ON GRID NORTH, MISSOURI COORDINATE SYSTEM OF 1983, EAST ZONE.

PROPERTY LINE LOCATIONS ARE APPROXIMATE ONLY.

"THIS MEDIA SHOULD NOT BE CONSIDERED A CERTIFIED DOCUMENT."

DATE PREPARED	
8/3/2020	
ROUTE 177	STATE MO
DISTRICT SE	SHEET NO. 4
COUNTY CAPE GIRARDEAU	
JOB NO. J9S3452	
CONTRACT ID.	
PROJECT NO.	
BRIDGE NO.	

DESCRIPTION	DATE

MISSOURI HIGHWAYS AND TRANSPORTATION COMMISSION
105 WEST CAPITOL
JEFFERSON CITY, MO 65102
1-888-ASK-MODOT (1-888-275-6636)

IF A SEAL IS PRESENT ON THIS SHEET IT HAS BEEN ELECTRONICALLY SEALED AND DATED.

REV.

004_PP_01_J9S3452_I50.dgn 7:03:52 AM 8/3/2020

BENCH MARKS - NAVD DATUM-1988

BM #1 - 80D NAIL ON W SIDE PP 82.78' LT OF ℄ RTE 177 STA 555+38.13 ELEV 397.29

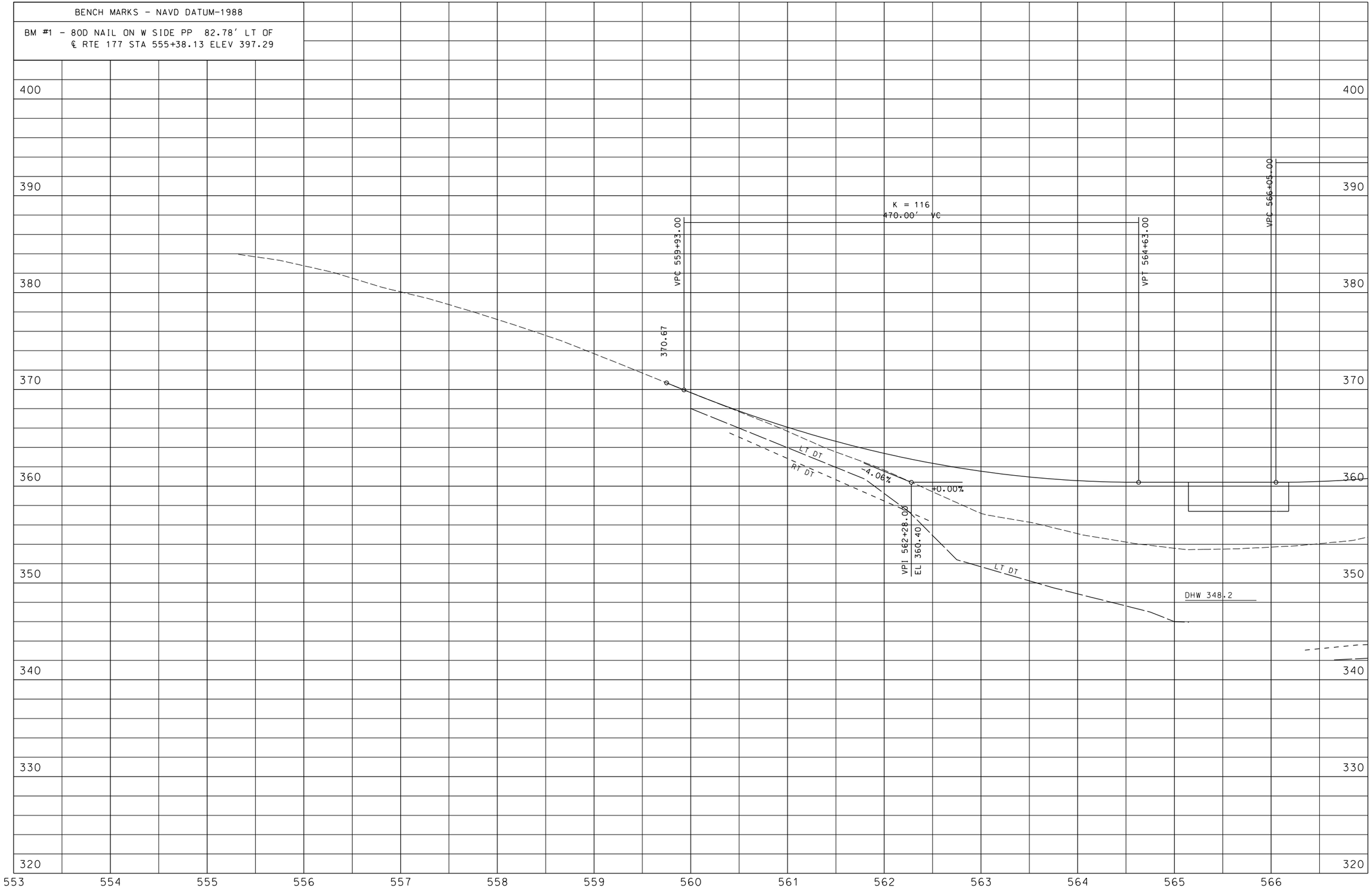

"THIS MEDIA SHOULD NOT BE CONSIDERED A CERTIFIED DOCUMENT."

DATE PREPARED	
6/18/2020	
ROUTE 177	STATE MO
DISTRICT SE	SHEET NO. 5
COUNTY CAPE GIRARDEAU	
JOB NO. J9S3452	
CONTRACT ID.	
PROJECT NO.	
BRIDGE NO.	

DATE	DESCRIPTION

MISSOURI HIGHWAYS AND TRANSPORTATION COMMISSION

105 WEST CAPITOL
JEFFERSON CITY, MO 65102
1-888-ASK-MODOT (1-888-275-6636)

IF A SEAL IS PRESENT ON THIS SHEET IT HAS BEEN ELECTRONICALLY SEALED AND DATED.

REV.

005_PP_02_J9S3452_I50.dgn 10:06:27 AM 6/18/2020

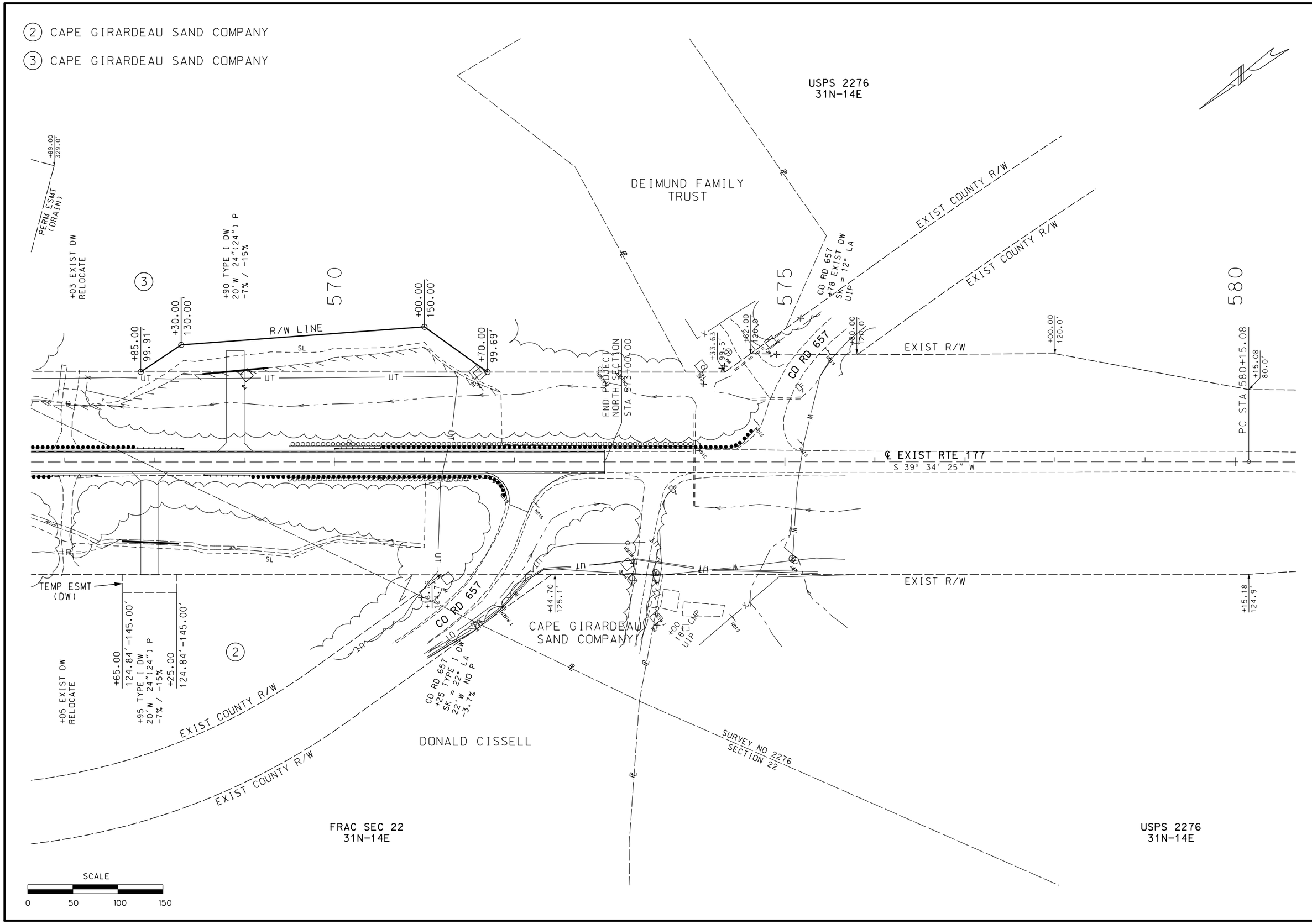

"THIS MEDIA SHOULD NOT BE CONSIDERED A CERTIFIED DOCUMENT."

DATE PREPARED	7/7/2020
ROUTE	177
STATE	MO
DISTRICT	SE
SHEET NO.	6
COUNTY	CAPE GIRARDEAU
JOB NO.	J9S3452
CONTRACT ID.	
PROJECT NO.	
BRIDGE NO.	

DATE	DESCRIPTION

MISSOURI HIGHWAYS AND TRANSPORTATION COMMISSION

105 WEST CAPITOL
JEFFERSON CITY, MO 65102
1-888-ASK-MODOT (1-888-275-6636)

IF A SEAL IS PRESENT ON THIS SHEET IT HAS BEEN ELECTRONICALLY SEALED AND DATED.

BENCH MARKS - NAVD DATUM-1988

BM #2 - 80D NAIL ON N ROOT 36" SYCAMORE
106.65' RT OF ℄ RTE 177 STA 572+38.84
ELEV 366.35

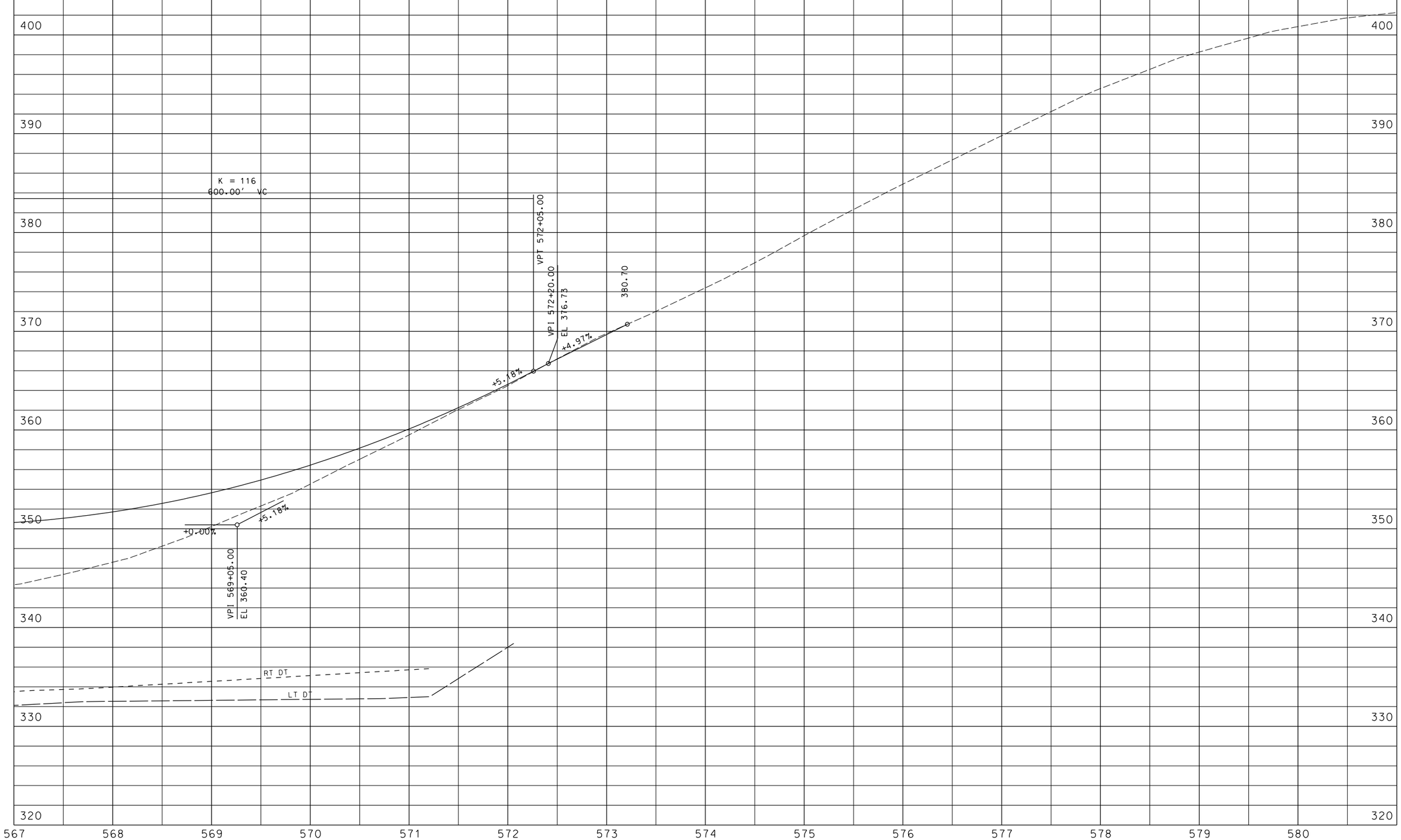

"THIS MEDIA SHOULD NOT BE CONSIDERED A CERTIFIED DOCUMENT."

DATE PREPARED	6/18/2020
ROUTE	177
STATE	MO
DISTRICT	SE
SHEET NO.	7
COUNTY	CAPE GIRARDEAU
JOB NO.	J9S3452
CONTRACT ID.	
PROJECT NO.	
BRIDGE NO.	

DATE	DESCRIPTION

MISSOURI HIGHWAYS AND TRANSPORTATION COMMISSION

105 WEST CAPITOL
JEFFERSON CITY, MO 65102
1-888-ASK-MODOT (1-888-275-6636)

IF A SEAL IS PRESENT ON THIS SHEET IT HAS BEEN ELECTRONICALLY SEALED AND DATED.

REV.

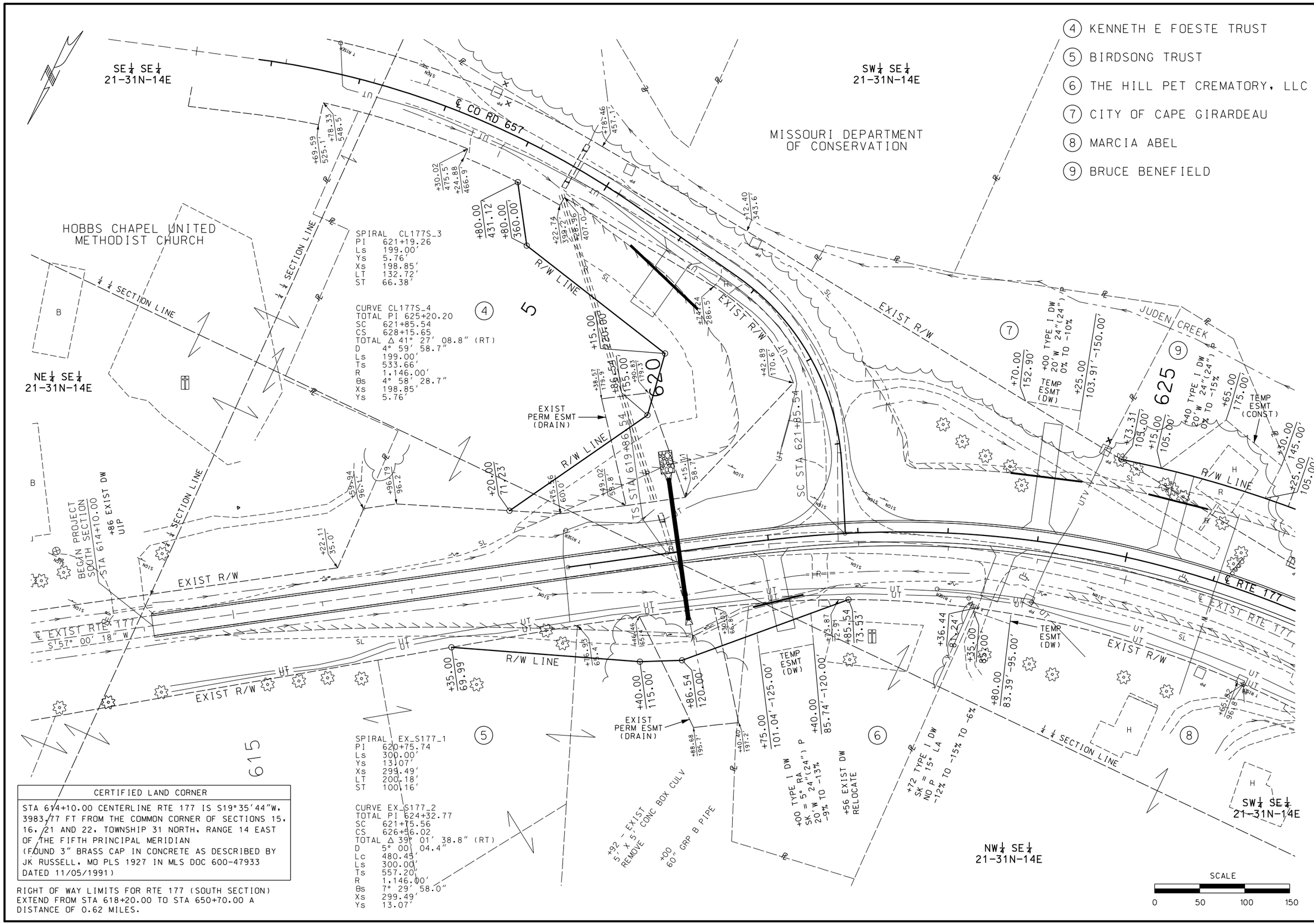

CERTIFIED LAND CORNER
STA 614+10.00 CENTERLINE RTE 177 IS S19°35'44"W, 3983.77 FT FROM THE COMMON CORNER OF SECTIONS 15, 16, 21 AND 22, TOWNSHIP 31 NORTH, RANGE 14 EAST OF THE FIFTH PRINCIPAL MERIDIAN (FOUND 3" BRASS CAP IN CONCRETE AS DESCRIBED BY JK RUSSELL, MO PLS 1927 IN MLS DOC 600-47933 DATED 11/05/1991)

RIGHT OF WAY LIMITS FOR RTE 177 (SOUTH SECTION) EXTEND FROM STA 618+20.00 TO STA 650+70.00 A DISTANCE OF 0.62 MILES.

(4) KENNETH E FOESTE TRUST
(5) BIRDSONG TRUST
(6) THE HILL PET CREMATORY, LLC
(7) CITY OF CAPE GIRARDEAU
(8) MARCIA ABEL
(9) BRUCE BENEFIELD

"THIS MEDIA SHOULD NOT BE CONSIDERED A CERTIFIED DOCUMENT."

DATE PREPARED	
8/5/2020	
ROUTE 177	STATE MO
DISTRICT SE	SHEET NO. 8
COUNTY CAPE GIRARDEAU	
JOB NO. J9S3452	
CONTRACT ID.	
PROJECT NO.	
BRIDGE NO.	

DATE	DESCRIPTION

MISSOURI HIGHWAYS AND TRANSPORTATION COMMISSION

105 WEST CAPITOL
JEFFERSON CITY, MO 65102
1-888-ASK-MODOT (1-888-275-6636)

IF A SEAL IS PRESENT ON THIS SHEET IT HAS BEEN ELECTRONICALLY SEALED AND DATED

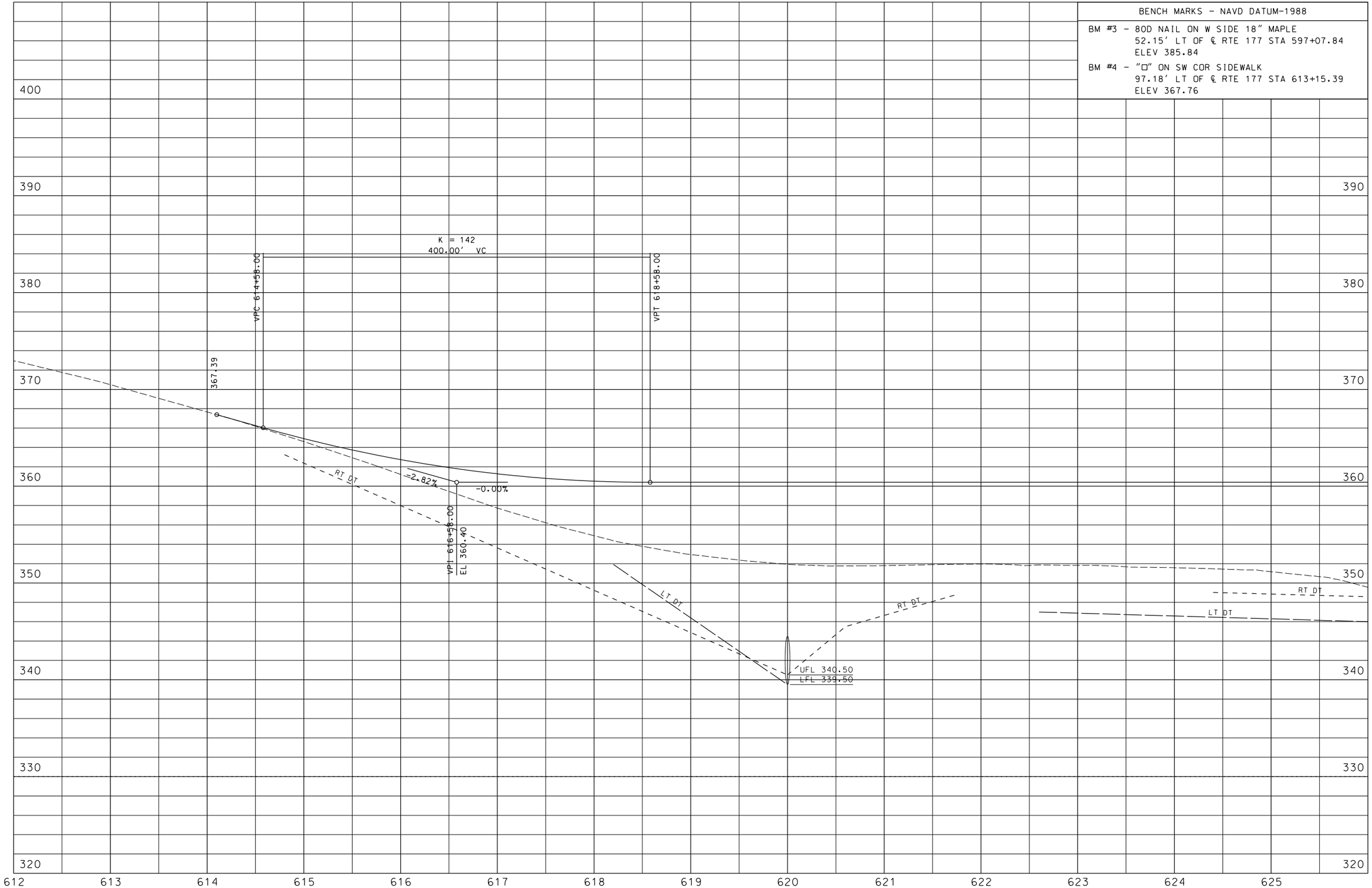

BENCH MARKS - NAVD DATUM-1988

BM #3 - 80D NAIL ON W SIDE 18" MAPLE
52.15' LT OF ℄ RTE 177 STA 597+07.84
ELEV 385.84

BM #4 - "□" ON SW COR SIDEWALK
97.18' LT OF ℄ RTE 177 STA 613+15.39
ELEV 367.76

"THIS MEDIA SHOULD NOT BE CONSIDERED A CERTIFIED DOCUMENT."

DATE PREPARED	6/18/2020
ROUTE	177
STATE	MO
DISTRICT	SE
SHEET NO.	9
COUNTY	CAPE GIRARDEAU
JOB NO.	J9S3452
CONTRACT ID.	
PROJECT NO.	
BRIDGE NO.	

DATE	DESCRIPTION

MISSOURI HIGHWAYS AND TRANSPORTATION COMMISSION

105 WEST CAPITOL
JEFFERSON CITY, MO 65102
1-888-ASK-MODOT (1-888-275-6636)

IF A SEAL IS PRESENT ON THIS SHEET IT HAS BEEN ELECTRONICALLY SEALED AND DATED.

REV.

009_PP_06_J9S3452_I50.dgn 10:07:46 AM 6/18/2020

(8) MARCIA ABEL

(9) BRUCE BENEFIELD

(10) WRIGHT PROPERTIES V, LLC

(11) SOUTHEAST MISSOURI STATE COLLEGE

(12) AUDUBON SOCIETY OF MISSOURI

(13) ISAAC LARRY DRISKELL & REBECCA C DRISKELL, HWF

(14) KENNETH E FOESTE REVOCABLE TRUST

(15) KENNETH E FOESTE REVOCABLE TRUST

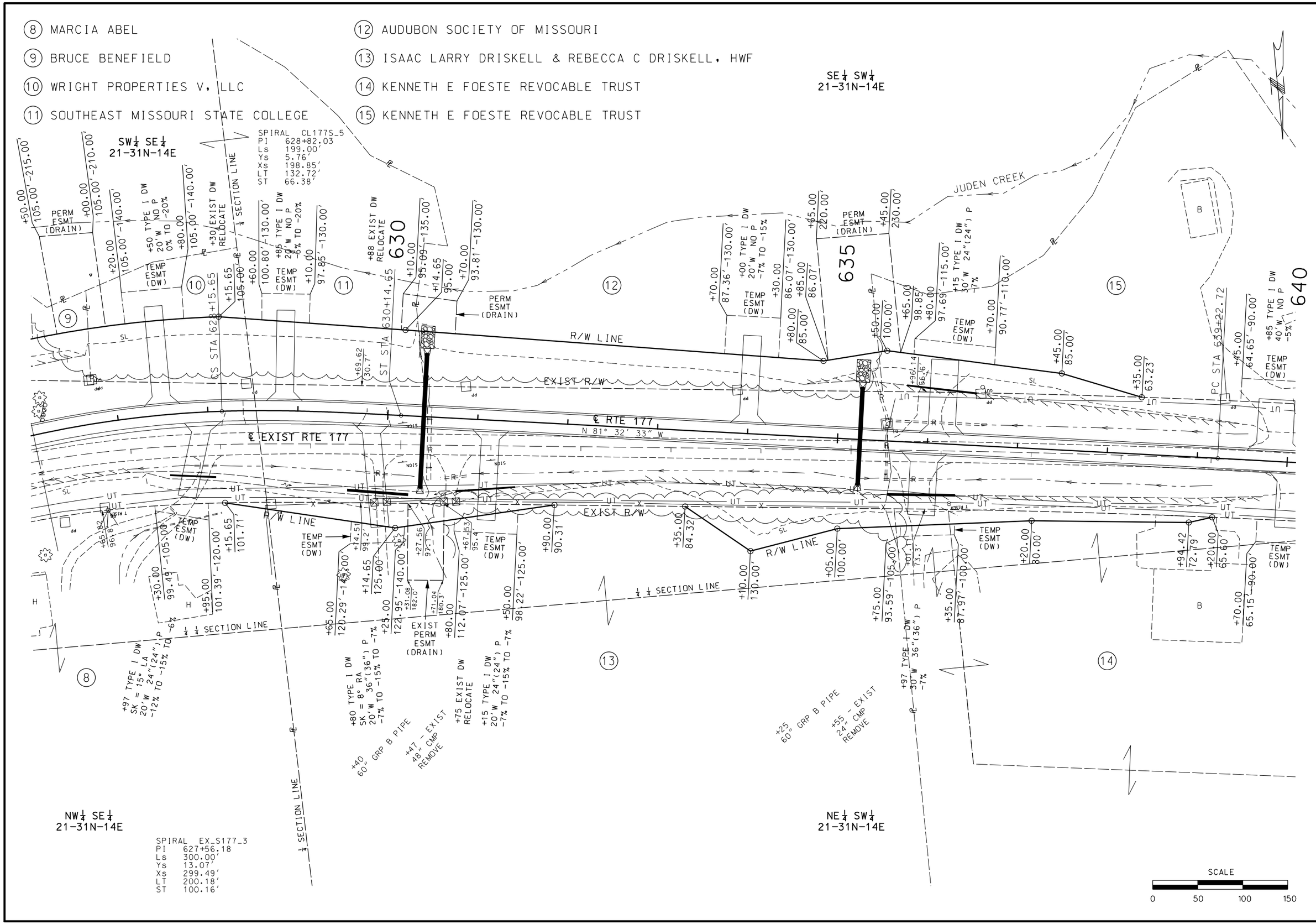

"THIS MEDIA SHOULD NOT BE CONSIDERED A CERTIFIED DOCUMENT."

DATE PREPARED	7/7/2020
ROUTE	177
STATE	MO
DISTRICT	SE
SHEET NO.	10
COUNTY	CAPE GIRARDEAU
JOB NO.	J9S3452
CONTRACT ID.	
PROJECT NO.	
BRIDGE NO.	

DATE	DESCRIPTION

MISSOURI HIGHWAYS AND TRANSPORTATION COMMISSION

105 WEST CAPITOL
JEFFERSON CITY, MO 65102
1-888-ASK-MODOT (1-888-275-6636)

IF A SEAL IS PRESENT ON THIS SHEET IT HAS BEEN ELECTRONICALLY SEALED AND DATED

BENCH MARKS - NAVD DATUM-1988

BM #5 - "□" ON TOP CENTER W HEADWALL
54.05' RT OF ℄ RTE 177 STA 630+45.76
ELEV 347.55

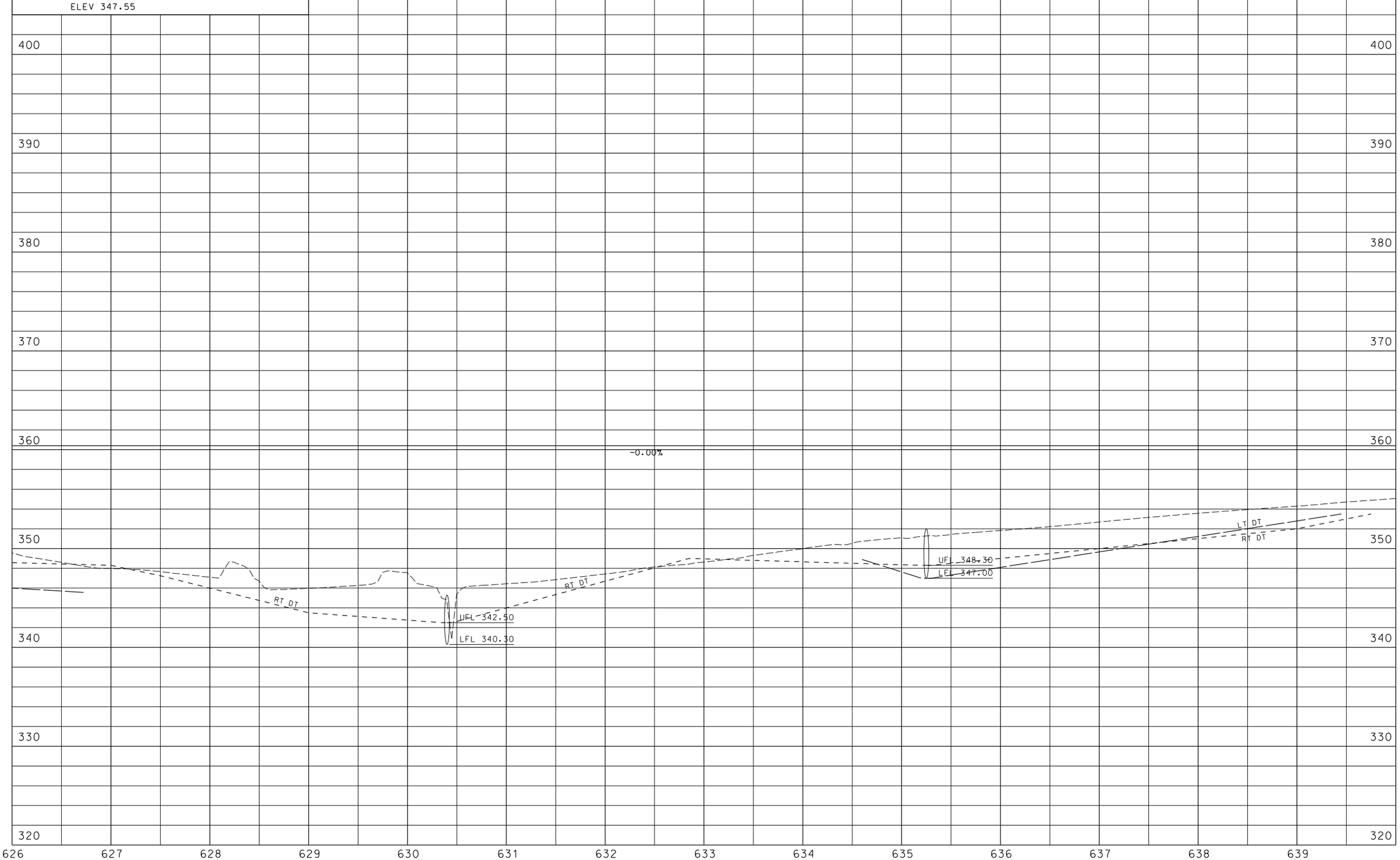

"THIS MEDIA SHOULD NOT BE CONSIDERED A CERTIFIED DOCUMENT."

DATE PREPARED	
6/18/2020	
ROUTE 177	STATE MO
DISTRICT SE	SHEET NO. 11
COUNTY CAPE GIRARDEAU	
JOB NO. J9S3452	
CONTRACT ID.	
PROJECT NO.	
BRIDGE NO.	

DATE	DESCRIPTION

MISSOURI HIGHWAYS AND TRANSPORTATION COMMISSION

105 WEST CAPITOL
JEFFERSON CITY, MO 65102
1-888-ASK-MODOT (1-888-275-6636)

IF A SEAL IS PRESENT ON THIS SHEET IT HAS BEEN ELECTRONICALLY SEALED AND DATED.

(14) KENNETH E FOESTE REVOCABLE TRUST

(15) KENNETH E FOESTE REVOCABLE TRUST

(16) CITY OF CAPE GIRARDEAU

(17) ROGER D RICE & EUGENIA A RICE. HWF

(18) ROGER D RICE ET AL

SE¼ SW¼
21-31N-14E

SW¼ SW¼
21-31N-14E

NE¼ SW¼
21-31N-14E

NW¼ SW¼
21-31N-14E

¼ ¼ SECTION LINE

CURVE CL177S_8
PI 641+51.05
PC 639+22.72
PT 643+79.37
Δ 1° 08′ 29.9″ (RT)
D 0° 15′ 00.0″
L 456.64′
T 228.33′
R 22.918.00′

CURVE CL177S_11
PI 653+96.13
PC 646+46.15
PT 661+13.19
Δ 29° 20′ 19.4″ (LT)
D 1° 59′ 59.5″
L 1,467.04′
T 749.98′
R 2,865.00′

CURVE EX_S177_4
PI 639+16.46
PC 635+83.01
PT 642+49.71
Δ 3° 19′ 59.7″ (RT)
D 0° 29′ 59.9″
L 666.70′
T 333.44′
R 11,460.00′

CURVE EX_S177_5
PI 653+90.92
PC 646+33.77
PT 661+14.23
Δ 29° 36′ 24.9″ (LT)
D 1° 59′ 59.5″
L 1,480.46′
T 757.15′
R 2,865.00′

SCALE
0 50 100 150

CERTIFIED LAND CORNER
STA 652+65.00 CENTERLINE RTE 177 IS N11°50′5″E, 1431.72 FT FROM THE COMMON CORNER OF SECTIONS 20, 21, 28 AND 29, TOWNSHIP 31 NORTH, RANGE 14 EAST OF THE FIFTH PRINCIPAL MERIDIAN (FOUND 3″ ALUMINUM MONUMENT AS DESCRIBED BY DARRELL PRATTE, MO PLS 2126 IN MLS DOC 600-0523 DATED 1/04/1994)

"THIS MEDIA SHOULD NOT BE CONSIDERED A CERTIFIED DOCUMENT."

DATE PREPARED	
8/5/2020	
ROUTE 177	STATE MO
DISTRICT SE	SHEET NO. 12
COUNTY CAPE GIRARDEAU	
JOB NO. J9S3452	
CONTRACT ID.	
PROJECT NO.	
BRIDGE NO.	

DATE	DESCRIPTION

MISSOURI HIGHWAYS AND TRANSPORTATION COMMISSION

105 WEST CAPITOL
JEFFERSON CITY, MO 65102
1-888-ASK-MODOT (1-888-275-6636)

IF A SEAL IS PRESENT ON THIS SHEET IT HAS BEEN ELECTRONICALLY SEALED AND DATED.

BENCH MARKS - NAVD DATUM-1988

BM #6 - 80D NAIL ON W ROOT 60" MAPLE
79.73' LT OF ℄ RTE 177 STA 643+64.53
ELEV 354.62

BM #7 - "□" ON SW COR CONC ENTRANCE
58.92' LT OF ℄ RTE 177 STA 661+06.44
ELEV 362.09

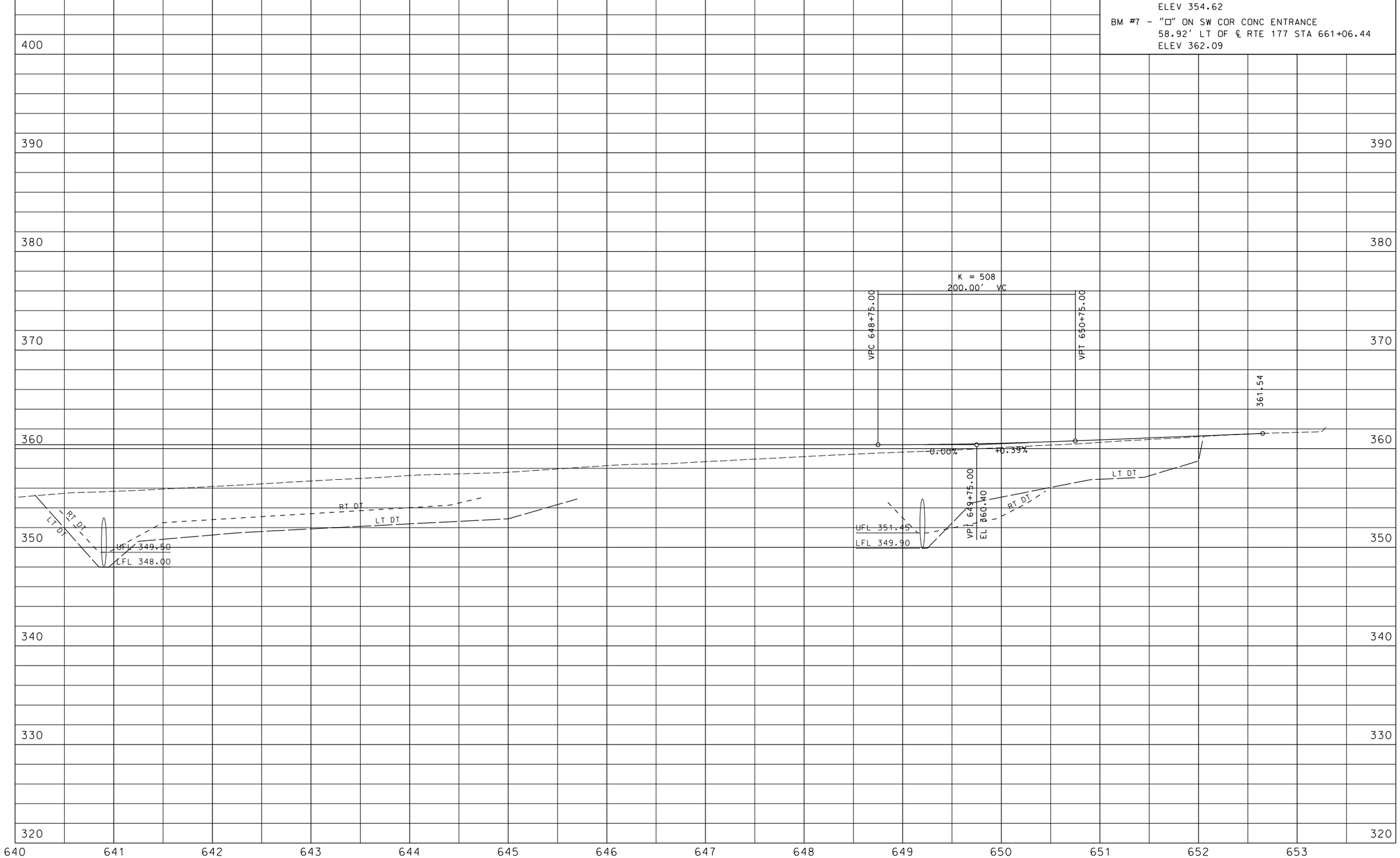

"THIS MEDIA SHOULD NOT BE CONSIDERED A CERTIFIED DOCUMENT."

DATE PREPARED	
6/18/2020	
ROUTE 177	STATE MO
DISTRICT SE	SHEET NO. 13
COUNTY CAPE GIRARDEAU	
JOB NO. J9S3452	
CONTRACT ID.	
PROJECT NO.	
BRIDGE NO.	

DATE	DESCRIPTION

MISSOURI HIGHWAYS AND TRANSPORTATION COMMISSION

105 WEST CAPITOL
JEFFERSON CITY, MO 65102
1-888-ASK-MODOT (1-888-275-6636)

IF A SEAL IS PRESENT ON THIS SHEET IT HAS BEEN ELECTRONICALLY SEALED AND DATED.

REV.

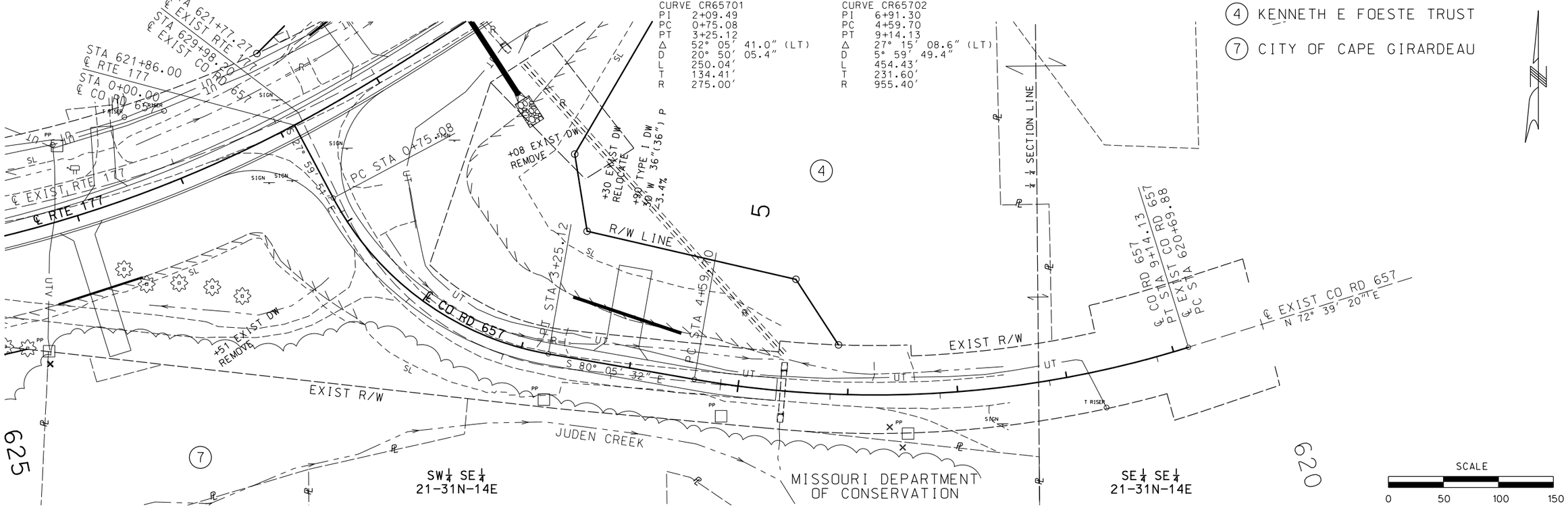

CURVE CR65701
PI 2+09.49
PC 0+75.08
PT 3+25.12
Δ 52° 05' 41.0" (LT)
D 20° 50' 05.4"
L 250.04'
T 134.41'
R 275.00'

CURVE CR65702
PI 6+91.30
PC 4+59.70
PT 9+14.13
Δ 27° 15' 08.6" (LT)
D 5° 59' 49.4"
L 454.43'
T 231.60'
R 955.40'

CURVE EX_CR657_2
PI 627+82.15
PC 626+43.10
PT 628+96.90
Δ 58° 10' 00.0" (RT)
D 22° 55' 05.9"
L 253.80'
T 139.05'
R 250.00'

CURVE EX_CR657_1
PI 622+66.33
PC 620+69.88
PT 624+57.38
Δ 23° 14' 18.8" (RT)
D 5° 59' 49.4"
L 387.50'
T 196.45'
R 955.40'

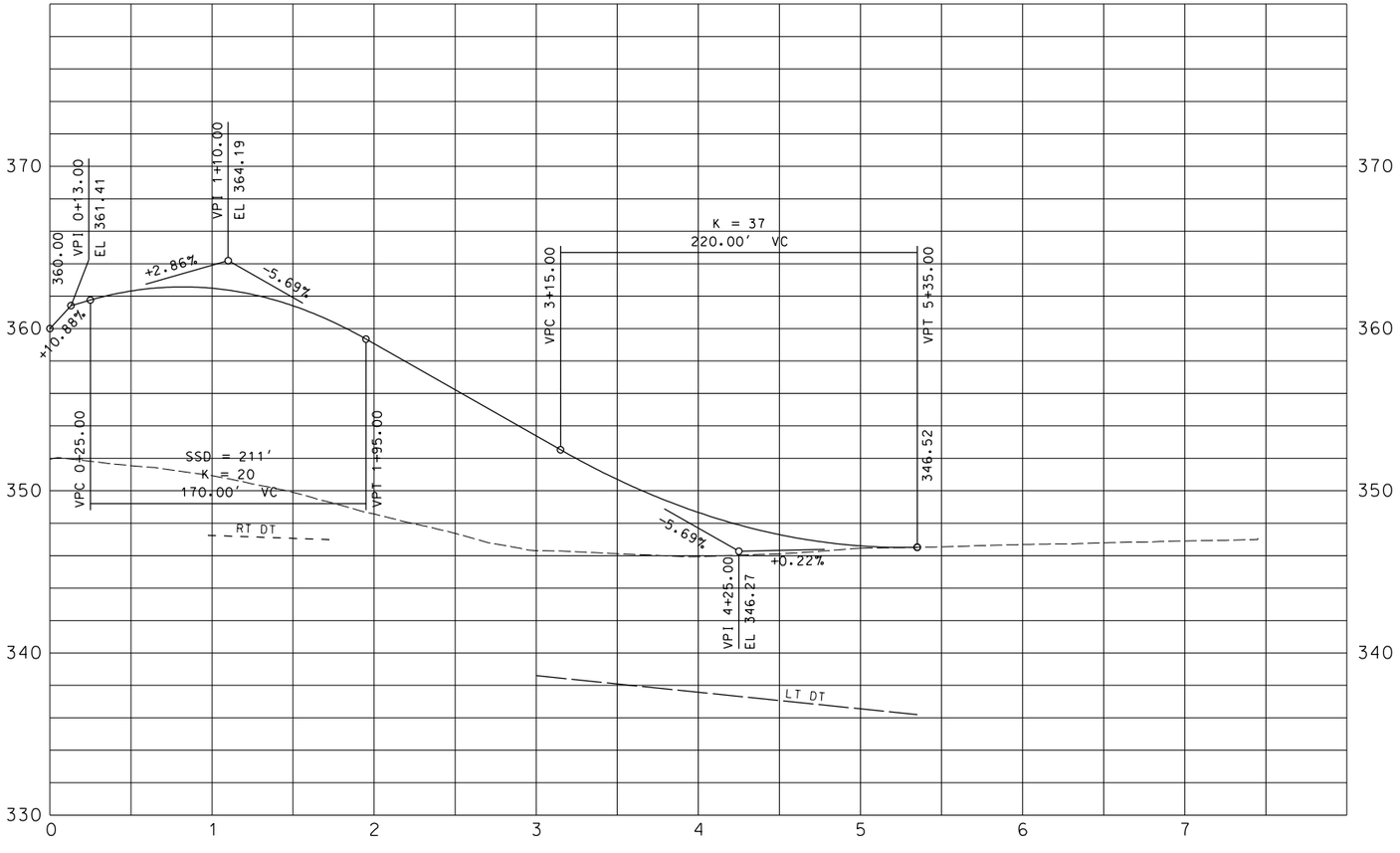

"THIS MEDIA SHOULD NOT BE CONSIDERED A CERTIFIED DOCUMENT."

DATE PREPARED	7/8/2020
ROUTE 177	STATE MO
DISTRICT SE	SHEET NO. 14
COUNTY	CAPE GIRARDEAU
JOB NO.	J9S3452
CONTRACT ID.	
PROJECT NO.	
BRIDGE NO.	

DESCRIPTION

DATE

MISSOURI HIGHWAYS AND TRANSPORTATION COMMISSION

105 WEST CAPITOL
JEFFERSON CITY, MO 65102
1-888-ASK-MODOT (1-888-275-6636)

IF A SEAL IS PRESENT ON THIS SHEET IT HAS BEEN ELECTRONICALLY SEALED AND DATED.

MISSOURI COORDINATE SYSTEM OF 1983, EAST ZONE
(2011 ADJUSTMENT, FEET)

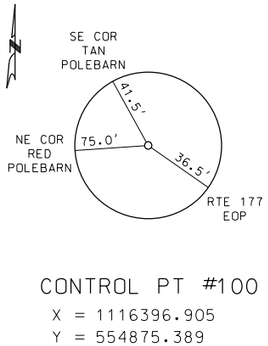

CONTROL PT #100
X = 1116396.905
Y = 554875.389
Z = 389.26
STA 554+69.57
OFF 47.23' RT

CP #100 - ⅝" REBAR W/ PLASTIC CAP ON WEST BACKSLOPE OF RTE 177 AT INTERSECT RTE 177/ROLLING HILLS DR

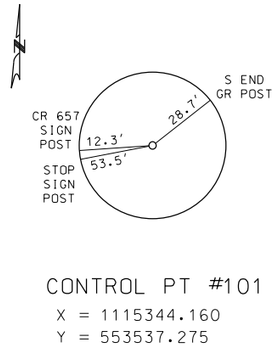

CONTROL PT #101
X = 1115344.160
Y = 553537.275
Z = 373.59
STA 571+77.21
OFF 21.91' RT

CP #101 - ⅝" REBAR W/ PLASTIC CAP IN NW QUAD OF RTE 177/CO RD 657N

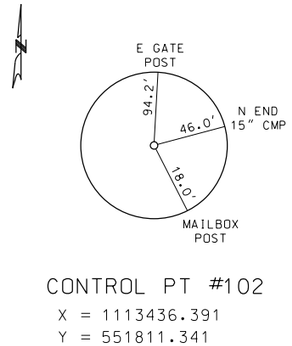

CONTROL PT #102
X = 1113436.391
Y = 551811.341
Z = 380.74
STA 597+79.96
OFF 38.00' RT

CP #102 - ⅝" REBAR W/ PLASTIC CAP 0.5 MI SOUTH OF CP #101 (ALONG RTE 177), IN SW QUAD OF RTE 177 & PRIVATE ASPH ENTRANCE

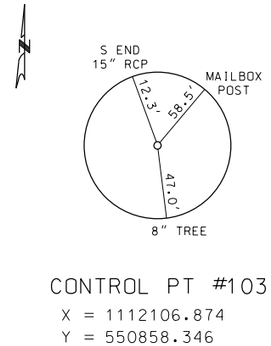

CONTROL PT #103
X = 1112106.874
Y = 550858.346
Z = 367.30
STA 614+14.01
OFF 37.29' LT

CP #103 - ⅝" REBAR W/ PLASTIC CAP IN SW QUAD OF RTE 177 & HOBBS CHAPEL CHURCH ASPH ENTRANCE

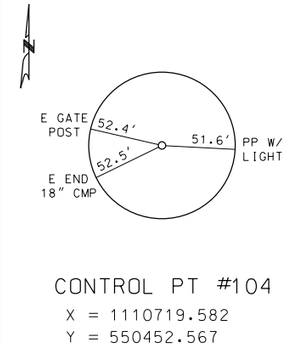

CONTROL PT #104
X = 1110719.582
Y = 550452.567
Z = 346.25
STA 629+38.49
OFF 98.63' RT

CP #104 - ⅝" REBAR W/ PLASTIC CAP 800 FT SOUTH OF RTE 177/CO RD 657S (ALONG RTE 177), 75' EAST OF PRIVATE AGGR ENTRANCE AND 5' SOUTH OF FENCE

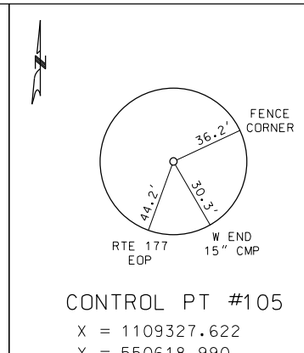

CONTROL PT #105
X = 1109327.622
Y = 550618.990
Z = 359.45
STA 643+42.08
OFF 55.01' RT

CP #105 - ⅝" REBAR W/ PLASTIC CAP 0.2 MI NORTH OF RTE 177/CO RD 643 (ALONG RTE 177), 50' WEST OF COMMERCIAL ENTRANCE ON RTE 177 BACKSLOPE

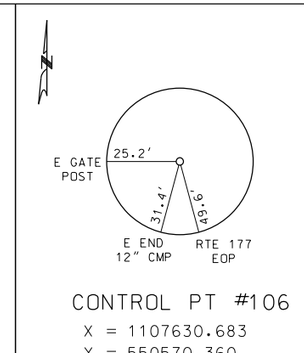

CONTROL PT #106
X = 1107630.683
Y = 550570.360
Z = 362.22
STA 660+32.79
OFF 60.08' RT

CP #106 - ⅝" REBAR W/ PLASTIC CAP 500 FT SOUTH OF RTE 177/CO RD 643 (ALONG RTE 177), 30' EAST OF PRIVATE AGGR ENTRANCE AND 5' SOUTH OF FENCE

DRAWING NOT TO SCALE. FOLLOW DIMENSIONS.

COORDINATE POINTS

NAME	LOC	STA	X-E US SURVEY FT	Y-N US SURVEY FT
RTE 177 (NORTH SECTION) - CL177N				
BEGINN177	POT	533+50.30	1116964.1367	556872.0752
EX_N177_1	PI	549+38.87	1116821.5876	555289.9182
	PC	540+50.70	1116901.2867	556174.5013
	PT	557+73.20	1116255.4994	554605.5329
	CC		1114047.8451	556431.5906
EX_N177_2	PI	585+99.39	1114454.7581	552427.2998
	PC	580+15.08	1114827.2723	552877.4774
	PT	591+74.72	1113964.7052	552109.0627
	CC		1111884.2164	555312.8053
RTE 177 (SOUTH SECTION) - CL177S				
123	POT	591+74.72	1113964.7052	552109.0627
CL177S_3	TS	619+86.54	1111606.3813	550577.8398
	PI	621+19.26	1111495.0675	550505.5655
	SC	621+85.54	1111436.4676	550474.3806
	CC		1110898.0929	551486.0469
CL177S_4	PI	625+08.78	1111151.1180	550322.5272
	PC	621+85.54	1111436.4676	550474.3806
	PT	628+15.65	1110828.4752	550342.1635
	CC		1110898.0929	551486.0469
CL177S_5	CS	628+15.65	1110828.4752	550342.1635
	PI	628+82.03	1110762.2168	550346.1960
	ST	630+14.65	1110630.9410	550365.7155
	CC		1110898.0929	551486.0469
CL177S_8	PI	641+51.05	1109506.8978	550532.8507
	PC	639+22.72	1109732.7443	550499.2694
	PT	643+79.37	1109281.7651	550570.9252
	CC		1113103.3893	573168.0469
CL177S_11	PI	653+96.13	1108279.2360	550740.4728
	PC	646+46.15	1109018.7169	550615.4119
	PT	661+13.19	1107573.3259	550487.1686
	CC		1108540.9722	547790.5252
124	POT	662+27.91	1107465.3502	550448.4232

COORDINATE POINTS

NAME	LOC	STA	X-E US SURVEY FT	Y-N US SURVEY FT
COUNTY ROAD 657 - CLCR657S				
CR657006	POT	0+00.00	1111436.0620	550474.1649
CR65701	PI	2+09.49	1111534.4029	550289.1926
	PC	0+75.08	1111471.3075	550407.8706
	PT	3+25.12	1111666.8062	550266.0658
	CC		1111714.1239	550536.9644
CR65702	PI	6+91.30	1112027.5228	550203.0597
	PC	4+59.70	1111799.3789	550242.9094
	PT	9+14.13	1112248.5898	550272.1030
	CC		1111963.7691	551184.0604
CR657001	POT	10+84.01	1112410.7428	550322.7463
RTE 177 (EXISTING SOUTH SECTION) - EXIST177S				
BEGINS177	POT	591+74.72	1113964.7052	552109.0627
EX_S177_1	TS	618+75.56	1111699.4605	550638.2747
	PI	620+75.74	1111531.5662	550529.2635
	SC	621+75.56	1111441.1568	550486.1490
	CC		1110947.8707	551520.5497
EX_S177_2	PI	624+19.45	1111221.0189	550381.1694
	PC	621+75.56	1111441.1568	550486.1490
	PT	626+56.02	1110977.2107	550374.9254
	CC		1110947.8707	551520.5497
EX_S177_3	CS	626+56.02	1110977.2107	550374.9254
	PI	627+56.18	1110877.0800	550372.3610
	ST	629+56.02	1110678.0087	550393.3981
	CC		1110947.8707	551520.5497
EX_S177_4	PI	639+16.46	1109723.0970	550496.2871
	PC	635+83.01	1110054.5492	550459.8949
	PT	642+49.71	1109394.3216	550551.8896
	CC		1111305.3005	561851.4365
EX_S177_5	PI	653+90.92	1108268.9566	550741.3998
	PC	646+33.77	1109015.6395	550615.9323
	PT	661+14.23	1107557.7774	550481.5892
	CC		1108540.8803	547790.5423
EQUATION: STA 662+12.43 BK = STA 698+21.40 AH				
ENDS177	POT	698+21.40	1107465.3502	550448.4232

COORDINATE POINTS

NAME	LOC	STA	X-E US SURVEY FT	Y-N US SURVEY FT
EXISTING COUNTY ROAD 657 - EXCR657				
BEGINCR657	POT	614+87.09	1112804.8793	550445.8422
EX_CR657_1	PI	622+66.33	1112061.0721	550213.5378
	PC	620+69.88	1112248.5898	550272.1030
	PT	624+57.38	1111865.6602	550233.7111
	CC		1111963.7691	551184.0604
EX_CR657_2	PI	627+82.15	1111542.7374	550268.3387
	PC	626+43.10	1111680.9176	550252.7829
	PT	628+96.90	1111483.0703	550393.9396
	CC		1111708.8851	550501.2136
ENDCR657	POT	629+98.20	1111439.6029	550485.4397

"THIS MEDIA SHOULD NOT BE CONSIDERED A CERTIFIED DOCUMENT."

DATE PREPARED	
6/11/2020	
ROUTE 177	STATE MO
DISTRICT SE	SHEET NO. 15
COUNTY CAPE GIRARDEAU	
JOB NO. J9S3452	
CONTRACT ID.	
PROJECT NO.	
BRIDGE NO.	

DATE	DESCRIPTION

MISSOURI HIGHWAYS AND TRANSPORTATION COMMISSION

105 WEST CAPITOL
JEFFERSON CITY, MO 65102
1-888-ASK-MODOT (1-888-275-6636)

CONTROL POINTS
COORDINATE POINTS
SHEET 1 OF 1

IF A SEAL IS PRESENT ON THIS SHEET IT HAS BEEN ELECTRONICALLY SEALED AND DATED.

J9S3452 RTE 177 CAPE GIRARDEAU

PARCEL	SHEET	PROPERTY OWNER	R/W TOTAL AC	R/W NORMAL *AC	R/W REMAIN AC	EASEMENTS PERM AC	EASEMENTS TEMP CONST AC	EASEMENTS TEMP DW AC	ENTRANCES STA	LOC	SKEW DEG	DW PIPE	WIDTH FT	GRADE %	EXIST DW SURFACE	NEW DW SURFACE	ADDITIONAL INFORMATION DW PAD
1	4	CHARLES WILLIAM &	1.00		1.00		0.21		563+05	LT	0	24"	20	-7 / -12	AGGR	AGGR	-7% @ 10'
		MARY ELLEN ELFRINK HWF															
2	4 & 6	CAPE GIRARDEAU SAND COMPANY	13.00		13.00			0.03	567+95	RT	0	24"	20	-7 / -15	AGGR	AGGR	-7% @ 10'
3	4 & 6	CAPE GIRARDEAU SAND COMPANY	171.00	0.31	170.69				568+90	LT	0	24"	20	-7 / -15	AGGR	AGGR	-7% @ 10'
4	8 & 14	KENNETH E FOESTE TRUST	3.59	1.09	2.50				3+90	LT	0	36"	30	-3.4	AGGR	AGGR	
									CR 657								
5	8	BIRDSONG TRUST	79.20	0.26	78.94												
6	8	THE HILL PET CREMATORY, LLC	1.32	0.05	1.27			0.04	621+00	RT	5 RA	24"	20	-9 / -13	AGGR	AGGR	-9% @ 15'
7	8	CITY OF CAPE GIRARDEAU	0.90		0.90			0.02	624+00	LT	0	24"	20	0 / -10	N/A	AGGR	0% @ 15'
8	8 & 10	MARCIA ABEL	14.40	179 SQ FT	14.40			0.01	623+72	RT	15 LA	NO P	20	-12 / -15 / -6	AGGR	AGGR	-12% @ 20' THEN -15% @ 20'
								0.02	627+97	RT	15 LA	24"	20	-12 / -15 / -6	AGGR	AGGR	-12% @ 20' THEN -15% @ 30'
9	8 & 10	BRUCE BENEFIELD	0.76	0.17	0.59	0.03	0.13		625+40	LT	0	24"	20	0 / -15	N/A	AGGR	0% @ 15'
10	10	WRIGHT PROPERTIES V, LLC	0.50	0.28	0.22	0.02		0.05	627+50	LT	0	NO P	20	0 / -20	EARTH	AGGR	0% @ 15'
11	10	SOUTHEAST MISSOURI STATE COLLEGE	11.20	0.29	10.91	0.09		0.04	628+85	LT	0	NO P	20	-5/ -20	EARTH	AGGR	-5% @ 15'
						0.02											
12	10	AUDUBON SOCIETY OF MISSOURI	27.30	0.54	26.76	0.04		0.06	634+00	LT	0	NO P	20	-7 / -15	N/A	AGGR	-7% @ 15'
						0.20											
13	10	ISAAC LARRY DRISKELL &	16.74	0.11	16.48			0.03	629+80	RT	8 RA	36"	20	-7 / -15 / -7	AGGR	AGGR	-7% @ 20' THEN -15 @ 50'
		REBECCA C DRISKELL, HWF		0.15				0.03	631+15	RT	0	24"	20	-7 / -15 / -7	AGGR	AGGR	-7% @ 20' THEN -15 @ 60'
				0.09				0.02	635+97	RT	0	36"	30	-7	AGGR	AGGR	
14	10 & 12	KENNETH E FOESTE REVOCABLE TRUST	86.78	0.16	86.41			0.05	640+10	RT	0	NO P	40	-7.5	AGGR	AGGR	
				0.12					643+00	RT	0	24"	20	-1.7	AGGR	AGGR	
						0.05											
15	10 & 12	KENNETH E FOESTE REVOCABLE TRUST	3.40	0.18	3.08	0.02		0.04	636+15	LT	0	24"	30	-7	AGGR	AGGR	
				0.14		0.03		0.05	639+85	LT	0	NO P	40	-5	AGGR	AGGR	
16	12	CITY OF CAPE GIRARDEAU	3.80	0.02	3.78	0.03		0.05	645+95	LT	0	NO P	20	-7	EARTH	AGGR	
17	12	ROGER D RICE &	6.16	0.01	6.15	0.05			648+55	LT	5 RA	NO P	20	-4	ASPH	ASPH	
		EUGENIA A RICE, HWF				0.03											
18	12	ROGER D RICE ET AL	0.35	0.02	0.33	0.02			650+55	LT	0	18"	20	-4 / -8	ASPH	ASPH	-4% @ 20'

* UNLESS OTHERWISE NOTED.

ADDITIONAL DRIVEWAYS

N/A	6	**NO R/W INVOLVED - CO RD 657**	572+25	RT	22 LA	NO P	22	-3.7	ASPH	ASPH	
N/A	12	**NO R/W INVOLVED**	651+22	LT	0	18"	20	-2 / -6	AGGR	AGGR	-2% @ 15'