Interchange Performance Matrix

Factor	Standard Diamond	Roundabouts	Diverging Diamond	Description
TRAFFIC OPERATIONS				
20 Year Traffic Operation	No Appreciable Difference Between the Three Options.			Indication of acceptable traffic operations in design year peak hour conditions.
Reserve Capacity After Expansion	●●●●	●○○○	●●●●	Indication of acceptable traffic operations in future peak hour conditions. Roundabouts will need to be three lanes to accommodate projected traffic, which is not desirable to the City.
Relative Vehicular Safety	●●○○	●●●●	●●●○	Each interchange type will be designed to current AASHTO and safety standards, however, the crash rates and severity differ due to geometry and traffic operations.
Bicycle Operation / Friendliness	●●●○	●●●○	●●●●	Stress level of cyclists increase with merging into traffic or merging into the shared use side paths at the roundabouts.
Pedestrian Operation / Friendliness	●●○○	●●●○	●●●●	Signalized intersections will have pedestrian signals, and the roundabouts will have pedestrian refuge islands with crosswalks that only cross traffic going one direction.
COSTS				
Initial Construction Cost	No Appreciable Difference Between the Three Options.			Construction cost only.
Expansion Construction Cost	●●○○	●○○○	●●●●	Construction cost only. (Note that the expansion costs are anticipated to be from City or private funds.)
Maintenance Cost	No Appreciable Difference Between the Three Options.			The standard diamond has signals and the most pavement, bridge, and storm drainage infrastructure to maintain. The diverging diamond has signals to maintain.
ENVIRONMENTAL STEWARDSHIP	No Appreciable Difference Between the Three Options.			Footprint of interchange in environmentally sensitive areas, amount of material needed to construct, storm drainage runoff, and other environmental factors where considered.
RIGHT-OF-WAY ACQUISITION	●●●○	●●●○	●●●●	Comparison of total acreage of right-of-way to be acquired.
AESTHETICS	●●●○	●●●●	●●●○	Roundabouts provided more space for aesthetics, however, MoDOT requirements limit features that can be included at the ramps.
ECONOMIC DEVELOPMENT	No Appreciable Difference Between the Three Options.			All three interchange types provide good access management and developable land for the impacted property owners.

Performance Rating Scale

●●●●	Excellent
●●●○	Good
●●○○	Fair
●○○○	Poor

EXPERIENCE | Transportation

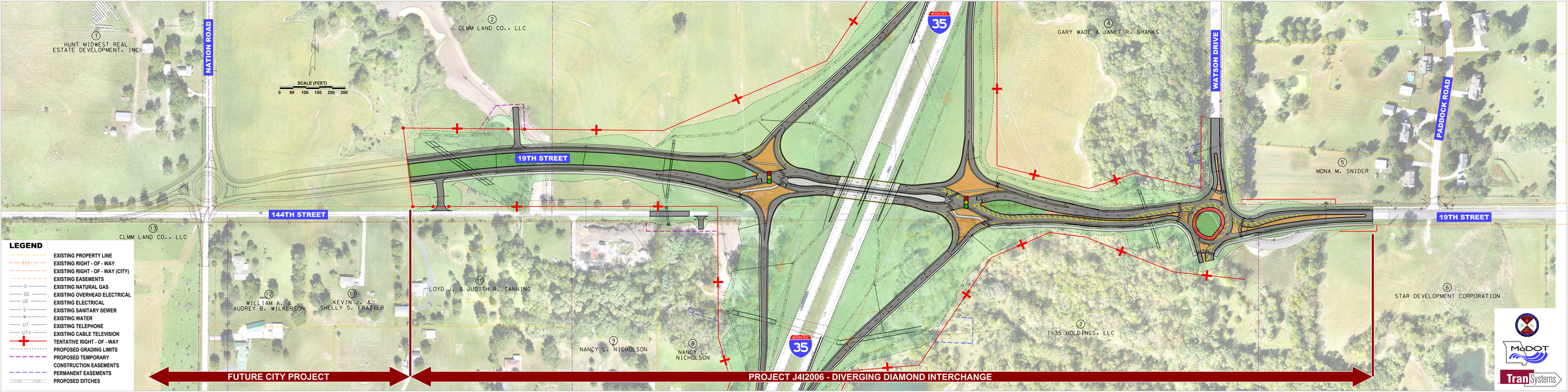
1 HUNT MIDWEST REAL ESTATE DEVELOPMENT, INC
2 CLMM LAND CO., LLC
4 GARY WADE & JANET R. SHANKS
5 MONA M. SNIDER
6 STAR DEVELOPMENT CORPORATION
7 I-35 HOLDINGS, LLC
8 NANCY L. NICHOLSON
9 NANCY L. NICHOLSON
10 LOYD J. & JUDITH R. CANNING
11 KEVIN J. & SHELLY S. FRAZIER
12 WILLIAM A. & AUDREY B. WILKERSON
13 CLMM LAND CO., LLC
NATION ROAD
WATSON DRIVE
PADDOCK ROAD
19TH STREET
144TH STREET
19TH STREET
INTERSTATE 35
INTERSTATE 35
SCALE (FEET)
0 50 100 150 200 250
LEGEND
EXISTING PROPERTY LINE
EXISTING RIGHT - OF - WAY
EXISTING RIGHT - OF - WAY (CITY)
EXISTING EASEMENTS
EXISTING NATURAL GAS
EXISTING OVERHEAD ELECTRICAL
EXISTING ELECTRICAL
EXISTING SANITARY SEWER
EXISTING WATER
EXISTING TELEPHONE
EXISTING CABLE TELEVISION
TENTATIVE RIGHT - OF - WAY
PROPOSED GRADING LIMITS
PROPOSED TEMPORARY CONSTRUCTION EASEMENTS
PERMANENT EASEMENTS
PROPOSED DITCHES
FUTURE CITY PROJECT
PROJECT J4I2006 - DIVERGING DIAMOND INTERCHANGE
MoDOT
TranSystems

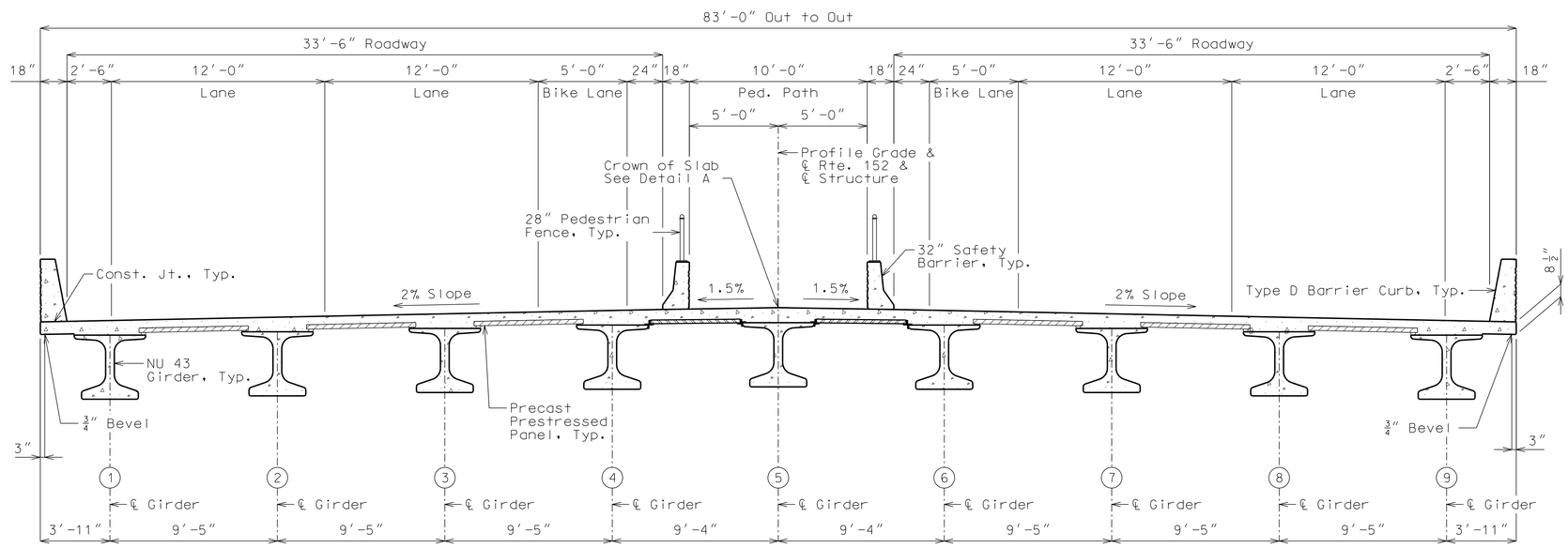

19TH STREET TYPICAL SECTION

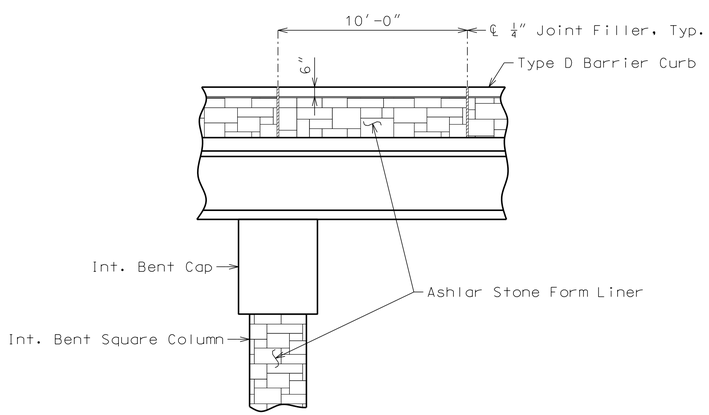

PART SECTION SHOWING FORM LINER

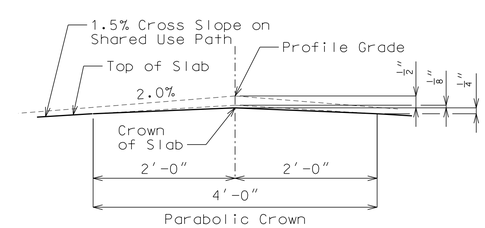

DETAIL A

Detailed Jan 2019
Checked Jan 2019

Note: This drawing is not to scale. Follow dimensions.

Sheet No. Bridge 2 Typical - Public Hearing

"THIS MEDIA SHOULD NOT BE CONSIDERED A CERTIFIED DOCUMENT."

DATE PREPARED	2/5/2019
ROUTE	I-35
STATE	MO
DISTRICT	BR
SHEET NO.	2
COUNTY	CLAY
JOB NO.	J4I2006
CONTRACT ID.	
PROJECT NO.	
BRIDGE NO.	A8791

DESCRIPTION

DATE

MISSOURI HIGHWAYS AND TRANSPORTATION COMMISSION

105 WEST CAPITOL
JEFFERSON CITY, MO 65102
1-888-ASK-MODOT (1-888-275-6636)

2400 PERSHING ROAD
SUITE 400
KANSAS CITY, MO 64108
PHONE: (816)329-8600
FAX: (816)329-8601

MO STATE CERTIFICATE OF AUTHORITY # 273
ENGINEERING

IF A SEAL IS PRESENT ON THIS SHEET IT HAS BEEN ELECTRONICALLY SEALED AND DATED.

pw:\\hq-pwint01.a-e.transyscorp.com:transyscorp-pw1\Documents\Projects_2018\KC101\101180273\Road\Exhibits\Bridge Typical - Public Hearing.dgn 11:16:06 AM 2/5/2019

BRIDGE AESTHETICS

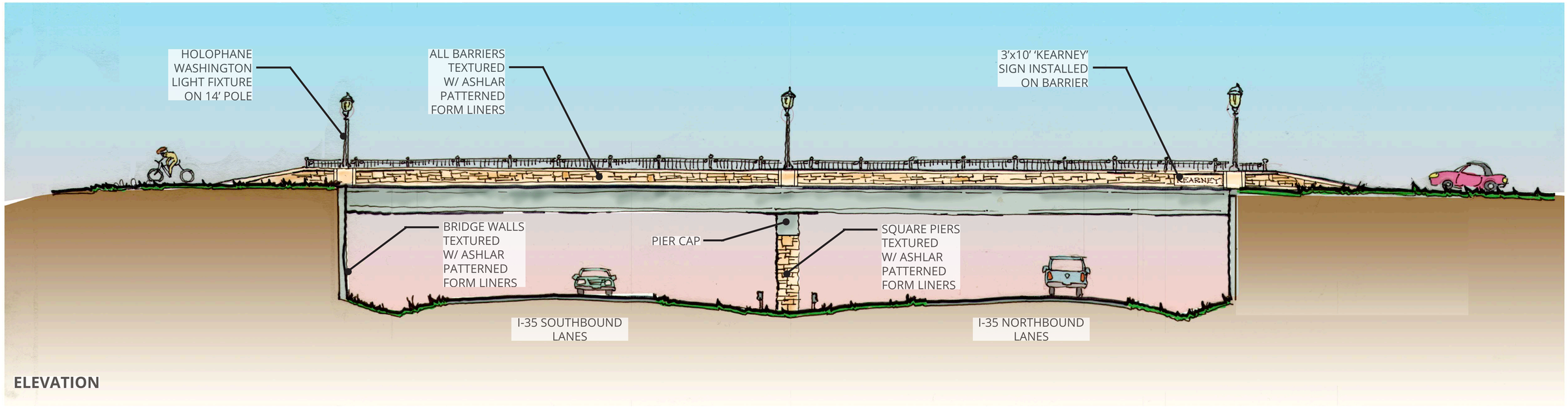

ELEVATION

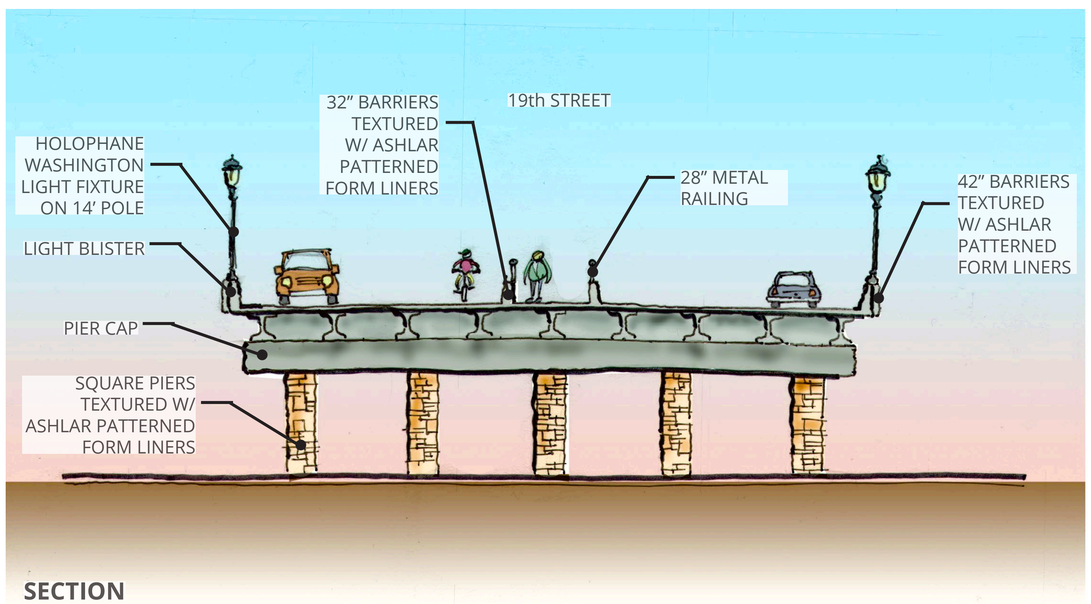

SECTION

MATERIAL IMAGES

LIGHTING

FORM LINER

SIGNAGE

- All concrete barriers, piers, and walls to be textured with ashlar-patterned form liners
- Outer barriers to feature Holophane Washington post top fixtures on 14- foot tall poles installed on light blisters
- Inner barriers to feature 28-inch tall decorative metal railings similar to Ameristar 'Echelon'
- 3' by 10' KEARNEY sign to be installed on outer bridge barriers facing north and south
- Signal poles and arms at intersections to be black

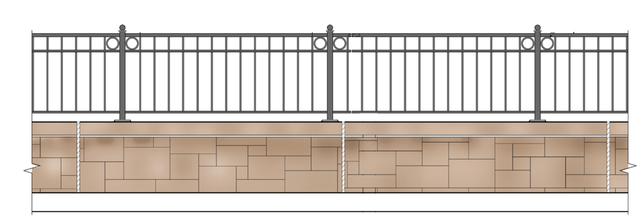

METAL RAILING

CONCEPTUAL DESIGN | 19th STREET INTERCHANGE IMPROVEMENTS

KEARNEY, MO | JANUARY 22, 2019

landworks STUDIO | TranSystems | CITY OF KEARNEY MISSOURI