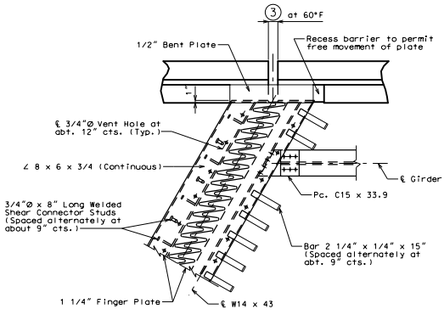

PART PLAN OF DEVICE

LA TYPE B BARRIER (SBC)

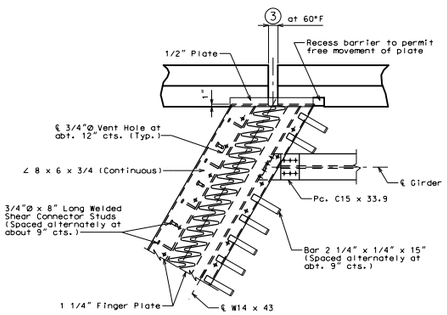

PART PLAN OF DEVICE

LA TYPE D BARRIER

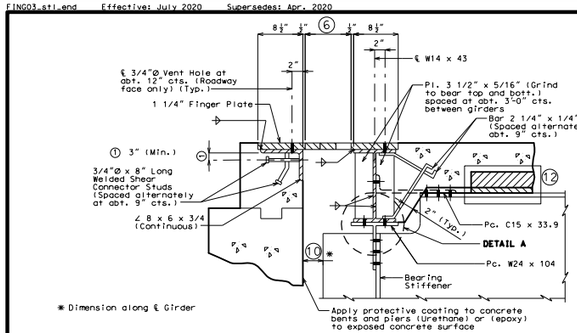

SECTION THRU DEVICE

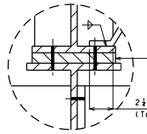

DETAIL A

Note:
Concrete shall be forced under and around finger plate supporting hardware, anchors, angles and bars. Proper consolidation shall be achieved by localized internal vibration.

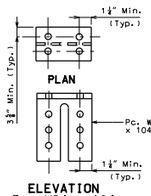

PLAN

ELEVATION
Pc. W24 x 104

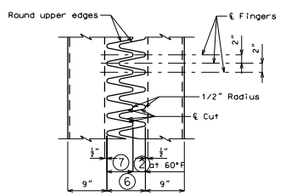

PART PLAN OF FINGER PLATE

GENERAL NOTES:

Finger plate shall be cut with a machine guided gas torch from one plate. The plate from which fingers are cut may be spliced before fingers are cut. The surface of cut shall be perpendicular to the surface of the plate. The cut shall not exceed 1/8" in width. The centerline of cut shall not deviate more than 1/16" from the position of centerline of cut shown. No splicing of finger plate or finger plate assembly will be allowed after fingers are cut. The expansion device shall be fabricated and installed to the crown and grade of the roadway.

Plan dimensions are based on installation at 60°F. The expansion gap and other dimensions shall be increased or decreased ____ for each 10° fall or rise in temperature at installation. ④

Material for the expansion device shall be ASTM A709 Grade 36 structural steel. Anchors for the expansion device shall be in accordance with Sec 1037.

Structural steel for the expansion device and barrier plate shall be coated with a minimum of two coats of inorganic zinc primer to provide a total dry film thickness of 4 mils minimum, 6 mils maximum, or galvanized in accordance with ASTM A123. Anchors need not be protected from overspray.

Payment for furnishing, coating or galvanizing and installing the structural steel for the expansion device will be considered completely covered by the contract unit price for Expansion Device (Finger Plate) per linear foot.

All holes shown for connections to be subpunched 11/16"Ø (shop or field drill) and reamed to 13/16"Ø in field.

Longitudinal reinforcing steel shall be placed so that ends shall not be more than ±1" from the web of W14 x 43 at the expansion device.

Complete joint penetration welds utilized in the fabrication of the expansion device shall be nondestructively tested by an approved method.

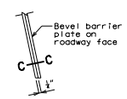

PART ELEVATION AT END OF BARRIER PLATE

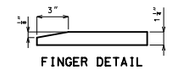

FINGER DETAIL

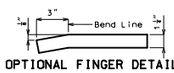

OPTIONAL FINGER DETAIL

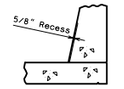

SECTION B-B

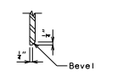

SECTION C-C

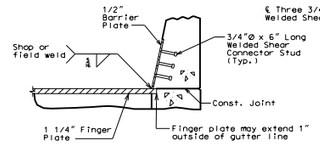

SECTION A-A

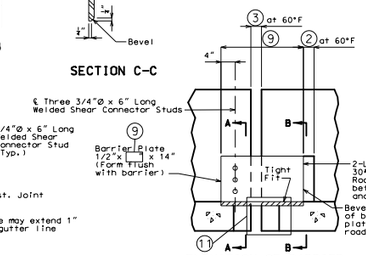

ELEVATION OF BARRIER

FINGER PLATE EXPANSION DEVICE AT END BENT NO. _

Detailed
Checked

Note: This drawing is not to scale. Follow dimensions. Sheet No. of

FING03_stl_end.dgn 10:45:24 AM 8/5/2020

"THIS MEDIA SHOULD NOT BE CONSIDERED A CERTIFIED DOCUMENT."

DATE PREPARED	
8/5/2020	
ROUTE ✱	STATE MO
DISTRICT BR	SHEET NO. ✱
COUNTY ✱	
JOB NO. ✱	
CONTRACT ID.	
PROJECT NO.	
BRIDGE NO. FING03	

DATE	DESCRIPTION

IF A SEAL IS PRESENT ON THIS SHEET IT HAS BEEN ELECTRONICALLY SEALED AND DATED.

MISSOURI HIGHWAYS AND TRANSPORTATION COMMISSION
MoDOT
105 WEST CAPITOL
JEFFERSON CITY, MO 65102
1-888-ASK-MODOT (1-888-275-6636)

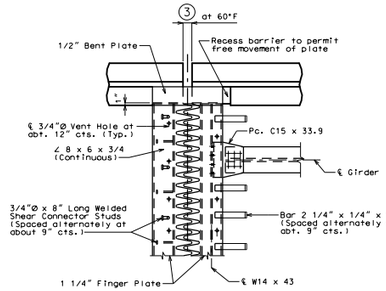

PART PLAN OF DEVICE

SQ TYPE B BARRIER (SBC)

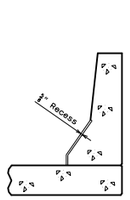

SECTION B-B

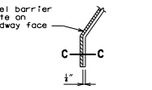

PART ELEVATION AT END OF BENT BARRIER PLATE

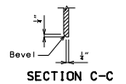

SECTION C-C

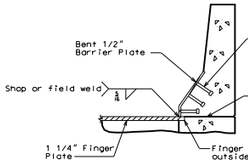

SECTION A-A

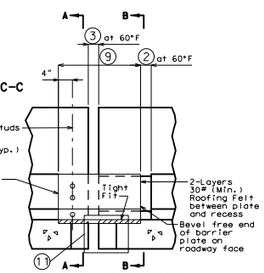

ELEVATION OF BARRIER

TYPE B BARRIER (SBC)(ALL)

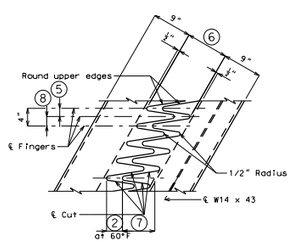

PART PLAN OF FINGER PLATE

LA

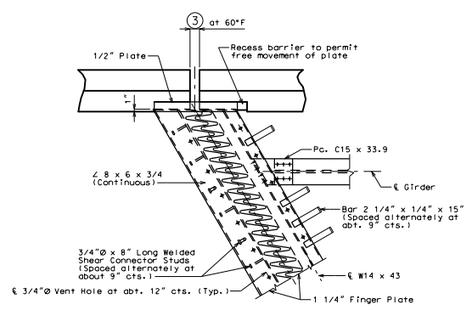

PART PLAN OF DEVICE

RA TYPE D BARRIER

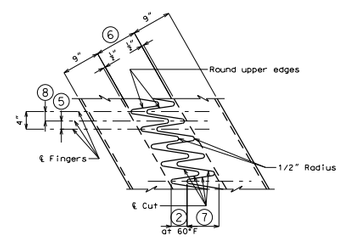

PART PLAN OF FINGER PLATE

RA

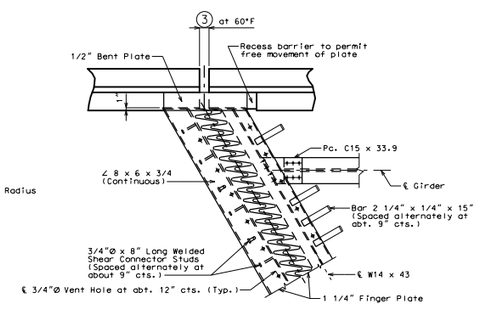

PART PLAN OF DEVICE

RA TYPE B BARRIER (SBC)

STANDARD DRAWING GUIDANCE (do not show on plans):
(For all finger plate drawings. Some notes may not apply to this sheet.)

① Not a guidance note. Do not replace.
② Gap between fingers, barrier recess gap and, for intermediate bents, gap in barrier.
③ For end bents: ② + 1/2"/cos(skew)
④ Gap adjustment for temperature: along bridge longitudinal axis
⑤ Transverse gap between fingers
⑥ Maximum gap between fingers normal to joint @ 60°F.
⑦ Finger length.
⑧ Transverse gap between fingers: not the same as ⑤ for skewed joints.
⑨ Plate length = (18"+ ⑥)/cos(skew)
⑩ Gap between girder or between girder and end bent.
⑪ Include details of slab projection beyond ℄ W-beam under barrier on plan of slab detail sheet. Consider similarly projection beyond front face of angle under barrier at end bents.
⑫ Delete panel for CIP slab.