MISSOURI HIGHWAYS AND TRANSPORTATION COMMISSION

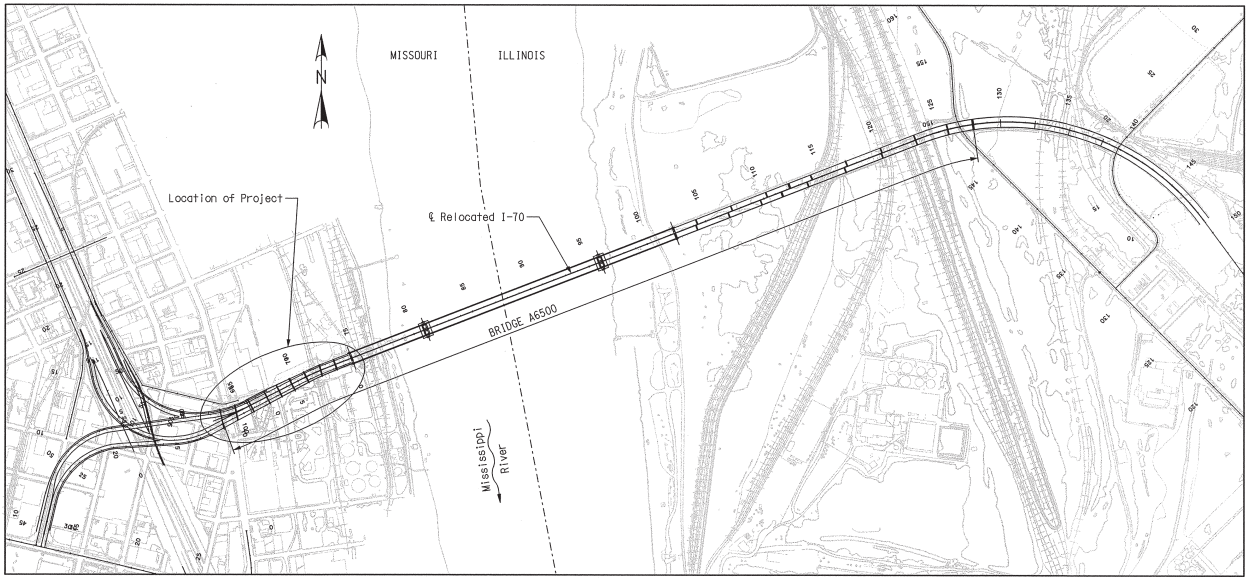

INDEX OF DRAWINGS

1 TITLE SHEET
2 OVERALL MISSISSIPPI RIVER BRIDGE LAYOUT
3 GENERAL PLAN AND ELEVATION - UNITS 1 AND 2
4 GENERAL PLAN AND ELEVATION - UNIT 3
5 GENERAL NOTES AND ESTIMATED QUANTITIES
6 SUBSTRUCTURE LAYOUT
7 BORING DATA (1 OF 4)
8 BORING DATA (2 OF 4)
9 BORING DATA (3 OF 4)
10 BORING DATA (4 OF 4)
11 ABUTMENT 1 - PLANS
12 ABUTMENT 1 - PLANS
13 ABUTMENT 1 - DETAILS
14 ABUTMENT 1 - DETAILS
15 ABUTMENT 1 - WING DETAILS
16 VERTICAL DRAIN AT ABUTMENT
17 PIER 2 - ELEVATION
18 PIER 2 - PLAN AND DETAILS
19 PIER 2 - DETAILS
20 PIER 3 - PLAN AND ELEVATION
21 PIER 3 - DETAILS
22 PIER 4 - PLAN AND ELEVATION
23 PIER 4 - DETAILS
24 PIER 5 - PLAN AND ELEVATION
25 PIER 5 - DETAILS
26 PIER 6 - PLAN AND ELEVATION
27 PIER 6 - DETAILS
28 PIER 7 - PLAN AND ELEVATION
29 PIER 7 - DETAILS
30 PIER 8 - PLAN AND ELEVATION
31 PIER 8 - DETAILS
32 PIER 9 - PLAN AND ELEVATION
33 PIER 9 - DETAILS
34 PIER 10 (FOR INFORMATION ONLY)
35 ANCHOR ROD SETTING PLANS
36 DETAILS OF TYPE "N" PTFE BEARINGS
37 FRAMING PLAN - UNIT 1
38 FRAMING PLAN - UNIT 2
39 FRAMING PLAN - UNIT 3
40 TYPE NU 63 P/S GIRDER - SPAN (1-2) GIRDERS 1 THRU 5
41 TYPE NU 63 P/S GIRDER - SPAN (1-2) GIRDERS 6 THRU 11
42 TYPE NU 70 P/S GIRDER - SPAN (2-3) GIRDERS 1 THRU 4
43 TYPE NU 70 P/S GIRDER - SPAN (2-3) GIRDERS 5 THRU 8
44 TYPE NU 70 P/S GIRDER - SPAN (2-3) GIRDERS 9 AND 10
45 TYPE NU 70 P/S GIRDER - SPAN (2-3) GIRDERS 11 AND 12
46 TYPE NU 70 P/S GIRDER - SPAN (3-4) GIRDERS 1 THRU 12
47 TYPE NU 70 P/S GIRDER - SPAN (4-5) GIRDERS 1 THRU 12
48 TYPE NU 70 P/S GIRDER - SPAN (5-6) GIRDERS 1 THRU 8
49 TYPE NU 70 P/S GIRDER - SPAN (6-7) GIRDERS 1 THRU 8
50 TYPE NU 70 P/S GIRDER - SPAN (7-8) GIRDERS 1 AND 2
51 TYPE NU 70 P/S GIRDER - SPAN (7-8) GIRDERS 3 AND 4
52 TYPE NU 70 P/S GIRDER - SPAN (7-8) GIRDERS 5 AND 6
53 TYPE NU 70 P/S GIRDER - SPAN (7-8) GIRDERS 7 AND 8
54 TYPE NU 70 P/S GIRDER - SPAN (8-9) GIRDERS 1 THRU 4
55 TYPE NU 70 P/S GIRDER - SPAN (8-9) GIRDERS 5 AND 6
56 TYPE NU 70 P/S GIRDER - SPAN (8-9) GIRDERS 7 AND 8
57 TYPE NU 70 P/S GIRDER - SPAN (9-10) GIRDERS 1 THRU 8
58 NU-GIRDER DETAILS - 1
59 NU-GIRDER DETAILS - 2
60 NU-GIRDER DETAILS - 3
61 NU-GIRDER DETAILS - 4
62 STEEL INTERMEDIATE DIAPHRAGM DETAILS - NU 63 GIRDER
63 STEEL INTERMEDIATE DIAPHRAGM DETAILS - NU 70 GIRDER
64 DIAPHRAGMS AT PIER 2 - PLANS
65 DIAPHRAGMS AT PIER 2 - ELEVATIONS (SPAN 1-2)
66 DIAPHRAGMS AT PIER 2 - ELEVATIONS (SPAN 2-3)
67 DIAPHRAGMS AT PIER 2 - DETAILS
68 DIAPHRAGM AT PIER 3
69 DIAPHRAGM AT PIER 4
70 DIAPHRAGMS AT PIER 5 - PLANS AND DETAILS
71 DIAPHRAGMS AT PIER 5 - ELEVATIONS
72 DIAPHRAGM AT PIER 6
73 DIAPHRAGM AT PIER 7
74 DIAPHRAGM AT PIER 8
75 DIAPHRAGM AT PIER 9
76 DIAPHRAGM AT PIER 10
77 THEORETICAL SLAB HAUNCHING DIAGRAM - UNITS 1 AND 2
78 THEORETICAL SLAB HAUNCHING DIAGRAM - UNIT 3
79 THEORETICAL SLAB HAUNCHING DIAGRAM - UNIT 3
80 THEORETICAL BOTTOM OF SLAB ELEVATIONS AND GIRDER CAMBER DIAGRAM - UNITS 1 AND 2
81 THEORETICAL BOTTOM OF SLAB ELEVATIONS AND GIRDER CAMBER DIAGRAM - UNIT 3
82 SLAB GEOMETRY AND OFFSETS - UNITS 1 AND 2
83 SLAB GEOMETRY AND OFFSETS - UNIT 3
84 SLAB PLAN SHOWING REINFORCING - UNITS 1 AND 2
85 SLAB PLAN SHOWING REINFORCING - UNIT 3
86 PRECAST PRESTRESSED PANEL DETAILS
87 SLAB CROSS SECTION - UNIT 1
88 SLAB CROSS SECTION - UNIT 2
89 SLAB CROSS SECTION - UNIT 3
90 SLAB POURING SEQUENCE - UNITS 1 AND 2
91 SLAB POURING SEQUENCE - UNIT 3
92 DRAINAGE PLAN AND ELEVATION - UNITS 1 AND 2
93 DRAINAGE PLAN AND ELEVATION - UNIT 3
94 DRAINAGE SYSTEM DETAILS - 1
95 DRAINAGE SYSTEM DETAILS - 2
96 DRY STANDPIPE
97 BRIDGE LIGHTING LAYOUT
98 LEFT BARRIER CURB (TYPE D) - ELEVATIONS
99 RIGHT BARRIER CURB (TYPE D) - ELEVATIONS
100 BARRIER CURB (TYPE D) - DETAILS
101 MEDIAN BARRIER CURB (TYPE C)
102 MEDIAN BARRIER CURB TRANSITION (TYPE C)
103 LEFT BARRIER CURB (TYPE D) AT ABUTMENT 1
104 RIGHT BARRIER CURB (TYPE D) AT ABUTMENT 1
105 OPTIONAL SLIP-FORM BARRIER CURB (TYPE D)
106 OPTIONAL SLIP-FORM MEDIAN BARRIER CURB (TYPE C)
107 DETAILS OF FLAT PLATE EXPANSION DEVICES AT PIER 2 (RAMP 8 & RAMP 10)
108 DETAILS OF FLAT PLATE EXPANSION DEVICE AT PIER 5
109 DETAILS OF EXPANSION DEVICE AT MEDIAN BARRIER CURB AT PIER 5
110 MODULAR EXPANSION JOINT DETAILS - PIER 10
111 BRIDGE APPROACH SLAB AT RAMP 8
112 BRIDGE APPROACH SLAB AT RAMP 10
113 BAR BENDING DIAGRAMS
114 BILL OF REINFORCING STEEL
115 BILL OF REINFORCING STEEL
116 BILL OF REINFORCING STEEL
117 BILL OF REINFORCING STEEL
118 BILL OF REINFORCING STEEL
119 BILL OF REINFORCING STEEL
120 BILL OF REINFORCING STEEL
121 BILL OF REINFORCING STEEL
122 BILL OF REINFORCING STEEL
123 AS BUILT PILE DATA
124 AS BUILT DRILLED SHAFT DATA - UNITS 1 AND 2
125 AS BUILT DRILLED SHAFT DATA - UNIT 3

I-70 MISSISSIPPI RIVER BRIDGE
MISSOURI APPROACH

Detailed JUL 2009
Checked JUL 2009

Note: This drawing is not to scale. Follow dimensions.

Sheet No. 1 of 125

\\slsw00\Jobs\46440\Techprod\Bridges\MO-Approach\Drawings\Baseline Drawings\B_A6500_001-125_J6I0984B_001.dgn

01-SEP-2009 10:54

LAWRENCE E. ROLWES
NUMBER PE-2006002847
PROFESSIONAL ENGINEER
STATE OF MISSOURI
9/11/09

DATE
8/20/09

ROUTE	STATE
I-70	MO
DISTRICT	SHEET NO.
6	BR1

COUNTY
St. Louis City - MO

JOB NO.
J6I0984B

CONTRACT ID.

PROJECT NO.

BRIDGE NO.
A6500

DATE	DESCRIPTION

MISSOURI HIGHWAYS AND TRANSPORTATION COMMISSION
105 WEST CAPITOL
JEFFERSON CITY, MO 65102
1-888-ASK-MODOT (1-888-275-6636)

HNTB
715 KIRK DRIVE
KANSAS CITY, MO 64105-1310
816.483.1600 FAX 816.472.3062
CERTIFICATE OF AUTHORITY
NO. 001270

REV.

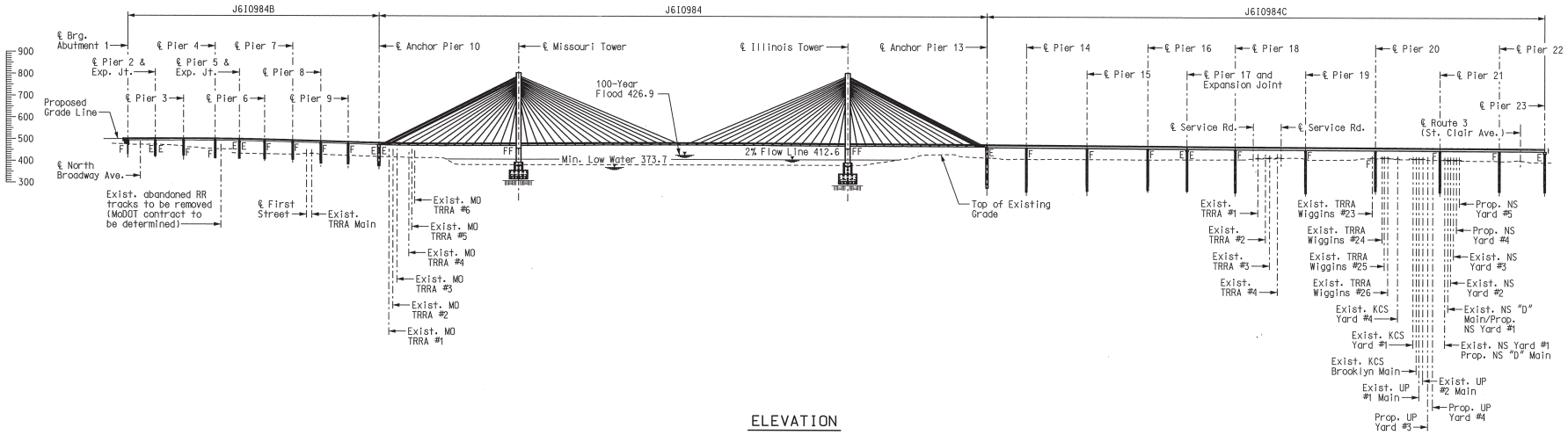

ELEVATION

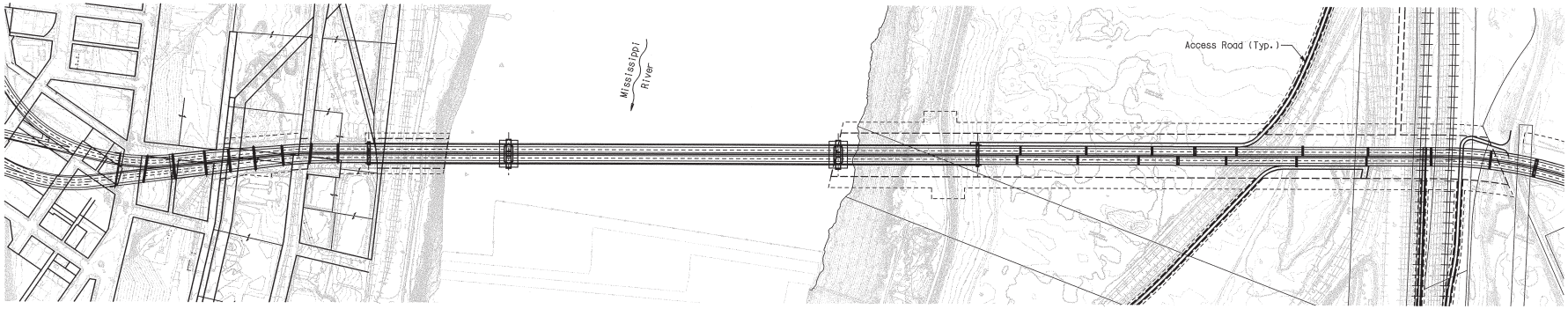

PLAN

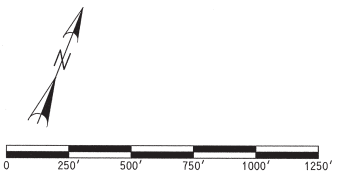

0 250' 500' 750' 1000' 1250'

Detailed JUL 2009
Checked JUL 2009

Note: This drawing is not to scale. Follow dimensions.

Sheet No. 2 of 125

OVERALL MISSISSIPPI RIVER BRIDGE LAYOUT

\\slsw00\Jobs\46440\Techprod\Bridges\MO-Approach\Drawings\Baseline Drawings\B_A6500_002-125_J6I0984B_002.dgn

18-AUG-2009 10:19

STATE OF MISSOURI LAWRENCE D. ROLWES NUMBER E-2006002847 PROFESSIONAL ENGINEER

8/20/09

DATE 8/20/09

ROUTE I-70 | STATE MO

DISTRICT 6 | SHEET NO. BR2

COUNTY St. Louis City - MO

JOB NO. J6I0984B

CONTRACT ID.

PROJECT NO.

BRIDGE NO. A6500

DESCRIPTION | DATE | REV.

MISSOURI HIGHWAYS AND TRANSPORTATION COMMISSION

MoDOT

105 WEST CAPITOL
JEFFERSON CITY, MO 65102
1-888-ASK-MODOT (1-888-275-6636)

HNTB

715 KIRK DRIVE
KANSAS CITY, MO 64105-1310
816.483.1600 FAX 816.472.3731
CERTIFICATE OF AUTHORITY NO. 001270

MISSOURI HIGHWAYS AND TRANSPORTATION COMMISSION

(125') Simple Composite Prestressed Concrete NU-Girder Span
(129'-144'-110') Continuous Composite Prestressed Concrete NU-Girder Spans
(115'-128'-128'-124'-138.25') Continuous Composite Prestressed Concrete NU-Girder Spans

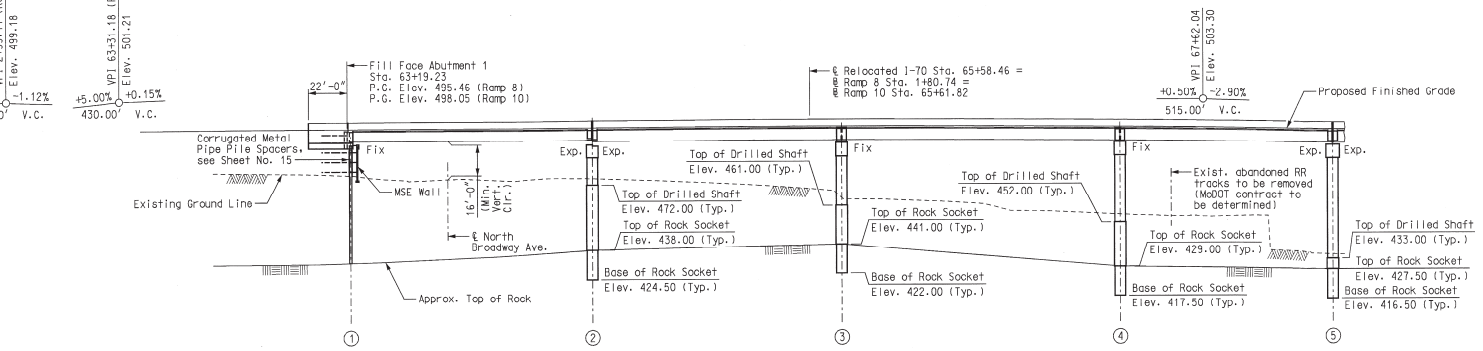

PART GENERAL ELEVATION

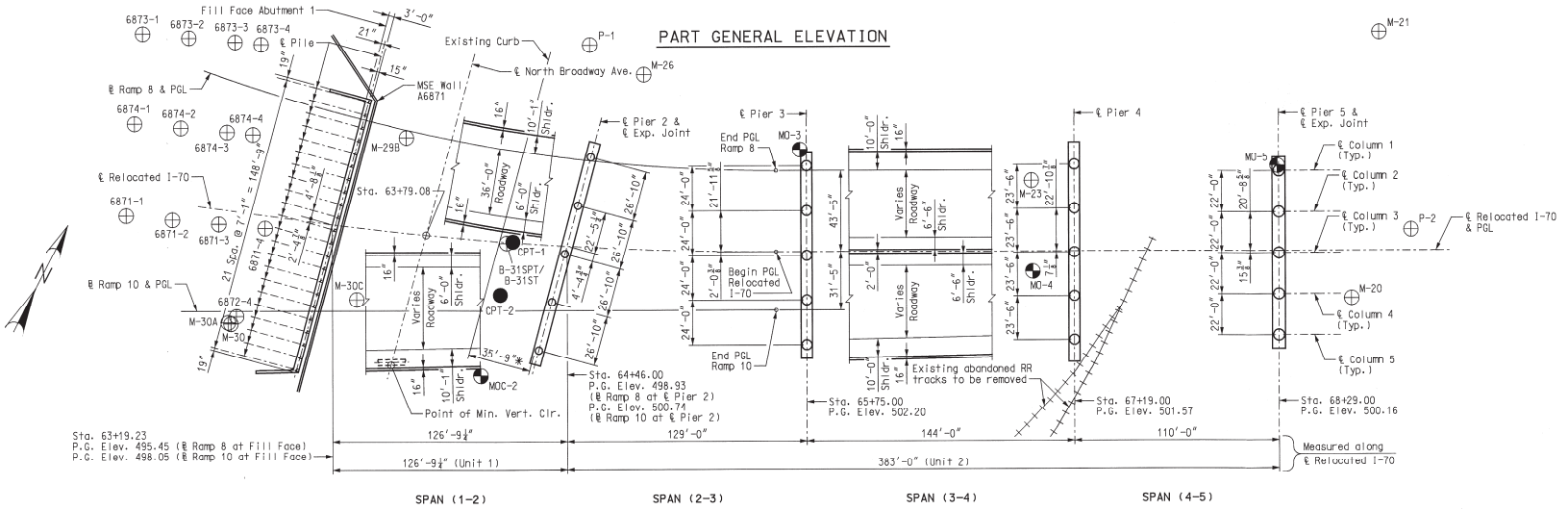

* Minimum Horizontal Clearance

PART PLAN

Notice and Disclaimer Regarding Boring Log Data

The locations of all subsurface borings for this structure are shown on the bridge plan sheets for this structure. Boring data for the locations shown ◔ are located on Sheet Nos. 7 thru 10. The boring data for all locations indicated, as well as any other boring logs or other factual records of subsurface data and investigations performed by the department for the design of the project, will be provided in the bridge electronic deliverable file or will be available from the Project Contact upon written request as outlined in the Project Special Provisions. No greater significance or weight should be given to the boring data depicted on the plan sheets than is subsurface data available from the district or elsewhere.

These borings represent the findings from the drill hole at the location and time shown. Any extensions, interpolations or extensions beyond the diameter of the drilling instrument are not warranted and should only be used by others, for any reason, at their own risk. Any claims for either Type 1 or II changed site condition by a bidder or contractor or those claiming under them will be judged by the Engineer based on his/her engineering judgement as to the range of possible reasonable expectations that those borings produced.

Notes:

"◔" Indicates location of borings drilled in 2008.

"●" Indicates approximate location of CPT's performed in 2008.

"⊕" Indicates approximate location of borings drilled prior to 2008.

All stations are along ℄ Relocated I-70.
All dimensions are horizontal.

MSE wall and roadway fill shall be completed to the final roadway section and up to the elevation of the bottom of the concrete beam within the limits of the structure and for not less than 100 feet in back of the MSE wall. Corrugated metal pipe pile spacers shall be placed per the special provisions prior to construction of the MSE wall. Pile driving shall not be started until the rate of settlement at settlement gauges (Roadway Item) is less than 1/4 inch per two-week period for two consecutive two-week periods and approval is given by the Engineer. See roadway and MSE wall plans for embankment construction requirements.

B.M. #3, Set at the end of a concrete walk at the northwest corner of Mullanphy Street and 1st Street and the southeast corner of the property of State Correctional Facility.
Elev. = 444.67

B.M. #7, Set in the southwest corner of concrete to a 6'x6' sq. manhole structure on the east side of Front Street in gravel at edge of asphalt between low service pumpstation and Bistate Warehousing, Inc. 650 N. Front Street, 0.7 mile north of the intersection of Front Street and Riverpark.
Elev. = 416.06

B.M. #10, Set in concrete median on the east side of Route 3 (St. Clair Ave.) between two railroad bridges. Approximately 0.1 mile south of 1st Street (in front of 301 St. Clair Ave.
Elev. 420.78

GENERAL PLAN AND ELEVATION – UNITS 1 AND 2

Detailed OCT 2009
Checked OCT 2009

Note: This drawing is not to scale. Follow dimensions.

Sheet No. 3 of 125

\\stlw00\pmwork\jobs\46440\Techprod\Bridges\MO-Approach\Drawings\Baseline Drawings\B_A6500_003-125_J6I0984B_003.dgn

09-DEC-2009 06:34

LAWRENCE C. ROLWES NUMBER PE-2006002841 PROFESSIONAL ENGINEER STATE OF MISSOURI

13/9/09

DATE	8/20/09
ROUTE	I-70
STATE	MO
DISTRICT	6
SHEET NO.	BR3
COUNTY	St. Louis City - MO
JOB NO.	J6I0984B
CONTRACT ID.	
PROJECT NO.	
BRIDGE NO.	A6500

DESCRIPTION	DATE

MISSOURI HIGHWAYS AND TRANSPORTATION COMMISSION
105 WEST CAPITOL
JEFFERSON CITY, MO 65102
1-888-ASK-MODOT (1-888-275-6636)

HNTB
115 KIRK DRIVE
KANSAS CITY, MO 64105-1310
TELEPHONE: (816) 472-1201
CERTIFICATE OF AUTHORITY
MO. 001270

NOT FOR CONSTRUCTION
11-08-09

REV.

MISSOURI HIGHWAYS AND TRANSPORTATION COMMISSION

(125′) Simple Composite Prestressed Concrete NU-Girder Span
(129′-144′-110′) Continuous Composite Prestressed Concrete NU-Girder Spans
(115′-128′-128′-124′-138.25′) Continuous Composite Prestressed Concrete NU-Girder Spans

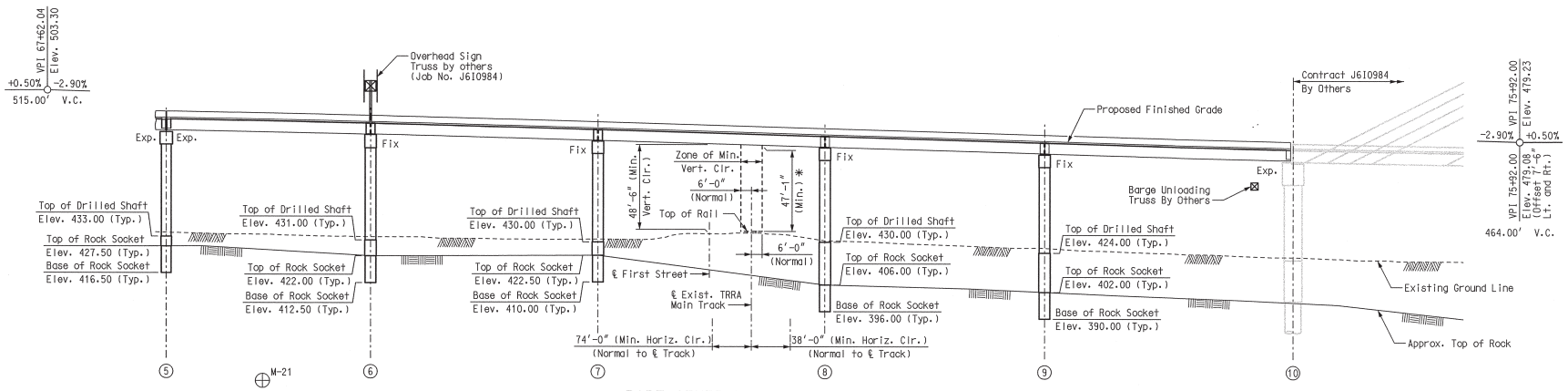

PART GENERAL ELEVATION

* Final vertical clearance from top of rails to bottom of superstructure to be at least 23′-6″.

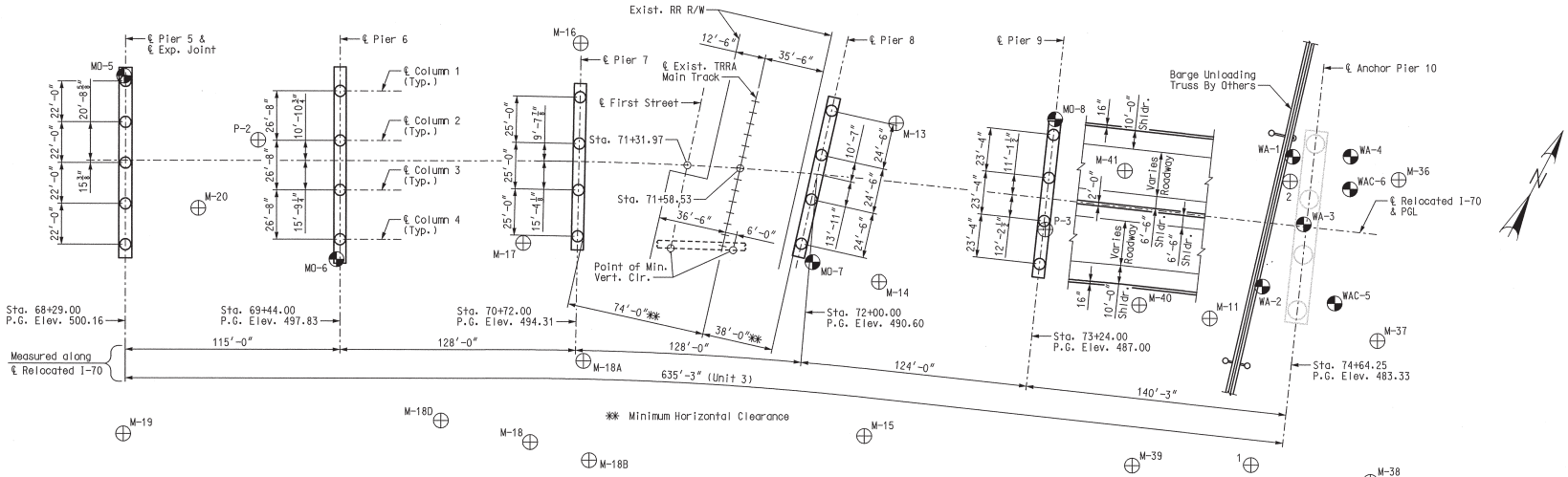

PART PLAN

Notes:
"◔" Indicates location of borings drilled in 2008.
"⊕" Indicates approximate location of borings drilled prior to 2008.
All stations are along ℄ Relocated I-70.
All dimensions are horizontal.
Boring data for the locations shown ◔ are shown on Sheet Nos. 7 thru 10.

GENERAL PLAN AND ELEVATION – UNIT 3

Detailed JUL 2009
Checked JUL 2009

Note: This drawing is not to scale. Follow dimensions.

Sheet No. 4 of 125

\\slsw00\Jobs\46440\Techprod\Bridges\MO-Approach\Drawings\Baseline Drawings\B_A6500_004-125_J6I0984B_004.dgn

19-AUG-2009 06:34

LAWRENCE E. ROLWES, JR. NUMBER PE-2009020847 STATE OF MISSOURI PROFESSIONAL ENGINEER
8/20/09

DATE 8/20/09
ROUTE I-70 | STATE MO
DISTRICT 6 | SHEET NO. BR4
COUNTY St. Louis City - MO
JOB NO. J6I0984B
CONTRACT ID.
PROJECT NO.
BRIDGE NO. A6500

DESCRIPTION | DATE

MISSOURI HIGHWAYS AND TRANSPORTATION COMMISSION
105 WEST CAPITOL
JEFFERSON CITY, MO 65102
1-888-ASK-MODOT (1-888-275-6636)

HNTB
715 KIRK DRIVE
KANSAS CITY, MO 64105-1310
TELEPHONE (816) 472-1201
CERTIFICATE OF AUTHORITY NO. 001270

REV.

GENERAL NOTES:

Design Specifications:
2007 - AASHTO LRFD 4th Edition and 2008 Interims
Load and Resistance Factor Design
Seismic Design Category = Seismic Zone 2
Seismic Peak Horizontal Ground Acceleration = 0.13g (975-yr.); 0.21g (2500-yr.)

Design Loading:
HL-93 (LRFD Superstructure, LRFD Substructure)
35#/Sq. Ft. Future Wearing Surface
Earth 120#/Cu. Ft., Equivalent Fluid Pressure 45#/Cu. Ft.
Superstructure: Simply-supported, non-composite for dead load.
Continuous composite for live load.

Design Unit Stresses:

Class B Concrete (Substructure)	f'c = 3,000 psi
Class B-2 Concrete (Drilled Shafts and Rock Sockets)	f'c = 5,500 psi
Class B-2 Concrete (Superstructure, except Prestressed Girders, Barrier Curb and Median Barrier Curb)	f'c = 4,000 psi
Class B-1 Concrete (Barrier Curb and Median Barrier Curb)	f'c = 4,000 psi
Reinforcing Steel (Grade 60)	fy = 60,000 psi
Structural Carbon Steel (ASTM A709 Grade 36)	fy = 36,000 psi
Steel Pile (ASTM A709 Grade 36)	fy = 36,000 psi

Neoprene Pads:
Bearings shall be 60 durometer neoprene pads, except as noted.

Fabricated Steel Connections:
Field connections shall be made with 3/4" diameter high strength bolts and 13/16" diameter holes, except as noted.

Joint Filler:
All joint filler shall be in accordance with Sec 1057 for preformed sponge rubber expansion and partition joint filler, except as noted.

Reinforcing Steel:
Minimum clearance to reinforcing steel shall be 1-1/2", unless otherwise shown.

Concrete Protective Coatings:
Protective coating for concrete piers (epoxy) shall be applied as shown on the bridge plans and in accordance with Sec 711.

Miscellaneous:
A minimum vertical clearance of 15'-0" over existing North Broadway Ave. and a minimum lateral clearance of 5'-3" from shoulder line shall be maintained during construction.
A minimum vertical clearance of 21'-0" from top of rails and a minimum horizontal clearance of 12'-0" from the centerline of track to nearest temporary construction falsework shall be maintained at all times during construction. See Special Provisions for flagging requirements and railroad insurance.
Erosion control measures are to be installed and properly maintained during construction activities in order that Railroad's right-of-way is protected at all times from project runoff and siltation.
High strength bolts, nuts, and washers will be sampled for quality assurance as specified in Sec 106 and Field Section (FS-712) from Materials Manual.
"Sec" refers to the sections in the standard and supplemental specifications unless specified otherwise.

Abbreviations:
E.F. denotes Each Face
N.F. denotes Near Face
F.F. denotes Far Face
U.N.O. denotes unless noted otherwise

ESTIMATED QUANTITIES

	Item		Substr.	Superstr.	Total
	Bridge Approach Slab (Bridge)	sq. yard	---	322	322
	Drilled Shafts (5 ft. 6 in. Dia.)	linear foot	385.0	---	385.0
	Drilled Shafts (6 ft. 6 in. Dia.)	linear foot	277.5	---	277.5
	Rock Sockets (5 ft. 0 in. Dia.)	linear foot	220.0	---	220.0
	Rock Sockets (6 ft. 0 in. Dia.)	linear foot	231.0	---	231.0
	Supplementary Television Camera Inspection	each	36	---	36
	Foundation Inspection Holes	linear foot	811.0	---	811.0
	Concrete Coring	linear foot	252.0	---	252.0
	Sonic Logging Testing	each	36	---	36
	Structural Steel Piles (14 in)	linear foot	1,263	---	1,263
	Pile Point Reinforcement	each	22	---	22
	Class B Concrete (Substructure)	cu. yard	2,956.1	---	2,956.1
*	Barrier Curb (Type D)	linear foot	---	2,778	2,778
*	Median Barrier Curb (Type C)	linear foot	---	905	905
	Median Barrier Curb Transition (Type C)	linear foot	---	18	18
	Slab on Concrete NU-Girder	sq. yard	---	12,939	12,939
	NU 63 (1600) Prestressed Concrete NU-Girder	linear foot	---	1,385	1,385
	NU 70 (1800) Prestressed Concrete NU-Girder	linear foot	---	9,623	9,623
	Reinforcing Steel (Bridges)	pound	799,110	---	799,110
	Mechanical Bar Splice	each	1,164	---	1,164
	Standpipe	lump sum	---	---	1
	Reinforcing Steel (Epoxy Coated)	pound	74,780	---	74,780
	Protective Coating - Concrete Bents and Piers (Epoxy)	lump sum	---	---	1
	Expansion Device (Flat Plate)	linear foot	---	214	214
	Steel Intermediate Diaphragm for P/S Concrete Girders	each	---	154	154
	Drainage System (On Structure)	lump sum	---	1	1
	Vertical Drain at End Bents	each	---	---	1
	Laminated Neoprene Bearing Pad	each	---	36	36
	Laminated Neoprene Bearing Pad (Tapered)	each	---	87	87
	Type N PTFE Bearing	each	---	51	51
	Corrugated Metal Pipe Pile Spacers	each	22	---	22

Notes:
All concrete above the construction joint in the abutment is included in the Estimated Quantities for Slab on Concrete NU-Girder.
All reinforcement in the abutment is included in the Estimated Quantities for Slab on Concrete NU-Girder.
All reinforcement in the pier concrete diaphragms except reinforcement embedded in the beam cap is included in the Estimated Quantities for Slab on Concrete NU-Girder.
All concrete above the pier beam cap is included in the Estimated Quantities for Slab on Concrete NU-Girder.
Cost of channel shear connectors C4 x 5.4 (ASTM A709 Grade 36) in place will be considered completely covered by the contract unit price for Structural Steel Piles (14 in.).
Laminated Neoprene Bearing Pads (Tapered and Non-Tapered) shall be in accordance with Sec 716.
* Barrier curb and median barrier curb shall be cast-in-place option or slip-form option.
Cost of any required excavation for bridge will be considered completely covered by the contract unit price for other items.

ESTIMATED QUANTITIES FOR SLAB ON CONCRETE NU-GIRDER

Item		Total
Class B-2 Concrete	cu. yard	3,274.0
Reinforcing Steel	pound	24,900
Reinforcing Steel (Epoxy Coated)	pound	813,390

Notes:
The table of Estimated Quantities for Slab on Concrete NU-Girder represents the quantities used by the State in preparing the cost estimate for concrete slabs. The area of the concrete slab will be measured to the nearest square yard with the horizontal dimensions as shown on the plan of slab. Payment for prestressed panels, conventional forms, all concrete, and coated and uncoated reinforcing steel will be considered completely covered by the contract unit price for the slab. Variations may be encountered in the estimated quantities but the variations cannot be used for an adjustment in the contract unit price.
Method of forming the slabs shall be as shown on the plans and in accordance with Sec 703. All hardware for forming the slab to be left in place as a permanent part of the structure shall be coated in accordance with ASTM A123 or ASTM B633 with a thickness class SC 4 and a finish type I, II, or III.

Precast Prestressed Panels:
The Estimated Quantities for Slab on Concrete NU-Girder are based on skewed precast prestressed end panels.
Class B-2 Concrete quantity is based on minimum top flange thickness and minimum joint material thickness.
The prestressed panel quantities are not included in the table of Estimated Quantities for Slab on Concrete NU-Girder.

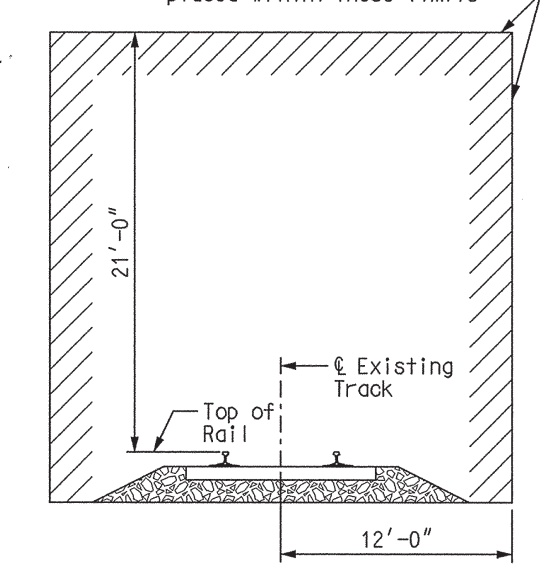

MINIMUM CONSTRUCTION CLEARANCE ENVELOPE
(Normal to ℄ Track)

FOUNDATION DATA

	Pier No.		1	2	3	4	5	6	7	8	9
Driven Pile	Type and Size		HP14x73	---	---	---	---	---	---	---	---
	Number		22	---	---	---	---	---	---	---	---
	Approximate Length	foot	58	---	---	---	---	---	---	---	---
	Pile Driving Verification Method		Modified Gates Formula	---	---	---	---	---	---	---	---
	Nominal Axial Pile Compression Resistance	kip	730	---	---	---	---	---	---	---	---
	Minimum Tip Penetration	Elev	438.00	---	---	---	---	---	---	---	---
	Criteria for Minimum Tip Penetration		Penetration of anticipated soft geotechnical layers	---	---	---	---	---	---	---	---
	Hammer Energy Required	ft-lbs	23,400	---	---	---	---	---	---	---	---
Rock Sockets	Foundation Material		---	Rock	Rock	Rock	Rock	Rock	Rock	Rock	Rock
	Number		---	5	5	5	5	4	4	4	4
	Design Side Friction	ksf	---	14.6	14.6	14.6	14.6	14.6	14.6	14.6	14.6

Notes:
Minimum energy requirement of hammer is based on plan length and nominal axial compression resistance value of piles.
All piles shall be driven to practical refusal.
Manufactured pile point reinforcement shall be used on all piles in this structure.

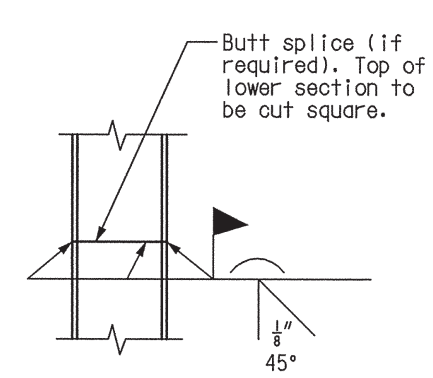

STEEL PILE SPLICE

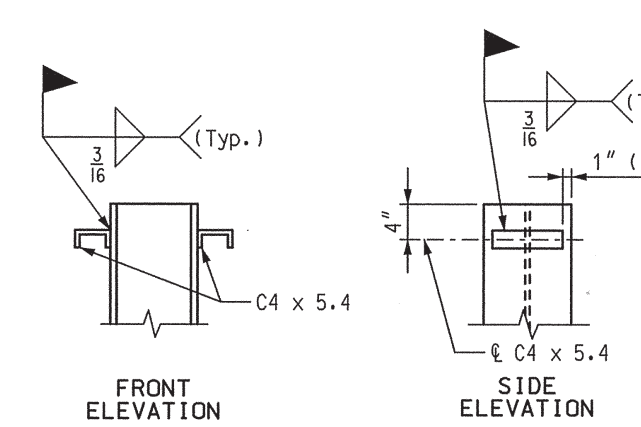

DETAILS OF PILE ANCHORS

GENERAL NOTES AND ESTIMATED QUANTITIES

Detailed JUL 2009
Checked JUL 2009

Note: This drawing is not to scale. Follow dimensions.

\\slsw00\Jobs\46440\Techprod\Bridges\MO-Approach\Drawings\Baseline Drawings\B_A6500_005-125_J6I0984B_005.dgn   01-SEP-2009 10:37

STATE OF MISSOURI — LAWRENCE D. ROLWES, JR. — NUMBER PE-2006002847 — REGISTERED PROFESSIONAL ENGINEER
9/1/09

DATE	8/20/09
ROUTE	I-70
STATE	MO
DISTRICT	6
SHEET NO.	BR5
COUNTY	St. Louis City - MO
JOB NO.	J6I0984B
CONTRACT ID.	
PROJECT NO.	
BRIDGE NO.	A6500

DESCRIPTION | DATE | REV.

MISSOURI HIGHWAYS AND TRANSPORTATION COMMISSION
105 WEST CAPITOL
JEFFERSON CITY, MO 65102
1-888-ASK-MODOT (1-888-275-6636)

HNTB
715 KIRK DRIVE
KANSAS CITY, MO 64105-1310
TELEPHONE (816) 472-1201
CERTIFICATE OF AUTHORITY
NO. 001270

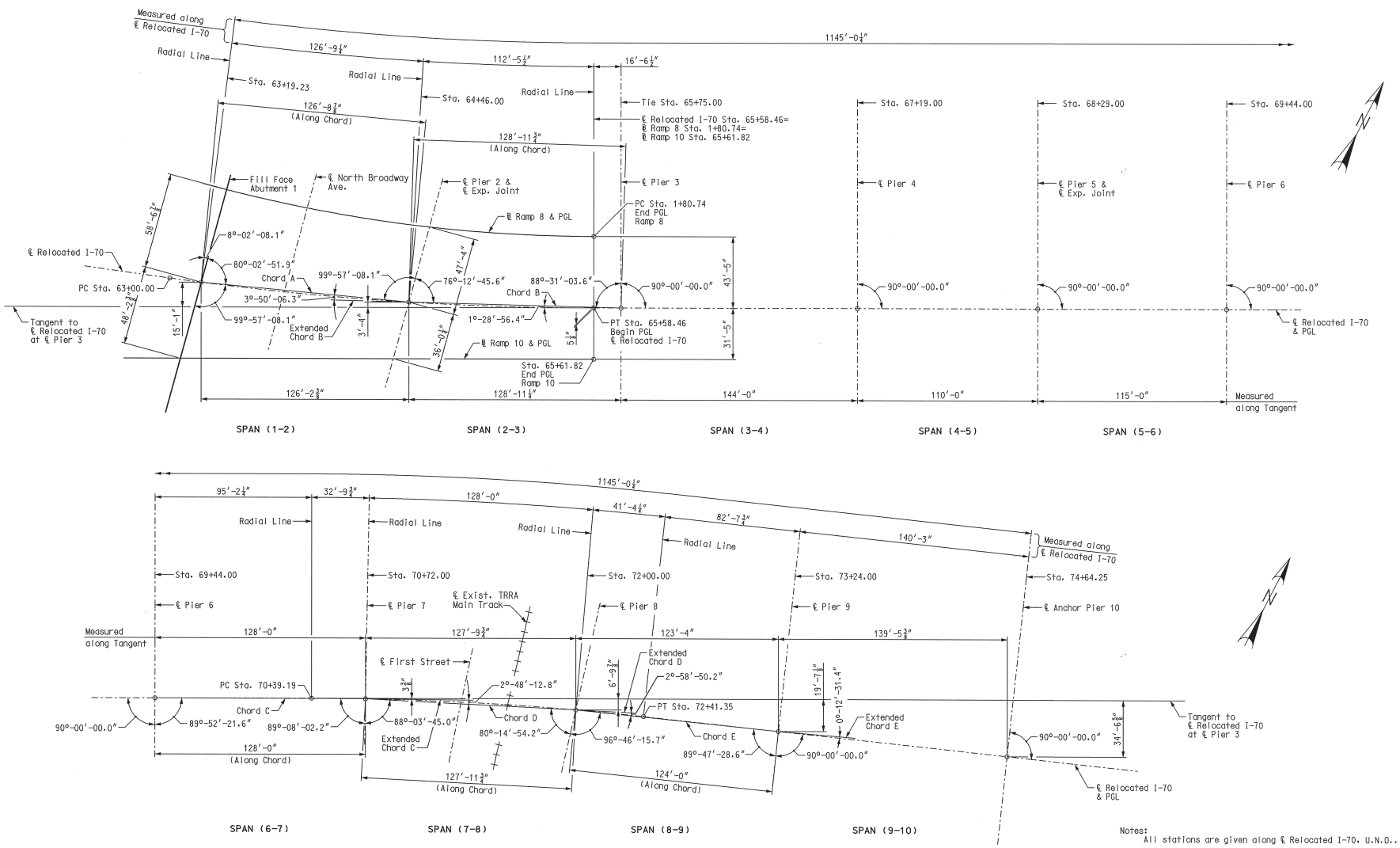

Notes:
All stations are given along ℄ Relocated I-70, U.N.O..

CURVE DATA

Curve R08-1

PI	3+92.80
PC	1+80.74
PCC	5+97.24
Δ	26° 34' 40.7" (RT)
D	6° 22' 52.5"
L	416.50'
T	212.07'
R	897.88'

Curve I-70-1

PI	64+29.43
PC	63+00.00
PT	65+58.46
Δ	7° 48' 56.5" (LT)
D	3° 01' 26.2"
L	258.46'
T	129.43'
R	1,894.74'

Curve I-70-2

PI	71+40.36
PC	70+39.19
PT	72+41.35
Δ	6° 07' 12.7" (RT)
D	3° 01' 38.5"
L	202.16'
T	101.18'
R	1,892.60'

Detailed JUL 2009
Checked JUL 2009

Note: This drawing is not to scale. Follow dimensions.

Sheet No. 6 of 125

SUBSTRUCTURE LAYOUT

STATE OF MISSOURI LAWRENCE E. ROLMES JR. NUMBER PE-2006002847 REGISTERED PROFESSIONAL ENGINEER
8/20/09

DATE	
8/20/09	
ROUTE I-70	STATE MO
DISTRICT 6	SHEET NO. BR6
COUNTY St. Louis City - MO	
JOB NO. J6I0984B	
CONTRACT ID.	
PROJECT NO.	
BRIDGE NO. A6500	

DESCRIPTION | DATE

MISSOURI HIGHWAYS AND TRANSPORTATION COMMISSION
MoDOT
105 WEST CAPITOL
JEFFERSON CITY, MO 65102
1-888-ASK-MODOT (1-888-275-6636)

HNTB
715 KIRK DRIVE
KANSAS CITY, MO 64105-1310
TELEPHONE (816) 472-1201
CERTIFICATE OF AUTHORITY NO. 001270

REV.

\\slsw00\Jobs\46440\Techprod\Bridges\MO-Approach\Drawings\Baseline Drawings\B_A6500_006-125_J6I0984B_006.dgn 18-AUG-2009 10:20

QU(TSF) P-Penet. L-Labor.	STANDARD PENETRATION TEST DEPTH	BLOWS/6"	
			ELEV. 477.2
			Dark Brown, Firm, Lean Clay, Moist, (FILL), Little Brick and Glass Pieces
2.75P	6		ELEV. 475.2
1.75P	8.5	2-4-4	Brown, Very Stiff to Firm, Lean CLAY, Moist, (CL), Trace Sand below 13.5'
0.75P	13.5	1-2-3	ELEV. 460.2
	18.5	2-4-5	Brown, Loose, Fine SAND, Moist, (SP), Trace Lean Clay
0.5P	23.5	1-2-4	ELEV. 453.7
1.25P	26		
0.5P	28.5	2-3-3	Brown, Soft to Stiff, Sandy Lean CLAY to Lean CLAY, Trace Sand, Moist, (CL)
0.75P	33.5	4-4-6	ELEV. 440.2
2.75P	38.5	6-6-50/0"	Brown, Very Stiff, Fat CLAY, Moist, (CH)

ROCK CORE DEPTH	REC%	RQD%	
			ELEV. 437.7
403.5L 43	83	56	LIMESTONE, gray to brown, moderately hard to hard, very finely to medium crystalline, thin to medium bedded, slightly to moderately weathered
48	95	85	- 3.0" void at 44.3 ft.
387.9L			- brown, moderately weathered below 86.2 ft.
53.25	100	79	- medium to finely crystalline, slightly weathered below 48.0 ft.
			- medium crystalline below 53.2 ft.
366.7L 58.25	100	88	- finely crystalline below 68.6 ft.
			- very finely to medium crystalline below 83.5 ft.
63.4	100	90	- moderately hard below 43.0 ft.
327.1L			- hard, thin bedded below 73.4 ft.
68.6	100	87	- medium bedded below 78.5 ft.
			- gray, medium bedded below 63.4 ft.
525.0L 73.4	100	57	- slightly pitted from 86.2 to 86.8 ft.
			- 6.0" core loss, possible clay seam at 40.3 ft.
78.5	100	44	- blue-gray, shaley from 52.6 to 54.2 ft.
			- 3.5" brown, hard, shale seam at 58.3 ft.
435.2L 83.5	100	72	- 0.12" gray, soft, shale seam at 66.3, 66.8, and 67.9 ft.
			- vertical fracture from 41.0 to 41.3, 50.0 to 50.3 and 60.4 and 61.3 ft.
88	100	100	- cemented vertical fracture from 46.6 to 48.0 ft.
			- 3.0" vertical fracture at 75.4 ft.
			- multiple horizontal fractures from 73.4 to 78.2 ft.
			- chert nodules at 70.6, 71.9, 72.8, 84.6, 84.8, 84.9, 85.1, and 85.8 ft.
			- 1.5" chert seam 71.6 ft.
			- 2.0" chert seams at 72.1 and 72.9 ft.
			- gray, cherty from 84.3 to 86.2 ft.
			ELEV. 389.2

Boring Number MOC-2
Pier 2
Sta. 64+05.27, 72.72' Rt.

QU(TSF) P-Penet. L-Labor.	STANDARD PENETRATION TEST DEPTH	BLOWS/6"	
			ELEV. 464.0
1.5P	2.5	2-3-4	Asphaltic Concrete (2.0")
			ELEV. 463.9
0.5P	7.5	2-2-3	Granite Cobblestone (5.0")
			ELEV. 463.4
1.0P	12.5	2-3-4	Crushed Limestone (1.0")
2.0P	17.5	1-3-4	ELEV. 463.4
1.5P	20		Dark Brown, Stiff to Firm, SILT, Trace Fine Sand to Sandy SILT, Moist, (ML)
1.0P	22.5	28-50/0"	ELEV. 451.5

ROCK CORE DEPTH	REC%	RQD%	
24	100	58	Dark Brown, Firm to Stiff, Lean CLAY, Moist, (CL) - Little Limestone Fragments at 22.5'
91.9L 29	65	13	ELEV. 441.0
34	93	68	LIMESTONE, gray, hard to moderately hard, medium to coarsely crystalline, thin bedded, slightly to moderately weathered, pitted - vertical fracture from 26.0 to 26.3 ft.
770.6L			ELEV. 437.0
39	100	93	SHALE, brown, moderately hard, clayey - core loss from 27.2 to 29.3 ft.
312.5L 44	100	100	ELEV. 432.6
49	100	100	LIMESTONE, gray to brown, moderately hard, very finely to coarsely crystalline, thin to thick bedded, slightly weathered to fresh, pitted
834.5L			- slightly weathered from 31.4 to 34.0 ft.
54	100	98	- brown, moderately weathered from 38.7 to 39.4 ft.
			- finely crystalline, very thick bedded below 34.0 ft.
59	100	100	- very finely crystalline, fresh below 39.0 ft.
322.7L			- thick bedded below 64.0 ft.
64	100	100	- medium bedded below 69.0 ft.
			- 0.25" dark gray, hard, shale seam at 48.3 53.2 and 53.3 ft.
1390.2L 69	97	97	- 1.0" dark gray, hard, shale seam at 55.7 ft.
			- 0.25" dark gray, soft, shale seam at 60.4, 61.6, and 62.8 ft.
74	100	100	- 0.12" dark gray, soft, shale seam at 71.0, 71.5, 71.9, and 72.4 ft.
			- cherty from 67.4 to 68.8 ft.
			- vertical fractures from 33.6 to 34.4 and 37.1 to 37.9 ft.
			- stylolites at 45.6, 45.8, 47.2, 48.2, 49.9, 50.3, 51.7, 52.1, 54.8, from 55.8 to 56.8, 57.8, from 58.0 to 58.5, 58.8, 60.2, 60.8, 61.0, 61.5, 62.0, 62.1, 62.2, 62.6, 63.1, 63.2, 63.4, 63.5, 63.8, 64.7, 64.8, 64.9, 65.0, 65.6, 66.2, 66.4, 66.5, 66.7, 67.3, 67.6, 69.3, 69.5, 69.9, 70.2, 70.8, 71.4, 72.6, 72.8, and 73.0 ft.
			- vertical stylolite from 63.8 to 64.0 ft.
			ELEV. 390.0

Boring Number MO-3
Pier 3
Sta. 65+71.47, 54.64' Lt.

QU(TSF) P-Penet. L-Labor.	STANDARD PENETRATION TEST DEPTH	BLOWS/6"	
			ELEV. 456.2
0.5P	3.5	1-3-2	Portland Cement Concrete (6.0")
2.0P	6		ELEV. 455.7
1.5P	8.5	6-7-6	Brown, Soft to Stiff, Lean Clay, Moist, (FILL), Few Concrete Pieces below 8.5'
			ELEV. 442.7
1.5P	13.5	WOH-WOH-1	Brown, Stiff to Very Soft, Lean CLAY, Moist, (CL), Few Limestone Pieces below 26.0'
	18.5	WOR-WOR-WOR	
0.25P	23.5	WOR-WOR-WOH	
0.25P	26		ELEV. 428.9

ROCK CORE DEPTH	REC%	RQD%	
534.3L 29.4	100	100	LIMESTONE, brown to gray, moderately hard, medium to very finely crystalline, medium to very thick bedded, slightly weathered to weathered
34.5	100	100	- weathered from 45.8 to 46.8 and 52.0 to 53.2 ft.
654.3L			- finely crystalline, slightly weathered below 59.8 ft.
39.5	93	87	- very finely crystalline below 69.8 ft.
441.3L 44.7	100	97	- gray, very thick bedded below 29.4 ft.
			- medium bedded below 39.5 ft.
49.75	100	95	- thick bedded below 44.7 ft.
635.0L			- thick to medium bedded below 54.8 ft.
54.75	100	98	- thin bedded below 59.8 ft.
			- medium bedded below 64.8 ft.
59.75	100	97	- gray, soft, shale seam at 33.8 ft.
790.0L			- 4.0" core loss, possible brown, soft, shale seam at 34.8 ft
64.75	100	73	- brown to bluish gray, shaley from 52.6 to 52.9 ft.
568.5L			- 0.25" blue-gray, soft, shale seam at 58.1, 58.2 and 59.3 ft.
69.75	100	65	- multiple horizontal joints with gray and brown shale from 69.8 to 74.7 ft.
			- cherty from 49.8 to 52.0 ft.
74.7	98	72	- chert nodules at 65.1, 66.1, and 68.1 ft.
			- 1.0" chert seam at 65.5 and 66.5 ft.
			- 0.5" chert seam at 66.8 ft.
			- cemented horizontal fracture at 29.9, 30.4, 33.3 and 44.2 ft.
			- high angle, weathered fractures from 35.1 to 36.6 ft.
			- 4.0" vertical fracture at 59.3 ft.
			- multiple horizontal fractures from 59.8 to 64.8 ft.
			ELEV. 381.5

Boring Number MO-4
Pier 4
Sta. 66+96.66, 10.92' Rt.

TYPICAL BORING

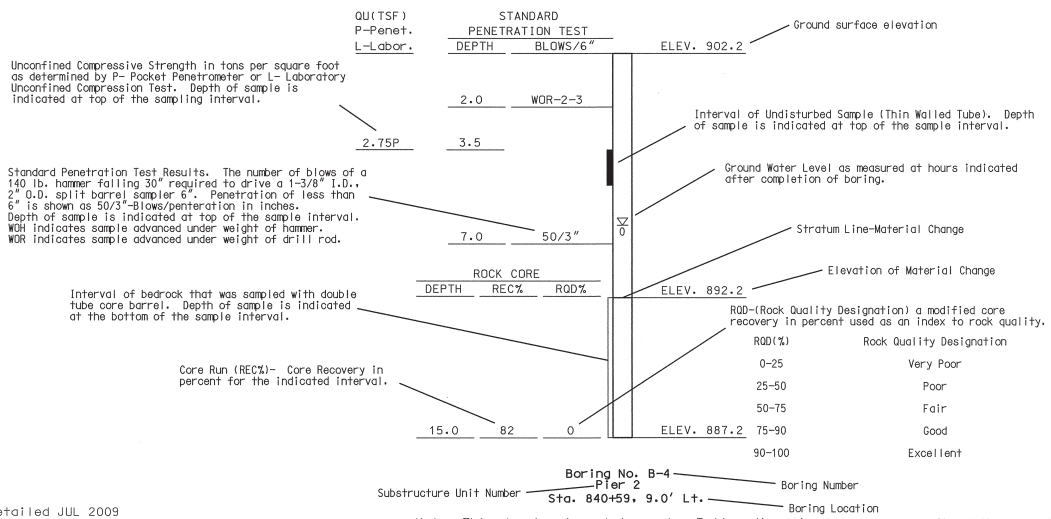

General Notes:

The borings shown in these plans were drilled by Geotechnology, Inc., under the direction of HNTB Corporation, between September 29, 2008 and December 31, 2008.
For boring locations in plan, see Sheet No. 3 through 4.
The ground water levels shown were recorded during time of drilling. Porosity of soil strata, weather conditions, seasonal changes, site topography, etc., may cause changes in the water levels reported.
The boring information shown on this drawing is abbreviated. A complete copy of boring logs and test results are available upon request to the Department.
For notice and disclaimer regarding boring log data, see Sheet No. 3.

BORING DATA (1 OF 4)

Detailed JUL 2009
Checked JUL 2009

Note: This drawing is not to scale. Follow dimensions.

Sheet No. 7 of 125

LAWRENCE E. ROLWES
NUMBER PE-2008020847
PROFESSIONAL ENGINEER
STATE OF MISSOURI
8/20/09

HNTB
715 KIRK DRIVE
KANSAS CITY, MO 64105-1310
TELEPHONE (816) 472-1201
CERTIFICATE OF AUTHORITY NO. 001270

DATE 8/20/09
ROUTE I-70
STATE MO
DISTRICT 6
SHEET NO. BR7
COUNTY St. Louis City - MO
JOB NO. J6I0984B
CONTRACT ID.
PROJECT NO.
BRIDGE NO. A6500

REV.	DESCRIPTION	DATE

MISSOURI HIGHWAYS AND TRANSPORTATION COMMISSION
105 WEST CAPITOL
JEFFERSON CITY, MO 65102
1-888-ASK-MODOT (1-888-275-6636)

QU(TSF) / P-Penet. / L-Labor. | STANDARD PENETRATION TEST: DEPTH | BLOWS/6"

	DEPTH	BLOWS/6"	
0.5P	3.5	3-5-15	ELEV. 436.0 Brown, Lean CLAY (CL), Trace Grass and Roots
			ELEV. 435.8
	7	50/4"	Dark Brown, Medium to Very Dense, Rubble, Moist, (FILL), Including Brick, Concrete, Glass pieces, Steel Rod, Few Lean Clay and Crushed Limestone
			ELEV. 427.8

ROCK CORE

	DEPTH	REC%	RQD%	
976.5L	10	95	95	LIMESTONE, gray to dark gray, hard, finely to medium crystalline, thick bedded, slightly weathered to fresh - dark gray from 32.3 to 32.8 ft. - slightly weathered from 24.0 to 24.8, 29.7 to 30.0, 51.5 to 54.5, and 56.1 to 59.3 ft. - moderately weathered from 59.3 to 60.0 ft. - medium crystalline, from 29.7 to 30.0 ft. - thin bedded below 40.0 ft. - 0.25" dark gray, moderately hard, shale seam at 11.0 ft. - 0.25" dark gray, soft, shale seam at 32.2, 37.2 and 39.8 ft. - 0.12" gray, soft, shale seam at 43.8 ft. - cherty from 44.0 to 46.0, 50.0 to 51.0 and 57.1 to 59.4 ft. - chert nodules at 59.2 ft. - vertical fracture from 22.6 to 23.1, 24.0 to 24.8, 35.9 to 36.7 49.4 to 49.6 and 59.6 to 60.0 ft. - horizontal fractures at 52.9 and 53.7 ft. - stylolites at 8.4, 8.6, 8.8, 9.8, 11.3, 11.6, 12.4, 12.7, 16.2, 16.4, 18.5, 20.7, 21.2, 30.9, 31.7, 37.3, 38.1, 38.2, 39.0, 41.3, 41.5, 41.8, 42.1, 42.5, 42.6, 42.8, 42.9, 43.4, 43.6, 45.4, 45.7, 45.9, 46.0, 46.5, 46.9, 48.1, 48.8 and 49.7 ft. - horizontal stylolite at 25.2, 26.4, and 28.7 ft. - vertical stylolites from 13.1 to 14.1, 19.4 to 19.6 23.1 to 23.5, and 35.0 to 37.0 ft.
562.8L	15	100	93	
481.8L	20	100	98	
286.7L	25	100	90	
185.4L	30	100	93	
346.1L	35	100	100	
	40	100	80	
	45	100	88	
	50	100	72	
	55	100	100	
	60	100	92	

ELEV. 376.0

Boring Number MO-5
Pier 5
Sta. 68+28.22, 45.56' Lt.

QU(TSF) / P-Penet. / L-Labor. | STANDARD PENETRATION TEST: DEPTH | BLOWS/6"

	DEPTH	BLOWS/6"	
2.0P	3.5	2-3-2	ELEV. 433.5 Topsoil
			ELEV. 433.3
	8.5	2-3-7	Dark Brown, Stiff, Lean Clay, Moist, (FILL), Some Limestone Pieces, Cinders
			ELEV. 426.5
	11	50/4"	Dark Brown, Loose to Very Dense, Rubble, Moist, (FILL), Including Limestone Pieces, Brick, Lean Clay, Concrete and Cinders
			ELEV. 422.0

ROCK CORE

	DEPTH	REC%	RQD%	
559.4L	15	98	90	LIMESTONE, gray to dark gray, hard, finely to medium crystalline, thick to thin bedded, fresh to highly weathered - finely crystalline, fresh to slightly weathered below 15.0 ft. - weathered from 23.6 to 24.3 ft. - moderately weathered from 31.0 to 31.5 ft. - thin bedded, slightly weathered below 35.0 ft. - fresh below 40.0 ft. - slightly weathered from 47.7 to 50.0 ft. - dark gray, medium crystalline, moderately to highly weathered, pitted below 50.0 ft. - 0.25" gray, soft, shale seam at 23.7 ft. - 0.25" dark gray, soft, shale seam at 36.3, 38.5, 39.2, 41.2, 42.4, 44.4 and 47.7 ft. - cherty from 43.2 to 46.1 and 56.0 to 59.2 ft. - vertical joint from 15.0 to 15.5 ft. - vertical fracture from 20.0 to 20.2, 46.1 to 46.3 and 46.6 to 47.1 ft. - 45 degree fracture from 53.5 to 53.6 ft. - multiple fractures from 55.0 to 59.7 ft. - stylolite at 19.8, 27.3, 27.6, 28.3, 30.4, 34.6, 37.3, 37.4, 38.2, 38.6, 39.0, 40.2, 40.3, 41.0, 41.3, 41.8, 42.8, 43.1, 43.2, 43.4, 44.2, 44.5, 44.7, 46.0, 46.6, 47.3, 47.4, and 47.6 ft. - vertical stylolite from 25.6 to 25.8 ft. - 3.0" core loss at 59.7 ft.
	20	100	100	
874.6L	25	100	100	
876.2L	30	100	85	
	35	100	100	
647.9L	40	100	93	
	45	100	92	
537.6L	50	100	77	
346.7L	55	100	100	
	60	95	85	

MO-6

ELEV. 373.5

Boring Number MO-6
Pier 6
Sta. 69+42.17, 53.13' Rt.

QU(TSF) / P-Penet. / L-Labor. | STANDARD PENETRATION TEST: DEPTH | BLOWS/6"

	DEPTH	BLOWS/6"	
			ELEV. 432.4
	3.5	4-4-3	Asphaltic Concrete (6.0")
			ELEV. 431.9
			Brown, Soft, Silt, Moist, (FILL)
			ELEV. 431.4
	8.5	2-1-1	Black, Loose, Cinders, Moist, (FILL), Few Crushed Limestone Pieces
			ELEV. 429.9
0.5P	13.5	1-1-2	
	18.5	1-1-1	Brown, Dark Brown to Gray, Soft, Lean Clay, Dry to Moist, (FILL), Brick, Crushed Limestone, Cinders, Asphalt Pieces and Concrete Pieces
0.5P	23.5	2-3-50/1"	
			ELEV. 407.8

ROCK CORE

	DEPTH	REC%	RQD%	
269.3L	29.8	100	96	LIMESTONE, gray to brown, moderately hard, very finely to coarse crystalline, thick to medium bedded, slightly weathered to fresh - hard, fresh below 65.1 ft. - brown, pitted from 58.5 to 60.2 ft - medium crystalline below 34.7 ft. - finely crystalline below 45.0 ft. - very finely crystalline, thick bedded below 55.0 ft. - brown, medium crystalline below 60.2 ft. - thick to medium bedded below 29.8 ft. - medium bedded below 39.9 ft. - shaley from 26.3 to 28.0 and 33.8 to 34.7 ft. - 0.25" gray, soft, shale seam at 69.8 ft. - 1.0" gray, soft, clay seam at 72.1 ft. - 0.5" blue-gray, medium hard, shale seam at 27.9 ft. - cherty from 28.5 to 29.8 ft. - chert nodule at 33.1, 58.8, 58.9, 59.0, 59.3, 60.2, 60.3, 61.1, 62.2, 62.3, and 62.4 ft. - 2.0" chert seam at 47.2 ft. - 1.0" chert seam at 58.3 ft. - cemented horizontal fractures at 40.1, 40.9, 41.6, 41.9, 42.1, 42.4, 42.9, 44.1, 44.2, 44.3, and 44.8 ft. - multiple horizontal and cemented horizontal fractures from 45.0 to 55.0 ft.
539.6L	34.7	100	90	
	39.9	100	97	
527.4L	45	100	79	
958.9L	50.1	100	83	
538.7L	55	100	73	
174.8L	60.2	100	95	
585.6L	65.1	100	95	
564.0L	70	100	93	
	75	100	82	

ELEV. 357.4

Boring Number MO-7
Pier 8
Sta. 72+01.66, 47.44 Rt.

QU(TSF) / P-Penet. / L-Labor. | STANDARD PENETRATION TEST: DEPTH | BLOWS/6"

	DEPTH	BLOWS/6"	
1.5P	3	3-2-2	ELEV. 426.7 Brown, Lean CLAY, Moist, (CL), Little Gravel, (4.0")
0.75P	5		ELEV. 426.4
0.25P	7.5	1-1-1	Granite Cobblestone, (5.0")
			ELEV. 426.0
0.25P	13	1-WOH-WOH	Crushed Limestone, (1.0")
0.25P	15		ELEV. 425.9
0.25P	18	1-1-1	Dark Gray to Black, Stiff to Firm, Lean Clay, Moist, (FILL), Few Fine Gravel, Trace Coal
0.25P	23	WOH-1-2	ELEV. 419.7
	25	50/3"	Dark Gray to Black, Soft, Sandy Silt, Very Moist, (FILL), Trace Gravel, Some Cinders, Gravel, Plastic Pieces
			ELEV. 408.7
			Dark Gray to Black, Soft, Lean CLAY, Moist, (CL), Trace Gravel
			ELEV. 401.7
			Dark Gray, Very Stiff, CLAY, Moist, (CH), Some Limestone Pieces
			ELEV. 401.2

ROCK CORE

	DEPTH	REC%	RQD%	
469.0L	29.5	96	38	LIMESTONE, gray to brown, moderately hard, very finely to medium crystalline, thin to thick bedded, highly weathered to fresh, pitted - highly weathered from 33.9 to 34.5 ft. - brown, moderately weathered below 54.5 ft - finely crystalline, thick bedded below 34.5 ft. - thin bedded below 39.5 ft. - very finely crystalline below 49.5 ft. - fresh, thick bedded below 64.5 ft. - thin bedded below 69.5 ft. - dark gray, hard, shale layer from 26.3 to 26.8, and 27.0 to 27.4 ft. - 0.25" dark gray, soft, shale seam at 27.7, 27.8, 27.9, 63.0, 71.8, 73.1, and 74.0 ft. - 0.25" dark gray, hard, shale seam at 47.5 ft. - dark gray, soft, shale partings at 50.9, 51.7, 52.0, and 53.6 ft. - 0.5" dark gray, soft, shale seam at 64.8 and 67.2 ft. - vertical fracture from 32.7 to 33.6 ft. - vertical joint from 41.2 to 41.7, 42.1 to 42.4, and 67.2 to 67.5 ft. - cherty from 43.9 to 46.0 and 56.5 to 59.0 ft. - stylolite at 37.8, 37.9, 38.1, 38.5, 38.7, 38.8, 39.8, 40.0, 40.4, 42.4, 42.8, 45.0, 45.6, 45.7, 47.0, 47.4, 47.9, 48.1, 50.4, 51.3, 52.1, 52.6, 52.7, 53.4, 54.8, 55.9, 56.1, 62.0, 62.6, 63.1, 63.5, 65.6, 65.8, 66.3, 66.7, 66.8, 68.8, 70.6, 71.2, 71.7, 72.1, 72.6, 72.7, and 73.6 - vertical stylolite from 34.5 to 35.1 and 40.8 to 41.2 ft.
327.7L	34.5	100	68	
354.0L	39.5	100	87	
766.3L	44.5	100	73	
820.9L	49.5	100	75	
475.1L	54.5	100	70	
101.7L	59.5	100	98	
533.3L	64.5	100	98	
	69.5	100	83	
	74.5	100	90	

ELEV. 352.2

Boring Number MO-8
Pier 9
Sta. 73+23.93, 42.92' Lt.

Note:
For Typical Boring and General Notes, see Sheet No. 7.

BORING DATA (2 OF 4)

Detailed JUL 2009
Checked JUL 2009

Note: This drawing is not to scale. Follow dimensions.

Sheet No. 8 of 125

\\slsw00\Jobs\46440\Techprod\Bridges\MO-Approach\Drawings\Baseline Drawings\B_A6500_008-125_J610984B_008.dgn

18-AUG-2009 10:20

LAWRENCE D. ROLWES NUMBER PE-2005002847 STATE OF MISSOURI PROFESSIONAL ENGINEER

8/20/09

DATE 8/20/09
ROUTE I-70 | STATE MO
DISTRICT 6 | SHEET NO. BR8
COUNTY St. Louis City - MO
JOB NO. J610984B
CONTRACT ID.
PROJECT NO.
BRIDGE NO. A6500

DESCRIPTION | DATE

MISSOURI HIGHWAYS AND TRANSPORTATION COMMISSION
105 WEST CAPITOL
JEFFERSON CITY, MO 65102
1-888-ASK-MODOT (1-888-275-6636)

HNTB
715 KIRK DRIVE
KANSAS CITY, MO 64105-1310
TELEPHONE (816) 472-1201
CERTIFICATE OF AUTHORITY NO. 001270

REV.

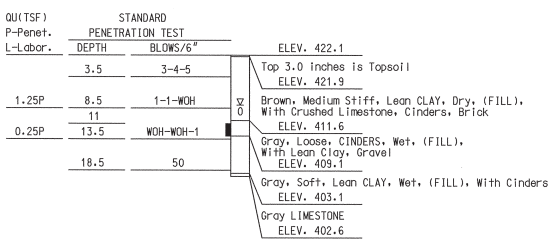

Boring Number WA-1
Anchor Pier 10
Sta. 74+52.89, 36.80' Lt.

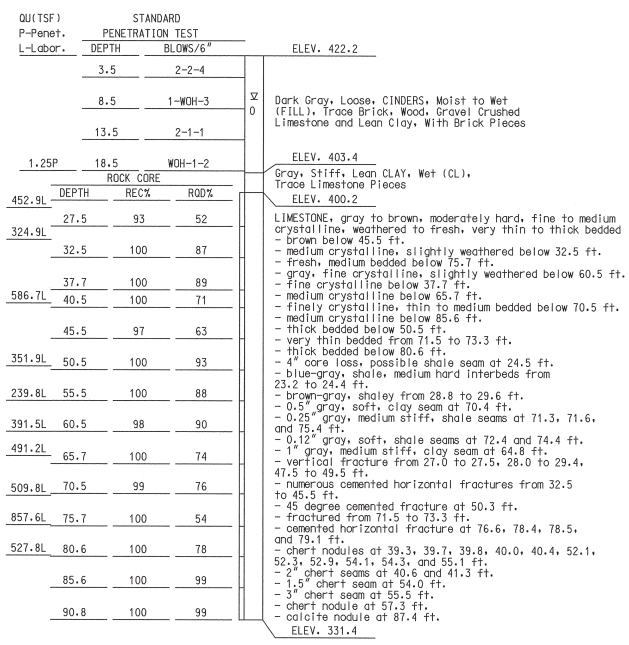

Boring Number WA-2
Anchor Pier 10
Sta. 74+44.23, 34.46' Rt.

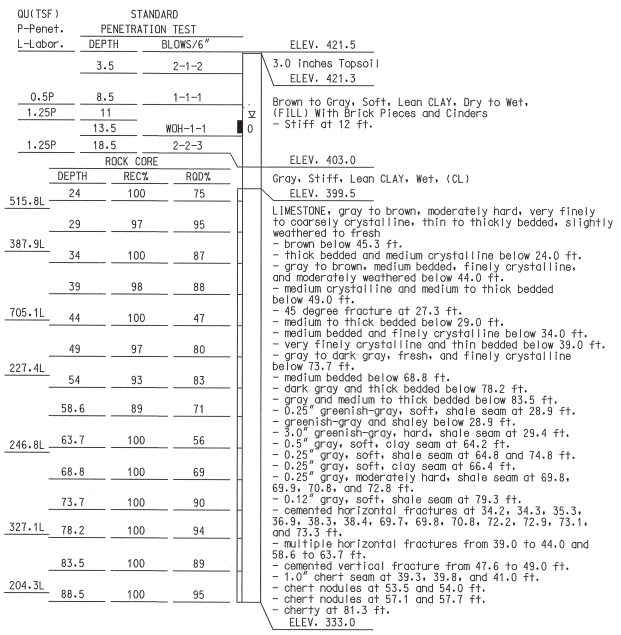

Boring Number WA-3
Anchor Pier 10
Sta. 74+62.74, 1.30' Lt.

Note:
For Typical Boring and General Notes, see Sheet No. 7.

BORING DATA (3 OF 4)

LAWRENCE E. ROLWES NUMBER PE-2006002841 PROFESSIONAL ENGINEER STATE OF MISSOURI
8/20/09

DATE 8/20/09
ROUTE I-70 | STATE MO
DISTRICT 6 | SHEET NO. BR9
COUNTY St. Louis City - MO
JOB NO. J6I0984B
CONTRACT ID.
PROJECT NO.
BRIDGE NO. A6500

DESCRIPTION | DATE

MISSOURI HIGHWAYS AND TRANSPORTATION COMMISSION
105 WEST CAPITOL
JEFFERSON CITY, MO 65102
1-888-ASK-MODOT (1-888-275-6636)

HNTB
715 KIRK DRIVE
KANSAS CITY, MO 64105-1310
TELEPHONE (816) 472-1201
CERTIFICATE OF AUTHORITY NO. 001270

REV.

Detailed JUL 2009
Checked JUL 2009

Note: This drawing is not to scale. Follow dimensions.

\\slsw00\Jobs\46440\Techprod\Bridges\MO-Approach\Drawings\Baseline Drawings\B_A6500_009-125_J6I0984B_009.dgn

18-AUG-2009 10:20

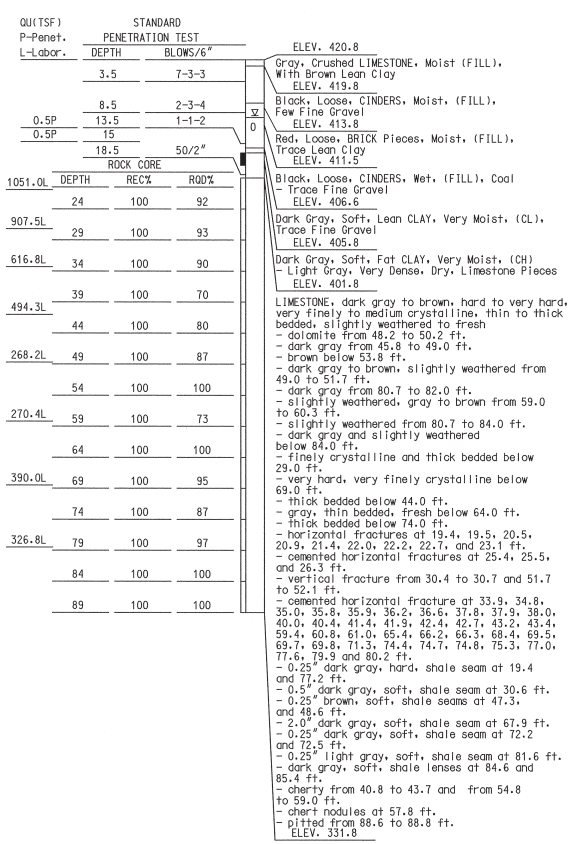

Boring Number WA-4
Anchor Pier 10
Sta. 74+83.82, 40.28' Lt.

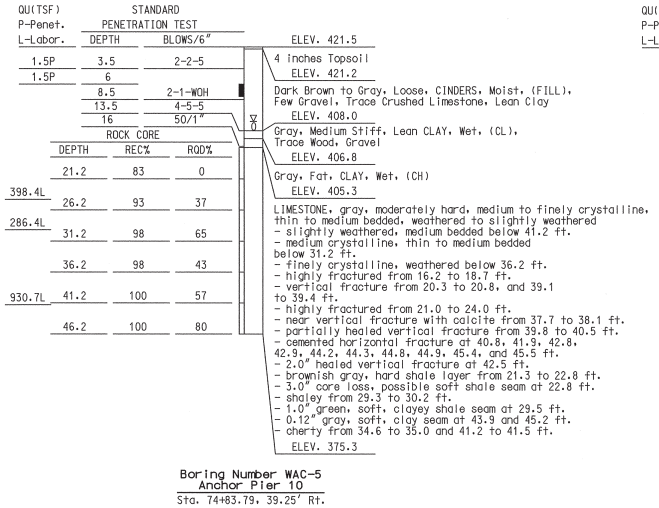

Boring Number WAC-5
Anchor Pier 10
Sta. 74+83.79, 39.25' Rt.

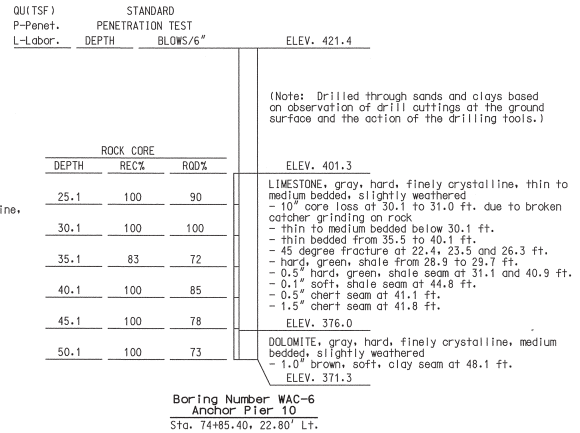

Boring Number WAC-6
Anchor Pier 10
Sta. 74+85.40, 22.80' Lt.

Note:
For Typical Boring and General Notes, see Sheet No. 7.

BORING DATA (4 OF 4)

Detailed JUL 2009
Checked JUL 2009

Note: This drawing is not to scale. Follow dimensions.

Sheet No. 10 of 125

\\slsw00\Jobs\46440\Techprod\Bridges\MO-Approach\Drawings\Baseline Drawings\B_A6500_010-125_J6I0984B_010.dgn

18-AUG-2009 10:20

REV.

LAWRENCE E. ROLWES, CPEM NUMBER PE-2009020847 STATE OF MISSOURI PROFESSIONAL ENGINEER

8/20/09

DATE 8/20/09
ROUTE I-70
STATE MO
DISTRICT 6
SHEET NO. BR10
COUNTY St. Louis City - MO
JOB NO. J6I0984B
CONTRACT ID.
PROJECT NO.
BRIDGE NO. A6500

DESCRIPTION | DATE

MISSOURI HIGHWAYS AND TRANSPORTATION COMMISSION
MoDOT
105 WEST CAPITOL
JEFFERSON CITY, MO 65102
1-888-ASK-MODOT (1-888-275-6636)

HNTB
715 KIRK DRIVE
KANSAS CITY, MO 64105-1310
TELEPHONE (816) 472-1201
CERTIFICATE OF AUTHORITY NO. 001270

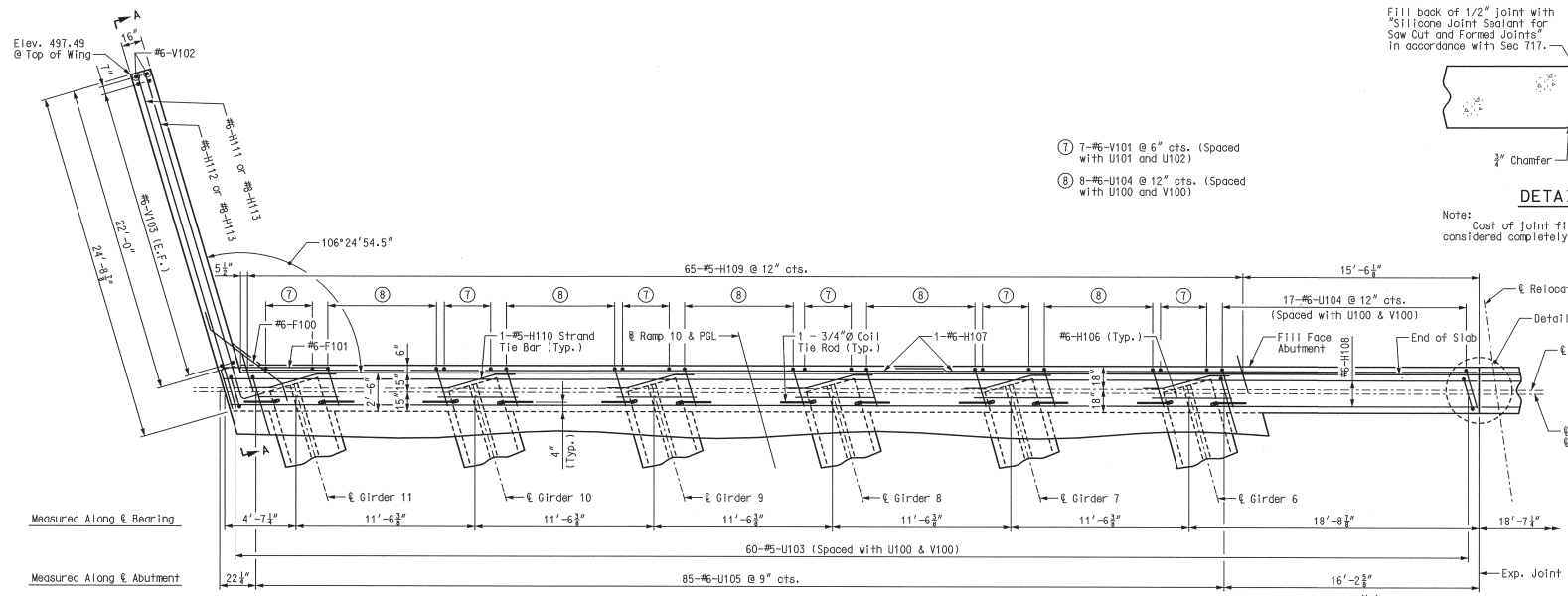

⑦ 7-#6-V101 @ 6" cts. (Spaced with U101 and U102)

⑧ 8-#6-U104 @ 12" cts. (Spaced with U100 and V100)

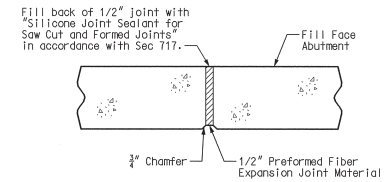

DETAIL "G"

Note:
Cost of joint filler and sealant shall be considered completely covered by other items.

PART PLAN

Note:
Lap for #6-H107 bars = 3'-1" (Min.).

Notes:
For reinforcement of the barrier curb, see Sheet Nos. 98, 99, and 104.
Bend F100 bars in the field to clear girders.
All reinforcing bars in the substructure beams or caps shall be field adjusted to clear piles by at least 1-1/2".
All concrete in the abutment above top of beam and below top of slab shall be Class B-2.
Strands at end of girder shall be field bent or, if necessary, cut in field to maintain 1-1/2" minimum clearance to fill face of abutment.
All U bars and pairs of V bars are to be placed parallel to ℄ Girders.
For Elevation A-A, see Sheet No. 15.
For detail of Bearing Pads, see Sheet No. 14.
For Typical Section Thru Key, see Sheet No. 14.
For coil tie details, see Sheet No. 62.
Laminated Neoprene Bearing Pads shall be oriented along ℄ girders.

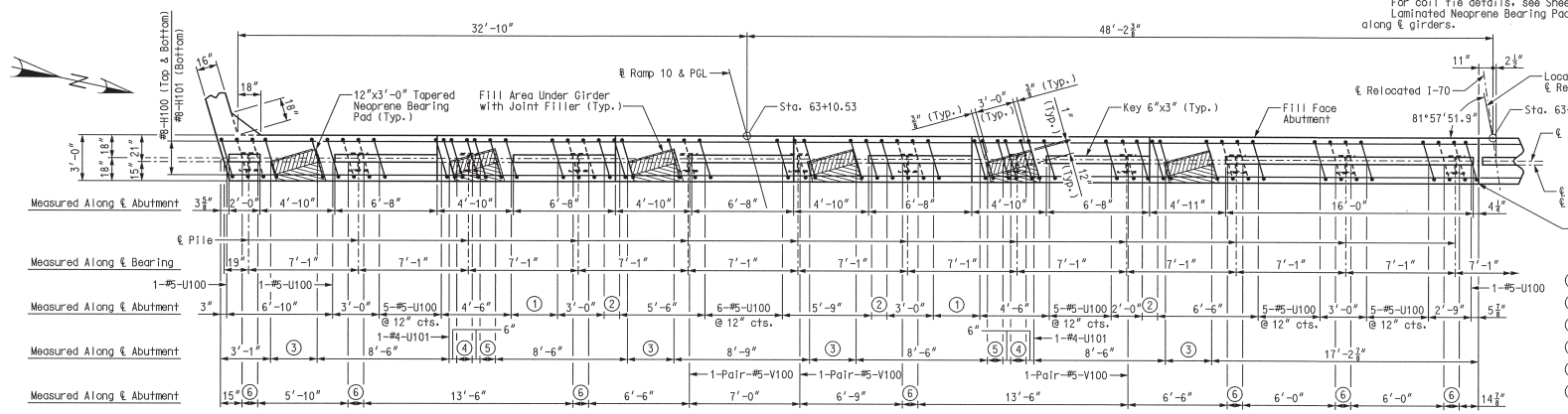

① 4-#5-U100 @ 12" cts.
② 2-#5-U100 @ 12" cts.
③ 7-#4-U101 @ 6" cts.
④ 3-#4-U102 @ 6" cts.
⑤ 3-#4-U101 @ 6" cts.
⑥ 2-Pair-#5-V100 @ 12" cts.

PART PLAN OF BEAM

ABUTMENT 1 - PLANS

Detailed JUL 2009
Checked JUL 2009

Note: This drawing is not to scale. Follow dimensions.

STATE OF MISSOURI
LAWRENCE E. ROLWES JR.
NUMBER PE-2006002847
REGISTERED PROFESSIONAL ENGINEER
8/20/09

DATE	
8/20/09	
ROUTE I-70	STATE MO
DISTRICT 6	SHEET NO. BR11
COUNTY St. Louis City - MO	
JOB NO. J6I0984B	
CONTRACT ID.	
PROJECT NO.	
BRIDGE NO. A6500	

DESCRIPTION

DATE

MISSOURI HIGHWAYS AND TRANSPORTATION COMMISSION
MoDOT
105 WEST CAPITOL
JEFFERSON CITY, MO 65102
1-888-ASK-MODOT (1-888-275-6636)

HNTB
715 KIRK DRIVE
KANSAS CITY, MO 64105-1310
TELEPHONE (816) 472-1201
CERTIFICATE OF AUTHORITY NO. 001270

REV.

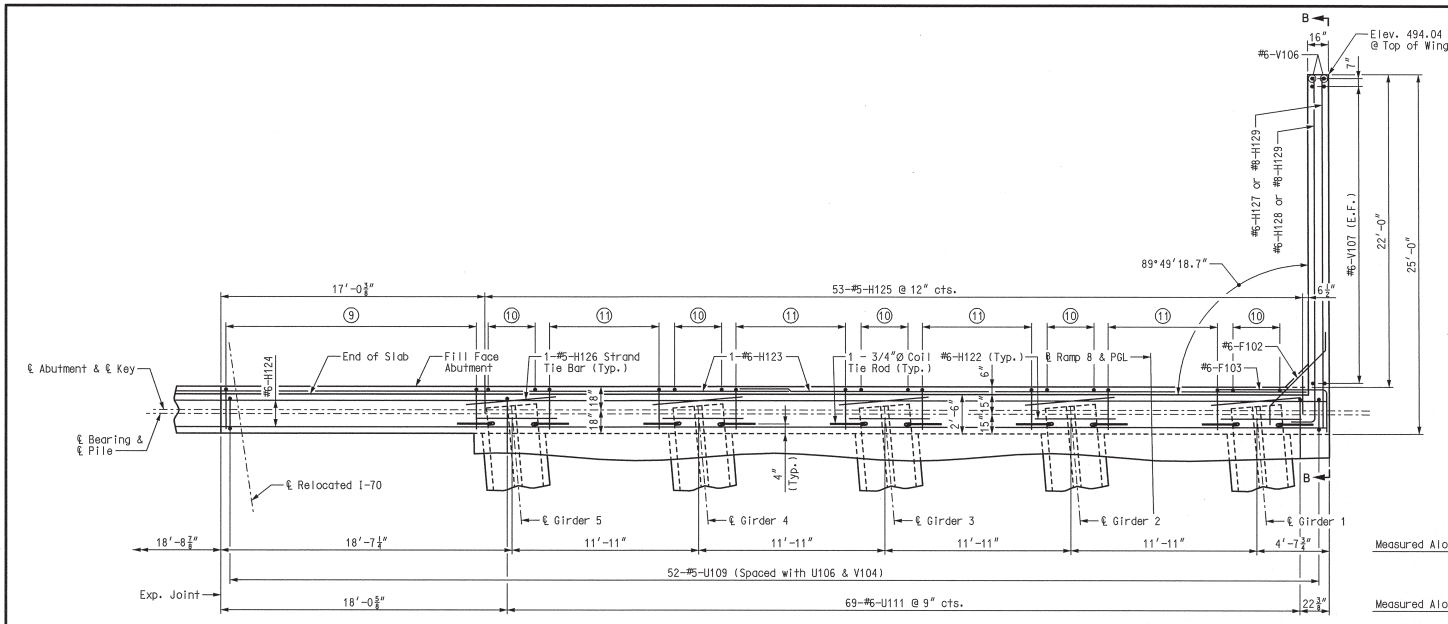

Measured Along ℄ Bearing

Measured Along ℄ Abutment

⑨ 17-#6-U110 @ 12" cts. (Spaced with U106 and V104)

⑩ 7-#6-V105 @ 6" cts. (Spaced with U107 and U108)

⑪ 8-#6-U110 @ 12" cts. (Spaced with U106 and V104)

PART PLAN

Note:
Lap for #6-H123 bars = 3'-1" (Min.).

Notes:
For reinforcement of the barrier curb, see Sheet Nos. 98, 99, and 103.
Bend F102 bars in the field to clear girders.
All reinforcing bars in the substructure beams or caps shall be field adjusted to clear piles by at least 1-1/2".
All concrete in the abutment above top of beam and below top of slab shall be Class B-2.
Strands at end of girder shall be field bent or, if necessary, cut in field to maintain 1-1/2" minimum clearance to fill face of abutment.
All U bars and pairs of V bars are to be placed parallel to ℄ Girders.
For Elevation B-B, see Sheet No. 15.
For detail of Bearing Pads, see Sheet No. 14.
For Typical Section Thru Key, see Sheet No. 14.
For coil tie details, see Sheet No. 62.
Laminated Neoprene Bearing Pads shall be oriented along ℄ girders.

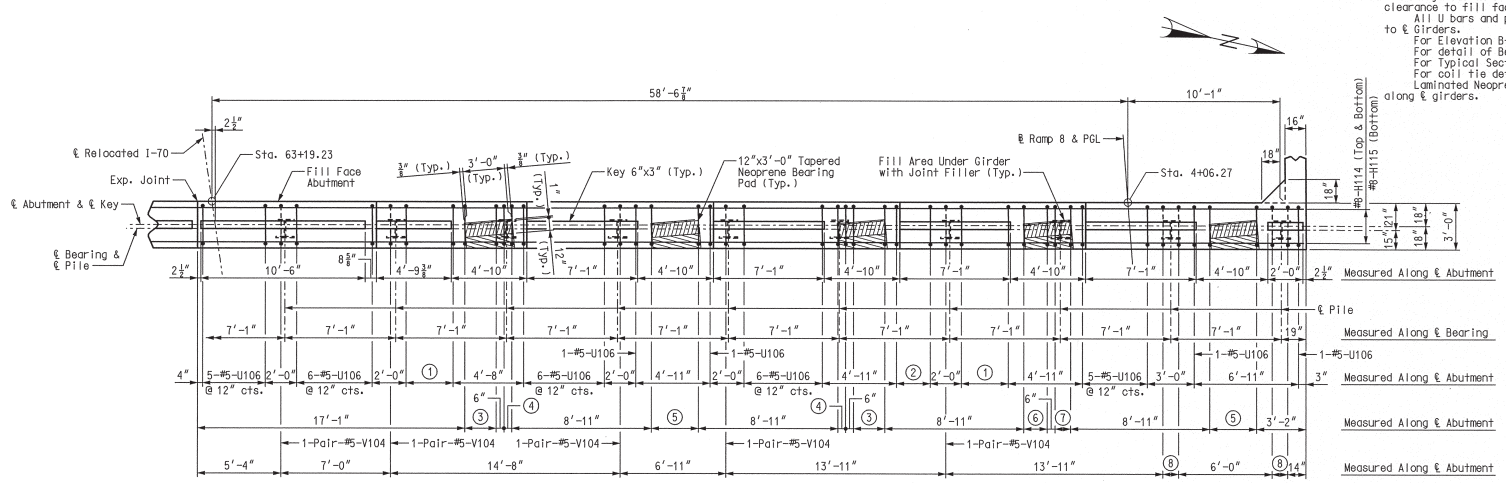

① 4-#5-U106 @ 12" cts.
② 3-#5-U106 @ 12" cts.
③ 5-#4-U107 & 5-#4-U112 @ 6" cts.
④ 2-#4-U108 & 2-#4-U112 @ 6" cts.
⑤ 7-#4-U107 & 7-#4-U112 @ 6" cts.
⑥ 4-#4-U107 & 4-#4-U112 @ 6" cts.
⑦ 3-#4-U108 & 3-#4-U112 @ 6" cts.
⑧ 2-Pair-#5-V104 @ 12" cts.

PART PLAN OF BEAM

ABUTMENT 1 – PLANS

Detailed JUL 2009
Checked JUL 2009

Note: This drawing is not to scale. Follow dimensions.

Sheet No. 12 of 125

\\slsw00\Jobs\46440\Techprod\Bridges\MO-Approach\Drawings\Baseline Drawings\B_A6500_012-125_J6I0984B_012.dgn

03-SEP-2009 09:23

REV.

STATE OF MISSOURI
LAWRENCE ROLWES JR.
NUMBER PE-2009002647
PROFESSIONAL ENGINEER
01/31/09

DATE
8/20/09

ROUTE	STATE
I-70	MO
DISTRICT	SHEET NO.
6	BR12

COUNTY
St. Louis City - MO

JOB NO.
J6I0984B

CONTRACT ID.

PROJECT NO.

BRIDGE NO.
A6500

DESCRIPTION	DATE

MISSOURI HIGHWAYS AND TRANSPORTATION COMMISSION

105 WEST CAPITOL
JEFFERSON CITY, MO 65102
1-888-ASK-MODOT (1-888-275-6636)

HNTB
715 KIRK DRIVE
KANSAS CITY, MO 64105-1310
TELEPHONE 816 472-1201
CERTIFICATE OF AUTHORITY
NO. 001270

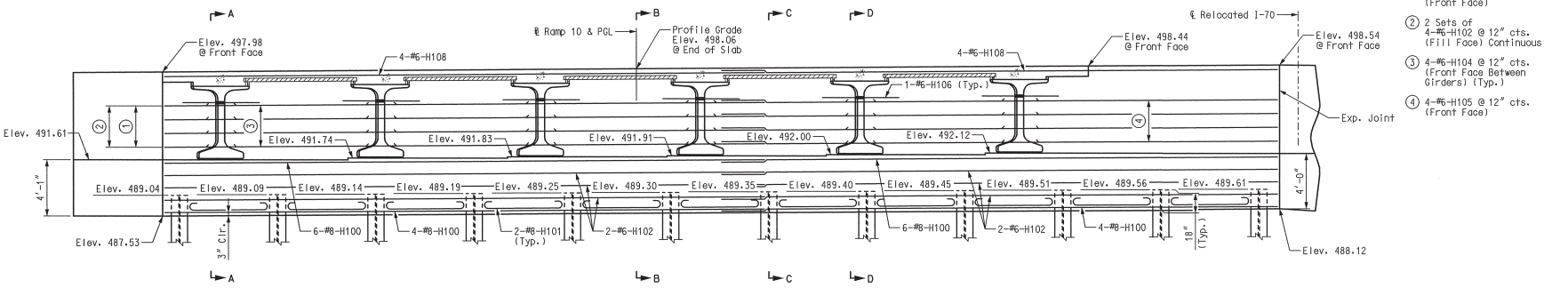

PART ELEVATION NEAR ABUTMENT

(Looking Back Station)

Notes:
Lap for #6-H102 bars = 3'-1" (Min.).
Lap for #6-H108 bars = 4'-5" (Min.).
Lap for #8-H100 bars = 6'-10" (Min.).

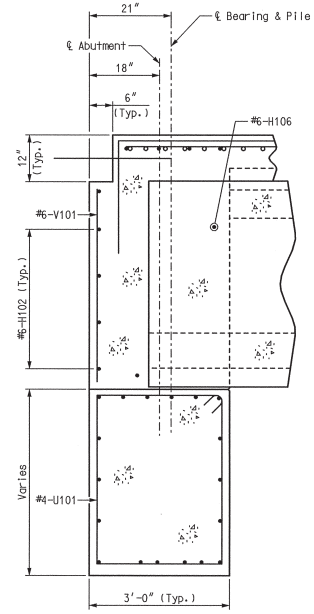

SECTION A-A

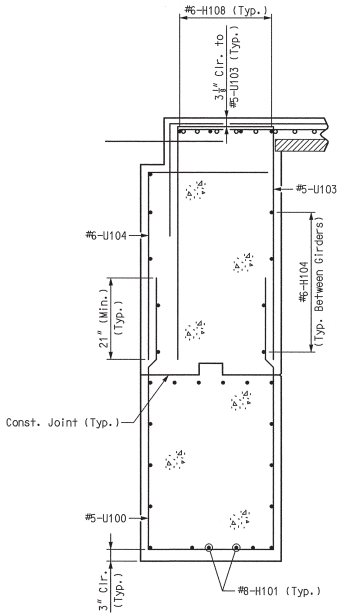

SECTION B-B

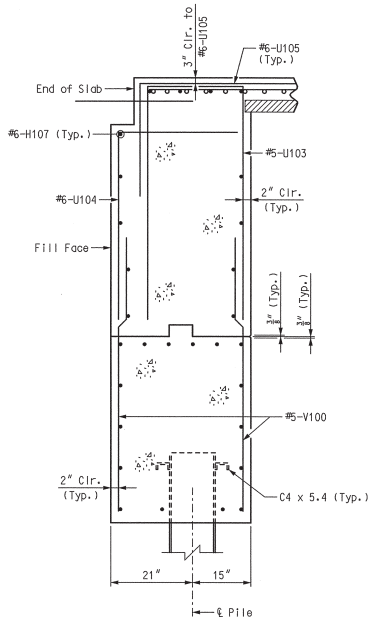

SECTION C-C

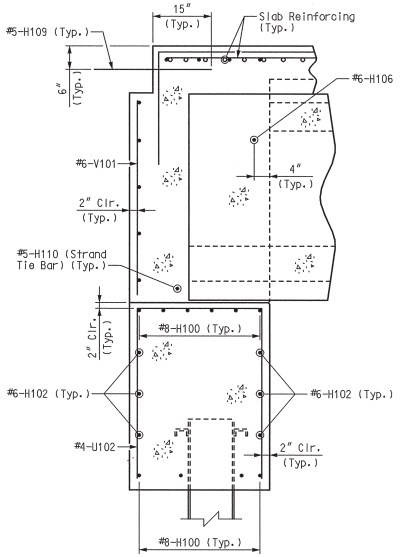

SECTION D-D

Notes:
For details of Abutment not shown, see Sheet Nos. 11, 12, 14, and 15.

ABUTMENT 1 - DETAILS

Detailed JUL 2009
Checked JUL 2009

Note: This drawing is not to scale. Follow dimensions.

Sheet No. 13 of 125

\\slsw00\Jobs\46440\Techprod\Bridges\MO-Approach\Drawings\Baseline Drawings\B_A6500_013-125_J6I0984B_013.dgn

18-AUG-2009 10:21

REV.

LAWRENCE E. ROLWES JR. NUMBER PE-2006002847 STATE OF MISSOURI PROFESSIONAL ENGINEER
8/20/09

DATE 8/20/09
ROUTE I-70 | STATE MO
DISTRICT 6 | SHEET NO. BR13
COUNTY St. Louis City - MO
JOB NO. J6I0984B
CONTRACT ID.
PROJECT NO.
BRIDGE NO. A6500

DESCRIPTION | DATE

MISSOURI HIGHWAYS AND TRANSPORTATION COMMISSION
105 WEST CAPITOL
JEFFERSON CITY, MO 65102
1-888-ASK-MODOT (1-888-275-6636)

HNTB
715 KIRK DRIVE
KANSAS CITY, MO 64105-1310
TELEPHONE (816) 472-1201
CERTIFICATE OF AUTHORITY NO. 001270

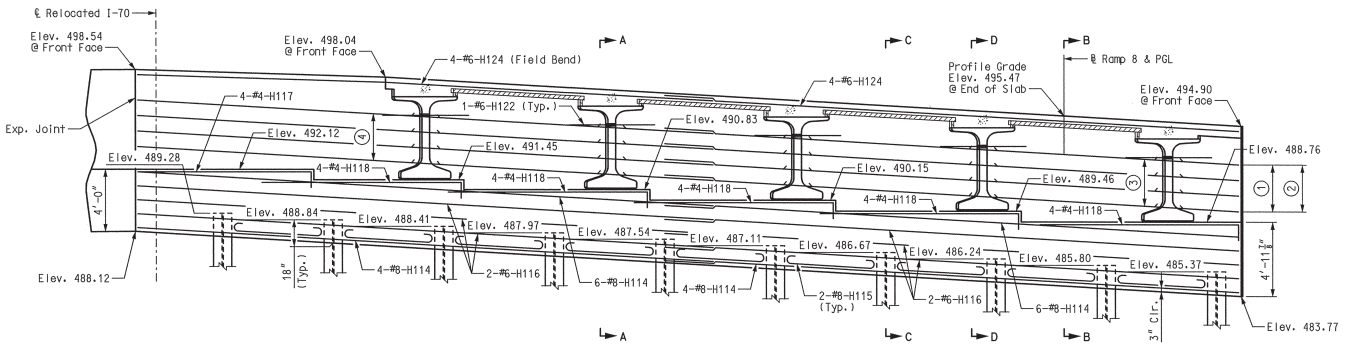

① 4-#6-H119 @ 12" cts. (Front Face)

② 2 Sets of 4-#6-H116 @ 12" cts. (Fill Face) Continuous

③ 4-#6-H120 @ 12" cts. (Front Face Between Girders) (Typ.)

④ 4-#6-H121 @ 12" cts. (Front Face)

PART ELEVATION NEAR ABUTMENT

(Looking Back Station)

Notes:
Lap for #6-H116 bars = 3'-1" (Min.).
Lap for #6-H124 bars = 4'-5" (Min.).
Lap for #8-H114 bars = 6'-10" (Min.).

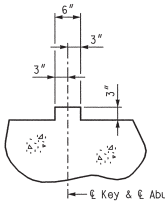

TYPICAL SECTION THRU KEY

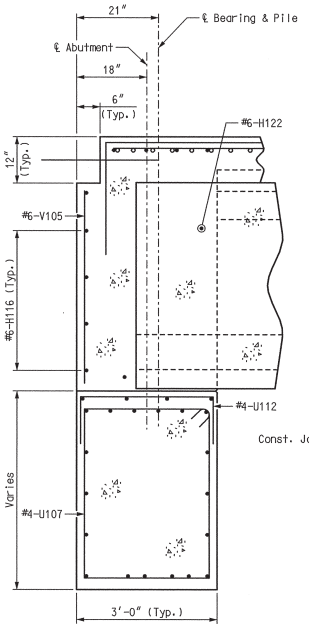

SECTION A-A

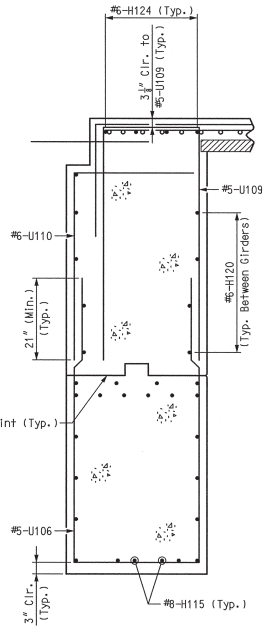

SECTION B-B

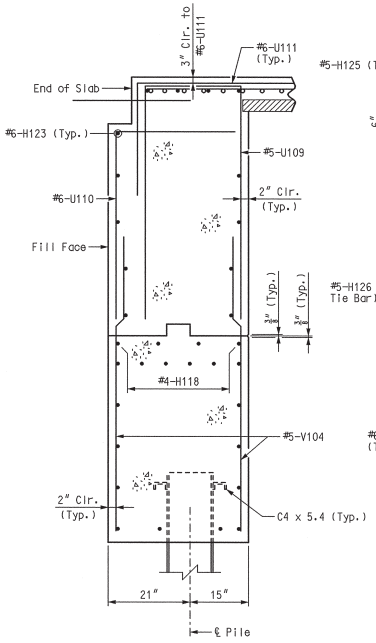

SECTION C-C

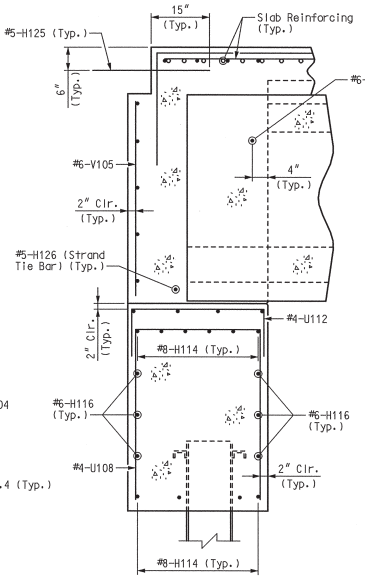

SECTION D-D

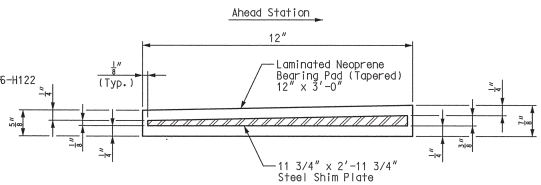

TYPICAL SECTION THRU LAMINATED NEOPRENE BEARING PAD

11 Required on Abutment 1

Notes:
The required shim plate shall be placed between layers of elastomer and molded together to form an integral unit.
Shop drawings are not required for laminated neoprene bearings on structures without sole plates.

Notes:
All piles shall be HP14x73.
For details of Abutment not shown, see Sheet Nos. 11, 12, 13, and 15.
For details of steel pile splice, see Sheet No. 5.
For Details of Pile Anchors, see Sheet No. 5.

****** SUBSTRUCTURE QUANTITY TABLE FOR ABUTMENT 1

Item		Quantity
Structural Steel Piles (14 in.)	linear foot	1,263
Pile Point Reinforcement	each	22
Class B Concrete (Substructure)	cu. yard	82.0
Corrugated Metal Pipe Pile Spacers	each	22

****** These quantities are included in the estimated quantities table on Sheet No. 5.

ABUTMENT 1 - DETAILS

Detailed JUL 2009
Checked JUL 2009

Note: This drawing is not to scale. Follow dimensions.

Sheet No. 14 of 125

\\slsw00\Jobs\46440\Techprod\Bridges\MO-Approach\Drawings\Baseline Drawings\B_A6500_014-125_J6I0984B_014.dgn

18-AUG-2009 10:21

LAWRENCE EDWARD ROLMES, JOHN NUMBER 2006020841 PROFESSIONAL ENGINEER STATE OF MISSOURI

8/20/09

DATE 8/20/09
ROUTE I-70 | STATE MO
DISTRICT 6 | SHEET NO. BR14
COUNTY St. Louis City - MO
JOB NO. J6I0984B
CONTRACT ID.
PROJECT NO.
BRIDGE NO. A6500

DESCRIPTION | DATE | REV.

MISSOURI HIGHWAYS AND TRANSPORTATION COMMISSION
MoDOT
105 WEST CAPITOL
JEFFERSON CITY, MO 65102
1-888-ASK-MODOT (1-888-275-6636)

HNTB
715 KIRK DRIVE
KANSAS CITY, MO 64105-4310
TELEPHONE (816) 472-1201
CERTIFICATE OF AUTHORITY NO. 001270

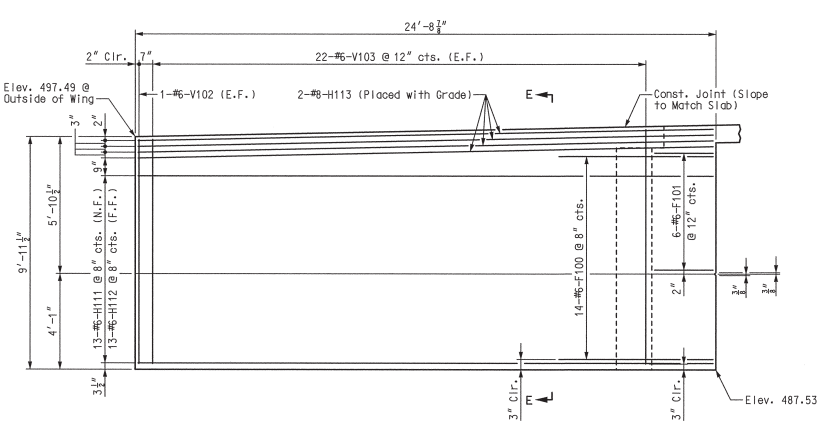

ELEVATION A-A

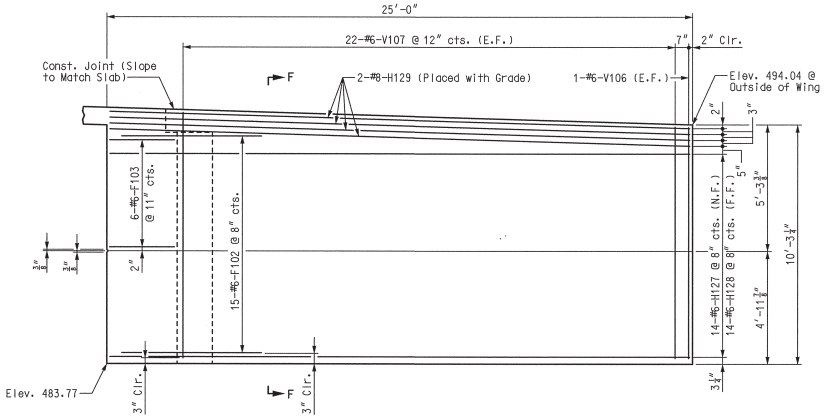

ELEVATION B-B

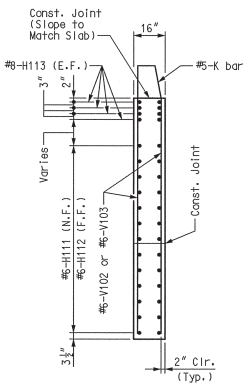

SECTION E-E

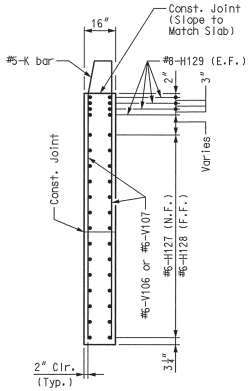

SECTION F-F

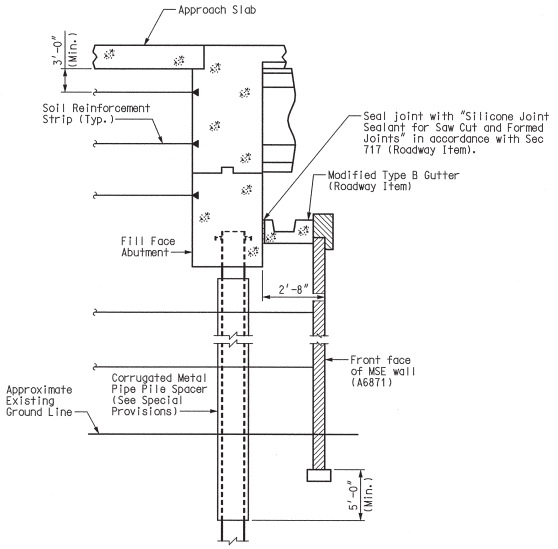

TYPICAL SECTION AT ABUTMENT AND MSE WALL

Notes:
For details and location of soil reinforcement strip attachment to abutment, see mechanically stabilized earth wall drawings. Reinforcing strips shall be designed to resist 5.7 kips/ft along fill face of abutment (LRFD Extreme Event I). Provide minimum of 3 layers of strips to resist the required load. Cost of strips and attachments to fill face of abutment, complete-in-place, shall be considered completely covered by the contract unit price for Class B Concrete (Substructure) per cubic yard.
Coordinate placement of reinforcing strips with vertical drain core.
For details of vertical drain at abutment, see Sheet No. 16.

Notes:
For reinforcement of the barrier curb, see Sheet Nos. 98, 99, 103, and 104.
For location of Elevations A-A and B-B, see Sheet Nos. 11 and 12.

ABUTMENT 1 - WING DETAILS

Detailed JUL 2009
Checked JUL 2009

Note: This drawing is not to scale. Follow dimensions.

Sheet No. 15 of 125

\\slsw00\Jobs\46440\Techprod\Bridges\MO-Approach\Drawings\Baseline Drawings\B_A6500_015-125_J6I0984B_015.dgn

01-SEP-2009 10:39

LAWRENCE G. ROLWES, JR. NUMBER PE-2006002847 STATE OF MISSOURI PROFESSIONAL ENGINEER

9/1/09

DATE 8/20/09

ROUTE	STATE
I-70	MO
DISTRICT	SHEET NO.
6	BR15

COUNTY: St. Louis City - MO

JOB NO.: J6I0984B

CONTRACT ID.:

PROJECT NO.:

BRIDGE NO.: A6500

DESCRIPTION	DATE

REV.

MISSOURI HIGHWAYS AND TRANSPORTATION COMMISSION
105 WEST CAPITOL
JEFFERSON CITY, MO 65102
1-888-ASK-MODOT (1-888-275-6636)

HNTB
715 KIRK DRIVE
KANSAS CITY, MO 64105-1310
TELEPHONE (816) 472-1201
CERTIFICATE OF AUTHORITY NO. 001270

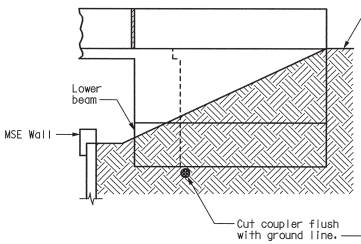

ELEVATION OF WING

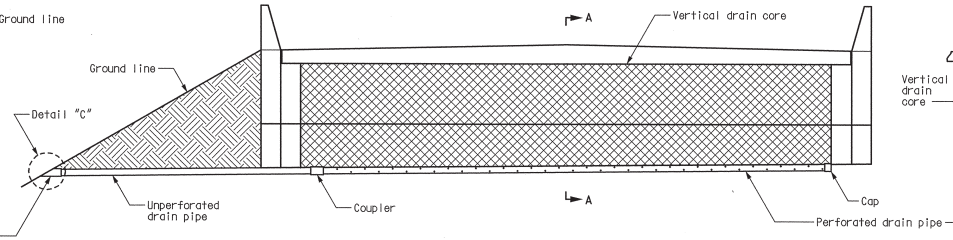

ELEVATION AT ABUTMENT

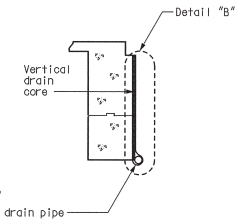

SECTION A-A

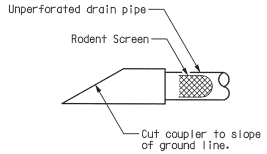

DETAIL "C"

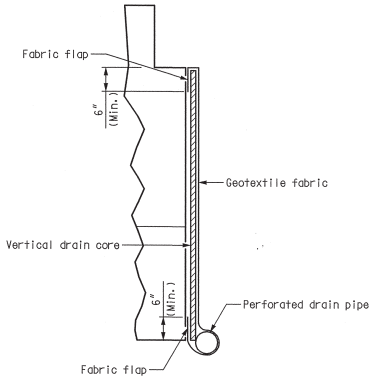

DETAIL "B"

Notes:

Drain pipe may be either 6" diameter corrugated metallic-coated steel pipe underdrain, 4" diameter corrugated polyvinyl chloride (PVC) drain pipe, or 4" diameter corrugated polyethylene (PE) drain pipe.

Place drain pipe at fill face of abutment and slope to lowest grade of ground line, also missing the lower beam of abutment by 1-1/2". (See elevation at abutment.)

Perforated pipe shall be placed at fill face side at the bottom of abutment and plain pipe shall be used where the vertical drain ends to the exit at ground line.

Coordinate placement of drain core and soil reinforcement strips at fill face abutment.

VERTICAL DRAIN AT ABUTMENT

Detailed JUL 2009
Checked JUL 2009

Note: This drawing is not to scale. Follow dimensions.

Sheet No. 16 of 125

STATE OF MISSOURI
LAWRENCE E. ROLWES JR.
NUMBER
PE-2006002847
REGISTERED PROFESSIONAL ENGINEER

8/20/09

DATE	
8/20/09	
ROUTE I-70	STATE MO
DISTRICT 6	SHEET NO. BR16
COUNTY St. Louis City - MO	
JOB NO. J6I0984B	
CONTRACT ID.	
PROJECT NO.	
BRIDGE NO. A6500	

DATE	DESCRIPTION

MISSOURI HIGHWAYS AND TRANSPORTATION COMMISSION

MoDOT

105 WEST CAPITOL
JEFFERSON CITY, MO 65102
1-888-ASK-MODOT (1-888-275-6636)

HNTB

715 KIRK DRIVE
KANSAS CITY, MO 64105-1310
TELEPHONE (816) 472-1201
CERTIFICATE OF AUTHORITY NO. 001270

REV.

\\slsw00\Jobs\46440\Techprod\Bridges\MO-Approach\Drawings\Baseline Drawings\B_A6500_016-125_J6I0984B_016.dgn

18-AUG-2009 10:21

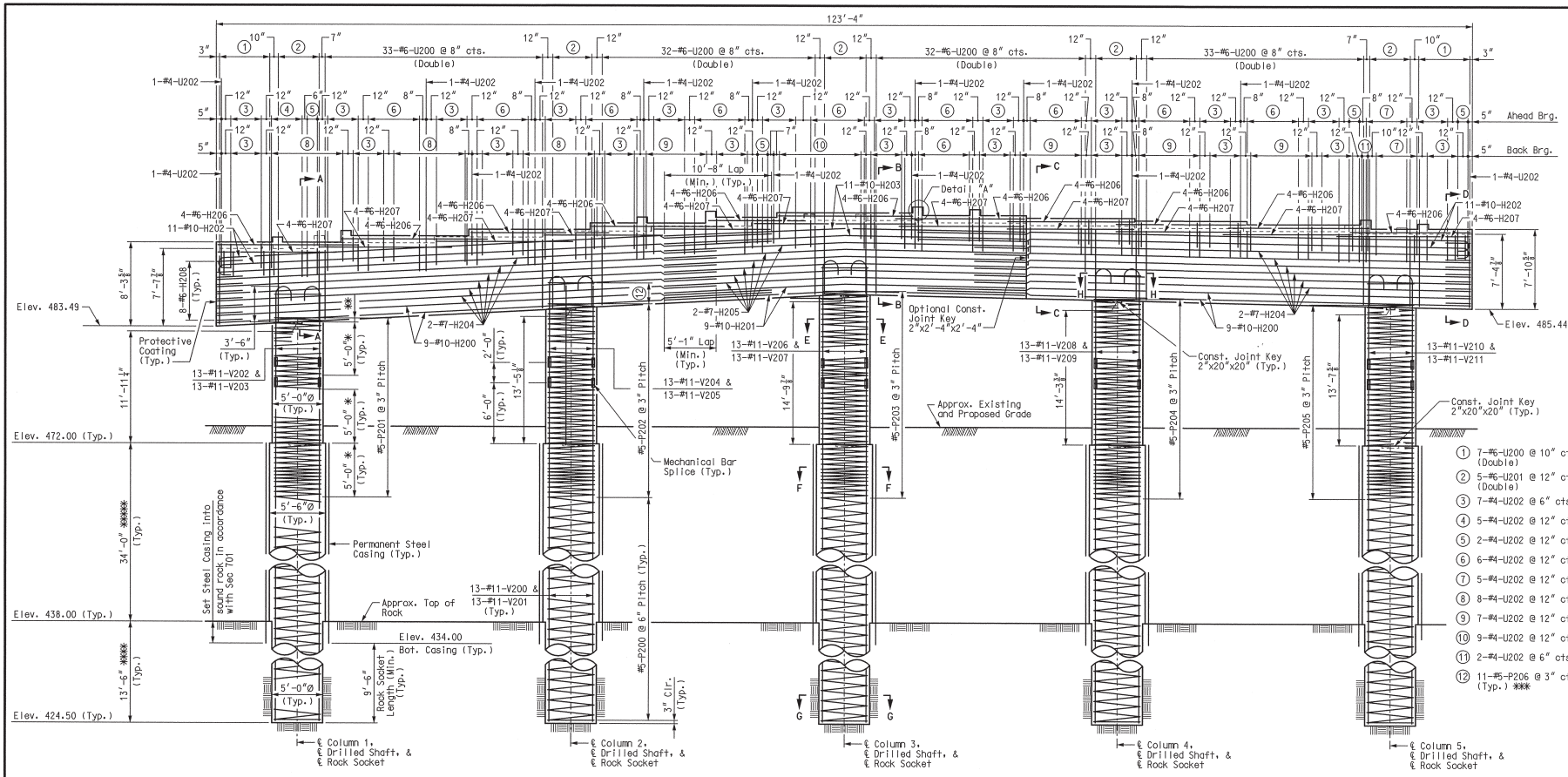

ELEVATION

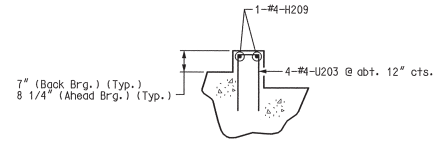

DETAIL "A"
(14 locations total)

GIRDER SEAT ELEVATIONS		
Girder	Back Brg.	Ahead Brg.
1	491.79	491.15
2	492.46	491.75
3	493.10	492.35
4	493.74	492.94
5	494.33	493.47
6	494.80	494.05
7	494.55	494.05
8	494.30	493.81
9	494.05	493.57
10	493.72	493.33
11	493.32	493.08
12	---	492.84

Notes:
An additional 4 feet has been added to #11-V200, #11-V201, and #5-P200 lengths for possible change in drilled shaft or rock socket depth. This excess length shall be cut off or included in the reinforcement lap if not required.
Concrete coring shall be performed on one of the drilled shafts and rock sockets in accordance with Sec 701. Sonic logging testing shall be performed on all drilled shafts and rock sockets.
The contractor shall use a mechanical bar splice for #11-V-Bars at the specified locations. The total bar lengths for bars indicated in the bill of reinforcing steel are determined based on the end of the bars being located at end of adjacent bar. No additional payment will be made for any additional bar lengths required for the mechanical bar splices. Mechanical bar splices shall be in accordance with Sec 706.
The hooks of V-Bars embedded in the beam cap shall be oriented inward. Bending the hooks outward, away from the column core, is not allowed.
The thickness of steel casing shall meet all the requirements of Sec 701 with the minimum thickness being 3/8 inch. Thicker casing may be required for installation.
For Details of Type "N" PTFE Bearings, see Sheet No. 36.
For Substructure Quantity Table, see Sheet No. 19.

* Lapping of spiral reinforcement in this region is not permitted.
** Continue spiral bars to the bottom of the beam cap stirrup reinforcing bar.
*** Splice locations shall be staggered.
Anchorage of spiral reinforcement shall be provided by 1-1/2 extra turns of spiral bar at each end of spiral unit.
**** Pay Items Rock Socket (5 ft. 0 in. Dia.).
***** Pay Items Drilled Shaft (5 ft. 6 in. Dia.).
The cost of any required excavation to the top of the drilled shafts will be considered completely covered by the contract unit price for Drilled Shaft (5 ft. 6 in. Dia.).
All reinforcing bars in the tops of substructure beams or caps shall be spaced to clear anchor rod wells for bearings by at least 1/2".
For Anchor Rod Setting Plans, see Sheet No. 35.
For Anchor Rod Well Details, see Sheet No. 35.
For plan view, see Sheet No. 18.
For Sections A-A, B-B, C-C, D-D, E-E, F-F, G-G, and H-H, see Sheet Nos. 18 and 19.

PIER 2 – ELEVATION

Detailed JUL 2009
Checked JUL 2009

Note: This drawing is not to scale. Follow dimensions.

\\slsw00\Jobs\46440\Techprod\Bridges\MO-Approach\Drawings\Baseline Drawings\B_A6500_017-125_J6I0984B_017.dgn

18-AUG-2009 10:21

LAWRENCE EDWARD ROLWES, NUMBER PE-2009000847, STATE OF MISSOURI, PROFESSIONAL ENGINEER
8/20/09

DATE 8/20/09
ROUTE I-70 | STATE MO
DISTRICT 6 | SHEET NO. BR17
COUNTY St. Louis City - MO
JOB NO. J6I0984B
CONTRACT ID.
PROJECT NO.
BRIDGE NO. A6500

REV. | DESCRIPTION | DATE

MISSOURI HIGHWAYS AND TRANSPORTATION COMMISSION
105 WEST CAPITOL
JEFFERSON CITY, MO 65102
1-888-ASK-MODOT (1-888-275-6636)

HNTB
715 KIRK DRIVE
KANSAS CITY, MO 64105-1310
TELEPHONE (816) 472-1201
CERTIFICATE OF AUTHORITY NO. 001270

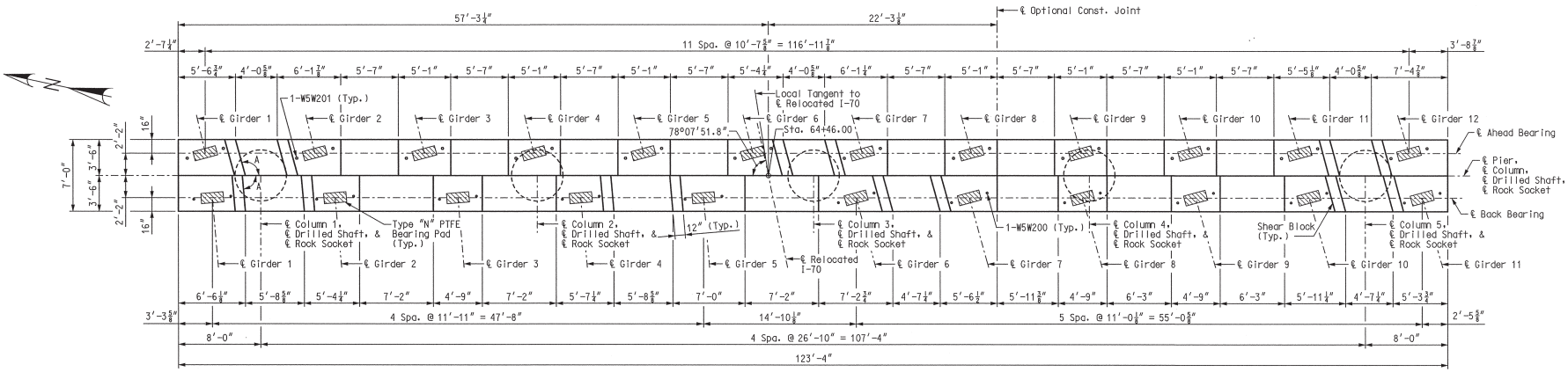

PLAN

SHEAR BLOCK ORIENTATION TABLE	
Location	A
Girders 1,2,4, & 5 (Back Brg.)	85°-07′-16.0″
Girders 6,7,10, & 11 (Back Brg.)	74°-43′-49.2″
Girders 1,2,6,7,11, & 12 (Ahead Brg.)	105°-16′-10.8″

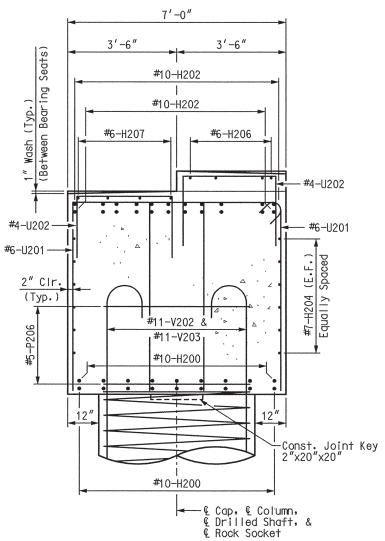

SECTION A-A

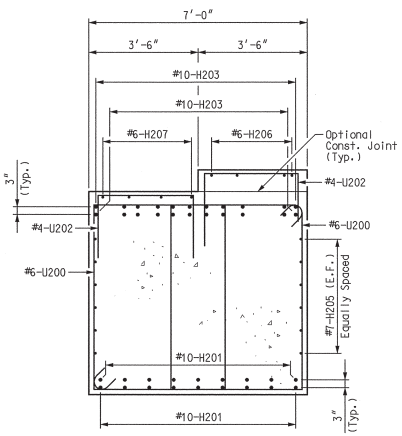

SECTION B-B

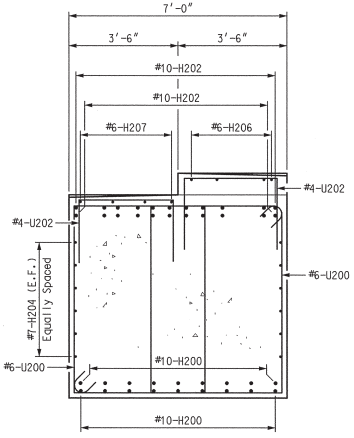

SECTION C-C

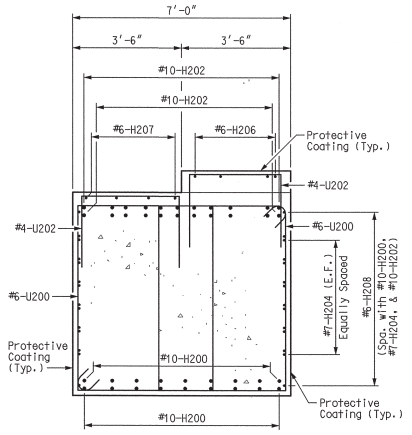

SECTION D-D

Notes:
For location of Sections A-A, B-B, C-C, and D-D, see Sheet No. 17.
Seal back face of beam, top of beam, ends of beam, and front face of beam with Protective Coating - Concrete Bents and Piers (Epoxy).
For elevation view, see Sheet No. 17.

PIER 2 - PLAN AND DETAILS

Detailed JUL 2009
Checked JUL 2009

Note: This drawing is not to scale. Follow dimensions.

Sheet No. 18 of 125

\\slsw00\Jobs\46440\Techprod\Bridges\MO-Approach\Drawings\Baseline Drawings\B_A6500_018-125_J6I0984B_018.dgn

18-AUG-2009 10:21

STATE OF MISSOURI — LAWRENCE E. ROLWES — NUMBER PE-2009020947 — PROFESSIONAL ENGINEER

5/20/09

DATE: 8/20/09

ROUTE	STATE
I-70	MO
DISTRICT	SHEET NO.
6	BR18

COUNTY: St. Louis City - MO

JOB NO.: J6I0984B

CONTRACT ID.:

PROJECT NO.:

BRIDGE NO.: A6500

REV.	DESCRIPTION	DATE

MISSOURI HIGHWAYS AND TRANSPORTATION COMMISSION

105 WEST CAPITOL
JEFFERSON CITY, MO 65102
1-888-ASK-MODOT (1-888-275-6636)

HNTB
715 KIRK DRIVE
KANSAS CITY, MO 64105-1310
TELEPHONE (816) 472-1201
CERTIFICATE OF AUTHORITY NO. 001270

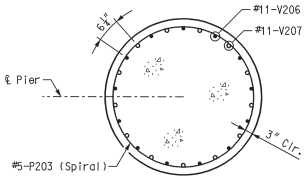

SECTION E-E
(5'-0" Diameter)

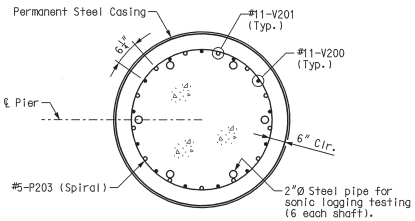

SECTION F-F
(5'-6" Diameter)

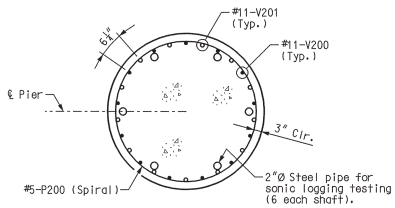

SECTION G-G
(5'-0" Diameter)

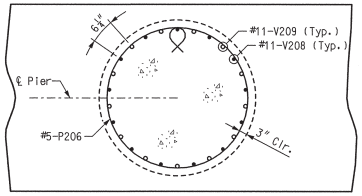

SECTION H-H

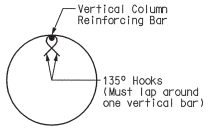

DETAIL OF SEISMIC STIRRUP BAR (#5-P206)

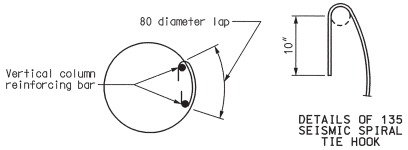

ANCHOR SPLICES IN SPIRAL AROUND VERTICAL BAR
(USE FOR INTERMEDIATE SPLICES OF SPIRALS)

Note:
For location of Sections E-E, F-F, G-G, and H-H, see Sheet No. 17.

** SUBSTRUCTURE QUANTITY TABLE FOR PIER 2		
Item		Quantity
Drilled Shafts (5 ft. 6 in. Dia.)	linear foot	170.0
Rock Sockets (5 ft. 0 in. Dia.)	linear foot	67.5
Supplementary Television Camera Inspection	each	5
Foundation Inspection Holes	linear foot	117.5
Concrete Coring	linear foot	48.5
Sonic Logging Testing	each	5
Class B Concrete (Substructure)	cu. yard	295.0
Reinforcing Steel (Bridges)	pound	60,960
Mechanical Bar Splice	each	130
Reinforcing Steel (Epoxy Coated)	pound	44,430

** These quantities are included in the estimated quantities table on Sheet No. 5.

PIER 2 - DETAILS

Detailed JUL 2009
Checked JUL 2009

Note: This drawing is not to scale. Follow dimensions.

STATE OF MISSOURI
LAWRENCE C. ROLWES, JR.
NUMBER PE-2006002847
REGISTERED PROFESSIONAL ENGINEER
9/1/09

DATE	
8/20/09	
ROUTE I-70	STATE MO
DISTRICT 6	SHEET NO. BR19
COUNTY St. Louis City - MO	
JOB NO. J6I0984B	
CONTRACT ID.	
PROJECT NO.	
BRIDGE NO. A6500	

DATE	DESCRIPTION

MISSOURI HIGHWAYS AND TRANSPORTATION COMMISSION
MODOT
105 WEST CAPITOL
JEFFERSON CITY, MO 65102
1-888-ASK-MODOT (1-888-275-6636)

HNTB
715 KIRK DRIVE
KANSAS CITY, MO 64105-1310
TELEPHONE (816) 472-1201
CERTIFICATE OF AUTHORITY NO. 001270

REV.

\\slsw00\Jobs\46440\Techprod\Bridges\MO-Approach\Drawings\Baseline Drawings\B_A6500_019-125_J6I0984B_019.dgn
01-SEP-2009 10:40

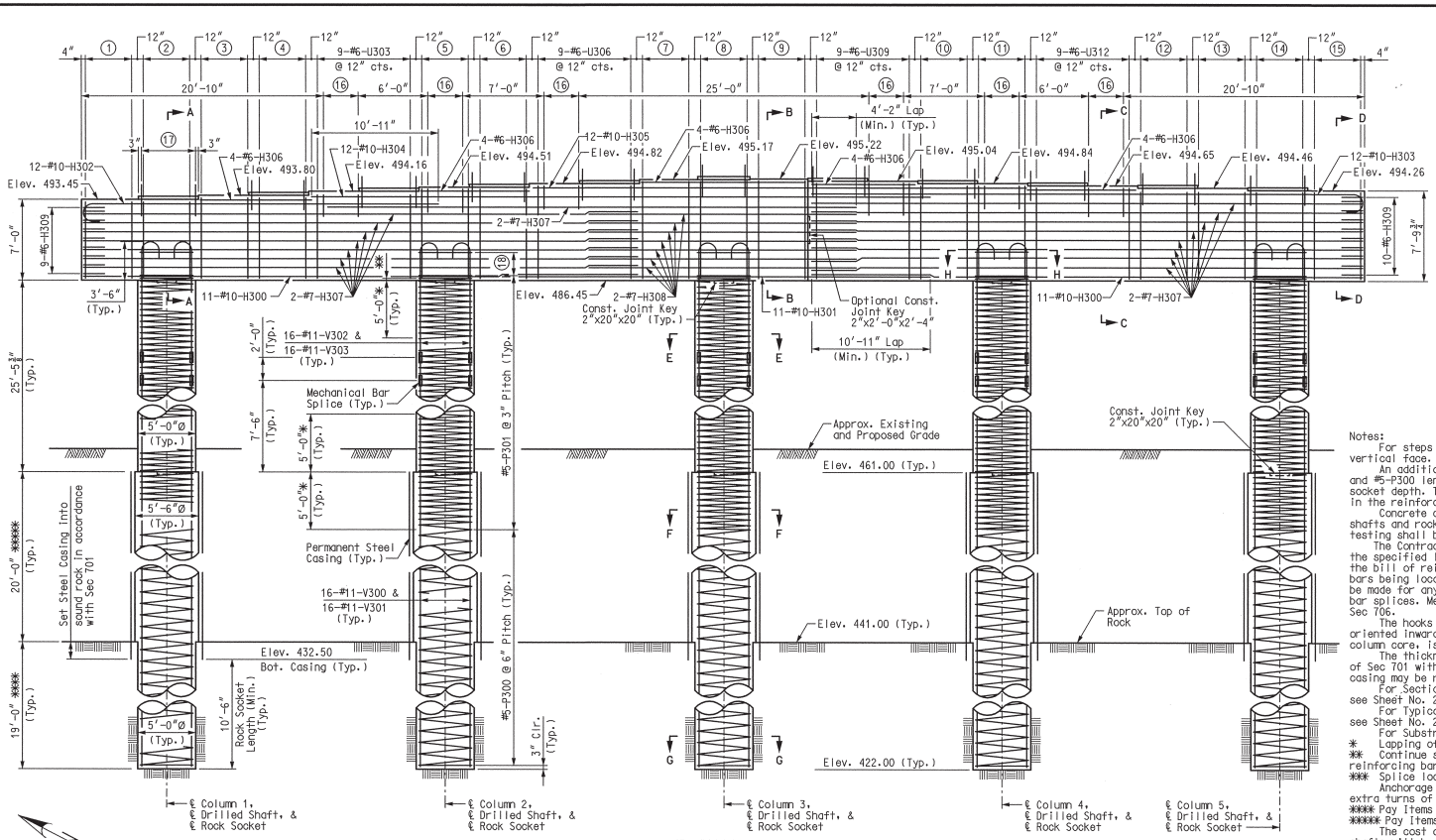

ELEVATION

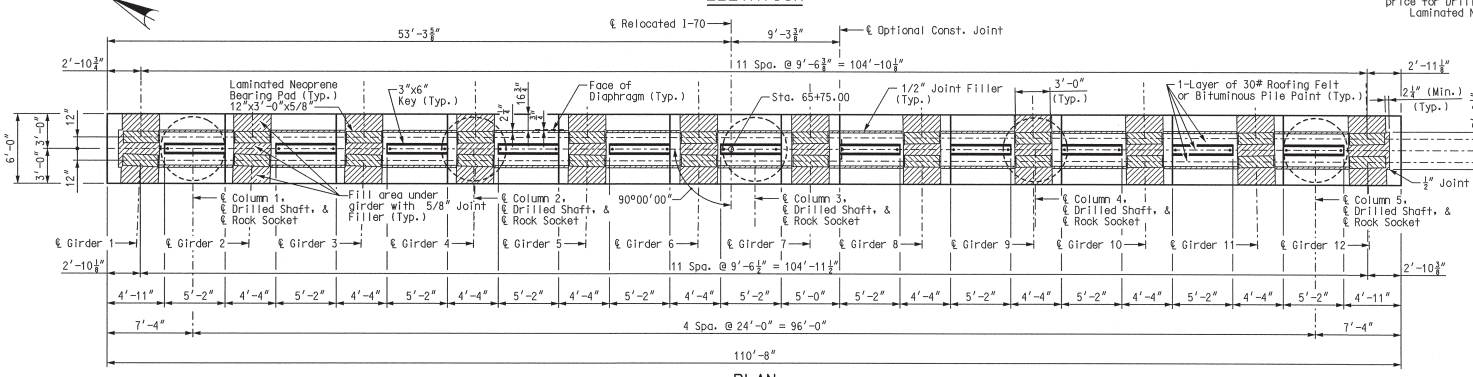

PLAN

① 9-#6-U300 @ 6" cts.
② 5-#6-U301 @ 12" cts.
③ 9-#6-U302 @ 6" cts.
④ 5-#6-U302 @ 12" cts.
⑤ 5-#6-U304 @ 12" cts.
⑥ 5-#6-U305 @ 12" cts.
⑦ 9-#6-U307 @ 6" cts.
⑧ 5-#6-U308 @ 12" cts.
⑨ 9-#6-U307 @ 6" cts.
⑩ 5-#6-U310 @ 12" cts.
⑪ 5-#6-U311 @ 12" cts.
⑫ 5-#6-U313 @ 12" cts.
⑬ 9-#6-U313 @ 6" cts.
⑭ 5-#6-U314 @ 12" cts.
⑮ 9-#6-U313 @ 6" cts.
⑯ 4-#4-U315 @ 12" cts.
⑰ 8-#6-D300 @ 8" cts. (Typ.)
⑱ 11-#5-P302 @ 3" cts. (Typ.) ***

Notes:

For steps 2" or more, use 2-1/4" x 1/2" joint filler up vertical face.

An additional 4 feet has been added to #11-V300, #11-V301, and #5-P300 lengths for possible change in drilled shaft or rock socket depth. This excess length shall be cut off or included in the reinforcement lap if not required.

Concrete coring shall be performed on one of the drilled shafts and rock sockets in accordance with Sec 701. Sonic logging testing shall be performed on all drilled shafts and rock sockets.

The Contractor shall use a mechanical bar splice for #11-V-Bars at the specified locations. The total bar lengths for bars indicated in the bill of reinforcing steel are determined based on the end of the bars being located at end of adjacent bar. No additional payment will be made for any additional bar lengths required for the mechanical bar splices. Mechanical bar splices shall be in accordance with Sec 706.

The hooks of V-Bars embedded in the beam cap shall be oriented inward. Bending the hooks outward, away from the column core, is not allowed.

The thickness of steel casing shall meet all the requirements of Sec 701 with the minimum thickness being 3/8 inch. Thicker casing may be required for installation.

For Section A-A, B-B, C-C, D-D, E-E, F-F, G-G, and H-H, see Sheet No. 21.

For Typical Section Thru Laminated Neoprene Bearing Pad, see Sheet No. 21.

For Substructure Quantity Table, see Sheet No. 21.

* Lapping of spiral reinforcement in this region is not permitted.

** Continue spiral bars to the bottom of the beam cap stirrup reinforcing bar.

*** Splice locations shall be staggered.

Anchorage of spiral reinforcement shall be provided by 1-1/2 extra turns of spiral bar at each end of spiral unit.

**** Pay Items Rock Socket (5 ft. 0 in. Dia.).

***** Pay Items Drilled Shaft (5 ft. 6 in. Dia.).

The cost of any required excavation to the top of the drilled shafts will be considered completely covered by the contract unit price for Drilled Shaft (5 ft. 6 in. Dia.).

Laminated Neoprene Bearing Pads shall be oriented along ℄ Girders.

PIER 3 – PLAN AND ELEVATION

Detailed JUL 2009
Checked JUL 2009

Note: This drawing is not to scale. Follow dimensions.

Sheet No. 20 of 125

LAWRENCE E. ROLWES
NUMBER PE-2009020841
PROFESSIONAL ENGINEER
STATE OF MISSOURI
8/20/09

MISSOURI HIGHWAYS AND TRANSPORTATION COMMISSION
MoDOT
105 WEST CAPITOL
JEFFERSON CITY, MO 65102
1-888-ASK-MODOT (1-888-275-6636)

HNTB
715 KIRK DRIVE
KANSAS CITY, MO 64105-4310
TELEPHONE (816) 472-1201
CERTIFICATE OF AUTHORITY NO. 001270

DESCRIPTION	DATE

DATE 8/20/09
ROUTE I-70 | STATE MO
DISTRICT 6 | SHEET NO. BR20
COUNTY St. Louis City - MO
JOB NO. J6I0984B
CONTRACT ID.
PROJECT NO.
BRIDGE NO. A6500

REV.

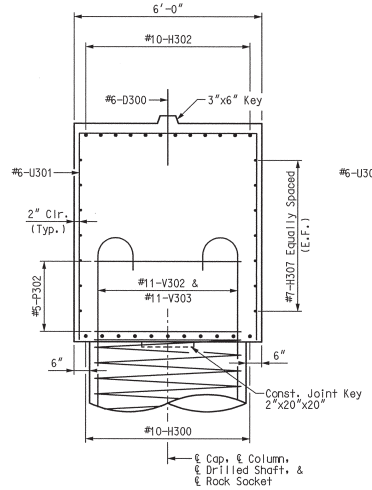

SECTION A-A

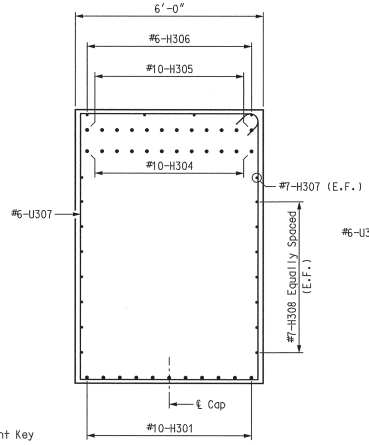

SECTION B-B

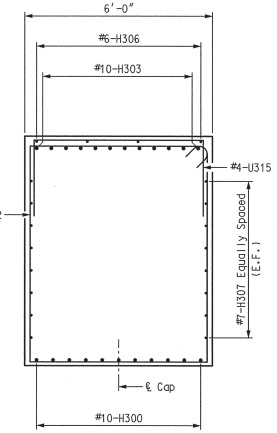

SECTION C-C

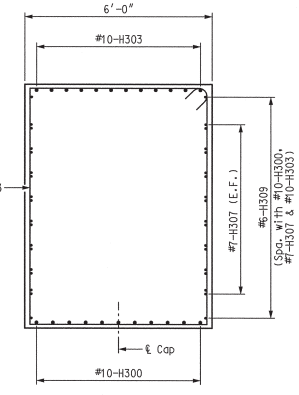

SECTION D-D

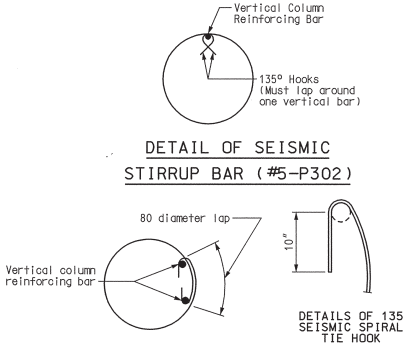

ANCHOR SPLICES IN SPIRAL AROUND VERTICAL BAR
(USE FOR INTERMEDIATE SPLICES OF SPIRALS)

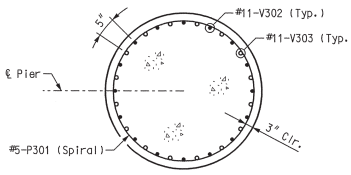

SECTION E-E
(5'-0" Diameter)

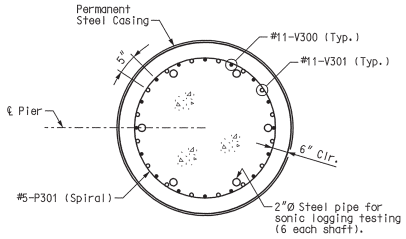

SECTION F-F
(5'-6" Diameter)

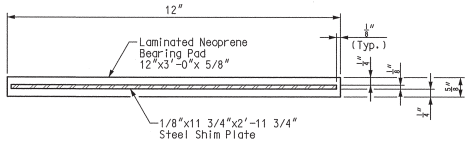

TYPICAL SECTION THRU LAMINATED NEOPRENE BEARING PAD
PIER 3
24 Required on Pier 3

Notes:
The required shim plate shall be placed between layers of elastomer and molded together to form an integral unit.
Shop drawings are not required for laminated neoprene bearings on structures without sole plates.

Note:
For location of Sections A-A, B-B, C-C, D-D, E-E, F-F, G-G, and H-H, see Sheet No. 20.

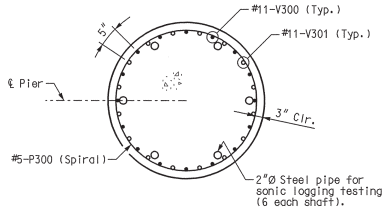

SECTION G-G
(5'-0" Diameter)

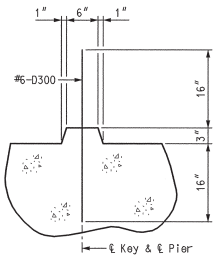

TYPICAL SECTION
THRU KEY

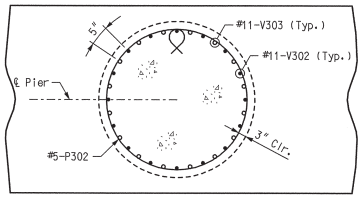

SECTION H-H

✻✻ SUBSTRUCTURE QUANTITY TABLE FOR PIER 3		
Item		Quantity
Drilled Shafts (5 ft. 6 in. Dia.)	linear foot	100.0
Rock Sockets (5 ft. 0 in. Dia.)	linear foot	95.0
Supplementary Television Camera Inspection	each	5
Foundation Inspection Holes	linear foot	145.0
Concrete Coring	linear foot	40.0
Sonic Logging Testing	each	5
Class B Concrete (Substructure)	cu. yard	290.7
Reinforcing Steel (Bridges)	pound	103,610
Mechanical Bar Splice	each	160

✻✻ These quantities are included in the estimated quantities table on Sheet No. 5.

PIER 3 - DETAILS

Detailed JUL 2009
Checked JUL 2009

Note: This drawing is not to scale. Follow dimensions.

\\slsw00\Jobs\46440\Techprod\Bridges\MO-Approach\Drawings\Baseline Drawings\B_A6500_021-125_J6I0984B_021.dgn

01-SEP-2009 10:41

REV.

LAWRENCE E. ROLWES, JR. NUMBER PE-2006002847 PROFESSIONAL ENGINEER STATE OF MISSOURI
9/1/09
HNTB
715 KIRK DRIVE
KANSAS CITY, MO 64105-1310
TELEPHONE (816) 472-1201
CERTIFICATE OF AUTHORITY NO. 001270

DATE 8/20/09
ROUTE I-70
STATE MO
DISTRICT 6
SHEET NO. BR21
COUNTY St. Louis City - MO
JOB NO. J6I0984B
CONTRACT ID.
PROJECT NO.
BRIDGE NO. A6500

DESCRIPTION | DATE

MISSOURI HIGHWAYS AND TRANSPORTATION COMMISSION
105 WEST CAPITOL
JEFFERSON CITY, MO 65102
1-888-ASK-MODOT (1-888-275-6636)
MoDOT

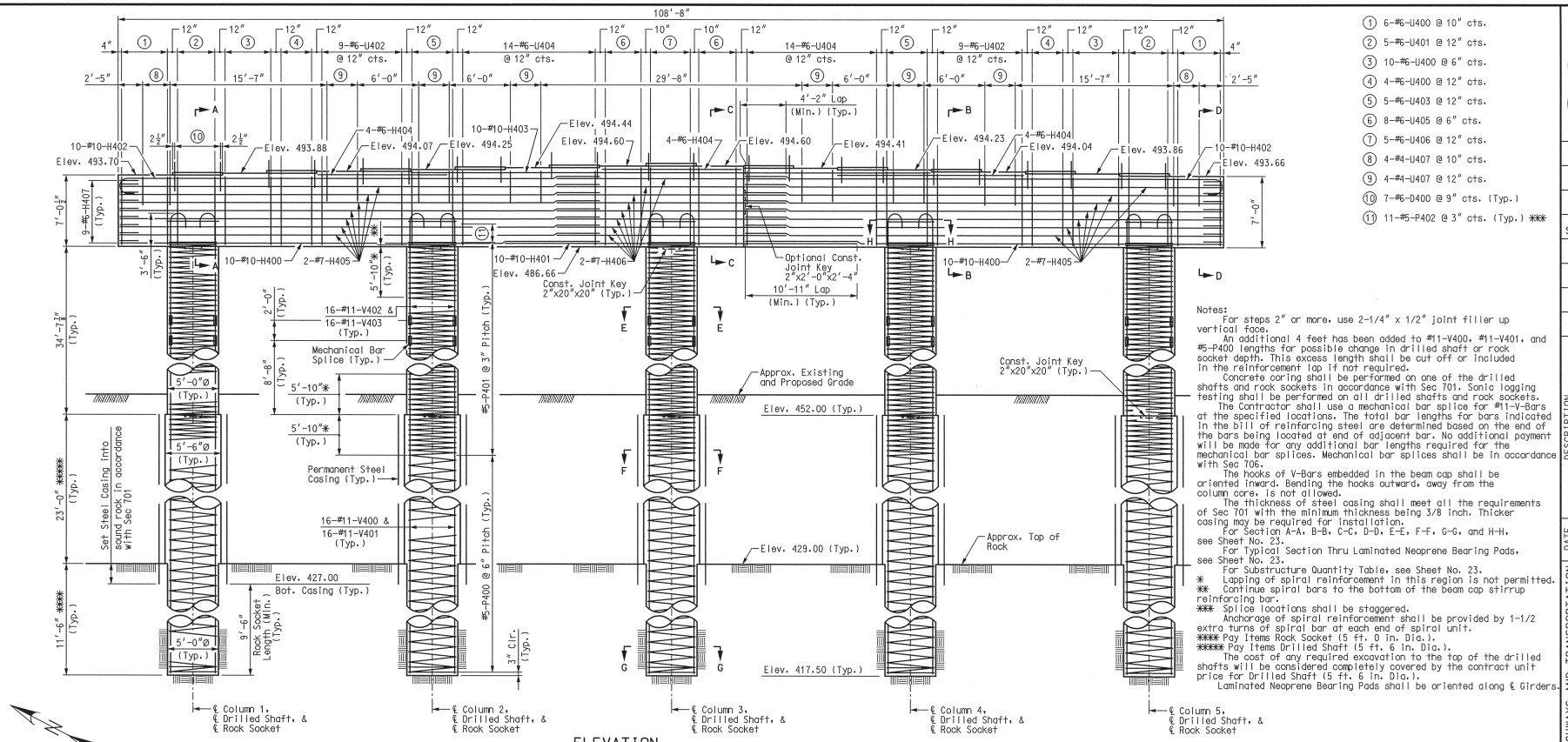

ELEVATION

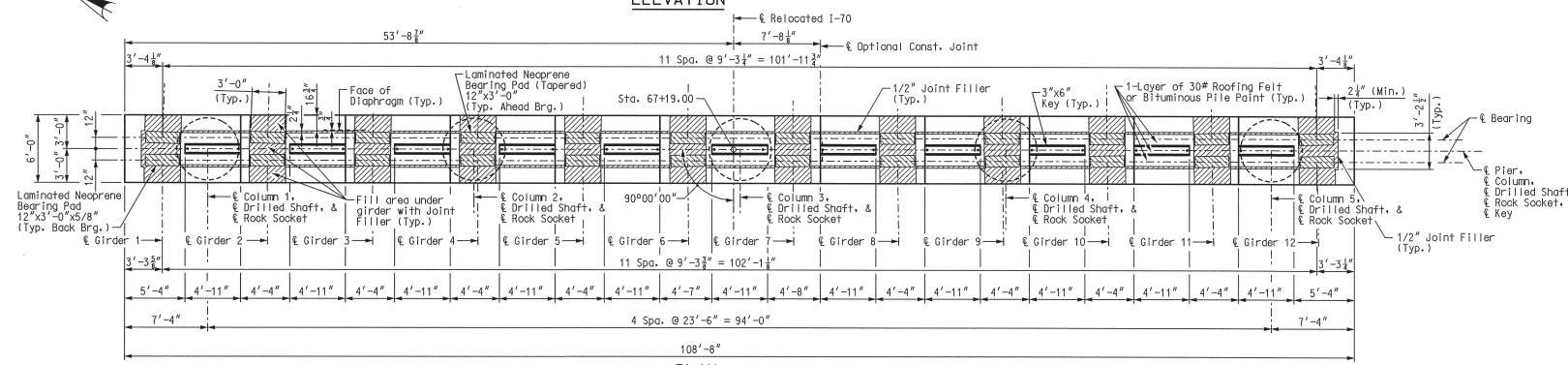

PLAN

Detailed JUL 2009
Checked JUL 2009

Note: This drawing is not to scale. Follow dimensions.

Sheet No. 22 of 125

PIER 4 – PLAN AND ELEVATION

① 6-#6-U400 @ 10" cts.
② 5-#6-U401 @ 12" cts.
③ 10-#6-U400 @ 6" cts.
④ 4-#6-U400 @ 12" cts.
⑤ 5-#6-U403 @ 12" cts.
⑥ 8-#6-U405 @ 6" cts.
⑦ 5-#6-U406 @ 12" cts.
⑧ 4-#4-U407 @ 10" cts.
⑨ 4-#4-U407 @ 12" cts.
⑩ 7-#6-D400 @ 9" cts. (Typ.)
⑪ 11-#5-P402 @ 3" cts. (Typ.) ***

Notes:
For steps 2" or more, use 2-1/4" x 1/2" joint filler up vertical face.
An additional 4 feet has been added to #11-V400, #11-V401, and #5-P400 lengths for possible change in drilled shaft or rock socket depth. This excess length shall be cut off or included in the reinforcement lap if not required.
Concrete coring shall be performed on one of the drilled shafts and rock sockets in accordance with Sec 701. Sonic logging testing shall be performed on all drilled shafts and rock sockets.
The Contractor shall use a mechanical bar splice for #11-V-Bars at the specified locations. The total bar lengths for bars indicated in the bill of reinforcing steel are determined based on the end of the bars being located at end of adjacent bar. No additional payment will be made for any additional bar lengths required for the mechanical bar splices. Mechanical bar splices shall be in accordance with Sec 706.
The hooks of V-Bars embedded in the beam cap shall be oriented inward. Bending the hooks outward, away from the column core, is not allowed.
The thickness of steel casing shall meet all the requirements of Sec 701 with the minimum thickness being 3/8 inch. Thicker casing may be required for installation.
For Section A-A, B-B, C-C, D-D, E-E, F-F, G-G, and H-H, see Sheet No. 23.
For Typical Section Thru Laminated Neoprene Bearing Pads, see Sheet No. 23.
For Substructure Quantity Table, see Sheet No. 23.
* Lapping of spiral reinforcement in this region is not permitted.
** Continue spiral bars to the bottom of the beam cap stirrup reinforcing bar.
*** Splice locations shall be staggered.
Anchorage of spiral reinforcement shall be provided by 1-1/2 extra turns of spiral bar at each end of spiral unit.
**** Pay Items Rock Socket (5 ft. 0 in. Dia.).
***** Pay Items Drilled Shaft (5 ft. 6 in. Dia.).
The cost of any required excavation to the top of the drilled shafts will be considered completely covered by the contract unit price for Drilled Shaft (5 ft. 6 in. Dia.).
Laminated Neoprene Bearing Pads shall be oriented along ℄ Girders.

LAWRENCE E. ROLWES, NUMBER 2002847, STATE OF MISSOURI, PROFESSIONAL ENGINEER

DATE 8/20/09
ROUTE I-70 | STATE MO
DISTRICT 6 | SHEET NO. BR22
COUNTY St. Louis City - MO
JOB NO. J6I0984B
CONTRACT ID.
PROJECT NO.
BRIDGE NO. A6500

DESCRIPTION | DATE

MISSOURI HIGHWAYS AND TRANSPORTATION COMMISSION
105 WEST CAPITOL
JEFFERSON CITY, MO 65102
1-888-ASK-MODOT (1-888-275-6636)

HNTB
715 KIRK DRIVE
KANSAS CITY, MO 64105-4310
TELEPHONE (816) 472-1201
CERTIFICATE OF AUTHORITY NO. 001270

REV.

\\slsw00\Jobs\46440\Techprod\Bridges\MO-Approach\Drawings\Baseline Drawings\B_A6500_022-125_J6I0984B_022.dgn 18-AUG-2009 10:22

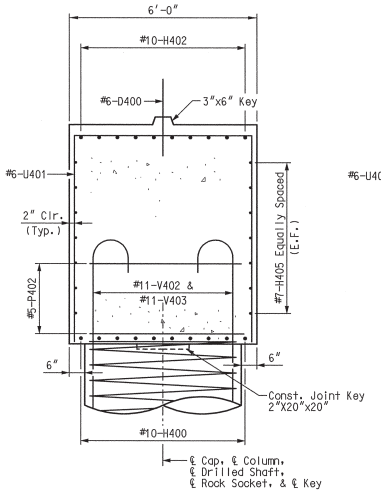

SECTION A-A

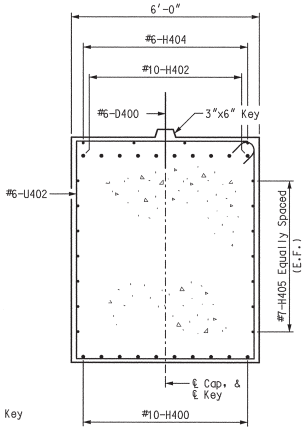

SECTION B-B

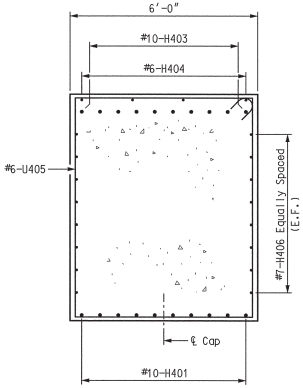

SECTION C-C

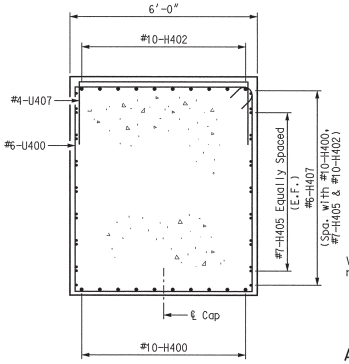

SECTION D-D

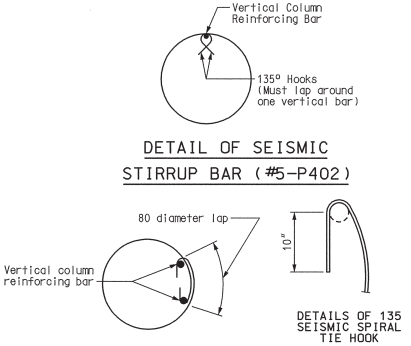

ANCHOR SPLICES IN SPIRAL AROUND VERTICAL BAR
(USE FOR INTERMEDIATE SPLICES OF SPIRALS)

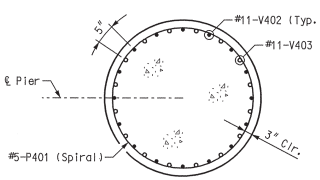

SECTION E-E
(5'-0" Diameter)

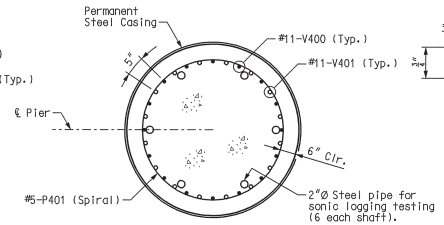

SECTION F-F
(5'-6" Diameter)

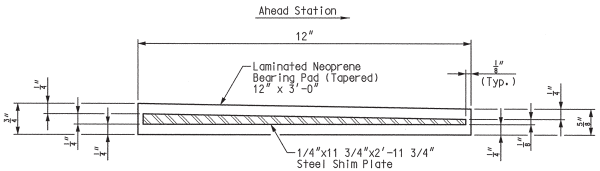

TYPICAL SECTION THRU
LAMINATED NEOPRENE BEARING PAD
PIER 4 (AHEAD BRG.)
(12 Required on Pier 4)

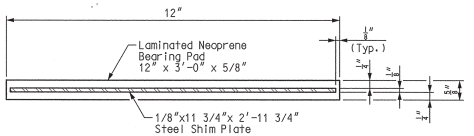

TYPICAL SECTION THRU
LAMINATED NEOPRENE BEARING PAD
PIER 4 (BACK BRG.)
(12 Required on Pier 4)

Notes:
The required shim plate shall be placed between layers of elastomer and molded together to form an integral unit.
Shop drawings are not required for laminated neoprene bearings on structures without sole plates.

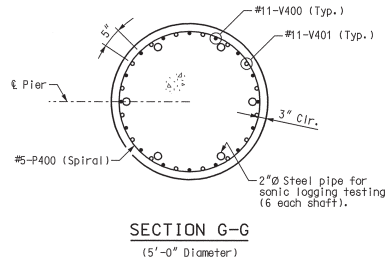

SECTION G-G
(5'-0" Diameter)

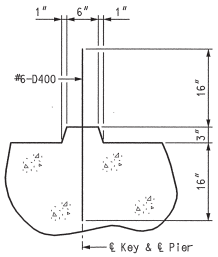

TYPICAL SECTION
THRU KEY

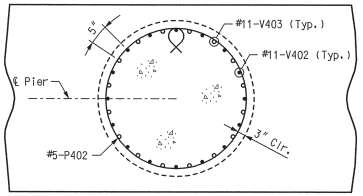

SECTION H-H

Note:
For location of Sections A-A, B-B, C-C, D-D, E-E, F-F, G-G, and H-H, see Sheet No. 22.

✱✱ SUBSTRUCTURE QUANTITY TABLE FOR PIER 4

Item		Quantity
Drilled Shafts (5 ft. 6 in. Dia.)	linear foot	115.0
Rock Sockets (5 ft. 0 in. Dia.)	linear foot	57.5
Supplementary Television Camera Inspection	each	5
Foundation Inspection Holes	linear foot	107.5
Concrete Coring	linear foot	35.5
Sonic Logging Testing	each	5
Class B Concrete (Substructure)	cu. yard	306.4
Reinforcing Steel (Bridges)	pound	105,290
Mechanical Bar Splice	each	160

✱✱ These quantities are included in the estimated quantities table on Sheet No. 5.

PIER 4 - DETAILS

Detailed JUL 2009
Checked JUL 2009

Note: This drawing is not to scale. Follow dimensions.

Sheet No. 23 of 125

\\slsw00\Jobs\46440\Techprod\Bridges\MO-Approach\Drawings\Baseline Drawings\B_A6500_023-125_J6I0984B_023.dgn

01-SEP-2009 10:45

LAWRENCE D. ROLWES, JR. NUMBER PE-2006002847 STATE OF MISSOURI PROFESSIONAL ENGINEER
9/1/09

DATE 8/20/09
ROUTE I-70 | STATE MO
DISTRICT 6 | SHEET NO. BR23
COUNTY St. Louis City - MO
JOB NO. J6I0984B
CONTRACT ID.
PROJECT NO.
BRIDGE NO. A6500

DESCRIPTION | DATE

MISSOURI HIGHWAYS AND TRANSPORTATION COMMISSION
105 WEST CAPITOL
JEFFERSON CITY, MO 65102
1-888-ASK-MODOT (1-888-275-6636)

HNTB
715 KIRK DRIVE
KANSAS CITY, MO 64105-1310
TELEPHONE (816) 472-1201
CERTIFICATE OF AUTHORITY NO. 001270

REV.

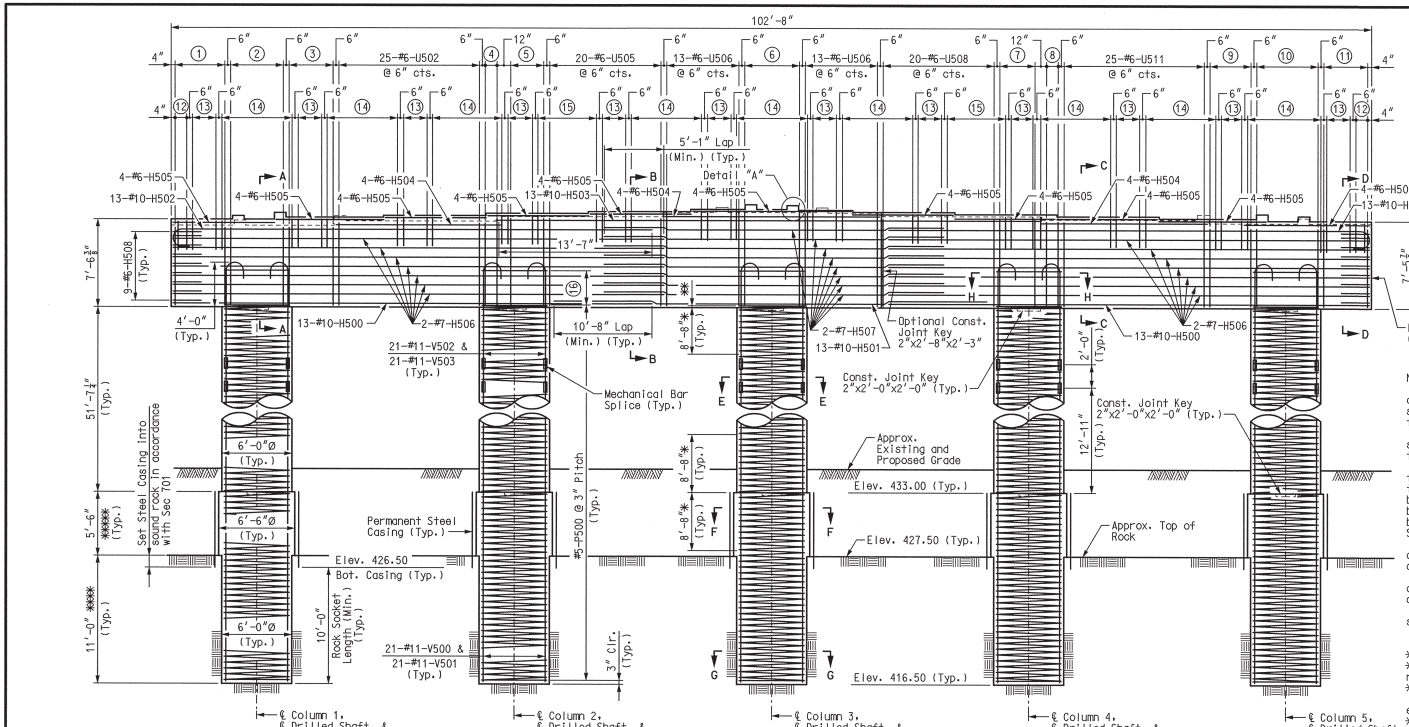

ELEVATION

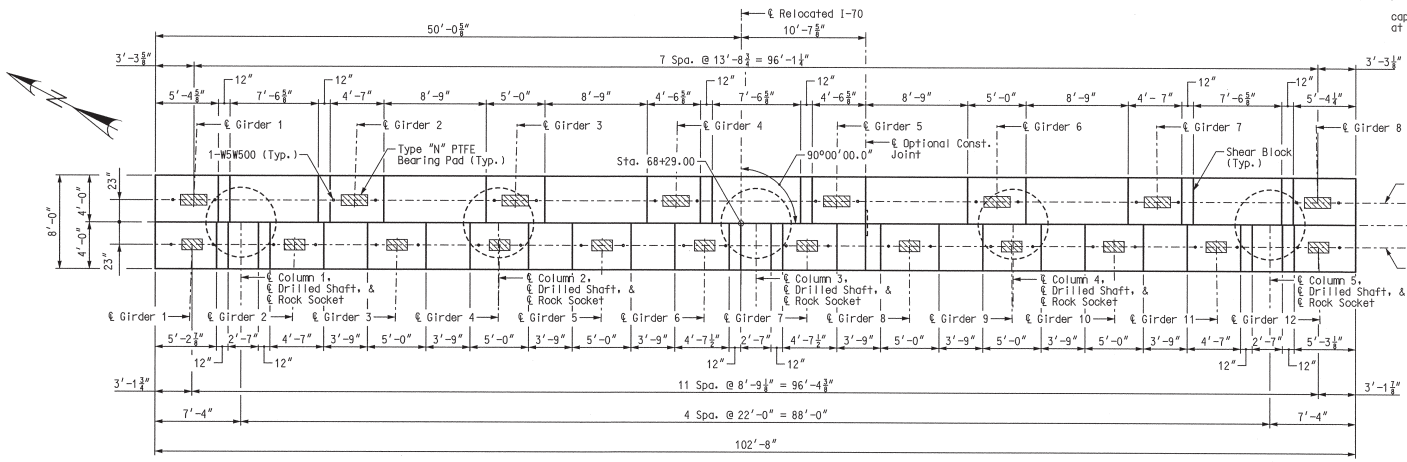

PLAN

GIRDER SEAT ELEVATIONS		
Girder	Back Brg.	Ahead Brg.
1	492.13	491.60
2	492.31	491.99
3	492.48	492.38
4	492.66	492.76
5	492.83	492.72
6	493.03	492.44
7	492.96	492.16
8	492.79	491.87
9	492.61	----
10	492.44	----
11	492.26	----
12	492.09	----

① 9-#6-U500 @ 6" cts.
② 6-#6-U501 @ 12" cts.
③ 8-#6-U500 @ 6" cts.
④ 2-#6-U503 @ 12" cts.
⑤ 7-#6-U504 @ 6" cts.
⑥ 6-#6-U507 @ 12" cts.
⑦ 7-#6-U509 @ 6" cts.
⑧ 2-#6-U510 @ 12" cts.
⑨ 8-#6-U512 @ 6" cts.
⑩ 6-#6-U513 @ 12" cts.
⑪ 9-#6-U512 @ 6" cts.
⑫ 2-#4-U514 @ 12" cts.
⑬ 5-#4-U514 @ 6" cts.
⑭ 7-#4-U514 @ 12" cts.
⑮ 6-#4-U514 @ 12" cts.
⑯ 13-#5-P501 @ 3" cts. (Typ.) ***

Notes:
An additional 4 feet has been added to #11-V500, #11-V501, and #5-P500 lengths for possible change in drilled shaft or rock socket depth. This excess length shall be cut off or included in the reinforcement lap if not required.
Concrete coring shall be performed on one of the drilled shafts and rock sockets in accordance with Sec 701. Sonic logging testing shall be performed on all drilled shafts and rock sockets.
The contractor shall use a mechanical bar splice for #11-V-Bars at the specified locations. The total bar lengths for bars indicated in the bill of reinforcing steel are determined based on the end of the bars being located at end of adjacent bar. No additional payment will be made for any additional bar lengths required for the mechanical bar splices. Mechanical bar splices shall be in accordance with Sec 706.
The hooks of V-Bars embedded in the beam cap shall be oriented inward. Bending the hooks outward, away from the column core, is not allowed.
The thickness of steel casing shall meet all the requirements of Sec 701 with the minimum thickness being 3/8 inch. Thicker casing may be required for installation.
For Sections A-A, B-B, C-C, D-D, E-E, F-F, G-G, and H-H, see Sheet No. 25.
For Details of Type "N" PTFE Bearings, see Sheet No. 36.
For Substructure Quantity Table, see Sheet No. 25.
* Lapping of spiral reinforcement in this region is not permitted.
** Continue spiral bars to the bottom of the beam cap stirrup reinforcing bar.
*** Splice locations shall be staggered.
Anchorage of spiral reinforcement shall be provided by 1-1/2 extra turns of spiral bar at each end of spiral unit.
**** Pay Items Rock Socket (6 ft. 0 in. Dia.).
***** Pay Items Drilled Shaft (6 ft. 6 in. Dia.).
The cost of any required excavation to the top of the drilled shafts will be considered completely covered by the contract unit price for Drilled Shaft (6 ft. 6 in. Dia.).
All reinforcing bars in the tops of substructure beams or caps shall be spaced to clear anchor rod wells for bearings by at least 1/2 ".
For Anchor Rod Setting Plans, see Sheet No. 35.
For Anchor Rod Well Details, see Sheet No. 35.
For Detail "A" see Sheet No. 25.

PIER 5 – PLAN AND ELEVATION

Detailed JUL 2009
Checked JUL 2009

Note: This drawing is not to scale. Follow dimensions.

\\slsw00\Jobs\46440\Techprod\Bridges\MO-Approach\Drawings\Baseline Drawings\B_A6500_024-125_J610984B_024.dgn

18-AUG-2009 10:22

LAWRENCE G. ROLWES
NUMBER PE-2009002847
STATE OF MISSOURI
PROFESSIONAL ENGINEER

8/20/09

DATE 8/20/09
ROUTE I-70
STATE MO
DISTRICT 6
SHEET NO. BR24
COUNTY St. Louis City - MO
JOB NO. J610984B
CONTRACT ID.
PROJECT NO.
BRIDGE NO. A6500

DESCRIPTION
DATE
REV.

MISSOURI HIGHWAYS AND TRANSPORTATION COMMISSION
MoDOT
105 WEST CAPITOL
JEFFERSON CITY, MO 65102
1-888-ASK-MODOT (1-888-275-6636)

HNTB
715 KIRK DRIVE
KANSAS CITY, MO 64105-1310
TELEPHONE (816) 472-1201
CERTIFICATE OF AUTHORITY NO. 001270

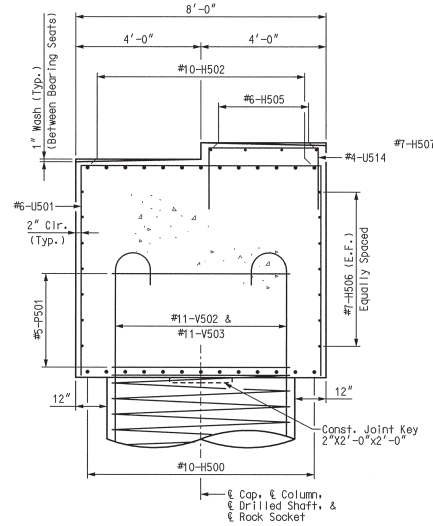

SECTION A-A

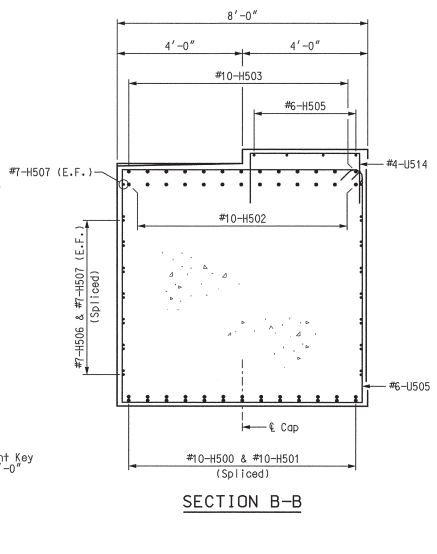

SECTION B-B

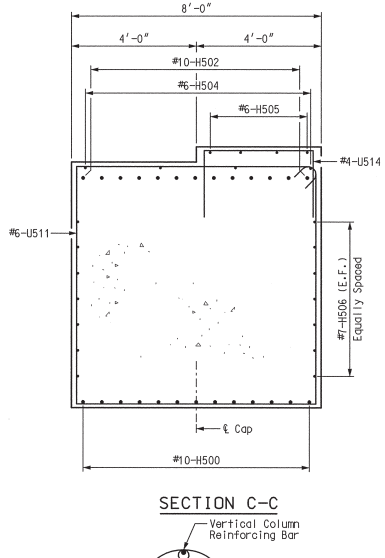

SECTION C-C

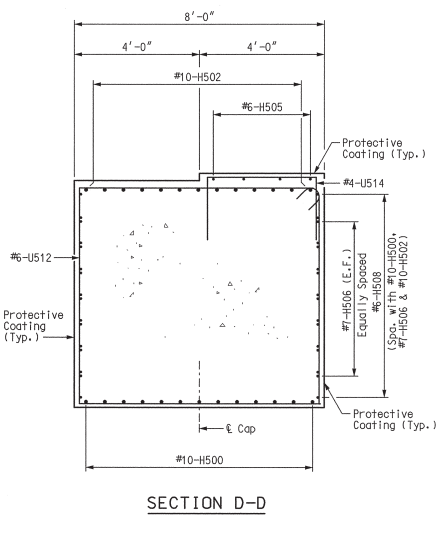

SECTION D-D

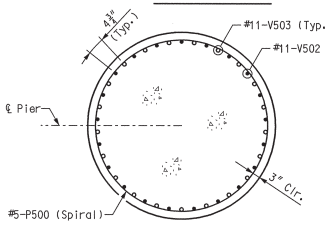

SECTION E-E

(6′-0″ Diameter)

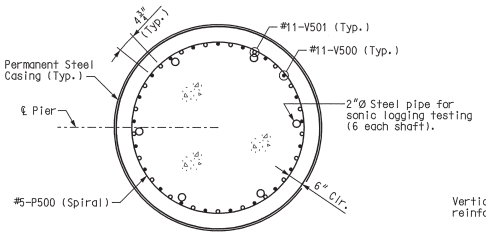

SECTION F-F

(6′-6″ Diameter)

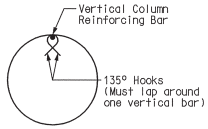

DETAIL OF SEISMIC
STIRRUP BAR (#5-P501)

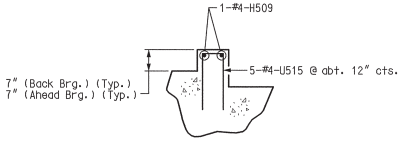

DETAIL "A"

(12 locations total)

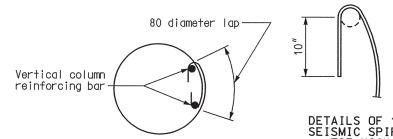

ANCHOR SPLICES IN SPIRAL AROUND VERTICAL BAR
(USE FOR INTERMEDIATE SPLICES OF SPIRALS)

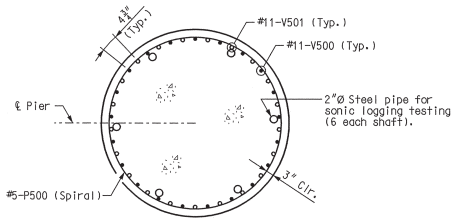

SECTION G-G

(6′-0″ Diameter)

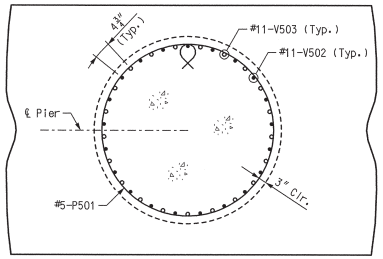

SECTION H-H

Notes:
For location of Sections A-A, B-B, C-C, D-D, E-E, F-F, G-G, and H-H, see Sheet No. 24.
Seal back face of beam, top of beam, ends of beam, and front face of beam with Protective Coating-Concrete Bents and Piers (Epoxy).

✻✻ SUBSTRUCTURE QUANTITY TABLE FOR PIER 5		
Item		Quantity
Drilled Shafts (6 ft. 6 in. Dia.)	linear foot	27.5
Rock Sockets (6 ft. 0 in. Dia.)	linear foot	55.0
Supplementary Television Camera Inspection	each	5
Foundation Inspection Holes	linear foot	105.0
Concrete Coring	linear foot	17.5
Sonic Logging Testing	each	5
Class B Concrete (Substructure)	cu. yard	506.7
Reinforcing Steel (Bridges)	pound	112,420
Mechanical Bar Splice	each	210
Reinforcing Steel (Epoxy Coated)	pound	30,350

✻✻ These quantities are included in the estimated quantities table on Sheet No. 5.

PIER 5 - DETAILS

LAWRENCE E. ROLWES JR. NUMBER PE-2006002847 PROFESSIONAL ENGINEER STATE OF MISSOURI

9/1/09

DATE
8/20/09

ROUTE	STATE
I-70	MO
DISTRICT	SHEET NO.
6	BR25

COUNTY
St. Louis City - MO

JOB NO.
J6I0984B

CONTRACT ID.

PROJECT NO.

BRIDGE NO.
A6500

REV.	DESCRIPTION	DATE

MISSOURI HIGHWAYS AND TRANSPORTATION COMMISSION
105 WEST CAPITOL
JEFFERSON CITY, MO 65102
1-888-ASK-MODOT (1-888-275-6636)

HNTB
715 KIRK DRIVE
KANSAS CITY, MO 64105-1310
TELEPHONE (816) 472-1201
CERTIFICATE OF AUTHORITY
NO. 001270

Detailed JUL 2009
Checked JUL 2009

Note: This drawing is not to scale. Follow dimensions.

\\slsw00\Jobs\46440\Techprod\Bridges\MO-Approach\Drawings\Baseline Drawings\B_A6500_025-125_J6I0984B_025.dgn

01-SEP-2009 10:46

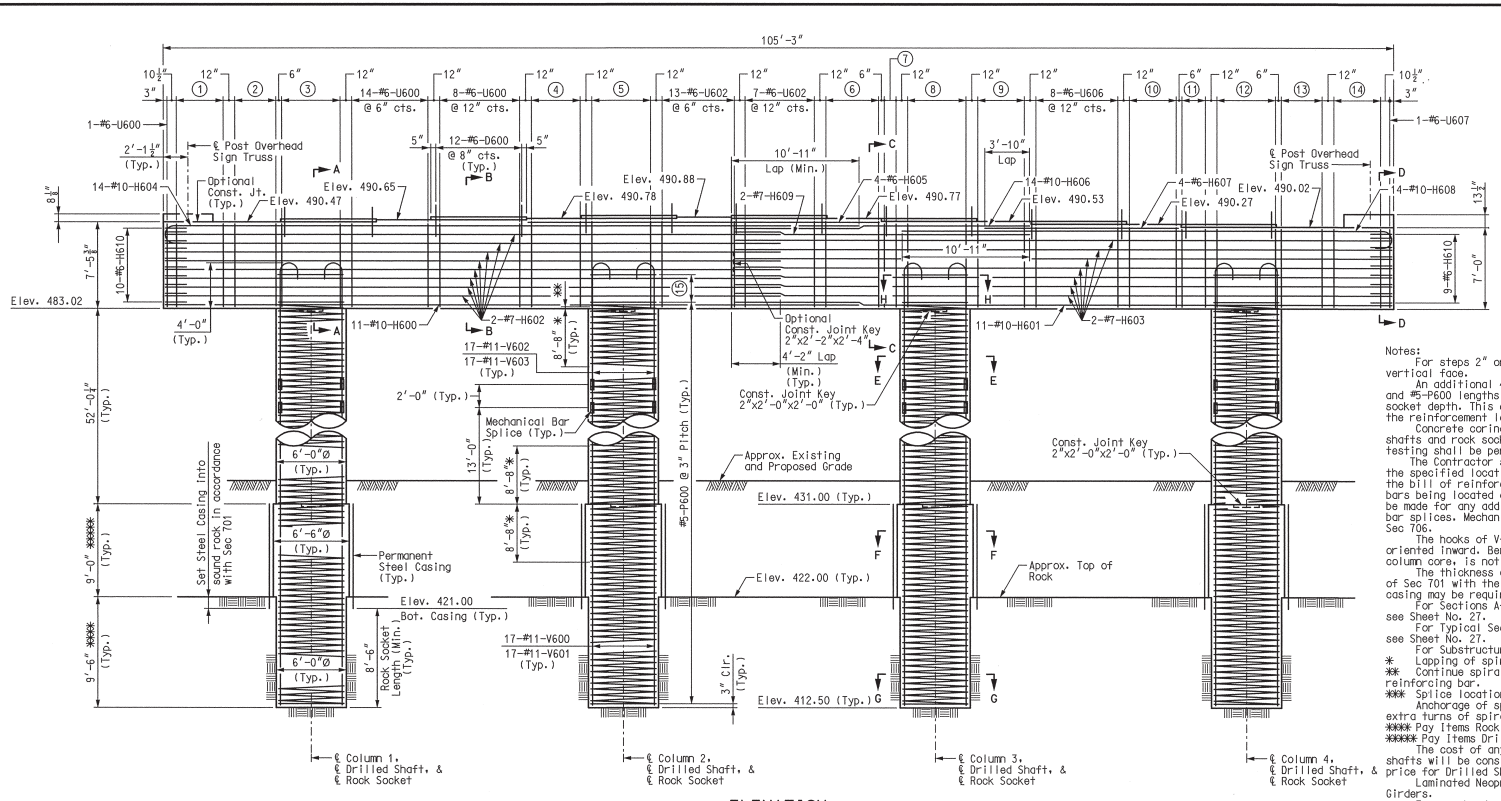

ELEVATION

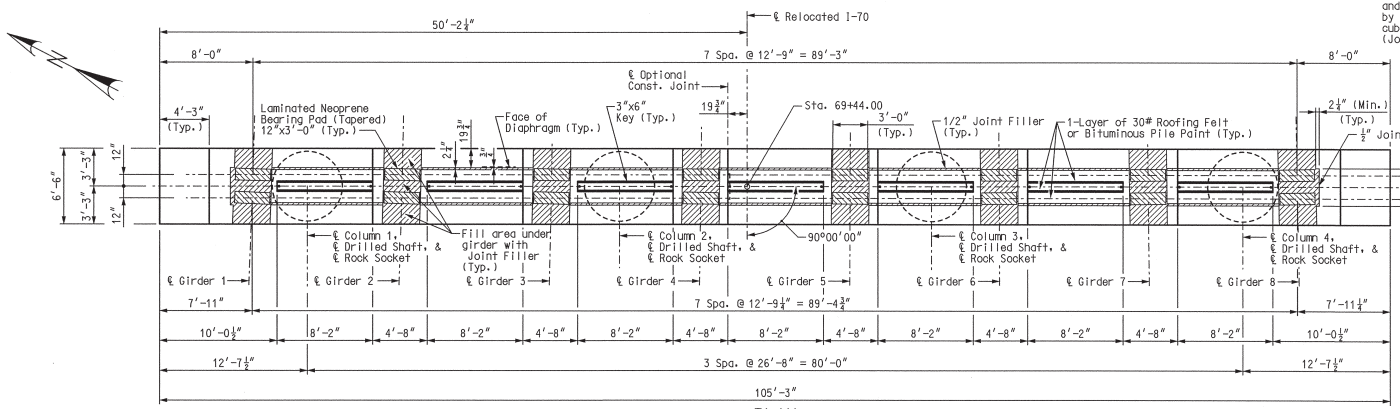

PLAN

1. 5-#6-U600 @ 12″ cts.
2. 8-#6-U600 @ 6″ cts.
3. 6-#6-U601 @ 12″ cts.
4. 9-#6-U602 @ 6″ cts.
5. 6-#6-U603 @ 12″ cts.
6. 10-#6-U602 @ 6″ cts.
7. 3-#6-U604 @ 6″ cts.
8. 6-#6-U605 @ 12″ cts.
9. 9-#6-U604 @ 6″ cts.
10. 9-#6-U606 @ 6″ cts.
11. 5-#6-U607 @ 6″ cts.
12. 6-#6-U608 @ 12″ cts.
13. 8-#6-U607 @ 6″ cts.
14. 5-#6-U607 @ 12″ cts.
15. 13-#5-P601 @ 3″ cts. ***

Notes:

For steps 2″ or more, use 2-1/4″ x 1/2″ joint filler up vertical face.

An additional 4 feet has been added to #11-V600, #11-V601 and #5-P600 lengths for possible change in drilled shaft or rock socket depth. This excess length shall be cut off or included in the reinforcement lap if not required.

Concrete coring shall be performed on one of the drilled shafts and rock sockets in accordance with Sec 701. Sonic logging testing shall be performed on all drilled shafts and rock sockets.

The Contractor shall use a mechanical bar splice for #11-V-Bars at the specified locations. The total bar lengths for bars indicated in the bill of reinforcing steel are determined based on the end of the bars being located at end of adjacent bar. No additional payment will be made for any additional bar lengths required for the mechanical bar splices. Mechanical bar splices shall be in accordance with Sec 706.

The hooks of V-Bars embedded in the beam cap shall be oriented inward. Bending the hooks outward, away from the column core, is not allowed.

The thickness of steel casing shall meet all the requirements of Sec 701 with the minimum thickness being 3/8 inch. Thicker casing may be required for installation.

For Sections A-A, B-B, C-C, D-D, E-E, F-F, G-G, and H-H, see Sheet No. 27.

For Typical Section Thru Laminated Neoprene Bearing Pad, see Sheet No. 27.

For Substructure Quantity Table, see Sheet No. 27.

* Lapping of spiral reinforcement in this region is not permitted.

** Continue spiral bars to the bottom of the beam cap stirrup reinforcing bar.

*** Splice locations shall be staggered.

Anchorage of spiral reinforcement shall be provided by 1-1/2 extra turns of spiral bar at each end of spiral unit.

**** Pay Items Rock Socket (6 ft. 0 in. Dia.).

***** Pay Items Drilled Shaft (6 ft. 6 in. Dia.).

The cost of any required excavation to the top of the drilled shafts will be considered completely covered by the contract unit price for Drilled Shaft (6 ft. 6 in. Dia.).

Laminated Neoprene Bearing Pads shall be oriented along ℄ Girders.

For overhead sign truss pedestal details, see Sheet No. 27.

Sign truss anchorages, which include anchor rods, nuts, washers, and embedded anchor plates, shall be considered completely covered by the contract unit price for Class B Concrete (Substructure) per cubic yard. Sign Truss and base plates shall be by Others (Job No. J6I0984).

PIER 6 – PLAN AND ELEVATION

Detailed JUL 2009
Checked JUL 2009

Note: This drawing is not to scale. Follow dimensions.

Sheet No. 26 of 125

\\slsw00\Jobs\46440\Techprod\Bridges\MO-Approach\Drawings\Baseline Drawings\B_A6500_026-125_J6I0984B_026.dgn

18-AUG-2009 10:22

LAWRENCE R. ROLWES NUMBER PE-2009002847 STATE OF MISSOURI PROFESSIONAL ENGINEER

8/20/09

DATE 8/20/09

ROUTE	STATE
I-70	MO
DISTRICT	SHEET NO.
6	BR26

COUNTY: St. Louis City - MO

JOB NO.: J6I0984B

CONTRACT ID.:

PROJECT NO.:

BRIDGE NO.: A6500

DATE	DESCRIPTION

MISSOURI HIGHWAYS AND TRANSPORTATION COMMISSION

MoDOT

105 WEST CAPITOL
JEFFERSON CITY, MO 65102
1-888-ASK-MODOT (1-888-275-6636)

HNTB

715 KIRK DRIVE
KANSAS CITY, MO 64105-1310
TELEPHONE (816) 472-1201
CERTIFICATE OF AUTHORITY NO. 001270

REV.

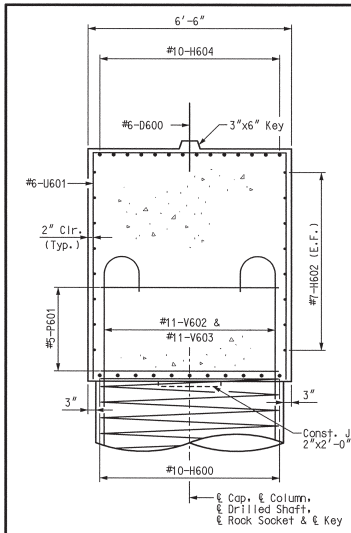

SECTION A-A

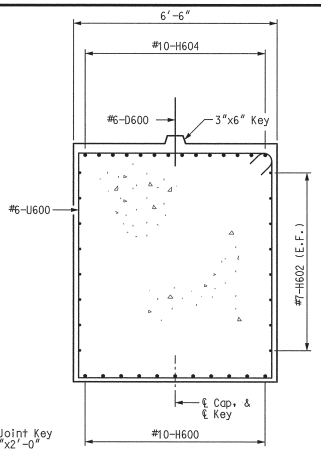

SECTION B-B

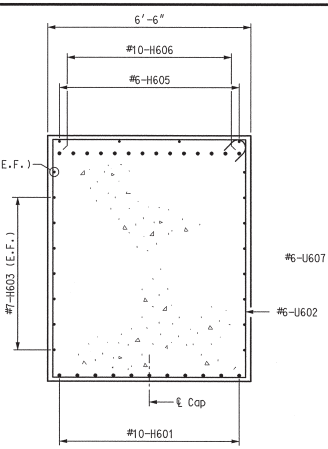

SECTION C-C

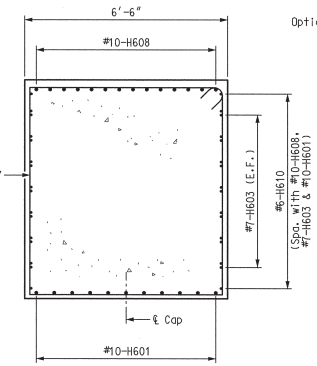

SECTION D-D
(Pedestal not shown)

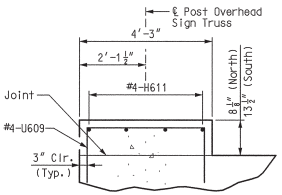

PEDESTAL ELEVATION

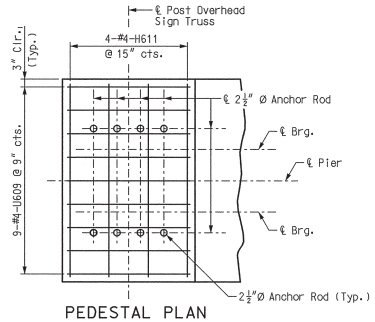

PEDESTAL PLAN

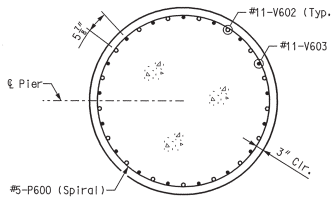

SECTION E-E
(6'-0" Diameter)

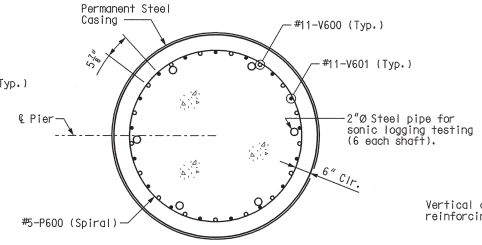

SECTION F-F
(6'-6" Diameter)

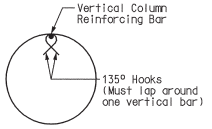

DETAIL OF SEISMIC STIRRUP BAR (#5-P601)

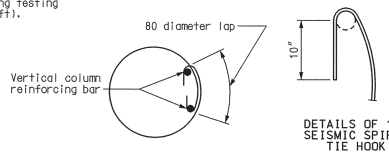

DETAILS OF 135 SEISMIC SPIRAL TIE HOOK

ANCHOR SPLICES IN SPIRAL AROUND VERTICAL BAR
(USE FOR INTERMEDIATE SPLICES OF SPIRALS)

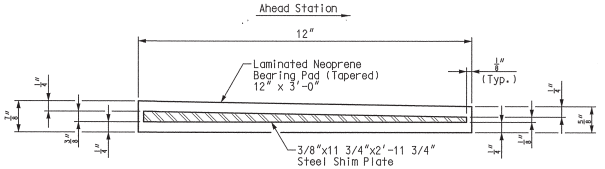

TYPICAL SECTION THRU LAMINATED NEOPRENE BEARING PAD
PIER 6
16 Required on Pier 6

Notes:
The required shim plate shall be placed between layers of elastomer and molded together to form an integral unit.
Shop drawings are not required for laminated neoprene bearings on structures without sole plates.

Notes:
For location of Sections A-A, B-B, C-C, D-D, E-E, F-F, G-G, and H-H, see Sheet No. 26.
For Anchor rod setting plan, see Sheet No. 35.

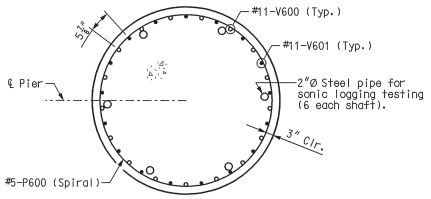

SECTION G-G
(6'-0" Diameter)

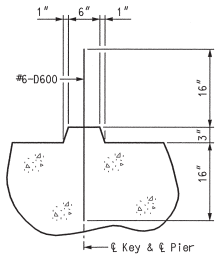

TYPICAL SECTION THRU KEY

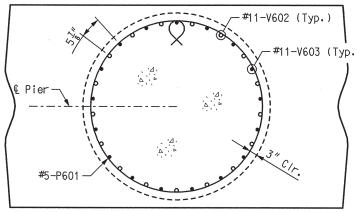

SECTION H-H

✻✻ SUBSTRUCTURE QUANTITY TABLE FOR PIER 6		
Item		Quantity
Drilled Shafts (6 ft. 6 in. Dia.)	linear foot	36.0
Rock Sockets (6 ft. 0 in. Dia.)	linear foot	38.0
Supplementary Television Camera Inspection	each	4
Foundation Inspection Holes	linear foot	78.0
Concrete Coring	linear foot	19.5
Sonic Logging Testing	each	4
Class B Concrete (Substructure)	cu. yard	409.3
Reinforcing Steel (Bridges)	pound	103,720
Mechanical Bar Splice	each	136

✻✻ These quantities are included in the estimated quantities table on Sheet No. 5.

PIER 6 - DETAILS

Detailed JUL 2009
Checked JUL 2009

Note: This drawing is not to scale. Follow dimensions.

Sheet No. 27 of 125

\\slsw00\Jobs\46440\Techprod\Bridges\MO-Approach\Drawings\Baseline Drawings\B_A6500_027-125_J6I0984B_027.dgn

01-SEP-2009 10:46

REV.

STATE OF MISSOURI
LAWRENCE E. ROLWES
NUMBER PE-2009002847
PROFESSIONAL ENGINEER

9/1/09

DATE
8/20/09

ROUTE	STATE
I-70	MO
DISTRICT	SHEET NO.
6	BR27

COUNTY
St. Louis City - MO

JOB NO.
J6I0984B

CONTRACT ID.

PROJECT NO.

BRIDGE NO.
A6500

DATE	DESCRIPTION

MISSOURI HIGHWAYS AND TRANSPORTATION COMMISSION
105 WEST CAPITOL
JEFFERSON CITY, MO 65102
1-888-ASK-MODOT (1-888-275-6636)

HNTB
715 KIRK DRIVE
KANSAS CITY, MO 64105-1310
TELEPHONE: (816) 472-1201
CERTIFICATE OF AUTHORITY NO. 001270

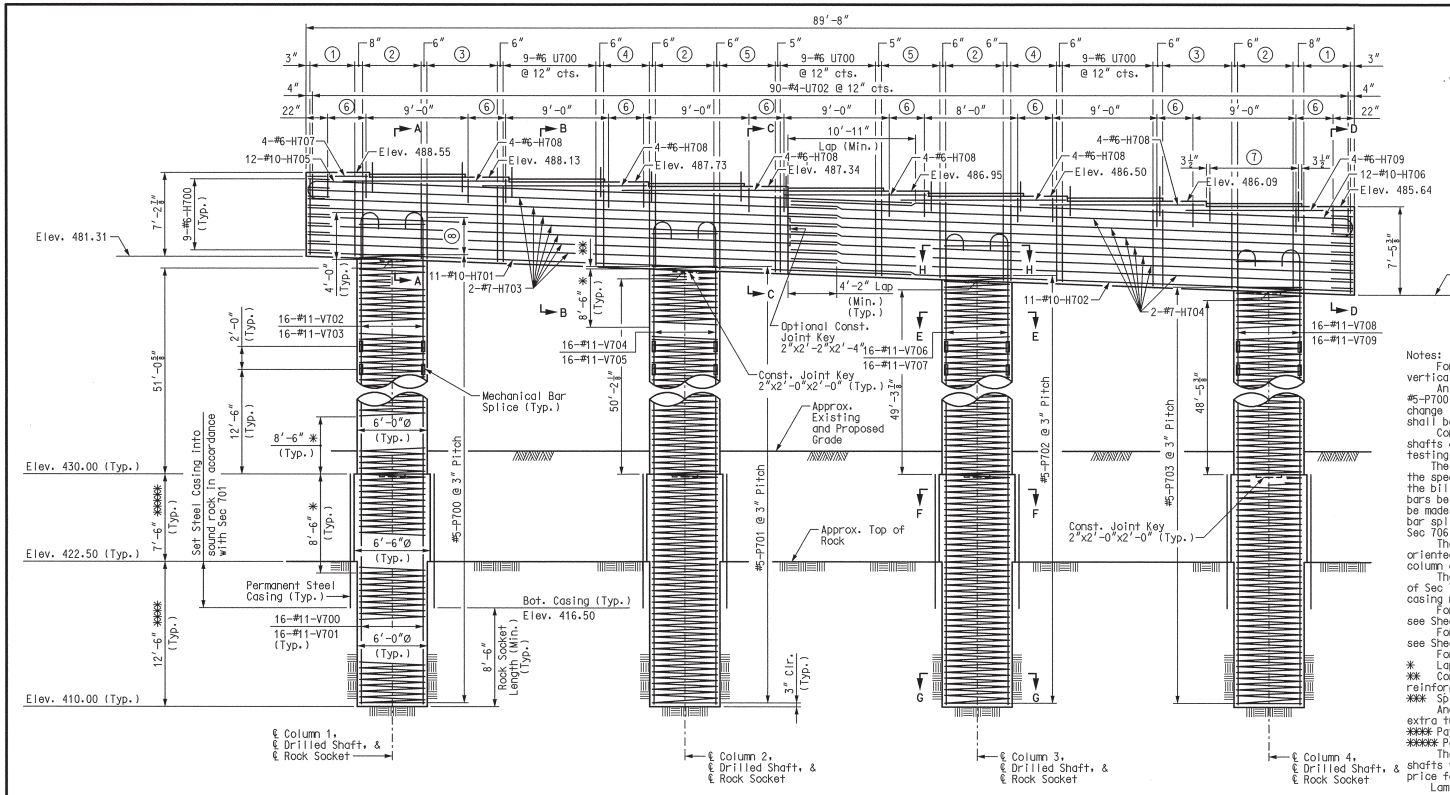

ELEVATION

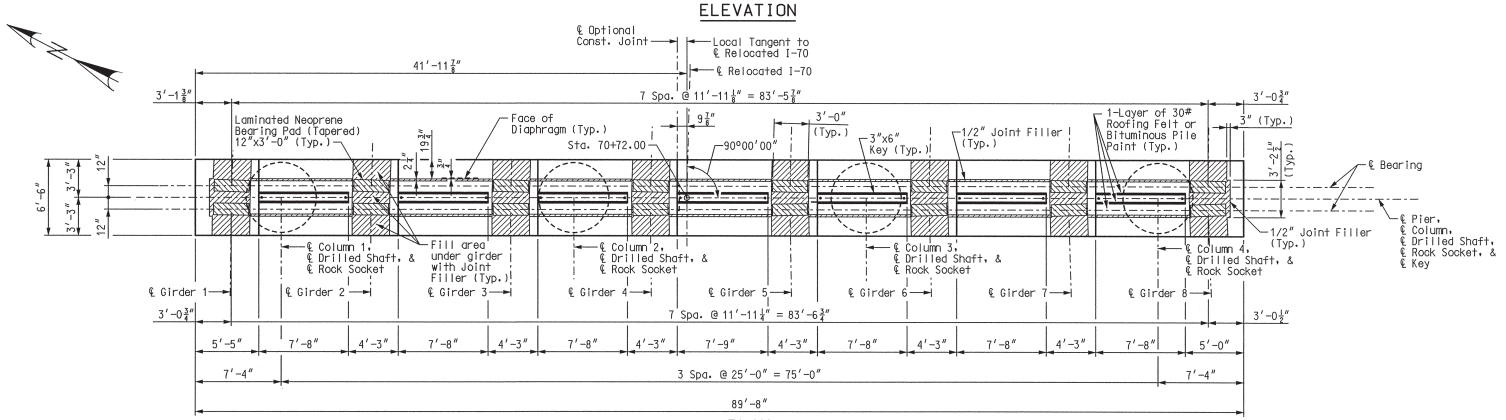

PLAN

① 7-#6-U700 @ 8" cts.
② 6-#6-U701 @ 12" cts.
③ 13-#6-U700 @ 6" cts.
④ 9-#6-U700 @ 6" cts.
⑤ 11-#6-U700 @ 6" cts.
⑥ 4-#4-U702 @ 12" cts.
⑦ 11-#6-D700 @ 8 1/2" cts. (Typ.)
⑧ 13-#5 P704 @ 3" cts. (Typ.) ***

Notes:

For steps 2" or more, use 2-1/4" x 1/2" joint filler up vertical face.

An additional 4 feet has been added to #11-V700, #11-V701, #5-P700, #5-P701, #5-P702, and #5-P703 lengths for possible change in drilled shaft or rock socket depth. This excess length shall be cut off or included in the reinforcement lap if not required.

Concrete coring shall be performed on one of the drilled shafts and rock sockets in accordance with Sec 701. Sonic logging testing shall be performed on all drilled shafts and rock sockets.

The Contractor shall use a mechanical bar splice for #11-V-Bars at the specified locations. The total bar lengths for bars indicated in the bill of reinforcing steel are determined based on the end of the bars being located at end of adjacent bar. No additional payment will be made for any additional bar lengths required for the mechanical bar splices. Mechanical bar splices shall be in accordance with Sec 706.

The hooks of V-Bars embedded in the beam cap shall be oriented inward. Bending the hooks outward, away from the column core, is not allowed.

The thickness of steel casing shall meet all the requirements of Sec 701 with the minimum thickness being 3/8 inch. Thicker casing may be required for installation.

For Sections A-A, B-B, C-C, D-D, E-E, F-F, G-G, and H-H, see Sheet No. 29.

For Typical Section Thru Laminated Neoprene Bearing Pad, see Sheet No. 29.

For Substructure Quantity Table, see Sheet No. 29.

* Lapping of spiral reinforcement in this region is not permitted.

** Continue spiral bars to the bottom of the beam cap stirrup reinforcing bar.

*** Splice locations shall be staggered.

Anchorage of spiral reinforcement shall be provided by 1-1/2 extra turns of spiral bar at each end of spiral unit.

**** Pay Items Rock Socket (6 ft. 0 in. Dia.).

***** Pay Items Drilled Shaft (6 ft. 6 in. Dia.).

The cost of any required excavation to the top of the drilled shafts will be considered completely covered by the contract unit price for Drilled Shaft (6 ft. 6 in. Dia.).

Laminated Neoprene Bearing Pads shall be oriented along ℄ Girders.

PIER 7 – PLAN AND ELEVATION

Detailed JUL 2009
Checked JUL 2009

Note: This drawing is not to scale. Follow dimensions.

Sheet No. 28 of 125

\\slsw00\Jobs\46440\Techprod\Bridges\MO-Approach\Drawings\Baseline Drawings\B_A6500_028-125_J6I0984B_028.dgn

18-AUG-2009 10:22

STATE OF MISSOURI — LAWRENCE G. ROLWES — NUMBER PE-2009002947 — PROFESSIONAL ENGINEER

8/20/09

DATE	
8/20/09	
ROUTE	STATE
I-70	MO
DISTRICT	SHEET NO.
6	BR28
COUNTY	
St. Louis City - MO	
JOB NO.	
J6I0984B	
CONTRACT ID.	
PROJECT NO.	
BRIDGE NO.	
A6500	

NO.	DESCRIPTION	DATE

MISSOURI HIGHWAYS AND TRANSPORTATION COMMISSION
105 WEST CAPITOL
JEFFERSON CITY, MO 65102
1-888-ASK-MODOT (1-888-275-6636)

HNTB
715 KIRK DRIVE
KANSAS CITY, MO 64105-1310
TELEPHONE (816) 472-1201
CERTIFICATE OF AUTHORITY NO. 001270

REV.

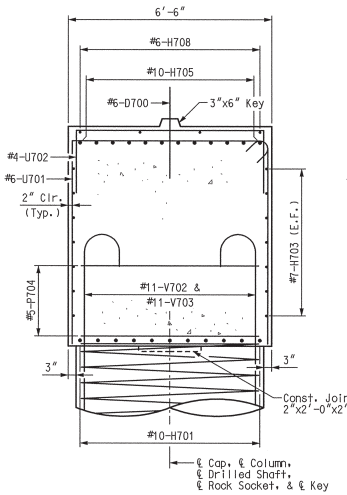

SECTION A-A

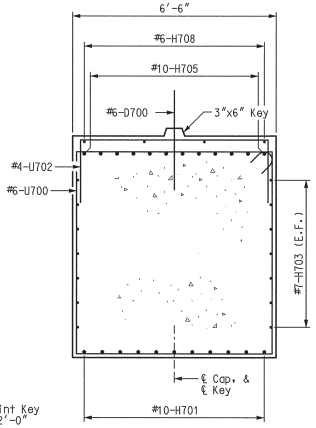

SECTION B-B

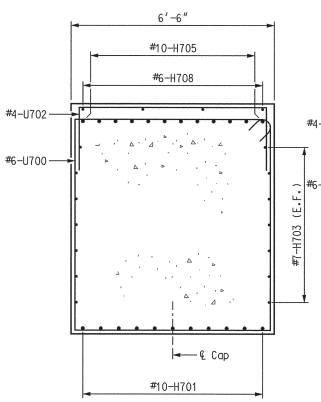

SECTION C-C

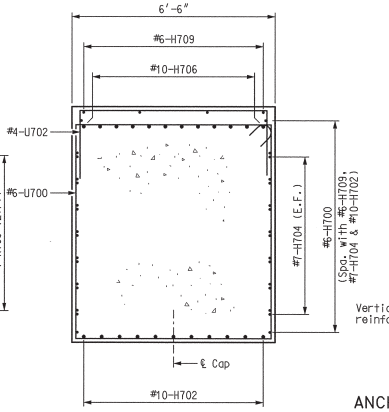

SECTION D-D



DETAIL OF SEISMIC STIRRUP BAR (#5-P704)

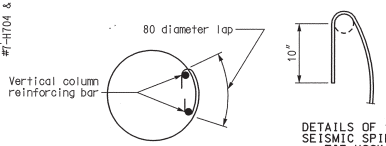

DETAILS OF 135 SEISMIC SPIRAL TIE HOOK

ANCHOR SPLICES IN SPIRAL AROUND VERTICAL BAR
(USE FOR INTERMEDIATE SPLICES OF SPIRALS)

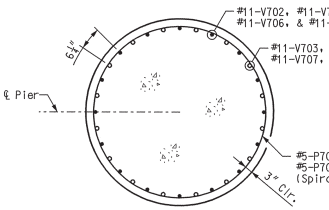

SECTION E-E
(6'-0" Diameter)

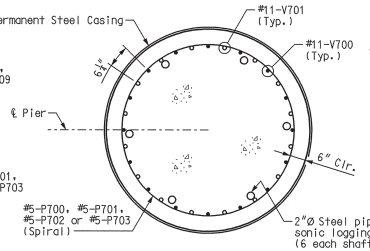

SECTION F-F
(6'-6" Diameter)

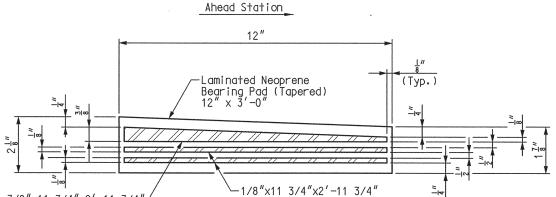

TYPICAL SECTION THRU
LAMINATED NEOPRENE BEARING PAD
PIER 7 (BACK BRG.)
(8 Required on Pier 7)

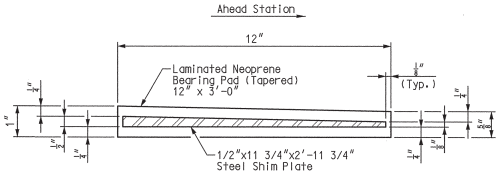

TYPICAL SECTION THRU
LAMINATED NEOPRENE BEARING PAD
PIER 7 (AHEAD BRG.)
(8 Required on Pier 7)

Notes:
The required shim plate shall be placed between layers of elastomer and molded together to form an integral unit.
Shop drawings are not required for laminated neoprene bearings on structures without sole plates.

Note:
For location of Sections A-A, B-B, C-C, D-D, E-E, F-F, G-G, and H-H, see Sheet No. 28.

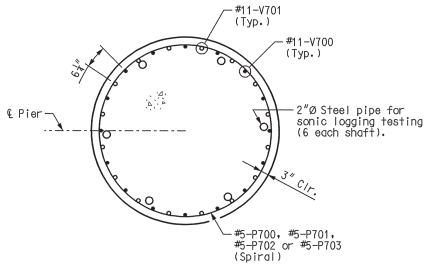

SECTION G-G
(6'-0" Diameter)

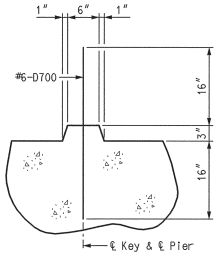

TYPICAL SECTION
THRU KEY

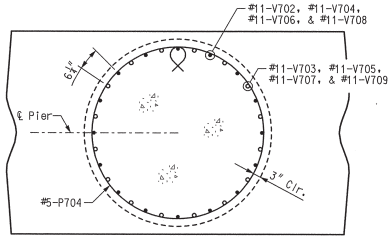

SECTION H-H

✻✻ SUBSTRUCTURE QUANTITY TABLE FOR PIER 7		
Item		Quantity
Drilled Shafts (6 ft. 6 in. Dia.)	linear foot	30.0
Rock Sockets (6 ft. 0 in. Dia.)	linear foot	50.0
Supplementary Television Camera Inspection	each	4
Foundation Inspection Holes	linear foot	90.0
Concrete Coring	linear foot	21.0
Sonic Logging Testing	each	4
Class B Concrete (Substructure)	cu. yard	365.2
Reinforcing Steel (Bridges)	pound	95,760
Mechanical Bar Splice	each	128

✻✻ These quantities are included in the estimated quantities table on Sheet No. 5.

PIER 7 - DETAILS

Detailed JUL 2009
Checked JUL 2009

Note: This drawing is not to scale. Follow dimensions.

Sheet No. 29 of 125

\\slsw00\Jobs\46440\Techprod\Bridges\MO-Approach\Drawings\Baseline Drawings\B_A6500_029-125_J6I0984B_029.dgn

01-SEP-2009 10:47

LAWRENCE E. ROLWES JR. NUMBER PE-2006002847 PROFESSIONAL ENGINEER STATE OF MISSOURI

9/1/09

DATE 8/20/09
ROUTE I-70 | STATE MO
DISTRICT 6 | SHEET NO. BR29
COUNTY St. Louis City - MO
JOB NO. J6I0984B
CONTRACT ID.
PROJECT NO.
BRIDGE NO. A6500

DESCRIPTION | DATE

MISSOURI HIGHWAYS AND TRANSPORTATION COMMISSION
105 WEST CAPITOL
JEFFERSON CITY, MO 65102
1-888-ASK-MODOT (1-888-275-6636)

HNTB
715 KIRK DRIVE
KANSAS CITY, MO 64105-1310
TELEPHONE (816) 472-1201
CERTIFICATE OF AUTHORITY NO. 001270

REV.

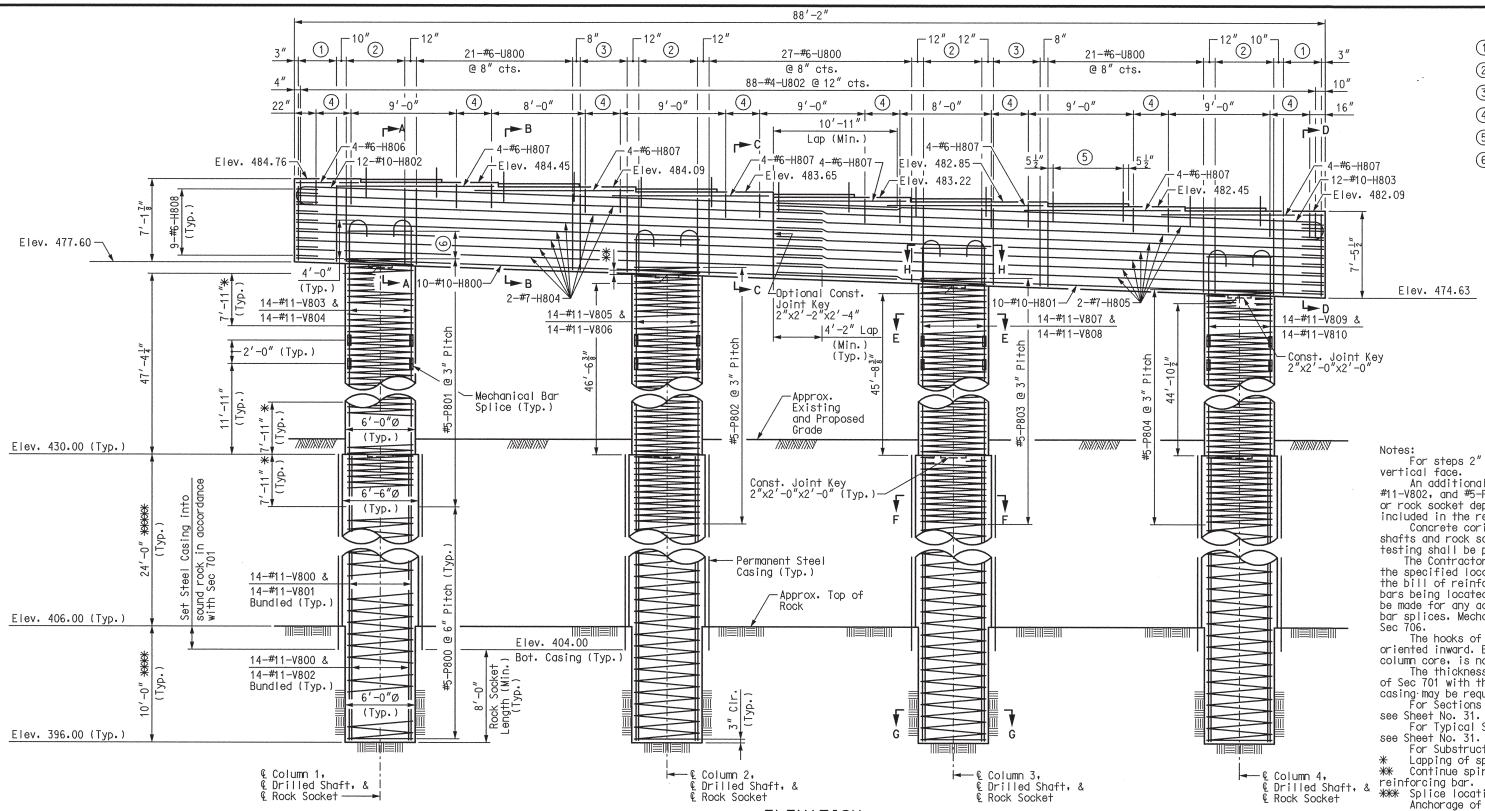

ELEVATION

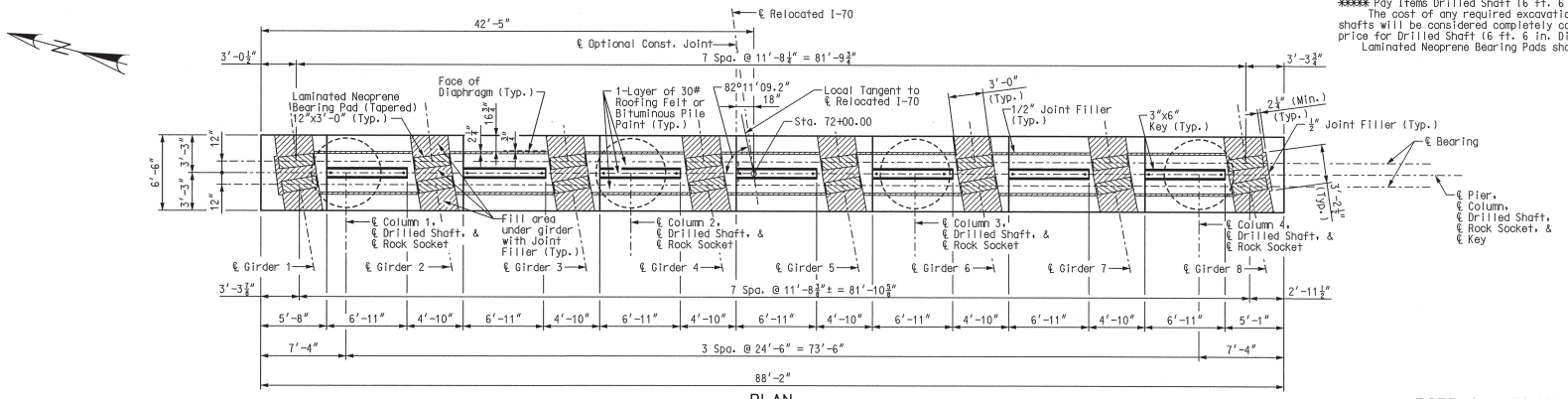

PLAN

① 6-#6-U800 @ 8" cts.
② 6-#6-U801 @ 12" cts.
③ 9-#6-U800 @ 6" cts.
④ 4-#4-U802 @ 12" cts.
⑤ 10-#6-D800 @ 8" cts. (Typ.)
⑥ 13-#5-P805 @ 3" cts. (Typ.) ***

Notes:
For steps 2" or more, use 2-1/4" x 1/2" joint filler up vertical face.
An additional 4 feet has been added to #11-V800, #11-V801, #11-V802, and #5-P800 lengths for possible change in drilled shaft or rock socket depth. This excess length shall be cut off or included in the reinforcement lap if not required.
Concrete coring shall be performed on one of the drilled shafts and rock sockets in accordance with Sec 701. Sonic logging testing shall be performed on all drilled shafts and rock sockets.
The Contractor shall use a mechanical bar splice for #11-V-Bars at the specified locations. The total bar lengths for bars indicated in the bill of reinforcing steel are determined based on the end of the bars being located at end of adjacent bar. No additional payment will be made for any additional bar lengths required for the mechanical bar splices. Mechanical bar splices shall be in accordance with Sec 706.
The hooks of V-Bars embedded in the beam cap shall be oriented inward. Bending the hooks outward, away from the column core, is not allowed.
The thickness of steel casing shall meet all the requirements of Sec 701 with the minimum thickness being 3/8 inch. Thicker casing may be required for installation.
For Sections A-A, B-B, C-C, D-D, E-E, F-F, G-G, and H-H, see Sheet No. 31.
For Typical Section Thru Laminated Neoprene Bearing Pad, see Sheet No. 31.
For Substructure Quantity Table, see Sheet No. 31.
* Lapping of spiral reinforcement in this region is not permitted.
** Continue spiral bars to the bottom of the beam cap stirrup reinforcing bar.
*** Splice locations shall be staggered.
Anchorage of spiral reinforcement shall be provided by 1-1/2 extra turns of spiral bar at each end of spiral unit.
**** Pay Items Rock Socket (6 ft. 0 in. Dia.).
***** Pay Items Drilled Shaft (6 ft. 6 in. Dia.).
The cost of any required excavation to the top of the drilled shafts will be considered completely covered by the contract unit price for Drilled Shaft (6 ft. 6 in. Dia.).
Laminated Neoprene Bearing Pads shall be oriented along ℄ Girders.

PIER 8 – PLAN AND ELEVATION

Detailed JUL 2009
Checked JUL 2009

Note: This drawing is not to scale. Follow dimensions.

Sheet No. 30 of 125

\\slsw00\Jobs\46440\Techprod\Bridges\MO-Approach\Drawings\Baseline Drawings\B_A6500_030-125_J6I0984B_030.dgn

18-AUG-2009 10:22

LAWRENCE C. ROLWES, NUMBER PE-2005002847, STATE OF MISSOURI, PROFESSIONAL ENGINEER
8/20/09

DATE 8/20/09
ROUTE I-70
STATE MO
DISTRICT 6
SHEET NO. BR30
COUNTY St. Louis City - MO
JOB NO. J6I0984B
CONTRACT ID.
PROJECT NO.
BRIDGE NO. A6500

DESCRIPTION
DATE

MISSOURI HIGHWAYS AND TRANSPORTATION COMMISSION
MoDOT
105 WEST CAPITOL
JEFFERSON CITY, MO 65102
1-888-ASK-MODOT (1-888-275-6636)

HNTB
715 KIRK DRIVE
KANSAS CITY, MO 64105-1310
TELEPHONE (816) 472-1201
CERTIFICATE OF AUTHORITY NO. 001270

REV.

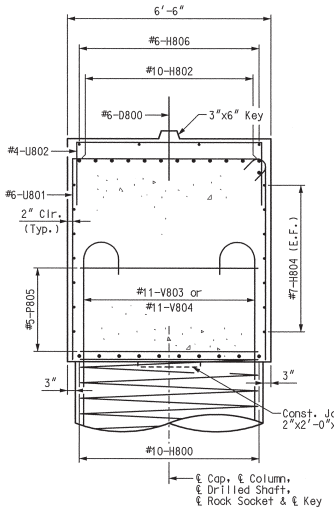

SECTION A-A

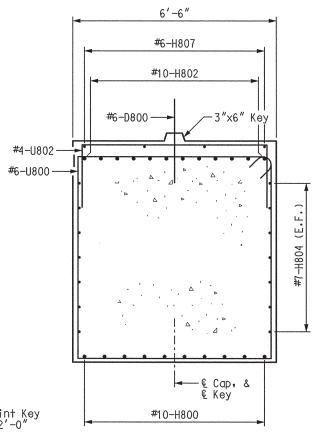

SECTION B-B

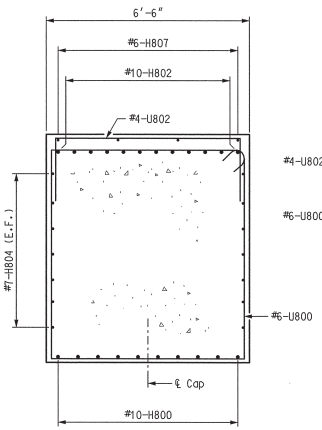

SECTION C-C

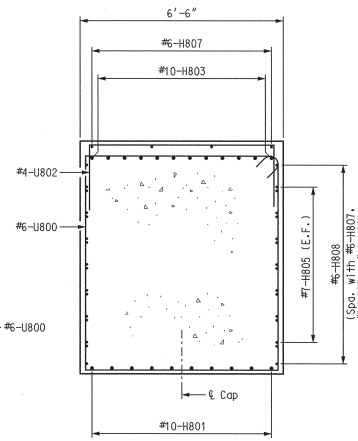

SECTION D-D

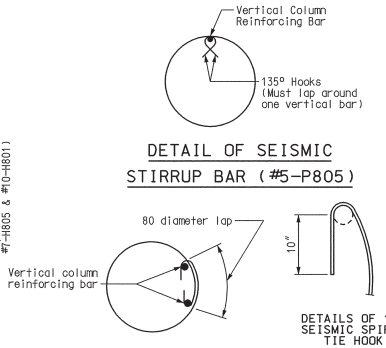

ANCHOR SPLICES IN SPIRAL AROUND VERTICAL BAR
(USE FOR INTERMEDIATE SPLICES OF SPIRALS)

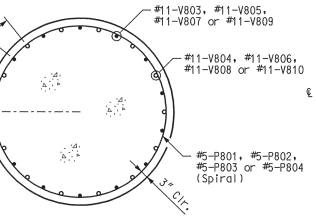

SECTION E-E
(6'-0" Diameter)

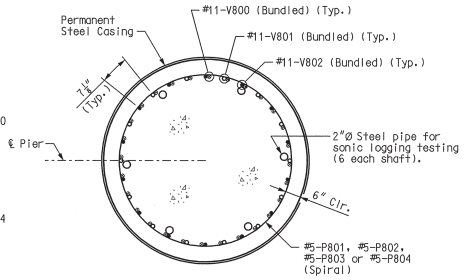

SECTION F-F
(6'-6" Diameter)

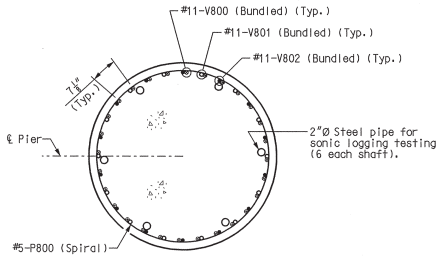

SECTION G-G
(6'-0" Diameter)

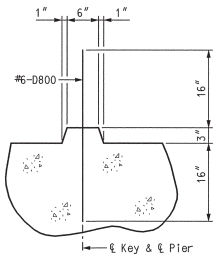

TYPICAL SECTION THRU KEY

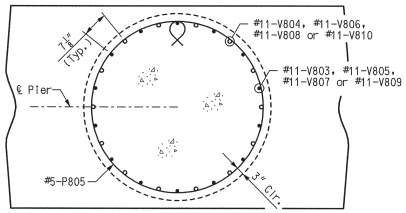

SECTION H-H

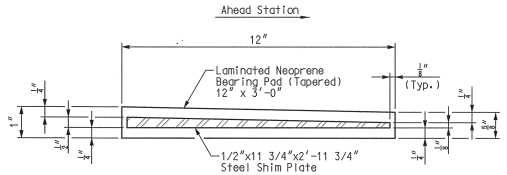

TYPICAL SECTION THRU LAMINATED NEOPRENE BEARING PAD
PIER 8

16 Required on Pier 8

Notes:
The required shim plate shall be placed between layers of elastomer and molded together to form an integral unit.
Shop drawings are not required for laminated neoprene bearings on structures without sole plates.

Note:
For location of Sections A-A, B-B, C-C, D-D, E-E, F-F, G-G, and H-H, see Sheet No. 30.

** SUBSTRUCTURE QUANTITY TABLE FOR PIER 8		
Item		Quantity
Drilled Shafts (6 ft. 6 in. Dia.)	linear foot	96.0
Rock Sockets (6 ft. 0 in. Dia.)	linear foot	40.0
Supplementary Television Camera Inspection	each	4
Foundation Inspection Holes	linear foot	80.0
Concrete Coring	linear foot	35.0
Sonic Logging Testing	each	4
Class B Concrete (Substructure)	cu. yard	346.9
Reinforcing Steel (Bridges)	pound	115,560
Mechanical Bar Splice	each	112

** These quantities are included in the estimated quantities table on Sheet No. 5.

PIER 8 - DETAILS

Detailed JUL 2009
Checked JUL 2009

Note: This drawing is not to scale. Follow dimensions.

Sheet No. 31 of 125

\\slsw00\Jobs\46440\Techprod\Bridges\MO-Approach\Drawings\Baseline Drawings\B_A6500_031-125_J6I0984B_031.dgn

01-SEP-2009 10:48

REV.

DESCRIPTION | DATE

MISSOURI HIGHWAYS AND TRANSPORTATION COMMISSION
105 WEST CAPITOL
JEFFERSON CITY, MO 65102
1-888-ASK-MODOT (1-888-275-6636)

HNTB
715 KIRK DRIVE
KANSAS CITY, MO 64105-1310
PHONE (816) 472-1201
CERTIFICATE OF AUTHORITY NO. 001270

LAWRENCE D. ROLWES, JR. NUMBER PE-2006002847 PROFESSIONAL ENGINEER STATE OF MISSOURI

9/11/09

DATE	
8/20/09	
ROUTE	STATE
I-70	MO
DISTRICT	SHEET NO.
6	BR31

COUNTY: St. Louis City - MO
JOB NO.: J6I0984B
CONTRACT ID.:
PROJECT NO.:
BRIDGE NO.: A6500

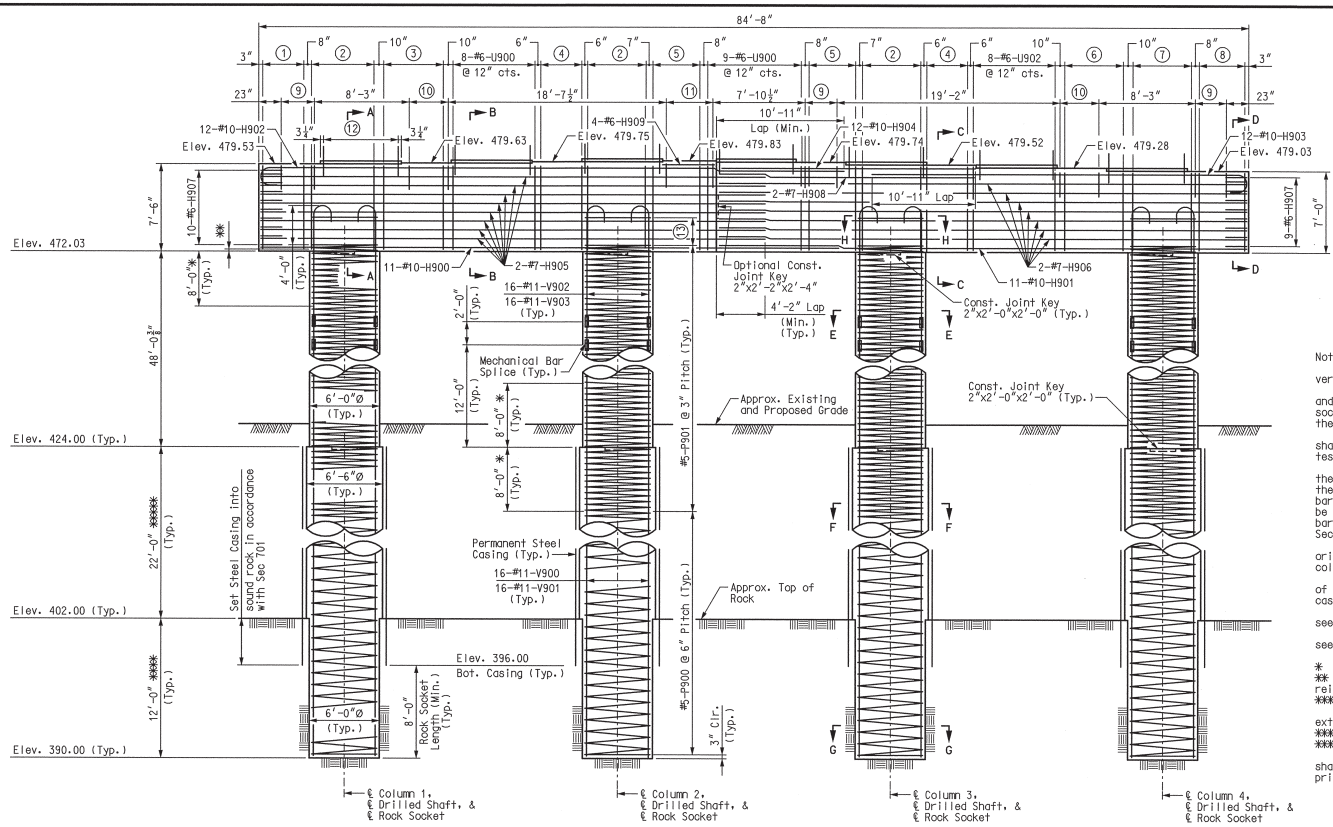

ELEVATION

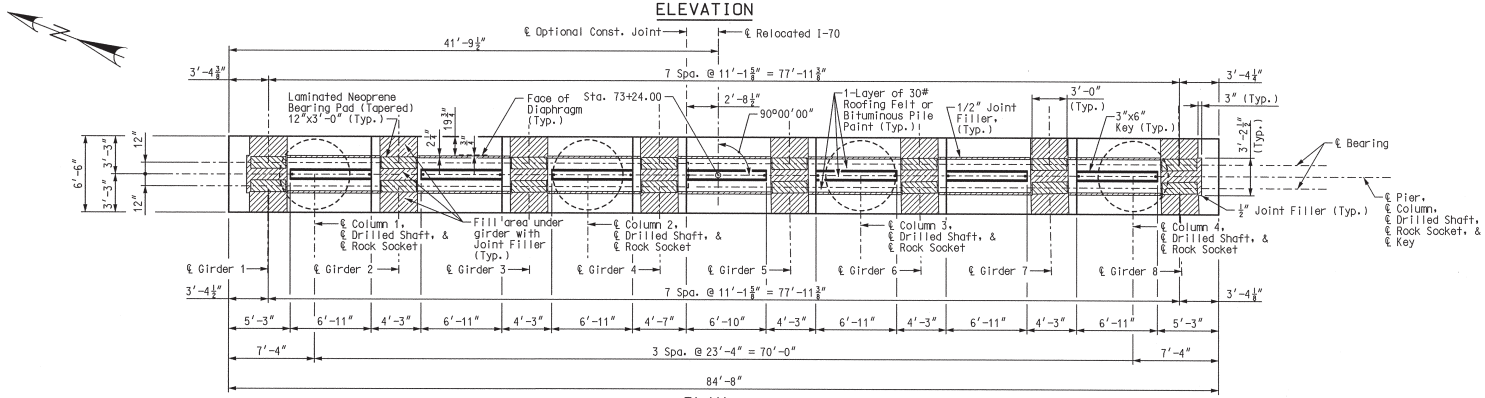

PLAN

Note: This drawing is not to scale. Follow dimensions.

1. 7-#6-U900 @ 8" cts.
2. 6-#6-U901 @ 12" cts.
3. 7-#6-U900 @ 10" cts.
4. 8-#6-U900 @ 6" cts.
5. 7-#6-U900 @ 8" cts.
6. 7-#6-U902 @ 10" cts.
7. 6-#6-U903 @ 12" cts.
8. 7-#6-U902 @ 8" cts.
9. 5-#4-U904 @ 8" cts.
10. 5-#4-U904 @ 10" cts.
11. 9-#4-U904 @ 6" cts.
12. 10-#6-D900 @ 8½" cts., (Typ.)
13. 13-#5-P902 @ 3" cts., (Typ.) ***

Notes:

For steps 2" or more, use 2-1/4" x 1/2" joint filler up vertical face.

An additional 4 feet has been added to #11-V900, #11-V901, and #6-P900 lengths for possible change in drilled shaft or rock socket depth. This excess length shall be cut off or included in the reinforcement lap if not required.

Concrete coring shall be performed on one of the drilled shafts and rock sockets in accordance with Sec 701. Sonic logging testing shall be performed on all drilled shafts and rock sockets.

The Contractor shall use a mechanical bar splice for #11-V-Bars at the specified locations. The total bar lengths for bars indicated in the bill of reinforcing steel are determined based on the end of the bars being located at end of adjacent bar. No additional payment will be made for any additional bar lengths required for the mechanical bar splices. Mechanical bar splices shall be in accordance with Sec 706.

The hooks of V-Bars embedded in the beam cap shall be oriented inward. Bending the hooks outward, away from the column core, is not allowed.

The thickness of steel casing shall meet all the requirements of Sec 701 with the minimum thickness being 3/8 inch. Thicker casing may be required for installation.

For Section A-A, B-B, C-C, D-D, E-E, F-F, G-G, and H-H, see Sheet No. 33.

For Typical Section Thru Laminated Neoprene Bearing Pad, see Sheet No. 33.

For Substructure Quantity Table, see Sheet No. 33.

* Lapping of spiral reinforcement in this region is not permitted.

** Continue spiral bars to the bottom of the beam cap stirrup reinforcing bar.

*** Splice locations shall be staggered.

Anchorage of spiral reinforcement shall be provided by 1-1/2 extra turns of spiral bar at each end of spiral unit.

**** Pay Items Rock Socket (6 ft. 0 in. Dia.).

***** Pay Items Drilled Shaft (6 ft. 6 in. Dia.).

The cost of any required excavation to the top of the drilled shafts will be considered completely covered by the contract unit price for Drilled Shaft (6 ft. 6 in. Dia.).

Laminated Neoprene Bearing Pads shall be oriented along ℄ Girders.

PIER 9 – PLAN AND ELEVATION

Detailed JUL 2009
Checked JUL 2009

Sheet No. 32 of 125

\\slsw00\Jobs\46440\Techprod\Bridges\MO-Approach\Drawings\Baseline Drawings\B_A6500_032-125_J610984B_032.dgn

18-AUG-2009 10:22

LAWRENCE G. ROLWES NUMBER PE-2009000847 PROFESSIONAL ENGINEER STATE OF MISSOURI
8/20/09

MISSOURI HIGHWAYS AND TRANSPORTATION COMMISSION
105 WEST CAPITOL
JEFFERSON CITY, MO 65102
1-888-ASK-MODOT (1-888-275-6636)

HNTB
715 KIRK DRIVE
KANSAS CITY, MO 64105-1310
TELEPHONE (816) 472-1201
CERTIFICATE OF AUTHORITY NO. 001270

DATE	DESCRIPTION

DATE 8/20/09
ROUTE I-70 | STATE MO
DISTRICT 6 | SHEET NO. BR32
COUNTY St. Louis City - MO
JOB NO. J610984B
CONTRACT ID.
PROJECT NO.
BRIDGE NO. A6500

REV.

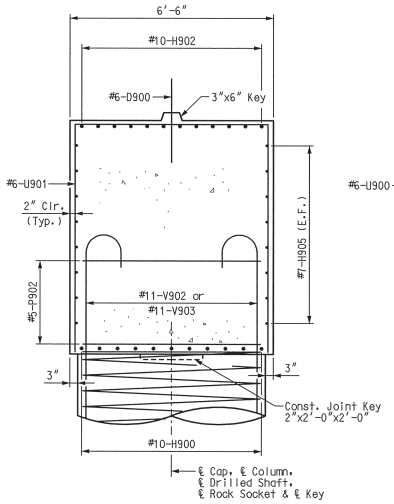

SECTION A-A

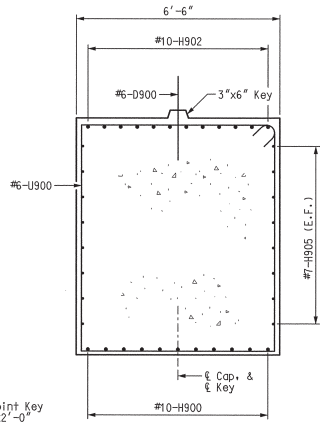

SECTION B-B

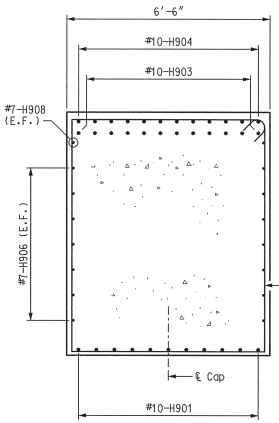

SECTION C-C

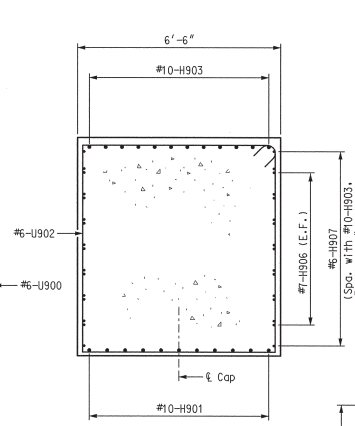

SECTION D-D

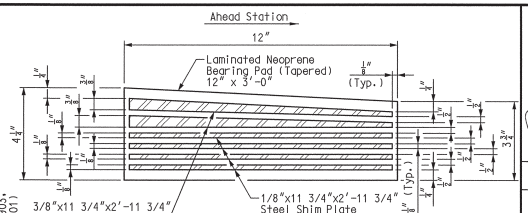

TYPICAL SECTION THRU
LAMINATED NEOPRENE BEARING PAD
PIER 9 (BACK BRG.)

(Girders 1, 2, 7 & 8)
(4 Required on Pier 9)

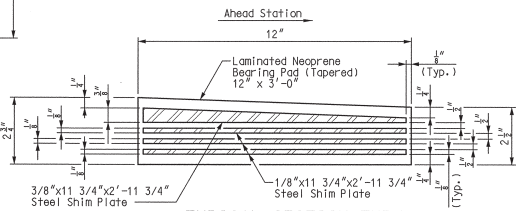

TYPICAL SECTION THRU
LAMINATED NEOPRENE BEARING PAD
PIER 9 (BACK BRG.)

(Girders 3, 4, 5 & 6)
(4 Required on Pier 9)

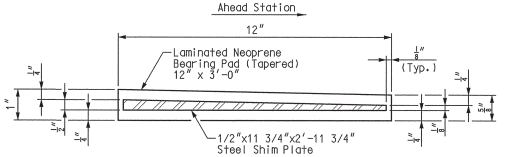

TYPICAL SECTION THRU
LAMINATED NEOPRENE BEARING PAD
PIER 9 (AHEAD BRG.)

(8 Required on Pier 9)

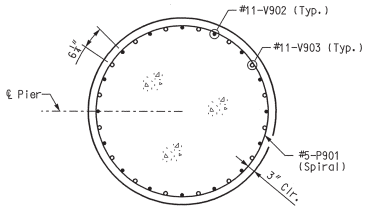

SECTION E-E
(6'-0" Diameter)

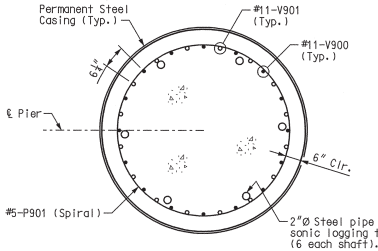

SECTION F-F
(6'-6" Diameter)

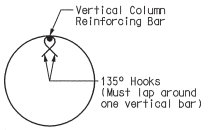

DETAIL OF SEISMIC
STIRRUP BAR (#5-P902)

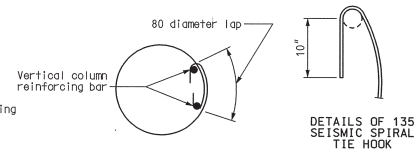

ANCHOR SPLICES IN SPIRAL AROUND VERTICAL BAR
(USE FOR INTERMEDIATE SPLICES OF SPIRALS)

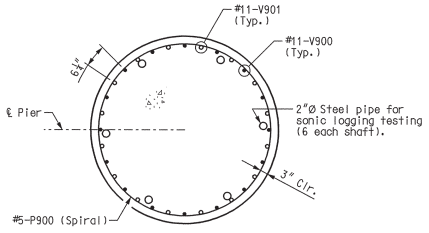

SECTION G-G
(6'-0" Diameter)

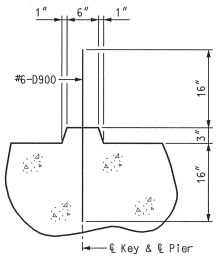

TYPICAL SECTION
THRU KEY

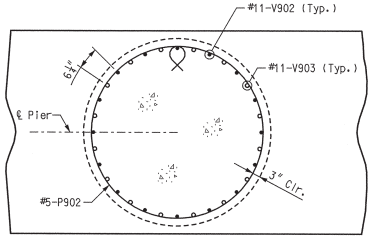

SECTION H-H

Notes:
The required shim plate shall be placed between layers of elastomer and molded together to form an integral unit.
Shop drawings are not required for laminated neoprene bearings on structures without sole plates.

Note:
For location of Sections A-A, B-B, C-C, D-D, E-E, F-F, G-G, and H-H, see Sheet No. 32.

✻✻ SUBSTRUCTURE QUANTITY TABLE FOR PIER 9

Item		Quantity
Drilled Shafts (6 ft. 6 in. Dia.)	linear foot	88.0
Rock Sockets (6 ft. 0 in. Dia.)	linear foot	48.0
Supplementary Television Camera Inspection	each	4
Foundation Inspection Holes	linear foot	88.0
Concrete Coring	linear foot	35.0
Sonic Logging Testing	each	4
Class B Concrete (Substructure)	cu. yard	353.9
Reinforcing Steel (Bridges)	pound	101,790
Mechanical Bar Splice	each	128

✻✻ These quantities are included in the estimated quantities table on Sheet No. 5.

PIER 9 - DETAILS

Detailed JUL 2009
Checked JUL 2009

Note: This drawing is not to scale. Follow dimensions.

Sheet No. 33 of 125

LAWRENCE C. SCHLUETER
ROLLA, MO
NUMBER E-2006002847
PROFESSIONAL ENGINEER
STATE OF MISSOURI

9/1/09

DATE
8/20/09

ROUTE	STATE
I-70	MO
DISTRICT	SHEET NO.
6	BR33

COUNTY
St. Louis City - MO

JOB NO.
J6I0984B

CONTRACT ID.

PROJECT NO.

BRIDGE NO.
A6500

DESCRIPTION | DATE

MISSOURI HIGHWAYS AND TRANSPORTATION COMMISSION
105 WEST CAPITOL
JEFFERSON CITY, MO 65102
1-888-ASK-MODOT (1-888-275-6636)

HNTB
715 KIRK DRIVE
KANSAS CITY, MO 64105-1310
(816) 472-1201
CERTIFICATE OF AUTHORITY NO. 001270

REV.

\\slsw00\Jobs\46440\Techprod\Bridges\MO-Approach\Drawings\Baseline Drawings\B_A6500_033-125_J6I0984B_033.dgn

01-SEP-2009 10:48

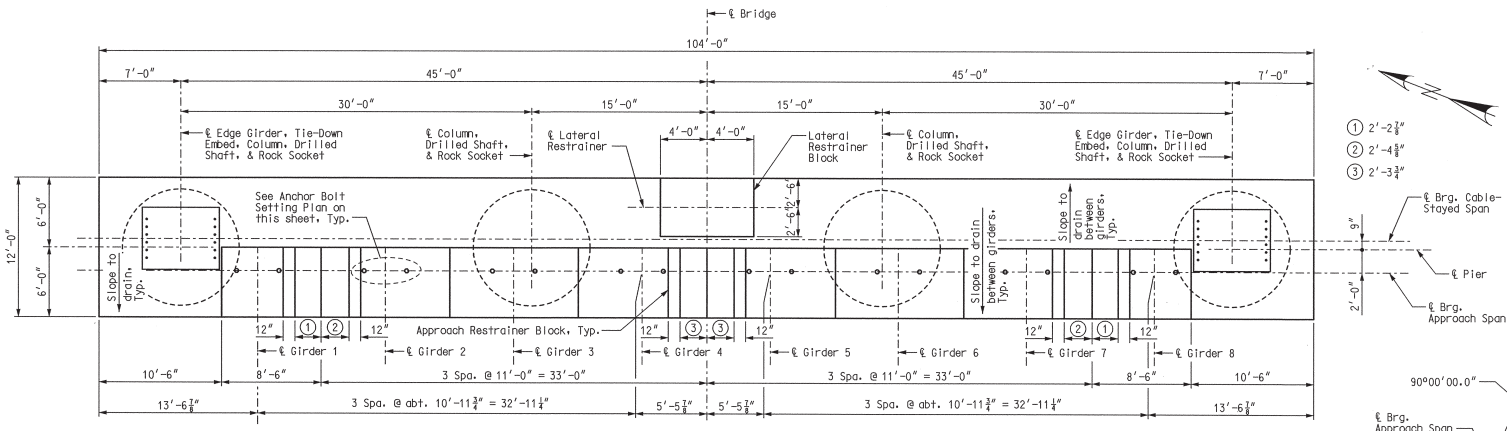

PLAN

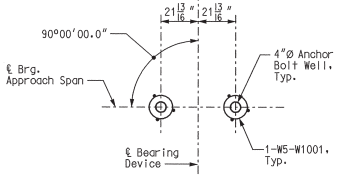

ANCHOR BOLT WELL SETTING PLAN

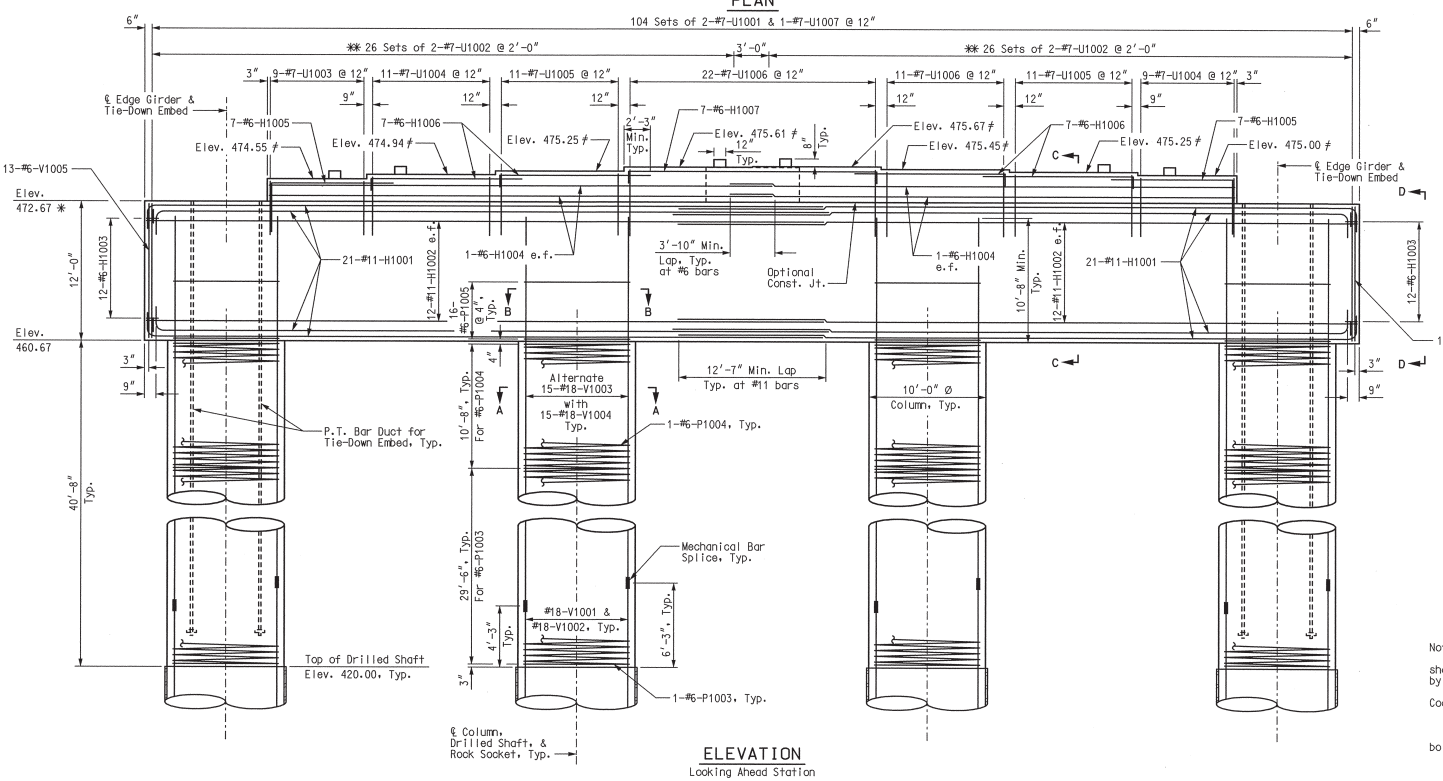

ELEVATION
Looking Ahead Station

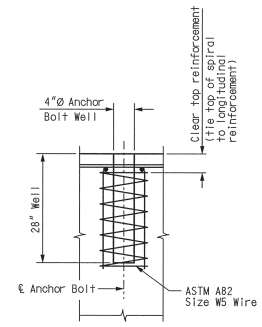

ANCHOR BOLT WELL DETAIL

Notes:
All reinforcing bars in the top of the capbeam shall be spaced to clear anchor bolt wells for bearings by at least 1/2″.
Seal top and all faces of capbeam with Protective Coating in accordance with Sec. 711.3.2.
✻ Elevation taken at ℄ Pier.
✻✻ Elevation taken at ℄ Brg. Approach Span.
✻✻ Space to clear Column Reinforcing and anchor bolt wells.

PIER 10 (FOR INFORMATION ONLY)

Detailed JUL 2009
Checked JUL 2009

Note: This drawing is not to scale. Follow dimensions.

\\slsw00\Jobs\46440\Techprod\Bridges\MO-Approach\Drawings\Baseline Drawings\B_A6500_034-125_J6I0984B_034.dgn 18-AUG-2009 10:23

LAWRENCE C. ROLWES, PE NUMBER PE-2009000841 STATE OF MISSOURI PROFESSIONAL ENGINEER

8/20/09

DATE 8/20/09
ROUTE I-70 | STATE MO
DISTRICT 6 | SHEET NO. BR34
COUNTY St. Louis City - MO
JOB NO. J6I0984B
CONTRACT ID.
PROJECT NO.
BRIDGE NO. A6500

DESCRIPTION | DATE

MISSOURI HIGHWAYS AND TRANSPORTATION COMMISSION
105 WEST CAPITOL
JEFFERSON CITY, MO 65102
1-888-ASK-MODOT (1-888-275-6636)

HNTB
715 KIRK DRIVE
KANSAS CITY, MO 64105-1310
TELEPHONE (816) 472-1201
CERTIFICATE OF AUTHORITY NO. 001270

REV.

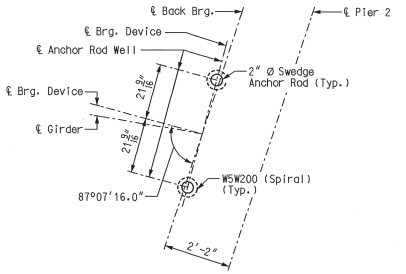

ANCHOR ROD SETTING PLAN
PIER 2 SPAN (1-2) (GIRDERS 1 THRU 5)

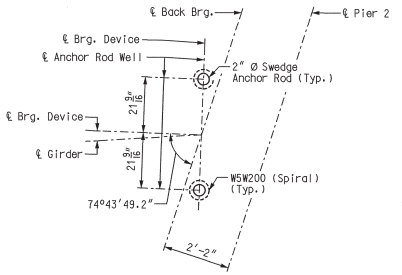

ANCHOR ROD SETTING PLAN
PIER 2 SPAN (1-2) (GIRDERS 6 THRU 11)

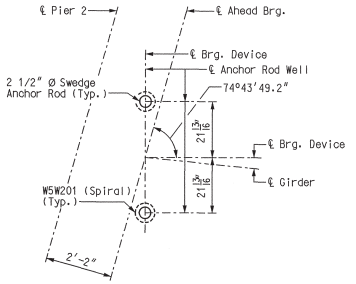

ANCHOR ROD SETTING PLAN
PIER 2 SPAN (2-3)

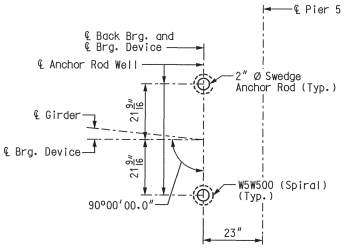

ANCHOR ROD SETTING PLAN
PIER 5 SPAN (4-5)

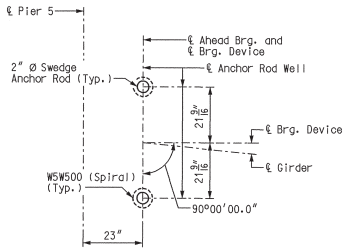

ANCHOR ROD SETTING PLAN
PIER 5 SPAN (5-6)

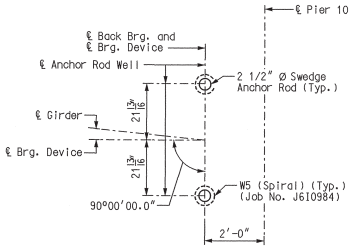

ANCHOR ROD SETTING PLAN
PIER 10 SPAN (9-10)
(For information only)

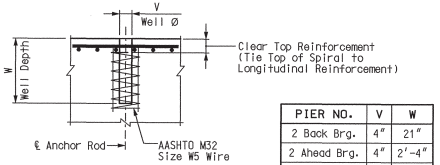

ANCHOR ROD WELL DETAIL

PIER NO.	V	W
2 Back Brg.	4"	21"
2 Ahead Brg.	4"	2'-4"
5 Back Brg.	4"	21"
5 Ahead Brg.	4"	21"

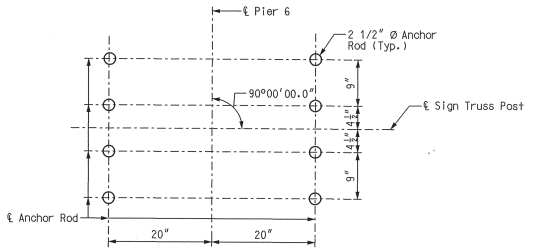

ANCHOR ROD SETTING PLAN
PIER 6 (SIGN TRUSS PEDESTALS)

Note:
For details of sign truss anchorage and anchor rod length, see Missouri Standard Plans Drawing 903.60 (Post Type V).

ANCHOR ROD SETTING PLANS

Detailed JUL 2009
Checked JUL 2009

Note: This drawing is not to scale. Follow dimensions.

Sheet No. 35 of 125

\\slsw00\Jobs\46440\Techprod\Bridges\MO-Approach\Drawings\Baseline Drawings\B_A6500_035-125_J6I0984B_035.dgn

18-AUG-2009 10:23

STATE OF MISSOURI
LAWRENCE D. ROLWES, JR.
NUMBER PE-2006002847
PROFESSIONAL ENGINEER

8/20/09

DATE
8/20/09

ROUTE	STATE
I-70	MO
DISTRICT	SHEET NO.
6	BR35

COUNTY
St. Louis City - MO

JOB NO.
J6I0984B

CONTRACT ID.

PROJECT NO.

BRIDGE NO.
A6500

DESCRIPTION | DATE

MISSOURI HIGHWAYS AND TRANSPORTATION COMMISSION
105 WEST CAPITOL
JEFFERSON CITY, MO 65102
1-888-ASK-MODOT (1-888-275-6636)

HNTB
715 KIRK DRIVE
KANSAS CITY, MO 64105-1310
TELEPHONE (816) 472-1201
CERTIFICATE OF AUTHORITY NO. 001270

REV.

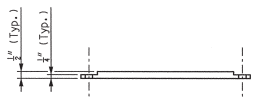

ELEVATION OF GALVANIZED STEEL STOPPER PLATE

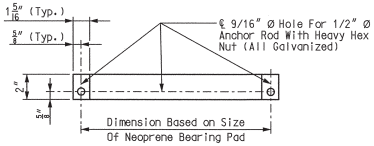

PLAN OF GALVANIZED STEEL STOPPER PLATE

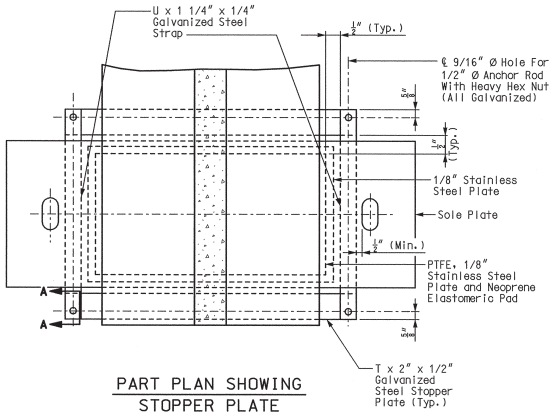

PART PLAN SHOWING STOPPER PLATE

Notes:
Stopper plates and straps shall be provided to prevent loss of support due to creeping of PTFE bearings. Payment for fabricating and installing the stopper plates and straps will be considered completely covered by the contract unit price for Type N PTFE Bearing.
The bottom face of the 1/8" stainless steel plate that is welded to the sole plate shall be lubricated with a lubricant that is approved by the bearing manufacturer.

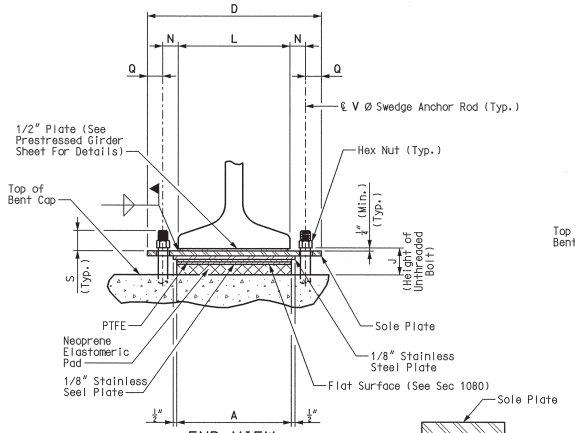

END VIEW

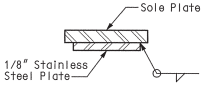

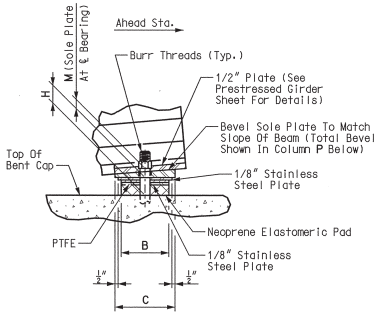

SIDE VIEW

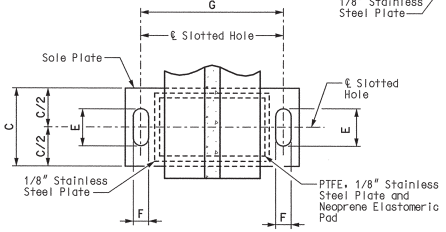

PART PLAN

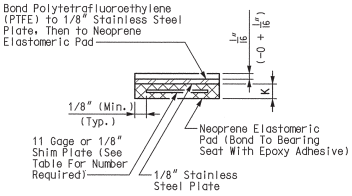

NEOPRENE ELASTOMERIC PAD

PTFE SLIDING BEARINGS

PIER NO.	A	B	C	D	E	F	G	H	J	K	L	M	N	P	Q	R	S	T	U	V	W	NUMBER OF SHIM PLATES(*)	NUMBER REQUIRED
2 Back	2'-2"	12"	2'-5"	4'-1 1/8"	17 1/2"	2 1/4"	3'-7 1/8"	3 7/16"	5 1/4"	3 1/8"	3'-2 3/8"	1 1/2"	2 3/8"	1/2"	3"	1/16"	2 1/2"	2'-5 1/2"	17"	2"	18"	5	11
2 Ahead	2'-3"	11"	2'-4 1/2"	4'-3 1/8"	18 1/2"	2 3/4"	3'-7 5/8"	4 11/16"	6 1/2"	4 3/8"	3'-2 3/8"	1 1/2"	2 3/8"	1/4"	3 3/4"	1/8"	3"	2'-6 1/2"	16"	2 1/2"	2'-1"	7	12
5 Back	21"	11"	2'-5 1/2"	4'-1 1/8"	19"	2 1/4"	3'-7 1/8"	2 5/16"	4 1/16"	1 7/8"	3'-2 3/8"	1 9/16"	2 3/8"	-3/8"	3"	1/8"	2 1/2"	2'-0 1/2"	16"	2"	18"	3	12
5 Ahead	2'-3"	11"	2'-6 1/2"	4'-1 1/8"	20 1/4"	2 1/4"	3'-7 1/8"	2 5/16"	4 1/16"	2 1/2"	3'-2 3/8"	1 9/16"	2 3/8"	-1/2"	3"	3/16"	2 1/2"	2'-6 1/2"	16"	2"	18"	4	8
10 Back	2'-1"	12"	2'-7 1/2"	4'-3 1/8"	20 1/2"	2 3/4"	3'-7 5/8"	3 1/16"	5 5/16"	3 1/8"	3'-2 3/8"	1 3/16"	2 3/8"	-1/8"	3 3/4"	1/4"	3"	2'-4 1/2"	17"	2 1/2"	2'-1"	5	8
																						TOTAL BEARINGS	51

(*) The required shim plate shall be placed between layers of elastomer and molded together to form an integral unit.

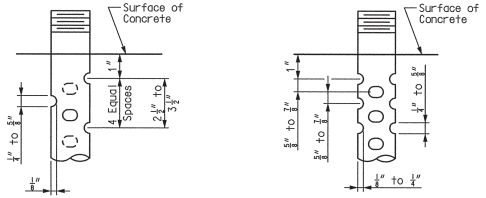

DETAIL FOR 3/4"Ø THRU 2 1/2"Ø ANCHOR RODS

OPTIONAL DETAIL FOR 1 1/8"Ø THRU 2 1/2"Ø ANCHOR RODS

SWEDGE ANCHOR ROD DETAILS

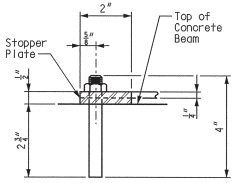

SECTION A-A

Notes:
Anchor rods shall be V Ø ASTM F1554 Grade 55 swedged rods and shall extend W into the concrete with AASHTO M291 (ASTM A563) Grade A Hex or Heavy Hex nuts. Actual manufacturer's certified mill test reports (chemical and mechanical) shall be provided. Swedging shall be 1" less than extension into the concrete.
Anchor rod shall be at the ℄ of slotted hole at 60°F. Bearing position shall be adjusted R for each 10° fall or rise in temperature at installation.
All structural steel for the anchor rods and heavy hexagon nuts shall be coated with a minimum of two coats of inorganic zinc primer (5 mils minimum).
Neoprene Elastomeric Pads shall be 70 Durometer.
Structural steel for sole plate shall be ASTM A709 Grade 36 and shall be coated with a minimum of two coats of inorganic zinc primer (5 mils minimum). The stainless steel plate shall be protected from any coating.
Type N PTFE Bearings shall be in accordance with Sec 716.

DETAILS OF TYPE "N" PTFE BEARINGS

Detailed JUL 2009
Checked JUL 2009

Note: This drawing is not to scale. Follow dimensions.

Sheet No. 36 of 125

\\slsw00\Jobs\46440\Techprod\Bridges\MO-Approach\Drawings\Baseline Drawings\B_A6500_036-125_J6I0984B_036.dgn

18-AUG-2009 10:23

LAWRENCE R. HOLMES, JR. NUMBER PE-2009006002947 STATE OF MISSOURI PROFESSIONAL ENGINEER

8/20/09

DATE	
8/20/09	
ROUTE	STATE
I-70	MO
DISTRICT	SHEET NO.
6	BR36
COUNTY	
St. Louis City - MO	
JOB NO.	
J6I0984B	
CONTRACT ID.	
PROJECT NO.	
BRIDGE NO.	
A6500	

DESCRIPTION	DATE

MISSOURI HIGHWAYS AND TRANSPORTATION COMMISSION

105 WEST CAPITOL
JEFFERSON CITY, MO 65102
1-888-ASK-MODOT (1-888-275-6636)

HNTB
716 KIRK DRIVE
KANSAS CITY, MO 64105-1310
TELEPHONE (816) 472-1201
CERTIFICATE OF AUTHORITY NO. 001270

REV.

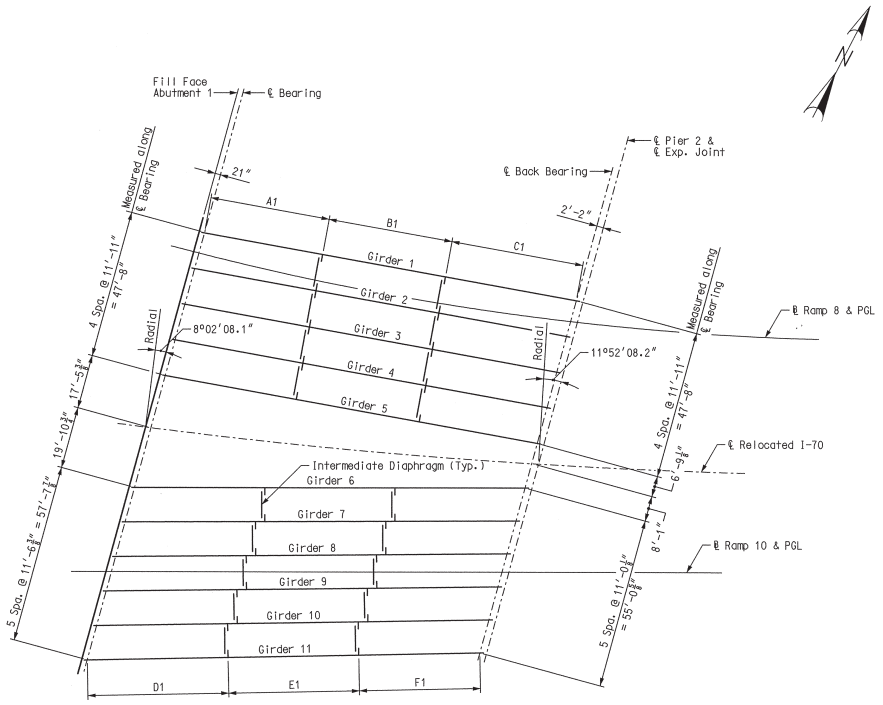

SPAN (1-2)

FRAMING PLAN

INTERMEDIATE DIAPHRAGM LAYOUT DIMENSIONS – UNIT 1						
Location	A1	B1	C1	D1	E1	F1
Girder 1	38′-4 7/8″	40′-5 3/4″	42′-6 1/2″	–	–	–
Girder 2	39′-5 1/4″	40′-5 3/4″	41′-6 1/8″	39′-5 1/4″	40′-5 3/4″	41′-6 1/8″
Girder 3	40′-5 3/4″	40′-5 3/4″	40′-5 5/8″	40′-5 3/4″	40′-5 3/4″	40′-5 5/8″
Girder 4	41′-6 1/8″	40′-5 3/4″	39′-5 1/4″	41′-6 1/8″	40′-5 3/4″	39′-5 1/4″
Girder 5	–	–	–	42′-6 1/2″	40′-5 3/4″	38′-4 7/8″
Girder 6	40′-3 3/8″	41′-9 7/8″	43′-3 3/8″	–	–	–
Girder 7	40′-3 5/8″	41′-10 3/8″	43′-4 1/4″	43′-4″	41′-9 7/8″	40′-4 3/8″
Girder 8	40′-3 7/8″	41′-10 3/8″	43′-5 1/8″	43′-4 7/8″	41′-10 3/8″	40′-4 3/8″
Girder 9	40′-4 1/8″	41′-11 1/2″	43′-5 7/8″	43′-5 5/8″	41′-10 3/8″	40′-5″
Girder 10	40′-4 1/2″	42′-0″	43′-6 5/8″	43′-6 3/8″	41′-11 1/2″	40′-5 1/4″
Girder 11	–	–	–	43′-7 1/4″	42′-0″	40′-5 5/8″

Note:
Dimensions "A", "B", "C", "D", "E", and "F" measured along ℄ Girder.

FRAMING PLAN – UNIT 1

Detailed JUL 2009
Checked JUL 2009

Note: This drawing is not to scale. Follow dimensions.

Sheet No. 37 of 125

\\slsw00\Jobs\46440\Techprod\Bridges\MO-Approach\Drawings\Baseline Drawings\B_A6500_037-125_J6I0984B_037.dgn

18-AUG-2009 10:23

LAWRENCE O. ROLWES, JR. NUMBER PE-2006002847 STATE OF MISSOURI PROFESSIONAL ENGINEER

8/20/09

DATE
8/20/09

ROUTE I-70 | STATE MO
DISTRICT 6 | SHEET NO. BR37
COUNTY St. Louis City - MO
JOB NO. J6I0984B
CONTRACT ID.
PROJECT NO.
BRIDGE NO. A6500

DESCRIPTION | DATE

MISSOURI HIGHWAYS AND TRANSPORTATION COMMISSION
105 WEST CAPITOL
JEFFERSON CITY, MO 65102
1-888-ASK-MODOT (1-888-275-6636)

HNTB
715 KIRK DRIVE
KANSAS CITY, MO 64105-1310
TELEPHONE (816) 472-1201
CERTIFICATE OF AUTHORITY NO. 001270

REV.

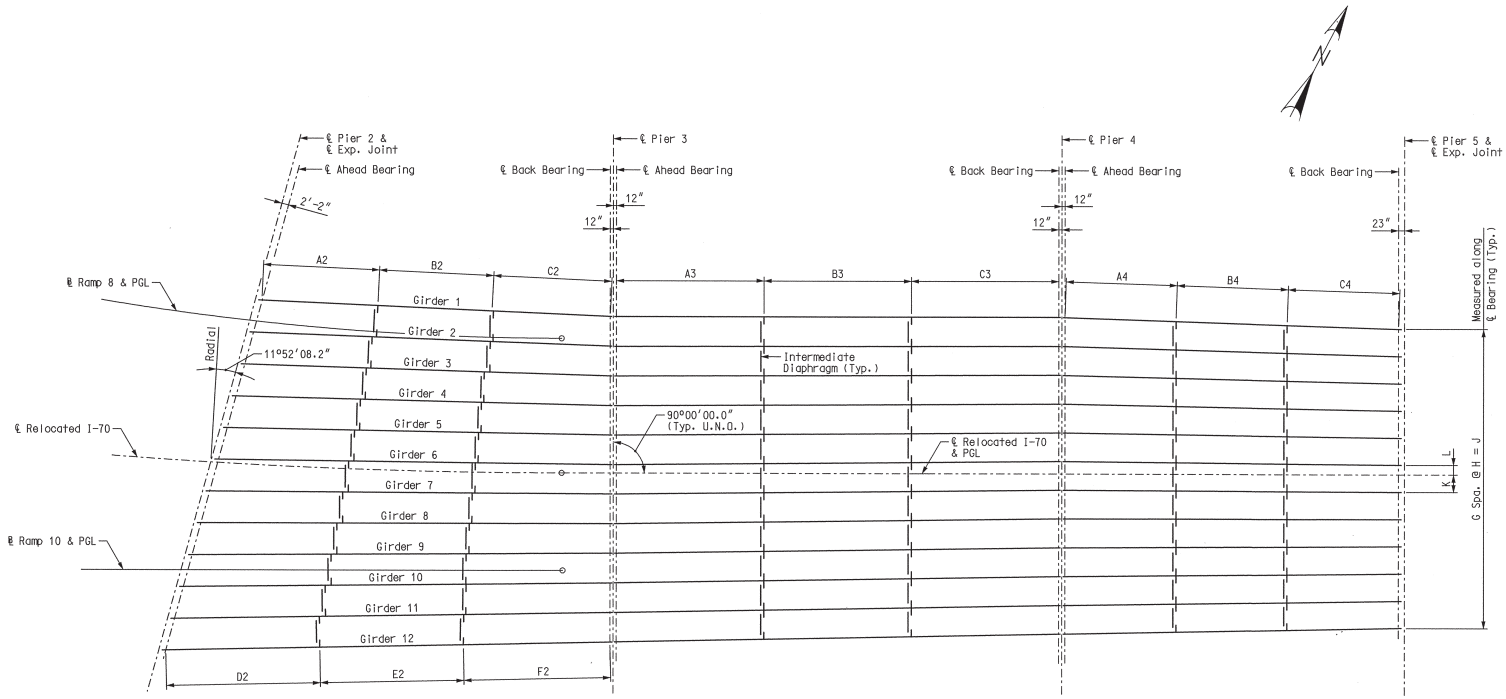

SPAN (2-3) SPAN (3-4) SPAN (4-5)

FRAMING PLAN

INTERMEDIATE DIAPHRAGM LAYOUT DIMENSIONS – UNIT 2

Location	A2	B2	C2	D2	E2	F2	A3	B3	C3	A4	B4	C4
Girder 1	36′-5 1/2″	37′-7 7/8″	37′-5 5/8″	-	-	-	47′-4″	47′-4″	47′-4″	35′-8 5/8″	35′-8 5/8″	35′-8 1/2″
Girder 2	37′-4 1/8″	38′-6 7/8″	38′-5 1/8″	38′-9 1/2″	37′-7 7/8″	37′-10 3/4″	47′-4″	47′-4″	47′-4″	35′-8 1/2″	35′-8 1/2″	35′-8 5/8″
Girder 3	38′-2 7/8″	39′-6″	39′-4 1/2″	39′-9 1/8″	38′-6 7/8″	38′-9 3/8″	47′-4″	47′-4″	47′-4″	35′-8 1/2″	35′-8 1/2″	35′-8 3/8″
Girder 4	39′-1 1/2″	40′-5 1/8″	40′-4 1/8″	40′-8 5/8″	39′-6″	39′-8 1/8″	47′-4″	47′-4″	47′-4″	35′-8 3/8″	35′-8 3/8″	35′-8 1/2″
Girder 5	40′-0 1/8″	41′-4 1/4″	41′-3 3/8″	41′-8″	40′-5 1/8″	40′-6 7/8″	47′-4″	47′-4″	47′-4″	35′-8 3/8″	35′-8 3/8″	35′-8 1/2″
Girder 6	40′-11″	42′-3 3/8″	42′-3 1/8″	42′-7 5/8″	41′-4 1/4″	41′-5 5/8″	47′-4″	47′-4″	47′-4 1/8″	35′-8 3/8″	35′-8 3/8″	35′-8 1/2″
Girder 7	41′-9 3/4″	43′-2 5/8″	43′-2 5/8″	43′-7 1/8″	42′-3 3/8″	42′-4 1/2″	47′-4″	47′-4″	47′-4 1/8″	35′-8 3/8″	35′-8 3/8″	35′-8 3/8″
Girder 8	42′-8 3/4″	44′-1 7/8″	44′-2″	44′-6 3/4″	43′-2 5/8″	43′-3 1/4″	47′-4″	47′-4″	47′-4 1/8″	35′-8 3/8″	35′-8 3/8″	35′-8 3/8″
Girder 9	43′-7 5/8″	45′-1″	45′-1 5/8″	45′-6 1/4″	44′-1 7/8″	44′-2 1/8″	47′-4 1/8″	47′-4″	47′-4 1/8″	35′-8 3/8″	35′-8 3/8″	35′-8 3/8″
Girder 10	44′-6 1/2″	46′-0 1/4″	46′-1 1/4″	46′-6″	45′-1″	45′-1″	47′-4 1/8″	47′-4″	47′-4 1/8″	35′-8 3/8″	35′-8 3/8″	35′-8 3/8″
Girder 11	47′-5 1/2″	46′-0 1/4″	45′-11 7/8″	47′-5 1/2″	46′-0 1/4″	45′-11 7/8″	47′-4 1/8″	47′-4″	47′-4 1/8″	35′-8 3/8″	35′-8 3/8″	35′-8 1/2″
Girder 12	-	-	-	48′-5″	46′-11 1/2″	46′-10 7/8″	47′-4 1/8″	47′-4 1/8″	47′-4 1/8″	35′-8 1/2″	35′-8 1/2″	35′-8 3/8″

GIRDER LAYOUT DIMENSIONS – UNIT 2

Location	G	H	J	K	L
Pier 2 ℄ Ahead Brg.	11	10′-7 5/8″	116′-11 7/8″	9′-7 1/8″	12 1/2″
Pier 3 ℄ Back Brg.	11	9′-6 1/2″	104′-11 1/2″	6′-9 1/2″	2′-9″
Pier 3 ℄ Ahead Brg.	11	9′-6 3/8″	104′-10 1/8″	6′-9 3/8″	2′-9″
Pier 4 ℄ Back Brg.	11	9′-3 3/8″	102′-1 1/8″	5′-3″	4′-0 3/8″
Pier 4 ℄ Ahead Brg.	11	9′-3 1/4″	101′-11 3/4″	5′-2 3/4″	4′-0 1/8″
Pier 5 ℄ Back Brg.	11	8′-9 1/8″	96′-4 3/8″	5′-7 1/8″	3′-1 1/4″

Note: Dimensions "A", "B", "C", "D", "E", and "F" measured along ℄ Girder.

FRAMING PLAN – UNIT 2

Detailed JUL 2009
Checked JUL 2009

Note: This drawing is not to scale. Follow dimensions.

\\slsw00\Jobs\46440\Techprod\Bridges\MO-Approach\Drawings\Baseline Drawings\B_A6500_038-125_J6I0984B_038.dgn

18-AUG-2009 10:23

LAWRENCE ROLWES NUMBER PE-2009020941 STATE OF MISSOURI PROFESSIONAL ENGINEER

8/20/09

DATE 8/20/09

ROUTE	STATE
I-70	MO
DISTRICT	SHEET NO.
6	BR38

COUNTY: St. Louis City - MO
JOB NO.: J6I0984B
CONTRACT ID.:
PROJECT NO.:
BRIDGE NO.: A6500

REV.	DESCRIPTION	DATE

MISSOURI HIGHWAYS AND TRANSPORTATION COMMISSION
105 WEST CAPITOL
JEFFERSON CITY, MO 65102
1-888-ASK-MODOT (1-888-275-6636)

HNTB
715 KIRK DRIVE
(KANSAS CITY, MO 64105-1310
TELEPHONE (816) 472-1201
CERTIFICATE OF AUTHORITY NO. 001270

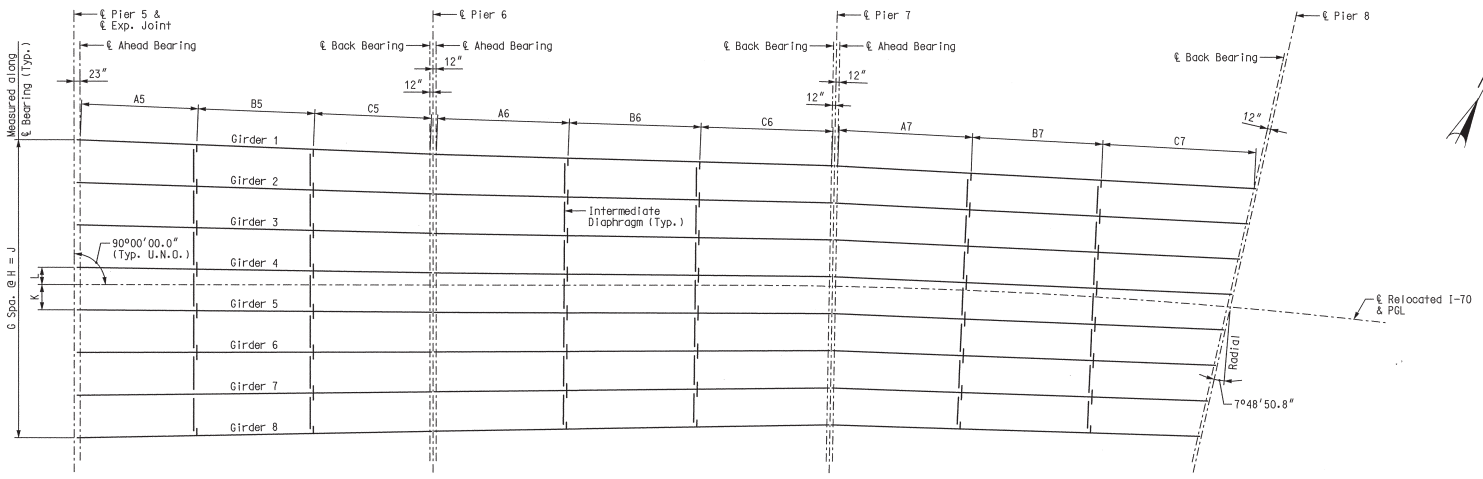

FRAMING PLAN

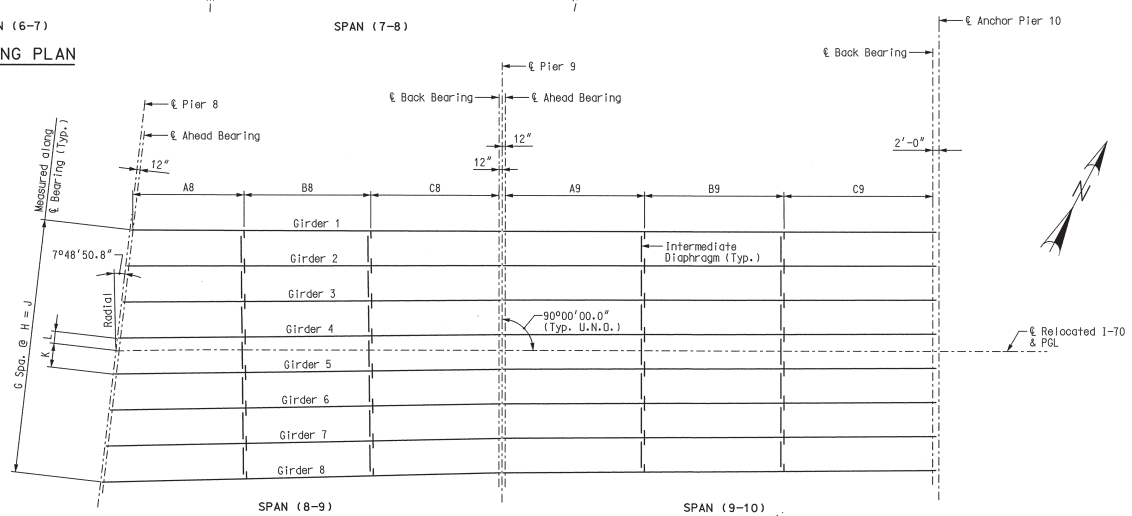

FRAMING PLAN

GIRDER LAYOUT DIMENSIONS – UNIT 3					
Location	G	H	J	K	L
Pier 5 ℄ Ahead Brg.	7	13′-8 3/4″	96′-1 1/4″	8′-2″	5′-6 3/4″
Pier 6 ℄ Back Brg.	7	12′-9 1/4″	89′-4 3/4″	8′-9 3/4″	3′-11 1/2″
Pier 6 ℄ Ahead Brg.	7	12′-9″	89′-3″	8′-9 3/4″	3′-11 1/4″
Pier 7 ℄ Back Brg.	7	11′-11 1/4″	83′-6 3/4″	8′-9 3/8″	3′-1 3/8″
Pier 7 ℄ Ahead Brg.	7	11′-11 1/8″	83′-5 3/4″	8′-10″	3′-1 1/8″
Pier 8 ℄ Back Brg.	7	11′-8 3/8″	81′-10 5/8″	7′-6 3/8″	4′-1 1/4″
Pier 8 ℄ Ahead Brg.	7	11′-8 1/4″	81′-9 3/4″	7′-6 1/4″	4′-2 1/4″
Pier 9 ℄ Back Brg.	7	11′-1 3/8″	77′-11 3/8″	6′-1 1/2″	5′-0 1/8″
Pier 9 ℄ Ahead Brg.	7	11′-1 5/8″	77′-11 3/8″	6′-1 3/8″	5′-0 1/4″
Pier 10 ℄ Back Brg.	7	10′-11 1/4″	76′-10 1/4″	5′-5 3/8″	5′-5 7/8″

INTERMEDIATE DIAPHRAGM LAYOUT DIMENSIONS – UNIT 3															
Location	A5	B5	C5	A6	B6	C6	A7	B7	C7	A8	B8	C8	A9	B9	C9
Girder 1	37′-4 3/8″	37′-4 1/4″	37′-4 3/8″	42′-3″	42′-3″	42′-2 3/4″	42′-11 3/4″	41′-10 1/2″	49′-1 1/2″	35′-8″	40′-9″	41′-2 1/4″	45′-9 1/4″	45′-9 1/4″	45′-9 1/4″
Girder 2	37′-4 3/8″	37′-4 1/4″	37′-4 1/2″	42′-2 1/8″	42′-2 1/8″	42′-2″	42′-8″	41′-10 1/2″	47′-0 3/8″	37′-1 1/2″	40′-9″	41′-0 3/8″	45′-9 1/4″	45′-9 1/4″	45′-9 3/8″
Girder 3	37′-4 1/2″	37′-4 1/2″	37′-4 1/2″	42′-1 1/4″	42′-1 1/4″	42′-1 1/4″	42′-4 1/4″	41′-10 1/2″	44′-11 3/4″	38′-7″	40′-9″	40′-11″	45′-9 1/4″	45′-9 1/4″	45′-9 1/4″
Girder 4	37′-4 3/8″	37′-4 3/8″	37′-4 1/2″	42′-0 1/2″	42′-0 1/2″	42′-0 1/4″	42′-0 1/2″	41′-10 1/2″	42′-11″	40′-0 1/4″	40′-9″	40′-9 3/8″	45′-9 1/4″	45′-9 1/4″	45′-9 1/4″
Girder 5	37′-4 3/8″	37′-4 3/8″	37′-4 1/2″	41′-11 5/8″	41′-11 5/8″	41′-11 5/8″	41′-8 3/4″	41′-10 1/2″	40′-10″	41′-5 3/4″	40′-9″	40′-8 1/8″	45′-9 1/4″	45′-9 1/4″	45′-9 1/8″
Girder 6	37′-4 3/8″	37′-4 1/2″	37′-4 1/2″	41′-10 3/4″	41′-10 3/4″	41′-10 3/4″	41′-5 1/8″	41′-10 1/2″	38′-9 1/4″	42′-11 1/8″	40′-9″	40′-6 3/4″	45′-9 1/4″	45′-9 1/4″	45′-9 1/4″
Girder 7	37′-4 3/8″	37′-4 1/2″	37′-4 1/2″	41′-10″	41′-10″	41′-10 1/8″	41′-1 1/2″	41′-10 1/2″	36′-8 3/4″	44′-4 1/2″	40′-9″	40′-5 1/4″	45′-9 1/4″	45′-9 1/4″	45′-9 1/4″
Girder 8	37′-4 1/2″	37′-4 1/2″	37′-4 1/2″	41′-9 1/4″	41′-9 1/4″	41′-9 1/4″	40′-9 3/4″	41′-10 1/2″	34′-7 1/2″	45′-10 1/4″	40′-9″	40′-3 1/8″	45′-9 1/4″	45′-9 1/4″	45′-9 1/8″

Notes:
Dimensions "A", "B" and "C" measured along ℄ Girder.
Dimensions "G", "H", "J", "K" and "L" measured along ℄ Bearing.

FRAMING PLAN – UNIT 3

Detailed JUL 2009
Checked JUL 2009

Note: This drawing is not to scale. Follow dimensions.

Sheet No. 39 of 125

\\slsw00\Jobs\46440\Techprod\Bridges\MO-Approach\Drawings\Baseline Drawings\B_A6500_039-125_J6I0984B_039.dgn

18-AUG-2009 10:23

LAWRENCE D. ROLWES – NUMBER PE-2005000841 – STATE OF MISSOURI – PROFESSIONAL ENGINEER
8/20/09

DATE: 8/20/09
ROUTE: I-70 | STATE: MO
DISTRICT: 6 | SHEET NO.: BR39
COUNTY: St. Louis City - MO
JOB NO.: J6I0984B
CONTRACT ID.:
PROJECT NO.:
BRIDGE NO.: A6500

DESCRIPTION | DATE | REV.

MISSOURI HIGHWAYS AND TRANSPORTATION COMMISSION
105 WEST CAPITOL
JEFFERSON CITY, MO 65102
1-888-ASK-MODOT (1-888-275-6636)

HNTB
715 KIRK DRIVE
KANSAS CITY, MO 64105-4310
TELEPHONE (816) 472-1201
CERTIFICATE OF AUTHORITY NO. 001270

Notes:
Concrete for prestressed girders shall be Class A-1 with f'c = 8000 psi and f'ci = 6500 psi.
(+) indicates prestressing strand.
Use 46 strands with an initial prestress force of 2021 kips.
Prestressing tendons shall be uncoated, seven-wire, low-relaxation strands, 0.6 inch diameter in accordance with AASHTO M 203, Grade 270. Pretensioned members shall be in accordance with Sec 1029.
For top flange cross-slope and step details and dimensions, see Sheet No. 58.

Girders shall be lifted by devices designed by the fabricator.
** At the contractor's option the location for bent-up strands may be varied from that shown. The total number of bent-up strands shall not be changed. One strand tie bar is required for each layer of bent-up strands except at abutments which require one bar on the bottom layer of strands only. No additional payment will be made if additional strand tie bars are required.
*** Girder top flange shall be steel troweled to a smooth finish for 8" at the edges, as shown. Bond breaker shall be applied to this region only. The center portion shall be rough finished by scarifying the surface transversely with a wire brush, and no laitance shall remain on the surface.
**** Prestressing strands at Pier 2 shall be trimmed to within 1/8 inch of concrete if exposed or 1 inch of concrete if encased. Exposed ends of girders shall be given 2 coats of an asphalt paint. Ends of girders which will be encased in concrete diaphragms shall not be painted.

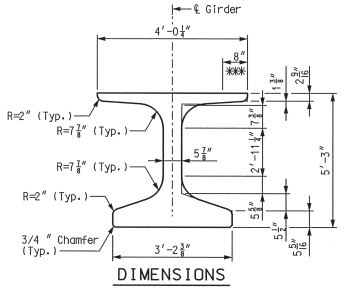

DIMENSIONS

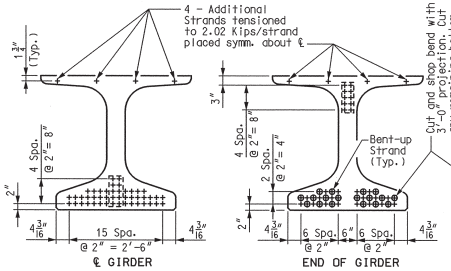

STRAND ARRANGEMENTS

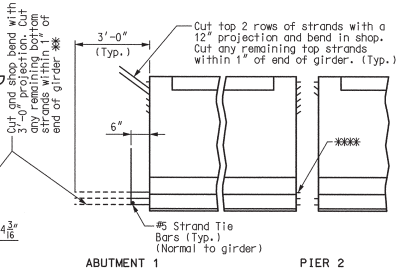

STRAND DETAILS AT GIRDER ENDS

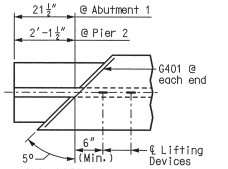

ALL GIRDERS (ABUT. 1) INTERIOR GIRDERS (PIER 2)

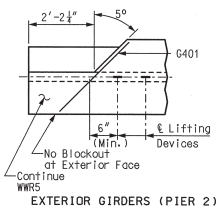

EXTERIOR GIRDERS (PIER 2)
TOP FLANGE BLOCK-OUT DETAILS

Reinforcing Steel Notes:
Reinforcing steel shall conform to the requirements of AASHTO M 31, Grade 60. Welded Wire Reinforcement (WWR) shall conform to the requirements of AASHTO M 221.
All dimensions are out-to-out.
Hooks and bends shall be in accordance with the CRSI Manual of Standard Practice for Detailing Reinforced Concrete Structures, Stirrup and Tie Dimensions.
Minimum clearance to reinforcing shall be 1", unless otherwise shown.
Actual lengths are measured along centerline of bar to the nearest inch.

Notes:
Cost of 3/4" Ø coil tie rods placed in diaphragms will be considered completely covered by the contract unit price for Prestressed Concrete NU-Girder per linear foot.
Coil ties shall be held in place in the forms by slotted wire-setting-studs projecting through forms. Studs are to be left in place or replaced with temporary plugs until girders are erected, then replaced by coil tie rods.
For location of coil inserts at drainage scuppers, see Sheet No. 92.
For location of coil ties, see Sheet Nos. 12, 14, 62, 64, 65 and 67.
The 1-1/2" Ø holes shall be cast in the web for steel intermediate diaphragms. See Sheet No. 62 for details.
Drilling is not allowed.
For details of diaphragms, see Sheet Nos. 12, 14, 64, 65 and 67.
For Girder Camber Diagram, see Sheet No. 80.
For location of slotted well for expansion joint attachment to girder, see Sheet No. 107.

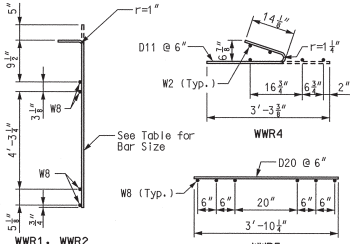

WELDED WIRED BENDING DIAGRAMS

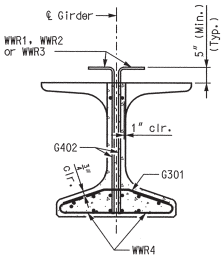

SECTION A-A
Strands not shown for clarity.

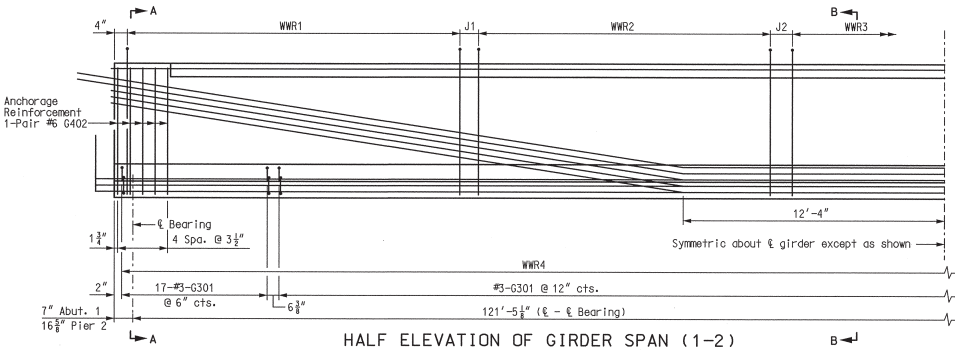

HALF ELEVATION OF GIRDER SPAN (1-2)

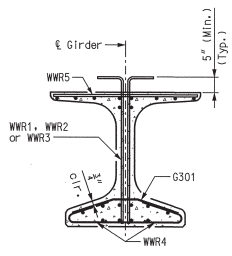

SECTION B-B
Strands not shown for clarity.

BILL OF REINFORCING STEEL - EACH GIRDER				
NO.	SIZE & MARK	ACTUAL LENGTH	SHAPE	BENDING DIAGRAM
141	3 G301	2'-11⅜"	15	
2	4 G401	3'-10¼"	20	13" 7⅞" 13" 4" 4½" SHAPE 15
20	6 G402	5'-1"	20	
				SHAPE 20

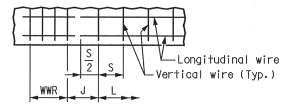

REINFORCEMENT PLACEMENT DETAIL

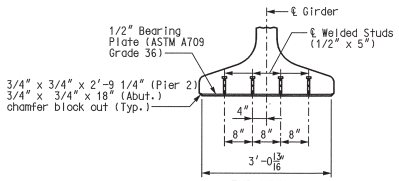

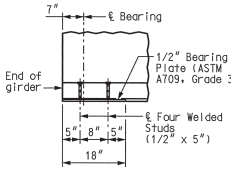

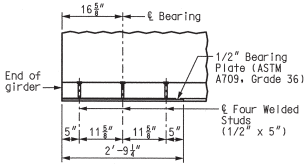

BEARING PLATE DETAILS

Galvanize the 1/2" bearing plate (ASTM A709 Grade 36) in accordance with ASTM A123.

Cost of furnishing, galvanizing, and installing the 1/2" bearing plate (ASTM A709 Grade 36) and welded studs in the prestressed girder will be considered completely covered by the contract unit price for Prestressed Concrete NU-Girder per linear foot.

WELDED WIRE REINFORCEMENT (WWR4 & WWR5 as shown in Welded Wired Bending Diagrams)												
GIRDER NO.	WWR1				WWR2				WWR3			
	BAR SIZE	S1	L1	J1	BAR SIZE	S2	L2	J2	BAR SIZE	S3	L3	
1-5	D20	9"	25'-6"	9"	D20	12"	31'-0"	13¾"	D20	24"	6'-0"	

TYPE NU 63 P/S GIRDER - SPAN (1-2)
GIRDERS 1 THRU 5

Detailed JUL 2009
Checked JUL 2009

Note: This drawing is not to scale. Follow dimensions.

Sheet No. 40 of 125

LAWRENCE R. ROLWES, JR. NUMBER E-26470 STATE OF MISSOURI PROFESSIONAL ENGINEER
8/20/09

DATE	DESCRIPTION
8/20/09	

ROUTE	STATE
I-70	MO
DISTRICT	SHEET NO.
6	BR40
COUNTY	
St. Louis City - MO	
JOB NO.	
J6I0984B	
CONTRACT ID.	
PROJECT NO.	
BRIDGE NO.	
A6500	

MISSOURI HIGHWAYS AND TRANSPORTATION COMMISSION
105 WEST CAPITOL
JEFFERSON CITY, MO 65101
1-888-ASK-MODOT (1-888-275-6636)
HNTB
715 KIRK DRIVE
KANSAS CITY, MO 64105-1310
TELEPHONE (816) 472-1201
CERTIFICATE OF AUTHORITY NO. 001270

REV.

Notes:
Concrete for prestressed girders shall be Class A-1 with f'c = 8000 psi and f'ci = 6500 psi.
(+) indicates prestressing strand.
Use 46 strands with an initial prestress force of 2021 kips.
Prestressing tendons shall be uncoated, seven-wire, low-relaxation strands, 0.6 inch diameter in accordance with AASHTO M 203, Grade 270. Pretensioned members shall be in accordance with Sec 1029.
For top flange cross-slope and step details and dimensions, see Sheet No. 58.

Girders shall be lifted by devices designed by the fabricator.
** At the contractor's option the location for bent-up strands may be varied from that shown. The total number of bent-up strands shall not be changed. One strand tie bar is required for each layer of bent-up strands except at abutments which require one bar on the bottom layer of strands only. No additional payment will be made if additional strand tie bars are required.
*** Girder top flange shall be steel troweled to a smooth finish for 8" at the edges, as shown. Bond breaker shall be applied to this region only. The center portion shall be rough finished by scarifying the surface transversely with a wire brush, and no laitance shall remain on the surface.
**** Prestressing strands at Pier 2 shall be trimmed to within 1/8 inch of concrete if exposed or 1 inch if encased. Exposed ends of girders shall be given 2 coats of an asphalt paint. Ends of girders which will be encased in concrete diaphragms shall not be painted.

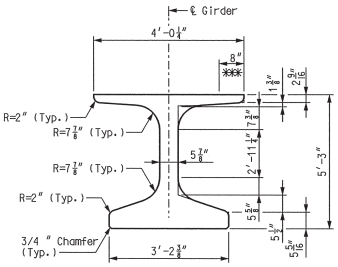

DIMENSIONS

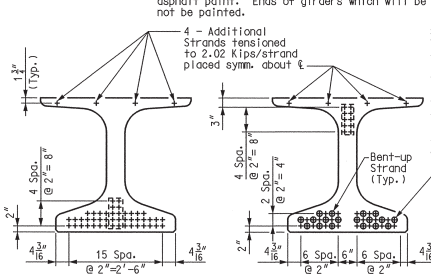

STRAND ARRANGEMENTS

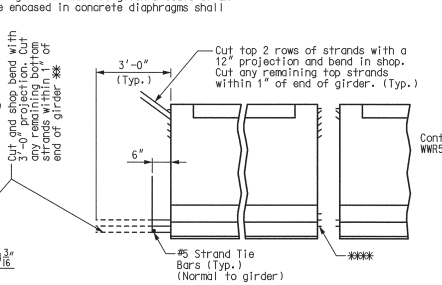

STRAND DETAILS AT GIRDER ENDS

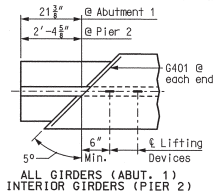

ALL GIRDERS (ABUT. 1)
INTERIOR GIRDERS (PIER 2)

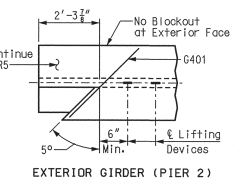

EXTERIOR GIRDER (PIER 2)

TOP FLANGE BLOCK-OUT DETAILS

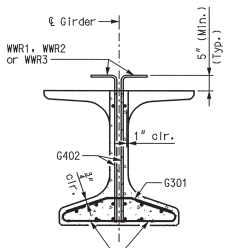

SECTION A-A
Strands not shown for clarity.

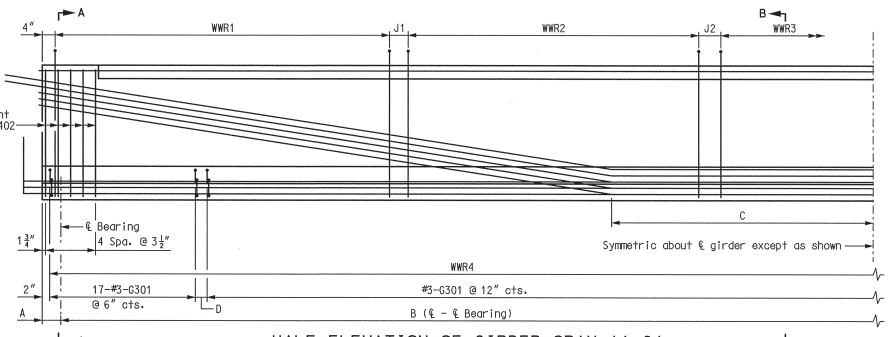

HALF ELEVATION OF GIRDER SPAN (1-2)

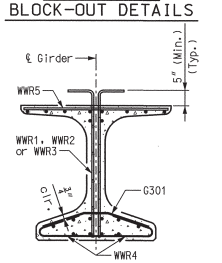

SECTION B-B
Strands not shown for clarity.

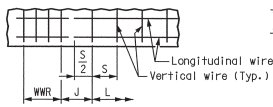

REINFORCEMENT PLACEMENT DETAIL

S = Vertical wire spacing
L = Length of WWR mats
J = Distance between WWR mats

Reinforcing Steel Notes:
Reinforcing steel shall conform to the requirements of AASHTO M 31, Grade 60. Welded Wire Reinforcement (WWR) shall conform to the requirements of AASHTO M 221.
All dimensions are out-to-out.
Hooks and bends shall be in accordance with the CRSI Manual of Standard Practice for Detailing Reinforced Concrete Structures, Stirrup and Tie Dimensions.
Minimum clearance to reinforcing shall be 1", unless otherwise shown.
Actual lengths are measured along centerline of bar to the nearest inch.

Notes:
Cost of 3/4" Ø coil tie rods placed in diaphragms will be considered completely covered by the contract unit price for Prestressed Concrete NU-Girder per linear foot.
Coil ties shall be held in place in the forms by slotted wire-setting-studs projecting through forms. Studs are to be left in place or replaced with temporary plugs until girders are erected, then replaced by coil tie rods.
For location of coil inserts at drain scuppers, see Sheet No. 92.
For location of coil ties, see Sheet Nos. 11, 13, 62, 64, 65 and 67.
The 1-1/2" Ø holes shall be cast in the web for steel intermediate diaphragms, see Sheet No. 62.
Drilling is not allowed.
For details of diaphragms, see Sheet Nos. 11, 13, 64, 65 and 67.
For Girder Camber Diagram, see Sheet No. 80.
For location of slotted well for expansion joint attachment to girder, see Sheet No. 107.

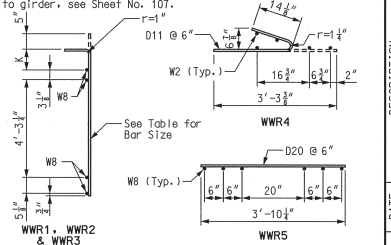

WELDED WIRED BENDING DIAGRAMS

BILL OF REINFORCING STEEL

GIRDER NO.	NO.	SIZE & MARK	ACTUAL LENGTH	SHAPE	BENDING DIAGRAM
6-9	145	3 G301	2'-11⅜"	15	
10,11	146	3 G301	2'-11⅜"	15	
6-11	2	4 G401	3'-11⅞"	20	
6-11	20	6 G402	5'-1"	20	

SHAPE 15
SHAPE 20

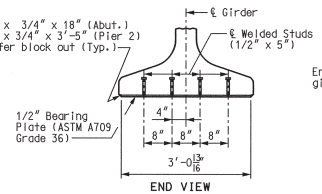

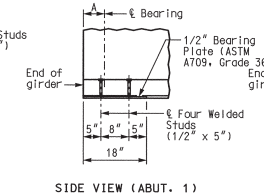

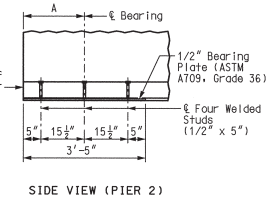

BEARING PLATE DETAILS

Galvanize the 1/2" bearing plate (ASTM A709 Grade 36) in accordance with ASTM A123.

Cost of furnishing, galvanizing, and installing the 1/2" bearing plate (ASTM A709 Grade 36) and welded studs in the prestressed girder will be considered completely covered by the contract unit price for Prestressed Concrete NU-Girder per linear foot.

TABLE OF DIMENSIONS

Girder No.	A		B	C	D
	Abut. 1	Pier 2			
6	7"	20½"	125'-4⅝"	12'-9¼"	8"
7	7"	20⅝"	125'-6½"	12'-9⅜"	8⅜"
8	7"	20⅜"	125'-7⅞"	12'-9½"	9⅝"
9	7"	20¼"	125'-9½"	12'-9⅝"	10⅜"
10	7"	20¼"	125'-11⅛"	12'-9⅞"	5⅛"
11	7"	20⅛"	126'-0⅞"	12'-10"	6"

WELDED WIRE REINFORCEMENT
(WWR4 & WWR5 as shown in Welded Wired Bending Diagrams)

GIRDER No.	WWR1					WWR2					WWR3				
	BAR SIZE	S1	L1	J1	K1	BAR SIZE	S2	L2	J2	K2	BAR SIZE	S3	L3	K3	
6	D20	9"	25'-6"	9"	8⅞"	D20	12"	31'-0"	15"	10⅜"	D20	24"	10'-0"	10⅜"	
7	D20	9"	25'-6"	9"	8⅜"	D20	12"	31'-0"	15¾"	9⅜"	D20	24"	10'-0"	9⅜"	
8	D20	9"	25'-6"	9"	8"	D20	12"	31'-0"	16⅝"	8¼"	D20	24"	10'-0"	8⅜"	
9	D20	9"	25'-6"	9"	7½"	D20	12"	31'-0"	17⅜"	7⅛"	D20	24"	10'-0"	7¼"	
10	D20	9"	25'-6"	9"	7¾"	D20	12"	31'-0"	18⅛"	7⅜"	D20	24"	10'-0"	6⅞"	
11	D20	9"	25'-6"	9"	9⅜"	D20	12"	31'-0"	19"	8"	D20	24"	10'-0"	7⅛"	

TYPE NU 63 P/S GIRDER - SPAN (1-2)
GIRDERS 6 THRU 11

Detailed JUL 2009
Checked JUL 2009

Note: This drawing is not to scale. Follow dimensions.

Sheet No. 41 of 125

HNTB
715 KIRK DRIVE
KANSAS CITY, MO 64105-4310
TELEPHONE (816) 472-1201
CERTIFICATE OF AUTHORITY NO. 001270

MISSOURI HIGHWAYS AND TRANSPORTATION COMMISSION
105 WEST CAPITOL
JEFFERSON CITY, MO 65102
1-888-ASK-MODOT (1-888-275-6636)

8/20/09
DATE 8/20/09
ROUTE I-70
STATE MO
DISTRICT 6
SHEET NO. BR41
COUNTY St. Louis City - MO
JOB NO. J6I0984B
CONTRACT ID.
PROJECT NO.
BRIDGE NO. A6500

DESCRIPTION	DATE

REV.

Notes:
Concrete for prestressed girders shall be Class A-1 with f'c = 8000 psi and f'ci = 6500 psi.
(+) indicates prestressing strand.
Use 34 strands with an initial prestress force of 1494 kips.
Prestressing tendons shall be uncoated, seven-wire, low-relaxation strands, 0.6 inch diameter in accordance with AASHTO M 203, Grade 270. Pretensioned members shall be in accordance with Sec 1029.
For top flange cross-slope and step details and dimensions, see Sheet No. 58.

Girders shall be lifted by devices designed by the fabricator.
** At the contractor's option the location for bent-up strands may be varied from that shown. The total number of bent-up strands shall not be changed. One strand tie bar is required for each layer of bent-up strands except at abutments which require one bar on the bottom layer of strands only. No additional payment will be made if additional strand tie bars are required.
*** Girder top flange shall be steel troweled to a smooth finish for 8" at the edges, as shown. Bond breaker shall be applied to this region only. The center portion shall be rough finished by scarifying the surface transversely with a wire brush, and no laitance shall remain on the surface.
**** Prestressing strands at Pier 2 shall be trimmed to within 1/8 inch of concrete if exposed or 1 inch of concrete if encased. Exposed ends of girders shall be given 2 coats of asphalt paint. Ends of girders which will be encased in concrete diaphragms shall not be painted.

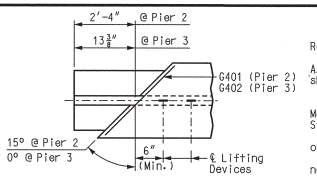

INTERIOR GIRDERS (PIER 2)
ALL GIRDERS (PIER 3)

Reinforcing Steel Notes:
Reinforcing steel shall conform to the requirements of AASHTO M 31, Grade 60. Welded Wire Reinforcement (WWR) shall conform to the requirements of AASHTO M 221.
All dimensions are out-to-out.
Hooks and bends shall be in accordance with the CRSI Manual of Standard Practice for Detailing Reinforced Concrete Structures, Stirrup and Tie Dimensions.
Minimum clearance to reinforcing shall be 1", unless otherwise shown.
Actual lengths are measured along centerline of bar to the nearest inch.

Notes:
Cost of 3/4" Ø coil tie rods placed in diaphragms will be considered completely covered by the contract unit price for Prestressed Concrete NU-Girder per linear foot.
Coil ties shall be held in place in the forms by slotted wire-setting-studs projecting through forms. Studs are to be left in place or replaced with temporary plugs until girders are erected, then replaced by coil tie rods.
For location of coil inserts at drainage scuppers, see Sheet No. 92.
For location of coil ties, see Sheet Nos. 63, 64, 66, 67 and 68.
The 1-1/2" Ø holes shall be cast in the web for steel intermediate diaphragms, see Sheet No. 63 for details.
Drilling is not allowed.
For details of diaphragms, see Sheet Nos. 64, 66, 67 and 68.
For Girder Camber Diagram, see Sheet No. 80.
For location of slotted well for expansion joint attachment to girder, see Sheet No. 107.

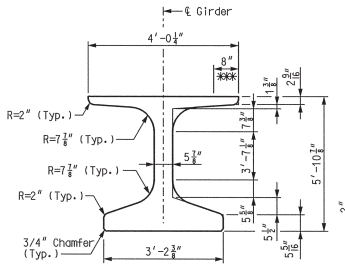

DIMENSIONS

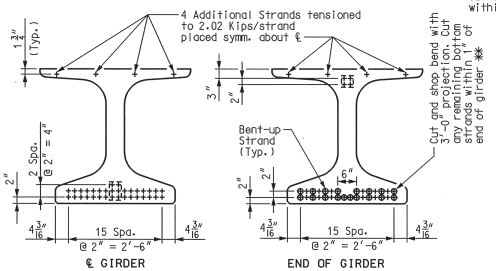

STRAND ARRANGEMENTS

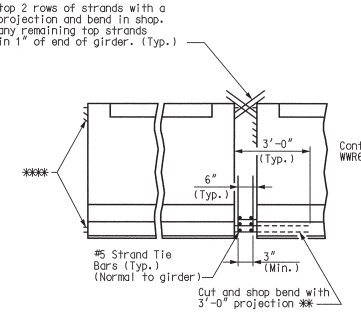

STRAND DETAILS AT GIRDER ENDS

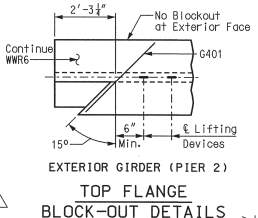

EXTERIOR GIRDER (PIER 2)
TOP FLANGE BLOCK-OUT DETAILS

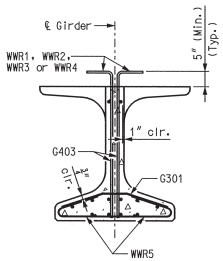

SECTION A-A
Strands not shown for clarity.

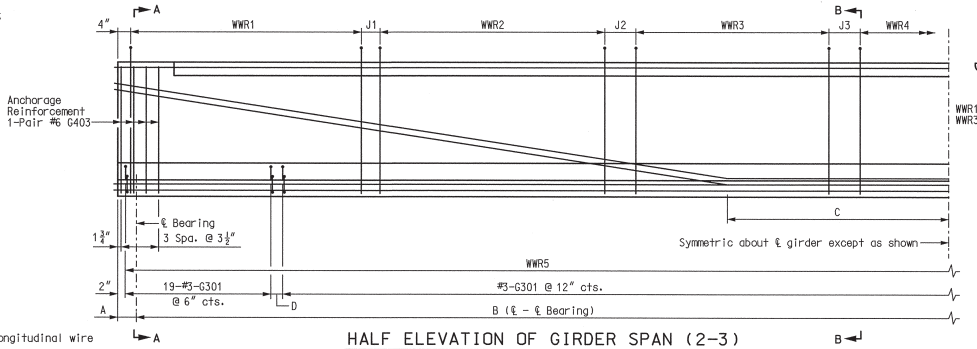

HALF ELEVATION OF GIRDER SPAN (2-3)

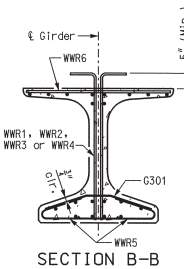

SECTION B-B
Strands not shown for clarity.

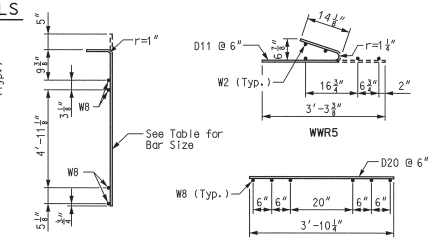

WELDED WIRED BENDING DIAGRAMS

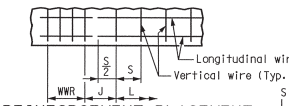

REINFORCEMENT PLACEMENT DETAIL
S = Vertical wire spacing
L = Length of WWR mats
J = Distance between WWR mats

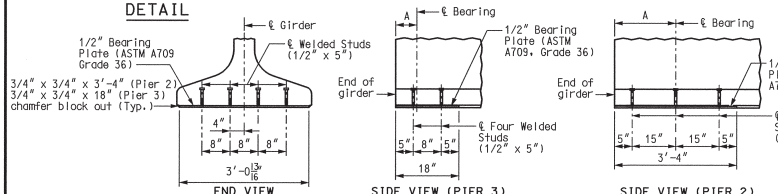

BEARING PLATE DETAILS

Galvanize the 1/2" bearing plate (ASTM A709 Grade 36) in accordance with ASTM A123.

Cost of furnishing, galvanizing, and installing the 1/2" bearing plate (ASTM A709 Grade 36) and welded studs in the prestressed girder will be considered completely covered by the contract unit price for Prestressed Concrete NU-Girder per linear foot.

BILL OF REINFORCING STEEL

GIRDER NO.	NO.	SIZE & MARK	ACTUAL LENGTH	SHAPE	BENDING DIAGRAM
1	133	3 G301	2'-11⅜"	15	
2	136	3 G301	2'-11⅜"	15	
3	139	3 G301	2'-11⅜"	15	
4	142	3 G301	2'-11⅜"	15	
1-4	1	4 G401	3'-11⅜"	20	
1-4	1	4 G402	3'-10¼"	20	
1-4	16	6 G403	5'-8"	20	

SHAPE 15
SHAPE 20

TABLE OF DIMENSIONS

Girder No.	A		B	C	D
	Pier 2	Pier 3			
1	20"	7"	111'-7"	11'-4⅝"	9"
2	19⅞"	7"	114'-4⅛"	11'-7⅜"	7½"
3	19¾"	7"	117'-1⅜"	11'-11¼"	6"
4	19⅝"	7"	119'-10¾"	12'-2½"	4⅝"

WELDED WIRE REINFORCEMENT
(WWR5 & WWR6 as shown in Welded Wired Bending Diagrams)

GIRDER No.	WWR1				WWR2				WWR3				WWR4		
	BAR SIZE	S1	L1	J1	BAR SIZE	S2	L2	J2	BAR SIZE	S3	L3	J3	BAR SIZE	S4	L4
1	D20	6"	16'-0"	6"	D20	12"	24'-0"	12"	D20	18"	9'-0"	13"	D20	24"	10'-0"
2	D20	6"	16'-0"	6"	D20	12"	24'-0"	12"	D20	18"	9'-0"	17½"	D20	24"	12'-0"
3	D20	6"	16'-0"	6"	D20	12"	24'-0"	12"	D20	18"	9'-0"	10"	D20	24"	16'-0"
4	D20	6"	16'-0"	6"	D20	12"	24'-0"	12"	D20	18"	9'-0"	14⅝"	D20	24"	18'-0"

TYPE NU 70 P/S GIRDER - SPAN (2-3)
GIRDERS 1 THRU 4

Detailed JUL 2009
Checked JUL 2009

Note: This drawing is not to scale. Follow dimensions.

Sheet No. 42 of 125

\\slsw00\Jobs\46440\Techprod\Bridges\MO-Approach\Drawings\Baseline Drawings\B_A6500_042-125_J6I0984B_042.dgn

18-AUG-2009 10:23

LAWRENCE W. KRUSE
ROLLA, MISSOURI
NUMBER
PE-2009006847
PROFESSIONAL ENGINEER
8/20/09

DATE 8/20/09
ROUTE I-70
STATE MO
DISTRICT 6
SHEET NO. BR42
COUNTY St. Louis City - MO
JOB NO. J6I0984B
CONTRACT ID.
PROJECT NO.
BRIDGE NO. A6500

DESCRIPTION
DATE
REV.

MISSOURI HIGHWAYS AND TRANSPORTATION COMMISSION
105 WEST CAPITOL
JEFFERSON CITY, MO 65102
1-888-ASK-MODOT (1-888-275-6636)
HNTB
715 KIRK DRIVE
KANSAS CITY, MO 64105-1310
TELEPHONE: (816) 472-1201
CERTIFICATE OF AUTHORITY NO. 001270

Notes:
Concrete for prestressed girders shall be Class A-1 with f'c = 8000 psi and f'ci = 6500 psi.
(+) indicates prestressing strand.
Use 40 strands with an initial prestress force of 1758 kips.
Prestressing tendons shall be uncoated, seven-wire, low-relaxation strands, 0.6 inch diameter in accordance with AASHTO M 203, Grade 270. Pretensioned members shall be in accordance with Sec 1029.
For top flange cross-slope and step details and dimensions, see Sheet No. 58.

Girders shall be lifted by devices designed by the fabricator.
** At the contractor's option the location for bent-up strands may be varied from that shown. The total number of bent-up strands shall not be changed. One strand tie bar is required for each layer of bent-up strands except at abutments which require one bar on the bottom layer of strands only. No additional payment will be made if additional strand tie bars are required.
*** Girder top flange shall be steel troweled to a smooth finish for 8" at the edges, as shown. Bond breaker shall be applied to this region only. The center portion shall be rough finished by scarifying the surface transversely with a wire brush, and no laitance shall remain on the surface.
**** Prestressing strands at Pier 2 shall be trimmed to within 1/8 inch of concrete if exposed or 1 inch of concrete if encased. Exposed ends of girders shall be given 2 coats of an asphalt paint. Ends of girders which will be encased in concrete diaphragms shall not be painted.

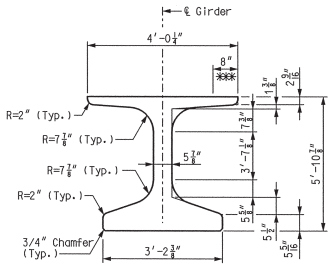

DIMENSIONS

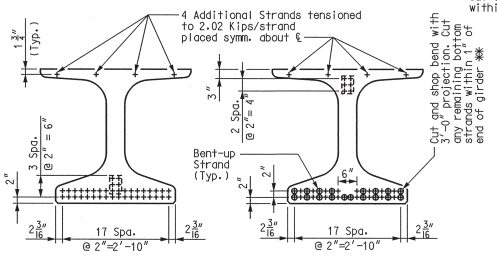

STRAND ARRANGEMENTS

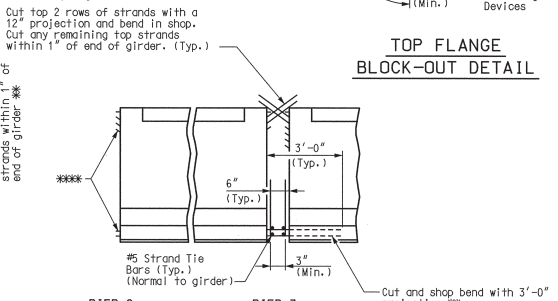

STRAND DETAILS AT GIRDER ENDS

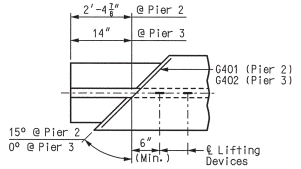

TOP FLANGE BLOCK-OUT DETAIL

Reinforcing Steel Notes:
Reinforcing steel shall conform to the requirements of AASHTO M 31, Grade 60. Welded Wire Reinforcement (WWR) shall conform to the requirements of AASHTO M 221.
All dimensions are out-to-out.
Hooks and bends shall be in accordance with the CRSI Manual of Standard Practice for Detailing Reinforced Concrete Structures, Stirrup and Tie Dimensions.
Minimum clearance to reinforcing shall be 1", unless otherwise shown.
Actual lengths are measured along centerline of bar to the nearest inch.

Notes:
Cost of 3/4" Ø coil tie rods placed in diaphragms will be considered completely covered by the contract unit price for Prestressed Concrete NU-Girder per linear foot.
Coil ties shall be held in place in the forms by slotted wire-setting-studs projecting through forms. Studs are to be left in place or replaced with temporary plugs until girders are erected, then replaced by coil tie rods.
For location of coil inserts at drainage scuppers, see Sheet No. 92.
For location of coil ties, see Sheet Nos. 63, 64, 66, 67 and 68.
The 1-1/2" Ø holes shall be cast in the web for steel intermediate diaphragms, see Sheet No. 63 for details.
Drilling is not allowed.
For details of diaphragms, see Sheet Nos. 64, 66, 67 and 68.
For Girder Camber Diagram, see Sheet No. 80.
For location of slotted well for expansion joint attachment to girder, see Sheet No. 107.

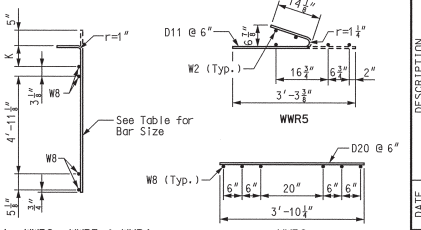

WELDED WIRED BENDING DIAGRAMS

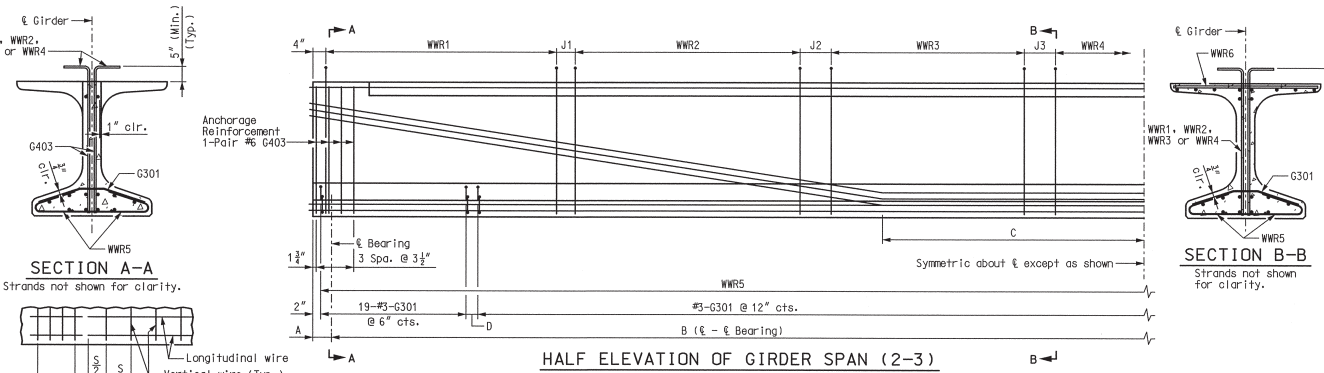

BILL OF REINFORCING STEEL

GIRDER NO.	NO.	SIZE & MARK	ACTUAL LENGTH	SHAPE	BENDING DIAGRAM
5	144	3 G301	2'-11⅜"	15	
6	147	3 G301	2'-11⅜"	15	
7	150	3 G301	2'-11⅜"	15	
8	153	3 G301	2'-11⅜"	15	
5-8	1	4 G401	3'-11⅛"	20	
5-8	1	4 G402	3'-10¼"	20	
5-8	16	6 G403	5'-8"	20	

4⅜" 13" 7⅞" 13" 4⅜" 4⅜"
SHAPE 15
SHAPE 20

WELDED WIRE REINFORCEMENT
(WWR5 & WWR6 as shown in Welded Wired Bending Diagrams)

GIRDER No.	WWR1 BAR SIZE	S1	L1	J1	K1	WWR2 BAR SIZE	S2	L2	J2	K2	WWR3 BAR SIZE	S3	L3	J3	K3	WWR4 BAR SIZE	S4	L4	K4
5	D20	6"	16'-0"	6"	8⅜"	D20	12"	24'-0"	12"	8¾"	D20	18"	12'-0"	19⅝"	7⅞"	D20	24"	14'-0"	7⅝"
6	D20	6"	16'-0"	6"	9⅛"	D20	12"	24'-0"	12"	9¼"	D20	18"	12'-0"	12½"	8¼"	D20	24"	18'-0"	7⅝"
7	D20	6"	16'-0"	6"	7⅝"	D20	12"	24'-0"	12"	7⅝"	D20	18"	12'-0"	17"	7⅝"	D20	24"	20'-0"	7⅝"
8	D20	6"	16'-0"	6"	7⅞"	D20	12"	24'-0"	12"	7⅞"	D20	18"	12'-0"	21¾"	7⅞"	D20	24"	22'-0"	7⅝"

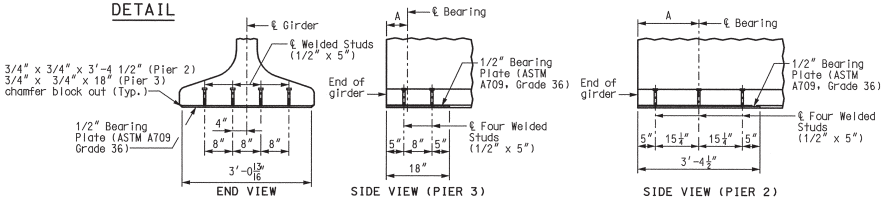

BEARING PLATE DETAILS

Galvanize the 1/2" bearing plate (ASTM A709 Grade 36) in accordance with ASTM A123.

Cost of furnishing, galvanizing, and installing the 1/2" bearing plate (ASTM A709 Grade 36) and welded studs in the prestressed girder will be considered completely covered by the contract unit price for Prestressed Concrete NU-Girder per linear foot.

TABLE OF DIMENSIONS

Girder No.	A Pier 2	A Pier 3	B	C	D
5	20¼"	7"	122'-8"	12'-5⅞"	9⅝"
6	20⅛"	7"	125'-5½"	12-9¼"	8¼"
7	20"	7"	128'-3"	13'-0⅝"	7"
8	19⅞"	7"	131'-0⅝"	13'-4"	5¾"

TYPE NU 70 P/S GIRDER - SPAN (2-3)
GIRDERS 5 THRU 8

Detailed JUL 2009
Checked JUL 2009

Note: This drawing is not to scale. Follow dimensions.

Sheet No. 43 of 125

LAWRENCE C. ROLMES NUMBER PE-2003020240 PROFESSIONAL ENGINEER STATE OF MISSOURI
8/20/09

DATE	
8/20/09	
ROUTE	STATE
I-70	MO
DISTRICT	SHEET NO.
6	BR43
COUNTY	
St. Louis City - MO	
JOB NO.	
J6I0984B	
CONTRACT ID.	
PROJECT NO.	
BRIDGE NO.	
A6500	

DESCRIPTION | DATE

MISSOURI HIGHWAYS AND TRANSPORTATION COMMISSION
105 WEST CAPITOL
JEFFERSON CITY, MO 65102
1-888-ASK-MODOT (1-888-275-6636)
HNTB
715 KIRK DRIVE
KANSAS CITY, MO 64105-4310
TELEPHONE (816) 472-1201
CERTIFICATE OF AUTHORITY NO. 001270

REV.

Notes:
Concrete for prestressed girders shall be Class A-1 with f'c = 8000 psi and f'ci = 6500 psi.
(+) indicates prestressing strand.
Use 46 strands with an initial prestress force of 2021 kips.
Prestressing tendons shall be uncoated, seven-wire, low-relaxation strands, 0.6 inch diameter in accordance with AASHTO M 203, Grade 270. Pretensioned members shall be in accordance with Sec 1029.
For top flange cross-slope and step details and dimensions, see Sheet No. 58.

Girders shall be lifted by devices designed by the fabricator.
** At the contractor's option the location for bent-up strands may be varied from that shown. The total number of bent-up strands shall not be changed. One strand tie bar is required for each layer of bent-up strands except at abutments which require one bar on the bottom layer of strands only. No additional payment will be made if additional strand tie bars are required.
*** Girder top flange shall be steel troweled to a smooth finish for 8" at the edges, as shown. Bond breaker shall be applied to this region only. The center portion shall be rough finished by scarifying the surface transversely with a wire brush, and no laitance shall remain on the surface.
**** Prestressing strands at Pier 2 shall be trimmed to within 1/8 inch of concrete if exposed or 1 inch of concrete if encased. Exposed ends of girders shall be given 2 coats of an asphalt paint. Ends of girders which will be encased in concrete diaphragms shall not be painted.

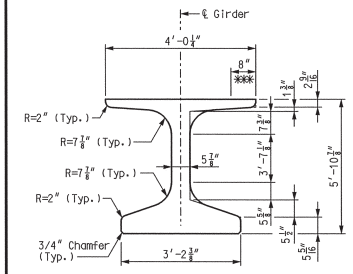

DIMENSIONS

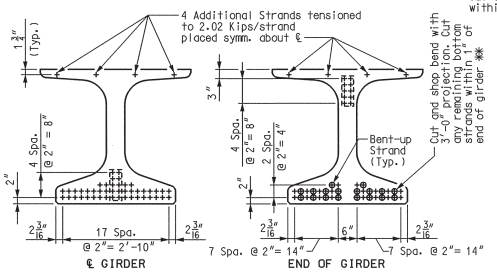

STRAND ARRANGEMENTS

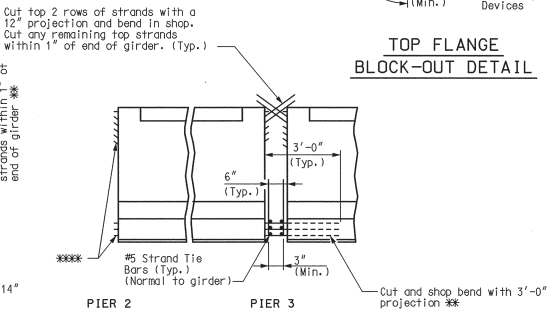

STRAND DETAILS AT GIRDER ENDS

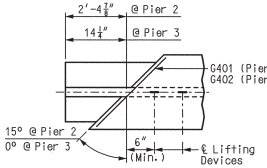

TOP FLANGE BLOCK-OUT DETAIL

Reinforcing Steel Notes:
Reinforcing steel shall conform to the requirements of AASHTO M 31, Grade 60. Welded Wire Reinforcement (WWR) shall conform to the requirements of AASHTO M 221.
All dimensions are out-to-out.
Hooks and bends shall be in accordance with the CRSI Manual of Standard Practice for Detailing Reinforced Concrete Structures, Stirrup and Tie Dimensions.
Minimum clearance to reinforcing shall be 1", unless otherwise shown.
Actual lengths are measured along centerline of bar to the nearest inch.

Notes:
Cost of 3/4" Ø coil tie rods placed in diaphragms will be considered completely covered by the contract unit price for Prestressed Concrete NU-Girder per linear foot.
Coil ties shall be held in place in the forms by slotted wire-setting-studs projecting through forms. Studs are to be left in place or replaced with temporary plugs until girders are erected, then replaced by coil tie rods.
For location of coil inserts at drainage scuppers, see Sheet No. 92.
For location of coil ties, see Sheet Nos. 63, 64, 66, 67 and 68.
The 1-1/2" Ø holes shall be cast in the web for steel intermediate diaphragms, see Sheet No. 63 for details.
Drilling is not allowed.
For details of diaphragms, see Sheet Nos. 64, 66, 67 and 68.
For Girder Camber Diagram, see Sheet No. 80.
For location of slotted well for expansion joint attachment to girder, see Sheet No. 107.

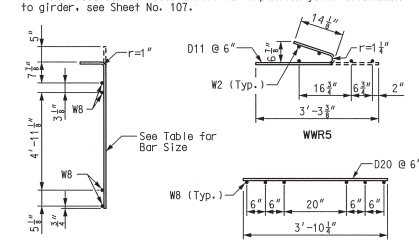

WELDED WIRED BENDING DIAGRAMS

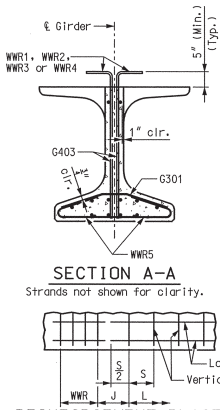

SECTION A-A
Strands not shown for clarity.

REINFORCEMENT PLACEMENT DETAIL
S = Vertical wire spacing
L = Length of WWR mats
J = Distance between WWR mats

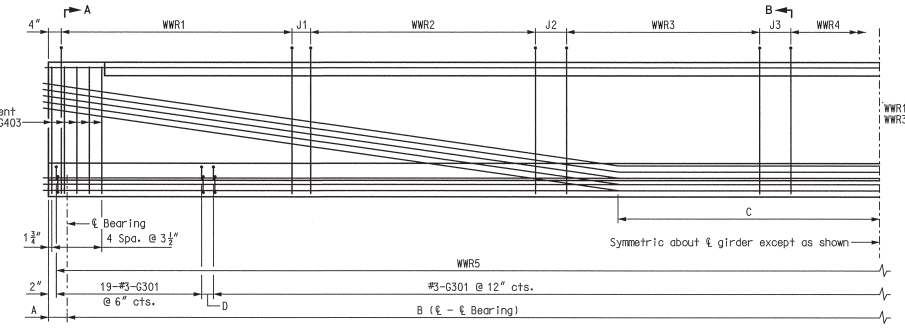

HALF ELEVATION OF GIRDER SPAN (2-3)

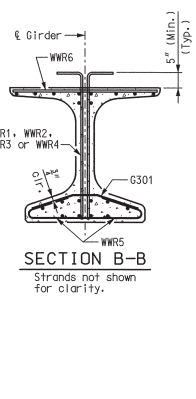

SECTION B-B
Strands not shown for clarity.

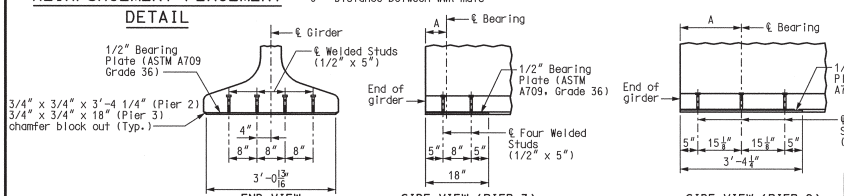

BEARING PLATE DETAILS

Galvanize the 1/2" bearing plate (ASTM A709 Grade 36) in accordance with ASTM A123.

Cost of furnishing, galvanizing, and installing the 1/2" bearing plate (ASTM A709 Grade 36) and welded studs in the prestressed girder will be considered completely covered by the contract unit price for Prestressed Concrete NU-Girder per linear foot.

BILL OF REINFORCING STEEL					
GIRDER NO.	NO.	SIZE & MARK	ACTUAL LENGTH	SHAPE	BENDING DIAGRAM
9	155	3 G301	2'-11⅜"	15	
10	158	3 G301	2'-11⅜"	15	
9-10	1	4 G401	3'-11⅞"	20	
9-10	1	4 G402	3'-10¼"	20	
9-10	20	6 G403	5'-8"	20	

SHAPE 15
SHAPE 20

TABLE OF DIMENSIONS					
Girder No.	A		B	C	D
	Pier 2	Pier 3			
9	20¼"	7"	133'-10¼"	6'-9⅝"	10⅝"
10	20"	7"	136'-8"	6'-11¾"	9½"

WELDED WIRE REINFORCEMENT (WWR5 & WWR6 as shown in Welded Wired Bending Diagrams)																
GIRDER NO.	WWR1				WWR2				WWR3				WWR4			
	BAR SIZE	S1	L1	J1	BAR SIZE	S2	L2	J2	BAR SIZE	S3	L3	J3	BAR SIZE	S4	L4	
9	D20	6"	16'-0"	6"	D20	12"	24'-0"	12"	D20	18"	12'-0"	14⅝"	D20	24"	26'-0"	
10	D20	6"	16'-0"	6"	D20	12"	24'-0"	12"	D20	18"	12'-0"	19½"	D20	24"	28'-0"	

TYPE NU 70 P/S GIRDER - SPAN (2-3)
GIRDERS 9 AND 10

Detailed JUL 2009
Checked JUL 2009

Note: This drawing is not to scale. Follow dimensions.

Sheet No. 44 of 125

\\slsw00\Jobs\46440\Techprod\Bridges\MO-Approach\Drawings\Baseline Drawings\B_A6500_044-125_J6I0984B_044.dgn

18-AUG-2009 10:24

LAWRENCE E. ROLWES NUMBER PE-2006002041 PROFESSIONAL ENGINEER STATE OF MISSOURI
5/20/09
DATE 8/20/09
ROUTE I-70 | STATE MO
DISTRICT 6 | SHEET NO. BR44
COUNTY St. Louis City - MO
JOB NO. J6I0984B
CONTRACT ID.
PROJECT NO.
BRIDGE NO. A6500

DESCRIPTION	DATE

MISSOURI HIGHWAYS AND TRANSPORTATION COMMISSION
105 WEST CAPITOL
JEFFERSON CITY, MO 65102
1-888-ASK-MODOT (1-888-275-6636)

HNTB
715 KIRK DRIVE
KANSAS CITY, MO 64105-1310
TELEPHONE (816) 472-1201
CERTIFICATE OF AUTHORITY NO. 001270

REV.

Notes:
Concrete for prestressed girders shall be Class A-1 with f'c = 8000 psi and f'ci = 6500 psi.
(+) indicates prestressing strand.
Use 52 strands with an initial prestress force of 2285 kips.
Prestressing tendons shall be uncoated, seven-wire, low-relaxation strands, 0.6 inch diameter in accordance with AASHTO M 203, Grade 270. Pretensioned members shall be in accordance with Sec 1029.
For top flange cross-slope and step details and dimensions, see Sheet No. 58.

Girders shall be lifted by devices designed by the fabricator.
** At the contractor's option the location for bent-up strands may be varied from that shown. The total number of bent-up strands shall not be changed. One strand tie bar is required for each layer of bent-up strands except at abutments which require one bar on the bottom layer of strands only. No additional payment will be made if additional strand tie bars are required.
*** Girder top flange shall be steel troweled to a smooth finish for 8" at the edges, as shown. Bond breaker shall be applied to this region only. The center portion shall be rough finished by scarifying the surface transversely with a wire brush, and no laitance shall remain on the surface.
**** Prestressing strands at Pier 2 shall be trimmed to within 1/8 inch of concrete if exposed or 1 inch of concrete if encased. Exposed ends of girders shall be given 2 coats of asphalt paint. Ends of girders which will be encased in concrete diaphragms shall not be painted.

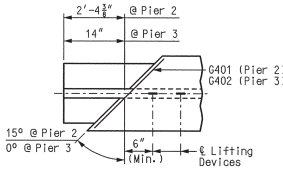

INTERIOR GIRDERS (PIER 2)
ALL GIRDERS (PIER 3)

Reinforcing Steel Notes:
Reinforcing steel shall conform to the requirements of AASHTO M 31, Grade 60. Welded Wire Reinforcement (WWR) shall conform to the requirements of AASHTO M 221.
All dimensions are out-to-out.
Hooks and bends shall be in accordance with the CRSI Manual of Standard Practice for Detailing Reinforced Concrete Structures, Stirrup and Tie Dimensions.
Minimum clearance to reinforcing shall be 1", unless otherwise shown.
Actual lengths are measured along centerline of bar to the nearest inch.

Notes:
Cost of 3/4" Ø coil tie rods placed in diaphragms will be considered completely covered by the contract unit price for Prestressed Concrete NU-Girder per linear foot.
Coil ties shall be held in place in the forms by slotted wire-setting-studs projecting through forms. Studs are to be left in place or replaced with temporary plugs until girders are erected, then replaced by coil tie rods.
For location of coil inserts at drainage scuppers, see Sheet No. 92.
For location of coil ties, see Sheet Nos. 63, 64, 66, 67 and 68.
The 1-1/2" Ø holes shall be cast in the web for steel intermediate diaphragms. See Sheet No. 63 for details
Drilling is not allowed.
For details of diaphragms, see Sheet Nos. 64, 66, 67 and 68.
For Girder Camber Diagram, see Sheet No. 80.
For location of slotted well for expansion joint attachment to girder, see Sheet No. 107.

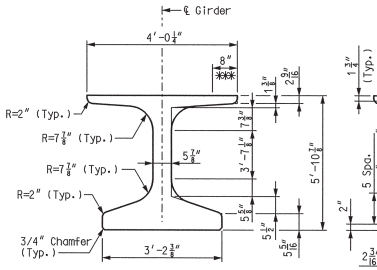

DIMENSIONS

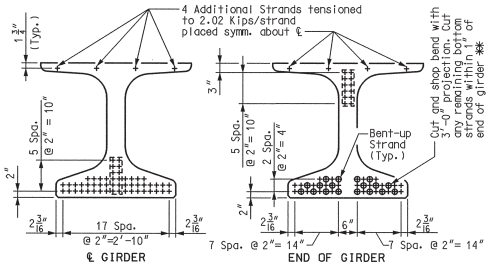

STRAND ARRANGEMENTS

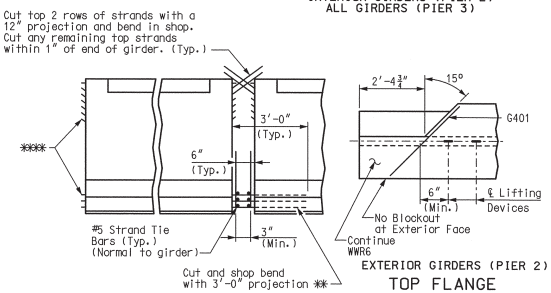

STRAND DETAILS AT GIRDER ENDS

TOP FLANGE BLOCK-OUT DETAILS

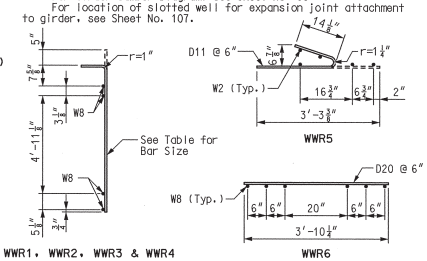

WELDED WIRED BENDING DIAGRAMS

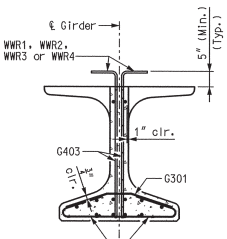

SECTION A-A
Strands not shown for clarity.

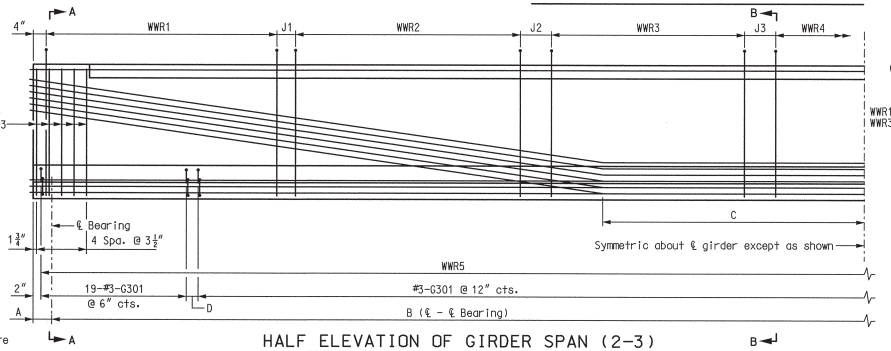

HALF ELEVATION OF GIRDER SPAN (2-3)

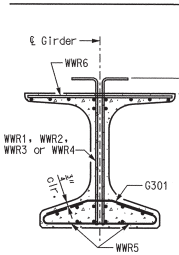

SECTION B-B
Strands not shown for clarity.

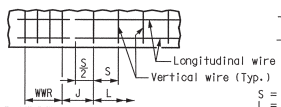

REINFORCEMENT PLACEMENT DETAIL
S = Vertical wire spacing
L = Length of WWR mats
J = Distance between WWR mats

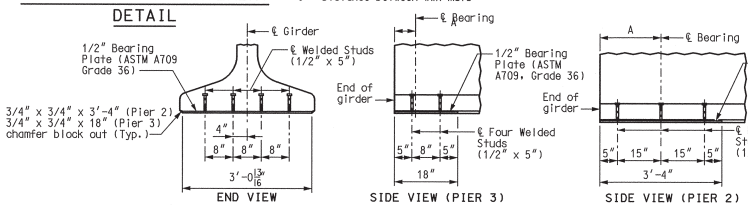

BEARING PLATE DETAILS

Galvanize the 1/2" bearing plate (ASTM A709 Grade 36) in accordance with ASTM A123.

Cost of furnishing, galvanizing, and installing the 1/2" bearing plate (ASTM A709 Grade 36) and welded studs in the prestressed girder will be considered completely covered by the contract unit price for Prestressed Concrete NU-Girder per linear foot.

BILL OF REINFORCING STEEL

GIRDER NO.	NO.	SIZE & MARK	ACTUAL LENGTH	SHAPE	BENDING DIAGRAM
11	161	3 G301	2'-11 3/8"	15	
12	164	3 G301	2'-11 3/8"	15	
11-12	1	4 G401	3'-11 7/8"	20	
11-12	1	4 G402	3'-10 1/4"	20	
11-12	20	6 G403	5'-8"	20	

SHAPE 15
SHAPE 20

TABLE OF DIMENSIONS

Girder No.	A		B	C	D
	Pier 2	Pier 3			
11	20"	7"	139'-5 5/8"	7'-1"	8 1/4"
12	19 1/8"	7"	142'-3 3/8"	7'-2 3/4"	7 1/8"

WELDED WIRE REINFORCEMENT
(WWR5 & WWR6 as shown in Welded Wired Bending Diagrams)

GIRDER NO.	WWR1				WWR2				WWR3				WWR4		
	BAR SIZE	S1	L1	J1	BAR SIZE	S2	L2	J2	BAR SIZE	S3	L3	J3	BAR SIZE	S4	L4
11	D20	6"	16'-0"	6"	D20	12"	35'-0"	12"	D20	18"	9'-0"	12 1/4"	D20	24"	16'-0"
12	D20	6"	16'-0"	6"	D20	12"	35'-0"	12"	D20	18"	9'-0"	17 1/8"	D20	24"	18'-0"

TYPE NU 70 P/S GIRDER - SPAN (2-3)
GIRDERS 11 AND 12

Detailed JUL 2009
Checked JUL 2009

Note: This drawing is not to scale. Follow dimensions.

Sheet No. 45 of 125

\\slsw00\Jobs\46440\Techprod\Bridges\MO-Approach\Drawings\Baseline Drawings\B_A6500_045-125_J6I0984B_045.dgn

18-AUG-2009 10:24

LAWRENCE C. ROLWES NUMBER PE2007000247 PROFESSIONAL ENGINEER STATE OF MISSOURI
8/20/09

DATE 8/20/09
ROUTE I-70 | STATE MO
DISTRICT 6 | SHEET NO. BR45
COUNTY St. Louis City - MO
JOB NO. J6I0984B
CONTRACT ID.
PROJECT NO.
BRIDGE NO. A6500

DESCRIPTION | DATE

MISSOURI HIGHWAYS AND TRANSPORTATION COMMISSION
105 WEST CAPITOL
JEFFERSON CITY, MO 65102
1-888-ASK-MODOT (1-888-275-6636)

HNTB
715 KIRK DRIVE
KANSAS CITY, MO 64105-1310
TELEPHONE (816) 472-1201
CERTIFICATE OF AUTHORITY NO. 001270

REV.

Notes:
Concrete for prestressed girders shall be Class A-1 with f'c = 8000 psi and f'ci = 6500 psi.
(+) indicates prestressing strand.
Use 50 strands with an initial prestress force of 2198 kips.
Prestressing tendons shall be uncoated, seven-wire, low-relaxation strands, 0.6 inch diameter in accordance with AASHTO M 203, Grade 270. Pretensioned members shall be in accordance with Sec 1029.
For top flange cross-slope and step details and dimensions, see Sheet No. 59.

Girders shall be lifted by devices designed by the fabricator.
** At the contractor's option the location for bent-up strands may be varied from that shown. The total number of bent-up strands shall not be changed. One strand tie bar is required for each layer of bent-up strands except at abutments which require one bar on the bottom layer of strands only. No additional payment will be made if additional strand tie bars are required.
*** Girder top flange shall be steel troweled to a smooth finish for 8" at the edges, as shown. Bond breaker shall be applied to this region only. The center portion shall be rough finished by scarifying the surface transversely with a wire brush, and no laitance shall remain on the surface.

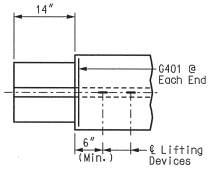

TOP FLANGE BLOCK-OUT DETAIL

Reinforcing Steel Notes:
Reinforcing steel shall conform to the requirements of AASHTO M 31, Grade 60. Welded Wire Reinforcement (WWR) shall conform to the requirements of AASHTO M 221.
All dimensions are out-to-out.
Hooks and bends shall be in accordance with the CRSI Manual of Standard Practice for Detailing Reinforced Concrete Structures, Stirrup and Tie Dimensions.
Minimum clearance to reinforcing shall be 1", unless otherwise shown.
Actual lengths are measured along centerline of bar to the nearest inch.

Notes:
Cost of 3/4" Ø coil tie rods placed in diaphragms will be considered completely covered by the contract unit price for Prestressed Concrete NU-Girder per linear foot.
Coil ties shall be held in place in the forms by slotted wire-setting-studs projecting through forms. Studs are to be left in place or replaced with temporary plugs until girders are erected, then replaced by coil tie rods.
For location of coil inserts at drainage souppers, see Sheet No. 92.
For location of coil ties, see Sheet Nos. 63, 68 and 69.
The 1-1/2" Ø holes shall be cast in the web for steel intermediate diaphragms, see Sheet No. 63 for details.
Drilling is not allowed.
For details of diaphragms, see Sheet Nos. 68 & 69.
For Girder Camber Diagram, see Sheet No. 80.

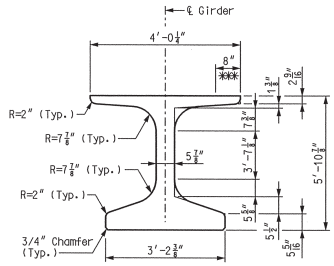

DIMENSIONS

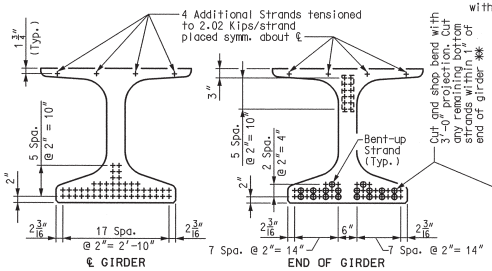

STRAND ARRANGEMENTS

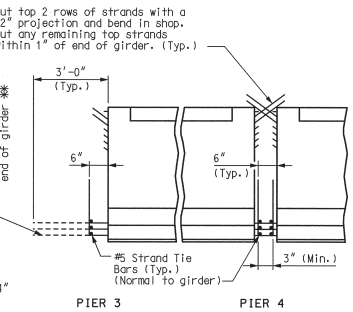

STRAND DETAILS AT GIRDER ENDS

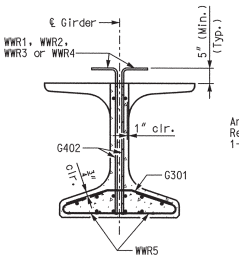

SECTION A-A
Strands not shown for clarity.

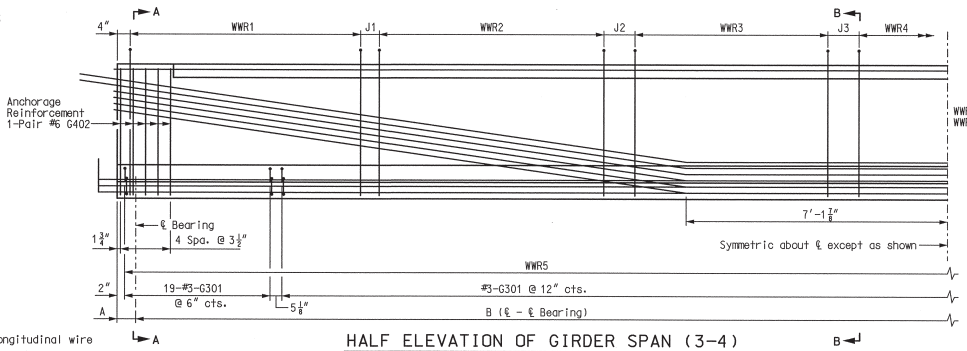

HALF ELEVATION OF GIRDER SPAN (3-4)

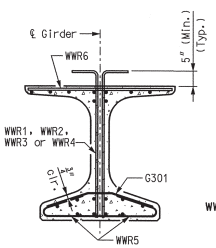

SECTION B-B
Strands not shown for clarity.

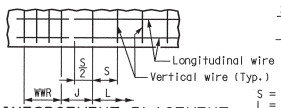

REINFORCEMENT PLACEMENT DETAIL

S = Vertical wire spacing
L = Length of WWR mats
J = Distance between WWR mats

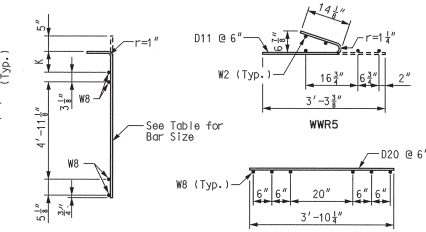

WELDED WIRED BENDING DIAGRAMS

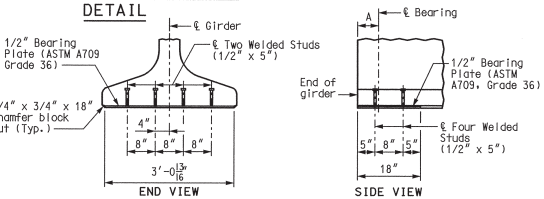

BEARING PLATE DETAILS

Galvanize the 1/2" bearing plate (ASTM A709 Grade 36) in accordance with ASTM A123.

Cost of furnishing, galvanizing, and installing the 1/2" bearing plate (ASTM A709 Grade 36) and welded studs in the prestressed girder will be considered completely covered by the contract unit price for Prestressed Concrete NU-Girder per liner foot.

BILL OF REINFORCING STEEL - EACH GIRDER

NO.	SIZE & MARK	ACTUAL LENGTH	SHAPE	BENDING DIAGRAM
163	3 G301	2'-11⅜"	15	
2	4 G401	3'-10¼"	20	
20	6 G402	5'-8"	20	

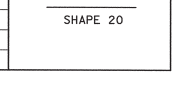

SHAPE 20

TABLE OF DIMENSIONS

Girder No.	A		B
	Pier 3	Pier 4	
1-5	7⅜"	7"	142'-0"
6-8	7¼"	7"	142'-0⅛"
9-11	7⅛"	7"	142'-0¼"
12	7"	7"	142'-0⅜"

WELDED WIRE REINFORCEMENT
(WWR5 & WWR6 as shown in Welded Wired Bending Diagrams)

GIRDER NO.	WWR1					WWR2					WWR3					WWR4				
	BAR SIZE	S1	L1	J1	K1	BAR SIZE	S2	L2	J2	K2	BAR SIZE	S3	L3	J3	K3	BAR SIZE	S4	L4	K4
1	D20	6"	14'-0"	6"	8⅜"	D20	12"	33'-0"	12"	11⅝"	D20	18"	12'-0"	9¼"	11⅝"	D20	24"	20'-0"	11⅝"
2-12	D20	6"	14'-0"	6"	9¼"	D20	12"	33'-0"	12"	10⅛"	D20	18"	12'-0"	9¼"	11⅛"	D20	24"	20'-0"	11⅛"

TYPE NU 70 P/S GIRDER - SPAN (3-4)
GIRDERS 1 THRU 12

Detailed JUL 2009
Checked JUL 2009

Note: This drawing is not to scale. Follow dimensions.

Sheet No. 46 of 125

8/20/09
DATE 8/20/09
ROUTE I-70 | STATE MO
DISTRICT 6 | SHEET NO. BR46
COUNTY St. Louis City - MO
JOB NO. J6I0984B
CONTRACT ID.
PROJECT NO.
BRIDGE NO. A6500
DESCRIPTION
DATE
MISSOURI HIGHWAYS AND TRANSPORTATION COMMISSION
105 WEST CAPITOL
JEFFERSON CITY, MO 65102
1-888-ASK-MODOT (1-888-275-6636)
HNTB
715 KIRK DRIVE
KANSAS CITY, MO 64105-1310
TELEPHONE (816) 472-1201
CERTIFICATE OF AUTHORITY NO. 001270
REV.

Notes:
Concrete for prestressed girders shall be Class A-1 with f'c = 8000 psi and f'ci = 6500 psi.
(+) indicates prestressing strand.
Use 30 strands with an initial prestress force of 1319 kips.
Prestressing tendons shall be uncoated, seven-wire, low-relaxation strands, 0.6 inch diameter in accordance with AASHTO M 203, Grade 270.
Pretensioned members shall be in accordance with Sec 1029.

Girders shall be lifted by devices designed by the fabricator.
** At the contractor's option the location for bent-up strands may be varied from that shown. The total number of bent-up strands shall not be changed. One strand tie bar is required for each layer of bent-up strands except at abutments which require one bar on the bottom layer of strands only. No additional payment will be made if additional strand tie bars are required.
*** Girder top flange shall be steel troweled to a smooth finish for 8" at the edges, as shown. Bond breaker shall be applied to this region only. The center portion shall be rough finished by scarifying the surface transversely with a wire brush, and no laitance shall remain on the surface.
**** Prestressing strands at Pier 2 shall be trimmed to within 1/8 inch of concrete if exposed or 1 inch if encased. Exposed ends of girders shall be given 2 coats of an asphalt paint. Ends of girders which will be encased in concrete diaphragms shall not be painted.

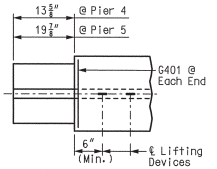

ALL GIRDERS (PIER 4)
INTERIOR GIRDERS (PIER 5)

Reinforcing Steel Notes:
Reinforcing steel shall conform to the requirements of AASHTO M 31, Grade 60. Welded Wire Reinforcement (WWR) shall conform to the requirements of AASHTO M 221.
All dimensions are out-to-out.
Hooks and bends shall be in accordance with the CRSI Manual of Standard Practice for Detailing Reinforced Concrete Structures, Stirrup and Tie Dimensions.
Minimum clearance to reinforcing shall be 1", unless otherwise shown.
Actual lengths are measured along centerline of bar to the nearest inch.

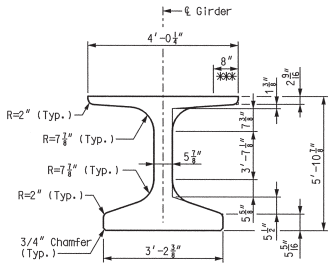

DIMENSIONS

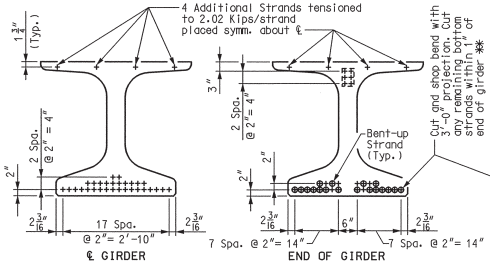

STRAND ARRANGEMENTS

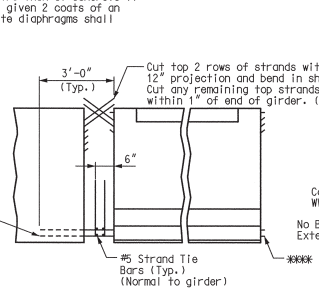

STRAND DETAILS AT GIRDER ENDS

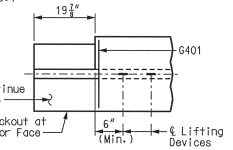

EXTERIOR GIRDERS (PIER 5)
TOP FLANGE BLOCK-OUT DETAILS

Notes:
Cost of 3/4" Ø coil tie rods placed in diaphragms will be considered completely covered by the contract unit price for Prestressed Concrete NU-Girder per linear foot.
Coil ties shall be held in place in the forms by slotted wire-setting-studs projecting through forms. Studs are to be left in place or replaced with temporary plugs until girders are erected, then replaced by coil tie rods.
For location of coil inserts at drainage scuppers, see Sheet No. 92.
For location of coil ties, see Sheet Nos. 63, 69, 70 and 71.
The 1-1/2" Ø holes shall be cast in the web for steel intermediate diaphragms, see Sheet No. 63 for details.
Drilling is not allowed.
For details of diaphragms, see Sheet Nos. 69, 70 and 71.
For Girder Camber Diagram, see Sheet No. 80.
For location of slotted well for expansion joint attachment to girder, see Sheet No. 108.

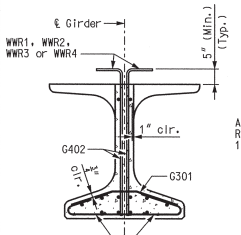

SECTION A-A
Strands not shown for clarity.

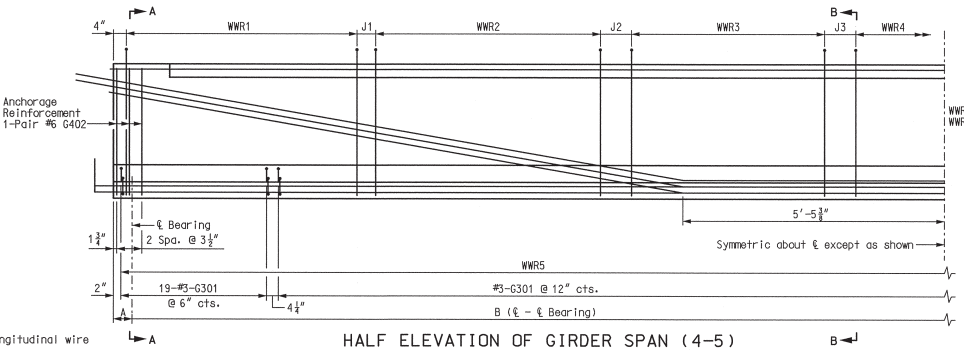

HALF ELEVATION OF GIRDER SPAN (4-5)

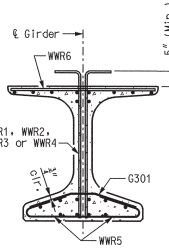

SECTION B-B
Strands not shown for clarity.

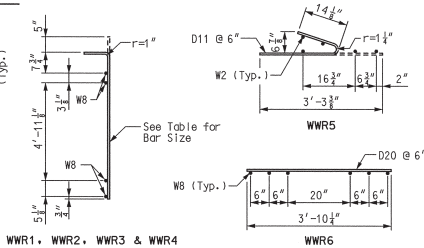

WELDED WIRED BENDING DIAGRAMS

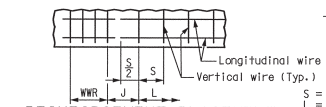

REINFORCEMENT PLACEMENT DETAIL
S = Vertical wire spacing
L = Length of WWR mats
J = Distance between WWR mats

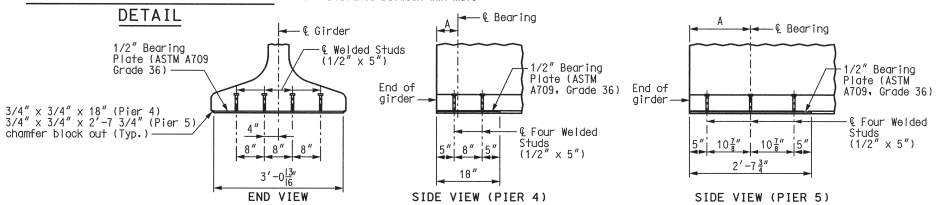

BEARING PLATE DETAILS

Galvanize the 1/2" bearing plate (ASTM A709 Grade 36) in accordance with ASTM A123.

Cost of furnishing, galvanizing, and installing the 1/2" bearing plate (ASTM A709 Grade 36) and welded studs in the prestressed girder will be considered completely covered by the contract unit price for Prestressed Concrete NU-Girder per linear foot.

TABLE OF DIMENSIONS			
Girder No.	A		B
	Pier 3	Pier 4	
1	7"	15⅛"	107'-1¾"
2	7¼"	15¼"	107'-1⅝"
3	7½"	15⅜"	107'-1½"
4	7¾"	15½"	107'-1¼"
5	7⅞"	15⅝"	107'-1⅛"
6	8"	15¾"	107'-1"
7	8⅛"	15⅞"	107'-1⅛"
8	8¼"	15¼"	107'-1¼"
9	8⅜"	15⅜"	107'-1½"
10	8"	15½"	107'-1⅝"
11	7⅞"	15½"	107'-1¼"
12	7⅝"	15⅝"	107'-1¾"

BILL OF REINFORCING STEEL - EACH GIRDER				
NO.	SIZE & MARK	ACTUAL LENGTH	SHAPE	BENDING DIAGRAM
129	3 G301	2'-11⅞"	15	4⅜" 13" 7⅞" 13" 4⅜" SHAPE 15
2	4 G401	3'-10¼"	20	
12	6 G402	5'-8"	20	SHAPE 20

WELDED WIRE REINFORCEMENT (WWR5 & WWR6 as shown in Welded Wired Bending Diagrams)																	
GIRDER NO.	WWR1					WWR2				WWR3				WWR4			
	BAR SIZE	S1	L1	J1		BAR SIZE	S2	L2	J2	BAR SIZE	S3	L3	J3	BAR SIZE	S4	L4	
1-12	D20	6"	14'-0"	6"		D20	12"	8'-0"	12"	D20	18"	12'-0"	8¼"	D20	24"	36'-0"	

TYPE NU 70 P/S GIRDER - SPAN (4-5)
GIRDERS 1 THRU 12

Detailed JUL 2009
Checked JUL 2009

Note: This drawing is not to scale. Follow dimensions.

Sheet No. 47 of 125

\\slsw00\Jobs\46440\Techprod\Bridges\MO-Approach\Drawings\Baseline Drawings\B_A6500_047-125_J6I0984B_047.dgn

18-AUG-2009 10:24

LAWRENCE D. ROLWES NUMBER 2006020284 PROFESSIONAL ENGINEER STATE OF MISSOURI

8/20/09

DATE	
8/20/09	
ROUTE	STATE
I-70	MO
DISTRICT	SHEET NO.
6	BR47
COUNTY	
St. Louis City - MO	
JOB NO.	
J6I0984B	
CONTRACT ID.	
PROJECT NO.	
BRIDGE NO.	
A6500	

DESCRIPTION | DATE

MISSOURI HIGHWAYS AND TRANSPORTATION COMMISSION
105 WEST CAPITOL
JEFFERSON CITY, MO 65102
1-888-ASK-MODOT (1-888-275-6636)

HNTB
715 KIRK DRIVE
KANSAS CITY, MO 64105-1310
TELEPHONE (816) 472-1201
CERTIFICATE OF AUTHORITY NO. 001270

REV.

Notes:
Concrete for prestressed girders shall be Class A-1 with f'c = 8000 psi and f'ci = 6500 psi.
(+) indicates prestressing strand.
Use 38 strands with an initial prestress force of 1670 kips.
Prestressing tendons shall be uncoated, seven-wire, low-relaxation strands, 0.6 inch diameter in accordance with AASHTO M 203, Grade 270. Pretensioned members shall be in accordance with Sec 1029.
For top flange cross-slope and step details and dimensions, see Sheet No. 59.

Girders shall be lifted by devices designed by the fabricator.
** At the contractor's option the location for bent-up strands may be varied from that shown. The total number of bent-up strands shall not be changed. One strand tie bar is required for each layer of bent-up strands except at abutments which require one bar on the bottom layer of strands only. No additional payment will be made if additional strand tie bars are required.
*** Girder top flange shall be steel troweled to a smooth finish for 8" at the edges, as shown. Bond breaker shall be applied to this region only. The center portion shall be rough finished by scarifying the surface transversely with a wire brush, and no laitance shall remain on the surface.
**** Prestressing strands at Pier 5 shall be trimmed to within 1/8 inch of concrete if exposed or 1 inch if encased. Exposed ends of girders shall be given 2 coats of an asphalt paint. Ends of girders which will be encased in concrete diaphragms shall not be painted.

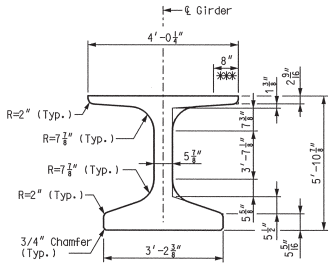

DIMENSIONS

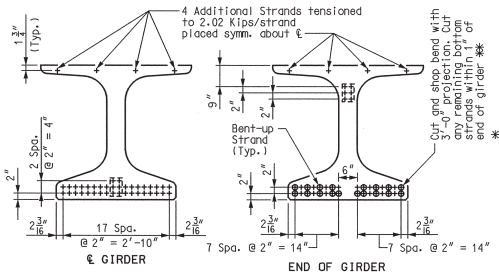

STRAND ARRANGEMENTS

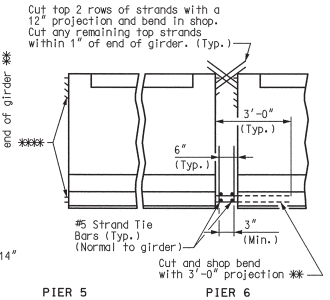

STRAND DETAILS AT GIRDER ENDS

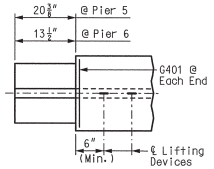

INTERIOR GIRDERS (PIER 5)
ALL GIRDERS (PIER 6)

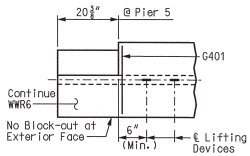

EXTERIOR GIRDERS (PIER 5)
TOP FLANGE BLOCK-OUT DETAILS

Reinforcing Steel Notes:
Reinforcing steel shall conform to the requirements of AASHTO M 31, Grade 60. Welded Wire Reinforcement (WWR) shall conform to the requirements of AASHTO M 221.
All dimensions are out-to-out.
Hooks and bends shall be in accordance with the CRSI Manual of Standard Practice for Detailing Reinforced Concrete Structures, Stirrup and Tie Dimensions.
Minimum clearance to reinforcing shall be 1", unless otherwise shown.
Actual lengths are measured along centerline of bar to the nearest inch.

Notes:
Cost of 3/4" Ø coil tie rods placed in diaphragms will be considered completely covered by the contract unit price for Prestressed Concrete NU-Girder per linear foot.
Coil ties shall be held in place in the forms by slotted wire-setting-studs projecting through forms. Studs are to be left in place or replaced with temporary plugs until girders are erected, then replaced by coil tie rods.
For location of coil inserts at drainage scuppers, see Sheet No. 93.
For location of coil ties, see Sheet Nos. 70, 71, 72 and 63.
The 1-1/2" Ø holes shall be cast in the web for steel intermediate diaphragms, see Sheet No. 63 for details.
Drilling is not allowed.
For details of diaphragms, see Sheet Nos. 70, 71 and 72.
For Girder Camber Diagram, see Sheet No. 81.
For location of slotted well for expansion joint attachment to girder, see Sheet No. 108.

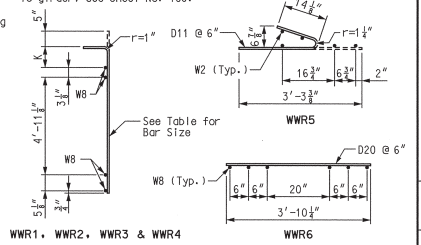

WELDED WIRED BENDING DIAGRAMS

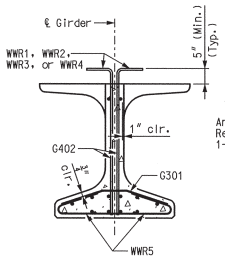

SECTION A-A
Strands not shown for clarity.

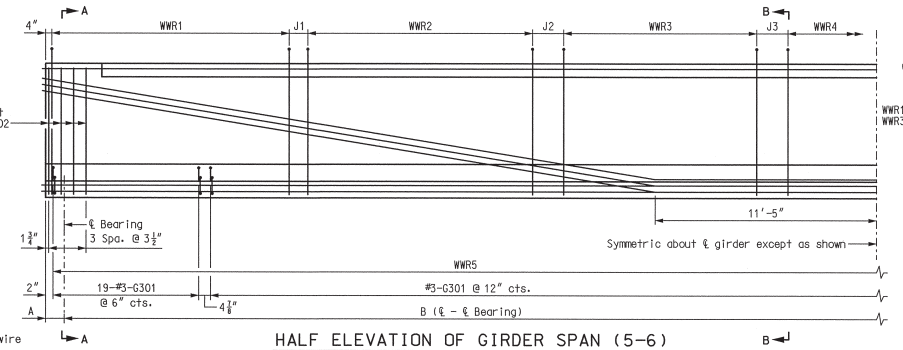

HALF ELEVATION OF GIRDER SPAN (5-6)

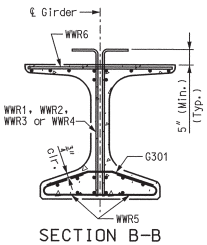

SECTION B-B
Strands not shown for clarity.

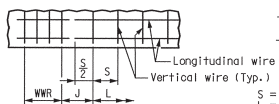

REINFORCEMENT PLACEMENT DETAIL
S = Vertical wire spacing
L = Length of WWR mats
J = Distance between WWR mats

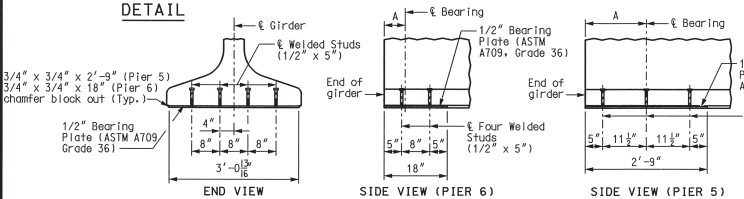

BEARING PLATE DETAILS

Galvanize the 1/2" bearing plate (ASTM A709 Grade 36) in accordance with ASTM A123.

Cost of furnishing, galvanizing, and installing the 1/2" bearing plate (ASTM A709 Grade 36) and welded studs in the prestressed girder will be considered completely covered by the contract unit price for Prestressed Concrete NU-Girder per linear foot.

BILL OF REINFORCING STEEL

GIRDER NO.	NO.	SIZE & MARK	ACTUAL LENGTH	SHAPE	BENDING DIAGRAM
1-8	134	3 G301	2'-11⅜"	15	
1-8	2	4 G401	3'-10¼"	20	
1-8	1	6 G402	5'-8"	20	

SHAPE 15
SHAPE 20

TABLE OF DIMENSIONS

Girder No.	A		B
	Pier 5	Pier 6	
1	16½"	7"	112'-2¼"
2	16⅜"	7⅝"	112'-1¾"
3	16¼"	8"	112'-1⅝"
4	16"	8⅜"	112'-1⅜"
5	15⅞"	8⅝"	112'-1¼"
6	15¾"	8⅝"	112'-1⅜"
7	16"	8⅜"	112'-1⅜"
8	16⅛"	8⅛"	112'-1½"

WELDED WIRE REINFORCEMENT
(WWR5 & WWR6 as shown in Welded Wired Bending Diagrams)

GIRDER No.	WWR1					WWR2					WWR3					WWR4			
	BAR SIZE	S1	L1	J1	K1	BAR SIZE	S2	L2	J2	K2	BAR SIZE	S3	L3	J3	K3	BAR SIZE	S4	L4	K4
1	D20	5"	25'-0"	6"	11¼"	D20	12"	18'-0"	12"	9¼"	D20	18"	6'-0"	14⅜"	7¾"	D20	24"	10'-0"	7¾"
2	D20	5"	25'-0"	6"	9¾"	D20	12"	18'-0"	12"	8¼"	D20	18"	6'-0"	14⅜"	7¾"	D20	24"	10'-0"	7¾"
3	D20	5"	25'-0"	6"	8¼"	D20	12"	18'-0"	12"	7¾"	D20	18"	6'-0"	14⅜"	7¾"	D20	24"	10'-0"	7¾"
4-8	D20	5"	25'-0"	6"	7¾"	D20	12"	18'-0"	12"	7¾"	D20	18"	6'-0"	14⅜"	7¾"	D20	24"	10'-0"	7¾"

TYPE NU 70 P/S GIRDER - SPAN (5-6)
GIRDERS 1 THRU 8

Detailed JUL 2009
Checked JUL 2009

Note: This drawing is not to scale. Follow dimensions.

Sheet No. 48 of 125

\\slsw00\Jobs\46440\Techprod\Bridges\MO-Approach\Drawings\Baseline Drawings\B_A6500_048-125_J6I0984B_048.dgn

18-AUG-2009 10:24

LAWRENCE O. ROLWES, JR. NUMBER PE-2006002847 PROFESSIONAL ENGINEER STATE OF MISSOURI
8/20/09

DATE 8/20/09
ROUTE I-70 | STATE MO
DISTRICT 6 | SHEET NO. BR48
COUNTY St. Louis City - MO
JOB NO. J6I0984B
CONTRACT ID.
PROJECT NO.
BRIDGE NO. A6500

DESCRIPTION | DATE

MISSOURI HIGHWAYS AND TRANSPORTATION COMMISSION
105 WEST CAPITOL
JEFFERSON CITY, MO 65102
1-888-ASK-MODOT (1-888-275-6636)

HNTB
715 KIRK DRIVE
KANSAS CITY, MO 64105-1310
TELEPHONE: (816) 472-1201
CERTIFICATE OF AUTHORITY NO. 001270

REV.

Notes:
Concrete for prestressed girders shall be Class A-1 with f'c = 8000 psi and f'ci = 6500 psi.
(+) indicates prestressing strand.
Use 44 strands with an initial prestress force of 1933 kips.
Prestressing tendons shall be uncoated, seven-wire, low-relaxation strands, 0.6 inch diameter in accordance with AASHTO M 203, Grade 270. Pretensioned members shall be in accordance with Sec 1029.
For top flange cross-slope and step details and dimensions, see Sheet No. 60.

Girders shall be lifted by devices designed by the fabricator.
** At the contractor's option the location for bent-up strands may be varied from that shown. The total number of bent-up strands shall not be changed. One strand tie bar is required for each layer of bent-up strands except at abutments which require one bar on the bottom layer of strands only. No additional payment will be made if additional strand tie bars are required.
*** Girder top flange shall be steel troweled to a smooth finish for 8" at the edges, as shown. Bond breaker shall be applied to this region only. The center portion shall be rough finished by scarifying the surface transversely with a wire brush, and no laitance shall remain on the surface.

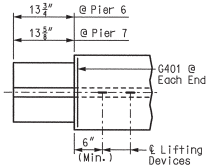

TOP FLANGE BLOCK-OUT DETAIL

Reinforcing Steel Notes:
Reinforcing steel shall conform to the requirements of AASHTO M 31, Grade 60. Welded Wire Reinforcement (WWR) shall conform to the requirements of AASHTO M 221.
All dimensions are out-to-out.
Hooks and bends shall be in accordance with the CRSI Manual of Standard Practice for Detailing Reinforced Concrete Structures, Stirrup and Tie Dimensions.
Minimum clearance to reinforcing shall be 1", unless otherwise shown.
Actual lengths are measured along centerline of bar to the nearest inch.

Notes:
Cost of 3/4" Ø coil tie rods placed in diaphragms will be considered completely covered by the contract unit price for Prestressed Concrete NU-Girder per linear foot.
Coil ties shall be held in place in the forms by slotted wire-setting-studs projecting through forms. Studs are to be left in place or replaced with temporary plugs until girders are erected, then replaced by coil tie rods.
For location of coil inserts at drainage scuppers, see Sheet No. 93.
For location of coil ties, see Sheet Nos. 72, 73 and 63.
The 1-1/2" Ø holes shall be cast in the web for steel intermediate diaphragms, see Sheet No. 63 for details.
Drilling is not allowed.
For details of diaphragms, see Sheet Nos. 72 and 73.
For Girder Camber Diagram, see Sheet No. 81.

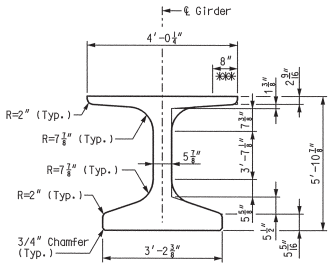

DIMENSIONS

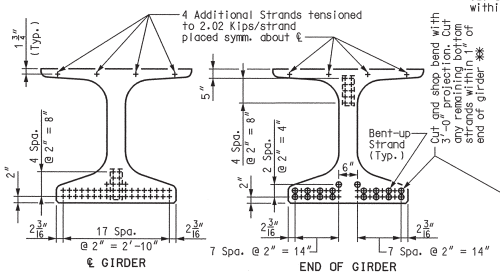

STRAND ARRANGEMENTS

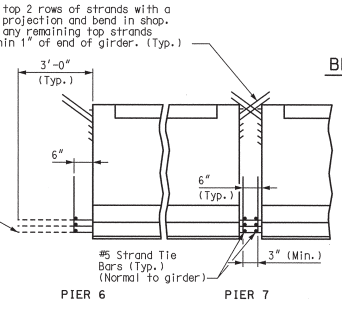

STRAND DETAILS AT GIRDER ENDS

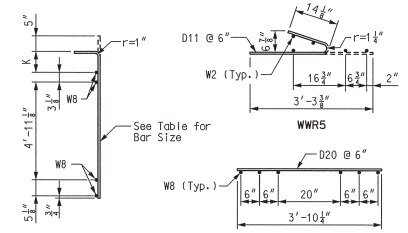

WELDED WIRED BENDING DIAGRAMS

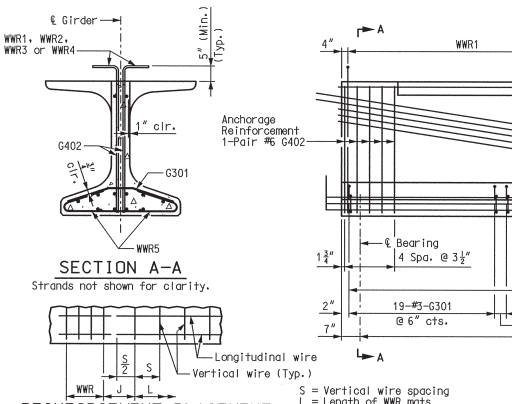

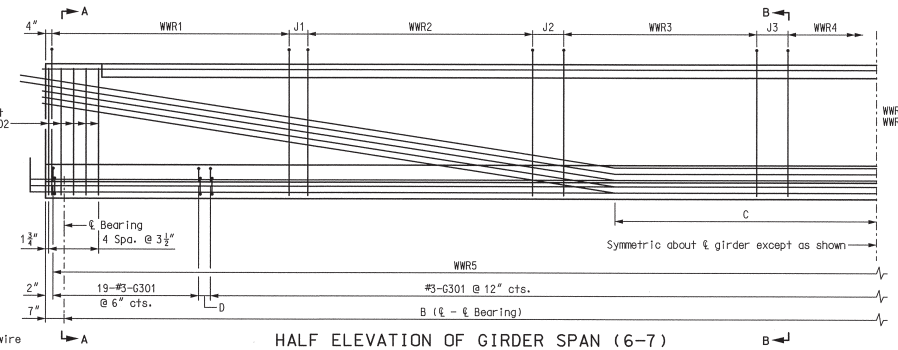

HALF ELEVATION OF GIRDER SPAN (6-7)

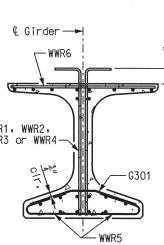

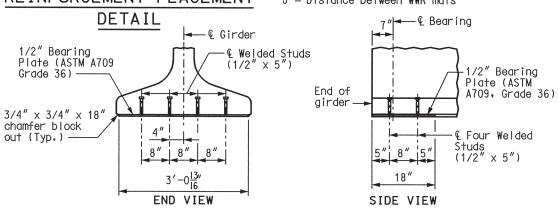

BEARING PLATE DETAILS

Galvanize the 1/2" bearing plate (ASTM A709 Grade 36) in accordance with ASTM A123.

Cost of furnishing, galvanizing, and installing the 1/2" bearing plate (ASTM A709 Grade 36) and welded studs in the prestressed girder will be considered completely covered by the contract unit price for Prestressed Concrete NU-Girder per linear foot.

BILL OF REINFORCING STEEL

GIRDER NO.	NO.	SIZE & MARK	ACTUAL LENGTH	SHAPE	BENDING DIAGRAM
1	148	3 G301	2'-11⅜"	15	
2-6	147	3 G301	2'-11⅜"	15	
7-8	146	3 G301	2'-11⅜"	15	
1-8	2	4 G401	3'-10¼"	20	
1-8	20	6 G402	5'-8"	20	

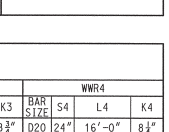

TABLE OF DIMENSIONS

Girder No.	B	C	D
1	126'-8⅞"	12'-9½"	3½"
2	126'-6¼"	12'-9¼"	8⅛"
3	126'-3⅝"	12'-9"	6⅞"
4	126'-1¼"	12'-8⅞"	5⅝"
5	125'-10⅞"	12'-8½"	4½"
6	125'-8⅝"	12'-8¼"	3¼"
7	125'-6⅜"	12'-8"	8⅛"
8	125'-3¾"	12'-7¾"	6⅞"

WELDED WIRE REINFORCEMENT
(WWR5 & WWR6 as shown in Welded Wired Bending Diagrams)

GIRDER No.	WWR1					WWR2					WWR3					WWR4				
	BAR SIZE	S1	L1	J1	K1	BAR SIZE	S2	L2	J2	K2	BAR SIZE	S3	L3	J3	K3	BAR SIZE	S4	L4	K4	
1	D20	6"	13'-0"	6"	10¾"	D20	12"	31'-0"	12"	10¾"	D20	18"	9'-0"	13½"	8¾"	D20	24"	16'-0"	8¼"	
2	D20	6"	13'-0"	6"	9¼"	D20	12"	31'-0"	12"	9¼"	D20	18"	9'-0"	12⅛"	8¼"	D20	24"	16'-0"	8¼"	
3	D20	6"	13'-0"	6"	8¼"	D20	12"	31'-0"	12"	8¼"	D20	18"	9'-0"	22⅞"	7¾"	D20	24"	14'-0"	7¾"	
4	D20	6"	13'-0"	6"	7¾"	D20	12"	31'-0"	12"	7¾"	D20	18"	9'-0"	21⅝"	7¾"	D20	24"	14'-0"	7¾"	
5	D20	6"	13'-0"	6"	8¼"	D20	12"	31'-0"	12"	7¾"	D20	18"	9'-0"	20¾"	7¾"	D20	24"	14'-0"	7¾"	
6	D20	6"	13'-0"	6"	8¾"	D20	12"	31'-0"	12"	8¾"	D20	18"	9'-0"	19¼"	8¾"	D20	24"	14'-0"	8¼"	
7	D20	6"	13'-0"	6"	9¼"	D20	12"	31'-0"	12"	9¼"	D20	18"	9'-0"	18⅛"	9¾"	D20	24"	14'-0"	9¾"	
8	D20	6"	13'-0"	6"	9¾"	D20	12"	31'-0"	12"	10¾"	D20	18"	9'-0"	16⅞"	11¾"	D20	24"	14'-0"	10¾"	

TYPE NU 70 P/S GIRDER - SPAN (6-7)
GIRDERS 1 THRU 8

Detailed JUL 2009
Checked JUL 2009

Note: This drawing is not to scale. Follow dimensions.

Sheet No. 49 of 125

LAWRENCE O. ROLWES, JR. NUMBER PE-2009020261 STATE OF MISSOURI REGISTERED PROFESSIONAL ENGINEER
8/20/09
DATE 8/20/09
ROUTE I-70 | STATE MO
DISTRICT 6 | SHEET NO. BR49
COUNTY St. Louis City - MO
JOB NO. J6I0984B
CONTRACT ID.
PROJECT NO.
BRIDGE NO. A6500
DESCRIPTION
DATE
MISSOURI HIGHWAYS AND TRANSPORTATION COMMISSION
105 WEST CAPITOL
P.O. BOX 270
JEFFERSON CITY, MO 65102
1-888-ASK-MODOT (1-888-275-6636)
MoDOT
HNTB
715 KIRK DRIVE
KANSAS CITY, MO 64105-1310
TELEPHONE (816) 472-1201
CERTIFICATE OF AUTHORITY NO. 001270
REV.

Notes:
Concrete for prestressed girders shall be Class A-1 with f'c = 8000 psi and f'ci = 6500 psi.
(+) Indicates prestressing strand.
Use 48 strands with an initial prestress force of 2109 kips.
Prestressing tendons shall be uncoated, seven-wire, low-relaxation strands, 0.6 inch diameter in accordance with AASHTO M 203, Grade 270. Pretensioned members shall be in accordance with Sec 1029.
For top flange cross-slope and step details and dimensions, see Sheet No. 60.

Girders shall be lifted by devices designed by the fabricator.
** At the contractor's option the location for bent-up strands may be varied from that shown. The total number of bent-up strands shall not be changed. One strand tie bar is required for each layer of bent-up strands except at abutments which require one bar on the bottom layer of strands only. No additional payment will be made if additional strand tie bars are required.
*** Girder top flange shall be steel troweled to a smooth finish for 8" at the edges, as shown. Bond breaker shall be applied to this region only. The center portion shall be rough finished by scarifying the surface transversely with a wire brush, and no laitance shall remain on the surface.

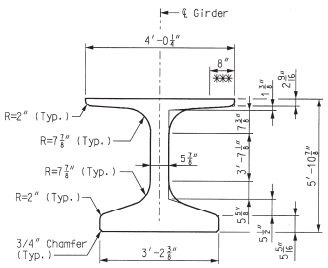

DIMENSIONS

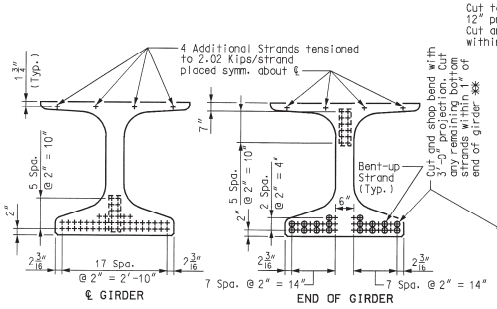

STRAND ARRANGEMENTS

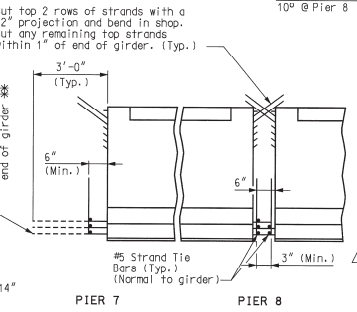

STRAND DETAILS AT GIRDER ENDS

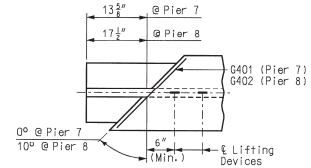

ALL GIRDERS (PIER 7)
GIRDER 2 (PIER 8)

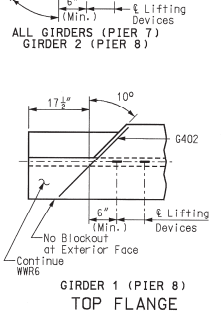

GIRDER 1 (PIER 8)
TOP FLANGE BLOCK-OUT DETAILS

Reinforcing Steel Notes:
Reinforcing steel shall conform to the requirements of AASHTO M 31, Grade 60. Welded Wire Reinforcement (WWR) shall conform to the requirements of AASHTO M 221.
All dimensions are out-to-out.
Hooks and bends shall be in accordance with the CRSI Manual of Standard Practice for Detailing Reinforced Concrete Structures, Stirrup and Tie Dimensions.
Minimum clearance to reinforcing shall be 1", unless otherwise shown.
Actual lengths are measured along centerline of bar to the nearest inch.

Notes:
Cost of 3/4" Ø coil tie rods placed in diaphragms will be considered completely covered by the contract unit price for Prestressed Concrete NU-Girder per linear foot.
Coil ties shall be held in place in the forms by slotted wire-setting-studs projecting through forms. Studs are to be left in place or replaced with temporary plugs until girders are erected, then replaced by coil tie rods.
For location of coil inserts at drainage scuppers, see Sheet No. 93.
For location of coil ties, see Sheet Nos. 73, 74 and 63.
The 1-1/2" Ø holes shall be cast in the web for steel intermediate diaphragms, see Sheet No. 63 for details.
Drilling is not allowed.
For details of diaphragms, see Sheet Nos. 73 and 74.
For Girder Camber Diagram, see Sheet No. 81.

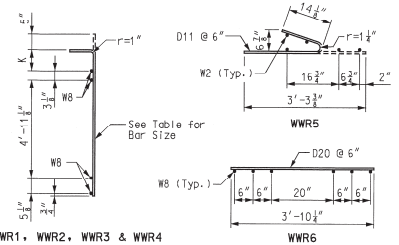

WELDED WIRED BENDING DIAGRAMS

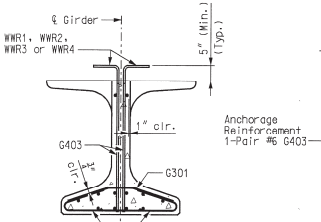

SECTION A-A
Strands not shown for clarity.

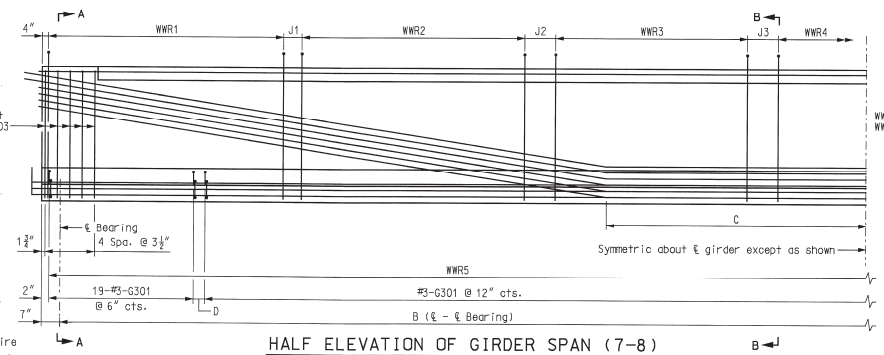

HALF ELEVATION OF GIRDER SPAN (7-8)

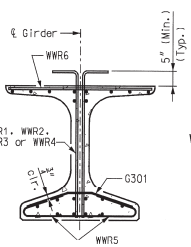

SECTION B-B
Strands not shown for clarity.

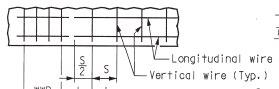

REINFORCEMENT PLACEMENT DETAIL

S = Vertical wire spacing
L = Length of WWR mats
J = Distance between WWR mats

BILL OF REINFORCING STEEL					
GIRDER NO.	NO.	SIZE & MARK	ACTUAL LENGTH	SHAPE	BENDING DIAGRAM
1	155	3 G301	2'-11⅜"	15	
2	153	3 G301	2'-11⅜"	15	
1-2	1	4 G401	3'-10¼"	20	
1-2	1	4 G402	3'-11"	20	
1-2	20	6 G403	5'-8"	20	

SHAPE 15
SHAPE 20

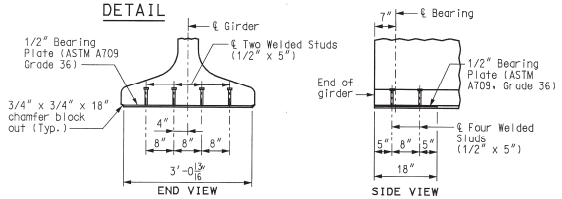

BEARING PLATE DETAILS

Galvanize the 1/2" bearing plate (ASTM A709 Grade 36) in accordance with ASTM A123.

Cost of furnishing, galvanizing, and installing the 1/2" bearing plate (ASTM A709 Grade 36) and welded studs in the prestressed girder will be considered completely covered by the contract unit price for Prestressed Concrete NU-Girder per linear foot.

TABLE OF DIMENSIONS			
Girder No.	B	C	D
1	133'-11¾"	6'-9"	4⅞"
2	131'-7⅛"	6'-7⅝"	2½"

WELDED WIRE REINFORCEMENT
(WWR5 & WWR6 as shown in Welded Wired Bending Diagrams)

GIRDER No.	WWR1					WWR2					WWR3					WWR4				
	BAR SIZE	S1	L1	J1	K1	BAR SIZE	S2	L2	J2	K2	BAR SIZE	S3	L3	J3	K3	BAR SIZE	S4	L4	K4	
1	D20	6"	11'-6"	6"	8¼"	D20	12"	14'-0"	12"	7¾"	D20	18"	19'-6"	20⅞"	7¾"	D20	24"	38'-0"	7¾"	
2	D20	6"	13'-6"	6"	7⅜"	D20	12"	30'-0"	12"	7¾"	D20	18"	9'-0"	12½"	7¾"	D20	24"	22'-0"	7¾"	

TYPE NU 70 P/S GIRDER - SPAN (7-8)
GIRDERS 1 AND 2

Detailed OCT 2009
Checked OCT 2009

Note: This drawing is not to scale. Follow dimensions.

LAWRENCE D. ROLMES NUMBER E-24760 PROFESSIONAL ENGINEER
8/9/09
HNTB
715 KIRK DRIVE
KANSAS CITY, MO 64105-1310
TELEPHONE (816) 472-1201
CERTIFICATE OF AUTHORITY NO. 001270

DATE 8/20/09
ROUTE I-70
STATE MO
DISTRICT 6
SHEET NO. BR50
COUNTY St. Louis City - MO
JOB NO. J6I0984B
CONTRACT ID.
PROJECT NO.
BRIDGE NO. A6500

DESCRIPTION | DATE

MISSOURI HIGHWAYS AND TRANSPORTATION COMMISSION
105 WEST CAPITOL
JEFFERSON CITY, MO 65102
1-888-ASK-MODOT (1-888-275-6636)

NOT FOR CONSTRUCTION
11-06-08

REV.

Notes:
Concrete for prestressed girders shall be Class A-1 with f'c = 8000 psi and f'ci = 6500 psi.
(+) indicates prestressing strand.
Use 44 strands with an initial prestress force of 1933 kips.
Prestressing tendons shall be uncoated, seven-wire, low-relaxation strands, 0.6 inch diameter in accordance with AASHTO M 203, Grade 270. Pretensioned members shall be in accordance with Sec 1029.
For top flange cross-slope and step details and dimensions, see Sheet No. 60.

Girders shall be lifted by devices designed by the fabricator.
** At the contractor's option the location for bent-up strands may be varied from that shown. The total number of bent-up strands shall not be changed. One strand tie bar is required for each layer of bent-up strands except at abutments which require one bar on the bottom layer of strands only. No additional payment will be made if additional strand tie bars are required.
*** Girder top flange shall be steel troweled to a smooth finish for 8" at the edges, as shown. Bond breaker shall be applied to this region only. The center portion shall be rough finished by scarifying the surface transversely with a wire brush, and no laitance shall remain on the surface.

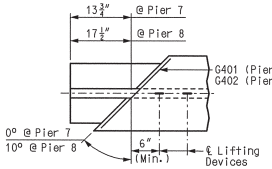

TOP FLANGE BLOCK-OUT DETAIL

Reinforcing Steel Notes:
Reinforcing steel shall conform to the requirements of AASHTO M 31, Grade 60. Welded Wire Reinforcement (WWR) shall conform to the requirements of AASHTO M 221.
All dimensions are out-to-out.
Hooks and bends shall be in accordance with the CRSI Manual of Standard Practice for Detailing Reinforced Concrete Structures, Stirrup and Tie Dimensions.
Minimum clearance to reinforcing shall be 1", unless otherwise shown.
Actual lengths are measured along centerline of bar to the nearest inch.

Notes:
Cost of 3/4" Ø coil tie rods placed in diaphragms will be considered completely covered by the contract unit price for Prestressed Concrete NU-Girder per linear foot.
Coil ties shall be held in place in the forms by slotted wire-setting-studs projecting through forms. Studs are to be left in place or replaced with temporary plugs until girders are erected, then replaced by coil tie rods.
For location of coil inserts at drainage scuppers, see Sheet No. 93.
For location of coil ties, see Sheet Nos. 73, 74 and 63.
The 1-1/2" Ø holes shall be cast in the web for steel intermediate diaphragms, see Sheet No. 63 for details.
Drilling is not allowed.
For details of diaphragms, see Sheet Nos. 73 and 74.
For Girder Camber Diagram, see Sheet No. 81.

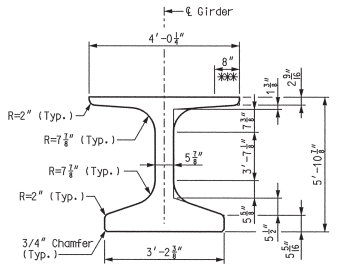

DIMENSIONS

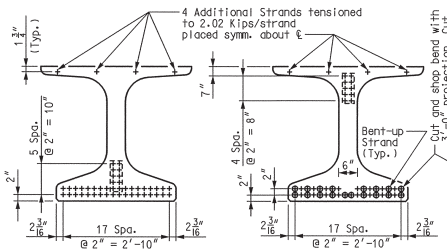

STRAND ARRANGEMENTS

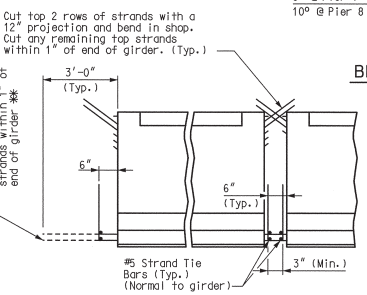

STRAND DETAILS AT GIRDER ENDS

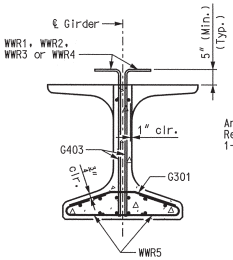

SECTION A-A
Strands not shown for clarity.

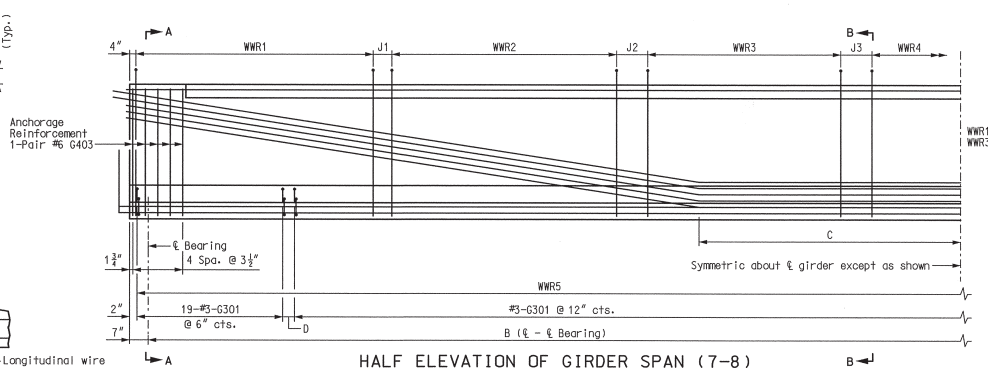

HALF ELEVATION OF GIRDER SPAN (7-8)

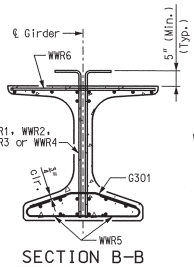

SECTION B-B
Strands not shown for clarity.

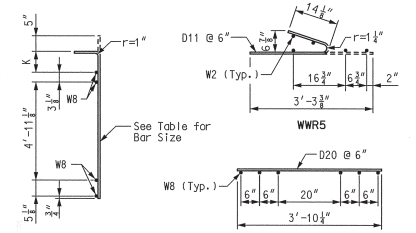

WELDED WIRED BENDING DIAGRAMS

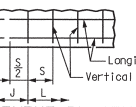

REINFORCEMENT PLACEMENT DETAIL

S = Vertical wire spacing
L = Length of WWR mats
J = Distance between WWR mats

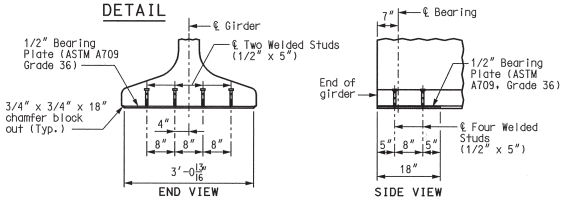

BEARING PLATE DETAILS

Galvanize the 1/2" bearing plate (ASTM A709 Grade 36) in accordance with ASTM A123.

Cost of furnishing, galvanizing, and installing the 1/2" bearing plate (ASTM A709 Grade 36) and welded studs in the prestressed girder will be considered completely covered by the contract unit price for Prestressed Concrete NU-Girder per linear foot.

TABLE OF DIMENSIONS			
Girder No.	B	C	D
3	129'-2½"	13'-0½"	6¼"
4	126'-10"	12'-9⅜"	4"

BILL OF REINFORCING STEEL					
GIRDER NO.	NO.	SIZE & MARK	ACTUAL LENGTH	SHAPE	BENDING DIAGRAM
3	150	3 G301	2'-11⅜"	15	
4	148	3 G301	2'-11⅜"	15	
3-4	1	4 G401	3'-10½"	20	
3-4	1	4 G402	3'-11"	20	
3-4	20	6 G403	5'-8"	20	

SHAPE 15
SHAPE 20

WELDED WIRE REINFORCEMENT (WWR5 & WWR6 as shown in Welded Wired Bending Diagrams)																				
GIRDER No.	WWR1					WWR2					WWR3					WWR4				
	BAR SIZE	S1	L1	J1	K1	BAR SIZE	S2	L2	J2	K2	BAR SIZE	S3	L3	J3	K3	BAR SIZE	S4	L4	K4	
3	D20	6"	12'-6"	6"	8¼"	D20	12"	32'-0"	12"	7¾"	D20	18"	7'-6"	16¼"	7¾"	D20	24"	20'-0"	7¾"	
4	D20	6"	12'-6"	6"	8¾"	D20	12"	32'-0"	12"	7¾"	D20	18"	7'-6"	14"	7¾"	D20	24"	18'-0"	7¾"	

TYPE NU 70 P/S GIRDER - SPAN (7-8)
GIRDERS 3 AND 4

Detailed JUL 2009
Checked JUL 2009

Note: This drawing is not to scale. Follow dimensions.

Sheet No. 51 of 125

\\slsw00\Jobs\46440\Techprod\Bridges\MO-Approach\Drawings\Baseline Drawings\B_A6500_051-125_J6I0984B_051.dgn

18-AUG-2009 10:25

LAWRENCE G. ROLWES NUMBER PE-2006002847 STATE OF MISSOURI PROFESSIONAL ENGINEER
8/20/09

DATE 8/20/09
ROUTE I-70 | STATE MO
DISTRICT 6 | SHEET NO. BR51
COUNTY St. Louis City - MO
JOB NO. J6I0984B
CONTRACT ID.
PROJECT NO.
BRIDGE NO. A6500

DESCRIPTION | DATE

MISSOURI HIGHWAYS AND TRANSPORTATION COMMISSION
105 WEST CAPITOL
JEFFERSON CITY, MO 65102
1-888-ASK-MODOT (1-888-275-6636)

HNTB
715 KIRK DRIVE
KANSAS CITY, MO 64105-1310
TELEPHONE (816) 472-1201
CERTIFICATE OF AUTHORITY NO. 001270

REV.

Notes:
Concrete for prestressed girders shall be Class A-1 with f'c = 8000 psi and f'ci = 6500 psi.
(+) indicates prestressing strand.
Use 42 strands with an initial prestress force of 1846 kips.
Prestressing tendons shall be uncoated, seven-wire, low-relaxation strands, 0.6 inch diameter in accordance with AASHTO M 203, Grade 270. Pretensioned members shall be in accordance with Sec 1029.
For top flange cross-slope and step details and dimensions, see Sheet No. 60.

Girders shall be lifted by devices designed by the fabricator.
** At the contractor's option the location for bent-up strands may be varied from that shown. The total number of bent-up strands shall not be changed. One strand tie bar is required for each layer of bent-up strands except at abutments which require one bar on the bottom layer of strands only. No additional payment will be made if additional strand tie bars are required.
*** Girder top flange shall be steel troweled to a smooth finish for 8" at the edges, as shown. Bond breaker shall be applied to this region only. The center portion shall be rough finished by scarifying the surface transversely with a wire brush, and no laitance shall remain on the surface.

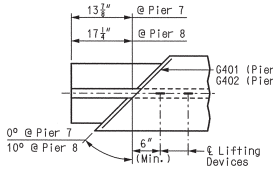

TOP FLANGE BLOCK-OUT DETAIL

Reinforcing Steel Notes:
Reinforcing steel shall conform to the requirements of AASHTO M 31, Grade 60. Welded Wire Reinforcement (WWR) shall conform to the requirements of AASHTO M 221.
All dimensions are out-to-out.
Hooks and bends shall be in accordance with the CRSI Manual of Standard Practice for Detailing Reinforced Concrete Structures, Stirrup and Tie Dimensions.
Minimum clearance to reinforcing shall be 1", unless otherwise shown.
Actual lengths are measured along centerline of bar to the nearest inch.

Notes:
Cost of 3/4" Ø coil tie rods placed in diaphragms will be considered completely covered by the contract unit price for Prestressed Concrete NU-Girder per linear foot.
Coil ties shall be held in place in the forms by slotted wire-setting-studs projecting through forms. Studs are to be left in place or replaced with temporary plugs until girders are erected, then replaced by coil tie rods.
For location of coil inserts at drainage scuppers, see Sheet No. 93.
For location of coil ties, see Sheet Nos. 73, 74 and 63.
The 1-1/2" Ø holes shall be cast in the web for steel intermediate diaphragms, see Sheet No. 63 for details.
Drilling is not allowed.
For details of diaphragms, see Sheet Nos. 73 and 74.
For Girder Camber Diagram, see Sheet No. 81.

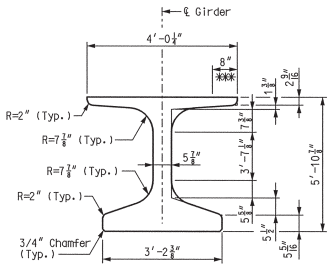

DIMENSIONS

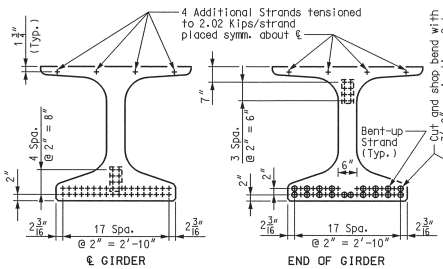

STRAND ARRANGEMENTS

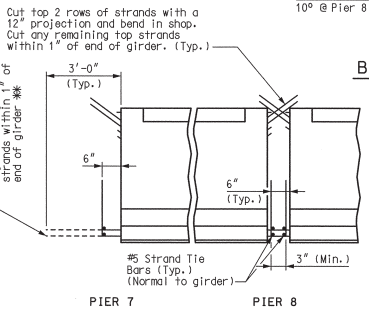

STRAND DETAILS AT GIRDER ENDS

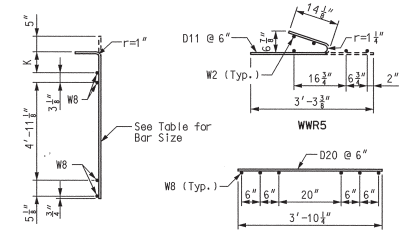

WELDED WIRED BENDING DIAGRAMS

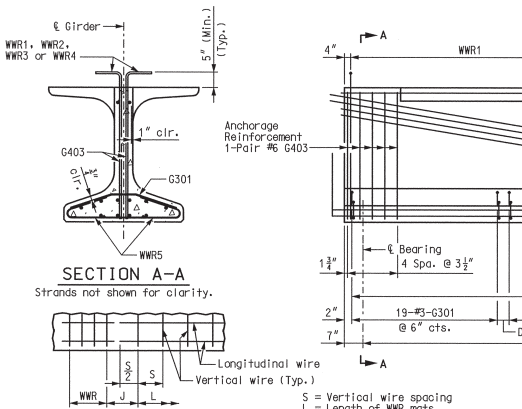

HALF ELEVATION OF GIRDER SPAN (7-8)

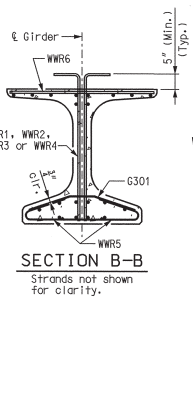

BILL OF REINFORCING STEEL					
GIRDER NO.	NO.	SIZE & MARK	ACTUAL LENGTH	SHAPE	BENDING DIAGRAM
5	145	3 G301	2'-11⅜"	15	
6	143	3 G301	2'-11⅜"	15	
5-6	1	4 G401	3'-10½"	20	
5-6	1	4 G402	3'-11"	20	
5-6	20	6 G403	5'-8"	20	

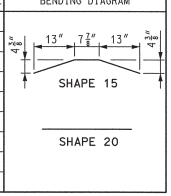

TABLE OF DIMENSIONS			
Girder No.	B	C	D
5	124'-5⅜"	12'-6¾"	7¾"
6	122'-0⅞"	12'-3⅞"	5½"

WELDED WIRE REINFORCEMENT (WWR5 & WWR6 as shown in Welded Wired Bending Diagrams)																				
GIRDER No.	WWR1					WWR2					WWR3					WWR4				
	BAR SIZE	S1	L1	J1	K1	BAR SIZE	S2	L2	J2	K2	BAR SIZE	S3	L3	J3	K3	BAR SIZE	S4	L4	K4
5	D20	5"	12'-6"	6"	9¼"	D20	12"	31'-0"	12"	8¾"	D20	18"	7'-6"	23¾"	7¾"	D20	24"	16'-0"	7¾"
6	D20	5"	12'-6"	6"	9¼"	D20	12"	31'-0"	12"	8¼"	D20	18"	7'-6"	21½"	7¾"	D20	24"	14'-0"	7¾"

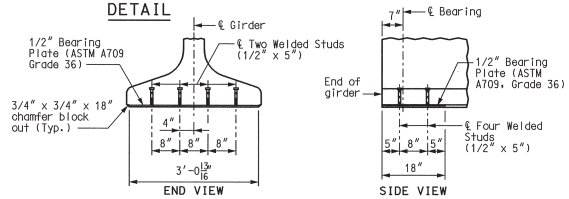

BEARING PLATE DETAILS

Galvanize the 1/2" bearing plate (ASTM A709 Grade 36) in accordance with ASTM A123.

Cost of furnishing, galvanizing, and installing the 1/2" bearing plate (ASTM A709 Grade 36) and welded studs in the prestressed girder will be considered completely covered by the contract unit price for Prestressed Concrete NU-Girder per linear foot.

TYPE NU 70 P/S GIRDER - SPAN (7-8)
GIRDERS 5 AND 6

Detailed JUL 2009
Checked JUL 2009

Note: This drawing is not to scale. Follow dimensions.

Sheet No. 52 of 125

LAWRENCE E. ROLWES NUMBER E-24220 PROFESSIONAL ENGINEER
8/20/09

DATE	8/20/09
ROUTE	I-70
STATE	MO
DISTRICT	6
SHEET NO.	BR52
COUNTY	St. Louis City - MO
JOB NO.	J6I0984B
CONTRACT ID.	
PROJECT NO.	
BRIDGE NO.	A6500

DESCRIPTION | DATE

MISSOURI HIGHWAYS AND TRANSPORTATION COMMISSION
105 WEST CAPITOL
JEFFERSON CITY, MO 65102
1-888-ASK-MODOT (1-888-275-6636)
MoDOT
HNTB
715 KIRK DRIVE
KANSAS CITY, MO 64105-1310
TELEPHONE (816) 472-1201
CERTIFICATE OF AUTHORITY NO. 001270

REV.

Notes:
Concrete for prestressed girders shall be Class A-1 with f'c = 8000 psi and f'ci = 6500 psi.
(+) indicates prestressing strand.
Use 40 strands with an initial prestress force of 1758 kips.
Prestressing tendons shall be uncoated, seven-wire, low-relaxation strands, 0.6 inch diameter in accordance with AASHTO M 203, Grade 270. Pretensioned members shall be in accordance with Sec 1029.
For top flange cross-slope and step details and dimensions, see Sheet No. 60.

Girders shall be lifted by devices designed by the fabricator.
** At the contractor's option the location for bent-up strands may be varied from that shown. The total number of bent-up strands shall not be changed. One strand tie bar is required for each layer of bent-up strands except at abutments which require one bar on the bottom layer of strands only. No additional payment will be made if additional strand tie bars are required.
*** Girder top flange shall be steel troweled to a smooth finish for 8" at the edges, as shown. Bond breaker shall be applied to this region only. The center portion shall be rough finished by scarifying the surface transversely with a wire brush, and no laitance shall remain on the surface.

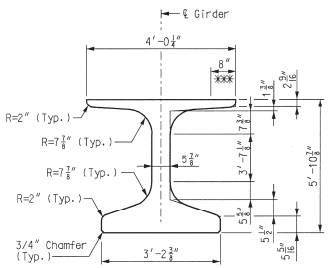

DIMENSIONS

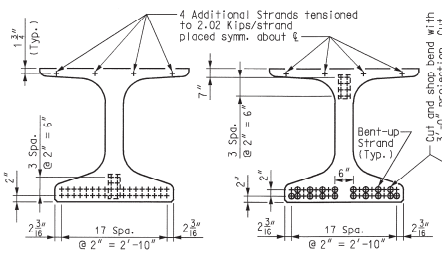

STRAND ARRANGEMENTS

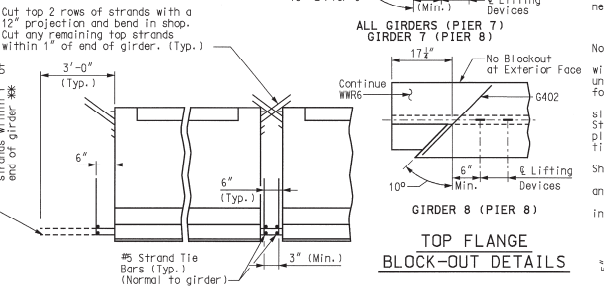

STRAND DETAILS AT GIRDER ENDS

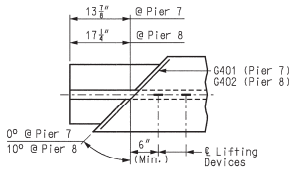

ALL GIRDERS (PIER 7) GIRDER 7 (PIER 8)

GIRDER 8 (PIER 8)

TOP FLANGE BLOCK-OUT DETAILS

Reinforcing Steel Notes:
Reinforcing steel shall conform to the requirements of AASHTO M 31, Grade 60. Welded Wire Reinforcement (WWR) shall conform to the requirements of AASHTO M 221.
All dimensions are out-to-out.
Hooks and bends shall be in accordance with the CRSI Manual of Standard Practice for Detailing Reinforced Concrete Structures, Stirrup and Tie Dimensions.
Minimum clearance to reinforcing shall be 1", unless otherwise shown.
Actual lengths are measured along centerline of bar to the nearest inch.

Notes:
Cost of 3/4" Ø coil tie rods placed in diaphragms will be considered completely covered by the contract unit price for Prestressed Concrete NU-Girder per linear foot.
Coil ties shall be held in place in the forms by slotted wire-setting-studs projecting through forms. Studs are to be left in place or replaced with temporary plugs until girders are erected, then replaced by coil tie rods.
For location of coil inserts at drainage scuppers, see Sheet No. 93.
For location of coil ties, see Sheet Nos. 73, 74 and 63.
The 1-1/2" Ø holes shall be cast in the web for steel intermediate diaphragms, see Sheet No. 63 for details.
Drilling is not allowed.
For details of diaphragms, see Sheet Nos. 73 and 74.
For Girder Camber Diagram, see Sheet No. 81.

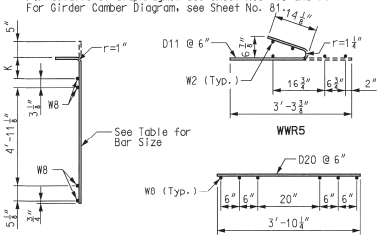

WWR1, WWR2, WWR3 & WWR4

WELDED WIRED BENDING DIAGRAMS

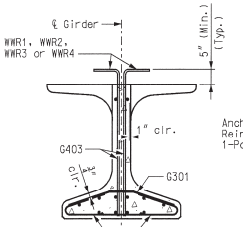

SECTION A-A
Strands not shown for clarity.

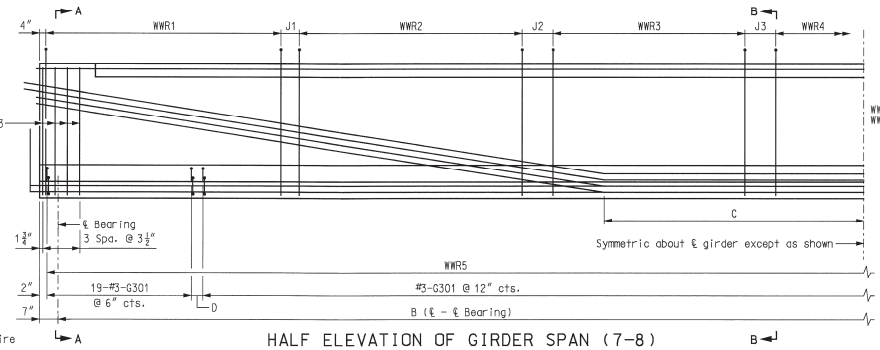

HALF ELEVATION OF GIRDER SPAN (7-8)

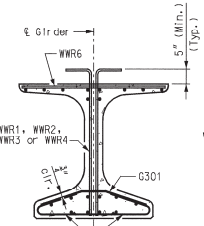

SECTION B-B
Strands not shown for clarity.

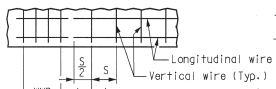

REINFORCEMENT PLACEMENT DETAIL

S = Vertical wire spacing
L = Length of WWR mats
J = Distance between WWR mats

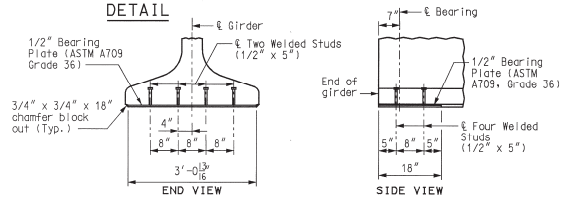

BEARING PLATE DETAILS

Galvanize the 1/2" bearing plate (ASTM A709 Grade 36) in accordance with ASTM A123.

Cost of furnishing, galvanizing, and installing the 1/2" bearing plate (ASTM A709 Grade 36) and welded studs in the prestressed girder will be considered completely covered by the contract unit price for Prestressed Concrete NU-Girder per linear foot.

BILL OF REINFORCING STEEL

GIRDER NO.	NO.	SIZE & MARK	ACTUAL LENGTH	SHAPE	BENDING DIAGRAM
7	141	3 G301	2'-11⅜"	15	
8	138	3 G301	2'-11⅜"	15	
7-8	1	4 G401	3'-10¼"	20	
7-8	1	4 G402	3'-11"	20	
7-8	16	6 G403	5'-8"	20	

SHAPE 15
SHAPE 20

TABLE OF DIMENSIONS

Girder No.	B	C	D
7	119'-8⅜"	12'-1"	7¼"
8	117'-3¾"	11'-10⅛"	6⅞"

WELDED WIRE REINFORCEMENT
(WWR5 & WWR6 as shown in Welded Wired Bending Diagrams)

GIRDER No.	WWR1					WWR2					WWR3					WWR4			
	BAR SIZE	S1	L1	J1	K1	BAR SIZE	S2	L2	J2	K2	BAR SIZE	S3	L3	J3	K3	BAR SIZE	S4	L4	K4
7	D20	6"	12'-0"	6"	9¾"	D20	12"	29'-0"	12"	8¾"	D20	18"	7'-6"	13¼"	7¾"	D20	24"	18'-0"	7¾"
8	D20	6"	10'-0"	6"	9¾"	D20	12"	8'-0"	12"	8¾"	D20	18"	21'-0"	16⅝"	7¾"	D20	24"	34'-0"	7¾"

TYPE NU 70 P/S GIRDER - SPAN (7-8)
GIRDERS 7 AND 8

Detailed OCT 2009
Checked OCT 2009

Note: This drawing is not to scale. Follow dimensions.

\\stlw00\pmwork\jobs\46440\Techprod\Bridges\MO-Approach\Drawings\Baseline Drawings\B_A6500_053-125_J6I0984B_053.dgn
09-DEC-2009 06:40

STATE OF MISSOURI
DAVID W. ROLWES
NUMBER PE-2007060284
DESIGNED BY
DRAWN BY
CHECKED BY

12/3/09
DATE
8/20/09
ROUTE I-70
STATE MO
DISTRICT 6
SHEET NO. BR53
COUNTY St. Louis City - MO
JOB NO. J6I0984B
CONTRACT ID.
PROJECT NO.
BRIDGE NO. A6500

DESCRIPTION
DATE
REV.

MISSOURI HIGHWAYS AND TRANSPORTATION COMMISSION
105 WEST CAPITOL
JEFFERSON CITY, MO 65102
1-888-ASK-MODOT (1-888-275-6636)
MoDOT

HNTB
715 KIRK DRIVE
KANSAS CITY, MO 64105-5170
816.483.1600 FAX 816.472.3720
CERTIFICATE OF AUTHORITY NO. 001270

NOT FOR CONSTRUCTION
11-06-09

Notes:
Concrete for prestressed girders shall be Class A-1 with f'c = 8000 psi and f'ci = 6500 psi.
(+) indicates prestressing strand.
Use 38 strands with an initial prestress force of 1670 kips.
Prestressing tendons shall be uncoated, seven-wire, low-relaxation strands, 0.6 inch diameter in accordance with AASHTO M 203, Grade 270. Pretensioned members shall be in accordance with Sec 1029.
For top flange cross-slope and step details and dimensions, see Sheet No. 61.

Girders shall be lifted by devices designed by the fabricator.
** At the contractor's option the location for bent-up strands may be varied from that shown. The total number of bent-up strands shall not be changed. One strand tie bar is required for each layer of bent-up strands except at abutments which require one bar on the bottom layer of strands only. No additional payment will be made if additional strand tie bars are required.
*** Girder top flange shall be steel troweled to a smooth finish for 8" at the edges, as shown. Bond breaker shall be applied to this region only. The center portion shall be rough finished by scarifying the surface transversely with a wire brush, and no laitance shall remain on the surface.

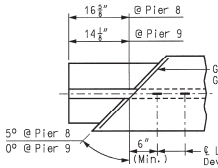

INTERIOR GIRDERS (PIER 8)
ALL GIRDERS (PIER 9)

Reinforcing Steel Notes:
Reinforcing steel shall conform to the requirements of AASHTO M 31, Grade 60. Welded Wire Reinforcement (WWR) shall conform to the requirements of AASHTO M 221.
All dimensions are out-to-out.
Hooks and bends shall be in accordance with the CRSI Manual of Standard Practice for Detailing Reinforced Concrete Structures, Stirrup and Tie Dimensions.
Minimum clearance to reinforcing shall be 1", unless otherwise shown.
Actual lengths are measured along centerline of bar to the nearest inch.

Notes:
Cost of 3/4" Ø coil tie rods placed in diaphragms will be considered completely covered by the contract unit price for Prestressed Concrete NU-Girder per linear foot.
Coil ties shall be held in place in the forms by slotted wire-setting-studs projecting through forms. Studs are to be left in place or replaced with temporary plugs until girders are erected, then replaced by coil tie rods.
For location of coil inserts at drainage scuppers, see Sheet No. 93.
For location of coil ties, see Sheet Nos. 74, 75 and 63.
The 1-1/2" Ø holes shall be cast in the web for steel intermediate diaphragms, see Sheet No. 63 for details.
Drilling is not allowed.
For details of diaphragms, see Sheet Nos. 74 and 75.
For Girder Camber Diagram, see Sheet No. 81.

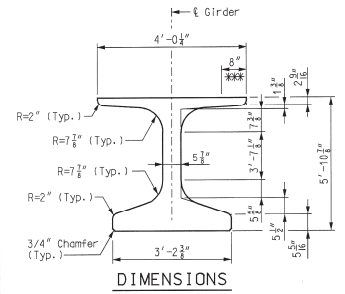

DIMENSIONS

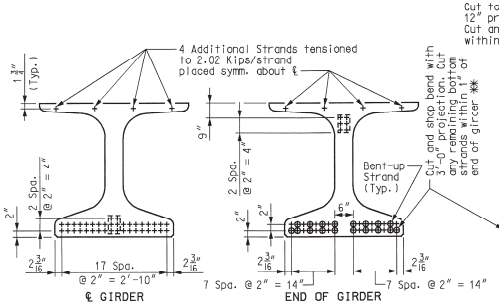

STRAND ARRANGEMENTS

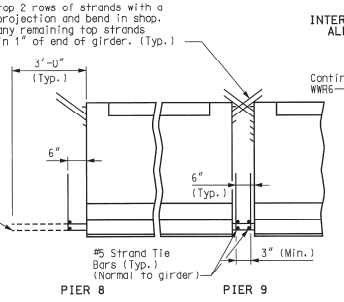

STRAND DETAILS AT GIRDER ENDS

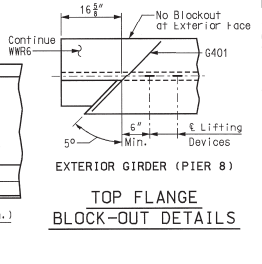

TOP FLANGE BLOCK-OUT DETAILS

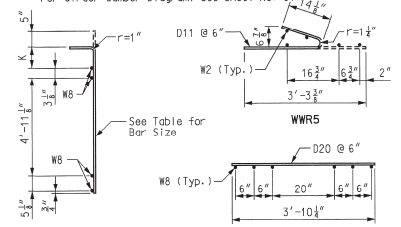

WELDED WIRED BENDING DIAGRAMS

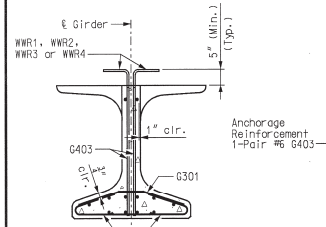

SECTION A-A
Strands not shown for clarity.

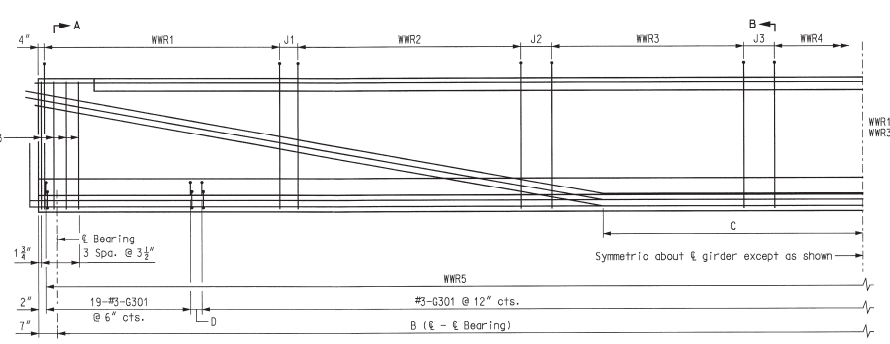

HALF ELEVATION OF GIRDER SPAN (8-9)

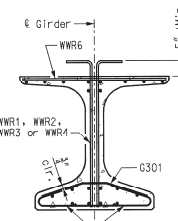

SECTION B-B
Strands not shown for clarity.

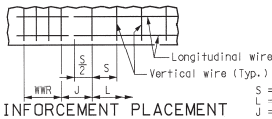

REINFORCEMENT PLACEMENT DETAIL
S = Vertical wire spacing
L = Length of WWR mats
J = Distance between WWR mats

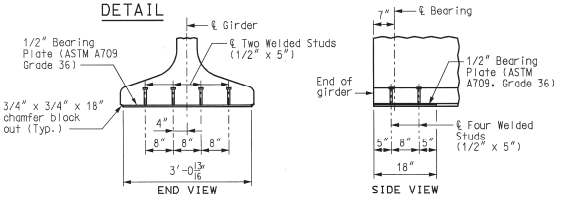

BEARING PLATE DETAILS

Galvanize the 1/2" bearing plate (ASTM A709 Grade 36) in accordance with ASTM A123.

Cost of furnishing, galvanizing, and installing the 1/2" bearing plate (ASTM A709 Grade 36) and welded studs in the prestressed girder will be considered completely covered by the contract unit price for Prestressed Concrete NU-Girder per linear foot.

TABLE OF DIMENSIONS			
Girder No.	B	C	D
1	117'-7¼"	11'-10½"	2⅝"
2	118'-11⅛"	12'-0⅛"	4⅝"
3	120'-3"	12'-1¾"	6½"
4	121'-6⅜"	12'-3⅛"	8½"

BILL OF REINFORCING STEEL					
GIRDER NO.	NO.	SIZE & MARK	ACTUAL LENGTH	SHAPE	BENDING DIAGRAM
1	139	3 G301	2'-11⅜"	15	
2	140	3 G301	2'-11⅜"	15	
3	141	3 G301	2'-11⅜"	15	
4	142	3 G301	2'-11⅜"	15	
1-4	1	4 G401	3'-10⅜"	20	
1-4	1	4 G402	3'-10¼"	20	
1-4	16	6 G403	5'-8"	20	

4¾" 13" 7½" 13" 3⅜"
SHAPE 15
SHAPE 20

WELDED WIRE REINFORCEMENT (WWR5 & WWR6 as shown in Welded Wired Bending Diagrams)																				
GIRDER No.	WWR1					WWR2					WWR3					WWR4				
	BAR SIZE	S1	L1	J1	K1	BAR SIZE	S2	L2	J2	K2	BAR SIZE	S3	L3	J3	K3	BAR SIZE	S4	L4	K4	
1	D20	6"	17'-0"	6"	11¾"	D20	12"	5'-0"	12"	10¼"	D20	18"	18'-0"	18⅝"	8¾"	D20	24"	32'-0"	8¼"	
2	D20	6"	11'-6"	6"	10¼"	D20	12"	28'-0"	12"	9¼"	D20	18"	7'-6"	14⅝"	7¾"	D20	24"	20'-0"	7¾"	
3	D20	6"	12'-6"	6"	10¼"	D20	12"	30'-0"	12"	9¼"	D20	18"	7'-6"	22½"	7¾"	D20	24"	14'-0"	7¾"	
4	D20	6"	12'-6"	6"	8¾"	D20	12"	30'-0"	12"	8¼"	D20	18"	7'-6"	18½"	7¾"	D20	24"	16'-0"	7¾"	

TYPE NU 70 P/S GIRDER - SPAN (8-9)
GIRDERS 1 THRU 4

Detailed OCT 2009
Checked OCT 2009

Note: This drawing is not to scale. Follow dimensions.

\\stlw00\pmwork\jobs\46440\Techprod\Bridges\MO-Approach\Drawings\Baseline Drawings\B_A6500_054-125_J610984B_054.dgn
09-DEC-2009 06:41

LAWRENCE D. ROLWES
NUMBER 2006020947
PROFESSIONAL ENGINEER
STATE OF MISSOURI

12/9/09

DATE 8/20/09
ROUTE I-70
STATE MO
DISTRICT 6
SHEET NO. BR54
COUNTY St. Louis City - MO
JOB NO. J610984B
CONTRACT ID.
PROJECT NO.
BRIDGE NO. A6500

DESCRIPTION
DATE
REV.

MISSOURI HIGHWAYS AND TRANSPORTATION COMMISSION
105 WEST CAPITOL
JEFFERSON CITY, MO 65102
1-888-ASK-MODOT (1-888-275-6636)
HNTB
115 KIRK DRIVE
KANSAS CITY, MO 64105-1310
TELEPHONE (816) 472-1201
CERTIFICATE OF AUTHORITY NO. 001270

NOT FOR CONSTRUCTION
11-06-09

Notes:
Concrete for prestressed girders shall be Class A-1 with f'c = 8000 psi and f'ci = 6500 psi.
(+) indicates prestressing strand.
Use 40 strands with an initial prestress force of 1758 kips.
Prestressing tendons shall be uncoated, seven-wire, low-relaxation strands, 0.6 inch diameter in accordance with AASHTO M 203, Grade 270. Pretensioned members shall be in accordance with Sec 1029.
For top flange cross-slope and step details and dimensions, see Sheet No. 61.

Girders shall be lifted by devices designed by the fabricator.
** At the contractor's option the location for bent-up strands may be varied from that shown. The total number of bent-up strands shall not be changed. One strand tie bar is required for each layer of bent-up strands except at abutments which require one bar on the bottom layer of strands only. No additional payment will be made if additional strand tie bars are required.
*** Girder top flange shall be steel troweled to a smooth finish for 8" at the edges, as shown. Bond breaker shall be applied to this region only. The center portion shall be rough finished by scarifying the surface transversely with a wire brush, and no laitance shall remain on the surface.

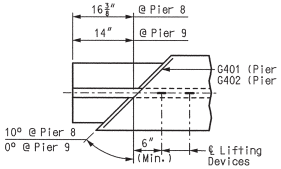

TOP FLANGE BLOCK-OUT DETAIL

Reinforcing Steel Notes:
Reinforcing steel shall conform to the requirements of AASHTO M 31, Grade 60. Welded Wire Reinforcement (WWR) shall conform to the requirements of AASHTO M 221.
All dimensions are out-to-out.
Hooks and bends shall be in accordance with the CRSI Manual of Standard Practice for Detailing Reinforced Concrete Structures. Stirrup and Tie Dimensions.
Minimum clearance to reinforcing shall be 1", unless otherwise shown.
Actual lengths are measured along centerline of bar to the nearest inch.

Notes:
Cost of 3/4" Ø coil tie rods placed in diaphragms will be considered completely covered by the contract unit price for Prestressed Concrete NU-Girder per linear foot.
Coil ties shall be held in place in the forms by slotted wire-setting-studs projecting through forms. Studs are to be left in place or replaced with temporary plugs until girders are erected, then replaced by coil tie rods.
For location of coil inserts at drainage scuppers, see Sheet No. 93.
For location of coil ties, see Sheet Nos. 63, 74 and 75.
The 1-1/2" Ø holes shall be cast in the web for steel intermediate diaphragms. See Sheet No. 63 for details.
Drilling is not allowed.
For details of diaphragms, see Sheet Nos. 74 and 75.
For Girder Camber Diagram, see Sheet No. 81.

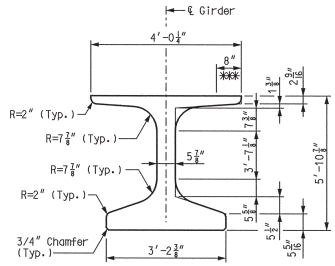

DIMENSIONS

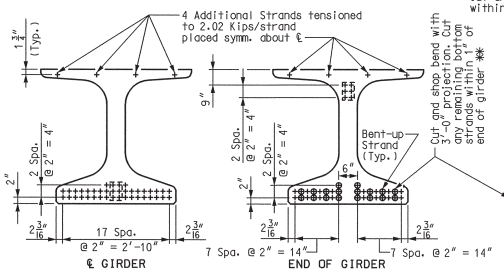

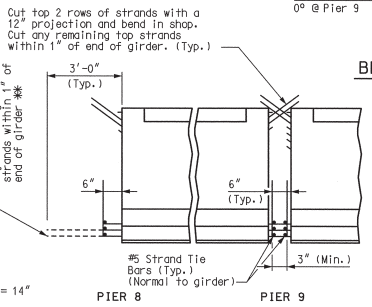

STRAND ARRANGEMENTS

STRAND DETAILS AT GIRDER ENDS

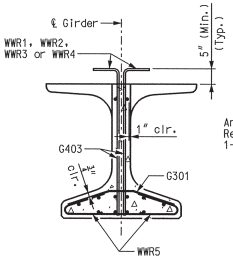

SECTION A-A
Strands not shown for clarity.

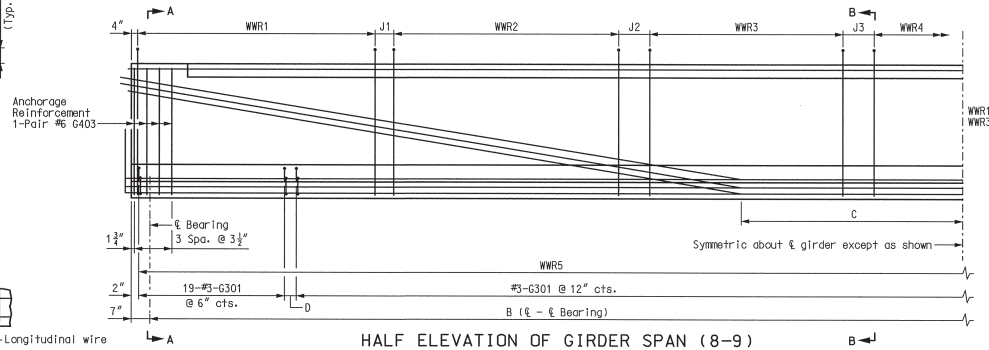

HALF ELEVATION OF GIRDER SPAN (8-9)

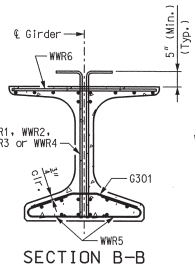

SECTION B-B
Strands not shown for clarity.

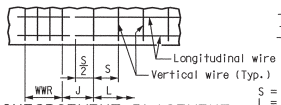

REINFORCEMENT PLACEMENT DETAIL

S = Vertical wire spacing
L = Length of WWR mats
J = Distance between WWR mats

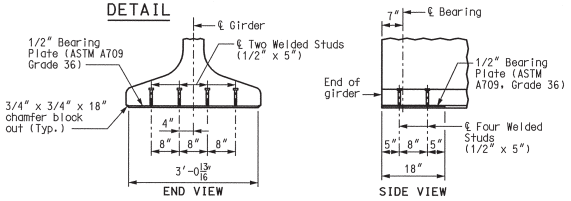

BEARING PLATE DETAILS

Galvanize the 1/2" bearing plate (ASTM A709 Grade 36) in accordance with ASTM A123.

Cost of furnishing, galvanizing, and installing the 1/2" bearing plate (ASTM A709 Grade 36) and welded studs in the prestressed girder will be considered completely covered by the contract unit price for Prestressed Concrete NU-Girder per linear foot.

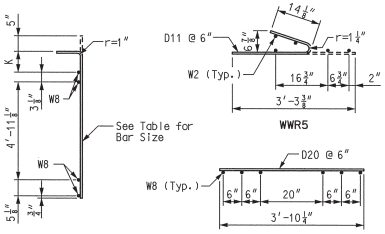

WELDED WIRED BENDING DIAGRAMS

BILL OF REINFORCING STEEL

GIRDER NO.	NO.	SIZE & MARK	ACTUAL LENGTH	SHAPE	BENDING DIAGRAM
5	144	3 G301	2'-11 3/8"	15	
6	145	3 G301	2'-11 3/8"	15	
5-6	1	4 G401	3'-11"	20	
5-6	1	4 G402	3'-10 1/4"	20	
5-6	16	6 G403	5'-8"	20	

SHAPE 15
SHAPE 20

TABLE OF DIMENSIONS

Girder No.	B	C	D
5	122'-10 1/4"	12'-4 3/8"	4 1/2"
6	124'-2 3/8"	12'-6 1/2"	6 1/2"

WELDED WIRE REINFORCEMENT
(WWR5 & WWR6 as shown in Welded Wired Bending Diagrams)

GIRDER No.	WWR1					WWR2					WWR3					WWR4				
	BAR SIZE	S1	L1	J1	K1	BAR SIZE	S2	L2	J2	K2	BAR SIZE	S3	L3	J3	K3	BAR SIZE	S4	L4	K4
5	D20	6"	12'-6"	6"	8 3/4"	D20	12"	32'-0"	12"	8 1/4"	D20	18"	6'-0"	20 1/2"	7 3/4"	D20	24"	16'-0"	7 3/4"
6	D20	6"	12'-6"	6"	8 3/4"	D20	12"	32'-0"	12"	8 1/4"	D20	18"	6'-0"	16 1/2"	8 1/4"	D20	24"	18'-0"	8 1/2"

TYPE NU 70 P/S GIRDER - SPAN (8-9)
GIRDERS 5 AND 6

Detailed JUL 2009
Checked JUL 2009

Note: This drawing is not to scale. Follow dimensions.

LAWRENCE C. ROLMES JR. NUMBER E-26600 PROFESSIONAL ENGINEER STATE OF MISSOURI
8/20/09
DATE 8/20/09
ROUTE I-70 | STATE MO
DISTRICT 6 | SHEET NO. BR55
COUNTY St. Louis City - MO
JOB NO. J6I0984B
CONTRACT ID.
PROJECT NO.
BRIDGE NO. A6500
DESCRIPTION
DATE
MISSOURI HIGHWAYS AND TRANSPORTATION COMMISSION
105 WEST CAPITOL
JEFFERSON CITY, MO 65102
1-888-ASK-MODOT (1-888-275-6636)
HNTB
715 KIRK DRIVE
KANSAS CITY, MO 64105-1310
TELEPHONE (816) 472-1201
CERTIFICATE OF AUTHORITY NO. 001270
REV.

Notes:
Concrete for prestressed girders shall be Class A-1 with f'c = 8000 psi and f'ci = 6500 psi.
(+) indicates prestressing strand.
Use 44 strands with an initial prestress force of 1933 kips.
Prestressing tendons shall be uncoated, seven-wire, low-relaxation strands. 0.6 inch diameter in accordance with AASHTO M 203, Grade 270. Pretensioned members shall be in accordance with Sec 1029.
For top flange cross-slope and step details and dimensions, see Sheet No. 61.

Girders shall be lifted by devices designed by the fabricator.
** At the contractor's option the location for bent-up strands may be varied from that shown. The total number of bent-up strands shall not be changed. One strand tie bar is required for each layer of bent-up strands except at abutments which require one bar on the bottom layer of strands only. No additional payment will be made if additional strand tie bars are required.
*** Girder top flange shall be steel troweled to a smooth finish for 8" at the edges, as shown. Bond breaker shall be applied to this region only. The center portion shall be rough finished by scarifying the surface transversely with a wire brush, and no laitance shall remain on the surface.

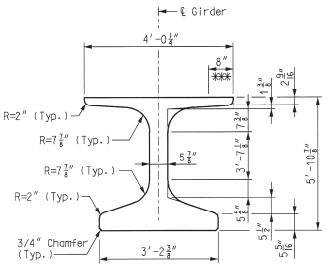

DIMENSIONS

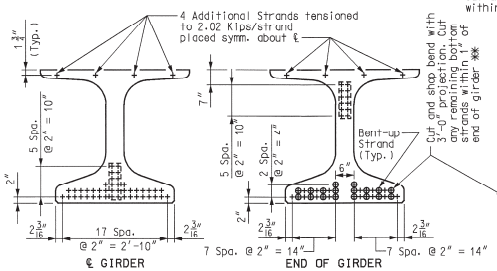

STRAND ARRANGEMENTS

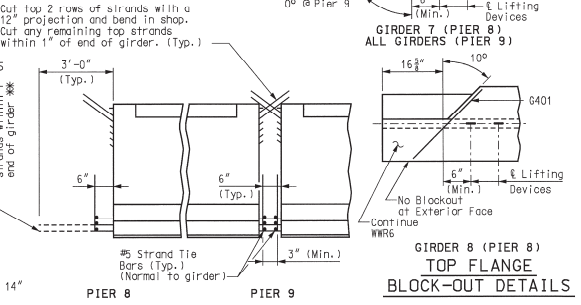

STRAND DETAILS AT GIRDER ENDS

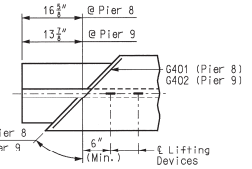

GIRDER 7 (PIER 8)
ALL GIRDERS (PIER 9)

GIRDER 8 (PIER 8)
TOP FLANGE BLOCK-OUT DETAILS

Reinforcing Steel Notes:
Reinforcing steel shall conform to the requirements of AASHTO M 31, Grade 60. Welded Wire Reinforcement (WWR) shall conform to the requirements of AASHTO M 221.
All dimensions are out-to-out.
Hooks and bends shall be in accordance with the CRSI Manual of Standard Practice for Detailing Reinforced Concrete Structures, Stirrup and Tie Dimensions.
Minimum clearance to reinforcing shall be 1", unless otherwise shown.
Actual lengths are measured along centerline of bar to the nearest inch.

Notes:
Cost of 3/4" Ø coil tie rods placed in diaphragms will be considered completely covered by the contract unit price for Prestressed Concrete NU-Girder per linear foot.
Coil ties shall be held in place in the forms by slotted wire-setting-studs projecting through forms. Studs are to be left in place or replaced with temporary plugs until girders are erected, then replaced by coil tie rods.
For location of coil inserts at drainage scuppers, see Sheet No. 93.
For location of coil ties, see Sheet Nos. 74, 75 and 63.
The 1-1/2" Ø holes shall be cast in the web for steel intermediate diaphragms, see Sheet No. 63 for details.
Drilling is not allowed.
For details of diaphragms, see Sheet Nos. 74 and 75.
For Girder Camber Diagram, see Sheet No. 81.

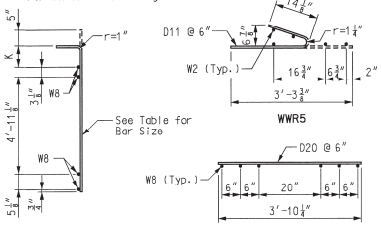

WWR1, WWR2, WWR3 & WWR4

WELDED WIRED BENDING DIAGRAMS

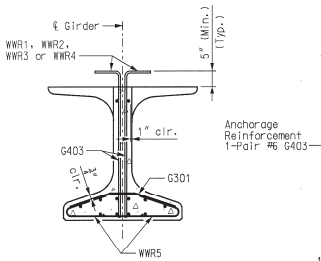

SECTION A-A
Strands not shown for clarity.

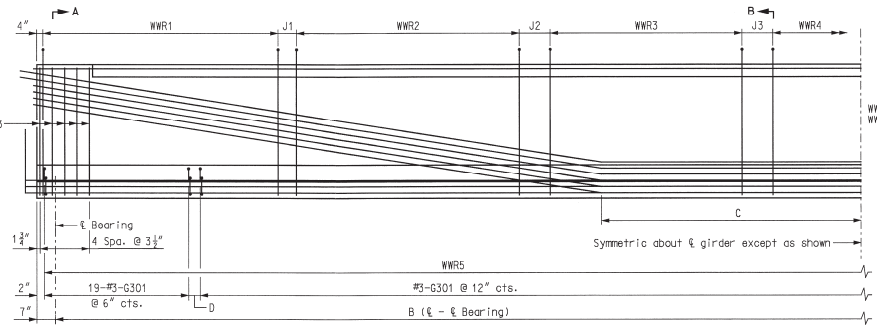

HALF ELEVATION OF GIRDER SPAN (8-9)

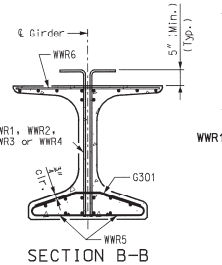

SECTION B-B
Strands not shown for clarity.

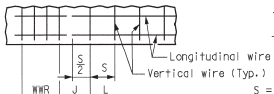

REINFORCEMENT PLACEMENT DETAIL

S = Vertical wire spacing
L = Length of WWR mats
J = Distance between WWR mats

BILL OF REINFORCING STEEL

GIRDER NO.	NO.	SIZE & MARK	ACTUAL LENGTH	SHAPE	BENDING DIAGRAM
7	147	3 G301	2'-11⅜"	15	
8	148	3 G301	2'-11⅜"	15	
7-8	1	4 G401	3'-11"	20	
7-8	1	4 G402	3'-10¼"	20	
7-8	20	6 G403	5'-8"	20	

SHAPE 15
SHAPE 20

TABLE OF DIMENSIONS

Girder No.	B	C	D
7	125'-7"	6'-4"	2½"
8	126'-11⅛"	6'-4⅛"	4⅛"

WELDED WIRE REINFORCEMENT
(WWR5 & WWR6 as shown in Welded Wired Bending Diagrams)

GIRDER No.	WWR1					WWR2					WWR3					WWR4				
	BAR SIZE	S1	L1	J1	K1	BAR SIZE	S2	L2	J2	K2	BAR SIZE	S3	L3	J3	K3	BAR SIZE	S4	L4	K4
7	D20	6"	12'-0"	6"	9¼"	D20	12"	28'-0"	12"	8¾"	D20	18"	9'-0"	18½"	8¾"	D20	24"	22'-0"	8¾"
8	D20	6"	10'-6"	6"	9¼"	D20	12"	23'-0"	12"	9¼"	D20	18"	12'-0"	20¾"	9¼"	D20	24"	30'-0"	9¼"

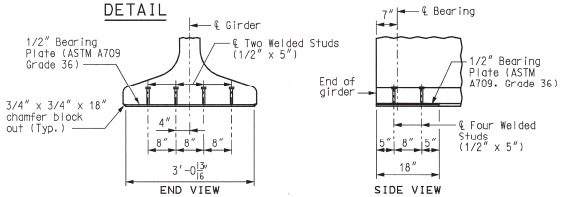

BEARING PLATE DETAILS

Galvanize the 1/2" bearing plate (ASTM A709 Grade 36) in accordance with ASTM A123.

Cost of furnishing, galvanizing, and installing the 1/2" bearing plate (ASTM A709 Grade 36) and welded studs in the prestressed girder will be considered completely covered by the contract unit price for Prestressed Concrete NU-Girder per linear foot.

TYPE NU 70 P/S GIRDER - SPAN (8-9)
GIRDERS 7 AND 8

Detailed OCT 2009
Checked OCT 2009

Note: This drawing is not to scale. Follow dimensions.

Sheet No. 56 of 125

\\stlw00\pmwork\jobs\46440\Techprod\Bridges\MO-Approach\Drawings\Baseline Drawings\B_A6500_056-125_J6I0984B_056.dgn

09-DEC-2009 06:41

LAWRENCE D. ROLWES, JR. NUMBER 2006002847 STATE OF MISSOURI PROFESSIONAL ENGINEER

12/8/09

DATE 8/20/09
ROUTE I-70 | STATE MO
DISTRICT 6 | SHEET NO. BR56
COUNTY St. Louis City - MO
JOB NO. J6I0984B
CONTRACT ID.
PROJECT NO.
BRIDGE NO. A6500

DESCRIPTION | DATE

MISSOURI HIGHWAYS AND TRANSPERTATION COMMISSION
105 WEST CAPITOL
JEFFERSON CITY, MO 65102
1-888-ASK-MODOT (1-888-275-6636)

HNTB
715 KIRK DRIVE
KANSAS CITY, MO 64105-1310
TELEPHONE (816) 472-1201
CERTIFICATE OF AUTHORITY NO. 001270

NOT FOR CONSTRUCTION
11-06-09

REV.

Notes:
Concrete for prestressed girders shall be Class A-1 with f'c = 8000 psi and f'ci = 6500 psi.
(+) indicates prestressing strand.
Use 50 strands with an initial prestress force of 2197 kips.
Prestressing tendons shall be uncoated, seven-wire, low-relaxation strands, 0.6 inch diameter in accordance with AASHTO M 203, Grade 270. Pretensioned members shall be in accordance with Sec 1029.
For top flange cross-slope and step details and dimensions, see Sheet No. 61.

Girders shall be lifted by devices designed by the fabricator.
** At the contractor's option the location for bent-up strands may be varied from that shown. The total number of bent-up strands shall not be changed. One strand tie bar is required for each layer of bent-up strands except at abutments which require one bar on the bottom layer of strands only. No additional payment will be made if additional strand tie bars are required.
*** Girder top flange shall be steel troweled to a smooth finish for 8" at the edges, as shown. Bond breaker shall be applied to this region only. The center portion shall be rough finished by scarifying the surface transversely with a wire brush, and no laitance shall remain on the surface.
**** Prestressing strands at Pier 10 shall be trimmed to within 1/8 inch of concrete if exposed or 1 inch if encased. Exposed ends of girders shall be given 2 coats of an asphalt paint. Ends of girders which will be encased in concrete diaphragms shall not be painted.

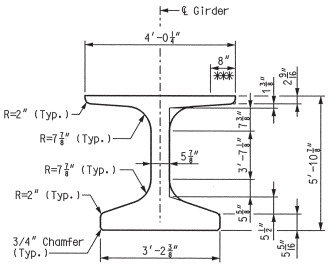

DIMENSIONS

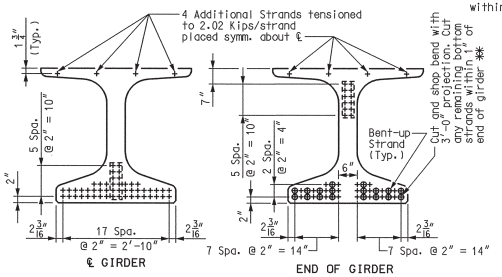

STRAND ARRANGEMENTS

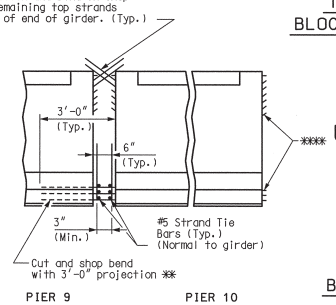

STRAND DETAILS AT GIRDER ENDS

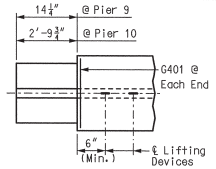

TOP FLANGE BLOCK-OUT DETAIL

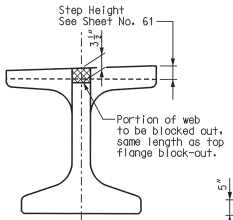

BLOCK-OUT DETAIL AT PIER 10

Reinforcing Steel Notes:
Reinforcing steel shall conform to the requirements of AASHTO M 31, Grade 60. Welded Wire Reinforcement (WWR) shall conform to the requirements of AASHTO M 221.
All dimensions are out-to-out.
Hooks and bends shall be in accordance with the CRSI Manual of Standard Practice for Detailing Reinforced Concrete Structures, Stirrup and Tie Dimensions.
Minimum clearance to reinforcing shall be 1", unless otherwise shown.
Actual lengths are measured along centerline of bar to the nearest inch.

Notes:
Cost of 3/4" Ø coil tie rods placed in diaphragms will be considered completely covered by the contract unit price for Prestressed Concrete NU-Girder per linear foot.
Coil ties shall be held in place in the forms by slotted wire-setting-studs projecting through forms. Studs are to be left in place or replaced with temporary plugs until girders are erected, then replaced by coil tie rods.
For location of coil inserts at drainage scuppers, see Sheet No. 93.
For location of coil ties, see Sheet No. 75, 76 and 63.
The 1-1/2" Ø holes shall be cast in the web for steel intermediate diaphragms, see Sheet No. 63 for details.
Drilling is not allowed.
For details of diaphragms, see Sheet Nos. 75 and 76.
For Girder Camber Diagram, see Sheet No. 81.

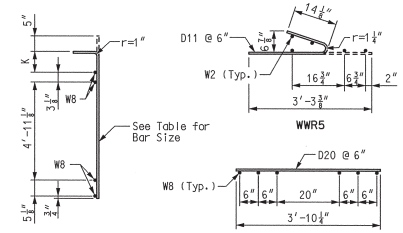

WELDED WIRED BENDING DIAGRAMS

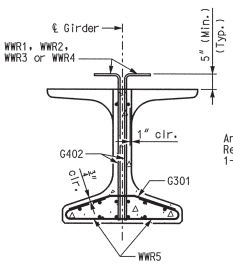

SECTION A-A
Strands not shown for clarity.

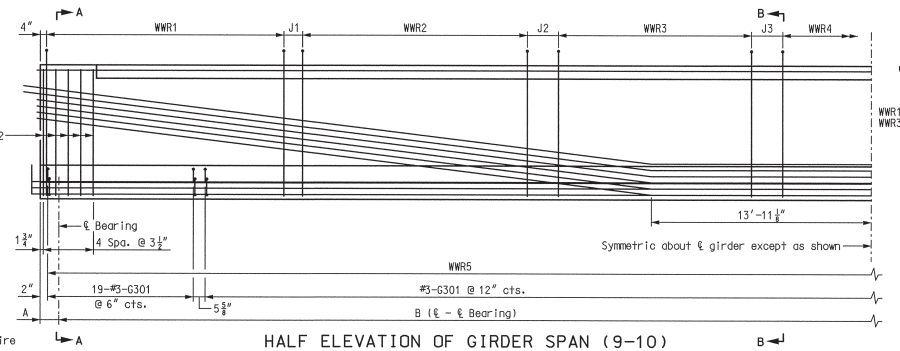

HALF ELEVATION OF GIRDER SPAN (9-10)

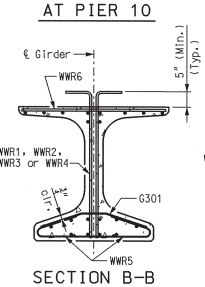

SECTION B-B
Strands not shown for clarity.

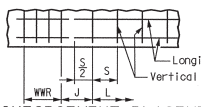

REINFORCEMENT PLACEMENT DETAIL

S = Vertical wire spacing
L = Length of WWR mats
J = Distance between WWR mats

BILL OF REINFORCING STEEL

GIRDER NO.	NO.	SIZE & MARK	ACTUAL LENGTH	SHAPE	BENDING DIAGRAM
1-8	159	3 G301	2'-11⅜"	15	
					4½" 13" 7⅝" 13" 4⅛" SHAPE 15
1-8	2	4 G401	3'-10⅛"	20	
1-8	16	6 G402	5'-8"	20	
					SHAPE 20

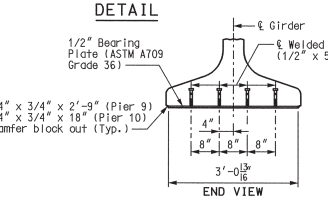

END VIEW

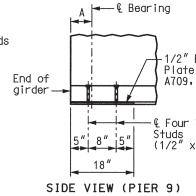

SIDE VIEW (PIER 9)

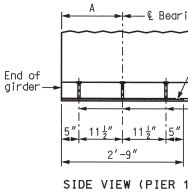

SIDE VIEW (PIER 10)

BEARING PLATE DETAILS

Galvanize the 1/2" bearing plate (ASTM A709 Grade 36) in accordance with ASTM A123.

Cost of furnishing, galvanizing, and installing the 1/2" bearing plate (ASTM A709 Grade 36) and welded studs in the prestressed girder will be considered completely covered by the contract unit price for Prestressed Concrete NU-Girder per linear foot.

WELDED WIRE REINFORCEMENT
(WWR5 & WWR6 as shown in Welded Wired Bending Diagrams)

GIRDER No.	WWR1 BAR SIZE	S1	L1	J1	K1	WWR2 BAR SIZE	S2	L2	J2	K2	WWR3 BAR SIZE	S3	L3	J3	K3	WWR4 BAR SIZE	S4	L4	K4
1	D20	6"	17'-0"	6"	16½"	D20	12"	34'-0"	12"	13¼"	D20	18"	9'-0"	21⅝"	7¾"	D20	24"	12'-0"	7¾"
2	D20	6"	17'-0"	6"	14¼"	D20	12"	34'-0"	12"	11¾"	D20	18"	9'-0"	21⅝"	7¾"	D20	24"	12'-0"	7¾"
3	D20	6"	17'-0"	6"	13¼"	D20	12"	34'-0"	12"	10¾"	D20	18"	9'-0"	21⅝"	7¾"	D20	24"	12'-0"	7¾"
4	D20	6"	17'-0"	6"	11¾"	D20	12"	34'-0"	12"	9¾"	D20	18"	9'-0"	21⅝"	7¾"	D20	24"	12'-0"	7¾"
5-8	D20	6"	17'-0"	6"	10¾"	D20	12"	34'-0"	12"	9¼"	D20	18"	9'-0"	21⅝"	7¾"	D20	24"	12'-0"	7¾"

TABLE OF DIMENSIONS

Girder No.	A Pier 9	A Pier 10	B
1	7"	16½"	137'-4"
2	7⅛"	16¼"	137'-3⅞"
3	7¼"	16¼"	137'-3¾"
4-8	7¼"	16⅜"	137'-3⅞"

TYPE NU 70 P/S GIRDER - SPAN (9-10)
GIRDERS 1 THRU 8

Detailed JUL 2009
Checked JUL 2009

Note: This drawing is not to scale. Follow dimensions.

Sheet No. 57 of 125

LAWRENCE L. ROLWES, JR. NUMBER PE-2009002847 PROFESSIONAL ENGINEER STATE OF MISSOURI
8/20/09

DATE	8/20/09
ROUTE	I-70
STATE	MO
DISTRICT	6
SHEET NO.	BR57
COUNTY	St. Louis City - MO
JOB NO.	J6I0984B
CONTRACT ID.	
PROJECT NO.	
BRIDGE NO.	A6500

DESCRIPTION	DATE

MISSOURI HIGHWAYS AND TRANSPORTATION COMMISSION
105 WEST CAPITOL
P.O. BOX 270
JEFFERSON CITY, MO 65102
1-888-ASK-MODOT (1-888-275-6636)
MoDOT

HNTB
715 KIRK DRIVE
KANSAS CITY, MO 64105-1310
TELEPHONE (816) 472-1201
CERTIFICATE OF AUTHORITY NO. 001270

REV.

SPAN 1-2

Location	Top of Girder Slope: Rise	Top of Girder Slope: Side of Girder	Girder Steps									
Girder 1	2 3/4"	Right	Step Length	-	-	-	-	-	-	-	-	-
			Step Height	-	-	-	-	-	-	-	-	-
Girder 2	2 3/4"	Right	Step Length	-	-	-	-	-	-	-	-	-
			Step Height	-	-	-	-	-	-	-	-	-
Girder 3	2 3/4"	Right	Step Length	-	-	-	-	-	-	-	-	-
			Step Height	-	-	-	-	-	-	-	-	-
Girder 4	2 3/4"	Right	Step Length	-	-	-	-	-	-	-	-	-
			Step Height	-	-	-	-	-	-	-	-	-
Girder 5	2 3/4"	Right	Step Length	-	-	-	-	-	-	-	-	-
			Step Height	-	-	-	-	-	-	-	-	-
Girder 6	7/8"	Left	Step Length	19'-0"	10'-0"	10'-0"	13'-0"	20'-8 1/8"	11'-0"	9'-0"	8'-0"	27'-0"
			Step Height	0"	1/2"	1"	1 1/2"	2"	1 1/2"	1"	1/2"	0"
Girder 7	7/8"	Left	Step Length	24'-0"	19'-0"	38'-9 5/8"	13'-0"	33'-0"	-	-	-	-
			Step Height	0"	1/2"	1"	1/2"	0"	-	-	-	-
Girder 8	7/8"	Left	Step Length	-	-	-	-	-	-	-	-	-
			Step Height	-	-	-	-	-	-	-	-	-
Girder 9	7/8"	Left	Step Length	-	-	-	-	-	-	-	-	-
			Step Height	-	-	-	-	-	-	-	-	-
Girder 10	7/8"	Left	Step Length	-	-	-	-	-	-	-	-	-
			Step Height	-	-	-	-	-	-	-	-	-
Girder 11	7/8"	Left	Step Length	3'-0"	20'-0"	85'-4"	10'-0"	10'-0"	-	-	-	-
			Step Height	1"	1/2"	0"	1/2"	1"	-	-	-	-

SPAN 2-3

Location	Top of Girder Slope: Rise	Top of Girder Slope: Side of Girder	Girder Steps	
Girder 1	2 1/4"	Right	Step Length	-
			Step Height	-
Girder 2	2 1/4"	Right	Step Length	-
			Step Height	-
Girder 3	2 1/4"	Right	Step Length	-
			Step Height	-
Girder 4	2 1/4"	Right	Step Length	-
			Step Height	-
Girder 5	2 1/4"	Right	Step Length	-
			Step Height	-
Girder 6	2 1/4"	Right	Step Length	-
			Step Height	-
Girder 7	-	-	Step Length	-
			Step Height	-
Girder 8	-	-	Step Length	-
			Step Height	-
Girder 9	-	-	Step Length	-
			Step Height	-
Girder 10	-	-	Step Length	-
			Step Height	-
Girder 11	-	-	Step Length	-
			Step Height	-
Girder 12	-	-	Step Length	-
			Step Height	-

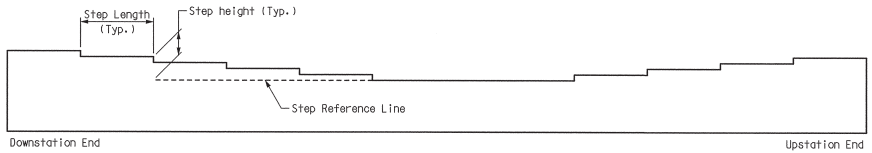

GIRDER ELEVATION

(Not showing Girder cross-slope)

(Showing condition in which steps increase towards ends.
Other conditions exist where steps increase towards midspan.)

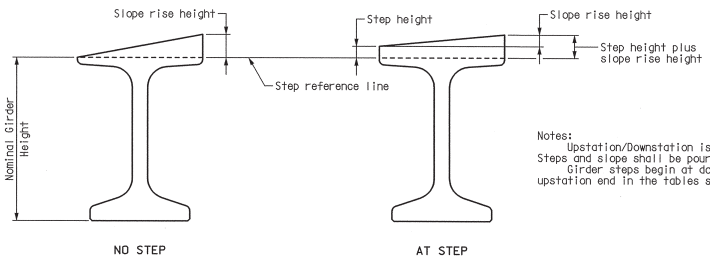

Notes:
Upstation/Downstation is referenced from ℄ Relocated I-70.
Steps and slope shall be poured monolithically with girder.
Girder steps begin at downstation end and move toward upstation end in the tables shown from left to right.

SECTION THRU GIRDER

(Showing slope on right side of girder)

NU-GIRDER DETAILS - 1

Detailed JUL 2009
Checked JUL 2009

Note: This drawing is not to scale. Follow dimensions.

STATE OF MISSOURI
LAWRENCE E. ROLWES JR.
NUMBER PE-2006002847
REGISTERED PROFESSIONAL ENGINEER

8/20/09

DATE 8/20/09
ROUTE I-70 STATE MO
DISTRICT 6 SHEET NO. BR58
COUNTY St. Louis City - MO
JOB NO. J6I0984B
CONTRACT ID.
PROJECT NO.
BRIDGE NO. A6500

DESCRIPTION | DATE

MISSOURI HIGHWAYS AND TRANSPORTATION COMMISSION
MoDOT
105 WEST CAPITOL
JEFFERSON CITY, MO 65102
1-888-ASK-MODOT (1-888-275-6636)

HNTB
715 KIRK DRIVE
KANSAS CITY, MO 64105-1310
TELEPHONE (816) 472-1201
CERTIFICATE OF AUTHORITY NO. 001270

REV.

\\slsw00\Jobs\46440\Techprod\Bridges\MO-Approach\Drawings\Baseline Drawings\B_A6500_058-125_J6I0984B_058.dgn 18-AUG-2009 10:25

SPAN 3-4

Location	Top of Girder Slope		Girder Steps													
	Rise	Side of Girder														
Girder 1	1″	Right	Step Length	2′-0″	10′-0″	11′-0″	9′-0″	8′-0″	10′-0″	26′-2 3/8″	9′-0″	7′-0″	6′-0″	7′-0″	8′-0″	7′-0″	23′-0″
			Step Height	1/2″	1″	1 1/2″	2″	2 1/2″	3″	3 1/2″	3″	2 1/2″	2″	1 1/2″	1″	1/2″	0″
Girder 2	1″	Right	Step Length	7′-0″	14′-0″	11′-0″	13′-0″	36′-2 3/8″	9′-0″	9′-0″	9′-0″	9′-0″	26′-0″	–	–	–	–
			Step Height	1/2″	1″	1 1/2″	2″	2 1/2″	2″	1/2″	1″	1/2″	0″	–	–	–	–
Girder 3	1″	Right	Step Length	5′-0″	19′-0″	17′-0″	43′-2 3/8″	11′-0″	13′-0″	35′-0″	–	–	–	–	–	–	–
			Step Height	0	1/2″	1″	1 1/2″	1″	1/2″	0″	–	–	–	–	–	–	–
Girder 4	1″	Right	Step Length	25′-0″	30′-0″	19′-2 3/8″	17′-0″	52′-0″	–	–	–	–	–	–	–	–	–
			Step Height	0″	1/2″	1″	1/2″	0″	–	–	–	–	–	–	–	–	–
Girder 5	1″	Right	Step Length	–	–	–	–	–	–	–	–	–	–	–	–	–	–
			Step Height	–	–	–	–	–	–	–	–	–	–	–	–	–	–
Girder 6	1″	Right	Step Length	–	–	–	–	–	–	–	–	–	–	–	–	–	–
			Step Height	–	–	–	–	–	–	–	–	–	–	–	–	–	–
Girder 7	–	–	Step Length	–	–	–	–	–	–	–	–	–	–	–	–	–	–
			Step Height	–	–	–	–	–	–	–	–	–	–	–	–	–	–
Girder 8	–	–	Step Length	–	–	–	–	–	–	–	–	–	–	–	–	–	–
			Step Height	–	–	–	–	–	–	–	–	–	–	–	–	–	–
Girder 9	–	–	Step Length	–	–	–	–	–	–	–	–	–	–	–	–	–	–
			Step Height	–	–	–	–	–	–	–	–	–	–	–	–	–	–
Girder 10	–	–	Step Length	–	–	–	–	–	–	–	–	–	–	–	–	–	–
			Step Height	–	–	–	–	–	–	–	–	–	–	–	–	–	–
Girder 11	–	–	Step Length	–	–	–	–	–	–	–	–	–	–	–	–	–	–
			Step Height	–	–	–	–	–	–	–	–	–	–	–	–	–	–
Girder 12	–	–	Step Length	–	–	–	–	–	–	–	–	–	–	–	–	–	–
			Step Height	–	–	–	–	–	–	–	–	–	–	–	–	–	–

SPAN 5-6

Location	Top of Girder Slope		Girder Steps														
	Rise	Side of Girder															
Girder 1	1″	Right	Step Length	6′-0″	6′-0″	5′-0″	5′-0″	5′-0″	4′-0″	6′-0″	45′-1 3/4″	5′-0″	4′-0″	5′-0″	6′-0″	4′-0″	6′-0″	2′-0″
			Step Height	3 1/2″	3″	2 1/2″	2″	1 1/2″	1″	1/2″	0″	1/2″	1″	1 1/2″	2″	2 1/2″	3″	3 1/2″
Girder 2	1″	Right	Step Length	9′-0″	6′-0″	7′-0″	7′-0″	60′-1 3/4″	7′-0″	8′-0″	8′-0″	2′-0″	–	–	–	–	–	–
			Step Height	2″	1 1/2″	1″	1/2″	0″	1/2″	1″	1 1/2″	2″	–	–	–	–	–	–
Girder 3	1″	Right	Step Length	15′-0″	86′-1 3/4″	13′-0″	–	–	–	–	–	–	–	–	–	–	–	–
			Step Height	1/2″	0″	1/2″	–	–	–	–	–	–	–	–	–	–	–	–
Girder 4	1″	Right	Step Length	–	–	–	–	–	–	–	–	–	–	–	–	–	–	–
			Step Height	–	–	–	–	–	–	–	–	–	–	–	–	–	–	–
Girder 5	1″	Left	Step Length	–	–	–	–	–	–	–	–	–	–	–	–	–	–	–
			Step Height	–	–	–	–	–	–	–	–	–	–	–	–	–	–	–
Girder 6	1″	Left	Step Length	–	–	–	–	–	–	–	–	–	–	–	–	–	–	–
			Step Height	–	–	–	–	–	–	–	–	–	–	–	–	–	–	–
Girder 7	1″	Left	Step Length	–	–	–	–	–	–	–	–	–	–	–	–	–	–	–
			Step Height	–	–	–	–	–	–	–	–	–	–	–	–	–	–	–
Girder 8	1″	Left	Step Length	–	–	–	–	–	–	–	–	–	–	–	–	–	–	–
			Step Height	–	–	–	–	–	–	–	–	–	–	–	–	–	–	–

Notes:
Girders located in Span 4-5 do not require steps or slopes at the top of girder. For additional details, see Sheet No. 58.

NU-GIRDER DETAILS – 2

Detailed JUL 2009
Checked JUL 2009

Note: This drawing is not to scale. Follow dimensions.

Sheet No. 59 of 125

\\slsw00\Jobs\46440\Techprod\Bridges\MO-Approach\Drawings\Baseline Drawings\B_A6500_059-125_J6I0984B_059.dgn

18-AUG-2009 10:25

REV.

DESCRIPTION | DATE

MISSOURI HIGHWAYS AND TRANSPORTATION COMMISSION
105 WEST CAPITOL
JEFFERSON CITY, MO 65102
1-888-ASK-MODOT (1-888-275-6636)

HNTB
715 KIRK DRIVE
KANSAS CITY, MO 64105-4310
TELEPHONE (816) 472-1201
CERTIFICATE OF AUTHORITY NO. 001270

8/20/09

DATE 8/20/09
ROUTE I-70 | STATE MO
DISTRICT 6 | SHEET NO. BR59
COUNTY St. Louis City - MO
JOB NO. J6I0984B
CONTRACT ID.
PROJECT NO.
BRIDGE NO. A6500

SPAN 6-7

Location	Top of Girder Slope		Girder Steps										
	Rise	Side of Girder											
Girder 1	1¼"	Left	Step Length	15′-0″	10′-0″	10′-0″	9′-0″	11′-0″	11′-0″	61′-10⅞″	–	–	–	–
			Step Height	3″	2½″	2″	1½″	1″	½″	0″	–	–	–	–
Girder 2	1¼"	Left	Step Length	20′-0″	19′-0″	17′-0″	71′-8¼″	–	–	–	–	–	–	–
			Step Height	1½″	1″	½″	0″	–	–	–	–	–	–	–
Girder 3	1¼"	Left	Step Length	21′-0″	106′-5¾″	–	–	–	–	–	–	–	–	–
			Step Height	½″	0″	–	–	–	–	–	–	–	–	–
Girder 4	1¼"	Left	Step Length	–	–	–	–	–	–	–	–	–	–	–
			Step Height	–	–	–	–	–	–	–	–	–	–	–
Girder 5	1″	Left	Step Length	120′-0⅞″	7′-0″	–	–	–	–	–	–	–	–	–
			Step Height	0″	½″	–	–	–	–	–	–	–	–	–
Girder 6	1″	Left	Step Length	57′-10⅛″	16′-0″	53′-0″	–	–	–	–	–	–	–	–
			Step Height	0″	½″	1″	–	–	–	–	–	–	–	–
Girder 7	1″	Left	Step Length	38′-8⅛″	9′-0″	9′-0″	11′-0″	25′-0″	34′-0″	–	–	–	–	–
			Step Height	0″	½″	1″	1½″	2″	1½″	–	–	–	–	–
Girder 8	1″	Left	Step Length	32′-5¾″	8′-0″	6′-0″	6′-0″	7′-0″	9′-0″	6′-0″	2′-0″	17′-0″	17′-0″	16′-0″
			Step Height	0″	½″	1″	1½″	2″	2½″	3″	3½″	3″	2½″	2″

SPAN 7-8

Location	Top of Girder Slope		Girder Steps								
	Rise	Side of Girder									
Girder 1	1¾"	Left	Step Length	123′-1¾″	12′-0″	–	–	–	–	–	–
			Step Height	0″	½″	–	–	–	–	–	–
Girder 2	1¾"	Left	Step Length	–	–	–	–	–	–	–	–
			Step Height	–	–	–	–	–	–	–	–
Girder 3	1¾"	Left	Step Length	6′-0″	124′-4½″	–	–	–	–	–	–
			Step Height	½″	0″	–	–	–	–	–	–
Girder 4	1¾"	Left	Step Length	3′-0″	112′-0″	7′-0″	6′-0″	–	–	–	–
			Step Height	½″	0″	½″	1″	–	–	–	–
Girder 5	1¾"	Left	Step Length	104′-7⅜″	7′-0″	6′-0″	8′-0″	–	–	–	–
			Step Height	0″	½″	1″	1½″	–	–	–	–
Girder 6	1¾"	Left	Step Length	3′-0″	4′-0″	96′-2⅜″	7′-0″	5′-0″	8′-0″	–	–
			Step Height	1″	½″	0″	½″	1″	1½″	–	–
Girder 7	1¾"	Left	Step Length	4′-0″	3′-0″	88′-10⅜″	7′-0″	7′-0″	5′-0″	6′-0″	–
			Step Height	1″	½″	0″	½″	1″	1½″	2″	–
Girder 8	1¾"	Left	Step Length	4′-0″	3′-0″	2′-0″	88′-5¾″	6′-0″	5′-0″	6′-0″	4′-0″
			Step Height	1½″	1″	½″	0″	½″	1″	1½″	2″

Note:
For additional details, see Sheet No. 58.

NU-GIRDER DETAILS – 3

Detailed JUL 2009
Checked JUL 2009

Note: This drawing is not to scale. Follow dimensions.

Sheet No. 60 of 125

\\slsw00\Jobs\46440\Techprod\Bridges\MO-Approach\Drawings\Baseline Drawings\B_A6500_060-125_J6I0984B_060.dgn

18-AUG-2009 10:25

REV.

LAWRENCE ROLWES, JR. NUMBER 2006002847 PROFESSIONAL ENGINEER STATE OF MISSOURI

8/20/09

DATE
8/20/09

ROUTE I-70 | STATE MO
DISTRICT 6 | SHEET NO. BR60
COUNTY
St. Louis City - MO
JOB NO.
J6I0984B
CONTRACT ID.
PROJECT NO.
BRIDGE NO.
A6500

DESCRIPTION | DATE

MISSOURI HIGHWAYS AND TRANSPORTATION COMMISSION
MoDOT
105 WEST CAPITOL
JEFFERSON CITY, MO 65102
1-888-ASK-MODOT (1-888-275-6636)

HNTB
715 KIRK DRIVE
KANSAS CITY, MO 64105-1310
TELEPHONE (816) 472-1201
CERTIFICATE OF AUTHORITY NO. 001270

SPAN 8-9

Location	Top of Girder Slope			Girder Steps																
	Rise	Side of Girder																		
Girder 1	1 5/8"	Left	Step Length	68'-9 1/4"	8'-0"	7'-0"	7'-0"	6'-0"	5'-0"	6'-0"	4'-0"	7'-0"	-	-	-	-	-	-	-
			Step Height	0"	1/2"	1"	1 1/2"	2"	2 1/2"	3"	3 1/2"	4"	-	-	-	-	-	-	-
Girder 2	1 5/8"	Left	Step Length	84'-1 1/4'	8'-0"	7'-0"	7'-0"	6'-0"	8'-0"	-	-	-	-	-	-	-	-	-	-	-
			Step Height	0"	1/2"	1"	1 1/2"	2"	2 1/2"	-	-	-	-	-	-	-	-	-	-	-
Girder 3	1 5/8"	Left	Step Length	87'-5"	8'-0"	8'-0"	7'-0"	6'-0"	5'-0"	-	-	-	-	-	-	-	-	-	-	-
			Step Height	0"	1/2"	1"	1 1/2"	2"	2 1/2"	-	-	-	-	-	-	-	-	-	-	-
Girder 4	1 5/8"	Left	Step Length	5'-0"	96'-8 7/8"	10'-0"	11'-0"	-	-	-	-	-	-	-	-	-	-	-	-	-
			Step Height	1/2"	0"	1/2"	1"	-	-	-	-	-	-	-	-	-	-	-	-	-
Girder 5	1 1/2"	Left	Step Length	10'-0"	7'-0"	107'-0 3/8"	-	-	-	-	-	-	-	-	-	-	-	-	-	-
			Step Height	1"	1/2"	0"	-	-	-	-	-	-	-	-	-	-	-	-	-	-
Girder 6	1 1/2"	Left	Step Length	12'-0"	62'-0"	51'-4 1/8"	-	-	-	-	-	-	-	-	-	-	-	-	-	-
			Step Height	1"	1/2"	0"	-	-	-	-	-	-	-	-	-	-	-	-	-	-
Girder 7	1 1/2"	Left	Step Length	9'-0"	69'-0"	11'-0"	37'-9"	-	-	-	-	-	-	-	-	-	-	-	-	-
			Step Height	1 1/2"	1"	1/2"	0"	-	-	-	-	-	-	-	-	-	-	-	-	-
Girder 8	1 1/2"	Left	Step Length	81'-0"	10'-0"	11'-0"	26'-1 1/8"	-	-	-	-	-	-	-	-	-	-	-	-	-
			Step Height	1 1/2"	1"	1/2"	0"	-	-	-	-	-	-	-	-	-	-	-	-	-

SPAN 9-10

| Location | Top of Girder Slope | | | Girder Steps | | | | | | | | | | | | | | | | | |

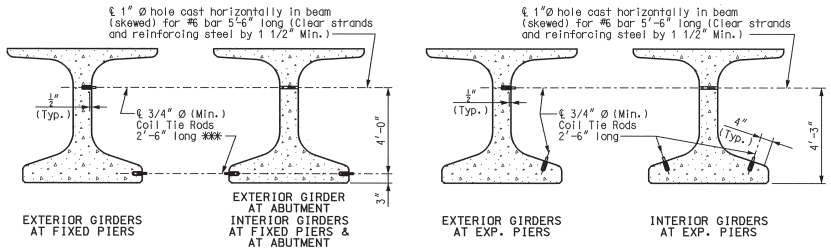

DETAILS OF COIL TIES

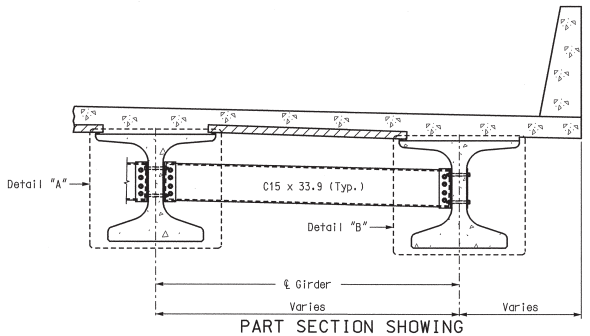

PART SECTION SHOWING INTERMEDIATE DIAPHRAGMS

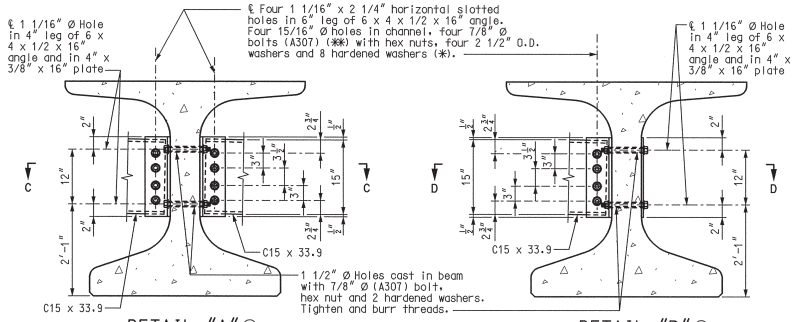

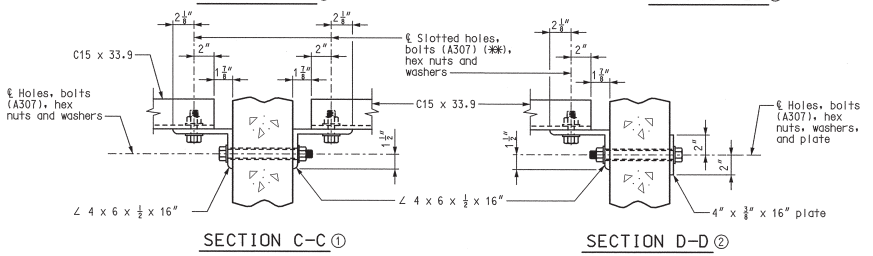

① Showing interior girder at square diaphragms.

② Showing interior girder at skewed diaphragms and exterior girder at all diaphragms.

Notes:
(*) In lieu of 2-1/2" outside diameter washers, contractor may substitute a 3/16" (Min. thickness) plate with four 15/16" Ø holes and one hardened washer per bolt.
(**) Bolts shall be tightened to provide a tension of one-half that specified in Sec 712 for high strength bolt installation. A325 bolts may be substituted for and installed in accordance with the requirements for the specified A307 bolts.
All diaphragm materials including bolts, nuts, and washers shall be galvanized.
Fabricated structural steel shall be ASTM A709 Grade 36 except as noted.
Payment for furnishing and installing steel intermediate diaphragms will be considered completely covered by the contract unit price for Steel Intermediate Diaphragm for P/S Concrete Girders.
Shop drawings will not be required for steel intermediate diaphragms and angle connections.
For location of intermediate diaphragms, see Sheet No. 37.
*** Length of coil tie rods at exterior girders at Ramp 8 Abutment 1 = 3'-0"
Length of coil tie rods at exterior girders at Ramp 10 Abutment 1 = 2'-11 3/4"

STEEL INTERMEDIATE DIAPHRAGM DETAILS - NU 63 GIRDER

Detailed JUL 2009
Checked JUL 2009

Note: This drawing is not to scale. Follow dimensions.

Sheet No. 62 of 125

\\slsw00\Jobs\46440\Techprod\Bridges\MO-Approach\Drawings\Baseline Drawings\B_A6500_062-125_J6I0984B_062.dgn

18-AUG-2009 10:26

LAWRENCE G. ROLWES 2006 NUMBER PE-2006002847 PROFESSIONAL ENGINEER STATE OF MISSOURI

8/20/09

DATE	8/20/09
ROUTE	I-70
STATE	MO
DISTRICT	6
SHEET NO.	BR62
COUNTY	St. Louis City - MO
JOB NO.	J6I0984B
CONTRACT ID.	
PROJECT NO.	
BRIDGE NO.	A6500

DESCRIPTION | DATE

MISSOURI HIGHWAYS AND TRANSPORTATION COMMISSION
105 WEST CAPITOL
JEFFERSON CITY, MO 65102
1-888-ASK-MODOT (1-888-275-6636)

HNTB
715 KIRK DRIVE
KANSAS CITY, MO 64105-1310
TELEPHONE (816) 472-1201
CERTIFICATE OF AUTHORITY NO. 001270

REV.

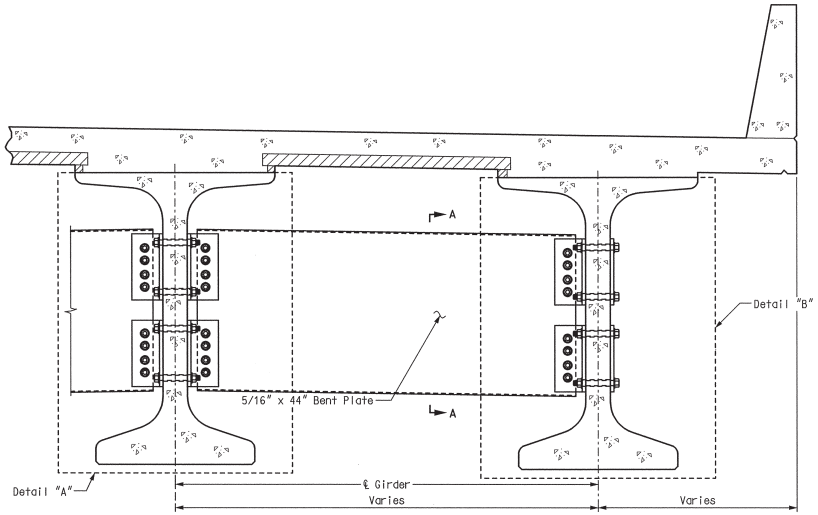

PART SECTION SHOWING
INTERMEDIATE DIAPHRAGMS

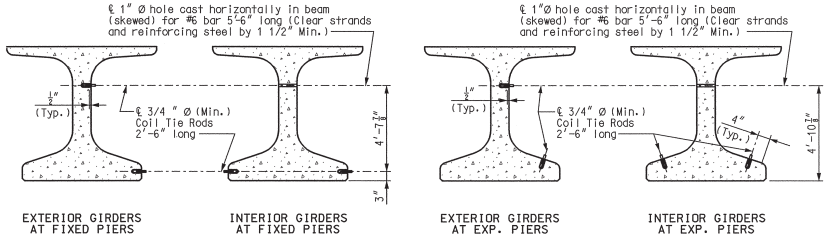

DETAILS OF COIL TIES

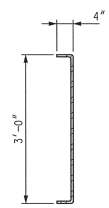

SECTION A-A

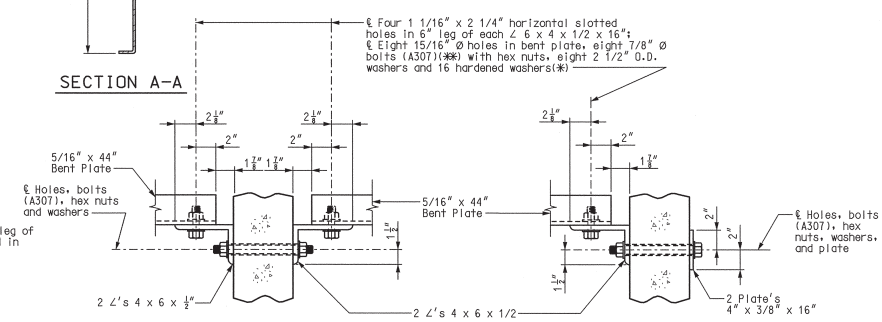

SECTION C-C ①

SECTION D-D ②

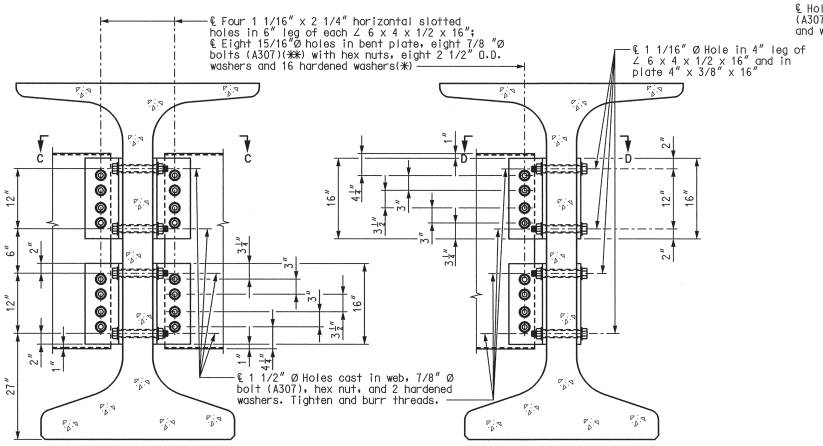

DETAIL "A" ①

DETAIL "B" ②

① Showing interior girder at square diaphragms.

② Showing interior girder at skewed diaphragms and exterior girder at all diaphragms.

Notes:
(✱) In lieu of 2-1/2" outside diameter washers, contractor may substitute a 3/16" (Min. thickness) plate with four 15/16" Ø holes and one hardened washer per bolt.
(✱✱) Bolts shall be tightened to provide a tension of one-half that specified in Sec 712 for high strength bolt installation. A325 bolts may be substituted for and installed in accordance with the requirements for the specified A307 bolts.
All diaphragm materials including bolts, nuts, and washers shall be galvanized.
Fabricated structural steel shall be ASTM A709 Grade 36 except as noted.
Payment for furnishing and installing steel intermediate diaphragms will be considered completely covered by the contract unit price for Steel Intermediate Diaphragm for P/S Concrete Girders.
Shop drawings will not be required for steel intermediate diaphragms and angle connections.
For location of intermediate diaphragms, see Sheet Nos. 38 and 39.

STEEL INTERMEDIATE DIAPHRAGM DETAILS - NU 70 GIRDER

Detailed JUL 2009
Checked JUL 2009

Note: This drawing is not to scale. Follow dimensions.

STATE OF MISSOURI LAWRENCE C. ROLWEST JR. NUMBER 66-006002847 REGISTERED PROFESSIONAL ENGINEER

8/20/09

DATE	
8/20/09	
ROUTE I-70	STATE MO
DISTRICT 6	SHEET NO. BR63
COUNTY St. Louis City - MO	
JOB NO. J6I0984B	
CONTRACT ID.	
PROJECT NO.	
BRIDGE NO. A6500	

DESCRIPTION

DATE

MISSOURI HIGHWAYS AND TRANSPORTATION COMMISSION

MoDOT

105 WEST CAPITOL
JEFFERSON CITY, MO 65102
1-888-ASK-MODOT (1-888-275-6636)

HNTB
715 KIRK DRIVE
KANSAS CITY, MO 64105-1310
TELEPHONE (816) 472-1201
CERTIFICATE OF AUTHORITY NO. 001270

REV.

\\slsw00\Jobs\46440\Techprod\Bridges\MO-Approach\Drawings\Baseline Drawings\B_A6500_063-125_J6I0984B_063.dgn 18-AUG-2009 10:26

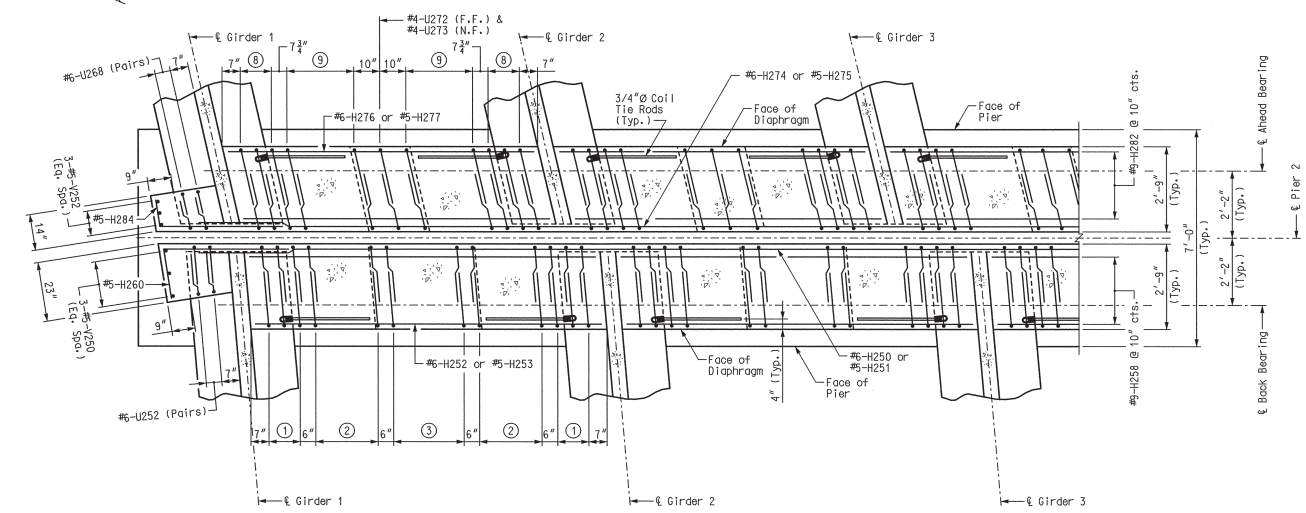

TYPICAL PART PLAN NEAR RAMP 8

1. #6-U250 (F.F.) & #6-U251 (N.F.)
2. #6-U254 (F.F.) & #6-U255 (N.F.)
3. #4-U256 (F.F.) & #4-U257 (N.F.)
4. #6-U258 (F.F.) & #6-U259 (N.F.)
5. #6-U262 (F.F.) & #6-U263 (N.F.)
6. #4-U264 (F.F.) & #4-U265 (N.F.)
7. 3-#5-V251 @ Eq. Spa.
8. #6-U266 (F.F.) & #6-U267 (N.F.)
9. #6-U270 (F.F.) & #6-U271 (N.F.)
10. 3-#5-V252 @ Eq. Spa.

Notes:
Diaphragms at piers shall be built vertical.
For location and details of coil ties, see Sheet No. 62 and 63.
For girder spacing see Sheet Nos. 37 and 38.
Seal inside face and ends of diaphragms with Protective Coating - Concrete Bents and Piers (Epoxy).
For elevations and details of diaphragms, see Sheet Nos. 65, 66 and 67.

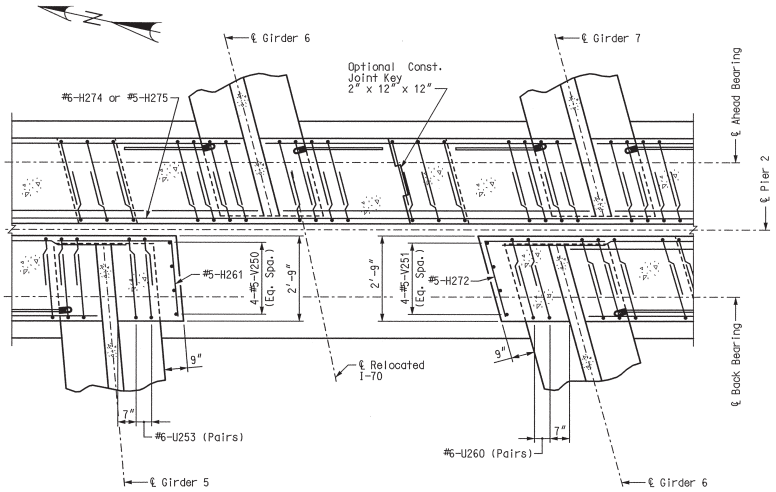

PART PLAN NEAR GORE

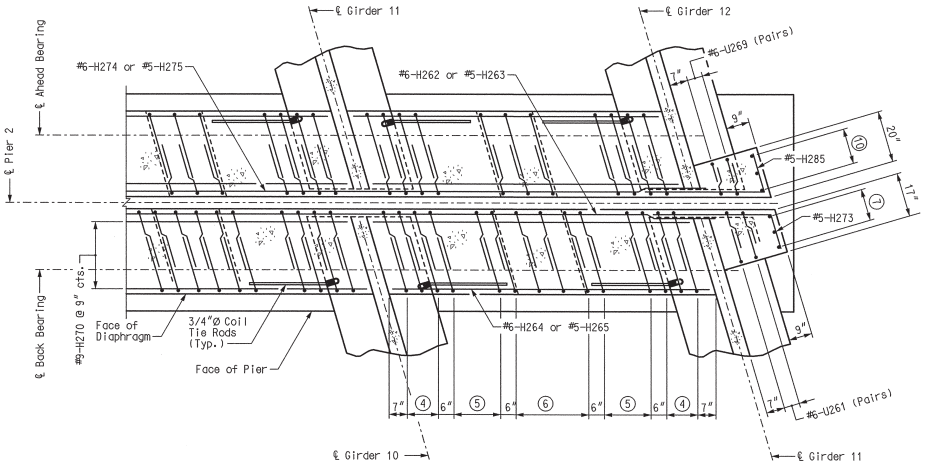

TYPICAL PART PLAN NEAR RAMP 10

DIAPHRAGMS AT PIER 2 - PLANS

Detailed JUL 2009
Checked JUL 2009

Note: This drawing is not to scale. Follow dimensions.

Sheet No. 64 of 125

STATE OF MISSOURI
LAWRENCE R. ROLWES
NUMBER
PE-2006002847
REGISTERED PROFESSIONAL ENGINEER
8/20/09

DATE	
8/20/09	
ROUTE	STATE
I-70	MO
DISTRICT	SHEET NO.
6	BR64
COUNTY	
St. Louis City - MO	
JOB NO.	
J6I0984B	
CONTRACT ID.	
PROJECT NO.	
BRIDGE NO.	
A6500	

DATE | DESCRIPTION

MISSOURI HIGHWAYS AND TRANSPORTATION COMMISSION
MoDOT
105 WEST CAPITOL
JEFFERSON CITY, MO 65102
1-888-ASK-MODOT (1-888-275-6636)

HNTB
715 KIRK DRIVE
KANSAS CITY, MO 64105-1310
TELEPHONE (816) 472-1201
CERTIFICATE OF AUTHORITY
NO. 001270

REV.

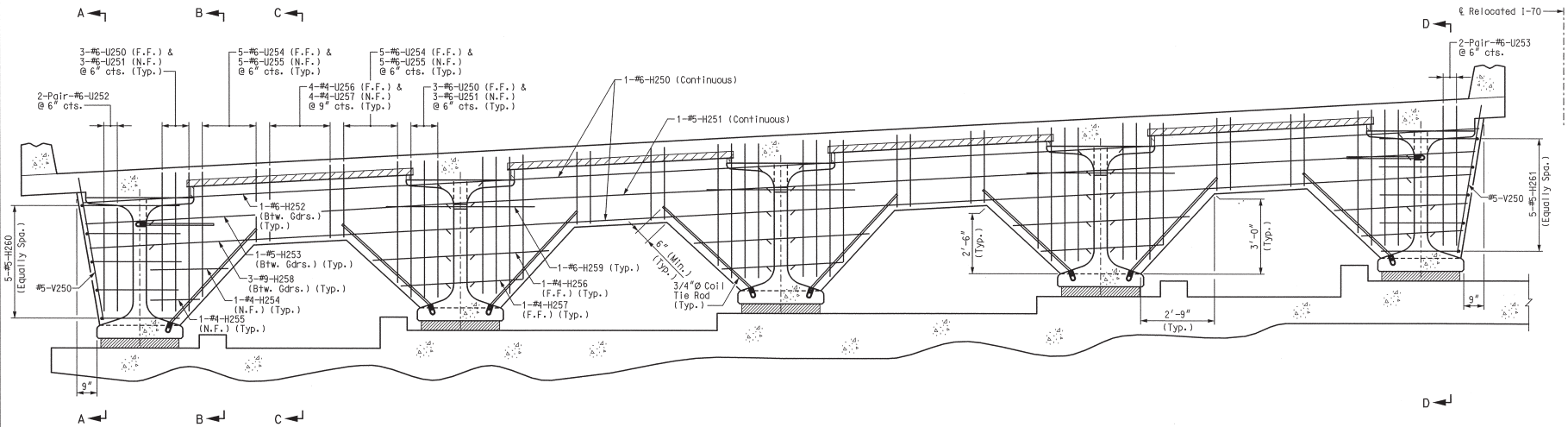

ELEVATION

(Ramp 8)
(Looking Upstation)

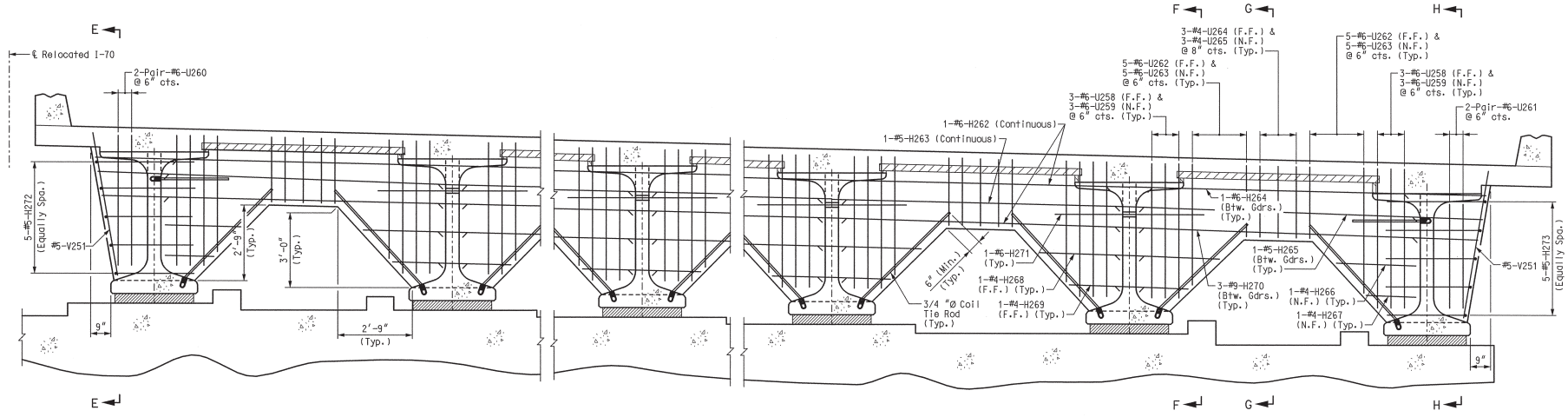

ELEVATION

(Ramp 10)
(Looking Upstation)

Notes:
For plans and details of diaphragms, see Sheet Nos. 64 and 67.
For Sections A-A, B-B, C-C, D-D, E-E, F-F, G-G, and H-H, see Sheet No. 67.

DIAPHRAGMS AT PIER 2 - ELEVATIONS (SPAN 1-2)

Detailed JUL 2009
Checked JUL 2009

Note: This drawing is not to scale. Follow dimensions.

Sheet No. 65 of 125

STATE OF MISSOURI
LAWRENCE B. ROLWEY, JR.
NUMBER
PE-2006002847
REGISTERED PROFESSIONAL ENGINEER

8/20/09

DATE	
8/20/09	
ROUTE	STATE
I-70	MO
DISTRICT	SHEET NO.
6	BR65
COUNTY	
St. Louis City - MO	
JOB NO.	
J6I0984B	
CONTRACT ID.	
PROJECT NO.	
BRIDGE NO.	
A6500	

DESCRIPTION

DATE

MISSOURI HIGHWAYS AND TRANSPORTATION COMMISSION

MoDOT

105 WEST CAPITOL
JEFFERSON CITY, MO 65102
1-888-ASK-MODOT (1-888-275-6636)

HNTB

715 KIRK DRIVE
KANSAS CITY, MO 64105-1310
TELEPHONE (816) 472-1201
CERTIFICATE OF AUTHORITY
NO. 001270

REV.

\\slsw00\Jobs\46440\Techprod\Bridges\MO-Approach\Drawings\Baseline Drawings\B_A6500_065-125_J6I0984B_065.dgn

18-AUG-2009 10:26

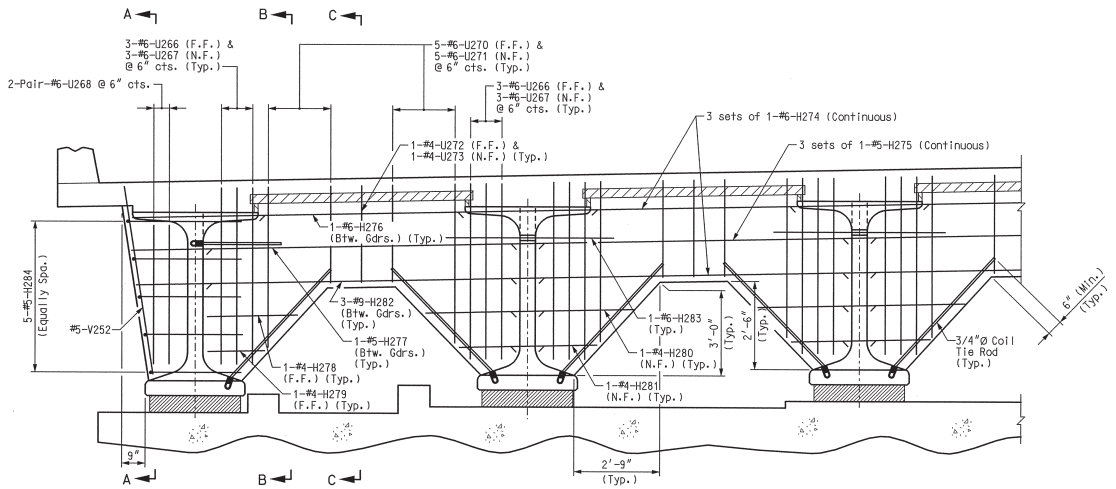

TYPICAL PART ELEVATION NEAR RAMP 8

(Looking Upstation)

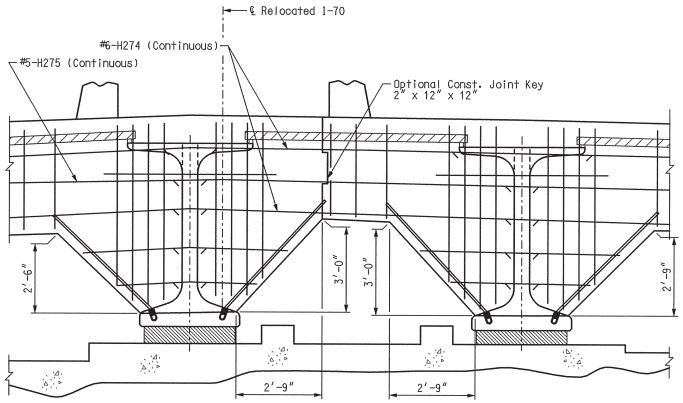

PART ELEVATION NEAR GORE

(Near Const. Joint)
(Looking Upstation)

Note:
Use minimum lap length of 3'-6" between #6-H274 bars.
Use minimum lap length of 2'-11" between #5-H275 bars.

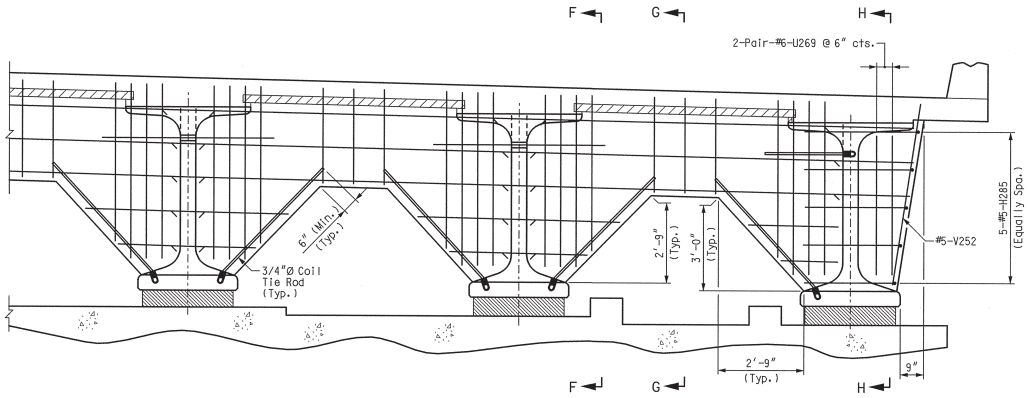

TYPICAL PART ELEVATION NEAR RAMP 10

(Looking Upstation)

Notes:
For plans and details of diaphragms, see Sheet Nos. 64 and 67.
For Sections A-A, B-B, C-C, D-D, E-E, F-F, G-G, and H-H, see Sheet No. 67.

DIAPHRAGMS AT PIER 2 - ELEVATIONS (SPAN 2-3)

Detailed JUL 2009
Checked JUL 2009

Note: This drawing is not to scale. Follow dimensions.

STATE OF MISSOURI
LAWRENCE C. ROLWES JR.
NUMBER
PE-2006002847
PROFESSIONAL ENGINEER

8/20/09

DATE	
8/20/09	
ROUTE	STATE
I-70	MO
DISTRICT	SHEET NO.
6	BR66
COUNTY	
St. Louis City - MO	
JOB NO.	
J6I0984B	
CONTRACT ID.	
PROJECT NO.	
BRIDGE NO.	
A6500	

DATE	DESCRIPTION

MISSOURI HIGHWAYS AND TRANSPORTATION COMMISSION

MoDOT

105 WEST CAPITOL
JEFFERSON CITY, MO 65102
1-888-ASK-MODOT (1-888-275-6636)

HNTB

715 KIRK DRIVE
KANSAS CITY, MO 64105-1310
TELEPHONE (816) 472-1201
CERTIFICATE OF AUTHORITY
NO. 001270

REV.

\\slsw00\Jobs\46440\Techprod\Bridges\MO-Approach\Drawings\Baseline Drawings\B_A6500_066-125_J6I0984B_066.dgn

18-AUG-2009 10:26

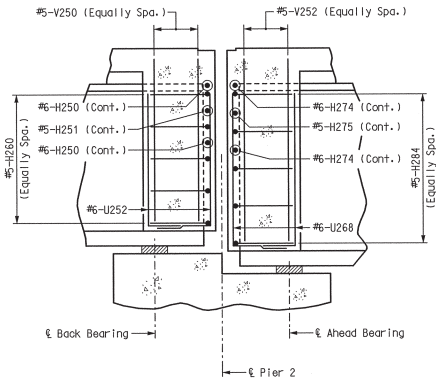

SECTION A-A

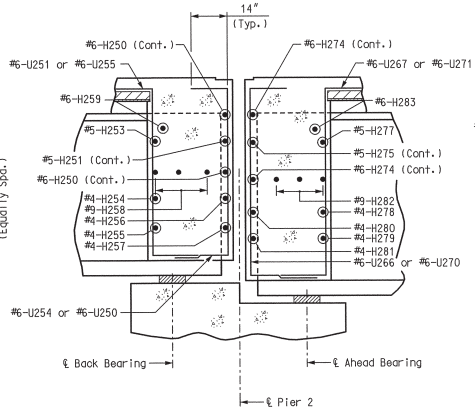

SECTION B-B

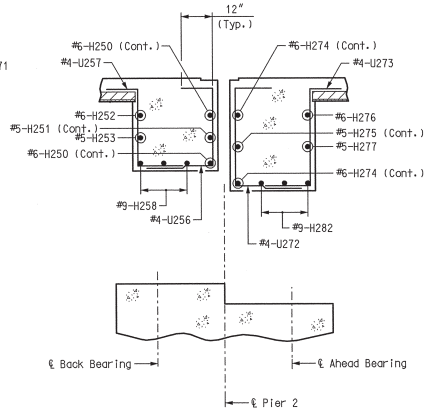

SECTION C-C

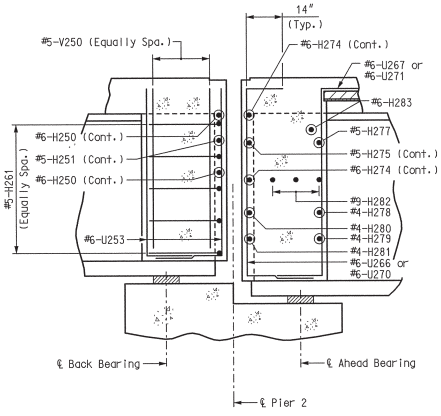

SECTION D-D

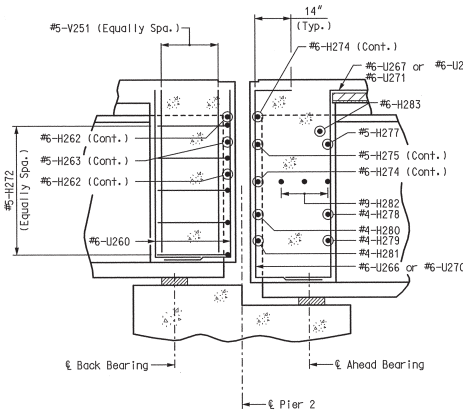

SECTION E-E

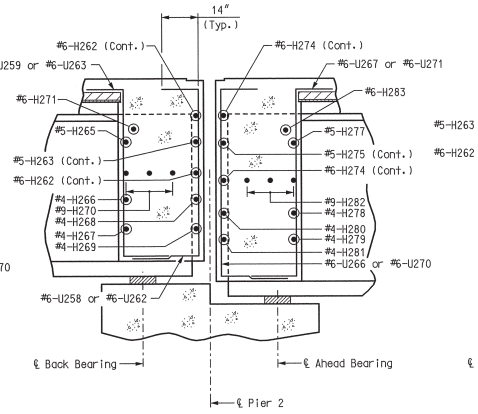

SECTION F-F

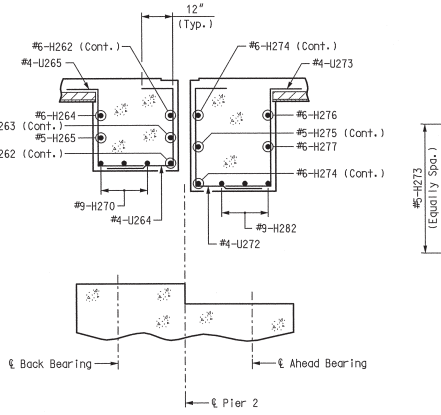

SECTION G-G

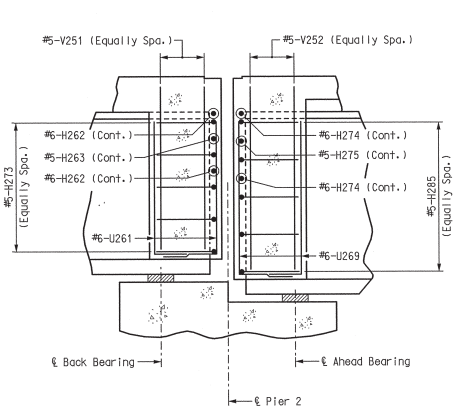

SECTION H-H

Note:
For location of Section A-A, B-B, C-C, D-D, E-E, F-F, G-G and H-H see Sheet Nos. 65 and 66.

DIAPHRAGMS AT PIER 2 - DETAILS

Detailed JUL 2009
Checked JUL 2009

Note: This drawing is not to scale. Follow dimensions.

Sheet No. 67 of 125

\\slsw00\Jobs\46440\Techprod\Bridges\MO-Approach\Drawings\Baseline Drawings\B_A6500_067-125_J6I0984B_067.dgn

18-AUG-2009 10:26

STATE OF MISSOURI
LAWRENCE R. ROLWES JR.
NUMBER 2004000947
PROFESSIONAL ENGINEER
8/20/09

DATE
8/20/09

ROUTE	STATE
I-70	MO
DISTRICT	SHEET NO.
6	BR67

COUNTY
St. Louis City - MO

JOB NO.
J6I0984B

CONTRACT ID.

PROJECT NO.

BRIDGE NO.
A6500

DATE	DESCRIPTION	REV.

MISSOURI HIGHWAYS AND TRANSPORTATION COMMISSION
105 WEST CAPITOL
JEFFERSON CITY, MO 65102
1-888-ASK-MODOT (1-888-275-6636)

HNTB
715 KIRK DRIVE
KANSAS CITY, MO 64105-1310
TELEPHONE (816) 472-1201
CERTIFICATE OF AUTHORITY NO. 001270

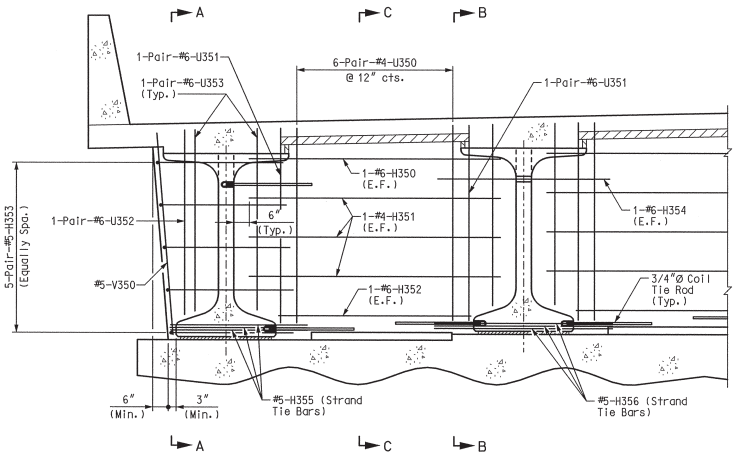

TYPICAL PART ELEVATION

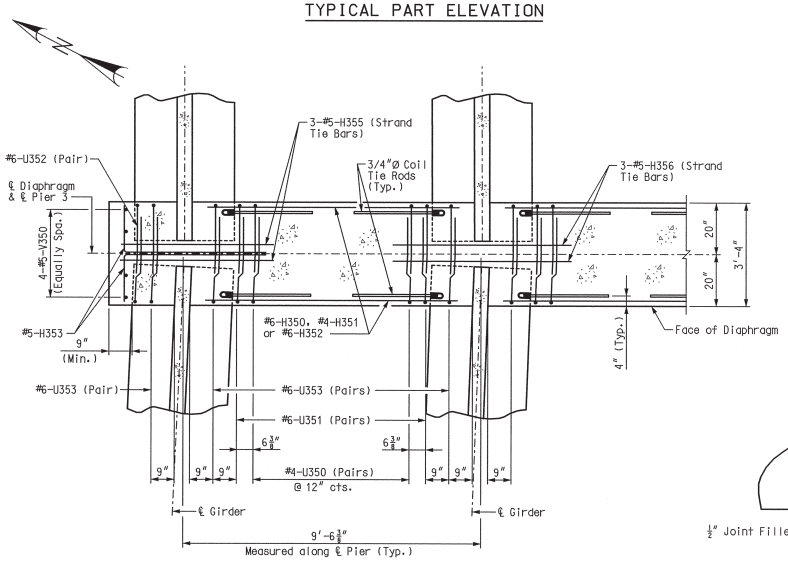

TYPICAL PART PLAN

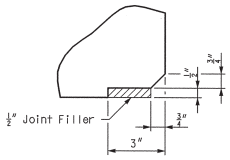

DETAIL "A"

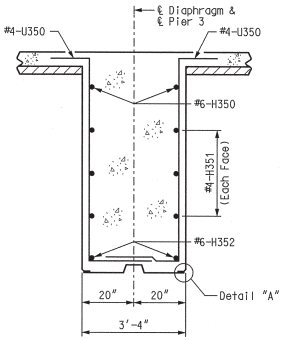

SECTION C-C

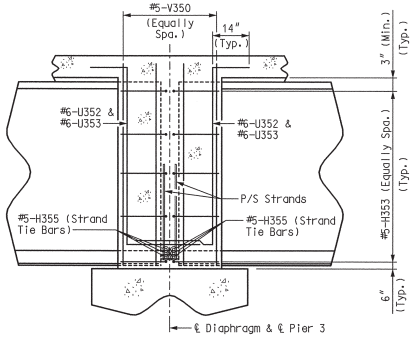

SECTION A-A

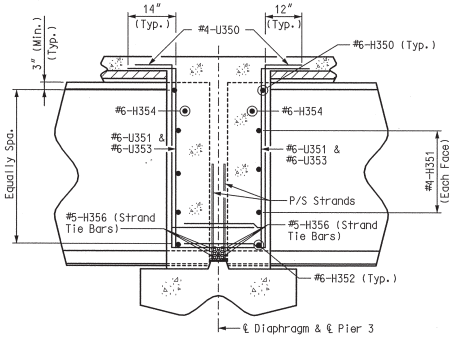

SECTION B-B

Notes:
For location of #5-H355 and #5-H356 (Strand Tie Bars), see Sheet Nos. 42 thru 46.
Diaphragms at Piers shall be built vertical.
For location and details of coil ties, see Sheet No. 63.

DIAPHRAGM AT PIER 3

Detailed JUL 2009
Checked JUL 2009

Note: This drawing is not to scale. Follow dimensions.

Sheet No. 68 of 125

\\slsw00\Jobs\46440\Techprod\Bridges\MO-Approach\Drawings\Baseline Drawings\B_A6500_068-125_J6I0984B_068.dgn

18-AUG-2009 10:26

LAWRENCE E. ROLWES NUMBER PE-2009009841 PROFESSIONAL ENGINEER STATE OF MISSOURI

8/20/09

DATE
8/20/09

ROUTE	STATE
I-70	MO
DISTRICT	SHEET NO.
6	BR68

COUNTY
St. Louis City - MO

JOB NO.
J6I0984B

CONTRACT ID.

PROJECT NO.

BRIDGE NO.
A6500

DESCRIPTION	DATE

MISSOURI HIGHWAYS AND TRANSPORTATION COMMISSION

105 WEST CAPITOL
JEFFERSON CITY, MO 65102
1-888-ASK-MODOT (1-888-275-6636)

HNTB
715 KIRK DRIVE
KANSAS CITY, MO 64105-1310
TELEPHONE (816) 472-1201
CERTIFICATE OF AUTHORITY
NO. 001270

REV.

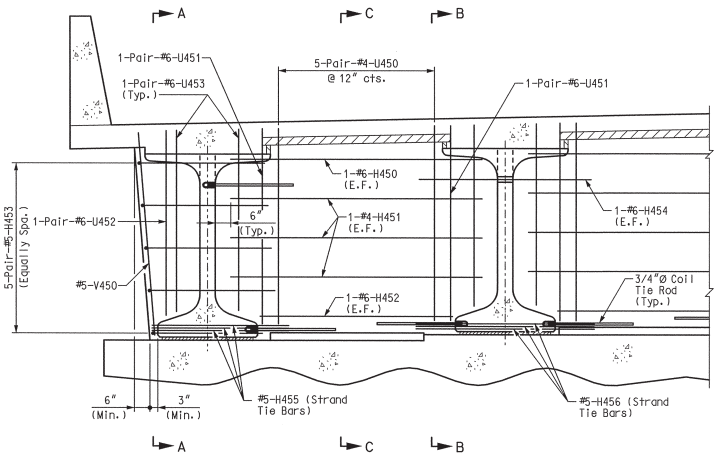

TYPICAL PART ELEVATION

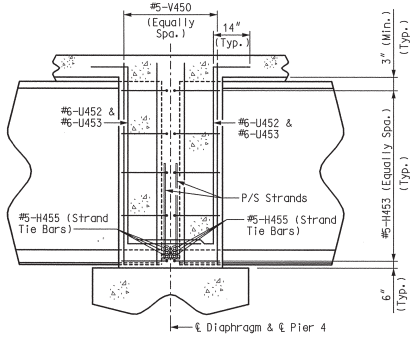

SECTION A-A

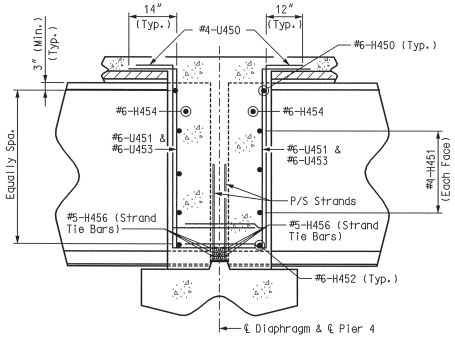

SECTION B-B

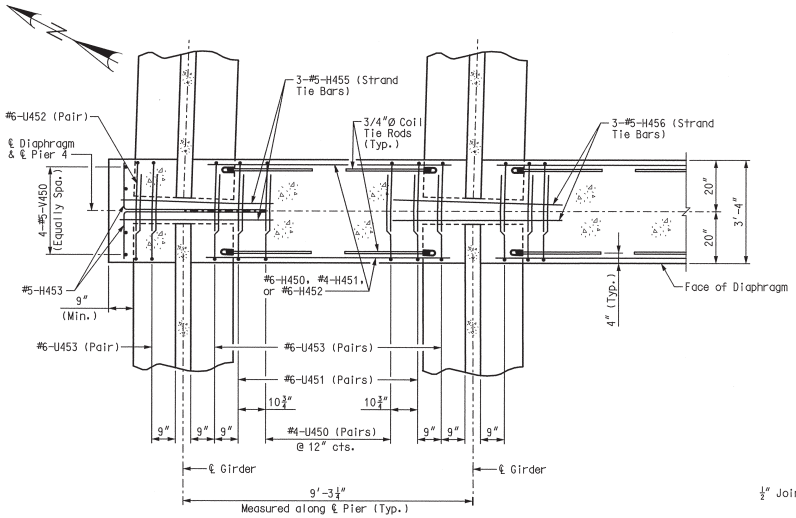

TYPICAL PART PLAN

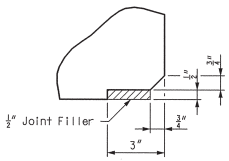

DETAIL "A"

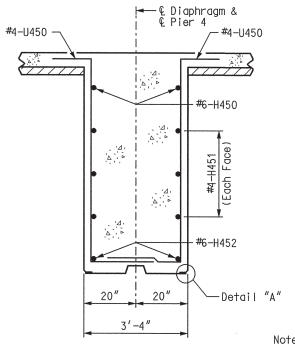

SECTION C-C

Notes:
For location of #5-H455 and #5-H456 (Strand Tie Bars), see Sheet Nos. 46 and 47.
Diaphragms at Piers shall be built vertical.
For location and details of coil ties, see Sheet No. 63.

DIAPHRAGM AT PIER 4

Detailed JUL 2009
Checked JUL 2009

Note: This drawing is not to scale. Follow dimensions.

STATE OF MISSOURI LAWRENCE ROLWESS NUMBER PE-2006002847 REGISTERED PROFESSIONAL ENGINEER

8/20/09

DATE	
8/20/09	
ROUTE	STATE
I-70	MO
DISTRICT	SHEET NO.
6	BR69
COUNTY	
St. Louis City - MO	
JOB NO.	
J6I0984B	
CONTRACT ID.	
PROJECT NO.	
BRIDGE NO.	
A6500	

DESCRIPTION

DATE

MISSOURI HIGHWAYS AND TRANSPORTATION COMMISSION

MoDOT

105 WEST CAPITOL
JEFFERSON CITY, MO 65102
1-888-ASK-MODOT (1-888-275-6636)

HNTB

715 KIRK DRIVE
KANSAS CITY, MO 64105-1310
TELEPHONE (816) 472-1201
CERTIFICATE OF AUTHORITY NO. 001270

REV.

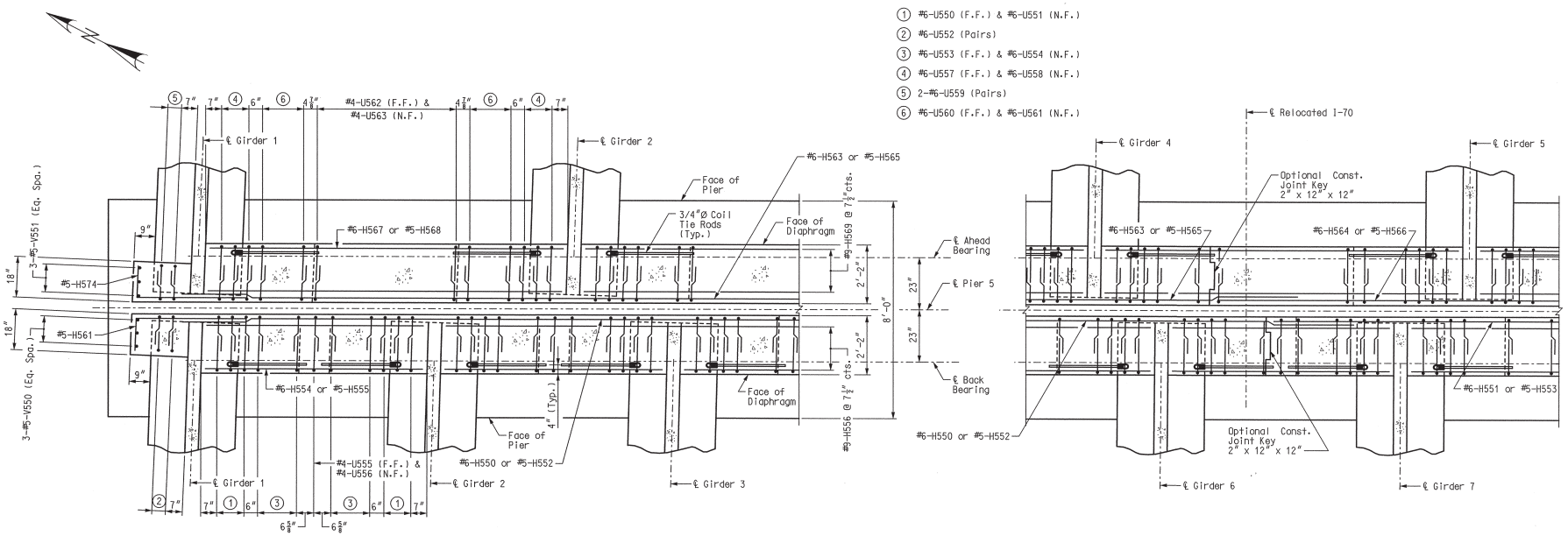

TYPICAL PART PLAN

PART PLAN NEAR CONST. JOINT

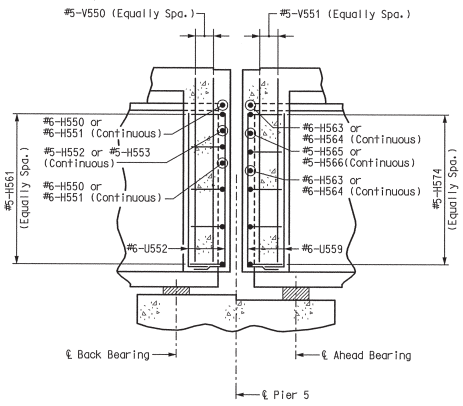

SECTION A–A

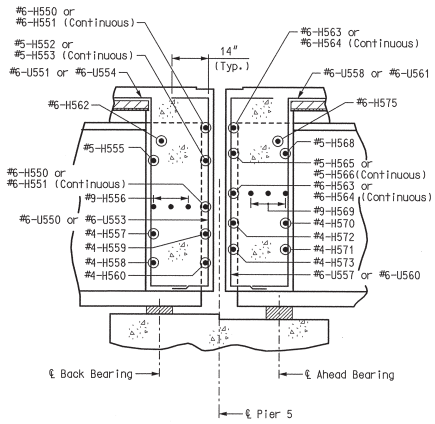

SECTION B–B

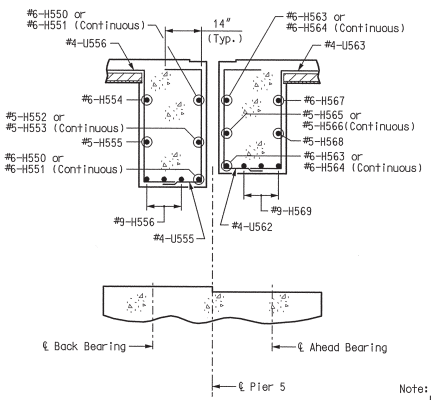

SECTION C–C

Note:
For location of Sections A-A, B-B and C-C see Sheet No. 71.

DIAPHRAGMS AT PIER 5 – PLANS AND DETAILS

Detailed JUL 2009
Checked JUL 2009

Note: This drawing is not to scale. Follow dimensions.

Sheet No. 70 of 125

\\slsw00\Jobs\46440\Techprod\Bridges\MO-Approach\Drawings\Baseline Drawings\B_A6500_070-125_J6I0984B_070.dgn

18-AUG-2009 10:26

STATE OF MISSOURI
LAWRENCE A. ROLWES
NUMBER PE-2006020847
PROFESSIONAL ENGINEER
8/20/09

DATE 8/20/09
ROUTE I-70
STATE MO
DISTRICT 6
SHEET NO. BR70
COUNTY St. Louis City - MO
JOB NO. J6I0984B
CONTRACT ID.
PROJECT NO.
BRIDGE NO. A6500

DESCRIPTION
DATE

MISSOURI HIGHWAYS AND TRANSPORTATION COMMISSION
MoDOT
105 WEST CAPITOL
JEFFERSON CITY, MO 65102
1-888-ASK-MODOT (1-888-275-6636)

HNTB
715 KIRK DRIVE
KANSAS CITY, MO 64105-1310
TELEPHONE (816) 472-1201
CERTIFICATE OF AUTHORITY NO. 001270

REV.

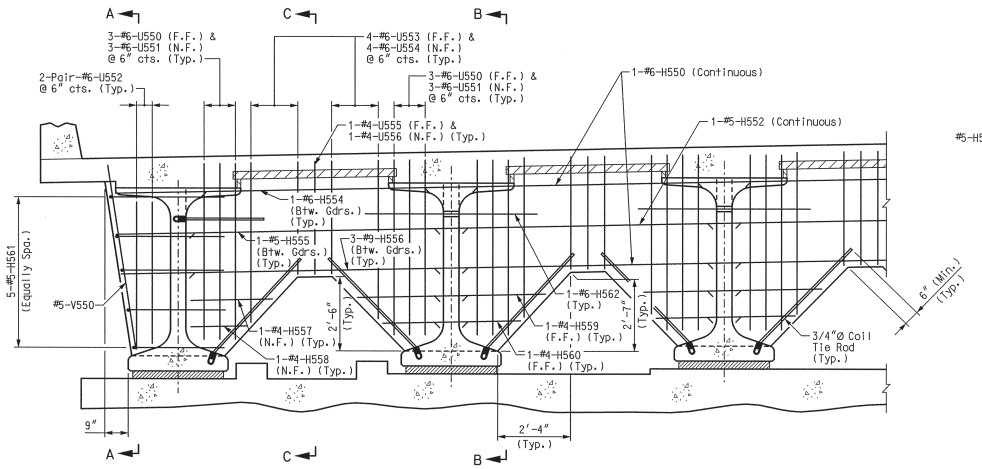

TYPICAL PART ELEVATION

Span (4-5)
(Looking upstation)

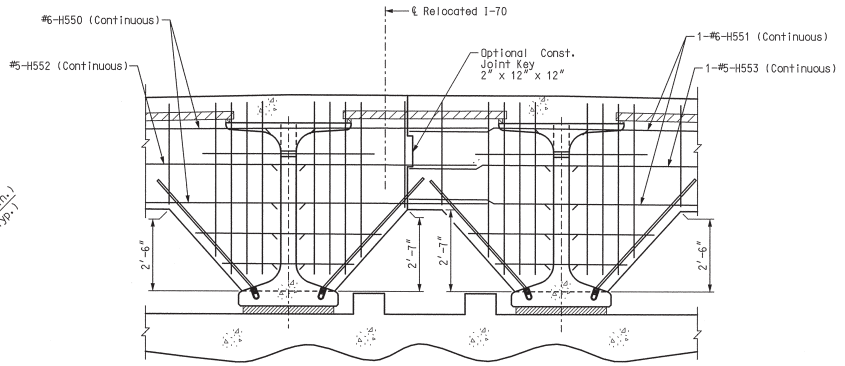

PART ELEVATION

Span (4-5) Near Const. Joint
(Looking Upstation)

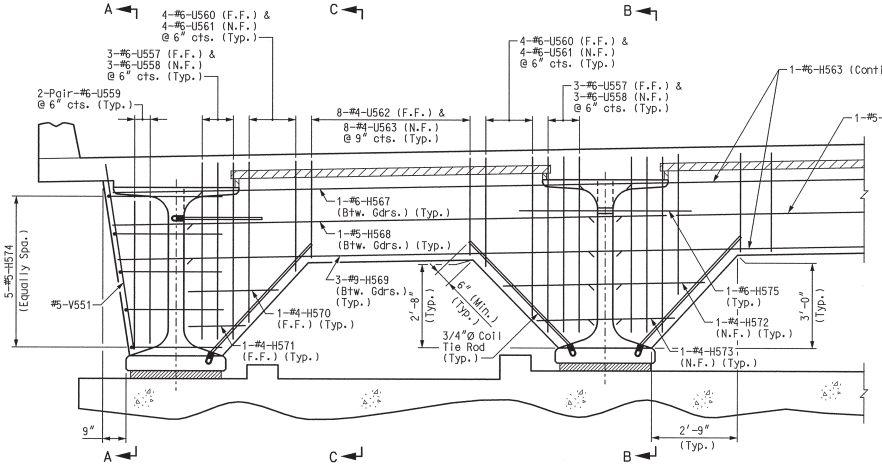

TYPICAL PART ELEVATION

Span (5-6)
(Looking Upstation)

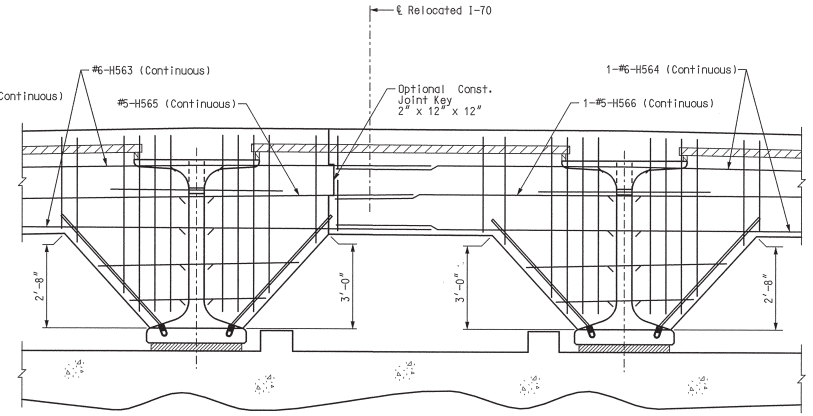

PART ELEVATION

Span (5-6) Near Const. Joint
(Looking Upstation)

Notes:
Use minimum lap length of 3'-6" between #6-H550 and #6-H551, #6-H563 and #6-H564.
Use minimum lap length of 2'-11" between #5-H552 and #5-H553, #5-H565 and #5-H566.

Notes:
Diaphragms at piers shall be built vertical.
For location and details of coil ties, see Sheet No. 63.
For girder spacing, see Sheet Nos. 38 and 39.
Seal inside face and ends of diaphragm with Protective Coating - Concrete Bents and Piers (Epoxy).
For plans and details of diaphragms, see Sheet No. 70.

DIAPHRAGMS AT PIER 5 - ELEVATIONS

Detailed JUL 2009
Checked JUL 2009

Note: This drawing is not to scale. Follow dimensions.

STATE OF MISSOURI
LAWRENCE E. ROLWES, JR.
NUMBER PE-2006002847
REGISTERED PROFESSIONAL ENGINEER

8/20/09

DATE	
8/20/09	
ROUTE	STATE
I-70	MO
DISTRICT	SHEET NO.
6	BR71
COUNTY	
St. Louis City - MO	
JOB NO.	
J6I0984B	
CONTRACT ID.	
PROJECT NO.	
BRIDGE NO.	
A6500	

DESCRIPTION

DATE

MISSOURI HIGHWAYS AND TRANSPORTATION COMMISSION

MoDOT

105 WEST CAPITOL
JEFFERSON CITY, MO 65102
1-888-ASK-MODOT (1-888-275-6636)

HNTB

715 KIRK DRIVE
KANSAS CITY, MO 64105-1310
TELEPHONE (816) 472-1201
CERTIFICATE OF AUTHORITY
NO. 001270

REV.

\\slsw00\Jobs\46440\Techprod\Bridges\MO-Approach\Drawings\Baseline Drawings\B_A6500_071-125_J6I0984B_071.dgn

18-AUG-2009 10:26

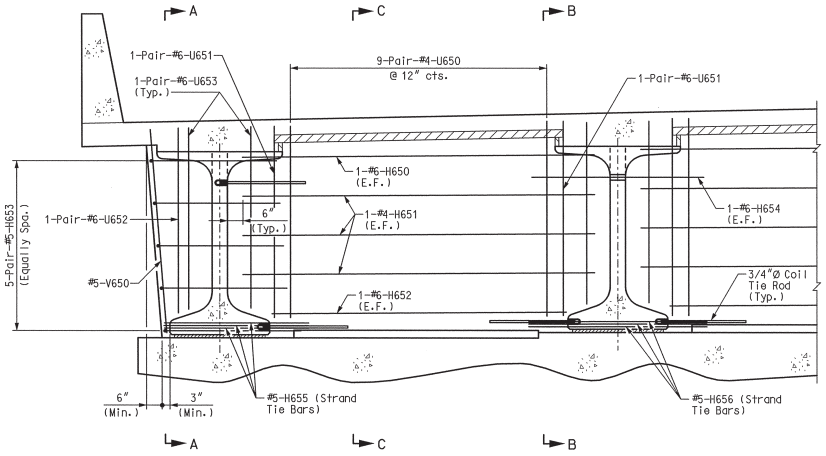

TYPICAL PART ELEVATION

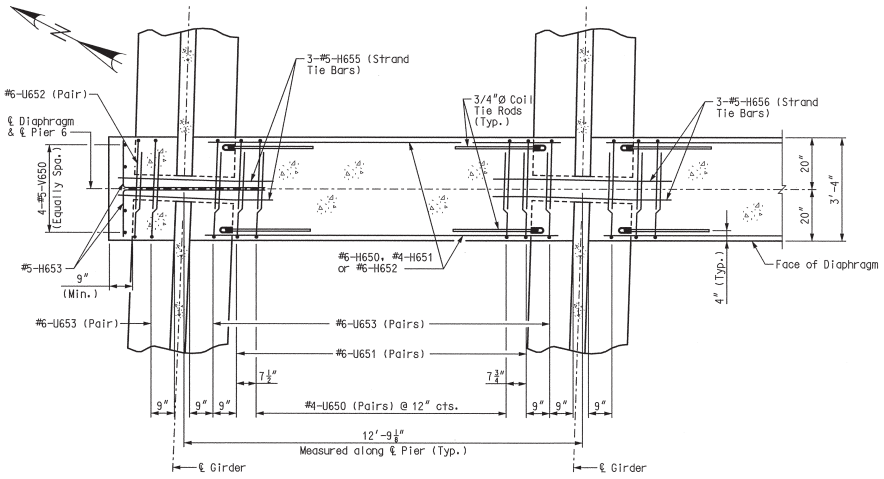

TYPICAL PART PLAN

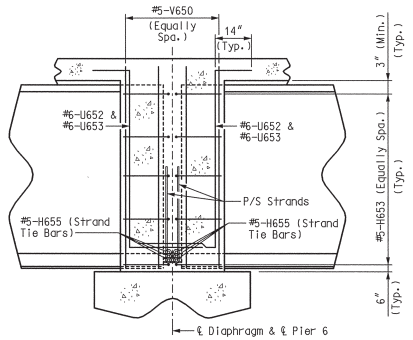

SECTION A-A

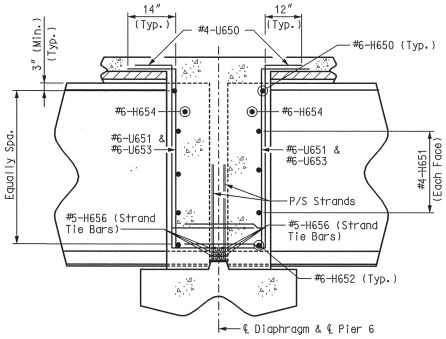

SECTION B-B

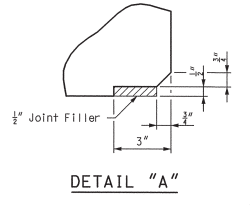

DETAIL "A"

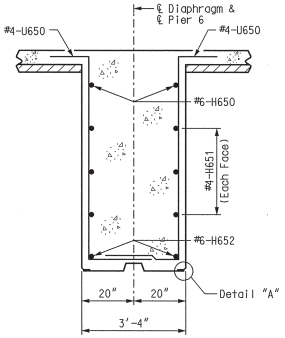

SECTION C-C

Notes:
For location of #5-H655 and #5-H656 (Strand Tie Bars), see Sheet Nos. 48 and 49.
Diaphragms at Piers shall be built vertical.
For location and details of coil ties, see Sheet No. 63.

DIAPHRAGM AT PIER 6

LAWRENCE D. ROLWES, JR. NUMBER PE-2005002847 STATE OF MISSOURI PROFESSIONAL ENGINEER

8/20/09

DATE 8/20/09
ROUTE I-70 | STATE MO
DISTRICT 6 | SHEET NO. BR72
COUNTY St. Louis City - MO
JOB NO. J6I0984B
CONTRACT ID.
PROJECT NO.
BRIDGE NO. A6500

DESCRIPTION | DATE

MISSOURI HIGHWAYS AND TRANSPORTATION COMMISSION
MoDOT
105 WEST CAPITOL
JEFFERSON CITY, MO 65102
1-888-ASK-MODOT (1-888-275-6636)

HNTB
715 KIRK DRIVE
KANSAS CITY, MO 64105-1310
TELEPHONE (816) 472-1201
CERTIFICATE OF AUTHORITY NO. 001270

REV.

Detailed JUL 2009
Checked JUL 2009

Note: This drawing is not to scale. Follow dimensions.

\\slsw00\Jobs\46440\Techprod\Bridges\MO-Approach\Drawings\Baseline Drawings\B_A6500_072-125_J6I0984B_072.dgn

18-AUG-2009 10:27

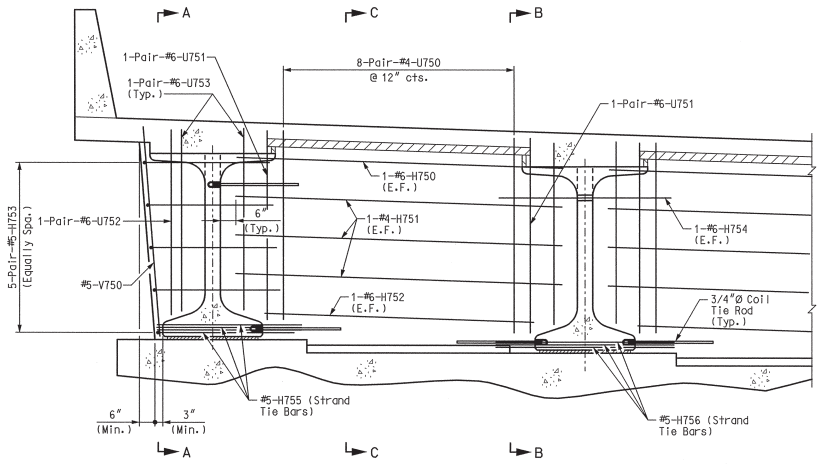

TYPICAL PART ELEVATION

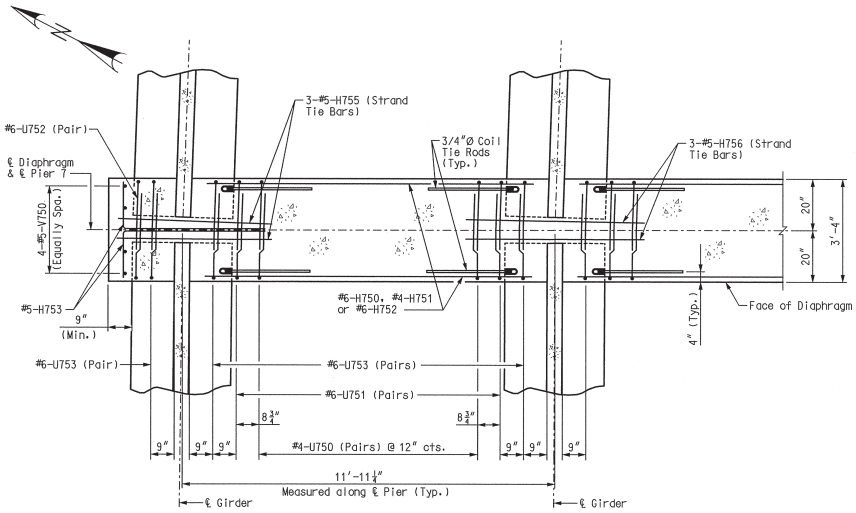

TYPICAL PART PLAN

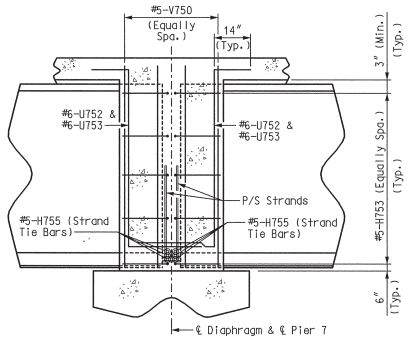

SECTION A-A

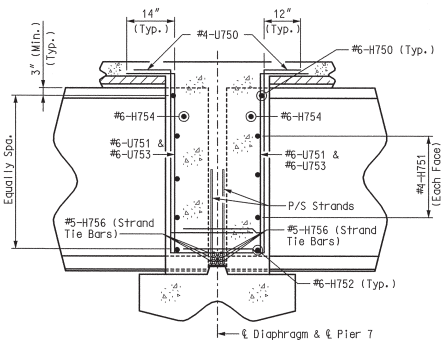

SECTION B-B

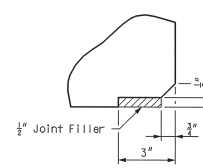

DETAIL "A"

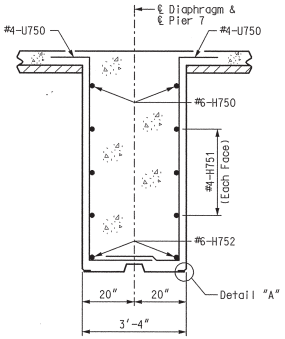

SECTION C-C

Notes:
For location of #5-H755 and #5-H756 (Strand Tie Bars), see Sheet Nos. 49 thru 53.
Diaphragms at Piers shall be built vertical.
For location and details of coil ties, see Sheet No. 63.

DIAPHRAGM AT PIER 7

Detailed JUL 2009
Checked JUL 2009

Note: This drawing is not to scale. Follow dimensions.

Sheet No. 73 of 125

STATE OF MISSOURI LAWRENCE J. ROLWES, JR. NUMBER PE-2006002847 REGISTERED PROFESSIONAL ENGINEER

8/20/09

DATE	
8/20/09	
ROUTE I-70	STATE MO
DISTRICT 6	SHEET NO. BR73
COUNTY St. Louis City - MO	
JOB NO. J6I0984B	
CONTRACT ID.	
PROJECT NO.	
BRIDGE NO. A6500	

DATE	DESCRIPTION

MISSOURI HIGHWAYS AND TRANSPORTATION COMMISSION

MoDOT

105 WEST CAPITOL
JEFFERSON CITY, MO 65102
1-888-ASK-MODOT (1-888-275-6636)

HNTB
715 KIRK DRIVE
KANSAS CITY, MO 64105-1310
TELEPHONE (816) 472-1201
CERTIFICATE OF AUTHORITY NO. 001270

REV.

\\slsw00\Jobs\46440\Techprod\Bridges\MO-Approach\Drawings\Baseline Drawings\B_A6500_073-125_J6I0984B_073.dgn

18-AUG-2009 10:27

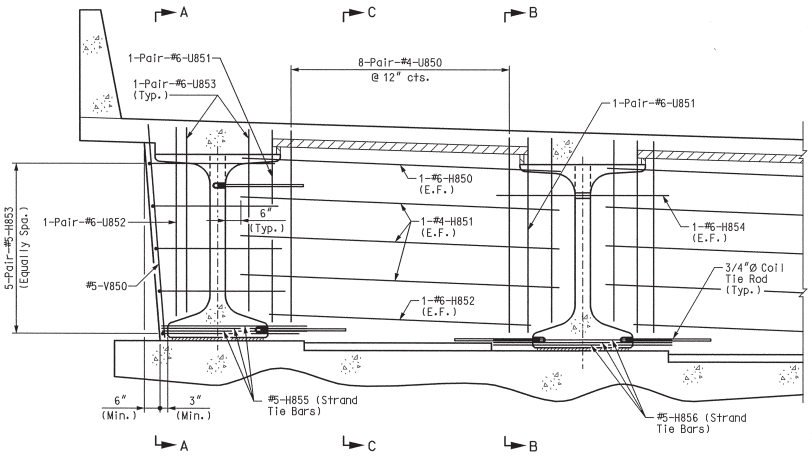

TYPICAL PART ELEVATION

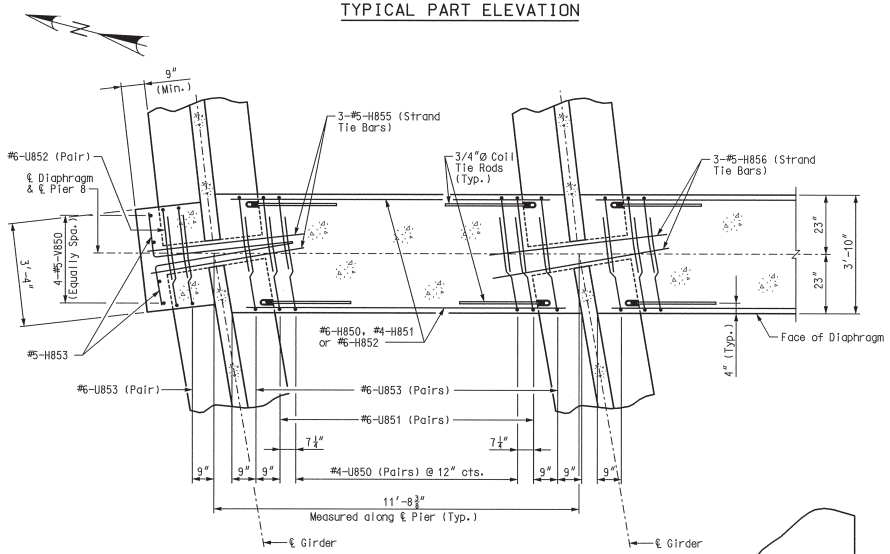

TYPICAL PART PLAN

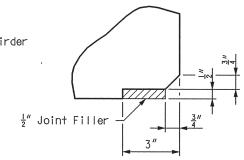

DETAIL "A"

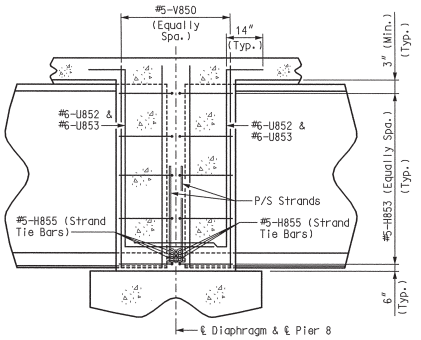

SECTION A-A

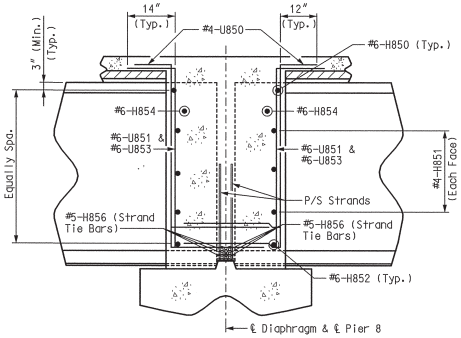

SECTION B-B

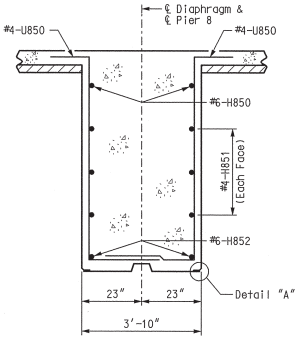

SECTION C-C

Notes:
For location of #5-H855 and #5-H856 (Strand Tie Bars), see Sheet Nos. 50 thru 56.
Diaphragms at Piers shall be built vertical.
For location and details of coil ties, see Sheet No. 63.

DIAPHRAGM AT PIER 8

Detailed JUL 2009
Checked JUL 2009

Note: This drawing is not to scale. Follow dimensions.

Sheet No. 74 of 125

STATE OF MISSOURI
LAWRENCE D. ROLWES JR.
NUMBER
PE-2006002847
REGISTERED PROFESSIONAL ENGINEER
8/20/09

DATE	
8/20/09	
ROUTE I-70	STATE MO
DISTRICT 6	SHEET NO. BR74
COUNTY St. Louis City - MO	
JOB NO. J6I0984B	
CONTRACT ID.	
PROJECT NO.	
BRIDGE NO. A6500	

DATE	DESCRIPTION

MISSOURI HIGHWAYS AND TRANSPORTATION COMMISSION

MoDOT
105 WEST CAPITOL
JEFFERSON CITY, MO 65102
1-888-ASK-MODOT (1-888-275-6636)

HNTB
715 KIRK DRIVE
KANSAS CITY, MO 64105-1310
TELEPHONE (816) 472-1201
CERTIFICATE OF AUTHORITY NO. 001270

REV.

\\slsw00\Jobs\46440\Techprod\Bridges\MO-Approach\Drawings\Baseline Drawings\B_A6500_074-125_J6I0984B_074.dgn 18-AUG-2009 10:27

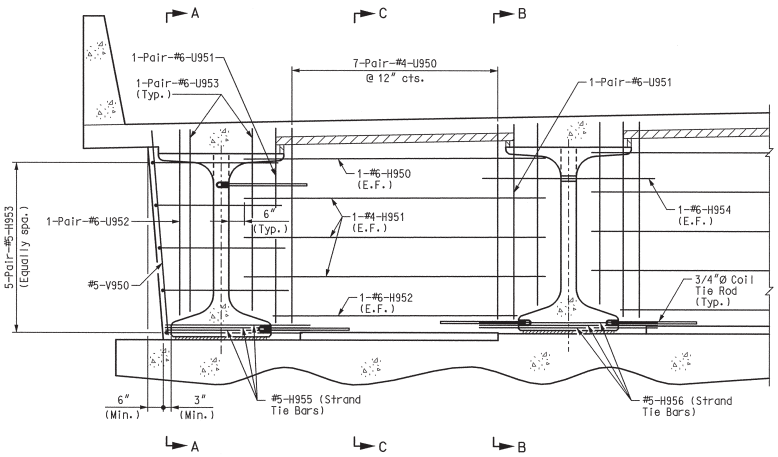

TYPICAL PART ELEVATION

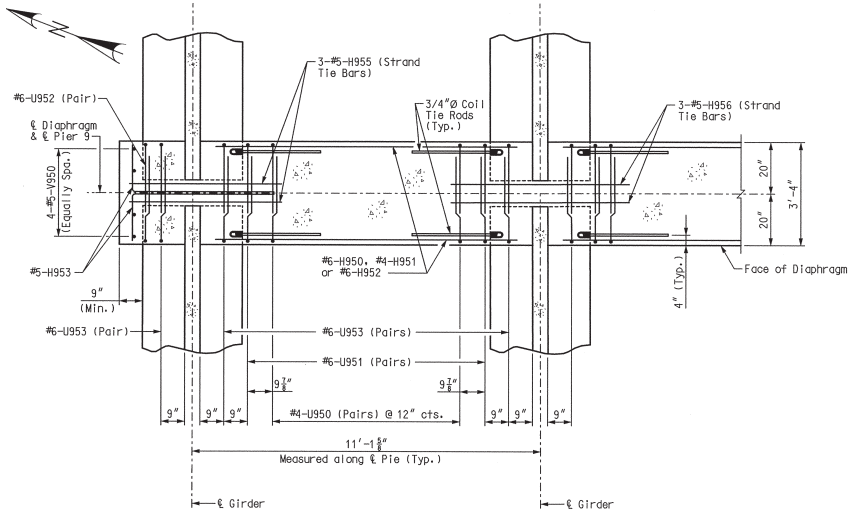

TYPICAL PART PLAN

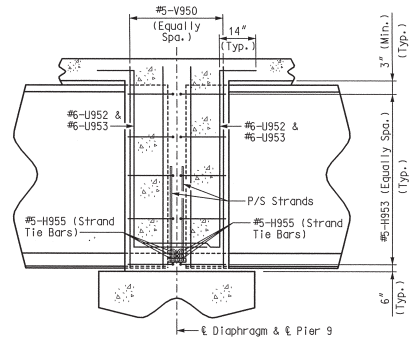

SECTION A-A

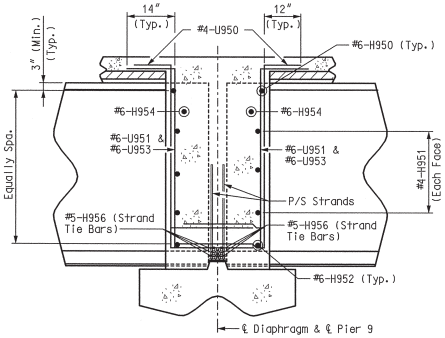

SECTION B-B

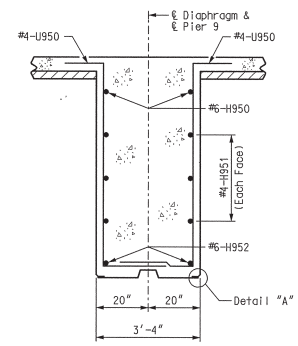

SECTION C-C

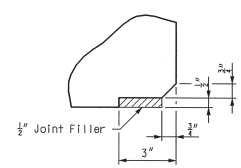

DETAIL "A"

Notes:
For location of #5-H955 and #5-H956 (Strand Tie Bars), see Sheet Nos. 54 thru 57.
Diaphragms at Piers shall be built vertical.
For location and details of coil ties, see Sheet No. 63.

DIAPHRAGM AT PIER 9

Detailed JUL 2009
Checked JUL 2009

Note: This drawing is not to scale. Follow dimensions.

STATE OF MISSOURI LAWRENCE ROLWES JR. NUMBER PE-2006002847 REGISTERED PROFESSIONAL ENGINEER
8/20/09

DATE	8/20/09
ROUTE	I-70
STATE	MO
DISTRICT	6
SHEET NO.	BR75
COUNTY	St. Louis City - MO
JOB NO.	J6I0984B
CONTRACT ID.	
PROJECT NO.	
BRIDGE NO.	A6500

DESCRIPTION

DATE

MISSOURI HIGHWAYS AND TRANSPORTATION COMMISSION

MoDOT
105 WEST CAPITOL
JEFFERSON CITY, MO 65102
1-888-ASK-MODOT (1-888-275-6636)

HNTB
715 KIRK DRIVE
KANSAS CITY, MO 64105-1310
TELEPHONE (816) 472-1201
CERTIFICATE OF AUTHORITY NO. 001270

REV.

\\slsw00\Jobs\46440\Techprod\Bridges\MO-Approach\Drawings\Baseline Drawings\B_A6500_075-125_J6I0984B_075.dgn 18-AUG-2009 10:27

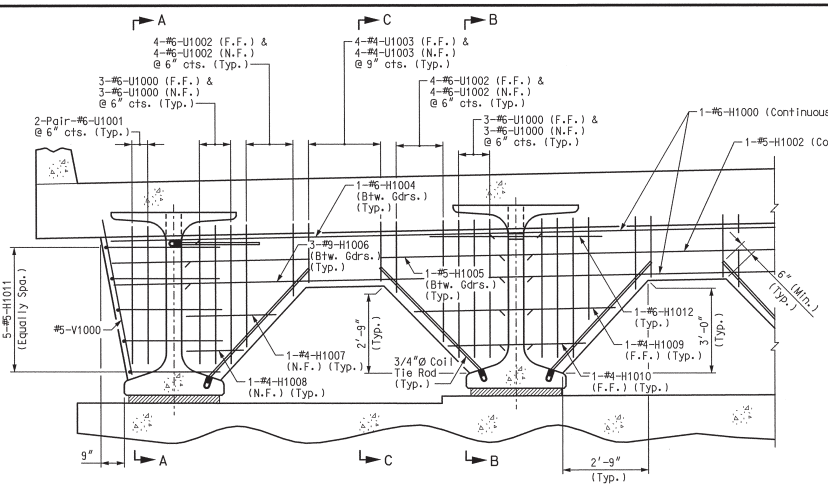

TYPICAL PART ELEVATION

Span (9-10)
(Looking Upstation)

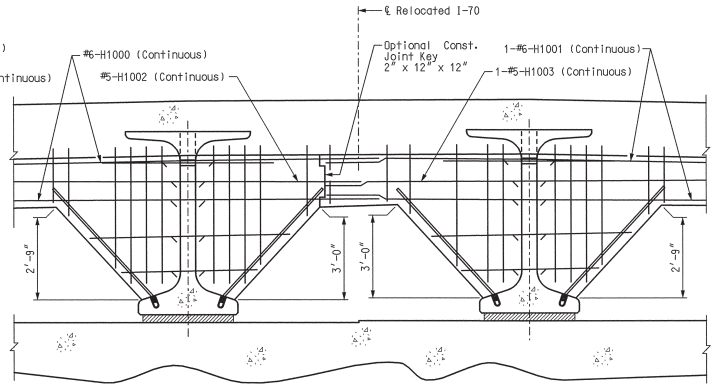

PART ELEVATION

Span (9-10) Near Const. Joint
(Looking Upstation)

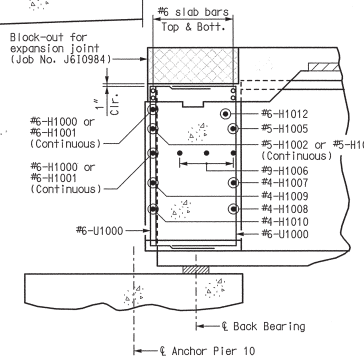

SECTION B-B

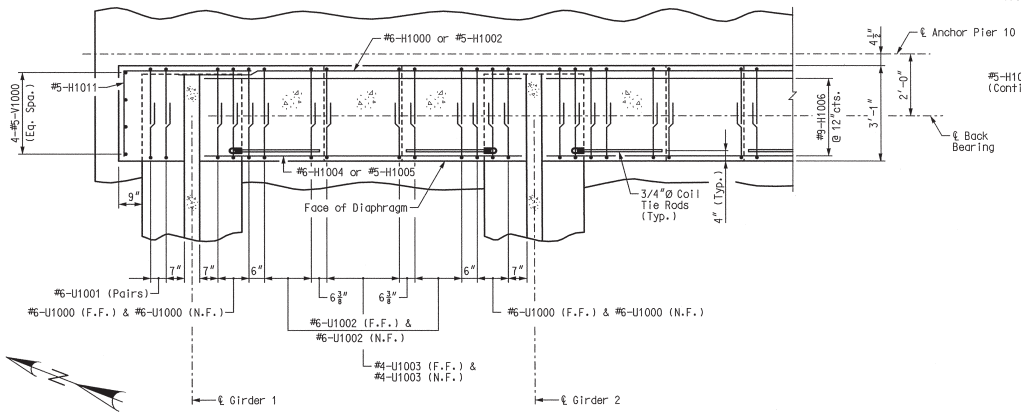

TYPICAL PART PLAN

Notes:
Use minimum lap length of 3'-6" between #6-H1000 and #6-H1001.
Use minimum lap length of 2'-11" between #5-H1002 and #5-H1003.

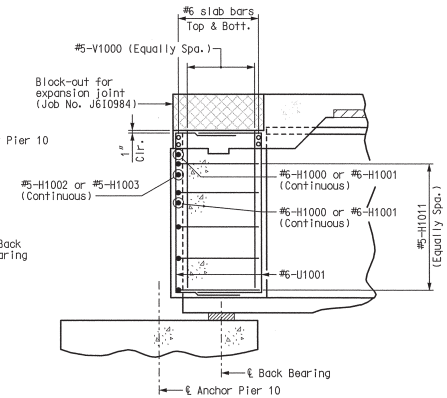

SECTION A-A

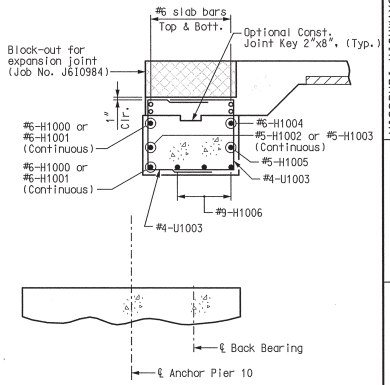

SECTION C-C

Notes:
Diaphragms at piers shall be built vertical.
For location and details of coil ties, see Sheet No. 63.
For girder spacing, see Sheet No. 39.
Seal inside face and ends of diaphragm with Protective Coating - Concrete Bents and Piers (Epoxy).
Adjust or cut slab and diaphragm reinforcing bars to clear expansion joint support blocks.

DIAPHRAGM AT PIER 10

Detailed JUL 2009
Checked JUL 2009

Note: This drawing is not to scale. Follow dimensions.

LAWRENCE C. ROLWES, SR. NUMBER PE-2005002847
8/20/09

DATE	8/20/09
ROUTE	I-70
STATE	MO
DISTRICT	6
SHEET NO.	BR76
COUNTY	St. Louis City - MO
JOB NO.	J6I0984B
CONTRACT ID.	
PROJECT NO.	
BRIDGE NO.	A6500

DESCRIPTION | DATE

MISSOURI HIGHWAYS AND TRANSPORTATION COMMISSION
105 WEST CAPITOL
JEFFERSON CITY, MO 65102
1-888-ASK-MODOT (1-888-275-6636)
HNTB
715 KIRK DRIVE
KANSAS CITY, MO 64105-1310
TELEPHONE (816) 472-1201
CERTIFICATE OF AUTHORITY NO. 001270

REV.

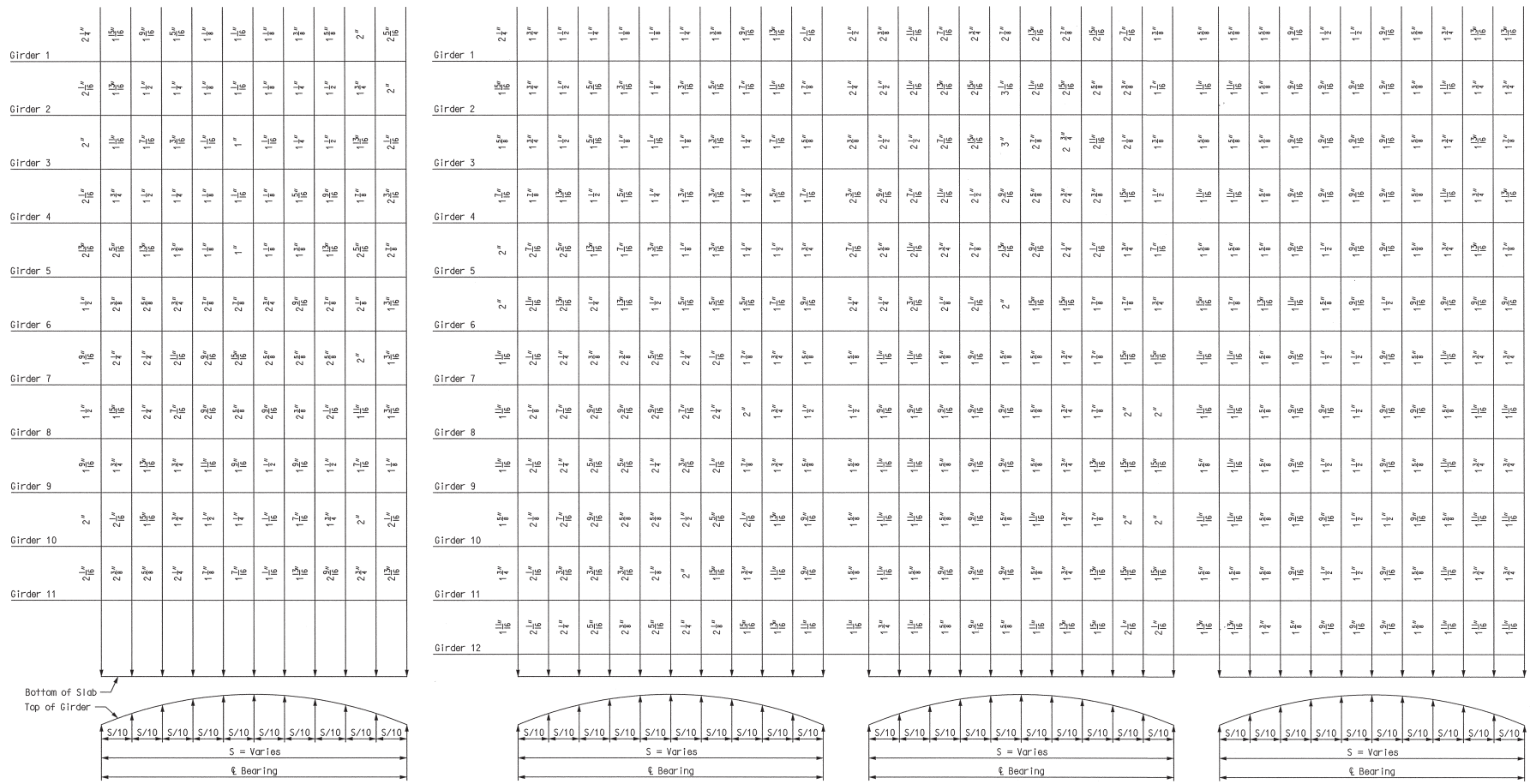

SPAN (1-2)

SPAN (2-3)

SPAN (3-4)

SPAN (4-5)

Notes:
If girder camber is different from that shown in the camber diagram, adjustment of the slab haunches, an increase in slab thickness, or a raise in grade uniformly throughout the structure shall be necessary. No payment will be made for additional labor or materials required for variation in haunching, slab thickness, or grade adjustment.
Concrete in the slab haunches is included in the Estimated Quantities for Slab on Concrete NU-Girder.

Detailed JUL 2009
Checked JUL 2009

Note: This drawing is not to scale. Follow dimensions.

Sheet No. 77 of 125

THEORETICAL SLAB HAUNCHING DIAGRAM - UNITS 1 AND UNIT 2

STATE OF MISSOURI
LAWRENCE E. ROLWEG, JR.
NUMBER PE-2006002847
REGISTERED PROFESSIONAL ENGINEER

8/20/09

DATE	8/20/09
ROUTE	I-70
STATE	MO
DISTRICT	6
SHEET NO.	BR77
COUNTY	St. Louis City - MO
JOB NO.	J6I0984B
CONTRACT ID.	
PROJECT NO.	
BRIDGE NO.	A6500

DESCRIPTION

DATE

MISSOURI HIGHWAYS AND TRANSPORTATION COMMISSION

MoDOT

105 WEST CAPITOL
JEFFERSON CITY, MO 65102
1-888-ASK-MODOT (1-888-275-6636)

HNTB
715 KIRK DRIVE
KANSAS CITY, MO 64105-1310
TELEPHONE (816) 472-1201
CERTIFICATE OF AUTHORITY
NO. 001270

REV.

\\slsw00\Jobs\46440\Techprod\Bridges\MO-Approach\Drawings\Baseline Drawings\B_A6500_077-125_J6I0984B_077.dgn

18-AUG-2009 10:27

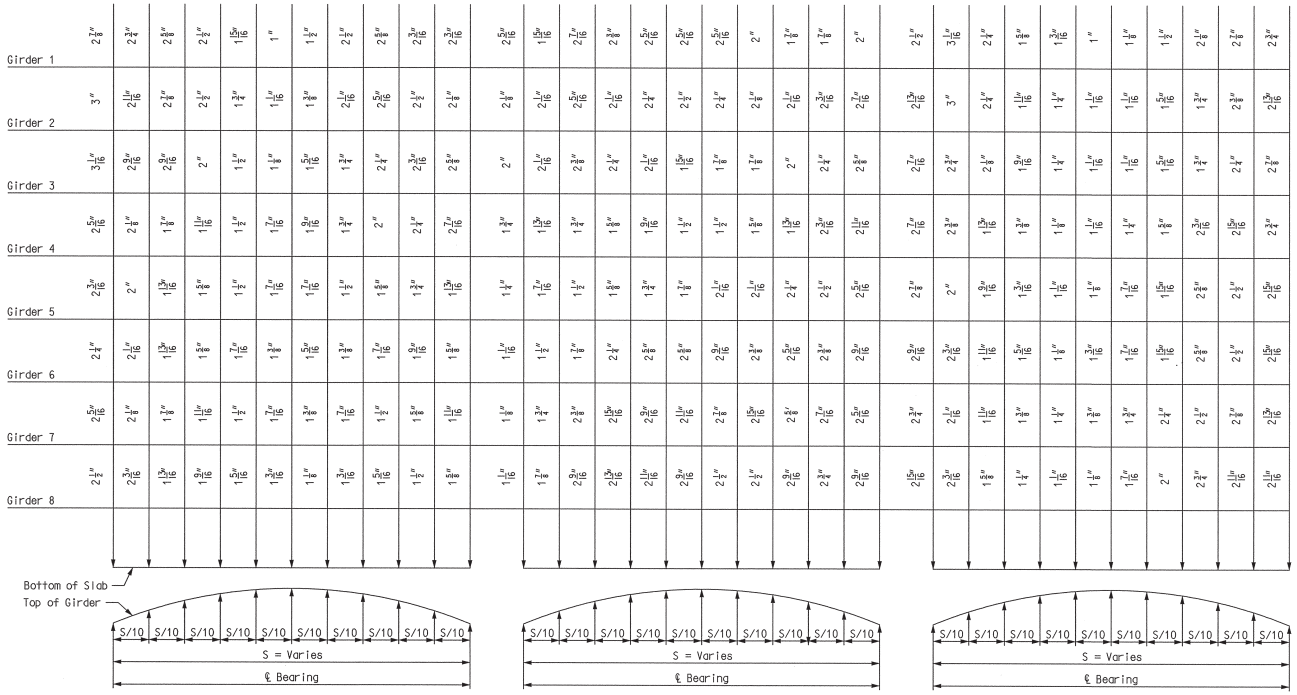

Notes:
If girder camber is different from that shown in the camber diagram, adjustment of the slab haunches, an increase in slab thickness, or a raise in grade uniformly throughout the structure shall be necessary. No payment will be made for additional labor or materials required for variation in haunching, slab thickness, or grade adjustment.
Concrete in the slab haunches is included in the Estimated Quantities for Slab on Concrete NU-Girder.

THEORETICAL SLAB HAUNCHING DIAGRAM – UNIT 3

Detailed JUL 2009
Checked JUL 2009

Note: This drawing is not to scale. Follow dimensions.

\\slsw00\Jobs\46440\Techprod\Bridges\MO-Approach\Drawings\Baseline Drawings\B_A6500_078-125_J6I0984B_078.dgn 18-AUG-2009 10:27

LAWRENCE ROLWES, JR. NUMBER PE-2009002847 STATE OF MISSOURI PROFESSIONAL ENGINEER
8/20/09

DATE 8/20/09
ROUTE I-70 | STATE MO
DISTRICT 6 | SHEET NO. BR78
COUNTY St. Louis City - MO
JOB NO. J6I0984B
CONTRACT ID.
PROJECT NO.
BRIDGE NO. A6500

DESCRIPTION | DATE

MISSOURI HIGHWAYS AND TRANSPORTATION COMMISSION
MoDOT
105 WEST CAPITOL
JEFFERSON CITY, MO 65102
1-888-ASK-MODOT (1-888-275-6636)

HNTB
715 KIRK DRIVE
KANSAS CITY, MO 64105-1310
TELEPHONE (816) 472-1201
CERTIFICATE OF AUTHORITY NO. 001270

REV.

Girder 1	2 3/8"	2 1/16"	1 7/8"	1 7/8"	1 15/16"	2 3/16"	2 1/8"	2 5/16"	2 3/16"	2 3/16"	2 1/4"	2 1/4"	2 7/16"	2 9/16"	2 7/16"	2 1/16"	1 1/8"	2 5/16"	3 1/16"	2 11/16"	2 5/8"	2 13/16"
Girder 2	2"	1 11/16"	1 7/16"	1 3/8"	1 3/8"	1 9/16"	1 15/16"	2 7/16"	2 1/8"	1 15/16"	2 1/4"	2 3/8"	2 5/16"	2 5/16"	2 7/16"	1 13/16"	1 1/16"	1 15/16"	2 13/16"	2 9/16"	2 9/16"	2 3/4"
Girder 3	2 1/8"	1 3/4"	1 1/2"	1 3/8"	1 3/8"	1 1/2"	1 7/8"	2 5/16"	1 15/16"	2 1/8"	1 15/16"	2 1/4"	2 1/2"	2 5/16"	2 1/4"	1 1/2"	1 1/8"	1 13/16"	2 15/16"	2 7/16"	2 11/16"	2 11/16"
Girder 4	2 5/8"	2 1/2"	2 1/16"	1 11/16"	1 1/2"	1 7/16"	1 9/16"	1 13/16"	2 3/16"	2 3/16"	2 1/4"	2 1/8"	2 1/16"	2 5/8"	1 3/4"	1 1/4"	1 1/16"	1 1/2"	2 5/16"	2 15/16"	2 13/16"	2 1/2"
Girder 5	2 7/8"	2 3/4"	2 5/8"	2 1/4"	2"	1 7/8"	1 13/16"	1 7/8"	2 1/16"	2 3/8"	2 3/4"	2 5/8"	2 11/16"	2 5/16"	2 9/16"	1 1/8"	1 1/16"	1 3/8"	2"	2 1/2"	2 3/4"	2 3/4"
Girder 6	2 7/8"	2 7/8"	2 1/2"	2 1/4"	2 1/4"	2 3/8"	2 3/4"	2 1/2"	2 1/2"	2 9/16"	2 3/4"	2 5/8"	2 11/16"	2 5/16"	2 9/16"	1 1/8"	1 1/16"	1 3/8"	2"	2 1/2"	2 3/4"	2 13/16"
Girder 7	2 3/4"	2 11/16"	2 7/16"	2 3/8"	2 7/16"	2 5/8"	2 5/16"	2 3/16"	2 1/4"	1 7/8"	1 9/16"	2 13/16"	2 13/16"	2 7/16"	1 5/8"	1 3/16"	1 1/16"	1 5/16"	1 15/16"	2 7/8"	2 9/16"	2 9/16"
Girder 8	2 5/8"	1 7/8"	1 7/8"	1 15/16"	2 1/4"	2 11/16"	2 1/2"	2 1/4"	2 3/4"	2 1/4"	1 15/16"	2 5/8"	2 9/16"	2 9/16"	1 11/16"	1 3/16"	1 1/16"	1 5/16"	2"	2 1/2"	2 13/16"	2 15/16"

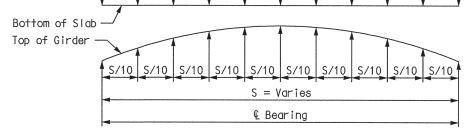

SPAN (8-9)

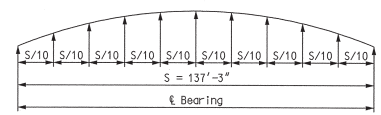

SPAN (9-10)

Notes:
If girder camber is different from that shown in the camber diagram, adjustment of the slab haunches, an increase in slab thickness, or a raise in grade uniformly throughout the structure shall be necessary. No payment will be made for additional labor or materials required for variation in haunching, slab thickness, or grade adjustment.
Concrete in the slab haunches is included in the Estimated Quantities for Slab on Concrete NU-Girder.

Detailed JUL 2009
Checked JUL 2009

Note: This drawing is not to scale. Follow dimensions.

Sheet No. 79 of 125

THEORETICAL SLAB HAUNCHING DIAGRAM - UNIT 3

STATE OF MISSOURI
LAWRENCE C. ROLWES JR.
NUMBER
PE-2006002847
REGISTERED PROFESSIONAL ENGINEER

8/20/09

DATE	8/20/09
ROUTE	I-70
STATE	MO
DISTRICT	6
SHEET NO.	BR79
COUNTY	St. Louis City - MO
JOB NO.	J6I0984B
CONTRACT ID.	
PROJECT NO.	
BRIDGE NO.	A6500

DATE	DESCRIPTION

MISSOURI HIGHWAYS AND TRANSPORTATION COMMISSION

MoDOT
105 WEST CAPITOL
JEFFERSON CITY, MO 65102
1-888-ASK-MODOT (1-888-275-6636)

HNTB
715 KIRK DRIVE
KANSAS CITY, MO 64105-1310
TELEPHONE (816) 472-1201
CERTIFICATE OF AUTHORITY
NO. 001270

REV.

\\slsw00\Jobs\46440\Techprod\Bridges\MO-Approach\Drawings\Baseline Drawings\B_A6500_079-125_J6I0984B_079.dgn 18-AUG-2009 10:27

✱✱ THEORETICAL BOTTOM OF SLAB ELEVATIONS AT ℄ OF GIRDER (PRIOR TO FORMING FOR SLAB)

	Span (1-2) (Varies ℄ Brg. – ℄ Brg.)										
	℄ Brg.	0.10	0.20	0.30	0.40	0.50	0.60	0.70	0.80	0.90	℄ Brg.
Girder 1	494.38	494.82	495.24	495.65	496.03	496.39	496.71	497.01	497.28	497.53	497.76
Girder 2	495.06	495.50	495.93	496.34	496.72	497.07	497.39	497.68	497.94	498.18	498.41
Girder 3	495.74	496.18	496.61	497.01	497.39	497.73	498.05	498.33	498.59	498.83	499.05
Girder 4	496.43	496.86	497.28	497.68	498.05	498.40	498.71	498.99	499.24	499.48	499.70
Girder 5	497.11	497.52	497.92	498.30	498.66	499.00	499.31	499.60	499.86	500.11	500.34
Girder 6	497.59	498.10	498.59	499.04	499.45	499.82	500.05	500.24	500.39	500.51	500.60
Girder 7	497.48	497.96	498.41	498.83	499.22	499.55	499.80	499.99	500.14	500.26	500.35
Girder 8	497.38	497.83	498.25	498.63	498.98	499.28	499.53	499.72	499.88	500.00	500.10
Girder 9	497.31	497.72	498.10	498.45	498.75	499.02	499.25	499.45	499.62	499.74	499.84
Girder 10	497.25	497.62	497.97	498.28	498.55	498.78	498.98	499.19	499.35	499.49	499.59
Girder 11	497.22	497.54	497.84	498.11	498.35	498.54	498.69	498.90	499.08	499.22	499.34
	Span (2-3) (Varies ℄ Brg. – ℄ Brg.)										
	℄ Brg.	0.10	0.20	0.30	0.40	0.50	0.60	0.70	0.80	0.90	℄ Brg.
Girder 1	497.85	498.08	498.31	498.54	498.75	498.94	499.12	499.28	499.42	499.55	499.67
Girder 2	498.43	498.65	498.87	499.07	499.25	499.42	499.57	499.71	499.82	499.92	500.01
Girder 3	499.00	499.23	499.42	499.60	499.76	499.90	500.02	500.13	500.21	500.28	500.35
Girder 4	499.58	499.81	499.99	500.14	500.27	500.39	500.48	500.56	500.61	500.65	500.68
Girder 5	500.15	500.39	500.56	500.68	500.79	500.88	500.94	500.99	501.01	501.02	501.02
Girder 6	500.73	500.97	501.14	501.24	501.31	501.37	501.41	501.42	501.41	501.39	501.35
Girder 7	500.61	500.83	501.01	501.17	501.29	501.37	501.42	501.43	501.41	501.37	501.31
Girder 8	500.37	500.60	500.80	500.97	501.09	501.19	501.24	501.25	501.22	501.18	501.12
Girder 9	500.13	500.37	500.58	500.76	500.90	501.00	501.05	501.06	501.04	500.99	500.93
Girder 10	499.89	500.15	500.37	500.56	500.71	500.81	500.87	500.88	500.86	500.81	500.74
Girder 11	499.65	499.92	500.16	500.36	500.52	500.63	500.69	500.70	500.67	500.62	500.55
Girder 12	499.40	499.69	499.94	500.15	500.31	500.43	500.49	500.51	500.48	500.43	500.36
	Span (3-4) (Varies ℄ Brg. – ℄ Brg.)										
	℄ Brg.	0.10	0.20	0.30	0.40	0.50	0.60	0.70	0.80	0.90	℄ Brg.
Girder 1	499.70	499.94	500.16	500.35	500.51	500.57	500.48	500.36	500.21	500.02	499.82
Girder 2	500.03	500.24	500.44	500.60	500.73	500.76	500.68	500.56	500.40	500.21	500.00
Girder 3	500.36	500.54	500.71	500.84	500.93	500.95	500.87	500.74	500.59	500.40	500.19
Girder 4	500.69	500.84	500.97	501.07	501.14	501.14	501.05	500.93	500.77	500.58	500.37
Girder 5	501.02	501.14	501.24	501.31	501.35	501.33	501.24	501.12	500.96	500.77	500.56
Girder 6	501.36	501.44	501.51	501.55	501.55	501.52	501.43	501.31	501.15	500.96	500.74
Girder 7	501.31	501.40	501.47	501.50	501.50	501.46	501.38	501.26	501.11	500.93	500.72
Girder 8	501.12	501.21	501.28	501.31	501.31	501.27	501.20	501.08	500.92	500.74	500.53
Girder 9	500.93	501.02	501.09	501.12	501.12	501.09	501.01	500.89	500.74	500.55	500.35
Girder 10	500.74	500.83	500.90	500.94	500.94	500.90	500.82	500.70	500.55	500.37	500.16
Girder 11	500.55	500.64	500.71	500.75	500.75	500.71	500.63	500.52	500.36	500.18	499.98
Girder 12	500.36	500.45	500.52	500.55	500.55	500.51	500.44	500.32	500.17	499.99	499.79
	Span (4-5) (Varies ℄ Brg. – ℄ Brg.)										
	℄ Brg.	0.10	0.20	0.30	0.40	0.50	0.60	0.70	0.80	0.90	℄ Brg.
Girder 1	499.80	499.73	499.65	499.56	499.46	499.33	499.20	499.04	498.88	498.69	498.50
Girder 2	499.98	499.92	499.84	499.75	499.64	499.52	499.38	499.22	499.05	498.87	498.68
Girder 3	500.17	500.10	500.02	499.93	499.82	499.70	499.56	499.40	499.23	499.05	498.85
Girder 4	500.36	500.28	500.20	500.11	500.00	499.88	499.74	499.58	499.41	499.22	499.03
Girder 5	500.54	500.47	500.39	500.29	500.18	500.06	499.91	499.76	499.58	499.40	499.20
Girder 6	500.73	500.65	500.57	500.47	500.36	500.24	500.09	499.94	499.76	499.58	499.38
Girder 7	500.70	500.63	500.54	500.44	500.33	500.20	500.05	499.89	499.72	499.53	499.33
Girder 8	500.52	500.44	500.36	500.26	500.15	500.02	499.87	499.71	499.54	499.35	499.15
Girder 9	500.33	500.26	500.17	500.08	499.97	499.84	499.69	499.54	499.36	499.17	498.98
Girder 10	500.15	500.07	499.99	499.90	499.78	499.66	499.52	499.36	499.18	499.00	498.80
Girder 11	499.96	499.89	499.81	499.71	499.60	499.48	499.34	499.18	499.01	498.82	498.63
Girder 12	499.78	499.71	499.62	499.53	499.42	499.30	499.16	499.00	498.83	498.65	498.45

✱✱ Elevations are based on a constant slab thickness of 9″ and include allowance for theoretical dead load deflections due to weight of Slab (including Prestressed Panel) and Barrier Curbs.

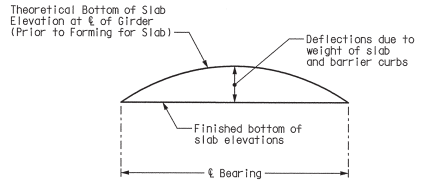

TYPICAL SLAB ELEVATIONS DIAGRAM

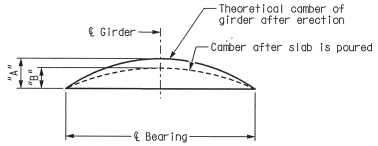

	Span (1-2)		Span (2-3)		Span (3-4)		Span (4-5)	
	"A"	"B"	"A"	"B"	"A"	"B"	"A"	"B"
Girder 1	$5\frac{1}{16}$″	$2\frac{3}{8}$″	$3\frac{3}{16}$″	$1\frac{7}{8}$″	$5\frac{9}{16}$″	$2\frac{5}{16}$″	$2\frac{7}{16}$″	$1\frac{3}{8}$″
Girder 2	$5\frac{1}{16}$″	$2\frac{1}{16}$″	$3\frac{1}{4}$″	$1\frac{3}{4}$″	$5\frac{9}{16}$″	$2\frac{1}{4}$″	$2\frac{7}{16}$″	$1\frac{3}{8}$″
Girder 3	$5\frac{1}{16}$″	$2\frac{1}{16}$″	$3\frac{1}{4}$″	$1\frac{5}{8}$″	$5\frac{9}{16}$″	$2\frac{1}{4}$″	$2\frac{7}{16}$″	$1\frac{3}{8}$″
Girder 4	$5\frac{1}{16}$″	$2\frac{1}{16}$″	$3\frac{5}{16}$″	$1\frac{1}{2}$″	$5\frac{9}{16}$″	$2\frac{1}{4}$″	$2\frac{7}{16}$″	$1\frac{3}{8}$″
Girder 5	$5\frac{1}{16}$″	$2\frac{13}{16}$″	$4\frac{3}{16}$″	$2\frac{3}{16}$″	$5\frac{9}{16}$″	$2\frac{1}{4}$″	$2\frac{7}{16}$″	$1\frac{3}{8}$″
Girder 6	$5\frac{1}{8}$″	$2\frac{5}{16}$″	$4\frac{3}{16}$″	$2\frac{1}{16}$″	$5\frac{9}{16}$″	$2\frac{1}{4}$″	$2\frac{7}{16}$″	$1\frac{3}{8}$″
Girder 7	$5\frac{1}{8}$″	2″	$4\frac{1}{4}$″	$1\frac{15}{16}$″	$5\frac{9}{16}$″	$2\frac{1}{4}$″	$2\frac{7}{16}$″	$1\frac{3}{8}$″
Girder 8	$5\frac{1}{8}$″	2″	$4\frac{3}{16}$″	$1\frac{3}{4}$″	$5\frac{9}{16}$″	$2\frac{1}{4}$″	$2\frac{7}{16}$″	$1\frac{3}{8}$″
Girder 9	$5\frac{1}{8}$″	2″	$4\frac{15}{16}$″	$2\frac{3}{16}$″	$5\frac{9}{16}$″	$2\frac{1}{4}$″	$2\frac{7}{16}$″	$1\frac{3}{8}$″
Girder 10	$5\frac{1}{8}$″	2″	5″	$1\frac{15}{16}$″	$5\frac{9}{16}$″	$2\frac{1}{4}$″	$2\frac{7}{16}$″	$1\frac{3}{8}$″
Girder 11	$5\frac{1}{8}$″	$2\frac{1}{4}$″	$5\frac{3}{8}$″	$2\frac{5}{8}$″	$5\frac{9}{16}$″	$2\frac{1}{4}$″	$2\frac{7}{16}$″	$1\frac{3}{8}$″
Girder 12	----	----	$5\frac{15}{16}$″	$2\frac{9}{16}$″	$5\frac{9}{16}$″	$2\frac{5}{16}$″	$2\frac{7}{16}$″	$1\frac{3}{8}$″

Conversion factors for girder camber
0.1 pt. = 0.314 x 0.5 pt.
0.2 pt. = 0.593 x 0.5 pt.
0.3 pt. = 0.813 x 0.5 pt.
0.4 pt. = 0.952 x 0.5 pt.

GIRDER CAMBER DIAGRAM

THEORETICAL BOTTOM OF SLAB ELEVATIONS AND GIRDER CAMBER DIAGRAM – UNITS 1 AND 2

Detailed JUL 2009
Checked JUL 2009

Note: This drawing is not to scale. Follow dimensions.

Sheet No. 80 of 125

\\slsw00\Jobs\46440\Techprod\Bridges\MO-Approach\Drawings\Baseline Drawings\B_A6500_080-125_J6I0984B_080.dgn

18-AUG-2009 10:27

REV.

LAWRENCE E. ROLWES, JR. NUMBER PE-2009002847 STATE OF MISSOURI PROFESSIONAL ENGINEER

8/20/09

DATE 8/20/09

ROUTE	STATE
I-70	MO
DISTRICT	SHEET NO.
6	BR80

COUNTY: St. Louis City - MO

JOB NO.: J6I0984B

CONTRACT ID.:

PROJECT NO.:

BRIDGE NO.: A6500

DESCRIPTION | DATE

MISSOURI HIGHWAYS AND TRANSPORTATION COMMISSION
105 WEST CAPITOL
JEFFERSON CITY, MO 65102
1-888-ASK-MODOT (1-888-275-6636)

HNTB
715 KIRK DRIVE
KANSAS CITY, MO 64105-1310
TELEPHONE (816) 472-1201
CERTIFICATE OF AUTHORITY NO. 001270

✳✳ THEORETICAL BOTTOM OF SLAB ELEVATIONS AT ℄ OF GIRDER (PRIOR TO FORMING FOR SLAB)

	Span (5-6) (Varies ℄ Brg. - ℄ Brg.)										
	℄ Brg.	0.10	0.20	0.30	0.40	0.50	0.60	0.70	0.80	0.90	℄ Brg.
Girder 1	498.44	498.30	498.15	497.98	497.79	497.59	497.47	497.37	497.25	497.11	496.95
Girder 2	498.72	498.58	498.43	498.27	498.08	497.88	497.72	497.57	497.40	497.21	497.00
Girder 3	498.99	498.86	498.71	498.54	498.35	498.14	497.96	497.76	497.54	497.30	497.05
Girder 4	499.27	499.13	498.98	498.81	498.62	498.41	498.18	497.94	497.68	497.39	497.09
Girder 5	499.21	499.07	498.92	498.74	498.55	498.33	498.09	497.83	497.55	497.25	496.93
Girder 6	498.94	498.80	498.64	498.47	498.28	498.07	497.83	497.57	497.29	496.99	496.68
Girder 7	498.67	498.53	498.37	498.20	498.01	497.80	497.56	497.31	497.03	496.73	496.42
Girder 8	498.39	498.25	498.09	497.92	497.72	497.51	497.28	497.03	496.75	496.47	496.17
	Span (6-7) (Varies ℄ Brg. - ℄ Brg.)										
	℄ Brg.	0.10	0.20	0.30	0.40	0.50	0.60	0.70	0.80	0.90	℄ Brg.
Girder 1	496.93	496.84	496.72	496.57	496.40	496.19	495.96	495.70	495.42	495.13	494.84
Girder 2	496.97	496.84	496.69	496.51	496.29	496.05	495.77	495.46	495.13	494.80	494.46
Girder 3	497.01	496.84	496.63	496.41	496.15	495.87	495.55	495.20	494.83	494.45	494.07
Girder 4	497.05	496.82	496.58	496.31	496.01	495.68	495.32	494.93	494.53	494.11	493.69
Girder 5	496.88	496.64	496.39	496.11	495.80	495.46	495.08	494.66	494.22	493.76	493.30
Girder 6	496.63	496.39	496.14	495.86	495.55	495.21	494.84	494.38	493.90	493.41	492.91
Girder 7	496.37	496.14	495.88	495.61	495.30	494.97	494.60	494.10	493.59	493.06	492.52
Girder 8	496.12	495.87	495.61	495.33	495.02	494.69	494.32	493.80	493.25	492.70	492.14
	Span (7-8) (Varies ℄ Brg. - ℄ Brg.)										
	℄ Brg.	0.10	0.20	0.30	0.40	0.50	0.60	0.70	0.80	0.90	℄ Brg.
Girder 1	494.80	494.61	494.28	493.94	493.59	493.22	492.83	492.42	492.00	491.56	491.08
Girder 2	494.41	494.20	493.88	493.56	493.22	492.85	492.47	492.06	491.63	491.20	490.73
Girder 3	494.02	493.76	493.45	493.12	492.78	492.42	492.04	491.64	491.23	490.81	490.38
Girder 4	493.63	493.33	493.02	492.70	492.36	492.00	491.63	491.24	490.84	490.43	490.01
Girder 5	493.24	492.91	492.59	492.27	491.94	491.59	491.22	490.84	490.45	490.05	489.64
Girder 6	492.84	492.48	492.17	491.85	491.52	491.18	490.82	490.44	490.06	489.66	489.27
Girder 7	492.45	492.05	491.74	491.43	491.10	490.76	490.41	490.05	489.67	489.29	488.90
Girder 8	492.06	491.61	491.31	490.99	490.67	490.33	489.99	489.63	489.27	488.90	488.53
	Span (8-9) (Varies ℄ Brg. - ℄ Brg.)										
	℄ Brg.	0.10	0.20	0.30	0.40	0.50	0.60	0.70	0.80	0.90	℄ Brg.
Girder 1	491.00	490.58	490.16	489.73	489.28	488.82	488.35	487.86	487.37	486.86	486.36
Girder 2	490.66	490.28	489.89	489.50	489.09	488.66	488.22	487.77	487.30	486.82	486.33
Girder 3	490.31	489.96	489.61	489.25	488.88	488.49	488.08	487.65	487.22	486.77	486.31
Girder 4	489.95	489.64	489.32	489.00	488.66	488.30	487.93	487.54	487.13	486.71	486.29
Girder 5	489.58	489.30	489.02	488.73	488.42	488.10	487.75	487.37	486.97	486.57	486.16
Girder 6	489.21	488.96	488.71	488.45	488.18	487.89	487.54	487.16	486.76	486.35	485.94
Girder 7	488.84	488.61	488.40	488.18	487.94	487.68	487.35	486.96	486.56	486.14	485.71
Girder 8	488.47	488.24	488.05	487.86	487.65	487.43	487.11	486.73	486.32	485.91	485.49
	Span (9-10) (137'-3" ℄ Brg. - ℄ Brg.)										
	℄ Brg.	0.10	0.20	0.30	0.40	0.50	0.60	0.70	0.80	0.90	℄ Brg.
Girder 1	486.28	485.80	485.32	484.82	484.31	483.79	483.40	483.02	482.63	482.24	481.86
Girder 2	486.26	485.84	485.41	484.96	484.50	484.03	483.65	483.26	482.87	482.47	482.08
Girder 3	486.25	485.87	485.49	485.09	484.67	484.24	483.87	483.48	483.09	482.69	482.30
Girder 4	486.23	485.90	485.56	485.21	484.84	484.46	484.09	483.70	483.31	482.91	482.52
Girder 5	486.10	485.79	485.48	485.15	484.80	484.45	484.08	483.70	483.30	482.91	482.52
Girder 6	485.88	485.57	485.26	484.93	484.58	484.23	483.86	483.48	483.08	482.69	482.30
Girder 7	485.66	485.35	485.04	484.70	484.36	484.01	483.64	483.25	482.86	482.47	482.08
Girder 8	485.43	485.12	484.80	484.46	484.11	483.75	483.39	483.01	482.63	482.24	481.86

✳✳ Elevations are based on a constant slab thickness of 9" and include allowance for theoretical dead load deflections due to weight of Slab (including Prestressed Panel) and Barrier Curbs.

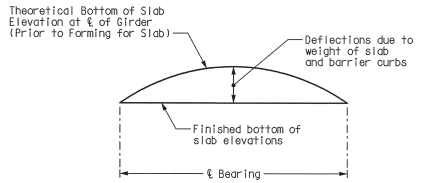

TYPICAL SLAB ELEVATIONS DIAGRAM

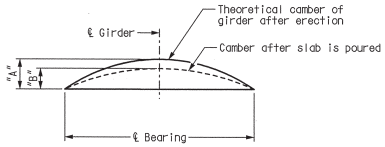

	Span (5-6)		Span (6-7)		Span (7-8)		Span (8-9)		Span (9-10)	
	"A"	"B"	"A"	"B"	"A"	"B"	"A"	"B"	"A"	"B"
Girder 1	3 11/16"	2 3/16"	4 1/2"	2 1/4"	5 3/16"	2 7/16"	3 13/16"	2 3/16"	5 9/16"	2 1/2"
Girder 2	3 11/16"	1 7/8"	4 1/2"	1 13/16"	5 1/8"	2"	3 13/16"	1 7/8"	5 9/16"	2 3/16"
Girder 3	3 11/16"	1 7/8"	4 1/2"	1 7/8"	4 1/2"	1 3/4"	3 7/8"	1 13/16"	5 9/16"	2 3/16"
Girder 4	3 11/16"	1 7/8"	4 1/2"	1 7/8"	4 1/2"	1 7/8"	3 7/8"	1 3/4"	5 9/16"	2 3/16"
Girder 5	3 11/16"	1 7/8"	4 1/2"	1 7/8"	4 3/8"	1 15/16"	4 1/4"	2"	5 9/16"	2 3/16"
Girder 6	3 11/16"	1 7/8"	4 1/2"	1 7/8"	4 5/16"	2 1/16"	4 1/4"	1 15/16"	5 9/16"	2 3/16"
Girder 7	3 11/16"	1 7/8"	4 1/2"	1 7/8"	3 15/16"	1 15/16"	4 3/16"	1 9/16"	5 9/16"	2 3/16"
Girder 8	3 11/16"	2 3/16"	4 1/2"	2 5/16"	3 15/16"	2 1/4"	4 3/16"	2"	5 9/16"	2 9/16"

Conversion factors for girder camber
0.1 pt. = 0.314 x 0.5 pt.
0.2 pt. = 0.593 x 0.5 pt.
0.3 pt. = 0.813 x 0.5 pt.
0.4 pt. = 0.952 x 0.5 pt.

GIRDER CAMBER DIAGRAM

THEORETICAL BOTTOM OF SLAB ELEVATIONS AND GIRDER CAMBER DIAGRAM – UNIT 3

Detailed JUL 2009
Checked JUL 2009

Note: This drawing is not to scale. Follow dimensions.

Sheet No. 81 of 125

\\slsw00\Jobs\46440\Techprod\Bridges\MO-Approach\Drawings\Baseline Drawings\B_A6500_081-125_J6I0984B_081.dgn

18-AUG-2009 10:27

LAWRENCE E. ROLWES NUMBER PE-2009007241 PROFESSIONAL ENGINEER STATE OF MISSOURI

8/20/09

DATE 8/20/09
ROUTE I-70 | STATE MO
DISTRICT 6 | SHEET NO. BR81
COUNTY St. Louis City - MO
JOB NO. J6I0984B
CONTRACT ID.
PROJECT NO.
BRIDGE NO. A6500

DESCRIPTION | DATE | REV.

MISSOURI HIGHWAYS AND TRANSPORTATION COMMISSION
105 WEST CAPITOL
JEFFERSON CITY, MO 65102
1-888-ASK-MODOT (1-888-275-6636)

HNTB
715 KIRK DRIVE
KANSAS CITY, MO 64105-1310
TELEPHONE (816) 472-1201
CERTIFICATE OF AUTHORITY NO. 001270

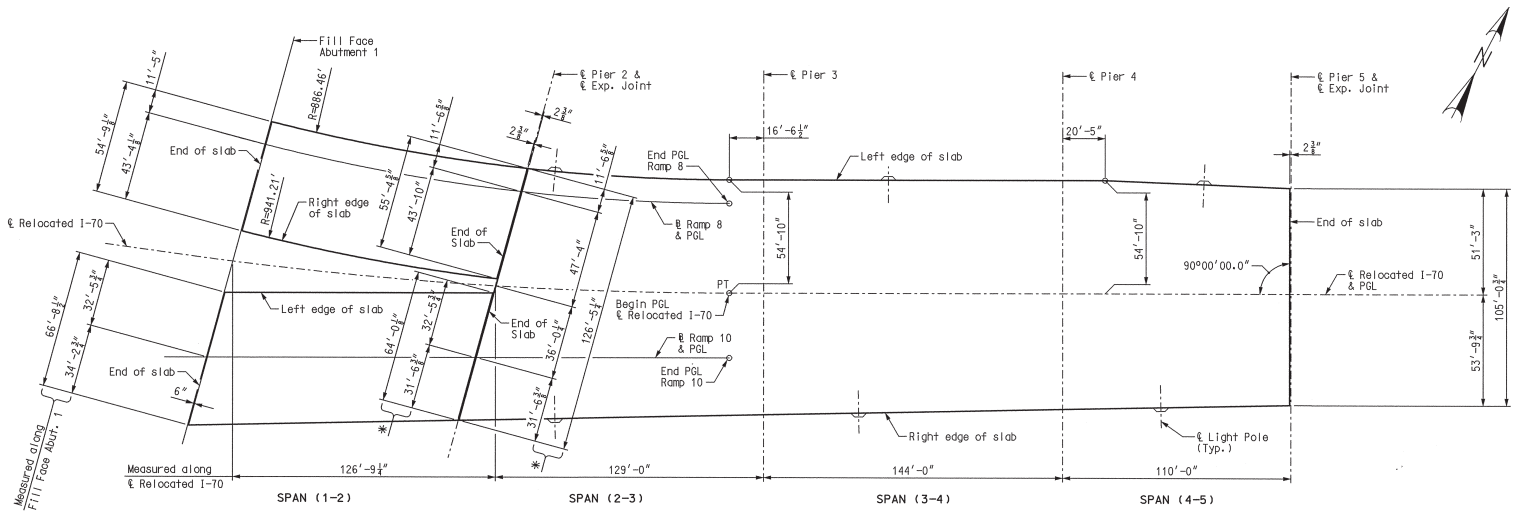

* Measured along ℄ Pier 2

PLAN OF SLAB

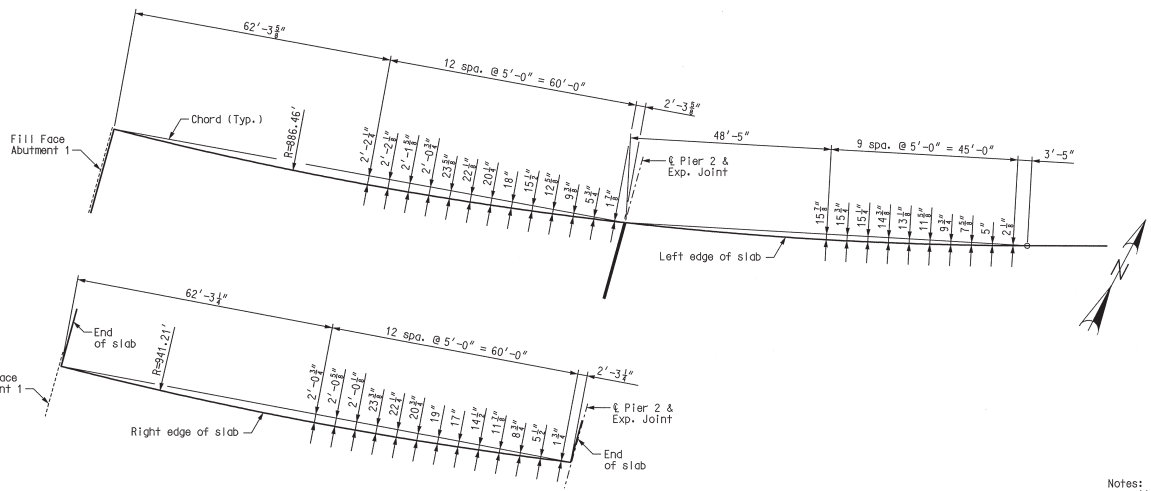

ENLARGED PLAN OF SLAB SHOWING CURVE ORDINATES

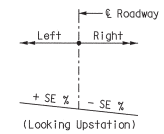

TYPICAL SLAB SE DIAGRAM

Note:
For values of SE, see SE Data Tables, this sheet.

SE DATA TABLE - RAMP 8		
Sta.	SE Left	SE Right
1+80.74	3.87%	-3.87%
2+66.74	5.80%	-5.80%
5+93.91	5.80%	-5.80%

SE DATA TABLE - RAMP 10		
Sta.	SE Left	SE Right
62+48.13	-2.00%	2.00%
63+14.79	0.00%	0.00%
63+81.46	2.00%	-2.00%
65+61.82	2.00%	-2.00%

Notes:
All dimensions are horizontal.
For bridge lighting layout and mounting blisters, see Sheet No. 97.
For details of optional slab closure pour, see Sheet No. 88.

SLAB GEOMETRY AND OFFSETS - UNITS 1 AND 2

Detailed JUL 2009
Checked JUL 2009

Note: This drawing is not to scale. Follow dimensions.

STATE OF MISSOURI LAWRENCE G. ROLWES JR. NUMBER PE-2006002847 REGISTERED PROFESSIONAL ENGINEER

8/20/09

DATE	
8/20/09	
ROUTE I-70	STATE MO
DISTRICT 6	SHEET NO. BR82
COUNTY St. Louis City - MO	
JOB NO. J6I0984B	
CONTRACT ID.	
PROJECT NO.	
BRIDGE NO. A6500	

DATE | DESCRIPTION

MISSOURI HIGHWAYS AND TRANSPORTATION COMMISSION

MoDOT
105 WEST CAPITOL
JEFFERSON CITY, MO 65102
1-888-ASK-MODOT (1-888-275-6636)

HNTB
715 KIRK DRIVE
KANSAS CITY, MO 64105-1310
TELEPHONE (816) 472-1201
CERTIFICATE OF AUTHORITY NO. 001270

REV.

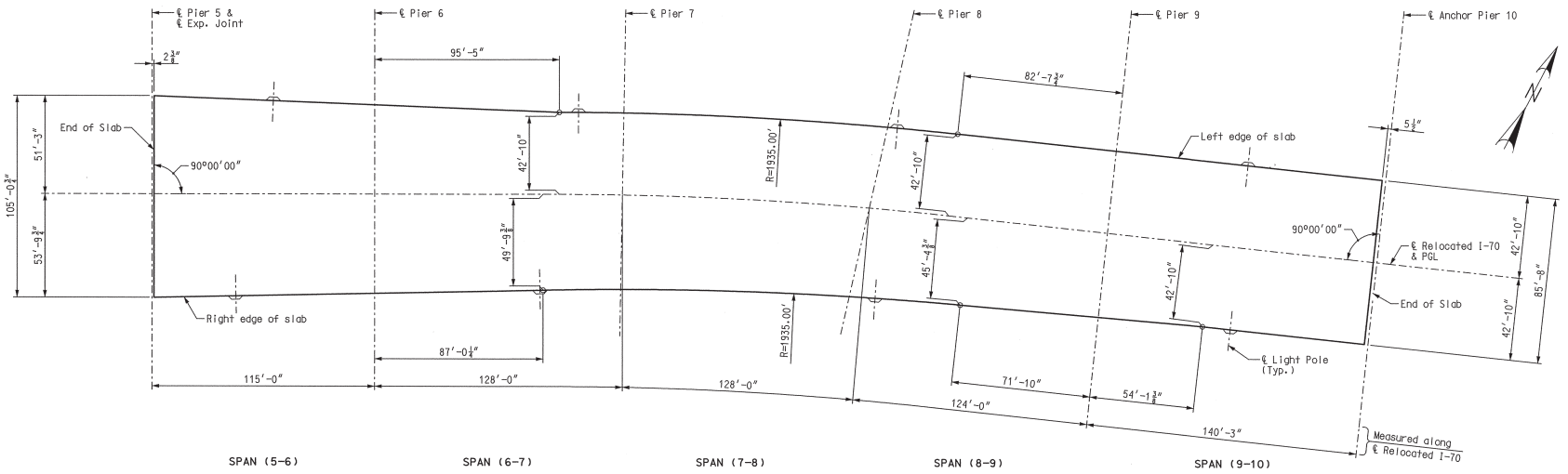

PLAN OF SLAB

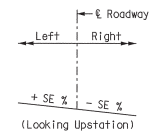

TYPICAL SLAB SE DIAGRAM

Note:
For values of SE, see SE Data Tables, this sheet.

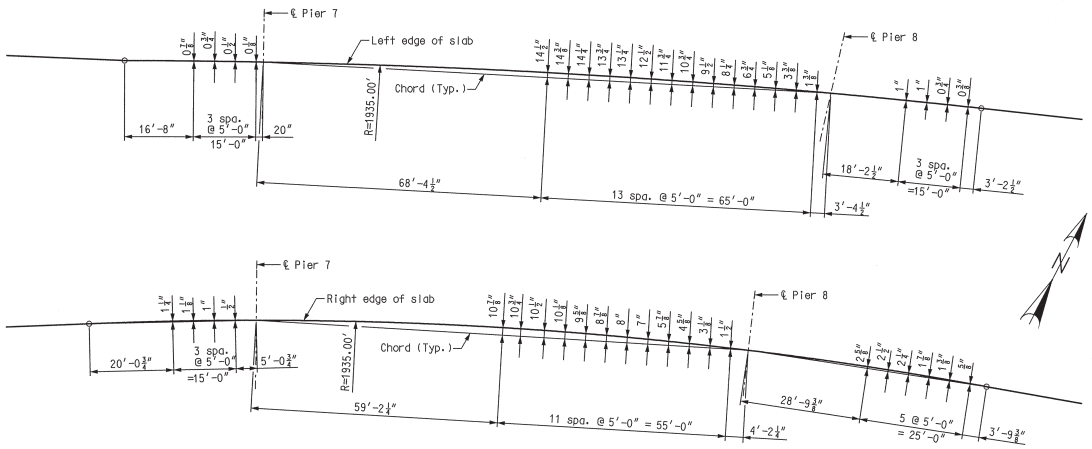

ENLARGED PLAN OF SLAB SHOWING CURVE ORDINATES

SE DATA TABLE - RELOCATED I-70		
Sta.	SE Left	SE Right
65+58.46	-3.87%	-2.00%
66+41.49	-2.00%	-2.00%
66+65.00	-2.00%	-2.00%
68+90.00	-2.00%	-2.00%
69+55.00	0.00%	-2.00%
70+20.00	1.80%	-2.00%
70+84.89	3.60%	-3.60%
70+85.00	3.60%	-3.60%
72+00.00	3.60%	-3.60%
72+65.00	1.80%	-2.00%
73+30.00	0.00%	-2.00%
73+95.00	-2.00%	-2.00%
74+64.25	-2.00%	-2.00%

Notes:
All dimensions are horizontal.
For bridge lighting layout and mounting blisters, see Sheet No. 97.
For details of optional slab closure pour, see Sheet No. 89.

SLAB GEOMETRY AND OFFSETS - UNIT 3

Detailed JUL 2009
Checked JUL 2009

Note: This drawing is not to scale. Follow dimensions.

STATE OF MISSOURI
LAWRENCE ROLWES, JR.
NUMBER
PE-2006002847
REGISTERED PROFESSIONAL ENGINEER

8/20/09

DATE	
8/20/09	
ROUTE	STATE
I-70	MO
DISTRICT	SHEET NO.
6	BR83
COUNTY	
St. Louis City - MO	
JOB NO.	
J6I0984B	
CONTRACT ID.	
PROJECT NO.	
BRIDGE NO.	
A6500	

DATE | DESCRIPTION

MISSOURI HIGHWAYS AND TRANSPORTATION COMMISSION

MoDOT

105 WEST CAPITOL
JEFFERSON CITY, MO 65102
1-888-ASK-MODOT (1-888-275-6636)

HNTB

715 KIRK DRIVE
KANSAS CITY, MO 64105-1310
TELEPHONE (816) 472-1201
CERTIFICATE OF AUTHORITY
NO. 001270

REV.

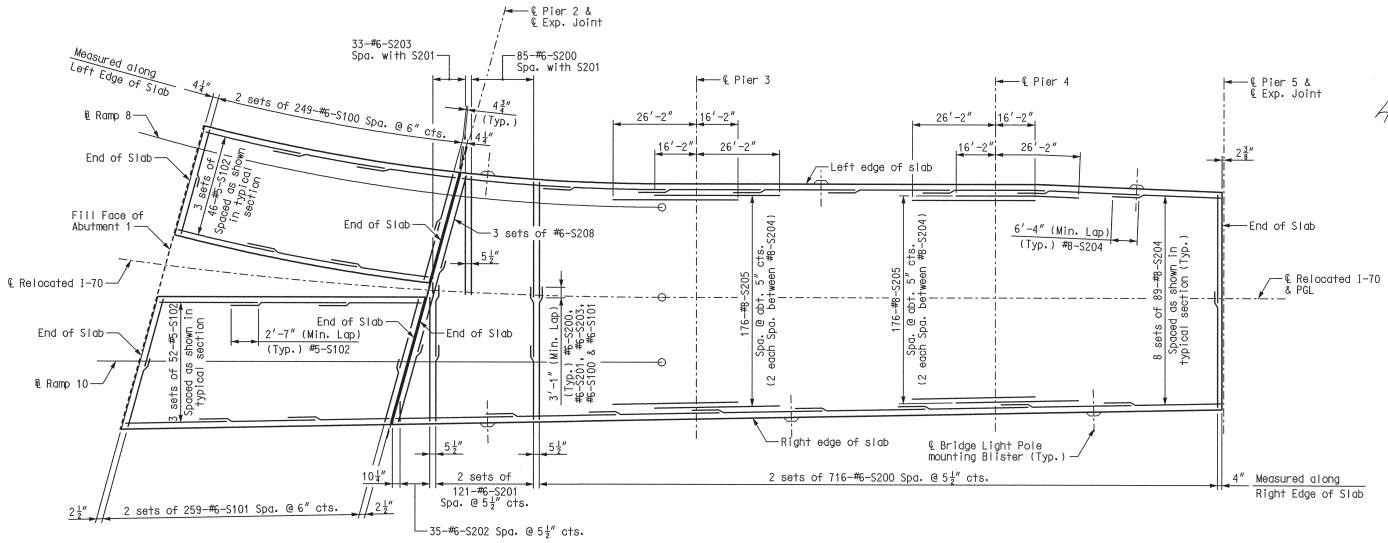

TOP REINFORCING

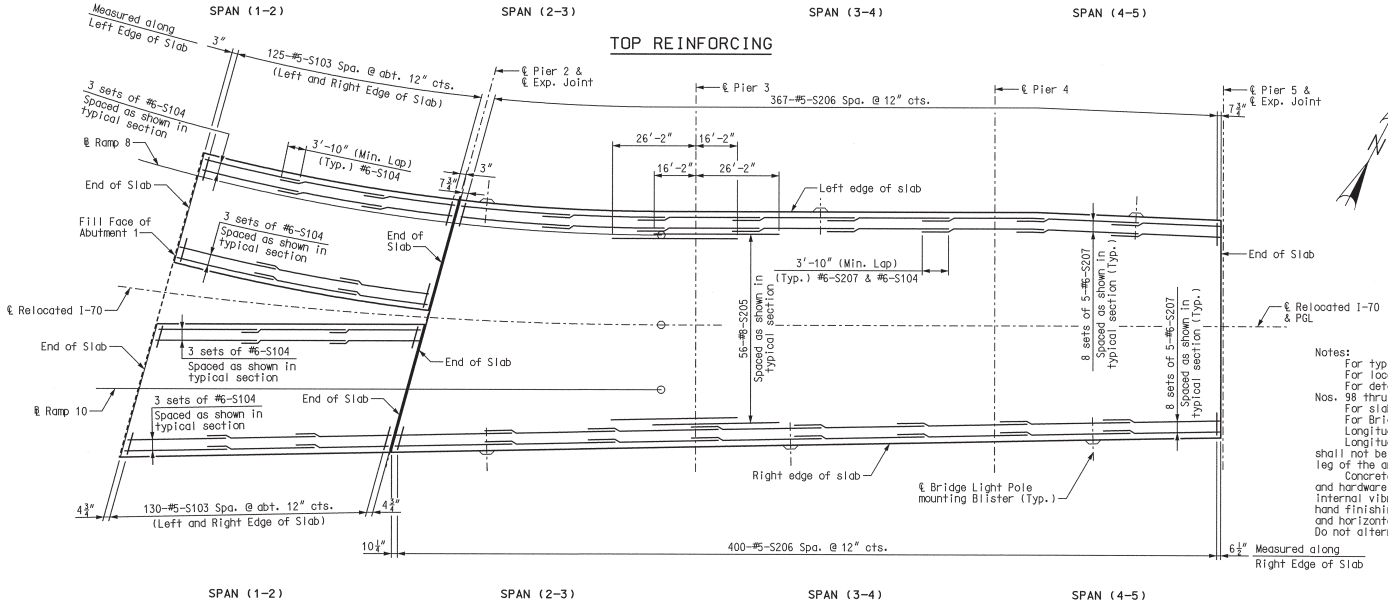

Notes:
For typical bridge sections, see Sheet Nos. 87 and 88.
For location of slab drains, see Sheet No. 92.
For details and reinforcing of barrier curbs, see Sheet Nos. 98 thru 102.
For slab pouring sequence, see Sheet No. 90.
For Bridge Lighting Layout and mounting blisters, see Sheet No. 97.
Longitudinal slab dimensions are measured horizontally.
Longitudinal reinforcing steel shall be placed so that ends shall not be more than 1"± from the vertical plate and the vertical leg of the angle at expansion device (Pier 2 and Pier 5).
Concrete shall be forced under and around the joint members and hardware. Proper consolidation shall be achieved by localized internal vibration. Finishing of the concrete shall be achieved by hand finishing within one foot of the expansion device. The vertical and horizontal concrete vent holes shall be offset from each other. Do not alternate holes at the 12" spacing.

BOTTOM REINFORCING

SLAB PLAN SHOWING REINFORCING – UNITS 1 AND 2

Detailed JUL 2009
Checked JUL 2009

Note: This drawing is not to scale. Follow dimensions.

Sheet No. 84 of 125

\\slsw00\Jobs\46440\Techprod\Bridges\MO-Approach\Drawings\Baseline Drawings\B_A6500_084-125_J6I0984B_084.dgn

18-AUG-2009 10:27

REV.

LAWRENCE D. ROLWES, STATE OF MISSOURI, NUMBER PE-2009002847, PROFESSIONAL ENGINEER

8/20/09

DATE 8/20/09

ROUTE	STATE
I-70	MO
DISTRICT	SHEET NO.
6	BR84

COUNTY: St. Louis City - MO

JOB NO.: J6I0984B

CONTRACT ID.:

PROJECT NO.:

BRIDGE NO.: A6500

DESCRIPTION	DATE

MISSOURI HIGHWAYS AND TRANSPORTATION COMMISSION

105 WEST CAPITOL
JEFFERSON CITY, MO 65102
1-888-ASK-MODOT (1-888-275-6636)

HNTB
715 KIRK DRIVE
KANSAS CITY, MO 64105-4310
TELEPHONE (816) 472-1201
CERTIFICATE OF AUTHORITY NO. 001270

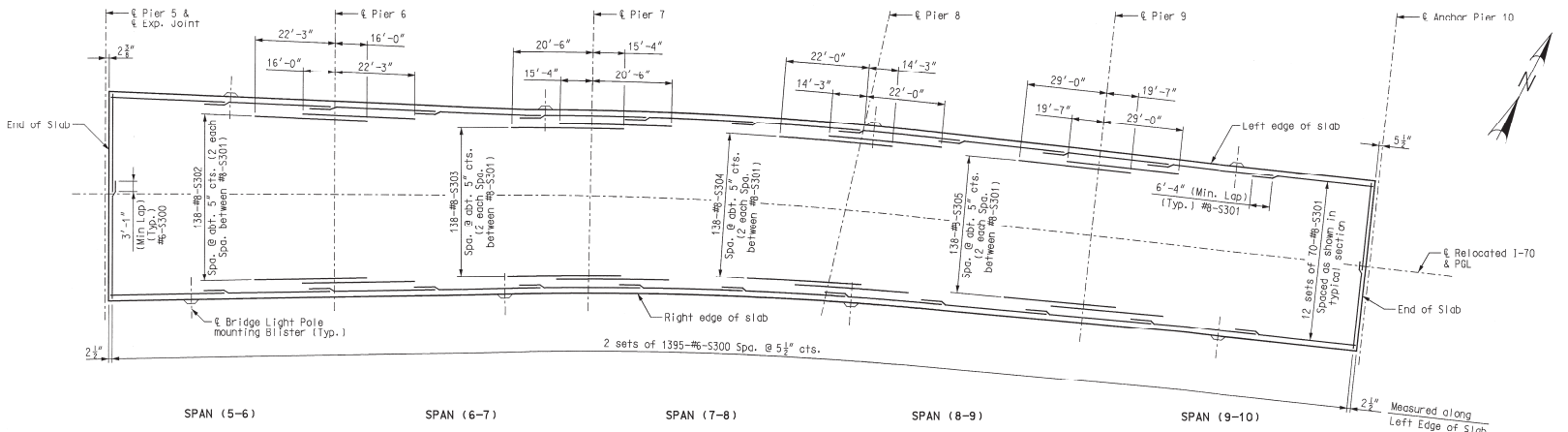

TOP REINFORCING

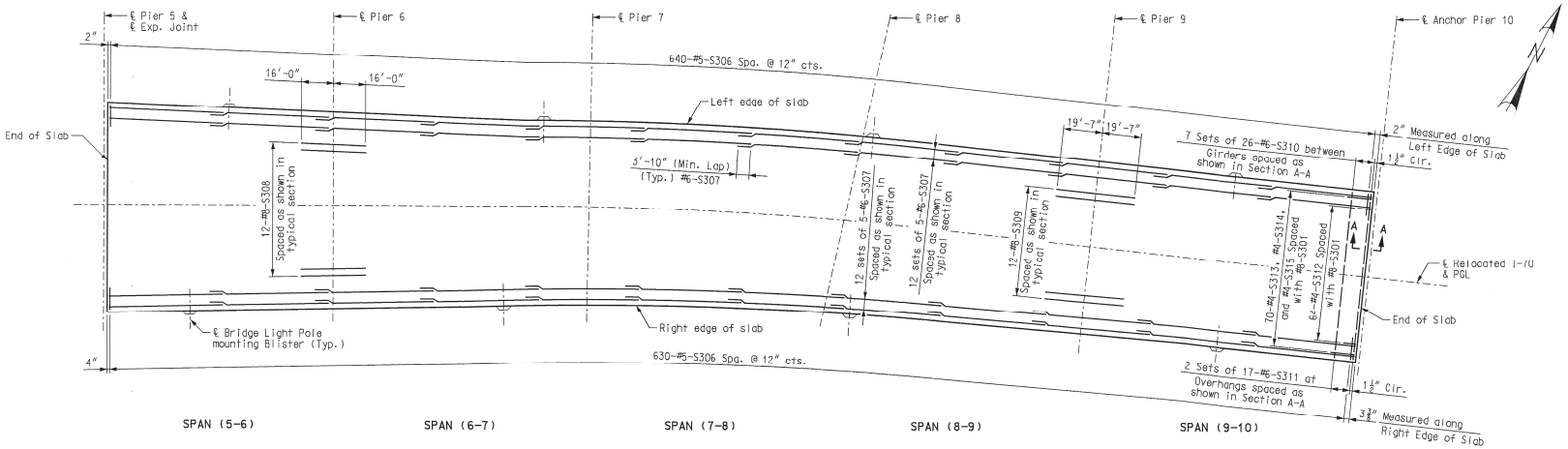

BOTTOM REINFORCING

Notes:
For typical bridge section, see Sheet No. 89.
For location of slab drains, see Sheet No. 93.
For details and reinforcing of barrier curbs, see Sheet Nos. 98 thru 102.
For slab pouring sequence, see Sheet No. 91.
For Bridge Lighting Layout and mounting blisters, see Sheet No. 97.
Longitudinal slab dimensions are measured horizontally.
Longitudinal reinforcing steel shall be placed so that ends shall not be more than 1"± from the vertical plate and the vertical leg of the angle at expansion device (Pier 5 and Anchor Pier 10).
Concrete shall be forced under and around the joint members and hardware. Proper consolidation shall be achieved by localized internal vibration. Finishing of the concrete shall be achieved by hand finishing within one foot of the expansion device. The vertical and horizontal concrete vent holes shall be offset from each other. Do not alternate holes at the 12" spacing.
For Section A-A, see Sheet No. 89.

SLAB PLAN SHOWING REINFORCING - UNIT 3

Detailed OCT 2009
Checked OCT 2009

Note: This drawing is not to scale. Follow dimensions.

STATE OF MISSOURI LAWRENCE P. ROLWES JR. NUMBER PE-2006002847 REGISTERED PROFESSIONAL ENGINEER
12/9/09

DATE 8/20/09	
ROUTE I-70	STATE MO
DISTRICT 6	SHEET NO. BR85
COUNTY St. Louis City - MO	
JOB NO. J6I0984B	
CONTRACT ID.	
PROJECT NO.	
BRIDGE NO. A6500	

DESCRIPTION
DATE

MISSOURI HIGHWAYS AND TRANSPORTATION COMMISSION
MoDOT
105 WEST CAPITOL
JEFFERSON CITY, MO 65102
1-888-ASK-MODOT (1-888-275-6636)

HNTB
715 KIRK DRIVE
KANSAS CITY, MO 64105-1310
TELEPHONE (816) 472-1201
CERTIFICATE OF AUTHORITY NO. 001270

NOT FOR CONSTRUCTION
11-06-09

REV.

\\stlw00\pmwork\jobs\46440\Techprod\Bridges\MO-Approach\Drawings\Baseline Drawings\B_A6500_085-125_J6I0984B_085.dgn
09-DEC-2009 06:42

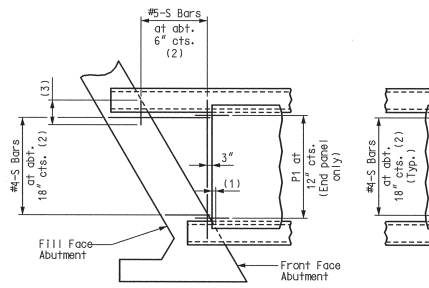

PANELS-SQUARED ENDS

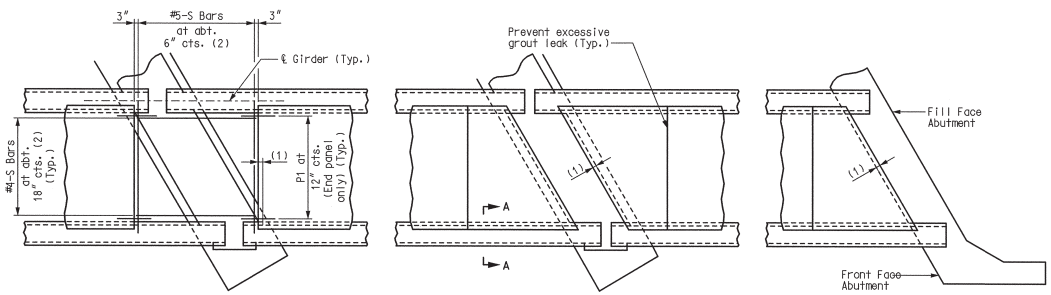

PLAN OF PRECAST PRESTRESSED PANELS PLACEMENT

PANELS-SKEWED ENDS

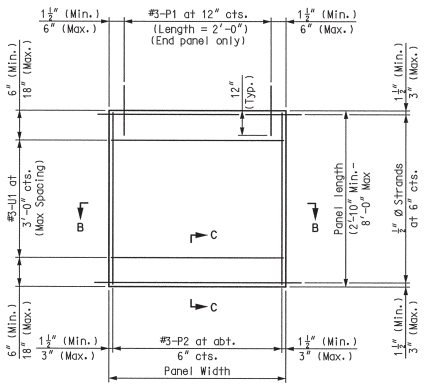

PLAN OF PRECAST PRESTRESSED PANEL

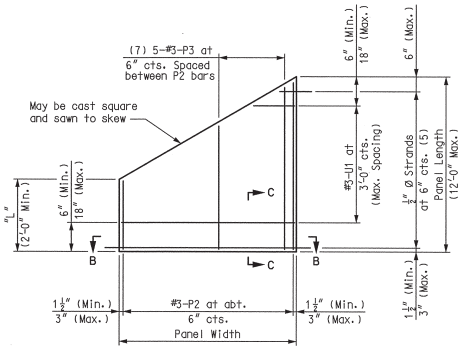

PLAN OF PRECAST PRESTRESSED PANEL (SKEWED END-OPTIONAL)

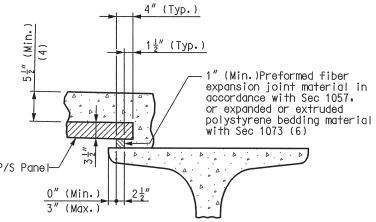

SECTION A-A

Note:
Use slab haunching diagram on Sheet Nos.77 thru 79 for determining thickness of preformed fiber expansion joint material or polystyrene bedding material within the limits noted in general notes.

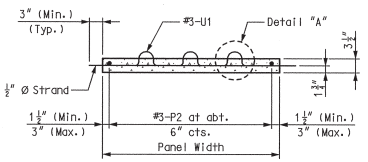

SECTION B-B

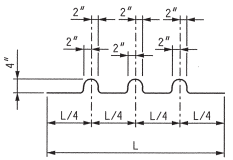

BEDING DIAGRAM FOR U1 BAR

(U1 Bars may be oriented at right angles to location and spacing shown. U1 Bars shall be placed between P1 bars.)

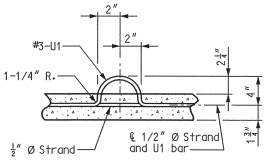

DETAIL "A"

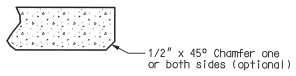

SECTION C-C

NOTES:

Cost of S-bars will be considered completely covered by the contract unit price for the slab.

S-bars are not listed in the bill of reinforcing.

(1) End panels shall be dimensioned 1" min. to 1-1/2" max. from the inside face of diaphragm.

(2) S-bars shown are bottom steel in slab between panels and used with squared end panels only.

(3) Extend S-bars 18 inches beyond the front face of abutments only.

(4) In order to maintain minimum slab thickness, it may be necessary to raise the grade uniformly throughout the structure. No payment will be made for additional labor or materials required for necessary grade adjustment.

(5) Any strand 2'-0" or shorter shall have a #4 reinforcing bar on each side of it, centered between strands. Strands 2'-0" or shorter may then be debonded at the fabricator's option.

(6) All panel support pads shall be glued to the girder. When support thickness exceeds 1-1/2", the pads shall be glued top and bottom. The glue used shall be the type recommended by the panel support pads manufacturer.

(7) Use #3-P3 bars if panel is skewed 45° or greater.

(8) Minimum reinforcement steel length shall be 2'-0".

GENERAL NOTES:

PRESTRESSED PANELS

Concrete for prestressed panels shall be Class A-1 with f'c = 6,000 psi, f'ci = 4,000 psi.

The top surface of all panels shall receive a scored finish with a depth of scoring of 1/8" perpendicular to the prestressing strands in the panels.

Prestressing tendons shall be high-tensile strength, uncoated seven-wire, low-relaxation strands for prestressed concrete in accordance with AASHTO M 203 Grade 270, with nominal diameter of strand = 1/2" and nominal area = 0.153 sq.in. and minimum ultimate strength = 41.31 kips (270 ksi). Larger strands may be used with the same spacing and initial tension.

Initial prestressing force = 31.0 kips/strand.

The method and sequence of releasing the strands shall be shown on the shop drawings.

Suitable anchorage devices for lifting panels may be cast in panels, provided the devices are shown on the shop drawings and approved by the engineer. Panel lengths shall be determined by the contractor and shown on the shop drawings.

When square end panels are used at skewed supports, the skewed portion shall be cast full depth. No separate payment will be made for additional concrete and reinforcing required.

Support from diaphragm forms is required under the optional skewed end until cast-in-place concrete has reached 3,000 psi compressive strength.

Minimum preformed fiber expansion joint material or polystyrene bedding material thickness shall be 1 inch. Thicker material may be used on one or both sides of the girder to reduce cast-in-place concrete thickness to within tolerances. No more than 3 inches total thickness shall be used.

The same thickness of preformed fiber expansion joint material shall be used under any one edge of any panel except at locations where top flange thickness may be stepped. The maximum change in thickness between adjacent panels shall be 1/4 inch.

The polystyrene bedding material may be cut with a transition to match haunch height above top of flange.

Slab thickness over prestressed panels may vary due to girder camber.

At the contractor's option, in lieu of increasing and varying the girder top flange thickness as shown in the plans, the haunch height may be achieved by sloping the top flange and providing a constant joint filler thickness. Dimensions shall be shown on the shop drawings.

In spans with splayed girder lines, the contractor may provide rectangular panels in lieu of tapered panels, and vary the location of joint filler, as measured from edge of flange, to a max. of 3".

REINFORCING STEEL:

All dimensions are out-to-out.

Minimum clearance to reinforcing steel shall be 1-1/2", unless otherwise shown.

Hooks and bends shall be in accordance with the CRSI Manual of Standard Practice for Detailing Reinforced Concrete Structures, Stirrup and Tie Dimensions.

Actual lengths are measured along centerline of bar to the nearest inch.

The prestressed panel quantities are not included in the table of estimated quantities for the slab.

If U1 bars interfere with placement of slab steel, U1 loops may be bent over, as necessary, to clear slab steel.

Welded wire fabric or welded deformed bar mats providing a minimum area of reinforcing perpendicular to strands of 0.22 sq. in./ft., with spacing parallel to strands sufficient to insure proper handling, may be used in lieu of the #3-P2 bars shown. Wire or bar diameter shall not be larger than 0.375 inch. The above alternative reinforcement criteria may be used in lieu of the #3-P3 bars, when required, and placed over a width not less than 2 feet.

The reinforcing steel shall be tied securely to the 1/2" Ø strands with the following maximum spacing in each direction:

#3-P2 bars at 16 inches.

Welded wire fabric or welded deformed bar mats at 2'-0".

Tie the #3-U1 bars to the #3-P2 bars, to the welded wire fabric or the welded deformed bar mats at about 3'-0" centers.

All reinforcement other than prestressing strands shall be epoxy coated.

Precast panels may be in contact with stirrup reinforcing in diaphragms.

PRECAST PRESTRESSED PANEL DETAILS

LAWRENCE E. ROLWES NUMBER PE-2009020847 PROFESSIONAL ENGINEER STATE OF MISSOURI
8/20/09

DATE	
8/20/09	
ROUTE	STATE
I-70	MO
DISTRICT	SHEET NO.
6	BR86
COUNTY	
St. Louis City - MO	
JOB NO.	
J6I0984B	
CONTRACT ID.	
PROJECT NO.	
BRIDGE NO.	
A6500	

DESCRIPTION	DATE

MISSOURI HIGHWAYS AND TRANSPORTATION COMMISSION
105 WEST CAPITOL
JEFFERSON CITY, MO 65102
1-888-ASK-MODOT (1-888-275-6636)

HNTB
715 KIRK DRIVE
KANSAS CITY, MO 64105-1310
TELEPHONE (816) 472-1201
CERTIFICATE OF AUTHORITY NO. 001270

REV.

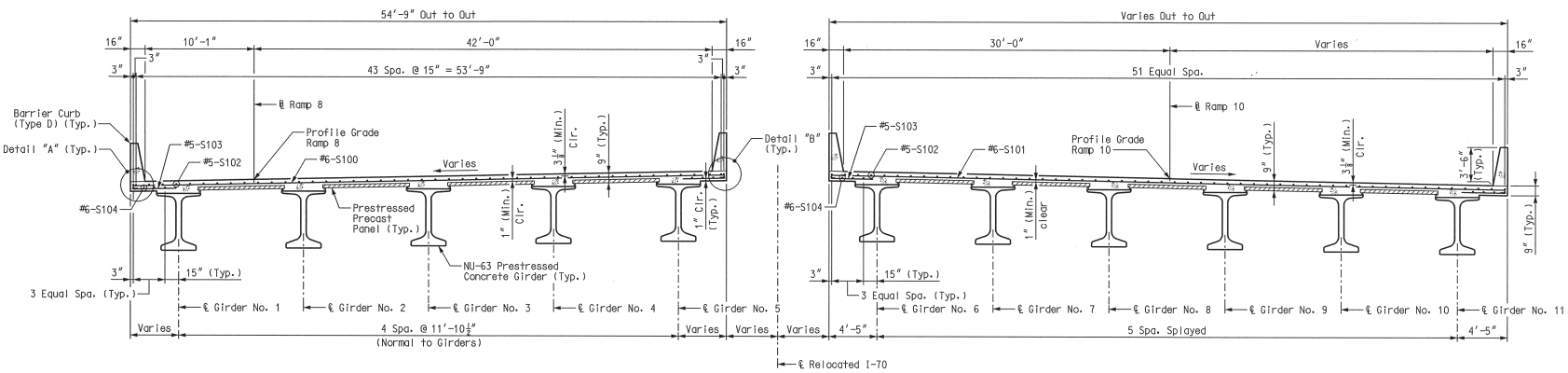

TYPICAL BRIDGE SECTION

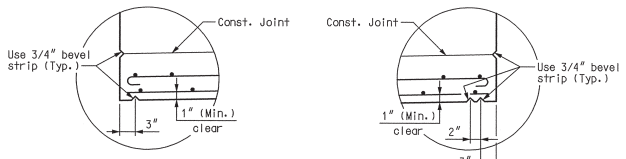

DETAIL "A"

DETAIL "B"

Notes:
Longitudinal slab dimensions are measured horizontally. All dimensions are perpendicular to ℄ Ramp 8 or ℄ Ramp 10, unless noted otherwise.
For slab pouring sequence, see Sheet No. 90.
For theoretical slab haunching diagram, see Sheet No. 77.
For details and reinforcement of barrier curbs not shown, see Sheet Nos. 98 thru 102.
For details of precast panels, see Sheet No. 86.

Detailed JUL 2009
Checked JUL 2009

Note: This drawing is not to scale. Follow dimensions.

Sheet No. 87 of 125

SLAB CROSS SECTION – UNIT 1

LAWRENCE A. ROLWES NUMBER PE-2009010247 STATE OF MISSOURI PROFESSIONAL ENGINEER
8/20/09

DATE 8/20/09
ROUTE I-70 | STATE MO
DISTRICT 6 | SHEET NO. BR87
COUNTY St. Louis City - MO
JOB NO. J6I0984B
CONTRACT ID.
PROJECT NO.
BRIDGE NO. A6500

DESCRIPTION | DATE

MISSOURI HIGHWAYS AND TRANSPORTATION COMMISSION
105 WEST CAPITOL
JEFFERSON CITY, MO 65102
1-888-ASK-MODOT (1-888-275-6636)

HNTB
715 KIRK DRIVE
KANSAS CITY, MO 64105-1310
TELEPHONE (816) 472-1201
CERTIFICATE OF AUTHORITY NO. 001270

REV.

\\slsw00\Jobs\46440\Techprod\Bridges\MO-Approach\Drawings\Baseline Drawings\B_A6500_087-125_J6I0984B_087.dgn
18-AUG-2009 10:28

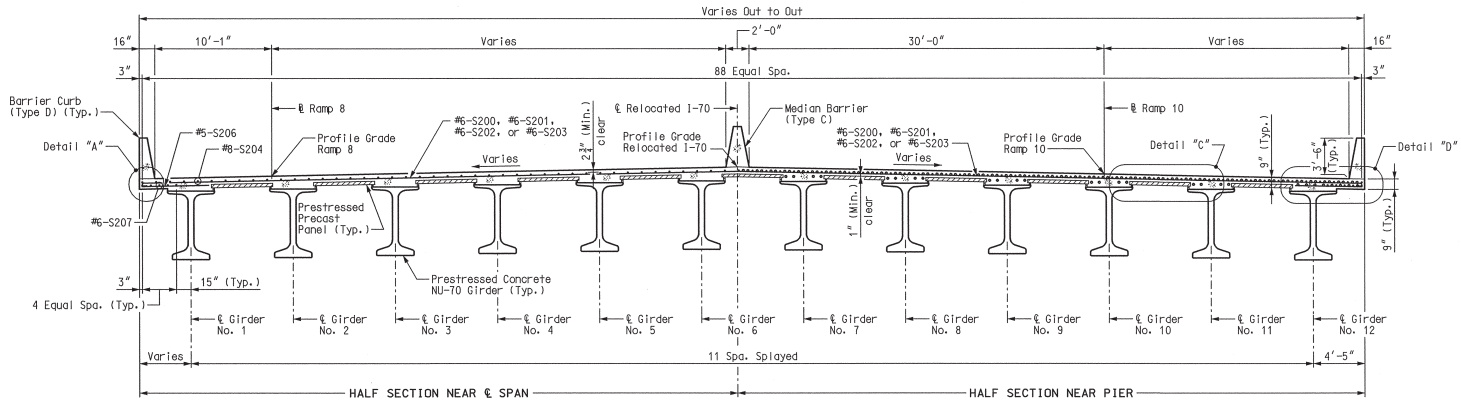

TYPICAL SECTION

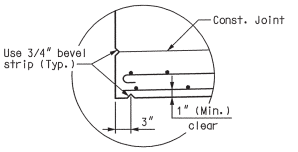

DETAIL "A"

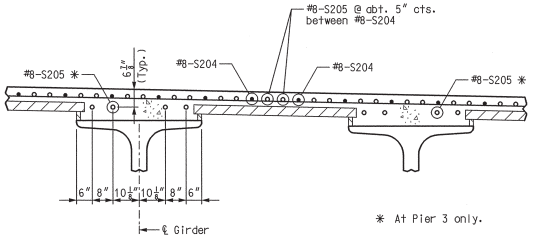

✱ At Pier 3 only.

DETAIL "C"

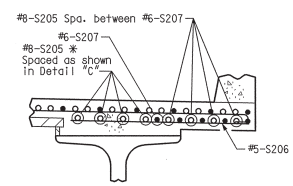

Note:
Right overhang shown, left overhang similar.

DETAIL "D" (PIER 3)

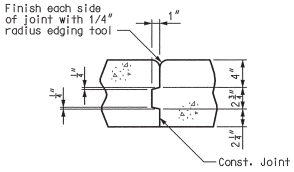

DETAIL "E"

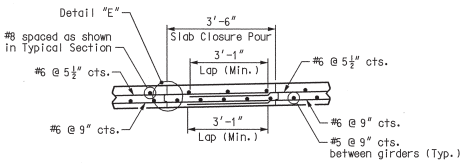

OPTIONAL SLAB CLOSURE POUR DETAIL

Notes:
Bar lengths may need to be adjusted from those shown in the bill of reinforcing steel if the optional slab closure pour is used.
Reinforcing bars shown at bottom slab are not included in the bill of reinforcing steel. If the contractor provides a closure pour, no additional payment will be made for the additional reinforcing steel or concrete.
If the closure pour is provided, it shall be placed in the bay between Girder Nos. 6 and 7.

Notes:
Longitudinal slab dimensions are measured horizontally.
All measurements perpendicular to centerline I-70 unless otherwise noted.
For slab pouring sequence, see Sheet No. 90.
For theoretical slab haunching diagram, see Sheet No. 77.
For details and reinforcement of barrier curbs not shown, see Sheet Nos. 98 thru 102.
For details of precast panels, see Sheet No. 86.

SLAB CROSS SECTION - UNIT 2

Detailed JUL 2009
Checked JUL 2009

Note: This drawing is not to scale. Follow dimensions.

STATE OF MISSOURI LAWRENCE ROLWES JR. NUMBER PE-2006002847 REGISTERED PROFESSIONAL ENGINEER
8/20/09

DATE 8/20/09	
ROUTE I-70	STATE MO
DISTRICT 6	SHEET NO. BR88
COUNTY St. Louis City - MO	
JOB NO. J6I0984B	
CONTRACT ID.	
PROJECT NO.	
BRIDGE NO. A6500	

DATE | DESCRIPTION

MISSOURI HIGHWAYS AND TRANSPORTATION COMMISSION
MoDOT
105 WEST CAPITOL
JEFFERSON CITY, MO 65102
1-888-ASK-MODOT (1-888-275-6636)

HNTB
715 KIRK DRIVE
KANSAS CITY, MO 64105-1310
TELEPHONE (816) 472-1201
CERTIFICATE OF AUTHORITY NO. 001270

REV.

\\slsw00\Jobs\46440\Techprod\Bridges\MO-Approach\Drawings\Baseline Drawings\B_A6500_088-125_J6I0984B_088.dgn 18-AUG-2009 10:28

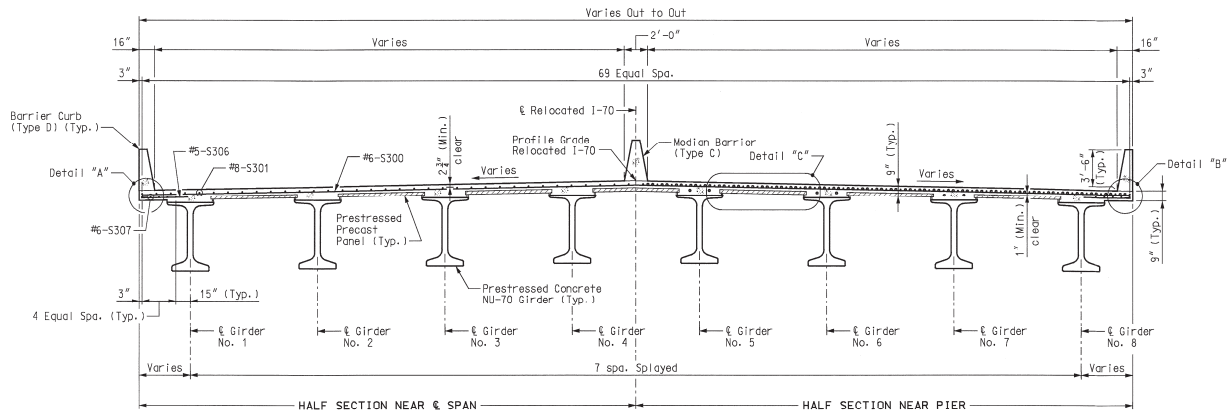

TYPICAL SECTION

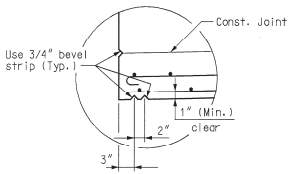

DETAIL "A"

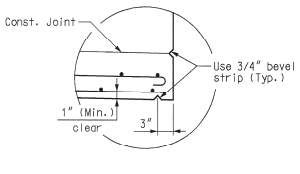

DETAIL "B"

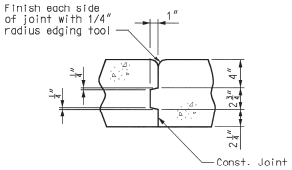

DETAIL "E"

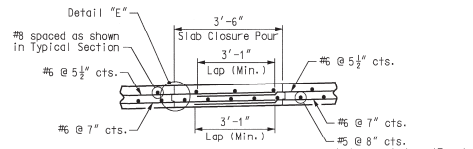

OPTIONAL SLAB CLOSURE POUR DETAIL

Notes:
Bar lengths may need to be adjusted from those shown in the bill of reinforcing steel if the optional slab closure pour is used.
Reinforcing bars shown at bottom slab are not included in the bill of reinforcing steel. If the contractor provides a closure pour, no additional payment will be made for the additional reinforcing steel or concrete.
If the closure pour is provided, it shall be placed in the bay between Girder Nos. 4 and 5.

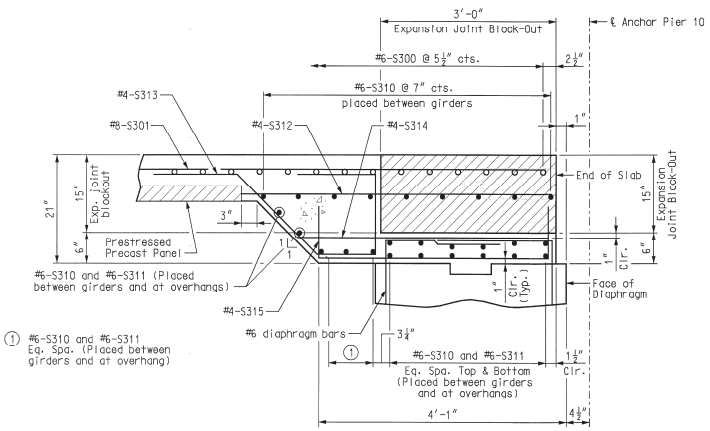

SECTION A-A

Notes:
Concrete in block-out will be placed with the expansion joint by others (Job No. J6I0984).
Adjust #4-S312, #4-S313, #4-S314, and #4-S315 to clear girder webs.
For end diaphragm details at Anchor Pier 10, see Sheet No. 76.

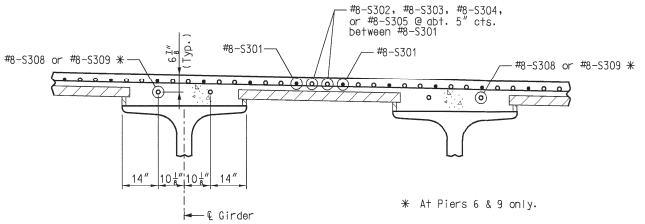

* At Piers 6 & 9 only.

DETAIL "C"

Notes:
Longitudinal slab dimensions are measured horizontally.
For slab pouring sequence, see Sheet No. 91.
For theoretical slab haunching diagram, see Sheets Nos. 78 and 79.
For details and reinforcement of barrier curbs not shown, see Sheet Nos. 98 thru 102.
For details of precast panels, see Sheet No. 86.
For girder flange and Block-Out details at Pier 10, see Sheet No. 57.

SLAB CROSS SECTION – UNIT 3

Detailed OCT 2009
Checked OCT 2009

Note: This drawing is not to scale. Follow dimensions.

\\stlw00\pmwork\jobs\46440\Techprod\Bridges\MO-Approach\Drawings\Baseline Drawings\B_A6500_089-125_J6I0984B_089.dgn

09-DEC-2009 06:42

LAWRENCE P. ROLLINS JR. NUMBER 2006000284 PROFESSIONAL ENGINEER

12/9/09
DATE
8/20/09
ROUTE I-70
STATE MO
DISTRICT 6
SHEET NO. BR89
COUNTY St. Louis City - MO
JOB NO. J6I0984B
CONTRACT ID.
PROJECT NO.
BRIDGE NO. A6500

DESCRIPTION	DATE

MISSOURI HIGHWAYS AND TRANSPORTATION COMMISSION
105 WEST CAPITOL
JEFFERSON CITY, MO 65102
1-888-ASK-MODOT (1-888-275-6636)

HNTB
715 KIRK DRIVE
KANSAS CITY, MO 64105-1310
TELEPHONE: 816 472-1201
CERTIFICATE OF AUTHORITY NO. 001270

NOT FOR CONSTRUCTION
11-06-09

REV.

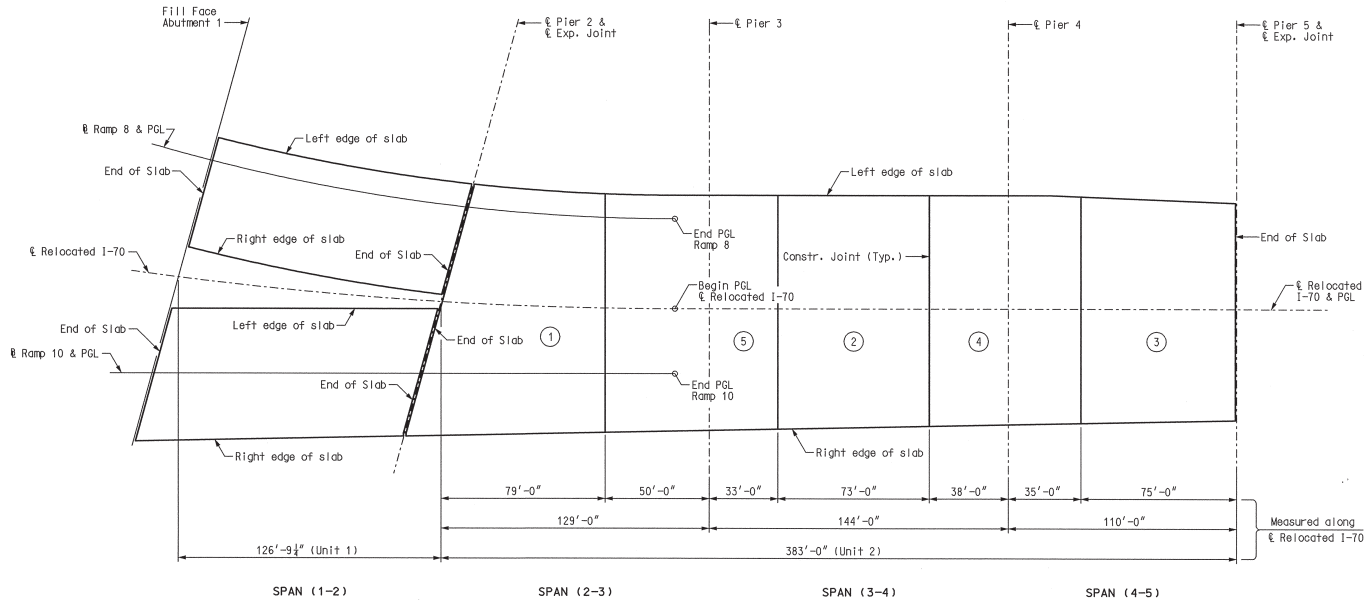

SLAB POURING SEQUENCE

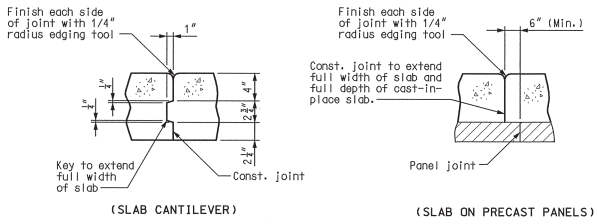

TRANSVERSE SLAB CONSTRUCTION JOINT DETAILS

	Sequence of Pours					Min. rate of pour cu. yds./hr.
	Direction					With Retarder
Basic sequence	1	2	3	4	5	59
	Either direction					
Alternate pours to the basic skip sequence are subject to the approval of the engineer in accordance with Sec 703.						
Alternate "A" pours	1	5 + 2	4 + 3			65
	End to 5	1 to 4	2 to End			
Alternate "B" pours	1 + 5 + 2	4 + 3				65
	End to 4	2 to End				
Alternate "C" pours	1 + 5 + 2 + 4 + 3					65
	End to End					

Notes:

Longitudinal dimensions are measured horizontally.

Transverse construction joints shall be placed normal to ℄ Relocated I-70.

The contractor shall pour and satisfactorily finish the roadway slabs for Span (1-2) at a rate not less than 25 cu.yd. per hour.

The contractor shall furnish an approved retarder to retard the set of the concrete to 2.5 hours and shall pour and satisfactorily finish the slab pours at the rate given.

The concrete diaphragm at the intermediate piers and integral abutment shall be poured a minimum of 30 minutes and a maximum of 2 hours before the slab is poured.

If the closure pour is used, the minimum rate of pour for the basic and alternate pouring sequences shall be decreased by a factor corresponding to the larger pour width divided by the total slab width.

End diaphragms at expansion devices may be poured with a construction joint between the diaphragm and slab, or monolithic with the slab.

SLAB POURING SEQUENCE - UNITS 1 AND 2

Detailed JUL 2009
Checked JUL 2009

Note: This drawing is not to scale. Follow dimensions.

STATE OF MISSOURI LAWRENCE E. ROLWES, JR. NUMBER PE-2006002847 REGISTERED PROFESSIONAL ENGINEER

8/20/09

DATE	
8/20/09	
ROUTE I-70	STATE MO
DISTRICT 6	SHEET NO. BR90
COUNTY St. Louis City - MO	
JOB NO. J6I0984B	
CONTRACT ID.	
PROJECT NO.	
BRIDGE NO. A6500	

DESCRIPTION

DATE

MISSOURI HIGHWAYS AND TRANSPORTATION COMMISSION

MoDOT

105 WEST CAPITOL
JEFFERSON CITY, MO 65102
1-888-ASK-MODOT (1-888-275-6636)

HNTB

715 KIRK DRIVE
KANSAS CITY, MO 64105-1310
TELEPHONE (816) 472-1201
CERTIFICATE OF AUTHORITY NO. 001270

REV.

\\slsw00\Jobs\46440\Techprod\Bridges\MO-Approach\Drawings\Baseline Drawings\B_A6500_090-125_J6I0984B_090.dgn 18-AUG-2009 10:28

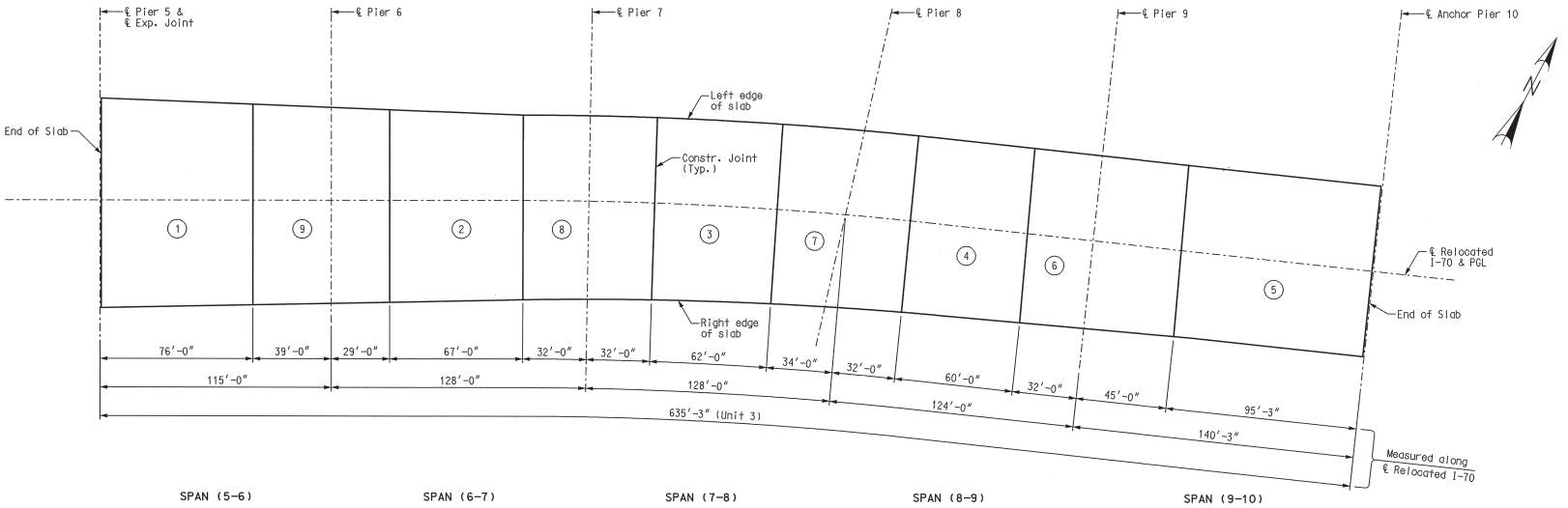

SLAB POURING SEQUENCE

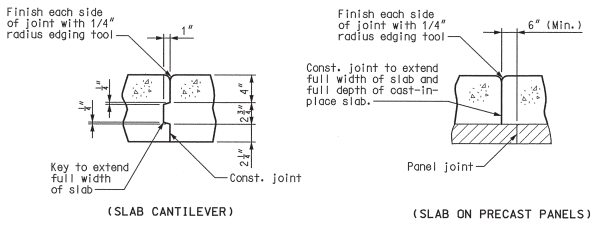

TRANSVERSE SLAB CONSTRUCTION JOINT DETAILS

	Sequence of Pours									Min. rate of pour cu. yds./hr.
	Direction									With Retarder
Basic sequence	1	2	3	4	5	6	7	8	9	51
	Either direction									
Alternate pours to the basic skip sequence are subject to the approval of the engineer in accordance with Sec 703.										
Alternate "A" pours	1	9 + 2		8 + 3		7 + 4		6 + 5		65
	End to 9	1 to 8		2 to 7		3 to 6		4 to End		
Alternate "B" pours	1 + 9 + 2			8 + 3		7 + 4 + 6 + 5				65
	End to 8			2 to 7		3 to End				
Alternate "C" pours	1 + 9 + 2 + 8 + 3					7 + 4 + 6 + 5				65
	End to 7					3 to End				
Alternate "D" pours	1 + 9 + 2 + 8 + 3 + 7 + 4 + 6 + 5									65
	End to End									

Notes:
Longitudinal dimensions are measured horizontally.
Transverse construction joints shall be placed normal to ℄ Relocated I-70.
The contractor shall furnish an approved retarder to retard the set of the concrete to 2.5 hours and shall pour and satisfactorily finish the slab pours at the rate given.
The concrete diaphragm at the intermediate piers shall be poured a minimum of 30 minutes and a maximum of 2 hours before the slab is poured.
If the closure pour is used, the minimum rate of pour for the basic and alternate pouring sequences shall be decreased by a factor corresponding to the larger pour width divided by the total slab width.
End diaphragms at expansion devices may be poured with a construction joint between the diaphragm and slab, or monolithic with the slab.

SLAB POURING SEQUENCE – UNIT 3

Detailed JUL 2009
Checked JUL 2009

Note: This drawing is not to scale. Follow dimensions.

\\slsw00\Jobs\46440\Techprod\Bridges\MO-Approach\Drawings\Baseline Drawings\B_A6500_091-125_J610984B_091.dgn

18-AUG-2009 10:28

STATE OF MISSOURI
LAWRENCE S. ROLWES
NUMBER 2006002847
PROFESSIONAL ENGINEER
8/20/09

DATE 8/20/09
ROUTE I-70
STATE MO
DISTRICT 6
SHEET NO. BR91
COUNTY St. Louis City - MO
JOB NO. J610984B
CONTRACT ID.
PROJECT NO.
BRIDGE NO. A6500

DESCRIPTION | DATE

MISSOURI HIGHWAYS AND TRANSPORTATION COMMISSION
105 WEST CAPITOL
JEFFERSON CITY, MO 65102
1-888-ASK-MODOT (1-888-275-6636)

HNTB
715 KIRK DRIVE
KANSAS CITY, MO 64105-1310
TELEPHONE (816) 472-1201
CERTIFICATE OF AUTHORITY NO. 001270

REV.

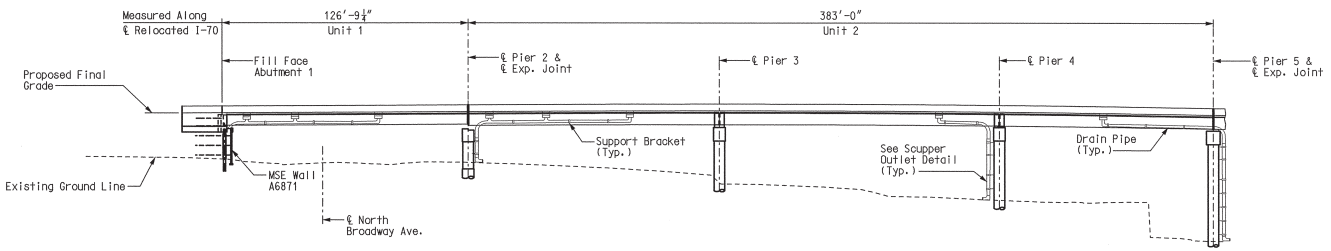

PART ELEVATION

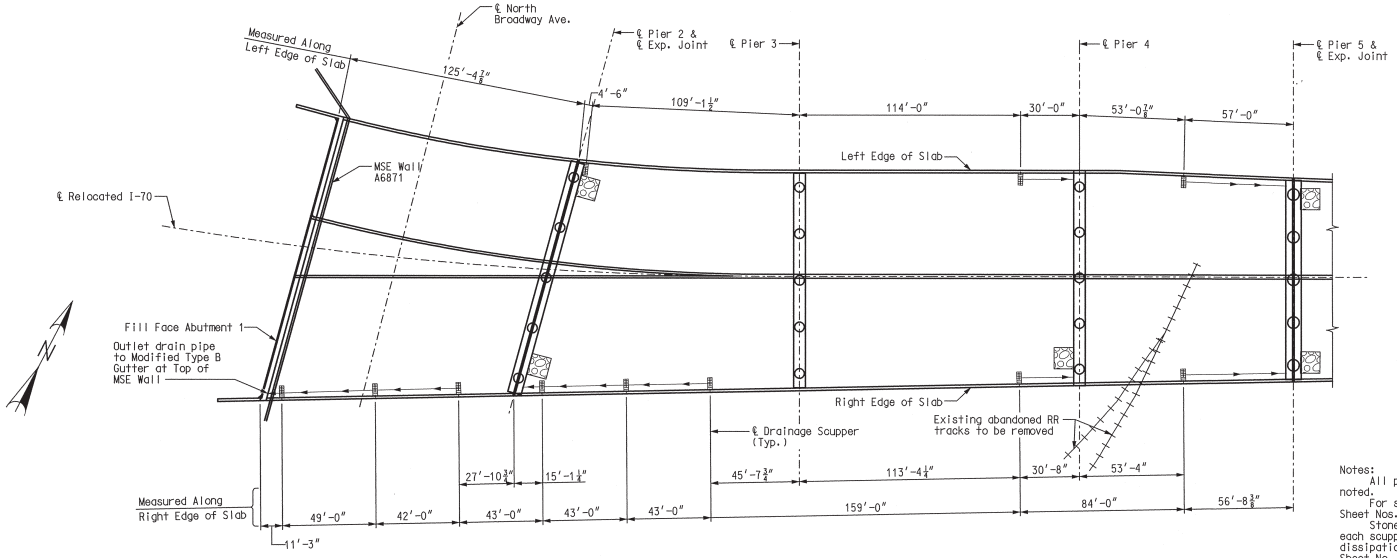

PART PLAN

LEGEND

- Drainage Scupper
- Fiberglass Drain Pipe
- Stone Riprap Check Basin

Notes:

All pipe shall be 12" fiberglass unless otherwise noted.

For scupper and pipe connection details, see Sheet Nos. 94 and 95.

Stone rip rap check basins will be located at each scupper outlet point as shown for velocity dissipation. Check basin dimensions are given on Sheet No. 95.

Stone riprap check basins shall be Type 2 Rock Blanket (Roadway Item).

All drainage scuppers shall be Neenah designation R 3921-V1 or approved equal.

Layout lengths provided along outside edge of slab. Elevation view shows drainage pipe slope for scuppers and pipe located at right edge of slab only.

Pipe slope shall follow the longitudinal slope of the roadway. Where a backslope is required for outletting purposes, the slope will be 0.5 %.

See roadway plans for bridge scupper connection to existing drainage facilities.

DRAINAGE PLAN AND ELEVATION – UNITS 1 AND 2

Detailed JUL 2009
Checked JUL 2009

Note: This drawing is not to scale. Follow dimensions.

\\slsw00\Jobs\46440\Techprod\Bridges\MO-Approach\Drawings\Baseline Drawings\B_A6500_092-125_J6I0984B_092.dgn 18-AUG-2009 10:28

LAWRENCE EDWARD ROLWES, JR. NUMBER 2007006002847 PROFESSIONAL ENGINEER STATE OF MISSOURI

8/20/09

DATE 8/20/09

ROUTE I-70 | STATE MO

DISTRICT 6 | SHEET NO. BR92

COUNTY St. Louis City - MO

JOB NO. J6I0984B

CONTRACT ID.

PROJECT NO.

BRIDGE NO. A6500

DESCRIPTION | DATE

REV.

MISSOURI HIGHWAYS AND TRANSPORTATION COMMISSION

MoDOT

105 WEST CAPITOL
JEFFERSON CITY, MO 65102
1-888-ASK-MODOT (1-888-275-6636)

HNTB

715 KIRK DRIVE
KANSAS CITY, MO 64105-1310
TELEPHONE (816) 472-1201
CERTIFICATE OF AUTHORITY NO. 001270

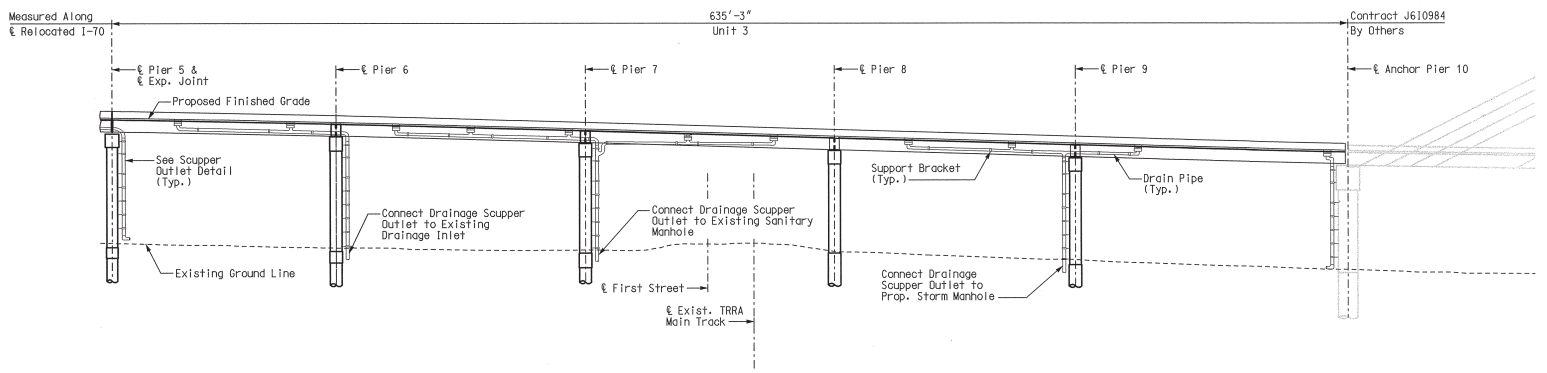

PART ELEVATION

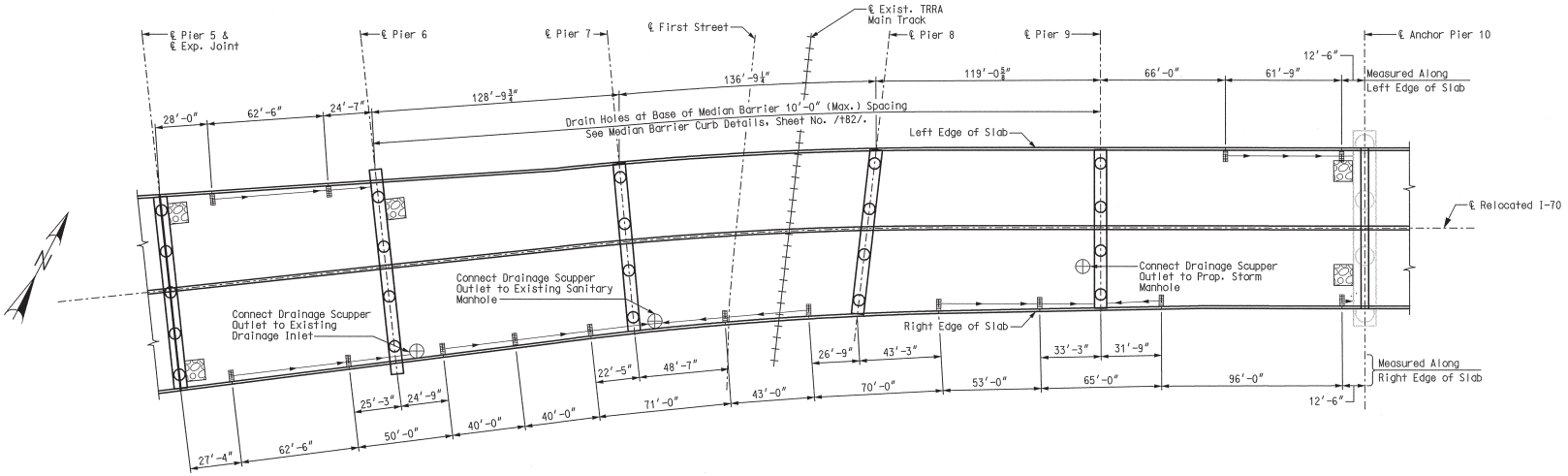

PART PLAN

Notes:
For drainage system notes, see Sheet No. 92.
For legend, see Sheet No. 92.

DRAINAGE PLAN AND ELEVATION – UNIT 3

Detailed JUL 2009
Checked JUL 2009

Note: This drawing is not to scale. Follow dimensions.

Sheet No. 93 of 125

\\slsw00\Jobs\46440\Techprod\Bridges\MO-Approach\Drawings\Baseline Drawings\B_A6500_093-125_J6I0984B_093.dgn

18-AUG-2009 10:28

LAWRENCE G. ROLWES NUMBER PE-2005002847 STATE OF MISSOURI PROFESSIONAL ENGINEER

8/20/09

DATE 8/20/09
ROUTE I-70
STATE MO
DISTRICT 6
SHEET NO. BR93
COUNTY St. Louis City - MO
JOB NO. J6I0984B
CONTRACT ID.
PROJECT NO.
BRIDGE NO. A6500

DESCRIPTION | DATE

MISSOURI HIGHWAYS AND TRANSPORTATION COMMISSION
105 WEST CAPITOL
JEFFERSON CITY, MO 65102
1-888-ASK-MODOT (1-888-275-6636)

HNTB
715 KIRK DRIVE
KANSAS CITY, MO 64105-1310
TELEPHONE (816) 472-1201
CERTIFICATE OF AUTHORITY NO. 001270

REV.

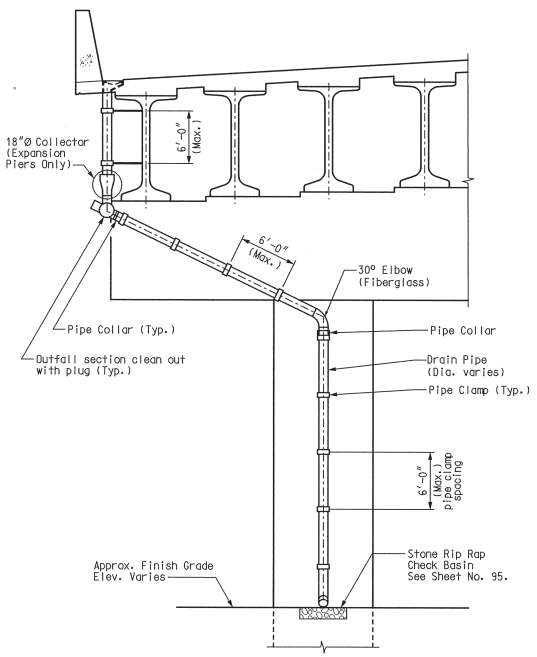

ELEVATION
SCUPPER OUTFALL

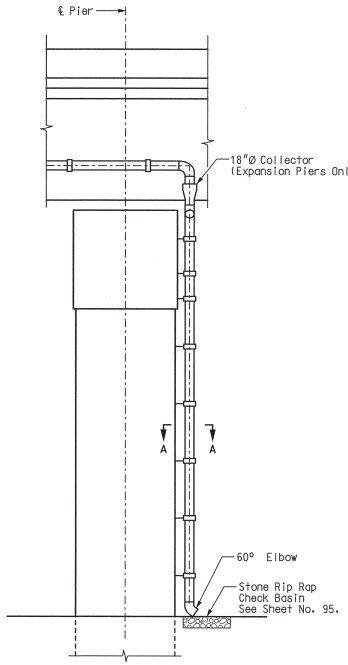

END VIEW
SCUPPER OUTFALL

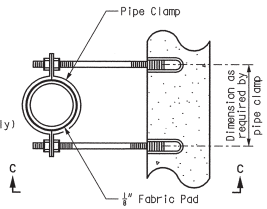

SUPPORT BRACKET

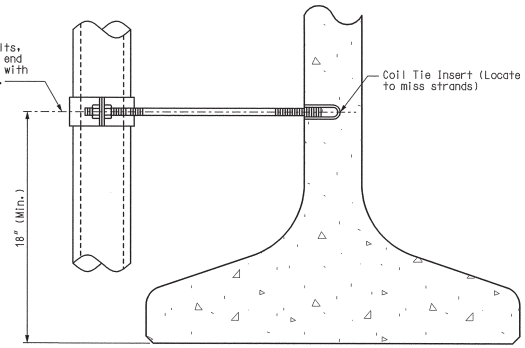

VIEW C-C

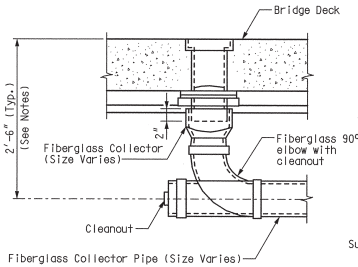

COLLECTOR PIPE
DETAIL - END SECTION

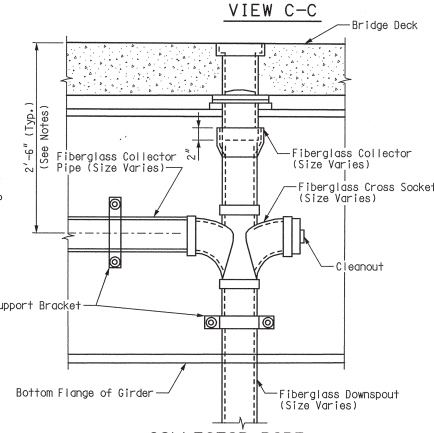

COLLECTOR PIPE
DETAIL - OUTFALL SECTION

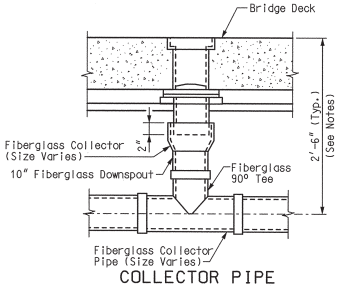

COLLECTOR PIPE
DETAIL - TEE SECTION

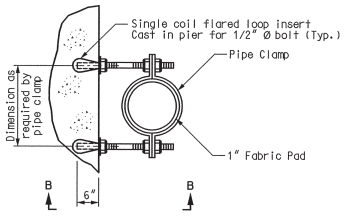

SECTION A-A

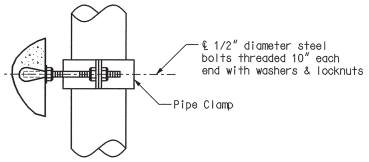

VIEW B-B

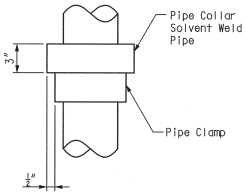

PIPE COLLAR DETAIL

Notes:
In areas where the pipe collector system flows opposite the bridge profile, the typical height will vary as necessary to meet a minimum 0.5% slope.
All downspouts from scuppers shall be 6" unless otherwise stated.
All fiberglass collectors and pipe clamps shall match the pipe size(s) shown in the drainage plan and profile.
All pipe clamps, fabric pad inserts, collectors and other work necessary to install the system shall be considered completely covered by the contract unit price for Drainage System (On Structure).

DRAINAGE SYSTEM DETAILS - 1

Detailed JUL 2009
Checked JUL 2009

Note: This drawing is not to scale. Follow dimensions.

Sheet No. 94 of 125

\\slsw00\Jobs\46440\Techprod\Bridges\MO-Approach\Drawings\Baseline Drawings\B_A6500_094-125_J6I0984B_094.dgn

18-AUG-2009 10:28

LAWRENCE E. ROLWES NUMBER E-2005002847 PROFESSIONAL ENGINEER STATE OF MISSOURI

8/20/09

DATE 8/20/09
ROUTE I-70 | STATE MO
DISTRICT 6 | SHEET NO. BR94
COUNTY St. Louis City - MO
JOB NO. J6I0984B
CONTRACT ID.
PROJECT NO.
BRIDGE NO. A6500

DESCRIPTION | DATE

MISSOURI HIGHWAYS AND TRANSPORTATION COMMISSION
105 WEST CAPITOL
JEFFERSON CITY, MO 65102
1-888-ASK-MODOT (1-888-275-6636)

HNTB
715 KIRK DRIVE
KANSAS CITY, MO 64105-1310
TELEPHONE (816) 472-1201
CERTIFICATE OF AUTHORITY NO. 001270

REV.

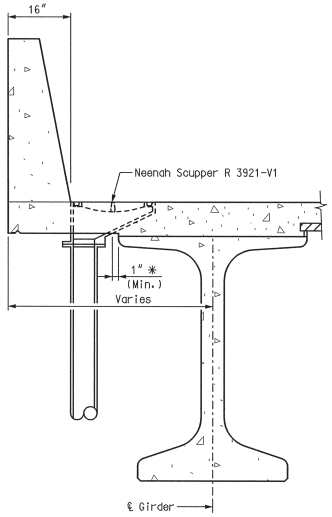

SCUPPER TYPICAL SECTION

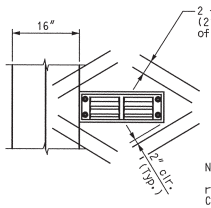

PLAN

Note:
Adjust or sawcut longitudinal reinforcement to clear drainage scuppers. Coat exposed ends with epoxy paint.

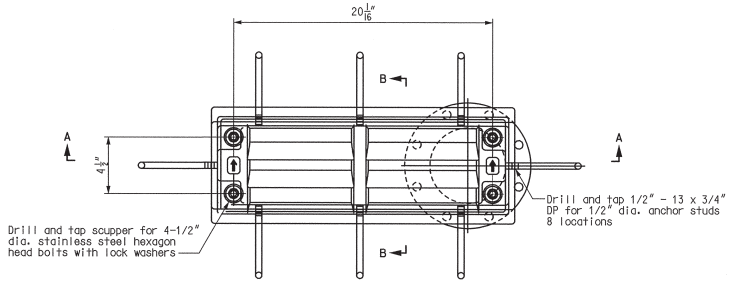

PLAN

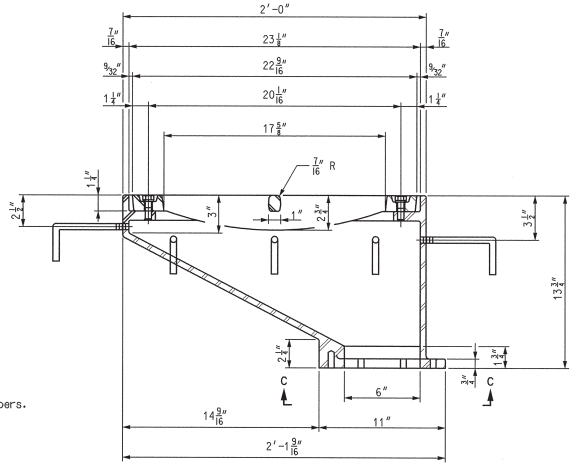

SECTION A-A

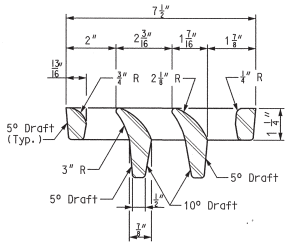

VANE GRATE DETAIL

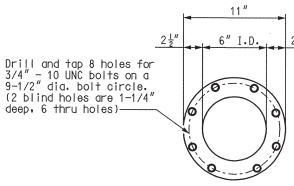

VIEW C-C

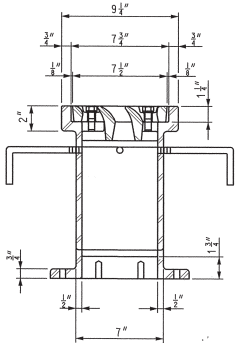

SECTION B-B

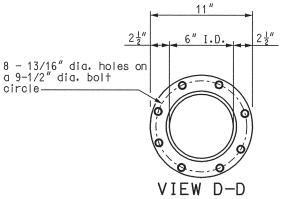

VIEW D-D

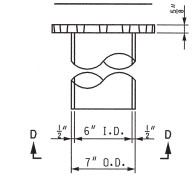

DOWNSPOUT

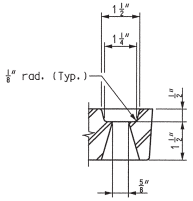

GRATE BOLT HOLE DETAIL

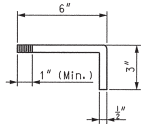

ANCHOR STUD DETAIL

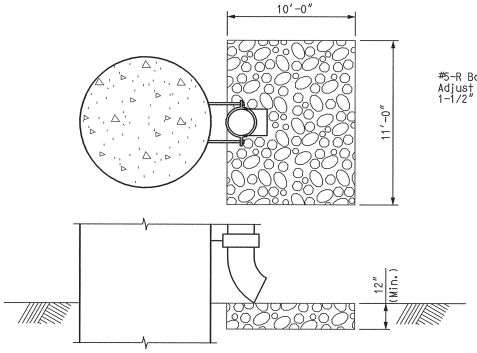

STONE RIPRAP CHECK BASIN DETAIL

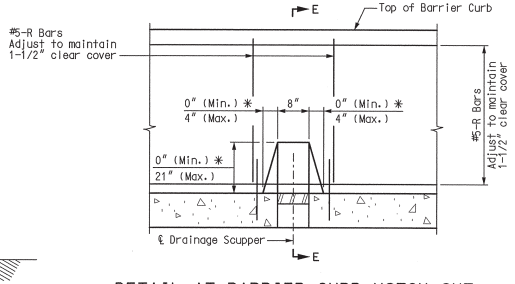

DETAIL AT BARRIER CURB NOTCH-OUT AT DRAINAGE SCUPPER

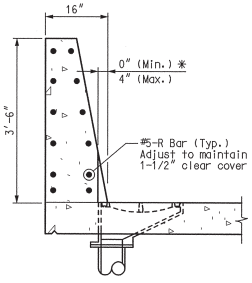

SECTION E-E

Notes:
All cast iron parts shall be gray iron conforming to the requirements of AASHTO M 105, Class 35B.
Bolts, anchor studs, washers and nuts shall conform to the requirements of ASTM A 307 and shall be galvanized according to AASHTO M 232.
As an alternate, bolts, anchor studs, washers and nuts may be stainless steel according to Sec 1080.
All castings shall conform to the requirements of AASHTO M 306.
Structural steel weldments of equal sections and of the same configuration may be substituted for the cast iron scupper frame. Fillet or full penetration welds shall be used for the weldments. Details shall be submitted to the Engineer for approval. Structural steel weldments shall not be substituted for the cast iron scupper grate. Structural steel frames and downspouts shall be galvanized according to AASHTO M111.
All fiberglass pipe shall conform to ASTM D 2996 with a short-time rupture strength hoop tensile stress of 30,000 psi min. Color shall be concrete gray.
✱ Drainage scupper may overlap gutterline up to 4" to maintain 1" clearance to top flange of girder.
When scupper overlaps gutterline, the barrier will be notched as shown to allow for removal of the grate.
Payment for scupper, grate, downspout, and all hardware shall be considered completely covered by the contract unit price for Drainage System (On Structure).

DRAINAGE SYSTEM DETAILS - 2

Detailed JUL 2009
Checked JUL 2009

Note: This drawing is not to scale. Follow dimensions.

Sheet No. 95 of 125

\\slsw00\Jobs\46440\Techprod\Bridges\MO-Approach\Drawings\Baseline Drawings\B_A6500_095-125_J6I0984B_095.dgn

18-AUG-2009 10:28

LAWRENCE D. ROLMESCH NUMBER 2005002847 PROFESSIONAL ENGINEER STATE OF MISSOURI

8/20/09

DATE 8/20/09

ROUTE	STATE
I-70	MO
DISTRICT	SHEET NO.
6	BR95

COUNTY: St. Louis City - MO

JOB NO. J6I0984B

CONTRACT ID.

PROJECT NO.

BRIDGE NO. A6500

DESCRIPTION	DATE

MISSOURI HIGHWAYS AND TRANSPORTATION COMMISSION

105 WEST CAPITOL
JEFFERSON CITY, MO 65102
1-888-ASK-MODOT (1-888-275-6636)

HNTB
715 KIRK DRIVE
KANSAS CITY, MO 64105-1310
TELEPHONE (816) 472-1201
CERTIFICATE OF AUTHORITY NO. 001270

REV.

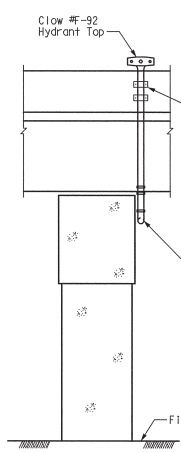

ELEVATION LOOKING NORTH
AT PIER 7

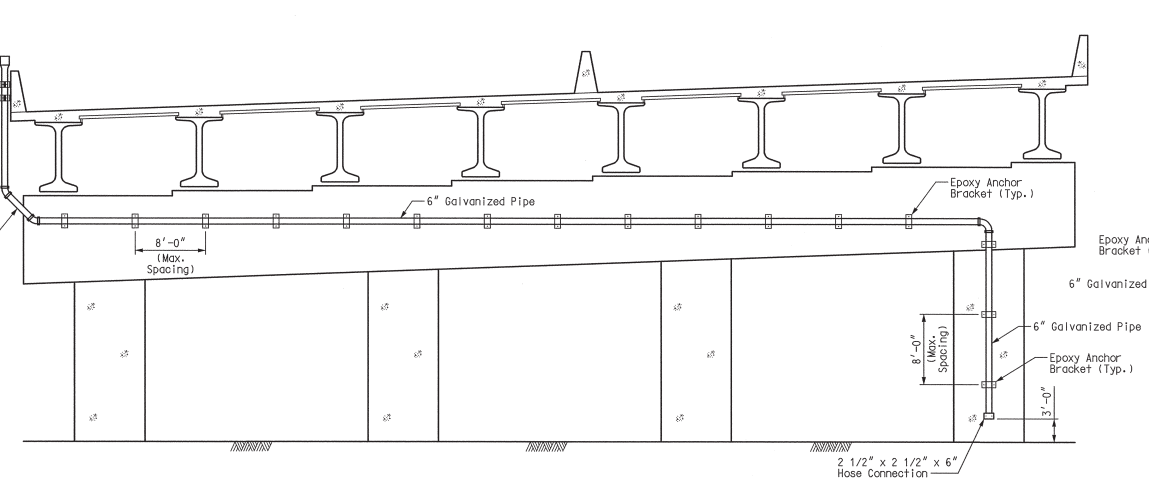

ELEVATION LOOKING WEST
AT PIER 7

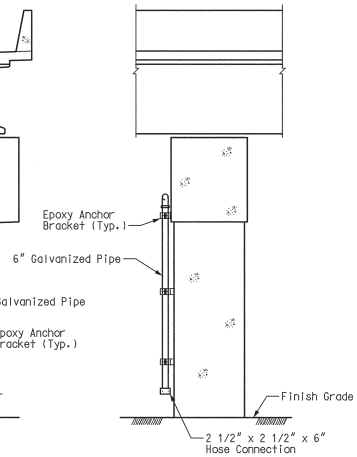

ELEVATION LOOKING SOUTH
AT PIER 7

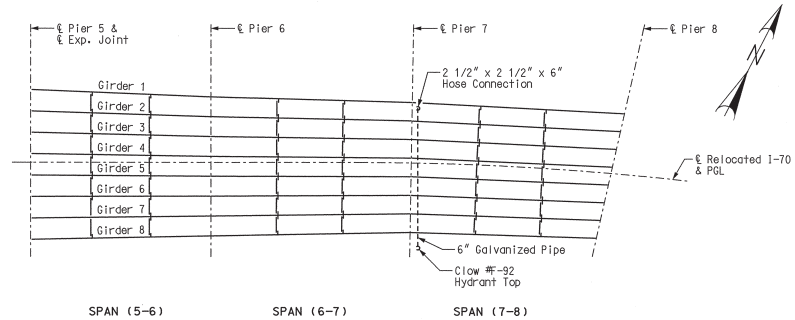

PART FRAMING PLAN

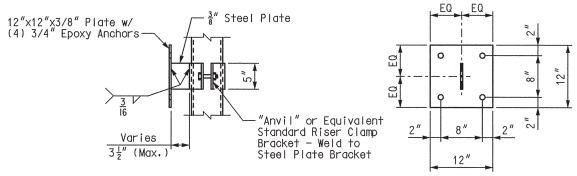

ELEVATION

BASE PLATE

EPOXY ANCHOR BRACKET

General Notes:
1. Payment for pipe, fittings, hangers, anchors and all hardware shall be included in pay item "Standpipe".

Structural Notes:
1. Steel shall conform to the following grades:
   All Angles, Base Plates, Conn. Plates (U.N.O.)----------A36
   Bolts----------A325
2. Fabricator is responsible for the design of connections not designed on the drawings. Any connection that is not shown or is not completely detailed on the structural drawings shall be designed by a structural engineer, registered in the state of Missouri.
3. The minimum plate thickness shall be 3/8". The minimum bolt diameter shall be 3/4". The minimum weld shall be 3/16" and the minimum design load on any connection shall be 10k unless noted otherwise.
4. All elements shall be hot dip galvanized.

Adhesive Anchors:
1. Adhesive anchors to be provided shall have the following embedments and allowable working loads (U.N.O.)

	Anchor Dia.	Min. Emb.	Tension Cap (lb.)	Shear Cap (lb.)
Concrete	3/4"	6 5/8"	7,400	4,300

Pipe and Fittings:
1. All pipe shall be schedule 40 hot-dipped galvanized meeting the requirements of ASTM-A53, NFPA 13, and shall be factory mutual approved. Piping shall have grooved ends compatible with fittings.
2. All fittings shall be standard victaulic grooved joint cast ductile iron conforming to ASTM A-536, Grade 64-45-12. Fittings shall be hot-dipped galvanized to ASTM A-153.

DRY STANDPIPE

Detailed JUL 2009
Checked JUL 2009

Note: This drawing is not to scale. Follow dimensions.

Sheet No. 96 of 125

STATE OF MISSOURI
LAWRENCE E. ROLWES, JR.
NUMBER
PE-2006002847
REGISTERED PROFESSIONAL ENGINEER

9/1/09

DATE	
8/20/09	
ROUTE	STATE
I-70	MO
DISTRICT	SHEET NO.
6	BR96
COUNTY	
St. Louis City - MO	
JOB NO.	
J6I0984B	
CONTRACT ID.	
PROJECT NO.	
BRIDGE NO.	
A6500	

DATE	DESCRIPTION

MISSOURI HIGHWAYS AND TRANSPORTATION COMMISSION

MoDOT

105 WEST CAPITOL
JEFFERSON CITY, MO 65102
1-888-ASK-MODOT (1-888-275-6636)

HNTB
715 KIRK DRIVE
KANSAS CITY, MO 64105-1310
TELEPHONE (816) 472-1201
CERTIFICATE OF AUTHORITY
NO. 001270

REV.

\\slsw00\Jobs\46440\Techprod\Bridges\MO-Approach\Drawings\Baseline Drawings\B_A6500_096-125_J6I0984B_096.dgn

01-SEP-2009 11:00

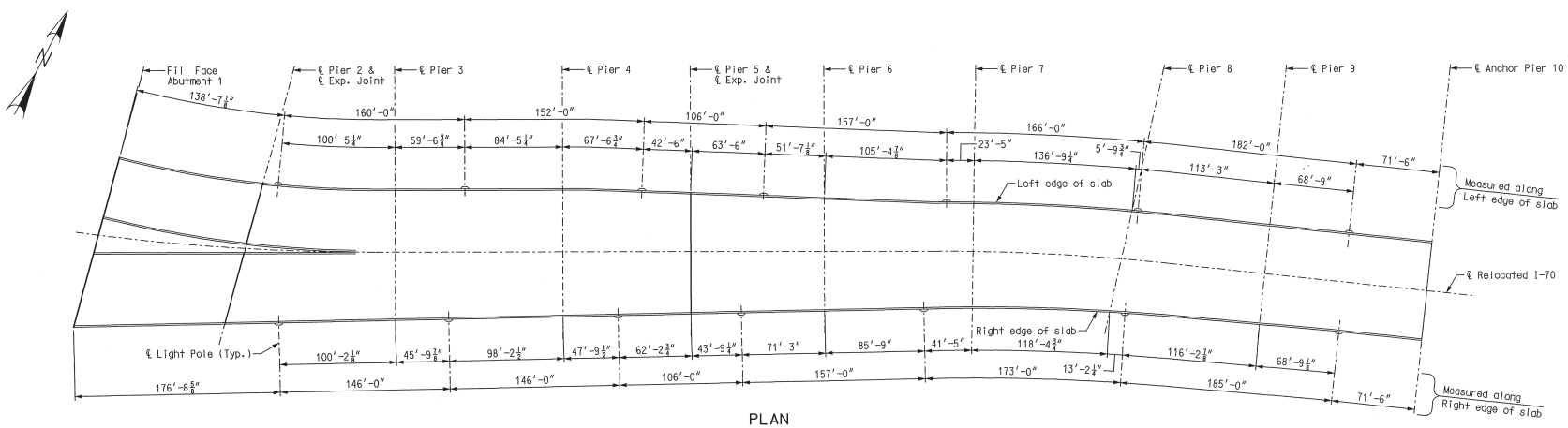

PLAN

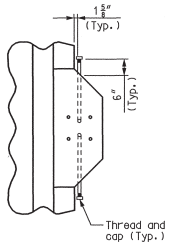

PLAN SHOWING CONDUIT

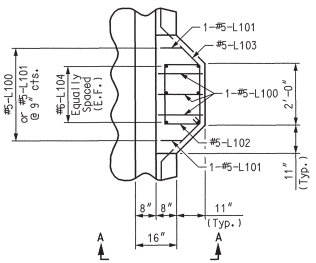

LIGHT POLE MOUNTING PLAN SHOWING REINFORCEMENT

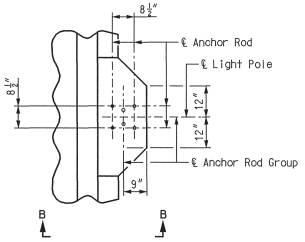

LIGHT POLE MOUNTING PLAN

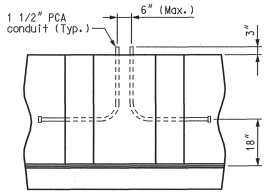

ELEVATION SHOWING CONDUIT

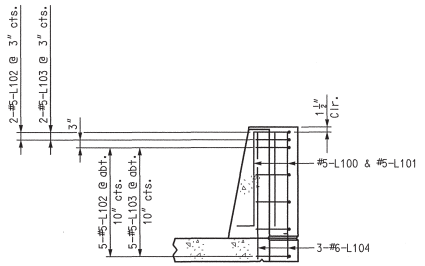

ELEVATION A-A

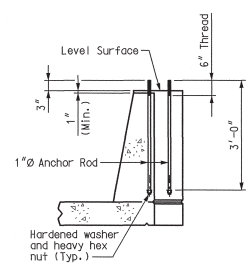

ELEVATION B-B

Notes:
Anchor rods and nuts shall be AASHTO M314-90 Grade 55. Anchor rods, nuts and washers shall be fully galvanized.
Anchor rods shall be placed vertically.
Light poles and wiring are to be furnished in contract J6I0984, by Others.
Cost of anchor rods, nuts, washers and conduits will be considered completely covered by contract unit price for "Barrier Curb (Type D)" per linear foot.

BRIDGE LIGHTING LAYOUT

Detailed JUL 2009
Checked JUL 2009

Note: This drawing is not to scale. Follow dimensions.

Sheet No. 97 of 125

STATE OF MISSOURI LAWRENCE E. ROLWES NUMBER PE-2006002847 REGISTERED PROFESSIONAL ENGINEER

8/20/09

DATE	
8/20/09	
ROUTE I-70	STATE MO
DISTRICT 6	SHEET NO. BR97
COUNTY St. Louis City - MO	
JOB NO. J6I0984B	
CONTRACT ID.	
PROJECT NO.	
BRIDGE NO. A6500	

DESCRIPTION

DATE

MISSOURI HIGHWAYS AND TRANSPORTATION COMMISSION

MoDOT

105 WEST CAPITOL
JEFFERSON CITY, MO 65102
1-888-ASK-MODOT (1-888-275-6636)

HNTB
715 KIRK DRIVE
KANSAS CITY, MO 64105-1310
TELEPHONE (816) 472-1201
CERTIFICATE OF AUTHORITY NO. 001270

REV.

\\slsw00\Jobs\46440\Techprod\Bridges\MO-Approach\Drawings\Baseline Drawings\B_A6500_097-125_J6I0984B_097.dgn 18-AUG-2009 10:29

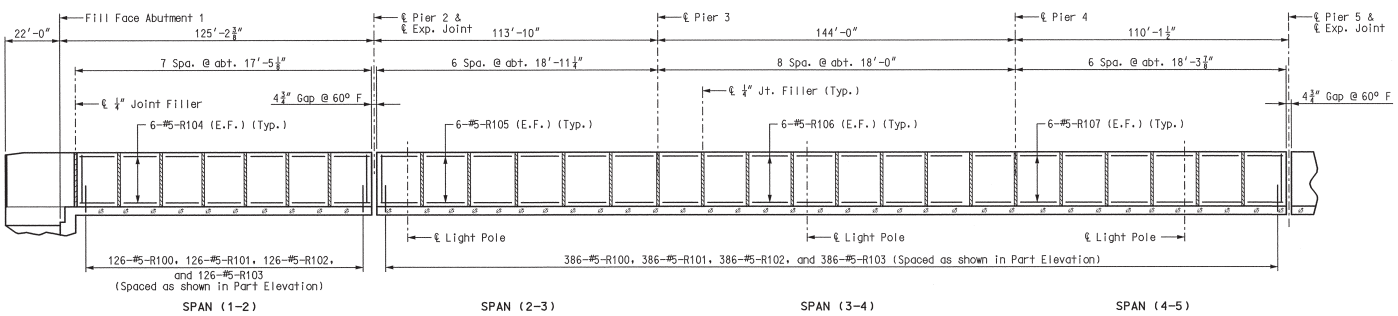

SECTION NEAR BARRIER CURB (TYPE D)

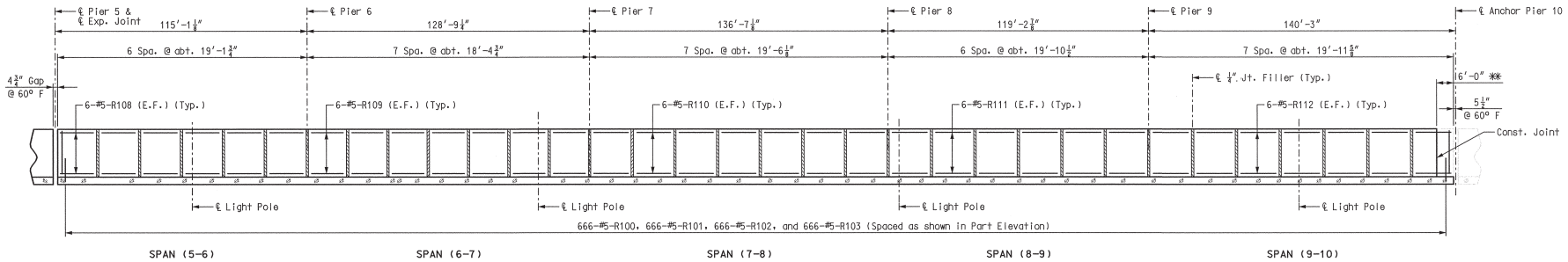

SECTION NEAR BARRIER CURB (TYPE D)

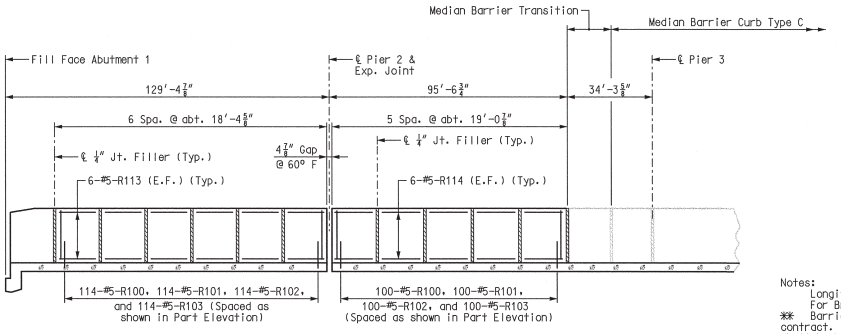

SECTION NEAR BARRIER CURB (TYPE D) RAMP 10

Notes:
Longitudinal dimensions are horizontal.
For Bridge Lighting Layout, see Sheet No. 97.
** Barrier reinforcement within this segment is included in this contract. Forming and placement of concrete within this segment shall be by others (Contract J6I0984).

LEFT BARRIER CURB (TYPE D) – ELEVATIONS

Detailed JUL 2009
Checked JUL 2009

Note: This drawing is not to scale. Follow dimensions.

Sheet No. 98 of 125

STATE OF MISSOURI
LAWRENCE G. ROLMES
NUMBER 2006000847
REGISTERED PROFESSIONAL ENGINEER
8/20/09

DATE 8/20/09
ROUTE I-70
STATE MO
DISTRICT 6
SHEET NO. BR98
COUNTY St. Louis City - MO
JOB NO. J6I0984B
CONTRACT ID.
PROJECT NO.
BRIDGE NO. A6500

DESCRIPTION
DATE
REV.

MISSOURI HIGHWAYS AND TRANSPORTATION COMMISSION
MoDOT
105 WEST CAPITOL
JEFFERSON CITY, MO 65102
1-888-ASK-MODOT (1-888-275-6636)

HNTB
715 KIRK DRIVE
KANSAS CITY, MO 64105-1310
TELEPHONE (816) 472-1201
CERTIFICATE OF AUTHORITY NO. 001210

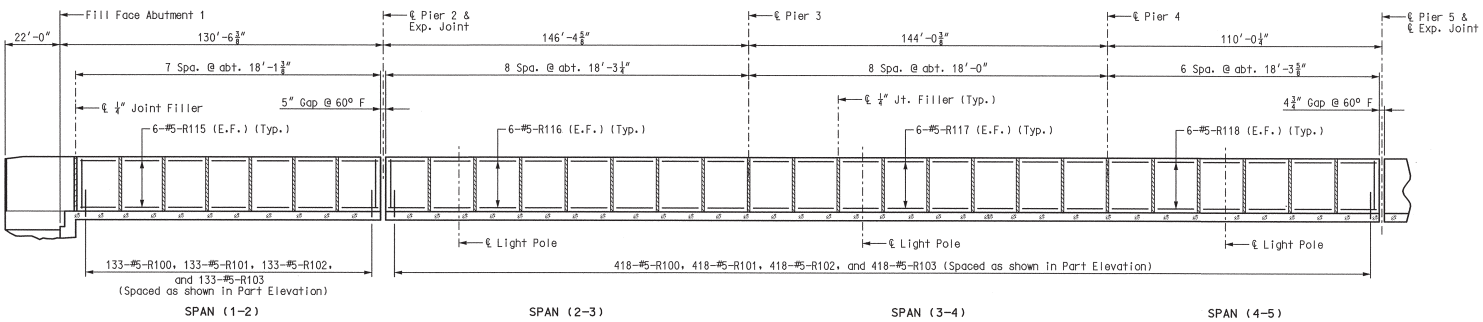

SECTION NEAR BARRIER CURB (TYPE D)

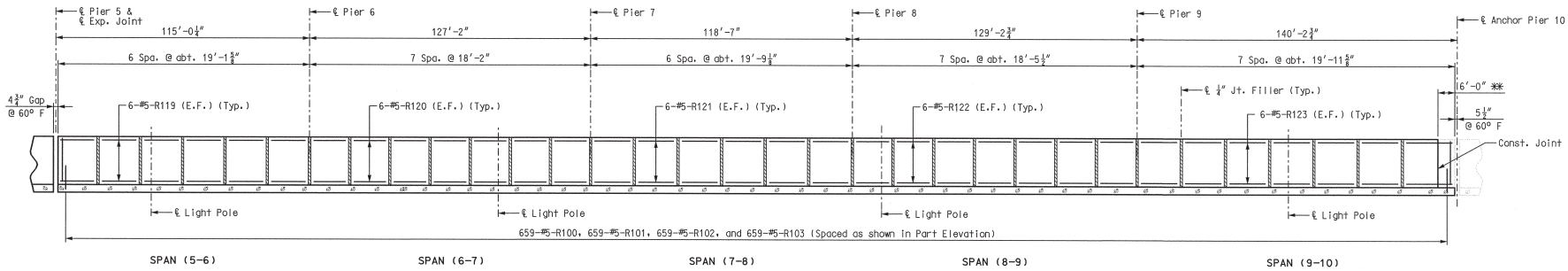

SECTION NEAR BARRIER CURB (TYPE D)

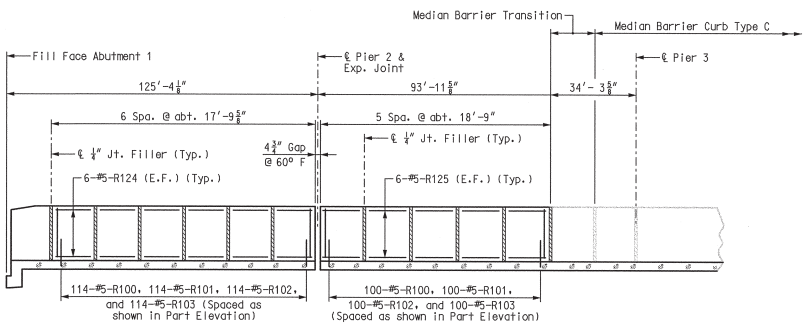

SECTION NEAR BARRIER CURB (TYPE D) RAMP 8

Notes:
Longitudinal dimensions are horizontal.
For Bridge Lighting Layout, see Sheet No. 97.
** Barrier reinforcement within this segment is included in this contract. Forming and placement of concrete within this segment shall be by others (Contract J6I0984).

RIGHT BARRIER CURB (TYPE D) - ELEVATIONS

Detailed JUL 2009
Checked JUL 2009

Note: This drawing is not to scale. Follow dimensions.

Sheet No. 99 of 125

STATE OF MISSOURI
LAWRENCE G. ROLWES
NUMBER PE-0006002847
REGISTERED PROFESSIONAL ENGINEER
8/20/09

DATE	
8/20/09	
ROUTE I-70	STATE MO
DISTRICT 6	SHEET NO. BR99
COUNTY St. Louis City - MO	
JOB NO. J6I0984B	
CONTRACT ID.	
PROJECT NO.	
BRIDGE NO. A6500	

DESCRIPTION

DATE

MISSOURI HIGHWAYS AND TRANSPORTATION COMMISSION

MoDOT

105 WEST CAPITOL
JEFFERSON CITY, MO 65102
1-888-ASK-MODOT (1-888-275-6636)

HNTB
715 KIRK DRIVE
KANSAS CITY, MO 64105-1310
TELEPHONE (816) 472-1201
CERTIFICATE OF AUTHORITY NO. 001270

REV.

\\slsw00\Jobs\46440\Techprod\Bridges\MO-Approach\Drawings\Baseline Drawings\B_A6500_099-125_J6I0984B_099.dgn

18-AUG-2009 10:29

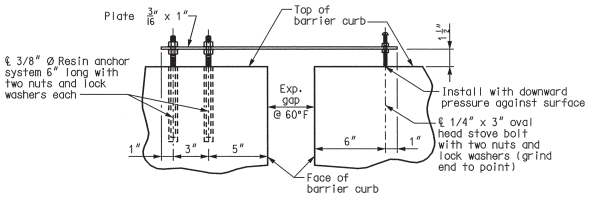

PART ELEVATION OF BARRIER CURB

SHOWING MOVEMENT GAUGE

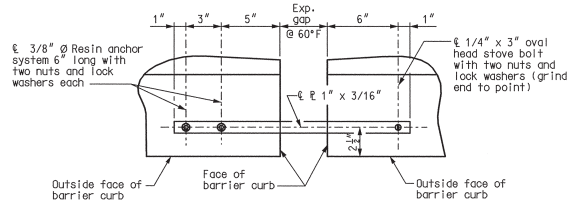

PART PLAN OF BARRIER CURB

SHOWING MOVEMENT GAUGE

Notes:
A movement gauge shall be provided on one side of bridge at all barrier curb expansion joints.
All steel shall be galvanized.
Cost of movement gauge, complete-in-place, will be considered completely covered by the contract unit price for Barrier Curb (Type D).

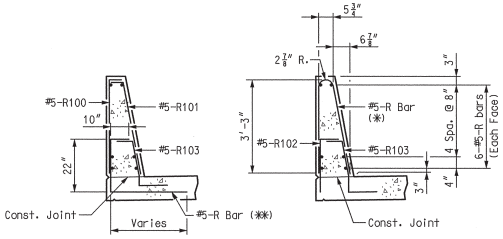

R-BAR PERMISSIBLE ALTERNATE SHAPES

(*) The R100 and R101 bar combination may be furnished as one bar, as shown, at the contractor's option. (All dimensions are out to out.)

(**) The R102 bar and #5 bottom transverse slab bar in cantilever (P/S panels only) combination may be furnished as one bar as shown, at the contractor's option.

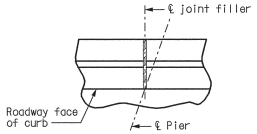

PART PLAN SHOWING

BARRIER CURB JOINT

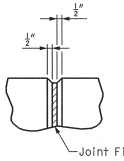

FILLED JOINT DETAIL

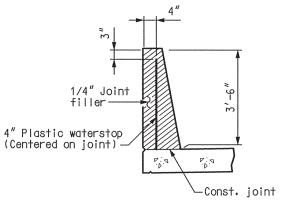

DETAILS OF PLASTIC WATERSTOP

Notes:
Plastic waterstop shall be placed in all barrier curb filled joints, except structures with superelevation, use on all lower barrier curb joints only.
Cost of plastic waterstop, complete-in-place, will be considered completely covered by the contract unit price for Barrier Curb (Type D).

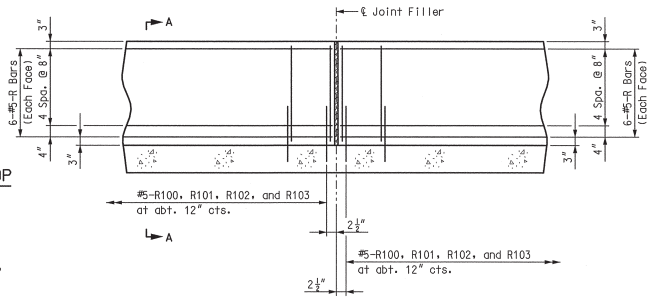

PART ELEVATION

(Cast-in-place Conventional Forming Option)

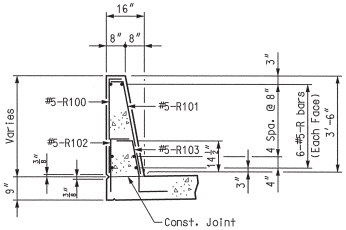

PART SECTION A-A

Notes:
Use a minimum lap of 2'-11" for #5 horizontal barrier curb (Type D) bars.
The cross-sectional area above the slab = 3.52 sq. ft. (based on a 2% cross slope). Cross-sectional area will vary at superelevated sections.

Notes:
Concrete in the barrier curb (Type D) shall be Class B-1.
Top of barrier curb (Type D) shall be built parallel to grade with barrier curb joints (except at abutment) normal to grade.
All exposed edges of barrier curb (Type D) shall have either a 1/2" radius or a 3/8" bevel, unless otherwise noted.
Payment for all concrete and reinforcement, complete-in-place, will be completely covered by the contract unit price for Barrier Curb (Type D) per linear foot.
Measurement of barrier curb (Type D) is to the nearest linear foot for each structure, measured along the outside top of slab from end of wing to end of slab at Anchor Pier 10.
Concrete traffic barrier delineators shall be placed on top of the barrier curb (Type D) as shown on Missouri Standard Plans 617.10 and in accordance with Sec 617. Concrete traffic barrier delineators will be considered completely covered by the contract unit price for "Barrier Curb (Type D)".
The curb shall be cured by application of Type 1-D or Type 2 Liquid Membrane-forming Compound in accordance with Sec 1055. Surface sealing for concrete in accordance with Sec 703 is not required. Application of linseed oil at the contractor's expense is permitted.

BARRIER CURB (TYPE D) – DETAILS

LAWRENCE E. ROLWES
NUMBER PE-2009007847
PROFESSIONAL ENGINEER
STATE OF MISSOURI

3/20/09

DATE 8/20/09

ROUTE	STATE
I-70	MO
DISTRICT	SHEET NO.
6	BR100

COUNTY: St. Louis City - MO

JOB NO.: J6I0984B

CONTRACT ID.:

PROJECT NO.:

BRIDGE NO.: A6500

REV.	DESCRIPTION	DATE

MISSOURI HIGHWAYS AND TRANSPORTATION COMMISSION
MoDOT
105 WEST CAPITOL
JEFFERSON CITY, MO 65102
1-888-ASK-MODOT (1-888-275-6636)

HNTB
715 KIRK DRIVE
KANSAS CITY, MO 64105-1310
TELEPHONE: (816) 472-1201
CERTIFICATE OF AUTHORITY NO. 001270

Detailed JUL 2009
Checked JUL 2009

Note: This drawing is not to scale. Follow dimensions.

\\slsw00\Jobs\46440\Techprod\Bridges\MO-Approach\Drawings\Baseline Drawings\B_A6500_100-125_J6I0984B_100.dgn

18-AUG-2009 10:29

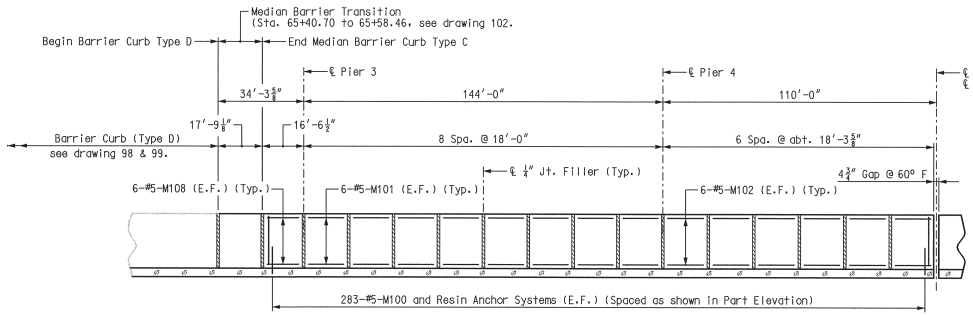

SECTION NEAR MEDIAN BARRIER CURB (TYPE C)

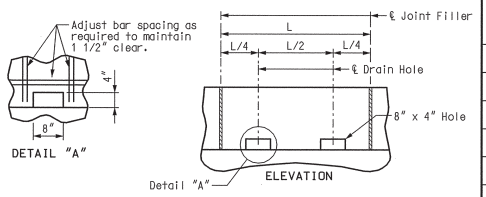

DRAIN HOLE DETAILS
SPANS (6-7) THRU (8-9)

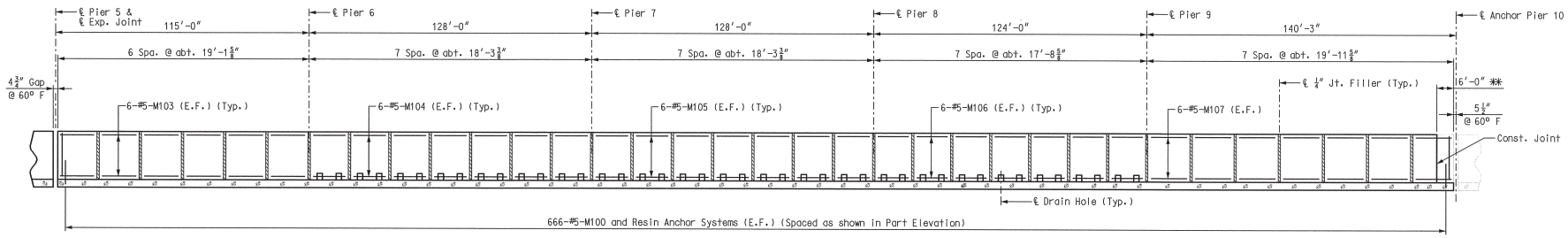

SECTION NEAR MEDIAN BARRIER CURB (TYPE C)

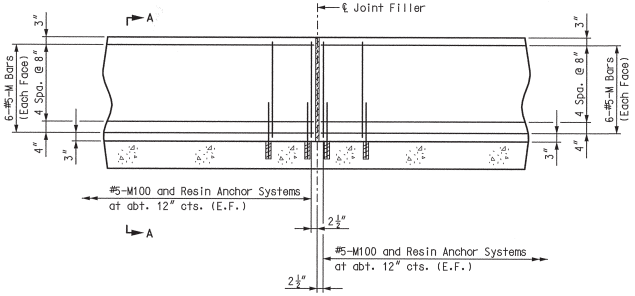

PART SECTION NEAR MEDIAN BARRIER CURB
(CAST-IN-PLACE CONVENTIONAL FORMING OPTION)

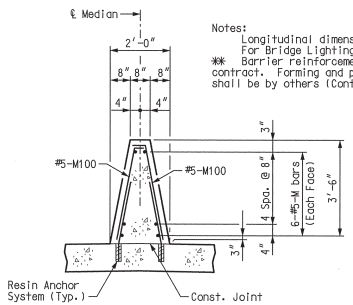

PART SECTION A-A

Notes:
Use a minimum lap of 2′-11″ for #5 horizontal median barrier curb (Type C) bars.

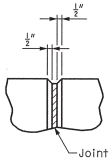

FILLED JOINT DETAIL

Notes:
Longitudinal dimensions are horizontal.
For Bridge Lighting Layout, see Sheet No. 97.
** Barrier reinforcement within this segment is included in this contract. Forming and placement of concrete within this segment shall be by others (Contract J6I0984).

Notes:

The contractor shall use one of the qualified resin anchor systems in accordance with Sec 1039.

Cost of furnishing and installing the resin anchor system complete-in-place will be completely covered by the contract unit price for Median Barrier Curb (Type C).

The minimum embedment depth in concrete with f′c = 4,000 psi for the resin anchor system shall be that required to meet the minimum ultimate pullout strength in accordance with Sec 1039 but shall not be less than 5″ or not more than 5 1/2″.

An epoxy coated #5 Grade 60 reinforcing bar 3′-0″ long shall be substituted for the threaded rod.

Concrete traffic barrier delineators shall be placed on top of the median barrier curb (Type C) as shown on Missouri Standard Plans 617.10 and in accordance with Sec 617. Concrete traffic barrier delineators will be considered completely covered by the contract unit price for "Median Barrier Curb (Type C)".

Concrete in the median barrier curb (Type C) shall be Class B-1.

Top of median barrier curb (Type C) shall be built parallel to grade with median barrier curb joints normal to grade.

All exposed edges of median barrier curb (Type C) shall have either a 1/2″ radius or a 3/8″ bevel, unless otherwise noted.

Payment for all concrete and reinforcement, complete-in-place, will be completely covered by the contract unit price for Median Barrier Curb (Type C) per linear foot.

Measurement of median barrier curb (Type C) is to the nearest linear foot for each structure, measured along the top of slab at ℄ Relocated I-70 from median barrier transition to end of slab at Anchor Pier 10.

Concrete traffic barrier delineators shall be placed on top of the median barrier curb (Type C) as shown on Missouri Standard Plans 617.10 and in accordance with Sec 617. Concrete traffic barrier delineators will be considered completely covered by the contract unit price for "Median Barrier Curb (Type C)".

The curb shall be cured by application of Type 1-D or Type 2 Liquid Membrane-Forming Compound in accordance with Sec 1055. Surface sealing for concrete in accordance with Sec 703 is not required. Application of linseed oil at the contractors expense is permitted.

Longitudinal dimensions are horizontal.

** Barrier reinforcement within this segment is included in this contract. Forming and placement of concrete within this segment shall be by others (Contract J6I0984).

MEDIAN BARRIER CURB (TYPE C)

LAWRENCE G. ROLWES NUMBER PE-2005002247 PROFESSIONAL ENGINEER STATE OF MISSOURI

8/20/09

DATE 8/20/09
ROUTE I-70 | STATE MO
DISTRICT 6 | SHEET NO. BR101
COUNTY St. Louis City - MO
JOB NO. J6I0984B
CONTRACT ID.
PROJECT NO.
BRIDGE NO. A6500

DESCRIPTION | DATE

MISSOURI HIGHWAYS AND TRANSPORTATION COMMISSION
MoDOT
105 WEST CAPITOL
JEFFERSON CITY, MO 65102
1-888-ASK-MODOT (1-888-275-6636)

HNTB
715 KIRK DRIVE
KANSAS CITY, MO 64105-1310
TELEPHONE (816) 472-1201
CERTIFICATE OF AUTHORITY NO. 001270

REV.

Detailed JUL 2009
Checked JUL 2009

Note: This drawing is not to scale. Follow dimensions.

Sheet No. 101 of 125

\\slsw00\Jobs\46440\Techprod\Bridges\MO-Approach\Drawings\Baseline Drawings\B_A6500_101-125_J6I0984B_101.dgn

18-AUG-2009 10:29

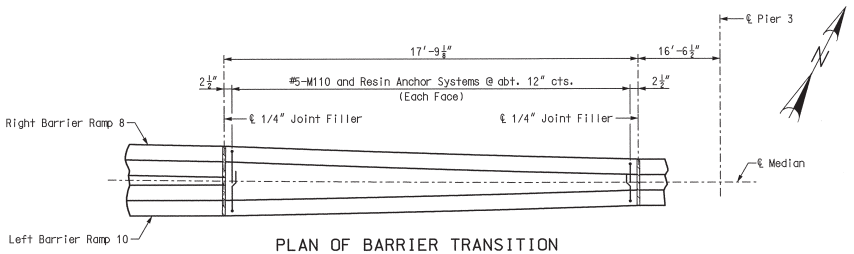

PLAN OF BARRIER TRANSITION

Note: M111 bars not shown for clarity.

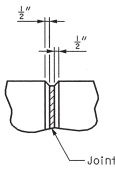

FILLED JOINT DETAIL

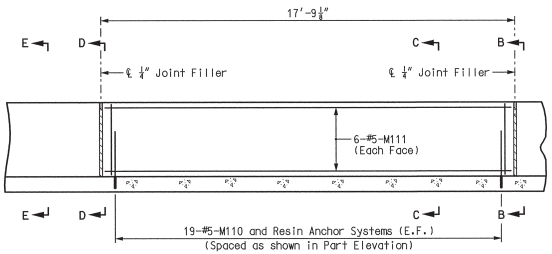

ELEVATION OF BARRIER TRANSITION

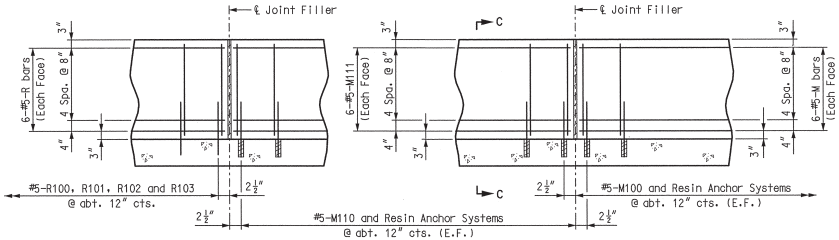

PART ELEVATION

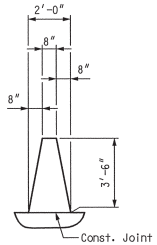

ELEVATION B-B

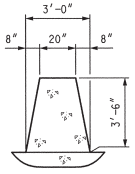

SECTION D-D

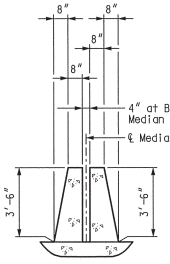

SECTION E-E

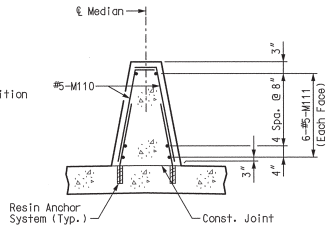

SECTION C-C

Notes:
Use a minimum lap of 2′-11″ for #5 horizontal median barrier curb transition (Type C) bars.

Notes:
Longitudinal dimensions are horizontal.
Concrete in the median barrier curb Transition (Type C) shall be Class B-1.
The contractor shall use one of the qualified resin anchor systems in accordance with Sec 1039.
Cost of furnishing and installing the resin anchor system complete-in-place will be considered completely covered by the contract unit price for Median Barrier Curb Transitional (Type C).
The minimum embedment depth in concrete with f′c = 4,000 psi for the resin anchor system shall be that required to meet the minimum ultimate pullout strength in accordance with Sec 1039 but shall not be less than 5″ or greater than 5 1/2″.
An epoxy coated #5 Grade 60 reinforcing bar 3′-0″ long shall be substituted for the threaded rod.
Top of median barrier curb transition (Type C) shall be built parallel to grade with median barrier curb transition (Type C) joints normal to grade.
All exposed edges of median barrier curb transition (Type C) shall have either a 1/2″ radius or a 3/8″ bevel, unless otherwise noted.
Payment for all concrete and reinforcement, complete-in-place will be completely covered by the contract unit price for Median Barrier Curb Transition (Type C) per linear foot.
Measurement of Median Barrier Curb Transition (Type C) is to the nearest linear foot, measured along the top of the slab.
Concrete traffic barrier delineators shall be placed on top of the median barrier curb transition (Type C) as shown on Missouri Standard Plans 617.10 and in accordance with Sec 617. Concrete traffic barrier delineators will be considered completely covered by the contract unit price for "Median Barrier Curb Transition (Type C)".
The curb shall be cured by application of Type 1-D or Type 2 Liquid Membrane-Forming Compound in accordance with Sec 1055. Surface sealing for concrete in accordance with Sec 703 is not required. Application of linseed oil at the contractor's expense is permitted.

MEDIAN BARRIER CURB TRANSITION (TYPE C)

LAWRENCE ROLMES NUMBER PE-2009002847 PROFESSIONAL ENGINEER STATE OF MISSOURI

8/20/09

DATE 8/20/09
ROUTE I-70 | STATE MO
DISTRICT 6 | SHEET NO. BR102
COUNTY St. Louis City - MO
JOB NO. J6I0984B
CONTRACT ID.
PROJECT NO.
BRIDGE NO. A6500

DESCRIPTION | DATE

MISSOURI HIGHWAYS AND TRANSPORTATION COMMISSION
MoDOT
105 WEST CAPITOL
JEFFERSON CITY, MO 65102
1-888-ASK-MODOT (1-888-275-6636)

HNTB
715 KIRK DRIVE
KANSAS CITY, MO 64105-1310
TELEPHONE (816) 472-1201
CERTIFICATE OF AUTHORITY NO. 001270

REV.

Detailed JUL 2009
Checked JUL 2009

Note: This drawing is not to scale. Follow dimensions.

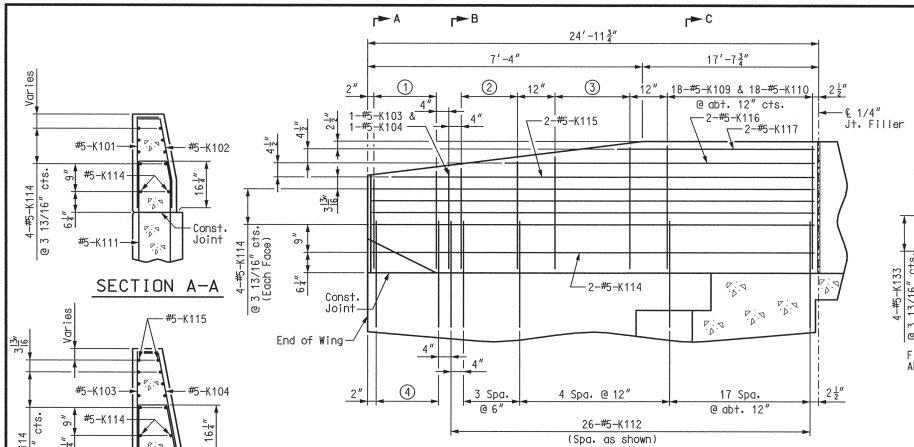

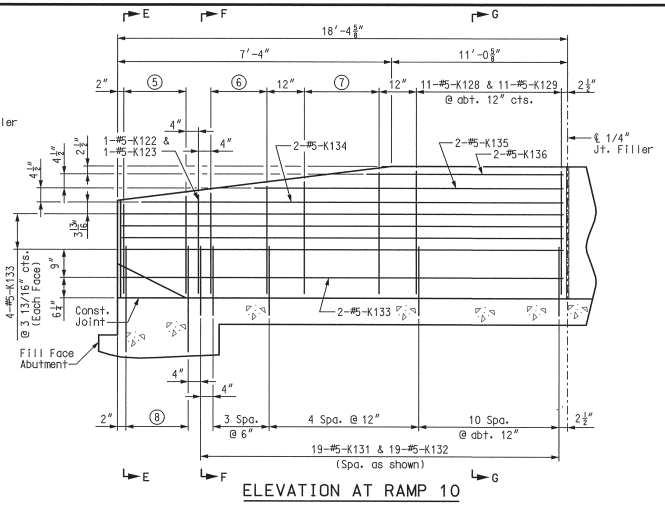

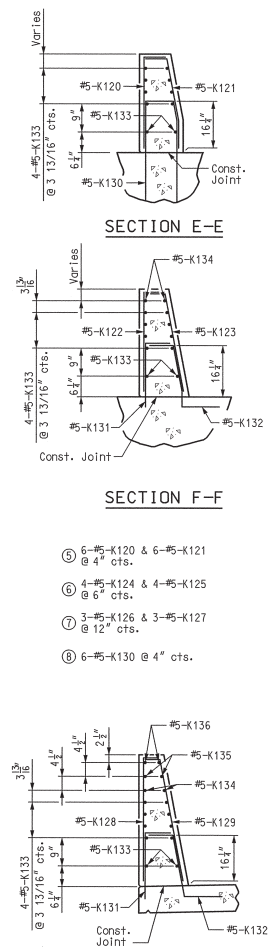

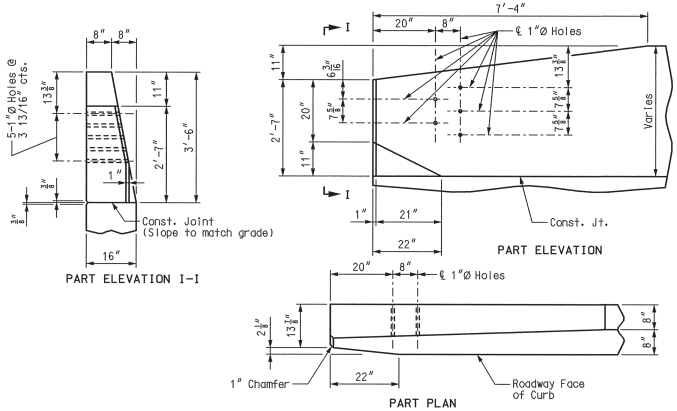

Notes:
Concrete traffic barrier delineators shall be placed on top of the barrier curb (Type D) as shown on Missouri Standard Plans 617.10 and in accordance with Sec 617. Concrete traffic barrier delineators will be considered completely covered by the contract unit price for "Barrier Curb (Type D)".
Guard rail attachment will be required at Ramp 10 barrier end posts only.

DETAILS OF GUARD RAIL ATTACHMENT

Note: This drawing is not to scale. Follow dimensions.

LEFT BARRIER CURB (TYPE D) AT ABUTMENT 1

Detailed JUL 2009
Checked JUL 2009

Sheet No. 103 of 125

\\slsw00\Jobs\46440\Techprod\Bridges\MO-Approach\Drawings\Baseline Drawings\B_A6500_103-125_J6I0984B_103.dgn

18-AUG-2009 10:29

LAWRENCE C. ROLMES NUMBER 2006002841 STATE OF MISSOURI REGISTERED PROFESSIONAL ENGINEER
8/20/09

DATE 8/20/09
ROUTE I-70 | STATE MO
DISTRICT 6 | SHEET NO. BR103
COUNTY St. Louis City - MO
JOB NO. J6I0984B
CONTRACT ID.
PROJECT NO.
BRIDGE NO. A6500

DESCRIPTION | DATE

MISSOURI HIGHWAYS AND TRANSPORTATION COMMISSION
105 WEST CAPITOL
JEFFERSON CITY, MO 65102
1-888-ASK-MODOT (1-888-275-6636)

HNTB
715 KIRK DRIVE
KANSAS CITY, MO 64105-1310
TELEPHONE (816) 472-1201
CERTIFICATE OF AUTHORITY NO. 001270

REV.

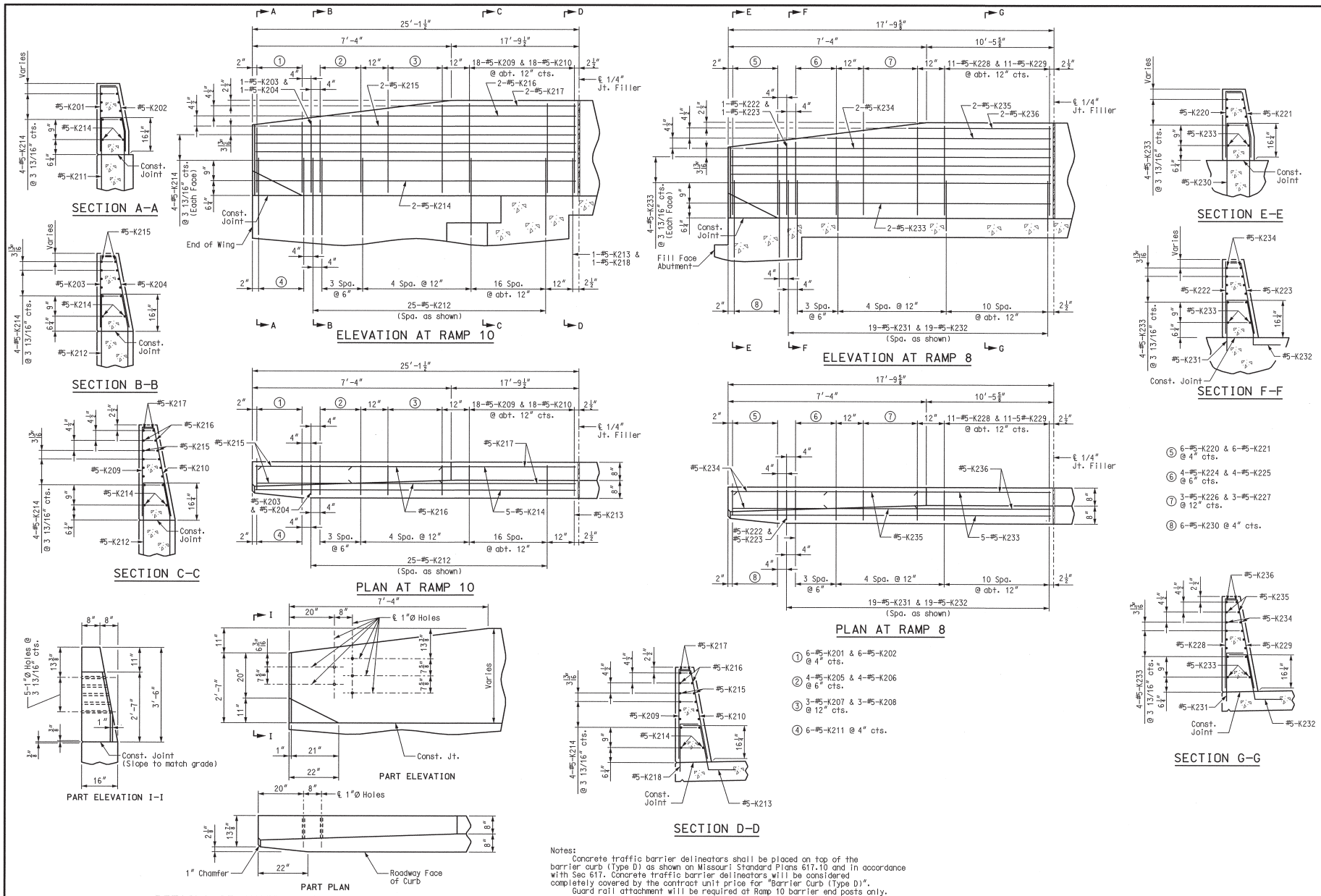

① 6-#5-K201 & 6-#5-K202 @ 4" cts.

② 4-#5-K205 & 4-#5-K206 @ 6" cts.

③ 3-#5-K207 & 3-#5-K208 @ 12" cts.

④ 6-#5-K211 @ 4" cts.

⑤ 6-#5-K220 & 6-#5-K221 @ 4" cts.

⑥ 4-#5-K224 & 4-#5-K225 @ 6" cts.

⑦ 3-#5-K226 & 3-#5-K227 @ 12" cts.

⑧ 6-#5-K230 @ 4" cts.

Notes:
Concrete traffic barrier delineators shall be placed on top of the barrier curb (Type D) as shown on Missouri Standard Plans 617.10 and in accordance with Sec 617. Concrete traffic barrier delineators will be considered completely covered by the contract unit price for "Barrier Curb (Type D)".
Guard rail attachment will be required at Ramp 10 barrier end posts only.

RIGHT BARRIER CURB (TYPE D) AT ABUTMENT 1

Detailed JUL 2009
Checked JUL 2009

Note: This drawing is not to scale. Follow dimensions.

Sheet No. 104 of 125

STATE OF MISSOURI
LAWRENCE O. ROLWES, JR.
NUMBER
PE-2006002847
REGISTERED PROFESSIONAL ENGINEER

8/20/09

DATE	
8/20/09	
ROUTE	STATE
I-70	MO
DISTRICT	SHEET NO.
6	BR104
COUNTY	
St. Louis City - MO	
JOB NO.	
J6I0984B	
CONTRACT ID.	
PROJECT NO.	
BRIDGE NO.	
A6500	

DATE	DESCRIPTION

MISSOURI HIGHWAYS AND TRANSPORTATION COMMISSION

MoDOT
105 WEST CAPITOL
JEFFERSON CITY, MO 65102
1-888-ASK-MODOT (1-888-275-6636)

HNTB
715 KIRK DRIVE
KANSAS CITY, MO 64105-1310
TELEPHONE (816) 472-1201
CERTIFICATE OF AUTHORITY NO. 001270

REV.

\\slsw00\Jobs\46440\Techprod\Bridges\MO-Approach\Drawings\Baseline Drawings\B_A6500_104-125_J6I0984B_104.dgn

18-AUG-2009 10:29

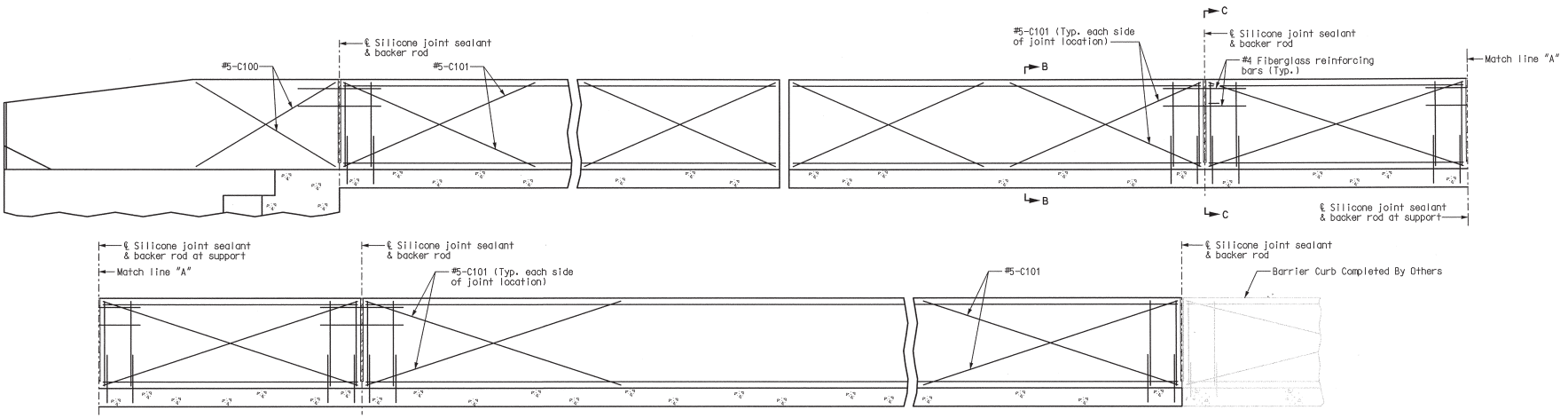

TYPICAL SECTION NEAR LEFT BARRIER CURB (TYPE D) AT SUPPORT LOCATIONS
(OPTIONAL SLIP-FORM BRIDGE BARRIER CURB (TYPE D))

Notes:
Top of barrier curb (Type D) shall be built parallel to grade with barrier curb joints (except at abutment) normal to grade.

Payment for all concrete and reinforcement, complete-in-place, will be considered completely covered by the contract unit price for Barrier Curb (Type D) per linear foot.

Concrete in the barrier curb (Type D) shall be Class B-1.

Measurement of barrier curb (Type D) is to the nearest linear foot for each structure, measured along the outside top of slab from end of wing to end of slab at Anchor Pier 10.

The curb shall be cured by application of Type 1-D or Type 2 Liquid Membrane-Forming Compound in accordance with Sec 1055. Surface sealing for concrete in accordance with Sec 703 is not required. Application of linseed oil at the contractor's expense is permitted.

Notes:
Joint sealant and backer rods shall be used on all slip-form barrier curbs instead of joint filler and shall be in accordance with Sec 717 for silicone joint sealant for saw cut and formed joints.

Plastic waterstop shall not be used with slip-form option.

C Bars (Slip-form option only) shall be used in addition to cast-in-place conventional forming reinforcement for bridge barrier curb (Type D).

For Slip-Form option, all sides of the barrier curb (Type D) shall have a vertically broomed finish and the curb top shall have a transversely broomed finish.

Concrete traffic barrier delineators shall be placed on top of the barrier curb (Type D) as shown on Missouri Standard Plans 617.10 and in accordance with Sec 617. Concrete traffic barrier delineators will be considered completely covered by the contract unit price for "Barrier Curb (Type D)".

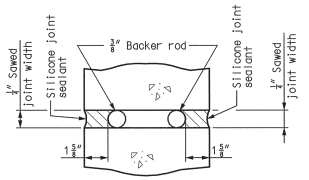

SECTION A-A

Note:
Cost of silicone joint sealant and backer rod, complete-in-place, will be considered completely covered by the contract unit price for Barrier Curb (Type D).

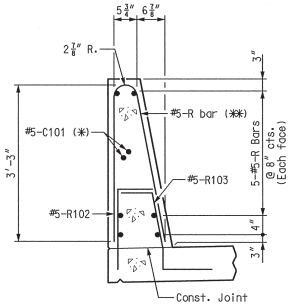

PART SECTION B-B

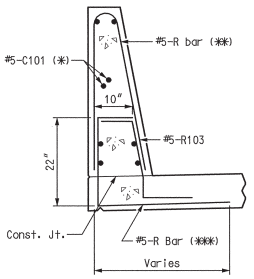

PART SECTION B-B
(Optional #5-R Bar shown)

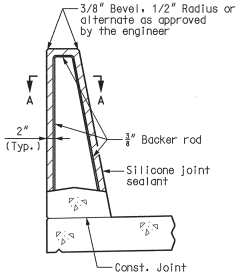

SECTION THRU JOINT

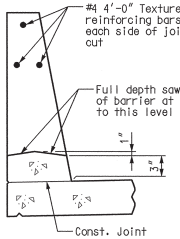

PART SECTION C-C

Notes:
(✳) Each side of joint location (except in transition).
(✱✱) The R100 and R101 bar combination may be furnished as one bar, as shown, at the contractor's option. (All dimensions are out-to-out.)
(✱✱✱) The R102 bar and #5 bottom transverse slab bar in cantilever (P/S panels only) combination may be furnished as one bar at the contractor's option.

(Left barrier curb shown, right barrier curb similar.)

Detailed JUL 2009
Checked JUL 2009

Note: This drawing is not to scale. Follow dimensions.

Sheet No. 105 of 125

OPTIONAL SLIP-FORM BARRIER CURB (TYPE D)

REV.

STATE OF MISSOURI
LAWRENCE E. ROLWES
NUMBER 2006002847
PROFESSIONAL ENGINEER
8/20/09

DATE 8/20/09
ROUTE I-70
STATE MO
DISTRICT 6
SHEET NO. BR105
COUNTY St. Louis City - MO
JOB NO. J6I0984B
CONTRACT ID.
PROJECT NO.
BRIDGE NO. A6500

DESCRIPTION | DATE

MISSOURI HIGHWAYS AND TRANSPORTATION COMMISSION
MoDOT
105 WEST CAPITOL
JEFFERSON CITY, MO 65102
1-888-ASK-MODOT (1-888-275-6636)

HNTB
715 KIRK DRIVE
KANSAS CITY, MO 64105-1310
TELEPHONE (816) 472-1201
CERTIFICATE OF AUTHORITY NO. 001270

\\slsw00\Jobs\46440\Techprod\Bridges\MO-Approach\Drawings\Baseline Drawings\B_A6500_105-125_J6I0984B_105.dgn
18-AUG-2009 10:29

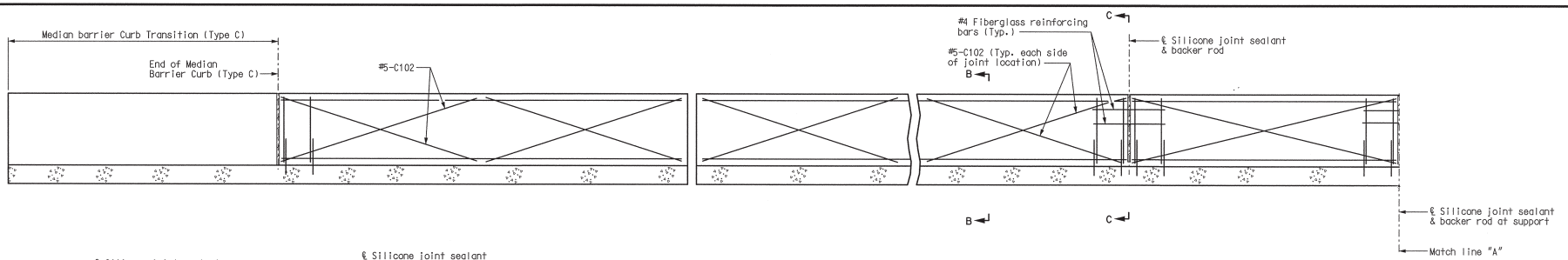

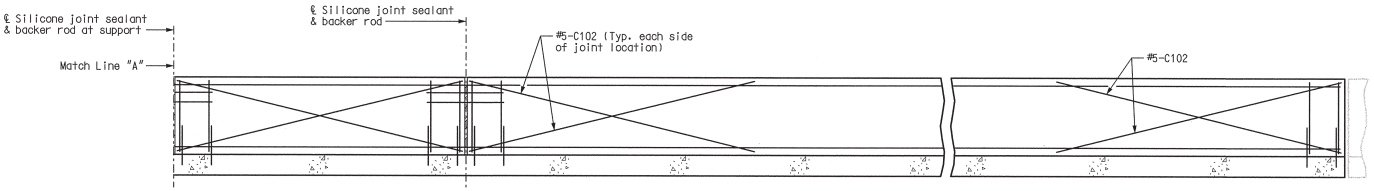

TYPICAL SECTION NEAR MEDIAN BARRIER CURB (TYPE C) AT SUPPORT LOCATIONS
(OPTIONAL SLIP-FORM MEDIAN BARRIER CURB (TYPE C))

Notes:

Top of median barrier curb (Type C) shall be built parallel to grade with median barrier curb joints normal to grade.

Payment for all concrete and reinforcement, complete-in-place, will be considered completely covered by the contract unit price for Median Barrier Curb (Type C) per linear foot.

Concrete in the median barrier curb (Type C) shall be Class B-1.

Measurement of median barrier curb (Type C) is to the nearest linear foot for each structure, measured along the top of slab at ℄ Relocated I-70 from median barrier transition to end of slab at Anchor Pier 10.

Concrete traffic barrier delineators shall be placed on top of the median barrier curb (Type C) as shown on Missouri Standard Plans 617.10 and in accordance with Sec 617. Concrete traffic barrier delineators will be considered completely covered by the contract unit price for "Median Barrier Curb (Type C)".

The minimum embedment depth in concrete with f'c = 4,000 psi for the resin anchor system shall be that required to meet the minimum ultimate pullout strength in accordance with Sec 1039 but shall not be less than 5" or greater than 5 1/2".

The curb shall be cured by application of Type 1-D or Type 2 Liquid Membrane-Forming Compound in accordance with Sec 1055. Surface sealing for concrete in accordance with Sec 703 is not required. Application of linseed oil at the contractor's expense is permitted.

Notes:

Joint sealant and backer rods shall be used on all slip-form median barrier curbs (Type C) instead of joint filler and shall be in accordance with Sec 717 for silicone joint sealant for saw cut and formed joints.

Plastic waterstop shall not be used with slip-form options.

For Slip-Form Option, all sides of median barrier curb (Type C) shall have a vertically broomed finish and the curb top shall have a transversely broomed finish.

C Bars (Slip-form option only) shall be used in addition to cast-in-place conventional forming reinforcement for bridge median barrier curb (Type C).

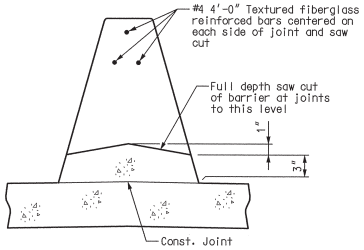

PART SECTION C-C

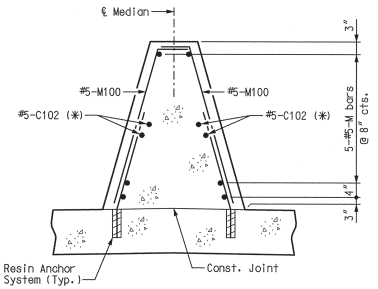

PART SECTION B-B

Note: (✳) Each side of joint location.

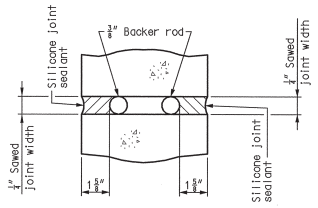

SECTION A-A

Note:
Cost of silicone joint sealant and backer rod, complete-in-place, will be considered completely covered by the contract unit price for Median Barrier Curb (Type C).

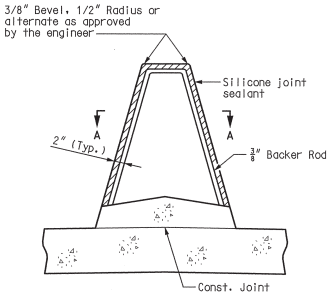

SECTION THRU JOINT

OPTIONAL SLIP-FORM MEDIAN BARRIER CURB (TYPE C)

Detailed JUL 2009
Checked JUL 2009

Note: This drawing is not to scale. Follow dimensions.

\\slsw00\Jobs\46440\Techprod\Bridges\MO-Approach\Drawings\Baseline Drawings\B_A6500_106-125_J6I0984B_106.dgn

18-AUG-2009 10:29

REV.

DESCRIPTION | DATE

8/20/09
DATE
8/20/09
ROUTE I-70 | STATE MO
DISTRICT 6 | SHEET NO. BR106
COUNTY St. Louis City - MO
JOB NO. J6I0984B
CONTRACT ID.
PROJECT NO.
BRIDGE NO. A6500

MISSOURI HIGHWAYS AND TRANSPORTATION COMMISSION
105 WEST CAPITOL
JEFFERSON CITY, MO 65102
1-888-ASK-MODOT (1-888-275-6636)

HNTB
715 KIRK DRIVE
KANSAS CITY, MO 64105-1310
TELEPHONE (816) 472-1201
CERTIFICATE OF AUTHORITY NO. 001270

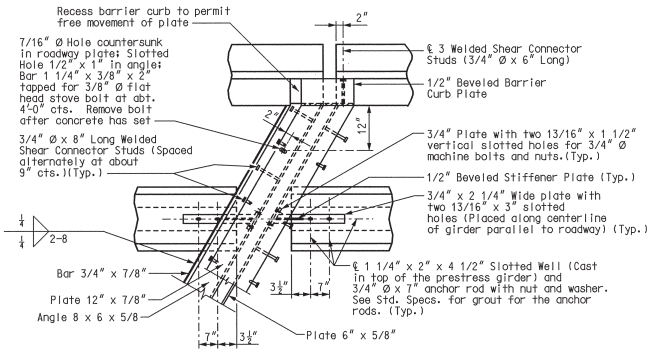

PART PLAN

Note: Concrete vent holes not shown for clarity.

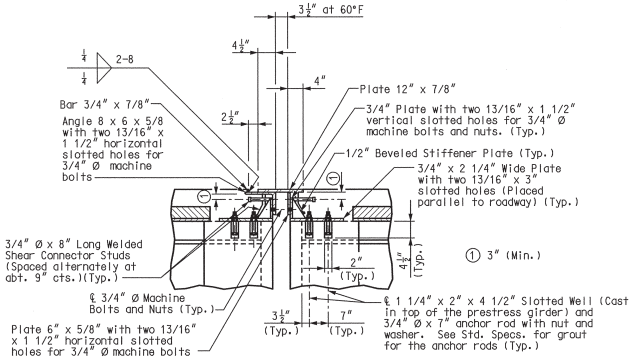

PART SECTION AT PIER

(Horizontal dimensions shown are perpendicular to ℄ of joint.)

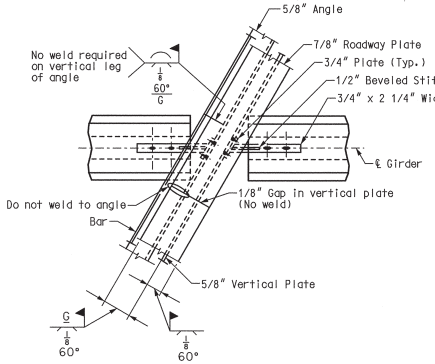

PERMISSIBLE FIELD SPLICE AT PIER

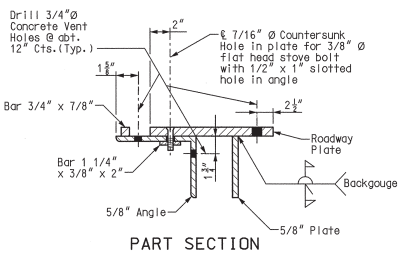

PART SECTION (TYPICAL)

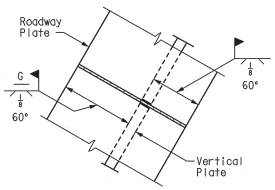

PART PLAN ROADWAY PLATE AND VERTICAL PLATE

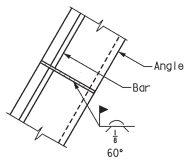

PART PLAN OF ANGLE AND BAR

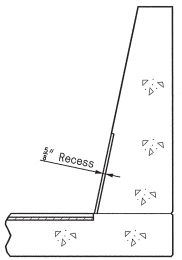

PART SECTION B-B

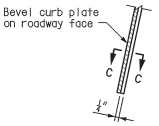

PART ELEVATION AT END OF BEVELED CURB PLATE

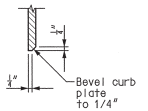

SECTION C-C

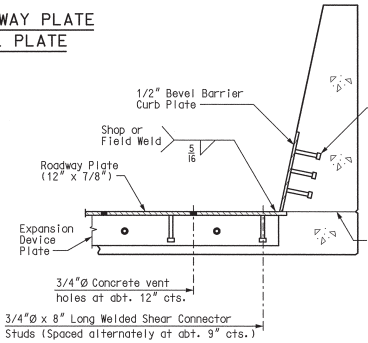

PART SECTION A-A

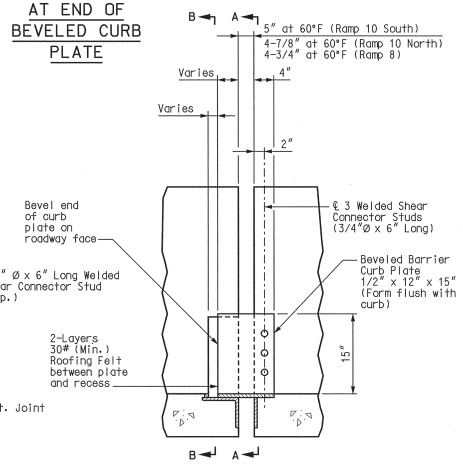

ELEVATION OF BARRIER CURB

(Horizontal dimensions shown are along face of barrier)

GENERAL NOTES:

Expansion device shall be fabricated in one section, except for stage construction and when the length is over 50 feet. A complete joint penetration groove weld splice shall be required. Welds shall be ground flush to provide a smooth surface. The expansion device shall be fabricated and installed to the crown and grade of the roadway.

Plan dimensions are based on installation at 60°F. The expansion gap and other dimensions shall be increased or decreased 1/4" for each 10° fall or rise in temperature at installation.

Material for the expansion device shall be ASTM A709 Grade 36 structural steel. Shear connector studs for the expansion device shall be in accordance with Sec 1037. Anchor Rods shall be ASTM F1554 Grade 36 Material.

Structural steel for the expansion device and curb plate shall be coated with a minimum of two coats of inorganic zinc primer (5 mils minimum) or galvanized in accordance with ASTM A123. Shear connector studs need not be protected from overspray.

Payment for furnishing, coating or galvanizing and installing the structural steel for the expansion device will be considered completely covered by the contract unit price for Expansion Device (Flat Plate) per linear foot.

Concrete shall be forced under and around flat plate, anchors and angles. Proper consolidation shall be achieved by localized internal vibration. Finishing of the concrete shall be achieved by hand finishing within one foot of the expansion device. The vertical and horizontal concrete vent holes shall be offset from each other. Do not alternate holes at the 12" spacing.

Complete joint penetration welds utilized in the fabrication of the expansion device shall be nondestructively tested by an approved method.

For Details of Expansion Device at Median Barrier Curb, see Sheet No. 109.

DETAILS OF FLAT PLATE EXPANSION DEVICES AT PIER 2 (RAMP 8 & RAM 10)

LAWRENCE G. ROLWES, JR. NUMBER PE-2006002847 STATE OF MISSOURI PROFESSIONAL ENGINEER
8/20/09

DATE	8/20/09
ROUTE	I-70
STATE	MO
DISTRICT	6
SHEET NO.	BR107
COUNTY	St. Louis City - MO
JOB NO.	J6I0984B
CONTRACT ID.	
PROJECT NO.	
BRIDGE NO.	A6500

DESCRIPTION | DATE

MISSOURI HIGHWAYS AND TRANSPORTATION COMMISSION
105 WEST CAPITOL
JEFFERSON CITY, MO 65102
1-888-ASK-MODOT (1-888-275-6636)
HNTB
715 KIRK DRIVE
KANSAS CITY, MO 64105-1310
TELEPHONE (816) 472-1201
CERTIFICATE OF AUTHORITY NO. 001270

REV.

Detailed JUL 2009
Checked JUL 2009

Note: This drawing is not to scale. Follow dimensions.

\\slsw00\Jobs\46440\Techprod\Bridges\MO-Approach\Drawings\Baseline Drawings\B_A6500_107-125_J6I0984B_107.dgn

18-AUG-2009 10:30

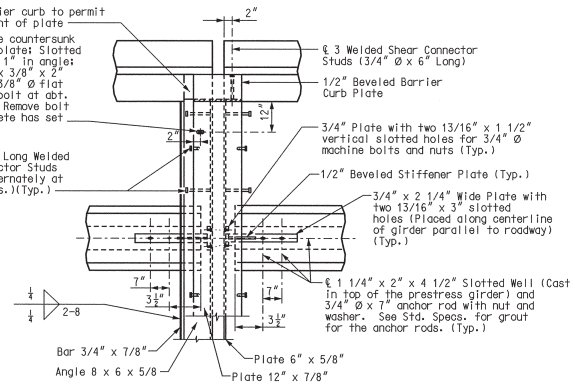

PART PLAN

Note: Concrete vent holes not shown for clarity.

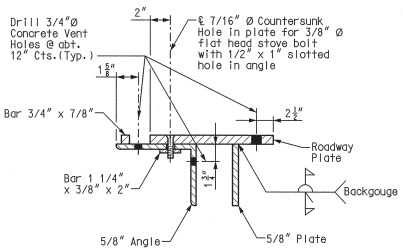

PART SECTION (TYPICAL)

GENERAL NOTES:

Expansion device shall be fabricated in one section, except for stage construction and when the length is over 50 feet. A complete joint penetration groove weld splice shall be required. Welds shall be ground flush to provide a smooth surface. The expansion device shall be fabricated and installed to the crown and grade of the roadway.

Plan dimensions are based on installation at 60°F. The expansion gap and other dimensions shall be increased or decreased 1/16" for each 10° fall or rise in temperature at installation.

Material for the expansion device shall be ASTM A709 Grade 36 structural steel. Shear Connector Studs for the expansion device shall be in accordance with Sec 1037. Anchor Rods shall be ASTM F1554 Grade 36 material.

Structural steel for the expansion device and curb plate shall be coated with a minimum of two coats of inorganic zinc primer (5 mils minimum) or galvanized in accordance with ASTM A123. Shear Connector Studs need not be protected from overspray.

Payment for furnishing, coating or galvanizing and installing the structural steel for the expansion device will be considered completely covered by the contract unit price for Expansion Device (Flat Plate) per linear foot.

Concrete shall be forced under and around flat plate, anchors and angles. Proper consolidation shall be achieved by localized internal vibration. Finishing of the concrete shall be achieved by hand finishing within one foot of the expansion device. The vertical and horizontal concrete vent holes shall be offset from each other. Do not alternate holes at the 12" spacing.

Complete joint penetration welds utilized in the fabrication of the expansion device shall be nondestructively tested by an approved method.

For Details of Expansion Device at Median Barrier Curb, see Sheet 109.

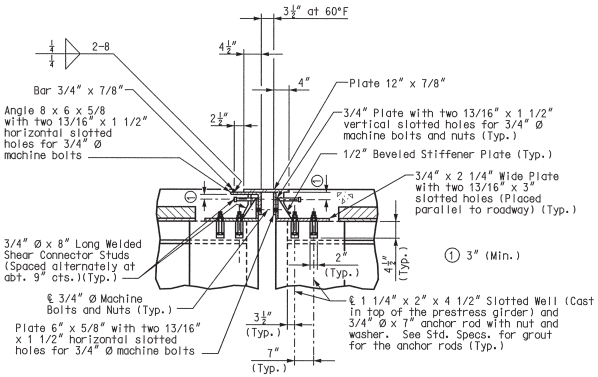

PART SECTION AT PIER

(Horizontal dimensions shown are perpendicular to ℄ of Joint)

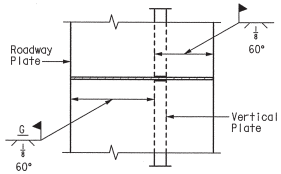

PART PLAN ROADWAY PLATE AND VERTICAL PLATE

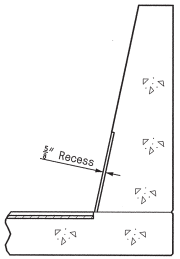

PART SECTION B-B

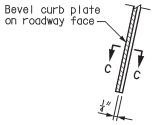

PART ELEVATION AT END OF BEVELED CURB PLATE

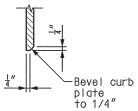

SECTION C-C

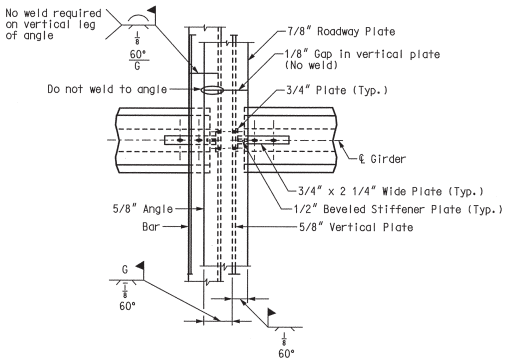

PERMISSIBLE FIELD SPLICE AT PIER

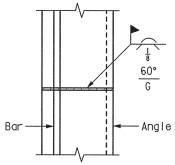

PART PLAN OF ANGLE AND BAR

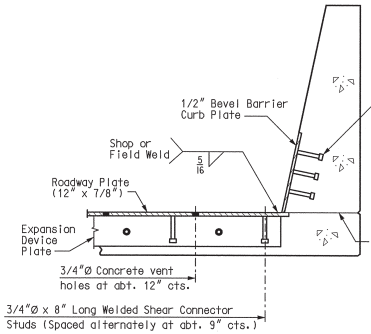

PART SECTION A-A

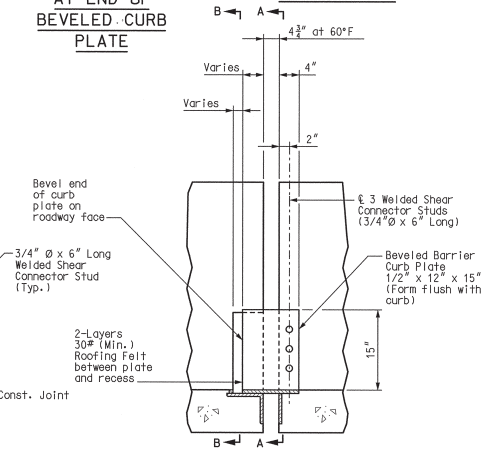

ELEVATION OF BARRIER CURB

(Horizontal dimensions shown are along face of barrier)

DETAILS OF FLAT PLATE EXPANSION DEVICE AT PIER 5

Detailed JUL 2009
Checked JUL 2009

Note: This drawing is not to scale. Follow dimensions.

Sheet No. 108 of 125

\\slsw00\Jobs\46440\Techprod\Bridges\MO-Approach\Drawings\Baseline Drawings\B_A6500_108-125_J6I0984B_108.dgn

18-AUG-2009 10:30

LAWRENCE G. ROLWES NUMBER PE-2006002841 STATE OF MISSOURI PROFESSIONAL ENGINEER

8/20/09

DESCRIPTION	DATE

DATE 8/20/09

ROUTE	STATE
I-70	MO
DISTRICT	SHEET NO.
6	BR108

COUNTY: St. Louis City - MO

JOB NO.: J6I0984B

CONTRACT ID.:

PROJECT NO.:

BRIDGE NO.: A6500

MISSOURI HIGHWAYS AND TRANSPORTATION COMMISSION

105 WEST CAPITOL
JEFFERSON CITY, MO 65102
1-888-ASK-MODOT (1-888-275-6636)

HNTB
715 KIRK DRIVE
KANSAS CITY, MO 64105-1310
TELEPHONE (816) 472-1201
CERTIFICATE OF AUTHORITY NO. 001270

REV.

GENERAL NOTES:

Plan dimensions are based on installation at 60°F. The expansion gap and other dimensions shall be increased or decreased for each 10° fall or rise in temperature at installation per the flat plate expansion device details.

Material for the expansion device at curb plates shall be ASTM A709 Grade 36 structural steel. Shear Connector Studs for the median barrier curb plate shall be in accordance with Sec 1037.

Structural steel for the expansion device at curb plates shall be coated with a minimum of two coats of inorganic zinc primer (5 mils minimum) or galvanized in accordance with ASTM A123. Shear Connector Studs need not be protected from overspray.

Payment for furnishing, coating or galvanizing, and installing the structural steel for the expansion device at curb plates will be considered completely covered by the contract unit price for Expansion Device (Flat Plate) per linear foot.

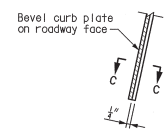

PART ELEVATION AT END OF BEVELED CURB PLATE

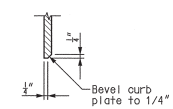

SECTION C-C

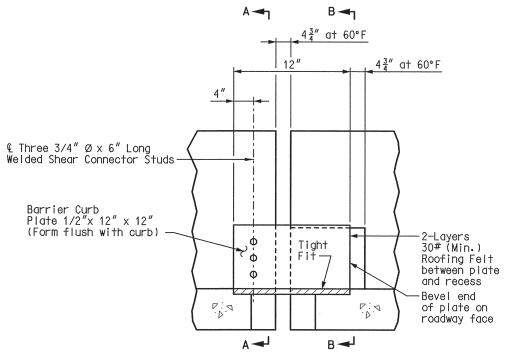

ELEVATION OF MEDIAN BARRIER CURB

(Horizontal dimensions shown are along face of barrier)

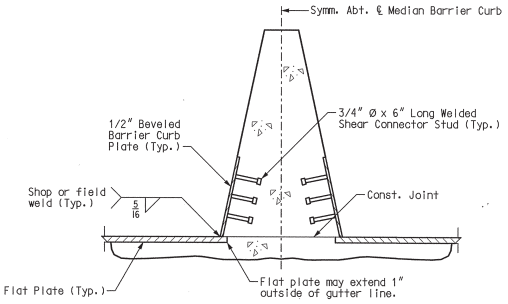

PART SECTION A-A

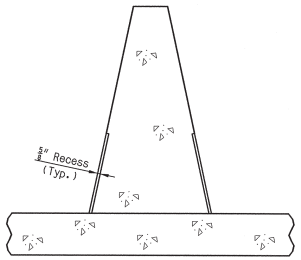

PART SECTION B-B

DETAILS OF EXPANSION DEVICE AT MEDIAN BARRIER CURB AT PIER 5

Detailed JUL 2009
Checked JUL 2009

Note: This drawing is not to scale. Follow dimensions.

Sheet No. 109 of 125

STATE OF MISSOURI
LAWRENCE E. ROLWES
NUMBER
PE-2006002847
PROFESSIONAL ENGINEER

8/20/09

DATE	8/20/09
ROUTE I-70	STATE MO
DISTRICT 6	SHEET NO. BR109
COUNTY	St. Louis City - MO
JOB NO.	J6I0984B
CONTRACT ID.	
PROJECT NO.	
BRIDGE NO.	A6500

DESCRIPTION

DATE

MISSOURI HIGHWAYS AND TRANSPORTATION COMMISSION

MoDOT

105 WEST CAPITOL
JEFFERSON CITY, MO 65102
1-888-ASK-MODOT (1-888-275-6636)

HNTB

715 KIRK DRIVE
KANSAS CITY, MO 64105-1310
TELEPHONE (816) 472-1201
CERTIFICATE OF AUTHORITY NO. 001270

REV.

\\slsw00\Jobs\46440\Techprod\Bridges\MO-Approach\Drawings\Baseline Drawings\B_A6500_109-125_J6I0984B_109.dgn

18-AUG-2009 10:30

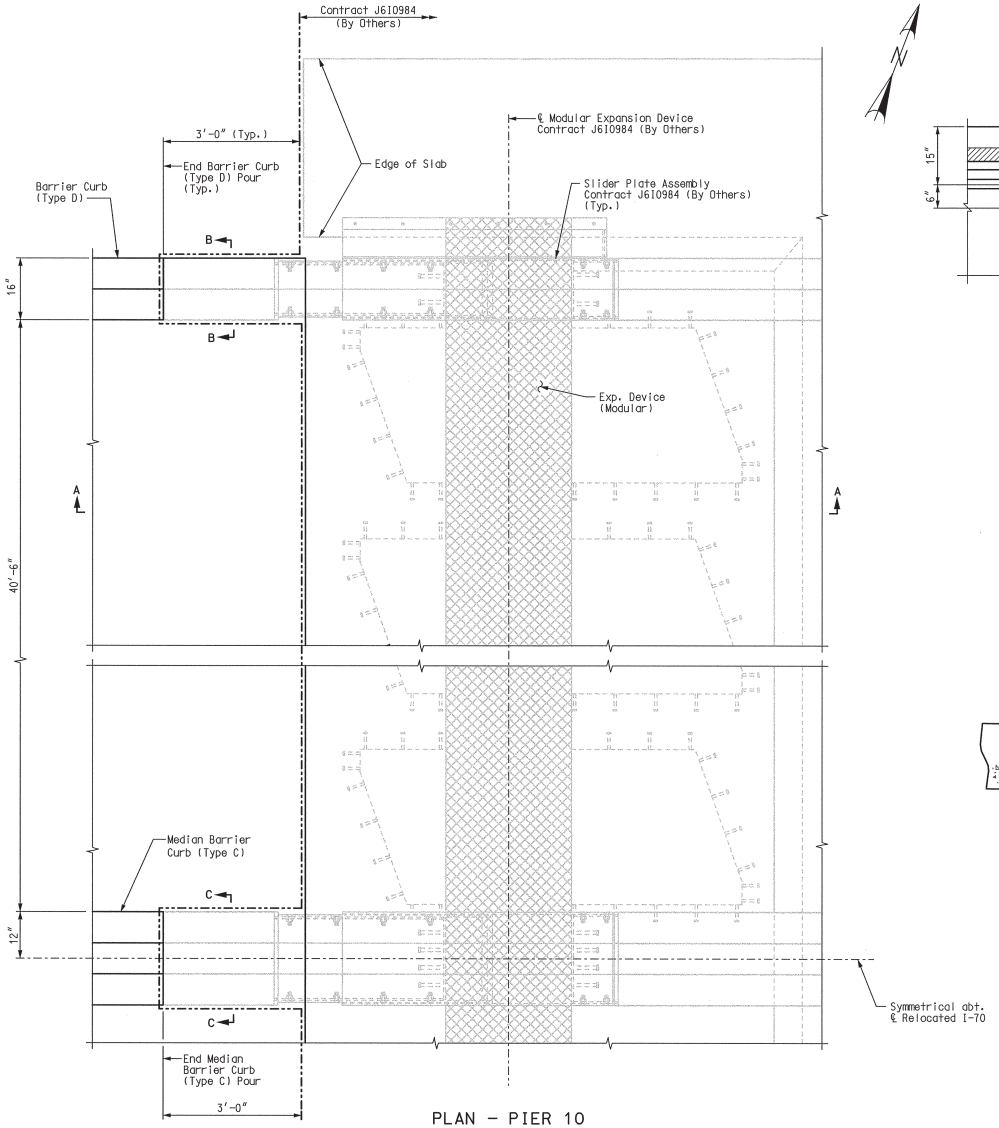

PLAN - PIER 10

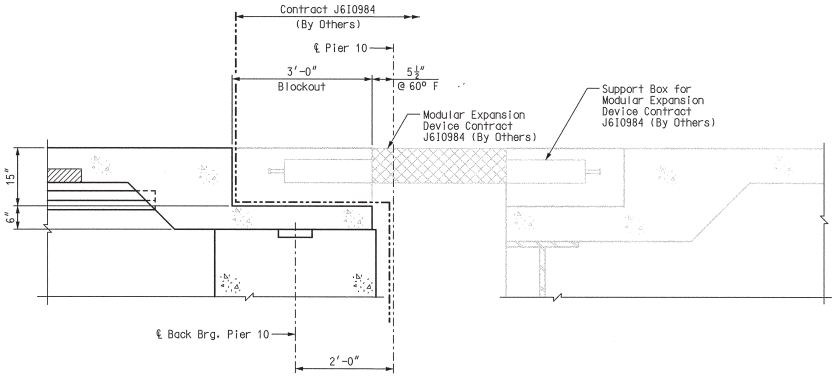

SECTION A-A

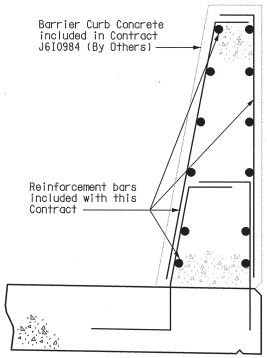

SECTION B-B

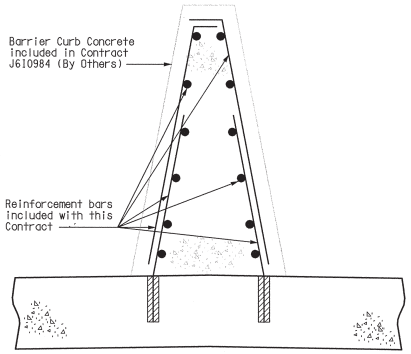

SECTION C-C

Notes:
For slab reinforcing, see Sheet No. 83.
For details of Median Barrier Curb (Type C), see Sheet No 101.
For details of Barrier Curb (Type D), see Sheet Nos. 98 thru 100.

MODULAR EXPANSION JOINT DETAILS - PIER 10

Detailed JUL 2009
Checked JUL 2009

Note: This drawing is not to scale. Follow dimensions.

Sheet No. 110 of 125

STATE OF MISSOURI
LAWRENCE G. ROLWES, JR.
NUMBER
PE-2006002847
REGISTERED PROFESSIONAL ENGINEER

8/20/09

DATE	8/20/09
ROUTE	I-70
STATE	MO
DISTRICT	6
SHEET NO.	BR110
COUNTY	St. Louis City - MO
JOB NO.	J6I0984B
CONTRACT ID.	
PROJECT NO.	
BRIDGE NO.	A6500

DATE	DESCRIPTION

MISSOURI HIGHWAYS AND TRANSPORTATION COMMISSION

MoDOT

105 WEST CAPITOL
JEFFERSON CITY, MO 65102
1-888-ASK-MODOT (1-888-275-6636)

HNTB
715 KIRK DRIVE
KANSAS CITY, MO 64105-1310
TELEPHONE (816) 472-1201
CERTIFICATE OF AUTHORITY
NO. 001270

REV.

\\slsw00\Jobs\46440\Techprod\Bridges\MO-Approach\Drawings\Baseline Drawings\B_A6500_110-125_J6I0984B_110.dgn

18-AUG-2009 10:30

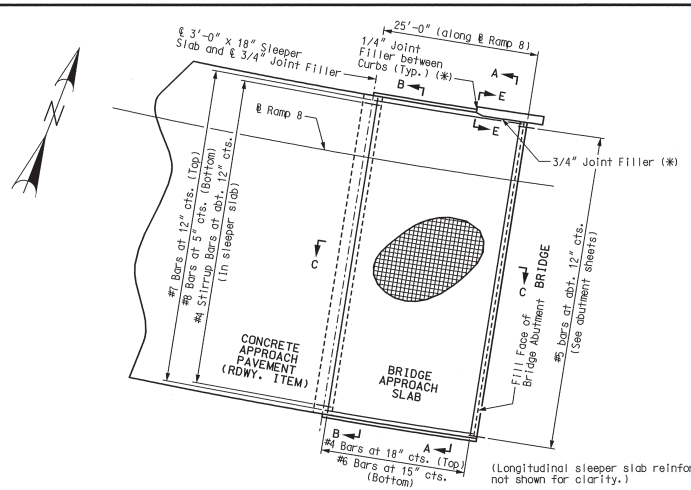

PART PLAN SHOWING REINFORCEMENT

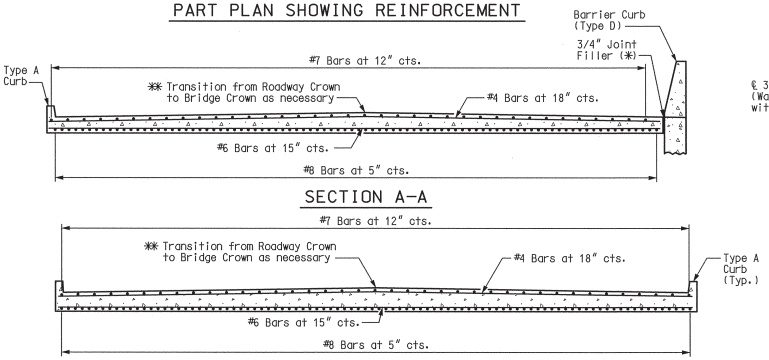

Note:
With the approval of the engineer, the contractor may crown the bottom of the approach slab to match the crown of the roadway surface.

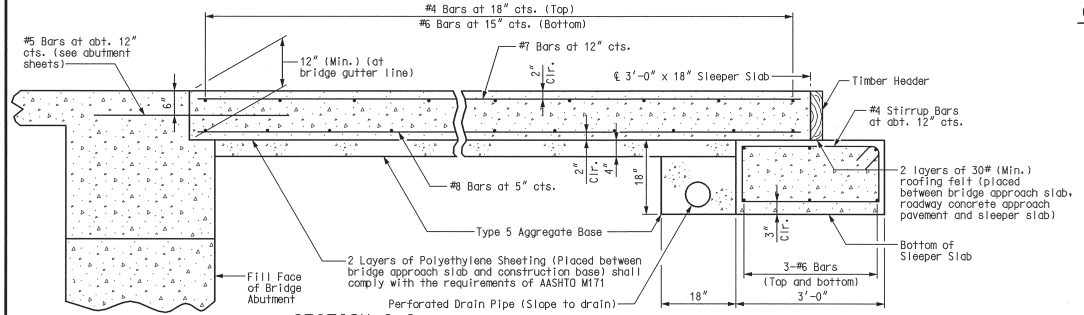

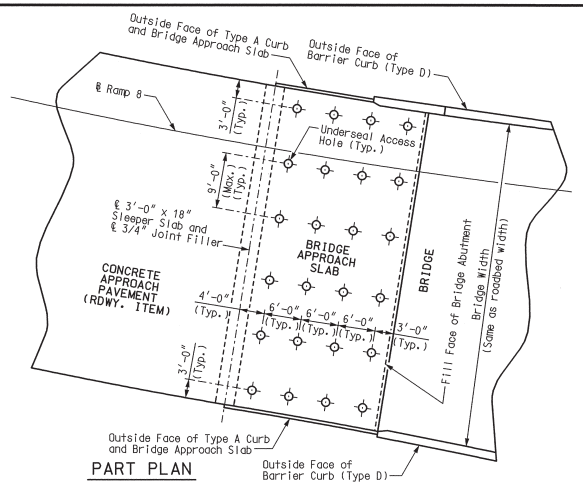

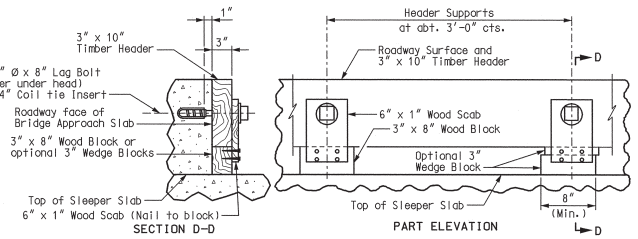

Note: Remove timber header when concrete pavement is placed.

DETAILS OF TIMBER HEADER

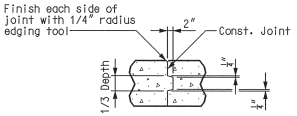

CONST. JOINT DETAIL

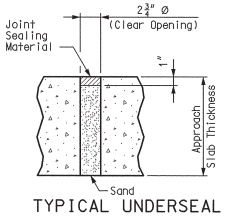

TYPICAL UNDERSEAL ACCESS HOLE DETAIL

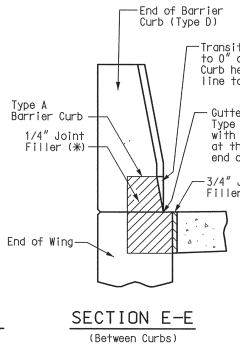

SECTION E-E

(Between Curbs)

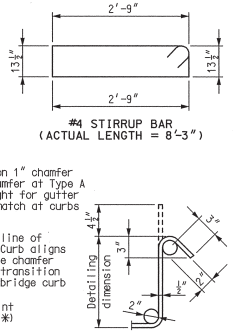

TYPICAL 135° STIRRUP HOOK DIMENSIONS BENDING DIAGRAM

Note:
Nominal lengths are based on out-to-out dimensions shown in bending diagram and are listed for fabricator's use (nearest inch).

GENERAL NOTES:

All concrete for the bridge approach slab and sleeper slab shall be in accordance with Sec 503 (f'c = 4,000 psi).

All joint filler shall be in accordance with Sec 1057 for preformed fiber expansion joint filler, except as noted.

The reinforcing steel in the bridge approach slab and the sleeper slab shall be epoxy coated Grade 60 with Fy = 60,000 psi.

Minimum clearance to reinforcing steel shall be 1-1/2", unless otherwise shown.

The reinforcing steel in the bridge approach slab and the sleeper slab shall be continuous. The transverse reinforcing steel may be made continuous by lap splicing the #4 & #6 bars 18" and 2'-2", respectively.

Mechanical bar splices shall be in accordance with Sec 706.

(✳) Seal joint between vertical face of approach slab and wing with "Silicone Joint Sealant for Saw Cut and Formed Joints" in accordance with Sec 717.

Hooks and bends shall be in accordance with the CRSI Manual of Standard Practice for Detailing Reinforced Concrete Structures, Stirrup and Tie Dimensions.

The contractor shall pour and satisfactorily finish the bridge or semi-deep slab before pouring the bridge approach slabs.

Longitudinal construction joints in approach slab and sleeper slab shall be aligned with longitudinal construction joints in bridge or semi-deep slab.

Payment for furnishing all materials, labor and excavation necessary to construct the approach slab, including the timber header, sleeper slab, underdrain, Type 5 aggregate base, joint filler and all other appurtenances and incidental work as shown on this sheet, complete-in-place, will be considered completely covered by the contract unit price for Bridge Approach Slab (Bridge) per square yard.

For Concrete Approach Pavement details, see roadway plans.

See Missouri Standard Plans Drawing 609.00 for details of Type A Curb.

At the contractor's option, Grade 40 reinforcement may be substituted for the Grade 60 #5 dowel bars connecting the bridge approach slab to the bridge abutment. No additional payment will be made for this substitution.

When Grade 40 reinforcement is substituted for the Grade 60 #5 dowel bars connecting the bridge approach slab to the bridge abutment, the reinforcement may be bent up to 90 degrees with a 2" minimum radius near the abutment to allow compaction of the backfill material near the abutment. Damage to epoxy coating shall be repaired in accordance with Sec 710.

Drain pipe may be either 6" diameter corrugated metallic-coated pipe underdrain, 4" diameter corrugated polyvinyl chloride (PVC) drain pipe, or 4" diameter corrugated polyethylene (PE) drain pipe.

✳✳ For superelevation transition data, see Sheet No. 82.

LAWRENCE ED ROLWES, NUMBER PE-2009000841, STATE OF MISSOURI, PROFESSIONAL ENGINEER
8/20/09

DESCRIPTION	DATE

DATE: 8/20/09
ROUTE: I-70 | STATE: MO
DISTRICT: 6 | SHEET NO.: BR111
COUNTY: St. Louis City - MO
JOB NO.: J6I0984B
CONTRACT ID.:
PROJECT NO.:
BRIDGE NO.: A6500

MISSOURI HIGHWAYS AND TRANSPORTATION COMMISSION
105 WEST CAPITOL
JEFFERSON CITY, MO 65102
1-888-ASK-MODOT (1-888-275-6636)
HNTB
715 KIRK DRIVE
KANSAS CITY, MO 64105-1310
TELEPHONE (816) 472-1201
CERTIFICATE OF AUTHORITY NO. 001270

REV.

Detailed JUL 2009
Checked JUL 2009

Note: This drawing is not to scale. Follow dimensions.

BRIDGE APPROACH SLAB AT RAMP 8

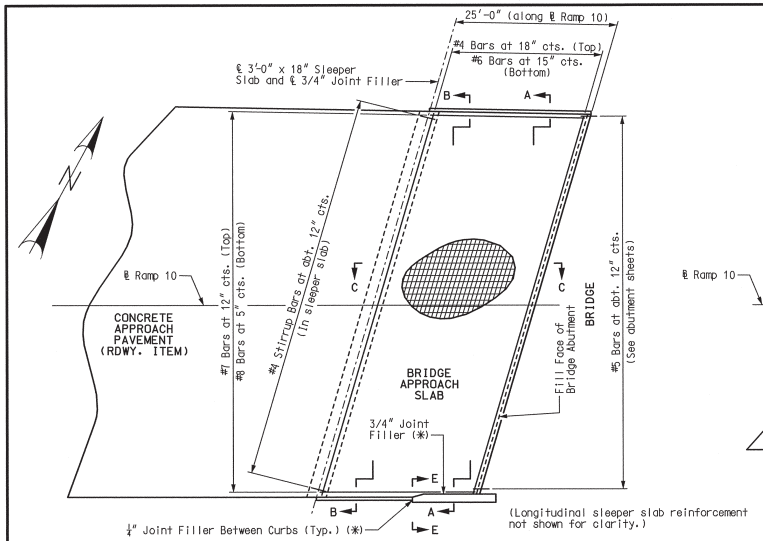

PART PLAN SHOWING REINFORCEMENT

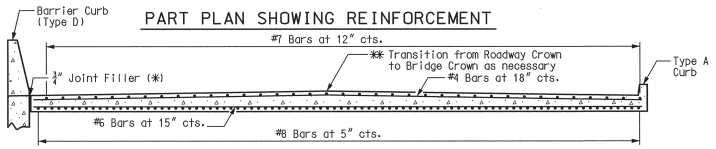

SECTION A-A

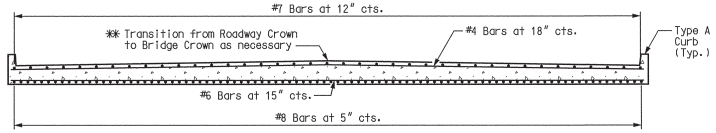

SECTION B-B

Note:
With the approval of the engineer, the contractor may crown the bottom of the approach slab to match the crown of the roadway surface.

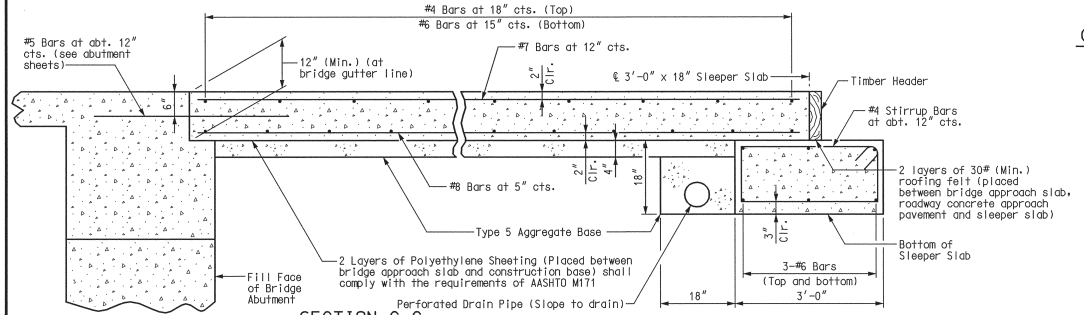

SECTION C-C

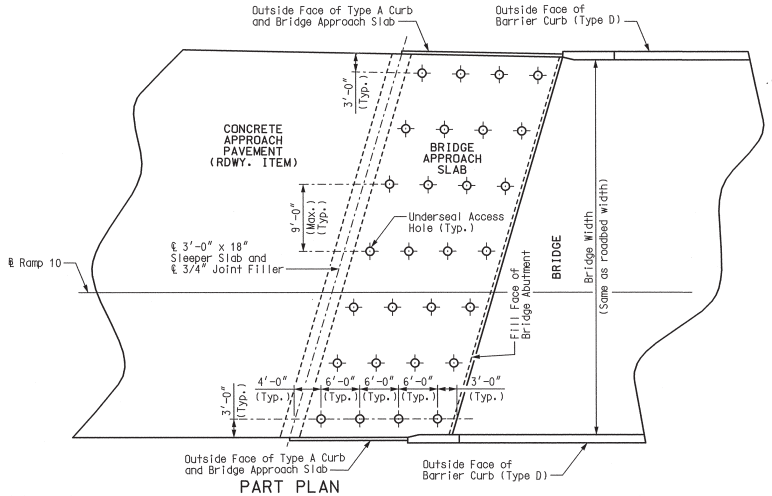

PART PLAN

(Showing Typical Underseal Access Hole Locations)

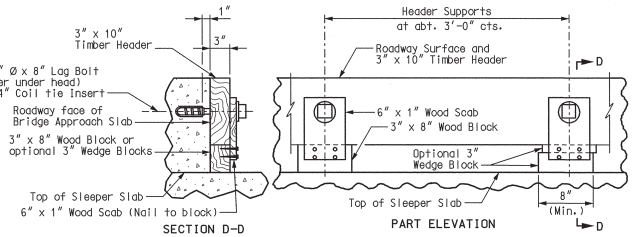

SECTION D-D

PART ELEVATION

Note: Remove timber header when concrete pavement is placed.

DETAILS OF TIMBER HEADER

GENERAL NOTES:

All concrete for the bridge approach slab and sleeper slab shall be in accordance with Sec 503 (f'c = 4,000 psi).

All joint filler shall be in accordance with Sec 1057 for preformed fiber expansion joint filler, except as noted.

The reinforcing steel in the bridge approach slab and the sleeper slab shall be epoxy coated Grade 60 with Fy = 60,000 psi.

Minimum clearance to reinforcing steel shall be 1-1/2", unless otherwise shown.

The reinforcing steel in the bridge approach slab and the sleeper slab shall be continuous. The transverse reinforcing steel may be made continuous by lap splicing the #4 & #6 bars 18" and 2'-2", respectively.

Mechanical bar splices shall be in accordance with Sec 706.

(*) Seal joint between vertical face of approach slab and wing with "Silicone Joint Sealant for Saw Cut and Formed Joints" in accordance with Sec 717.

Hooks and bends shall be in accordance with the CRSI Manual of Standard Practice for Detailing Reinforced Concrete Structures, Stirrup and Tie Dimensions.

The contractor shall pour and satisfactorily finish the bridge or semi-deep slab before pouring the bridge approach slabs.

Longitudinal construction joints in approach slab and sleeper slab shall be aligned with longitudinal construction joints in bridge or semi-deep slab.

Payment for furnishing all materials, labor and excavation necessary to construct the approach slab, including the timber header, sleeper slab, underdrain, Type 5 aggregate base, joint filler and all other appurtenances and incidental work as shown on this sheet, complete-in-place, will be considered completely covered by the contract unit price for Bridge Approach Slab (Bridge) per square yard.

For Concrete Approach Pavement details, see roadway plans.

See Missouri Standard Plans Drawing 609.00 for details of Type A Curb.

At the contractor's option, Grade 40 reinforcement may be substituted for the Grade 60 #5 dowel bars connecting the bridge approach slab to the bridge abutment. No additional payment will be made for this substitution.

When Grade 40 reinforcement is substituted for the Grade 60 #5 dowel bars connecting the bridge approach slab to the bridge abutment, the reinforcement may be bent up to 90 degrees with a 2" minimum radius near the abutment to allow compaction of the backfill material near the abutment. Damage to epoxy coating shall be repaired in accordance with Sec 710.

Drain pipe may be either 6" diameter corrugated metallic-coated pipe underdrain, 4" diameter corrugated polyvinyl chloride (PVC) drain pipe, or 4" diameter corrugated polyethylene (PE) drain pipe.

** For superelevation transition data, see Sheet No. 82.

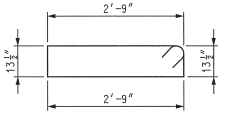

#4 STIRRUP BAR (ACTUAL LENGTH = 8'-3")

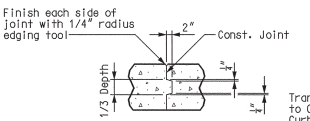

CONST. JOINT DETAIL

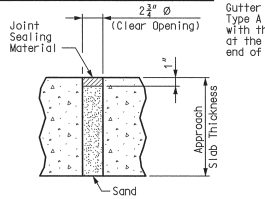

TYPICAL UNDERSEAL ACCESS HOLE DETAIL

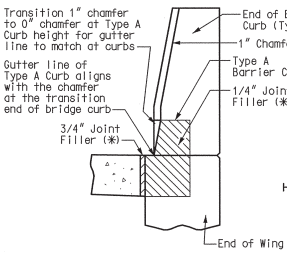

SECTION E-E

(Between Curbs)

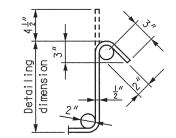

TYPICAL 135° STIRRUP HOOK DIMENSIONS BENDING DIAGRAM

Note:
Nominal lengths are based on out-to-out dimensions shown in bending diagram and are listed for fabricator's use (nearest inch).

BRIDGE APPROACH SLAB AT RAMP 10

Detailed JUL 2009
Checked JUL 2009

Note: This drawing is not to scale. Follow dimensions.

Sheet No. 112 of 125

LAWRENCE E. ROLWES
NUMBER PE-2006020847
PROFESSIONAL ENGINEER
STATE OF MISSOURI
8/20/09

MISSOURI HIGHWAYS AND TRANSPORTATION COMMISSION
105 WEST CAPITOL
JEFFERSON CITY, MO 65102
1-888-ASK-MODOT (1-888-275-6636)

HNTB
715 KIRK DRIVE
KANSAS CITY, MO 64105-1310
TELEPHONE (816) 472-1201
CERTIFICATE OF AUTHORITY NO. 001270

DESCRIPTION	DATE

DATE 8/20/09
ROUTE I-70 | STATE MO
DISTRICT 6 | SHEET NO. BR112
COUNTY St. Louis City - MO
JOB NO. J6I0984B
CONTRACT ID.
PROJECT NO.
BRIDGE NO. A6500

REV.

\\slsw00\Jobs\46440\Techprod\Bridges\MO-Approach\Drawings\Baseline Drawings\B_A6500_112-125_J6I0984B_112.dgn 18-AUG-2009 10:30

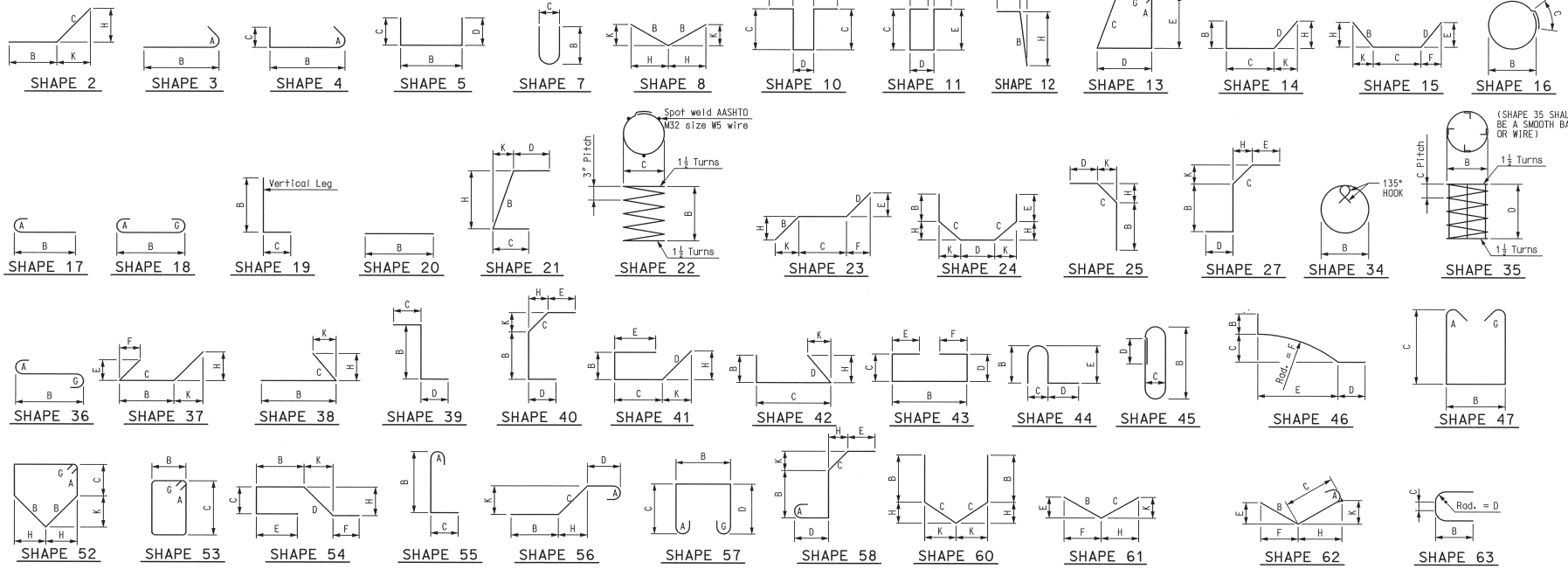

STIRRUP HOOK DIMENSIONS

Bar Size	D (in)	All Grades		
		90° Hooks	135° Hooks	
		Hook A or G (in)	Hook A or G (in)	Approx. H (in)
#4	2″	4½″	4½″	3″
#5	2½″	6″	5½″	3¾″
#6	4½″	12″	8″	4½″

END HOOK DIMENSIONS

Bar Size	D (in)	All Grades		
		180° Hooks		90° Hooks
		Hook A or G (in)	J (in)	Hook A or G (in)
#3	2¼″	5″	3″	6″
#4	3″	6″	4″	8″
#5	3¾″	7″	5″	10″
#6	4½″	8″	6″	12″
#7	5¼″	10″	7″	14″
#8	6″	11″	8″	16″
#9	9½″	15″	11¾″	19″
#10	10¾″	17″	13¼″	22″
#11	12″	19″	14¾″	2′-0″
#14	18¼″	2′-3″	21¾″	2′-7″
#18	2′-0″	3′-0″	2′-4½″	3′-5″

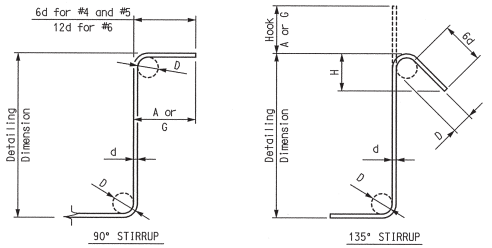

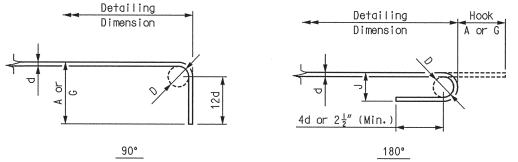

Notes:
All standard hooks and bends other than 180 degree are to be bent with same procedure as for 90 degree standard hooks.
Hooks and bends shall be in accordance with the procedures as shown on this sheet.
Nominal lengths are based on cut-to-cut dimensions shown in bending diagrams and are listed for fabricators use. (Nearest inch)
Pay weights are based on actual lengths.
Unless otherwise noted, diameter "D" is the same for all bends and hooks on a bar.
E = Epoxy coated reinforcement.
S = Stirrup.
X = Bar is included in substructure quantities.
Actual lengths are measured along centerline bar to the nearest inch.
V = Bar dimensions vary in equal increments between dimensions shown on this line and the following line.
No. ea. = Number of bars of each length.
Four angle or channel spacers are required for each column spiral. Spacers are to be placed on inside of spirals. Length and weight of column spirals do not include splices or spacers.
Reinforcing steel (Grade 60) fy = 60,000 psi.

BAR BENDING DIAGRAMS

Detailed JUL 2009
Checked JUL 2009

Note: This drawing is not to scale. Follow dimensions.

Sheet No. 113 of 125

\\slsw00\Jobs\46440\Techprod\Bridges\MO-Approach\Drawings\Baseline Drawings\B_A6500_113-125_J6I0984B_113.dgn

18-AUG-2009 10:30

LAWRENCE E. ROLWES NUMBER 2006002847 PROFESSIONAL ENGINEER STATE OF MISSOURI

8/20/09

DATE	
8/20/09	
ROUTE	STATE
I-70	MO
DISTRICT	SHEET NO.
6	BR113
COUNTY	
St. Louis City - MO	
JOB NO.	
J6I0984B	
CONTRACT ID.	
PROJECT NO.	
BRIDGE NO.	
A6500	

DESCRIPTION | DATE

REV.

MISSOURI HIGHWAYS AND TRANSPORTATION COMMISSION

105 WEST CAPITOL
JEFFERSON CITY, MO 65102
1-888-ASK-MODOT (1-888-275-6636)

HNTB
715 KIRK DRIVE
KANSAS CITY, MO 64105-1310
TELEPHONE (816) 472-1201
CERTIFICATE OF AUTHORITY NO. 001270

BILL OF REINFORCING STEEL

NO. REQ'D.	MARK NO. (SIZE MARK)	LOCATION	EPOXY (E)	SHAPE NO.	STIRRUP (S)	SUBSTR. (X)	VARIES (V)	NO. EACH	B FT. IN.	C FT. IN.	D FT. IN.	E FT. IN.	F FT. IN.	H FT. IN.	K FT. IN.	NOMINAL LENGTH FT. IN.	ACTUAL LENGTH FT. IN.	WEIGHT LBS.
		ABUTMENT 1																
14	6F100	Wingwall		23					14"	5'-9"	14"	8⅜"	11¼"	8⅜"	11¼"	8'-1"	8'-1"	170
6	6F101	Diaphragm		38					6'-6"	2'-8"				2'-6¾"	9"	9'-2"	9'-2"	83
15	6F102	Wingwall		23					14"	4'-11"	14"	9⅞"	9⅞"	9⅞"	9⅞"	7'-3"	7'-3"	163
6	6F103	Diaphragm		19					6'-4"	2'-7"						8'-11"	8'-10"	80
20	8H100	Beam		20					44'-0"							44'-0"	44'-0"	2,350
22	8H101	Beam		18					5'-7"							7'-5"	7'-5"	436
20	6H102	Beam & Diaphragm		20					42'-2"							42'-2"	42'-2"	1,267
4	6H103	Diaphragm		20					3'-8"							3'-8"	3'-8"	22
20	6H104	Diaphragm		20					10'-0"							10'-0"	10'-0"	300
4	6H105	Diaphragm		20					17'-6"							17'-6"	17'-6"	105
6	6H106	Diaphragm		20					5'-6"							5'-6"	5'-6"	50
2	6H107	App. Seat		20					41'-6"							41'-6"	41'-6"	125
8	6H108	Diaphragm	E	20					42'-10"							42'-10"	42'-10"	515
65	5H109	App. Seat	E	20					2'-6"							2'-6"	2'-6"	169
6	5H110	Diaphragm		23					15"	3'-2"	15"	4¼"	14⅜"	4¼"	14⅜"	5'-8"	5'-8"	35
13	6H111	Wingwall		20					24'-5"							24'-5"	24'-5"	477
13	6H112	Wingwall		19					24'-5"	12"						25'-5"	25'-4"	495
10	8H113	Wingwall *	E	20					24'-5"							24'-5"	24'-5"	652
20	8H114	Beam		20					38'-10"							38'-10"	38'-10"	2,074
18	8H115	Beam		18					5'-7"							7'-5"	7'-5"	356
20	6H116	Beam & Diaphragm		20					36'-11"							36'-11"	36'-11"	1,109
4	4H117	Beam		19	S				14"	11'-1"						12'-3"	12'-2"	33
20	4H118	Beam		19	S				14"	15'-0"						16'-2"	16'-1"	215
4	6H119	Diaphragm		20					3'-7"							3'-7"	3'-7"	22
16	6H120	Diaphragm		20					10'-5"							10'-5"	10'-5"	250
4	6H121	Diaphragm		20					17'-9"							17'-9"	17'-9"	107
5	6H122	Diaphragm		20					5'-6"							5'-6"	5'-6"	41
2	6H123	App. Seat		20					36'-3"							36'-3"	36'-3"	109
8	6H124	Diaphragm	E	20					37'-7"							37'-7"	37'-7"	452
53	5H125	App. Seat	E	20					2'-6"							2'-6"	2'-6"	138
5	5H126	Diaphragm		20					5'-9"							5'-9"	5'-9"	30
14	6H127	Wingwall		20					24'-8"							24'-8"	24'-8"	519
14	6H128	Wingwall		19					24'-4"	12"						25'-4"	25'-3"	531
8	8H129	Wingwall	E	20					24'-8"							24'-8"	24'-8"	527
43	5U100	Beam		5	S				2'-9"	6'-0"	6'-0"					14'-9"	14'-6"	650
36	4U101	Beam		53	S				2'-9"	3'-7"						13'-5"	13'-2"	317
6	4U102	Beam		5	S				2'-9"	3'-7"	3'-7"					9'-11"	9'-9"	39
60	5U103	Diaphragm	E	5	S				2'-3"	5'-11"	5'-11"					14'-1"	13'-10"	866
57	6U104	Diaphragm		19	S				5'-0"	2'-9"						7'-9"	7'-8"	656
85	6U105	Diaphragm	E	19	S				3'-4"	5'-1"						8'-5"	8'-4"	1,064
43	5U106	Beam		5	S				2'-8"	7'-6"	7'-6"					17'-8"	17'-5"	781
28	4U107	Beam		53	S				2'-8"	3'-7"						13'-3"	13'-0"	243
7	4U108	Beam		5	S				2'-8"	3'-7"	3'-7"					9'-10"	9'-8"	45
52	5U109	Diaphragm	E	5	S				2'-2"	5'-8"	5'-8"					13'-6"	13'-3"	719
49	6U110	Diaphragm		19	S				4'-9"	2'-8"						7'-5"	7'-4"	540
69	6U111	Diaphragm	E	19	S				3'-4"	4'-11"						8'-3"	8'-2"	846
35	4U112	Beam		5	S				2'-8"	2'-0"	2'-0"					6'-8"	6'-6"	152
34	5V100	Beam & Diaphragm		20					6'-0"							6'-0"	6'-0"	213
42	6V101	Diaphragm		20					5'-0"							5'-0"	5'-0"	315
2	6V102	Wingwall		20					9'-7"							9'-7"	9'-7"	29
44	6V103	Wingwall		20			V	2	9'-7"							9'-7"	9'-7"	647
		Increment = ¼"							10'-0"							10'-0"	10'-0"	
18	5V104	Beam & Diaphragm		20					7'-6"							7'-6"	7'-6"	141
35	6V105	Diaphragm		20					4'-9"							4'-9"	4'-9"	250
2	6V106	Wingwall		20					9'-10"							9'-10"	9'-10"	30
44	6V107	Wingwall		20			V	2	9'-11"							9'-11"	9'-11"	677
		Increment = ⅜"							10'-7"							10'-7"	10'-7"	

* Two additional #8-H113 are included in the bar bill for testing.

BILL OF REINFORCING STEEL

NO. REQ'D.	MARK NO. (SIZE MARK)	LOCATION	EPOXY (E)	SHAPE NO.	STIRRUP (S)	SUBSTR. (X)	VARIES (V)	NO. EACH	B FT. IN.	C FT. IN.	D FT. IN.	E FT. IN.	F FT. IN.	H FT. IN.	K FT. IN.	NOMINAL LENGTH FT. IN.	ACTUAL LENGTH FT. IN.	WEIGHT LBS.
		PIER 2																
36	10H200	Beam	E	20		X			54'-5"							54'-5"	54'-5"	8,430
18	10H201	Beam	E	61		X			17'-9"	17'-9"		11½"	17'-8⅞"	17'-9"	4¾"	35'-6"	35'-6"	2,750
44	10H202	Beam	E	17		X			54'-5"							55'-10"	55'-10"	10,571
22	10H203	Beam	E	61		X			17'-9"	17'-9"		11½"	17'-8⅞"	17'-9"	4¾"	35'-6"	35'-6"	3,361
24	7H204	Beam	E	20		X			48'-10"							48'-10"	48'-10"	2,396
12	7H205	Beam	E	61		X			17'-9"	17'-9"		11½"	17'-8⅞"	17'-9"	4¾"	35'-6"	35'-6"	871
44	6H206	Beam	E	20		X			14'-0"							14'-0"	14'-0"	925
44	6H207	Beam	E	20		X			15'-2"							15'-2"	15'-2"	1,002
16	6H208	Beam	E	5	S	X			6'-6"	22"	22"					10'-2"	9'-11"	238
28	4H209	Beam	E	20		X			3'-2"							3'-2"	3'-2"	59
5	5P200	Drilled Shaft		35		X			4'-6"	6"	46'-3"					1330'-11"	1330'-11"	6,941
1	5P201	Column & Drilled Shaft		35		X			4'-6"	3"	17'-2"					992'-10"	992'-10"	1,036
1	5P202	Column & Drilled Shaft		35		X			4'-6"	3"	18'-8"					1076'-9"	1076'-9"	1,123
1	5P203	Column & Drilled Shaft		35		X			4'-6"	3"	20'-0"					1151'-3"	1151'-3"	1,201
1	5P204	Column & Drilled Shaft		35		X			4'-6"	3"	19'-6"					1123'-4"	1123'-4"	1,172
1	5P205	Column & Drilled Shaft		35		X			4'-6"	3"	18'-10"					1086'-0"	1086'-0"	1,133
55	5P206	Beam	E	34	S	X			4'-6"							14'-11"	14'-11"	856
288	6U200	Beam	E	53	S	X			4'-2"	6'-8"						23'-0"	22'-7"	9,769
50	6U201	Beam	E	5	S	X			4'-2"	6'-8"	6'-8"					17'-6"	17'-3"	1,295
322	4U202	Beam	E	5	S	X			3'-2"	2'-0"	2'-0"					7'-2"	7'-0"	1,506
56	4U203	Beam	E	5	S	X			8"	2'-0"	2'-0"					4'-8"	4'-6"	168
65	11V200	Column & Drilled Shaft		20		X			57'-3"							57'-3"	57'-3"	19,771
65	11V201	Column & Drilled Shaft		20		X			59'-3"							59'-3"	59'-3"	20,462
13	11V202	Column		17		X			9'-6"							11'-1"	11'-1"	766
13	11V203	Column		17		X			7'-6"							9'-1"	9'-1"	627
13	11V204	Column		17		X			11'-0"							12'-7"	12'-7"	869
13	11V205	Column		17		X			9'-0"							10'-7"	10'-7"	731
13	11V206	Column		17		X			12'-4"							13'-11"	13'-11"	961
13	11V207	Column		17		X			10'-4"							11'-11"	11'-11"	823
13	11V208	Column		17		X			11'-10"							13'-5"	13'-5"	927
13	11V209	Column		17		X			9'-10"							11'-5"	11'-5"	789
13	11V210	Column		17		X			11'-2"							12'-9"	12'-9"	881
13	11V211	Column		17		X			9'-2"							10'-9"	10'-9"	742
22	W5W200	Beam	E	22		X			18"	9⅛"						26'-1"	26'-1"	96
24	W5W201	Beam	E	22		X			2'-1"	9⅛"						33'-2"	33'-2"	133

Note:
For bar bending diagram, see Sheet No. 113.

Detailed JUL 2009
Checked JUL 2009

Note: This drawing is not to scale. Follow dimensions.

BILL OF REINFORCING STEEL

\\slsw00\Jobs\46440\Techprod\Bridges\MO-Approach\Drawings\Baseline Drawings\B_A6500_114-125_J6I0984B_114.dgn

18-AUG-2009 10:30

STATE OF MISSOURI
LAWRENCE E. ROLWES, JR.
NUMBER
PE-2006002847
REGISTERED PROFESSIONAL ENGINEER

8/20/09

DATE	
8/20/09	
ROUTE I-70	STATE MO
DISTRICT 6	SHEET NO. BR114
COUNTY St. Louis City - MO	
JOB NO. J6I0984B	
CONTRACT ID.	
PROJECT NO.	
BRIDGE NO. A6500	

DESCRIPTION

DATE

MISSOURI HIGHWAYS AND TRANSPORTATION COMMISSION
105 WEST CAPITOL
JEFFERSON CITY, MO 65102
1-888-ASK-MODOT (1-888-275-6636)

HNTB
715 KIRK DRIVE
KANSAS CITY, MO 64105-1310
TELEPHONE (816) 472-1201
CERTIFICATE OF AUTHORITY
NO. 001270

REV.

BILL OF REINFORCING STEEL

NO. REQ'D.	MARK NO. SIZE	MARK NO. MARK	LOCATION	EPOXY (E)	SHAPE NO.	STIRRUP (S)	SUBSTR. (X)	VARIES (V)	NO. EACH	DIMENSIONS B	C	D	E	F	H	K	NOMINAL LENGTH	ACTUAL LENGTH	WEIGHT
										FT. IN.	FT. IN.	FT. IN.	FT. IN.	FT. IN.	FT. IN.	FT. IN.	FT. IN.	FT. IN.	LBS.
			PIER 3																
88		6D300	Beam		20		X			2′-11″							2′-11″	2′-11″	386
22		10H300	Beam		20		X			47′-9″							47′-9″	47′-9″	4,520
11		10H301	Beam		20		X			36′-8″							36′-8″	36′-8″	1,736
12		10H302	Beam		17		X			30′-6″							31′-11″	31′-11″	1,648
12		10H303	Beam		17		X			47′-9″							49′-2″	49′-2″	2,539
12		10H304	Beam		20		X			53′-11″							53′-11″	53′-11″	2,784
12		10H305	Beam		20		X			42′-8″							42′-8″	42′-8″	2,203
20		6H306	Beam		20		X			9′-2″							9′-2″	9′-2″	275
32		7H307	Beam		20		X			47′-9″							47′-9″	47′-9″	3,123
14		7H308	Beam		20		X			23′-2″							23′-2″	23′-2″	663
19		6H309	Beam		5	S	X			5′-6″	22″	22″					9′-2″	8′-11″	254
5		5P300	Drilled Shaft		35		X			4′-6″	6″	37′-9″					1093′-3″	1093′-3″	5,701
5		5P301	Column & Drilled Shaft		35		X			4′-6″	3″	30′-8″					1747′-7″	1747′-7″	9,114
55		5P302	Beam		34	S	X			4′-6″							14′-11″	14′-11″	856
9		6U300	Beam		53	S	X			5′-8″	6′-8″						26′-0″	25′-7″	346
5		6U301	Beam		5	S	X			5′-8″	6′-8″	6′-8″					19′-0″	18′-9″	141
14		6U302	Beam		53	S	X			5′-8″	7′-0″						26′-8″	26′-3″	552
9		6U303	Beam		53	S	X			5′-8″	7′-4″						27′-4″	26′-11″	364
5		6U304	Beam		5	S	X			5′-8″	7′-8″	7′-8″					21′-0″	20′-9″	156
5		6U305	Beam		53	S	X			5′-8″	7′-8″						28′-0″	27′-7″	207
9		6U306	Beam		53	S	X			5′-8″	8′-0″						28′-8″	28′-3″	382
18		6U307	Beam		53	S	X			5′-8″	8′-4″						29′-4″	28′-11″	782
5		6U308	Beam		5	S	X			5′-8″	8′-4″	8′-4″					22′-4″	22′-1″	166
9		6U309	Beam		53	S	X			5′-8″	8′-2″						29′-0″	28′-7″	386
5		6U310	Beam		53	S	X			5′-8″	8′-0″						28′-8″	28′-3″	212
5		6U311	Beam		5	S	X			5′-8″	8′-0″	8′-0″					21′-8″	21′-5″	161
9		6U312	Beam		53	S	X			5′-8″	7′-9″						28′-2″	27′-9″	375
23		6U313	Beam		53	S	X			5′-8″	7′-5″						27′-6″	27′-1″	936
5		6U314	Beam		5	S	X			5′-8″	7′-5″	7′-5″					20′-6″	20′-3″	152
24		4U315	Beam		5	S	X			5′-8″	2′-0″	2′-0″					9′-8″	9′-6″	152
80		11V300	Column & Drilled Shaft		20		X			50′-3″							50′-3″	50′-3″	21,358
80		11V301	Column & Drilled Shaft		20		X			52′-3″							52′-3″	52′-3″	22,208
80		11V302	Column		17		X			21′-6″							23′-1″	23′-1″	9,811
80		11V303	Column		17		X			19′-6″							21′-1″	21′-1″	8,961

BILL OF REINFORCING STEEL

NO. REQ'D.	MARK NO. SIZE	MARK NO. MARK	LOCATION	EPOXY (E)	SHAPE NO.	STIRRUP (S)	SUBSTR. (X)	VARIES (V)	NO. EACH	DIMENSIONS B	C	D	E	F	H	K	NOMINAL LENGTH	ACTUAL LENGTH	WEIGHT
										FT. IN.	FT. IN.	FT. IN.	FT. IN.	FT. IN.	FT. IN.	FT. IN.	FT. IN.	FT. IN.	LBS.
			PIER 4																
77		6D400	Beam		20		X			2′-11″							2′-11″	2′-11″	337
20		10H400	Beam		20		X			46′-11″							46′-11″	46′-11″	4,038
10		10H401	Beam		20		X			36′-4″							36′-4″	36′-4″	1,563
20		10H402	Beam		17		X			46′-11″							48′-4″	48′-4″	4,160
10		10H403	Beam		20		X			50′-10″							50′-10″	50′-10″	2,187
12		6H404	Beam		20		X			14′-0″							14′-0″	14′-0″	252
28		7H405	Beam		20		X			46′-11″							46′-11″	46′-11″	2,685
16		7H406	Beam		20		X			22′-10″							22′-10″	22′-10″	747
18		6H407	Beam		5	S	X			5′-6″	22″	22″					9′-2″	8′-11″	241
5		5P400	Drilled Shaft		35		X			4′-6″	6″	32′-5″					944′-1″	944′-1″	4,923
5		5P401	Column & Drilled Shaft		35		X			4′-6″	3″	40′-8″					2306′-7″	2306′-7″	12,029
55		5P402	Beam		34	S	X			4′-6″							14′-11″	14′-11″	856
40		6U400	Beam		53	S	X			5′-8″	6′-8″						26′-0″	25′-7″	1,537
10		6U401	Beam		5	S	X			5′-8″	6′-8″	6′-8″					19′-0″	18′-9″	282
18		6U402	Beam		53	S	X			5′-8″	7′-0″						26′-8″	26′-3″	710
10		6U403	Beam		5	S	X			5′-8″	7′-2″	7′-2″					20′-0″	19′-9″	297
28		6U404	Beam		53	S	X			5′-8″	7′-2″						27′-0″	26′-7″	1,118
16		6U405	Beam		53	S	X			5′-8″	7′-7″						27′-10″	27′-5″	659
5		6U406	Beam		5	S	X			5′-8″	7′-7″	7′-7″					20′-10″	20′-7″	155
32		4U407	Beam		5	S	X			5′-8″	2′-0″	2′-0″					9′-8″	9′-6″	203
80		11V400	Column & Drilled Shaft		20		X			46′-11″							46′-11″	46′-11″	19,941
80		11V401	Column & Drilled Shaft		20		X			48′-11″							48′-11″	48′-11″	20,792
80		11V402	Column		17		X			29′-6″							31′-1″	31′-1″	13,212
80		11V403	Column		17		X			27′-6″							29′-1″	29′-1″	12,362

Note:
For bar bending diagram, see Sheet No. 113.

BILL OF REINFORCING STEEL

Detailed JUL 2009
Checked JUL 2009

Note: This drawing is not to scale. Follow dimensions.

Sheet No. 115 of 125

\\slsw00\Jobs\46440\Techprod\Bridges\MO-Approach\Drawings\Baseline Drawings\B_A6500_115-125_J6I0984B_115.dgn

18-AUG-2009 10:30

LAWRENCE O. ROLWES NUMBER PE-2006002961 STATE OF MISSOURI PROFESSIONAL ENGINEER

8/20/09

DATE 8/20/09

ROUTE	STATE
I-70	MO
DISTRICT	SHEET NO.
6	BR115

COUNTY: St. Louis City - MO

JOB NO.: J6I0984B

CONTRACT ID.:

PROJECT NO.:

BRIDGE NO.: A6500

NO.	DESCRIPTION	DATE

MISSOURI HIGHWAYS AND TRANSPORTATION COMMISSION

MoDOT

105 WEST CAPITOL
JEFFERSON CITY, MO 65102
1-888-ASK-MODOT (1-888-275-6636)

HNTB

715 KIRK DRIVE
KANSAS CITY, MO 64105-1310
TELEPHONE (816) 472-1201
CERTIFICATE OF AUTHORITY NO. 001270

REV.

BILL OF REINFORCING STEEL

NO. REQ'D.	MARK NO. SIZE	MARK NO. MARK	LOCATION	EPOXY (E)	SHAPE NO.	STIRRUP (S)	SUBSTR. (X)	VARIES (V)	NO. EACH	DIMENSIONS B	C	D	E	F	H	K	NOMINAL LENGTH	ACTUAL LENGTH	WEIGHT
										FT. IN.	FT. IN.	FT. IN.	FT. IN.	FT. IN.	FT. IN.	FT. IN.	FT. IN.	FT. IN.	LBS.
			PIER 5																
26	10	H500	Beam	E	20		X			41′-7″							41′-7″	41′-7″	4,652
15	10	H501	Beam ✳	E	20		X			40′-4″							40′-4″	40′-4″	2,630
26	10	H502	Beam	E	17		X			41′-7″							43′-0″	43′-0″	4,811
13	10	H503	Beam	E	20		X			45′-9″							45′-9″	45′-9″	2,559
12	6	H504	Beam	E	20		X			18′-4″							18′-4″	18′-4″	330
44	6	H505	Beam	E	20		X			13′-6″							13′-6″	13′-6″	892
28	7	H506	Beam	E	20		X			41′-7″							41′-7″	41′-7″	2,380
18	7	H507	Beam ✳	E	20		X			29′-2″							29′-2″	29′-2″	1,073
18	6	H508	Beam	E	5	S	X			7′-6″	22″	22″					11′-2″	10′-11″	295
24	4	H509	Beam	E	20		X			3′-8″							3′-8″	3′-8″	59
5	5	P500	Column & Drilled Shaft		35		X			5′-6″	3″	72′-1″					4976′-1″	4976′-1″	25,950
65	5	P501	Beam	E	34	S	X			5′-6″							18′-1″	18′-1″	1,226
17	6	U500	Beam	E	53	S	X			7′-8″	6′-7″						29′-10″	29′-5″	751
6	6	U501	Beam	E	5	S	X			7′-8″	6′-7″	6′-7″					20′-10″	20′-7″	185
25	6	U502	Beam	E	53	S	X			7′-8″	6′-11″						30′-6″	30′-1″	1,130
2	6	U503	Beam	E	5	S	X			7′-8″	6′-11″	6′-11″					21′-6″	21′-3″	64
7	6	U504	Beam	E	5	S	X			7′-8″	7′-4″	7′-4″					22′-4″	22′-1″	232
20	6	U505	Beam	E	53	S	X			7′-8″	7′-4″						31′-4″	30′-11″	929
26	6	U506	Beam	E	53	S	X			7′-8″	7′-8″						32′-0″	31′-7″	1,233
6	6	U507	Beam	E	5	S	X			7′-8″	7′-8″	7′-8″					23′-0″	22′-9″	205
20	6	U508	Beam	E	53	S	X			7′-8″	7′-4″						31′-4″	30′-11″	929
7	6	U509	Beam	E	5	S	X			7′-8″	7′-4″	7′-4″					22′-4″	22′-1″	232
2	6	U510	Beam	E	5	S	X			7′-8″	7′-1″	7′-1″					21′-10″	21′-7″	65
25	6	U511	Beam	E	53	S	X			7′-8″	7′-1″						30′-10″	30′-5″	1,142
17	6	U512	Beam	E	53	S	X			7′-8″	6′-10″						30′-4″	29′-11″	764
6	6	U513	Beam	E	5	S	X			7′-8″	6′-10″	6′-10″					21′-4″	21′-1″	190
139	4	U514	Beam	E	5	S	X			7′-8″	2′-0″	2′-0″					11′-8″	11′-6″	1,068
60	4	U515	Beam	E	5	S	X			8″	2′-0″	2′-0″					4′-8″	4′-6″	180
105	11	V500	Column & Drilled Shaft		20		X			33′-2″							33′-2″	33′-2″	18,503
105	11	V501	Column & Drilled Shaft		20		X			35′-2″							35′-2″	35′-2″	19,618
105	11	V502	Column		17		X			42′-9″							44′-4″	44′-4″	24,732
105	11	V503	Column		17		X			40′-9″							42′-4″	42′-4″	23,616
40	W5	W500	Beam	E	22		X			18″	9 1/8″						26′-1″	26′-1″	174

✳ Two additional #7-H507 and #10-H501 are included in the bar bill for testing.

BILL OF REINFORCING STEEL

NO. REQ'D.	MARK NO. SIZE	MARK NO. MARK	LOCATION	EPOXY (E)	SHAPE NO.	STIRRUP (S)	SUBSTR. (X)	VARIES (V)	NO. EACH	DIMENSIONS B	C	D	E	F	H	K	NOMINAL LENGTH	ACTUAL LENGTH	WEIGHT
										FT. IN.	FT. IN.	FT. IN.	FT. IN.	FT. IN.	FT. IN.	FT. IN.	FT. IN.	FT. IN.	LBS.
			PIER 6																
84	6	D600	Beam		20		X			2′-11″							2′-11″	2′-11″	368
11	10	H600	Beam		20		X			59′-6″							59′-6″	59′-6″	2,816
11	10	H601	Beam		20		X			56′-5″							56′-5″	56′-5″	2,670
16	7	H602	Beam		20		X			52′-9″							52′-9″	52′-9″	1,725
14	7	H603	Beam		20		X			56′-5″							56′-5″	56′-5″	1,614
14	10	H604	Beam		17		X			59′-6″							60′-11″	60′-11″	3,670
4	6	H605	Beam		20		X			30′-0″							30′-0″	30′-0″	180
14	10	H606	Beam		20		X			25′-4″							25′-4″	25′-4″	1,526
4	6	H607	Beam		20		X			16′-8″							16′-8″	16′-8″	100
14	10	H608	Beam		17		X			42′-0″							43′-5″	43′-5″	2,616
2	7	H609	Beam		20		X			25′-4″							25′-4″	25′-4″	104
19	6	H610	Beam		5	S	X			6′-0″	22″	22″					9′-8″	9′-5″	269
8	4	H611	Beam		20		X			6′-2″							6′-2″	6′-2″	33
4	5	P600	Column & Drilled Shaft		35		X			5′-6″	3″	74′-6″					5141′-6″	5141′-6″	21,450
52	5	P601	Beam		34	S	X			5′-6″							18′-1″	18′-1″	981
35	6	U600	Beam		53	S	X			6′-2″	7′-1″						27′-10″	27′-5″	1,441
6	6	U601	Beam		5	S	X			6′-2″	7′-1″	7′-1″					20′-4″	20′-1″	181
39	6	U602	Beam		53	S	X			6′-2″	7′-5″						28′-6″	28′-1″	1,645
6	6	U603	Beam		5	S	X			6′-2″	7′-5″	7′-5″					21′-0″	20′-9″	187
12	6	U604	Beam		53	S	X			6′-2″	7′-2″						28′-0″	27′-7″	497
6	6	U605	Beam		5	S	X			6′-2″	7′-2″	7′-2″					20′-6″	20′-3″	182
17	6	U606	Beam		53	S	X			6′-2″	6′-11″						27′-6″	27′-1″	692
19	6	U607	Beam		53	S	X			6′-2″	6′-8″						27′-0″	26′-7″	759
6	6	U608	Beam		5	S	X			6′-2″	6′-8″	6′-8″					19′-6″	19′-3″	173
18	4	U609	Beam		5	S	X			3′-9″	2′-0″	2′-0″					7′-9″	7′-7″	91
68	11	V600	Column & Drilled Shaft		20		X			35′-3″							35′-3″	35′-3″	12,735
68	11	V601	Column & Drilled Shaft		20		X			37′-3″							37′-3″	37′-3″	13,458
68	11	V602	Column		17		X			43′-1″							44′-8″	44′-8″	16,137
68	11	V603	Column		17		X			41′-1″							42′-8″	42′-8″	15,415

Note:
For bar bending diagram, see Sheet No. 113.

BILL OF REINFORCING STEEL

Detailed JUL 2009
Checked JUL 2009

Note: This drawing is not to scale. Follow dimensions.

Sheet No. 116 of 125

\\slsw00\Jobs\46440\Techprod\Bridges\MO-Approach\Drawings\Baseline Drawings\B_A6500_116-125_J6I0984B_116.dgn

18-AUG-2009 10:30

REV.

LAWRENCE E. ROLNESS NUMBER PE-2009006284 STATE OF MISSOURI PROFESSIONAL ENGINEER

8/20/09

DATE
8/20/09

ROUTE	STATE
I-70	MO
DISTRICT 6	SHEET NO. BR116

COUNTY
St. Louis City - MO

JOB NO.
J6I0984B

CONTRACT ID.

PROJECT NO.

BRIDGE NO.
A6500

DESCRIPTION	DATE

MISSOURI HIGHWAYS AND TRANSPORTATION COMMISSION

MoDOT

105 WEST CAPITOL
JEFFERSON CITY, MO 65102
1-888-ASK-MODOT (1-888-275-6636)

HNTB
715 KIRK DRIVE
KANSAS CITY, MO 64105-1310
TELEPHONE (816) 472-1201
CERTIFICATE OF AUTHORITY NO. 001270

BILL OF REINFORCING STEEL

NO. REQ'D.	MARK NO. SIZE	MARK NO. MARK	LOCATION	EPOXY (E)	SHAPE NO.	STIRRUP (S)	SUBSTR. (X)	VARIES (V)	NO. EACH	DIMENSIONS B	C	D	E	F	H	K	NOMINAL LENGTH	ACTUAL LENGTH	WEIGHT
										FT. IN.	FT. IN.	FT. IN.	FT. IN.	FT. IN.	FT. IN.	FT. IN.	FT. IN.	FT. IN.	LBS.
			PIER 7																
77	6	D700	Beam		20		X			2′-11″							2′-11″	2′-11″	337
18	6	H700	Beam		5	S	X			6′-0″	22″	22″					9′-8″	9′-5″	255
11	10	H701	Beam		20		X			52′-3″							52′-3″	52′-3″	2,473
11	10	H702	Beam		20		X			48′-1″							48′-1″	48′-1″	2,276
14	7	H703	Beam		20		X			45′-6″							45′-6″	45′-6″	1,302
14	7	H704	Beam		20		X			48′-1″							48′-1″	48′-1″	1,376
12	10	H705	Beam		17		X			52′-3″							53′-8″	53′-8″	2,771
12	10	H706	Beam		17		X			48′-1″							49′-6″	49′-6″	2,556
4	6	H707	Beam		20		X			5′-1″							5′-1″	5′-1″	31
24	6	H708	Beam		20		X			13′-9″							13′-9″	13′-9″	496
4	6	H709	Beam		20		X			15′-0″							15′-0″	15′-0″	90
1	5	P700	Column & Drilled Shaft		35		X			5′-6″	3″	75′-0″					5175′-9″	5175′-9″	5,398
1	5	P701	Column & Drilled Shaft		35		X			5′-6″	3″	74′-2″					5118′-8″	5118′-8″	5,339
1	5	P702	Column & Drilled Shaft		35		X			5′-6″	3″	73′-3″					5055′-11″	5055′-11″	5,273
1	5	P703	Column & Drilled Shaft		35		X			5′-6″	3″	72′-5″					4998′-10″	4998′-10″	5,214
52	5	P704	Beam		34	S	X			5′-6″							18′-1″	18′-1″	981
107	6	U700	Beam		53	S	X			6′-2″	6′-8″						27′-0″	26′-7″	4,272
24	6	U701	Beam		5	S	X			6′-2″	6′-8″	6′-8″					19′-6″	19′-3″	694
122	4	U702	Beam		5	S	X			6′-2″	2′-0″	2′-0″					10′-2″	10′-0″	815
64	11	V700	Column & Drilled Shaft		20		X			36′-3″							36′-3″	36′-3″	12,326
64	11	V701	Column & Drilled Shaft		20		X			38′-3″							38′-3″	38′-3″	13,006
16	11	V702	Column		17		X			42′-7″							44′-2″	44′-2″	3,755
16	11	V703	Column		17		X			40′-7″							42′-2″	42′-2″	3,585
16	11	V704	Column		17		X			41′-9″							43′-4″	43′-4″	3,684
16	11	V705	Column		17		X			39′-9″							41′-4″	41′-4″	3,514
16	11	V706	Column		17		X			40′-10″							42′-5″	42′-5″	3,606
16	11	V707	Column		17		X			38′-10″							40′-5″	40′-5″	3,436
16	11	V708	Column		17		X			40′-0″							41′-7″	41′-7″	3,535
16	11	V709	Column		17		X			38′-0″							39′-7″	39′-7″	3,365

BILL OF REINFORCING STEEL

NO. REQ'D.	MARK NO. SIZE	MARK NO. MARK	LOCATION	EPOXY (E)	SHAPE NO.	STIRRUP (S)	SUBSTR. (X)	VARIES (V)	NO. EACH	DIMENSIONS B	C	D	E	F	H	K	NOMINAL LENGTH	ACTUAL LENGTH	WEIGHT
										FT. IN.	FT. IN.	FT. IN.	FT. IN.	FT. IN.	FT. IN.	FT. IN.	FT. IN.	FT. IN.	LBS.
			PIER 8																
70	6	D800	Beam		20		X			2′-11″							2′-11″	2′-11″	307
10	10	H800	Beam		20		X			51′-9″							51′-9″	51′-9″	2,227
10	10	H801	Beam		20		X			47′-1″							47′-1″	47′-1″	2,026
12	10	H802	Beam		17		X			51′-9″							53′-2″	53′-2″	2,745
12	10	H803	Beam		17		X			47′-1″							48′-6″	48′-6″	2,504
14	7	H804	Beam		20		X			45′-0″							45′-0″	45′-0″	1,288
14	7	H805	Beam		20		X			47′-1″							47′-1″	47′-1″	1,347
4	6	H806	Beam		20		X			5′-4″							5′-4″	5′-4″	32
28	6	H807	Beam		20		X			14′-0″							14′-0″	14′-0″	589
18	6	H808	Beam		5	S	X			6′-0″	22″	22″					9′-8″	9′-5″	255
4	5	P800	Drilled Shaft		35		X			5′-6″	6″	29′-10″					1067′-8″	1067′-8″	4,454
1	5	P801	Column & Drilled Shaft		35		X			5′-6″	3″	55′-6″					3840′-7″	3840′-7″	4,006
1	5	P802	Column & Drilled Shaft		35		X			5′-6″	3″	54′-8″					3783′-7″	3783′-7″	3,946
1	5	P803	Column & Drilled Shaft		35		X			5′-6″	3″	53′-10″					3726′-6″	3726′-6″	3,887
1	5	P804	Column & Drilled Shaft		35		X			5′-6″	3″	53′-0″					3669′-5″	3669′-5″	3,827
52	5	P805	Beam		34	S	X			5′-6″							18′-1″	18′-1″	981
99	6	U800	Beam		53	S	X			6′-2″	6′-7″						26′-10″	26′-5″	3,928
24	6	U801	Beam		5	S	X			6′-2″	6′-7″	6′-7″					19′-4″	19′-1″	688
120	4	U802	Beam		5	S	X			6′-2″	2′-0″	2′-0″					10′-2″	10′-0″	802
112	11	V800	Drilled Shaft		20		X			37′-9″							37′-9″	37′-9″	22,463
56	11	V801	Column & Drilled Shaft		20		X			49′-8″							49′-8″	49′-8″	14,777
56	11	V802	Column & Drilled Shaft		20		X			51′-8″							51′-8″	51′-8″	15,372
14	11	V803	Column		17		X			39′-6″							41′-1″	41′-1″	3,056
14	11	V804	Column		17		X			37′-6″							39′-1″	39′-1″	2,907
14	11	V805	Column		17		X			38′-8″							40′-3″	40′-3″	2,994
14	11	V806	Column		17		X			36′-8″							38′-3″	38′-3″	2,845
14	11	V807	Column		17		X			37′-10″							39′-5″	39′-5″	2,932
14	11	V808	Column		17		X			35′-10″							37′-5″	37′-5″	2,783
14	11	V809	Column		17		X			37′-0″							38′-7″	38′-7″	2,870
14	11	V810	Column		17		X			35′-0″							36′-7″	36′-7″	2,721

Note:
For bar bending diagram, see Sheet No. 113.

BILL OF REINFORCING STEEL

Detailed JUL 2009
Checked JUL 2009

Note: This drawing is not to scale. Follow dimensions.

Sheet No. 117 of 125

\\slsw00\Jobs\46440\Techprod\Bridges\MO-Approach\Drawings\Baseline Drawings\B_A6500_117-125_J6I0984B_117.dgn

18-AUG-2009 10:31

REV.

LAWRENCE D. ROLWES, JR.
NUMBER
PE-2006002847
PROFESSIONAL ENGINEER
STATE OF MISSOURI
8/20/09

DATE 8/20/09

ROUTE	STATE
I-70	MO
DISTRICT	SHEET NO.
6	BR117

COUNTY: St. Louis City - MO
JOB NO.: J6I0984B
CONTRACT ID.:
PROJECT NO.:
BRIDGE NO.: A6500

DESCRIPTION | DATE

MISSOURI HIGHWAYS AND TRANSPORTATION COMMISSION
MoDOT
105 WEST CAPITOL
JEFFERSON CITY, MO 65102
1-888-ASK-MODOT (1-888-275-6636)

HNTB
715 KIRK DRIVE
KANSAS CITY, MO 64105-1310
TELEPHONE (816) 472-1201
CERTIFICATE OF AUTHORITY NO. 001270

BILL OF REINFORCING STEEL

NO. REQ'D.	MARK NO. SIZE	MARK NO. MARK	LOCATION	EPOXY (E)	SHAPE NO.	STIRRUP (S)	SUBSTR. (X)	VARIES (V)	NO. EACH	DIMENSIONS B	C	D	E	F	H	K	NOMINAL LENGTH	ACTUAL LENGTH	WEIGHT
										FT. IN.	FT. IN.	FT. IN.	FT. IN.	FT. IN.	FT. IN.	FT. IN.	FT. IN.	FT. IN.	LBS.
			PIER 9																
70		6D900	Beam		20		X			2′-11″							2′-11″	2′-11″	307
11		10H900	Beam		20		X			50′-0″							50′-0″	50′-0″	2,367
11		10H901	Beam		20		X			45′-3″							45′-3″	45′-3″	2,142
12		10H902	Beam		17		X			50′-0″							51′-5″	51′-5″	2,655
12		10H903	Beam		17		X			34′-3″							35′-8″	35′-8″	1,842
12		10H904	Beam		20		X			21′-11″							21′-11″	21′-11″	1,132
16		7H905	Beam		20		X			43′-3″							43′-3″	43′-3″	1,414
14		7H906	Beam		20		X			45′-3″							45′-3″	45′-3″	1,295
19		6H907	Beam		5	S	X			6′-0″	22″	22″					9′-8″	9′-5″	269
2		7H908	Beam		20		X			21′-11″							21′-11″	21′-11″	90
4		6H909	Beam		20		X			4′-3″							4′-3″	4′-3″	26
4		6H910	Beam		20		X			11′-2″							11′-2″	11′-2″	67
4		5P900	Drilled Shaft		35		X			5′-6″	6″	29′-9″					1064′-10″	1064′-10″	4,442
4		5P901	Column & Drilled Shaft		35		X			5′-6″	3″	56′-3″					3892′-0″	3892′-0″	16,237
52		5P902	Beam		34	S	X			5′-6″							18′-1″	18′-1″	981
61		6U900	Beam		53	S	X			6′-2″	7′-2″						28′-0″	27′-7″	2,527
18		6U901	Beam		5	S	X			6′-2″	7′-2″	7′-2″					20′-6″	20′-3″	547
22		6U902	Beam		53	S	X			6′-2″	6′-8″						27′-0″	26′-7″	878
6		6U903	Beam		5	S	X			6′-2″	6′-8″	6′-8″					19′-6″	19′-3″	173
34		4U904	Beam		5	S	X			6′-2″	2′-0″	2′-0″					10′-2″	10′-0″	227
64		11V900	Column & Drilled Shaft		20		X			49′-9″							49′-9″	49′-9″	16,917
64		11V901	Column & Drilled Shaft		20		X			51′-9″							51′-9″	51′-9″	17,597
64		11V902	Column		17		X			40′-1″							41′-8″	41′-8″	14,168
64		11V903	Column		17		X			38′-1″							39′-8″	39′-8″	13,488
			SLAB																
498		6S100	Slab	E	17					29′-1″							29′-9″	29′-9″	22,253
518		6S101	Slab	E	17					34′-9″							35′-5″	35′-5″	27,555
294		5S102	Slab	E	20					44′-9″							44′-9″	44′-9″	13,722
510		5S103	Slab	E	20					3′-9″							3′-9″	3′-9″	1,995
48		6S104	Slab	E	20					45′-7″							45′-7″	45′-7″	3,286
1517		6S200	Slab	E	17					60′-0″							60′-8″	60′-8″	138,231
242		6S201	Slab	E	17					34′-0″							34′-8″	34′-8″	12,601
35		6S202	Slab	E	17			V	1	2′-6″							3′-2″	3′-2″	1,658
			Increment = 20″							59′-3″							59′-11″	59′-11″	
33		6S203	Slab	E	20			V	1	5′-6″							5′-6″	5′-6″	1,623
			Increment = 20½″							60′-0″							60′-0″	60′-0″	
712		8S204	Slab	E	20					55′-7″							55′-7″	55′-7″	105,666
408		8S205	Slab	E	20					42′-4″							42′-4″	42′-4″	46,116
767		5S206	Slab	E	20					4′-0″							4′-0″	4′-0″	3,200
80		6S207	Slab	E	20					53′-4″							53′-4″	53′-4″	6,409
3		6S208	Slab	E	20					44′-1″							44′-1″	44′-1″	199
2790		6S300	Slab	E	17					53′-11″							54′-7″	54′-7″	228,736
840		6S301	Slab	E	20					59′-1″							59′-1″	59′-1″	74,544
138		8S302	Slab	E	20					38′-3″							38′-3″	38′-3″	14,094
138		8S303	Slab	E	20					35′-10″							35′-10″	35′-10″	13,203
138		8S304	Slab	E	20					36′-3″							36′-3″	36′-3″	13,357
138		8S305	Slab	E	20					48′-7″							48′-7″	48′-7″	17,901
1270		5S306	Slab	E	20					4′-4″							4′-4″	4′-4″	5,740
120		6S307	Slab	E	20					56′-10″							56′-10″	56′-10″	10,244
12		8S308	Slab	E	20					32′-0″							32′-0″	32′-0″	1,025
12		8S309	Slab	E	20					39′-2″							39′-2″	39′-2″	1,255
184		6S310	Slab ✳	E	20					10′-2″							10′-2″	10′-2″	2,810
34		6S311	Slab	E	20					3′-10″							3′-10″	3′-10″	196
64		4S312	Slab	E	20					4′-10″							4′-10″	4′-10″	207
70		4S313	Slab	E	54					10″	17″	2′-0″	18″	18″	17″	17″	7′-3″	7′-0″	327
70		4S314	Slab	E	20					4′-1″							4′-1″	4′-1″	191
70		4S315	Slab	E	5	S				3′-10″	17″	17″					6′-8″	6′-6″	304
104		5S400	Slab Drain	E	20					2′-0″							2′-0″	2′-0″	217

✳ Two additional #6-S310 and #9-H270 are included in the bar bill for testing.

BILL OF REINFORCING STEEL

NO. REQ'D.	MARK NO. SIZE	MARK NO. MARK	LOCATION	EPOXY (E)	SHAPE NO.	STIRRUP (S)	SUBSTR. (X)	VARIES (V)	NO. EACH	DIMENSIONS B	C	D	E	F	H	K	NOMINAL LENGTH	ACTUAL LENGTH	WEIGHT
										FT. IN.	FT. IN.	FT. IN.	FT. IN.	FT. IN.	FT. IN.	FT. IN.	FT. IN.	FT. IN.	LBS.
			PIER 2 BACK RAMP 8 DIAPHRAGM																
2		6H250	Pier 2 Span(1-2) Ramp 8	E	20					51′-1″							51′-1″	51′-1″	153
1		5H251	Pier 2 Span(1-2) Ramp 8	E	20					51′-1″							51′-1″	51′-1″	53
4		6H252	Pier 2 Span(1-2) Ramp 8	E	20					10′-3″							10′-3″	10′-3″	62
4		5H253	Pier 2 Span(1-2) Ramp 8	E	20					11′-1″							11′-1″	11′-1″	46
8		4H254	Pier 2 Span(1-2) Ramp 8	E	20					2′-7″							2′-7″	2′-7″	14
8		4H255	Pier 2 Span(1-2) Ramp 8	E	20					19″							19″	19″	8
3		4H256	Pier 2 Span(1-2) Ramp 8	E	20					6′-3″							6′-3″	6′-3″	13
3		4H257	Pier 2 Span(1-2) Ramp 8	E	20					4′-3″							4′-3″	4′-3″	9
12		9H258	Pier 2 Span(1-2) Ramp 8	E	20					11′-1″							11′-1″	11′-1″	452
3		6H259	Pier 2 Span(1-2) Ramp 8	E	20					5′-6″							5′-6″	5′-6″	25
5		5H260	Pier 2 Span(1-2) Ramp 8	E	38	S		V	1	2′-8″	19″				19″	3″	4′-3″	4′-3″	24
			Increment = 2″							3′-4″	19″				19″	3″	4′-11″	4′-11″	
5		5H261	Pier 2 Span(1-2) Ramp 8	E	19	S		V	1	2′-8″	2′-5″						5′-1″	5′-0″	28
			Increment = 2″							3′-4″	2′-5″						5′-9″	5′-8″	
24		6U250	Pier 2 Span(1-2) Ramp 8	E	5	S				4′-10″	14″	2′-5″					8′-5″	8′-2″	294
24		6U251	Pier 2 Span(1-2) Ramp 8	E	39	S				4′-10″	14″	2′-5″					8′-5″	8′-2″	294
4		6U252	Pier 2 Span(1-2) Ramp 8	E	19	S				3′-5″	10″						4′-3″	4′-2″	25
4		6U253	Pier 2 Span(1-2) Ramp 8	E	19	S				4′-10″	10″						5′-8″	5′-7″	34
40		6U254	Pier 2 Span(1-2) Ramp 8	E	5	S		V	8	2′-8″	14″	2′-5″					6′-3″	6′-0″	411
			Increment = 5″							4′-4″	14″	2′-5″					7′-11″	7′-8″	
40		6U255	Pier 2 Span(1-2) Ramp 8	E	39	S		V	8	2′-8″	14″	2′-5″					6′-3″	6′-0″	411
			Increment = 5″							4′-4″	14″	2′-5″					7′-11″	7′-8″	
16		4U256	Pier 2 Span(1-2) Ramp 8	E	5	S				2′-6″	12″	2′-5″					5′-11″	5′-9″	61
16		4U257	Pier 2 Span(1-2) Ramp 8	E	39	S				2′-6″	12″	2′-5″					5′-11″	5′-9″	61
7		5V250	Pier 2 Span(1-2) Ramp 8	E	20					5′-3″							5′-3″	5′-3″	38
			PIER 2 BACK RAMP 10 DIAPHRAGM																
2		6H262	Pier 2 Span(1-2) Ramp 10	E	20					58′-7″							58′-7″	58′-7″	176
1		5H263	Pier 2 Span(1-2) Ramp 10	E	20					58′-7″							58′-7″	58′-7″	61
5		6H264	Pier 2 Span(1-2) Ramp 10	E	20					9′-3″							9′-3″	9′-3″	69
5		5H265	Pier 2 Span(1-2) Ramp 10	E	20					10′-2″							10′-2″	10′-2″	53
10		4H266	Pier 2 Span(1-2) Ramp 10	E	20					2′-9″							2′-9″	2′-9″	18
10		4H267	Pier 2 Span(1-2) Ramp 10	E	20					20″							20″	20″	11
4		4H268	Pier 2 Span(1-2) Ramp 10	E	20					6′-5″							6′-5″	6′-5″	17
4		4H269	Pier 2 Span(1-2) Ramp 10	E	20					4′-6″							4′-6″	4′-6″	12
17		9H270	Pier 2 Span(1-2) Ramp 10 ✳	E	20					10′-2″							10′-2″	10′-2″	588
4		6H271	Pier 2 Span(1-2) Ramp 10	E	20					5′-6″							5′-6″	5′-6″	33
5		5H272	Pier 2 Span(1-2) Ramp 10	E	38	S		V	1	2′-8″	2′-6″				2′-5″	8″	5′-2″	5′-2″	29
			Increment = 2″							3′-4″	2′-6″				2′-5″	8″	5′-10″	5′-10″	
5		5H273	Pier 2 Span(1-2) Ramp 10	E	12	S		V	1	13″	2′-8″				12″	3″	3′-9″	3′-9″	21
			Increment = 2″							13″	3′-4″				12″	3″	4′-5″	4′-5″	
30		6U258	Pier 2 Span(1-2) Ramp 10	E	5	S				4′-10″	14″	2′-6″					8′-6″	8′-3″	372
30		6U259	Pier 2 Span(1-2) Ramp 10	E	39	S				4′-10″	14″	2′-6″					8′-6″	8′-3″	372
4		6U260	Pier 2 Span(1-2) Ramp 10	E	19	S				3′-8″	2′-6″						6′-2″	6′-1″	37
4		6U261	Pier 2 Span(1-2) Ramp 10	E	19	S				3′-8″	2′-6″						6′-2″	6′-1″	37
50		6U262	Pier 2 Span(1-2) Ramp 10	E	5	S		V	10	2′-9″	14″	2′-6″					6′-5″	6′-2″	526
			Increment = 5″							4′-5″	14″	2′-6″					8′-1″	7′-10″	
50		6U263	Pier 2 Span(1-2) Ramp 10	E	39	S		V	10	2′-9″	14″	2′-6″					6′-5″	6′-2″	526
			Increment = 5″							4′-5″	14″	2′-6″					8′-1″	7′-10″	
15		4U264	Pier 2 Span(1-2) Ramp 10	E	5	S				2′-5″	12″	2′-6″					5′-11″	5′-9″	58
15		4U265	Pier 2 Span(1-2) Ramp 10	E	39	S				2′-5″	12″	2′-6″					5′-11″	5′-9″	58
7		5V251	Pier 2 Span(1-2) Ramp 10	E	20					5′-4″							5′-4″	5′-4″	39

Note:
For bar bending diagram, see Sheet No. 113.

BILL OF REINFORCING STEEL

Detailed JUL 2009
Checked JUL 2009

Note: This drawing is not to scale. Follow dimensions.

Sheet No. 118 of 125

\\slsw00\Jobs\46440\Techprod\Bridges\MO-Approach\Drawings\Baseline Drawings\B_A6500_118-125_J6I0984B_118.dgn

18-AUG-2009 10:31

LAWRENCE ROLWES JR. NUMBER PE-2006000847 STATE OF MISSOURI PROFESSIONAL ENGINEER

8/20/09

DATE 8/20/09

ROUTE	STATE
I-70	MO

DISTRICT	SHEET NO.
6	BR118

COUNTY: St. Louis City - MO

JOB NO.: J6I0984B

CONTRACT ID.:

PROJECT NO.:

BRIDGE NO.: A6500

NO.	DESCRIPTION	DATE

MISSOURI HIGHWAYS AND TRANSPORTATION COMMISSION

105 WEST CAPITOL
JEFFERSON CITY, MO 65102
1-888-ASK-MODOT (1-888-275-6636)

HNTB
715 KIRK DRIVE
KANSAS CITY, MO 64105-1310
TELEPHONE (816) 472-1201
CERTIFICATE OF AUTHORITY NO. 001270

REV.

BILL OF REINFORCING STEEL

NO. REQ'D.	MARK NO. SIZE	MARK NO. MARK	LOCATION	EPOXY (E)	SHAPE NO.	STIRRUP (S)	SUBSTR. (X)	VARIES (V)	NO. EACH	DIMENSIONS B	C	D	E	F	H	K	NOMINAL LENGTH	ACTUAL LENGTH	WEIGHT
										FT. IN.	FT. IN.	FT. IN.	FT. IN.	FT. IN.	FT. IN.	FT. IN.	FT. IN.	FT. IN.	LBS.
			PIER 2 AHEAD DIAPHRAGM																
6		6H274	Pier 2 Span(2-3)	E	20					42′-9″							42′-9″	42′-9″	385
3		5H275	Pier 2 Span(2-3)	E	20					42′-4″							42′-4″	42′-4″	132
11		6H276	Pier 2 Span(2-3)	E	20					8′-11″							8′-11″	8′-11″	147
11		5H277	Pier 2 Span(2-3)	E	20					9′-9″							9′-9″	9′-9″	112
22		4H278	Pier 2 Span(2-3)	E	20					2′-9″							2′-9″	2′-9″	40
22		4H279	Pier 2 Span(2-3)	E	20					20″							20″	20″	24
10		4H280	Pier 2 Span(2-3)	E	20					6′-6″							6′-6″	6′-6″	43
10		4H281	Pier 2 Span(2-3)	E	20					4′-2″							4′-2″	4′-2″	28
33		9H282	Pier 2 Span(2-3)	E	20					9′-9″							9′-9″	9′-9″	1,094
10		6H283	Pier 2 Span(2-3)	E	20					5′-6″							5′-6″	5′-6″	83
5		5H284	Pier 2 Span(2-3)	E	12	S		V	1	10″	2′-7″				10″	2″	3′-5″	3′-5″	20
			Increment = 3″							10″	3′-7″				10″	2″	4′-5″	4′-5″	
5		5H285	Pier 2 Span(2-3)	E	38	S		V	1	2′-7″	16″				15″	3″	3′-11″	3′-11″	23
			Increment = 3″							3′-7″	16″				15″	3″	4′-11″	4′-11″	
66		6U266	Pier 2 Span(2-3)	E	5	S				5′-6″	14″	2′-6″					9′-2″	8′-11″	884
66		6U267	Pier 2 Span(2-3)	E	39	S				5′-6″	14″	2′-6″					9′-2″	8′-11″	884
4		6U268	Pier 2 Span(2-3)	E	19	S				4′-3″	10″						5′-1″	5′-0″	30
4		6U269	Pier 2 Span(2-3)	E	19	S				4′-3″	10″						5′-1″	5′-0″	30
110		6U270	Pier 2 Span(2-3)	E	5	S		V	22	3′-4″	14″	2′-6″					7′-0″	6′-9″	1,253
			Increment = 5″							5′-0″	14″	2′-6″					8′-8″	8′-5″	
110		6U271	Pier 2 Span(2-3)	E	39	S		V	22	3′-4″	14″	2′-6″					7′-0″	6′-9″	1,253
			Increment = 5″							5′-0″	14″	2′-6″					8′-8″	8′-5″	
11		4U272	Pier 2 Span(2-3)	E	5	S				3′-3″	12″	2′-6″					6′-9″	6′-7″	48
11		4U273	Pier 2 Span(2-3)	E	39	S				3′-3″	12″	2′-6″					6′-9″	6′-7″	48
6		5V252	Pier 2 Span(2-3)	E	20					5′-11″							5′-11″	5′-11″	37
			PIER 3 DIAPHRAGM																
22		6H350	Pier 3		20					8′-0″							8′-0″	8′-0″	264
66		4H351	Pier 3		20					8′-0″							8′-0″	8′-0″	353
22		6H352	Pier 3		20					5′-11″							5′-11″	5′-11″	196
20		5H353	Pier 3		19	S				4′-0″	16″						5′-4″	5′-3″	110
20		6H354	Pier 3		20					5′-6″							5′-6″	5′-6″	165
12		5H355	Pier 3		20					3′-7″							3′-7″	3′-7″	45
60		5H356	Pier 3		20					4′-8″							4′-8″	4′-8″	292
132		4U350	Pier 3	E	39	S				6′-7″	12″	3′-0″					10′-7″	10′-5″	919
44		6U351	Pier 3	E	39	S				6′-7″	14″	3′-0″					10′-9″	10′-6″	694
4		6U352	Pier 3		19	S				4′-9″	3′-0″						7′-9″	7′-8″	46
48		6U353	Pier 3	E	39	S				5′-7″	14″	3′-0″					9′-9″	9′-6″	685
8		5V350	Pier 3	E	20					6′-7″							6′-7″	6′-7″	55
			PIER 4 DIAPHRAGM																
22		6H450	Pier 4		20					7′-9″							7′-9″	7′-9″	256
66		4H451	Pier 4		20					7′-9″							7′-9″	7′-9″	342
22		6H452	Pier 4		20					5′-8″							5′-8″	5′-8″	187
20		5H453	Pier 4		19	S				4′-0″	16″						5′-4″	5′-3″	110
20		6H454	Pier 4		20					5′-6″							5′-6″	5′-6″	165
12		5H455	Pier 4		20					3′-7″							3′-7″	3′-7″	45
60		5H456	Pier 4		20					4′-8″							4′-8″	4′-8″	292
110		4U450	Pier 4	E	39	S				6′-7″	12″	3′-0″					10′-7″	10′-5″	765
44		6U451	Pier 4	E	39	S				6′-7″	14″	3′-0″					10′-9″	10′-6″	694
4		6U452	Pier 4		19	S				4′-9″	3′-0″						7′-9″	7′-8″	46
48		6U453	Pier 4	E	39	S				5′-7″	14″	3′-0″					9′-9″	9′-6″	685
8		5V450	Pier 4	E	20					6′-7″							6′-7″	6′-7″	55

✳ Two additional #4-H572 are included in the bar bill for testing.

BILL OF REINFORCING STEEL

NO. REQ'D.	MARK NO. SIZE	MARK NO. MARK	LOCATION	EPOXY (E)	SHAPE NO.	STIRRUP (S)	SUBSTR. (X)	VARIES (V)	NO. EACH	DIMENSIONS B	C	D	E	F	H	K	NOMINAL LENGTH	ACTUAL LENGTH	WEIGHT
										FT. IN.	FT. IN.	FT. IN.	FT. IN.	FT. IN.	FT. IN.	FT. IN.	FT. IN.	FT. IN.	LBS.
			PIER 5 BACK DIAPHRAGM																
2		6H550	Pier 5 Span(4-5)	E	20					53′-4″							53′-4″	53′-4″	160
2		6H551	Pier 5 Span(4-5)	E	20					50′-5″							50′-5″	50′-5″	151
1		5H552	Pier 5 Span(4-5)	E	20					52′-6″							52′-6″	52′-6″	55
1		5H553	Pier 5 Span(4-5)	E	20					50′-5″							50′-5″	50′-5″	53
11		6H554	Pier 5 Span(4-5)	E	20					7′-0″							7′-0″	7′-0″	116
11		5H555	Pier 5 Span(4-5)	E	20					7′-11″							7′-11″	7′-11″	91
33		9H556	Pier 5 Span(4-5)	E	20					7′-11″							7′-11″	7′-11″	888
22		4H557	Pier 5 Span(4-5)	E	20					2′-5″							2′-5″	2′-5″	36
22		4H558	Pier 5 Span(4-5)	E	20					18″							18″	18″	22
10		4H559	Pier 5 Span(4-5)	E	20					5′-8″							5′-8″	5′-8″	38
10		4H560	Pier 5 Span(4-5)	E	20					3′-10″							3′-10″	3′-10″	26
10		5H561	Pier 5 Span(4-5)	E	19	S		V	2	2′-9″	14″						3′-11″	3′-10″	43
			Increment = 2″							3′-5″	14″						4′-7″	4′-6″	
10		6H562	Pier 5 Span(4-5)	E	20					5′-6″							5′-6″	5′-6″	83
66		6U550	Pier 5 Span(4-5)	E	5	S				5′-6″	14″	22″					8′-6″	8′-3″	818
66		6U551	Pier 5 Span(4-5)	E	39	S				5′-6″	14″	22″					8′-6″	8′-3″	818
8		6U552	Pier 5 Span(4-5)	E	19	S				4′-6″	14″						5′-8″	5′-7″	67
88		6U553	Pier 5 Span(4-5)	E	5	S		V	22	3′-6″	14″	22″					6′-6″	6′-3″	925
			Increment = 6″							5′-0″	14″	22″					8′-0″	7′-9″	
88		6U554	Pier 5 Span(4-5)	E	39	S		V	22	3′-6″	14″	22″					6′-6″	6′-3″	925
			Increment = 6″							5′-0″	14″	22″					8′-0″	7′-9″	
11		4U555	Pier 5 Span(4-5)	E	5	S				3′-4″	14″	22″					6′-4″	6′-2″	45
11		4U556	Pier 5 Span(4-5)	E	39	S				3′-4″	14″	22″					6′-4″	6′-2″	45
6		5V550	Pier 5 Span(4-5)	E	20					5′-10″							5′-10″	5′-10″	37
			PIER 5 AHEAD DIAPHRAGM																
2		6H563	Pier 5 Span(5-6)	E	20					52′-1″							52′-1″	52′-1″	156
2		6H564	Pier 5 Span(5-6)	E	20					51′-3″							51′-3″	51′-3″	154
1		5H565	Pier 5 Span(5-6)	E	20					51′-5″							51′-5″	51′-5″	54
1		5H566	Pier 5 Span(5-6)	E	20					51′-3″							51′-3″	51′-3″	53
7		6H567	Pier 5 Span(5-6)	E	20					11′-11″							11′-11″	11′-11″	125
7		5H568	Pier 5 Span(5-6)	E	20					12′-11″							12′-11″	12′-11″	94
21		9H569	Pier 5 Span(5-6)	E	20					12′-11″							12′-11″	12′-11″	922
14		4H570	Pier 5 Span(5-6)	E	20					2′-9″							2′-9″	2′-9″	26
14		4H571	Pier 5 Span(5-6)	E	20					19″							19″	19″	15
8		4H572	Pier 5 Span(5-6) ✳	E	20					6′-6″							6′-6″	6′-6″	35
6		4H573	Pier 5 Span(5-6)	E	20					4′-3″							4′-3″	4′-3″	17
10		5H574	Pier 5 Span(5-6)	E	19	S		V	2	2′-9″	14″						3′-11″	3′-10″	43
			Increment = 2″							3′-5″	14″						4′-7″	4′-6″	
6		6H575	Pier 5 Span(5-6)	E	20					5′-6″							5′-6″	5′-6″	50
42		6U557	Pier 5 Span(5-6)	E	5	S				5′-9″	14″	22″					8′-9″	8′-6″	536
42		6U558	Pier 5 Span(5-6)	E	39	S				5′-9″	14″	22″					8′-9″	8′-6″	536
8		6U559	Pier 5 Span(5-6)	E	19	S				4′-6″	14″						5′-8″	5′-7″	67
56		6U560	Pier 5 Span(5-6)	E	5	S		V	14	3′-9″	14″	22″					6′-9″	6′-6″	610
			Increment = 6″							5′-3″	14″	22″					8′-3″	8′-0″	
56		6U561	Pier 5 Span(5-6)	E	39	S		V	14	3′-9″	14″	22″					6′-9″	6′-6″	610
			Increment = 6″							5′-3″	14″	22″					8′-3″	8′-0″	
56		4U562	Pier 5 Span(5-6)	E	5	S				3′-7″	14″	22″					6′-7″	6′-5″	240
56		4U563	Pier 5 Span(5-6)	E	39	S				3′-7″	14″	22″					6′-7″	6′-5″	240
6		5V551	Pier 5 Span(5-6)	E	20					6′-3″							6′-3″	6′-3″	39

Note:
For bar bending diagram, see Sheet No. 113.

BILL OF REINFORCING STEEL

Detailed JUL 2009
Checked JUL 2009

Note: This drawing is not to scale. Follow dimensions.

Sheet No. 119 of 125

\\slsw00\Jobs\46440\Techprod\Bridges\MO-Approach\Drawings\Baseline Drawings\B_A6500_119-125_J6I0984B_119.dgn

18-AUG-2009 10:31

LAWRENCE D. ROLWES, JR. NUMBER 2006002847 REGISTERED PROFESSIONAL ENGINEER STATE OF MISSOURI

8/20/09

DATE 8/20/09

ROUTE	STATE
I-70	MO
DISTRICT 6	SHEET NO. BR119

COUNTY St. Louis City - MO

JOB NO. J6I0984B

CONTRACT ID.

PROJECT NO.

BRIDGE NO. A6500

NO.	DESCRIPTION	DATE

MISSOURI HIGHWAYS AND TRANSPORTATION COMMISSION

105 WEST CAPITOL
JEFFERSON CITY, MO 65102
1-888-ASK-MODOT (1-888-275-6636)

HNTB
715 KIRK DRIVE
KANSAS CITY, MO 64105-1310
TELEPHONE (816) 472-1201
CERTIFICATE OF AUTHORITY NO. 001270

REV.

BILL OF REINFORCING STEEL

NO. REQ'D.	MARK NO. SIZE	MARK NO. MARK	LOCATION	EPOXY (E)	SHAPE NO.	STIRRUP (S)	SUBSTR. (X)	VARIES (V)	NO. EACH	DIMENSIONS B FT. IN.	C FT. IN.	D FT. IN.	E FT. IN.	F FT. IN.	H FT. IN.	K FT. IN.	NOMINAL LENGTH FT. IN.	ACTUAL LENGTH FT. IN.	WEIGHT LBS.
			PIER 6 DIAPHRAGM																
14	6H650		Pier 6		20					11′-3″							11′-3″	11′-3″	237
42	4H651		Pier 6		20					11′-3″							11′-3″	11′-3″	316
14	6H652		Pier 6		20					9′-2″							9′-2″	9′-2″	193
20	5H653		Pier 6		19	S				4′-0″	16″						5′-4″	5′-3″	110
12	6H654		Pier 6		20					5′-6″							5′-6″	5′-6″	99
12	5H655		Pier 6		20					3′-7″							3′-7″	3′-7″	45
36	5H656		Pier 6		20					4′-8″							4′-8″	4′-8″	175
126	4U650		Pier 6	E	39	S				6′-7″	12″	3′-0″					10′-7″	10′-5″	877
28	6U651		Pier 6	E	39	S				6′-7″	14″	3′-0″					10′-9″	10′-6″	442
4	6U652		Pier 6		19	S				4′-9″	3′-0″						7′-9″	7′-8″	46
32	6U653		Pier 6	E	39	S				5′-7″	14″	3′-0″					9′-9″	9′-6″	457
8	5V650		Pier 6	E	20					6′-7″							6′-7″	6′-7″	55
			PIER 7 DIAPHRAGM																
14	6H750		Pier 7		20					10′-5″							10′-5″	10′-5″	219
42	4H751		Pier 7		20					10′-5″							10′-5″	10′-5″	292
14	6H752		Pier 7		20					8′-4″							8′-4″	8′-4″	175
20	5H753		Pier 7		19	S				4′-0″	16″						5′-4″	5′-3″	110
12	6H754		Pier 7		20					5′-6″							5′-6″	5′-6″	99
12	5H755		Pier 7		20					3′-7″							3′-7″	3′-7″	45
36	6H756		Pier 7		20					4′-8″							4′-8″	4′-8″	252
112	4U750		Pier 7	E	39	S				6′-7″	12″	3′-0″					10′-7″	10′-5″	779
28	6U751		Pier 7	E	39	S				6′-7″	14″	3′-0″					10′-9″	10′-6″	442
4	6U752		Pier 7		19	S				4′-9″	3′-0″						7′-9″	7′-8″	46
32	6U753		Pier 7	E	39	S				5′-7″	14″	3′-0″					9′-9″	9′-6″	457
8	5V750		Pier 7	E	20					6′-7″							6′-7″	6′-7″	55
			PIER 8 DIAPHRAGM																
14	6H850		Pier 8		20					10′-2″							10′-2″	10′-2″	214
42	4H851		Pier 8		20					10′-2″							10′-2″	10′-2″	285
14	6H852		Pier 8		20					8′-1″							8′-1″	8′-1″	170
20	5H853		Pier 8		19	S				4′-0″	16″						5′-4″	5′-3″	110
12	6H854		Pier 8		20					5′-6″							5′-6″	5′-6″	99
12	5H855		Pier 8		20					3′-7″							3′-7″	3′-7″	45
36	5H856		Pier 8		20					4′-8″							4′-8″	4′-8″	175
112	4U850		Pier 8	E	39	S				6′-7″	12″	3′-6″					11′-1″	10′-11″	817
28	6U851		Pier 8	E	39	S				6′-7″	14″	3′-6″					11′-3″	11′-0″	463
4	6U852		Pier 8		19	S				4′-9″	3′-0″						7′-9″	7′-8″	46
32	6U853		Pier 8	E	39	S				5′-7″	14″	3′-0″					9′-9″	9′-6″	457
8	5V850		Pier 8	E	20					6′-7″							6′-7″	6′-7″	55
			PIER 9 DIAPHRAGM																
14	6H950		Pier 9		20					9′-7″							9′-7″	9′-7″	202
42	4H951		Pier 9		20					9′-7″							9′-7″	9′-7″	269
14	6H952		Pier 9		20					7′-6″							7′-6″	7′-6″	158
20	5H953		Pier 9		19	S				4′-0″	16″						5′-4″	5′-3″	110
12	6H954		Pier 9		20					5′-6″							5′-6″	5′-6″	99
12	5H955		Pier 9		20					3′-7″							3′-7″	3′-7″	45
36	5H956		Pier 9		20					4′-8″							4′-8″	4′-8″	175
98	4U950		Pier 9	E	39	S				6′-7″	12″	3′-0″					10′-7″	10′-5″	682
28	6U951		Pier 9	E	39	S				6′-7″	14″	3′-0″					10′-9″	10′-6″	442
4	6U952		Pier 9		19	S				4′-9″	3′-0″						7′-9″	7′-8″	46
32	6U953		Pier 9	E	39	S				5′-7″	14″	3′-0″					9′-9″	9′-6″	457
8	5V950		Pier 9	E	20					6′-7″							6′-7″	6′-7″	55

BILL OF REINFORCING STEEL

NO. REQ'D.	MARK NO. SIZE	MARK NO. MARK	LOCATION	EPOXY (E)	SHAPE NO.	STIRRUP (S)	SUBSTR. (X)	VARIES (V)	NO. EACH	DIMENSIONS B FT. IN.	C FT. IN.	D FT. IN.	E FT. IN.	F FT. IN.	H FT. IN.	K FT. IN.	NOMINAL LENGTH FT. IN.	ACTUAL LENGTH FT. IN.	WEIGHT LBS.
			PIER 10 BACK DIAPHRAGM																
2	6H1000		Pier 10 Span(9-10)	E	20					42′-5″							42′-5″	42′-5″	127
2	6H1001		Pier 10 Span(9-10)	E	20					41′-5″							41′-5″	41′-5″	124
1	5H1002		Pier 10 Span(9-10)	E	20					41′-10″							41′-10″	41′-10″	44
1	5H1003		Pier 10 Span(9-10)	E	20					41′-5″							41′-5″	41′-5″	43
7	6H1004		Pier 10 Span(9-10)	E	20					8′-9″							8′-9″	8′-9″	92
7	5H1005		Pier 10 Span(9-10)	E	20					10′-2″							10′-2″	10′-2″	74
21	9H1006		Pier 10 Span(9-10)	E	20					10′-2″							10′-2″	10′-2″	726
14	4H1007		Pier 10 Span(9-10)	E	20					2′-9″							2′-9″	2′-9″	26
14	4H1008		Pier 10 Span(9-10)	E	20					21″							21″	21″	16
6	4H1009		Pier 10 Span(9-10)	E	20					6′-3″							6′-3″	6′-3″	25
6	4H1010		Pier 10 Span(9-10)	E	20					4′-2″							4′-2″	4′-2″	17
10	5H1011		Pier 10 Span(9-10)	E	19	S		V	2	2′-9″	2′-9″						5′-6″	5′-5″	60
			Increment = 2″							3′-5″	2′-9″						6′-2″	6′-1″	
6	6H1012		Pier 10 Span(9-10)	E	20					5′-6″							5′-6″	5′-6″	50
84	6U1000		Pier 10 Span(9-10)	E	5	S				5′-0″	2′-9″	2′-9″					10′-6″	10′-3″	1,293
8	6U1001		Pier 10 Span(9-10)	E	5	S				5′-0″	2′-9″	2′-9″					10′-6″	10′-3″	123
112	6U1002		Pier 10 Span(9-10)	E	5	S		V	28	3′-4″	2′-9″	2′-9″					8′-10″	8′-7″	1,549
			Increment = 5″							4′-7″	2′-9″	2′-9″					10′-1″	9′-10″	
56	4U1003		Pier 10 Span(9-10)	E	5	S				2′-9″	2′-9″	2′-9″					8′-3″	8′-1″	302
8	5V1000		Pier 10 Span(9-10)	E	20					5′-7″							5′-7″	5′-7″	47
			BARRIER CURB																
2816	5R100		Barrier Curb (Type D)	E	19	S				3′-4″	5″						3′-9″	3′-8″	10,769
2816	5R101		Barrier Curb (Type D)	E	12	S				3′-4″	5″				3′-3½″	7½″	3′-9″	3′-9″	11,014
2816	5R102		Barrier Curb (Type D)	E	19	S				21″	9″						2′-6″	2′-5″	7,098
2816	5R103		Barrier Curb (Type D)	E	27	S				4¾″	16¾″	12″	9″		2¾″	14½″	3′-7″	3′-4″	9,790
84	5R104		Barrier Curb (Type D)	E	20					17′-1″							17′-1″	17′-1″	1,497
72	5R105		Barrier Curb (Type D)	E	20					18′-7″							18′-7″	18′-7″	1,396
96	5R106		Barrier Curb (Type D)	E	20					17′-8″							17′-8″	17′-8″	1,769
72	5R107		Barrier Curb (Type D)	E	20					17′-11″							17′-11″	17′-11″	1,345
72	5R108		Barrier Curb (Type D)	E	20					18′-9″							18′-9″	18′-9″	1,408
84	5R109		Barrier Curb (Type D)	E	20					18′-0″							18′-0″	18′-0″	1,577
84	5R110		Barrier Curb (Type D)	E	20					19′-2″							19′-2″	19′-2″	1,679
72	5R111		Barrier Curb (Type D)	E	20					19′-6″							19′-6″	19′-6″	1,464
84	5R112		Barrier Curb (Type D)	E	20					19′-7″							19′-7″	19′-7″	1,716
72	5R113		Barrier Curb (Type D)	E	20					18′-0″							18′-0″	18′-0″	1,352
60	5R114		Barrier Curb (Type D)	E	20					18′-8″							18′-8″	18′-8″	1,168
84	5R115		Barrier Curb (Type D)	E	20					17′-9″							17′-9″	17′-9″	1,555
96	5R116		Barrier Curb (Type D)	E	20					17′-11″							17′-11″	17′-11″	1,794
96	5R117		Barrier Curb (Type D)	E	20					17′-8″							17′-8″	17′-8″	1,769
72	5R118		Barrier Curb (Type D)	E	20					17′-11″							17′-11″	17′-11″	1,345
72	5R119		Barrier Curb (Type D)	E	20					18′-9″							18′-9″	18′-9″	1,408
84	5R120		Barrier Curb (Type D)	E	20					17′-10″							17′-10″	17′-10″	1,562
72	5R121		Barrier Curb (Type D)	E	20					19′-5″							19′-5″	19′-5″	1,458
84	5R122		Barrier Curb (Type D)	E	20					18′-1″							18′-1″	18′-1″	1,584
84	5R123		Barrier Curb (Type D)	E	20					19′-7″							19′-7″	19′-7″	1,716
72	5R124		Barrier Curb (Type D)	E	20					17′-5″							17′-5″	17′-5″	1,308
60	5R125		Barrier Curb (Type D)	E	20					18′-5″							18′-5″	18′-5″	1,153
8	5C100		Slip Form B.C. (Type D)	E	20					10′-0″							10′-0″	10′-0″	83
288	5C101		Slip Form B.C. (Type D)	E	20					17′-5″							17′-5″	17′-5″	5,232

Note:
For bar bending diagram, see Sheet No. 113.

BILL OF REINFORCING STEEL

Detailed JUL 2009
Checked JUL 2009

Note: This drawing is not to scale. Follow dimensions.

Sheet No. 120 of 125

\\slsw00\Jobs\46440\Techprod\Bridges\MO-Approach\Drawings\Baseline Drawings\B_A6500_120-125_J6I0984B_120.dgn

18-AUG-2009 10:31

STATE OF MISSOURI
LAWRENCE D. ROLWES
NUMBER 2006002847
REGISTERED PROFESSIONAL ENGINEER
8/20/09

DATE 8/20/09
ROUTE I-70
STATE MO
DISTRICT 6
SHEET NO. BR120
COUNTY St. Louis City - MO
JOB NO. J6I0984B
CONTRACT ID.
PROJECT NO.
BRIDGE NO. A6500

DESCRIPTION
DATE

MISSOURI HIGHWAYS AND TRANSPORTATION COMMISSION
105 WEST CAPITOL
JEFFERSON CITY, MO 65102
1-888-ASK-MODOT (1-888-275-6636)

HNTB
715 KIRK DRIVE
KANSAS CITY, MO 64105-1310
TELEPHONE (816) 472-1201
CERTIFICATE OF AUTHORITY NO. 001270

REV.

BILL OF REINFORCING STEEL

NO. REQ'D.	MARK NO. SIZE	MARK NO. MARK	LOCATION	EPOXY (E)	SHAPE NO.	STIRRUP (S)	SUBSTR. (X)	VARIES (V)	NO. EACH	DIMENSIONS B	C	D	E	F	H	K	NOMINAL LENGTH	ACTUAL LENGTH	WEIGHT
										FT. IN.	FT. IN.	FT. IN.	FT. IN.	FT. IN.	FT. IN.	FT. IN.	FT. IN.	FT. IN.	LBS.
			BARRIER CURB (CONT.)																
1898	5	M100	Median Barrier Curb (Type C)	E	12	S				3′-4″	5″				3′-3½″	7½″	3′-9″	3′-9″	7,424
96	5	M101	Median Barrier Curb (Type C)	E	20					17′-8″							17′-8″	17′-8″	1,769
72	5	M102	Median Barrier Curb (Type C)	E	20					17′-11″							17′-11″	17′-11″	1,345
72	5	M103	Median Barrier Curb (Type C)	E	20					18′-9″							18′-9″	18′-9″	1,408
84	5	M104	Median Barrier Curb (Type C)	E	20					17′-11″							17′-11″	17′-11″	1,570
84	5	M105	Median Barrier Curb (Type C)	E	20					17′-11″							17′-11″	17′-11″	1,570
84	5	M106	Median Barrier Curb (Type C)	E	20					17′-4″							17′-4″	17′-4″	1,519
84	5	M107	Median Barrier Curb (Type C)	E	20					19′-7″							19′-7″	19′-7″	1,716
12	5	M108	Median Barrier Curb (Type C)	E	20					16′-2″							16′-2″	16′-2″	202
38	5	M110	Med. B.C. Trans. (Type C)	E	12	S		V	2	3′-4″	5″				3′-3½″	7½″	3′-9″	3′-9″	168
			Increment = 3/8″							3′-4″	16½″				3′-3½″	7½″	4′-9″	4′-9″	
12	5	M111	Med. B.C. Trans. (Type C)	E	20					17′-5″							17′-5″	17′-5″	218
196	5	C102	Slip Form B.C. (Type C)	E	20					16′-6″							16′-6″	16′-6″	3,373
6	5	K101	Barrier Curb (Type D)	E	19	S				2′-5″	6″						2′-11″	2′-10″	18
6	5	K102	Barrier Curb (Type D)	E	25	S				10″	19″	6″			18⅝″	3½″	2′-11″	2′-10″	18
1	5	K103	Barrier Curb (Type D)	E	19	S				2′-9″	6″						3′-3″	3′-2″	3
1	5	K104	Barrier Curb (Type D)	E	12	S				2′-9″	6″				2′-8⅜″	6⅛″	3′-3″	3′-3″	3
4	5	K105	Barrier Curb (Type D)	E	19	S				2′-10″	6″						3′-4″	3′-3″	14
4	5	K106	Barrier Curb (Type D)	E	12	S				2′-10″	6″				2′-9⅜″	6⅜″	3′-4″	3′-4″	14
3	5	K107	Barrier Curb (Type D)	E	19	S				2′-11″	5″						3′-4″	3′-3″	10
3	5	K108	Barrier Curb (Type D)	E	12	S				2′-11″	5″				2′-10⅜″	6½″	3′-4″	3′-4″	10
18	5	K109	Barrier Curb (Type D)	E	19	S				3′-4″	5″						3′-9″	3′-8″	69
18	5	K110	Barrier Curb (Type D)	E	12	S				3′-4″	5″				3′-3½″	7½″	3′-9″	3′-9″	70
6	5	K111	Barrier Curb (Type D)	E	40	S				9⅜″	5⅜″	3′-6″	3′-0¾″		5¼″	1″	7′-10″	7′-7″	47
26	5	K112	Barrier Curb (Type D)	E	40	S				8⅞″	16¾″	3′-6″	2′-1½″		16½″	3⅛″	7′-10″	7′-6″	203
10	5	K114	Barrier Curb (Type D)	E	20					24′-7″							24′-7″	24′-7″	256
2	5	K115	Barrier Curb (Type D)	E	20					23′-9″							23′-9″	23′-9″	50
2	5	K116	Barrier Curb (Type D)	E	20					20′-9″							20′-9″	20′-9″	43
2	5	K117	Barrier Curb (Type D)	E	20					17′-9″							17′-9″	17′-9″	37
6	5	K120	Barrier Curb (Type D)	E	19	S				2′-5″	6″						2′-11″	2′-10″	18
6	5	K121	Barrier Curb (Type D)	E	25	S				10″	19″	6″			18⅝″	3½″	2′-11″	2′-10″	18
1	5	K122	Barrier Curb (Type D)	E	19	S				2′-9″	6″						3′-3″	3′-2″	3
1	5	K123	Barrier Curb (Type D)	E	12	S				2′-9″	6″				2′-8⅜″	6⅛″	3′-3″	3′-3″	3
4	5	K124	Barrier Curb (Type D)	E	19	S				2′-10″	6″						3′-4″	3′-3″	14
4	5	K125	Barrier Curb (Type D)	E	12	S				2′-10″	6″				2′-9⅜″	6⅜″	3′-4″	3′-4″	14
3	5	K126	Barrier Curb (Type D)	E	19	S				2′-11″	5″						3′-4″	3′-3″	10
3	5	K127	Barrier Curb (Type D)	E	12	S				2′-11″	5″				2′-10⅜″	6½″	3′-4″	3′-4″	10
11	5	K128	Barrier Curb (Type D)	E	19	S				3′-4″	5″						3′-9″	3′-8″	42
11	5	K129	Barrier Curb (Type D)	E	12	S				3′-4″	5″				3′-3½″	7½″	3′-9″	3′-9″	43
6	5	K130	Barrier Curb (Type D)	E	40	S				9⅜″	5⅜″	3′-6″	3′-0¾″		5¼″	1″	7′-10″	7′-7″	47
19	5	K131	Barrier Curb (Type D)	E	19	S				23″	8″						2′-7″	2′-6″	50
19	5	K132	Barrier Curb (Type D)	E	27	S				4¾″	16¾″	12″	8″		3⅛″	16½″	3′-6″	3′-3″	64
10	5	K133	Barrier Curb (Type D)	E	20					18′-0″							18′-0″	18′-0″	188
2	5	K134	Barrier Curb (Type D)	E	20					17′-2″							17′-2″	17′-2″	36
2	5	K135	Barrier Curb (Type D)	E	20					14′-2″							14′-2″	14′-2″	30
2	5	K136	Barrier Curb (Type D)	E	20					11′-2″							11′-2″	11′-2″	23

✱ Two additional #5-K236 are included in the bar bill for testing.

BILL OF REINFORCING STEEL

NO. REQ'D.	MARK NO. SIZE	MARK NO. MARK	LOCATION	EPOXY (E)	SHAPE NO.	STIRRUP (S)	SUBSTR. (X)	VARIES (V)	NO. EACH	DIMENSIONS B	C	D	E	F	H	K	NOMINAL LENGTH	ACTUAL LENGTH	WEIGHT
										FT. IN.	FT. IN.	FT. IN.	FT. IN.	FT. IN.	FT. IN.	FT. IN.	FT. IN.	FT. IN.	LBS.
			BARRIER CURB (CONT.)																
6	5	K220	Barrier Curb (Type D)	E	19	S				2′-5″	6″						2′-11″	2′-10″	18
6	5	K221	Barrier Curb (Type D)	E	25	S				10″	19″	6″			18⅝″	3½″	2′-11″	2′-10″	18
1	5	K222	Barrier Curb (Type D)	E	19	S				2′-9″	6″						3′-3″	3′-2″	3
1	5	K223	Barrier Curb (Type D)	E	12	S				2′-9″	6″				2′-8⅜″	6⅛″	3′-3″	3′-3″	3
4	5	K224	Barrier Curb (Type D)	E	19	S				2′-10″	6″						3′-4″	3′-3″	14
4	5	K225	Barrier Curb (Type D)	E	12	S				2′-10″	6″				2′-9⅜″	6⅜″	3′-4″	3′-4″	14
3	5	K226	Barrier Curb (Type D)	E	19	S				2′-11″	5″						3′-4″	3′-3″	10
3	5	K227	Barrier Curb (Type D)	E	12	S				2′-11″	5″				2′-10⅜″	6½″	3′-4″	3′-4″	10
11	5	K228	Barrier Curb (Type D)	E	19	S				3′-4″	5″						3′-9″	3′-8″	42
11	5	K229	Barrier Curb (Type D)	E	12	S				3′-4″	5″				3′-3½″	7½″	3′-9″	3′-9″	43
6	5	K230	Barrier Curb (Type D)	E	40	S				9⅜″	5⅜″	3′-6″	3′-0¾″		5¼″	1″	7′-10″	7′-7″	47
19	5	K231	Barrier Curb (Type D)	E	19	S				23″	8″						2′-7″	2′-6″	50
19	5	K232	Barrier Curb (Type D)	E	27	S				4¾″	16¾″	12″	8″		3⅛″	16½″	3′-6″	3′-3″	64
10	5	K233	Barrier Curb (Type D)	E	20					17′-5″							17′-5″	17′-5″	182
2	5	K234	Barrier Curb (Type D)	E	20					16′-7″							16′-7″	16′-7″	35
2	5	K235	Barrier Curb (Type D)	E	20					13′-7″							13′-7″	13′-7″	28
4	5	K236	Barrier Curb (Type D) ✱	E	20					10′-7″							10′-7″	10′-7″	44
6	5	K201	Barrier Curb (Type D)	E	19	S				2′-5″	6″						2′-11″	2′-10″	18
6	5	K202	Barrier Curb (Type D)	E	25	S				10″	19″	6″			18⅝″	3½″	2′-11″	2′-10″	18
1	5	K203	Barrier Curb (Type D)	E	19	S				2′-9″	6″						3′-3″	3′-2″	3
1	5	K204	Barrier Curb (Type D)	E	12	S				2′-9″	6″				2′-8⅜″	6⅛″	3′-3″	3′-3″	3
4	5	K205	Barrier Curb (Type D)	E	19	S				2′-10″	6″						3′-4″	3′-3″	14
4	5	K206	Barrier Curb (Type D)	E	12	S				2′-10″	6″				2′-9⅜″	6⅜″	3′-4″	3′-4″	14
3	5	K207	Barrier Curb (Type D)	E	19	S				2′-11″	5″						3′-4″	3′-3″	10
3	5	K208	Barrier Curb (Type D)	E	12	S				2′-11″	5″				2′-10⅜″	6½″	3′-4″	3′-4″	10
18	5	K209	Barrier Curb (Type D)	E	19	S				3′-4″	5″						3′-9″	3′-8″	69
18	5	K210	Barrier Curb (Type D)	E	12	S				3′-4″	5″				3′-3½″	7½″	3′-9″	3′-9″	70
6	5	K211	Barrier Curb (Type D)	E	40	S				9⅜″	5⅜″	3′-6″	3′-0¾″		5¼″	1″	7′-10″	7′-7″	47
25	5	K212	Barrier Curb (Type D)	E	40	S				8⅞″	16¾″	3′-6″	2′-1½″		16½″	3⅛″	7′-10″	7′-6″	196
1	5	K213	Barrier Curb (Type D)	E	27	S				4¾″	16¾″	12″	10″		3⅛″	16½″	3′-8″	3′-5″	4
10	5	K214	Barrier Curb (Type D)	E	20					24′-9″							24′-9″	24′-9″	258
2	5	K215	Barrier Curb (Type D)	E	20					23′-11″							23′-11″	23′-11″	50
2	5	K216	Barrier Curb (Type D)	E	20					20′-11″							20′-11″	20′-11″	44
2	5	K217	Barrier Curb (Type D)	E	20					17′-11″							17′-11″	17′-11″	37
1	5	K218	Barrier Curb (Type D)	E	19	S				23″	8″						2′-7″	2′-6″	3
42	5	L100	Light Pole Mount	E	11	S					3′-2″	14″	3′-2″	6″			8′-0″	7′-6″	329
28	5	L101	Light Pole Mount	E	11	S					3′-2″	7¼″	3′-2″	6″			7′-6″	6′-11″	202
98	5	L102	Light Pole Mount	E	53	S				22½″	14½″						7′-1″	6′-10″	698
98	5	L103	Light Pole Mount	E	67	S				18″	20½″	22½″			14½″	14½″	8′-4″	7′-11″	809
84	6	L104	Light Pole Mount	E	20					4′-0″							4′-0″	4′-0″	505

Note:
For bar bending diagram, see Sheet No. 113.

BILL OF REINFORCING STEEL

Detailed JUL 2009
Checked JUL 2009

Note: This drawing is not to scale. Follow dimensions.

Sheet No. 121 of 125

\\slsw00\Jobs\46440\Techprod\Bridges\MO-Approach\Drawings\Baseline Drawings\B_A6500_121-125_J610984B_121.dgn

18-AUG-2009 10:31

LAWRENCE D. ROLWES — NUMBER PE-2006002847 — STATE OF MISSOURI — PROFESSIONAL ENGINEER

8/20/09

DATE 8/20/09

ROUTE	STATE
I-70	MO

DISTRICT	SHEET NO.
6	BR121

COUNTY: St. Louis City - MO

JOB NO.: J610984B

CONTRACT ID.:

PROJECT NO.:

BRIDGE NO.: A6500

NO.	DESCRIPTION	DATE

MISSOURI HIGHWAYS AND TRANSPORTATION COMMISSION

MoDOT

105 WEST CAPITOL
JEFFERSON CITY, MO 65102
1-888-ASK-MODOT (1-888-275-6636)

HNTB
715 KIRK DRIVE
KANSAS CITY, MO 64105-1310
TELEPHONE (816) 472-1201
CERTIFICATE OF AUTHORITY NO. 001270

REV.

BILL OF REINFORCING STEEL

NO. REQ'D.	MARK NO. SIZE	MARK NO. MARK	LOCATION	EPOXY (E)	SHAPE NO.	STIRRUP (S)	SUBSTR. (X)	VARIES (V)	NO. EACH	DIMENSIONS B FT. IN.	C FT. IN.	D FT. IN.	E FT. IN.	F FT. IN.	H FT. IN.	K FT. IN.	NOMINAL LENGTH FT. IN.	ACTUAL LENGTH FT. IN.	WEIGHT LBS.
			TOTALS																
	W5			E															403
	4																		5,224
	4			E															10,650
	5																		163,321
	5			E															135,024
	6																		48,157
	6			E															581,970
	7																		18,773
	7			E															6,720
	8																		5,216
	8			E															213,796
	9			E															4,670
	10																		70,392
	10			E															39,737
	11																		512,910
			SLAB ON CONCRETE NU-GIRDER																
	4																		2,901
	4			E															7,610
	5																		3,889
	5			E															28,642
	6																		12,894
	6			E															558,668
	8																		5,216
	8			E															213,796
	9			E															4,670
			REINFORCING STEEL (BRIDGES)																
	W5			E															403
	4																		2,323
	4			E															3,040
	5																		159,432
	5			E															2,082
	6																		35,263
	6			E															22,797
	7																		18,773
	7			E															6,720
	10																		70,392
	10			E															39,737
	11																		512,910
			BARRIER CURB																
	5			E															95,612
	6			E															505
			SLIP FORM OPTION																
	5			E															8,688

BILL OF REINFORCING STEEL

NO. REQ'D.	MARK NO. SIZE	MARK NO. MARK	LOCATION	EPOXY (E)	SHAPE NO.	STIRRUP (S)	SUBSTR. (X)	VARIES (V)	NO. EACH	DIMENSIONS B FT. IN.	C FT. IN.	D FT. IN.	E FT. IN.	F FT. IN.	H FT. IN.	K FT. IN.	NOMINAL LENGTH FT. IN.	ACTUAL LENGTH FT. IN.	WEIGHT LBS.

Note:
For bar bending diagram, see Sheet No. 113.

BILL OF REINFORCING STEEL

Detailed JUL 2009
Checked JUL 2009

Note: This drawing is not to scale. Follow dimensions.

Sheet No. 122 of 125

\\slsw00\Jobs\46440\Techprod\Bridges\MO-Approach\Drawings\Baseline Drawings\B_A6500_122-125_J6I0984B_122.dgn 18-AUG-2009 10:31

LAWRENCE R. ROLWES JR. NUMBER PE-2006012847 STATE OF MISSOURI PROFESSIONAL ENGINEER

3/20/09
DATE
8/20/09

ROUTE	STATE
I-70	MO
DISTRICT	SHEET NO.
6	BR122

COUNTY
St. Louis City - MO

JOB NO.
J6I0984B

CONTRACT ID.

PROJECT NO.

BRIDGE NO.
A6500

DESCRIPTION	DATE

MISSOURI HIGHWAYS AND TRANSPORTATION COMMISSION
105 WEST CAPITOL
JEFFERSON CITY, MO 65102
1-888-ASK-MODOT (1-888-275-6636)

HNTB
715 KIRK DRIVE
KANSAS CITY, MO 64105-1310
TELEPHONE (816) 472-1201
CERTIFICATE OF AUTHORITY
NO. 001270

REV.

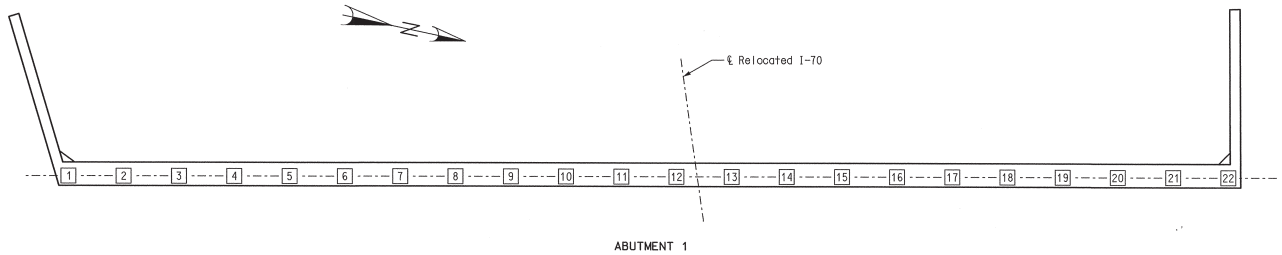

ABUTMENT 1

PART PLAN SHOWING PILE NUMBERING FOR RECORDING "AS BUILT PILE" DATA

"AS BUILT PILE" DATA

PILE NO.	LENGTH IN PLACE (FT.)	NOMINAL PILE AXIAL COMPRESSION RESISTANCE (KIPS)	REMARKS
			ABUTMENT 1
1			
2			
3			
4			
5			
6			
7			
8			
9			
10			
11			

"AS BUILT PILE" DATA

PILE NO.	LENGTH IN PLACE (FT.)	NOMINAL PILE AXIAL COMPRESSION RESISTANCE (KIPS)	REMARKS
			ABUTMENT 1 (CONT.)
12			
13			
14			
15			
16			
17			
18			
19			
20			
21			
22			

"AS BUILT PILE" DATA

PILE NO.	LENGTH IN PLACE (FT.)	NOMINAL PILE AXIAL COMPRESSION RESISTANCE (KIPS)	REMARKS

Note: Indicate in Remarks column:
A.) If piling were driven to practical refusal.
B.) Pile batter if other than shown on abutment detail sheet.
C.) Type of piling used.

NOTE: THIS SHEET TO BE COMPLETED BY MoDOT CONSTRUCTION PERSONNEL.

AS BUILT PILE DATA

Detailed JUL 2009
Checked JUL 2009

Note: This drawing is not to scale. Follow dimensions.

STATE OF MISSOURI
LAWRENCE E. ROLNES, JR.
NUMBER
PE-2006002847
REGISTERED PROFESSIONAL ENGINEER

8/20/09

DATE	8/20/09
ROUTE	I-70
STATE	MO
DISTRICT	6
SHEET NO.	BR123
COUNTY	St. Louis City - MO
JOB NO.	J6I0984B
CONTRACT ID.	
PROJECT NO.	
BRIDGE NO.	A6500

DESCRIPTION

DATE

MISSOURI HIGHWAYS AND TRANSPORTATION COMMISSION

MoDOT

105 WEST CAPITOL
JEFFERSON CITY, MO 65102
1-888-ASK-MODOT (1-888-275-6636)

HNTB
715 KIRK DRIVE
KANSAS CITY, MO 64105-1310
TELEPHONE (816) 472-1201
CERTIFICATE OF AUTHORITY
NO. 001270

REV.

\\slsw00\Jobs\46440\Techprod\Bridges\MO-Approach\Drawings\Baseline Drawings\B_A6500_123-125_J6I0984B_123.dgn 18-AUG-2009 10:31

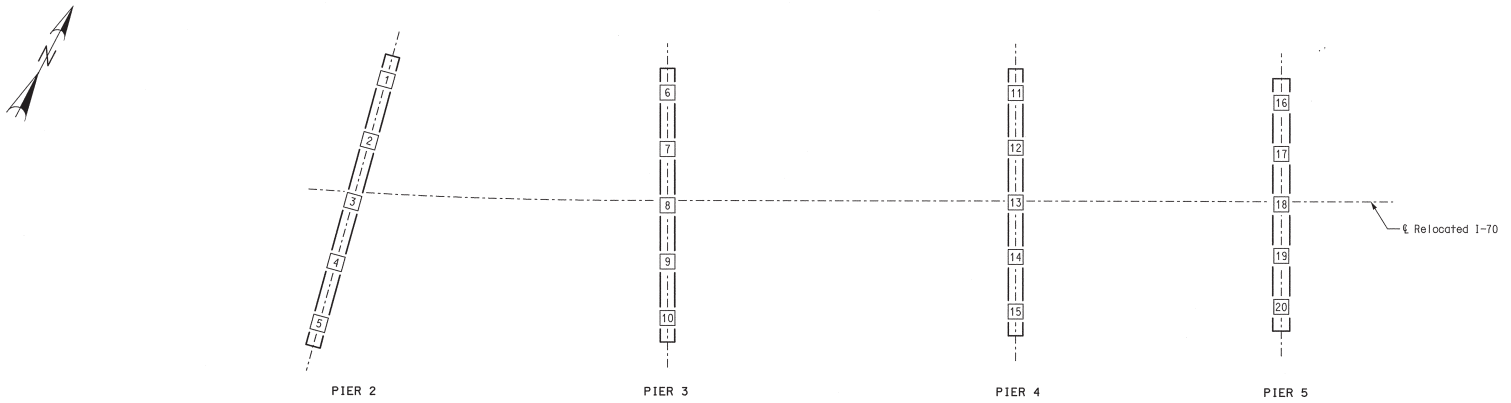

PART PLAN SHOWING DRILLED SHAFT NUMBERING FOR RECORDING "AS BUILT DRILLED SHAFT" DATA

"AS BUILT DRILLED SHAFT" DATA

SHAFT NO.	BOTTOM OF DRILLED SHAFT (ELEV.)	BOTTOM OF ROCK SOCKET (ELEV.)	REMARKS
			PIER 2
1			
2			
3			
4			
5			
			PIER 3
6			
7			
8			
9			
10			

"AS BUILT DRILLED SHAFT" DATA

SHAFT NO.	BOTTOM OF DRILLED SHAFT (ELEV.)	BOTTOM OF ROCK SOCKET (ELEV.)	REMARKS
			PIER 4
11			
12			
13			
14			
15			
			PIER 5
16			
17			
18			
19			
20			

"AS BUILT DRILLED SHAFT" DATA

SHAFT NO.	BOTTOM OF DRILLED SHAFT (ELEV.)	BOTTOM OF ROCK SOCKET (ELEV.)	REMARKS

NOTE: THIS SHEET TO BE COMPLETED BY MoDOT CONSTRUCTION PERSONNEL.

AS BUILT DRILLED SHAFT DATA – UNITS 1 AND 2

Detailed JUL 2009
Checked JUL 2009

Note: This drawing is not to scale. Follow dimensions.

Sheet No. 124 of 125

\\slsw00\Jobs\46440\Techprod\Bridges\MO-Approach\Drawings\Baseline Drawings\B_A6500_124-125_J6I0984B_124.dgn

18-AUG-2009 10:31

LAWRENCE D. ROLWES, JR. NUMBER PE-2009002847 STATE OF MISSOURI PROFESSIONAL ENGINEER

8/24/09
DATE
8/20/09

ROUTE	STATE
I-70	MO
DISTRICT	SHEET NO.
6	BR124

COUNTY
St. Louis City - MO

JOB NO.
J6I0984B

CONTRACT ID.

PROJECT NO.

BRIDGE NO.
A6500

DESCRIPTION	DATE

MISSOURI HIGHWAYS AND TRANSPORTATION COMMISSION

MoDOT

105 WEST CAPITOL
JEFFERSON CITY, MO 65102
1-888-ASK-MODOT (1-888-275-6636)

HNTB

715 KIRK DRIVE
KANSAS CITY, MO 64105-1310
TELEPHONE (816) 472-1201
CERTIFICATE OF AUTHORITY NO. 001270

REV.

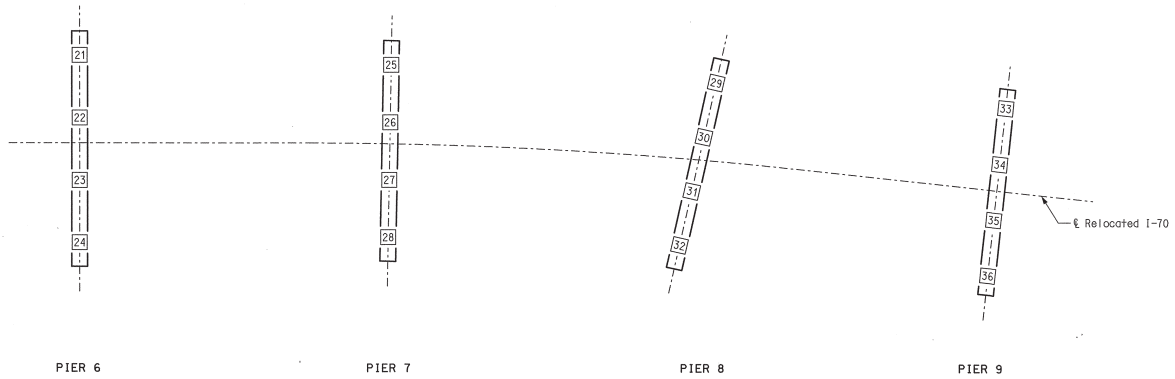

PART PLAN SHOWING DRILLED SHAFT NUMBERING FOR RECORDING "AS BUILT DRILLED SHAFT" DATA

"AS BUILT DRILLED SHAFT" DATA

SHAFT NO.	BOTTOM OF DRILLED SHAFT (ELEV.)	BOTTOM OF ROCK SOCKET (ELEV.)	REMARKS
			PIER 6
21			
22			
23			
24			
			PIER 7
25			
26			
27			
28			

"AS BUILT DRILLED SHAFT" DATA

SHAFT NO.	BOTTOM OF DRILLED SHAFT (ELEV.)	BOTTOM OF ROCK SOCKET (ELEV.)	REMARKS
			PIER 8
29			
30			
31			
32			
			PIER 9
33			
34			
35			
36			

"AS BUILT DRILLED SHAFT" DATA

SHAFT NO.	BOTTOM OF DRILLED SHAFT (ELEV.)	BOTTOM OF ROCK SOCKET (ELEV.)	REMARKS

NOTE: THIS SHEET TO BE COMPLETED BY MoDOT CONSTRUCTION PERSONNEL.

Detailed JUL 2009
Checked JUL 2009

Note: This drawing is not to scale. Follow dimensions.

Sheet No. 125 of 125

AS BUILT DRILLED SHAFT DATA – UNIT 3

\\slsw00\Jobs\46440\Techprod\Bridges\MO-Approach\Drawings\Baseline Drawings\B_A6500_125-125_J6I0984B_125.dgn

18-AUG-2009 10:31

LAWRENCE D. [illegible]
RENEWAL DATE
NUMBER
2006007241
STATE OF MISSOURI
PROFESSIONAL ENGINEER

8/20/09
DATE

ROUTE	STATE
I-70	MO
DISTRICT	SHEET NO.
6	BR125

COUNTY: St. Louis City - MO
JOB NO.: J6I0984B
CONTRACT ID.:
PROJECT NO.:
BRIDGE NO.: A6500

DESCRIPTION | DATE | REV.

MISSOURI HIGHWAYS AND TRANSPORTATION COMMISSION
105 WEST CAPITOL
JEFFERSON CITY, MO 65102
1-888-ASK-MODOT (1-888-275-6636)

HNTB
715 KIRK DRIVE
KANSAS CITY, MO 64105-1310
TELEPHONE (816) 472-1201
CERTIFICATE OF AUTHORITY NO. 001270

SEC/SUR 2 TWP 2N RGE 10W

MISSOURI HIGHWAYS AND TRANSPORTATION COMMISSION

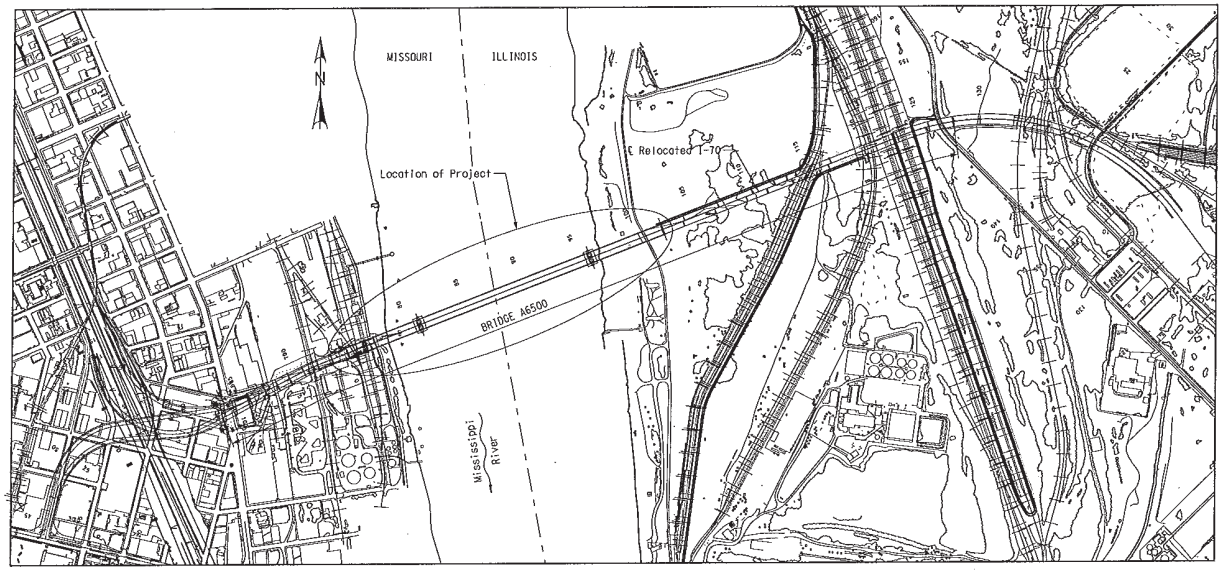

I-70 MISSISSIPPI RIVER BRIDGE
MAIN SPANS

DATE 8/20/09
ROUTE I-70 STATE MO/IL
DISTRICT 6 SHEET NO. BR1
COUNTY ST. LOUIS CITY - MO ST. CLAIR - IL
JOB NO. J610984
CONTRACT ID. 091208-601
PROJECT NO. I-70-9 (20)
BRIDGE NO. A6500

DESCRIPTION | DATE | REV.

MISSOURI HIGHWAYS AND TRANSPORTATION COMMISSION
105 WEST CAPITOL
JEFFERSON CITY, MO 65102
1-888-ASK-MODOT (1-888-275-6636)

HNTB
715 KIRK DRIVE
KANSAS CITY, MO 64105-1310
TELEPHONE (816) 472-1201
CERTIFICATE OF AUTHORITY NO. 001270

Designed JUL 2009
Detailed JUL 2009
Checked JUL 2009

Note: This drawing is not to scale. Follow dimensions.

Sheet No. 1 of 205

STD. 706.35

FINAL PLANS

T:\de-proj\St_Louis_City\Construction\J610984\Asbuilts\Bridge\B_A6500_001-205_J610984_001.dgn 8:52:49 AM

INDEX OF DRAWINGS

BR1 Title Sheet
BR2 Index of Sheets
BR3 Overall Mississippi River Bridge Layout
BR4 General Plan & Elevation
BR5 Typical Section
BR6 General Notes
BR7 General Notes
BR8 Estimated Quantities
BR9 Estimated Quantities
BR10 River Stage Hydrograph
BR11 Foundation Layout
BR12 Alternative Foundation Layout
BR13 Boring Data
BR14 Boring Data
BR15 Boring Data
BR16 Boring Data
BR17 Boring Data
BR18 Boring Data
BR19 Boring Data
BR20 Boring Data
BR21 Limits of Rock Blanket
BR22 Pier 10
BR23 Pier 10
BR24 Pier 10
BR25 Pier 11 - Dimensions
BR26 Pier 11 - Foundation Dimensions
BR27 Pier 11 - Cutting Edge
BR28 Pier 11 - Cutting Edge
BR29 Pier 11 - Cutting Edge
BR30 Pier 11 - Caisson
BR31 Pier 11 - Caisson
BR32 Pier 11 - Caisson
BR33 Pier 11 - Caisson
BR34 Pier 11 - Subshaft
BR35 Pier 11 - Subshaft
BR36 Pier 11 - Distribution Cap
BR37 Pier 11 - Distribution Cap
BR38 Pier 11 - Distribution Cap
BR39 Pier 11 - Alternative Foundation
BR40 Pier 11 - Alternative Foundation
BR41 Pier 11 - Alternative Foundation
BR42 Pier 12 - Dimensions
BR43 Pier 12 - Foundation Dimensions
BR44 Pier 12 - Cutting Edge
BR45 Pier 12 - Cutting Edge
BR46 Pier 12 - Cutting Edge
BR47 Pier 12 - Caisson
BR48 Pier 12 - Caisson
BR49 Pier 12 - Caisson
BR50 Pier 12 - Caisson
BR51 Pier 12 - Subshaft
BR52 Pier 12 - Subshaft
BR53 Pier 12 - Distribution Cap
BR54 Pier 12 - Distribution Cap
BR55 Pier 12 - Distribution Cap
BR56 Pier 12 - Alternative Foundation
BR57 Pier 12 - Alternative Foundation
BR58 Pier 12 - Alternative Foundation
BR59 Piers 11 & 12 - Shaft
BR60 Piers 11 & 12 - Shaft
BR61 Piers 11 & 12 - Shaft
BR62 Piers 11 & 12 - Shaft
BR63 Piers 11 & 12 - Shaft
BR64 Piers 11 & 12 - Shaft
BR65 Piers 11 & 12 - Shaft
BR66 Piers 11 & 12 - Shaft
BR67 Piers 11 & 12 - Tower
BR68 Piers 11 & 12 - Tower
BR69 Piers 11 & 12 - Tower
BR70 Piers 11 & 12 - Tower
BR71 Piers 11 & 12 - Tower
BR72 Piers 11 & 12 - Tower
BR73 Piers 11 & 12 - Tower
BR74 Piers 11 & 12 - Tower
BR75 Piers 11 & 12 - Tower
BR76 Piers 11 & 12 - Tower
BR77 Piers 11 & 12 - Tower
BR78 Piers 11 & 12 - Tower
BR79 Piers 11 & 12 - Tower
BR80 Piers 11 & 12 - Tower
BR81 Piers 11 & 12 - Pedestal
BR82 Lateral Restrainer Bearing Details - Piers 11 & 12
BR83 Tower Access Opening Details - Piers 11 & 12
BR84 Tower Access Details - Piers 11 & 12
BR85 Tower Access Details - Piers 11 & 12
BR86 Tower Access Details - Piers 11 & 12
BR87 Ventilator and Obstruction Lighting Details
BR88 Tower Cable Anchorage Details - Piers 11 & 12
BR89 Tower Cable Anchorage Details - Piers 11 & 12
BR90 Tower Cable Anchorage Details - Piers 11 & 12
BR91 Tower Cable Anchorage Details - Piers 11 & 12
BR92 Tower Cable Anchorage Details - Piers 11 & 12
BR93 Tower Cable Anchorage Details - Piers 11 & 12
BR94 Tower Cable Anchorage Post-tensioning Details - Piers 11 & 12
BR95 Tower Cable Anchorage Post-tensioning Details - Piers 11 & 12
BR96 Pier 13
BR97 Pier 13
BR98 Pier 13
BR99 Inspection Traveler Access Details - Pier 10
BR100 Inspection Traveler Access Details - Pier 10
BR101 Inspection Traveler Access Details - Pier 10
BR102 Tie-Down Embed and Base Plate - Piers 10 & 13
BR103 Tie-Down Details - Piers 10 & 13
BR104 Details of Pot Bearing Pad Assembly - Piers 11 & 12
BR105 Details of Pot Bearing Pad Assembly - Piers 11 & 12
BR106 Lateral Restrainer Details - Piers 11 & 12
BR107 Longitudinal Lock-up Device Details - Piers 11 & 12
BR108 Longitudinal Lock-up Device Details - Piers 11 & 12
BR109 Framing Plan
BR110 Framing Plan
BR111 Edge Girder - Field Piece 1
BR112 Edge Girder - Field Piece 1
BR113 Edge Girder - Field Pieces 2-13 & 15-29
BR114 Edge Girder - Field Piece 14
BR115 Edge Girder - Field Piece 14
BR116 Edge Girder - Field Pieces 30 & 31
BR117 Floor Beam Elevation
BR118 Floor Beam Elevation
BR119 Floor Beam Elevation
BR120 Floor Beam Elevation
BR121 Floor Beam Elevation
BR122 Floor Beam Connection Details
BR123 Stay Cable Girder Anchorage Details
BR124 Stay Cable Girder Anchorage Details
BR125 Stay Cable Girder Anchorage Details
BR126 Stay Cable Girder Anchorage Details
BR127 Stay Cable Girder Anchorage Details
BR128 Stay Cable Girder Anchorage Details
BR129 Stay Cable Girder Anchorage Details
BR130 Stay Cable Girder Anchorage Details
BR131 Stay Cable Girder Anchorage Details
BR132 Miscellaneous Steel Details
BR133 Miscellaneous Steel Details
BR134 Miscellaneous Steel Details
BR135 Miscellaneous Steel Details
BR136 Field Splice Details
BR137 Cable Layout and Edge Girder Shortening
BR138 Cable Layout and Edge Girder Shortening
BR139 Stay Cable Geometry
BR140 Stay Cable Geometry
BR141 Stay Cable Schedule
BR142 Stay Cable Schedule
BR143 Stay Cable Anchorage Assembly
BR144 Precast Slab Panel Layout
BR145 Precast Slab Panel Layout
BR146 Precast Slab Panel Details
BR147 Precast Slab Panel Details
BR148 Precast Slab Panel Details
BR149 Precast Slab Panel Details
BR150 Precast Slab Panel Details
BR151 Misc. Precast Slab Panel Details
BR152 Misc. Precast Slab Panel Details
BR153 Misc. Precast Slab Panel Details
BR154 Cast-In-Place Slab Details
BR155 Cast-In-Place Slab Details
BR156 Cast-In-Place Slab Details
BR157 Cast-In-Place Slab Details
BR158 Cast-In-Place Slab Details
BR159 Counterweight Details
BR160 Counterweight Details
BR161 Counterweight Details
BR162 Counterweight Details
BR163 Slab Drain with Grate Layout
BR164 Slab Drain with Grate
BR165 Slab Drainage Details
BR166 Slab Drainage Details
BR167 Bridge Railing
BR168 Bridge Railing
BR169 Bridge Railing
BR170 Median Barrier Curb (Type C)
BR171 Optional Slip-Form Median Barrier Curb (Type C)
BR172 Expansion Joint Details - Piers 10 & 13
BR173 Expansion Joint Details - Piers 10 & 13
BR174 Expansion Joint Details - Piers 10 & 13
BR175 Expansion Joint Details - Piers 10 & 13
BR176 Expansion Joint Details - Piers 10 & 13
BR177 Navigation Clearance Gauge - Piers 11 & 12
BR178 Inspection Traveler Details
BR179 Suggested Erection Sequence - Piers 11 & 12
BR180 Suggested Erection Sequence - Typical Superstructure
BR181 Suggested Erection Sequence
BR182 Suggested Erection Sequence
BR183 Suggested Erection Sequence
BR184 Bar Bending Diagram
BR185 Bill of Reinforcing
BR186 Bill of Reinforcing
BR187 Bill of Reinforcing
BR188 Bill of Reinforcing
BR189 Bill of Reinforcing
BR190 Bill of Reinforcing
BR191 Bill of Reinforcing
BR192 Bill of Reinforcing
BR193 Bill of Reinforcing
BR194 Bill of Reinforcing
BR195 Bill of Reinforcing
BR196 Bill of Reinforcing
BR197 Bill of Reinforcing
BR198 Bill of Reinforcing
BR199 Bill of Reinforcing
BR200 Bill of Reinforcing
BR201 Bill of Reinforcing
BR202 Bill of Reinforcing
BR203 Bill of Reinforcing
BR204 As-Built Drilled Shaft Data
BR205 As-Built Drilled Shaft Data - Alternative Foundation

BR91A Tower Cable Anchorage Details - Piers 11 & 12
10 BR92A Tower Cable Anchorage Details - Piers 11 & 12
BR93A Tower Cable Anchorage Details - Piers 11 & 12

9 BR167A Bridge Railing

Foundation Layout, Alternative Foundation Layout → Blank Sheet, Foundation Layout 4

Pier 11 - Foundation Dimensions, Pier 11 - Cutting Edge, Pier 11 - Cutting Edge, Pier 11 - Cutting Edge, Pier 11 - Caisson, Pier 11 - Caisson, Pier 11 - Caisson, Pier 11 - Caisson, Pier 11 - Subshaft, Pier 11 - Subshaft, Pier 11 - Distribution Cap, Pier 11 - Distribution Cap, Pier 11 - Distribution Cap, Pier 11 - Alternative Foundation, Pier 11 - Alternative Foundation, Pier 11 - Alternative Foundation, Pier 12 - Dimensions → Blank Sheet, Blank Sheet, Blank Sheet, Blank Sheet, Blank Sheet, Blank Sheet, Blank Sheet, Blank Sheet, Blank Sheet, Blank Sheet, Blank Sheet, Blank Sheet, Pier 11 - Foundation, Pier 11 - Foundation, Pier 11 - Foundation, Pier 12 - Dimensions 4

Pier 12 - Foundation Dimensions, Pier 12 - Cutting Edge, Pier 12 - Cutting Edge, Pier 12 - Cutting Edge, Pier 12 - Caisson, Pier 12 - Caisson, Pier 12 - Caisson, Pier 12 - Caisson, Pier 12 - Subshaft, Pier 12 - Subshaft, Pier 12 - Distribution Cap, Pier 12 - Distribution Cap, Pier 12 - Distribution Cap, Pier 12 - Alternative Foundation, Pier 12 - Alternative Foundation, Pier 12 - Alternative Foundation → Blank Sheet, Blank Sheet, Blank Sheet, Blank Sheet, Blank Sheet, Blank Sheet, Blank Sheet, Blank Sheet, Blank Sheet, Blank Sheet, Blank Sheet, Blank Sheet, Pier 12 - Foundation, Pier 12 - Foundation, Pier 12 - Foundation

Suggested Erection Sequence - Piers 11 & 12 → Blank Sheet 4

Bill of Reinforcing → Blank Sheet 4

4 As-Built Drilled Shaft Data, As-Built Drilled Shaft Data - Alternative Foundation → Blank Sheet, As-Built Drilled Shaft Data

INDEX OF SHEETS

Detailed JUL 2009
Checked JUL 2009

Note: This drawing is not to scale. Follow dimensions.

T:\de-proj\St_Louis_City\Construction\J6I0984\Asbuilts\Bridge\B_A6500_002-205_J6I0984_002_REV010.dgn 10:05:25 AM

DATE 9/23/11
ROUTE I-70 | STATE MO/IL
DISTRICT 6 | SHEET NO. BR2
COUNTY ST. LOUIS CITY - MO / ST. CLAIR - IL
JOB NO. J6I0984
CONTRACT ID. 091208-601
PROJECT NO. I-70-9 (20)
BRIDGE NO. A6500

DATE	DESCRIPTION
5-17-10	4 Revised per ATC
9-23-11	4 Sheet added
9-23-11	4 Sheets added

MISSOURI HIGHWAYS AND TRANSPORTATION COMMISSION
105 WEST CAPITOL
JEFFERSON CITY, MO 65102
1-888-ASK-MODOT (1-888-275-6636)

HNTB
715 KIRK DRIVE
KANSAS CITY, MO 64105-1310
TELEPHONE (816) 472-1201
CERTIFICATE OF AUTHORITY NO. 001270

Final Plans

REV.

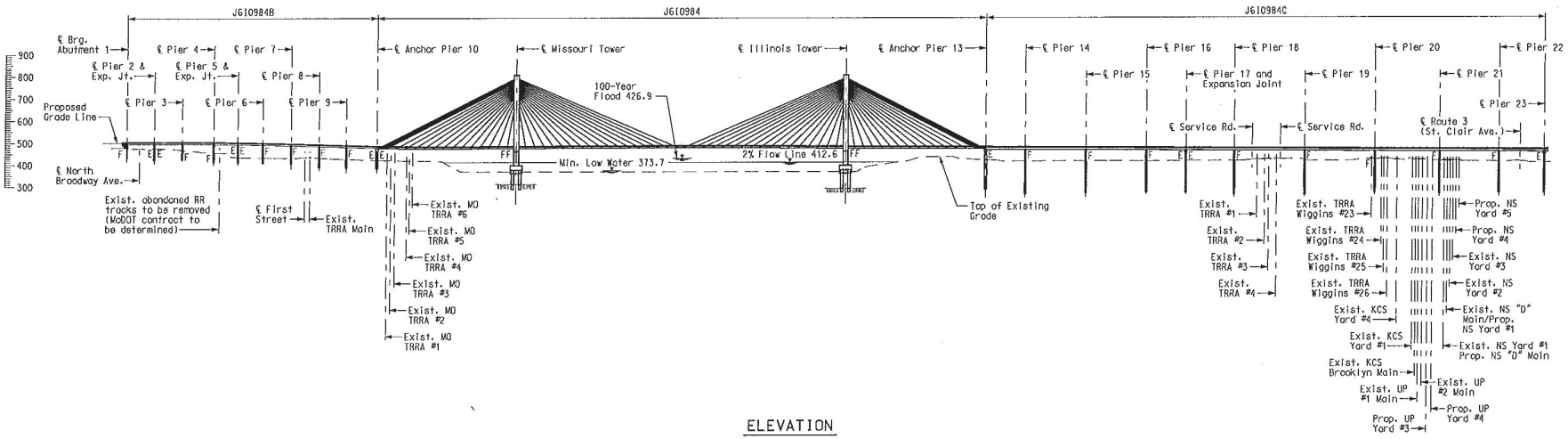

ELEVATION

4

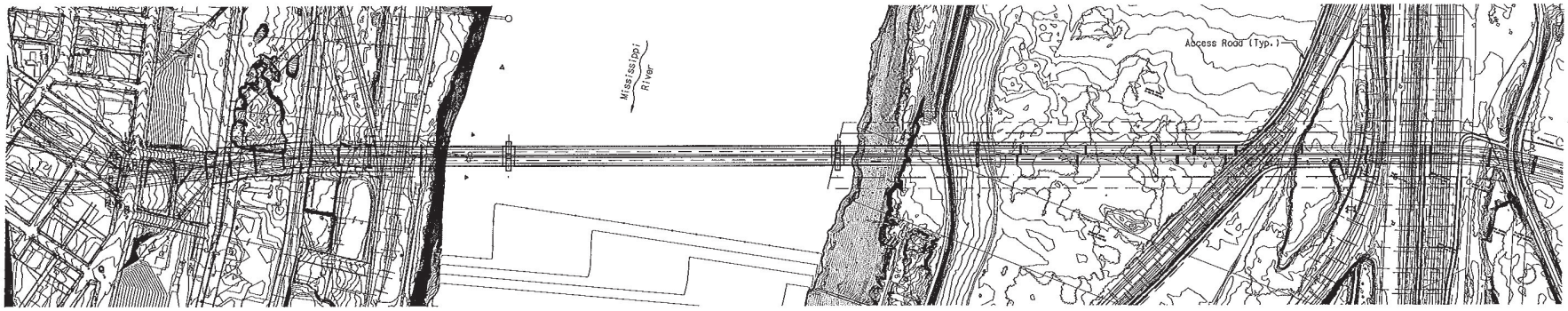

PLAN

4



OVERALL MISSISSIPPI RIVER BRIDGE LAYOUT

Detailed JUL 2009
Checked JUL 2009

Note: This drawing is not to scale. Follow dimensions.

Sheet No. 3 of 205

DATE 5/17/10
ROUTE I-70
STATE MO/IL
DISTRICT 6
SHEET NO. BR3
COUNTY ST. LOUIS CITY - MO ST. CLAIR - IL
JOB NO. J610984
CONTRACT ID. 091208-601
PROJECT NO. I-70-9 (20)
BRIDGE NO. A6500

DATE	DESCRIPTION
5-17-10	4 Revised per ATC

MISSOURI HIGHWAYS AND TRANSPORTATION COMMISSION
105 WEST CAPITOL
JEFFERSON CITY, MO 65102
1-888-ASK-MODOT (1-888-275-6636)

HNTB
715 KIRK DRIVE
KANSAS CITY, MO 64105-1310
TELEPHONE (816) 472-1201
CERTIFICATE OF AUTHORITY NO. 001270

Final Plans

REV.

MISSOURI HIGHWAYS AND TRANSPORTATION COMMISSION

(635'-9" - 1500'-0" - 635'-9") CABLE-STAYED UNIT

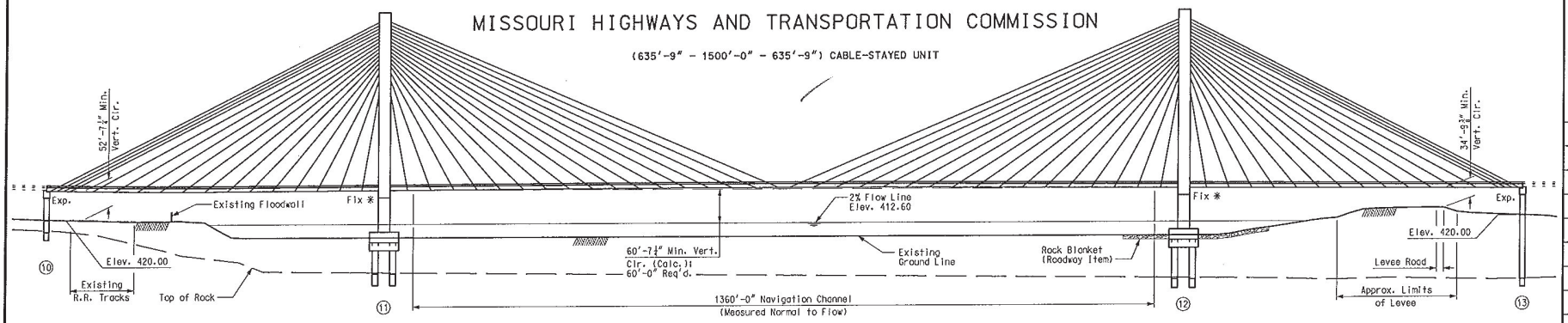

* Fixed for live-load, wind and seismic loads, and Expansion for thermal expansion and contraction and long-term creep effects.

ELEVATION

4

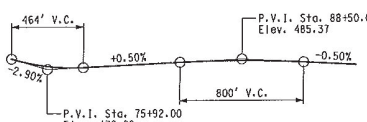

PROFILE GRADE - RELOCATED I-70

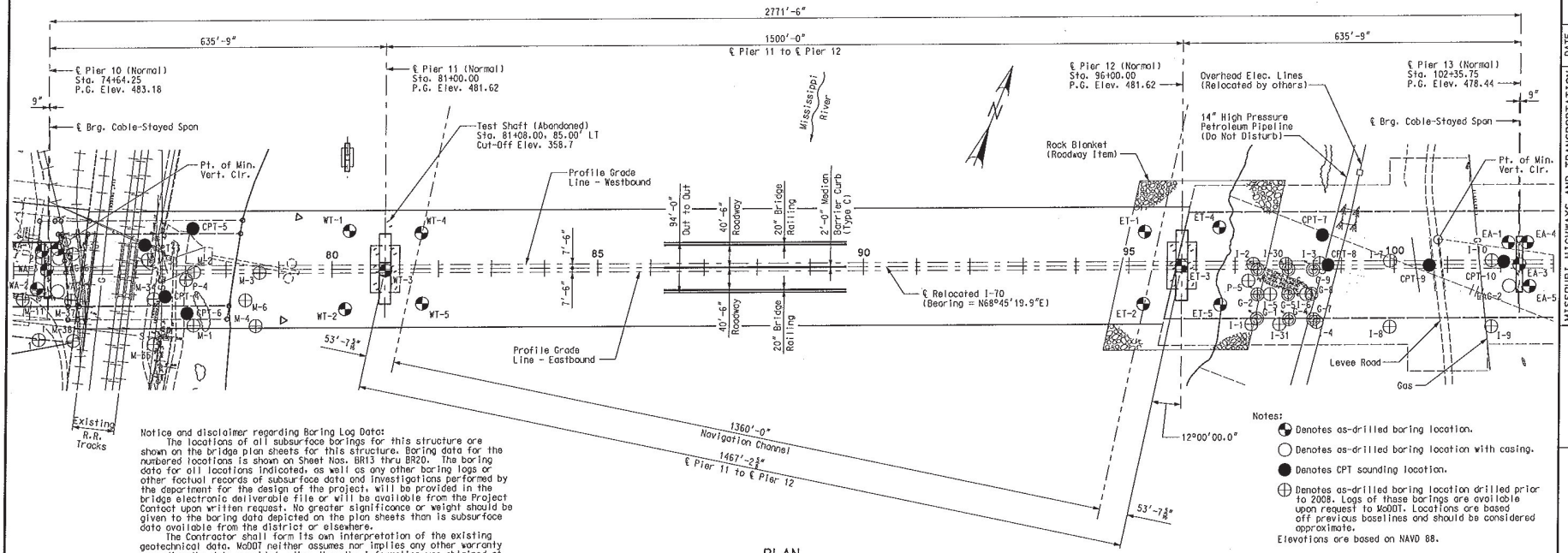

PLAN

4

Notes:

- Denotes as-drilled boring location.
- Denotes as-drilled boring location with casing.
- Denotes CPT sounding location.
- Denotes as-drilled boring location drilled prior to 2008. Logs of these borings are available upon request to MoDOT. Locations are based off previous baselines and should be considered approximate.

Elevations are based on NAVD 88.

GENERAL PLAN & ELEVATION

Notice and disclaimer regarding Boring Log Data:

The locations of all subsurface borings for this structure are shown on the bridge plan sheets for this structure. Boring data for the numbered locations is shown on Sheet Nos. BR13 thru BR20. The boring data for all locations indicated, as well as any other boring logs or other factual records of subsurface data and investigations performed by the department for the design of the project, will be provided in the bridge electronic deliverable file or will be available from the Project Contact upon written request. No greater significance or weight should be given to the boring data depicted on the plan sheets than is subsurface data available from the district or elsewhere.

The Contractor shall form its own interpretation of the existing geotechnical data. MoDOT neither assumes nor implies any other warranty regarding the data provided, other than the information was obtained at locations and depths indicated and to the accuracy of the data at the time of testing.

Detailed JUL 2009
Checked JUL 2009

Note: This drawing is not to scale. Follow dimensions.

Sheet No. 4 of 205

T:\de-proj\St_Louis_City\Construction\J6I0984\Asbuilts\Bridge\B_A6500_004-205_J6I0984_004.dgn

11:03:30 AM

DATE 5/17/10
ROUTE I-70 STATE MO/IL
DISTRICT 6 SHEET NO. BR4
COUNTY ST. LOUIS CITY - MO ST. CLAIR - IL
JOB NO. J6I0984
CONTRACT ID. 091208-601
PROJECT NO. I-70-9 (20)
BRIDGE NO. A6500

DATE	DESCRIPTION
5-17-10	4 Revised per ATC

MISSOURI HIGHWAYS AND TRANSPORTATION COMMISSION
105 WEST CAPITOL
JEFFERSON CITY, MO 65102
1-888-ASK-MODOT (1-888-275-6636)

HNTB
715 KIRK DRIVE
KANSAS CITY, MO 64105-1310
TELEPHONE (816) 472-1201
CERTIFICATE OF AUTHORITY NO. 001270

Final Plans

REV.

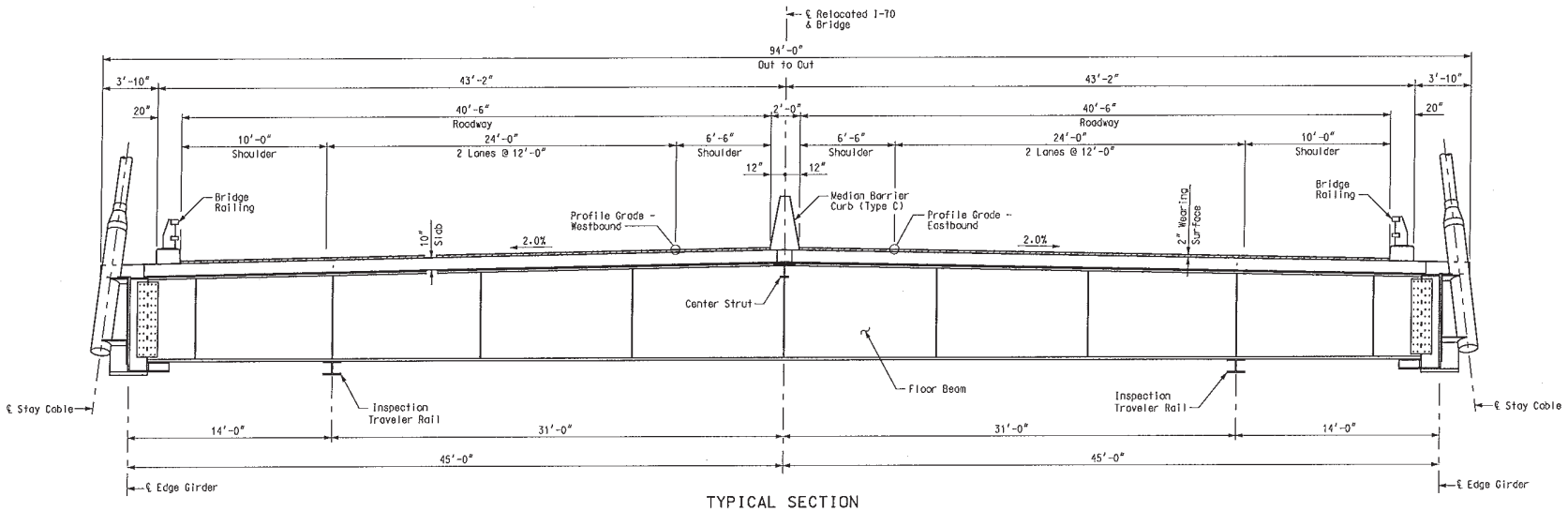

TYPICAL SECTION

TYPICAL SECTION

Detailed JUL 2009
Checked JUL 2009

Note: This drawing is not to scale. Follow dimensions.

Sheet No. 5 of 205

T:\de-proj\St_Louis_City\Construction\J6I0984\Asbuilts\Bridge\B_A6500_005-205_J6I0984_005.dgn

11:09:39 AM

DATE 8/20/09
ROUTE I-70 STATE MO/IL
DISTRICT 6 SHEET NO. BR5
COUNTY ST. LOUIS CITY - MO ST. CLAIR - IL
JOB NO. J6I0984
CONTRACT ID. 091208-601
PROJECT NO. I-70-9 (20)
BRIDGE NO. A6500

DESCRIPTION | DATE

MISSOURI HIGHWAYS AND TRANSPORTATION COMMISSION
105 WEST CAPITOL
JEFFERSON CITY, MO 65102
1-888-ASK-MODOT (1-888-275-6636)

HNTB
715 KIRK DRIVE
KANSAS CITY, MO 64105-1310
TELEPHONE (816) 472-1201
CERTIFICATE OF AUTHORITY NO. 001270

Final Plans

REV.

GENERAL NOTES

Column & Cap Concrete (Piers 10 & 13), Class B-1	f'c = 4000 psi
Drilled Shaft & Rock Socket Concrete (Piers 10, 11, 12 & 13), Class B-2	f'c = 5000 psi
Footing Concrete (Piers 11 & 12), Class B-1	f'c = 6000 psi

DESIGN SPECIFICATIONS:
AASHTO LRFD Bridge Design Specifications, Fourth Edition with interim specifications through 2008.
Post-Tensioning Institute "Recommendations for Stay Cable Design, Testing and Installation", Fifth Edition, October 2007.
AASHTO/AWS D1.5W/D1.5:2008 Bridge Welding Code.
CEB-FIP Model Code for Concrete Structures
"Design of Bridge Deck Drainage", Publication No. FHWA-SA-92-010.
AASHTO "Guide Specifications for Design and Construction of Segmental Concrete Bridges", 1999, including interim specifications through 2003.
AASHTO "Guide Specifications - Thermal Effects in Concrete Bridge Superstructures", 1989.
AASHTO "Guide Specifications for Highway Bridge Fabrication with HPS70W Steel".

CONSTRUCTION SPECIFICATIONS:
Missouri Standard Specifications for Highway Construction, June 2009, with applicable supplemental specifications and special provisions.
Unless otherwise noted, references to Section (Sec.) and subsection numbers in the plans refer to the Missouri Standard Specifications for Highway Construction.
AASHTO LRFD Bridge Construction Specifications, Second Edition with interim specifications through 2008.

DATUM:
All elevations are in feet, based on the North American Vertical Datum (NAVD), 1988, except as noted.

DIMENSIONS:
Dimensions given on the plans are measured horizontally at 60° F, unless otherwise noted.

DESIGN LOADS:
Dead Load:

Reinforced Concrete	150 pcf
Prestressed Concrete	155 pcf
Wearing Surface	155 pcf
Counterweight Concrete	135 pcf
Seal Concrete	140 pcf
Structural Steel	490 pcf
Cable Wire	490 pcf
Polyethylene Pipe	60 pcf
Earth	125 pcf

A 2-inch latex modified concrete wearing surface was applied to the deck after completion of the structure (see Sec. 505.20). No allowance has been made for a future wearing surface on the cable supported spans. It has been assumed in the design that the wearing surface will be replaced in kind when required.

Live Load:
AASHTO HL-93
Dynamic Load Allowance in accordance with AASHTO LRFD Art. 3.6.2 and Post-Tensioning Institute "Recommendations for Stay Cable Design, Testing and Installation".
Design Speed = 60 mph

Wind Load:
Wind loads have been determined through wind tunnel testing. Testing included models of the structure in its completed configuration as well as various stages of construction. The wind tunnel test results are available for review from MoDOT upon request.

Seismic:
Site-specific acceleration time histories were developed considering the following:
Importance Category = "Critical Bridge"
Seismic Performance Zone = 3
Response Modification Factor - Typical = 1.0
Response Modification Factor - Superstructure to Substructure connection = 0.8
Damping Coefficient = 3%

The Geotechnical Earthquake Engineering report "Geotechnical Seismic Engineering New I-70 Mississippi River Bridge, St. Louis, Missouri to St. Clair County, Illinois", July 2009, provides the seismic design data. Copies of this report are provided in the bridge electronic deliverables or are available from MoDOT upon request.

Earthquake was not considered as a construction load.

Thermal Forces:
The design mean temperature is 60° F.

Thermal effects were considered due to the following:

Steel:	Concrete:
Temperature Rise = 60° F.	Temperature Rise = 50° F.
Temperature Fall = 90° F.	Temperature Fall = 70° F.

Thermal Gradient:
Between cables and bridge = ± 18° F.
Between east & west face of tower and between north & south side of bridge = ± 10° F.

Longitudinal Forces:
Computed in accordance with AASHTO LRFD Art. 3.6.4.

Earth Forces:
Earth pressure is computed in accordance with AASHTO LRFD Art. 3.11.

Stream Flow and Scour:
Forces and scour due to stream current are based on the 100-year flood flow applied at a skew angle of 12° for the channel crossing with a velocity in accordance with the Hydrologic/Hydraulic and Scour Report, September 2002.

Vessel Allision:
Vessel allision forces are in accordance with the Vessel Allision Report. Copies of the Vessel Allision Report are available from MoDOT upon request.

Creep and Shrinkage:
Strains are calculated in accordance with CEB-FIP Model Code for Concrete Structures at 70% average relative humidity.

DESIGN LOADS (CONT'D.):
Concrete Seals:
Seals have been designed for a maximum water surface elevation of 416.0.

Settlement:
Differential settlement between bents is considered in accordance with the Geotechnical Engineering Report.

DESIGN METHODS:
All bridge components were designed in accordance with AASHTO LRFD Method.

LIMIT STATES COMBINATIONS:
Limit states shall be in accordance with AASHTO Article 3.4, Table 3.4.1-1, except as follows:
Shrinkage and creep of concrete are treated as dead load for extreme events.
The effects of stay cable force adjustments are treated as dead load. The factor, γ_{EQ} for live load in combination with seismic loads for Extreme Event 1 loading is = 0.0.
Load modifiers relating to ductility (η_D), redundancy (η_R), and operational importance (η_I) are to be applied as follows:

$\eta_D = 1.00$
$\eta_R = 1.00$
$\eta_I = 1.05$

MATERIALS AND DESIGN UNIT STRESSES:

Seal Concrete (Piers 11 & 12), Seal Concrete	f'c = 4000 psi
Drilled Shaft & Rock Socket Concrete (Piers 10, 11, 12 & 13), Class B-2	f'c = 4000 psi
Footing Concrete (Piers 11 & 12), Class B-1	f'c = 4000 psi
~~Caisson Concrete (Piers 11 & 12), Class B-2~~	~~f'c = 4000 psi~~
~~Distribution Cap Concrete (Piers 11 & 12), Class B-2~~	~~f'c = 4000 psi~~
Pier Shaft Concrete (Piers 11 & 12), Class A-1	f'c = 6000 psi
Tower Leg Concrete (Piers 11 & 12), Class A-1	f'c = 6000 psi
Deck Slab Concrete (Panels and Cast-in-Place), Class A-1	f'c = 6000 psi
Counterweight Concrete (Precast Panels), Class A-1	f'c = 6000 psi
Counterweight Concrete (Cast-in-Place), Class B	f'c = 3000 psi
Bridge Railing Curb and Light Pole Blister Concrete, Class B-1	f'c = 4000 psi
Median Barrier Curb Concrete, Class B-1	f'c = 4000 psi
Reinforcing Steel, ASTM A615, Grade 60	fy = 60,000 psi
Reinforcing Steel, ASTM A706, Grade 60	fy = 60,000 psi
Prestressing Bars, ASTM A722, Grade 150, Type II	fpu = 150,000 psi
Prestressing Strand for Stay Cables, ASTM 416, Grade 270, Low Relaxation	fpu = 270,000 psi
Prestressing Strand for P.T. Tendons., ASTM 416, Grade 270, Low Relaxation	fpu = 270,000 psi
Structural Steel for Edge Girders, ASTM A709, Grade HPS70WF-2 Including: Webs Flanges Floor Beam Connection Plates Splice Plates Stiffener Plates Bearing Plates Bearing Stiffeners Jacking Stiffeners Lateral Restrainer Connection Plates	fy = 70,000 psi
Structural Steel for Floor Beams A, B & C, ASTM A709, Grade HPS70WT-2 Including: Webs Flanges Connection Plates (Splice Plates) ③ Stiffener Plates Lateral Restrainer	fy = 70,000 psi
Structural Steel for Floor Beams D & E, ASTM A709, Grade HPS70WT-2 Including: Webs Flanges Connection Plates (Splice Plates) ③ Stiffener Plates	fy = 70,000 psi
Structural Steel for Floor Beams F, G, H & K, ASTM A709, Grade HPS50WT-2 Including: Webs Flanges Connection Plates (Splice Plates) ③ Stiffener Plates	fy = 50,000 psi
Structural Steel for Tower Cable Anchor Box, ASTM A709, Grade HPS50WT-2	fy = 50,000 psi
Structural Steel for Tower Cable Anchorage, ASTM A709, Grade HPS50WF-2 Including: Cable Anchor Beam Connection Plates	fy = 50,000 psi
Structural Steel for Tower Cable Anchor Load PL, ASTM A709, Grade HPS50W	fy = 50,000 psi
Structural Steel for Cable Anchorage Pipe, API 5L x52 PSL2.	fy = 52,000 psi
Structural Steel for Cable Girder Anchorage, ASTM A709, Grade HPS70WF-2 Including: Anchorage Web Plate Anchorage Stiffener Plate Anchorage Base Plate Anchorage Web Bracing Plate Flange Connection Plate	fy = 70,000 psi
Structural Steel for Top Flange Bracing, ASTM A709, Grade 50W Including: W10x68 Gusset Plates	fy = 50,000 psi
Structural Steel for Center Struts, ASTM A709, Grade 50W Including: WT12x31 Flange Plates Connection Plates	fy = 50,000 psi
Structural Steel for Horizontal Diaphragm, ASTM A709, Grade 50W Including: Diaphragm Plate Connection Plates & Angles Stiffener Plates & Angles	fy = 50,000 psi
Structural Steel for Drilled Shaft Casing, Piers 11-13, ASTM A572, Grade 60	fy = 60,000 psi
Structural Steel for Drilled Shaft Casing, Pier 10, ASTM A572, Grade 60	fy = 66,000 psi
Structural Steel for Counterweight, ASTM A709, Grade 50W Including: Intermediate Struts Intermediate Diaphragms End Diaphragms	fy = 50,000 psi
~~Structural Steel for Drilled Shaft Casing, ASTM A252, Grade 2~~	~~fy = 35,000 psi~~
~~Structural Steel for Cutting Edge Plate, ASTM A709, Grade 50~~	~~fy = 50,000 psi~~
~~Structural Steel for Cutting Edge Angle Bracing, ASTM A709, Grade 36~~	~~fy = 36,000 psi~~
Structural Steel for Tie-Down Device, ASTM A709, Grade 50WT-2	fy = 50,000 psi

REINFORCING STEEL:
Epoxy coated reinforcing steel, including chairs and ties, was used at the following locations:
Deck slab
Median Barrier Curb
Bridge Railing Curb
Light Pole Blisters
Pier Cap at Piers 10 & 13.

Mechanical couplers develop not less than 125% of the yield strength of the bar. Epoxy coated couplers were used with epoxy coated bars.

Unless noted otherwise, the minimum clear cover to reinforcing bars is as follows:

~~Bent Footings~~	~~3 in.~~
~~Caissons (Including Subshafts)~~	~~4 in.~~
Drilled Shafts	6 in.
Rock Sockets	3 in.
Top of Deck Slab (Including Wearing Surface)	4 in.
Bottom of Deck Slab	1 in.
Tower Legs (Piers 11 & 12)	2 in.
Pier Shafts (Piers 11 & 12)	3 in.
Pier Columns (Piers 10 & 13)	6 in.
Pier Cap (Piers 10 & 13)	3 in.

STRUCTURAL STEEL:
The following members or member components are considered fracture critical members (FCM):
Edge Girder Web Plates
Edge Girder Flange Plates
Floor Beam Connection Plates welded to Edge Girder
Stiffeners welded to Edge Girder
Bearing Plates and other Connection Plates welded to Edge Girder
Splice Plates
Tower Cable Anchor Beam & Connection Plates
Cable Girder Anchorage Web Plate
Cable Girder Anchorage Stiffener Plate
Cable Girder Anchorage Base Plate
Cable Girder Anchorage Web Bracing Plate
Cable Girder Anchorage Flange Connection Plate
Bolted connections were made with 1" diameter, ASTM A325, Type 3 bolts unless noted otherwise. Bolts were installed with a nut and washer compatible with the corresponding bolt as specified in the bolt specification.
Welded shop flange and web splices were permitted when detailed on the shop drawings and approved by the Engineer. No additional payment was made for optional shop splices added for the convenience of the Contractor or material availability. Welded shop splices conform to the details shown in these plans.
Holes for bolts are $\frac{1}{8}$" larger in diameter than the associated bolt unless noted otherwise.
Edge Girder field splices and floor beam to edge girder connections were prepared with a Class B finish on all contact surfaces.
Field Pieces were shop assembled in accordance with AASHTO LRFD Bridge Construction Specifications, Article 11.5.3.1. The progressive assembly included edge girders, floor beams, center struts and traveler rails.
Welding was in conformance with AWS D1.5 except as modified by the MoDOT Standard Specifications or by the AASHTO "Guide Specifications for Highway Bridge Fabrication with HPS70W Steel".
Weld metal was matching, unless otherwise noted.

STRUCTURAL STEEL PROTECTIVE COATING:
Protective Coating: System H in accordance with Section 1081.
Portions of the structural steel embedded in or in contact with the concrete, including but not limited to the top flange of girders, were coated with not less than 2.0 mils of the prime coat for System H.
Prime Coat: The prime coat was applied in the fabrication shop. The cost of the prime coat was considered completely covered by the contract unit price for Fabricated Structural Low Alloy Steel (Plate Girder) A709, Grade HPS50W, or Fabricated Structural Low Alloy Steel (Plate Girder) A709, Grade HPS70W.
The surfaces of all structural steel located under expansion joints were coated with complete System H within a distance of 1-1/2 times the girder depth, but not less than 10 feet, from the centerline of all deck joints. Within this limit, items to be coated included all surfaces of beams, girders, floor beams, diaphragms, stiffeners bearings, struts and miscellaneous structural steel items.
Field Coat: The color of the field coat was Brown (Federal Standard #30045). The cost of the intermediate and finish field coats was considered completely covered by the contract unit price for Fabricated Structural Low Alloy Steel (Plate Girder) A709, Grade HPS50W, or Fabricated Structural Low Alloy Steel (Plate Girder) A709, Grade HPS70W. At the option of the contractor, the intermediate and finish field coats may be applied in the shop. The contractor exercised extreme care during all phases of loading, hauling, handling, erection and pouring of the slab to minimize damage and was fully responsible for all repairs and cleaning of the coating systems as required by the Engineer.

Field pieces were shop assembled in accordance with AASHTO LRFD Bridge Construction Specifications, Article 11.5.3.1. The Contractor submitted a description of their proposed shop assembly to the Engineer for review and approval. At a minimum, shop assembly included the progressive assembly of contiguous edge girder segments (not full width, not including floor beams or center struts). In addition, each field piece was shop assembled full width, including both edge girders, floor beams and center strut (not including the traveler rail).

③ GENERAL NOTES

DATE	DESCRIPTION
11-25-09	④ Revised notes
5-17-10	④ Revised per ATC

DATE 5/17/10
ROUTE I-70 STATE MO/IL
DISTRICT 6 SHEET NO. BR6
COUNTY ST. LOUIS CITY - MO ST. CLAIR - IL
JOB NO. J6I0984
CONTRACT ID. 091208-601
PROJECT NO. I-70-9 (20)
BRIDGE NO. A6500

MISSOURI HIGHWAYS AND TRANSPORTATION COMMISSION
MoDOT
105 WEST CAPITOL
JEFFERSON CITY, MO 65102
1-888-ASK-MODOT (1-888-275-6636)
HNTB
715 KIRK DRIVE
KANSAS CITY, MO 64105-1310
TELEPHONE (816) 472-1201
CERTIFICATE OF AUTHORITY NO. 001270

Final Plans

GENERAL NOTES (CONT'D.)

CONCRETE PROTECTIVE COATINGS:
Temporary coating for concrete bents and piers (weathering steel) was applied on all concrete surfaces above the ground line or low water elevation on all abutments and intermediate piers in accordance with Sec 711.
Protective coating for concrete at Piers 10 & 13 (Epoxy) was applied as shown on the bridge plans and in accordance with Sec 711. Piers 11 and 12 were coated with Texcote XL-70 Bridge Cote in accordance with Special Provision "Protective Coatings for Exposed Concrete Surfaces"

JOINT FILLER:
All joint filler was in accordance with Sec 1057 for preformed sponge rubber expansion and partition joint filler, except as noted.
Joint filler for precast tower top was silicone joint sealant in accordance with Sec 717.40.

MISCELLANEOUS:
"Sec" refers to the sections in the standard and supplemental specifications unless specified otherwise.

FOUNDATIONS:
~~Two foundation options have been presented in the Plans. The Contractor has the option of selecting either option to bid and construct. Should the Contractor select the caisson option, then the Contractor shall construct caisson foundations for both Piers 11 & 12. Should the Contractor select the waterline footing option, then the Contractor shall construct waterline footing foundations for both Piers 11 & 12.~~ 4
NX size cores were required for the drilled shafts in accordance with Sec 701.4.11.2.
~~Concrete coring shall be required in accordance with Sec 701.4.17.1 for 1 of the 8 drilled shafts (and rock sockets) in the anchor piers and 1 of the drilled shafts (and rock sockets) in each of the waterline footings.~~
~~Drilled shafts and dredged caisson excavation shall be made as near as practicable to the dimensions shown on the plans.~~
~~Top of footings and dredged caissons shall be no higher than the elevation shown on the plans.~~
Seals at Piers 11 & 12 have been designed for a maximum water surface elevation of 416.00 feet.

ALLOWABLE STRESSES:
Structural Steel:
Per AASHTO LRFD Bridge Design Specifications

Reinforced Concrete:
Per AASHTO LRFD Bridge Design Specifications

Prestressed Concrete:
Per AASHTO LRFD Bridge Design Specifications and as follows

Minimum Concrete Strength:

Prior to stressing post-tensioning in deck panels:	f'ci = 4500 psi
Prior to stressing post-tensioning in tower legs:	f'ci = 6000 psi
Prior to final adjustment of stay cables:	f'c = 6000 psi

Stay Cables:
In accordance with the Post-Tensioning Institute "Recommendations for Stay Cable Design, Testing and Installation", October 2007.

Foundation Elements:
In accordance with the geotechnical report and load test results. 4

STAY CABLE REPLACEMENT AND INSTALLATION:
The design is capable of withstanding the loss of any single stay cable without structural instability with four lanes of traffic centered in traffic lanes with multiple lane reduction factors.

The design is capable of withstanding the replacement of any individual stay cable while maintaining two lanes of traffic on the far lanes and shoulder of the deck.

Contractor-provided stay cable details allow all individual stay cables to be removed by detensioning at the live end anchorage.

Provision was made for the adjustment of any individual cable during construction.

The following special design group loadings are used for the two stay cable conditions:
Stay Cable Exchange:
1.20C + 1.40W + 1.5(LL* + IM) + (cable exchange forces)
Φ = 0.8 for this limit state
* Two lanes of live load on the far lanes and shoulder of the deck
Loss of One Stay Cable:
1.20C + 1.40W + 0.75(LL** + IM) + (cable loss forces)
Φ = 0.9 for this limit state
** Four lanes of live load centered within the traffic lanes to maximize the reaction at the stay-cable under consideration.

CONSTRUCTION JOINTS:
Construction joints shall be prepared by roughening concrete surfaces to a minimum ¼ inch amplitude within 24 hours after placement, unless noted otherwise.

Concrete coring was required in accordance with Sec 701.4.17.1.
Drilled shafts were made as near as practicable to the dimensions shown on the plans.
Top of footings were no higher than the elevation shown on the plans.
Drilled shafts and rock sockets were constructed in accordance with the Special Provisions.
Rock socket capacities were based on load tests as specified in the Special Provisions.

DEFINITION OF TERMS:
The following terms are used throughout the plans and specifications. The list of terms is not intended to be all inclusive, nor does it include terms in common use by MoDOT:

Pier - A generic reference to any complete substructure element, including its footing, ~~caisson or~~ drilled shaft foundation, pier shaft, pier cap and tower. 4

Pier Cap - The portion of the pier which supports the girders.

Pier Shaft - The portion of the pier above the footing ~~or caisson distribution~~ cap and below the pier cap. 4

Cable Anchorage - The combination of all components required to resist the force in the stressed stay cable and transmit the force into the structure. A distinction may be made between the stressing (live) anchorage and the nonstressing (dead) anchorage. The stressing anchorage is located within the tower and the dead anchorage is located at the edge girder.

~~Caisson - The dredged foundation at Piers 11 & 12. The caisson is defined as the steel cutting edge and reinforcing frame, seal concrete, reinforcing steel and concrete which form the dredge wells. The subshaft shall be considered as part of the caisson for measurement and payment. The distribution cap is considered part of the caisson for measurement and payment.~~ 4

~~Caisson Distribution Cap - For limits, see Sheet Nos. BR25 & BR42.~~

~~Caisson Subshaft - For limits, see Sheet Nos. BR25 & BR42.~~

Center Span - The portion of the cable stayed unit between Piers 11 & 12.

End Span - The portion of the cable stayed unit between Piers 10 & 11 and between Piers 12 & 13.

Field Piece - The portion of the superstructure defined as "Field Piece" shall include the edge girders, floor beams, center struts and traveler rails.

Girder Working Chord - See Sheet No. BR111 for definition.

Girder Working Curve - See Sheet No. BR111 for definition.

Longitudinal Lock-Up Device (LUD) - A generic reference to the support mechanism used to transfer longitudinal impact forces from the superstructure to the pier towers.

Pier Table - The portion of the superstructure defined as "Pier Table" during the erection sequence shall include Field Piece 14, longitudinal lock-up bracket, lateral restrainer and any temporary falsework required for stability.

Sheathing - High density polyethylene (HDPE) pipe which is used to form the exterior layers of the stay-cable corrosion protection system.

Stay-Cable - Each of the primary tension elements between the tower and the edge girder which support the superstructure. Principal components of the stay-cables are cable anchorages, prestressing strands and sheathing.

Tie-Down Unit - The entire steel fabrication including prestressing steel, embeds, bolts, plates, pins and bronze bars which are located at Piers 10 & 13 and serve as both a bearing and an uplift restraint.

SYMBOLS:

Abt.:	About
Brg.:	Bearing
CL :	Centerline
Clr.:	Clear
CJP:	Complete Joint Penetration
Conn.:	Connection
Const.:	Construction
Dia.:	Diameter
E.F.:	Each face
Elev.:	Elevation
E.I.F.:	Each inside face
E.I.W.:	Each inner wall
E.O.F.:	Each outside face
E.O.W.:	Each outer wall
Eq.:	Equal
Exp.:	Expansion
F.F.:	Far face
F.I.F.:	Far inside face
F.S.:	Far Side
F.O.F.:	Far outside face
F.S.:	Field Splice
Ft.:	Feet
F.W.:	Far wall
Galv.:	Galvanize
Gr.:	Grade
H.S.:	High strength
I.D.:	Inside diameter
Lb.:	Pound
LUD:	Lock-up Device
Max.:	Maximum
Min.:	Minimum
MoDOT:	Missouri Department of Transportation
N.F.:	Near face
N.I.F.:	Near inside face
N.O.F.:	Near outside face
No. or Nos.:	Number
N.S.:	Near Side
N.W.:	Near wall
O.D.:	Outside diameter
PL:	Plate
P.T.:	Post-tensioning
R.:	Radius

SYMBOLS:

Spa.:	Space
Sta.:	Station
Symm.:	Symmetric
Thru:	Through
Typ.:	Typical
U.N.O.:	Unless noted otherwise
&:	And

CONSTRUCTION:
Erection loads during construction, except wind loads, were in accordance with Division I, Section 7.4 of AASHTO "Guide Specifications for Design and Construction of Segmental Concrete Bridges", 1999, including current interim specifications.

Wind loads in accordance with the wind tunnel test report were used. Design wind speed for structural design during construction stages had a return period of 20 years. The design speed was a 1-hour mean speed of 63 mph. The wind tunnel test report is available for review from MoDOT upon request.

Temperature effects were considered during construction.

Earthquake was omitted as a construction load.

Construction loads were combined in accordance with AASHTO LRFD Art. 3.4.2 for load and resistance factor design. Reinforcing steel stresses at service load was limited to 30,000 psi to control flexural cracking of concrete.

The Contractor's attention was directed to the requirements of the U.S. Coast Guard permit, regarding minimum clearances for the bridge. The Contractor conformed to the requirements of the U.S. Coast Guard, regarding clearances and encroachment on the navigation channel during construction.

Cofferdams used to construct the foundations were considered incidental to foundation bid items for Pier 11 and Pier 12.

Temporary falsework used to support the superstructure during erection was considered incidental to "Fabricated Structural Low Alloy Steel (Plate Girder) A709, Gr. HPS70W".

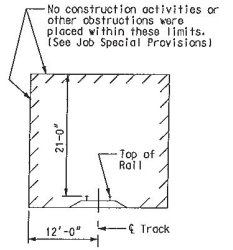

MINIMUM CONSTRUCTION CLEARANCES
(NORMAL TO RAILWAY)
(NOT TO SCALE)

GENERAL NOTES

Detailed JUL 2009
Checked JUL 2009

Note: This drawing is not to scale. Follow dimensions.

DATE 5/17/10
ROUTE I-70 | STATE MO/IL
DISTRICT 6 | SHEET NO. BR7
COUNTY ST. LOUIS CITY - MO, ST. CLAIR - IL
JOB NO. J6I0984
CONTRACT ID. 091208-601
PROJECT NO. I-70-9 (20)
BRIDGE NO. A6500

DATE	DESCRIPTION
5-17-10	4 Revised per ATC

MISSOURI HIGHWAYS AND TRANSPORTATION COMMISSION
105 WEST CAPITOL
JEFFERSON CITY, MO 65102
1-888-ASK-MODOT (1-888-275-6636)
HNTB
715 KIRK DRIVE
KANSAS CITY, MO 64105-310
816.472.1201 FAX 816.472.720
CERTIFICATE OF AUTHORITY
NO. 001270

Final Plans

REV.

QUANTITIES

ITEM		SUBSTR.	SUPERSTR.	TOTAL
Drilled Shafts (10'-0" Dia.)	linear foot	534.0	——	534.0
Rock Sockets (9'-6" Dia.)	linear foot	137.8	——	137.8
Foundation Inspection Holes	linear foot	220.6	——	220.6
Concrete Coring	linear foot	0	——	0
Sonic Logging Testing	each	8	——	8
SID Inspection	each	1	——	1
Television Camera Inspection	each	8	——	8
Class B-1 Concrete (Substructure)	cu. yard	2165.1	——	2165.1
* Median Barrier Curb (Type C)	linear foot	——	2787	2787
Class A-1 Concrete	cu. yard	15,536.4	——	15,536.4
Counterweight Concrete	lump sum	——	——	1
Precast Prestressed Concrete Slab Panels	sq. yard	——	28,625	28,625
Reinforcing Steel (Bridges)	pound	5,487,960	——	5,487,960
Mechanical Bar Splice	each	7743	——	7743
Reinforcing Steel (Epoxy Coated)	pound	359,300	——	359,300
Protective Coating - Concrete Bents and Piers (Epoxy)	lump sum	——	——	1
Temporary Coating - Concrete Bents and Piers (Weathering Steel)	lump sum	——	——	1
Protective Coating - Towers (Non-Epoxy)	lump sum	——	——	1
Fabricated Structural Carbon Steel (Miscellaneous)	pound	2040	8740	10,780
Fabricated Structural Low Alloy Steel (Plate Girder) A709, Gr. HPS70W	pound	——	6,849,270	6,849,270
Fabricated Structural Low Alloy Steel (Plate Girder) A709, Gr. HPS50W	pound	——	7,853,870	7,853,870
Drainage System (On Structure)	lump sum	——	——	1
Inspection Access	lump sum	——	——	1
Inspection Traveler	lump sum	——	——	1
Post-Tensioning System at Towers	lump sum	——	——	1
Stay Cable Testing	lump sum	——	——	0
Stay Cables	lump sum	——	——	1
Tie-Downs	lump sum	——	——	1
Lock-Up Device	each	8	——	8
Fabricated Structural Low Alloy Steel (Tower Anchor Box) A709, Gr. HPS50W	pound	1,653,920	——	1,653,920
Bridge Railing	linear foot	——	5534	5534
POT Bearing	each	——	4	4
Modular Expansion Joint System	linear foot	——	172	172
Latex Modified Concrete Wearing Surface	sq. yard	——	24,800	24,800
SLAB DRAIN WITH GRATE (CONT. 5002)	each	——	4	4
MISC. STRUCTURAL STEEL CONSTRUCTION STAY CABLE TESTING (CONT. 5009)	lump sum	1		1
Class 1 Excavation(CONT. 5011)	cu. yard	121.5		121.5
MISC. STRUCTURAL STEEL CONSTRUCTION ANCHOR BOX MODIFICATION (CONT. 5016)	each	——	1	1
MISC. STRUCTURAL STEEL CONSTRUCTION TOWER INSPECTION ACCESS DOORS (COATING & GRAB RAILS) (CONT. 5017)	lump sum	——	1	1
MISC. CONCRETE CONSTRUCTION INCREASE IN DECK WET JOINT THICKNESS (CONT. 5018)	lump sum	——	1	1
MISC. STRUCTURAL STEEL CONSTRUCTION TRANSVERSE TOWER POST-TENSIONING MODIFICATION (CONT.5020)	lump sum	——	1	1
MISC. STRUCTURAL STEEL CONSTRUCTION STAY CABLE FRICTION DAMPERS & AVP'S (CONT. 5030)	lump sum	——	1	1
MISC.CONCRETE CONSTRUCTION ADJUST LATERAL RESTRAINER BLOCK ELEVATION(CONT. 5034)	lump sum	——	1	1
BARRIER CURB (TYPE D) (CONT. 5035)	linear foot	——	117	117
MISC. CONCRETE CONSTRUCTION SURFACE SEALING MEDIAN BARRIER CURB (TYPE C),BRIDGE RAILING CURB AND DECK OVERHANG (CONT. 5036)	lump sum	——	1	1
MISC. Latex Modified Concrete Wearing Surface (CONT. 5039)	lump sum	——	1	1

Notes:
* Median Barrier Curb (Type C) was ~~cast-in-place or~~ slip-form.

ESTIMATED QUANTITIES - CAISSON FOUNDATION

ITEM		TOTAL
Foundation - Pier 11	lump sum	1
Foundation - Pier 12	lump sum	1

QUANTITIES - FOUNDATION AT PIERS 11 & 12

ITEM		Pier 11	Pier 12	TOTAL
Foundation Inspection Holes	linear foot	195	169	364
Concrete Coring	linear foot	——	386.7	386.7
Sonic Logging Testing	each	6	6	12
Drilled Shaft Load Test	each	1	——	1
SID Inspection	each	——	1	1
MISC. Television Camera Inspection	each	1	1	2
Drilled Shafts (11'-6" Dia.)	linear foot	0	0	0
Rock Sockets (11'-0" Dia.)	linear foot	140.7	113.8	254.5
Seal Concrete	cu. yard	0	0	0
Class B-1 Concrete (Substructure)	cu. yard	0	0	0
Reinforcing Steel (Bridges)	pound	0	0	0
Mechanical Bar Splice	each	0	0	0
MISC. PEDESTAL PILE DRILLED SHAFTS (11'6" DIA) (CONT. 5003)	linear foot	348.0	429.4	777.4
CLASS B-1 CONVRETE (SUBSTR) (CONT. 5004)	cu. yards	3585.2	3585.2	7170.4
REINFORCING STEEL (BRIDGES) (CONT. 5005)	pound	1,894,825	1,894,825	3,789,650
SEAL CONCRETE (CONT. 5006)	cu. yards	2321.5	2321.5	4643.0
MECHANICAL BAR SPLICE (CONT. 5008)	each	1480	1480	2960

DATE 4/19/12
ROUTE I-70 | STATE MO/IL
DISTRICT 6 | SHEET NO. BR8
COUNTY ST. LOUIS CITY - MO, ST. CLAIR - IL
JOB NO. J6I0984
CONTRACT ID. 091208-601
PROJECT NO. I-70-9 (20)
BRIDGE NO. A6500

DATE	DESCRIPTION
11-25-09	Revised Struct. Steel quantity
5-17-10	Revised per A/C
9-3-10	Revised Reinforcing Steel
6-10-11	Revised Reinforcing Steel
4-19-12	Revised Reinforcing Steel

MISSOURI HIGHWAYS AND TRANSPORTATION COMMISSION
105 WEST CAPITOL
JEFFERSON CITY, MISSOURI 65102
1-888-ASK-MODOT (1-888-275-6636)

HNTB
715 KIRK DRIVE
KANSAS CITY, MO 64105-1310
TELEPHONE (816) 472-1201
CERTIFICATE OF AUTHORITY NO. 001270

FINAL PLANS

Detailed JUL 2009
Checked JUL 2009

Note: This drawing is not to scale. Follow dimensions.

T:\de-proj\St_Louis_City\Construction\J6I0984\Asbuilts\Bridge\B_A6500_008-205_J6I0984_008_REV011.dgn 11:25:02 AM

QUANTITIES

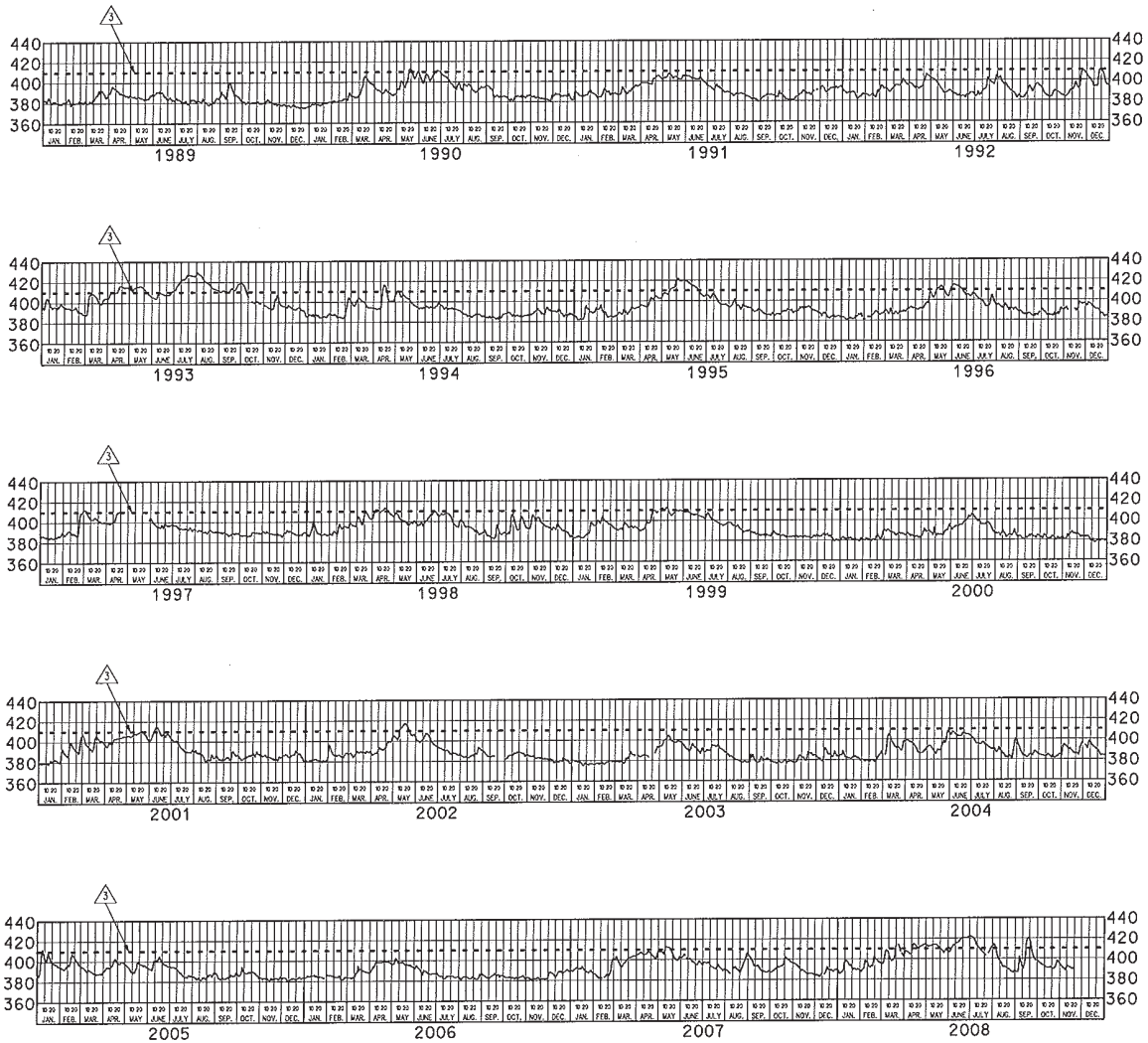

Notes:
Stage hydrograph values are from the St. Louis Gage, located at River Mile 179.6.

410.0 (3)

- - - - Represents Elevation 416.2 (See Special Provision "Potential Construction Delays Due To High Water").

ST. LOUIS GAGE
RIVER STAGE HYDROGRAPH

DATE 11/25/09
ROUTE I-70 | STATE MO/IL
DISTRICT 6 | SHEET NO. BR10
COUNTY ST. LOUIS CITY - MO, ST. CLAIR - IL
JOB NO. J6I0984
CONTRACT ID. 091208-601
PROJECT NO. I-70-9 (20)
BRIDGE NO. A6500

DATE	DESCRIPTION
11-25-09	(3) Revised Water Surface Elev.

MISSOURI HIGHWAYS AND TRANSPORTATION COMMISSION
105 WEST CAPITOL
JEFFERSON CITY, MO 65102
1-888-ASK-MODOT (1-888-275-6636)

HNTB
715 KIRK DRIVE
KANSAS CITY, MO 64105-1310
TELEPHONE (816) 472-1201
CERTIFICATE OF AUTHORITY NO. 001210

Final Plans

Detailed JUL 2009
Checked JUL 2009

Note: This drawing is not to scale. Follow dimensions.

T:\de-proj\St_Louis_City\Construction\J6I0984\Asbuilts\Bridge\B_A6500_010-205_J6I0984_010.dgn

11:35:07 AM

4 BLANK SHEET → ~~FOUNDATION LAYOUT~~

DATE 5/17/10
ROUTE I-70 | STATE MO/IL
DISTRICT 6 | SHEET NO. BR11
COUNTY ST. LOUIS CITY - MO, ST. CLAIR - IL
JOB NO. J6I0984
CONTRACT ID. 091208-601
PROJECT NO. I-70-9 (20)
BRIDGE NO. A6500

DATE	DESCRIPTION
5-17-10	4 Revised per ATC

MISSOURI HIGHWAYS AND TRANSPORTATION COMMISSION
MoDOT
105 WEST CAPITOL
JEFFERSON CITY, MO 65102
1-888-ASK-MODOT (1-888-275-6636)

HNTB
715 KIRK DRIVE
KANSAS CITY, MO 64105-1310
TELEPHONE (816) 472-1201
CERTIFICATE OF AUTHORITY NO. 001270

FINAL PLANS

REV.

Detailed JUL 2009
Checked JUL 2009

Note: This drawing is not to scale. Follow dimensions.

T:\de-proj\St_Louis_City\Construction\J6I0984\Asbuilts\Bridge\B_A6500_011-205_J6I0984_011.dgn

9:00:44 AM

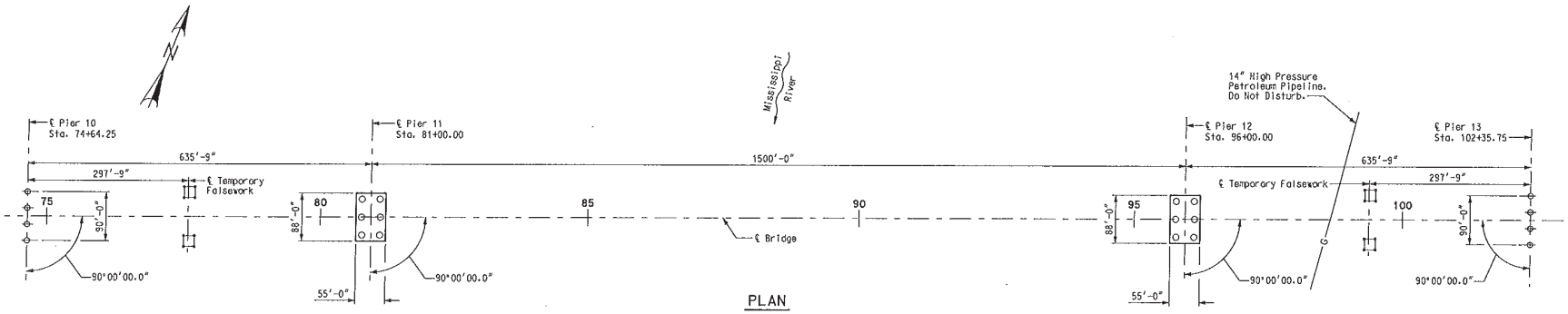

PLAN

4

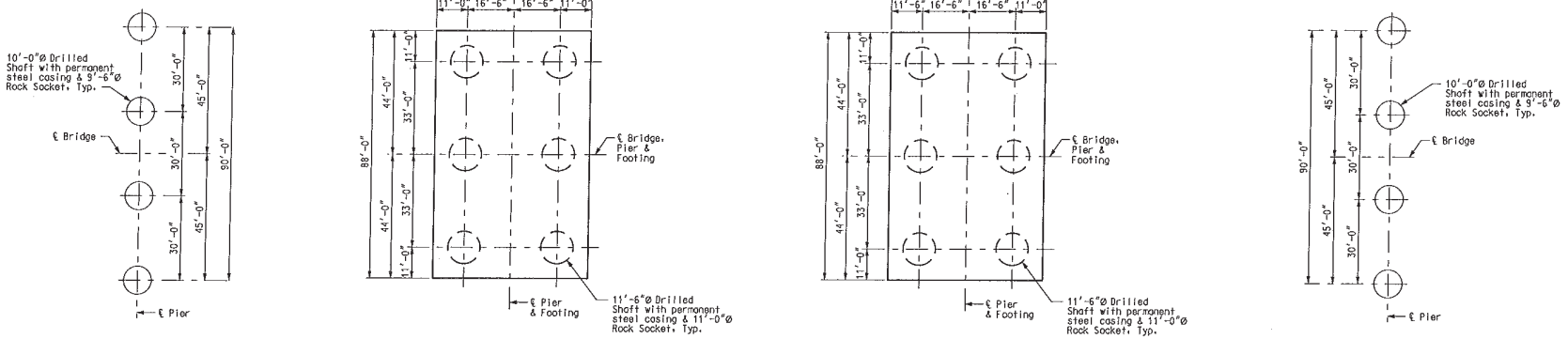

4

FOUNDATION LAYOUT

DATE	5/17/10
ROUTE	I-70
STATE	MO/IL
DISTRICT	6
SHEET NO.	BR12
COUNTY	ST. LOUIS CITY - MO ST. CLAIR - IL
JOB NO.	J6I0984
CONTRACT ID.	091208-601
PROJECT NO.	I-70-9 (20)
BRIDGE NO.	A6500

DESCRIPTION	DATE
4 Revised per ATC	5-17-10

MISSOURI HIGHWAYS AND TRANSPORTATION COMMISSION
105 WEST CAPITOL
JEFFERSON CITY, MO 65102
1-888-ASK-MODOT (1-888-275-6636)

HNTB
715 KIRK DRIVE
KANSAS CITY, MO 64105-1310
TELEPHONE (816) 472-1201
CERTIFICATE OF AUTHORITY NO. 001270

FINAL PLANS

REV.

Detailed JUL 2009
Checked JUL 2009

Note: This drawing is not to scale. Follow dimensions.

I:\de-proj\St_Louis_City\Construction\J6I0984\Asbuilts\Bridge\B_A6500_012-205_J6I0984_012.dgn

1:51:45 PM

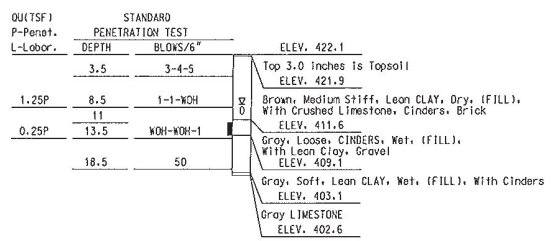

Boring Number WA-1
Pier 10

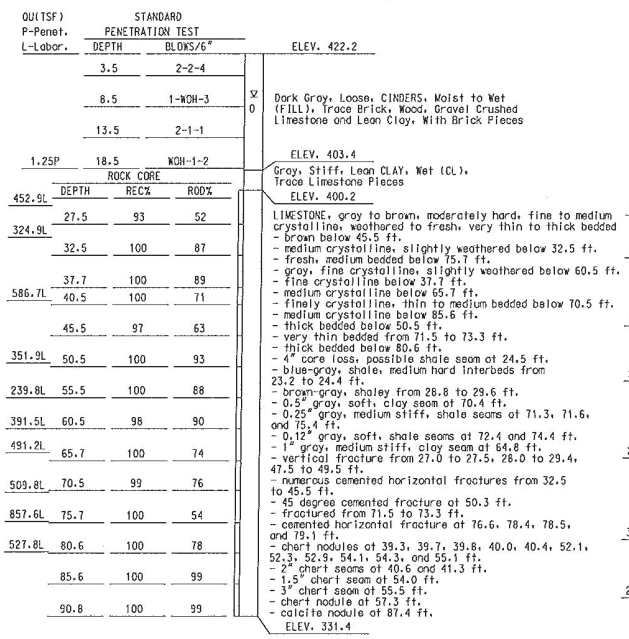

Boring Number WA-2
Pier 10

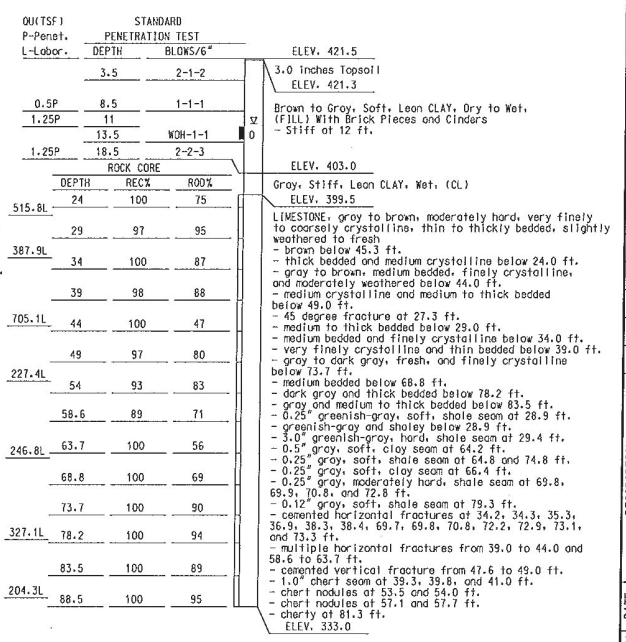

Boring Number WA-3
Pier 10

TYPICAL BORING

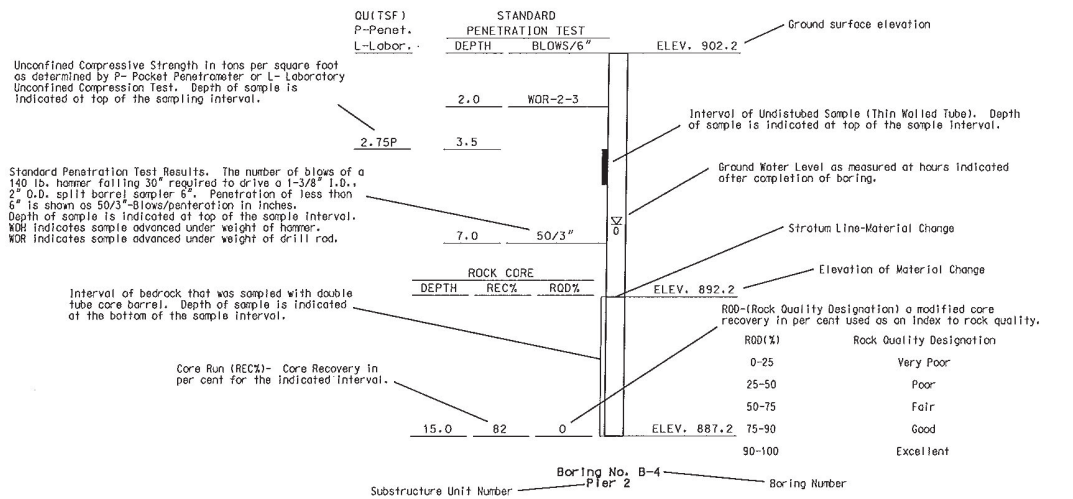

GENERAL NOTES:

The borings shown in these plans were drilled by Geotechnology, Inc., under the direction of HNTB Corporation, between September 8 and December 31, 2008.

For boring locations in plan, see Sheet No. BR4.

The ground water levels shown were recorded during time of drilling. Porosity of soil strata, weather conditions, seasonal changes, site topography, etc., may cause changes in the water levels reported.

The boring information shown on this drawing is abbreviated. A complete copy of boring logs and test results was provided in the bridge electronic deliverable file and from the Project Contact upon written request to the Commission.

For notice and disclaimer regarding boring log data, see Sheet No. BR4.

BORING DATA

Detailed JUL 2009
Checked JUL 2009

Note: This drawing is not to scale. Follow dimensions.

Sheet No. 13 of 205

DATE 8/20/09
ROUTE I-70
STATE MO/IL
DISTRICT 6
SHEET NO. BR13
COUNTY ST. LOUIS CITY - MO ST. CLAIR - IL
JOB NO. J6I0984
CONTRACT ID. 091208-601
PROJECT NO. I-70-9 (20)
BRIDGE NO. A6500

DESCRIPTION | DATE | REV.

MISSOURI HIGHWAYS AND TRANSPORTATION COMMISSION
105 WEST CAPITOL
JEFFERSON CITY, MO 65102
1-888-ASK-MODOT (1-888-275-6636)

HNTB
715 KIRK DRIVE
KANSAS CITY, MO 64105-1310
TELEPHONE (816) 472-1201
CERTIFICATE OF AUTHORITY NO. 001270

FINAL PLANS

T:\de-proj\St_Louis_City\Construction\J6I0984\Asbuilts\Bridge\B_A6500_013-205_J6I0984_013.dgn
11:38:46 AM

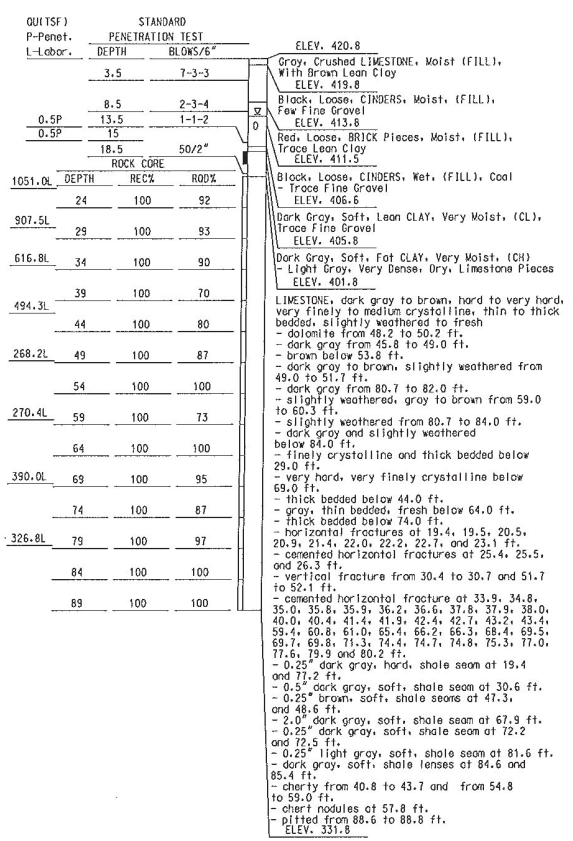

Boring Number WA-4
Pier 10

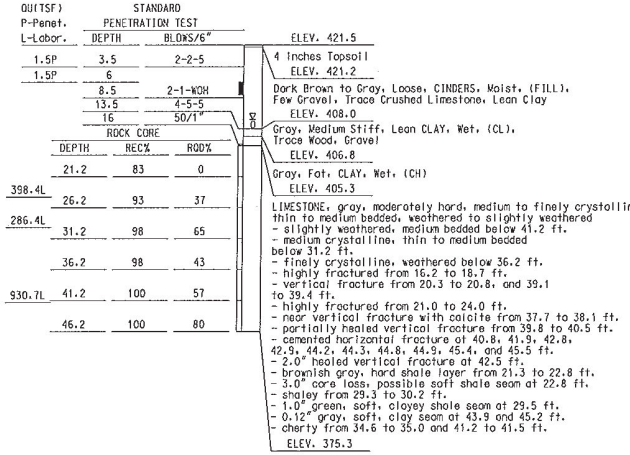

Boring Number WAC-5
Pier 10

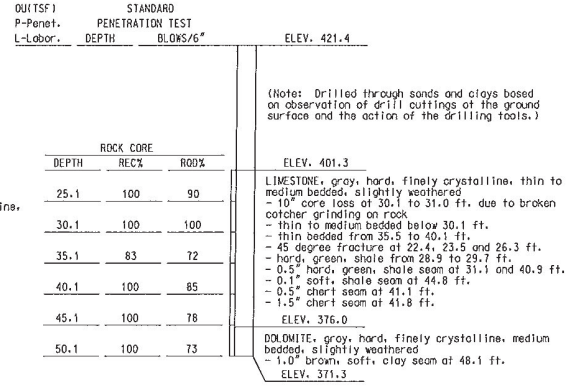

Boring Number WAC-6
Pier 10

NOTE:

For Typical Boring and General Notes, see Sheet No. BR13.

BORING DATA

DATE
8/20/09
ROUTE
I-70
STATE
MO/IL
DISTRICT
6
SHEET NO.
BR14
COUNTY
ST. LOUIS CITY - MO
ST. CLAIR - IL
JOB NO.
J610984
CONTRACT ID.
091208-601
PROJECT NO.
I-70-9 (20)
BRIDGE NO.
A6500

REV.	DESCRIPTION	DATE

MISSOURI HIGHWAYS AND TRANSPORTATION COMMISSION
105 WEST CAPITOL
JEFFERSON CITY, MO 65102
1-888-ASK-MODOT (1-888-275-6636)

HNTB
715 KIRK DRIVE
KANSAS CITY, MO 64105-1310
TELEPHONE (816) 472-1201
CERTIFICATE OF AUTHORITY NO. 001270

FINAL PLANS

Detailed JUL 2009
Checked JUL 2009

Note: This drawing is not to scale. Follow dimensions.

T:\de-proj\St_Louis_City\Construction\J610984\Asbuilts\Bridge\B_A6500_014-205_J610984_014.dgn

11:43:17 AM

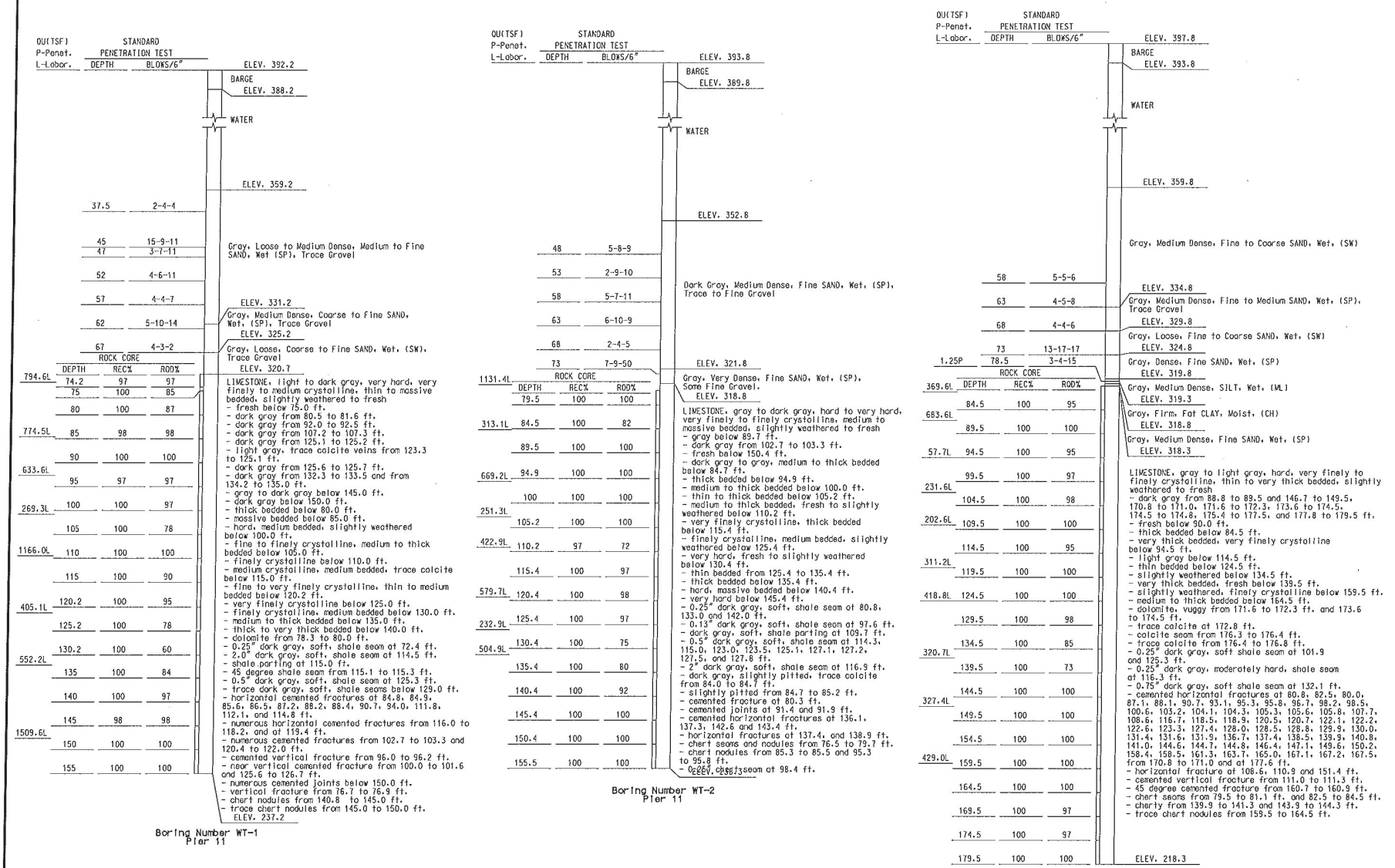

NOTE:

For Typical Boring and General Notes, see Sheet No. BR13.

BORING DATA

DATE 8/20/09
ROUTE I-70 STATE MO/IL
DISTRICT 6 SHEET NO. BR15
COUNTY ST. LOUIS CITY - MO ST. CLAIR - IL
JOB NO. J6I0984
CONTRACT ID. 091208-601
PROJECT NO. I-70-9 (20)
BRIDGE NO. A6500

DATE	DESCRIPTION

MISSOURI HIGHWAYS AND TRANSPORTATION COMMISSION
105 WEST CAPITOL
JEFFERSON CITY, MO 65102
1-888-ASK-MODOT (1-888-275-6636)
HNTB
715 KIRK DRIVE
KANSAS CITY, MO 64105-1310
TELEPHONE (816) 472-1201
CERTIFICATE OF AUTHORITY NO. 001210

FINAL PLANS

REV.

Detailed JUL 2009
Checked JUL 2009

Note: This drawing is not to scale. Follow dimensions.

T:\de-proj\St_Louis_City\Construction\J6I0984\Asbuilts\Bridge\B_A6500_015-205_J6I0984_015.dgn

11:45:40 AM

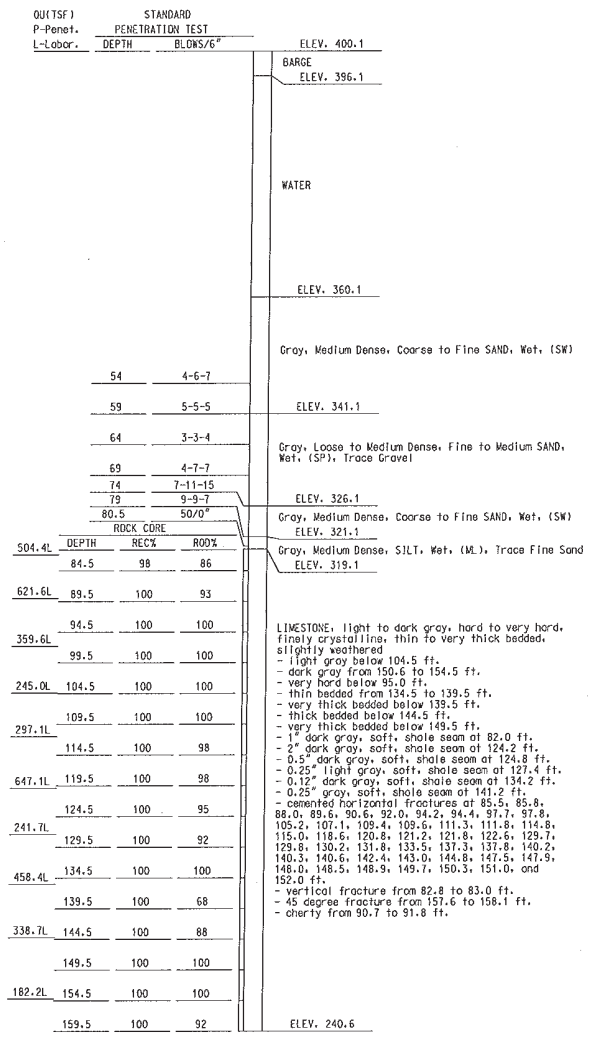

Boring Number WT-4
Pier 11

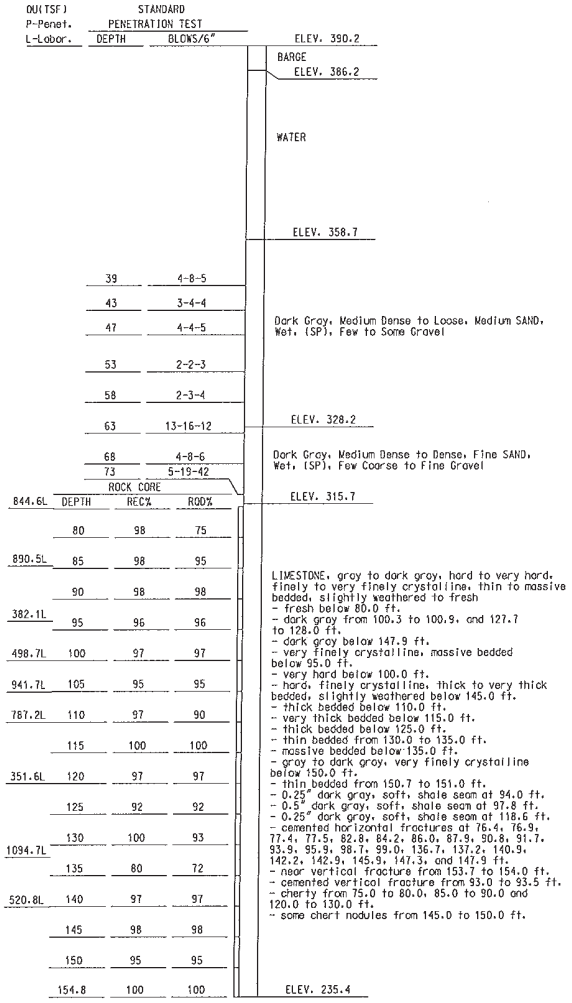

Boring Number WT-5
Pier 11

NOTE:

For Typical Boring and General Notes, see Sheet No. BR13.

BORING DATA

DATE 8/20/09
ROUTE I-70 STATE MO/IL
DISTRICT 6 SHEET NO. BR16
COUNTY ST. LOUIS CITY - MO ST. CLAIR - IL
JOB NO. J6I0984
CONTRACT ID. 091208-601
PROJECT NO. I-70-9 (20)
BRIDGE NO. A6500

DESCRIPTION | DATE

MISSOURI HIGHWAYS AND TRANSPORTATION COMMISSION
105 WEST CAPITOL
JEFFERSON CITY, MO 65102
1-888-ASK-MODOT (1-888-275-6636)

HNTB
715 KIRK DRIVE
KANSAS CITY, MO 64105-1310
TELEPHONE (816) 472-1201
CERTIFICATE OF AUTHORITY NO. 001270

FINAL PLANS

REV.

Detailed JUL 2009
Checked JUL 2009

Note: This drawing is not to scale. Follow dimensions.

T:\de-proj\St_Louis_City\Construction\J6I0984\Asbuilts\Bridge\B_A6500_016-205_J6I0984_016.dgn

11:50:04 AM

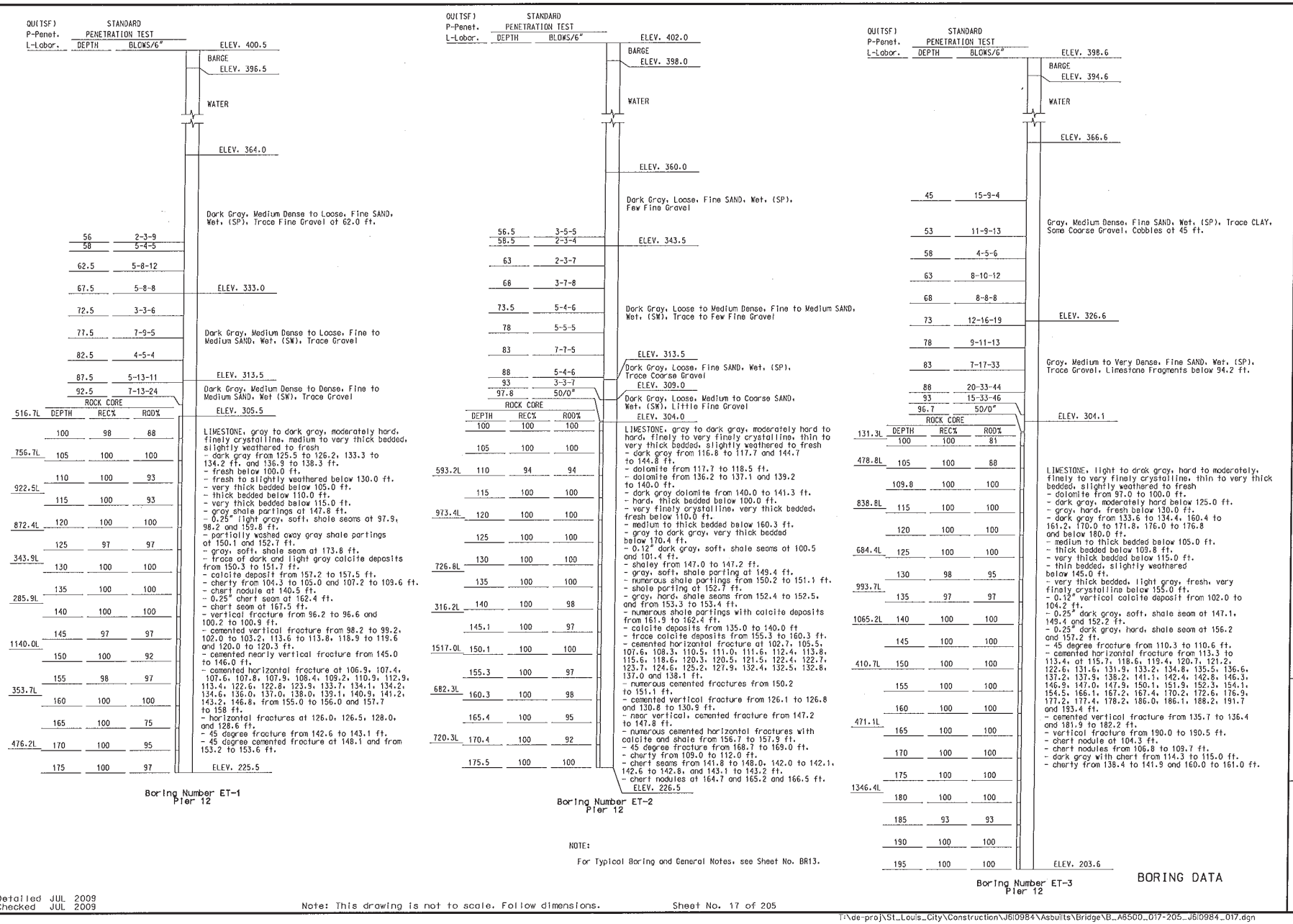
QU(TSF)
P-Penet.
L-Labor.
STANDARD PENETRATION TEST
DEPTH
BLOWS/6"
ROCK CORE
DEPTH
REC%
ROD%
ELEV. 400.5
BARGE
ELEV. 396.5
WATER
ELEV. 364.0
Dark Gray, Medium Dense to Loose, Fine SAND, Wet, (SP), Trace Fine Gravel at 62.0 ft.
56 2-3-9
58 5-4-5
62.5 5-8-12
67.5 5-8-8
ELEV. 333.0
72.5 3-3-6
77.5 7-9-5
Dark Gray, Medium Dense to Loose, Fine to Medium SAND, Wet, (SW), Trace Gravel
82.5 4-5-4
87.5 5-13-11
ELEV. 313.5
92.5 7-13-24
Dark Gray, Medium Dense to Dense, Fine to Medium SAND, Wet (SW), Trace Gravel
ELEV. 305.5
516.7L 100 98 88
LIMESTONE, gray to dark gray, moderately hard, finely crystalline, medium to very thick bedded, slightly weathered to fresh
- dark gray from 125.5 to 126.2, 133.3 to 134.2 ft. and 136.9 to 138.3 ft.
- fresh below 100.0 ft.
- fresh to slightly weathered below 130.0 ft.
- very thick bedded below 105.0 ft.
- thick bedded below 110.0 ft.
- very thick bedded below 115.0 ft.
- gray shale partings at 147.8 ft.
- 0.25" light gray, soft, shale seams at 97.9, 98.2 and 159.8 ft.
- partially washed away gray shale partings at 150.1 and 152.7 ft.
- gray, soft, shale seam at 173.8 ft.
- trace of dark and light gray calcite deposits from 150.3 to 151.7 ft.
- calcite deposit from 157.2 to 157.5 ft.
- cherty from 104.3 to 105.0 and 107.2 to 109.6 ft.
- chert nodule at 140.5 ft.
- 0.25" chert seam at 162.4 ft.
- chert seam at 167.5 ft.
- vertical fracture from 96.2 to 96.6 and 100.2 to 100.9 ft.
- cemented vertical fracture from 98.2 to 99.2, 102.0 to 103.2, 113.6 to 113.8, 118.9 to 119.6 and 120.0 to 120.3 ft.
- cemented nearly vertical fracture from 145.0 to 146.0 ft.
- cemented horizontal fracture at 106.9, 107.4, 107.6, 107.8, 107.9, 108.4, 109.2, 110.9, 112.9, 113.4, 122.6, 122.8, 123.9, 133.7, 134.1, 134.2, 134.6, 136.0, 137.0, 138.0, 139.1, 140.9, 141.2, 143.2, 146.8, from 155.0 to 156.0 and 157.7 to 158 ft.
- horizontal fractures at 126.0, 126.5, 128.0, and 128.6 ft.
- 45 degree fracture from 142.6 to 143.1 ft.
- 45 degree cemented fracture at 148.1 and from 153.2 to 153.6 ft.
105 100 100
922.5L 115 100 93
872.4L 120 100 100
125 97 97
343.9L 130 100 100
135 100 100
285.9L 140 100 100
145 97 97
1140.0L 150 100 92
155 98 97
353.7L 160 100 100
165 100 75
476.2L 170 100 95
175 100 97
ELEV. 225.5
Boring Number ET-1
Pier 12
QU(TSF)
P-Penet.
L-Labor.
STANDARD PENETRATION TEST
DEPTH
BLOWS/6"
ROCK CORE
DEPTH
REC%
ROD%
ELEV. 402.0
BARGE
ELEV. 398.0
WATER
ELEV. 360.0
Dark Gray, Loose, Fine SAND, Wet, (SP), Few Fine Gravel
56.5 3-5-5
58.5 2-3-4
ELEV. 343.5
63 2-3-7
68 3-7-8
73.5 5-4-6
Dark Gray, Loose to Medium Dense, Fine to Medium SAND, Wet, (SW), Trace to Few Fine Gravel
78 5-5-5
83 7-7-5
ELEV. 313.5
88 5-4-6
Dark Gray, Loose, Fine SAND, Wet, (SP), Trace Coarse Gravel
93 3-3-7
ELEV. 309.0
97.8 50/0"
Dark Gray, Loose, Medium to Coarse SAND, Wet, (SW), Little Fine Gravel
ELEV. 304.0
100 100 100
LIMESTONE, gray to dark gray, moderately hard to hard, finely to very finely crystalline, thin to very thick bedded, slightly weathered to fresh
- dark gray from 116.8 to 117.7 and 144.7 to 144.8 ft.
- dolomite from 117.7 to 118.5 ft.
- dolomite from 136.2 to 137.1 and 139.2 to 140.0 ft.
- dark gray dolomite from 140.0 to 141.3 ft.
- hard, thick bedded below 100.0 ft.
- very finely crystalline, very thick bedded, fresh below 110.0 ft.
- medium to thick bedded below 160.3 ft.
- gray to dark gray, very thick beddad below 170.4 ft.
- 0.12" dark gray, soft, shale seams at 100.5 and 101.4 ft.
- shaley from 147.0 to 147.2 ft.
- gray, soft, shale parting at 149.4 ft.
- numerous shale partings from 150.2 to 151.1 ft.
- shale parting at 152.7 ft.
- gray, hard, shale seams from 152.4 to 152.5, and from 153.3 to 153.4 ft.
- numerous shale partings with calcite deposits from 161.9 to 162.4 ft.
- calcite deposits from 135.0 to 140.0 ft
- trace calcite deposits from 155.3 to 160.3 ft.
- cemented horizontal fracture at 102.7, 105.5, 107.6, 108.3, 110.5, 111.0, 111.6, 112.4, 113.8, 115.6, 118.6, 120.3, 120.5, 121.5, 122.4, 122.7, 123.7, 124.6, 125.2, 127.9, 132.4, 132.5, 132.8, 137.0 and 138.1 ft.
- numerous cemented fractures from 150.2 to 151.1 ft.
- cemented vertical fracture from 126.1 to 126.8 and 130.8 to 130.9 ft.
- near vertical, cemented fracture from 147.2 to 147.8 ft.
- numerous cemented horizontal fractures with calcite and shale from 156.7 to 157.9 ft.
- 45 degree fracture from 168.7 to 169.0 ft.
- cherty from 109.0 to 112.0 ft.
- chert seams from 141.8 to 148.0, 142.0 to 142.1, 142.6 to 142.8, and 143.1 to 143.2 ft.
- chert nodules at 164.7 and 165.2 and 166.5 ft.
593.2L 110 94 94
115 100 100
973.4L 120 100 100
125 100 100
726.8L 130 100 100
135 100 100
316.2L 140 100 98
145.1 100 97
1517.0L 150.1 100 100
155.3 100 97
682.3L 160.3 100 98
165.4 100 95
720.3L 170.4 100 92
175.5 100 100
ELEV. 226.5
Boring Number ET-2
Pier 12
NOTE:
For Typical Boring and General Notes, see Sheet No. BR13.
QU(TSF)
P-Penet.
L-Labor.
STANDARD PENETRATION TEST
DEPTH
BLOWS/6"
ROCK CORE
DEPTH
REC%
ROD%
ELEV. 398.6
BARGE
ELEV. 394.6
WATER
ELEV. 366.6
45 15-9-4
Gray, Medium Dense, Fine SAND, Wet, (SP), Trace CLAY, Some Coarse Gravel, Cobbles at 45 ft.
53 11-9-13
58 4-5-6
63 8-10-12
68 8-8-8
73 12-16-19
ELEV. 326.6
78 9-11-13
83 7-17-33
Gray, Medium to Very Dense, Fine SAND, Wet, (SP), Trace Gravel, Limestone Fragments below 94.2 ft.
88 20-33-44
93 15-33-46
96.7 50/0"
ELEV. 304.1
131.3L 100 100 81
LIMESTONE, light to drak gray, hard to moderately, finely to very finely crystalline, thin to very thick bedded, slightly weathered to fresh
- dolomite from 97.0 to 100.0 ft.
- dark gray, moderately hard below 125.0 ft.
- gray, hard, fresh below 130.0 ft.
- dark gray from 133.6 to 134.4, 160.4 to 161.2, 170.0 to 171.8, 176.0 to 176.8 and below 180.0 ft.
- medium to thick bedded below 105.0 ft.
- thick bedded below 109.8 ft.
- very thick bedded below 115.0 ft.
- thin bedded, slightly weathered below 145.0 ft.
- very thick bedded, light gray, fresh, very finely crystalline below 155.0 ft.
- 0.12" vertical calcite deposit from 102.0 to 104.2 ft.
- 0.25" dark gray, soft, shale seam at 147.1, 149.4 and 152.2 ft.
- 0.25" dark gray, hard, shale seam at 156.2 and 157.2 ft.
- 45 degree fracture from 110.3 to 110.6 ft.
- cemented horizontal fracture from 113.3 to 113.4, at 115.7, 118.6, 119.4, 120.7, 121.2, 122.6, 131.6, 131.9, 133.2, 134.8, 135.5, 136.6, 137.2, 137.9, 138.2, 141.1, 142.4, 142.8, 146.3, 146.9, 147.0, 147.9, 150.1, 151.9, 152.3, 154.1, 154.5, 166.1, 167.2, 167.4, 170.2, 172.6, 176.9, 177.2, 177.4, 178.2, 186.0, 186.1, 188.2, 191.7 and 193.4 ft.
- cemented vertical fracture from 135.7 to 136.4 and 181.9 to 182.2 ft.
- vertical fracture from 190.0 to 190.5 ft.
- chert nodule at 104.3 ft.
- chert nodules from 106.8 to 109.7 ft.
- dark gray with chert from 114.3 to 115.0 ft.
- cherty from 138.4 to 141.9 and 160.0 to 161.0 ft.
478.8L 105 100 88
109.8 100 100
838.8L 115 100 100
120 100 100
684.4L 125 100 100
130 98 95
993.7L 135 97 97
1065.2L 140 100 100
145 100 100
410.7L 150 100 100
155 100 100
160 100 100
471.1L 165 100 100
170 100 100
175 100 100
1346.4L 180 100 100
185 93 93
190 100 100
195 100 100
ELEV. 203.6
Boring Number ET-3
Pier 12
BORING DATA
DESCRIPTION
DATE
DATE 8/20/09
ROUTE I-70
STATE MO/IL
DISTRICT 6
SHEET NO. BR17
COUNTY ST. LOUIS CITY - MO ST. CLAIR - IL
JOB NO. J6I0984
CONTRACT ID. 091208-601
PROJECT NO. I-70-9 (20)
BRIDGE NO. A6500
MISSOURI HIGHWAYS AND TRANSPORTATION COMMISSION
105 WEST CAPITOL
JEFFERSON CITY, MO 65102
1-888-ASK-MODOT (1-888-275-6636)
HNTB
715 KIRK DRIVE
KANSAS CITY, MO 64105-1310
TELEPHONE (816) 472-1201
CERTIFICATE OF AUTHORITY NO. 001270
FINAL PLANS
REV.
Detailed JUL 2009
Checked JUL 2009
Note: This drawing is not to scale. Follow dimensions.
Sheet No. 17 of 205
T:\de-proj\St_Louis_City\Construction\J6I0984\Asbuilts\Bridge\B_A6500_017-205_J6I0984_017.dgn
11:53:05 AM

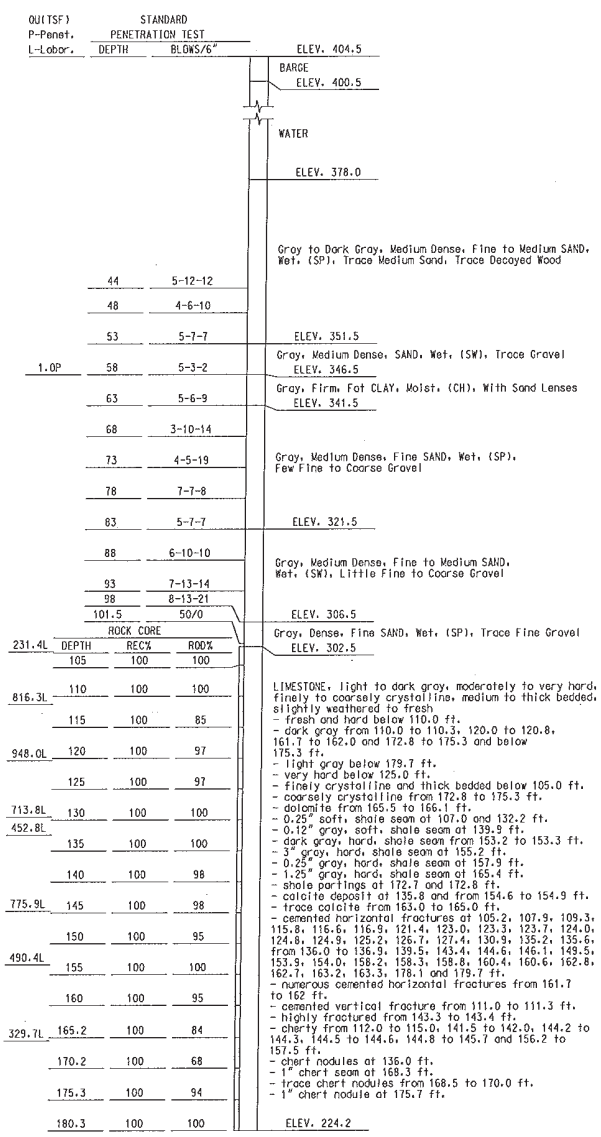

Boring Number ET-4
Pier 12

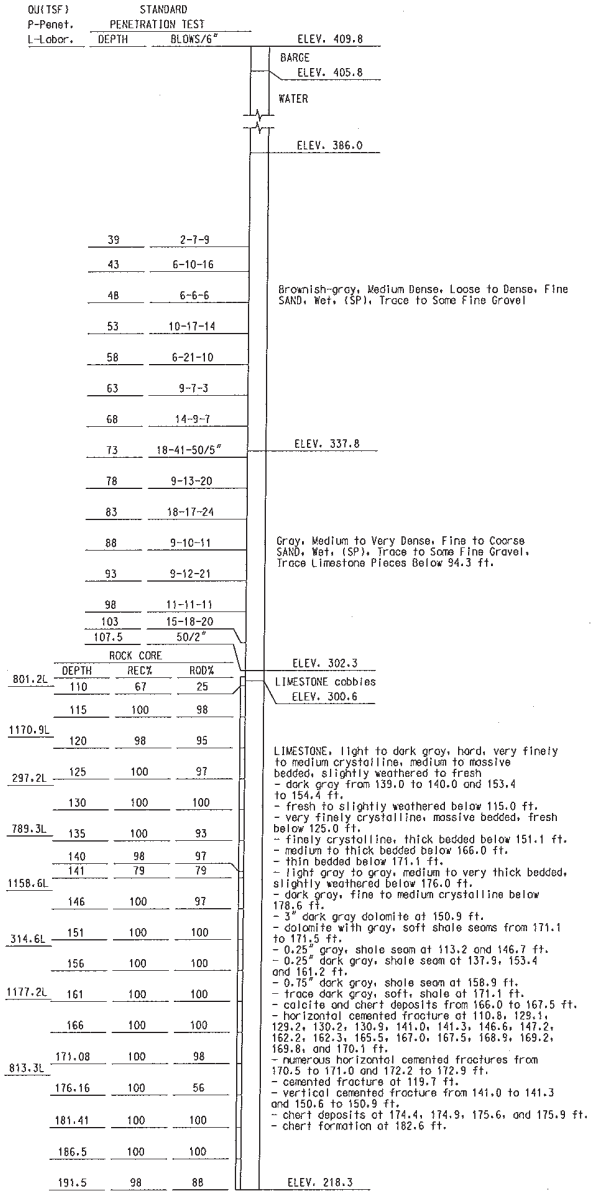

Boring Number ET-5
Pier 12

NOTE:

For Typical Boring and General Notes, see Sheet No. BR13.

BORING DATA

DATE 8/20/09
ROUTE I-70 STATE MO/IL
DISTRICT 6 SHEET NO. BR18
COUNTY ST. LOUIS CITY - MO ST. CLAIR - IL
JOB NO. J6I0984
CONTRACT ID. 091208-601
PROJECT NO. I-70-9 (20)
BRIDGE NO. A6500

DESCRIPTION | DATE

MISSOURI HIGHWAYS AND TRANSPORTATION COMMISSION
105 WEST CAPITOL
JEFFERSON CITY, MO 65102
1-888-ASK-MODOT (1-888-275-6636)

HNTB
715 KIRK DRIVE
KANSAS CITY, MO 64105-1310
TELEPHONE (816) 472-1201
CERTIFICATE OF AUTHORITY NO. 001270

FINAL PLANS

REV.

Detailed JUL 2009
Checked JUL 2009

Note: This drawing is not to scale. Follow dimensions.

Sheet No. 18 of 205

T:\de-proj\St_Louis_City\Construction\J6I0984\Asbuilts\Bridge\B_A6500_018-205_J6I0984_018.dgn

11:54:17 AM

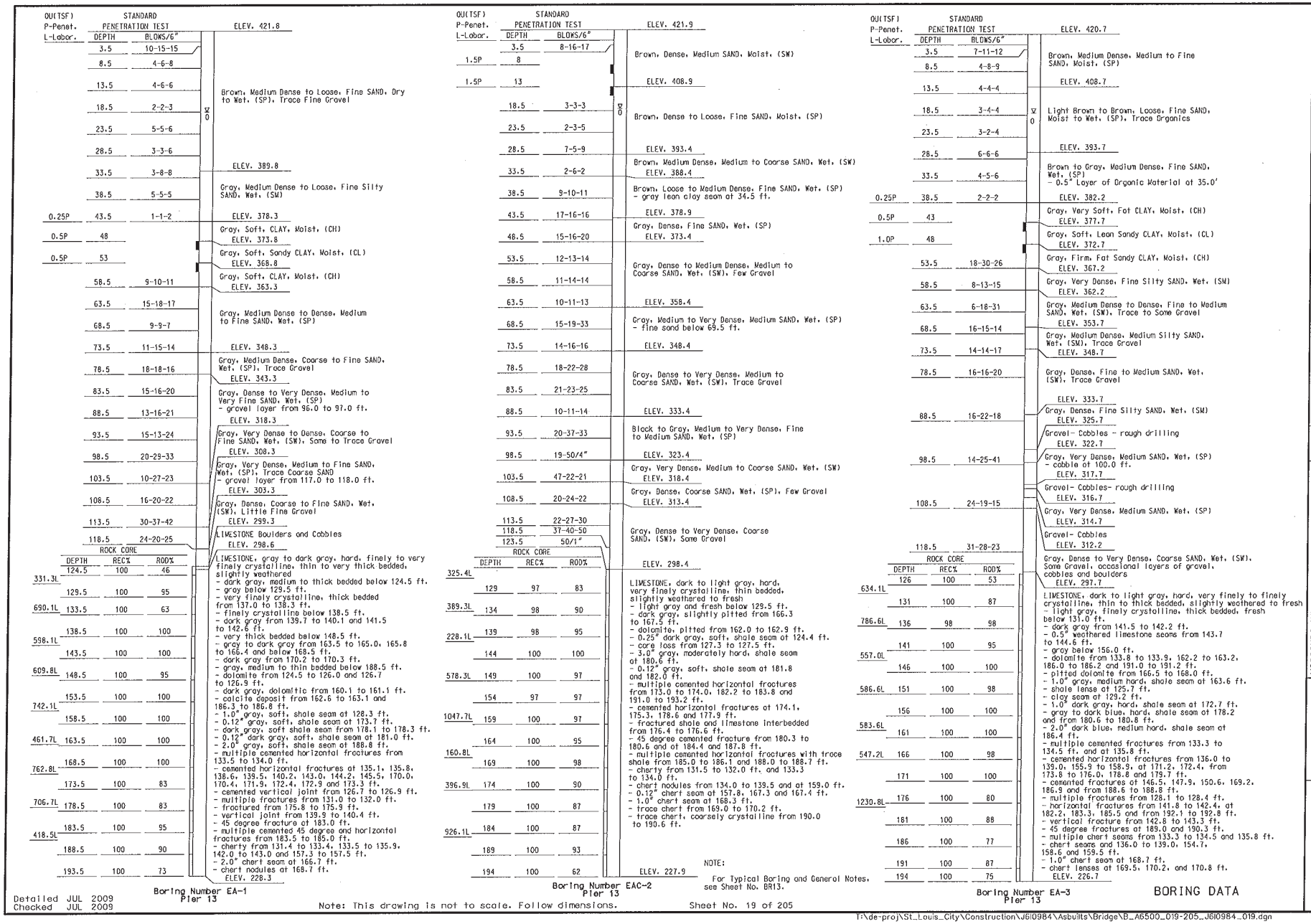
Boring Number EA-1
Pier 13
ELEV. 421.8
Brown, Medium Dense to Loose, Fine SAND, Dry to Wet, (SP), Trace Fine Gravel
ELEV. 389.8
Gray, Medium Dense to Loose, Fine Silty SAND, Wet, (SW)
ELEV. 378.3
Gray, Soft, CLAY, Moist, (CH)
ELEV. 373.8
Gray, Soft, Sandy CLAY, Moist, (CL)
ELEV. 368.8
Gray, Soft, CLAY, Moist, (CH)
ELEV. 363.3
Gray, Medium Dense to Dense, Medium to Fine SAND, Wet, (SP)
ELEV. 348.3
Gray, Medium Dense, Coarse to Fine SAND, Wet, (SP), Trace Gravel
ELEV. 343.3
Gray, Dense to Very Dense, Medium to Very Fine SAND, Wet, (SP)
- gravel layer from 96.0 to 97.0 ft.
ELEV. 318.3
Gray, Very Dense to Dense, Coarse to Fine SAND, Wet, (SW), Some to Trace Gravel
ELEV. 308.3
Gray, Very Dense, Medium to Fine SAND, Wet, (SP), Trace Coarse SAND
- gravel layer from 117.0 to 118.0 ft.
ELEV. 303.3
Gray, Dense, Coarse to Fine SAND, Wet, (SW), Little Fine Gravel
ELEV. 299.3
LIMESTONE Boulders and Cobbles
ELEV. 298.6
ROCK CORE
LIMESTONE, gray to dark gray, hard, finely to very finely crystalline, thin to very thick bedded, slightly weathered
- dark gray, medium to thick bedded below 124.5 ft.
- gray below 129.5 ft.
- very finely crystalline, thick bedded from 137.0 to 138.3 ft.
- finely crystalline below 138.5 ft.
- dark gray from 139.7 to 140.1 and 141.5 to 142.6 ft.
- very thick bedded below 148.5 ft.
- gray to dark gray from 163.5 to 165.0, 165.8 to 166.4 and below 168.5 ft.
- dark gray from 170.2 to 170.3 ft.
- gray, medium to thin bedded below 188.5 ft.
- dolomite from 124.5 to 126.0 and 126.7 to 126.9 ft.
- dark gray, dolomitic from 160.1 to 161.1 ft.
- calcite deposit from 162.6 to 163.1 and 186.3 to 186.8 ft.
- 1.0" gray, soft, shale seam at 128.3 ft.
- 0.12" gray, soft, shale seam at 173.7 ft.
- dark gray, soft shale seam from 178.1 to 178.3 ft.
- 0.12" dark gray, soft, shale seam at 181.0 ft.
- 2.0" gray, soft, shale seam at 188.8 ft.
- multiple cemented horizontal fractures from 133.5 to 134.0 ft.
- cemented horizontal fractures at 135.1, 135.8, 138.6, 139.5, 140.2, 143.0, 144.2, 145.5, 170.0, 170.4, 171.9, 172.4, 172.9 and 173.3 ft.
- cemented vertical joint from 126.7 to 126.9 ft.
- multiple fractures from 131.0 to 132.0 ft.
- fractured from 175.8 to 175.9 ft.
- vertical joint from 139.9 to 140.4 ft.
- 45 degree fracture at 183.0 ft.
- multiple cemented 45 degree and horizontal fractures from 183.5 to 185.0 ft.
- cherty from 131.4 to 133.4, 133.5 to 135.9, 142.0 to 143.0 and 157.3 to 157.5 ft.
- 2.0" chert seam at 166.7 ft.
- chert nodules at 168.7 ft.
ELEV. 228.3
Boring Number EAC-2
Pier 13
ELEV. 421.9
Brown, Dense, Medium SAND, Moist, (SW)
ELEV. 408.9
Brown, Dense to Loose, Fine SAND, Moist, (SP)
ELEV. 393.4
Brown, Medium Dense, Medium to Coarse SAND, Wet, (SW)
ELEV. 388.4
Brown, Loose to Medium Dense, Fine SAND, Wet, (SP)
- gray lean clay seam at 34.5 ft.
ELEV. 378.9
Gray, Dense, Fine SAND, Wet, (SP)
ELEV. 373.4
Gray, Dense to Medium Dense, Medium to Coarse SAND, Wet, (SW), Few Gravel
ELEV. 358.4
Gray, Medium to Very Dense, Medium SAND, Wet, (SP)
- fine sand below 69.5 ft.
ELEV. 348.4
Gray, Dense to Very Dense, Medium to Coarse SAND, Wet, (SW), Trace Gravel
ELEV. 333.4
Black to Gray, Medium to Very Dense, Fine to Medium SAND, Wet, (SP)
ELEV. 323.4
Gray, Very Dense, Medium to Coarse SAND, Wet, (SW)
ELEV. 318.4
Gray, Dense, Coarse SAND, Wet, (SP), Few Gravel
ELEV. 313.4
Gray, Dense to Very Dense, Coarse SAND, (SW), Some Gravel
ELEV. 298.4
ROCK CORE
LIMESTONE, dark to light gray, hard, very finely crystalline, thin bedded, slightly weathered to fresh
- light gray and fresh below 129.5 ft.
- dark gray, slightly pitted from 166.3 to 167.5 ft.
- dolomite, pitted from 162.0 to 162.9 ft.
- 0.25" dark gray, soft, shale seam at 124.4 ft.
- core loss from 127.3 to 127.5 ft.
- 3.0" gray, moderately hard, shale seam at 180.6 ft.
- 0.12" gray, soft, shale seam at 181.8 and 182.0 ft.
- multiple cemented horizontal fractures from 173.0 to 174.0, 182.2 to 183.8 and 191.0 to 193.2 ft.
- cemented horizontal fractures at 174.1, 175.3, 178.6 and 177.9 ft.
- fractured shale and limestone interbedded from 176.4 to 176.6 ft.
- 45 degree cemented fracture from 180.3 to 180.6 and at 184.4 and 187.8 ft.
- multiple cemented horizontal fractures with trace shale from 185.0 to 186.1 and 188.0 to 188.7 ft.
- cherty from 131.5 to 132.0 ft. and 133.3 to 134.0 ft.
- chert nodules from 134.0 to 139.5 and at 159.0 ft.
- 0.12" chert seam at 157.8, 167.3 and 167.4 ft.
- 1.0" chert seam at 168.3 ft.
- trace chert from 169.0 to 170.2 ft.
- trace chert, coarsely crystalline from 190.0 to 190.6 ft.
ELEV. 227.9
NOTE:
For Typical Boring and General Notes, see Sheet No. BR13.
Boring Number EA-3
Pier 13
ELEV. 420.7
Brown, Medium Dense, Medium to Fine SAND, Moist, (SP)
ELEV. 408.7
Light Brown to Brown, Loose, Fine SAND, Moist to Wet, (SP), Trace Organics
ELEV. 393.7
Brown to Gray, Medium Dense, Fine SAND, Wet, (SP)
- 0.5" Layer of Organic Material at 35.0'
ELEV. 382.2
Gray, Very Soft, Fat CLAY, Moist, (CH)
ELEV. 377.7
Gray, Soft, Lean Sandy CLAY, Moist, (CL)
ELEV. 372.7
Gray, Firm, Fat Sandy CLAY, Moist, (CH)
ELEV. 367.2
Gray, Very Dense, Fine Silty SAND, Wet, (SM)
ELEV. 362.2
Gray, Medium Dense to Dense, Fine to Medium SAND, Wet, (SW), Trace to Some Gravel
ELEV. 353.7
Gray, Medium Dense, Medium Silty SAND, Wet, (SM), Trace Gravel
ELEV. 348.7
Gray, Dense, Fine to Medium SAND, Wet, (SW), Trace Gravel
ELEV. 333.7
Gray, Dense, Fine Silty SAND, Wet, (SM)
ELEV. 325.7
Gravel- Cobbles - rough drilling
ELEV. 322.7
Gray, Very Dense, Medium SAND, Wet, (SP)
- cobble at 100.0 ft.
ELEV. 317.7
Gravel- Cobbles- rough drilling
ELEV. 316.7
Gray, Very Dense, Medium SAND, Wet, (SP)
ELEV. 314.7
Gravel- Cobbles
ELEV. 312.2
Gray, Dense to Very Dense, Coarse SAND, Wet, (SW), Some Gravel, occasional layers of gravel, cobbles and boulders
ELEV. 297.7
ROCK CORE
LIMESTONE, dark to light gray, hard, very finely to finely crystalline, thin to thick bedded, slightly weathered to fresh
- light gray, finely crystalline, thick bedded, fresh below 131.0 ft.
- dark gray from 141.5 to 142.2 ft.
- 0.5" weathered limestone seams from 143.7 to 144.6 ft.
- gray below 156.0 ft.
- dolomite from 133.8 to 133.9, 162.2 to 163.2, 186.0 to 186.2 and 191.0 to 191.2 ft.
- pitted dolomite from 166.5 to 168.0 ft.
- 1.0" gray, medium hard, shale seam at 163.6 ft.
- shale lense at 125.7 ft.
- clay seam at 129.2 ft.
- 1.0" dark gray, hard, shale seam at 172.7 ft.
- gray to dark blue, hard, shale seam at 178.2 and from 180.6 to 180.8 ft.
- 2.0" dark blue, medium hard, shale seam at 186.4 ft.
- multiple cemented fractures from 133.3 to 134.5 ft. and at 135.8 ft.
- cemented horizontal fractures from 136.0 to 139.0, 155.9 to 158.9, at 171.2, 172.4, from 173.8 to 176.0, 178.8 and 179.7 ft.
- cemented fractures at 146.5, 147.9, 150.6, 169.2, 186.9 and from 188.6 to 188.8 ft.
- multiple fractures from 128.1 to 128.4 ft.
- horizontal fractures from 141.8 to 142.4, at 182.2, 183.3, 185.5 and from 192.1 to 192.8 ft.
- vertical fracture from 142.8 to 143.3 ft.
- 45 degree fractures at 189.0 and 190.3 ft.
- multiple chert seams from 133.3 to 134.5 and 135.8 ft.
- chert seams and 136.0 to 139.0, 154.7, 158.6 and 159.5 ft.
- 1.0" chert seam at 168.7 ft.
- chert lenses at 169.5, 170.2, and 170.8 ft.
ELEV. 226.7
BORING DATA
Detailed JUL 2009
Checked JUL 2009
Note: This drawing is not to scale. Follow dimensions.
Sheet No. 19 of 205
T:\de-proj\St_Louis_City\Construction\J6I0984\Asbuilts\Bridge\B_A6500_019-205_J6I0984_019.dgn
11:55:56 AM
DATE 8/20/09
ROUTE I-70
STATE MO/IL
DISTRICT 6
SHEET NO. BR19
COUNTY ST. LOUIS CITY - MO ST. CLAIR - IL
JOB NO. J6I0984
CONTRACT ID. 091208-601
PROJECT NO. I-70-9 (20)
BRIDGE NO. A6500
DESCRIPTION
DATE
MISSOURI HIGHWAYS AND TRANSPORTATION COMMISSION
105 WEST CAPITOL
JEFFERSON CITY, MO 65102
1-888-ASK-MODOT (1-888-275-6636)
HNTB
715 KIRK DRIVE
KANSAS CITY, MO 64105-1310
TELEPHONE (816) 472-1201
CERTIFICATE OF AUTHORITY NO. 001270
FINAL PLANS
REV.

Boring Number EA-4
Pier 13

QU(TSF) P-Penet. L-Labor.	STANDARD PENETRATION TEST DEPTH	BLOWS/6"	
			ELEV. 420.1
	3.5	5-7-7	
	8.5	4-7-7	
	13.5	5-8-8	
	18.5	3-5-9	Brown, Medium Dense, Medium to Fine SAND, Moist, (SP)
	23.5	4-6-9	
	28.5	4-5-7	
	33.5	4-4-6	ELEV. 388.1
	38.5	4-7-6	Dark Gray to Gray, Loose to Medium Dense, Fine Silty SAND, Wet, (SM), Trace Wood
0.5P	43.5	5-3-3	ELEV. 376.1
1.0P	48		Gray, Soft, Fat CLAY, Moist, (CH)
			ELEV. 372.1
	53		Dark Gray, Stiff, Fine Sandy SILT, (ML)
			ELEV. 367.1
	58.5	7-8-7	Gray, Medium Dense, Fine SAND, Wet, (SP)
			ELEV. 361.6
	63.5	16-20-22	Gray, Medium Dense, Medium to Fine SAND, Wet, (SW), Trace Fine Gravel
	68.5	18-19-21	ELEV. 356.6
	73.5	9-12-15	Gray, Dense to Medium Dense, Medium to Fine SAND, Wet, (SP)
	78.5	7-12-15	ELEV. 341.6
	83.5	10-16-13	Gray, Medium Dense, Medium to Fine SAND, (SW)
			ELEV. 336.6
	93.5	16-38-50/0"	Dark Gray, Medium to Very Dense, Fine SAND, Wet, (SP), Trace Organics, Clay - rough drilling from 94.5 to 95.0 and 98.0 to 98.5 ft., gravel, cobbles and boulders
	103.5	16-17-17	ELEV. 316.6
	113.5	21-34-42	Gray, Dense, Coarse to Fine SAND, Wet, (SW), Little Fine Gravel
			ELEV. 306.6
			Gray, Very Dense, Fine to Coarse SAND, Wet, (SP) - rough drilling from 115.0 to 116.0 ft., gravel, cobbles, boulders
			ELEV. 297.1

ROCK CORE DEPTH	REC%	ROD%	
124.5	100	39	
129.5	100	100	LIMESTONE, gray to dark gray, hard, finely crystalline, thin to very thick bedded, slightly weathered - medium to thick bedded below 124.5 ft. - dark gray from 124.5 to 124.8 ft. - thick bedded below 129.5 ft.
134.5	100	98	- medium bedded below 139.5 ft. - thin bedded below 144.5 ft. - very thick bedded below 149.5 ft. - thin bedded below 189.5 ft.
139.5	100	95	- dark gray, dolomite from 140.2 to 140.7 and 142.3 to 143.3 ft.
144.5	100	100	- calcite deposit at 157.4 ft. - calcite deposits from 188.0 to 188.8 ft - dolomite, slightly pitted from 165.2 to 166.6 ft.
149.5	100	68	- 0.25" gray, soft, shale seam at 126.8 and 162.4 ft.
154.5	100	98	- 0.5" gray, soft, shale seam at 148.8 ft. - 1.0" gray, soft, clay seam at 161.6 ft.
159.5	100	100	- 2.0" blue gray, medium hard, shale seam at 171.0 ft.
164.5	100	85	- 2.0" dark blue, medium hard, shale seam at 179.5 ft.
169.5	100	100	- 1.0" gray, soft, shale seam at 188.8 and 109.1 ft. - cemented horizontal fracture at 128.4, 135.7, 136.5, 137.9, 141.0, 146.6, from 173.0 to 174.2, 174.5 to 175.5 177.5 to 179.0, at 188.6 and from 179.6 to 181.5 ft.
174.5	100	97	- multiple fractures from 161.2 to 161.6 ft. - vertical fracture from 123.6 to 123.8 ft. - near vertical fracture from 167.8 to 168.2 ft. - 45 degree fracture at 177.0 ft.
179.5	100	97	- fractured from 191.7 to 191.9 ft. - chert seam from 131.8 to 131.9 ft. - cherty from 133.1 to 138.0 and 143.0 to 143.4 ft. - 1.0" chert seam at 156.2 and 192.5 ft. - 0.1" chert seams from 183.6 to 184.0 ft. - chert seam from 167.3 to 167.4 and 167.8 to 168.2 ft.
184.5	100	92	
189.5	100	88	
194.5	95	80	
			ELEV. 225.6

Boring Number EA-5
Pier 13

QU(TSF) P-Penet. L-Labor.	STANDARD PENETRATION TEST DEPTH	BLOWS/6"	
			ELEV. 420.6
	3.5	5-10-10	
	8.5	3-5-7	
	13.5	2-3-3	Brown, Medium Dense to Very Loose, Medium to Fine Grained SAND, Moist, (SP)
	18.5	1-2-2	
	23.5	2-3-3	
	28.5	5-5-5	
	33.5	2-2-3	ELEV. 388.6
			Dark Gray, Loose, Sandy SILT, Wet, (ML)
	38.5	7-10-16	ELEV. 383.6
	43.5	10-15-18	
	48.5	15-20-15	
	53.5	6-7-9	Brown and Gray, Medium Dense to Dense, Fine SAND, Wet, (SP), Medium to Fine below 49.5ft., Fine to Coarse below 59.5 ft.
	58.5	6-8-14	
	63.5	9-12-21	
	68.5	20-31-31	ELEV. 353.6
	73.5	11-16-23	
	78.5	10-11-12	
	83.5	25-21-27	Gray, Very Dense to Medium Dense, Fine to Medium SAND, Wet, (SP) - some gravel layers encountered from 72.0 to 82.0 ft. - Coarse to Medium SAND at 79.0 ft. - cherty gravel layer at 84.0 ft - rough drilling from 96.0 to 97.5, 103.0 to 104.0 and 106.0 to 108.5 ft.
	88.5	15-19-19	
	98.5	22-27-25	
	108.5	38-20-14	ELEV. 312.1
			Gray to Brown, Dense to Very Dense, Coarse to Fine SAND, Wet, (SW), Little Fine Gravel, Trace Limestone Fragments
	118.5	23-34-30	
			ELEV. 297.6

ROCK CORE DEPTH	REC%	ROD%	
125.5	72	33	DOLOMITE, dark gray, hard, finely crystalline, thin bedded, slightly weathered
130.5	100	93	ELEV. 292.9
135.5	100	80	LIMESTONE, dark gray to gray, hard, finely to medium crystalline, thin to thick bedded, slightly weathered to fresh - fresh and thick bedded below 130.5 ft. - thin bedded below 140.5 ft. - thick bedded below 145.5 ft. - medium to thick bedded and slightly weathered below 155.5 ft. - gray, finely to medium crystalline, and medium to thick bedded below 175.5 ft. - dark gray, dolomite, pitted to slightly pitted from 163.2 to 164.4 and 167.8 to 169.5 ft. - gray, soft, shale seams at 132.4, 134.3, and 135.0 ft. - trace gray shale at 164.6 and 179.0 ft. - 1.0" gray, soft, shale seams at 174.3 and 174.6 ft. - dark blue shale seam from 181.5 to 181.6 ft. - blue shale seams at 189.9 and 190.3 ft. - cemented horizontal joints from 182.3 to 183.0 ft. - 45 degree fracture at 171.0 ft. - cemented vertical fracture from 179.0 to 179.8, 185.5 to 187.0 and 187.3 to 187.8 ft. - chert nodules at 132.3 and 134.3 ft. - 1.0" chert seam at 170.4 ft. - chert lense at 172.9 ft. - trace chert at 190.8 ft. - 0.5" chert seams from 192.9 to 193.8 ft.
140.5	100	93	
145.5	100	87	
150.5	100	95	
155.5	100	95	
160.5	100	100	
165.5	100	97	
170.5	100	97	
175.5	100	100	
180.5	100	95	
185.5	100	92	
190.5	100	95	
195.5	100	60	
			ELEV. 225.1

NOTE:

For Typical Boring and General Notes, see Sheet No. BR13.

BORING DATA

Detailed JUL 2009
Checked JUL 2009

Note: This drawing is not to scale. Follow dimensions.

Sheet No. 20 of 205

DATE 8/20/09
ROUTE I-70 | STATE MO/IL
DISTRICT 6 | SHEET NO. BR20
COUNTY ST. LOUIS CITY - MO, ST. CLAIR - IL
JOB NO. J6I0984
CONTRACT ID. 091208-601
PROJECT NO. I-70-9 (20)
BRIDGE NO. A6500

DESCRIPTION | DATE

MISSOURI HIGHWAYS AND TRANSPORTATION COMMISSION
105 WEST CAPITOL
JEFFERSON CITY, MO 65102
1-888-ASK-MODOT (1-888-275-6636)

HNTB
715 KIRK DRIVE
KANSAS CITY, MO 64105-1310
TELEPHONE (816) 472-1201
CERTIFICATE OF AUTHORITY NO. 001270

FINAL PLANS

REV.

T:\de-proj\St_Louis_City\Construction\J6I0984\Asbuilts\Bridge\B_A6500_020-205_J6I0984_020.dgn

11:57:26 AM

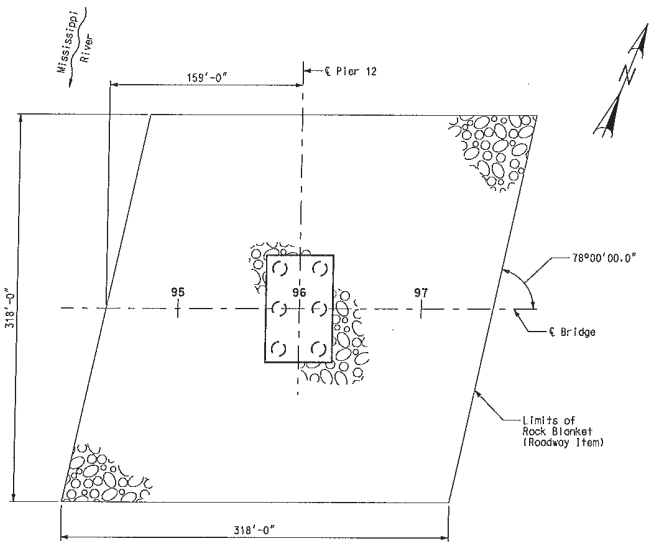

PLAN AT PIER 12 FOUNDATION

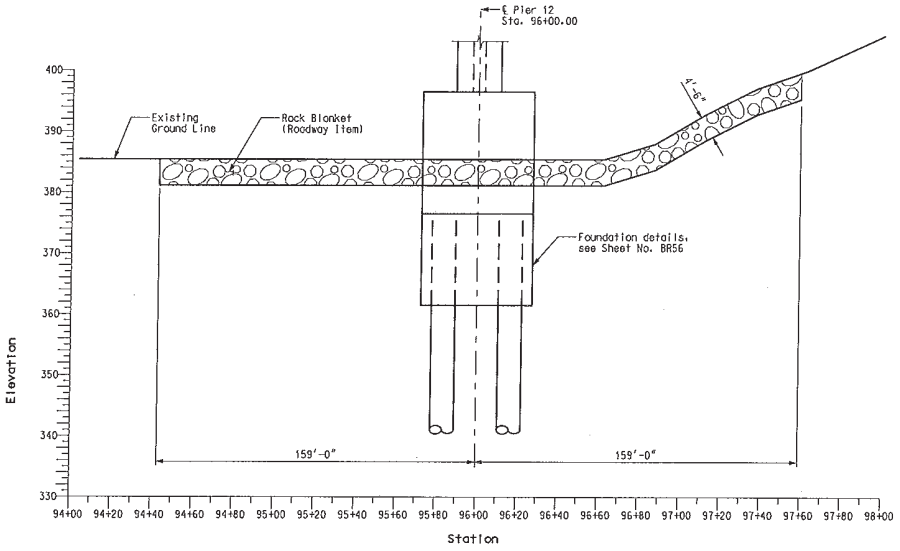

ELEVATION AT PIER 12 FOUNDATION

Notes:
For gradation and placement requirements, see Roadway Special Provisions.

LIMITS OF ROCK BLANKET

DATE 5/17/10
ROUTE I-70 | STATE MO/IL
DISTRICT 6 | SHEET NO. BR21
COUNTY ST. LOUIS CITY - MO, ST. CLAIR - IL
JOB NO. J6I0984
CONTRACT ID. 091208-601
PROJECT NO. I-70-9 (20)
BRIDGE NO. A6500

DESCRIPTION	DATE
A Revised per ATC	5-17-10

MISSOURI HIGHWAYS AND TRANSPORTATION COMMISSION
105 WEST CAPITOL
JEFFERSON CITY, MO 65102
1-888-ASK-MODOT (1-888-275-6636)

HNTB
715 KIRK DRIVE
KANSAS CITY, MO 64105-1310
TELEPHONE (816) 472-1201
CERTIFICATE OF AUTHORITY NO. 001270

FINAL PLANS

REV.

Detailed JUL 2009
Checked JUL 2009

Note: This drawing is not to scale. Follow dimensions.

T:\de-proj\St_Louis_City\Construction\J6I0984\Asbuilts\Bridge\B_A6500_021-205_J6I0984_021.dgn

1:54:28 PM

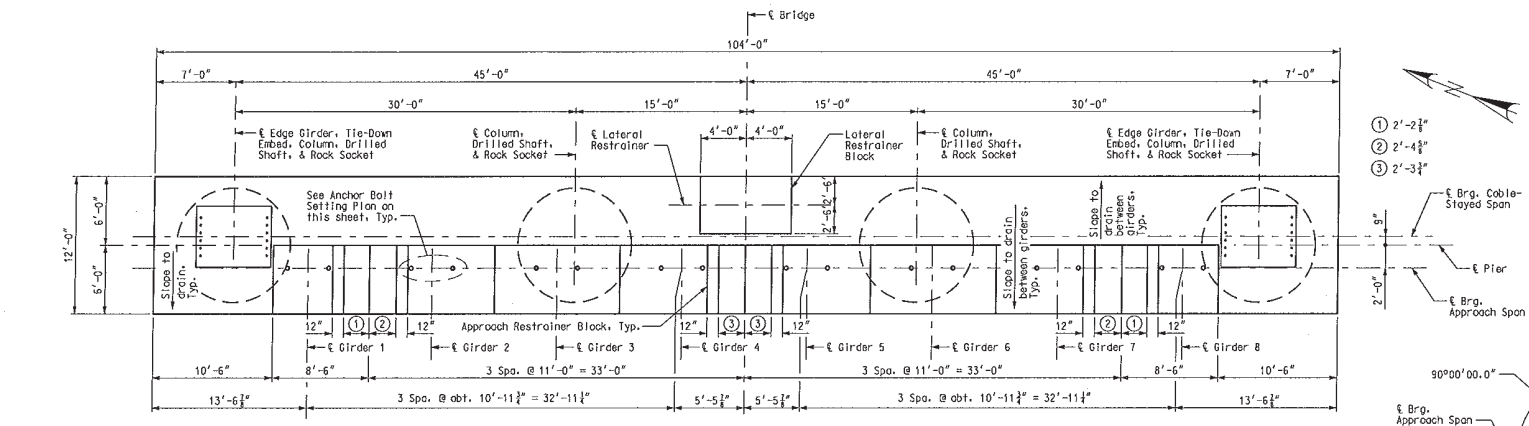

PLAN

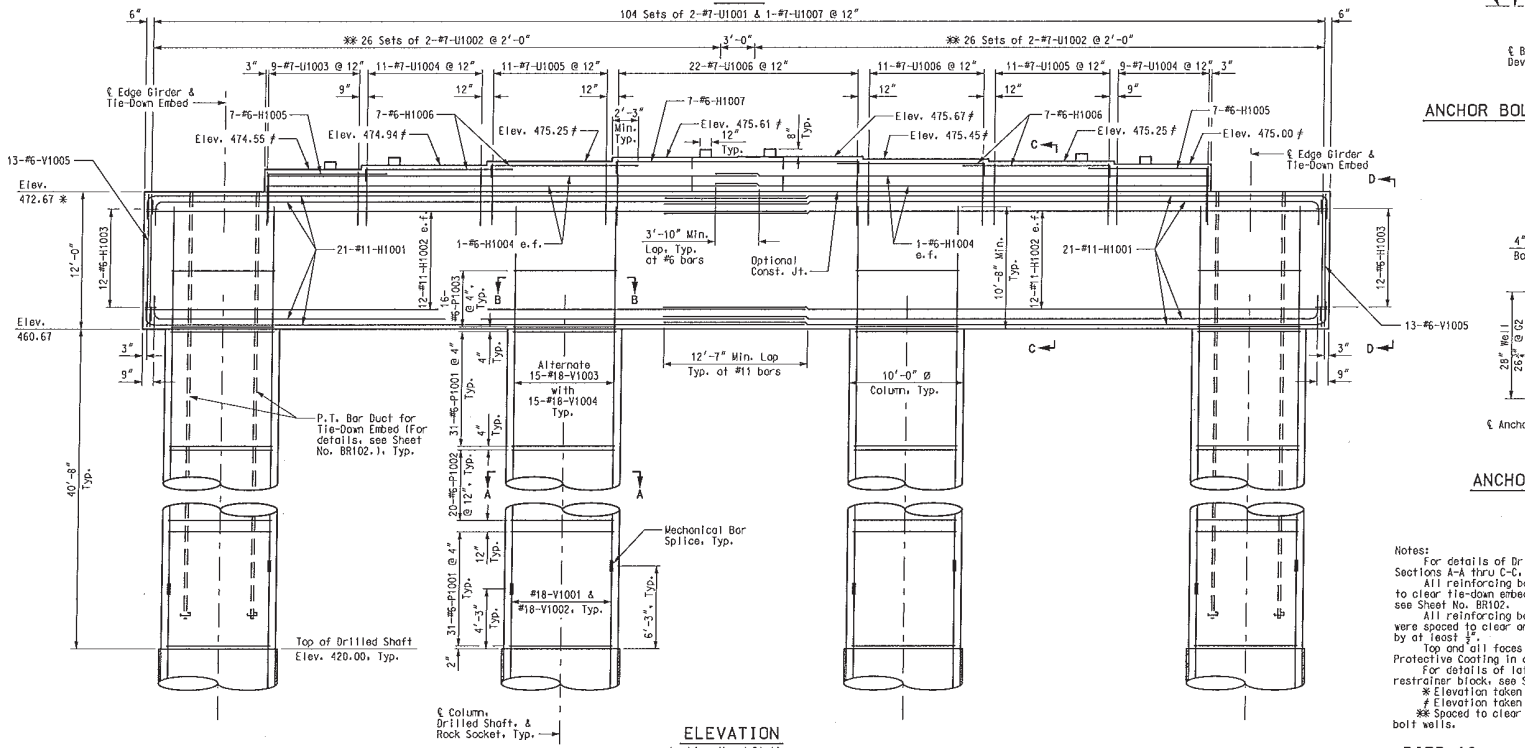

ELEVATION
Looking Ahead Station

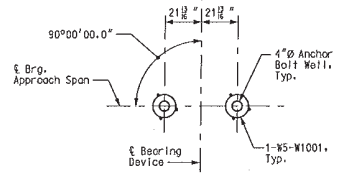

ANCHOR BOLT WELL SETTING PLAN

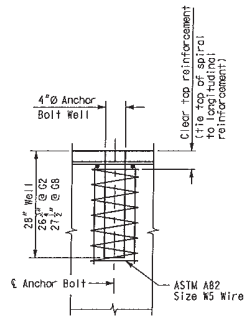

ANCHOR BOLT WELL DETAIL

Notes:
For details of Drilled Shaft, Rock Socket, Sections A-A thru C-C, & View D-D, see Sheet No. BR23.
All reinforcing bars in the capbeam were spaced to clear tie-down embed. For details of tie-down embed, see Sheet No. BR102.
All reinforcing bars in the top of the capbeam were spaced to clear anchor bolt wells for bearings by at least 3".
Top and all faces of capbeam were sealed with Protective Coating in accordance with Sec. 711.3.2.
For details of lateral restrainer block and approach restrainer block, see Sheet No. BR24.
* Elevation taken at ℄ Pier.
≠ Elevation taken at ℄ Brg. Approach Span.
** Spaced to clear Column Reinforcing and anchor bolt walls.

PIER 10

DATE 5/17/10
ROUTE I-70 | STATE MO/IL
DISTRICT 6 | SHEET NO. BR22
COUNTY ST. LOUIS CITY - MO, ST. CLAIR - IL
JOB NO. J6I0984
CONTRACT ID. 091208-601
PROJECT NO. I-70-9 (20)
BRIDGE NO. A6500

DESCRIPTION	DATE
A Revised per ATC	5-17-10

MISSOURI HIGHWAYS AND TRANSPORTATION COMMISSION
105 WEST CAPITOL
JEFFERSON CITY, MO 65102
1-888-ASK-MODOT (1-888-275-6636)

HNTB
715 KIRK DRIVE
KANSAS CITY, MO 64105-1310
TELEPHONE (816) 472-1201
CERTIFICATE OF AUTHORITY NO. 001270

FINAL PLANS

Detailed JUL 2009
Checked JUL 2009

Note: This drawing is not to scale. Follow dimensions.

T:\de-proj\St_Louis_City\Construction\J6I0984\Asbuilts\Bridge\B_A6500_022-205_J6I0984_022.dgn 12:03:22 PM

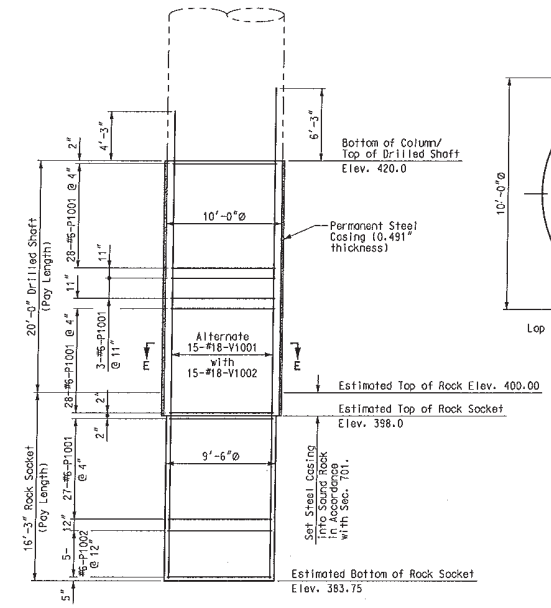

DRILLED SHAFT AND ROCK SOCKET ELEVATION

4

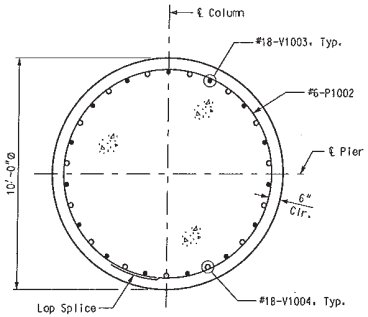

SECTION A-A

4

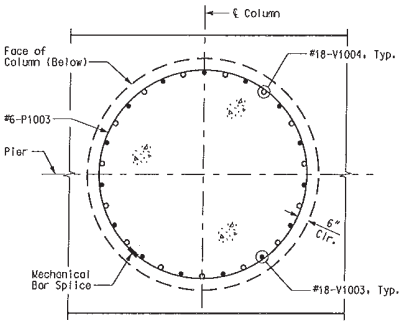

SECTION B-B

(Capbeam reinforcing not shown for clarity.)

4

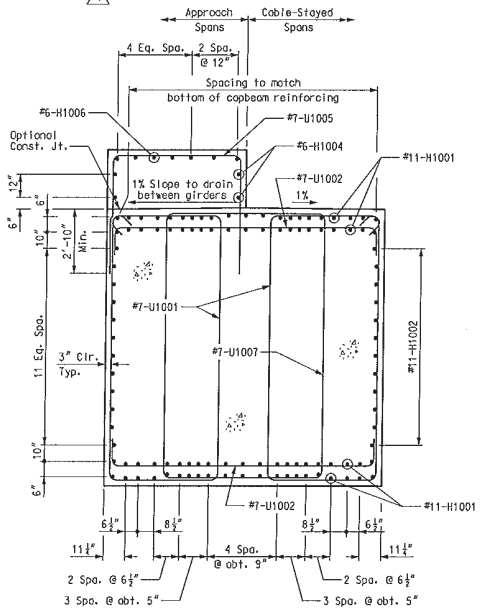

SECTION C-C

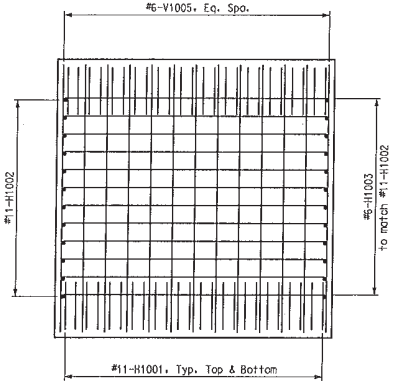

VIEW D-D

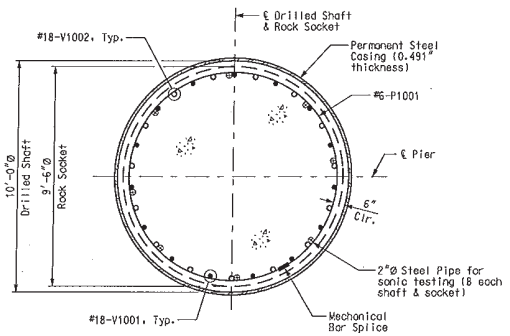

SECTION E-E

4

Notes:

For location of Sections A-A thru C-C, & View D-D, see Sheet No. BR22.

The contract unit price for "Drilled Shafts (10 ft. 0 in.)" and "Rock Sockets (9 ft. 6 in.)" was considered full compensation for construction of the drilled shafts and rock sockets including Class B2 Concrete within the pay limit shown. The contract unit price did not include reinforcing steel.

All reinforcement in drilled shafts and rock sockets were included in Substructure Quantities.

Concrete coring was not performed for these shafts.

Sonic logging testing was performed on all drilled shafts and rock sockets.

4 Rotated alternate hoops 180-degrees so that splices in adjacent bars are staggered.

For actual lengths of drilled shafts and rock sockets see sheet BR205.

PIER 10

DATE 5/17/10
ROUTE I-70 | STATE MO/IL
DISTRICT 6 | SHEET NO. BR23
COUNTY ST. LOUIS CITY - MO, ST. CLAIR - IL
JOB NO. J6I0984
CONTRACT ID. 091208-601
PROJECT NO. I-70-9 (20)
BRIDGE NO. A6500

DATE	DESCRIPTION
5-17-10	4 Revised per ATC

MISSOURI HIGHWAYS AND TRANSPORTATION COMMISSION
105 WEST CAPITOL
JEFFERSON CITY, MO 65102
1-888-ASK-MODOT (1-888-275-6636)

HNTB
715 KIRK DRIVE
KANSAS CITY, MO 64105-1310
TELEPHONE (816) 472-1201
CERTIFICATE OF AUTHORITY NO. 001270

FINAL PLANS

REV.

Detailed JUL 2009
Checked JUL 2009

Note: This drawing is not to scale. Follow dimensions.

I:\de-proj\St_Louis_City\Construction\J6I0984\Asbuilts\Bridge\B_A6500_023-205_J6I0984_023.dgn

9:20:17 AM

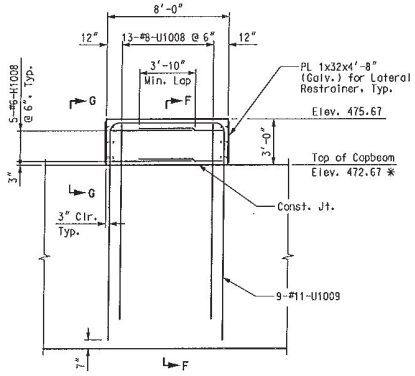

ELEVATION – LATERAL RESTRAINER BLOCK

(Capbeam reinforcing not shown for clarity.)

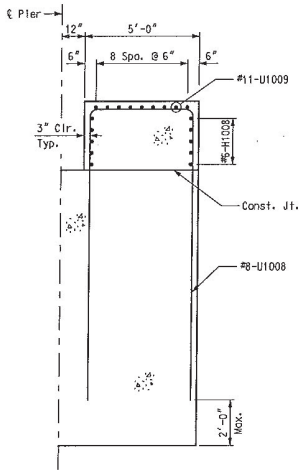

SECTION F-F

(Capbeam reinforcing not shown for clarity.)

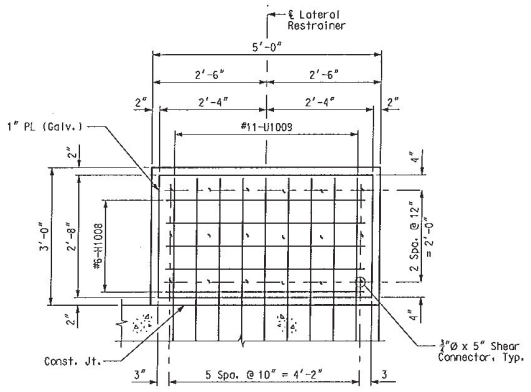

SECTION G-G

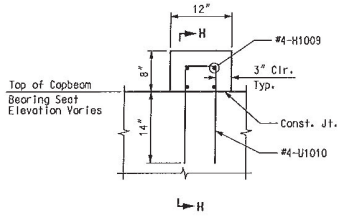

ELEVATION – APPROACH RESTRAINER BLOCK

(Capbeam reinforcing not shown for clarity.)

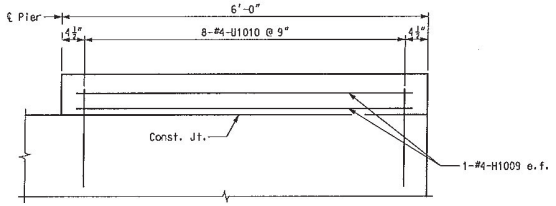

SECTION H-H

(Capbeam reinforcing not shown for clarity.)

Notes:
For reinforcing in capbeam, see Sheet Nos. BR22 & BR23.
For details of Lateral Restrainer, see Sheet No. BR117.
The cost of all labor and materials required to install the 1" galvanized plate was considered included in the pay item "Fabricated Structural Carbon Steel (Misc.)".
Galvanized plate for Lateral Restrainer was galvanized in accordance with ASTM A123 after fabrication.
* Elevation taken at ℄ Pier.

PIER 10

DATE 8/20/09
ROUTE I-70 | STATE MO/IL
DISTRICT 6 | SHEET NO. BR24
COUNTY ST. LOUIS CITY - MO ST. CLAIR - IL
JOB NO. J6I0984
CONTRACT ID. 091208-601
PROJECT NO. I-70-9 (20)
BRIDGE NO. A6500

DESCRIPTION | DATE

MISSOURI HIGHWAYS AND TRANSPORTATION COMMISSION
105 WEST CAPITOL
JEFFERSON CITY, MO 65102
1-888-ASK-MODOT (1-888-275-6636)

HNTB
715 KIRK DRIVE
KANSAS CITY, MO 64105-1310
TELEPHONE (816) 472-1201
CERTIFICATE OF AUTHORITY NO. 001270

FINAL PLANS

REV.

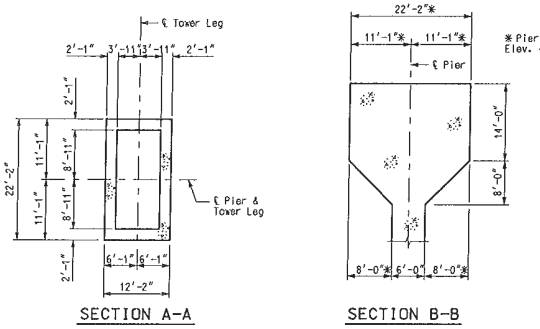

SECTION A-A

SECTION B-B

* Pier shaft transition from 22'-0" at Elev. 460.50 to 22'-2" at Elev. 464.5.

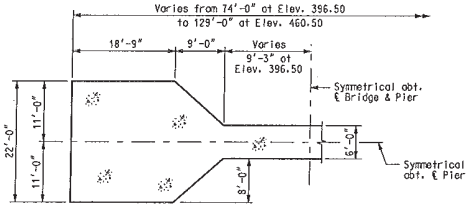

SECTION C-C

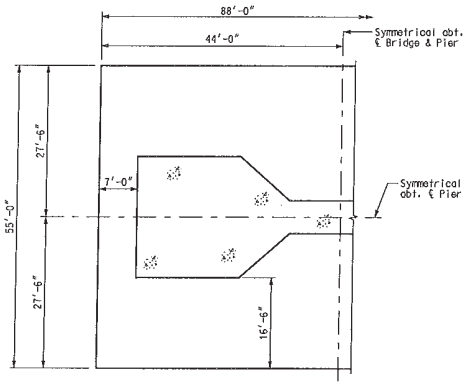

SECTION D-D

4

SUBSTRUCTURE QUANTITY TABLE FOR PIER 11		
ITEM		QUANTITY
Class A-1 Concrete	cu. yard	7768.2
Reinforcing Steel (Bridges)	pound	2,547,700
Mechanical Bar Splice	each	3198
Lock-up Device	each	4
Fabricated Structural Low Alloy Steel (Tower Anchor Box) A709 Gr. 50W	pound	826,960

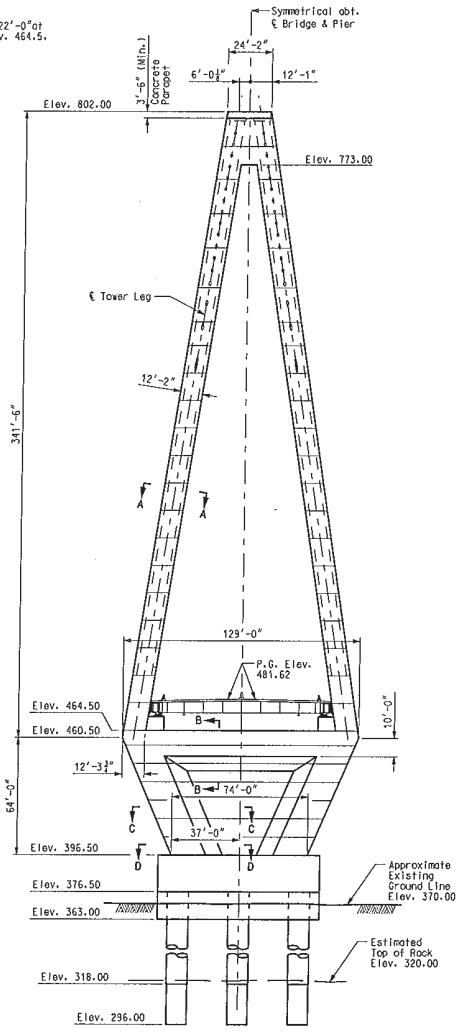

FRONT ELEVATION

4

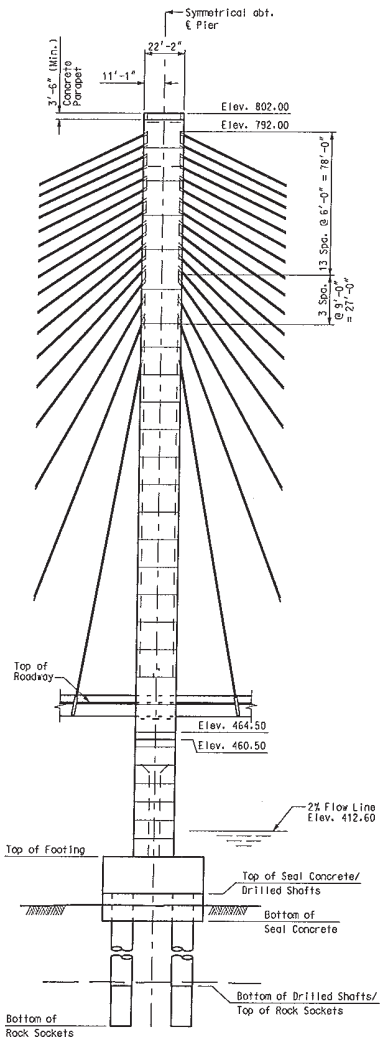

SIDE ELEVATION

4

4 Notes:
For Foundation Layout, see Sheet No. BR12.
For Foundation details, see Sheet Nos. BR39 thru BR41.
The Substructure Quantities listed in the table on this sheet pertain to the portion of the pier above the top of the ~~distribution cap. These~~ footing. These quantities were included in the Final Quantities table on Sheet No. BR8.

PIER 11 - DIMENSIONS

Detailed JUL 2009
Checked JUL 2009

Note: This drawing is not to scale. Follow dimensions.

Sheet No. 25 of 205

T:\de-proj\St_Louis_City\Construction\J6I0984\Asbuilts\Bridge\B_A6500_025-205_J6I0984_025.dgn

2:00:22 PM

DATE 5/17/10
ROUTE I-70 | STATE MO/IL
DISTRICT 6 | SHEET NO. BR25
COUNTY ST. LOUIS CITY - MO ST. CLAIR - IL
JOB NO. J6I0984
CONTRACT ID. 091208-601
PROJECT NO. I-70-9 (20)
BRIDGE NO. A6500

DESCRIPTION	DATE
4 Revised per ATC	5-17-10

MISSOURI HIGHWAYS AND TRANSPORTATION COMMISSION
105 WEST CAPITOL
JEFFERSON CITY, MO 65102
1-888-ASK-MODOT (1-888-275-6636)

HNTB
715 KIRK DRIVE
KANSAS CITY, MO 64105-1310
TELEPHONE (816) 472-1201
CERTIFICATE OF AUTHORITY NO. 001270

FINAL PLANS

REV.

4 BLANK SHEET → PIER 11 - FOUNDATION DIMENSIONS

Detailed JUL 2009
Checked JUL 2009

Note: This drawing is not to scale. Follow dimensions.

Sheet No. 26 of 205

DATE 5/17/10
ROUTE I-70 | STATE MO/IL
DISTRICT 6 | SHEET NO. BR26
COUNTY ST. LOUIS CITY - MO ST. CLAIR - IL
JOB NO. J6I0984
CONTRACT ID. 091208-601
PROJECT NO. I-70-9 (20)
BRIDGE NO. A6500

DATE	DESCRIPTION
5-17-10	4 Revised per ATC

MISSOURI HIGHWAYS AND TRANSPORTATION COMMISSION
105 WEST CAPITOL
JEFFERSON CITY, MO 65102
1-888-ASK-MODOT (1-888-275-6636)

HNTB
715 KIRK DRIVE
KANSAS CITY, MO 64105-1310
TELEPHONE (816) 472-1201
CERTIFICATE OF AUTHORITY NO. 001270

FINAL PLANS

REV.

T:\de-proj\St_Louis_City\Construction\J6I0984\Asbuilts\Bridge\B_A6500_026-205_J6I0984_026.dgn

12:25:38 PM

⚠4 BLANK SHEET → ~~PIER 11 – CUTTING EDGE~~

Detailed JUL 2009
Checked JUL 2009

Note: This drawing is not to scale. Follow dimensions.

Sheet No. 27 of 205

T:\de-proj\St_Louis_City\Construction\J6I0984\Asbuilts\Bridge\B_A6500_027-205_J6I0984_027.dgn

12:34:17 PM

DATE 5/17/10
ROUTE I-70 | STATE MO/IL
DISTRICT 6 | SHEET NO. BR27
COUNTY ST. LOUIS CITY - MO, ST. CLAIR - IL
JOB NO. J6I0984
CONTRACT ID. 091208-601
PROJECT NO. I-70-9 (20)
BRIDGE NO. A6500

REV.	DATE	DESCRIPTION
⚠4	5-17-10	Revised per ATC

MISSOURI HIGHWAYS AND TRANSPORTATION COMMISSION
105 WEST CAPITOL
JEFFERSON CITY, MO 65102
1-888-ASK-MODOT (1-888-275-6636)

HNTB
715 KIRK DRIVE
KANSAS CITY, MO 64105-1310
TELEPHONE (816) 472-1201
CERTIFICATE OF AUTHORITY
NO. 001270

FINAL PLANS

4 BLANK SHEET → PIER 11 ~~CUTTING EDGE~~

Detailed JUL 2009
Checked JUL 2009

Note: This drawing is not to scale. Follow dimensions.

Sheet No. 28 of 205

DATE 5/17/10
ROUTE I-70 | STATE MO/IL
DISTRICT 6 | SHEET NO. BR28
COUNTY ST. LOUIS CITY - MO, ST. CLAIR - IL
JOB NO. J6I0984
CONTRACT ID. 091208-601
PROJECT NO. I-70-9 (20)
BRIDGE NO. A6500

	DATE	DESCRIPTION
4	5-17-10	Revised per ATC

MISSOURI HIGHWAYS AND TRANSPORTATION COMMISSION
105 WEST CAPITOL
JEFFERSON CITY, MO 65102
1-888-ASK-MODOT (1-888-275-6636)

HNTB
715 KIRK DRIVE
KANSAS CITY, MO 64105-1310
TELEPHONE (816) 472-1201
CERTIFICATE OF AUTHORITY NO. 001270

FINAL PLANS

REV.

T:\de-proj\St_Louis_City\Construction\J6I0984\Asbuilts\Bridge\B_A6500_028-205_J6I0984_028.dgn

12:35:06 PM

4 BLANK SHEET → PIER 11 ~~- CUTTING EDGE~~

Detailed JUL 2009
Checked JUL 2009

Note: This drawing is not to scale. Follow dimensions.

Sheet No. 29 of 205

T:\de-proj\St_Louis_City\Construction\J6I0984\Asbuilts\Bridge\B_A6500_029-205_J6I0984_029.dgn

12:35:54 PM

DATE 5/17/10
ROUTE I-70 | STATE MO/IL
DISTRICT 6 | SHEET NO. BR29
COUNTY ST. LOUIS CITY - MO ST. CLAIR - IL
JOB NO. J6I0984
CONTRACT ID. 091208-601
PROJECT NO. I-70-9 (20)
BRIDGE NO. A6500

DATE	DESCRIPTION
5-17-10	4 Revised per ATC

MISSOURI HIGHWAYS AND TRANSPORTATION COMMISSION
105 WEST CAPITOL
JEFFERSON CITY, MO 65102
1-888-ASK-MODOT (1-888-275-6636)

HNTB
715 KIRK DRIVE
KANSAS CITY, MO 64105-1310
TELEPHONE (816) 472-1201
CERTIFICATE OF AUTHORITY NO. 001270

FINAL PLANS

REV.

4 BLANK SHEET → PIER 11 CAISSION

DATE	5/17/10
ROUTE	I-70
STATE	MO/IL
DISTRICT	6
SHEET NO.	BR30
COUNTY	ST. LOUIS CITY - MO ST. CLAIR - IL
JOB NO.	J6I0984
CONTRACT ID.	091208-601
PROJECT NO.	I-70-9 (20)
BRIDGE NO.	A6500

DESCRIPTION	DATE
4 Revised per ATC	5-17-10

MISSOURI HIGHWAYS AND TRANSPORTATION COMMISSION
105 WEST CAPITOL
JEFFERSON CITY, MO 65102
1-888-ASK-MODOT (1-888-275-6636)

HNTB
715 KIRK DRIVE
KANSAS CITY, MO 64105-1310
TELEPHONE (816) 472-1201
CERTIFICATE OF AUTHORITY NO. 001270

FINAL PLANS

REV.

Detailed JUL 2009
Checked JUL 2009

Note: This drawing is not to scale. Follow dimensions.

T:\de-proj\St_Louis_City\Construction\J6I0984\Asbuilts\Bridge\B_A6500_030-205_J6I0984_030.dgn 12:37:08 PM

4 BLANK SHEET → PIER 11 CAISSION

Detailed JUL 2009
Checked JUL 2009

Note: This drawing is not to scale. Follow dimensions.

f:\de-proj\St_Louis_City\Construction\J6I0984\Asbuilts\Bridge\B_A6500_031-205_J6I0984_031.dgn

12:38:00 PM

DATE 5/17/10
ROUTE I-70 | STATE MO/IL
DISTRICT 6 | SHEET NO. BR31
COUNTY ST. LOUIS CITY - MO ST. CLAIR - IL
JOB NO. J6I0984
CONTRACT ID. 091208-601
PROJECT NO. I-70-9 (20)
BRIDGE NO. A6500

DESCRIPTION	DATE
4 Revised per ATC	5-17-10

MISSOURI HIGHWAYS AND TRANSPORTATION COMMISSION
105 WEST CAPITOL
JEFFERSON CITY, MO 65102
1-888-ASK-MODOT (1-888-275-6636)

HNTB
715 KIRK DRIVE
KANSAS CITY, MO 64105-1310
TELEPHONE (816) 472-1201
CERTIFICATE OF AUTHORITY NO. 001270

FINAL PLANS

REV.

4 BLANK SHEET → ~~PIER 11 CAISSION~~

Detailed JUL 2009
Checked JUL 2009

Note: This drawing is not to scale. Follow dimensions.

Sheet No. 32 of 205

T:\de-proj\St_Louis_City\Construction\J6I0984\Asbuilts\Bridge\B_A6500_032-205_J6I0984_032.dgn

12:39:02 PM

DATE 5/17/10
ROUTE I-70 | STATE MO/IL
DISTRICT 6 | SHEET NO. BR32
COUNTY ST. LOUIS CITY - MO, ST. CLAIR - IL
JOB NO. J6I0984
CONTRACT ID. 091208-601
PROJECT NO. I-70-9 (20)
BRIDGE NO. A6500

DESCRIPTION	DATE
4 Revised per ATC	5-17-10

MISSOURI HIGHWAYS AND TRANSPORTATION COMMISSION
105 WEST CAPITOL
JEFFERSON CITY, MO 65102
1-888-ASK-MODOT (1-888-275-6636)

HNTB
715 KIRK DRIVE
KANSAS CITY, MO 64105-1310
TELEPHONE (816) 472-1201
CERTIFICATE OF AUTHORITY NO. 001270

FINAL PLANS

REV.

⚠ BLANK SHEET → ~~PIER 11 CAISSION~~

Detailed JUL 2009
Checked JUL 2009

Note: This drawing is not to scale. Follow dimensions.

Sheet No. 33 of 205

T:\de-proj\St_Louis_City\Construction\J6I0984\Asbuilts\Bridge\B_A6500_033-205_J6I0984_033.dgn

12:40:00 PM

DATE 5/17/10
ROUTE I-70 STATE MO/IL
DISTRICT 6 SHEET NO. BR33
COUNTY ST. LOUIS CITY - MO ST. CLAIR - IL
JOB NO. J6I0984
CONTRACT ID. 091208-601
PROJECT NO. I-70-9 (20)
BRIDGE NO. A6500

DATE	DESCRIPTION
5-17-10	⚠ Revised per ATC

MISSOURI HIGHWAYS AND TRANSPORTATION COMMISSION
105 WEST CAPITOL
JEFFERSON CITY, MO 65102
1-888-ASK-MODOT (1-888-275-6636)

HNTB
715 KIRK DRIVE
KANSAS CITY, MO 64105-1310
TELEPHONE (816) 472-1201
CERTIFICATE OF AUTHORITY NO. 001270

FINAL PLANS

REV.

4 BLANK SHEET → ~~PIER 11~~ ~~SUBSHAFT~~

DATE 5/17/10
ROUTE I-70 | STATE MO/IL
DISTRICT 6 | SHEET NO. BR34
COUNTY ST. LOUIS CITY - MO, ST. CLAIR - IL
JOB NO. J6I0984
CONTRACT ID. 091208-601
PROJECT NO. I-70-9 (20)
BRIDGE NO. A6500

REV.	DATE	DESCRIPTION
4	5-17-10	Revised per ATC

MISSOURI HIGHWAYS AND TRANSPORTATION COMMISSION
105 WEST CAPITOL
JEFFERSON CITY, MO 65102
1-888-ASK-MODOT (1-888-275-6636)

HNTB
715 KIRK DRIVE
KANSAS CITY, MO 64105-1310
TELEPHONE (816) 472-1201
CERTIFICATE OF AUTHORITY
NO. 001270

FINAL PLANS

Detailed JUL 2009
Checked JUL 2009

Note: This drawing is not to scale. Follow dimensions.

T:\de-proj\St_Louis_City\Construction\J6I0984\Asbuilts\Bridge\B_A6500_034-205_J6I0984_034.dgn

12:42:31 PM

⚠4 BLANK SHEET → ~~PIER 11 SUBSHAFT~~

Detailed JUL 2009
Checked JUL 2009

Note: This drawing is not to scale. Follow dimensions.

Sheet No. 35 of 205

DATE 5/17/10
ROUTE I-70 STATE MO/IL
DISTRICT 6 SHEET NO. BR35
COUNTY ST. LOUIS CITY - MO ST. CLAIR - IL
JOB NO. J610984
CONTRACT ID. 091208-601
PROJECT NO. I-70-9 (20)
BRIDGE NO. A6500

DESCRIPTION	DATE
⚠4 Revised per ATC	5-17-10

MISSOURI HIGHWAYS AND TRANSPORTATION COMMISSION
MoDOT
105 WEST CAPITOL
JEFFERSON CITY, MO 65102
1-888-ASK-MODOT (1-888-275-6636)

HNTB
715 KIRK DRIVE
KANSAS CITY, MO 64105-1310
TELEPHONE (816) 472-1201
CERTIFICATE OF AUTHORITY
NO. 001270

FINAL PLANS

REV.

T:\de-proj\St_Louis_City\Construction\J610984\Asbuilts\Bridge\B_A6500_035-205_J610984_035.dgn 12:43:05 PM

⚠4 BLANK SHEET → PIER 11 ~~- DISTRIBUTION~~ CAP

DATE 5/17/10
ROUTE I-70 | STATE MO/IL
DISTRICT 6 | SHEET NO. BR36
COUNTY ST. LOUIS CITY - MO, ST. CLAIR - IL
JOB NO. J6I0984
CONTRACT ID. 091208-601
PROJECT NO. I-70-9 (20)
BRIDGE NO. A6500

DESCRIPTION	DATE
⚠ Revised per ATC	5-17-10

MISSOURI HIGHWAYS AND TRANSPORTATION COMMISSION
MoDOT
105 WEST CAPITOL
JEFFERSON CITY, MO 65102
1-888-ASK-MODOT (1-888-275-6636)

HNTB
715 KIRK DRIVE
KANSAS CITY, MO 64105-1310
TELEPHONE (816) 472-1201
CERTIFICATE OF AUTHORITY
NO. 001270

FINAL PLANS

REV.

Detailed JUL 2009
Checked JUL 2009

Note: This drawing is not to scale. Follow dimensions.

T:\de-proj\St_Louis_City\Construction\J6I0984\Asbuilts\Bridge\B_A6500_036-205_J6I0984_036.dgn 12:43:39 PM

4 BLANK SHEET → PIER 11 ~~- DISTRIBUTION~~ CAP

DATE 5/17/10
ROUTE I-70 | STATE MO/IL
DISTRICT 6 | SHEET NO. BR37
COUNTY ST. LOUIS CITY - MO ST. CLAIR - IL
JOB NO. J6I0984
CONTRACT ID. 091208-601
PROJECT NO. I-70-9 (20)
BRIDGE NO. A6500

DATE	DESCRIPTION
5-17-10	4 Revised per ATC

MISSOURI HIGHWAYS AND TRANSPORTATION COMMISSION
MoDOT
105 WEST CAPITOL
JEFFERSON CITY, MO 65102
1-888-ASK-MODOT (1-888-275-6636)

HNTB
715 KIRK DRIVE
KANSAS CITY, MO 64105-1310
TELEPHONE (816) 472-1201
CERTIFICATE OF AUTHORITY NO. 001270

FINAL PLANS

REV.

Detailed JUL 2009
Checked JUL 2009

Note: This drawing is not to scale. Follow dimensions.

T:\de-proj\St_Louis_City\Construction\J6I0984\Asbuilts\Bridge\B_A6500_037-205_J6I0984_037.dgn

12:45:02 PM

⚠4 BLANK SHEET → PIER 11 - ~~DISTRIBUTION~~ CAP

Detailed JUL 2009
Checked JUL 2009

Note: This drawing is not to scale. Follow dimensions.

Sheet No. 38 of 205

T:\de-proj\St_Louis_City\Construction\J6I0984\Asbuilts\Bridge\B_A6500_038-205_J6I0984_038.dgn 12:45:37 PM

DATE 5/17/10
ROUTE I-70 | STATE MO/IL
DISTRICT 6 | SHEET NO. BR38
COUNTY ST. LOUIS CITY - MO ST. CLAIR - IL
JOB NO. J6I0984
CONTRACT ID. 091208-601
PROJECT NO. I-70-9 (20)
BRIDGE NO. A6500

DATE	DESCRIPTION
5-17-10	⚠4 Revised per ATC

MISSOURI HIGHWAYS AND TRANSPORTATION COMMISSION
105 WEST CAPITOL
JEFFERSON CITY, MO 65102
1-888-ASK-MODOT (1-888-275-6636)

HNTB
715 KIRK DRIVE
KANSAS CITY, MO 64105-1310
TELEPHONE (816) 472-1201
CERTIFICATE OF AUTHORITY NO. 001270

FINAL PLANS

REV.

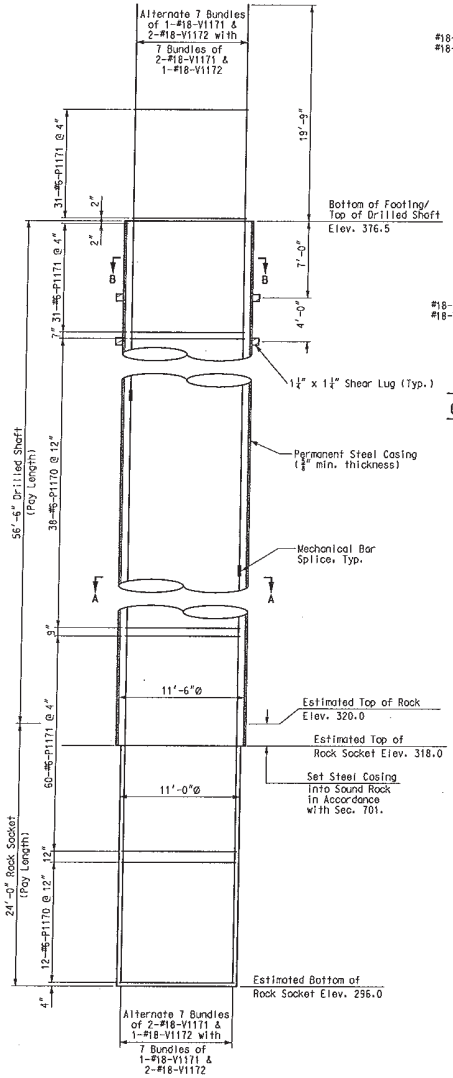

DRILLED SHAFT AND ROCK SOCKET ELEVATION

4

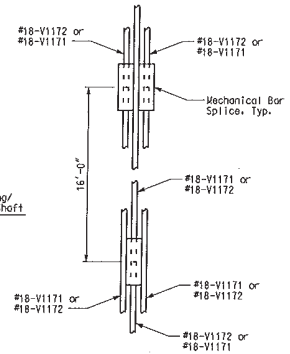

DETAIL OF COUPLING OF BUNDLED #18 BARS

4

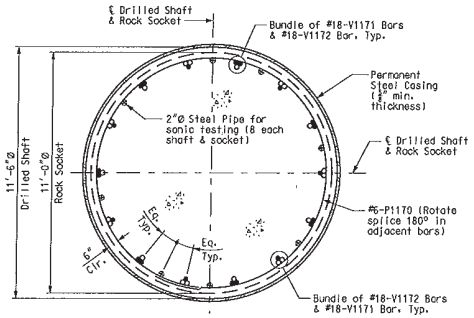

SECTION A-A

4

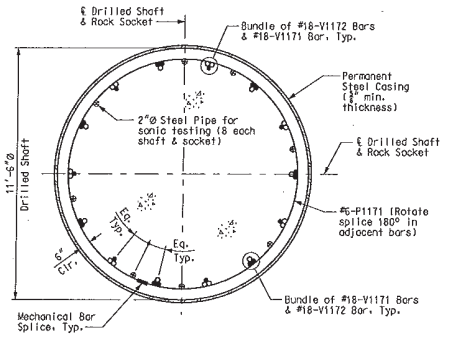

SECTION B-B

4

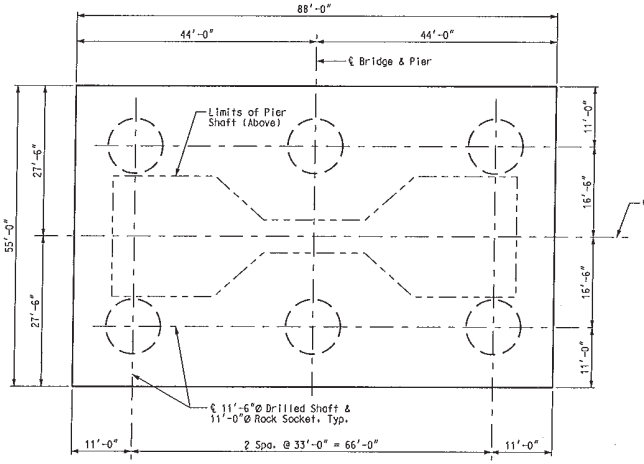

FOOTING PLAN

4

Notes:
For additional details of footing, see Sheets No. BR40 & BR41.
For Pier Shaft details, see Sheet Nos. BR59 thru BR66.
For Bill of Reinforcing, see Sheet Nos. BR184 thru BR203.
For Foundation Layout, see Sheet No. BR12.
For as built drilled shaft data, see Sheet No. BR205.
The foundation is defined as those portions of the pier below the top of the footing. All costs associated with the construction of the foundation were paid for at the contract unit price. The cost of any cofferdams or temporary shoring was considered incidental to foundation bid items for Pier 11 and Pier 12.
Permanent steel casing is ASTM A572 Grade 60 material.
The minimum factored load capacity of each drilled shaft/rock socket is 33,800-kip.
The final length of the rock sockets was determined on the basis of the load test outlined in the Job Special Provisions.
The concrete in the drilled shafts and rock sockets had a minimum 28 day compressive strength f'c = 5000-psi.

4



4 PIER 11 - FOUNDATION

4

DATE 5/17/10
ROUTE I-70 | STATE MO/IL
DISTRICT 6 | SHEET NO. BR39
COUNTY ST. LOUIS CITY - MO ST. CLAIR - IL
JOB NO. J6I0984
CONTRACT ID. 091208-601
PROJECT NO. I-70-9 (20)
BRIDGE NO. A6500

DESCRIPTION	DATE
4 Revised per ATC	5-17-10

MISSOURI HIGHWAYS AND TRANSPORTATION COMMISSION
105 WEST CAPITOL
JEFFERSON CITY, MO 65102
1-888-ASK-MODOT (1-888-275-6636)

HNTB
715 KIRK DRIVE
KANSAS CITY, MO 64105-1310
TELEPHONE (816) 472-1201
CERTIFICATE OF AUTHORITY NO. 001270

FINAL PLANS

REV.

Detailed JUL 2009
Checked JUL 2009

Note: This drawing is not to scale. Follow dimensions.

T:\de-proj\St_Louis_City\Construction\J6I0984\Asbuilts\Bridge\B_A6500_039-205_J6I0984_039.dgn

8:28:55 AM

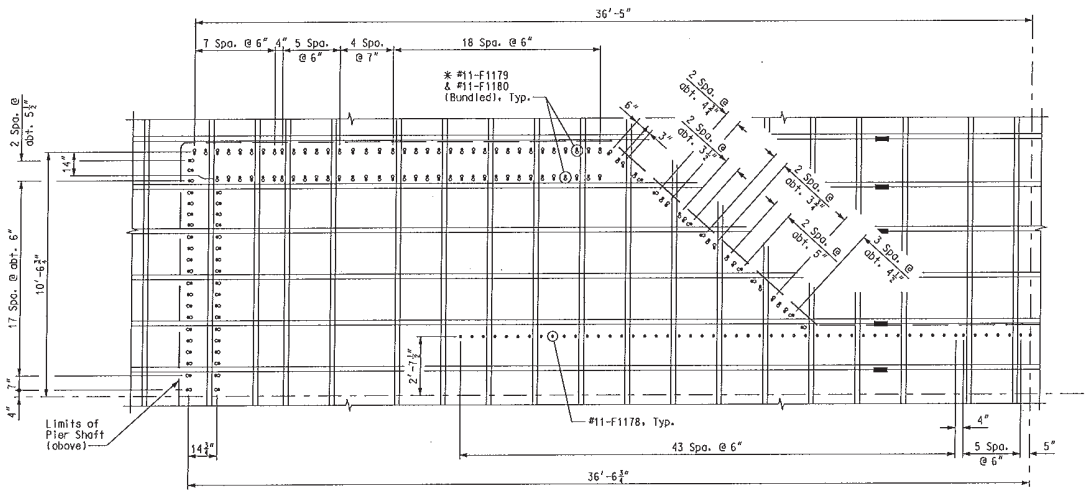

PARTIAL PLAN – PIER SHAFT REINFORCING

* See "Orientation of Bundled #11 Bars" on this sheet. (#11-F1177 Bars not shown for clarity)

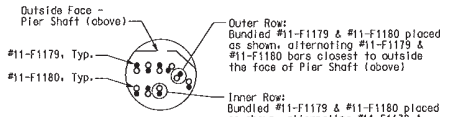

ORIENTATION OF BUNDLED #11 BARS

(VERTICAL)

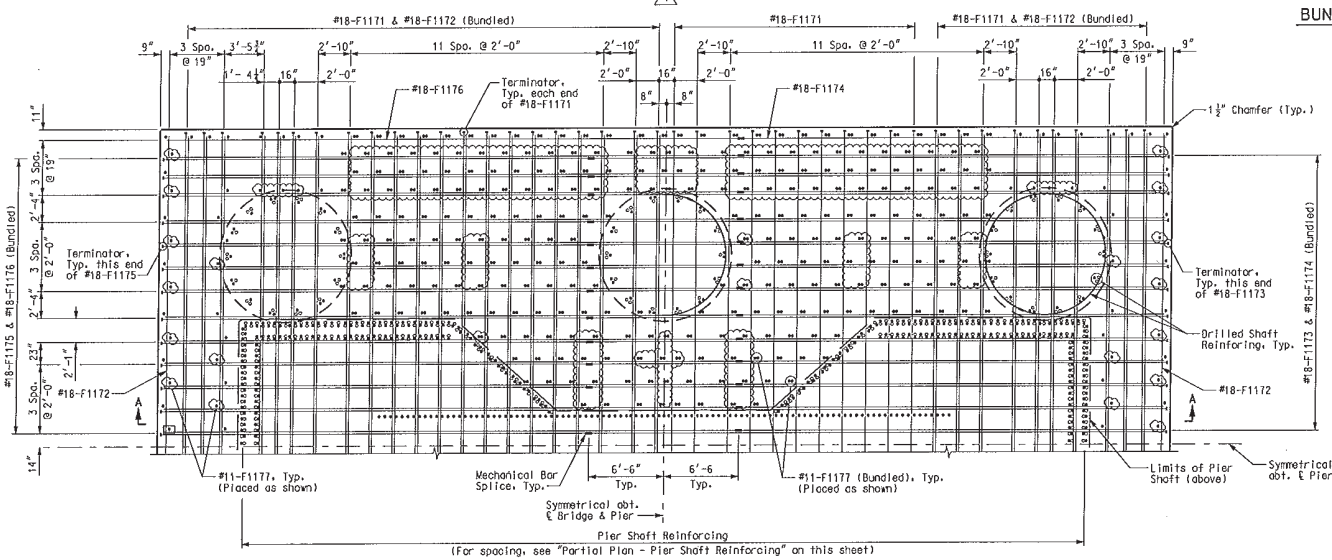

TOP REINFORCING MATS

BOTTOM REINFORCING MATS

PARTIAL PLAN – FOOTING

Notes:
For Section A-A, see Sheet No. BR41.
For Drilled Shaft reinforcing, see Sheet No. BR39.
The minimum cover on the reinforcing steel in the footing is 3".
#11-F1177 in clouded regions have terminators in lieu of 90° hooks on bottom only.
Terminators are Lenton Terminator D6 Embedment Anchors.

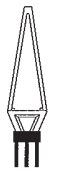

PIER 11 – FOUNDATION

Detailed JUL 2009
Checked JUL 2009

Note: This drawing is not to scale. Follow dimensions.

Sheet No. 40 of 205

T:\de-proj\St_Louis_City\Construction\J6I0984\Asbuilts\Bridge\B_A6500_040-205_J6I0984_040.dgn

12:49:22 PM

DATE 5/17/10
ROUTE I-70 | STATE MO/IL
DISTRICT 6 | SHEET NO. BR40
COUNTY ST. LOUIS CITY – MO ST. CLAIR – IL
JOB NO. J6I0984
CONTRACT ID. 091208-601
PROJECT NO. I-70-9 (20)
BRIDGE NO. A6500

REV.	DATE	DESCRIPTION
A	5-17-10	Revised per ATC

MISSOURI HIGHWAYS AND TRANSPORTATION COMMISSION
105 WEST CAPITOL
JEFFERSON CITY, MO 65102
1-888-ASK-MODOT (1-888-275-6636)

HNTB
715 KIRK DRIVE
KANSAS CITY, MO 64105-1310
TELEPHONE (816) 472-1201
CERTIFICATE OF AUTHORITY NO. 001270

FINAL PLANS

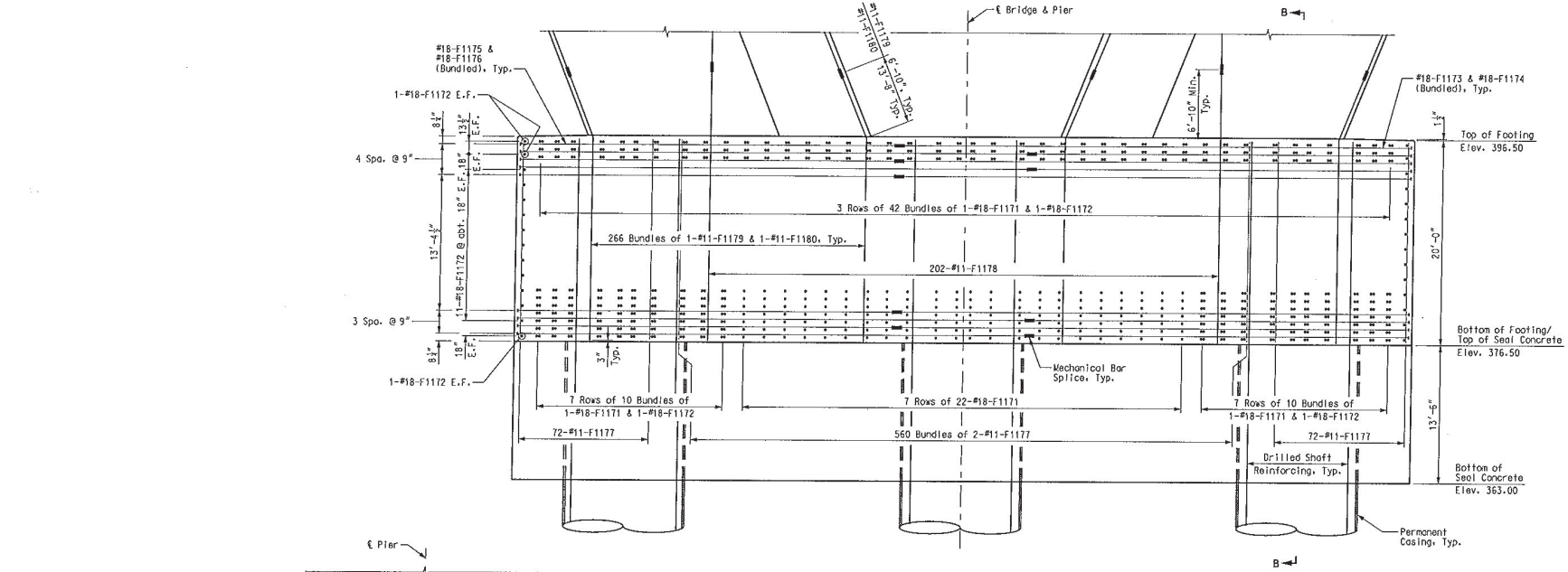

SECTION A-A

(For placement and spacing of reinforcing, see Sheet No. BR40.) 4

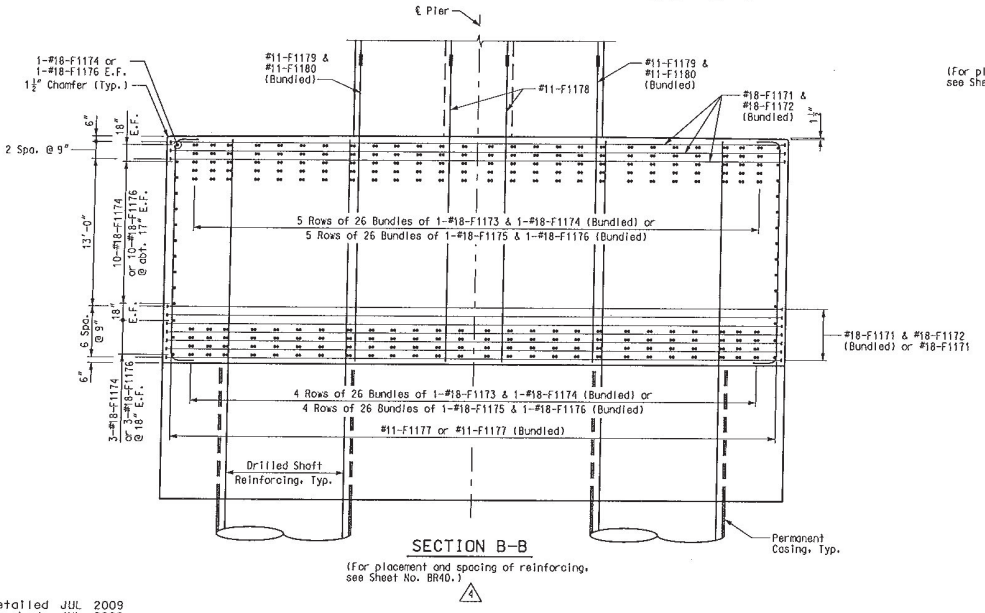

SECTION B-B

(For placement and spacing of reinforcing, see Sheet No. BR40.) 4

Notes:
For location of Section A-A, see Sheet No. BR40.
For Drilled Shaft reinforcing, see Sheet No. BR39.
The minimum cover on the reinforcing steel in the footing is 3".

4 PIER 11 - FOUNDATION

Detailed JUL 2009
Checked JUL 2009

Note: This drawing is not to scale. Follow dimensions.

Sheet No. 41 of 205

DATE 5/17/10
ROUTE I-70 STATE MO/IL
DISTRICT 6 SHEET NO. BR41
COUNTY ST. LOUIS CITY - MO ST. CLAIR - IL
JOB NO. J6I0984
CONTRACT ID. 091208-601
PROJECT NO. I-70-9 (20)
BRIDGE NO. A6500

DATE	DESCRIPTION
5-17-10	4 Revised per ATC

MISSOURI HIGHWAYS AND TRANSPORTATION COMMISSION
105 WEST CAPITOL
P.O. BOX 270
JEFFERSON CITY, MO 65102
1-888-ASK-MODOT (1-888-275-6636)

HNTB
715 KIRK DRIVE
KANSAS CITY, MO 64105-1310
TELEPHONE (816) 472-1201
CERTIFICATE OF AUTHORITY NO. 001270

FINAL PLANS

REV.

Y:\de-proj\St_Louis_City\Construction\J6I0984\Asbuilts\Bridge\B_A6500_041-205_J6I0984_041.dgn
1:07:06 PM

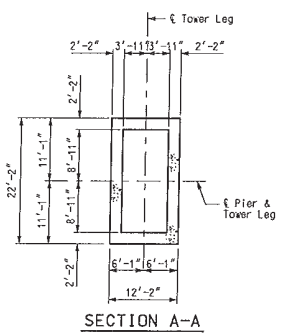

SECTION A-A

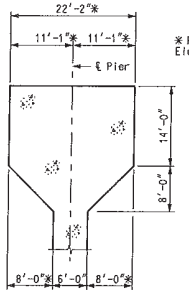

SECTION B-B

* Pier shaft transition from 22'-0" at Elev. 460.50 to 22'-2" at Elev. 464.50.

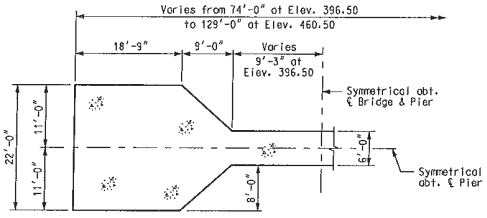

SECTION C-C

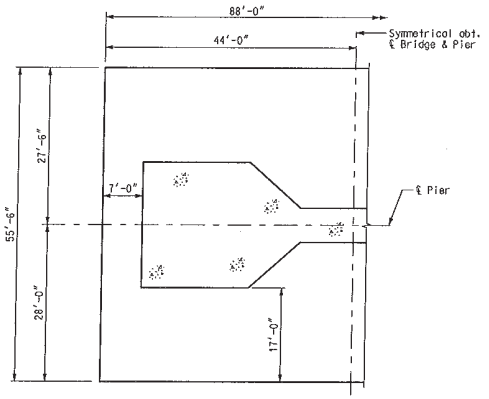

SECTION D-D

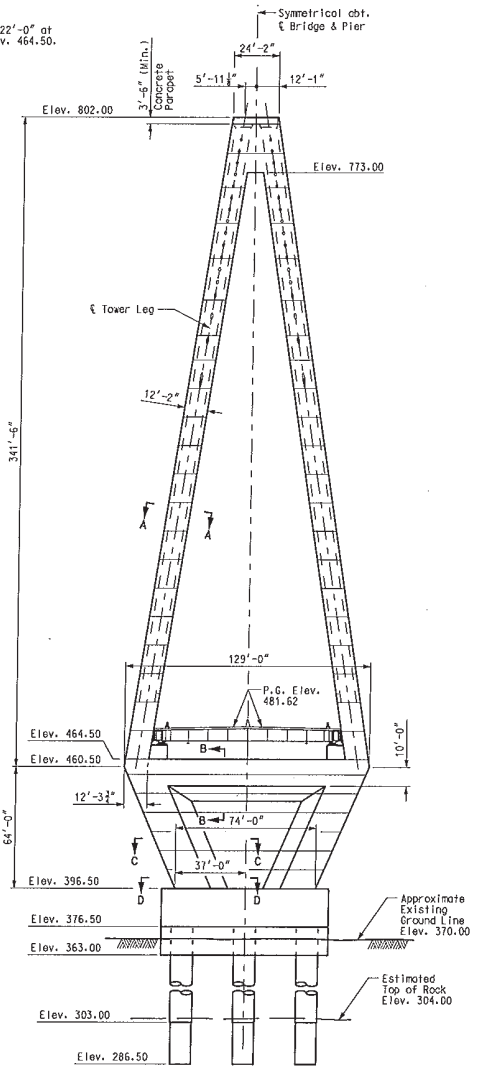

FRONT ELEVATION

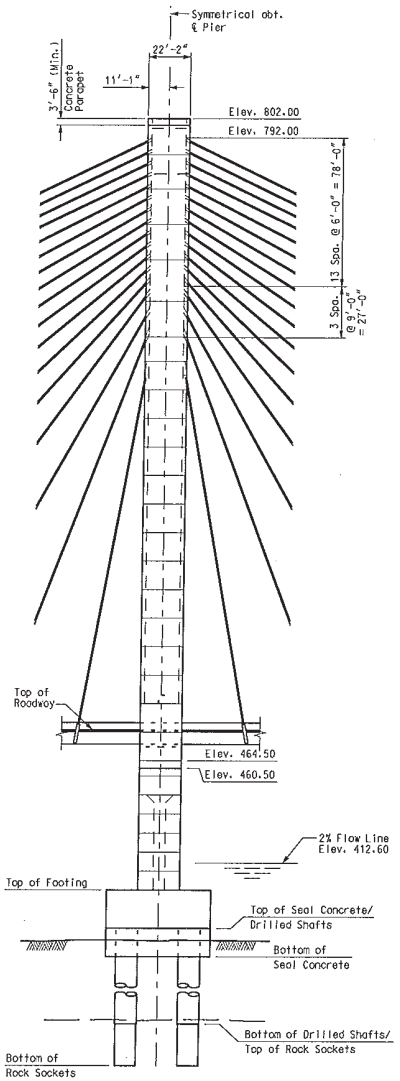

SIDE ELEVATION

4 Notes:
For Foundation Layout, see Sheet Nos. BR11 & BR12.
For Foundation details, see Sheet Nos. BR56 thru BR58.
The Substructure Quantities listed in the table on this sheet pertain to the portion of the pier above the top of the distribution cap. These quantities were included in the Final Quantities table on Sheet No. BR8.
footing. These

PIER 12 - DIMENSIONS

DATE 5/17/10
ROUTE I-70 | STATE MO/IL
DISTRICT 6 | SHEET NO. BR42
COUNTY ST. LOUIS CITY - MO ST. CLAIR - IL
JOB NO. J6I0984
CONTRACT ID. 091208-601
PROJECT NO. I-70-9 (20)
BRIDGE NO. A6500

DATE	DESCRIPTION
5-17-10	4 Revised per ATC

MISSOURI HIGHWAYS AND TRANSPORTATION COMMISSION
105 WEST CAPITOL
JEFFERSON CITY, MO 65102
1-888-ASK-MODOT (1-888-275-6636)

HNTB
715 KIRK DRIVE
KANSAS CITY, MO 64105-1310
TELEPHONE (816) 472-1201
CERTIFICATE OF AUTHORITY NO. 001270

FINAL PLANS

Detailed JUL 2009
Checked JUL 2009

Note: This drawing is not to scale. Follow dimensions.

Sheet No. 42 of 205

T:\de-proj\St_Louis_City\Construction\J6I0984\Asbuilts\Bridge\B_A6500_042-205_J6I0984_042.dgn
8:29:50 AM

4 BLANK SHEET → ~~PIER 12 - FOUNDATION DIMENSIONS~~

DATE 5/17/10
ROUTE I-70 | STATE MO/IL
DISTRICT 6 | SHEET NO. BR43
COUNTY ST. LOUIS CITY - MO ST. CLAIR - IL
JOB NO. J6I0984
CONTRACT ID. 091208-601
PROJECT NO. I-70-9 (20)
BRIDGE NO. A6500

DATE	DESCRIPTION
5-17-10	4 Revised per ATC

MISSOURI HIGHWAYS AND TRANSPORTATION COMMISSION
105 WEST CAPITOL
JEFFERSON CITY, MO 65102
1-888-ASK-MODOT (1-888-275-6636)

HNTB
715 KIRK DRIVE
KANSAS CITY, MO 64105-1310
TELEPHONE (816) 472-1201
CERTIFICATE OF AUTHORITY NO. 001270

FINAL PLANS

REV.

Detailed JUL 2009
Checked JUL 2009

Note: This drawing is not to scale. Follow dimensions.

T:\de-proj\St_Louis_City\Construction\J6I0984\Asbuilts\Bridge\B_A6500_043-205_J6I0984_043.dgn

1:12:02 PM

4 BLANK SHEET → ~~PIER 12 - CUTTING EDGE~~

Detailed JUL 2009
Checked JUL 2009

Note: This drawing is not to scale. Follow dimensions.

Sheet No. 44 of 205

T:\de-proj\St_Louis_City\Construction\J6I0984\Asbuilts\Bridge\B_A6500_044-205_J6I0984_044.dgn

1:12:40 PM

DATE 5/17/10
ROUTE I-70 | STATE MO/IL
DISTRICT 6 | SHEET NO. BR44
COUNTY ST. LOUIS CITY - MO ST. CLAIR - IL
JOB NO. J6I0984
CONTRACT ID. 091208-601
PROJECT NO. I-70-9 (20)
BRIDGE NO. A6500

DATE	DESCRIPTION
5-17-10	4 Revised per ATC

MISSOURI HIGHWAYS AND TRANSPORTATION COMMISSION
105 WEST CAPITOL
JEFFERSON CITY, MO 65102
1-888-ASK-MODOT (1-888-275-6636)

HNTB
715 KIRK DRIVE
KANSAS CITY, MO 64105-1310
TELEPHONE (816) 472-1201
CERTIFICATE OF AUTHORITY
NO. 001270

FINAL PLANS

REV.

⚠ BLANK SHEET → PIER 12 - CUTTING EDGE

Detailed JUL 2009
Checked JUL 2009

Note: This drawing is not to scale. Follow dimensions.

Sheet No. 45 of 205

T:\de-proj\St_Louis_City\Construction\J6I0984\Asbuilts\Bridge\B_A6500_045-205_J6I0984_045.dgn

DATE 5/17/10
ROUTE I-70 | STATE MO/IL
DISTRICT 6 | SHEET NO. BR45
COUNTY ST. LOUIS CITY - MO, ST. CLAIR - IL
JOB NO. J6I0984
CONTRACT ID. 091208-601
PROJECT NO. I-70-9 (20)
BRIDGE NO. A6500

DATE	DESCRIPTION
5-17-10	⚠ Revised per ATC

MISSOURI HIGHWAYS AND TRANSPORTATION COMMISSION
MoDOT
105 WEST CAPITOL
JEFFERSON CITY, MO 65102
1-888-ASK-MODOT (1-888-275-6636)

HNTB
715 KIRK DRIVE
KANSAS CITY, MO 64105-1310
TELEPHONE: (816) 472-1201
CERTIFICATE OF AUTHORITY NO. 001270

FINAL PLANS

REV.

1:13:41 PM

4 BLANK SHEET → ~~PIER 12 CAISSION~~

DATE 5/17/10
ROUTE I-70 | STATE MO/IL
DISTRICT 6 | SHEET NO. BR46
COUNTY ST. LOUIS CITY - MO ST. CLAIR - IL
JOB NO. J6I0984
CONTRACT ID. 091208-601
PROJECT NO. I-70-9 (20)
BRIDGE NO. A6500

DATE	DESCRIPTION
5-7-10	4 Revised per ATC

MISSOURI HIGHWAYS AND TRANSPORTATION COMMISSION
105 WEST CAPITOL
JEFFERSON CITY, MO 65102
1-888-ASK-MODOT (1-888-275-6636)

HNTB
715 KIRK DRIVE
KANSAS CITY, MO 64105-1310
TELEPHONE (816) 472-7201
CERTIFICATE OF AUTHORITY NO. 001270

FINAL PLANS

REV.

Detailed JUL 2009
Checked JUL 2009

Note: This drawing is not to scale. Follow dimensions.

T:\de-proj\St_Louis_City\Construction\J6I0984\Asbuilts\Bridge\B_A6500_046-205_J6I0984_046.dgn

1:14:12 PM

⚠4 BLANK SHEET → ~~PIER 12 CAISSION~~

DATE	5/17/10
ROUTE	I-70
STATE	MO/IL
DISTRICT	6
SHEET NO.	BR47
COUNTY	ST. LOUIS CITY - MO ST. CLAIR - IL
JOB NO.	J6I0984
CONTRACT ID.	091208-601
PROJECT NO.	I-70-9 (20)
BRIDGE NO.	A6500

DESCRIPTION	DATE
⚠4 Revised per ATC	5-17-10

MISSOURI HIGHWAYS AND TRANSPORTATION COMMISSION
105 WEST CAPITOL
JEFFERSON CITY, MO 65102
1-888-ASK-MODOT (1-888-275-6636)

HNTB
715 KIRK DRIVE
KANSAS CITY, MO 64105-1310
TELEPHONE (816) 472-1201
CERTIFICATE OF AUTHORITY
NO. 001270

FINAL PLANS

REV.

Detailed JUL 2009
Checked JUL 2009

Note: This drawing is not to scale. Follow dimensions.

T:\de-proj\St_Louis_City\Construction\J6I0984\Asbuilts\Bridge\B_A6500_047-205_J6I0984_047.dgn

1:14:59 PM

⚠4 BLANK SHEET → PIER 12 – CAISSION

DATE	5/17/10
ROUTE / STATE	I-70 / MO/IL
DISTRICT / SHEET NO.	6 / BR48
COUNTY	ST. LOUIS CITY - MO ST. CLAIR - IL
JOB NO.	J6I0984
CONTRACT ID.	091208-601
PROJECT NO.	I-70-9 (20)
BRIDGE NO.	A6500

DATE	DESCRIPTION
5-17-10	⚠4 Revised per ATC

MISSOURI HIGHWAYS AND TRANSPORTATION COMMISSION
105 WEST CAPITOL
JEFFERSON CITY, MO 65102
1-888-ASK-MODOT (1-888-275-6636)

HNTB
715 KIRK DRIVE
KANSAS CITY, MO 64105-1310
TELEPHONE (816) 472-1201
CERTIFICATE OF AUTHORITY NO. 001270

FINAL PLANS

REV.

Detailed JUL 2009
Checked JUL 2009

Note: This drawing is not to scale. Follow dimensions.

T:\de-proj\St_Louis_City\Construction\J6I0984\Asbuilts\Bridge\B_A6500_048-205_J6I0984_048.dgn

1:18:45 PM

⚠1 BLANK SHEET → PIER 12 — CAISSION

DATE 5/17/10
ROUTE I-70 | STATE MO/IL
DISTRICT 6 | SHEET NO. BR49
COUNTY ST. LOUIS CITY - MO, ST. CLAIR - IL
JOB NO. J6I0984
CONTRACT ID. 091208-601
PROJECT NO. I-70-9 (20)
BRIDGE NO. A6500

DESCRIPTION	DATE
⚠1 Revised per ATC	5-17-10

MISSOURI HIGHWAYS AND TRANSPORTATION COMMISSION
105 WEST CAPITOL
JEFFERSON CITY, MO 65102
1-888-ASK-MODOT (1-888-275-6636)

HNTB
715 KIRK DRIVE
KANSAS CITY, MO 64105-1310
TELEPHONE (816) 472-1201
CERTIFICATE OF AUTHORITY NO. 001270

FINAL PLANS

REV.

Detailed JUL 2009
Checked JUL 2009

Note: This drawing is not to scale. Follow dimensions.

T:\de-proj\St_Louis_City\Construction\J6I0984\Asbuilts\Bridge\B_A6500_049-205_J6I0984_049.dgn

1:19:26 PM

DATE
5/17/10

ROUTE	STATE
I-70	MO/IL

DISTRICT	SHEET NO.
6	BR50

COUNTY
ST. LOUIS CITY - MO
ST. CLAIR - IL

JOB NO.
J6I0984

CONTRACT ID.
091208-601

PROJECT NO.
I-70-9 (20)

BRIDGE NO.
A6500

DESCRIPTION	DATE
1 Revised per ATC	5-17-10

MISSOURI HIGHWAYS AND TRANSPORTATION COMMISSION

MoDOT

105 WEST CAPITOL
JEFFERSON CITY, MO 65102
1-888-ASK-MODOT (1-888-275-6636)

HNTB

715 KIRK DRIVE
KANSAS CITY, MO 64105-1310
TELEPHONE (816) 472-1201
CERTIFICATE OF AUTHORITY
NO. 001270

FINAL PLANS

REV.

1 BLANK SHEET → ~~PIER 12 CAISSION~~

Detailed JUL 2009
Checked JUL 2009

Note: This drawing is not to scale. Follow dimensions.

T:\de-proj\St_Louis_City\Construction\J6I0984\Asbuilts\Bridge\B_A6500_050-205_J6I0984_050.dgn

1:20:03 PM

⚠4 BLANK SHEET → ~~PIER 12 SUBSHAFT~~

DATE	5/17/10
ROUTE	I-70
STATE	MO/IL
DISTRICT	6
SHEET NO.	BR51
COUNTY	ST. LOUIS CITY - MO ST. CLAIR - IL
JOB NO.	J6I0984
CONTRACT ID.	091208-601
PROJECT NO.	I-70-9 (20)
BRIDGE NO.	A6500

DATE	DESCRIPTION
5-17-10	⚠ Revised per ATC

MISSOURI HIGHWAYS AND TRANSPORTATION COMMISSION
105 WEST CAPITOL
JEFFERSON CITY, MO 65102
1-888-ASK-MODOT (1-888-275-6636)

HNTB
715 KIRK DRIVE
KANSAS CITY, MO 64105-1310
TELEPHONE (816) 472-1201
CERTIFICATE OF AUTHORITY
NO. 001210

FINAL PLANS

REV.

Detailed JUL 2009
Checked JUL 2009

Note: This drawing is not to scale. Follow dimensions.

T:\da-proj\St_Louis_City\Construction\J6I0984\Asbuilts\Bridge\B_A6500_051-205_J6I0984_051.dgn

1:20:41 PM

4 BLANK SHEET → PIER 12 SUBSHAFT

Detailed JUL 2009
Checked JUL 2009

Note: This drawing is not to scale. Follow dimensions.

Sheet No. 52 of 205

T:\de-proj\St_Louis_City\Construction\J6I0984\Asbuilts\Bridge\B_A6500_052-205_J6I0984_052.dgn

DATE 5/17/10
ROUTE I-70 STATE MO/IL
DISTRICT 6 SHEET NO. BR52
COUNTY ST. LOUIS CITY - MO ST. CLAIR - IL
JOB NO. J6I0984
CONTRACT ID. 091208-601
PROJECT NO. I-70-9 (20)
BRIDGE NO. A6500

DATE	DESCRIPTION
5-17-10	4 Revised per ATC

MISSOURI HIGHWAYS AND TRANSPORTATION COMMISSION
MoDOT
105 WEST CAPITOL
JEFFERSON CITY, MO 65102
1-888-ASK-MODOT (1-888-275-6636)

HNTB
715 KIRK DRIVE
KANSAS CITY, MO 64105-1310
TELEPHONE (816) 472-1201
CERTIFICATE OF AUTHORITY NO. 001270

FINAL PLANS

REV.

1:21:14 PM

4 BLANK SHEET → ~~PIER 12 - DISTRIBUTION CAP~~

DATE 5/17/10
ROUTE I-70 | STATE MO/IL
DISTRICT 6 | SHEET NO. BR53
COUNTY ST. LOUIS CITY - MO ST. CLAIR - IL
JOB NO. J6I0984
CONTRACT ID. 091208-601
PROJECT NO. I-70-9 (20)
BRIDGE NO. A6500

REV.	DATE	DESCRIPTION
4	5-17-10	Revised per ATC

MISSOURI HIGHWAYS AND TRANSPORTATION COMMISSION
105 WEST CAPITOL
JEFFERSON CITY, MO 65102
1-888-ASK-MODOT (1-888-275-6636)

HNTB
715 KIRK DRIVE
KANSAS CITY, MO 64105-1310
TELEPHONE (816) 472-1201
CERTIFICATE OF AUTHORITY NO. 001270

FINAL PLANS

Detailed JUL 2009
Checked JUL 2009

Note: This drawing is not to scale. Follow dimensions.

T:\de-proj\St_Louis_City\Construction\J6I0984\Asbuilts\Bridge\B_A6500_053-205_J6I0984_053.dgn

1:21:49 PM

4 BLANK SHEET → PIER 12 ~~DISTRIBUTION~~ CAP

DATE 5/17/10
ROUTE I-70 | STATE MO/IL
DISTRICT 6 | SHEET NO. BR54
COUNTY ST. LOUIS CITY - MO, ST. CLAIR - IL
JOB NO. J610984
CONTRACT ID. 091208-601
PROJECT NO. I-70-9 (20)
BRIDGE NO. A6500

DESCRIPTION	DATE
4 Revised per ATC	5-17-10

MISSOURI HIGHWAYS AND TRANSPORTATION COMMISSION
105 WEST CAPITOL
JEFFERSON CITY, MO 65102
1-888-ASK-MODOT (1-888-275-6636)

HNTB
715 KIRK DRIVE
KANSAS CITY, MO 64105-1310
TELEPHONE (816) 472-1201
CERTIFICATE OF AUTHORITY NO. 001270

FINAL PLANS

REV.

Detailed JUL 2009
Checked JUL 2009

Note: This drawing is not to scale. Follow dimensions.

T:\de-proj\St_Louis_City\Construction\J610984\Asbuilts\Bridge\B_A6500_054-205_J610984_054.dgn

1:22:24 PM

4 BLANK SHEET → PIER 12 – ~~DISTRIBUTION~~ CAP

Detailed JUL 2009
Checked JUL 2009

Note: This drawing is not to scale. Follow dimensions.

T:\de-proj\St_Louis_City\Construction\J6I0984\Asbuilts\Bridge\B_A6500_055-205_J6I0984_055.dgn

DATE 5/17/10
ROUTE I-70 | STATE MO/IL
DISTRICT 6 | SHEET NO. BR55
COUNTY ST. LOUIS CITY - MO, ST. CLAIR - IL
JOB NO. J6I0984
CONTRACT ID. 091208-601
PROJECT NO. I-70-9 (20)
BRIDGE NO. A6500

DATE	DESCRIPTION
5-17-10	4 Revised per ATC

MISSOURI HIGHWAYS AND TRANSPORTATION COMMISSION
105 WEST CAPITOL
JEFFERSON CITY, MO 65102
1-888-ASK-MODOT (1-888-275-6636)

HNTB
715 KIRK DRIVE
KANSAS CITY, MO 64105-1310
TELEPHONE (816) 472-1201
CERTIFICATE OF AUTHORITY
NO. 001270

FINAL PLANS

REV.

1:23:17 PM

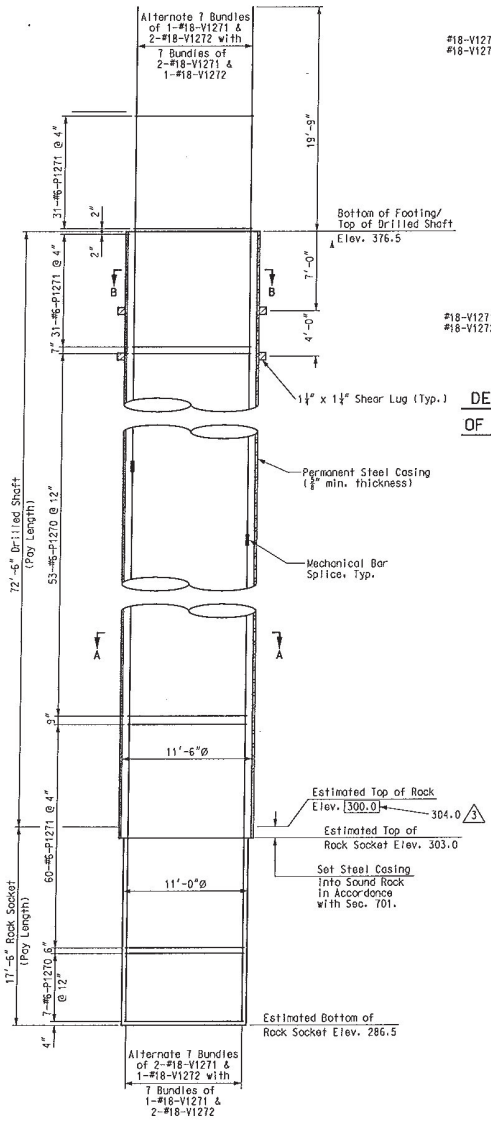

DRILLED SHAFT AND ROCK SOCKET ELEVATION

4

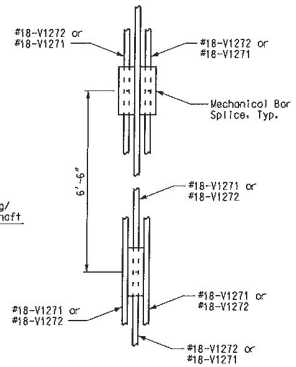

DETAIL OF COUPLING OF BUNDLED #18 BARS

4

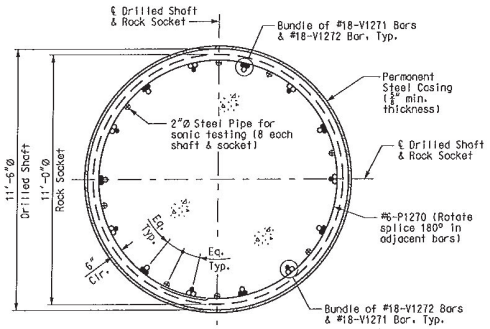

SECTION A-A

4

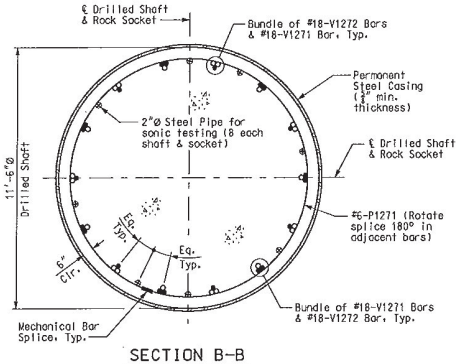

SECTION B-B

4

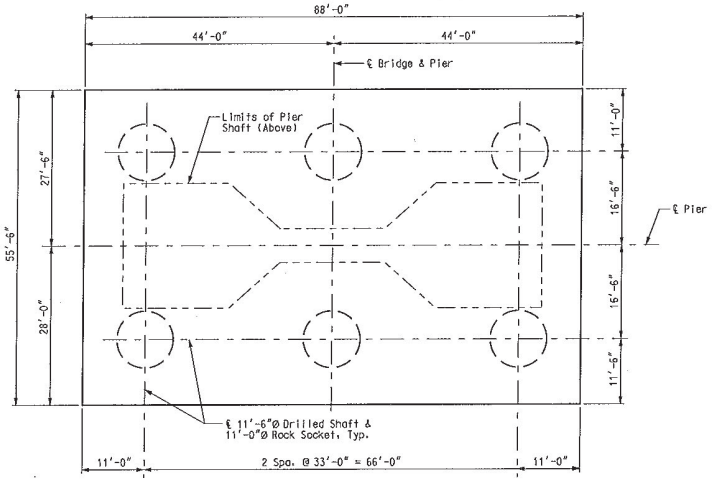

FOOTING PLAN

4

Notes:
For additional details of footing, see Sheet Nos. BR57 & BR58.
For Pier Shaft details, see Sheet Nos. BR59 thru BR66.
For Bill of Reinforcing, see Sheet Nos. BR184 thru BR203.
For Foundation Layout, see Sheet No. BR12.
For as built drilled shaft data, see Sheet No. 205.
The foundation is defined as those portions of the pier below the top of the footing. All costs associated with the construction of the foundation were paid for at the contract unit price. The cost of any cofferdams or temporary shoring was considered incidental to foundation bid items for Pier 11 and Pier 12.
Permanent steel casing is ASTM A572 Grade 60 material.
The minimum factored load capacity of each drilled shaft/rock socket is 32,300-kip.
The final length of the rock sockets was determined on the basis of the load test outlined in the Job Special Provisions.
The concrete in the drilled shafts and rock sockets had a minimum 28 day compressive strength f'c = 5000-psi.

4

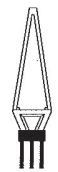

4 PIER 12 - FOUNDATION

4

DATE: 5/17/10
ROUTE: I-70 | STATE: MO/IL
DISTRICT: 6 | SHEET NO.: BR56
COUNTY: ST. LOUIS CITY - MO, ST. CLAIR - IL
JOB NO.: J610984
CONTRACT ID.: 091208-601
PROJECT NO.: I-70-9 (20)
BRIDGE NO.: A6500

DATE	DESCRIPTION
11-25-09	2 Revised Top of Rock Elev.
5-17-10	4 Revised per ATC

MISSOURI HIGHWAYS AND TRANSPORTATION COMMISSION
105 WEST CAPITOL
JEFFERSON CITY, MO 65102
1-888-ASK-MODOT (1-888-275-6636)

HNTB
715 KIRK DRIVE
KANSAS CITY, MO 64105-2310
TELEPHONE (816) 472-1201
CERTIFICATE OF AUTHORITY NO. 001270

FINAL PLANS

REV.

Detailed JUL 2009
Checked JUL 2009

Note: This drawing is not to scale. Follow dimensions.

Sheet No. 56 of 205

I:\de-proj\St_Louis_City\Construction\J610984\Asbuilts\Bridge\B_A6500_056-205_J610984_056.dgn

8:32:03 AM

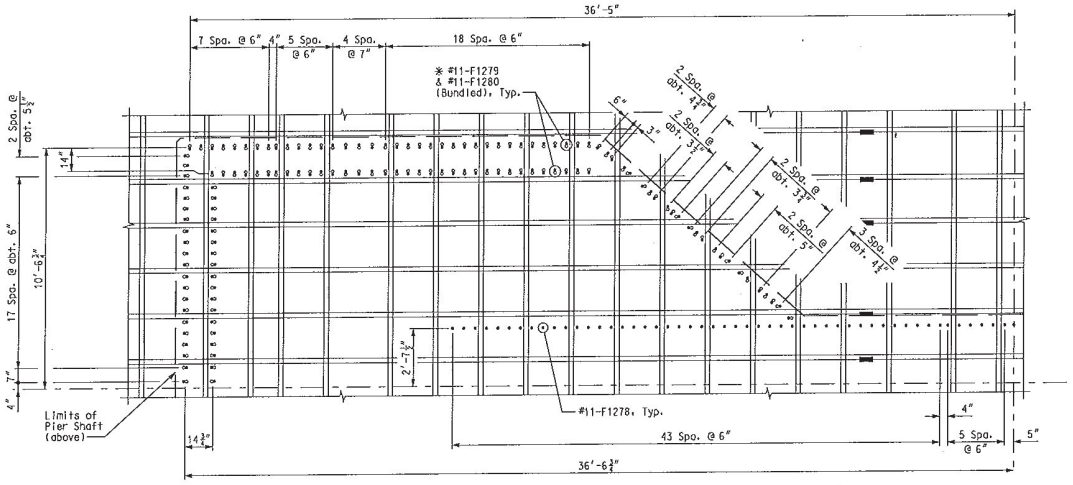

PARTIAL PLAN - PIER SHAFT REINFORCING

* See "Orientation of Bundled #11 Bars" on this sheet.
(#11-F1277 Bars not shown for clarity)

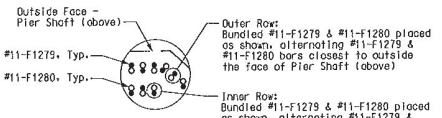

ORIENTATION OF BUNDLED #11 BARS
(VERTICAL)

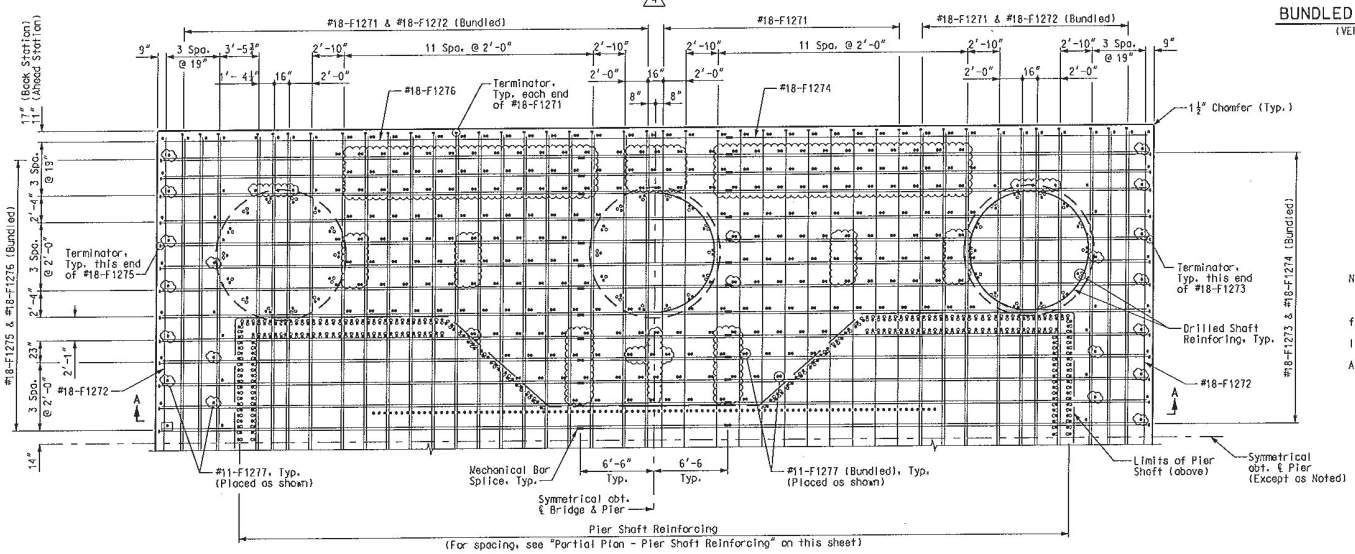

TOP REINFORCING MATS

BOTTOM REINFORCING MATS

PARTIAL PLAN - FOOTING

Notes:
For Section A-A, see Sheet No. BR58.
For Drilled Shaft reinforcing, see Sheet No. BR56.
The minimum cover on the reinforcing steel in the footing is 3".
#11-F1277 in clouded regions have terminators in lieu of 90° hooks on bottom only.
Terminators are Lenton Terminator D6 Embedment Anchors.

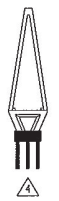

PIER 12 - FOUNDATION

DATE 5/17/10
ROUTE I-70 STATE MO/IL
DISTRICT 6 SHEET NO. BR57
COUNTY ST. LOUIS CITY - MO ST. CLAIR - IL
JOB NO. J6I0984
CONTRACT ID. 091208-601
PROJECT NO. I-70-9 (20)
BRIDGE NO. A6500

DATE	DESCRIPTION
5-17-10	Revised per ATC

MISSOURI HIGHWAYS AND TRANSPORTATION COMMISSION
105 WEST CAPITOL
JEFFERSON CITY, MO 65102
1-888-ASK-MODOT (1-888-275-6636)

HNTB
715 KIRK DRIVE
KANSAS CITY, MO 64105-1310
TELEPHONE (816) 472-1201
CERTIFICATE OF AUTHORITY NO. 001270

FINAL PLANS

Detailed JUL 2009
Checked JUL 2009

Note: This drawing is not to scale. Follow dimensions.

Sheet No. 57 of 205

T:\de-proj\St_Louis_City\Construction\J6I0984\Asbuilts\Bridge\B_A6500_057-205_J6I0984_057.dgn 1:52:30 PM

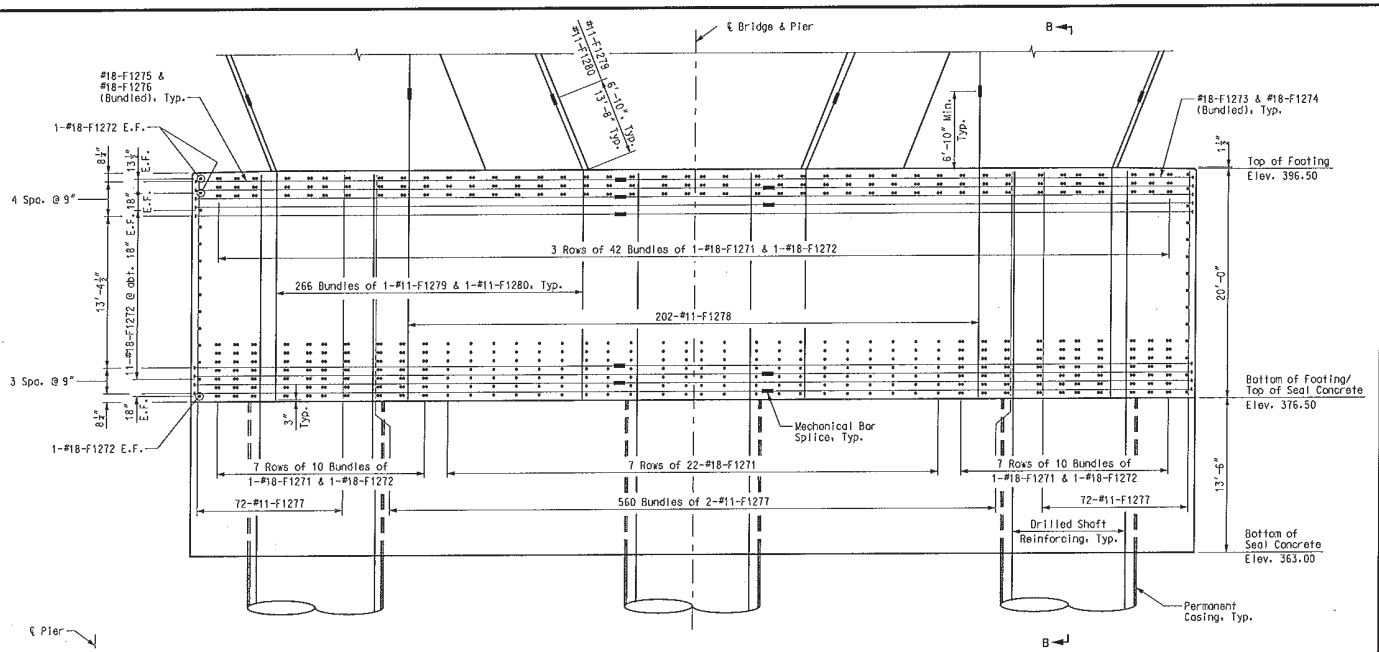

SECTION A-A

(For placement and spacing of reinforcing, see Sheet No. BR57.) 4

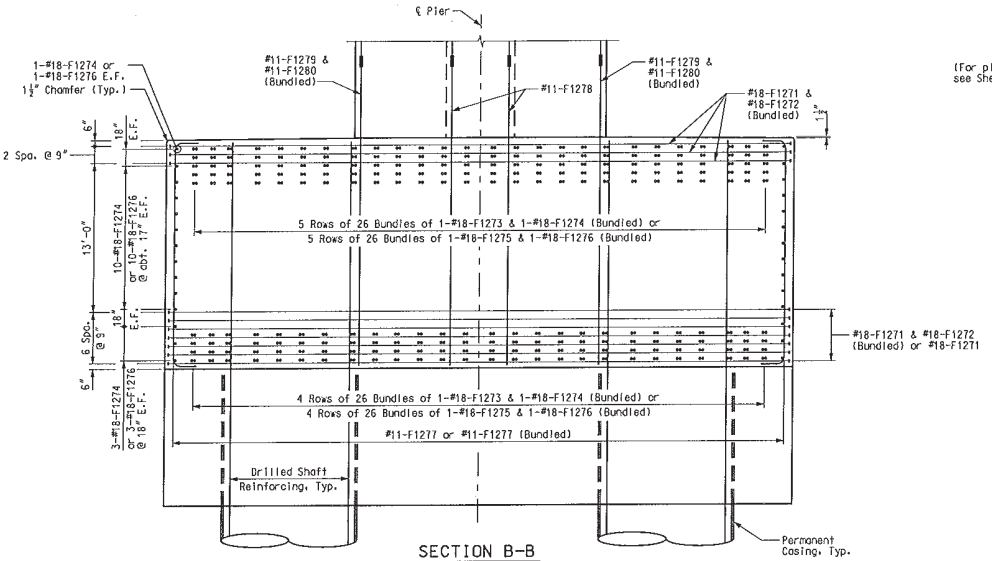

SECTION B-B

(For placement and spacing of reinforcing, see Sheet No. BR57.) 4

Notes:
For location of Section A-A, see Sheet No. BR57.
For Drilled Shaft reinforcing, see Sheet No. BR56.
The minimum cover on the reinforcing steel in the footing is 3".

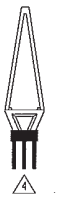

4 PIER 12 - FOUNDATION

DATE 5/17/10
ROUTE I-70 | STATE MO/IL
DISTRICT 6 | SHEET NO. BR58
COUNTY ST. LOUIS CITY - MO ST. CLAIR - IL
JOB NO. J6I0984
CONTRACT ID. 091208-601
PROJECT NO. I-70-9 (20)
BRIDGE NO. A6500

DATE	DESCRIPTION
5-17-10	4 Revised per ATC

MISSOURI HIGHWAYS AND TRANSPORTATION COMMISSION
105 WEST CAPITOL
JEFFERSON CITY, MO 65102
1-888-ASK-MODOT (1-888-275-6636)

HNTB
715 KIRK DRIVE
KANSAS CITY, MO 64105-1310
TELEPHONE (816) 472-1201
CERTIFICATE OF AUTHORITY NO. 001270

FINAL PLANS

REV.

Detailed JUL 2009
Checked JUL 2009

Note: This drawing is not to scale. Follow dimensions.

T:\de-proj\St_Louis_City\Construction\J6I0984\Asbuilts\Bridge\B_A6500_058-205_J6I0984_058.dgn

2:01:53 PM

TABLE OF REINFORCING

"A"	"B"	"C"	"D"	"E"	"F"	"G"	"H"	"J"
2-#7-P1103	2-#7-P1103	2-#7-P1103	2-#7-P1103	2-#7-P1103	2-#7-P1103	2-#7-P1103	2-#7-P1103	2-#7-P1103
4-#7-P1104	4-#7-P1104	4-#7-P1104	4-#7-P1104	4-#7-P1104	4-#7-P1104	4-#7-P1104	4-#7-P1104	4-#7-P1104
4-#7-P1105	4-#7-P1105	4-#7-P1105	4-#7-P1105	4-#7-P1105	4-#7-P1105	4-#7-P1105	4-#7-P1105	4-#7-P1105
54-#5-P1106	54-#5-P1106	54-#5-P1106	54-#5-P1106	54-#5-P1106	54-#5-P1106	46-#5-P1106	38-#5-P1106	30-#5-P1106
68-#5-P1107	68-#5-P1107	68-#5-P1107	68-#5-P1107	68-#5-P1107	68-#5-P1107	68-#5-P1107	68-#5-P1107	68-#5-P1107
29-#5-P1108	33-#5-P1108	37-#5-P1108	37-#5-P1108	47-#5-P1108	98-#5-P1144	102-#5-P1145	102-#5-P1146	102-#5-P1147
4-#5-P1109	4-#5-P1109	4-#5-P1109	4-#5-P1109	4-#5-P1109	4-#5-P1109	4-#5-P1109	4-#5-P1109	4-#5-P1109
4-#7-P1136	4-#7-P1136	4-#7-P1136	4-#7-P1136	4-#7-P1136	4-#7-P1136	4-#7-P1136	4-#7-P1136	4-#7-P1136
8-#5-P1137	8-#5-P1137	8-#5-P1137	8-#5-P1137	8-#5-P1137	8-#5-P1137	8-#5-P1137	———	———
———	———	2-#7-P1138	2-#7-P1138	2-#7-P1138	2-#7-P1138	2-#7-P1138	2-#7-P1138	2-#7-P1138

NOTE: Construction changes were made to reinforcing steel. See reinforcing steel shop drawings for details.

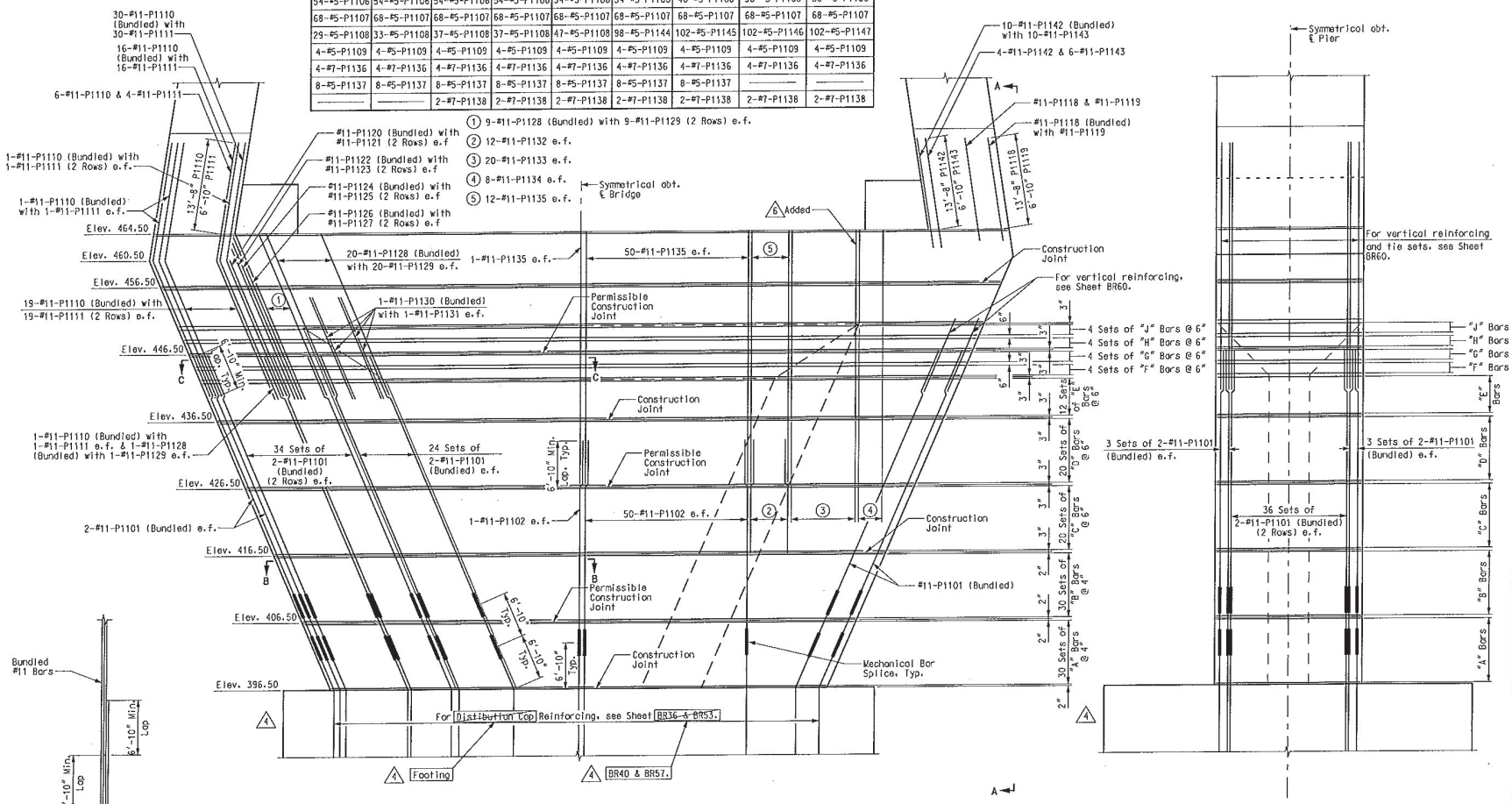

PART ELEVATION

PART SECTION

VIEW A-A

DETAIL OF LAP SPLICE AT BUNDLED #11 BARS

Notes:
Bar Marks shown are for Pier 11, using "P11" Series Bar Marks.
Pier 12 is similar, except use "P12" Series Bar Marks.
For Sections B-B, see Sheet No. BR62.
For Sections C-C, see Sheet No. BR63.
For Piers 11 & 12 dimensions, see Sheet Nos. BR25 and BR42.
For Piers 11 & 12 distribution cap, see Sheet Nos. BR36 and BR53.
BR39 and BR56.
footing.

PIERS 11 & 12 - SHAFT

Detailed JUL 2009
Checked JUL 2009

Note: This drawing is not to scale. Follow dimensions.

Sheet No. 59 of 205

T:\de-proj\St_Louis_City\Construction\J6I0984\Asbuilts\Bridge\B_A6500_059-205_J6I0984_059_REV006.dgn

1:58:22 PM

DATE 9/10/10
ROUTE I-70 | STATE MO/IL
DISTRICT 6 | SHEET NO. BR59
COUNTY ST. LOUIS CITY - MO, ST. CLAIR - IL
JOB NO. J6I0984
CONTRACT ID. 091208-601
PROJECT NO. I-70-9 (20)
BRIDGE NO. A6500

DATE	DESCRIPTION
5-17-10	Revised per ATC
9-3-10	Added Reinforcing Bar

MISSOURI HIGHWAYS AND TRANSPORTATION COMMISSION
105 WEST CAPITOL
JEFFERSON CITY, MO 65102
1-888-ASK-MODOT (1-888-275-6636)

HNTB
715 KIRK DRIVE
KANSAS CITY, MO 64105-1310
TELEPHONE (816) 472-1201
CERTIFICATE OF AUTHORITY NO. 001270

FINAL PLANS

REV.

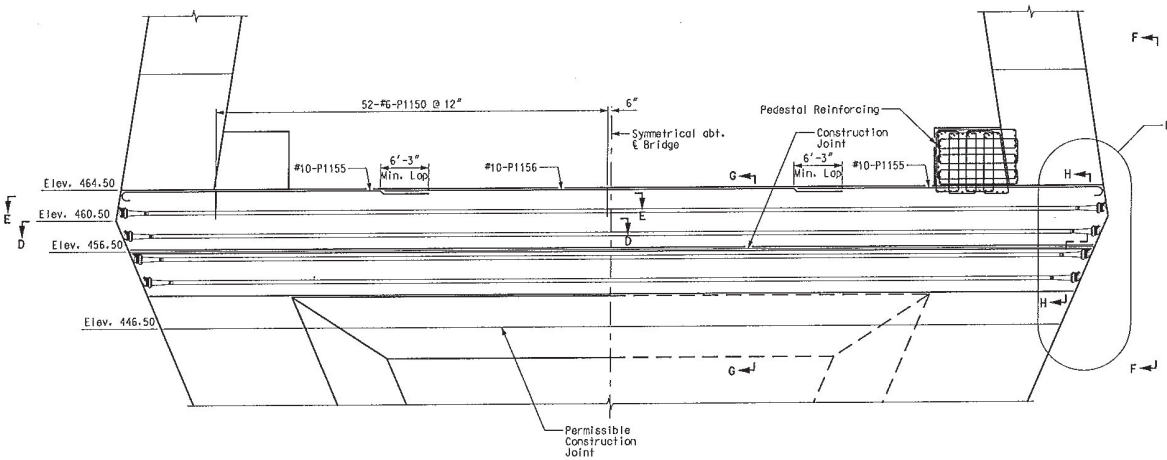

PART ELEVATION

PART SECTION

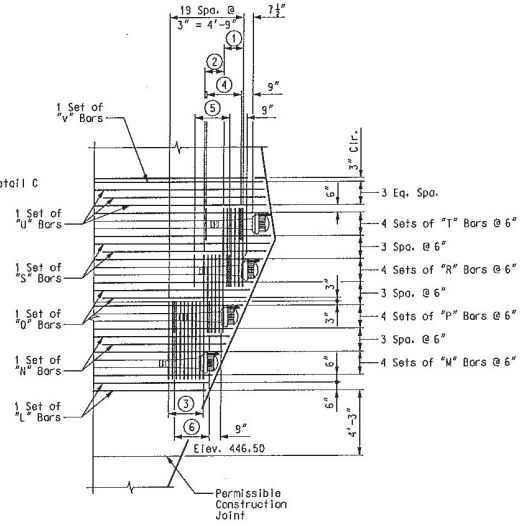

DETAIL C

1. 6 Sets of 10-#5-P1139
2. 6 Sets of 6-#5-P1139
3. 10 Sets of 2-#5-P1139
4. 10 Sets of 2-#5-P1140
5. 10 Sets of 2-#5-P1140
6. 10 Sets of 2-#5-P1141

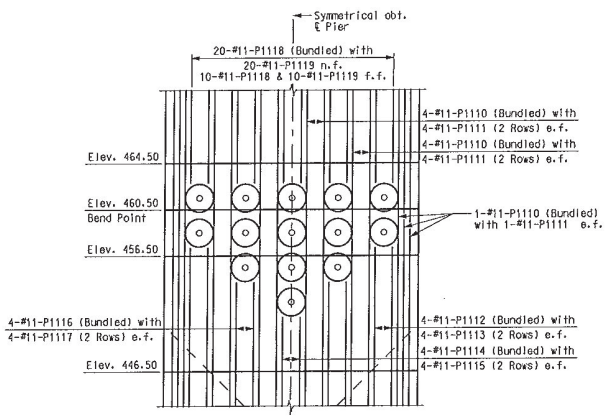

VIEW F-F

TABLE OF REINFORCING

"L"	"M"	"N"	"P"	"Q"	"R"	"S"	"T"	"U"	"V"
———	———	———	———	———	———	———	———	———	———
———	———	———	———	———	———	———	———	———	———
———	———	———	———	———	———	———	———	———	———
2-#7-P1103	———	2-#7-P1103	———	2-#7-P1103	———	2-#7-P1103	———	2-#7-P1103	2-#7-P1103
26-#5-P1106	———	26-#5-P1106	———	26-#5-P1106	———	26-#5-P1106	———	26-#5-P1106	26-#5-P1106
178-#5-P1107	182-#5-P1107	182-#5-P1107	182-#5-P1107	188-#5-P1107	186-#5-P1107	184-#5-P1107	182-#5-P1107	178-#5-P1107	44-#5-P1107
4-#5-P1109	4-#5-P1109	4-#5-P1109	4-#5-P1109	4-#5-P1109	4-#5-P1109	4-#5-P1109	4-#5-P1109	4-#5-P1109	4-#5-P1109
4-#7-P1136	4-#7-P1136	4-#7-P1136	4-#7-P1136	4-#7-P1136	4-#7-P1136	4-#7-P1136	4-#7-P1136	4-#7-P1136	46-#10-P1155
2-#7-P1138	2-#7-P1138	2-#7-P1138	2-#7-P1138	2-#7-P1138	2-#7-P1138	2-#7-P1138	2-#7-P1138	2-#7-P1138	23-#10-P1156
———	8-#5-P1148	———	8-#5-P1148	———	8-#5-P1148	———	8-#5-P1148	———	———
———	4-#7-P1149	———	4-#7-P1149	———	4-#7-P1149	———	4-#7-P1149	———	———

Notes:
Bar Marks shown are for Pier 11, using "P11" Series Bar Marks.
Pier 12 is similar, except use "P12" Series Bar Marks.
For Section D-D, see Sheet No. BR64.
For Section E-E, see Sheet No. BR65.
For Sections G-G and H-H, see Sheet No. BR66.
For Piers 11 & 12 dimensions, see Sheet Nos. BR25 and BR42.
For Post-tensioning details, see Sheet No. BR61.
For Pedestal details, see Sheet No. BR81.
Reinforcing was spaced to miss post-tensioning anchorages and tendons.

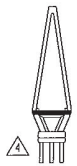

PIERS 11 & 12 - SHAFT

DATE 5/17/10
ROUTE I-70 STATE MO/IL
DISTRICT 6 SHEET NO. BR60
COUNTY ST. LOUIS CITY - MO ST. CLAIR - IL
JOB NO. J6I0984
CONTRACT ID. 091208-601
PROJECT NO. I-70-9 (20)
BRIDGE NO. A6500

DATE	DESCRIPTION
5-17-10	⚠ Revised per ATC

MISSOURI HIGHWAYS AND TRANSPORTATION COMMISSION
105 WEST CAPITOL
JEFFERSON CITY, MO 65102
1-888-ASK-MODOT (1-888-275-6636)

HNTB
715 KIRK DRIVE
KANSAS CITY, MO 64105-1310
TELEPHONE (816) 472-1201
CERTIFICATE OF AUTHORITY
MO. 001210

FINAL PLANS

Detailed JUL 2009
Checked JUL 2009

Note: This drawing is not to scale. Follow dimensions.

T:\de-proj\St_Louis_City\Construction\J6I0984\Asbuilts\Bridge\B_A6500_060-205_J6I0984_060.dgn

2:04:37 PM

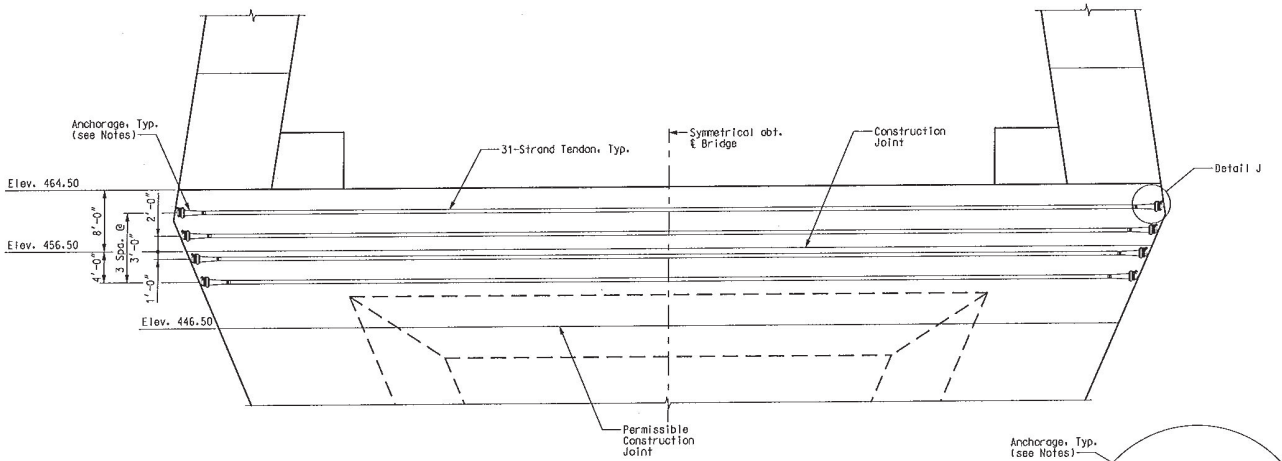

SECTION

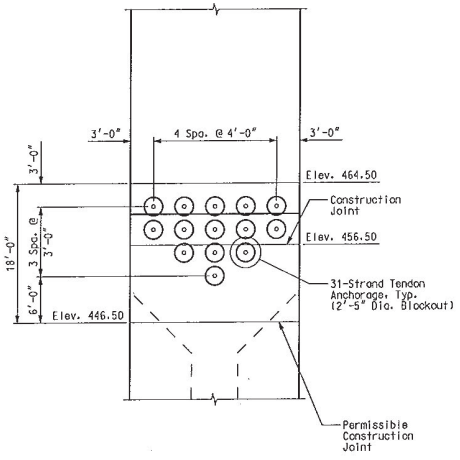

END VIEW

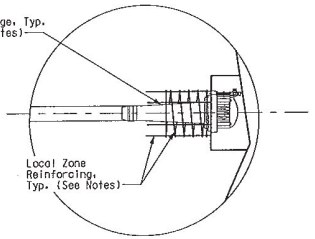

DETAIL J

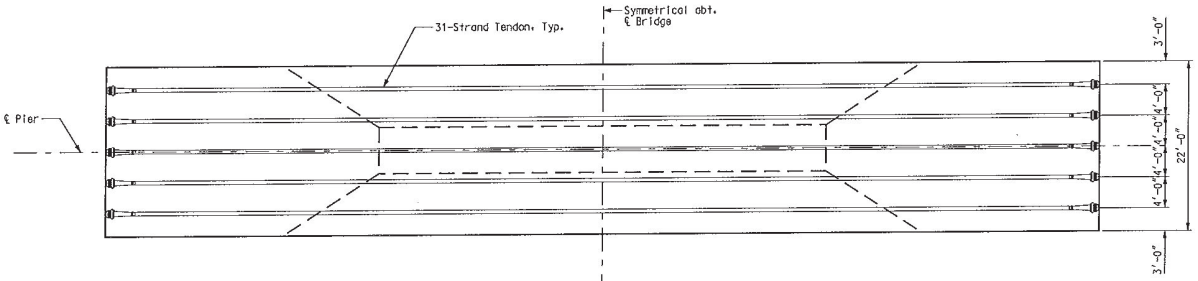

PLAN

Notes:
Tendons were not stressed until the Pier Cap concrete attained a strength of f'ci = 4000 psi.
Jacking force used was 1.308 kip/tendon.
Assumed friction loss coefficients were:
K = 0.0002/ft.
Assumed anchor set was .375".
Tendons were stressed from one end only.
Alternate tendons were stressed from opposite ends of Pier Cap.
Anchorage recesses were grouted immediately upon completion of tendon grouting.
Ducts are corrugated polyethylene.
All tendons are 0.6" diameter strands. There are 31-strands per tendon.
The post-tensioning supplier was responsible for specifying and providing the required local zone reinforcing.
Prior to installation of post-tensioning tendons, the Contractor submitted to the Engineer proof of acceptance for anchorage device tests performed per LRFD Construction Specifications 10.3.2 and 10.3.2.3.
Anchorages are VSL 6-31 Type ES.
All costs associated with material, fabrication and installation of the post-tensioning systems were considered included in the pay item "Post-Tensioning System at Towers". This included all strand, anchorages, duct, grout tubes, grout and local zone reinforcing.

4

PIERS 11 & 12 - SHAFT

DATE
5/17/10
ROUTE
I-70
STATE
MO/IL
DISTRICT
6
SHEET NO.
BR61
COUNTY
ST. LOUIS CITY - MO
ST. CLAIR - IL
JOB NO.
J6I0984
CONTRACT ID.
091208-601
PROJECT NO.
I-70-9 (20)
BRIDGE NO.
A6500

DESCRIPTION	DATE
4 Revised per ATC	5-17-10

MISSOURI HIGHWAYS AND TRANSPORTATION COMMISSION
105 WEST CAPITOL
JEFFERSON CITY, MO 65102
1-888-ASK-MODOT (1-888-275-6636)

HNTB
715 KIRK DRIVE
KANSAS CITY, MO 64105-1310
TELEPHONE (816) 472-1201
CERTIFICATE OF AUTHORITY
NO. 001270

FINAL PLANS

REV.

Detailed JUL 2009
Checked JUL 2009

Note: This drawing is not to scale. Follow dimensions.

T:\de-proj\St_Louis_City\Construction\J6I0984\Asbuilts\Bridge\B_A6500_061-205_J6I0984_061.dgn

2:05:37 PM

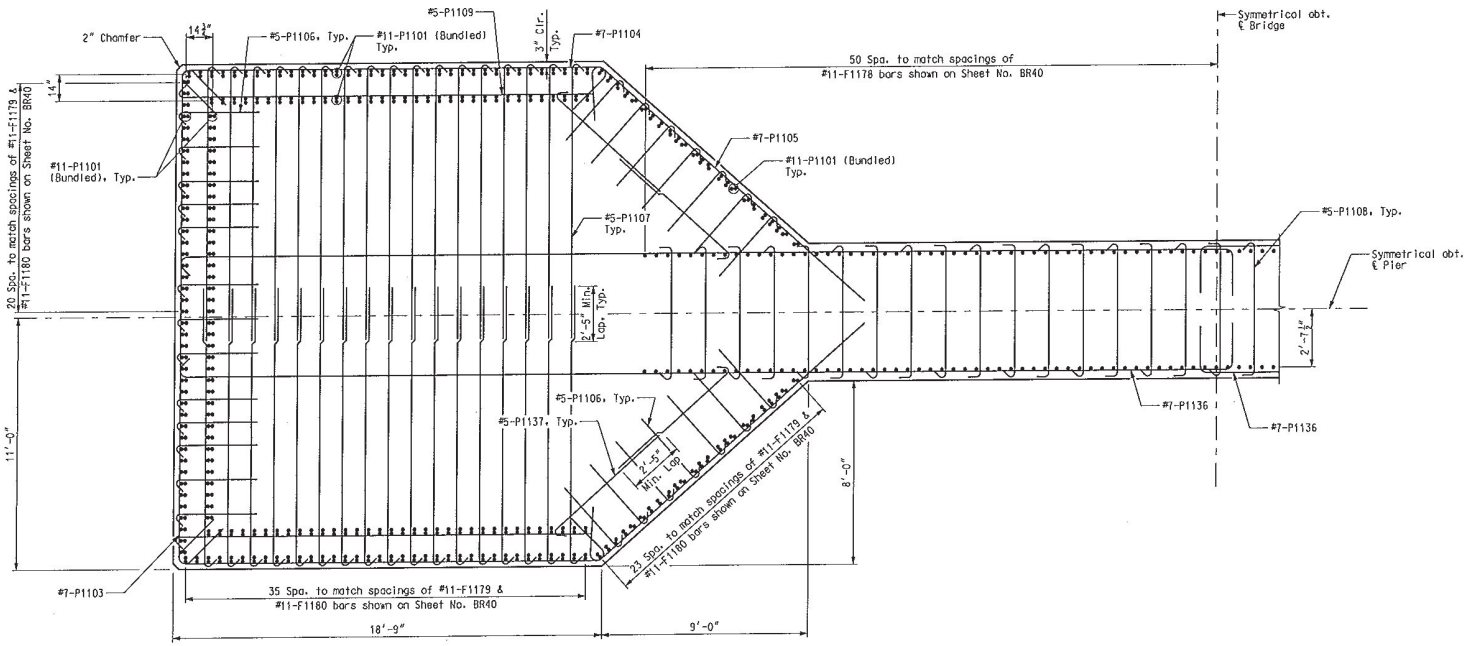

SECTION B-B

4

Notes:
Bar Marks shown are for Pier 11, using "P11" Series Bar Marks. Pier 12 is similar, except use "P12" Series Bar Marks.
For Location of Section B-B, see Sheet No. BR59.
Construction changes were made to reinforcing steel. See reinforcing steel shop drawings for details.

PIERS 11 & 12 - SHAFT

DATE 5/17/10
ROUTE I-70 | STATE MO/IL
DISTRICT 6 | SHEET NO. BR62
COUNTY ST. LOUIS CITY - MO, ST. CLAIR - IL
JOB NO. J610984
CONTRACT ID. 091208-601
PROJECT NO. I-70-9 (20)
BRIDGE NO. A6500

DATE	DESCRIPTION
5-17-10	4 Revised per A/C

MISSOURI HIGHWAYS AND TRANSPORTATION COMMISSION
105 WEST CAPITOL
JEFFERSON CITY, MO 65102
1-888-ASK-MODOT (1-888-275-6636)

HNTB
715 KIRK DRIVE
KANSAS CITY, MO 64105-1310
TELEPHONE (816) 472-1201
CERTIFICATE OF AUTHORITY NO. 001270

FINAL PLANS

REV.

Detailed JUL 2009
Checked JUL 2009

Note: This drawing is not to scale. Follow dimensions.

T:\de-proj\St_Louis_City\Construction\J610984\Asbuilts\Bridge\B_A6500_062-205_J610984_062.dgn 2:06:22 PM

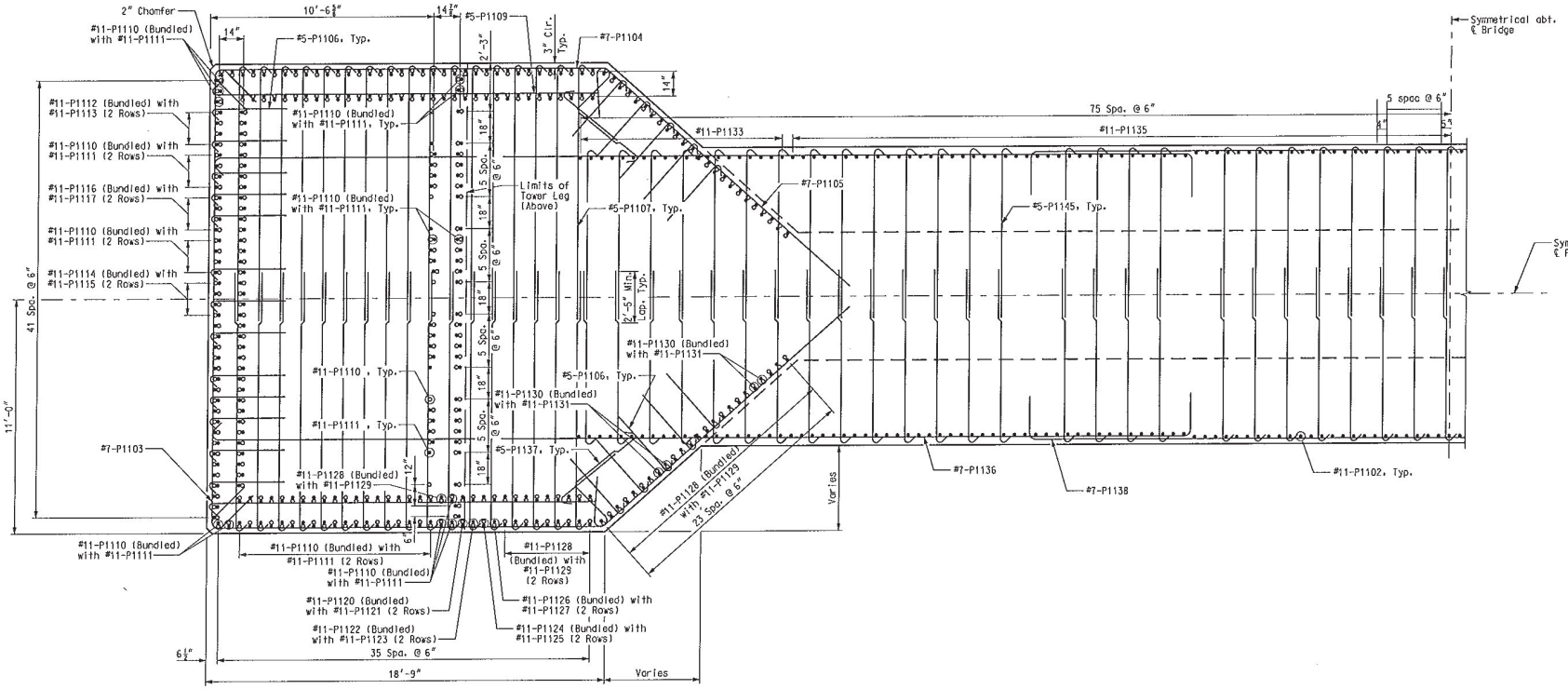

SECTION C-C

#11-P1101 not shown for clarity

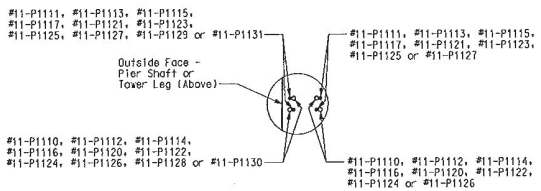

ORIENTATION OF BUNDLED #11 BARS (VERTICAL)

Notes:
Bar Marks shown are for Pier 11, using "P11" Series Bar Marks. Pier 12 is similar, except use "P12" Series Bar Marks.
For Location of Section C-C, see Sheet No. BR59.
Construction changes were made to reinforcing steel. See reinforcing steel shop drawings for details.

PIERS 11 & 12 – SHAFT

DATE 8/20/09
ROUTE I-70 STATE MO/IL
DISTRICT 6 SHEET NO. BR63
COUNTY ST. LOUIS CITY - MO ST. CLAIR - IL
JOB NO. J6I0984
CONTRACT ID. 091208-601
PROJECT NO. I-70-9 (20)
BRIDGE NO. A6500

DESCRIPTION | DATE

MISSOURI HIGHWAYS AND TRANSPORTATION COMMISSION
MoDOT
105 WEST CAPITOL
JEFFERSON CITY, MO 65102
1-888-ASK-MODOT (1-888-275-6636)

HNTB
715 KIRK DRIVE
KANSAS CITY, MO 64105-1310
TELEPHONE (816) 472-1201
CERTIFICATE OF AUTHORITY NO. 001270

FINAL PLANS

REV.

Detailed JUL 2009
Checked JUL 2009

Note: This drawing is not to scale. Follow dimensions.

T:\de-proj\St_Louis_City\Construction\J6I0984\Asbuilts\Bridge\B_A6500_063-205_J6I0984_063.dgn

2:17:06 PM

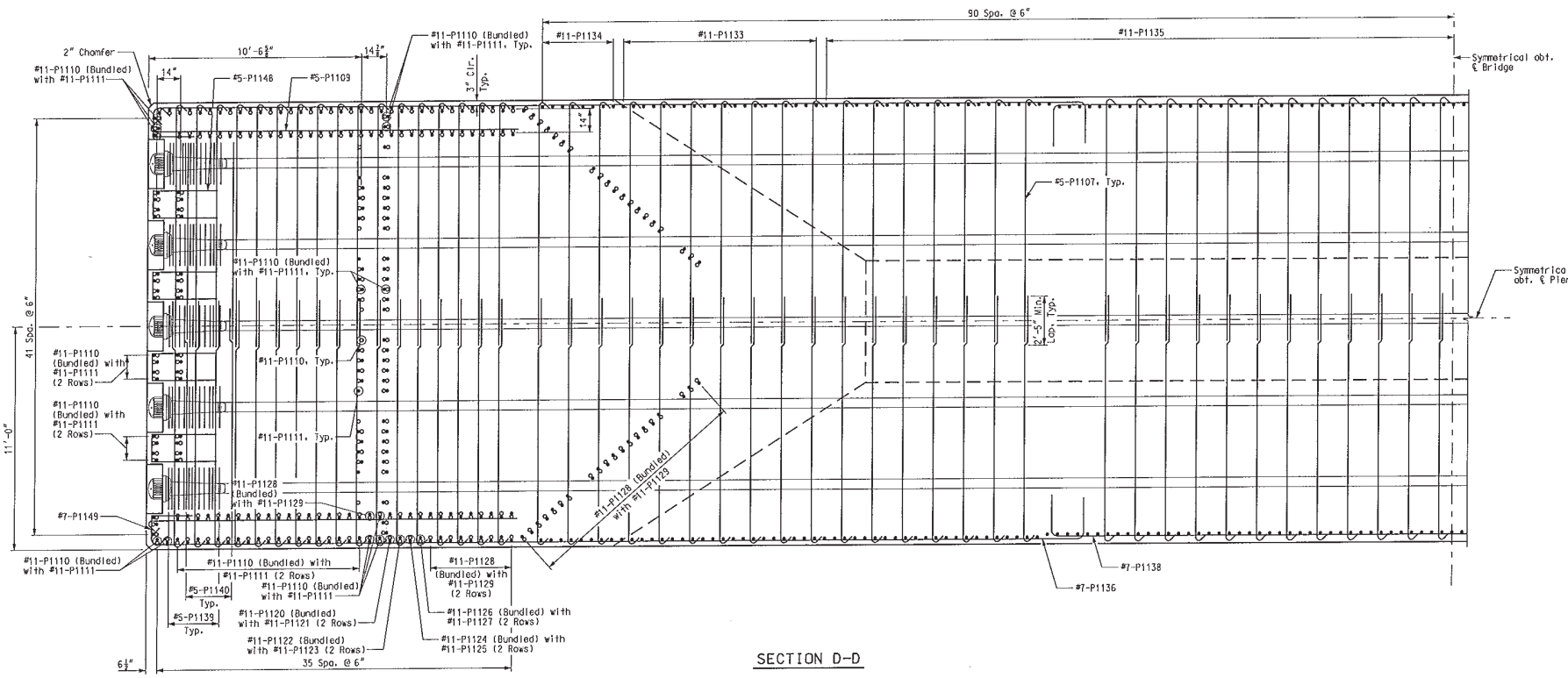

SECTION D-D

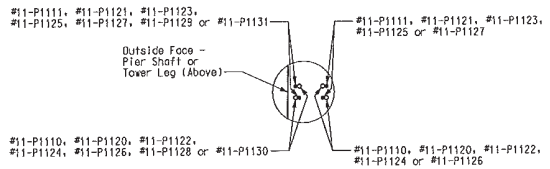

ORIENTATION OF BUNDLED #11 BARS (VERTICAL)

Notes:
Bar Marks shown are for Pier 11, using "P11" Series Bar Marks.
Pier 12 is similar, except use "P12" Series Bar Marks.
For Location of Section D-D, see Sheet No. BR60.
Construction changes were made to reinforcing steel. See reinforcing steel shop drawings for details.

PIERS 11 & 12 - SHAFT

DATE 8/20/09
ROUTE I-70 | STATE MO/IL
DISTRICT 6 | SHEET NO. BR64
COUNTY ST. LOUIS CITY - MO ST. CLAIR - IL
JOB NO. J6I0984
CONTRACT ID. 091208-601
PROJECT NO. I-70-9 (20)
BRIDGE NO. A6500

DESCRIPTION | DATE

MISSOURI HIGHWAYS AND TRANSPORTATION COMMISSION
105 WEST CAPITOL
JEFFERSON CITY, MO 65102
1-888-ASK-MODOT (1-888-275-6636)
HNTB
715 KIRK DRIVE
KANSAS CITY, MO 64105-1310
TELEPHONE (816) 472-1201
CERTIFICATE OF AUTHORITY NO. 001270

FINAL PLANS

REV.

Detailed JUL 2009
Checked JUL 2009

Note: This drawing is not to scale. Follow dimensions.

T:\de-proj\St_Louis_City\Construction\J6I0984\Asbuilts\Bridge\B_A6500_064-205_J6I0984_064.dgn

2:18:55 PM

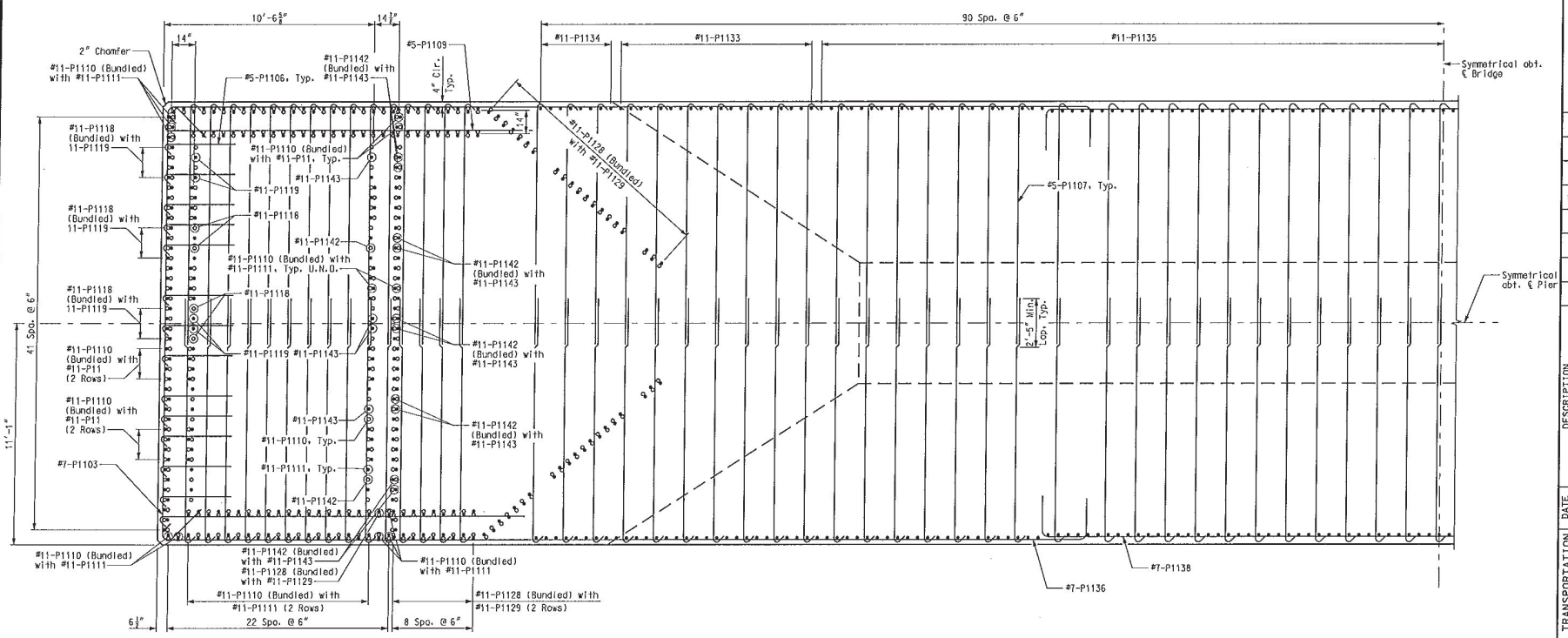

SECTION E-E

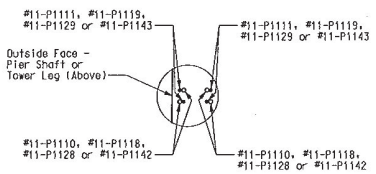

ORIENTATION OF
(Bundled) #11 BARS
(VERTICAL)

Notes:
Bar Marks shown are for Pier 11, using "P11" Series Bar Marks.
Pier 12 is similar, except use "P12" Series Bar Marks.
For Location of Section E-E, see Sheet No. BR60.
Construction changes were made to reinforcing steel. See reinforcing steel shop drawings for details.

PIERS 11 & 12 - SHAFT

DATE 8/20/09
ROUTE I-70 | STATE MO/IL
DISTRICT 6 | SHEET NO. BR65
COUNTY ST. LOUIS CITY - MO ST. CLAIR - IL
JOB NO. J6I0984
CONTRACT ID. 091208-601
PROJECT NO. I-70-9 (20)
BRIDGE NO. A6500

DESCRIPTION | DATE

MISSOURI HIGHWAYS AND TRANSPORTATION COMMISSION
105 WEST CAPITOL
JEFFERSON CITY, MO 65102
1-888-ASK-MODOT (1-888-275-6636)

HNTB
715 KIRK DRIVE
KANSAS CITY, MO 64105-1310
TELEPHONE (816) 472-1201
CERTIFICATE OF AUTHORITY NO. 001270

FINAL PLANS

REV.

Detailed JUL 2009
Checked JUL 2009

Note: This drawing is not to scale. Follow dimensions.

T:\de-proj\St_Louis_City\Construction\J6I0984\Asbuilts\Bridge\B_A6500_065-205_J6I0984_065.dgn 2:20:54 PM

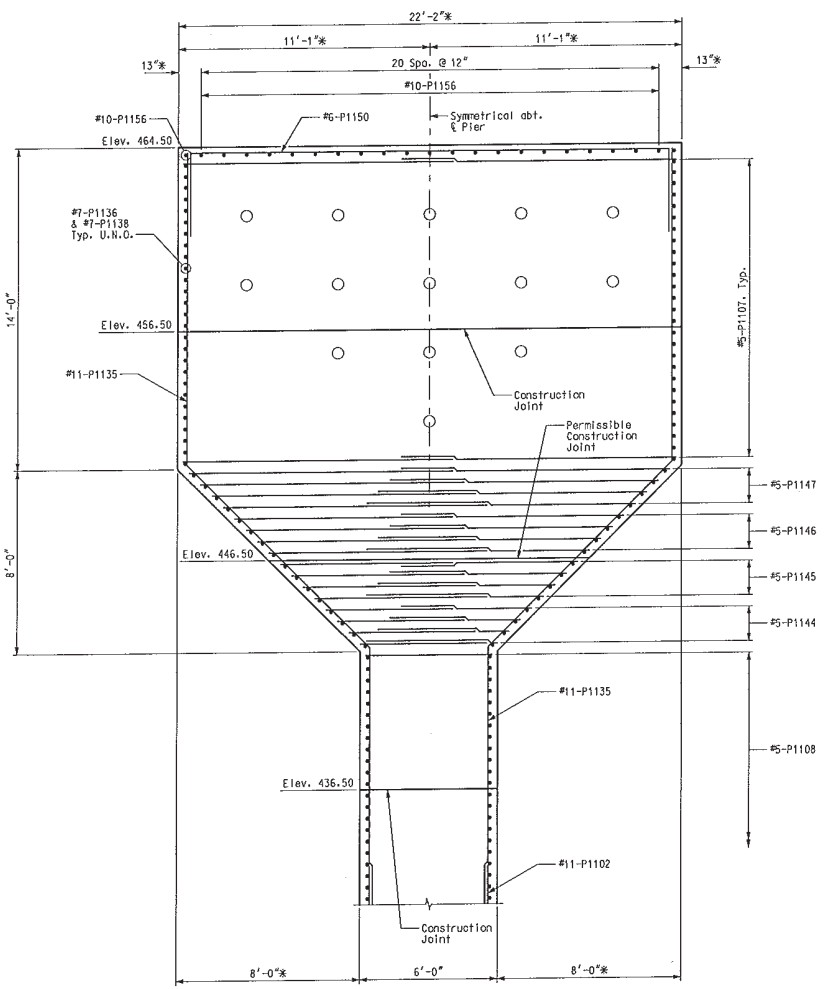

SECTION G-G

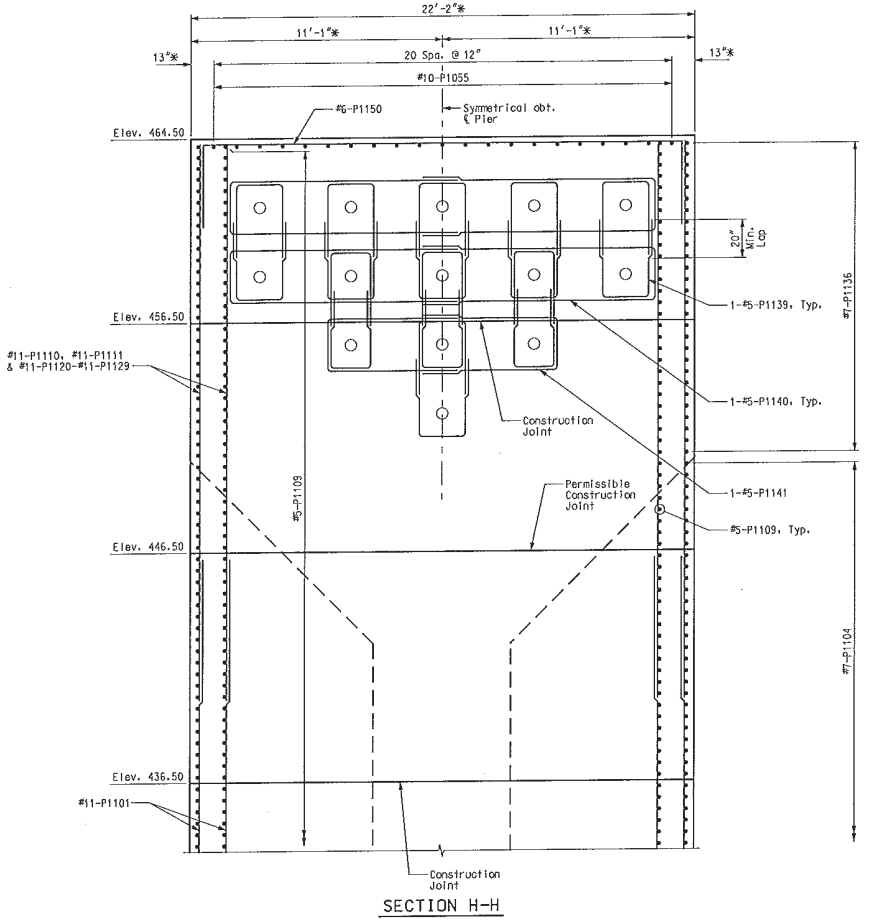

SECTION H-H

* Pier shaft transition from 22'-0" at Elev. 460.50 to 22'-2" at Elev. 464.50.

Notes:
Bar Marks shown are for Pier 11, using "P11" Series Bar Marks. Pier 12 is similar, except use "P12" Series Bar Marks.
For Location of Sections G-G & H-H, see Sheet No. BR60.
Construction changes were made to reinforcing steel. See reinforcing steel shop drawings for details.

PIERS 11 & 12 – SHAFT

DATE 8/20/09
ROUTE I-70 STATE MO/IL
DISTRICT 6 SHEET NO. BR66
COUNTY ST. LOUIS CITY – MO ST. CLAIR – IL
JOB NO. J6I0984
CONTRACT ID. 091208-601
PROJECT NO. I-70-9 (20)
BRIDGE NO. A6500

DESCRIPTION | DATE

MISSOURI HIGHWAYS AND TRANSPORTATION COMMISSION
105 WEST CAPITOL
JEFFERSON CITY, MO 65102
1-888-ASK-MODOT (1-888-275-6636)

HNTB
715 KIRK DRIVE
KANSAS CITY, MO 64105-1310
TELEPHONE (816) 472-1201
CERTIFICATE OF AUTHORITY NO. 001270

FINAL PLANS

REV.

Detailed JUL 2009
Checked JUL 2009

Note: This drawing is not to scale. Follow dimensions.

T:\de-proj\St_Louis_City\Construction\J6I0984\Asbuilts\Bridge\B_A6500_066-205_J6I0984_066.dgn

2:22:41 PM

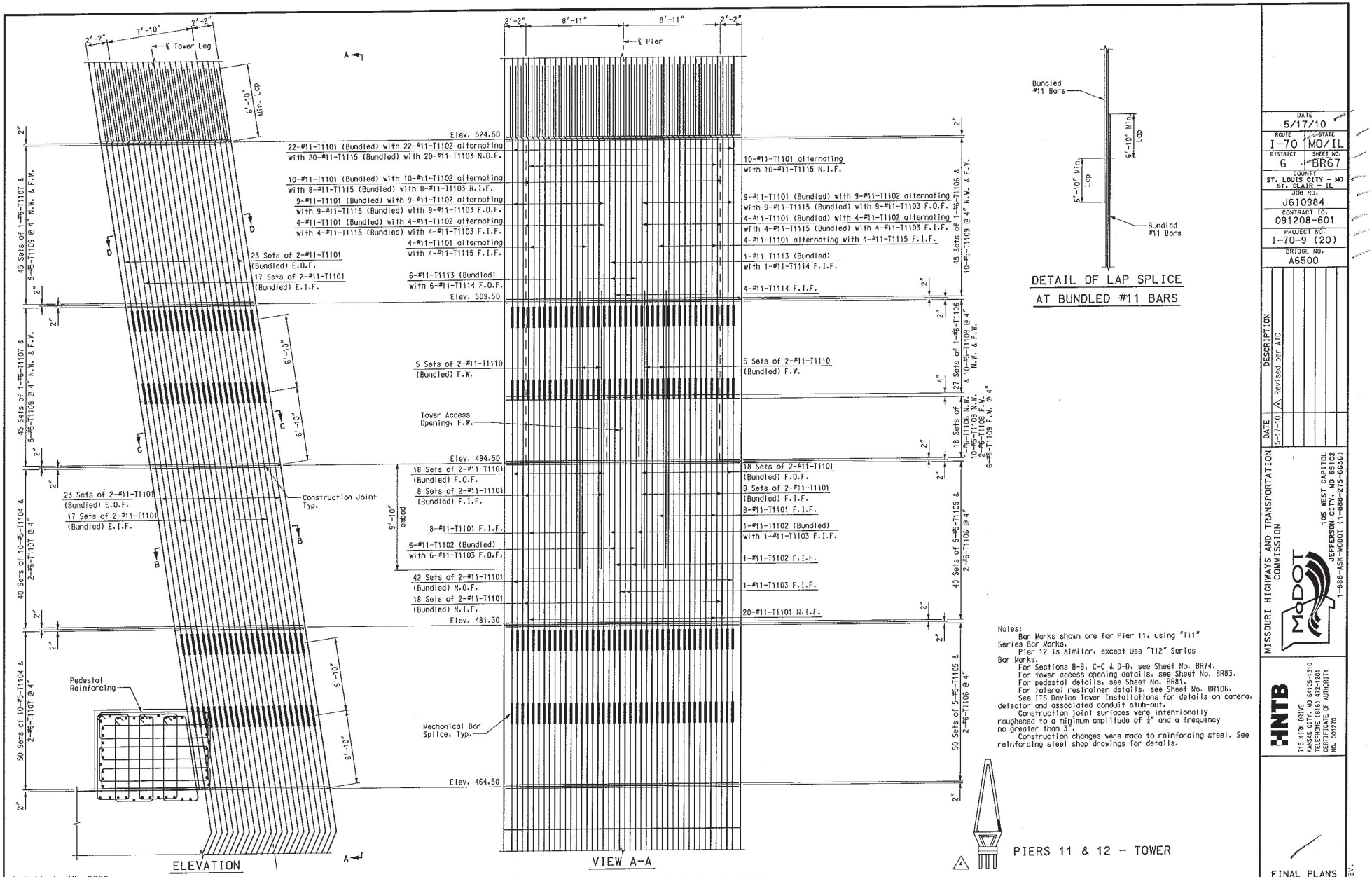
2'-2"
7'-10"
2'-2"
℄ Tower Leg
6'-10" Min. Lap
A
Elev. 524.50
22-#11-T1101 (Bundled) with 22-#11-T1102 alternating
with 20-#11-T1115 (Bundled) with 20-#11-T1103 N.O.F.
10-#11-T1101 (Bundled) with 10-#11-T1102 alternating
with 8-#11-T1115 (Bundled) with 8-#11-T1103 N.I.F.
9-#11-T1101 (Bundled) with 9-#11-T1102 alternating
with 9-#11-T1115 (Bundled) with 9-#11-T1103 F.O.F.
4-#11-T1101 (Bundled) with 4-#11-T1102 alternating
with 4-#11-T1115 (Bundled) with 4-#11-T1103 F.I.F.
4-#11-T1101 alternating
with 4-#11-T1115 F.I.F.
23 Sets of 2-#11-T1101
(Bundled) E.O.F.
17 Sets of 2-#11-T1101
(Bundled) E.I.F.
6-#11-T1113 (Bundled)
with 6-#11-T1114 F.O.F.
Elev. 509.50
5 Sets of 2-#11-T1110
(Bundled) F.W.
Tower Access
Opening, F.W.
Elev. 494.50
18 Sets of 2-#11-T1101
(Bundled) F.O.F.
8 Sets of 2-#11-T1101
(Bundled) F.I.F.
8-#11-T1101 F.I.F.
6-#11-T1102 (Bundled)
with 6-#11-T1103 F.O.F.
9'-10" embed
42 Sets of 2-#11-T1101
(Bundled) N.O.F.
18 Sets of 2-#11-T1101
(Bundled) N.I.F.
Elev. 481.30
Construction Joint
Typ.
Pedestal
Reinforcing
Mechanical Bar
Splice, Typ.
Elev. 464.50
45 Sets of 1-#5-T1107 & 5-#5-T1109 @ 4" N.W. & F.W.
45 Sets of 1-#5-T1107 & 5-#5-T1108 @ 4" N.W. & F.W.
40 Sets of 10-#5-T1104 & 2-#6-T1107 @ 4"
50 Sets of 10-#5-T1104 & 2-#6-T1107 @ 4"
2'-2"
8'-11"
8'-11"
2'-2"
℄ Pier
10-#11-T1101 alternating
with 10-#11-T1115 N.I.F.
9-#11-T1101 (Bundled) with 9-#11-T1102 alternating
with 9-#11-T1115 (Bundled) with 9-#11-T1103 F.O.F.
4-#11-T1101 (Bundled) with 4-#11-T1102 alternating
with 4-#11-T1115 (Bundled) with 4-#11-T1103 F.I.F.
4-#11-T1101 alternating with 4-#11-T1115 F.I.F.
1-#11-T1113 (Bundled)
with 1-#11-T1114 F.I.F.
4-#11-T1114 F.I.F.
5 Sets of 2-#11-T1110
(Bundled) F.W.
18 Sets of 2-#11-T1101
(Bundled) F.O.F.
8 Sets of 2-#11-T1101
(Bundled) F.I.F.
8-#11-T1101 F.I.F.
1-#11-T1102 (Bundled)
with 1-#11-T1103 F.I.F.
1-#11-T1102 F.I.F.
1-#11-T1103 F.I.F.
20-#11-T1101 N.I.F.
45 Sets of 1-#5-T1106 & 10-#5-T1109 @ 4" N.W. & F.W.
27 Sets of 1-#5-T1106 & 10-#5-T1109 @ 4" N.W. & F.W.
18 Sets of 1-#5-T1106 N.W. & 1-#5-T1109 N.W. & 6-#5-T1109 F.W. @ 4"
40 Sets of 5-#5-T1105 & 2-#6-T1106 @ 4"
50 Sets of 5-#5-T1105 & 2-#6-T1106 @ 4"
B
C
D
ELEVATION
VIEW A-A
Bundled
#11 Bars
6'-10" Min. Lap
Bundled
#11 Bars
DETAIL OF LAP SPLICE
AT BUNDLED #11 BARS
Notes:
Bar Works shown are for Pier 11, using "T11" Series Bar Works.
Pier 12 is similar, except use "T12" Series Bar Works.
For Sections B-B, C-C & D-D, see Sheet No. BR74.
For tower access opening details, see Sheet No. BR83.
For pedestal details, see Sheet No. BR81.
For lateral restrainer details, see Sheet No. BR106.
See ITS Device Tower Installations for details on camera, detector and associated conduit stub-out.
Construction joint surfaces were intentionally roughened to a minimum amplitude of ¼" and a frequency no greater than 3".
Construction changes were made to reinforcing steel. See reinforcing steel shop drawings for details.
PIERS 11 & 12 - TOWER
DATE 5/17/10
ROUTE I-70
STATE MO/IL
DISTRICT 6
SHEET NO. BR67
COUNTY ST. LOUIS CITY - MO ST. CLAIR - IL
JOB NO. J6I0984
CONTRACT ID. 091208-601
PROJECT NO. I-70-9 (20)
BRIDGE NO. A6500
DESCRIPTION
DATE
5-17-10
Revised per ATC
MISSOURI HIGHWAYS AND TRANSPORTATION COMMISSION
105 WEST CAPITOL
JEFFERSON CITY, MO 65102
1-888-ASK-MODOT (1-888-275-6636)
HNTB
715 KIRK DRIVE
KANSAS CITY, MO 64105-1310
TELEPHONE (816) 472-1201
CERTIFICATE OF AUTHORITY NO. 001270
FINAL PLANS
REV.
Detailed JUL 2009
Checked JUL 2009
Note: This drawing is not to scale. Follow dimensions.
Sheet No. 67 of 205
T:\de-proj\St_Louis_City\Construction\J6I0984\Asbuilts\Bridge\B_A6500_067-205_J6I0984_067.dgn
2:39:43 PM

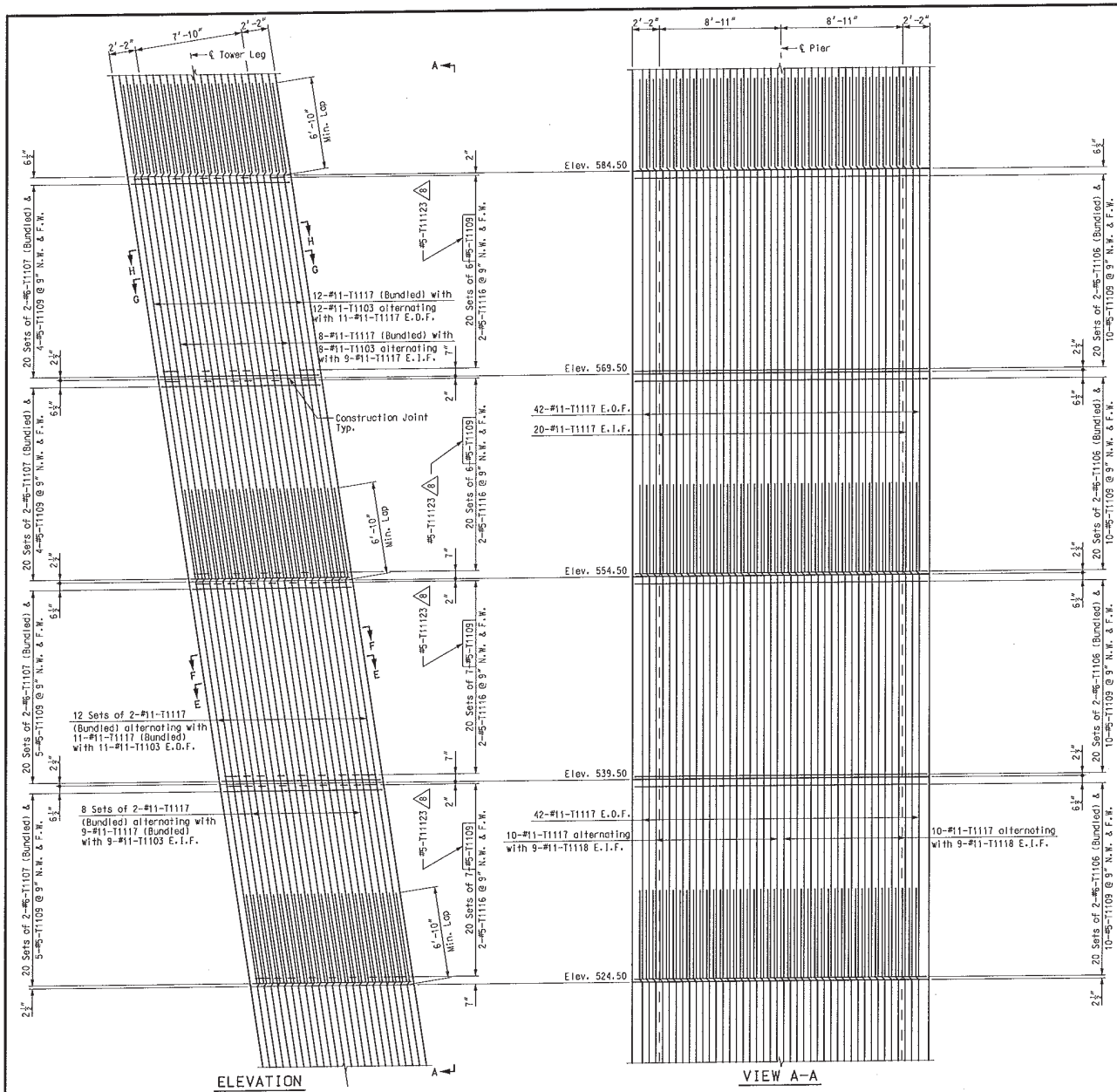

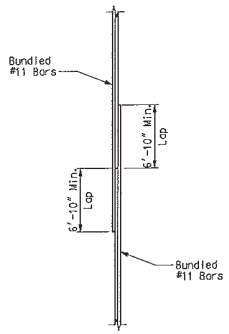

DETAIL OF LAP SPLICE
AT BUNDLED #11 BARS

Notes:
Bar Works shown are for Pier 11, using "11" Series Bar Works.
Pier 12 is similar, except use "12" Series Bar Works.
For Sections E-E, F-F, G-G & H-H, see Sheet No. BR75.
Construction joint surfaces were intentionally roughened to a minimum amplitude of ¼" and a frequency no greater than 3".
Construction changes were made to reinforcing steel. See reinforcing steel shop drawings for details.

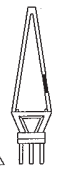

PIERS 11 & 12 - TOWER

DATE 6/10/11
ROUTE I-70 | STATE MO/IL
DISTRICT 6 | SHEET NO. BR68
COUNTY ST. LOUIS CITY - MO, ST. CLAIR - IL
JOB NO. J6I0984
CONTRACT ID. 091208-601
PROJECT NO. I-70-9 (20)
BRIDGE NO. A6500

DESCRIPTION	DATE
2 Revised per ATC	5-17-10
1 Revised Reinforcing Steel	6-10-11

MISSOURI HIGHWAYS AND TRANSPORTATION COMMISSION
105 WEST CAPITOL
JEFFERSON CITY, MO 65102
1-888-ASK-MODOT (1-888-275-6636)

HNTB
715 KIRK DRIVE
KANSAS CITY, MO 64105-3310
TELEPHONE (816) 472-1201
CERTIFICATE OF AUTHORITY NO. 001270

FINAL PLANS

REV.

Detailed JUL 2009
Checked JUL 2009

Note: This drawing is not to scale. Follow dimensions.

T:\de-proj\St_Louis_City\Construction\J6I0984\Asbuilts\Bridge\B_A6500_068-205_J6I0984_068_REV008.dgn

2:41:28 PM

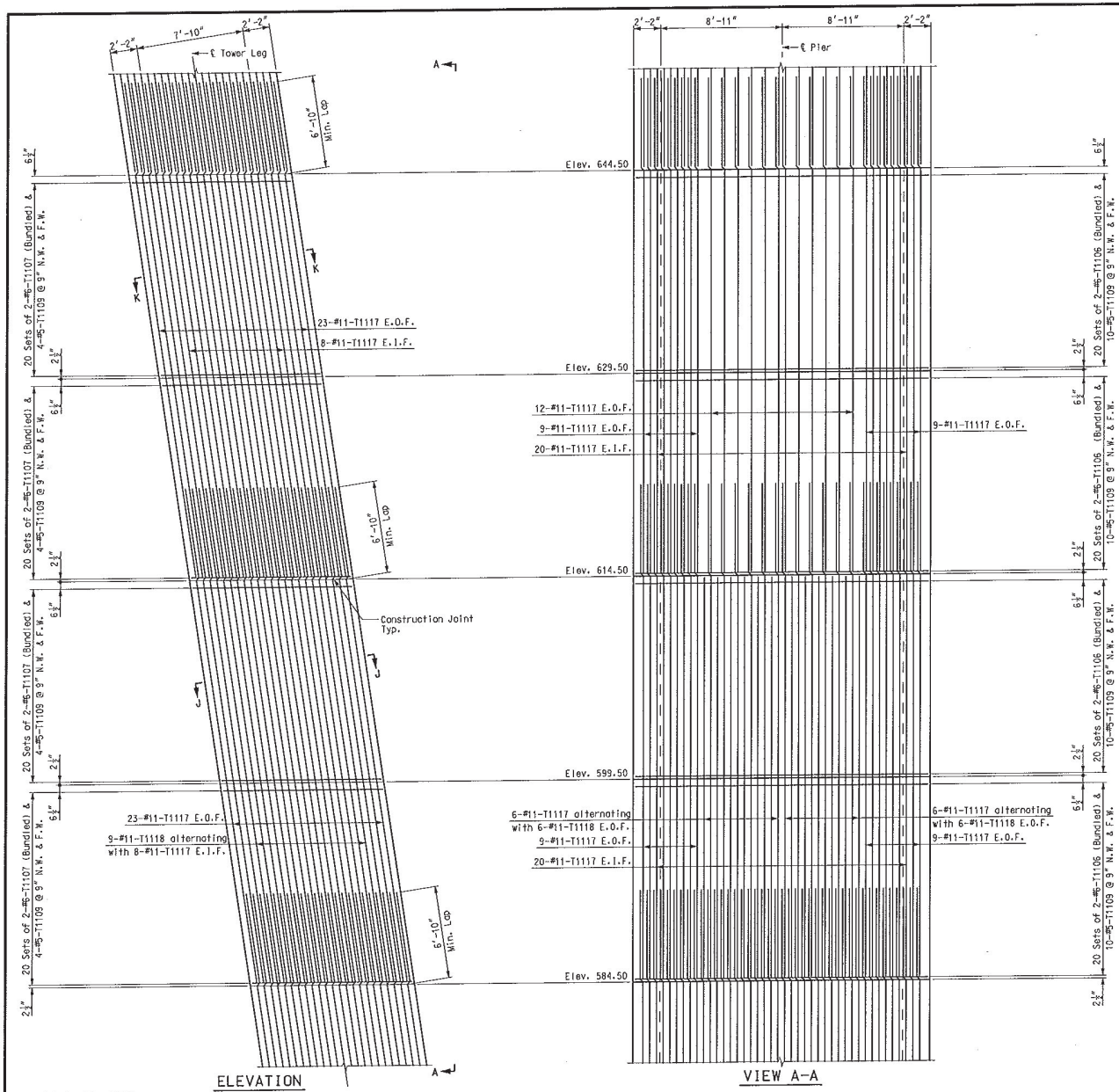

Notes:
Bar Marks shown are for Pier 11, using "T11" Series Bar Marks.
Pier 12 is similar, except use "T12" Series Bar Marks.
For Sections J-J & K-K, see Sheet No. BR76.
Construction joint surfaces were intentionally roughened to a minimum amplitude of ¼" and a frequency no greater than 3".
Construction changes were made to the reinforcing steel. See reinforcing steel shop drawings for details.

4 PIERS 11 & 12 – TOWER

Detailed JUL 2009
Checked JUL 2009

Note: This drawing is not to scale. Follow dimensions.

Sheet No. 69 of 205

T:\de-proj\St_Louis_City\Construction\J6I0984\Asbuilts\Bridge\B_A6500_069-205_J6I0984_069.dgn

2:43:16 PM

DATE 5/17/10
ROUTE I-70 | STATE MO/IL
DISTRICT 6 | SHEET NO. BR69
COUNTY ST. LOUIS CITY – MO ST. CLAIR – IL
JOB NO. J6I0984
CONTRACT ID. 091208-601
PROJECT NO. I-70-9 (20)
BRIDGE NO. A6500

DATE	DESCRIPTION
5-17-10	4 Revised per ATC

MISSOURI HIGHWAYS AND TRANSPORTATION COMMISSION
MoDOT
105 WEST CAPITOL
JEFFERSON CITY, MO 65102
1-888-ASK-MODOT (1-888-275-6636)

HNTB
715 KIRK DRIVE
KANSAS CITY, MO 64105-1310
TELEPHONE (816) 472-1201
CERTIFICATE OF AUTHORITY NO. 001270

FINAL PLANS

REV.

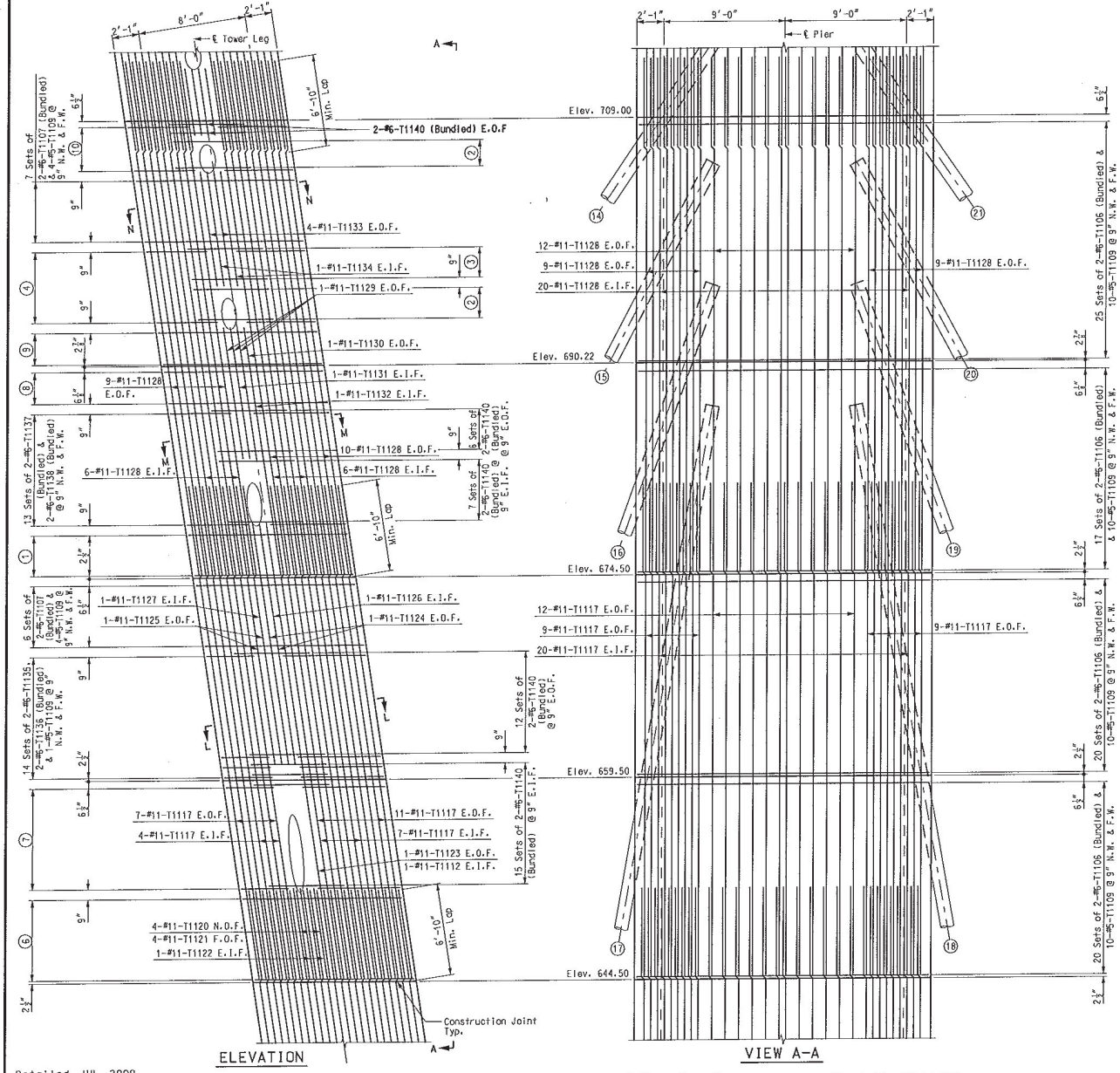

1. 5 Sets of 2-#6-T1107 (Bundled) & 4-#5-T1109 @ 9" N.W. & F.W.
2. 4 Sets of 2-#6-T1140 (Bundled) @ 9" E.I.F.
3. 4 Sets of 2-#6-T1140 (Bundled) @ 9" E.O.F.
4. 8 Sets of 2-#6-T1137 (Bundled) & 2-#6-T1139 (Bundled) @ 9" N.W. & F.W.
5. 9 sets of 2-#6-T1137 (Bundled) & 2-#6-T1139 (Bundled) @ 9" N.W. & F.W.
6. 7 Sets of 2-#6-T1107 (Bundled) & 4-#5-T1109 (Bundled) @ 9" Pier 11 F.W. & Pier 12 N.W. & F.W. 9 Sets of 2-#6-T1107 (Bundled) & 4-#5-T1109 (Bundled) @ 9" Pier 11 N.W.
7. 13 Sets of 2-#6-T1135, 2-#6-T1136 (Bundled) & 1-#5-T1109 @ 9" Pier 11 F.W. & Pier 12 N.W. & F.W. 11 Sets of 2-#6-T1135, 2-#6-T1136 (Bundled) & 1-#5-T1109 @ 9" Pier 11 N.W.
8. 3 Sets of 2-#6-T1107 (Bundled) & 4-#5-T1109 @ 9" N.W. & F.W.
9. 4 Sets of 2-#6-T1107 (Bundled) & 4-#5-T1109 @ 9" N.W. & F.W.
10. 6 sets of 2-#6-T1137 (Bundled) & 2-#6-T1139 (Bundled) @ 9" N.W. & F.W.

Notes:
Bar Marks shown are for Pier 11, using "T11" Series Bar Marks.
Pier 12 is similar, except use "T12" Series Bar Marks.
For Sections L-L, M-M & N-N, see Sheet BR77.
Construction joint surfaces were intentionally roughened to a minimum amplitude of ¼" and a frequency no greater than 3".
Construction changes were made to the reinforcing steel. See reinforcing steel shop drawings for details.
(#) denotes Stay Cable Number.

4 PIERS 11 & 12 - TOWER

Detailed JUL 2009
Checked JUL 2009

Note: This drawing is not to scale. Follow dimensions.

Sheet No. 70 of 205

DATE 5/17/10
ROUTE I-70 | STATE MO/IL
DISTRICT 6 | SHEET NO. BR70
COUNTY ST. LOUIS CITY - MO ST. CLAIR - IL
JOB NO. J6I0984
CONTRACT ID. 091208-601
PROJECT NO. I-70-9 (20)
BRIDGE NO. A6500

DATE	DESCRIPTION
5-17-10	4 Revised per AIC

MISSOURI HIGHWAYS AND TRANSPORTATION COMMISSION
MoDOT
105 WEST CAPITOL
JEFFERSON CITY, MO 65102
1-888-ASK-MODOT (1-888-275-6636)

HNTB
715 KIRK DRIVE
KANSAS CITY, MO 64105-2310
816.472.1201
CERTIFICATE OF AUTHORITY NO. 001270

FINAL PLANS

REV.

T:\de-proj\St_Louis_City\Construction\J6I0984\Asbuilts\Bridge\B_A6500_070-205_J6I0984_070.dgn
2:47:07 PM

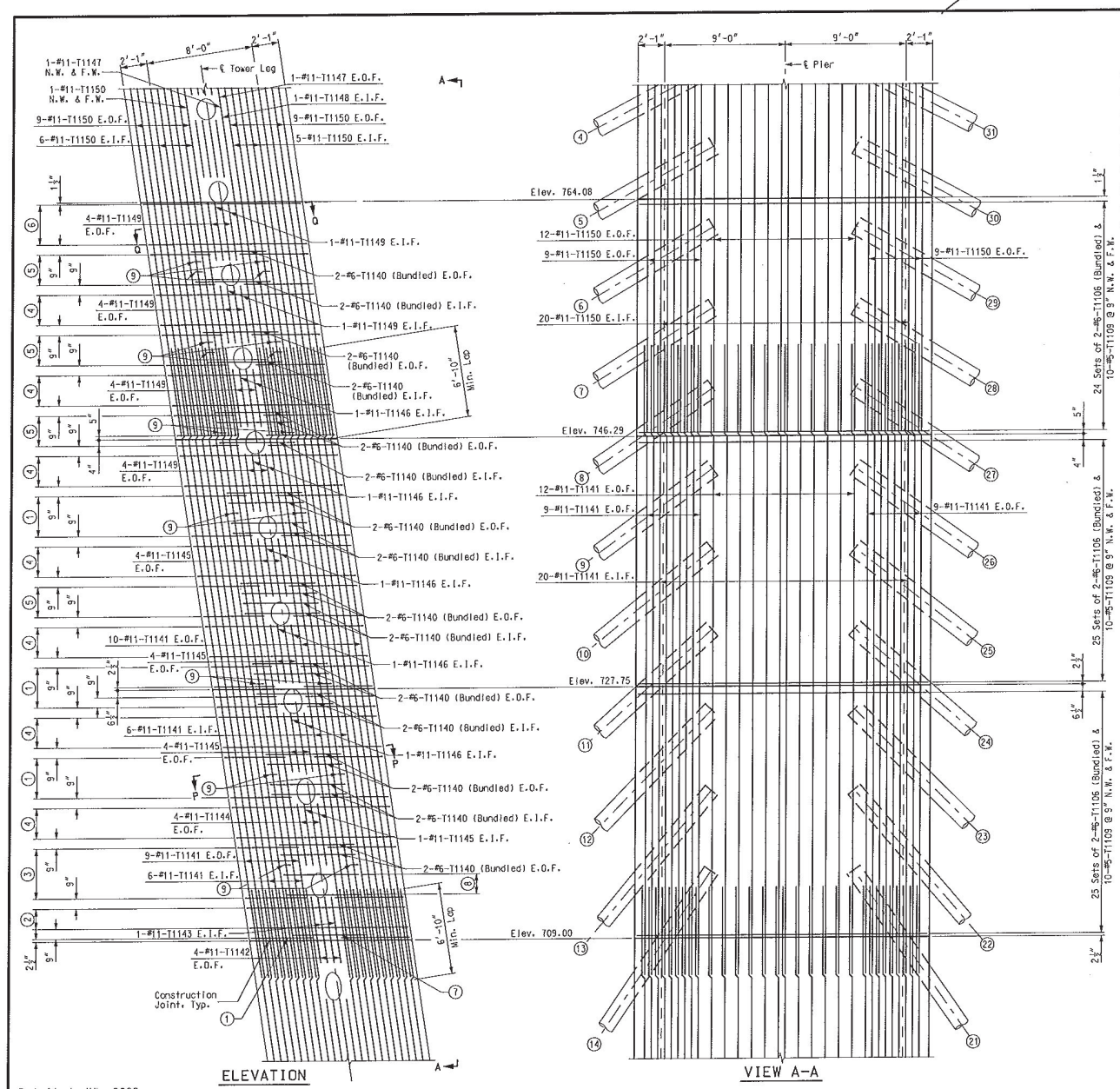

1. 1 Set of 2-#6-T1137 (Bundled) & 2-#6-T1139 (Bundled) @ 9" N.W. & F.W.
2. 3 Sets of 2-#6-T1107 (Bundled) & 4-#5-T1109 @ 9" N.W. & F.W.
3. 6 Sets of 2-#6-T1137 (Bundled) & 2-#6-T1139 (Bundled) @ 9" N.W. & F.W.
4. 4 Sets of 2-#6-T1107 (Bundled) & 4-#5-T1109 @ 9" N.W. & F.W.
5. 4 Sets of 2-#6-T1137 (Bundled) & 2-#6-T1139 (Bundled) @ 9" N.W. & F.W.
6. 5 Sets of 2-#6-T1107 (Bundled) & 4-#5-T1109 @ 9" N.W. & F.W.
7. 1 Set of 2-#6-T1140 (Bundled) @ 9" E.O.F.
8. 3 Sets of 2-#6-T1140 (Bundled) @ 9" E.I.F.
9. 1-#5-T1109 N.W. & F.W.

Notes:
Bar Marks shown are for Pier 11, using "T11" Series Bar Marks.
Pier 12 is similar, except use "T12" Series Bar Marks.
For Sections P-P & Q-Q, see Sheet BR78.
For details on the location and attachment of the aesthetic lighting system to the towers, see electrical plans.
Construction joint surfaces were intentionally roughened to a minimum amplitude of ¼" and a frequency no greater than 3".
Construction changes were made to the reinforcing steel. See reinforcing steel shop drawings for details.
(#) denotes Stay Cable Number.

4 PIERS 11 & 12 - TOWER

Detailed JUL 2009
Checked JUL 2009

Note: This drawing is not to scale. Follow dimensions.

Sheet No. 71 of 205

T:\de-proj\St_Louis_City\Construction\J6I0984\Asbuilts\Bridge\B_A6500_071-205_J6I0984_071.dgn 3:00:40 PM

DATE 5/17/10
ROUTE I-70 STATE MO/IL
DISTRICT 6 SHEET NO. BR71
COUNTY ST. LOUIS CITY - MO ST. CLAIR - IL
JOB NO. J6I0984
CONTRACT ID. 091208-601
PROJECT NO. I-70-9 (20)
BRIDGE NO. A6500

REV. | DATE | DESCRIPTION
1 | 5-17-10 | Revised per ATC

MISSOURI HIGHWAYS AND TRANSPORTATION COMMISSION
105 WEST CAPITOL
JEFFERSON CITY, MO 65102
1-888-ASK-MODOT (1-888-275-6636)

HNTB
715 KIRK DRIVE
KANSAS CITY, MO 64105-1310
TELEPHONE (816) 472-1201
CERTIFICATE OF AUTHORITY NO. 001270

FINAL PLANS

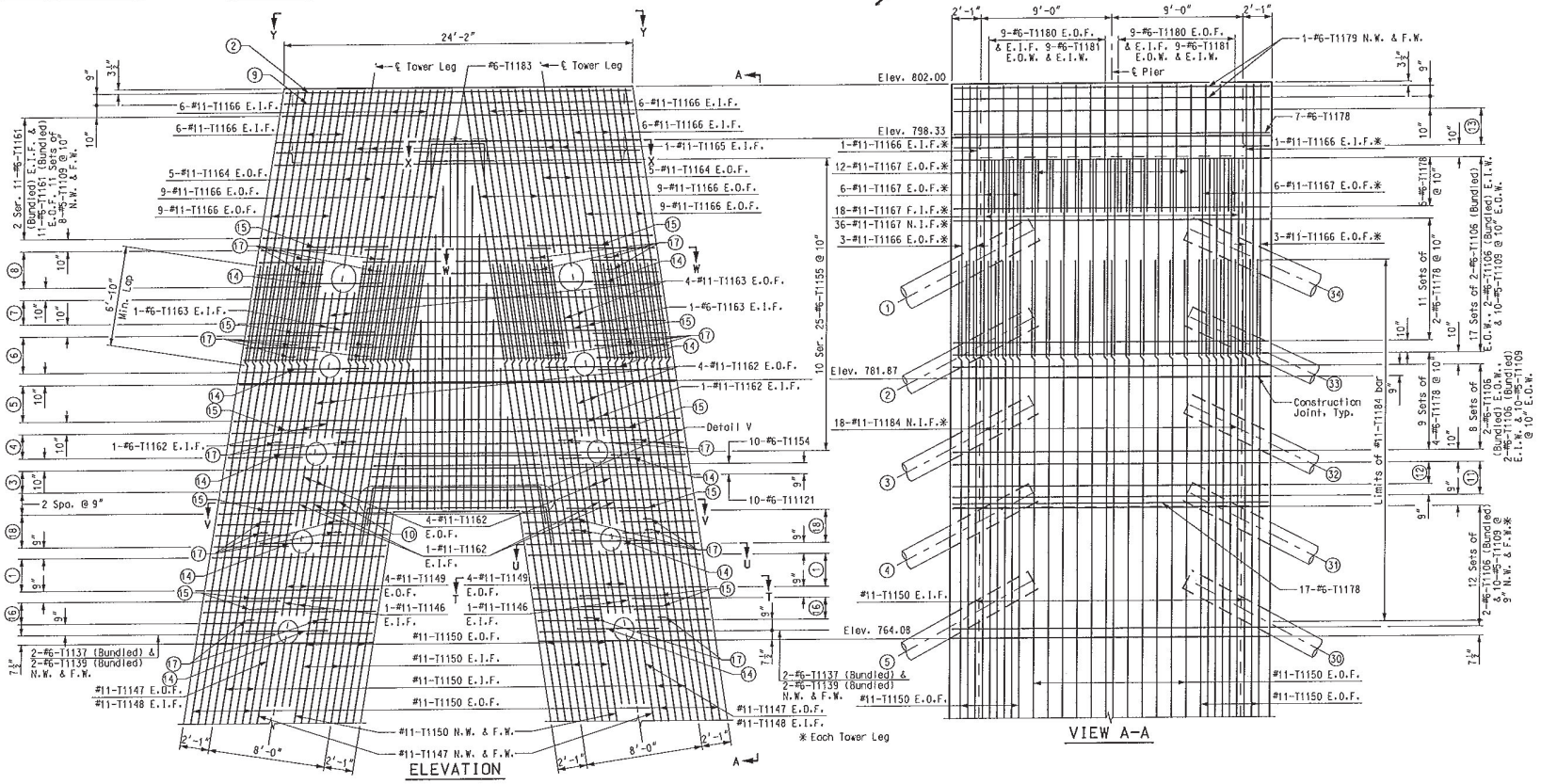

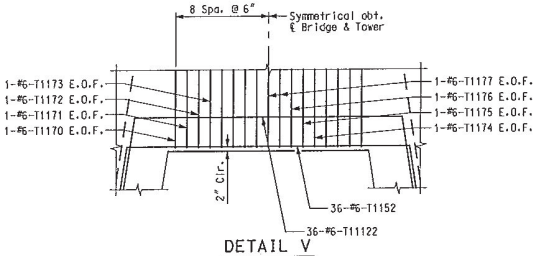

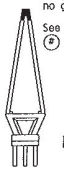

PIERS 11 & 12 - TOWER

(1) 4 Sets of 2-#6-T1107 (Bundled), 4-#5-T1109 & 1-#6-T1187 @ 9" N.W. & F.W.

(2) 1-#6-T1169 E.I.F. & 1-#6-T1169 E.O.F.

(3) 2 Ser. of 3-#6-T1153 (Bundled) E.I.F. & 3-#6-T1153 (Bundled) E.O.F. @ 9"
3 Sets of 8-#5-T1109 @ 9" N.W. & F.W.

(4) 2 Ser. of 3-#6-T1156 (Bundled) @ 10" N.W. & F.W.
3 Sets of 4-#6-T1139 (Bundled) @ 10" N.W. & F.W.

(5) 2 Ser. of 4-#6-T1157 (Bundled) E.I.F. & 4-#6-T1157 (Bundled) E.O.F. @ 10"
4 Sets of 8-#5-T1109 @ 10" N.W. & F.W.

(6) 2 Ser. of 4-#6-T1158 (Bundled) @ 10" N.W. & F.W.
4 Sets of 4-#6-T1139 (Bundled) @ 10" N.W. & F.W.

(7) 2 Ser. of 3-#6-T1159 (Bundled) E.I.F. & 3-#6-T1159 (Bundled) E.O.F. @ 10"
3 Sets of 8-#5-T1109 @ 10" N.W. & F.W.

(8) 2 Ser. of 4-#6-T1160 (Bundled) @ 10" N.W. & F.W.
4 Sets of 4-#6-T1137 (Bundled) @ 10" N.W. & F.W.

(9) 1-#6-T1168 E.I.F. & 1-#6-T1168 E.O.F.
8-#5-T1109 N.W. & F.W.

(10) 2-#6-T1151 (Bundled) E.I.F., 2-#6-T1151 (Bundled) E.O.F. & 8-#5-T1109 N.W. & F.W.

(11) 4 Sets of 2-#6-T1106 (Bundled) E.O.W., 2-#6-T1106 (Bundled) E.I.W. & 10-#5-T1109 @ 9" E.O.W.

(12) 3 Sets of 4-#6-T1178 @ 9"

(13) 4 Sets of 2-#6-T1179 @ 10" N.W. & F.W.

(14) 2-#6-T1140 (Bundled) E.I.F.

(15) 2-#6-T1140 (Bundled) E.O.F.

(16) 3 Sets of 2-#6-T1137 (Bundled), 2-#6-T1139 (Bundled),
1-#6-T1185 & 1-#6-T1186 @ 9" N.W. & F.W.

(17) 1-#5-T1109 N.W. & F.W.

(18) 4 Sets of 2-#6-T1137 (Bundled), 2-#6-T1139 (Bundled),
1-#6-T1185 & 1-#6-T1186 @ 9" N.W. & F.W.

Notes:
Bar Works shown are for Pier 11, using "T11" Series Bar Works.
Pier 12 is similar, except use "T12" Series Bar Marks.
For Sections T-T, U-U, V-V & W-W, see Sheet BR79.
For Section X-X, see Sheet BR80.
For View Y-Y, see Sheet BR80.
For details on the location and attachment of the aesthetic lighting system to the towers, see electrical plans.
Construction joint surfaces were intentionally roughened to a minimum amplitude of ¼" and a frequency no greater than 3".
Construction changes were made to the reinforcing steel. See reinforcing steel shop drawings for details.
(#) denotes Stay Cable Number.

DATE 5/17/10
ROUTE I-70 | STATE MO/IL
DISTRICT 6 | SHEET NO. BR72
COUNTY ST. LOUIS CITY - MO ST. CLAIR - IL
JOB NO. J610984
CONTRACT ID. 091208-601
PROJECT NO. I-70-9 (20)
BRIDGE NO. A6500

DESCRIPTION	DATE
Revised per ATC	5-17-10

MISSOURI HIGHWAYS AND TRANSPORTATION COMMISSION
105 WEST CAPITOL
JEFFERSON CITY, MO 65102
1-888-ASK-MODOT (1-888-275-6636)

HNTB
715 KIRK DRIVE KANSAS CITY, MO 64105-1310
TELEPHONE (816) 472-1201
CERTIFICATE OF AUTHORITY NO. 001270

FINAL PLANS

Detailed JUL 2009
Checked JUL 2009

Note: This drawing is not to scale. Follow dimensions.

Sheet No. 72 of 205

I:\de-proj\St_Louis_City\Construction\J610984\Asbuilts\Bridge\B_A6500_072-205_J610984_072.dgn

3:05:14 PM

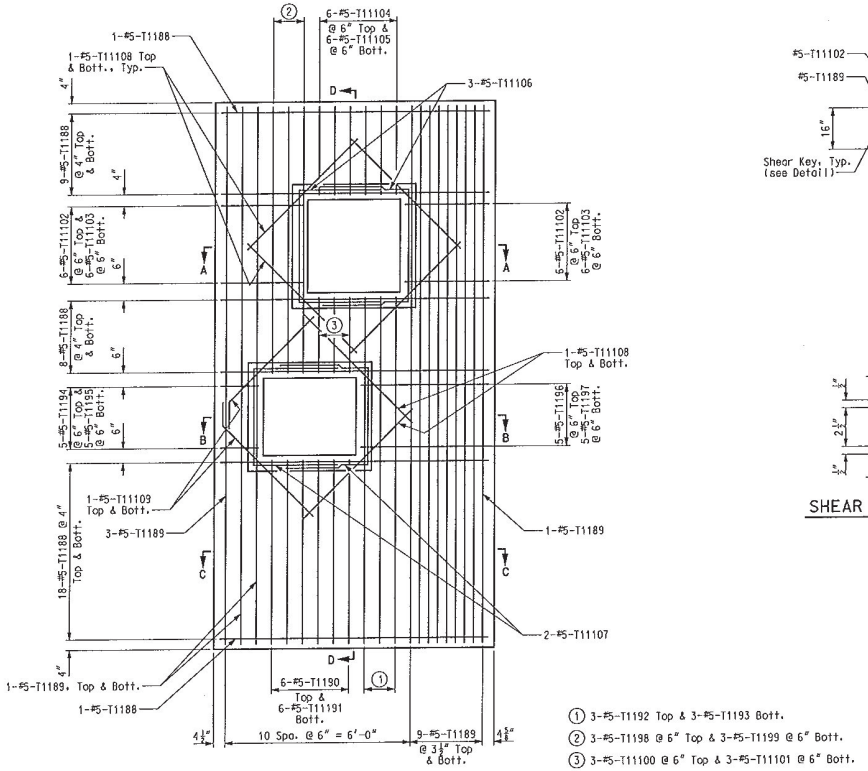

REINFORCING PLAN - PRECAST CAP

① 3-#5-T1192 Top & 3-#5-T1193 Bott.
② 3-#5-T1198 @ 6" Top & 3-#5-T1199 @ 6" Bott.
③ 3-#5-T11100 @ 6" Top & 3-#5-T11101 @ 6" Bott.

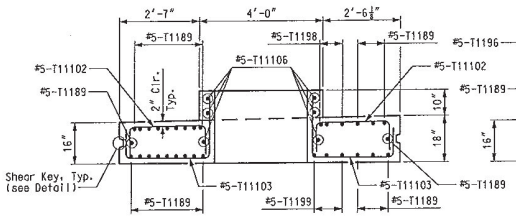

SECTION A-A
#5-T11108 not shown for clarity

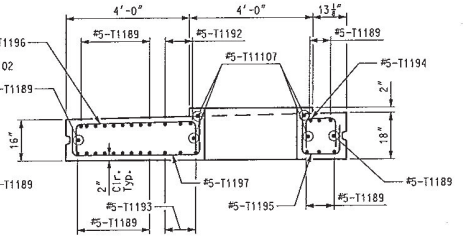

SECTION B-B
#5-T11108 & #5-T11109 not shown for clarity

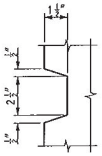

SHEAR KEY DETAIL

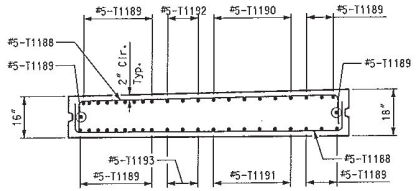

SECTION C-C

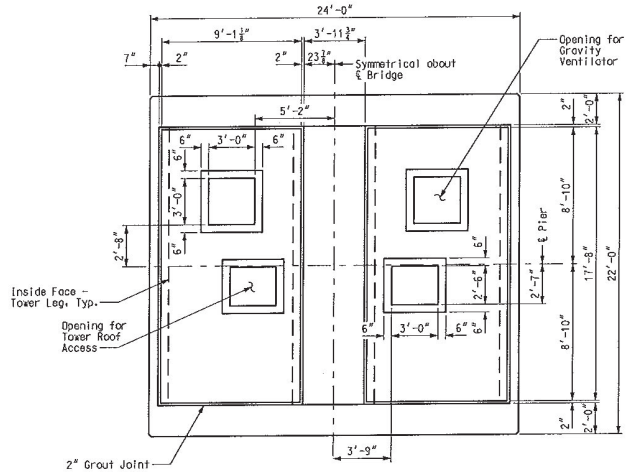

PLAN - PRECAST CAP

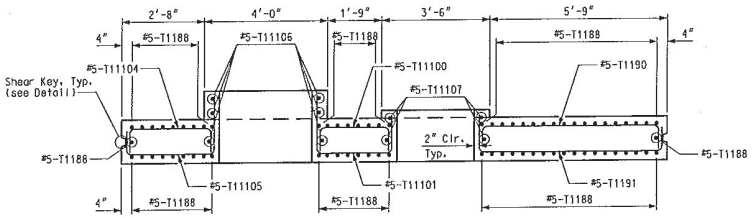

SECTION D-D
#5-T11108 not shown for clarity

Notes:
Bar Works shown are for Pier 11, using "T11" Series Bar Works.
Pier 12 is similar, except use "T12" Series Bar Works.
For additional roof access details, see Sheet No. BR85.
For additional gravity ventilator details, see Sheet No. BR87.
For tower details at precast cap, see Sheet No. BR80.

PIERS 11 & 12 - TOWER

DATE 8/20/09
ROUTE I-70 | STATE MO/IL
DISTRICT 6 | SHEET NO. BR73
COUNTY ST. LOUIS CITY - MO ST. CLAIR - IL
JOB NO. J6I0984
CONTRACT ID. 091208-601
PROJECT NO. I-70-9 (20)
BRIDGE NO. A6500

DESCRIPTION | DATE

MISSOURI HIGHWAYS AND TRANSPORTATION COMMISSION
105 WEST CAPITOL
JEFFERSON CITY, MO 65102
1-888-ASK-MODOT (1-888-275-6636)

HNTB
715 KIRK DRIVE
KANSAS CITY, MO 64105-1310
TELEPHONE: (816) 472-1201
CERTIFICATE OF AUTHORITY NO. 001270

FINAL PLANS

REV.

Detailed JUL 2009
Checked JUL 2009

Note: This drawing is not to scale. Follow dimensions.

T:\de-proj\St_Louis_City\Construction\J6I0984\Asbuilts\Bridge\B_A6500_073-205_J6I0984_073.dgn

3:06:07 PM

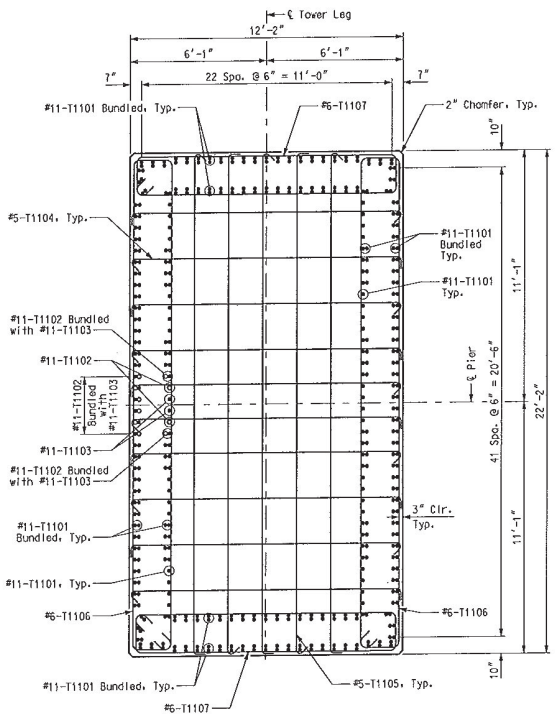

SECTION B-B

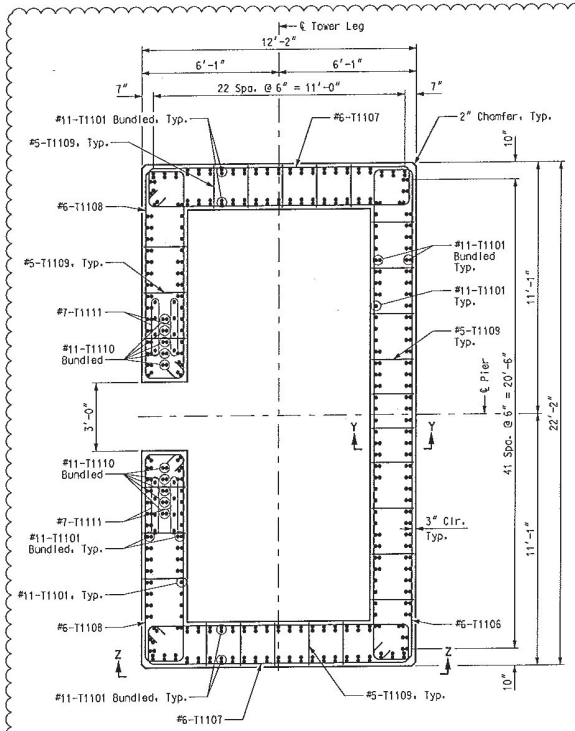

SECTION C-C

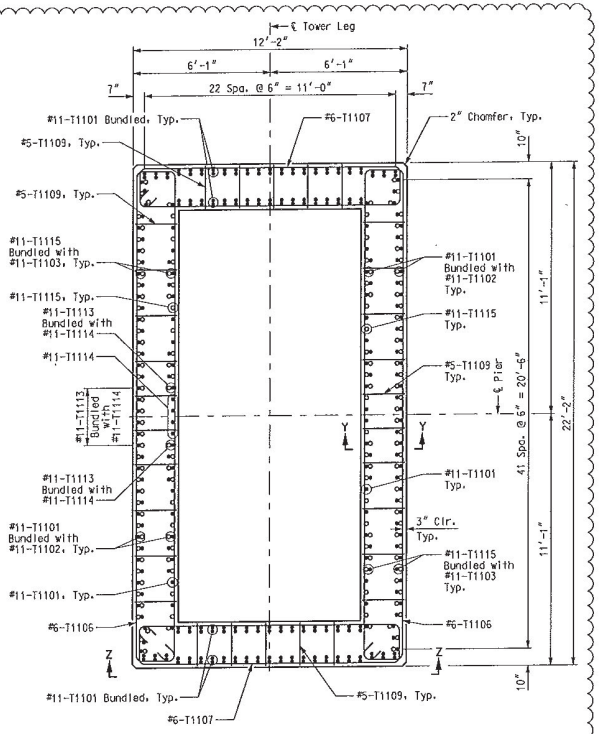

SECTION D-D

Revised 8

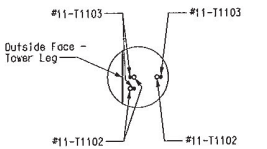

ORIENTATION OF BUNDLED #11 BARS (VERTICAL) SECTION B-B

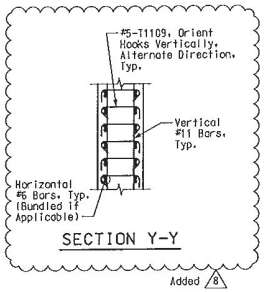

SECTION Y-Y

Added 8

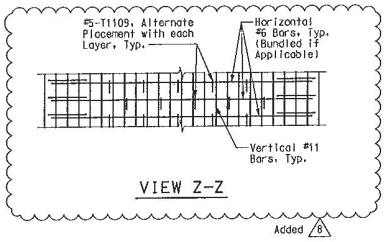

VIEW Z-Z

Added 8

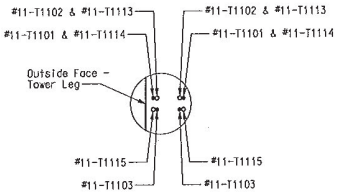

ORIENTATION OF BUNDLED #11 BARS (VERTICAL) SECTION D-D

Notes:
Bar Marks shown are for Pier 11, using "T11" Series Bar Marks. Pier 12 is similar, except use "T12" Series Bar Marks.
For Location of Sections B-B, C-C & D-D, see Sheet No. BR67.
For tower access opening details, see Sheet No. BR83.
Construction changes were made to reinforcing steel. See reinforcing steel shop drawings for details.

PIERS 11 & 12 - TOWER

DATE 6/10/11
ROUTE I-70 STATE MO/IL
DISTRICT 6 SHEET NO. BR74
COUNTY ST. LOUIS CITY - MO ST. CLAIR - IL
JOB NO. J6I0984
CONTRACT ID. 091208-601
PROJECT NO. I-70-9 (20)
BRIDGE NO. A6500

DATE	DESCRIPTION
6-10-11	8 Revised Reinforcing Steel

MISSOURI HIGHWAYS AND TRANSPORTATION COMMISSION
105 WEST CAPITOL
JEFFERSON CITY, MO 65102
1-888-ASK-MODOT (1-888-275-6636)

HNTB
715 KIRK DRIVE
KANSAS CITY, MO 64105-1310
TELEPHONE: (816) 472-1201
CERTIFICATE OF AUTHORITY NO. 001270

FINAL PLANS

REV.

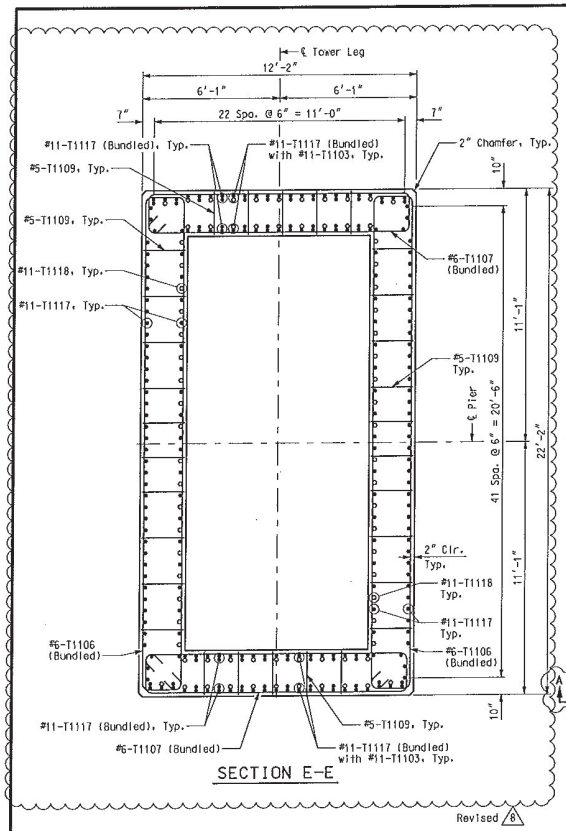

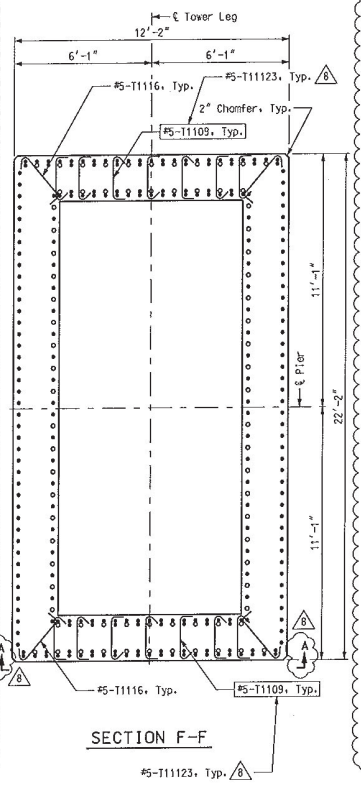

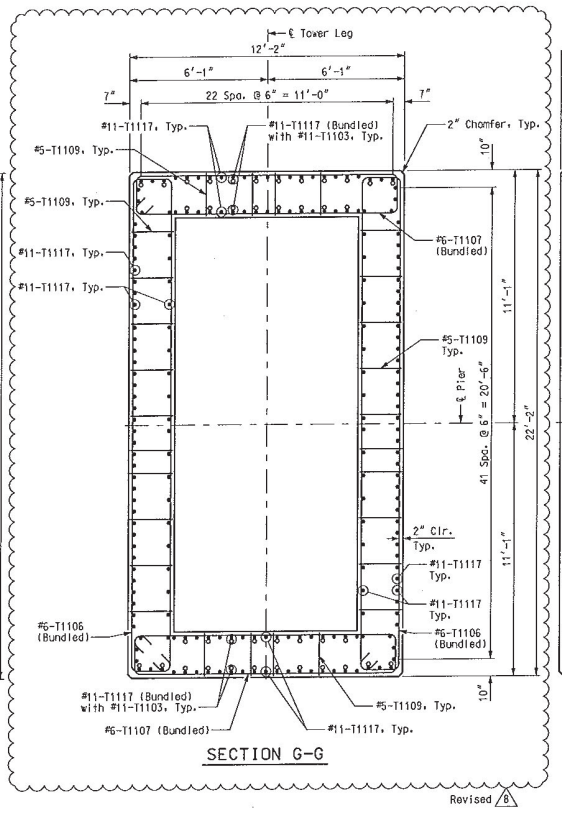

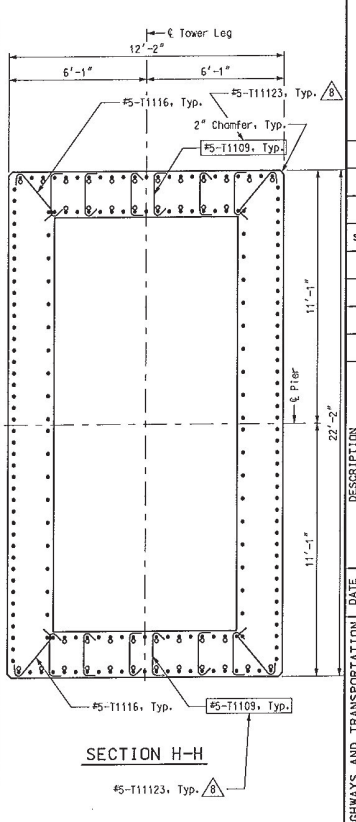

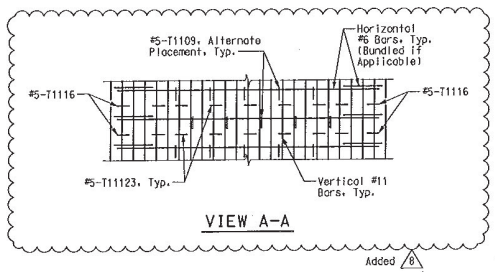

Notes:
Bar Marks shown are for Pier 11, using "T11" Series Bar Marks.
Pier 12 is similar, except use "T12" Series Bar Marks.
For Location of Sections E-E, F-F, G-G & H-H, see Sheet No. BR68.
For orientation of #5-T1109 bars, see Section Y-Y Sheet No. BR74, alternated placement with each layer.
Added 8

PIERS 11 & 12 - TOWER

DATE	DESCRIPTION
6-10-11	8 Revised Reinforcing Steel

DATE 6/10/11
ROUTE I-70 | STATE MO/IL
DISTRICT 6 | SHEET NO. BR75
COUNTY ST. LOUIS CITY - MO ST. CLAIR - IL
JOB NO. J6I0984
CONTRACT ID. 091208-601
PROJECT NO. I-70-9 (20)
BRIDGE NO. A6500

MISSOURI HIGHWAYS AND TRANSPORTATION COMMISSION
105 WEST CAPITOL
JEFFERSON CITY, MO 65102
1-888-ASK-MODOT (1-888-275-6636)
HNTB
715 KIRK DRIVE
KANSAS CITY, MO 64105-1310
TELEPHONE (816) 472-1201
CERTIFICATE OF AUTHORITY NO. 001270

FINAL PLANS

Detailed JUL 2009
Checked JUL 2009

Note: This drawing is not to scale. Follow dimensions.

T:\de-proj\St_Louis_City\Construction\J6I0984\Asbuilts\Bridge\B_A6500_075-205_J6I0984_075_REV008.dgn

3:07:27 PM

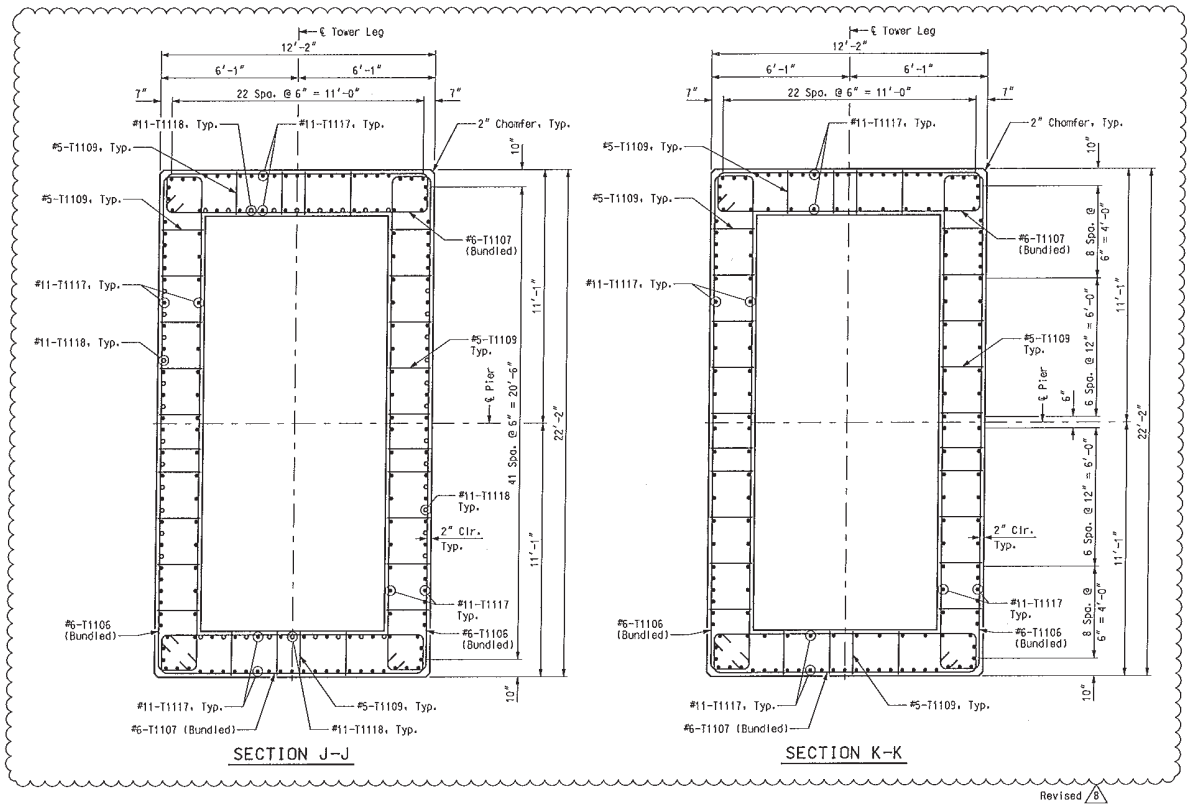

Notes:
Bar Marks shown are for Pier 11, using "T11" Series Bar Marks.
Pier 12 is similar, except use "T12" Series Bar Marks.
For Location of Sections J-J & K-K, see Sheet No. BR69.

For orientation of #5-T1109 bars, see Section Y-Y Sheet No. BR74, alternated placement with each layer.

Added 6

PIERS 11 & 12 - TOWER

DATE 6/10/11
ROUTE I-70 | STATE MO/IL
DISTRICT 6 | SHEET NO. BR76
COUNTY ST. LOUIS CITY - MO, ST. CLAIR - IL
JOB NO. J6I0984
CONTRACT ID. 091208-601
PROJECT NO. I-70-9 (20)
BRIDGE NO. A6500

DATE	DESCRIPTION
6-10-11	6 Revised Reinforcing Steel

MISSOURI HIGHWAYS AND TRANSPORTATION COMMISSION
MoDOT
105 WEST CAPITOL
JEFFERSON CITY - MO 65102
1-888-ASK-MODOT (1-888-275-6636)

HNTB
715 KIRK DRIVE
KANSAS CITY, MO 64105-1310
TELEPHONE (816) 472-1201
CERTIFICATE OF AUTHORITY NO. 001270

FINAL PLANS

Detailed JUL 2009
Checked JUL 2009

Note: This drawing is not to scale. Follow dimensions.

T:\de-proj\St_Louis_City\Construction\J6I0984\Asbuilts\Bridge\B_A6500_076-205_J6I0984_076_REV008.dgn

3:09:01 PM

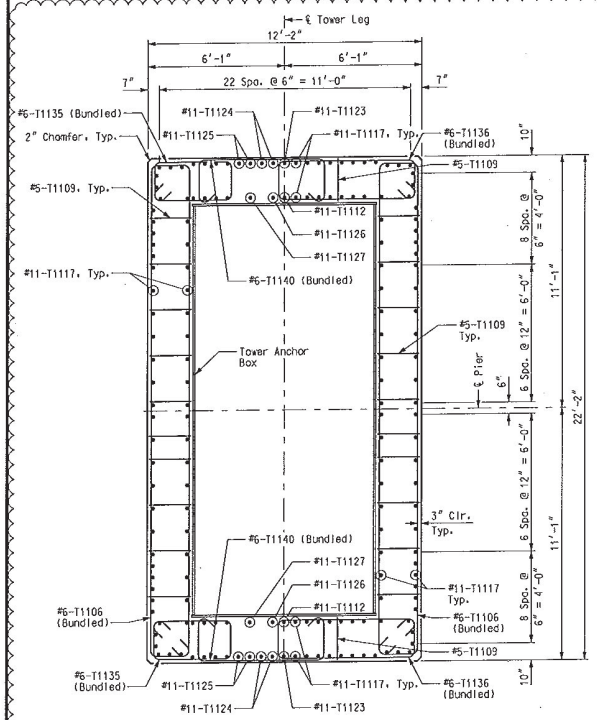

SECTION L-L

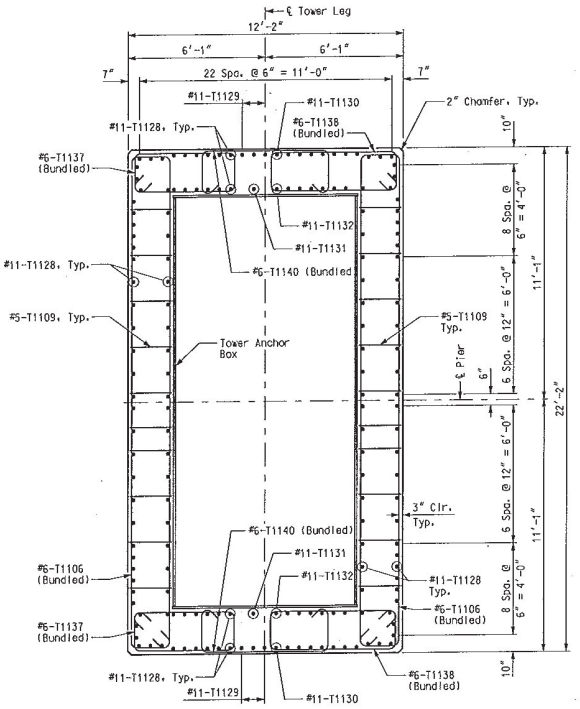

SECTION M-M

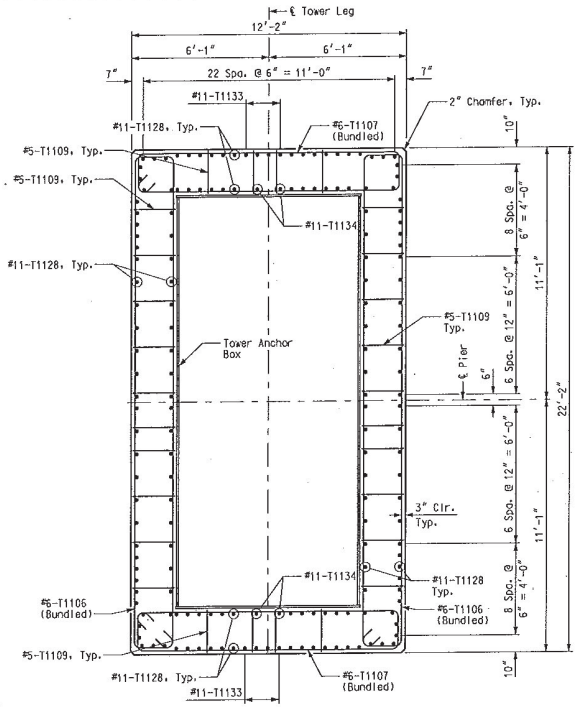

SECTION N-N

Revised 8

Notes:
Bar Marks shown are for Pier 11, using "T11" Series Bar Marks.
Pier 12 is similar, except use "T12" Series Bar Marks.
For Location of Sections L-L, M-M & N-N, see Sheet No. BR70.
For Tower Anchor Box details, see Sheet Nos. BR88 thru BR93.
For orientation of #5-T1109 bars, see Section Y-Y Sheet No. BR74; alternated placement with each layer.

Added 8

PIERS 11 & 12 - TOWER

DATE 6/10/11
ROUTE I-70 STATE MO/IL
DISTRICT 6 SHEET NO. BR77
COUNTY ST. LOUIS CITY - MO ST. CLAIR - IL
JOB NO. J610984
CONTRACT ID. 091208-601
PROJECT NO. I-70-9 (20)
BRIDGE NO. A6500

REV.	DATE	DESCRIPTION
8	6-10-11	Revised Reinforcing Steel

MISSOURI HIGHWAYS AND TRANSPORTATION COMMISSION
105 WEST CAPITOL
JEFFERSON CITY, MO 65102
1-888-ASK-MODOT (1-888-275-6636)

HNTB
715 KIRK DRIVE
KANSAS CITY, MO 64105-1310
TELEPHONE (816) 472-1201
CERTIFICATE OF AUTHORITY NO. 001270

FINAL PLANS

Detailed JUL 2009
Checked JUL 2009

Note: This drawing is not to scale. Follow dimensions.

Sheet No. 77 of 205

T:\de-proj\St_Louis_City\Construction\J610984\Asbuilts\Bridge\B_A6500_077-205_J610984_077_REV008.dgn

3:20:17 PM

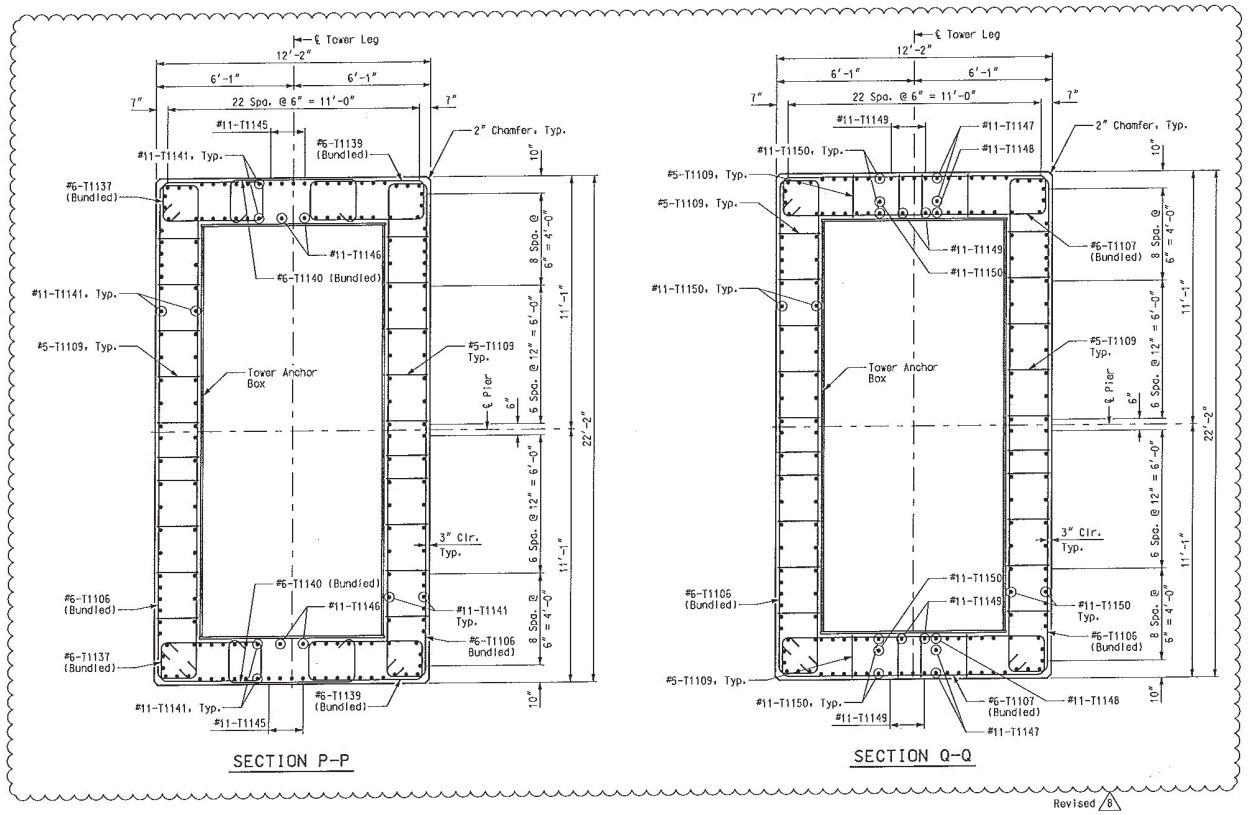

Revised 8

Notes:
Bar Marks shown are for Pier 11, using "T11" Series Bar Marks.
Pier 12 is similar, except use "T12" Series Bar Marks.
For Location of Sections P-P & Q-Q, see Sheet No. BR71.
For Tower Anchor Box details, see Sheet Nos. BR88 thru BR93.
For orientation of #5-T1109 bars, see Section Y-Y Sheet No. BR74, alternated placement with each layer.

Added 8

PIERS 11 & 12 – TOWER

DATE 6/10/11
ROUTE I-70 | STATE MO/IL
DISTRICT 6 | SHEET NO. BR78
COUNTY ST. LOUIS CITY - MO ST. CLAIR - IL
JOB NO. J6I0984
CONTRACT ID. 091208-601
PROJECT NO. I-70-9 (20)
BRIDGE NO. A6500

DATE	DESCRIPTION
6-10-11	8 Revised Reinforcing Steel

MISSOURI HIGHWAYS AND TRANSPORTATION COMMISSION
105 WEST CAPITOL
JEFFERSON CITY, MO 65102
1-888-ASK-MODOT (1-888-275-6636)

HNTB
715 KIRK DRIVE
KANSAS CITY, MO 64105-1310
TELEPHONE (816) 472-1201
CERTIFICATE OF AUTHORITY NO. 001270

FINAL PLANS

REV.

Detailed JUL 2009
Checked JUL 2009

Note: This drawing is not to scale. Follow dimensions.

T:\de-proj\St_Louis_City\Construction\J6I0984\Asbuilts\Bridge\8_A6500_078-205_J6I0984_078_REV008.dgn

3:21:49 PM

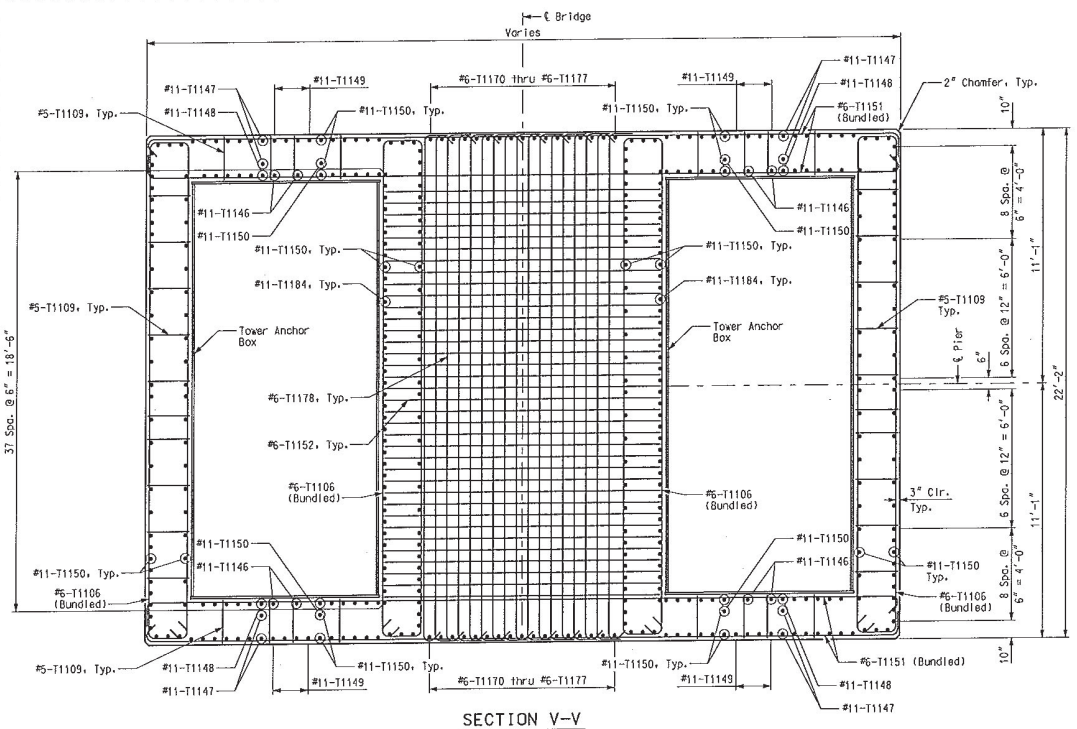

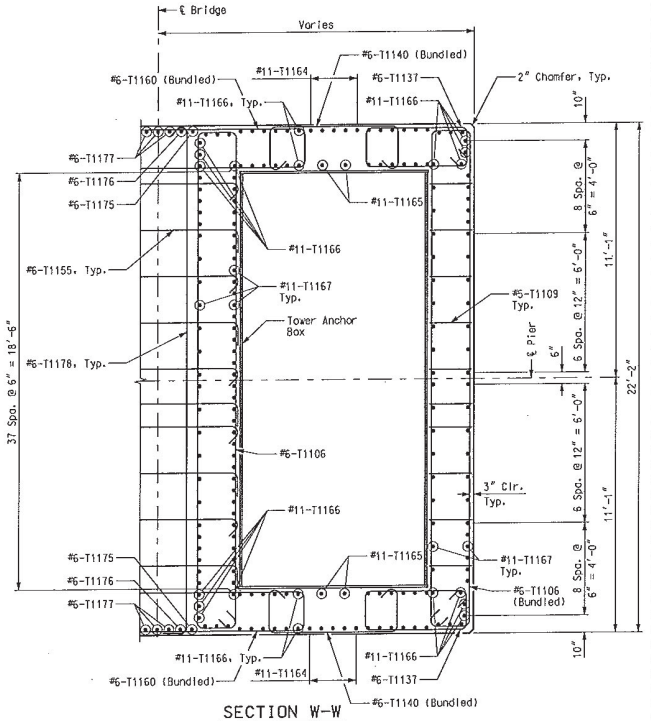

Revised 8

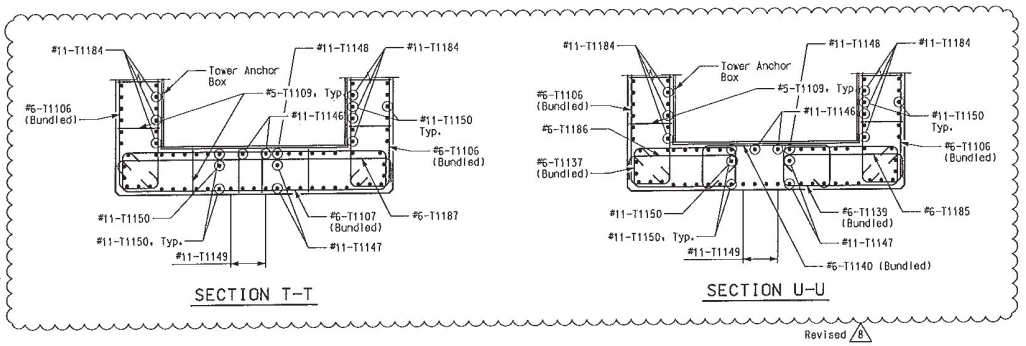

Revised 8

Notes:
Bar Marks shown are for Pier 11, using "T11" Series Bar Marks.
Pier 12 is similar, except use "T12" Series Bar Marks.
For Location of Sections V-V & W-W, see Sheet No. BR72.
For Tower Anchor Box details, see Sheet No. BR88 thru BR93.
For orientation of #5-T1109 bars, see Section Y-Y Sheet No. BR74, alternoted placement with each layer.

Added 8

PIERS 11 & 12 - TOWER

DATE 6/10/11
ROUTE I-70 STATE MO/IL
DISTRICT 6 SHEET NO. BR79
COUNTY ST. LOUIS CITY - MO ST. CLAIR - IL
JOB NO. J6I0984
CONTRACT ID. 091208-601
PROJECT NO. I-70-9 (20)
BRIDGE NO. A6500

DATE	DESCRIPTION
6-10-11	8 Revised Reinforcing Steel

MISSOURI HIGHWAYS AND TRANSPORTATION COMMISSION
105 WEST CAPITOL
JEFFERSON CITY, MO 65102
1-888-ASK-MODOT (1-888-275-6636)

HNTB
715 KING DRIVE
KANSAS CITY, MO 64105-1310
TELEPHONE (816) 472-1201
CERTIFICATE OF AUTHORITY NO. 001270

FINAL PLANS

REV.

Detailed JUL 2009
Checked JUL 2009

Note: This drawing is not to scale. Follow dimensions.

T:\de-proj\St_Louis_City\Construction\J6I0984\Asbuilts\Bridge\B_A6500_079-205_J6I0984_079_REV008.dgn

3:21:12 PM

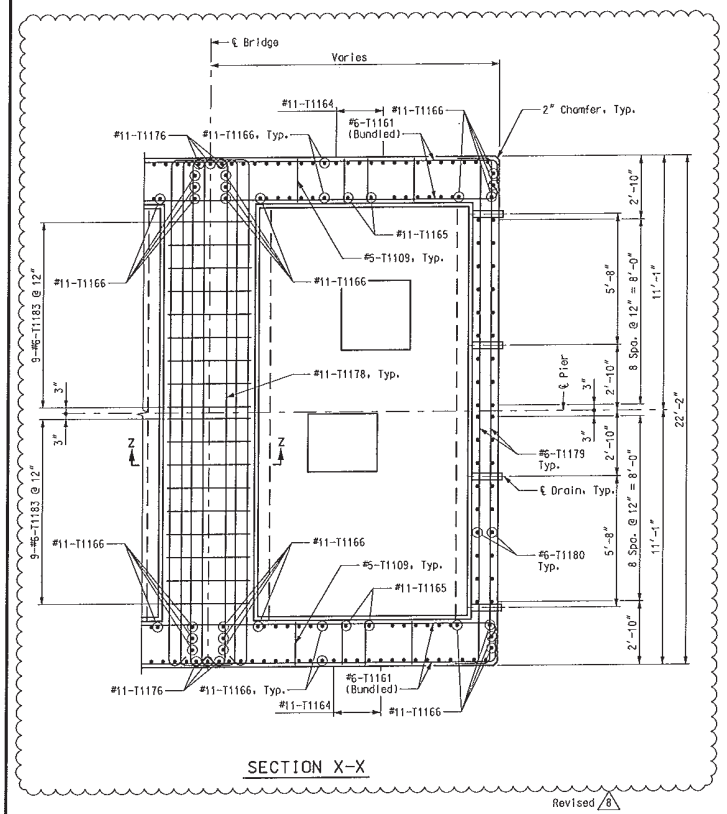

SECTION X-X

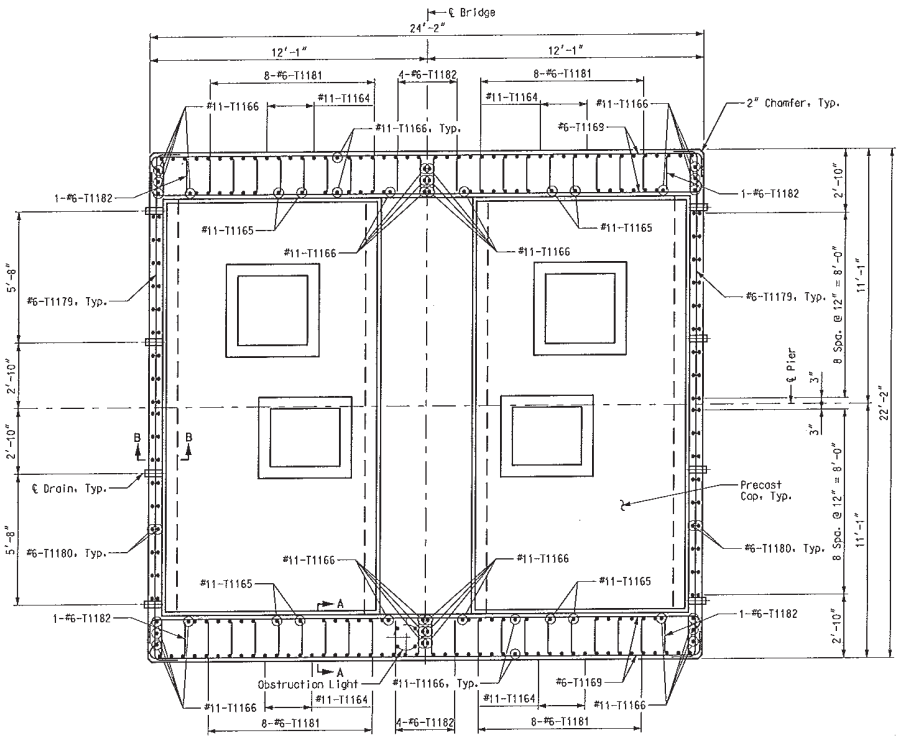

VIEW Y-Y

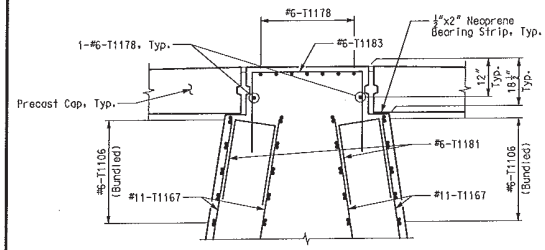

SECTION Z-Z

Revised 8

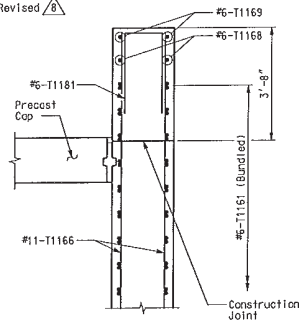

SECTION A-A

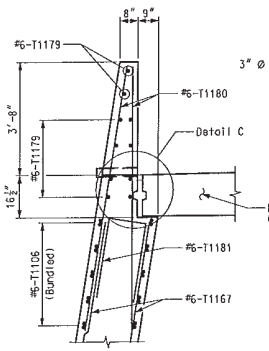

SECTION B-B

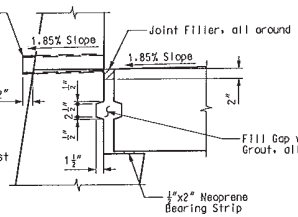

DETAIL C

Notes:
Bar Works shown are for Pier 11, using "T11" Series Bar Works. Pier 12 is similar, except use "T12" Series Bar Works.
For Location of Section X-X, see Sheet No. BR72.
For Location of View Y-Y, see Sheet No. BR72.
For Precast Cap Details, see Sheet No. BR73.
For Obstruction Light location and mounting details, see Sheet BR87.

For orientation of #5-T1109 bars, see Section Y-Y Sheet No. BR74. alternated placement with each layer.

Added 8

PIERS 11 & 12 - TOWER

DATE 6/10/11
ROUTE I-70 | STATE MO/IL
DISTRICT 6 | SHEET NO. BR80
COUNTY ST. LOUIS CITY - MO ST. CLAIR - IL
JOB NO. J6I0984
CONTRACT ID. 091208-601
PROJECT NO. I-70-9 (20)
BRIDGE NO. A6500

DATE	DESCRIPTION
6-10-11	8 Revised Reinforcing Steel

MISSOURI HIGHWAYS AND TRANSPORTATION COMMISSION
105 WEST CAPITOL
JEFFERSON CITY, MO 65102
1-888-ASK-MODOT (1-888-275-6636)

HNTB
715 KIRK DRIVE
KANSAS CITY, MO 64105-1310
TELEPHONE (816) 472-1201
CERTIFICATE OF AUTHORITY NO. 001270

FINAL PLANS

REV.

Detailed JUL 2009
Checked JUL 2009

Note: This drawing is not to scale. Follow dimensions.

T:\de-proj\St_Louis_City\Construction\J6I0984\Asbuilts\Bridge\B_A6500_080-205_J6I0984_080_REV008.dgn

3:23:00 PM

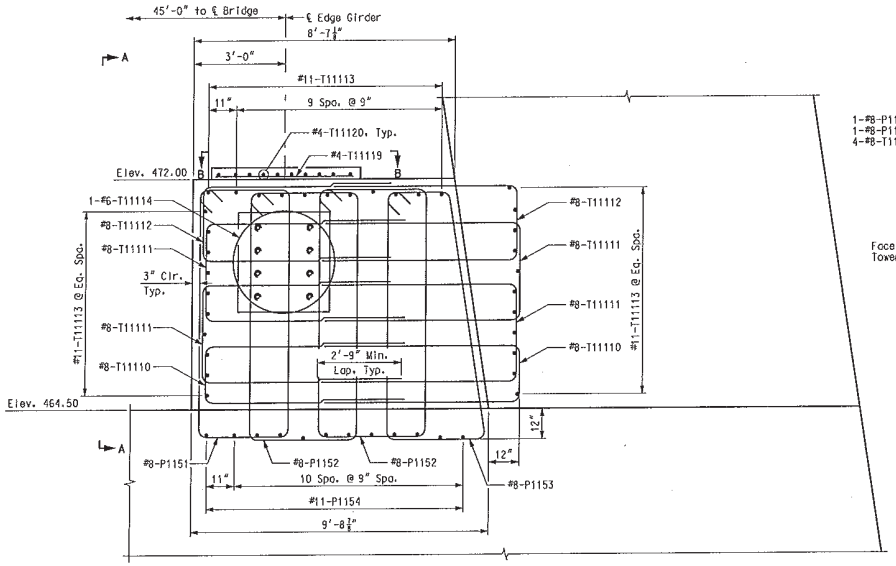

ELEVATION

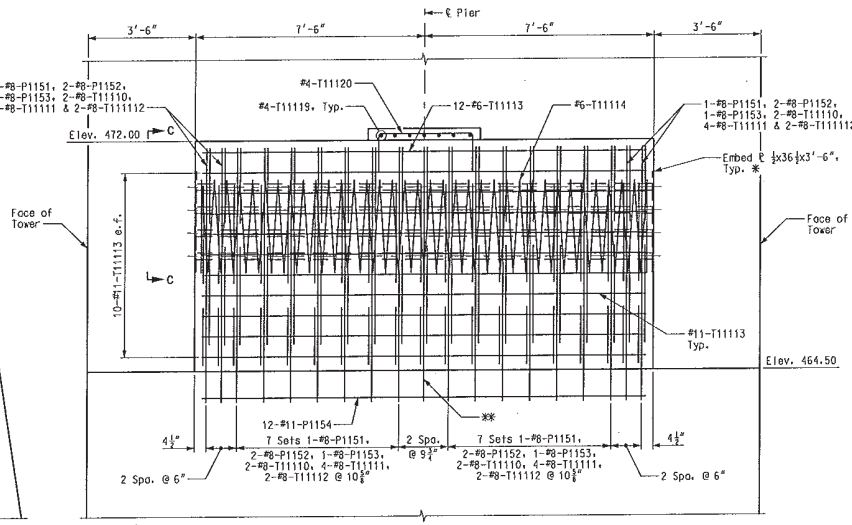

VIEW A-A

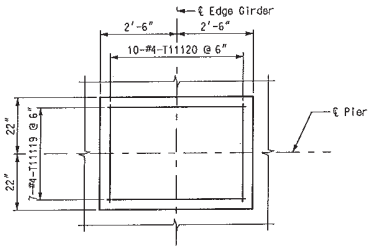

VIEW B-B

* Embed PL and Mounting PL for Longitudinal Lock-up Device were fabricated together to assure uniform contact area. For details of Mounting PL, see Sheet Nos. BR107 & BR108.
** 1-#8-P1151, 2-#8-P1152, 1-#8-P1153, 2-#8-T11110, 4-#8-T11111 & 2-#8-T11112

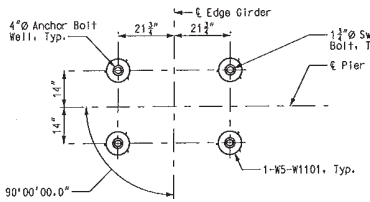

ANCHOR BOLT SETTING PLAN
PIERS 11 & 12

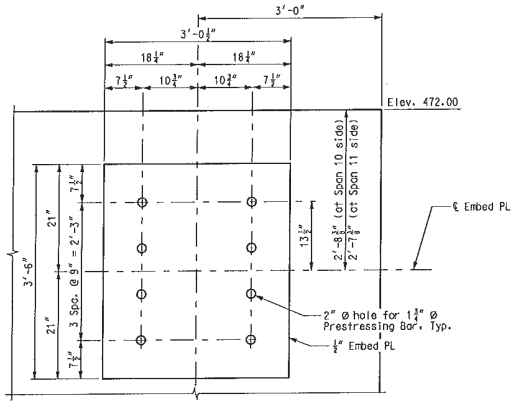

VIEW C-C

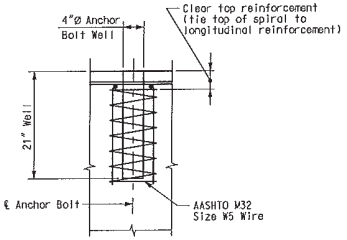

ANCHOR BOLT WELL DETAIL

Notes:
Bar Marks shown are for Pier 11, using "P11", "T11" & "W11" Series Bar Marks. Pier 12 is similar, except use "P12", "T12" & "W12" Series Bar Marks.
The embed plates shall be composed of A709, Gr. 50W steel and included in the pay item, "Fabricated Structural Low Alloy Steel (Plate Girder) A709, Gr. HPS50W".
Provisions for grouting of 2½" galvanized duct for 1¼" prestresssing bar shall be provided to Engineer for review prior to commencing grouting operations. No grouting shall be permitted until all prestressing bars have been stressed.
After installation of Mounting ℄ and Lock-up Device, the 1¼" prestressing bars shall be stressed to 275 Kips each.
For Details of Pot Bearings, see Sheets BR104 and BR105.
All reinforcing bars in the top of pedestal shall be spaced to clear anchor bolt wells for bearings by at least ½"
Prestressing Bars shall 1¼" diameter, A722, Gr. 150, Type I.

PIERS 11 & 12 - PEDESTAL

DATE 8/20/09
ROUTE I-70 STATE MO/IL
DISTRICT 6 SHEET NO. BR81
COUNTY ST. LOUIS CITY - MO ST. CLAIR - IL
JOB NO. J610984
CONTRACT ID. 091208-601
PROJECT NO. I-70-9 (20)
BRIDGE NO. A6500

DESCRIPTION | DATE

MISSOURI HIGHWAYS AND TRANSPORTATION COMMISSION
105 WEST CAPITOL
JEFFERSON CITY, MO 65102
1-888-ASK-MODOT (1-888-275-6636)
HNTB
715 KIRK DRIVE
KANSAS CITY, MO 64105-1310
TELEPHONE (816) 472-1201
CERTIFICATE OF AUTHORITY NO. 001270

FINAL PLANS

REV.

Detailed JUL 2009
Checked JUL 2009

Note: This drawing is not to scale. Follow dimensions.

I:\de-proj\St_Louis_City\Construction\J610984\Asbuilts\Bridge\B_A6500_081-205_J610984_081.dgn

3:24:17 PM

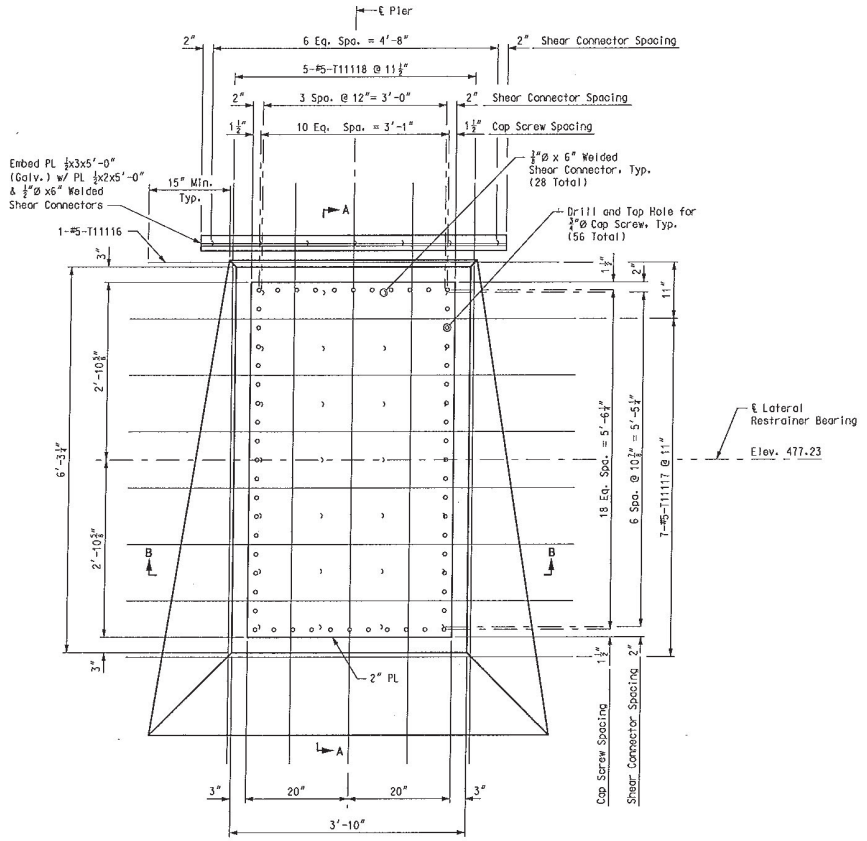

ELEVATION

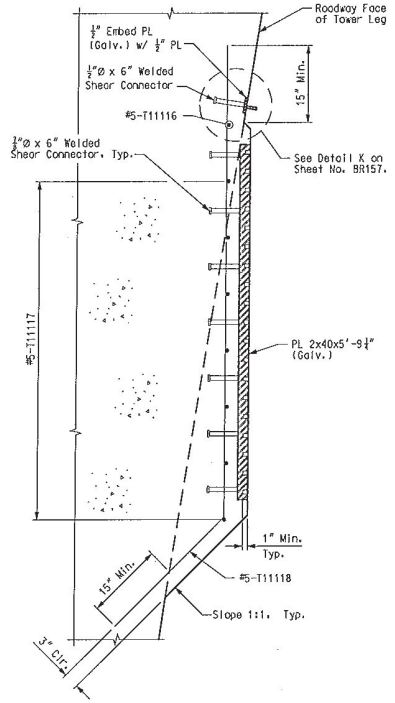

SECTION A-A

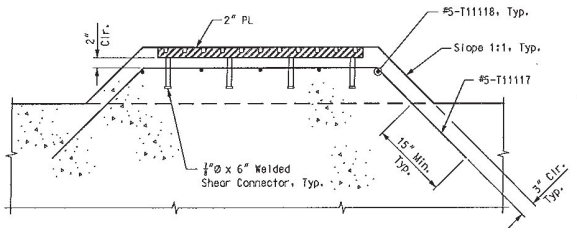

SECTION B-B

Notes:
Bar Works shown are for Pier 11, using "T11" Series Bar Works.
Pier 12 is similar, except use "T12" Series Bar Works.
For Lateral Restrainer Details, see Sheet No. BR106.
For details of tower leg at lateral restrainer bearing, see Sheet No. BR67.
All galvanized embeds were galvanized in accordance with ASTM A123 after fabrication.

LATERAL RESTRAINER BEARING DETAILS - PIERS 11 & 12

DATE 8/20/09
ROUTE I-70 | STATE MO/IL
DISTRICT 6 | SHEET NO. BR82
COUNTY ST. LOUIS CITY - MO ST. CLAIR - IL
JOB NO. J6I0984
CONTRACT ID. 091208-601
PROJECT NO. I-70-9 (20)
BRIDGE NO. A6500

DESCRIPTION | DATE

MISSOURI HIGHWAYS AND TRANSPORTATION COMMISSION
105 WEST CAPITOL
JEFFERSON CITY, MO 65102
1-888-ASK-MODOT (1-888-275-6636)

HNTB
715 KIRK DRIVE
KANSAS CITY, MO 64105-1310
TELEPHONE (816) 472-1201
CERTIFICATE OF AUTHORITY NO. 001270

FINAL PLANS

Detailed JUL 2009
Checked JUL 2009

Note: This drawing is not to scale. Follow dimensions.

T:\de-proj\St_Louis_City\Construction\J6I0984\Asbuilts\Bridge\B_A6500_082-205_J6I0984_082.dgn

3:25:00 PM

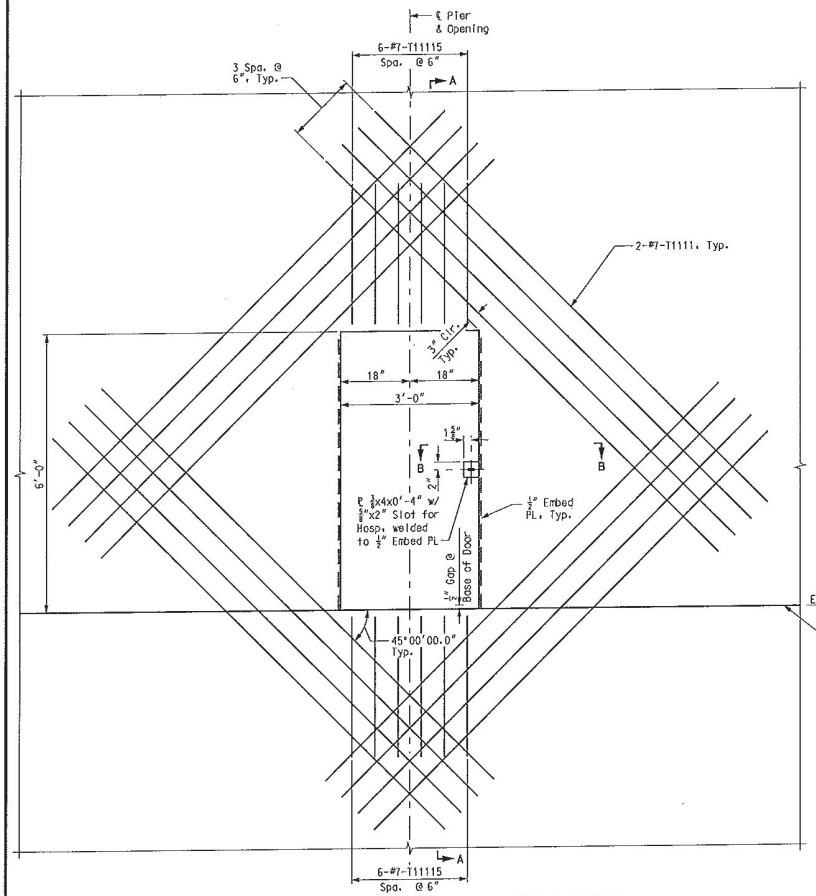

TOWER ACCESS OPENING REINFORCING LAYOUT

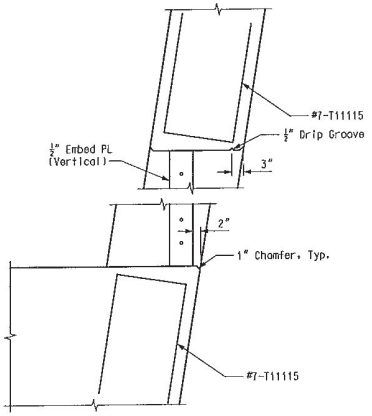

SECTION A-A

(Vertical bars and Horiz. stirrups and ties in tower leg not shown for clarity.)

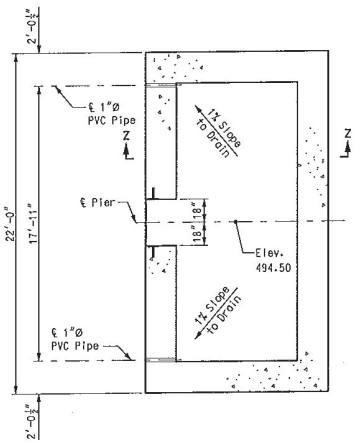

PLAN - ENTRANCE DETAIL

(Vertical bars and tie bars not shown for clarity.)

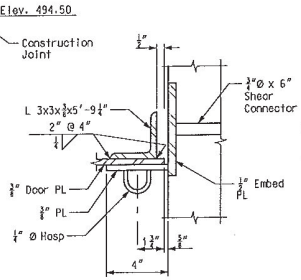

DETAIL F

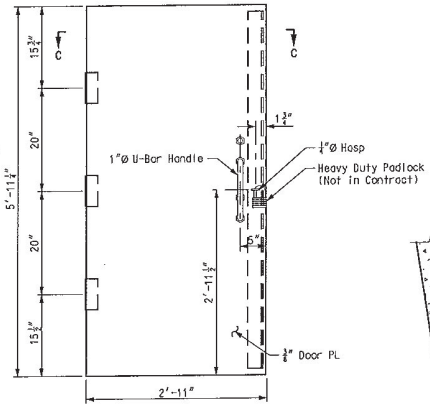

TOWER ACCESS DOOR DETAIL

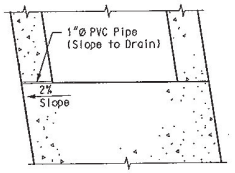

SECTION Z-Z

(Vertical bars and tie bars not shown for clarity.)

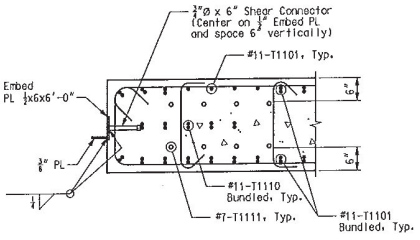

SECTION B-B

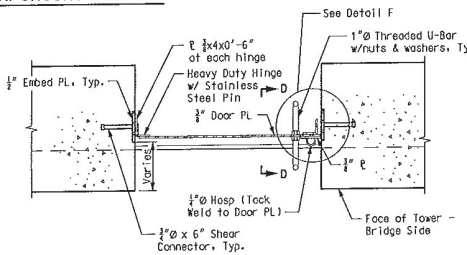

SECTION C-C

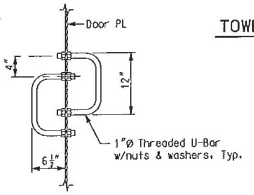

SECTION D-D

Notes:

Bar Marks shown are for Pier 11, using "T11" Series Bar Marks. Pier 12 is similar, except use "T12" Series Bar Marks.

All steel used for the tower access door shall meet the requirements of ASTM A709, Grade 36 and shall be galvanized per ASTM A123 after fabrication.

All material and labor necessary for fabrication and installation of tower access door, door frame and additional hardware shall be included in pay item "Inspection Access".

TOWER ACCESS OPENING DETAILS - PIERS 11 & 12

DATE 8/20/09
ROUTE I-70 STATE MO/IL
DISTRICT 6 SHEET NO. BR83
COUNTY ST. LOUIS CITY - MO ST. CLAIR - IL
JOB NO. J610984
CONTRACT ID. 091208-601
PROJECT NO. I-70-9 (20)
BRIDGE NO. A6500

DESCRIPTION | DATE

MISSOURI HIGHWAYS AND TRANSPORTATION COMMISSION
105 WEST CAPITOL
JEFFERSON CITY, MO 65102
1-888-ASK-MODOT (1-888-275-6636)

HNTB
715 KIRK DRIVE
KANSAS CITY, MO 64105-1310
TELEPHONE (816) 472-1201
CERTIFICATE OF AUTHORITY NO. 001270

FINAL PLANS

REV.

Detailed JUL 2009
Checked JUL 2009

Note: This drawing is not to scale. Follow dimensions.

T:\de-proj\St_Louis_City\Construction\J610984\Asbuilts\Bridge\B_A6500_083-205_J610984_083.dgn

3:25:35 PM

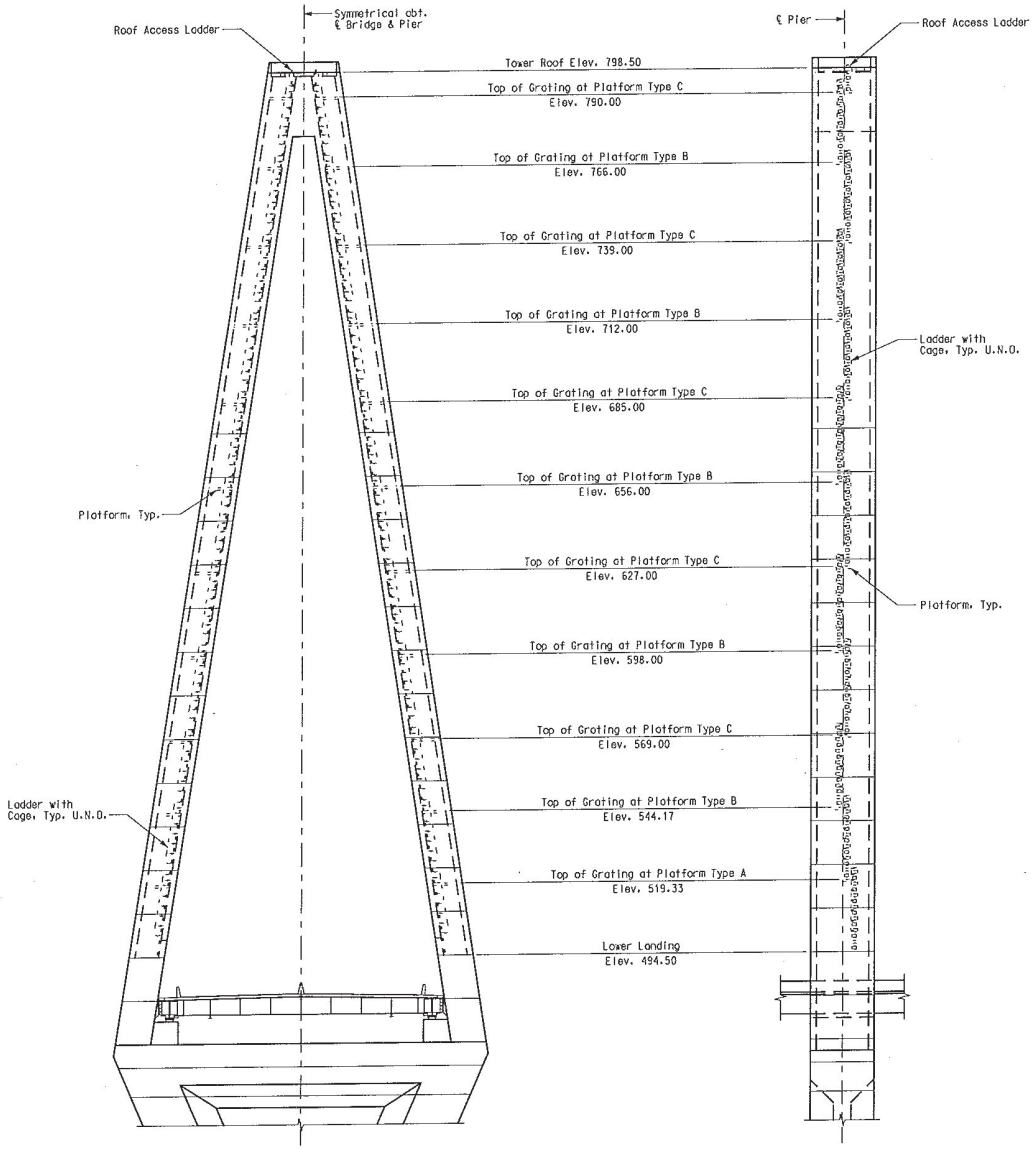

FRONT ELEVATION
(Cables not shown for clarity.)

SIDE ELEVATION
(Cables not shown for clarity.)

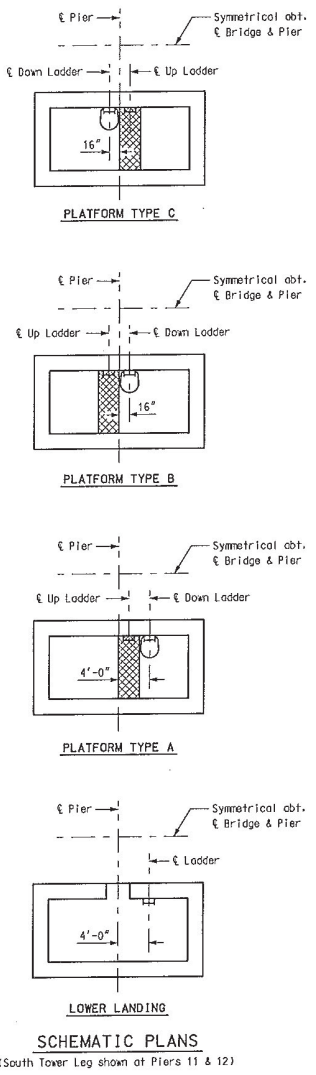

SCHEMATIC PLANS
(South Tower Leg shown at Piers 11 & 12)

Notes:
For details of ladders and cages, see Sheet No. BR85.
For details of platforms, see Sheet No. BR86.

TOWER ACCESS DETAILS – PIERS 11 & 12

DATE 8/20/09
ROUTE I-70 | STATE MO/IL
DISTRICT 6 | SHEET NO. BR84
COUNTY ST. LOUIS CITY – MO ST. CLAIR – IL
JOB NO. J6I0984
CONTRACT ID. 091208-601
PROJECT NO. I-70-9 (20)
BRIDGE NO. A6500

DESCRIPTION | DATE

MISSOURI HIGHWAYS AND TRANSPORTATION COMMISSION
105 WEST CAPITOL
JEFFERSON CITY, MO 65102
1-888-ASK-MODOT (1-888-275-6636)
HNTB
715 KIRK DRIVE
KANSAS CITY, MO 64105-1310
TELEPHONE (816) 472-1201
CERTIFICATE OF AUTHORITY NO. 001270

FINAL PLANS

REV.

Detailed JUL 2009
Checked JUL 2009

Note: This drawing is not to scale. Follow dimensions.

T:\de-proj\St_Louis_City\Construction\J6I0984\Asbuilts\Bridge\B_A6500_084-205_J6I0984_084.dgn

3:26:03 PM

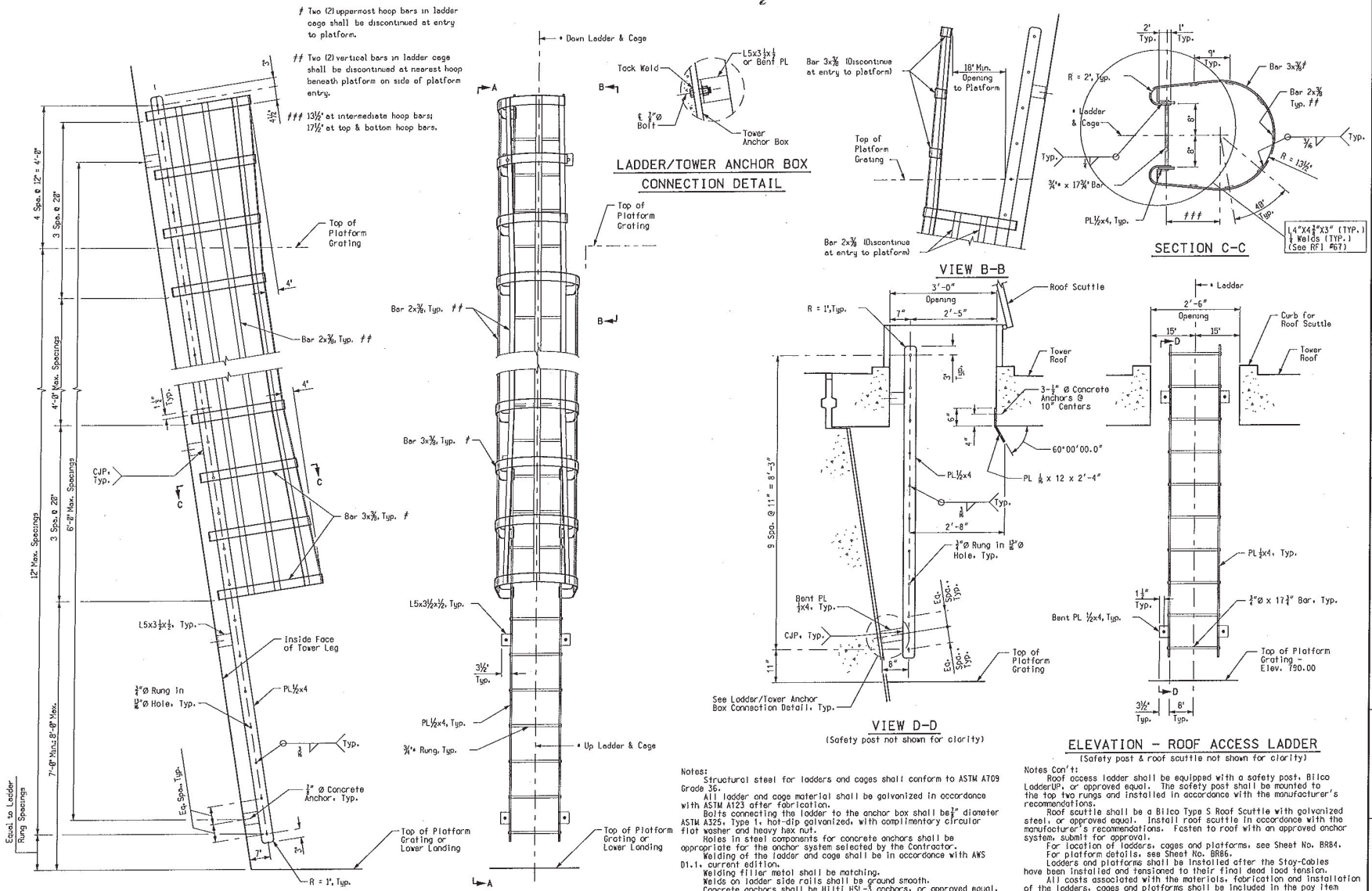

Notes:
Structural steel for ladders and cages shall conform to ASTM A709 Grade 36.
All ladder and cage material shall be galvanized in accordance with ASTM A123 after fabrication.
Bolts connecting the ladder to the anchor box shall be ⅞" diameter ASTM A325, Type 1, hot-dip galvanized, with complimentary circular flat washer and heavy hex nut.
Holes in steel components for concrete anchors shall be appropriate for the anchor system selected by the Contractor.
Welding of the ladder and cage shall be in accordance with AWS D1.1, current edition.
Welding filler metal shall be matching.
Welds on ladder side rails shall be ground smooth.
Concrete anchors shall be Hilti HSL-3 anchors, or approved equal. Install anchors in accordance with manufacturer's recommendations.

Notes Con't:
Roof access ladder shall be equipped with a safety post, Bilco LadderUP, or approved equal. The safety post shall be mounted to the top two rungs and installed in accordance with the manufacturer's recommendations.
Roof scuttle shall be a Bilco Type S Roof Scuttle with galvanized steel, or approved equal. Install roof scuttle in accordance with the manufacturer's recommendations. Fasten to roof with an approved anchor system, submit for approval.
For location of ladders, cages and platforms, see Sheet No. BR84.
For platform details, see Sheet No. BR86.
Ladders and platforms shall be installed after the Stay-Cables have been installed and tensioned to their final dead load tension.
All costs associated with the materials, fabrication and installation of the ladders, cages and platforms shall be included in the pay item "Inspection Access". This shall include all hardware including bolts, anchors, safety post, roof scuttle and gravity ventilator.

TOWER ACCESS DETAILS - PIERS 11 & 12

Detailed JUL 2009
Checked JUL 2009

Note: This drawing is not to scale. Follow dimensions.

T:\de-proj\St_Louis_City\Construction\J6I0984\Asbuilts\Bridge\B_A6500_085-205_J6I0984_085.dgn

8:54:45 AM

DATE 8/20/09
ROUTE I-70 STATE MO/IL
DISTRICT 6 SHEET NO. BR85
COUNTY ST. LOUIS CITY - MO ST. CLAIR - IL
JOB NO. J6I0984
CONTRACT ID. 091208-601
PROJECT NO. I-70-9 (20)
BRIDGE NO. A6500

DESCRIPTION | DATE

MISSOURI HIGHWAYS AND TRANSPORTATION COMMISSION
105 WEST CAPITOL
JEFFERSON CITY, MO 65102
1-888-ASK-MODOT (1-888-275-6636)

HNTB
715 KIRK DRIVE
KANSAS CITY, MO 64105-1310
TELEPHONE (816) 472-1201
CERTIFICATE OF AUTHORITY NO. 001270

FINAL PLANS

REV.

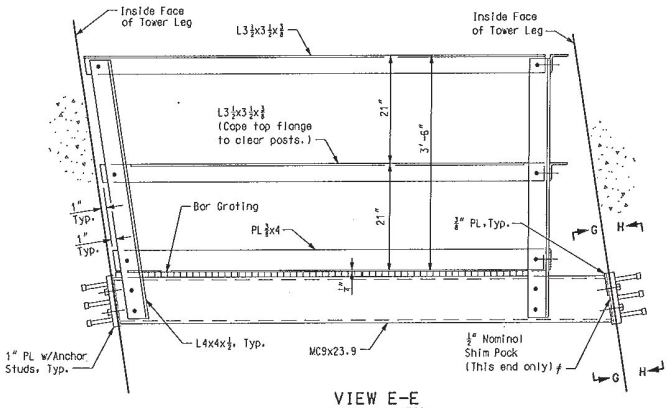

VIEW E-E

(View shown below Tower Anchor Box. For connection of platform to tower anchor box, see detail on this sheet.)

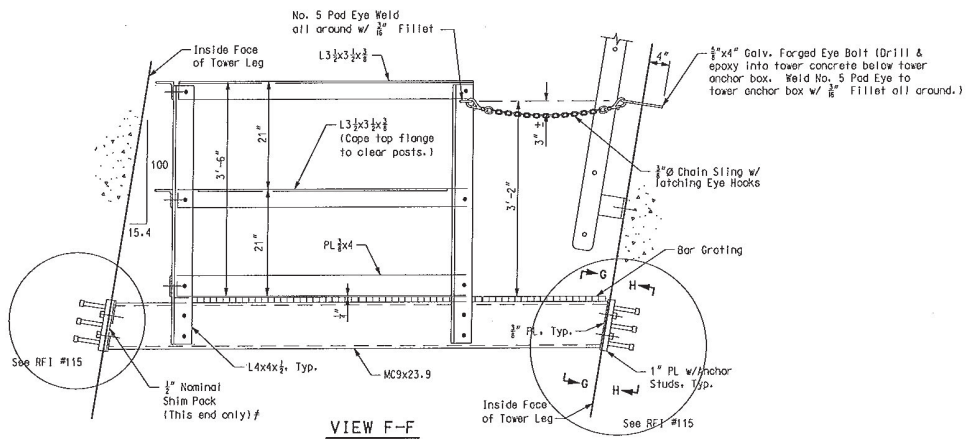

VIEW F-F

(View shown below Tower Anchor Box. For connection of platform to tower anchor box, see detail on this sheet.)

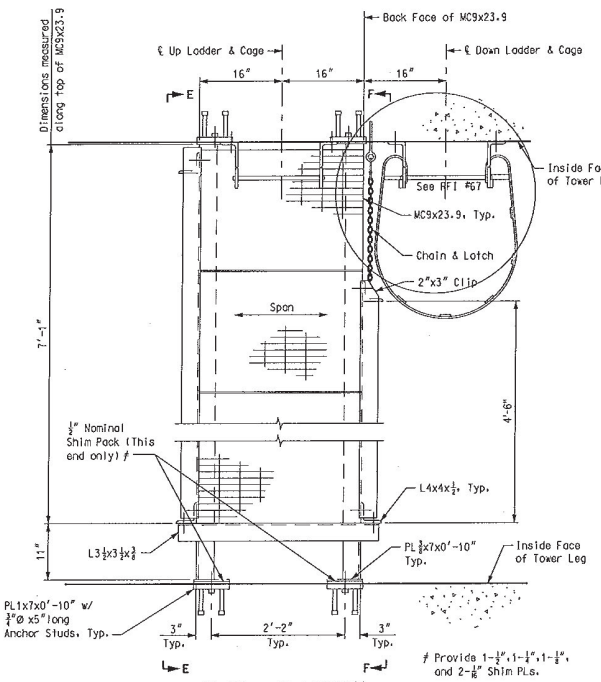

PLAN - PLATFORM

(Plan shown below Tower Anchor Box. For connection of platform to tower anchor box, see detail on this sheet.)

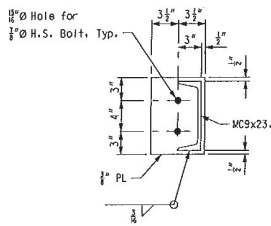

VIEW G-G

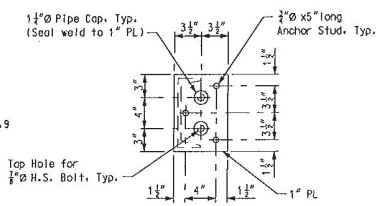

VIEW H-H

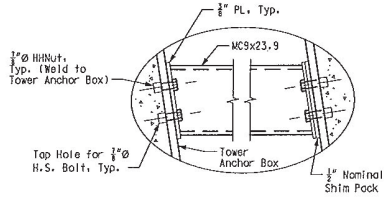

PLATFORM/TOWER ANCHOR BOX CONNECTION DETAIL

Notes:

Structural steel for platforms, posts and handrail shall conform to ASTM A709 Grade 36.

All platform, posts and handrail material shall be galvanized in accordance with ASTM A123 after fabrication.

Bolts connecting the handrail, post and platform shall be ¾" diameter; bolts connecting the platforms to the 1" embedded plate and anchor box shall be ⅞" diameter. All bolts shall be ASTM A325, Type 1, hot-dip galvanized, with complimentary circular flat washer and heavy hex nut.

Holes in steel components for A325 bolts shall be 1/16" larger in diameter than the associated bolt.

Holes in steel components for concrete anchors shall be appropriate for the anchor system selected by the Contractor.

Grating shall be IKG Borden, Weldforged, Type WB, galvanized, serrated, Size 4 (1"x⅛"bars) with saddle clip fasteners, or approved equal. There shall be three grating panels per platform. Grating panels shall be of similar width. There shall be a minimum of 6 grating fasteners per panel. Install in accordance with manufacturer's recommendations. Field drill holes in platform to accommodate grating fasteners.

Welding shall be in accordance with AWS D1.1, current edition.

Welding filler metal shall be matching.

¾" Chain sling with latching eye hooks shall be Crosby Spectrum 8 with two S-325 Eye Hooks, or approved equal.

No. 5 Pad Eye shall be Crosby S-264, stock no. 1090820, or approved equal.

⅝"x4" Galvanized Forged Eye Bolt shall be Crosby G-291 stock no. 1043472, or approved equal.

Epoxy anchor compound shall be Epcon C5 Epoxy or approved equal. Install in accordance with manufacturer's recommendations.

For locations of ladders, cages and platforms, see Sheet. No. BR84.

For ladder details, see Sheet No. BR85.

Ladders and platforms shall be installed after the Stay-Cables have been installed and tensioned to their final dead load tension.

All costs associated with the materials, fabrication and installation of the ladders, cages and platforms shall be included in the pay item "Inspection Access". This shall include all hardware including bolts, anchors, safety post, roof scuttle and gravity ventilator.

TOWER ACCESS DETAILS - PIERS 11 & 12

DATE 8/20/09
ROUTE I-70 | STATE MO/IL
DISTRICT 6 | SHEET NO. BR86
COUNTY ST. LOUIS CITY - MO ST. CLAIR - IL
JOB NO. J6I0984
CONTRACT ID. 091208-601
PROJECT NO. I-70-9 (20)
BRIDGE NO. A6500

DESCRIPTION | DATE

MISSOURI HIGHWAYS AND TRANSPORTATION COMMISSION
105 WEST CAPITOL
JEFFERSON CITY, MO 65102
1-888-ASK-MODOT (1-888-275-6636)

HNTB
715 KIRK DRIVE
KANSAS CITY, MO 64105-1310
TELEPHONE (816) 472-1201
CERTIFICATE OF AUTHORITY NO. 001270

FINAL PLANS

REV.

Detailed JUL 2009
Checked JUL 2009

Note: This drawing is not to scale. Follow dimensions.

Sheet No. 86 of 205

T:\de-proj\St_Louis_City\Construction\J6I0984\Asbuilts\Bridge\B_A6500_086-205_J6I0984_086.dgn

8:41:36 AM

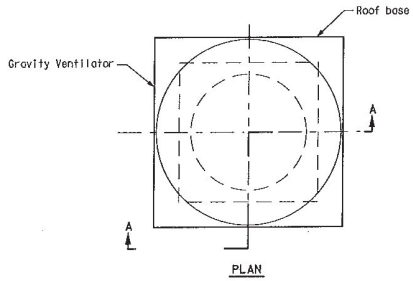

PLAN

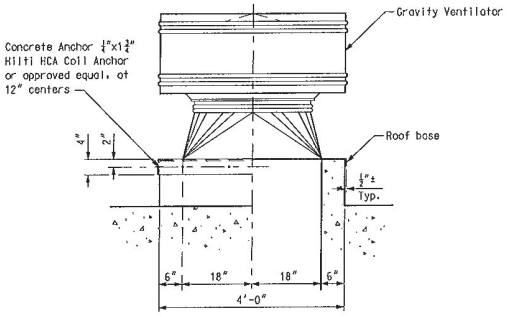

SECTION A-A

GRAVITY VENTILATOR

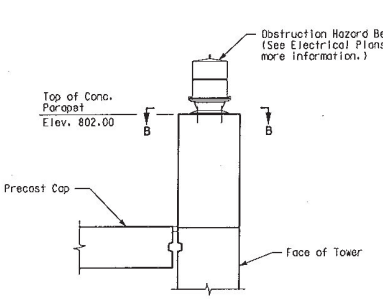

ELEVATION

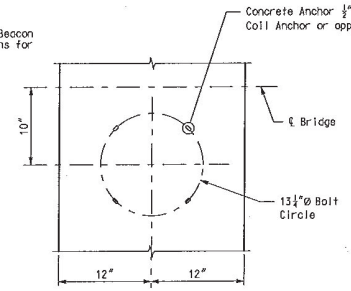

SECTION B-B

OBSTRUCTION LIGHTING MOUNTING DETAILS

Notes:

For layout and details of precast cap, see Sheet. No. BR73.

Gravity ventilator shall be Romlair Model RS-30, galvanized steel, or approved equal.

Gravity ventilator shall be mounted on a Roof Base, Romlair Model B-30, galvanized steel, or approved equal. Roof Base shall be modified to fit concrete curb.

Fasten ventilator to base with #6, zinc plated, pan head Tek screws, or equal, on about 8" centers.

VENTILATOR AND OBSTRUCTION LIGHTING DETAILS - PIERS 11 & 12

DATE 8/20/09
ROUTE I-70 | STATE MO/IL
DISTRICT 6 | SHEET NO. BR87
COUNTY ST. LOUIS CITY - MO ST. CLAIR - IL
JOB NO. J6I0984
CONTRACT ID. 091208-601
PROJECT NO. I-70-9 (20)
BRIDGE NO. A6500

DESCRIPTION | DATE

MISSOURI HIGHWAYS AND TRANSPORTATION COMMISSION
105 WEST CAPITOL
JEFFERSON CITY, MO 65102
1-888-ASK-MODOT (1-888-275-6636)

HNTB
715 KIRK DRIVE
KANSAS CITY, MO 64105-1310
TELEPHONE (816) 472-1201
CERTIFICATE OF AUTHORITY NO. 001270

FINAL PLANS

REV.

Detailed JUL 2009
Checked JUL 2009

Note: This drawing is not to scale. Follow dimensions.

T:\de-proj\St_Louis_City\Construction\J6I0984\Asbuilts\Bridge\B_A6500_087-205_J6I0984_087.dgn

8:58:45 AM

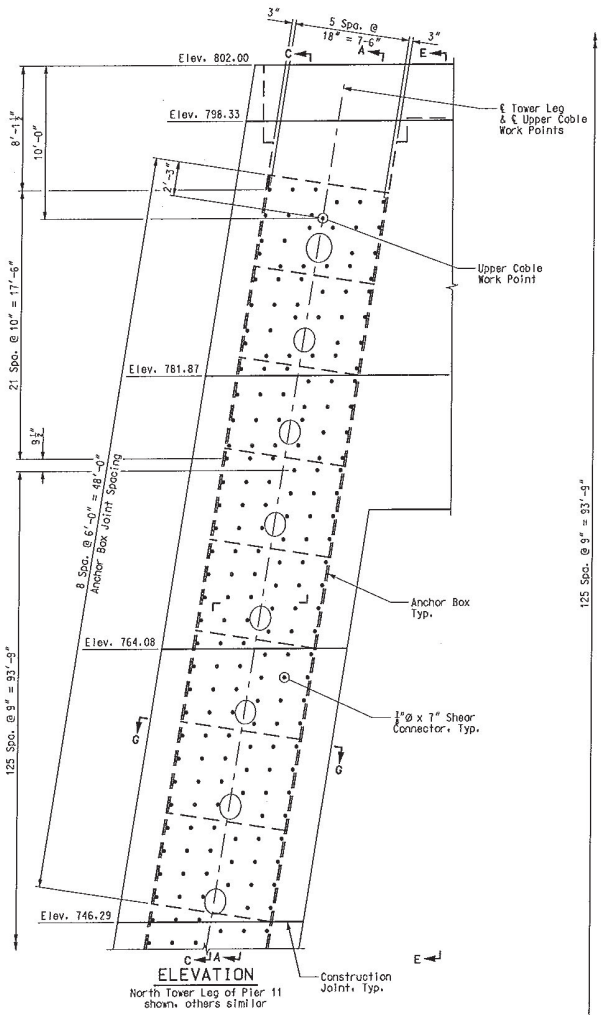

ELEVATION

North Tower Leg of Pier 11 shown, others similar

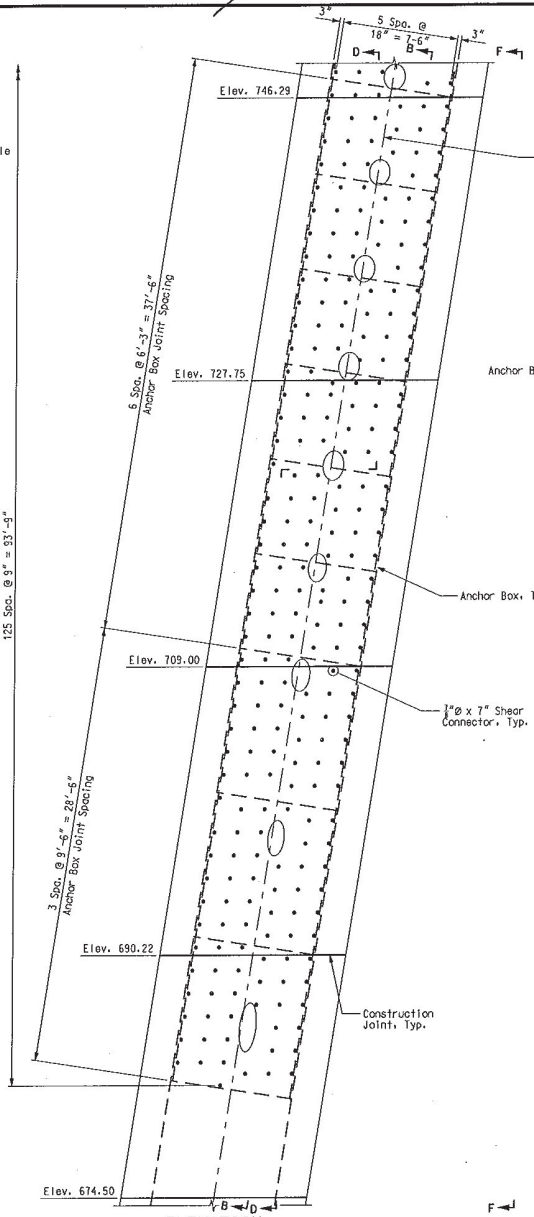

ELEVATION

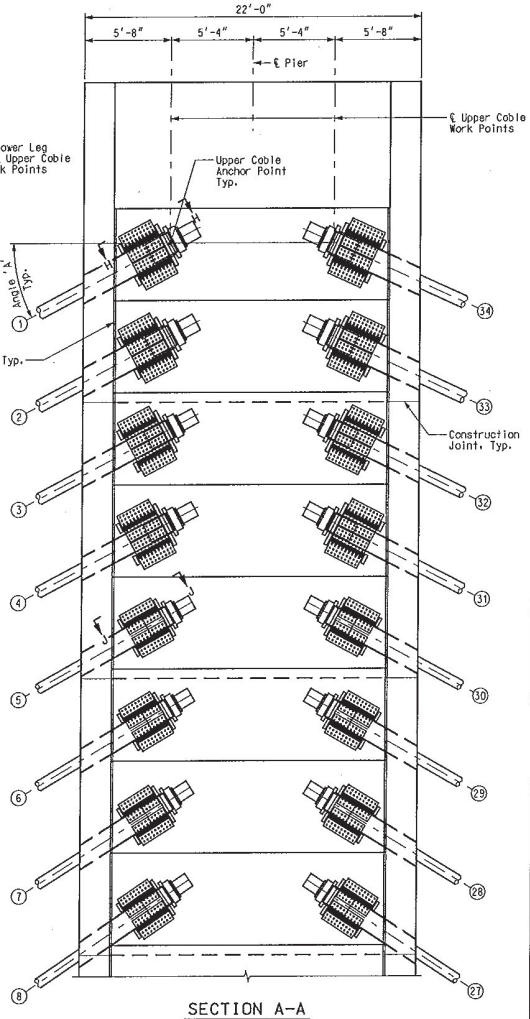

SECTION A-A

Shear Studs and Tower Access Details not shown for clarity

Notes:
- Pier 11 shown, Pier 12 is similar.
- For Sections B-B, C-C & D-D, see Sheet BR89.
- For Sections E-E & F-F, see Sheet BR90.
- For View H-H, see Sheet BR91.
- For View J-J, see Sheet BR92.
- (#) denotes Stay Cable Number.
- For additional notes, see Sheet BR89.
- For Angle 'A', see Sheet Nos. BR91 thru BR93.

TOWER CABLE ANCHORAGE DETAILS - PIERS 11 & 12

DATE 8/20/09
ROUTE I-70 | STATE MO/IL
DISTRICT 6 | SHEET NO. BR88
COUNTY ST. LOUIS CITY - MO ST. CLAIR - IL
JOB NO. J610984
CONTRACT ID. 091208-601
PROJECT NO. I-70-9 (20)
BRIDGE NO. A6500

DESCRIPTION | DATE | REV.

MISSOURI HIGHWAYS AND TRANSPORTATION COMMISSION
105 WEST CAPITOL
JEFFERSON CITY, MO 65102
1-888-ASK-MODOT (1-888-275-6636)

HNTB
715 KIRK DRIVE
KANSAS CITY, MO 64105-1310
TELEPHONE (816) 472-1201
CERTIFICATE OF AUTHORITY NO. 001270

FINAL PLANS

Detailed JUL 2009
Checked JUL 2009

Note: This drawing is not to scale. Follow dimensions.

Sheet No. 88 of 205

T:\de-proj\St_Louis_City\Construction\J610984\Asbuilts\Bridge\B_A6500_088-205_J610984_088.dgn

9:00:10 AM

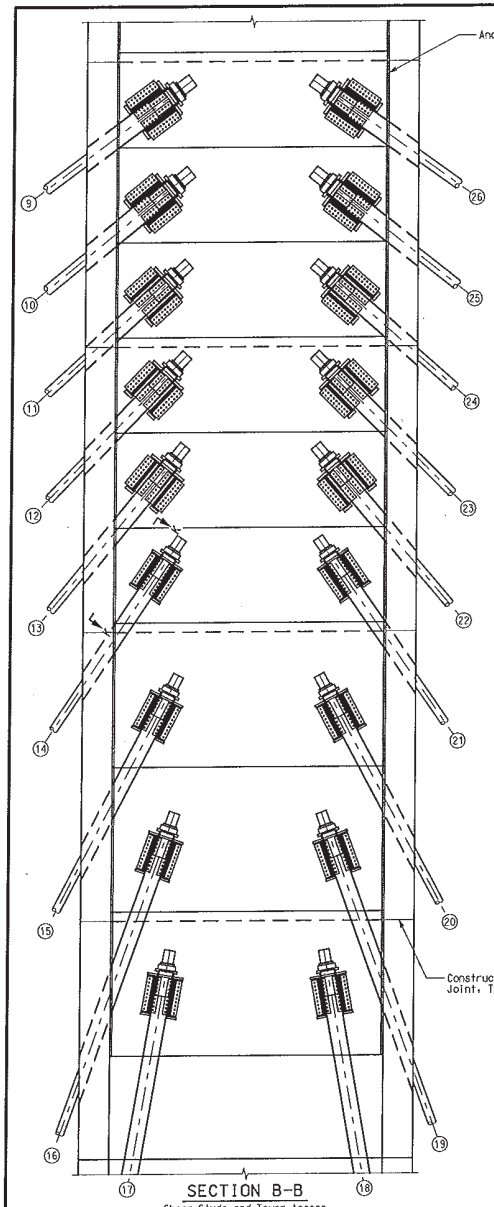

SECTION B-B
Shear Studs and Tower Access Details not shown for clarity

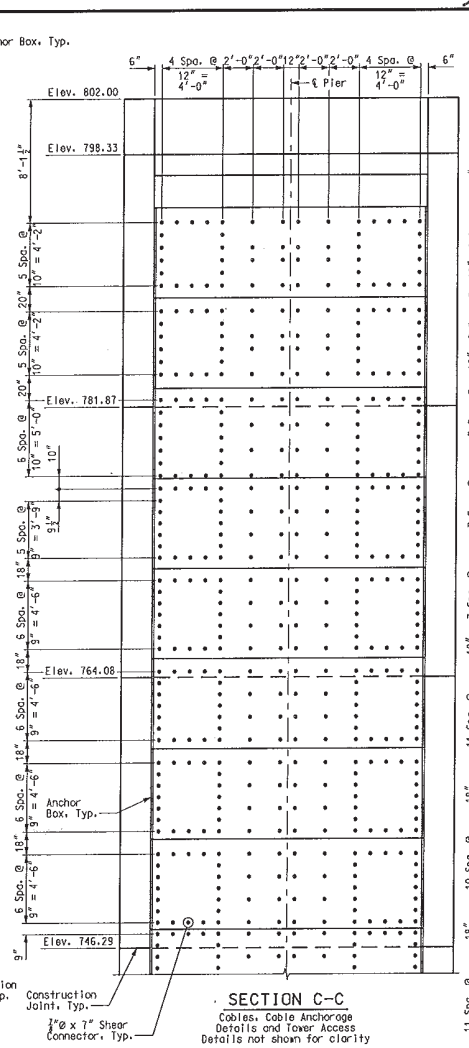

SECTION C-C
Cables, Cable Anchorage Details and Tower Access Details not shown for clarity

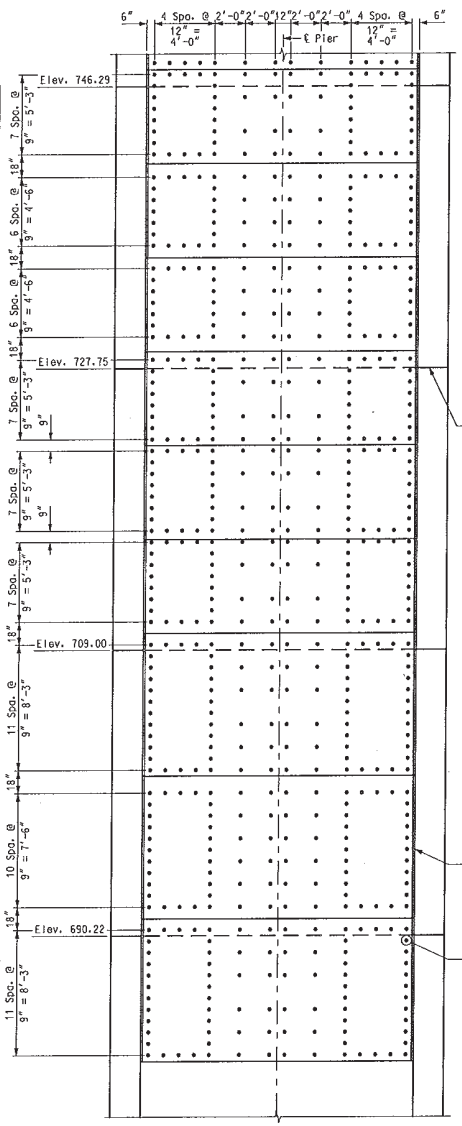

SECTION D-D
Cables, Cable Anchorage Details and Tower Access Details not shown for clarity

Notes:
For locations of Sections B-B, C-C & D-D, see Sheet BR88.
For View K-K, see Sheet BR93.
(#) denotes Stay Cable Number.
For Cable Layout, see Sheet Nos. BR137 & BR138.
For Stay Cable Geometry, see Sheet Nos. BR139 & BR140.
For Stay Cable Schedule, see Sheet Nos. BR141 & BR142.
For Stay Cable Anchorage Assembly, see Sheet BR143.

TOWER CABLE ANCHORAGE DETAILS - PIERS 11 & 12

Detailed JUL 2009
Checked JUL 2009

Note: This drawing is not to scale. Follow dimensions.

Sheet No. 89 of 205

T:\de-proj\St_Louis_City\Construction\J6I0984\Asbuilts\Bridge\B_A6500_089-205_J6I0984_089.dgn

9:01:46 AM

DATE 8/20/09
ROUTE I-70 | STATE MO/IL
DISTRICT 6 | SHEET NO. BR89
COUNTY ST. LOUIS CITY - MO, ST. CLAIR - IL
JOB NO. J6I0984
CONTRACT ID. 091208-601
PROJECT NO. I-70-9 (20)
BRIDGE NO. A6500

DESCRIPTION | DATE | REV.

MISSOURI HIGHWAYS AND TRANSPORTATION COMMISSION
105 WEST CAPITOL
JEFFERSON CITY, MO 65102
1-888-ASK-MODOT (1-888-275-6636)

HNTB
715 KIRK DRIVE
KANSAS CITY, MO 64105-1310
TELEPHONE (816) 472-1201
CERTIFICATE OF AUTHORITY NO. 001270

FINAL PLANS

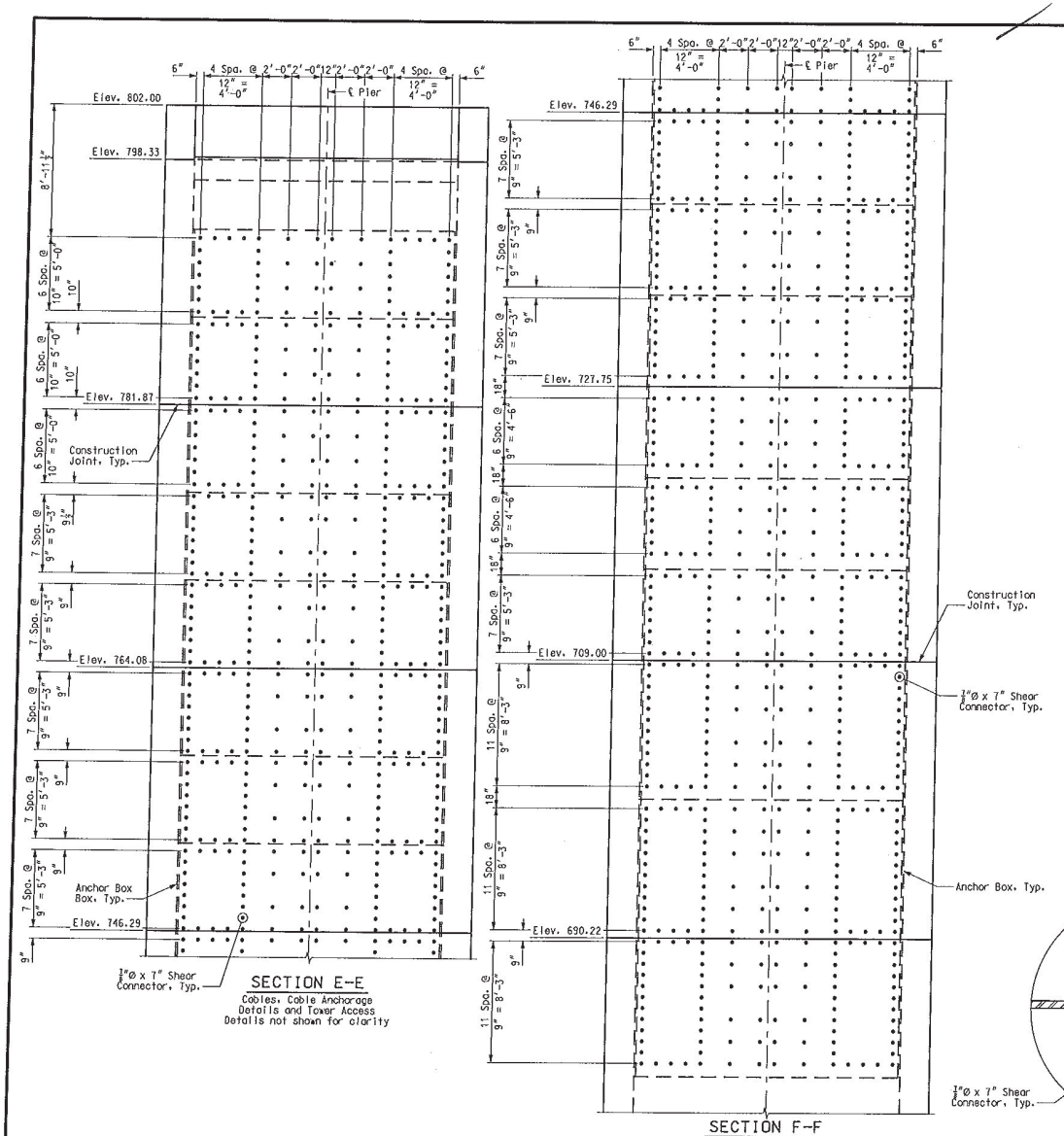

SECTION E-E
Cables, Cable Anchorage Details and Tower Access Details not shown for clarity

SECTION F-F
Cables, Cable Anchorage Details and Tower Access Details not shown for clarity

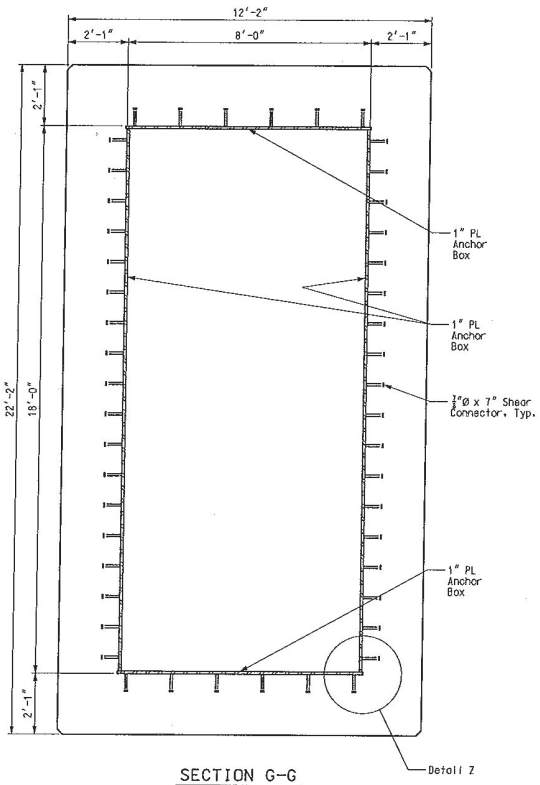

SECTION G-G
Cables, Cable Anchorage Details and Tower Access Details not shown for clarity

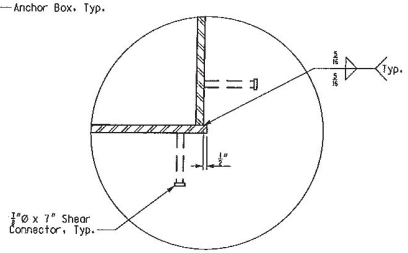

DETAIL Z

Notes:
For locations of Sections E-E & F-F, see Sheet BR88.
For location of Section G-G, see Sheet BR88.
The Anchor Box (1" Plate) shall be composed of A709 Gr. HPS50W1-2 material.
Upon approval of the Engineer, the Contractor modified the Anchor Box to facilitate lifting, transportation, handling and positioning.
The Anchor Box was not designed to function as a concrete form. The Contractor was responsible to adequately brace the Anchor Box to resist the pressure from the fluid concrete. Locked in stress in the Anchor Box due to the fluid concrete pressure and concrete placement did not exceed 5 ksi.
Shear connectors were relocated up to 3" from the plan location in order to avoid interference and conflicts with reinforcing steel or other components.
All costs associated with the materials, fabrication and installation of the Tower Anchorage System were included in the pay item "Fabricated Structural Low Alloy Steel (Tower Anchor Box) A709, Gr. HPS50W".
This included the Anchor Boxes, Shear Connectors, Cable Anchor Beams, Connection Plates, Load Plates and all fasteners.

TOWER CABLE ANCHORAGE DETAILS - PIERS 11 & 12

DATE 8/20/09
ROUTE I-70 | STATE MO/IL
DISTRICT 6 | SHEET NO. BR90
COUNTY ST. LOUIS CITY - MO ST. CLAIR - IL
JOB NO. J6I0984
CONTRACT ID. 091208-601
PROJECT NO. I-70-9 (20)
BRIDGE NO. A6500

DESCRIPTION | DATE

MISSOURI HIGHWAYS AND TRANSPORTATION COMMISSION
105 WEST CAPITOL
JEFFERSON CITY, MO 65102
1-888-ASK-MODOT (1-888-275-6636)
HNTB
715 KIRK DRIVE
KANSAS CITY, MO 64105-1310
TELEPHONE (816) 472-1201
CERTIFICATE OF AUTHORITY NO. 001270

FINAL PLANS
REV.

Detailed JUL 2009
Checked JUL 2009

Note: This drawing is not to scale. Follow dimensions.

T:\de-proj\St_Louis_City\Construction\J6I0984\Asbuilts\Bridge\B_A6500_090-205_J6I0984_090.dgn
9:07:18 AM

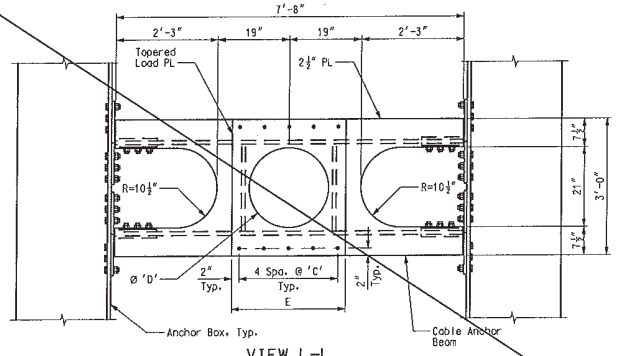

VIEW L-L

Cable & Shear Studs not shown for clarity

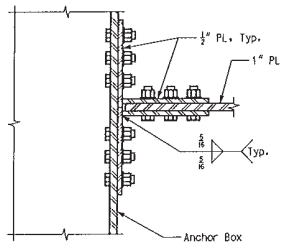

SECTION Q-Q

TABLE OF DIMENSIONS						
PIER 11	CABLE	ANGLE 'A'	ANGLE 'B'	SPACING 'C'	DIA. 'D'	WIDTH 'E'
	1	28°07'18.1"	0°52'58.0"	6½"	21"	2'-6"
	2	28°07'48.2"	0°53'38.5"	6½"	21"	2'-6"
	3	27°59'49.3"	0°52'56.3"	5¾"	17½"	2'-3"
	4	27°59'59.0"	0°53'36.5"	5¾"	17½"	2'-3"
	31	27°17'34.6"	0°52'14.9"	5¾"	17½"	2'-3"
	32	26°09'18.0"	0°49'25.2"	5¾"	17½"	2'-3"
	33	25°22'27.6"	0°49'09.2"	6½"	21"	2'-6"
	34	24°29'43.4"	0°47'08.3"	6½"	21"	2'-6"
PIER 12	CABLE	ANGLE 'A'	ANGLE 'B'	SPACING 'C'	DIA. 'D'	WIDTH 'E'
	1	28°24'41.9"	0°55'50.5"	6½"	21"	2'-6"
	2	28°24'05.7"	0°56'19.9"	6½"	21"	2'-6"
	3	28°15'02.4"	0°55'27.1"	5¾"	17½"	2'-3"
	4	28°17'33.4"	0°56'30.5"	5¾"	17½"	2'-3"
	31	27°17'29.6"	0°52'14.1"	5¾"	17½"	2'-3"
	32	26°11'02.2"	0°49'42.2"	5¾"	17½"	2'-3"
	33	25°23'09.4"	0°49'16.0"	6½"	21"	2'-6"
	34	24°32'22.2"	0°47'34.0"	6½"	21"	2'-6"

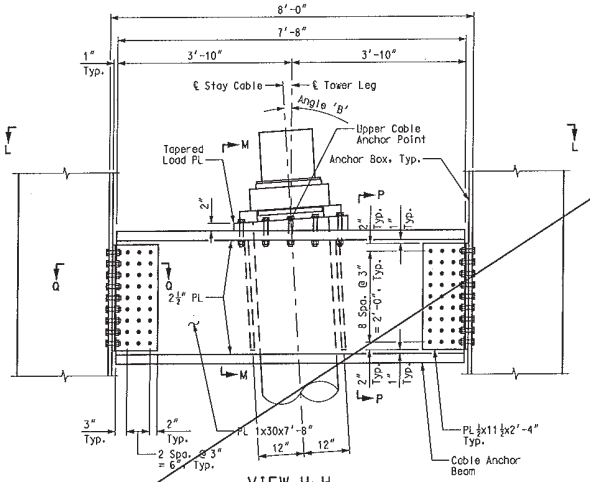

VIEW H-H

Cable 1 shown. Cables 2, 3, 4, 31, 32, 33 & 34 similar. Shear Studs not shown for clarity

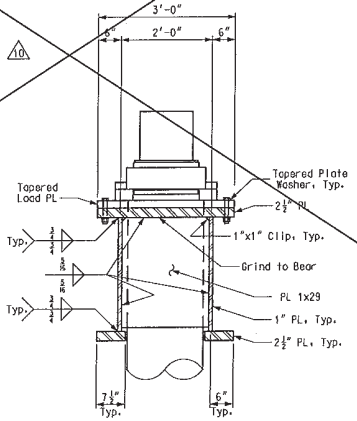

SECTION M-M

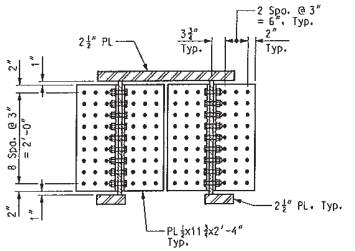

SECTION P-P

Notes:

For location of View H-H, see Sheet BR88.

The Cable Anchor Beams and Connection Plates shall be composed of A709 Gr. HPS50W-2 material.

The Cable Anchor Beams and Connection Plates shall be treated as Fracture Critical.

Bolts shall be 1" diameter ASTM A325, Type 3 with complimentary circular flat washer and heavy hex nut.

Tapered plate washers shall be made from A709, Gr. 50W material.

The contact surfaces of the Load Plate (top and bottom) and top flange of the Cable Anchor Beam shall be in accordance with Section 1080.3.3.13 of the MoDOT Standard Specifications for Highway Construction. These surfaces shall be flat and in full contact with each other and the Cable Anchor Plate. The surface roughness of these surfaces shall not exceed 250 micro-inches.

The dimensions associated with the Tower Cable Anchorage System as shown in these Plans are based on the VSL SSI 2000 Stay Cable System. Should another Stay Cable System be furnished, the Contractor is responsible for revising the Tower Cable Anchorage System to suit the furnished Stay Cable System. The revised Tower Cable Anchorage System is subject to review and approval by the Engineer.

All costs associated with the materials, fabrication and installation of the Tower Anchorage System shall be included in the pay item "Fabricated Structural Low Alloy Steel (Tower Anchor Box) A709, Gr. HPS50W". This shall include the Anchor Boxes, Shear Connectors, Cable Anchor Beams, Connection Plates, Load Plates and all fasteners.

For location of Angle 'A', see Sheet No. BR88.

TOWER CABLE ANCHORAGE DETAILS - PIERS 11 & 12

DATE 9/23/11
ROUTE I-70 | STATE MO/IL
DISTRICT 6 | SHEET NO. BR91
COUNTY ST. LOUIS CITY - MO ST. CLAIR - IL
JOB NO. J6I0984
CONTRACT ID. 091208-601
PROJECT NO. I-70-9 (20)
BRIDGE NO. A6500

DATE	DESCRIPTION
9-23-11	⚠ Sheet deleted

MISSOURI HIGHWAYS AND TRANSPORTATION COMMISSION
105 WEST CAPITOL
JEFFERSON CITY, MO 65102
1-888-ASK-MODOT (1-888-275-6636)

HNTB
715 KIRK DRIVE
KANSAS CITY, MO 64105-1310
TEL: (816) 472-1201
CERTIFICATE OF AUTHORITY NO. 001270

FINAL PLANS

REV.

Detailed JUL 2009
Checked JUL 2009

Note: This drawing is not to scale. Follow dimensions.

T:\de-proj\St_Louis_City\Construction\J6I0984\Asbuilts\Bridge\B_A6500_091-205_J6I0984_091_REV010.dgn

9:07:43 AM

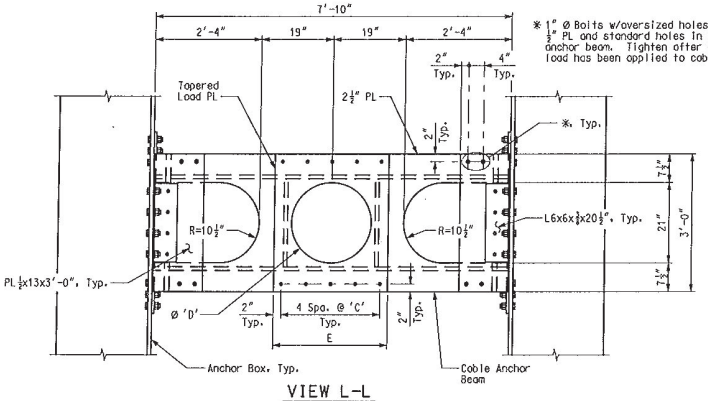

VIEW L-L

Cable & Shear Studs not shown for clarity

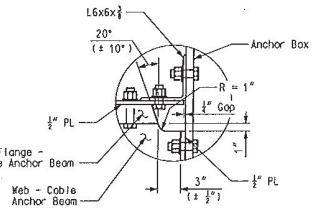

DETAIL Q

TABLE OF DIMENSIONS						
	CABLE	ANGLE 'A'	ANGLE 'B'	SPACING 'C'	DIA. 'D'	WIDTH 'E'
PIER 11	1	28°07'18.1"	0°52'58.0"	6½"	21"	2'-6"
	2	28°07'48.2"	0°53'36.5"	6½"	21"	2'-6"
	3	27°59'49.3"	0°52'56.3"	5¾"	17⅛"	2'-3"
	4	27°59'59.0"	0°53'36.5"	5¾"	17⅛"	2'-3"
	31	27°17'34.6"	0°52'14.9"	5¾"	17⅛"	2'-3"
	32	26°09'18.0"	0°49'25.2"	5¾"	17⅛"	2'-3"
	33	25°22'27.6"	0°49'09.2"	6½"	21"	2'-6"
	34	24°29'43.4"	0°47'08.3"	6½"	21"	2'-6"
PIER 12	CABLE	ANGLE 'A'	ANGLE 'B'	SPACING 'C'	DIA. 'D'	WIDTH 'E'
	1	28°24'41.9"	0°55'50.5"	6½"	21"	2'-6"
	2	28°24'05.7"	0°56'19.9"	6½"	21"	2'-6"
	3	28°15'02.4"	0°55'27.1"	5¾"	17⅛"	2'-3"
	4	28°17'33.4"	0°56'30.5"	5¾"	17⅛"	2'-3"
	31	27°17'29.6"	0°52'14.1"	5¾"	17⅛"	2'-3"
	32	26°11'02.2"	0°49'42.2"	5¾"	17⅛"	2'-3"
	33	25°23'09.4"	0°49'16.0"	6½"	21"	2'-6"
	34	24°32'22.2"	0°47'34.0"	6½"	21"	2'-6"

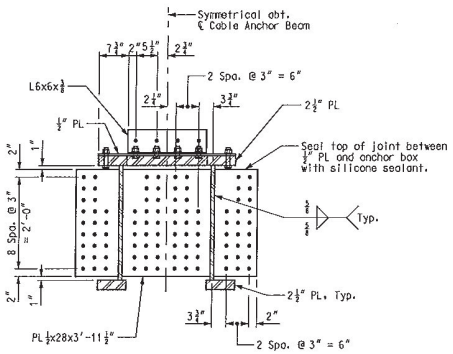

SECTION P-P

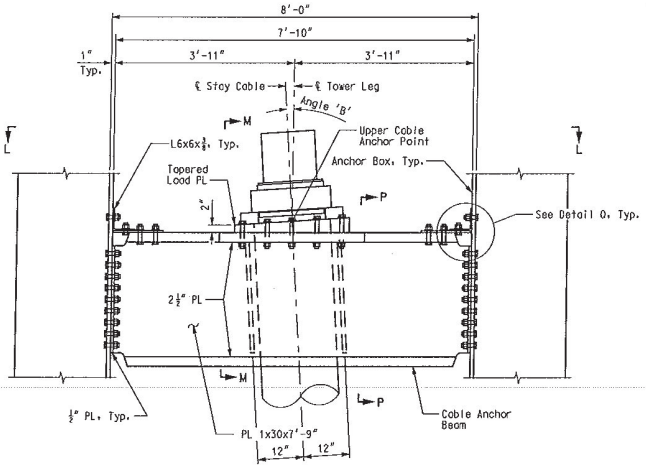

VIEW H-H

Cable 1 shown. Cables 2, 3, 4, 31, 32, 33 & 34 similar. Shear Studs not shown for clarity

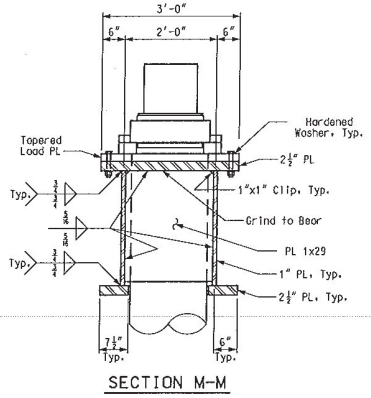

SECTION M-M

Notes:

For location of View H-H, see Sheet BR88.

The Cable Anchor Beams and Connection Plates shall be composed of A709 Gr. HPS50WF-2 material.

The Cable Anchor Beams and Connection Plates shall be treated as Fracture Critical.

Bolts shall be 1" diameter ASTM A325, Type 3 with complimentary circular flat washer and heavy hex nut.

Tapered plate washers shall be made from A709, Gr. 50W material.

The cope in the cable anchor beam web and flange shall be made in accordance with AWS D1.5, Article 3.2.4 and 3.2.2.

Silicone sealant shall be TREMCO Spectrum 1 with TREMprime non-porous primer, or approved equal.

Sealant shall be applied after cables have been installed and loaded with dead load.

The contact surfaces of the Load Plate (top and bottom) and top flange of the Cable Anchor Beam shall be in accordance with Section 1080.3.3.13 of the MoDOT Standard Specifications for Highway Construction. These surfaces shall be flat and in full contact with each other and the Cable Anchor Plate. The surface roughness of these surfaces shall not exceed 250 micro-inches.

The dimensions associated with the Tower Cable Anchorage System as shown in these Plans are based on the VSL SSI 2000 Stay Cable System. Should another Stay Cable System be furnished, the Contractor is responsible for revising the Tower Cable Anchorage System to suit the furnished Stay Cable System. The revised Tower Cable Anchorage System is subject to review and approval by the Engineer.

All costs associated with the materials, fabrication and installation of the Tower Anchorage System shall be included in the pay item "Fabricated Structural Low Alloy Steel (Tower Anchor Box) A709, Gr. HPS50W". This shall include the Anchor Boxes, Shear Connectors, Cable Anchor Beams, Connection Plates, Load Plates and all fasteners.

For location of Angle 'A', see Sheet No. BR86.

10 TOWER CABLE ANCHORAGE DETAILS - PIERS 11 & 12

DATE 9/23/11
ROUTE I-70 STATE MO/IL
DISTRICT 6 SHEET NO. BR91A
COUNTY ST. LOUIS CITY - MO ST. CLAIR - IL
JOB NO. J6I0984
CONTRACT ID. 091208-601
PROJECT NO. I-70-9 (20)
BRIDGE NO. A6500

DESCRIPTION: 10 Sheet added
DATE: 9-23-11

MISSOURI HIGHWAYS AND TRANSPORTATION COMMISSION
105 WEST CAPITOL
JEFFERSON CITY, MO 65102
1-888-ASK-MODOT (1-888-275-6636)

HNTB
715 KIRK DRIVE
KANSAS CITY, MO 64105-1310
TELEPHONE (816) 472-1201
CERTIFICATE OF AUTHORITY NO. 001270

FINAL PLANS

REV.

Detailed JUL 2009
Checked JUL 2009

Note: This drawing is not to scale. Follow dimensions.

Sheet No. 91A of 205

T:\de-proj\St_Louis_City\Construction\J6I0984\Asbuilts\Bridge\B_A6500_091-205_J6I0984_091A_REV010.dgn

9:10:17 AM

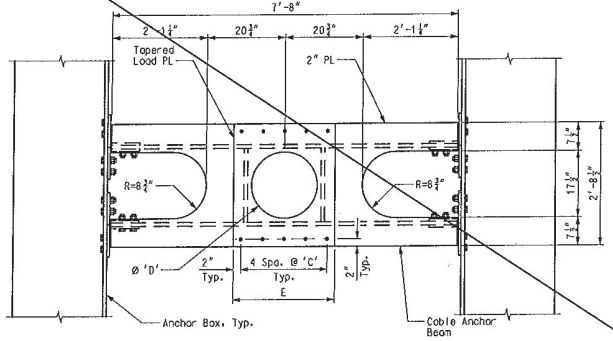

VIEW R-R

Cable & Shear Studs not shown for clarity

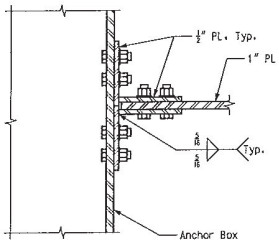

SECTION U-U

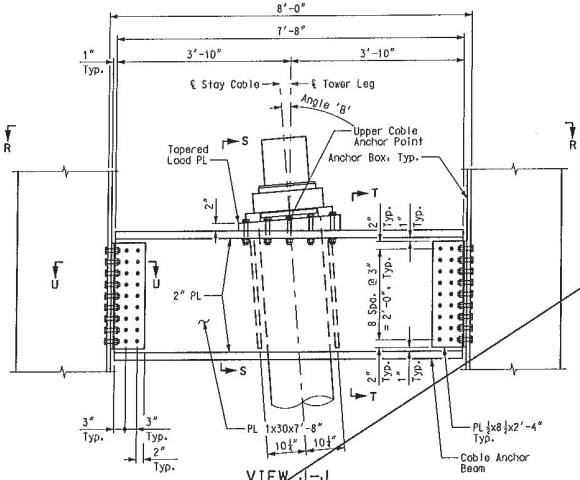

VIEW J-J

Cable 5 shown. Cables 6-13 & 22-30 similar. Shear Studs not shown for clarity

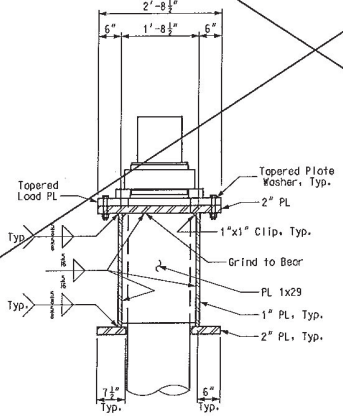

SECTION S-S

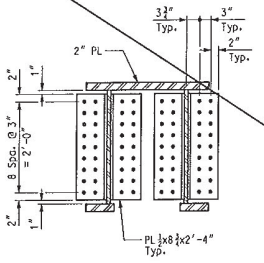

SECTION T-T

TABLE OF DIMENSIONS						
PIER 11	CABLE	ANGLE 'A'	ANGLE 'B'	SPACING 'C'	DIA. 'D'	WIDTH 'E'
	5	29°18'59.2"	0°56'54.9"	5¾"	17½"	2'-3"
	6	30°51'56.0"	1°01'09.9"	5¾"	17½"	2'-3"
	7	32°35'01.3"	1°05'25.7"	5¾"	17½"	2'-3"
	8	34°31'26.0"	1°09'50.4"	5¾"	17½"	2'-3"
	9	36°42'44.1"	1°14'07.7"	5¼"	17"	2'-1"
	10	39°18'36.7"	1°19'15.1"	5¼"	17"	2'-1"
	11	42°25'24.4"	1°25'23.6"	4¾"	15"	1'-11"
	12	46°13'41.6"	1°33'13.0"	4¾"	15"	1'-11"
	13	50°47'48.8"	1°41'48.3"	4¾"	15"	1'-11"
	22	49°39'43.7"	1°36'59.8"	4¾"	15"	1'-11"
	23	45°05'27.8"	1°28'37.1"	4¾"	15"	1'-11"
	24	41°16'24.1"	1°20'39.8"	4¾"	15"	1'-11"
	25	38°12'04.6"	1°14'51.8"	5¼"	17"	2'-1"
	26	35°33'51.1"	1°09'10.6"	5¼"	17"	2'-1"
	27	33°27'05.2"	1°05'30.2"	5¾"	17½"	2'-3"
	28	31°33'03.5"	1°01'19.3"	5¾"	17½"	2'-3"
	29	29°54'27.7"	0°57'38.5"	5¾"	17½"	2'-3"
	30	28°27'56.5"	0°54'17.6"	5¾"	17½"	2'-3"
PIER 12	CABLE	ANGLE 'A'	ANGLE 'B'	SPACING 'C'	DIA. 'D'	WIDTH 'E'
	5	29°33'47.9"	0°59'22.6"	5¾"	17½"	2'-3"
	6	31°01'27.4"	1°02'45.7"	5¾"	17½"	2'-3"
	7	32°43'27.9"	1°06'51.5"	5¾"	17½"	2'-3"
	8	34°38'55.6"	1°11'07.6"	5¾"	17½"	2'-3"
	9	36°45'24.1"	1°14'35.6"	5¼"	17"	2'-1"
	10	39°21'59.5"	1°19'51.4"	5¼"	17"	2'-1"
	11	42°26'08.2"	1°25'31.7"	4¾"	15"	1'-11"
	12	46°13'57.1"	1°33'16.0"	4¾"	15"	1'-11"
	13	50°47'51.1"	1°41'48.6"	4¾"	15"	1'-11"
	22	49°40'48.3"	1°37'13.0"	4¾"	15"	1'-11"
	23	45°05'05.6"	1°28'32.9"	4¾"	15"	1'-11"
	24	41°15'57.7"	1°20'34.9"	4¾"	15"	1'-11"
	25	38°11'42.5"	1°14'47.9"	5¼"	17"	2'-1"
	26	35°33'46.0"	1°09'09.7"	5¼"	17"	2'-1"
	27	33°28'32.3"	1°05'45.1"	5¾"	17½"	2'-3"
	28	31°32'37.6"	1°01'14.9"	5¾"	17½"	2'-3"
	29	29°53'32.8"	0°57'29.3"	5¾"	17½"	2'-3"
	30	28°27'04.2"	0°54'09.0"	5¾"	17½"	2'-3"

Notes:
For Location of View J-J, see Sheet BR88.
For addional notes, see Sheet No. BR91.

TOWER CABLE ANCHORAGE DETAILS - PIERS 11 & 12

DATE 9/23/11
ROUTE I-70 STATE MO/IL
DISTRICT 6 SHEET NO. BR92
COUNTY ST. LOUIS CITY - MO ST. CLAIR - IL
JOB NO. J6I0984
CONTRACT ID. 091208-601
PROJECT NO. I-70-9 (20)
BRIDGE NO. A6500

DESCRIPTION: 10 Sheet colored
DATE: 5-23-11

MISSOURI HIGHWAYS AND TRANSPORTATION COMMISSION
105 WEST CAPITOL
JEFFERSON CITY, MO 65102
1-888-ASK-MODOT (1-888-275-6636)

HNTB
715 KIRK DRIVE
KANSAS CITY, MO 64105-1310
(816) 472-1201
CERTIFICATE OF AUTHORITY NO. 001270

FINAL PLANS

Detailed JUL 2009
Checked JUL 2009

Note: This drawing is not to scale. Follow dimensions.

Sheet No. 92 of 205

I:\de-proj\St_Louis_City\Construction\J6I0984\Asbuilts\Bridge\B_A6500_092-205_J6I0984_092_REV010.dgn

9:08:53 AM

REV.

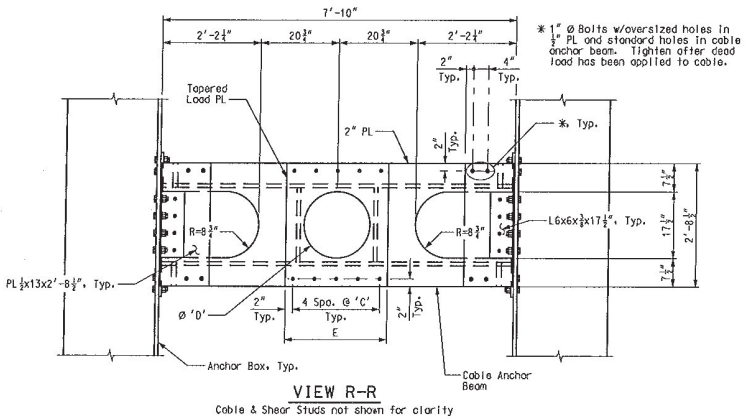

VIEW R-R

Cable & Shear Studs not shown for clarity

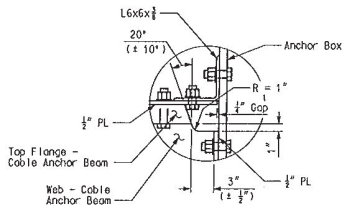

DETAIL U

TABLE OF DIMENSIONS						
PIER 11	CABLE	ANGLE 'A'	ANGLE 'B'	SPACING 'C'	DIA. 'D'	WIDTH 'E'
	5	29°18'59.2"	0°56'54.9"	5¾"	17½"	2'-3"
	6	30°51'56.0"	1°01'09.9"	5¾"	17½"	2'-3"
	7	32°35'01.3"	1°05'25.7"	5¾"	17½"	2'-3"
	8	34°31'26.0"	1°09'50.4"	5¾"	17½"	2'-3"
	9	36°42'44.1"	1°14'07.7"	5¼"	17"	2'-1"
	10	39°18'36.7"	1°19'15.1"	5¼"	17"	2'-1"
	11	42°25'24.4"	1°25'23.6"	4¾"	15"	1'-11"
	12	46°13'41.6"	1°33'13.0"	4¾"	15"	1'-11"
	13	50°47'49.8"	1°41'48.3"	4¾"	15"	1'-11"
	22	49°39'43.7"	1°36'59.8"	4¾"	15"	1'-11"
	23	45°05'27.8"	1°28'37.1"	4¾"	15"	1'-11"
	24	41°16'24.1"	1°20'39.8"	4¾"	15"	1'-11"
	25	38°12'04.6"	1°14'51.8"	5¼"	17"	2'-1"
	26	35°33'51.1"	1°09'10.6"	5¼"	17"	2'-1"
	27	33°27'05.2"	1°05'30.2"	5½"	17½"	2'-3"
	28	31°33'03.5"	1°01'19.3"	5½"	17½"	2'-3"
	29	29°54'27.7"	0°57'38.5"	5½"	17½"	2'-3"
	30	28°27'56.5"	0°54'17.6"	5½"	17½"	2'-3"
PIER 12	CABLE	ANGLE 'A'	ANGLE 'B'	SPACING 'C'	DIA. 'D'	WIDTH 'E'
	5	29°33'47.9"	0°59'22.6"	5¾"	17½"	2'-3"
	6	31°01'27.4"	1°02'45.7"	5¾"	17½"	2'-3"
	7	32°43'27.9"	1°06'51.5"	5¾"	17½"	2'-3"
	8	34°38'55.6"	1°11'07.6"	5½"	17½"	2'-3"
	9	36°45'24.1"	1°14'35.6"	5¼"	17"	2'-1"
	10	39°21'59.5"	1°19'51.4"	5¼"	17"	2'-1"
	11	42°26'08.2"	1°25'31.7"	4¾"	15"	1'-11"
	12	46°13'57.1"	1°33'16.0"	4¾"	15"	1'-11"
	13	50°47'51.1"	1°41'48.6"	4¾"	15"	1'-11"
	22	49°40'48.3"	1°37'13.0"	4¾"	15"	1'-11"
	23	45°05'05.6"	1°28'32.9"	4¾"	15"	1'-11"
	24	41°15'57.7"	1°20'34.9"	4¾"	15"	1'-11"
	25	38°11'42.5"	1°14'47.9"	5¼"	17"	2'-1"
	26	35°33'46.0"	1°09'09.7"	5¼"	17"	2'-1"
	27	33°28'32.3"	1°05'45.1"	5¼"	17½"	2'-3"
	28	31°32'37.6"	1°01'14.9"	5¾"	17½"	2'-3"
	29	29°53'32.8"	0°57'29.3"	5¾"	17½"	2'-3"
	30	28°27'04.2"	0°54'09.0"	5¾"	17½"	2'-3"

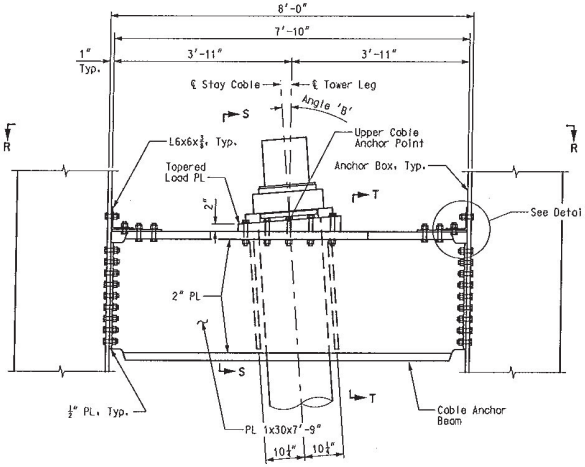

VIEW J-J

Cable 5 shown. Cables 6-13 & 22-30 similar. Shear Studs not shown for clarity

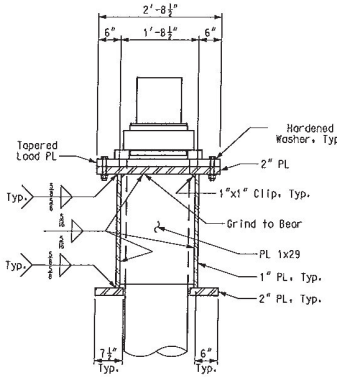

SECTION S-S

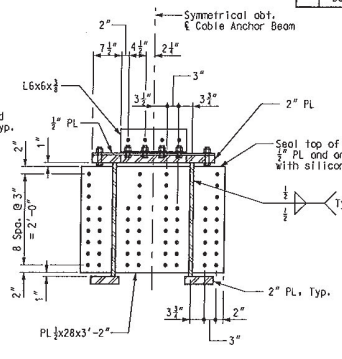

SECTION T-T

Notes:
For Location of View J-J, see Sheet BR88.
For additional notes, see Sheet No. BR91A.

⚠10 TOWER CABLE ANCHORAGE DETAILS - PIERS 11 & 12

Detailed JUL 2009
Checked JUL 2009

Note: This drawing is not to scale. Follow dimensions.

Sheet No. 92A of 205

T:\de-proj\St_Louis_City\Construction\J6I0984\Asbuilts\Bridge\B_A6500_092-205_J6I0984_092A_REV010.dgn

9:19:05 AM

DATE 9/23/11
ROUTE I-70 | STATE MO/IL
DISTRICT 6 | SHEET NO. BR92A
COUNTY ST. LOUIS CITY - MO ST. CLAIR - IL
JOB NO. J6I0984
CONTRACT ID. 091208-601
PROJECT NO. I-70-9 (20)
BRIDGE NO. A6500

REV.	DESCRIPTION	DATE
10	Sheet added	9-23-11

MISSOURI HIGHWAYS AND TRANSPORTATION COMMISSION
105 WEST CAPITOL
JEFFERSON CITY, MO 65102
1-888-ASK-MODOT (1-888-275-6636)

HNTB
715 KIRK DRIVE
KANSAS CITY, MO 64105-1310
TELEPHONE (816) 472-1201
CERTIFICATE OF AUTHORITY NO. 001270

FINAL PLANS

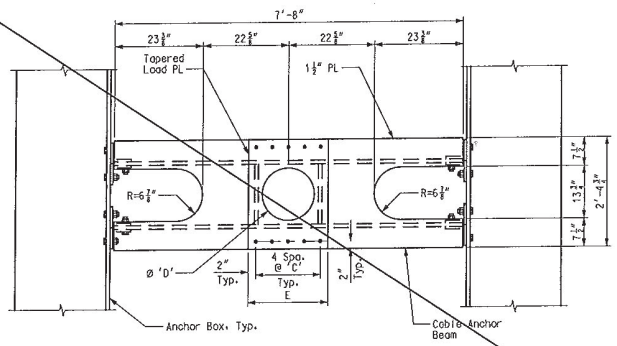

VIEW V-V

Cable & Shear Studs not shown for clarity

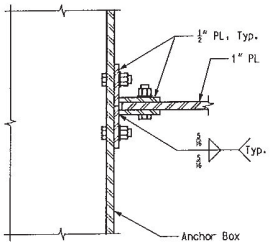

SECTION Y-Y

TABLE OF DIMENSIONS						
	CABLE	ANGLE 'A'	ANGLE 'B'	SPACING 'C'	DIA. 'D'	WIDTH 'E'
PIER 11	14	56°17'32.3"	1°50'35.3"	4¼"	13¾"	1'-9"
	15	62°43'21.6"	2°01'35.1"	4¼"	13¾"	1'-9"
	16	70°42'18.7"	2°13'55.4"	4¼"	13¾"	1'-9"
	17	80°18'44.3"	2°24'23.7"	4¼"	13¾"	1'-9"
	18	79°58'46.3"	2°23'49.2"	4¼"	13¾"	1'-9"
	19	70°03'03.9"	2°11'34.1"	4¼"	13¾"	1'-9"
	20	61°54'05.9"	1°59'09.4"	4¼"	13¾"	1'-9"
	21	55°18'05.2"	1°46'59.4"	4¼"	13¾"	1'-9"
	CABLE	ANGLE 'A'	ANGLE 'B'	SPACING 'C'	DIA. 'D'	WIDTH 'E'
PIER 12	14	56°17'33.3"	1°50'35.5"	4¼"	13¾"	1'-9"
	15	62°43'28.2"	2°01'36.9"	4¼"	13¾"	1'-9"
	16	70°42'08.5"	2°13'51.9"	4¼"	13¾"	1'-9"
	17	80°18'46.8"	2°24'25.4"	4¼"	13¾"	1'-9"
	18	79°58'42.0"	2°23'46.4"	4¼"	13¾"	1'-9"
	19	70°03'00.4"	2°11'32.9"	4¼"	13¾"	1'-9"
	20	61°53'32.6"	1°59'00.7"	4¼"	13¾"	1'-9"
	21	55°18'52.8"	1°47'10.1"	4¼"	13¾"	1'-9"

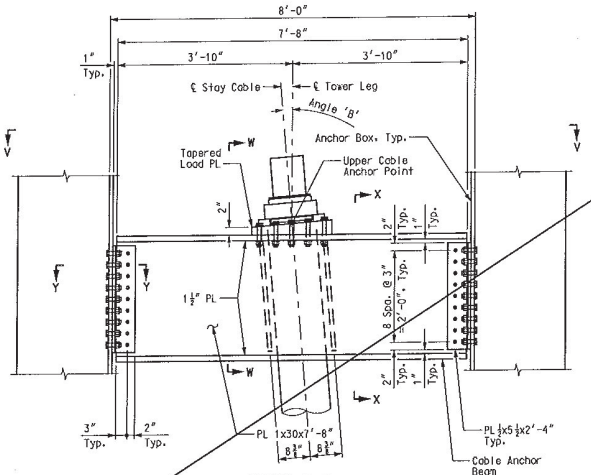

VIEW K-K

Cable 14 shown. Cables 15-17 & 18-21 similar. Shear Studs not shown for clarity

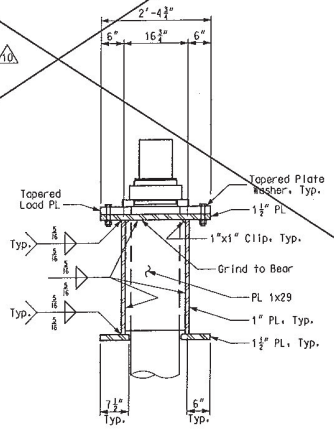

SECTION W-W

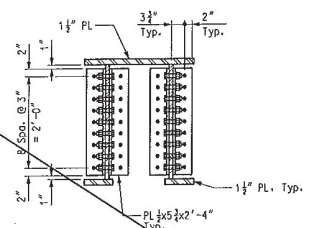

SECTION X-X

Notes:
For Location of View K-K, see Sheet BR89.
For additional notes, see Sheet No. BR91.

TOWER CABLE ANCHORAGE DETAILS - PIERS 11 & 12

DATE 9/23/11
ROUTE I-70 | STATE MO/IL
DISTRICT 6 | SHEET NO. BR93
COUNTY ST. LOUIS CITY - MO, ST. CLAIR - IL
JOB NO. J6I0984
CONTRACT ID. 091208-601
PROJECT NO. I-70-9 (20)
BRIDGE NO. A6500

DATE	DESCRIPTION
9-23-11	⚠10 Sheet deleted

MISSOURI HIGHWAYS AND TRANSPORTATION COMMISSION
105 WEST CAPITOL
JEFFERSON CITY, MO 65102
1-888-ASK-MODOT (1-888-275-6636)

HNTB
715 KIRK DRIVE
KANSAS CITY, MO 64105-1310
TELEPHONE (816) 472-1201
CERTIFICATE OF AUTHORITY NO. 001270

FINAL PLANS

Detailed JUL 2009
Checked JUL 2009

Note: This drawing is not to scale. Follow dimensions.

Sheet No. 93 of 205

I:\de-proj\St_Louis_City\Construction\J6I0984\Asbuilts\Bridge\B_A6500_093-205_J6I0984_093_REV010.dgn

9:09:42 AM

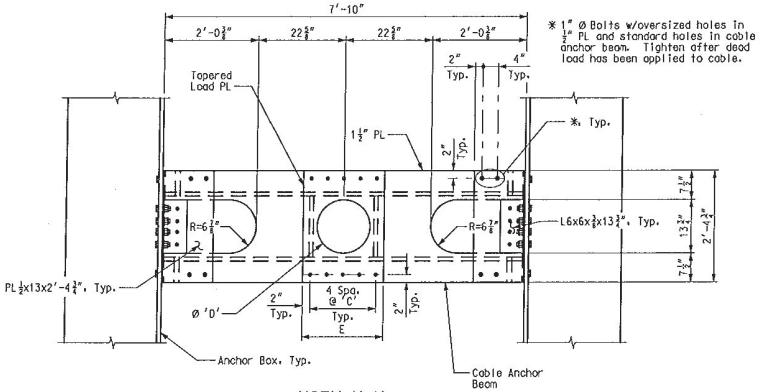

VIEW V-V

Cable & Shear Studs not shown for clarity

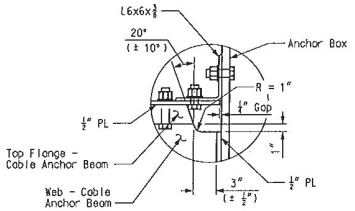

DETAIL Y

TABLE OF DIMENSIONS						
PIER 11	CABLE	ANGLE 'A'	ANGLE 'B'	SPACING 'C'	DIA. 'D'	WIDTH 'E'
	14	56°17'32.3"	1°50'35.3"	4¼"	13¾"	1'-9"
	15	62°43'21.6"	2°01'35.1"	4¼"	13¾"	1'-9"
	16	70°42'18.7"	2°13'55.4"	4¼"	13¾"	1'-9"
	17	80°18'44.3"	2°24'23.7"	4¼"	13¾"	1'-9"
	18	79°58'46.3"	2°23'49.2"	4¼"	13¾"	1'-9"
	19	70°03'03.9"	2°11'34.1"	4¼"	13¾"	1'-9"
	20	61°54'05.9"	1°59'09.4"	4¼"	13¾"	1'-9"
	21	55°18'05.2"	1°46'59.4"	4¼"	13¾"	1'-9"
PIER 12	CABLE	ANGLE 'A'	ANGLE 'B'	SPACING 'C'	DIA. 'D'	WIDTH 'E'
	14	56°17'33.3"	1°50'35.5"	4¼"	13¾"	1'-9"
	15	62°43'28.2"	2°01'36.9"	4¼"	13¾"	1'-9"
	16	70°42'08.5"	2°13'51.9"	4¼"	13¾"	1'-9"
	17	80°18'46.8"	2°24'25.4"	4¼"	13¾"	1'-9"
	18	79°58'42.0"	2°23'46.4"	4¼"	13¾"	1'-9"
	19	70°03'00.4"	2°11'32.9"	4¼"	13¾"	1'-9"
	20	61°53'32.6"	1°59'00.7"	4¼"	13¾"	1'-9"
	21	55°18'52.8"	1°47'10.1"	4¼"	13¾"	1'-9"

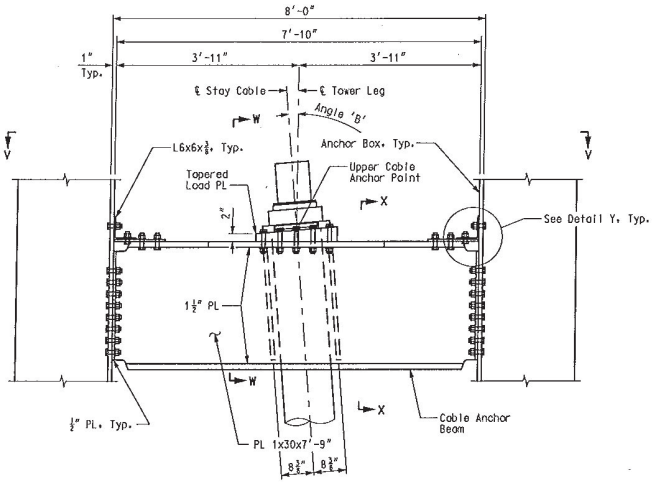

VIEW K-K

Cable 14 shown. Cables 15-17 & 18-21 similar. Shear Studs not shown for clarity

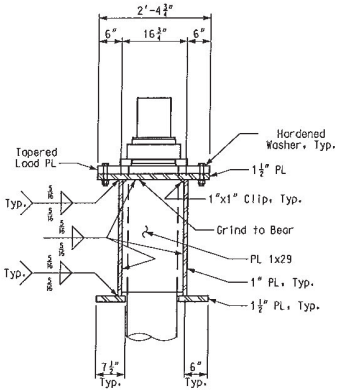

SECTION W-W

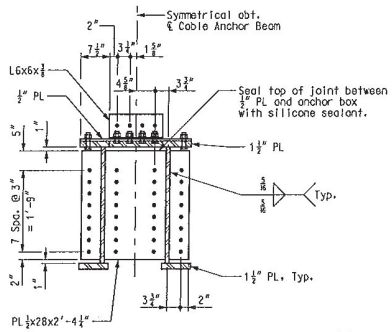

SECTION X-X

Notes:
For Location of View K-K, see Sheet BR89.
For additional notes, see Sheet No. BR91A.

⚠10 TOWER CABLE ANCHORAGE DETAILS - PIERS 11 & 12

Detailed JUL 2009
Checked JUL 2009

Note: This drawing is not to scale. Follow dimensions.

Sheet No. 93A of 205

T:\de-proj\St_Louis_City\Construction\J6I0984\Asbuilts\Bridge\B_A6500_093-205_J6I0984_093A_REV010.dgn

9:21:26 AM

DATE 9/23/11
ROUTE I-70 STATE MO/IL
DISTRICT 6 SHEET NO. BR93A
COUNTY ST. LOUIS CITY - MO ST. CLAIR - IL
JOB NO. J6I0984
CONTRACT ID. 091208-601
PROJECT NO. I-70-9 (20)
BRIDGE NO. A6500

DESCRIPTION	DATE
⚠ Sheet added	9-23-11

MISSOURI HIGHWAYS AND TRANSPORTATION COMMISSION
105 WEST CAPITOL
JEFFERSON CITY, MO 65102
1-888-ASK-MODOT (1-888-275-6636)

HNTB
715 KIRK DRIVE
KANSAS CITY, MO 64105-1310
TELEPHONE (816) 472-1201
CERTIFICATE OF AUTHORITY NO. 001270

FINAL PLANS

REV.

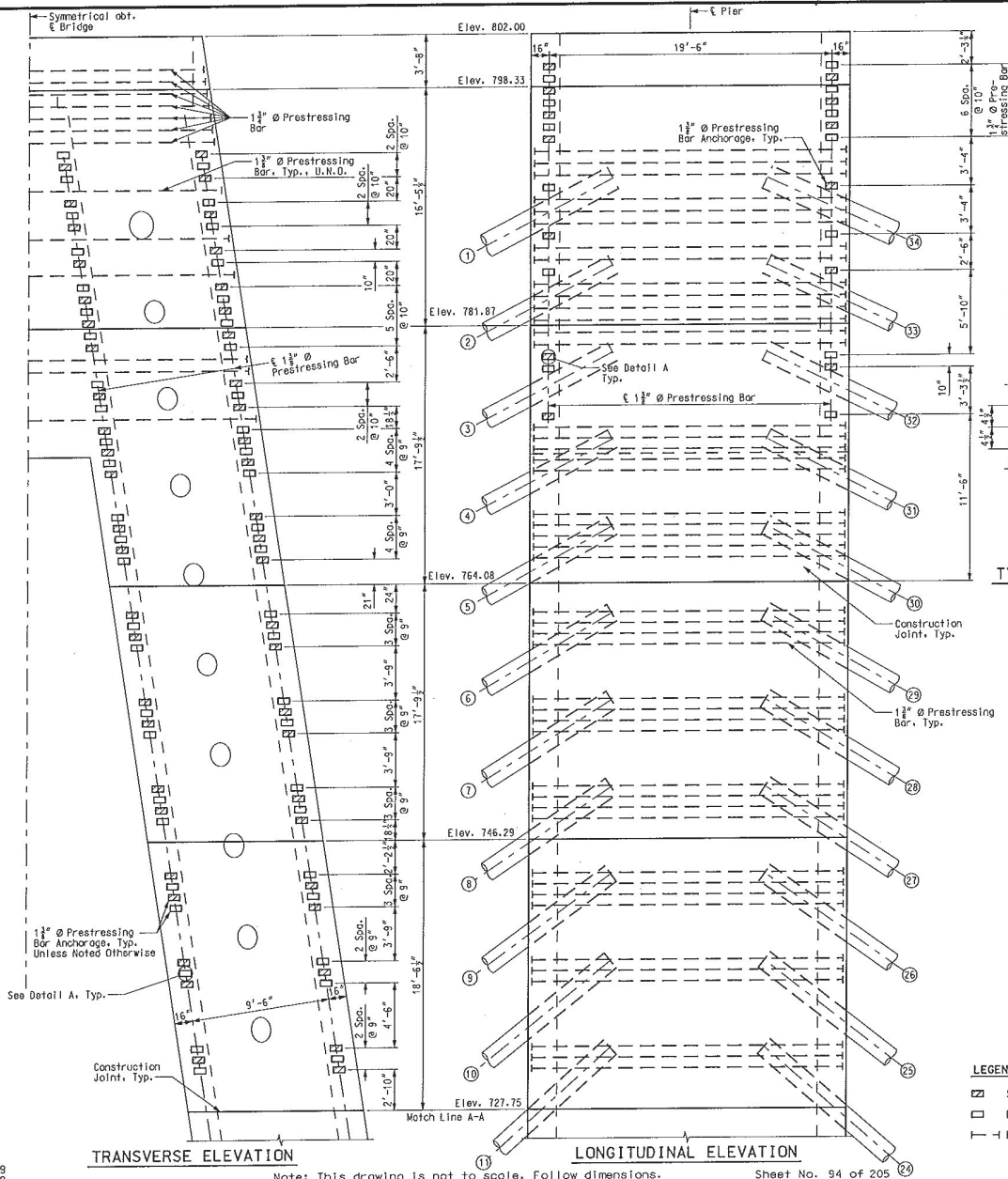

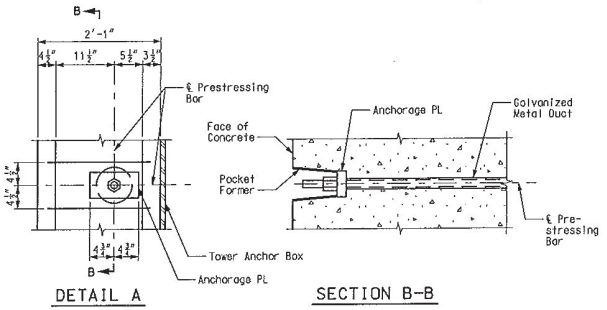

DETAIL A

SECTION B-B

TYPICAL POST-TENSIONING ANCHORAGE DETAIL

Notes:
(#) denotes Stay Cable Number.
Tower concrete at the prestressing bars attained a minimum compressive strength of 6000 psi prior to stressing bars.
Jacking stress in the prestressing bars was 108 ksi.
Anchorage plates were per approved shop drawings.
Effective stress in prestressing bars is 96-ksi.
Assumed friction loss coefficient is: 0.3
Assumed wobble coefficient is: k = 0.0002/ft.
Assumed anchor set is ¼".
Ducts were grouted or otherwise protected within 7 days of installing prestressing bars in duct.
All prestressing bars in the towers were stressed and grouted prior to installing stay cables or as approved by the engineer.
Ducts for prestressing bars were grouted following the jacking of the bars. Vent and grout tubes were provided as required to achieve grout distribution throughout the length of each duct.
After bar stressing and duct grouting operations are complete, the blockouts for the prestressing bars were filled with non-shrink grout. Grout shall attained a minimum compressive strength of 4000 psi.
The pay item "Post-Tensioning System at Towers" included the prestressing bars, ducts, grout, grout tubes, pocket formers, anchor plates, installing and stressing the prestressing bars, and grouting the ducts and blockouts.
For details of the Tower Anchor Box, see Sheet Nos. BR88 thru BR92.

LEGEND
Stressing End
Dead End
Presstressing Bar

TOWER CABLE ANCHORAGE POST-TENSIONING DETAILS - PIERS 11 & 12

DATE 8/20/09
ROUTE I-70 STATE MO/IL
DISTRICT 6 SHEET NO. BR94
COUNTY ST. LOUIS CITY - MO ST. CLAIR - IL
JOB NO. J6I0984
CONTRACT ID. 091208-601
PROJECT NO. I-70-9 (20)
BRIDGE NO. A6500

DESCRIPTION | DATE

MISSOURI HIGHWAYS AND TRANSPORTATION COMMISSION
105 WEST CAPITOL
JEFFERSON CITY, MO 65102
1-888-ASK-MODOT (1-888-275-6636)
HNTB
715 KIRK DRIVE
KANSAS CITY, MO 64105-1310
TELEPHONE (816) 472-1201
CERTIFICATE OF AUTHORITY NO. 001270

FINAL PLANS

Detailed JUL 2009
Checked JUL 2009

Note: This drawing is not to scale. Follow dimensions.

I:\de-proj\St_Louis_City\Construction\J6I0984\Asbuilts\Bridge\B_A6500_094-205_J6I0984_094.dgn 9:24:18 AM

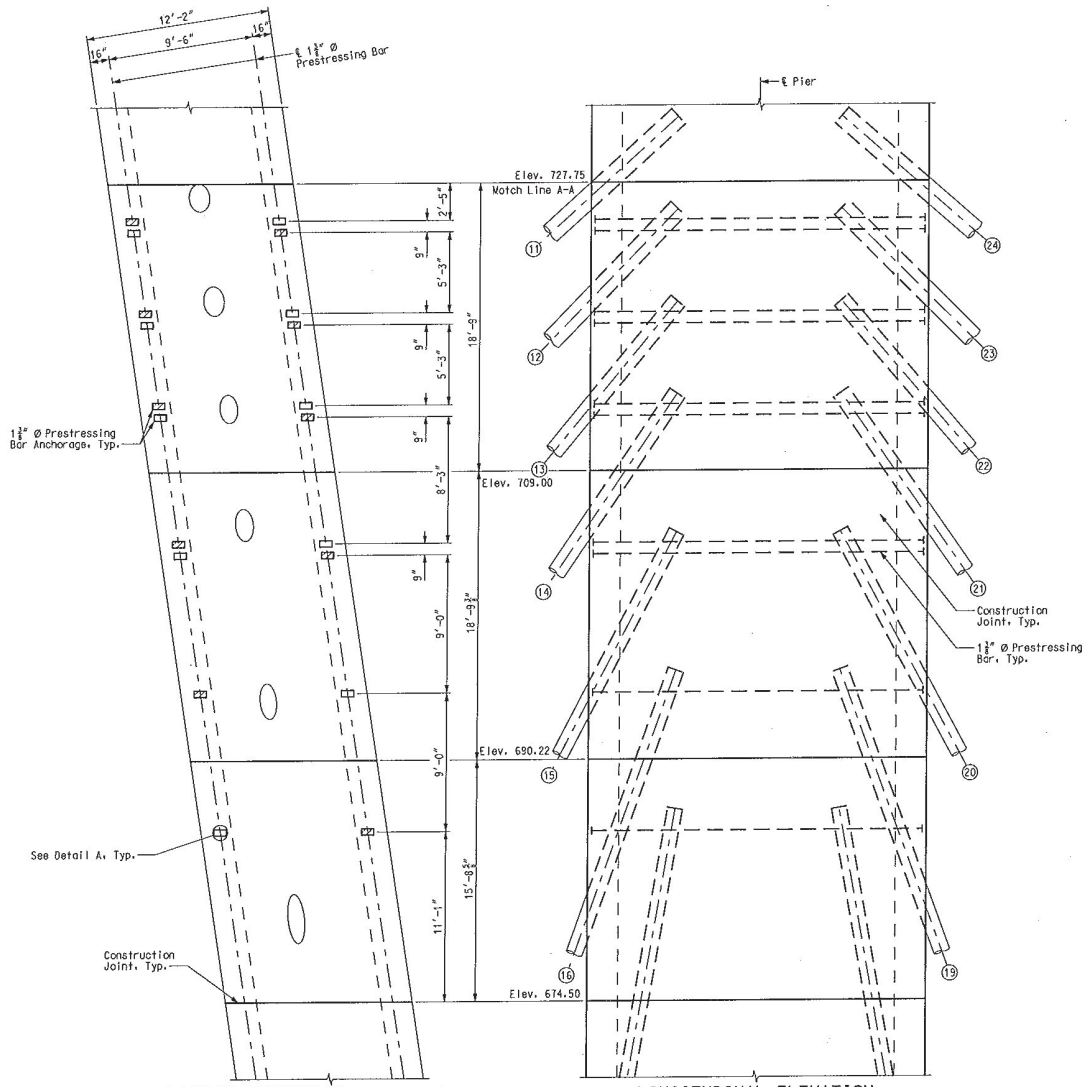

TRANSVERSE ELEVATION

LONGITUDINAL ELEVATION

Notes:
Ⓟ denotes Stay Cable Number.
For Tower Cable Anchorage Post-Tensioning notes, see Sheet No. BR94.
For Typical Post-Tensioning Anchorage Detail, see Sheet No. BR94.
For Detail A, see Sheet No. BR94.

LEGEND

- Stressing End
- Dead End
- Presstessing Bar

TOWER CABLE ANCHORAGE POST-TENSIONING DETAILS – PIERS 11 & 12

DATE 8/20/09
ROUTE I-70 | STATE MO/IL
DISTRICT 6 | SHEET NO. BR95
COUNTY ST. LOUIS CITY - MO, ST. CLAIR - IL
JOB NO. J6I0984
CONTRACT ID. 091208-601
PROJECT NO. I-70-9 (20)
BRIDGE NO. A6500

DESCRIPTION | DATE

MISSOURI HIGHWAYS AND TRANSPORTATION COMMISSION
MoDOT
105 WEST CAPITOL
JEFFERSON CITY, MO 65102
1-888-ASK-MODOT (1-888-275-6636)

HNTB
715 KIRK DRIVE
KANSAS CITY, MO 64105-1310
TELEPHONE (816) 472-1201
CERTIFICATE OF AUTHORITY NO. 001270

FINAL PLANS

REV.

Detailed JUL 2009
Checked JUL 2009

Note: This drawing is not to scale. Follow dimensions.

I:\de-proj\St_Louis_City\Construction\J6I0984\Asbuilts\Bridge\B_A6500_095-205_J6I0984_095.dgn

9:32:32 AM

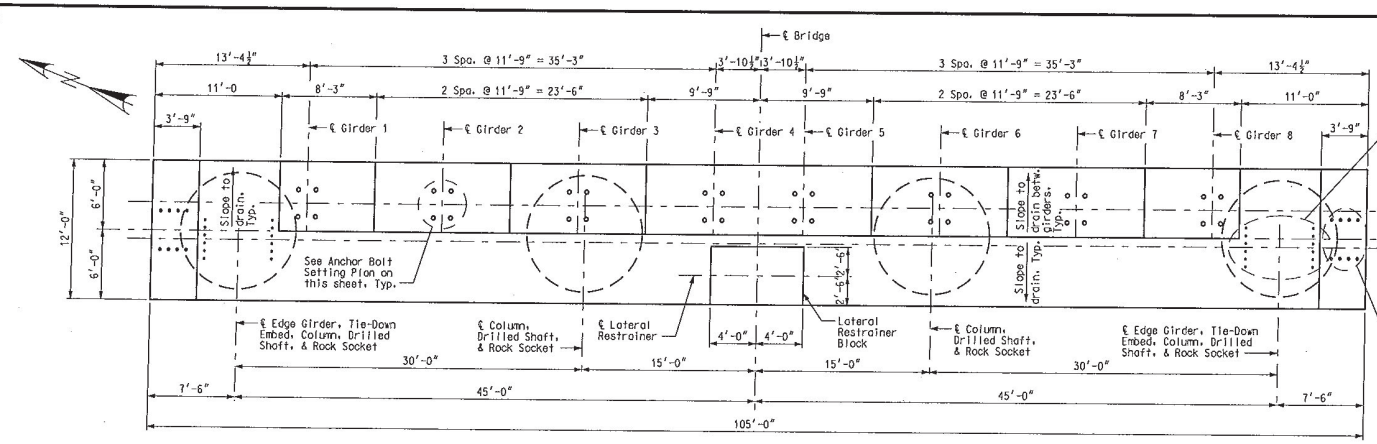

PLAN

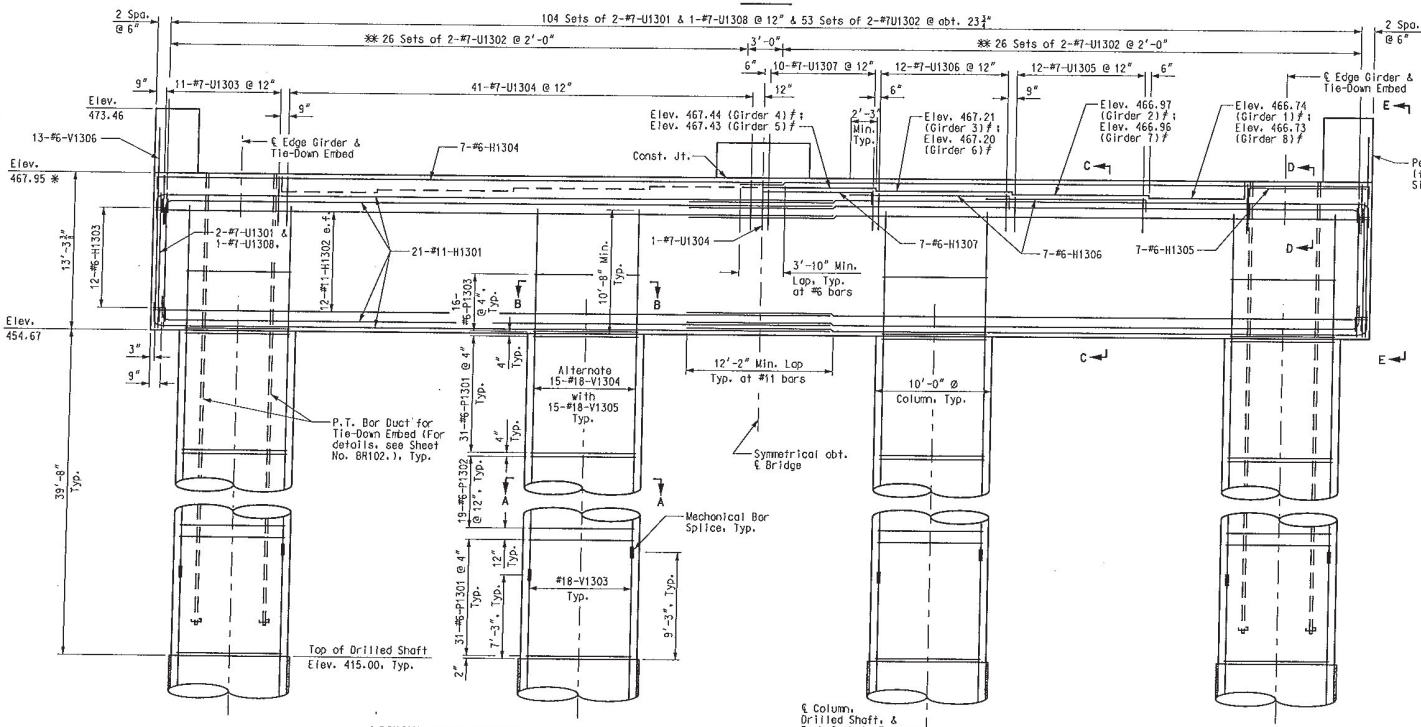

ELEVATION

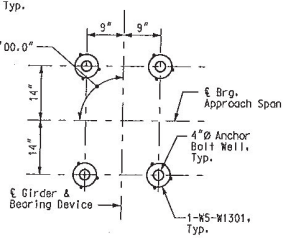

ANCHOR BOLT WELL SETTING PLAN

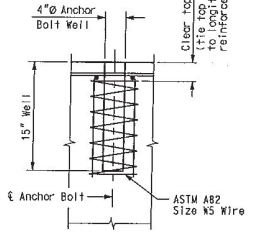

ANCHOR BOLT WELL DETAIL

Notes:
For details of Drilled Shaft, Rock Socket, Sections A-A thru D-D, & View E-E, see Sheet No. BR97.
All reinforcing bars in the capbeam were spaced to clear tie-down embed. For details of tie-down embed, see Sheet No. BR102.
All reinforcing bars in the top of the capbeam were spaced to clear anchor bolt wells for bearings by at least ½″.
Top and all faces of capbeam were sealed with Protective Coating in accordance with Sec. 711.3.2.
For details of lateral restrainer block and pedestals, see Sheet No. BR98.
* Elevation taken at ℄ Pier.
# Elevation taken at ℄ Brg. Approach Span.
** Spaced to clear column reinforcing and anchor bolt wells.

PIER 13

Detailed JUL 2009
Checked JUL 2009

Note: This drawing is not to scale. Follow dimensions.

Sheet No. 96 of 205

T:\de-proj\St_Louis_City\Construction\J6I0984\Asbuilts\Bridge\B_A6500_096-205_J6I0984_096.dgn 9:34:04 AM

DATE 5/17/10
ROUTE I-70 STATE MO/IL
DISTRICT 6 SHEET NO. BR96
COUNTY ST. LOUIS CITY - MO ST. CLAIR - IL
JOB NO. J6I0984
CONTRACT ID. 091208-601
PROJECT NO. I-70-9 (20)
BRIDGE NO. A6500

DATE	DESCRIPTION
5-17-10	Revised per A/C

MISSOURI HIGHWAYS AND TRANSPORTATION COMMISSION
105 WEST CAPITOL
JEFFERSON CITY, MO 65102
1-888-ASK-MODOT (1-888-275-6636)

HNTB
715 KIRK DRIVE
KANSAS CITY, MO 64105-1310
TELEPHONE (816) 472-1201
CERTIFICATE OF AUTHORITY NO. 001270

FINAL PLANS

REV.

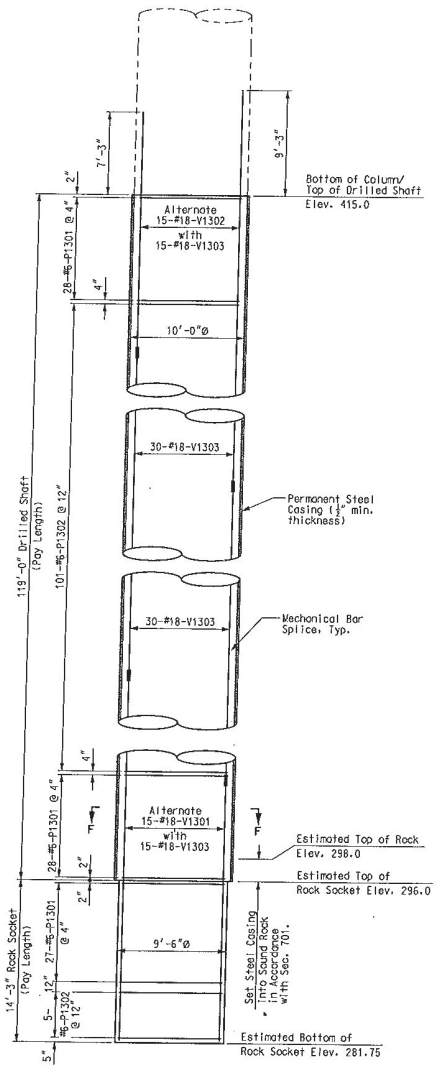

DRILLED SHAFT AND ROCK SOCKET ELEVATION

4

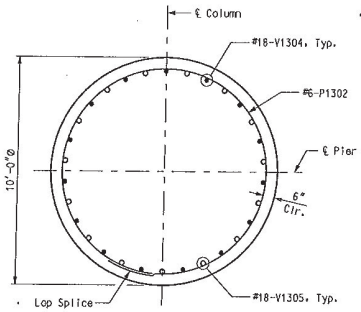

SECTION A-A

4

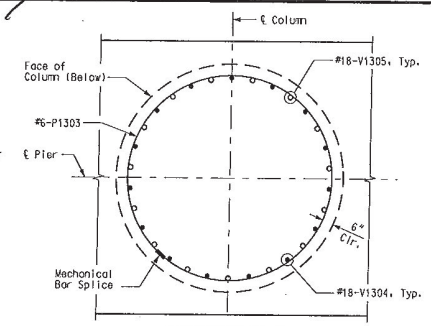

SECTION B-B

(Capbeam reinforcing not shown for clarity.)

4

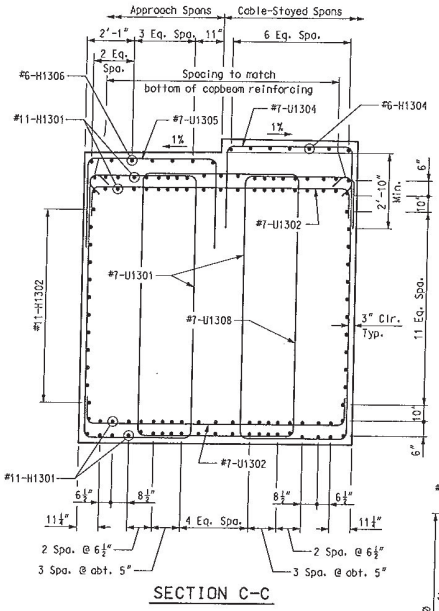

SECTION C-C

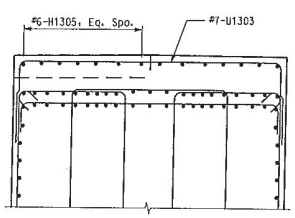

SECTION D-D

(Detail and dimensions are similar to Section C-C, except as noted.)

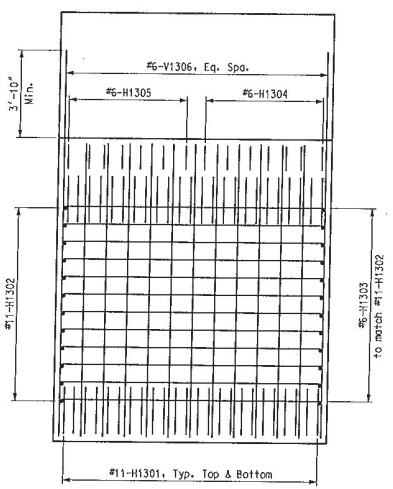

VIEW E-E

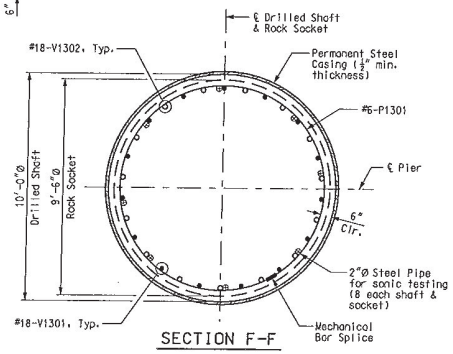

SECTION F-F

4

Notes:

For location of Sections A-A thru C-C, & View D-D, see Sheet No. BR96.

The contract unit price for "Drilled Shafts (10 ft. 0 in.)" and "Rock Sockets (9 ft. 6 in.)" was considered full compensation for construction of the drilled shafts and rock sockets including Class B2 Concrete within the pay limit shown. The contract unit price did not include reinforcing steel.

All reinforcement in drilled shafts and rock sockets was included in Substructure Quantities.

Concrete coring was not performed for these shafts.

Sonic logging testing was performed on all drilled shafts and rock sockets.

Rotated alternate hoops 180-degrees so that splices in adjacent bars are staggered.

4 For actual lengths of drilled shafts and rock sockets see sheet BR205.

PIER 13

Detailed JUL 2009
Checked JUL 2009

Note: This drawing is not to scale. Follow dimensions.

Sheet No. 97 of 205

T:\de-proj\St_Louis_City\Construction\J6I0984\Asbuilts\Bridge\B_A6500_097-205_J6I0984_097.dgn

9:17:41 AM

DATE 5/17/10
ROUTE I-70 | STATE MO/IL
DISTRICT 6 | SHEET NO. BR97
COUNTY ST. LOUIS CITY - MO ST. CLAIR - IL
JOB NO. J6I0984
CONTRACT ID. 091208-601
PROJECT NO. I-70-9 (20)
BRIDGE NO. A6500

DATE	DESCRIPTION
5-17-10	4 Revised per A/C

MISSOURI HIGHWAYS AND TRANSPORTATION COMMISSION
105 WEST CAPITOL
JEFFERSON CITY, MO 65102
1-888-ASK-MODOT (1-888-275-6636)

HNTB
715 KIRK DRIVE
KANSAS CITY, MO 64105-1310
TELEPHONE (816) 472-1201
CERTIFICATE OF AUTHORITY NO. 001270

FINAL PLANS

REV.

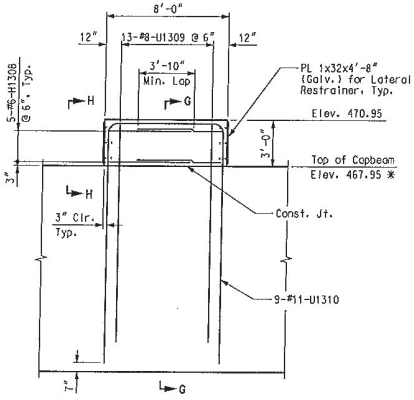

ELEVATION – LATERAL RESTRAINER BLOCK

(Capbeam reinforcing not shown for clarity.)

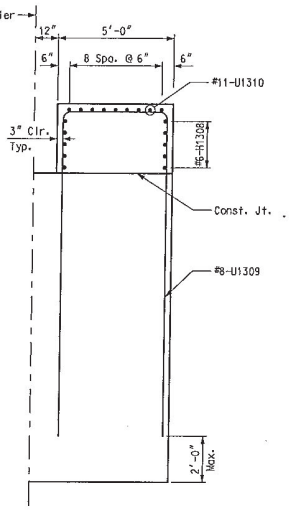

SECTION G-G

(Capbeam reinforcing not shown for clarity.)

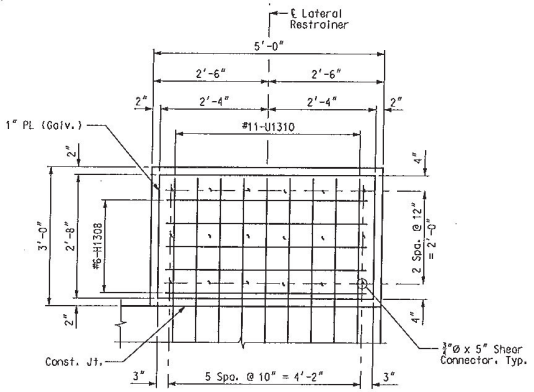

SECTION H-H

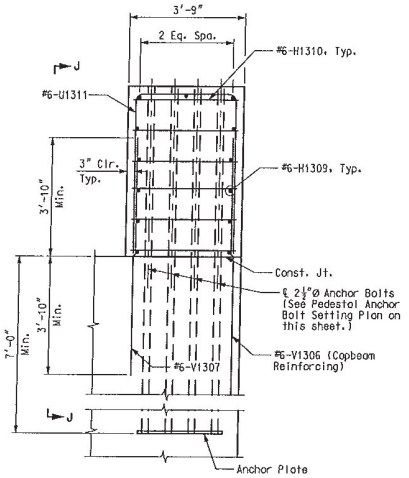

ELEVATION – PEDESTAL

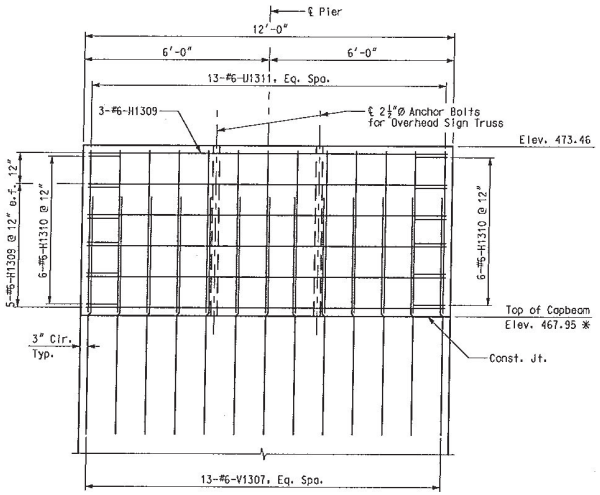

SECTION J-J

(Capbeam reinforcing not shown for clarity.)

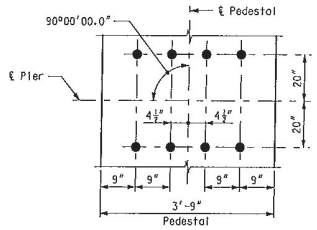

PEDESTAL ANCHOR BOLT SETTING PLAN

Notes:

For reinforcing in capbeam, see Sheet Nos. BR96 & BR97.
For details of Lateral Restrainer, see Sheet No. BR117.
For details of Overhead Sign Truss, see Signing Plans.
The cost of all labor and materials required to install the 1" galvanized plate was considered included in the pay item "Fabricated Structural Carbon Steel (Misc.)".
* Elevation taken at ℄ Pier.
Galvanized plate for Lateral Restrainer was galvanized in accordance with ASTM A123 after fabrication.

PIER 13

DATE 8/20/09
ROUTE I-70 | STATE MO/IL
DISTRICT 6 | SHEET NO. BR98
COUNTY ST. LOUIS CITY - MO, ST. CLAIR - IL
JOB NO. J6I0984
CONTRACT ID. 091208-601
PROJECT NO. I-70-9 (20)
BRIDGE NO. A6500

DESCRIPTION | DATE

MISSOURI HIGHWAYS AND TRANSPORTATION COMMISSION
105 WEST CAPITOL
JEFFERSON CITY, MO 65102
1-888-ASK-MODOT (1-888-275-6636)

HNTB
715 KIRK DRIVE
KANSAS CITY, MO 64105-1310
TELEPHONE (816) 472-1201
CERTIFICATE OF AUTHORITY NO. 001270

FINAL PLANS

REV.

Detailed JUL 2009
Checked JUL 2009

Note: This drawing is not to scale. Follow dimensions.

T:\de-proj\St_Louis_City\Construction\J6I0984\Asbuilts\Bridge\B_A6500_098-205_J6I0984_098.dgn 9:36:32 AM

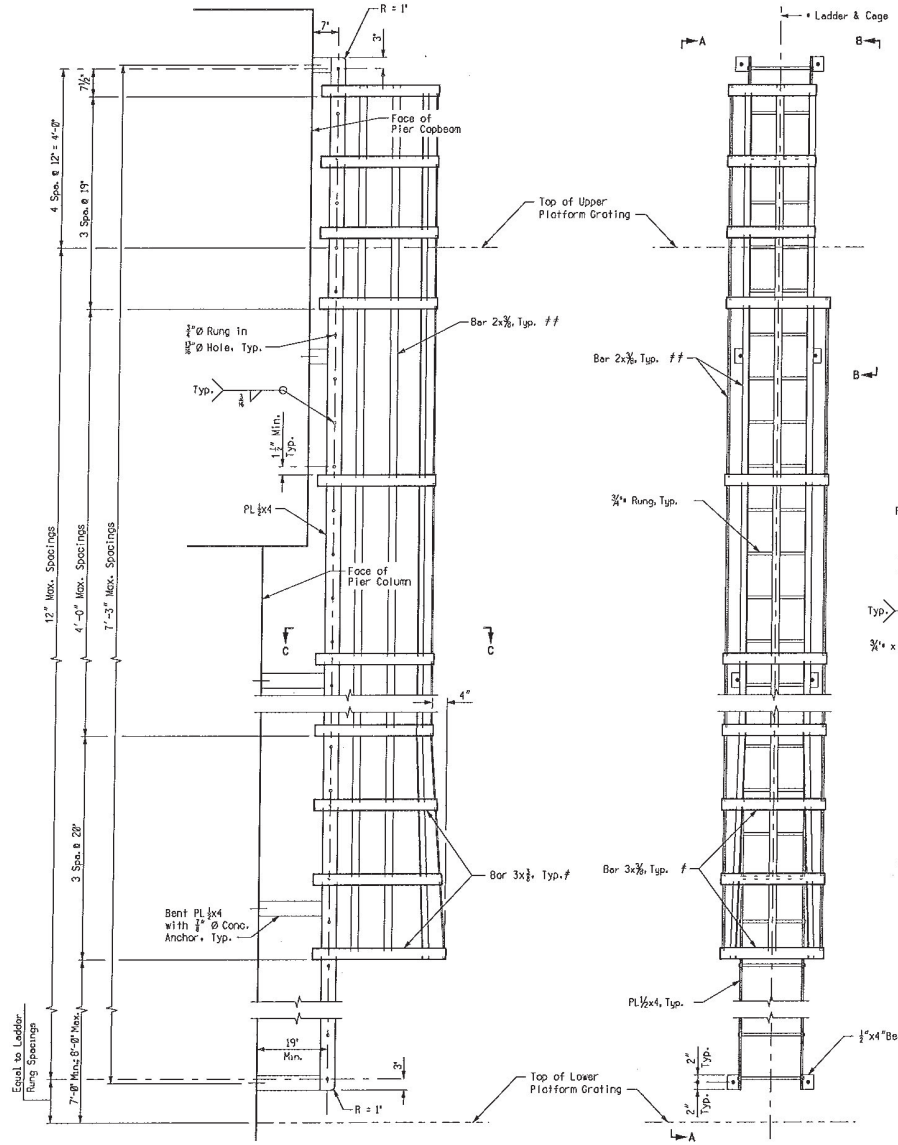

VIEW A-A

ELEVATION - LADDER AND CAGE

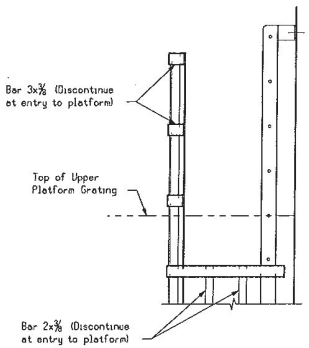

VIEW B-B

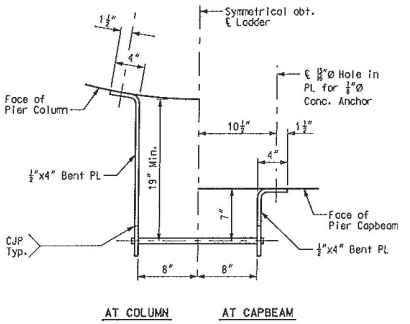

AT COLUMN AT CAPBEAM

BENT PL DETAIL

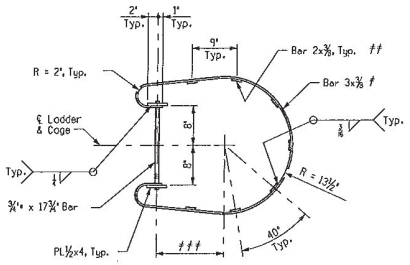

SECTION C-C

\# Two (2) uppermost hoop bars in ladder cage are discontinued at entry to platform.

\## Two (2) vertical bars in ladder cage are discontinued at nearest hoop beneath platform on side of platform entry.

13½" at top & intermediate hoop bars; 17½" at bottom hoop bars.

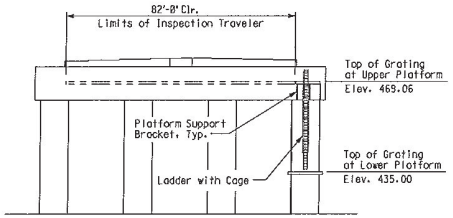

ELEVATION - INSPECTION TRAVELER ACCESS

(Looking Downstation at Pier 10)

Note:

Structural steel for ladders and cages has conformed to ASTM A789 Grade 36.

All ladder and cage material is galvanized in accordance with ASTM A123 after fabrication.

Holes in steel components for concrete anchors are appropriate for the anchor system selected by the Contractor.

Welding of the ladder and cage is in accordance with AWS D1.1, current edition.

Welding filler metal is matching.

Welds on ladder side rails are ground smooth.

Concrete anchors shall be Hilti HSL-3 anchors, or approved equal. Install anchors in accordance with manufacturer's recommendations.

For platform details, see Sheet Nos. BR128 and BR181.

Upper platform elevation based off assumed distance of 6.5' between bottom of floor beam and top of inspection traveler walkway. This elevation will need to be changed should the distance between the bottom of floor beam and top of inspection traveler walkway change, see Sheet No. BR178 for inspection traveler details.

INSPECTION TRAVELER ACCESS - PIER 10

DATE 8/20/09
ROUTE I-70 STATE MO/IL
DISTRICT 6 SHEET NO. BR99
COUNTY ST. LOUIS CITY - MO ST. CLAIR - IL
JOB NO. J6I0984
CONTRACT ID. 091208-601
PROJECT NO. I-70-9 (20)
BRIDGE NO. A6500

DESCRIPTION | DATE | REV.

MISSOURI HIGHWAYS AND TRANSPORTATION COMMISSION
105 WEST CAPITOL
JEFFERSON CITY, MO 65102
1-888-ASK-MODOT (1-888-275-6636)

HNTB
715 KIRK DRIVE
KANSAS CITY, MO 64105-1310
TELEPHONE (816) 472-1201
CERTIFICATE OF AUTHORITY NO. 001270

FINAL PLANS

Detailed JUL 2009
Checked JUL 2009

Note: This drawing is not to scale. Follow dimensions.

T:\de-proj\St_Louis_City\Construction\J6I0984\Asbuilts\Bridge\B_A6500_099-205_J6I0984_099.dgn 1:38:46 PM

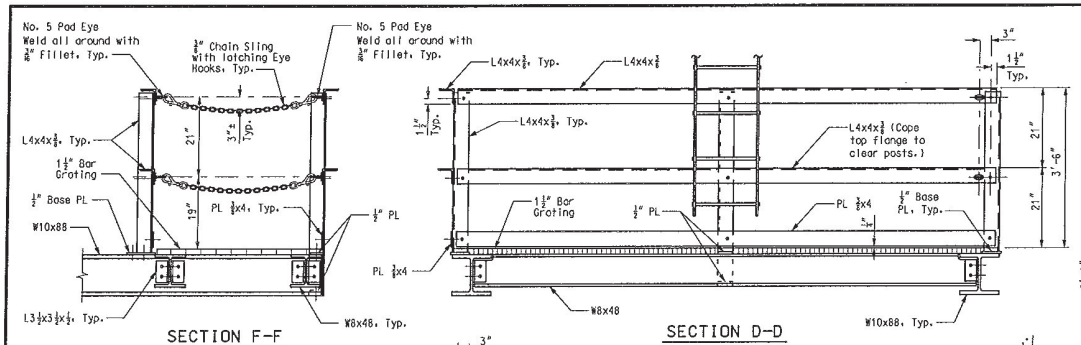

SECTION F-F

SECTION D-D

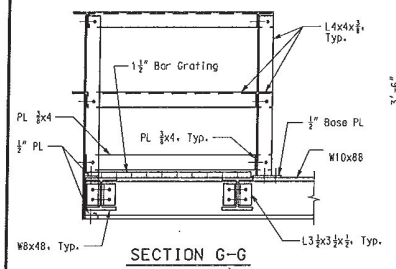

SECTION G-G

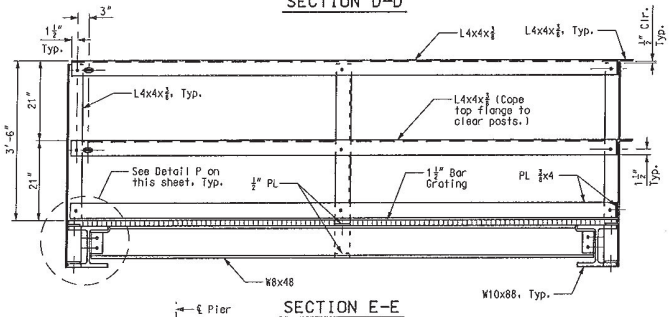

SECTION E-E

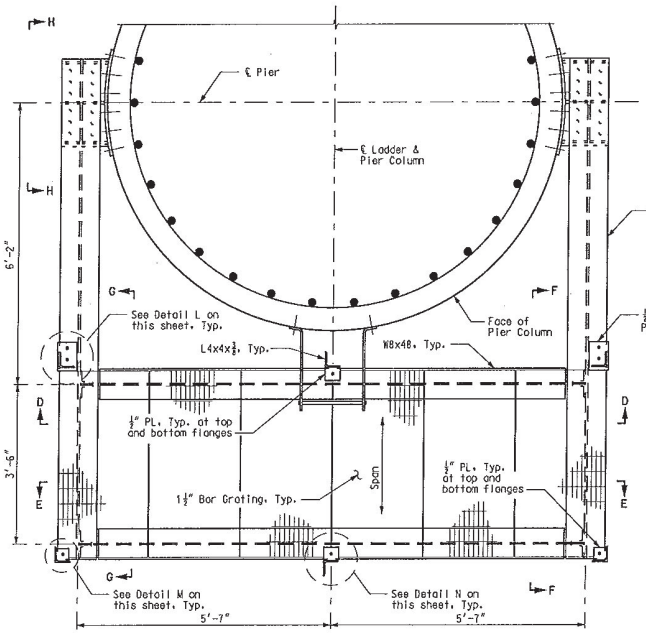

PLAN - LOWER PLATFORM

(Handrail not shown for clarity.)

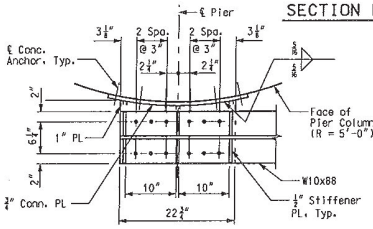

SECTION J-J

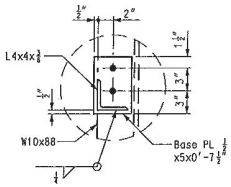

DETAIL L

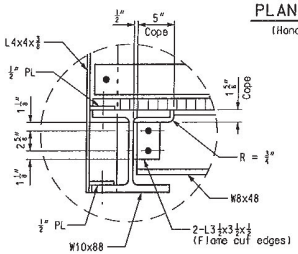

DETAIL P

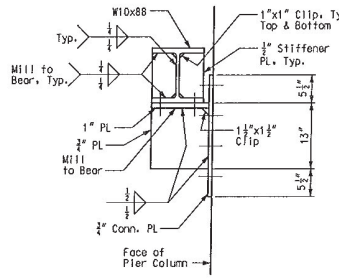

SECTION K-K

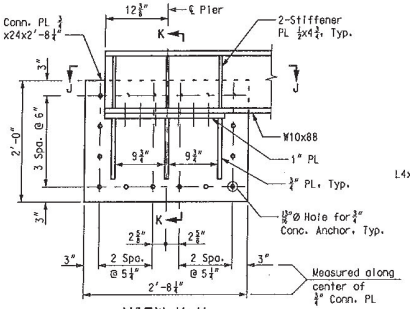

VIEW H-H

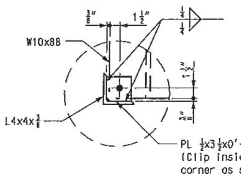

DETAIL M

(Detail shown at top flange of W10x88; detail at bottom flange is similar.)

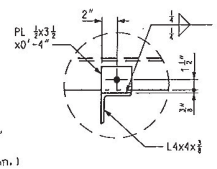

DETAIL N

(Detail shown at top flange of W10x88; detail at bottom flange is similar.)

Notes:

Structural steel for handrail was conform to ASTM A709 Grade 36.

Structural steel for platform was confirm to ASTM A709 Grade 50.

Holes in steel components for concrete anchors were appropriate for the anchor system selected by the Contractor.

All welding was in accordance with AWS D1.1, current edition.

Welding filler metal was matching.

Concrete anchors was Hilti HSL-3, length was per manufacturer's specification. Install anchors in accordance with manufacturer's recommendations.

Bolts connecting the platform members was ⅞" diameter ASTM A325, Type 1, hot-dip galvanized, with complimentory circular flat washer and heavy hex nut.

All handrail and platform material was galvanized in accordance with ASTM A123 after fabrication.

Grating was IKG Borden, Weldforged, Type WB, galvanized, Serrated Size 7(1½"x⅛" bars) with saddle clip fasteners, or approved equal. There were six grating panels per platform. Grating panels were of similar width. There were a minimum of six grating fasteners per panel. Install in accordance with manufacturer's recommendations.

Field drill holes in platform to accommodate grating fasteners.

¾" Chain Sling with latching eye hooks are Crosby Spectrum 8 with two S-325 Eye Hooks, or approved equal.

No. 5 Pad Eye is Crosby S-264, stock no. 1090820, or approved equal.

Epoxy anchor compound were Epcon G5 Epoxy or approved equal. Install in accordance with manufacturer's recommendations.

For location of platform and details of ladder, see Sheet No. BR99.

All costs associated with material, fabrication and installation of the Inspection Traveler Access system were included in the pay item, "Inspection Access".

INSPECTION TRAVELER ACCESS - PIER 10

Detailed JUL 2009
Checked JUL 2009

Note: This drawing is not to scale. Follow dimensions.

Sheet No. 100 of 205

T:\de-proj\St_Louis_City\Construction\J6I0984\Asbuilts\Bridge\B_A6500_100-205_J6I0984_100.dgn

1:40:11 PM

DATE 8/20/09
ROUTE I-70 | STATE MO/IL
DISTRICT 6 | SHEET NO. BR100
COUNTY ST. LOUIS CITY - MO ST. CLAIR - IL
JOB NO. J6I0984
CONTRACT ID. 091208-601
PROJECT NO. I-70-9 (20)
BRIDGE NO. A6500

DESCRIPTION | DATE | REV.

MISSOURI HIGHWAYS AND TRANSPORTATION COMMISSION
105 WEST CAPITOL
JEFFERSON CITY, MO 65102
1-888-ASK-MODOT (1-888-275-6636)

HNTB
715 KIRK DRIVE
KANSAS CITY, MO 64105-1310
TELEPHONE (816) 472-1201
CERTIFICATE OF AUTHORITY NO. 001270

FINAL PLANS

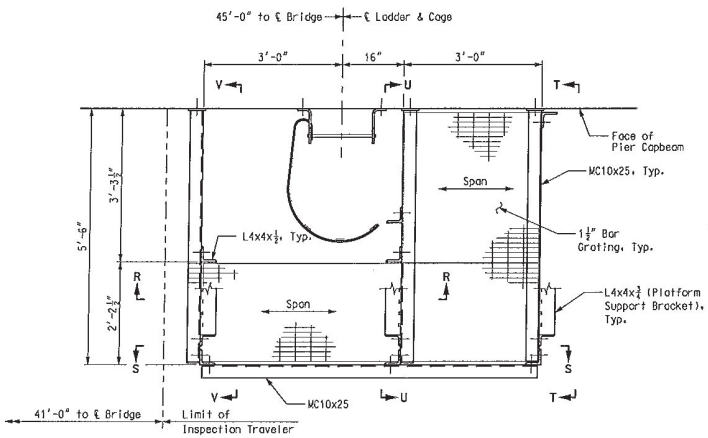

PLAN – UPPER PLATFORM

(Handrail not shown for clarity.)

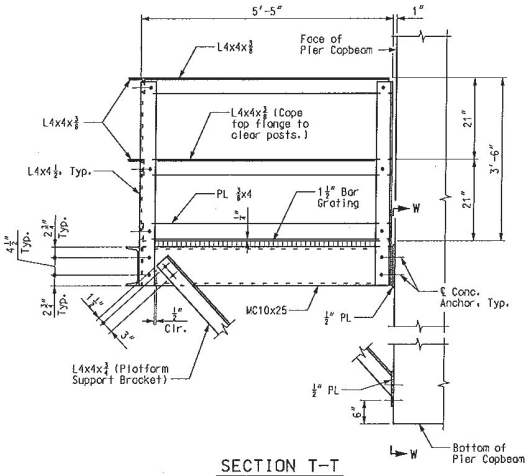

SECTION T–T

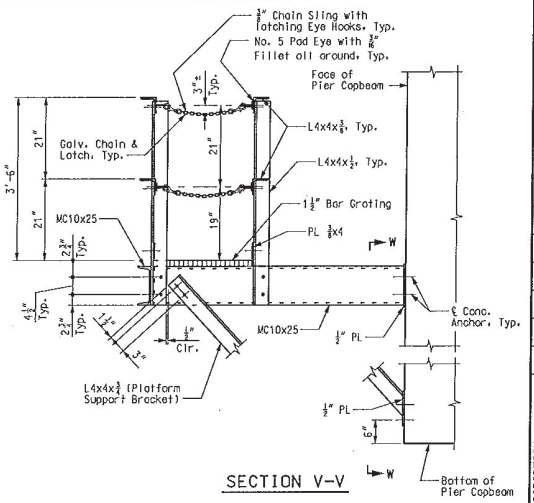

SECTION V–V

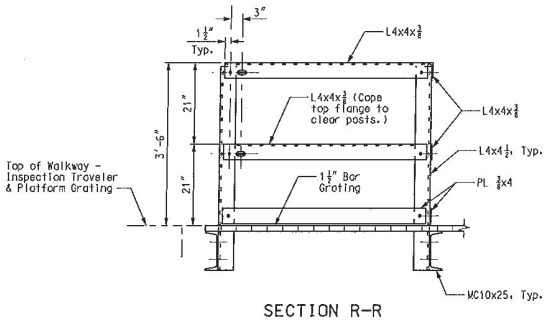

SECTION R–R

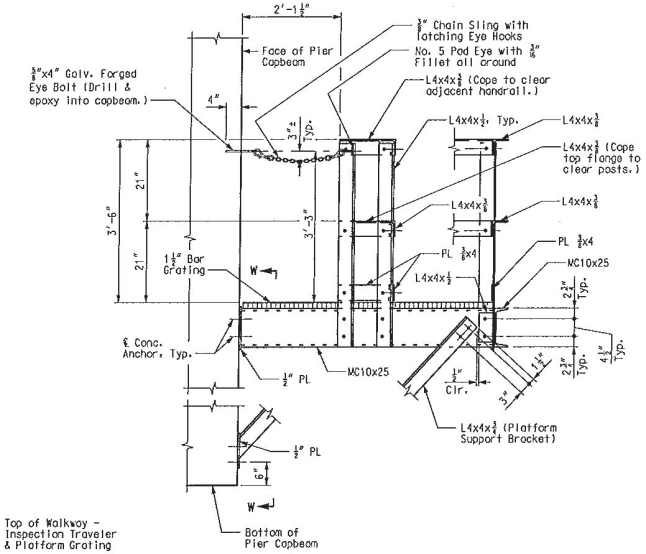

SECTION U–U

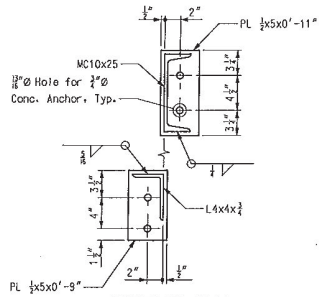

SECTION W–W

(Section shown at interior platform support bracket; section at exterior platform support bracket is similar.)

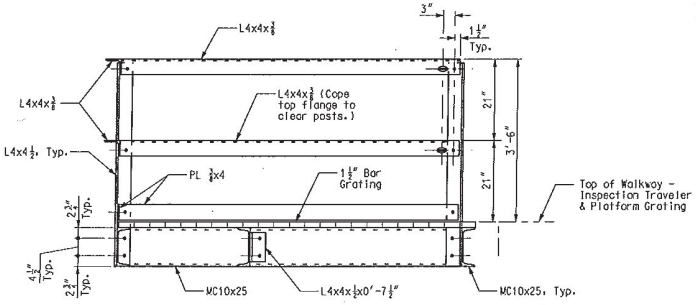

SECTION S–S

Notes:
For notes, see Sheet No. BR100.

INSPECTION TRAVELER ACCESS – PIER 10

Detailed JUL 2009
Checked JUL 2009

Note: This drawing is not to scale. Follow dimensions.

Sheet No. 101 of 205

DATE 8/20/09
ROUTE I-70 | STATE MO/IL
DISTRICT 6 | SHEET NO. BR101
COUNTY ST. LOUIS CITY – MO ST. CLAIR – IL
JOB NO. J6I0984
CONTRACT ID. 091208-601
PROJECT NO. I-70-9 (20)
BRIDGE NO. A6500

DESCRIPTION | DATE

MISSOURI HIGHWAYS AND TRANSPORTATION COMMISSION
105 WEST CAPITOL
JEFFERSON CITY, MO 65102
1-888-ASK-MODOT (1-888-275-6636)

HNTB
715 KIRK DRIVE
KANSAS CITY, MO 64105-1310
TELEPHONE (816) 472-1201
CERTIFICATE OF AUTHORITY NO. 001270

FINAL PLANS

REV.

I:\de-proj\St_Louis_City\Construction\J6I0984\Asbuilts\Bridge\B_A6500_101-205_J6I0984_101.dgn

9:44:36 AM

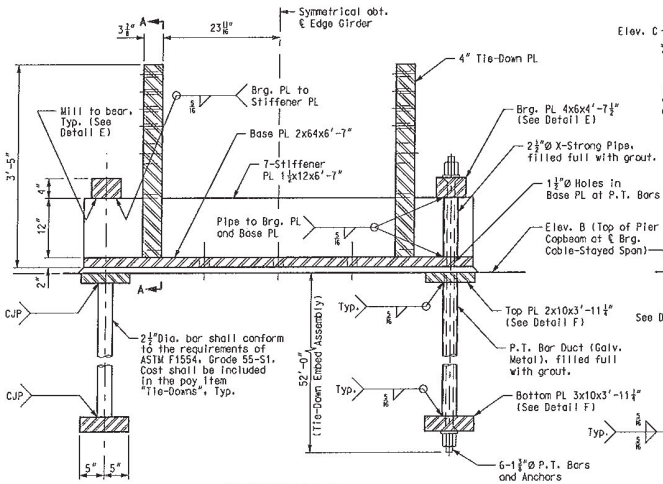

SECTION B-B

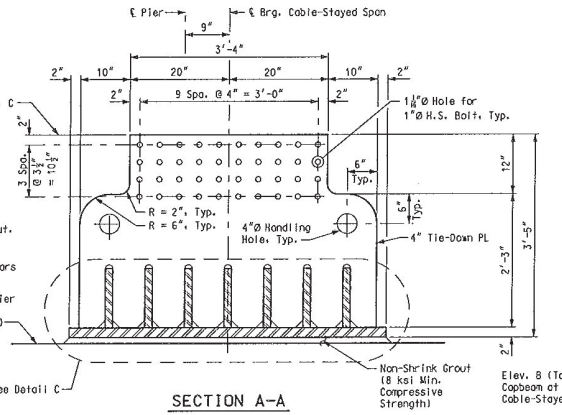

SECTION A-A

Note: 4" Brg. PL and post-tensioning bars beyond not shown for clarity.

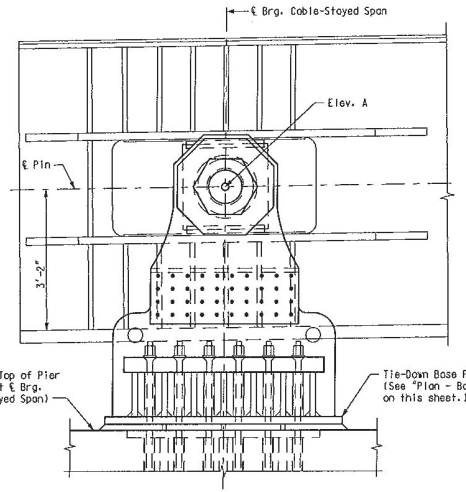

TIE-DOWN ELEVATION

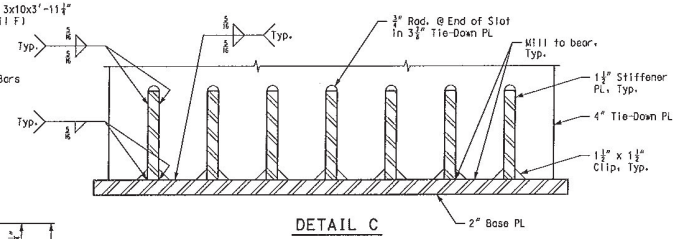

DETAIL C

TABLE OF ELEVATIONS			
LOCATION	ELEV. A	ELEV. B	ELEV. C
PIER 10	478.02	472.67	476.15
PIER 13	473.30	467.95	471.43

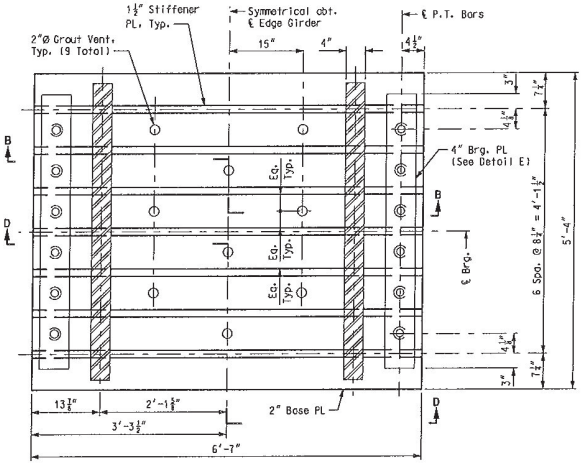

PLAN - BASE PL

Note: P.T. bar nut not shown for clarity.

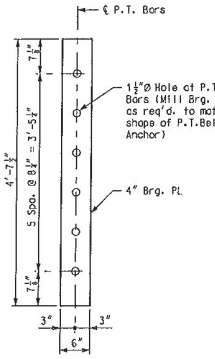

DETAIL E

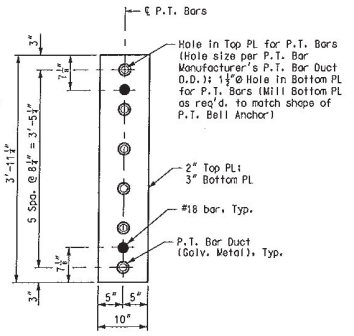

DETAIL F

Notes:

For Pier 10 and Pier 13 details, see Sheet Nos. BR22 & BR96.

For Section D-D, see Sheet No. BR103.

All structural steel used for the fabrication of the tie-down met the requirements of ASTM A709, Grade 50W unless noted otherwise.

For Edge Girder End Detail, see Sheet No. BR112.

Post-tensioning bars are stressed until all permanent counterweight has been installed. See Sheet Nos. BR179 thru BR183 for Suggested Erection Sequence.

Tie-down embed assemblies are set to the correct elevation with the P.T. bars and anchors installed "snug-tight". Remove top anchor nuts prior to installing tie-down base PL. Re-install top anchor nuts and stress bars after non-shrink grout has set.

The cost for materials, fabrication and installation of the Tie-Down system, including pins, tie-down, base plate, point and post-tensioning bars are included in the pay item "Tie-Downs".

Base plate assembly is stress relieved per AWS D1.5-2002.

Jacking stress for post-tensioning bars shall be 105 ksi.

Structural steel used in the fabrication of the tie-down device was painted in accordance with the Section 1080.4.4 of the Missouri Standard Specifications for Highway Construction.

TIE-DOWN EMBED AND BASE PLATE - PIERS 10 & 13

DATE 8/20/09
ROUTE I-70 | STATE MO/IL
DISTRICT 6 | SHEET NO. BR102
COUNTY ST. LOUIS CITY - MO, ST. CLAIR - IL
JOB NO. J6I0984
CONTRACT ID. 091208-601
PROJECT NO. I-70-9 (20)
BRIDGE NO. A6500

DESCRIPTION | DATE

MISSOURI HIGHWAYS AND TRANSPORTATION COMMISSION
MoDOT
105 WEST CAPITOL
JEFFERSON CITY, MO 65102
1-888-ASK-MODOT (1-888-275-6636)

HNTB
715 KIRK DRIVE
KANSAS CITY, MO 64105-1310
TELEPHONE (816) 472-1201
CERTIFICATE OF AUTHORITY NO. 001270

FINAL PLANS

REV.

Detailed JUL 2009
Checked JUL 2009

Note: This drawing is not to scale. Follow dimensions.

T:\de-proj\St_Louis_City\Construction\J6I0984\Asbuilts\Bridge\B_A6500_102-205_J6I0984_102.dgn

1:57:41 PM

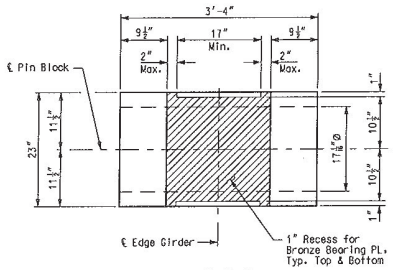

VIEW F-F

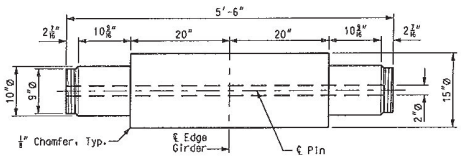

PIN DETAIL

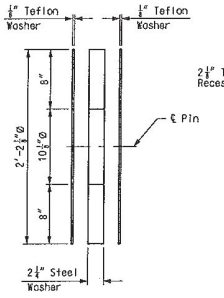

WASHER PACK DETAIL

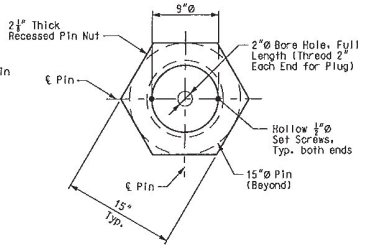

PIN NUT DETAIL

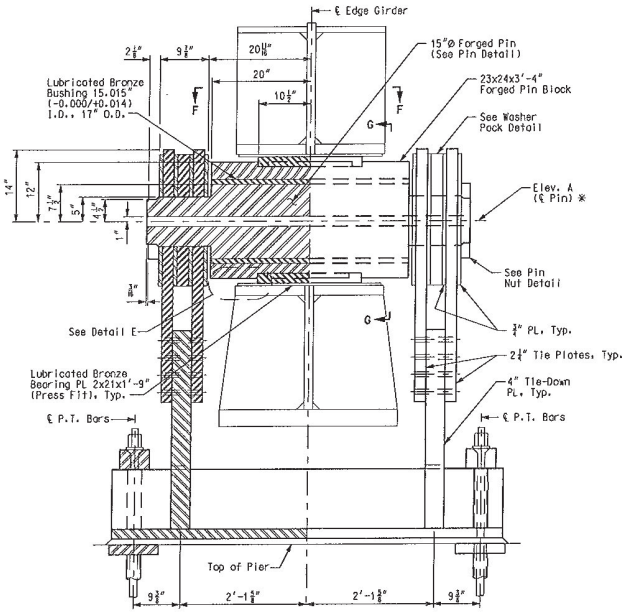

SECTION D-D

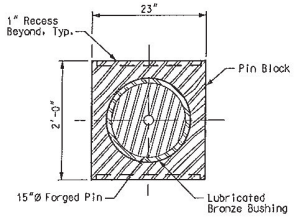

SECTION G-G

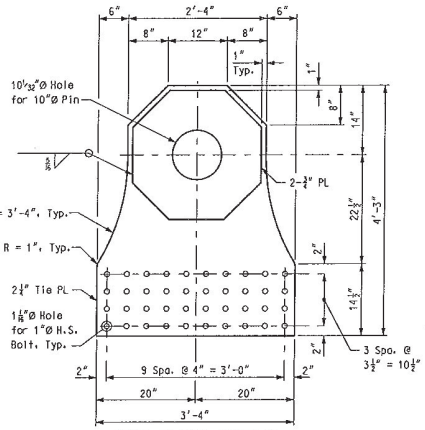

TIE PLATE DETAIL

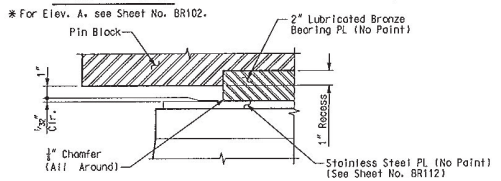

DETAIL E

* For Elev. A, see Sheet No. BR102.

Notes:
All steel for the tie-down unit meet the requirements of ASTM A709, Grade 50W-T2 unless noted otherwise.
The bolts to connect the tie plates to the tie-down plates are 1"Ø and meet the requirements of ASTM A325, Type 3.
The steel forging for the pin and pin block met the requirements of ASTM A668, Class G.
The bronze bushing and bearing plate was self-lubricating and met the requirements of ASTM B22 Alloy C86300. The lubricant used for the bushing was per the manufacturer's recommendation. The lubricated surface of the bronze plate is facing the stainless steel plate.
The contact surfaces between the bronze bushing, pin and pin block was in accordance with Section 1080.3.3.13 of the Missouri Standard Specifications for Highway Construction and is finished with 125 micro-inch surface roughness.
Teflon used in the washer pack met the requirements of ASTM D3294 Type II, Grade 1, Class B.
For location of Section D-D and tie-down embed details, see Sheet No. BR102.
The tie-down details, tie-down embeds, and tie-down base plates as shown on the plans are considered the tie-down and make up one unit. There are four units required for the project, two at Pier 10 and two at Pier 13. The cost of the materials, fabrication, machining, painting, and installation of the tie-down is included in the pay item "Tie-Downs". The tie-down is paid for as a lump sum.
For Edge Girder details, see Sheet Nos. BR111 & BR112.
The 2"Ø hole through the pin axis was bored after the forging has cooled below the critical range, under conditions to prevent injury by too rapid cooling, and before being annealed.
Install 2"Ø threaded plug at the ends of the pin.

TIE-DOWN DETAILS - PIERS 10 & 13

DATE 8/20/09
ROUTE I-70 STATE MO/IL
DISTRICT 6 SHEET NO. BR103
COUNTY ST. LOUIS CITY - MO ST. CLAIR - IL
JOB NO. J6I0984
CONTRACT ID. 091208-601
PROJECT NO. I-70-9 (20)
BRIDGE NO. A6500

DESCRIPTION | DATE

MISSOURI HIGHWAYS AND TRANSPORTATION COMMISSION
105 WEST CAPITOL
JEFFERSON CITY, MO 65102
1-888-ASK-MODOT (1-888-275-6636)

HNTB
715 KIRK DRIVE
KANSAS CITY, MO 64105-1310
TELEPHONE (816) 472-1201
CERTIFICATE OF AUTHORITY NO. 001270

FINAL PLANS

REV.

Detailed JUL 2009
Checked JUL 2009

Note: This drawing is not to scale. Follow dimensions.

Sheet No. 103 of 205

T:\de-proj\St_Louis_City\Construction\J6I0984\Asbuilts\Bridge\B_A6500_103-205_J6I0984_103.dgn 2-02-06 PM

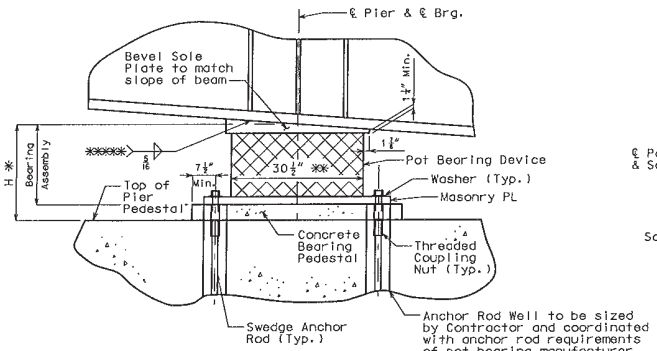

ELEVATION

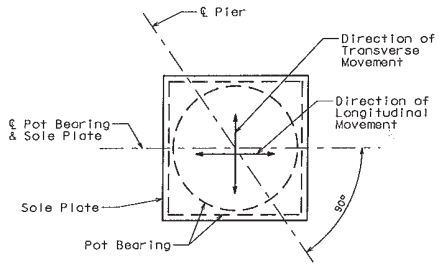

POT BEARING PLAN

BEARING DATA TABLE

Location	Pier 11			
Fix/Exp.	Expansion			
Quan. Req'd.	2			
Design load (kip)	Service limit state	Vertical	max.	1619 +
			perm.	559 +
			min.	0
		Transverse		0
		Longitudinal		125
	Strength limit state	Vertical		2218 +
		Transverse		0
		Longitudinal		172
Translation	Service limit state	Transverse		1"
		Longitudinal		20"
	Strength limit state	Transverse		1"
		Longitudinal		22"
Rotation (rad.)	Service limit state	Transverse		0
		Longitudinal		0.02
*** One Way Longit. Movement	11"			
**** (G) Guide Clearance	N/A			
Masonry Plate	Lm 34.5"			
	Wm 50"			
	Tm 1.5"			
Auxilliary Plate	La N/A			
	Wa N/A			
	Ta N/A			
Sole Plate	Ls 49.5"			
	Ws 39"			
	T1 1.25"			
	T2 1.5"			
Bearing H	8.427"			
Anchor Rods	d 1.75" ø			
	Rods / Brg. 4			
Weld Size	W1 5/8			
	W2			

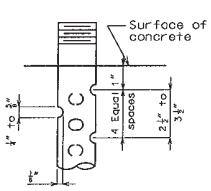

DETAIL OF 3/4"Ø THRU 2 1/2"Ø ANCHOR RODS

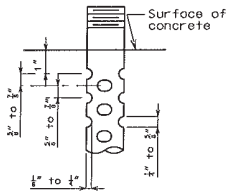

OPTIONAL DETAIL OF 1 3/8"Ø THRU 2 1/2"Ø ANCHOR RODS

SWEDGE ANCHOR ROD DETAILS

Notes:

T2 is upstation of T1.

*** One Way Longitudinal Movement is the maximum one way movement (expansion or contraction) of the superstructure when bearings are set at 60 degrees F plus 1" tolerance.

**** On wide structures and on curved structures provisions were made for limited lateral movement.

Indicates parts designed by the manufacturer.

+ Bearing reaction per TY Lin. Camber submittal Rev. #3 values based on final execution anaylsis bearing reaction of 559k.

NOTES:

The bearing design has conformed to the provisions of the latest edition of AASHTO.

The contractor, in coordination with the bearing manufacturer, is responsible for sizing the sole plate and masonry plate and determining the size, number, and location of anchor rods based on the load and movement capacities, indicated in the Bearing Data.

The contractor has submited calculations sealed by a Professional Engineer, licensed in the state of Missouri, indicating conformance with design load and material criteria in the contract documents.

* Maximum vertical dimension of the complete bearing. If the actual bearing dimension differs, adjustments are made in the thickness of the sole plate, masonry plate and concrete pad as needed by the contractor at no additional cost to the owner. Contractor has submitted proposed method of adjustment to Engineer for approval.

** Estimated horizontal dimension of the pot bearing device. If the actual dimension differs, adjust the size of the sole plate and masonry plate as needed by the contractor at no additional cost to the owner.

***** The temperature of the steel adjacent to the elastomeric was kept below 250°F.

The dimension "H" in the Bearing Data Table represents the difference in elevation between the bottom of the girder and the top of the concrete pier, and it is used by the designer to establish the thickness of the concrete pedestal by subtracting the height of the selected bearing assembly. If concrete bearing pedestal thickness is ≥ 4" the contractor has reinforce the pedestal at no additional cost to the owner.

The bearings are manufactured pot bearings, designed for the load and movement capacities indicated in the Bearing Data Table.

All expansion Bearings have maximum friction coefficient of 3%.

Steel for pot bearings are ASTM A709 Grade 50 and are galvanized. Steel for sole plate and masonry plates are ASTM A709 Grade 50.

Anchor rods conform to ASTM F1554 Grade 55. The anchor rods are the swedge-type and have a minimum diameter of 1 3/4-inches and extend a minimum of 18-inches into the concrete. Swedging is 1-inch less than the extension into the concrete.

Anchor rods were installed using a hardened steel washer at each exposed location.

Washers are conform to ASTM F463.

Certified mill test reports, conforming to the requirements of the specificaotions, for the metals of the pot bearing device, sole plate, masonry plate and anchor rods are submitted.

The masonry plate was prepared per the specifications and shop-coated with one coat of inorganic zinc primer (5 mils minimum).

The sole plate was prepared per the specifications and shop-coated with two coats of inorganic zinc primer (5 mils minimum).

The bearing device, sole plate and masonry plate are assembled in the shop and the bearing assembly shall be field welded to the bottom flange of the steel cap beam. The welds are designed for the load capacities indicated in the Bearing Data Table.

After installation of the bearings, any uncoated or damaged surfaces of the masonry and sole plates were prepared in accordance with the specifications and field-coated with inorganic zinc primer (5 mils minimum)

After installation of the bearings and field-applied prime coats, the surfaces of the masonry and sole plates are field-coated with System G intermediate and finish coat.

All bearings shall be marked prior to shipping. The marks have include the bearing location on the bridge and a direction arrow that points up-station. All marks shall be permanent and be visible after the bearing is installed.

The pot bearing device, sole plate, masonry plate, anchor rods, washers, anchor rod wells and any other appurtenances included in the fabrication and installation of the pot bearing device was incidental to the pay item "Pot Bearings".

Whenever jacking of the Superstructure is needed to reset the bearings, the contractor has submitted a jacking sequence for approval.

Tranverse edges of sole plate contacting edge girder are weatherproofed with Tremco Spectrum, 1 sealant or MoDOT approved equal.

DETAILS OF POT BEARING PAD ASSEMBLY - PIERS 11 & 12

DATE 8/20/09
ROUTE I-70 | STATE MO/IL
DISTRICT 6 | SHEET NO. BR104
COUNTY ST. LOUIS CITY - MO ST. CLAIR - IL
JOB NO. J6I0984
CONTRACT ID. 091208-601
PROJECT NO. I-70-9 (20)
BRIDGE NO. A6500

DESCRIPTION | DATE

MISSOURI HIGHWAYS AND TRANSPORTATION COMMISSION
105 WEST CAPITOL
JEFFERSON CITY, MO 65102
1-888-ASK-MODOT (1-888-275-6636)

HNTB
715 KIRK DRIVE
KANSAS CITY, MO 64105-1310
TELEPHONE (816) 472-1201
CERTIFICATE OF AUTHORITY NO. 001270

FINAL PLANS

REV.

Detailed JUL 2009
Checked JUL 2009

Note: This drawing is not to scale. Follow dimensions.

Sheet No. 104 of 205

T:\de-proj\St_Louis_City\Construction\J6I0984\Asbuilts\Bridge\B_A6500_104-205_J6I0984_104.dgn 11:23:00 AM

BEARING DATA TABLE

Location	Pier 12			
Fix/Exp.	Expansion			
Quan. Req'd.	2			
Design load (kip)	Service limit state	Vertical	max.	1619 +
			perm.	559 +
			min.	0
		Transverse		0
		Longitudinal		125
	Strength limit state	Vertical		2218 +
		Transverse		0
		Longitudinal		172
Translation	Service limit state	Transverse		1"
		Longitudinal		20"
	Strength limit state	Transverse		1"
		Longitudinal		22"
Rotation (rad.)	Service limit state	Transverse		0
		Longitudinal		0.02
*** One Way Longit. Movement	11"			
**** (G) Guide Clearance	N/A			
Masonry Plate	Lm	34.5"		
	Wm	50"		
	Tm	1.5"		
Auxilliary Plate	La	N/A		
	Wa	N/A		
	Ta	N/A		
Sole Plate	Ls	49.5"		
	Ws	39"		
	T1	1.5"		
	T2	1.25"		
Bearing H	8.429"			
Anchor Rods	d	1.75" Ø		
	Rods / Brg.	4		
Weld Size	W1	⅜"		
	W2			

+ Bearing reactions per TY Lin Camber Submittal, Rev. #3 values based on final erection analysis bearing reaction of 559k.

Note:
For details and notes, see Sheet No. BR104.

DETAILS OF POT BEARING PAD ASSEMBLY - PIERS 11 & 12

DATE 8/20/09
ROUTE I-70 | STATE MO/IL
DISTRICT 6 | SHEET NO. BR105
COUNTY ST. LOUIS CITY - MO, ST. CLAIR - IL
JOB NO. J6I0984
CONTRACT ID. 091208-601
PROJECT NO. I-70-9 (20)
BRIDGE NO. A6500

REV.	DESCRIPTION	DATE

MISSOURI HIGHWAYS AND TRANSPORTATION COMMISSION
105 WEST CAPITOL
JEFFERSON CITY, MO 65102
1-888-ASK-MODOT (1-888-275-6636)

HNTB
715 KIRK DRIVE
KANSAS CITY, MO 64105-1310
TELEPHONE: 816-347-2771
CERTIFICATE OF AUTHORITY
NO. 001270

FINAL PLANS

Detailed JUL 2009
Checked JUL 2009

Note: This drawing is not to scale. Follow dimensions.

T:\de-proj\St_Louis_City\Construction\J6I0984\Asbuilts\Bridge\B_A6500_105-205_J6I0984_105.dgn 2:52:26 PM

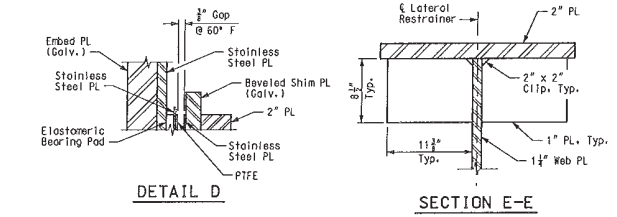

DETAIL D

SECTION E-E

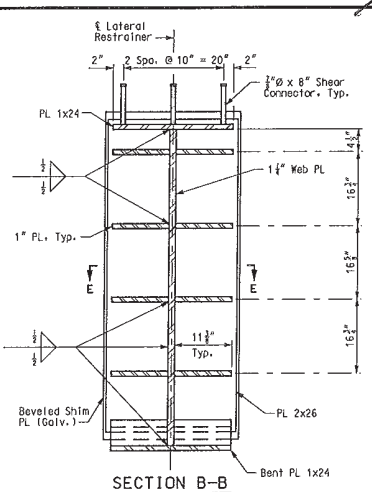

SECTION B-B

Note:
℄ Lateral Restrainer & Embed Plate to match at 60° F

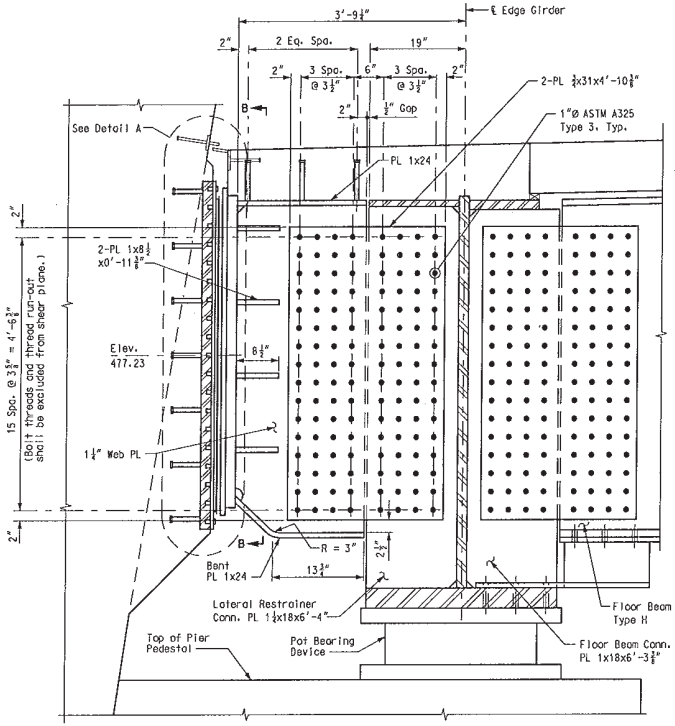

ELEVATION

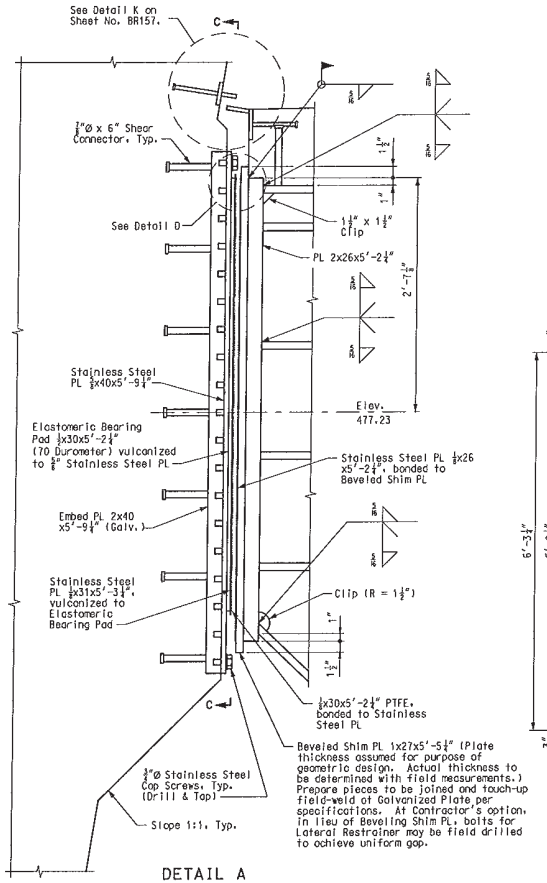

DETAIL A

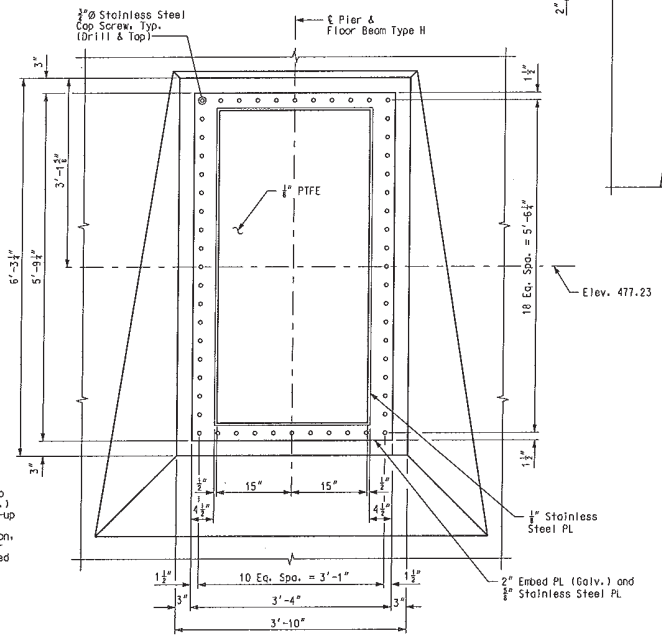

VIEW C-C

Notes:
For additional details of embed plate, see Sheet No. BR82.
The cost of materials, fabrication, machining and installation of lateral restrainers, are included in the pay item "Fabricated Structural Low Alloy Steel (Plate Girder) A709, Gr. HPS50W".
Stainless steel plates conform to the requirements of ASTM A240, Type 304.
Stainless steel cap screws are conform to the requirements of ASTM F593, Group 1.
For Floor Beam Type H details, see Sheet Nos. BR121 and BR122.
For details of Edge Girder - Field Piece 14, see Sheet Nos. BR114 and BR115.
Embed plates are ASTM A709, Grade 36.
Beveled shim plates are ASTM A709, Grade 36.
Embed and bevel shim plates are hot-dip galvanized according to ASTM 123
Structural steel for lateral restrainer is ASTM A709 Grade 50W.

LATERAL RESTRAINER DETAILS - PIERS 11 & 12

DATE 8/20/09
ROUTE I-70 | STATE MO/IL
DISTRICT 6 | SHEET NO. BR106
COUNTY ST. LOUIS CITY - MO ST. CLAIR - IL
JOB NO. J6I0984
CONTRACT ID. 091208-601
PROJECT NO. I-70-9 (20)
BRIDGE NO. A6500

DESCRIPTION | DATE

MISSOURI HIGHWAYS AND TRANSPORTATION COMMISSION
105 WEST CAPITOL
JEFFERSON CITY, MO 65102
1-888-ASK-MODOT (1-888-275-6636)

HNTB
715 KIRK DRIVE
KANSAS CITY, MO 64105-1310
TELEPHONE (816) 472-1201
CERTIFICATE OF AUTHORITY NO. 001270

FINAL PLANS

REV.

Detailed JUL 2009
Checked JUL 2009

Note: This drawing is not to scale. Follow dimensions.

T:\de-proj\St_Louis_City\Construction\J6I0984\Asbuilts\Bridge\B_A6500_106-205_J6I0984_106.dgn 2:22:04 PM

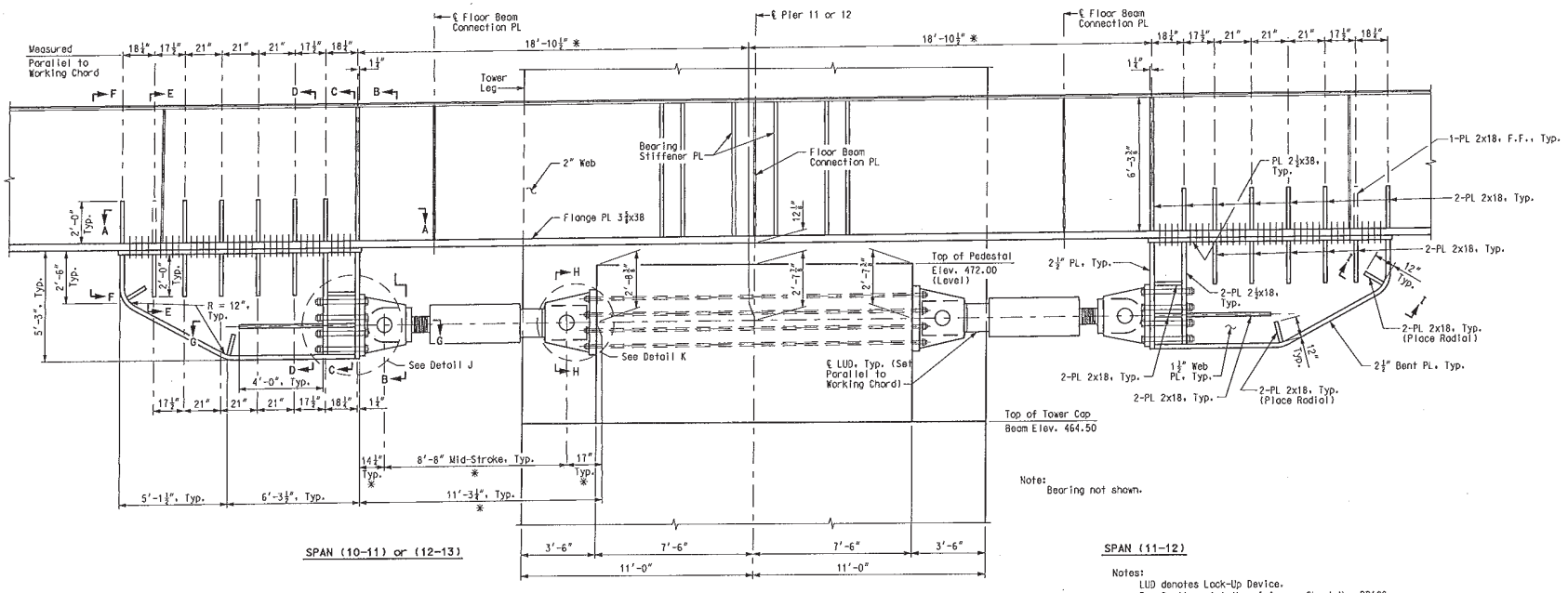

ELEVATION

(View taken from ℄ Bridge)
* See Notes with Details J & K.

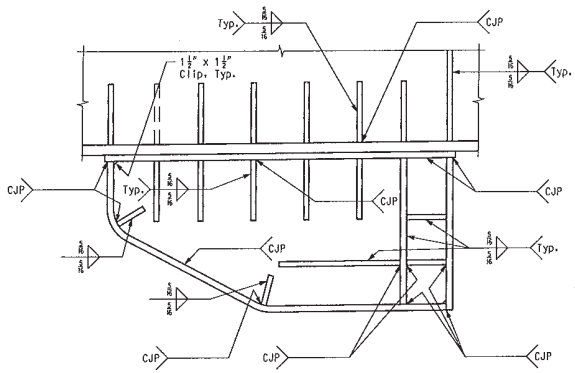

LOCK-UP DEVICE BRACKET WELD DETAIL

(Bolt centerlines not shown for clarity.)

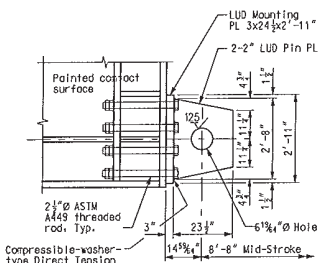

DETAIL J

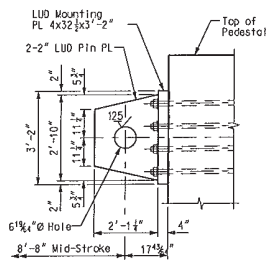

DETAIL K

Notes:
All dimensions shown in Details J & K are for information only. LUD manufacturer shall finalize these dimensions based on the detailing of their device. The Contractor is responsible for coordinating any revisions required due to deviation from dimensions shown.

SPAN (11-12)

Notes:

LUD denotes Lock-Up Device.

For Sections A-A thru I-I, see Sheet No. BR108.

Each LUD is capable of transmitting a longitudinal force of 1,550 Kips LRFD Strength I Limit State and shall provide for a longitudinal movement of 9" from the design temperature neutral position (18" total movement).

LUDs were supplied with pins capable of transferring the intended loads.

The Contractor has provide 2-LUDS per edge girder per tower bent (8 LUD'S total).

The centerline of force of the LUD are parallel to the working chord.

Longitudinal is considered parallel to centerline of bridge for this application.

Structural steel for the LUD bracket is ASTM A709 Gr. 50W.

See Special Provisions for payment of LUD's.

All costs associated with material, fabrication and installation of the LUDs are included in the pay item, "Lock-Up Device". This includes the LUDs, prestressing bars, bolts and hardware.

All costs associated with material, fabrication and installation of mounting plates and pin plates was included in the pay item, "Fabricated Structural Low Alloy Steel (Plate Girder) A709, Gr. HPS50W.

Lock-up device bracket is stress-relieved per AWS D1.5 current edition.

Jacking stress for post-tensioning bars is 105 ksi.

Suitable nuts and washers were supplied with the A449 bolts. Bolts were pretensioned to 150 kips tension.

Compressible-washer-type direct tension indicators were installed to prove the bolt tension. The direct tension indicators (DTI's) were supplied in accordance with ASTM F959 except for the compressive strength which is non-standard. The DTI's shall be corrosion resistant similar to the Type 3 bolts. The DTI supplier provided inspection and acceptance criteria to install the bolts to the pretension specified. At a minimum, inspection and acceptance is accomplished through the use of feeler gauges to measure the compressed gaps in the installed DTI's.

The DTI supplier provided a test report for establishing the inspection and acceptance criteria. At a minimum, the DTI supplier tested on additional 5 DTI's under hardened flat washerst similar to those that will be used in production, at a load of 150 kips in order to determine the inspection and acceptance criteria.

Three additional DTI's from the same lot and hardened washers were supplied to the state for testing.

All DTI's, including those used for testing, were supplied from the same lot.

For Bearing Details, see Sheet No. BR104.

For Pedestal Details, see Sheet No. BR81.

Provide hex nut and washer at each end of post-tensioning bars.

Provide 2¾"Ø galvanized ducts for post-tensioning bars. Provisions for grouting to be supplied by Contractor and approved by the Engineer.

Post-tensioning bars are 1¾"Ø ASTM A722 Grade 150, Type I.

LONGITUDINAL LOCK-UP DEVICE DETAILS - PIERS 11 & 12

DATE 10/19/09
ROUTE I-70 STATE MO/IL
DISTRICT 6 SHEET NO. BR107
COUNTY ST. LOUIS CITY - MO ST. CLAIR - IL
JOB NO. J6I0984
CONTRACT ID. 091208-601
PROJECT NO. I-70-9 (20)
BRIDGE NO. A6500

DESCRIPTION | DATE

MISSOURI HIGHWAYS AND TRANSPORTATION COMMISSION
105 WEST CAPITOL
JEFFERSON CITY, MO 65102
1-888-ASK-MODOT (1-888-275-6636)

HNTB
715 KIRK DRIVE
KANSAS CITY, MO 64105-1310
CERTIFICATE OF AUTHORITY NO. 001270

FINAL PLANS

REV.

Detailed JUL 2009
Checked JUL 2009

Note: This drawing is not to scale. Follow dimensions.

Sheet No. 107 of 205

T:\de-proj\St_Louis_City\Construction\J6I0984\Asbuilts\Bridge\B_A6500_107-205_J6I0984_107.dgn

2:14:02 PM

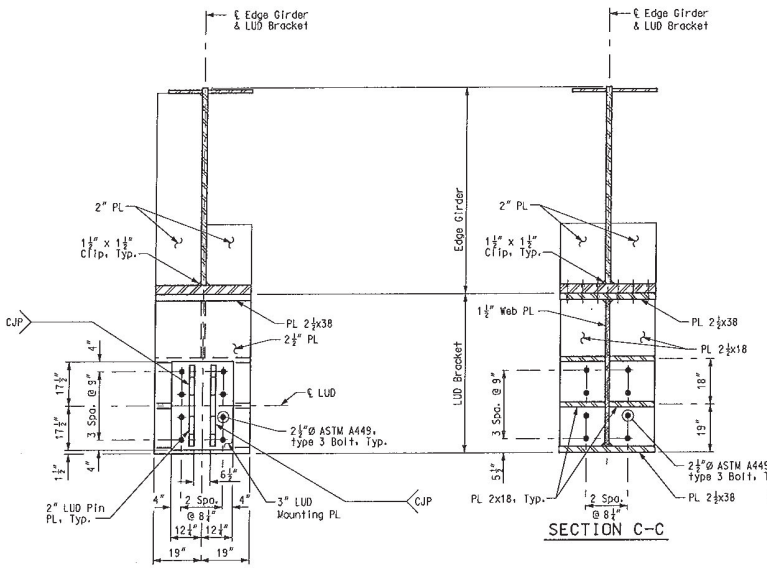

SECTION B-B

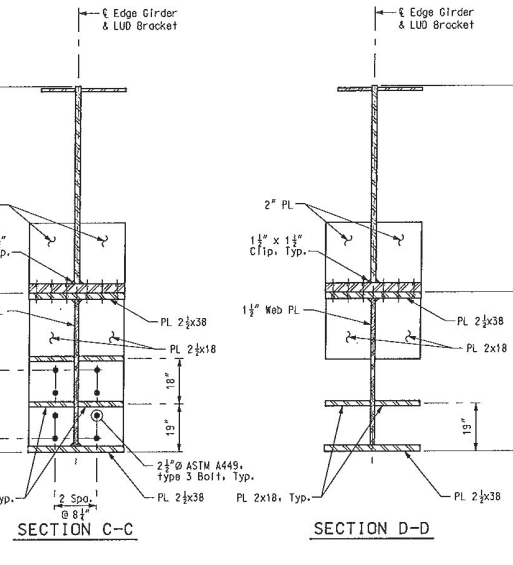

SECTION C-C

SECTION D-D

SECTION E-E

(Floor beam connection plate not shown for clarity)

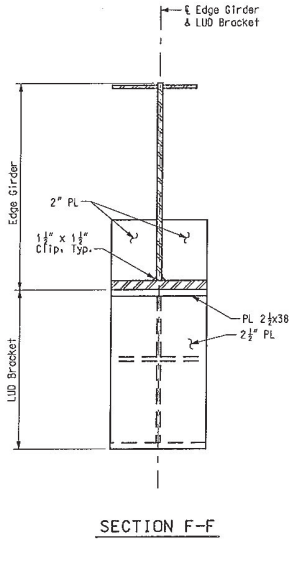

SECTION F-F

Notes:
All dimensions shown for LUD mounting plates and LUD pin plates in Sections B-B & G-G are for information only. LUD manufacturer shall finalize these dimensions based on the detailing of their device. The Contractor is responsible for coordinating any revisions required due to deviation from dimensions shown.

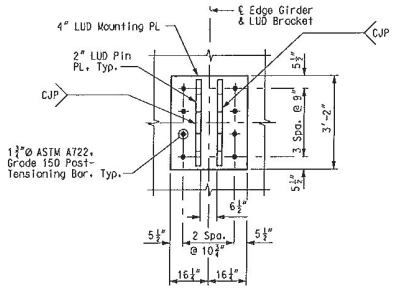

SECTION H-H

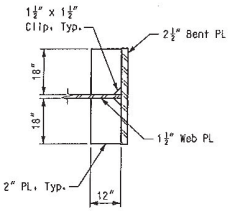

SECTION I-I

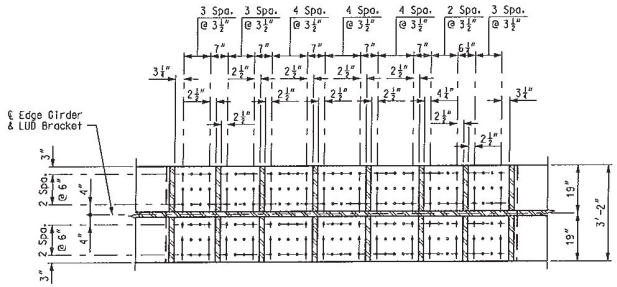

SECTION A-A

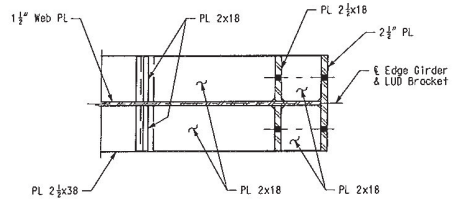

SECTION G-G

Note:
Components of Detail J and the LUD not shown.

Notes:
LUD denotes Lock-Up Device.
For location of Sections A-A thru I-I, see Sheet No. BR107.
Structural steel for bracket and connection plates are conform to ASTM A709 Grade 50W.
All welding is in accordance with AWS D1.5, Current Edition.
Welding filler metals matching.
Bolts connecting the bracket to the edge girder members are 1" diameter ASTM A325, Type 3, with complimentary circular flat washer and heavy hex nut.

LONGITUDINAL LOCK-UP DEVICE DETAILS - PIERS 11 & 12

Detailed JUL 2009
Checked JUL 2009

Note: This drawing is not to scale. Follow dimensions.

Sheet No. 108 of 205

T:\de-proj\St_Louis_City\Construction\J6I0984\Asbuilts\Bridge\B_A6500_108-205_J6I0984_108.dgn 2:33:16 PM

DATE 8/20/09
ROUTE I-70 STATE MO/IL
DISTRICT 6 SHEET NO. BR108
COUNTY ST. LOUIS CITY - MO ST. CLAIR - IL
JOB NO. J6I0984
CONTRACT ID. 091208-601
PROJECT NO. I-70-9 (20)
BRIDGE NO. A6500

DESCRIPTION | DATE

MISSOURI HIGHWAYS AND TRANSPORTATION COMMISSION
105 WEST CAPITOL
JEFFERSON CITY, MO 65102
1-888-ASK-MODOT (1-888-275-6636)

HNTB
715 KIRK DRIVE
KANSAS CITY, MO 64105-1310
TELEPHONE (816) 472-1201
CERTIFICATE OF AUTHORITY NO. 001270

FINAL PLANS

REV.

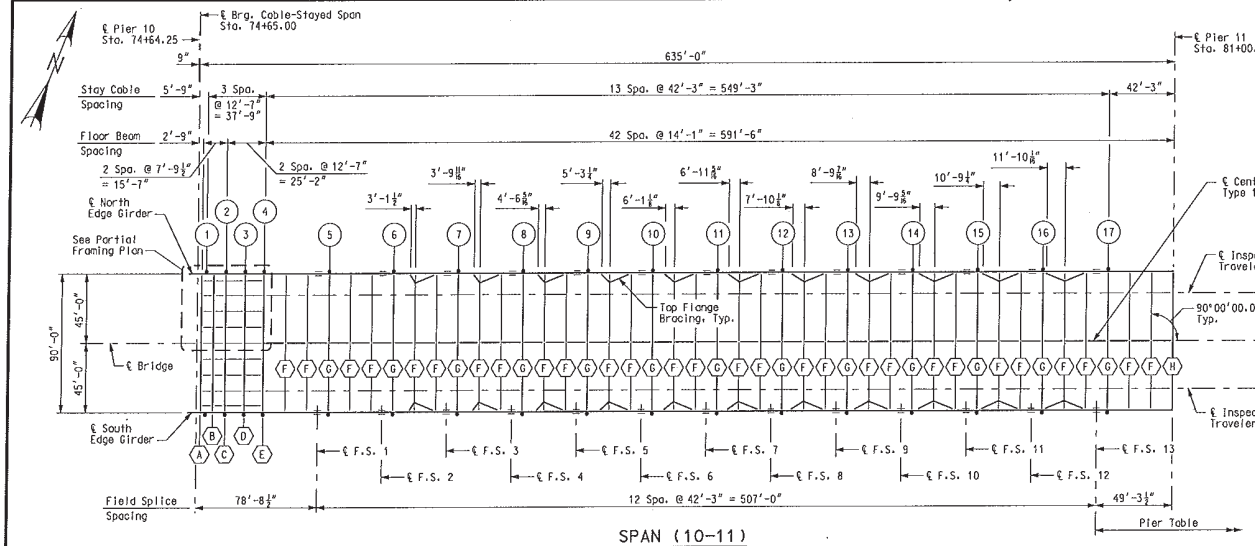

SPAN (10-11)

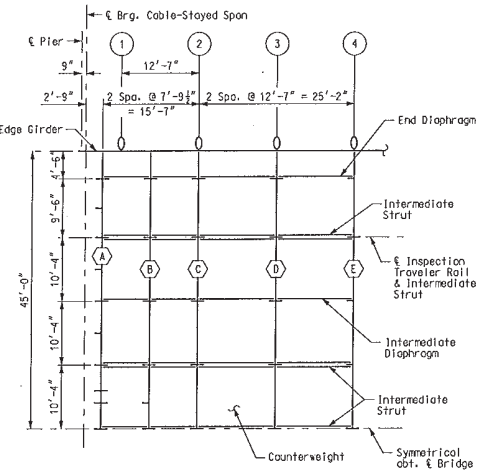

PARTIAL FRAMING PLAN

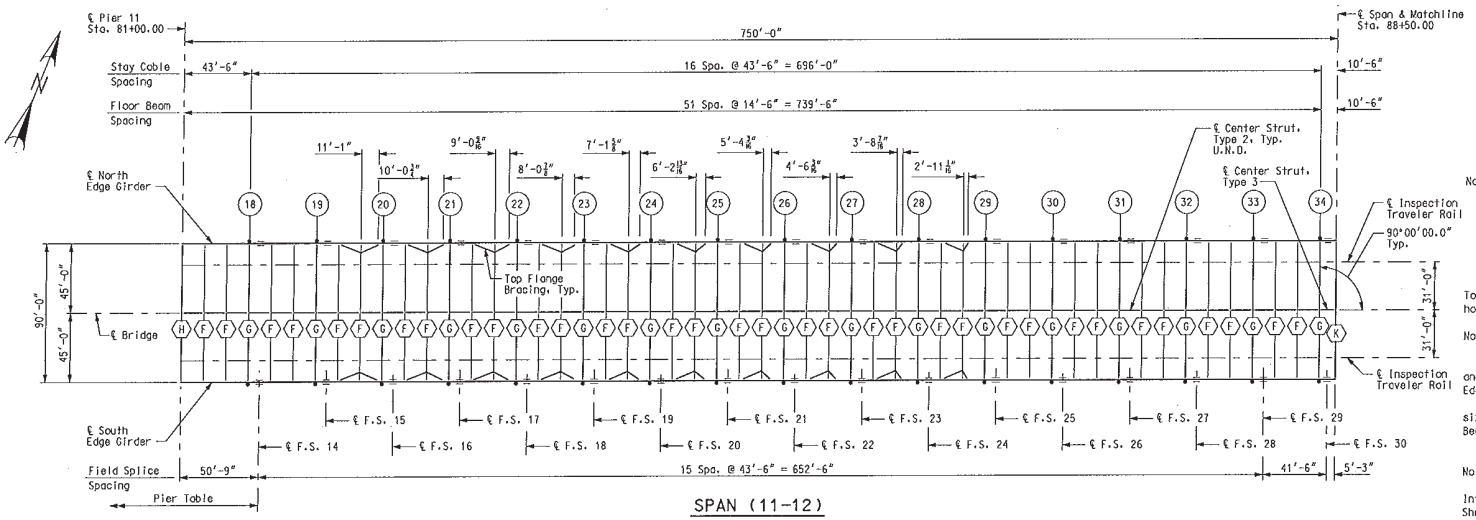

SPAN (11-12)

Notes:

(#) Denotes Stay Cable.

(#) Denotes Floor Beam Type.

LUD Denotes Lock-Up Device.

The location of the Stay Cables, Field Splices, Top Flange Bracing, and Floor Beams are measured horizontally.

For Top Flange Bracing details, see Sheet No. BR132.

For Center Strut details, see Sheet No. BR133.

For Edge Girder details, including the location and size of stiffeners and connection plates, see Edge Girder Elevations, Sheet Nos. BR111 thru BR116.

For Floor Beam details, including location and size of stiffeners and connection plates, see Floor Beam Elevations, Sheet Nos. BR117 thru BR122.

For Field Splice details, see Sheet No. BR136.

For Inspection Traveler details, see Sheet No. BR178.

For Intermediate Strut, End Diaphragm, Intermediate Diaphragm and Counterweight details, see Sheet Nos. BR159 thru BR162.

FRAMING PLAN

Detailed JUL 2009
Checked JUL 2009

Note: This drawing is not to scale. Follow dimensions.

Sheet No. 109 of 205

T:\de-proj\St_Louis_City\Construction\J6I0984\Asbuilts\Bridge\B_A6500_109-205_J6I0984_109_NCR012.dgn

10:45:12 AM

DATE 8/20/09
ROUTE I-70 STATE MO/IL
DISTRICT 6 SHEET NO. BR109
COUNTY ST. LOUIS CITY - MO ST. CLAIR - IL
JOB NO. J6I0984
CONTRACT ID. 091208-601
PROJECT NO. I-70-9 (20)
BRIDGE NO. A6500

DESCRIPTION | DATE

MISSOURI HIGHWAYS AND TRANSPORTATION COMMISSION
105 WEST CAPITOL
JEFFERSON CITY, MO 65102
1-888-ASK-MODOT (1-888-275-6636)

HNTB
715 KIRK DRIVE
KANSAS CITY, MO 64105-1310
TELEPHONE (816) 472-1201
CERTIFICATE OF AUTHORITY NO. 001270

FINAL PLANS

REV.

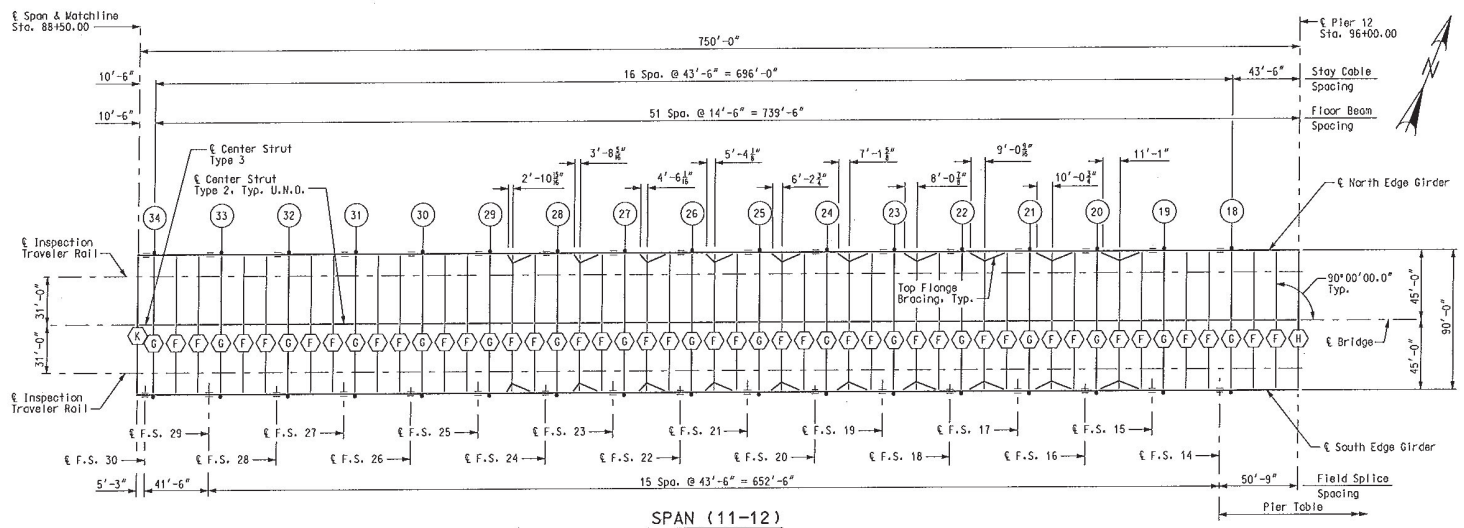

SPAN (11-12)

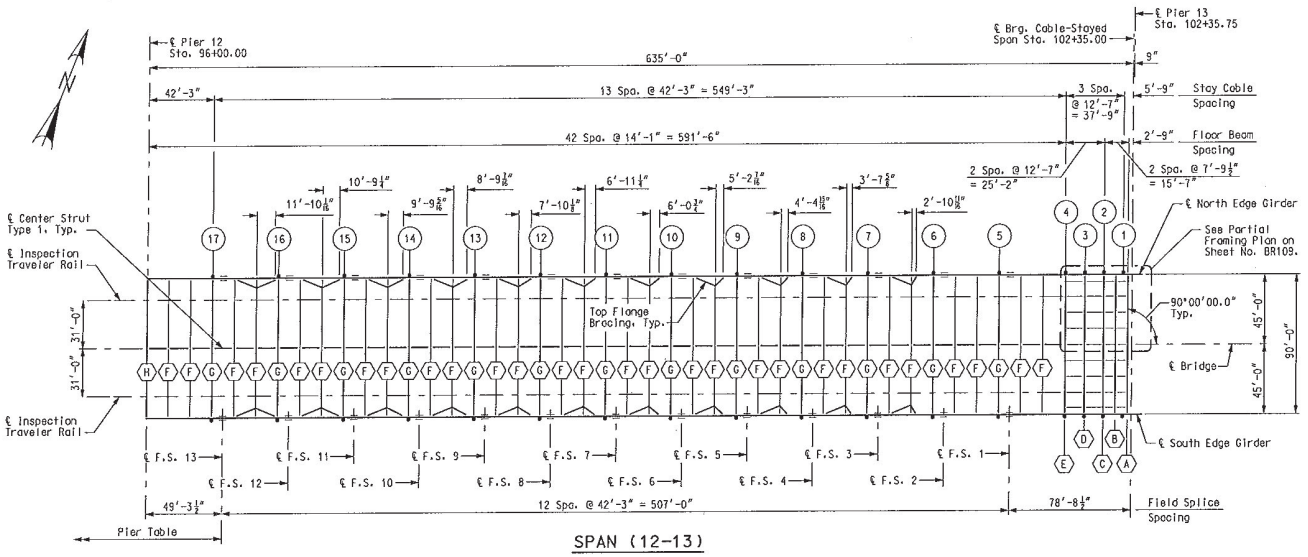

SPAN (12-13)

Notes:

(#) Denotes Stay Cable.

⟨#⟩ Denotes Floor Beam Type.

LUD Denotes Lock-Up Device.

See notes on Sheet No. BR109.

FRAMING PLAN

DATE 8/20/09
ROUTE I-70 STATE MO/IL
DISTRICT 6 SHEET NO. BR110
COUNTY ST. LOUIS CITY - MO ST. CLAIR - IL
JOB NO. J6I0984
CONTRACT ID. 091208-601
PROJECT NO. I-70-9 (20)
BRIDGE NO. A6500

DESCRIPTION | DATE

MISSOURI HIGHWAYS AND TRANSPORTATION COMMISSION
105 WEST CAPITOL
JEFFERSON CITY, MO 65102
1-888-ASK-MODOT (1-888-275-6636)

HNTB
715 KIRK DRIVE
KANSAS CITY, MO 64105-4310
TELEPHONE (816) 472-1201
CERTIFICATE OF AUTHORITY NO. 001270

FINAL PLANS

REV.

Detailed JUL 2009
Checked JUL 2009

Note: This drawing is not to scale. Follow dimensions.

T:\de-proj\St_Louis_City\Construction\J6I0984\Asbuilts\Bridge\B_A6500_110-205_J6I0984_110.dgn

11:37:01 AM

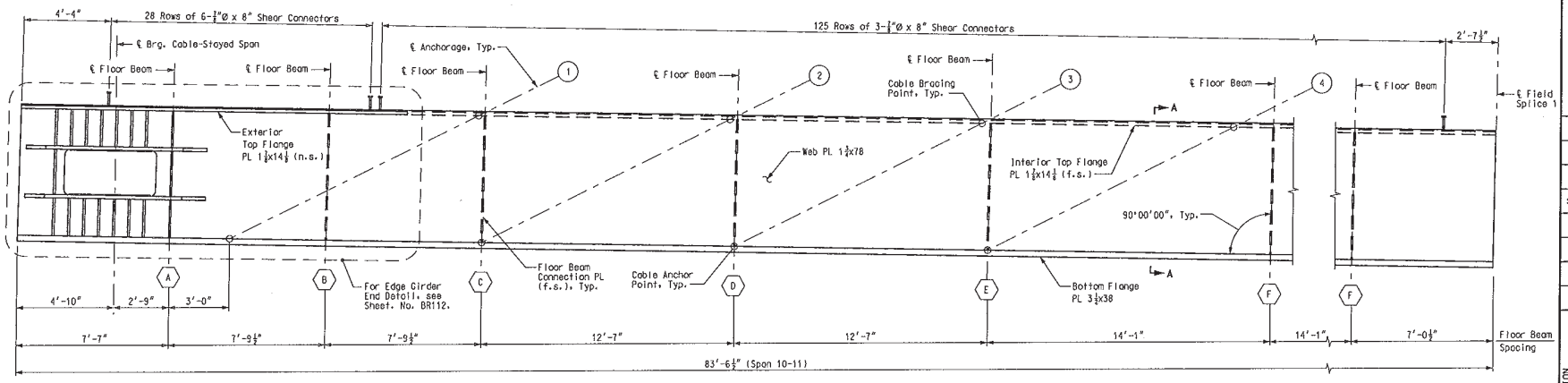

ELEVATION

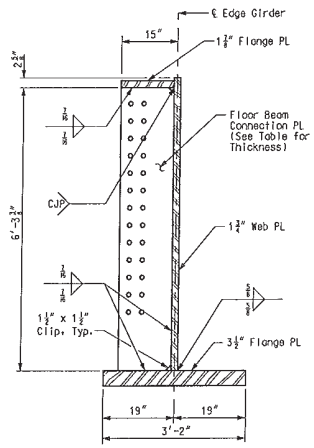

SECTION A-A

FLOOR BEAM CONNECTION PLATE	
FLOOR BEAM TYPE	PLATE THICKNESS
A	*
B	⅝"
C	⅝"
D	¾"
E	⅝"
F	½"

* See Section B-B on Sheet No. BR112.

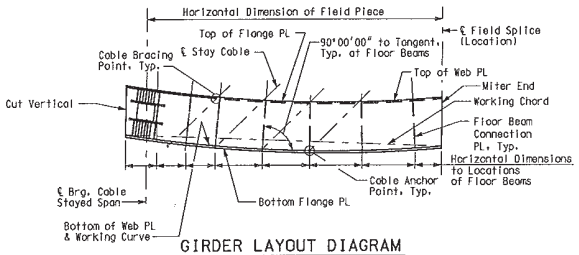

GIRDER LAYOUT DIAGRAM

For Field Piece 1

Notes:

(#) Denotes Stay Cable.

(#) Denotes Floor Beam Type.

For Cable Geometry, see Sheet Nos. BR139 & BR140.
For Stay Cable Girder Anchorage details, see Sheet Nos. BR123 thru BR131.
For Shear Connector notes and details, see Sheet No. BR135.
For Field Splice details, see Sheet No. BR136.
For Floor Beam details, see Sheet Nos. BR117 thru BR121.
For details of floor beam connections, see Sheet No. BR122.
For miscellaneous steel details, see Sheet Nos. BR132 thru BR134.
For Suggested Erection Sequence, see Sheet Nos. BR179 thru BR183.

All longitudinal dimensions are given along the horizontal and taken to the bottom of the web, unless otherwise noted. All vertical dimensions are given perpendicular to Working Chord for all field pieces except Field Piece 1 where they are perpendicular to the local tangent of the working curve, unless otherwise noted.

All dimensions are to the theoretical stressed locations of stay cable, floor beams, and edge girder. The girder is fabricated as necessary to produce a structure at the beginning of service conforming to these dimensions.

Web shall be plumb after all dead loads are applied at 60°F.

Edge girders are cambered as indicated on Sheet Nos. BR137 & BR138.

Floor beam connection plates are placed perpendicular to Working Chord for all field pieces except Field Piece 1 where they are perpendicular to the local tangent of the working curve unless otherwise noted.

Floor beam connection plates are placed on the inside of the girder only.

Bearing stiffeners are placed on the inside and outside of the girder.

Stay cable girder anchorage and field splice plates not shown for clarity.

Two of each Field Piece 1 thru 30 are required as shown and two are required opposite hand. One of Field Piece 31 is required as shown and one is required opposite hand. Refer to Framing Plan on Sheet Nos. BR109 & BR110.

Structural steel for edge girder flanges and web is conform to ASTM A709 Grade HPS70WF-2.

All bolts are ASTM A325, Type 3 bolts, unless otherwise noted.

Floor Beam Connection Plates are conform to ASTM A709 Grade HPS70W-2.

The web plate depth, as shown, is the nominal depth of the web plate and is measured normal to the Working Chord for all pieces except Field Piece 1 where it is measured perpendicular to the local tangent of the working curve.

All costs associated with material, fabrication and erection of the edge girders are included in the pay item, "Fabricated Structural Low Alloy Steel (Plate Girder) A709, Gr. HPS70W".

For "Edge Girder Bracket Assembly" that supports slab drain, see Sheet No. BR164.

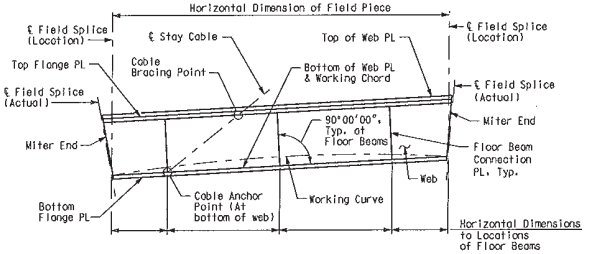

GIRDER LAYOUT DIAGRAM

Except for Field Piece 1

Girder Layout Diagram Notes:

The Cable Bracing Point is the point along the actual cable (catenary angle) which matches the elevation and station of a point on the bottom of the edge girder top flange. The Cable Anchor Point is the point along the actual cable (catenary angle) which matches the elevation and station of a point on the top of the edge girder bottom flange. For additional details see Sheet No. BR123.

Field Piece 1: The Working Curve is parallel to the Profile Grade and coincides with the bottom of the web. The Working Chord forms a straight line between the intersection of the Working Curve and the CL Brg. Cable-Stayed Span on one end and the intersection of the Working Curve and the CL Field Splice on the opposite end.

Except Field Piece 1: The Working Curve is parallel to the Profile Grade and intersects the Working Chord at the CL Field Splice. The Working Chord is a straight line along the bottom of the web.

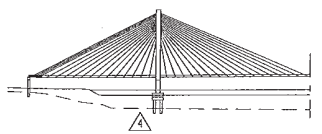

EDGE GIRDER - FIELD PIECE 1

DESCRIPTION	DATE
Revised per ATC	5-17-10

DATE 5/17/10
ROUTE I-70 | STATE MO/IL
DISTRICT 6 | SHEET NO. BR111
COUNTY ST. LOUIS CITY - MO ST. CLAIR - IL
JOB NO. J6I0984
CONTRACT ID. 091208-601
PROJECT NO. I-70-9 (20)
BRIDGE NO. A6500

MISSOURI HIGHWAYS AND TRANSPORTATION COMMISSION
105 WEST CAPITOL
JEFFERSON CITY, MO 65102
1-888-ASK-MODOT (1-888-275-6636)

HNTB
715 KIRK DRIVE
KANSAS CITY, MO 64105-1310
TELEPHONE (816) 472-1201
CERTIFICATE OF AUTHORITY NO. 001210

FINAL PLANS

Detailed JUL 2009
Checked JUL 2009

Note: This drawing is not to scale. Follow dimensions.

T:\de-proj\St_Louis_City\Construction\J6I0984\Asbuilts\Bridge\B_A6500_111-205_J6I0984_111.dgn

1:01:09 PM

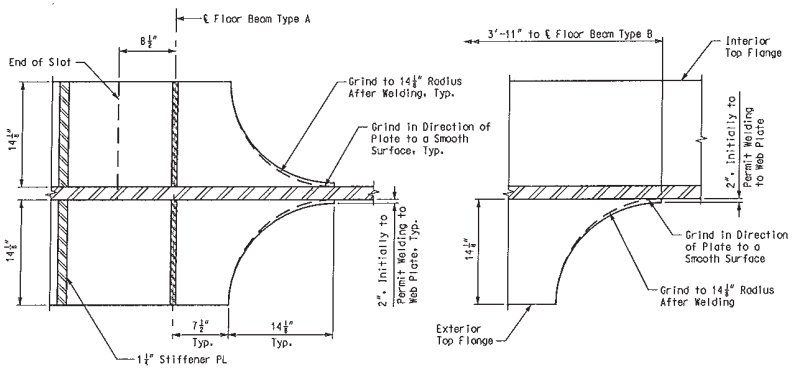

SECTION D-D

VIEW E-E

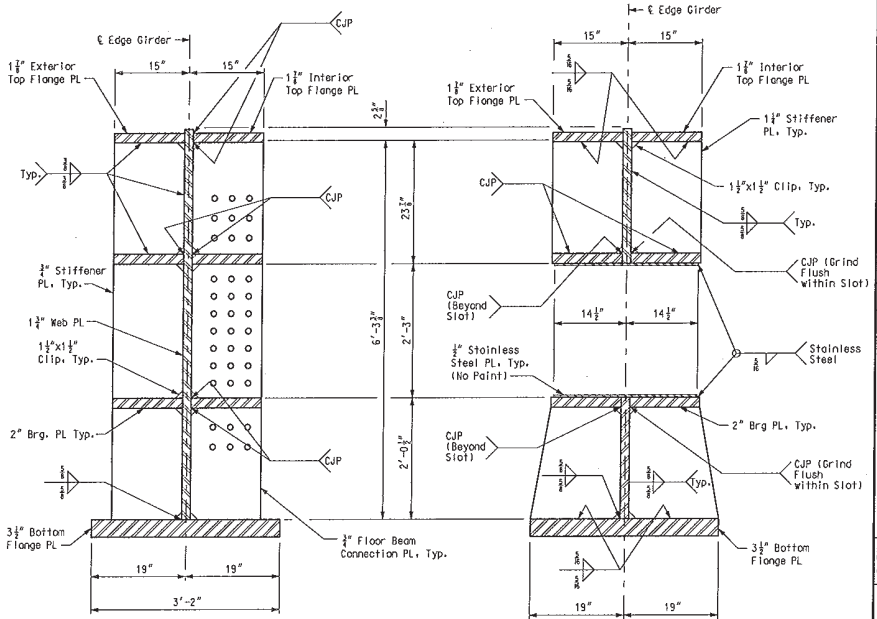

SECTION B-B

SECTION C-C

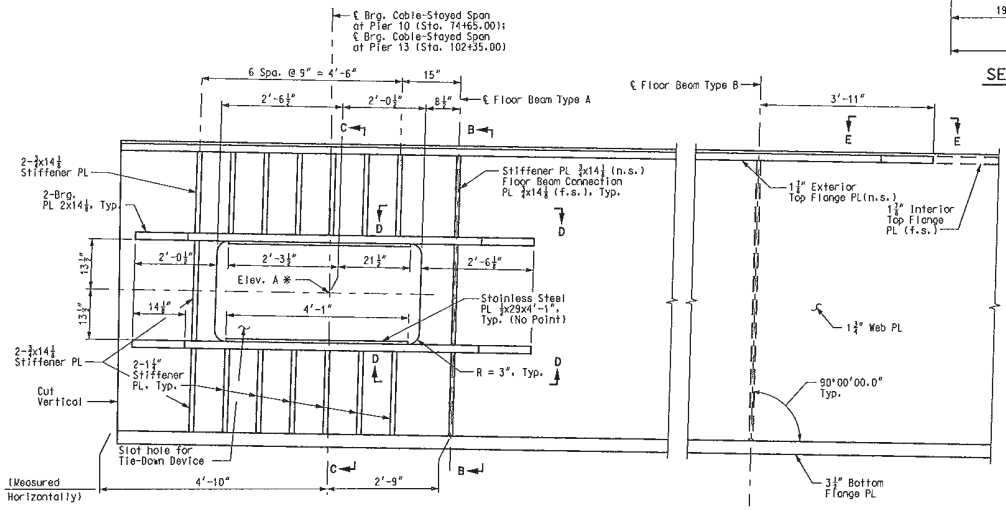

EDGE GIRDER END DETAIL

Notes:
Dimensions shown on this detail are measured parallel to and perpendicular to the Working Curve, unless otherwise noted.
* For Elev. A, see Sheet No. BR102.

Edge Girder End Detail Notes:
All floor beam connection plates are placed perpendicular to the local tangent of the Working Curve.
The bearing plates are placed parallel to the Working Curve. The plates are true and parallel. The contact surfaces between the bearing plates and the stainless steel is in accordance with Section 1080.3.3.13 of the MoDOT Standard Specifications for Highway Construction. These surfaces are in full contact with each other and the surface roughness of these surfaces are exceed 125 micro-inches.
The horizontal edges of the web opening is parallel to the Working Curve and the vertical edges of the web opening shall be perpendicular to the local tangent of the Working Curve.
The stainless steel meets the requirements of ASTM A240, Type 304. The contact surfaces between the bronze bearing plates of the tie-down and the stainless stee is finished to a mirror finish. The cost of the stainless steel, fabrication, finishing, installation, etc. is incidentol to the contract unit price for Fabricated Structural Low Alloy Steel (Plate Girder) A709, Grade HPS70W.
For tie-down details, see Sheet Nos. BR102 & BR103.
For additional notes, see Sheet No. BR111.
Structural steel for bearing plates and stiffeners at Edge Girder End Detail is conform to ASTM A709 Grade HPS70WF-2.
For "Edge Girder Bracket Assembly" that supports slab drain, see sheet BR164.

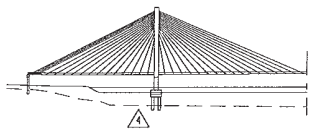

EDGE GIRDER - FIELD PIECE 1

DATE 5/17/10
ROUTE I-70 | STATE MO/IL
DISTRICT 6 | SHEET NO. BR112
COUNTY ST. LOUIS CITY - MO ST. CLAIR - IL
JOB NO. J6I0984
CONTRACT ID. 091208-601
PROJECT NO. I-70-9 (20)
BRIDGE NO. A6500

DATE	DESCRIPTION
5-17-10	1 Revised per ATC

MISSOURI HIGHWAYS AND TRANSPORTATION COMMISSION
105 WEST CAPITOL
JEFFERSON CITY, MO 65102
1-888-ASK-MODOT (1-888-275-6636)

HNTB
715 KIRK DRIVE
KANSAS CITY, MO 64105-1310
TELEPHONE (816) 472-1201
CERTIFICATE OF AUTHORITY NO. 001270

FINAL PLANS

Detailed JUL 2009
Checked JUL 2009

Note: This drawing is not to scale. Follow dimensions.

T:\de-proj\St_Louis_City\Construction\J6I0984\Asbuilts\Bridge\B_A6500_112-205_J6I0984_112.dgn

1:18:48 PM

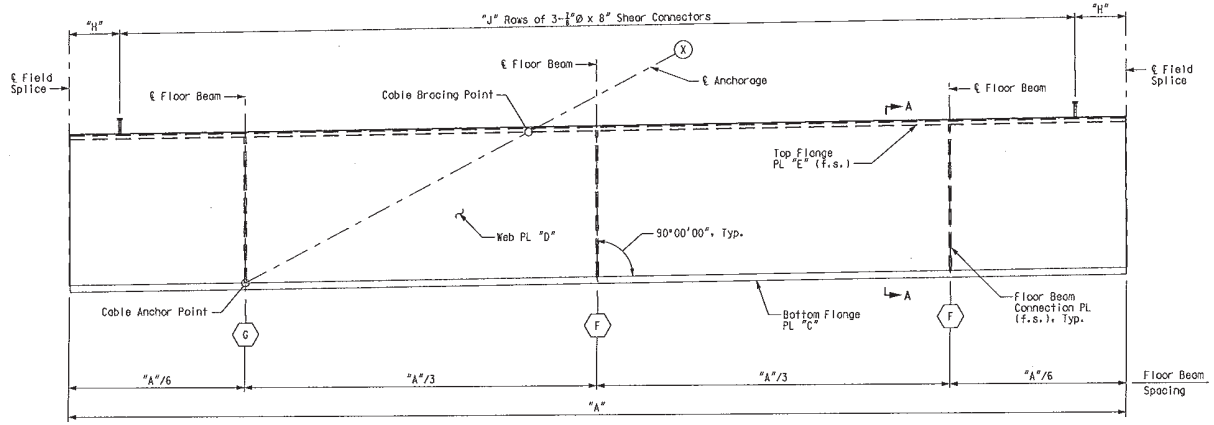

ELEVATION

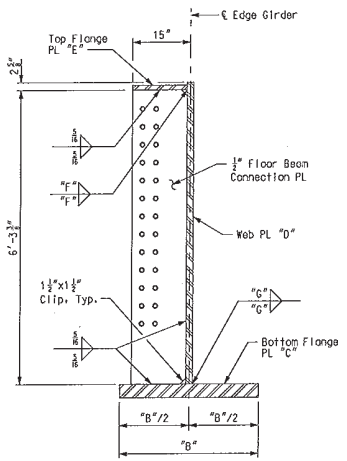

SECTION A-A

FIELD PIECE DATA										
FIELD PIECE	STAY CABLE (X)	"A"	"B"	BOTTOM FLANGE PL "C"	WEB PL "D"	TOP FLANGE PL "E"	"F"	"G"	"H"	"J"
2	5	42'-3"	3'-2"	3½x38	1½x78	1⅞x14½	¾"	¾"	2'-7½"	65
3	6	42'-3"	3'-2"	3½x38	1½x78	1⅞x14½	¾"	¾"	2'-7½"	67
4	7	42'-3"	2'-10"	3x34	1⅝x78	1⅞x14⅝	¾"	¾"	2'-7½"	67
5	8	42'-3"	2'-10"	3x34	1⅝x78	1⅞x14⅝	¾"	¾"	2'-7½"	65
6	9	42'-3"	2'-8"	2½x32	1⅝x78	1⅞x14⅝	¾"	¾"	2'-7½"	67
7	10	42'-3"	2'-8"	2½x32	1⅝x78	1⅞x14⅜	¾"	¾"	2'-7½"	67
8	11	42'-3"	2'-8"	2½x32	1⅝x78	1⅞x14⅛	¾"	¾"	2'-7½"	65
9	12	42'-3"	2'-8"	2½x32	1⅝x78	1⅞x14⅛	¾"	¾"	2'-7½"	67
10	13	42'-3"	2'-8"	2½x32	1⅝x78	1⅞x14⅛	¾"	¾"	2'-7½"	65
11	14	42'-3"	2'-8"	2½x32	1⅝x78	1⅞x14⅛	¾"	¾"	2'-7½"	63
12	15	42'-3"	2'-8"	3x32	1⅝x78	1⅞x14⅛	¾"	¾"	2'-7½"	63
13	16	42'-3"	2'-10"	3½x34	1⅝x78	1⅞x14⅛	¾"	¾"	2'-7½"	65
15	19	43'-6"	3'-0"	3½x36	2x78	1⅞x14	¾"	¾"	2'-10"	75
16	20	43'-6"	2'-10"	3¼x34	1⅝x78	1⅞x14⅛	¾"	¾"	2'-10"	67
17	21	43'-6"	2'-8"	3x32	1⅝x78	1⅞x14⅛	¾"	¾"	2'-10"	67
18	22	43'-6"	2'-8"	2½x32	1⅝x78	1⅞x14⅛	¾"	¾"	2'-10"	69
19	23	43'-6"	2'-8"	2½x32	1⅝x78	1⅞x14⅛	¾"	¾"	2'-10"	69
20	24	43'-6"	2'-8"	2½x32	1⅝x78	1⅞x14⅛	¾"	¾"	2'-10"	69
21	25	43'-6"	2'-8"	2½x32	1⅝x78	1⅞x14⅛	¾"	¾"	2'-10"	71
22	26	43'-6"	2'-8"	2½x32	1⅝x78	1⅞x14⅛	¾"	¾"	2'-10"	71
23	27	43'-6"	2'-8"	2½x32	1⅝x78	1⅞x14⅛	¾"	¾"	2'-10"	73
24	28	43'-6"	2'-8"	2½x32	1⅝x78	1⅞x14⅛	¾"	¾"	2'-10"	71
25	29	43'-6"	2'-8"	2½x32	1⅝x78	1⅞x14⅛	¾"	¾"	2'-10"	71
26	30	43'-6"	2'-10"	2½x34	1⅝x78	1⅞x14⅛	¾"	¾"	2'-10"	69
27	31	43'-6"	2'-10"	2½x34	1⅝x78	1⅞x14½	¾"	¾"	2'-10"	67
28	32	43'-6"	2'-10"	2½x34	1⅝x78	1⅞x14½	¾"	¾"	2'-10"	67
29	33	43'-6"	2'-10"	2½x34	1⅝x78	1⅞x14⅝	¾"	¾"	2'-10"	67

Notes:

(F) Denotes Floor Beam Type.

For additional notes and details, see Sheet No. BR111.

(X) Denotes Stay Cable.

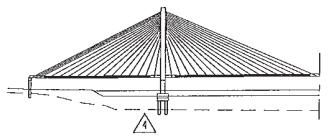

EDGE GIRDER - FIELD PIECES 2-13 & 15-29

DATE 5/17/10
ROUTE I-70 STATE MO/IL
DISTRICT 6 SHEET NO. BR113
COUNTY ST. LOUIS CITY - MO ST. CLAIR - IL
JOB NO. J6I0984
CONTRACT ID. 091208-601
PROJECT NO. I-70-9 (20)
BRIDGE NO. A6500

DESCRIPTION	DATE
1 Revised per ATC	5-17-10

MISSOURI HIGHWAYS AND TRANSPORTATION COMMISSION
105 WEST CAPITOL
JEFFERSON CITY, MO 65102
1-888-ASK-MODOT (1-888-275-6636)

HNTB
715 KIRK DRIVE
KANSAS CITY, MO 64105-1310
TELEPHONE (816) 472-1201
CERTIFICATE OF AUTHORITY NO. 001270

FINAL PLANS

REV.

Detailed JUL 2009
Checked JUL 2009

Note: This drawing is not to scale. Follow dimensions.

T:\de-proj\St_Louis_City\Construction\J6I0984\Asbuilts\Bridge\B_A6500_113-205_J6I0984_113.dgn

11:41:07 AM

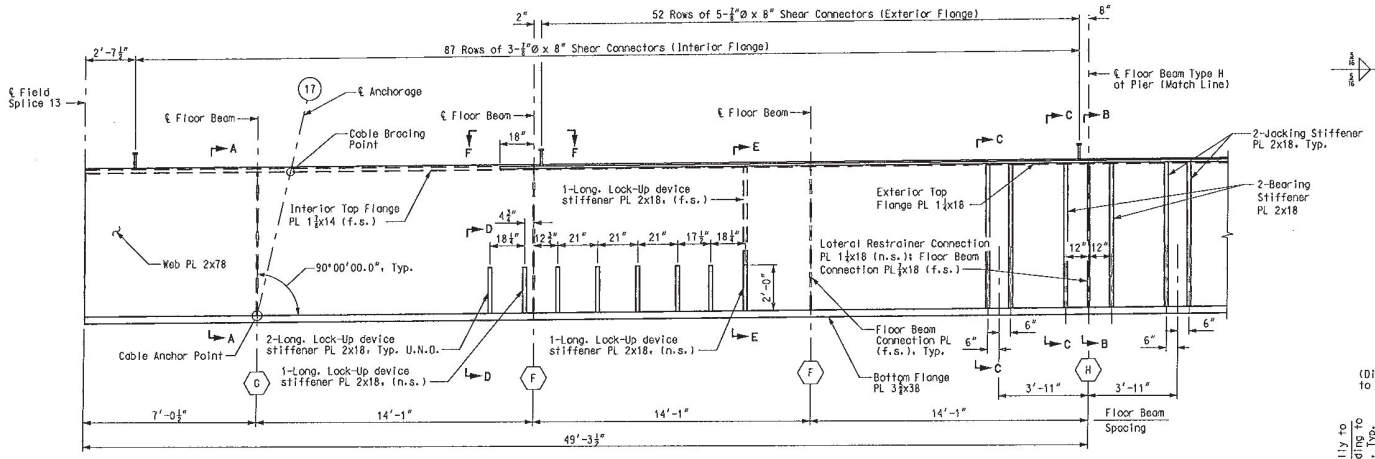

ELEVATION

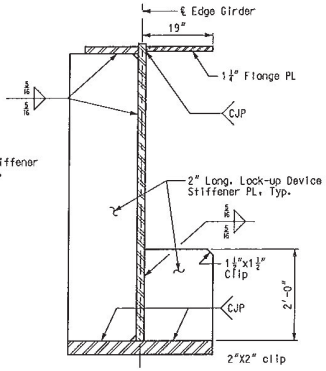

SECTION E-E

(Dimensions and details are identical to Section A-A, unless otherwise noted.)

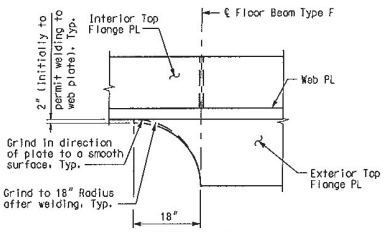

VIEW F-F

(Shear Connectors not shown for clarity)

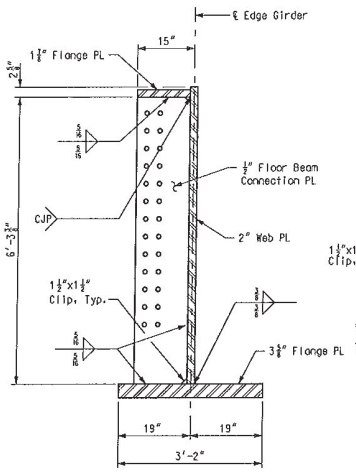

SECTION A-A

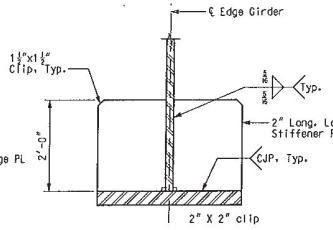

SECTION D-D

(Dimensions and details are identical to Section A-A, unless otherwise noted.)

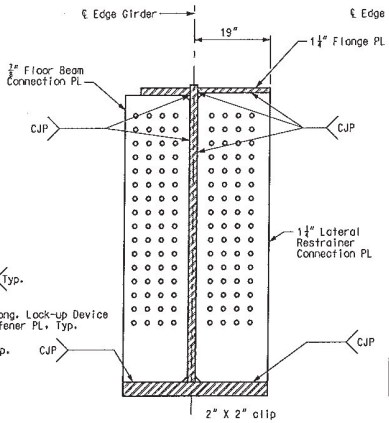

SECTION B-B

(Dimensions and details are identical to Section A-A, unless otherwise noted.)

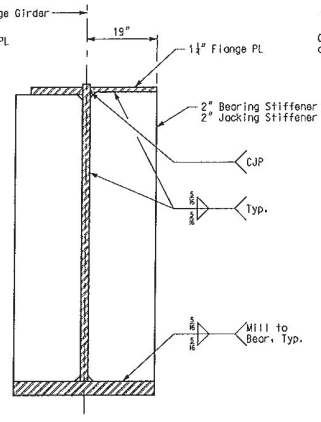

SECTION C-C

(Dimensions and details are identical to Section A-A, unless otherwise noted.)

Notes:

(17) Denotes Stay Cable.

(F) Denotes Floor Beam Type.

For additional notes and details, see Sheet No. BR111.
Longitudinal lock-up device not shown for clarity. For details see Sheet Nos. BR107 & BR108.
Bearing and Jacking stiffeners in Field Piece 14 is ASTM A709 Grade HPS70W-2.

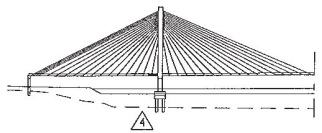

EDGE GIRDER - FIELD PIECE 14

DATE 5/17/10
ROUTE I-70 STATE MO/IL
DISTRICT 6 SHEET NO. BR114
COUNTY ST. LOUIS CITY - MO ST. CLAIR - IL
JOB NO. J6I0984
CONTRACT ID. 091208-601
PROJECT NO. I-70-9 (20)
BRIDGE NO. A6500

DESCRIPTION	DATE
4 Revised per ATC	5-17-10

MISSOURI HIGHWAYS AND TRANSPORTATION COMMISSION
MoDOT
105 WEST CAPITOL
JEFFERSON CITY, MO 65102
1-888-ASK-MODOT (1-888-275-6636)

HNTB
715 KIRK DRIVE
KANSAS CITY, MO 64105-1310
TELEPHONE (816) 472-1201
CERTIFICATE OF AUTHORITY NO. 000270

FINAL PLANS

REV.

Detailed JUL 2009
Checked JUL 2009

Note: This drawing is not to scale. Follow dimensions.

T:\de-proj\St_Louis_City\Construction\J6I0984\Asbuilts\Bridge\B_A6500_114-205_J6I0984_114.dgn

1:20:03 PM

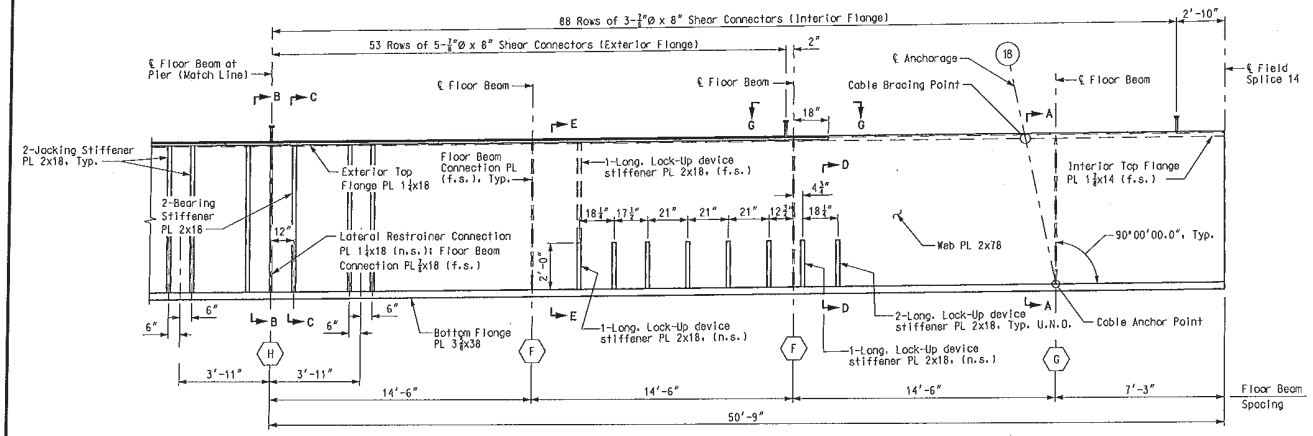

ELEVATION

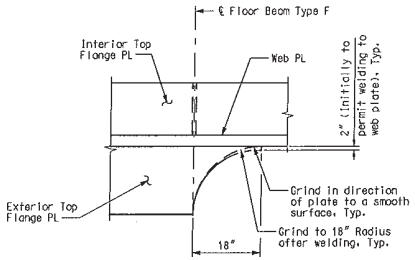

VIEW G-G

(Shear Connectors not shown for clarity)

Notes:

(18) Denotes Stay Cable.

(F) Denotes Floor Beam Type.

For Sections A-A thru E-E, see Sheet No. BR114.
For additional notes and details, see Sheet Nos. BR111 & BR114.

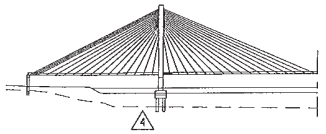

EDGE GIRDER - FIELD PIECE 14

DATE 5/17/10
ROUTE I-70 | STATE MO/IL
DISTRICT 6 | SHEET NO. BR115
COUNTY ST. LOUIS CITY - MO ST. CLAIR - IL
JOB NO. J6I0984
CONTRACT ID. 091208-601
PROJECT NO. I-70-9 (20)
BRIDGE NO. A6500

DESCRIPTION	DATE
1 Revised per ATC	5-17-10

MISSOURI HIGHWAYS AND TRANSPORTATION COMMISSION
MoDOT
105 WEST CAPITOL
JEFFERSON CITY, MO 65102
1-888-ASK-MODOT (1-888-275-6636)

HNTB
715 KIRK DRIVE
KANSAS CITY, MO 64105-1310
TELEPHONE (816) 472-1201
CERTIFICATE OF AUTHORITY NO. 001270

FINAL PLANS

REV.

Detailed JUL 2009
Checked JUL 2009

Note: This drawing is not to scale. Follow dimensions.

T:\de-proj\St_Louis_City\Construction\J6I0984\Asbuilts\Bridge\B_A6500_115-205_J6I0984_115.dgn

8:11:40 AM

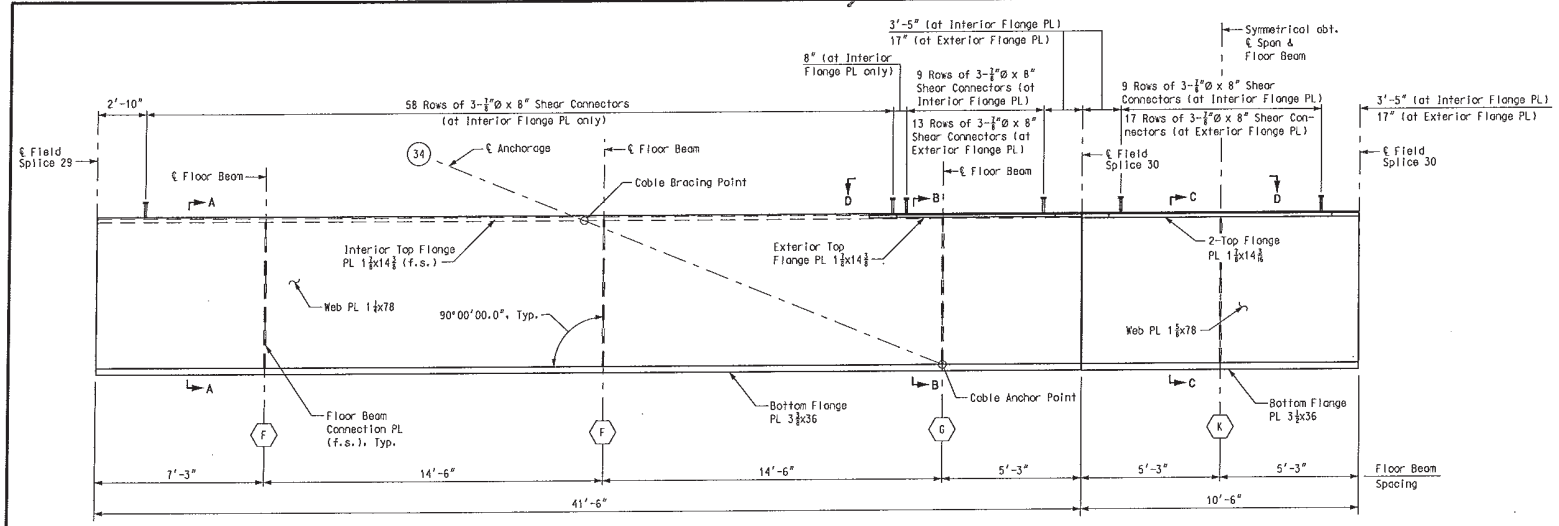

ELEVATION

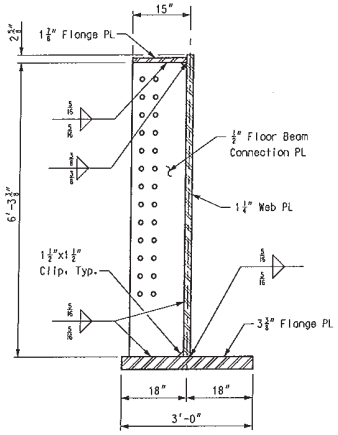

SECTION A-A

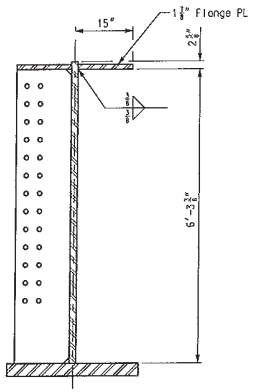

SECTION B-B

(Dimensions and details are identical to Section A-A , unless otherwise noted.)

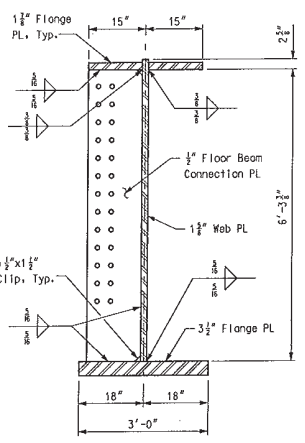

SECTION C-C

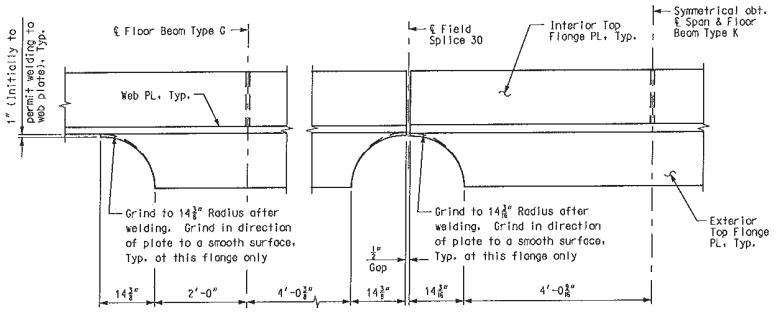

VIEW D-D

Notes:

(34) Denotes Stay Cable.

(F) Denotes Floor Beam Type.

For additional notes and details, see Sheet Nos. BR111.

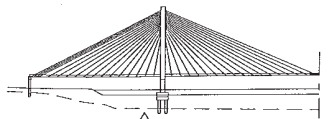

EDGE GIRDER - FIELD PIECES 30 & 31

DATE 5/17/10
ROUTE I-70 STATE MO/IL
DISTRICT 6 SHEET NO. BR116
COUNTY ST. LOUIS CITY - MO ST. CLAIR - IL
JOB NO. J6I0984
CONTRACT ID. 091208-601
PROJECT NO. I-70-9 (20)
BRIDGE NO. A6500

DATE	DESCRIPTION
5-17-10	4 Revised per ATC

MISSOURI HIGHWAYS AND TRANSPORTATION COMMISSION
105 WEST CAPITOL
JEFFERSON CITY, MO 65102
1-888-ASK-MODOT (1-888-275-6636)

HNTB
715 KIRK DRIVE
KANSAS CITY, MO 64105-1310
TELEPHONE (816) 472-1201
CERTIFICATE OF AUTHORITY NO. 001270

FINAL PLANS

REV.

Detailed JUL 2009
Checked JUL 2009

Note: This drawing is not to scale. Follow dimensions.

T:\de-proj\St_Louis_City\Construction\J6I0984\Asbuilts\Bridge\B_A6500_116-205_J6I0984_116.dgn 8:42:23 AM

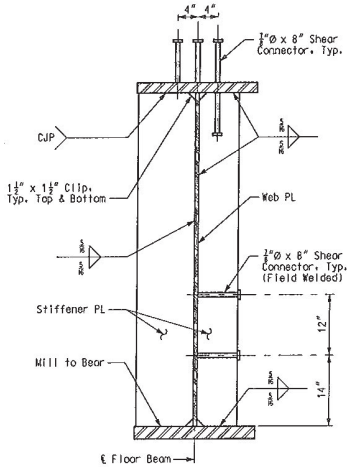

SECTION A–A

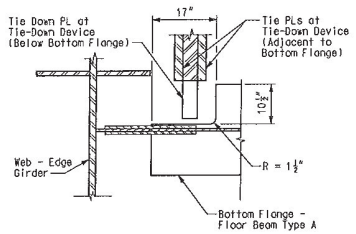

PLAN – COPE IN BOTTOM FLANGE

(Edge Girder Bottom Flange and Horizontal Diaphragm not shown for clarity)

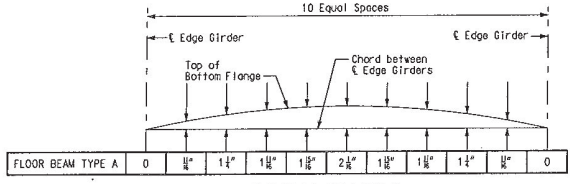

CAMBER DIAGRAM

Camber Notes:

The floor beams were fabricated for total dead load as indicated on the camber diagram. Ends of the floor beam were fabricated such that, under total dead load, the web of the edge girder is vertical.

"Total Dead Load" ordinates represent the amount of deflection due to all structural steel, precast concrete slab panels, cast-in-place slab concrete, counterweight concrete, barriers and wearing surface.

Ordinates are in inches and are at tenth points of the floor beam span.

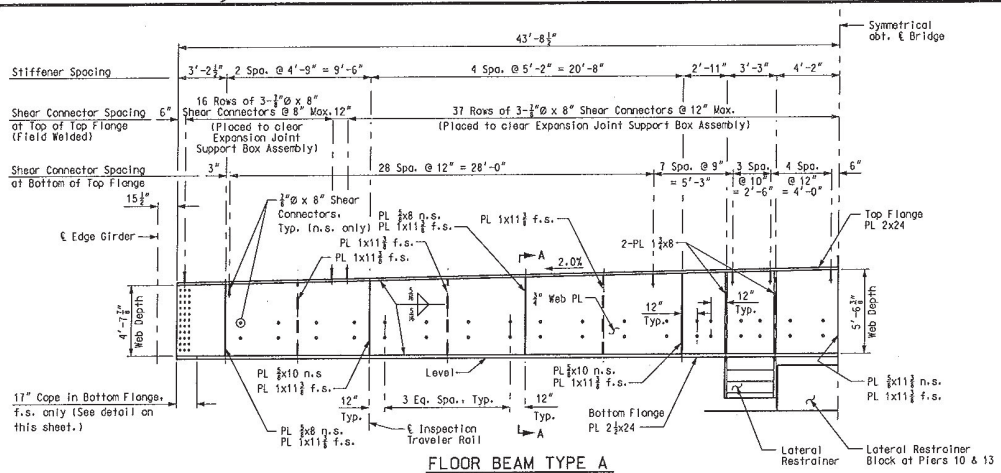

FLOOR BEAM TYPE A

Looking from ℄ Pier 11 or 12

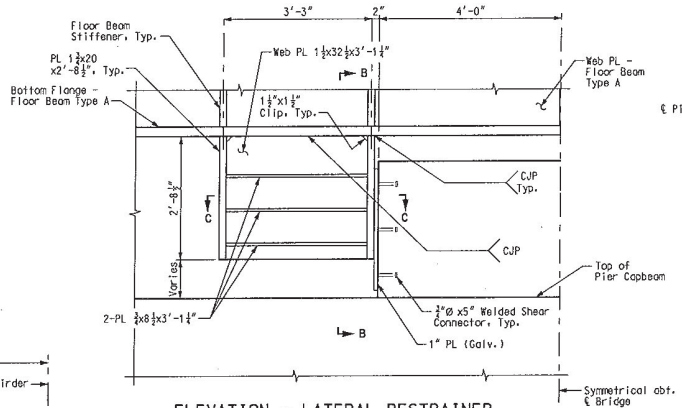

ELEVATION – LATERAL RESTRAINER

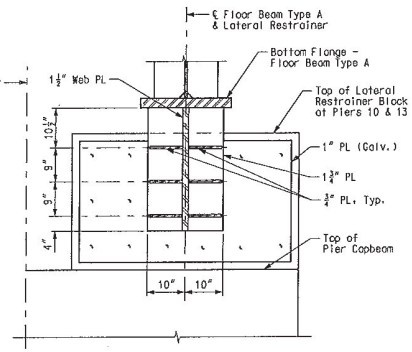

SECTION B–B

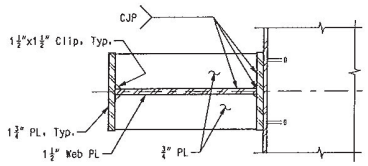

SECTION C–C

Notes:

All floor beam plates and connection plates for Floor Beam Type A conform to ASTM A709, Grade HPS70W T-2.

All floor beam connection plates have a Class B contact surface preparation.

Shear connectors shown attached to the web plate are to be installed after placement of the precast counterweight panels.

Web depth for Floor Beam Type A selected for an assumed modular expansion joint depth of 20½". The Contractor maked the required modifications if actual modular expansion joint depth varies from assumed dimension.

For details of Lateral Restrainer Block and 1" PL (Galv.), see Sheet Nos. BR24 & BR98.

For locations of floor beams, see Sheet Nos. BR109 & BR110.

For details of floor beam end connections, see Sheet No. BR122.

For Stiffener and Connection Plate Weld Detail, see Sheet No. BR118.

For Inspection Traveler, see Sheet No. BR178.

For Expansion Joint details, see Sheet Nos. BR172 thru BR176.

For Floor Beam Support Bracket detail for slab drain, see Sheet No. BR165.

All costs associated with materials, fabrication and erection of Floor Beams A, B, C, D & E are included in the pay item, "Fabricated Structural Low Alloy Steel (Plate Girder) A709, Gr. HPS70W".

FLOOR BEAM ELEVATION

DATE 8/20/09
ROUTE I-70 | STATE MO/IL
DISTRICT 6 | SHEET NO. BR117
COUNTY ST. LOUIS CITY – MO ST. CLAIR – IL
JOB NO. J6I0984
CONTRACT ID. 091208-601
PROJECT NO. I-70-9 (20)
BRIDGE NO. A6500

DESCRIPTION | DATE

MISSOURI HIGHWAYS AND TRANSPORTATION COMMISSION
105 WEST CAPITOL
JEFFERSON CITY, MO 65102
1-888-ASK-MODOT (1-888-275-6636)

HNTB
715 KIRK DRIVE
KANSAS CITY, MO 64105-1310
TELEPHONE (816) 472-1201
CERTIFICATE OF AUTHORITY NO. 001270

FINAL PLANS

REV.

Detailed JUL 2009
Checked JUL 2009

Note: This drawing is not to scale. Follow dimensions.

T:\de-proj\St_Louis_City\Construction\J6I0984\Asbuilts\Bridge\B_A6500_117-205_J6I0984_117.dgn 12:22:53 PM

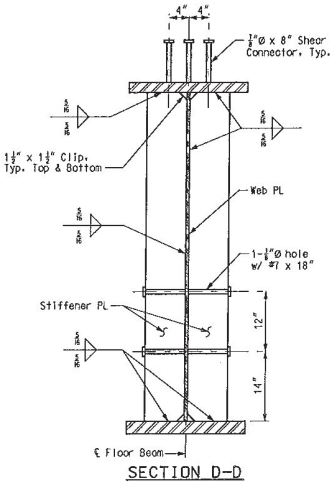

SECTION D-D

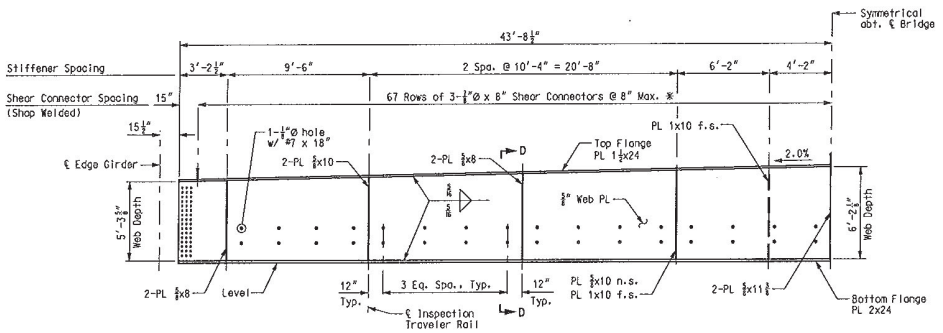

FLOOR BEAM TYPE B

Looking from ℄ Pier 11 or 12

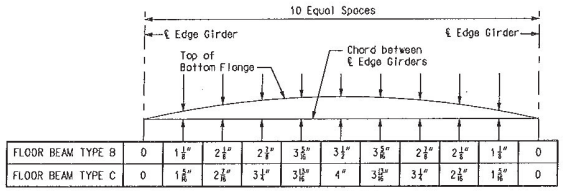

FLOOR BEAM TYPE B	0	1⅛"	2⅛"	2⅞"	3⅝"	3⅞"	3⅝"	2⅞"	2⅛"	1⅛"	0
FLOOR BEAM TYPE C	0	1⅝"	2⅞"	3¼"	3¹³⁄₁₆"	4"	3¹³⁄₁₆"	3¼"	2⅞"	1⅝"	0

CAMBER DIAGRAM

Camber Notes:

The floor beams shall be fabricated for total dead load as indicated on the camber diagram. Ends of the floor beam shall be fabricated such that, under total dead load, the web of the edge girder is vertical.

"Total Dead Load" ordinates represent the amount of deflection due to all structural steel, precast concrete slab panels, cast-in-place slab concrete, counterweight concrete, barriers and wearing surface.

Ordinates are in inches and are at tenth points of the floor beam span.

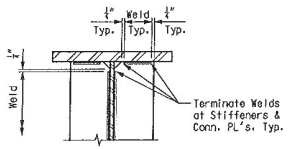

STIFFENER & CONNECTION PLATE WELD DETAIL

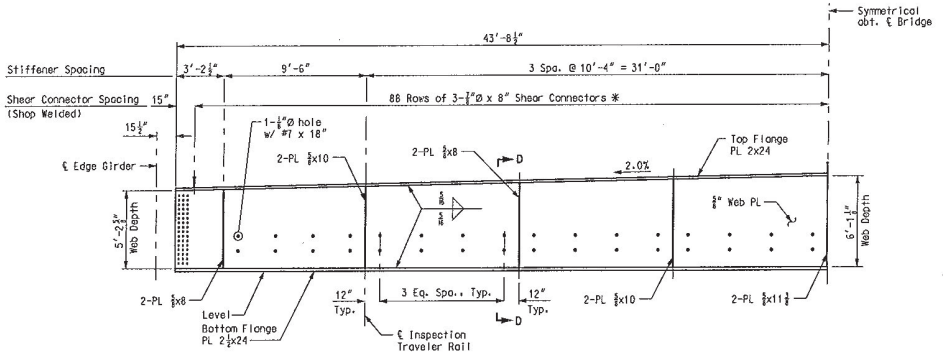

FLOOR BEAM TYPE C

Looking from ℄ Pier 11 or 12

Notes:

All floor beam plates and connection plates for Floor Beam Types B and C conform to ASTM A709 Grade, HPS70W T-2.

For additional notes and details, see Sheet No. BR117.

* See shop drawings for shear connector spacing.

FLOOR BEAM ELEVATION

DATE 8/20/09

ROUTE I-70 | STATE MO/IL

DISTRICT 6 | SHEET NO. BR118

COUNTY ST. LOUIS CITY - MO, ST. CLAIR - IL

JOB NO. J6I0984

CONTRACT ID. 091208-601

PROJECT NO. I-70-9 (20)

BRIDGE NO. A6500

DESCRIPTION | DATE

MISSOURI HIGHWAYS AND TRANSPORTATION COMMISSION
105 WEST CAPITOL
JEFFERSON CITY, MO 65102
1-888-ASK-MODOT (1-888-275-6636)

HNTB
715 KIRK DRIVE
KANSAS CITY, MO 64105-1310
TELEPHONE (816) 472-1201
CERTIFICATE OF AUTHORITY NO. 001270

FINAL PLANS

REV.

Detailed JUL 2009
Checked JUL 2009

Note: This drawing is not to scale. Follow dimensions.

T:\de-proj\St_Louis_City\Construction\J6I0984\Asbuilts\Bridge\B_A6500_118-205_J6I0984_118.dgn

12:27:07 PM

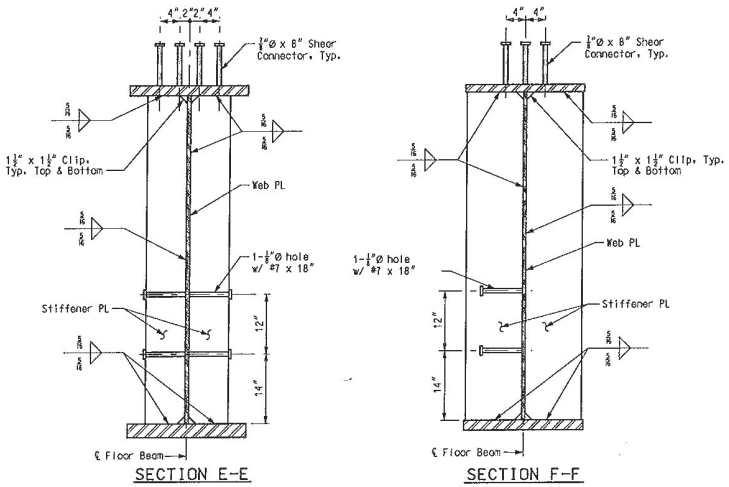

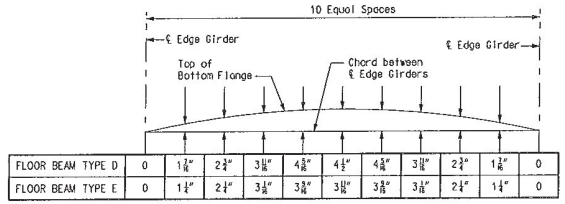

FLOOR BEAM TYPE D	0	1 1/16"	2 1/4"	3 11/16"	4 3/8"	4 1/2"	4 3/8"	3 11/16"	2 1/4"	1 1/16"	0
FLOOR BEAM TYPE E	0	1 1/4"	2 1/4"	3 1/4"	3 3/8"	3 1/2"	3 3/8"	3 1/4"	2 1/4"	1 1/4"	0

CAMBER DIAGRAM

Camber Notes:
The floor beams fabricated for total dead load as indicated on the camber diagram. Ends of the floor beam fabricated such that, under total dead load, the web of the edge girder is vertical.
"Total Dead Load" ordinates represent the amount of deflection due to all structural steel, precast concrete slab panels, cast-in-place slab concrete, counterweight concrete, barriers and wearing surface.
Ordinates are in inches and are at tenth points of the floor beam span.

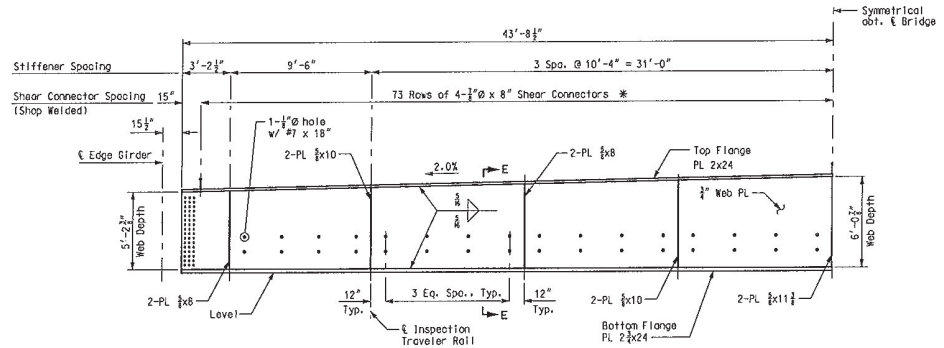

FLOOR BEAM TYPE D
Looking from ℄ Pier 11 or 12

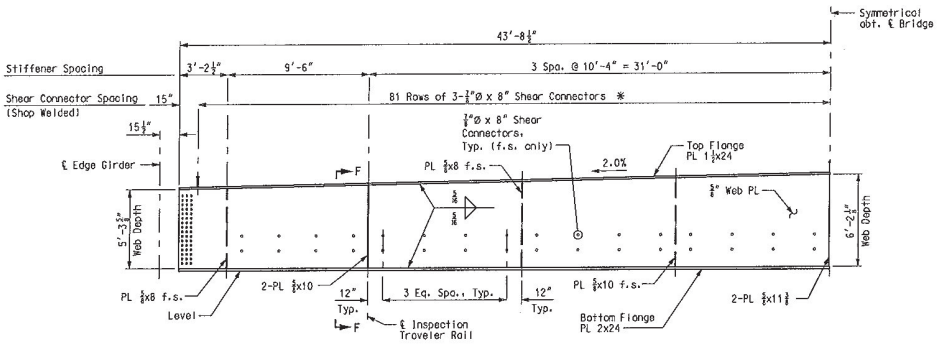

FLOOR BEAM TYPE E
Looking from ℄ Pier 11 or 12

Notes:
All floor beam plates and connection plates for Floor Beam Types D and E conform to ASTM A709, Grade HPS70W T-2.
For additional notes and details, see Sheet No. BR117.
* See shop drawings for shear connector spacing.

FLOOR BEAM ELEVATION

DATE 8/20/09
ROUTE I-70 | STATE MO/IL
DISTRICT 6 | SHEET NO. BR119
COUNTY ST. LOUIS CITY - MO ST. CLAIR - IL
JOB NO. J6I0984
CONTRACT ID. 091208-601
PROJECT NO. I-70-9 (20)
BRIDGE NO. A6500

DESCRIPTION | DATE

MISSOURI HIGHWAYS AND TRANSPORTATION COMMISSION
105 WEST CAPITOL
JEFFERSON CITY, MO 65102
1-888-ASK-MODOT (1-888-275-6636)

HNTB
715 KIRK DRIVE
KANSAS CITY, MO 64105-1310
TELEPHONE (816) 472-1201
CERTIFICATE OF AUTHORITY NO. 001270

FINAL PLANS

REV.

Detailed JUL 2009
Checked JUL 2009

Note: This drawing is not to scale. Follow dimensions.

T:\de-proj\St_Louis_City\Construction\J6I0984\Asbuilts\Bridge\B_A6500_119-205_J6I0984_119.dgn

12:30:04 PM

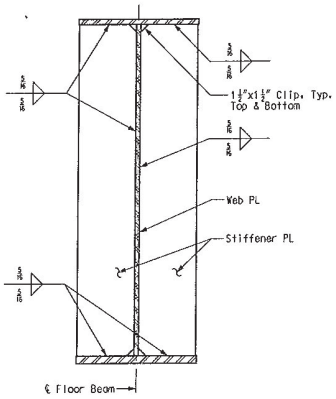

SECTION G-G

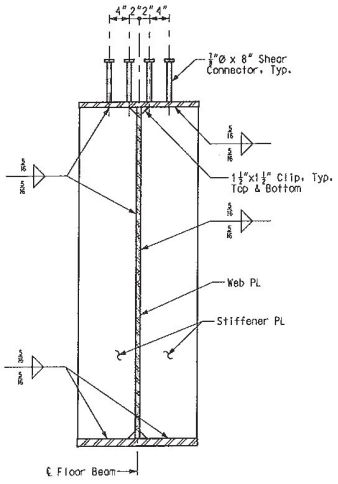

SECTION H-H

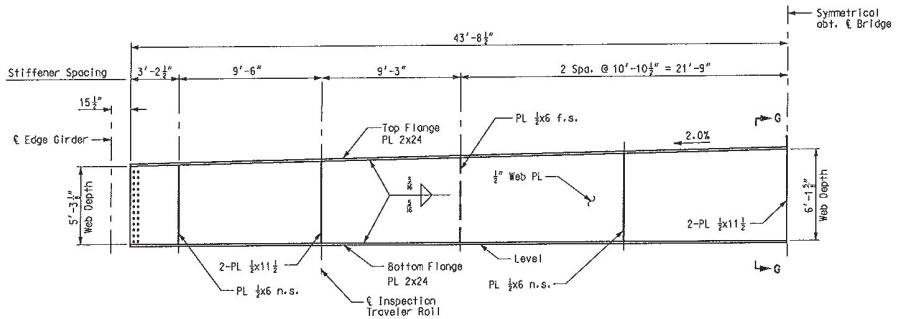

FLOOR BEAM TYPE F

Looking from ℄ Pier 11 or 12

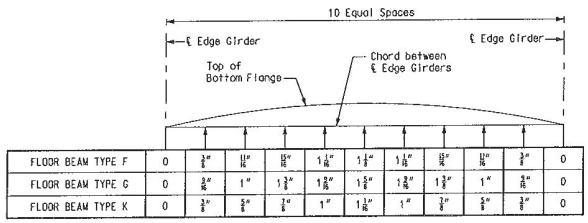

FLOOR BEAM TYPE F	0	3/8"	11/16"	15/16"	1 1/16"	1 1/8"	1 1/16"	15/16"	11/16"	3/8"	0
FLOOR BEAM TYPE G	0	3/8"	1"	1 3/16"	1 5/16"	1 3/8"	1 5/16"	1 3/16"	1"	3/8"	0
FLOOR BEAM TYPE K	0	3/8"	5/8"	7/8"	1"	1 1/16"	1"	7/8"	5/8"	3/8"	0

CAMBER DIAGRAM

Camber Notes:
The floor beams fabricated for total dead load as indicated on the camber diagram. Ends of the floor beam fabricated such that, under total dead load, the web of the edge girder is vertical.
"Total Dead Load" ordinates represent the amount of deflection due to all structural steel, precast concrete slab panels, cast-in-place slab concrete, barriers and wearing surface.
Ordinates are in inches and are at tenth points of the floor beam span.

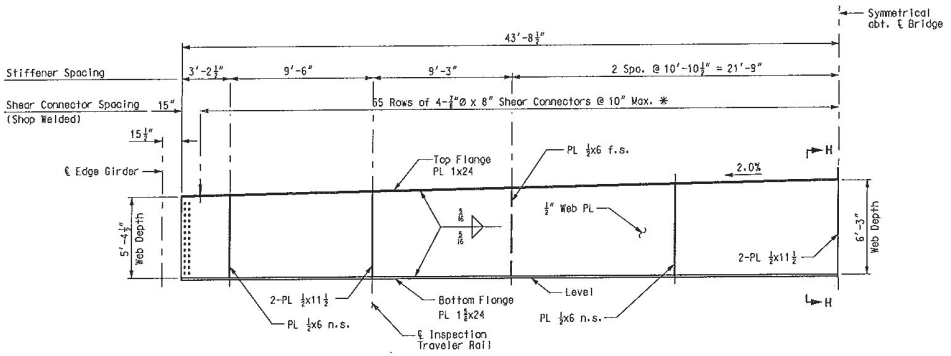

FLOOR BEAM TYPES G & K

Looking from ℄ Pier 11 or 12

Notes:
All floor beam plates and connection plates for Floor Beam Types F, G and K conform to ASTM A709, Grade HPS50W T-2.
For additional notes and details, see Sheet No. BR117.
All costs associated with materials, fabrication and erection of Floor Beams F, G, H & K included in the pay item, "Fabricated Structural Low Alloy Steel (Plate Girder) A709, Gr. HPS50W".
* See shop drawings for shear stud layout.

FLOOR BEAM ELEVATION

DATE 8/20/09
ROUTE I-70 STATE MO/IL
DISTRICT 6 SHEET NO. BR120
COUNTY ST. LOUIS CITY - MO ST. CLAIR - IL
JOB NO. J6I0984
CONTRACT ID. 091208-601
PROJECT NO. I-70-9 (20)
BRIDGE NO. A6500

DESCRIPTION | DATE

MISSOURI HIGHWAYS AND TRANSPORTATION COMMISSION
105 WEST CAPITOL
JEFFERSON CITY, MO 65102
1-888-ASK-MODOT (1-888-275-6636)

HNTB
715 KIRK DRIVE
KANSAS CITY, MO 64105-1310
TELEPHONE (816) 472-1201
CERTIFICATE OF AUTHORITY NO. 001670

FINAL PLANS

REV.

Detailed JUL 2009
Checked JUL 2009

Note: This drawing is not to scale. Follow dimensions.

T:\de-proj\St_Louis_City\Construction\J6I0984\Asbuilts\Bridge\B_A6500_120-205_J6I0984_120_NCR012.dgn

12:31:50 PM

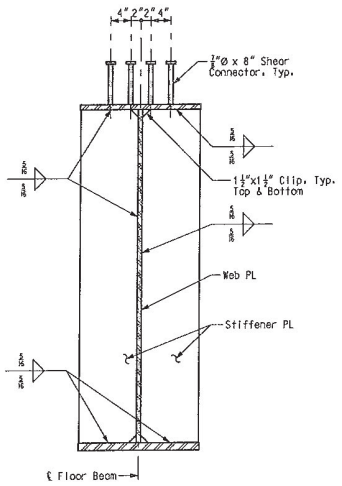

SECTION J-J

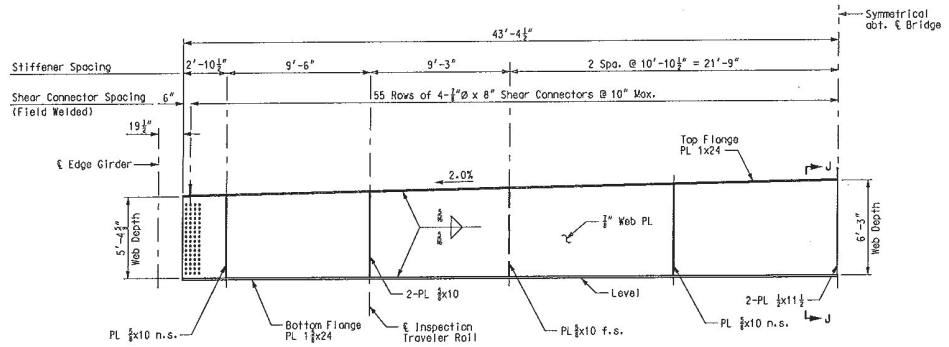

FLOOR BEAM TYPE H

Looking from ℄ Pier 11 or 12

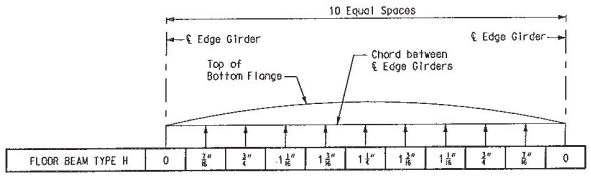

CAMBER DIAGRAM

Camber Notes:

The floor beams fabricated for total dead load as indicated on the camber diagram. Ends of the floor beam fabricated such that, under total dead load, the web of the edge girder is vertical.

"Total Dead Load" ordinates represent the amount of deflection due to all structural steel, precast concrete slab panels, cast-in-place slab concrete, barriers and wearing surface.

Ordinates are in inches and are at tenth points of the floor beam span.

Notes:

All floor beam plates and connection plates for Floor Beam Type H conform to ASTM A709, Grade HPS50W T-2.

For additional notes and details, see Sheet No. BR117.

FLOOR BEAM ELEVATION

DATE 8/20/09
ROUTE I-70 | STATE MO/IL
DISTRICT 6 | SHEET NO. BR121
COUNTY ST. LOUIS CITY - MO ST. CLAIR - IL
JOB NO. J6I0984
CONTRACT ID. 091208-601
PROJECT NO. I-70-9 (20)
BRIDGE NO. A6500

DESCRIPTION | DATE

MISSOURI HIGHWAYS AND TRANSPORTATION COMMISSION
105 WEST CAPITOL
JEFFERSON CITY, MO 65102
1-888-ASK-MODOT (1-888-275-6636)

HNTB
715 KIRK DRIVE
KANSAS CITY, MO 64105-1310
TELEPHONE (816) 472-1201
CERTIFICATE OF AUTHORITY NO. 001270

FINAL PLANS

REV.

Detailed JUL 2009
Checked JUL 2009

Note: This drawing is not to scale. Follow dimensions.

T:\da-proj\St_Louis_City\Construction\J6I0984\Asbuilts\Bridge\B_A6500_121-205_J6I0984_121.dgn

12:39:12 PM

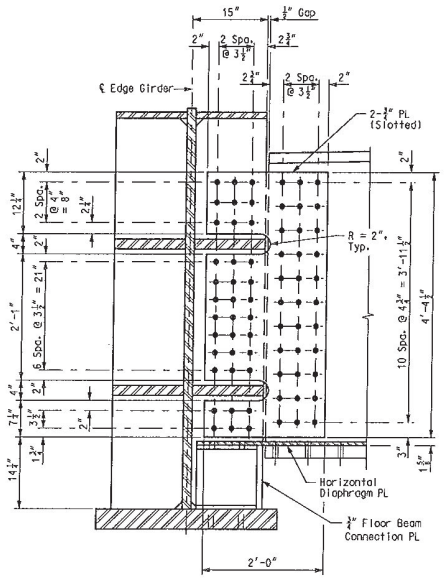

FLOOR BEAM TYPE A

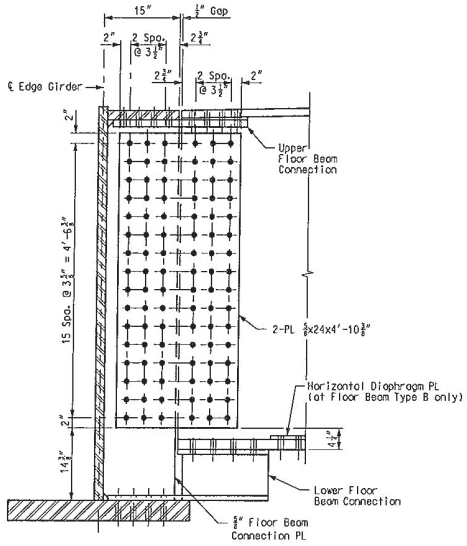

FLOOR BEAM TYPES B & E

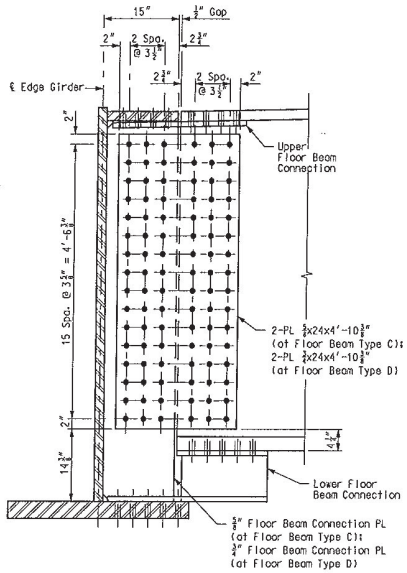

FLOOR BEAM TYPES C & D

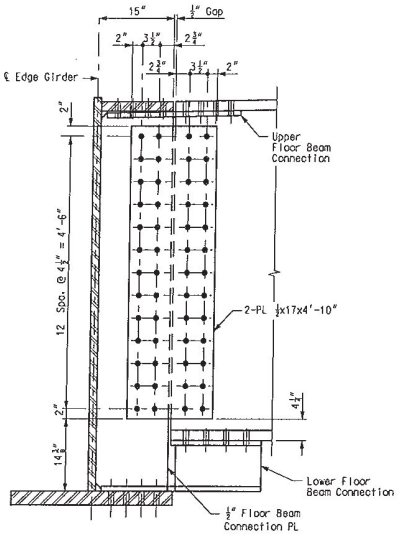

FLOOR BEAM TYPE F

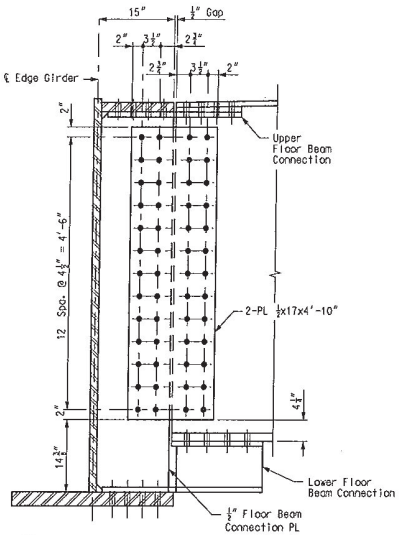

FLOOR BEAM TYPES G & K

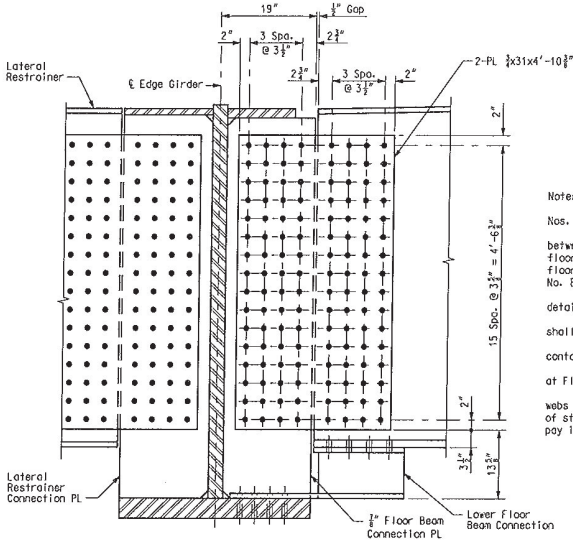

FLOOR BEAM TYPE H

Notes:

For floor beam details, see Sheet Nos. BR117 thru BR121.

For details of horizontal diophragm between Floor Beam Types A & B, upper floor beam connection, and lower floor beam connections, see Sheet No. BR134.

Shear connectors and cable anchorage details not shown for clarity.

All bolts for floor beam end connections shall be 1"Ø ASTM A325, Type 3 bolts.

All Floor Beam connection plates are Class B contact surface preparation.

For additional details of Lateral Restrainer at Floor Beam Type H, see Sheet No. BR106.

Plates connecting the floor beam flanges and webs to the edge girders are the same grade of steel as the floor beam and included in the same pay items as the floor beams.

FLOOR BEAM CONNECTION DETAILS

Detailed JUL 2009
Checked JUL 2009

Note: This drawing is not to scale. Follow dimensions.

Sheet No. 122 of 205

T:\de-proj\St_Louis_City\Construction\J6I0984\Asbuilts\Bridge\B_A6500_122-205_J6I0984_122_NCR012.dgn

12:42:04 PM

DATE 8/20/09
ROUTE I-70 STATE MO/IL
DISTRICT 6 SHEET NO. BR122
COUNTY ST. LOUIS CITY - MO ST. CLAIR - IL
JOB NO. J6I0984
CONTRACT ID. 091208-601
PROJECT NO. I-70-9 (20)
BRIDGE NO. A6500

DESCRIPTION | DATE | REV.

MISSOURI HIGHWAYS AND TRANSPORTATION COMMISSION
105 WEST CAPITOL
JEFFERSON CITY, MO 65102
1-888-ASK-MODOT (1-888-275-6636)

HNTB
715 KIRK DRIVE
KANSAS CITY, MO 64105-1310
TELEPHONE (816) 472-1201
CERTIFICATE OF AUTHORITY NO. 001270

FINAL PLANS

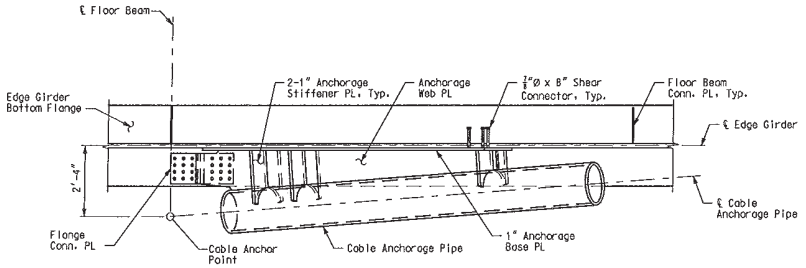

PLAN

(Anchorage for Cable Stay (8) shown, others similar. Floor Beam connection, stay cable, anchor, and bolts not shown for clarity.)

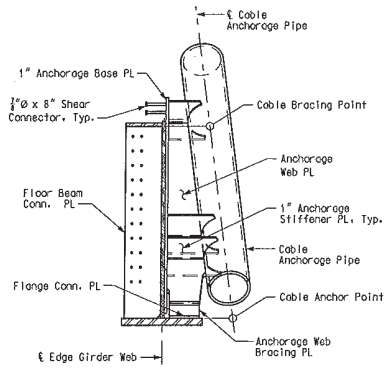

SECTION A-A

(Floor Beam connection not shown for clarity.)

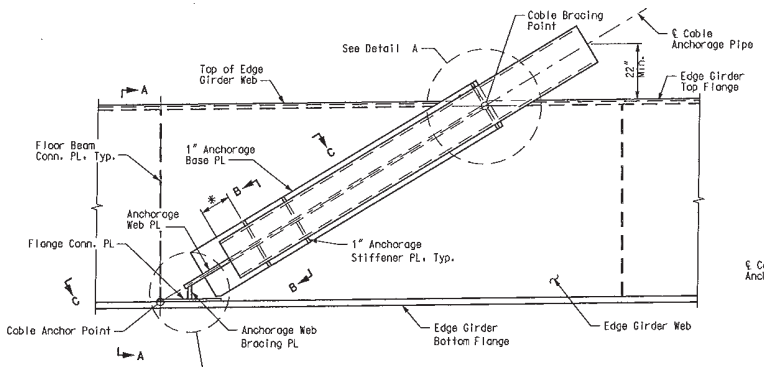

ELEVATION

(Anchorage for Cable Stay (8) shown, others similar. Stay cable, anchor, and bolts not shown for clarity.)
* 18" at Stay Cable 1; 12" at Stay Cables 2-34.
** Provided minimum 2" clear between anti-vandalism (not shown) pipe and bridge deck.

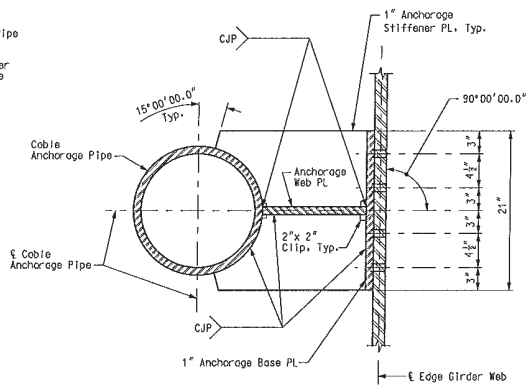

SECTION B-B

GIRDER ANCHORAGE DATA				
STAY CABLE	CABLE ANCHORAGE PIPE OUTSIDE DIAMETER (INCHES)	CABLE ANCHORAGE PIPE WALL THICKNESS (INCHES)	ANCHORAGE WEB PL THICKNESS (INCHES)	ANCHORAGE WEB BRACING PL THICKNESS (INCHES)
1	20.000	1.500	2.375	1.875
2	20.000	1.500	2.250	1.750
3	18.000	1.375	2.250	1.750
4	18.000	1.375	2.250	1.750
5	16.000	1.218	2.250	1.750
6	16.000	1.218	2.250	1.750
7	16.000	1.218	2.250	1.750
8	16.000	1.218	2.250	1.750
9	16.000	1.218	1.875	1.375
10	16.000	1.218	1.875	1.375
11	14.000	1.250	1.875	1.375
12	14.000	1.250	1.750	-
13	14.000	1.250	1.750	-
14	12.750	1.000	1.750	-
15	12.750	1.000	1.750	-
16	12.750	1.000	1.500	-
17	12.750	1.000	1.500	-
18	12.750	1.000	1.500	-
19	12.750	1.000	1.500	-
20	12.750	1.000	1.750	-
21	12.750	1.000	1.750	-
22	14.000	1.250	1.875	-
23	14.000	1.250	1.875	-
24	14.000	1.250	1.875	1.375
25	16.000	1.218	1.875	1.375
26	16.000	1.218	1.875	1.375
27	16.000	1.218	1.875	1.375
28	16.000	1.218	2.250	1.750
29	16.000	1.218	2.250	1.750
30	16.000	1.218	2.250	1.750
31	18.000	1.375	2.250	1.750
32	18.000	1.375	2.250	1.750
33	20.000	1.500	2.250	1.750
34	20.000	1.500	2.375	1.875

Notes:
For locations of bolts at anchorage base plate and edge girder web, see Sheet Nos. BR125 thru BR131.
All fasteners were 1"Ø, ASTM A325 Type 3.
For Details A & B and Section C-C, see Sheet No. BR124.
For geometry of cable anchor point and cable bracing point, see Sheet No. BR139 & BR140.
The cable anchorage pipe diameter and length shown on this sheet may be modified, with the approval of the Engineer, to contain the cable anchor hardware for the cable system proposed by the Contractor.
For Lower Floor Beam Connection details, see Sheet No. BR134.
Structural steel for Anchorage Web PL, Anchorage Stiffener PL, Anchorage Base PL, Anchorage Web Bracing PL and Flange Connection PL shall conform to ASTM A709 Grade HPS70W-2.
Structural steel for Cable Anchorage Pipe was conform to API 5L X52 PSL2.
Structural steel for the Stay Cable Girder Anchorages were included in the pay item "Fabricated Structural Low Alloy Steel (Plate Girder) A709, Gr. HPS70W".
Except as otherwise noted, stay cable girder anchorages were coated with paint system 'H', in accordance with Sec. 1081. This include the anchorage base plates, anchorage web plates, exterior of the cable anchorage pipe, anchorage web bracing plates, flange connection plates, fasteners and anchorage stiffeners. The color of the field coat is Brown (Federal Std. #30045). The interior of the cable anchorage stay pipes was accordance with Section #1045.

STAY CABLE GIRDER ANCHORAGE DETAILS

DATE 10/19/09
ROUTE I-70 | STATE MO/IL
DISTRICT 6 | SHEET NO. BR123
COUNTY ST. LOUIS CITY - MO ST. CLAIR - IL
JOB NO. J6I0984
CONTRACT ID. 091208-601
PROJECT NO. I-70-9 (20)
BRIDGE NO. A6500

DESCRIPTION | DATE

MISSOURI HIGHWAYS AND TRANSPORTATION COMMISSION
105 WEST CAPITOL
JEFFERSON CITY, MO 65102
1-888-ASK-MODOT (1-888-275-6636)

HNTB
715 KIRK DRIVE
KANSAS CITY, MO 64105-1310
(816) 472-1201
CERTIFICATE OF AUTHORITY NO. 001270

FINAL PLANS

REV.

Detailed JUL 2009
Checked JUL 2009

Note: This drawing is not to scale. Follow dimensions.

T:\de-proj\St_Louis_City\Construction\J6I0984\Asbuilts\Bridge\B_A6500_123-205_J6I0984_123.dgn 12:43:25 PM

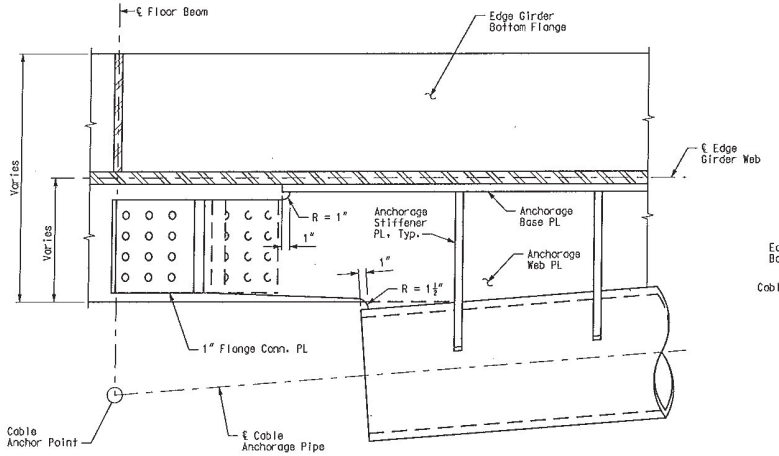

AT STAY CABLES 1-11 AND 24-34

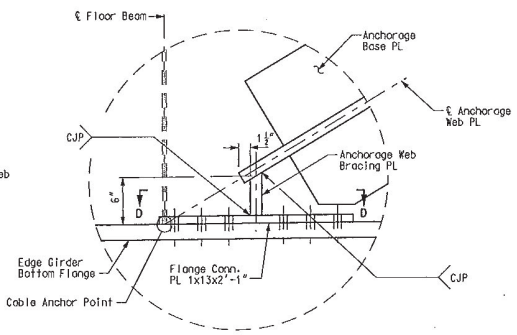

AT STAY CABLES 1-11 AND 24-34

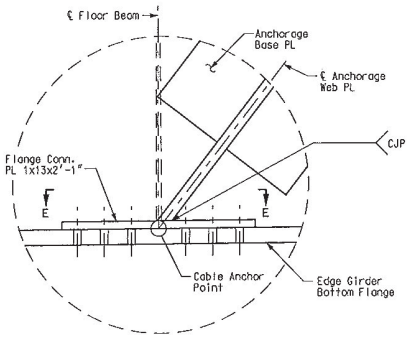

AT STAY CABLES 12-23

DETAIL B

(Cable Anchorage Pipe and bolts not shown for clarity.)

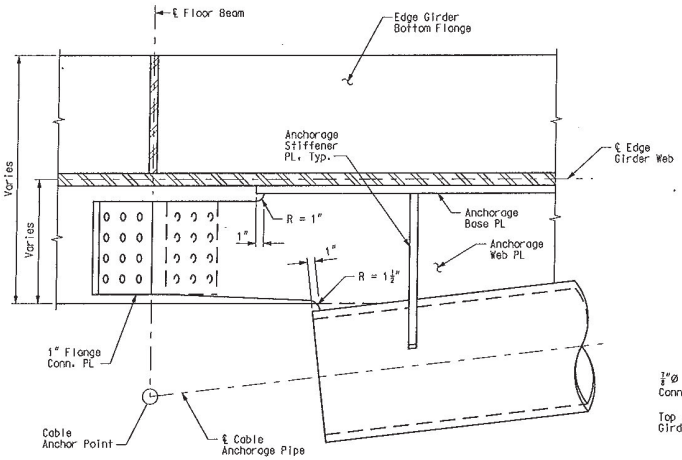

AT STAY CABLES 12-23

SECTION C-C

(Lower Floor Beam Connection not shown for clarity)

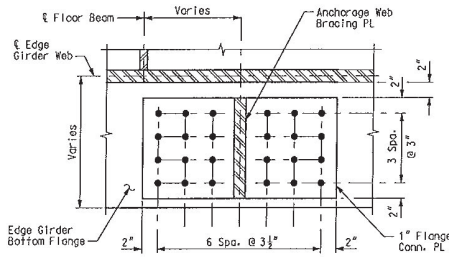

SECTION D-D

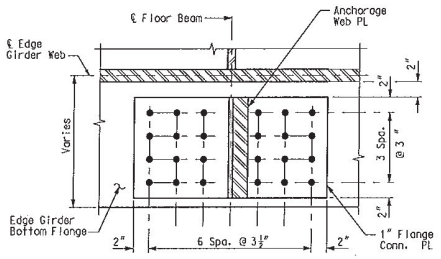

SECTION E-E

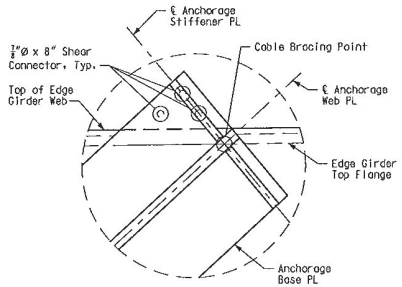

DETAIL A

(Cable Anchorage Pipe and bolts not shown for clarity.)

Notes:
For location of Details A, B, and Section C-C, see Sheet No. BR123.
For additional notes and details, see Sheet No. BR123.

STAY CABLE GIRDER ANCHORAGE DETAILS

DATE 8/20/09
ROUTE I-70 | STATE MO/IL
DISTRICT 6 | SHEET NO. BR124
COUNTY ST. LOUIS CITY - MO, ST. CLAIR - IL
JOB NO. J6I0984
CONTRACT ID. 091208-601
PROJECT NO. I-70-9 (20)
BRIDGE NO. A6500

DESCRIPTION | DATE

MISSOURI HIGHWAYS AND TRANSPORTATION COMMISSION
105 WEST CAPITOL
JEFFERSON CITY, MO 65102
1-888-ASK-MODOT (1-888-275-6636)

HNTB
715 KIRK DRIVE
KANSAS CITY, MO 64105-1310
TELEPHONE (816) 472-1201
CERTIFICATE OF AUTHORITY NO. 001210

FINAL PLANS

REV.

Detailed JUL 2009
Checked JUL 2009

Note: This drawing is not to scale. Follow dimensions.

T:\de-proj\St_Louis_City\Construction\J6I0984\Asbuilts\Bridge\B_A6500_124-205_J6I0984_124.dgn

2:05:35 PM

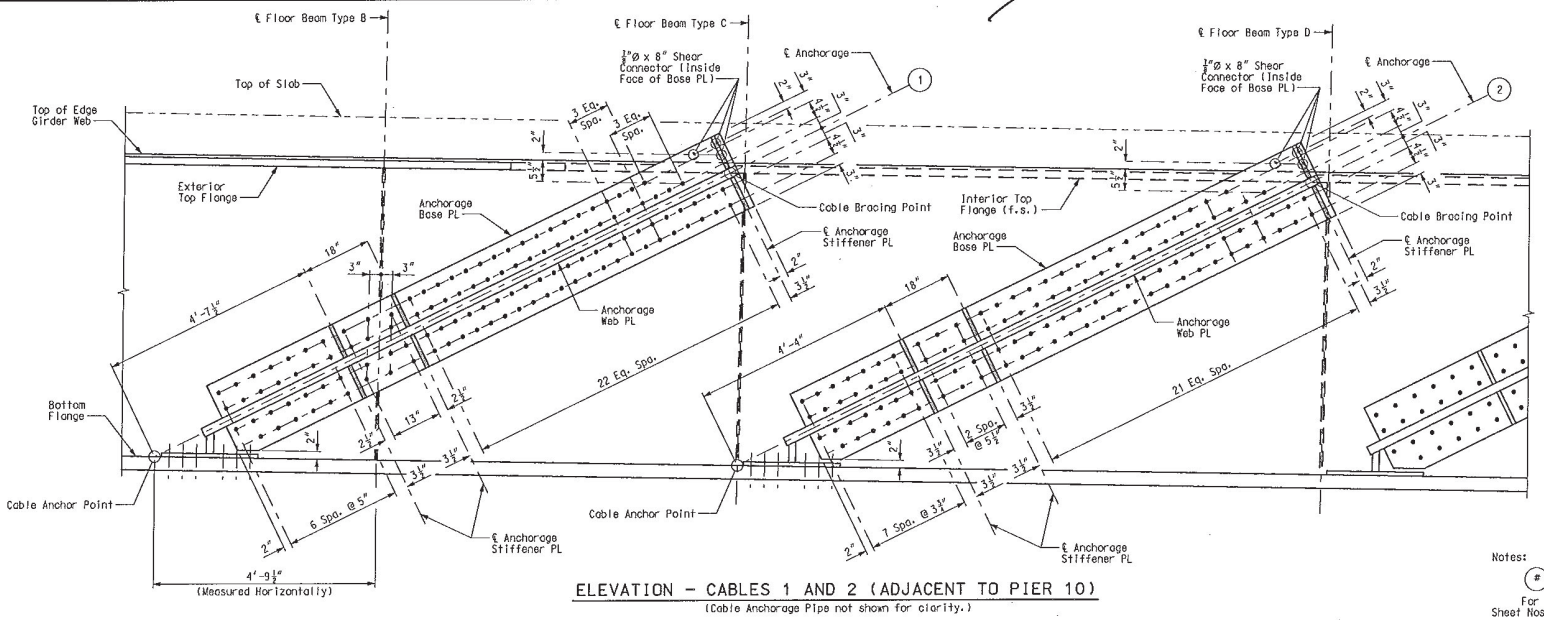

ELEVATION – CABLES 1 AND 2 (ADJACENT TO PIER 10)

(Cable Anchorage Pipe not shown for clarity.)

Notes:

(#) Denotes Stay Cable.

For additional notes and details, see Sheet Nos. BR123 & BR124.

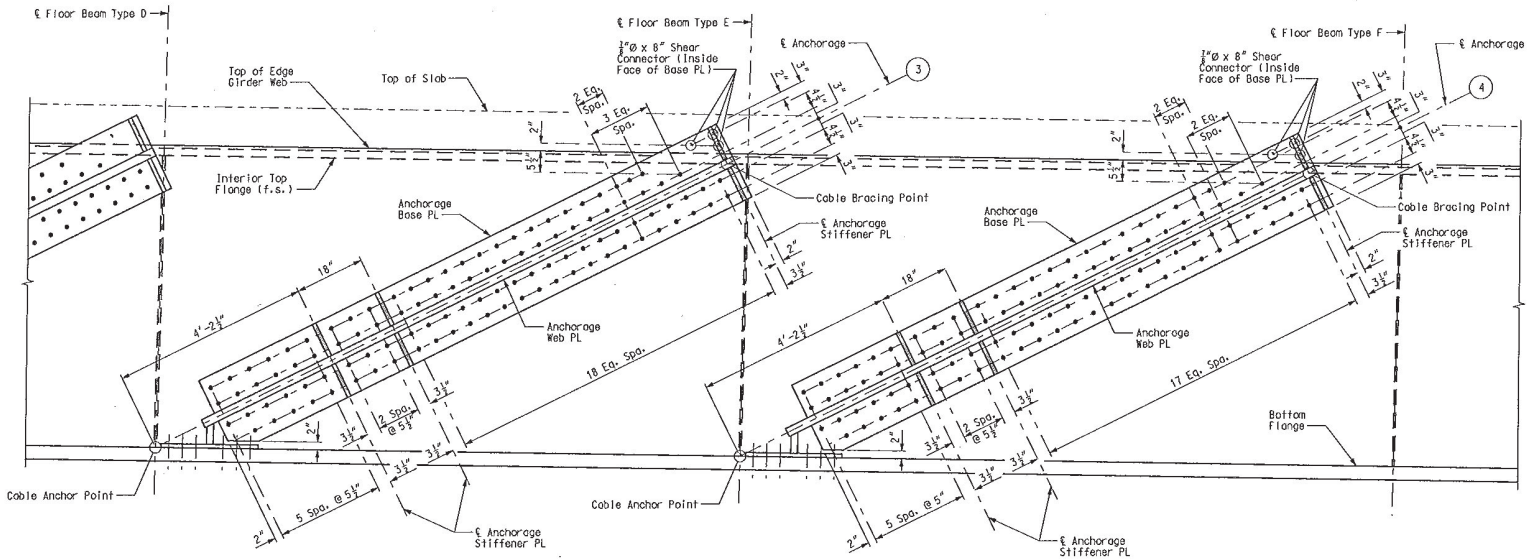

ELEVATION – CABLES 3 AND 4 (ADJACENT TO PIER 10)

(Cable Anchorage Pipe not shown for clarity.)

STAY CABLE GIRDER ANCHORAGE DETAILS

Detailed JUL 2009
Checked JUL 2009

Note: This drawing is not to scale. Follow dimensions.

Sheet No. 125 of 205

DATE 8/20/09
ROUTE I-70 STATE MO/IL
DISTRICT 6 SHEET NO. BR125
COUNTY ST. LOUIS CITY – MO ST. CLAIR – IL
JOB NO. J6I0984
CONTRACT ID. 091208-601
PROJECT NO. I-70-9 (20)
BRIDGE NO. A6500

DESCRIPTION | DATE

MISSOURI HIGHWAYS AND TRANSPORTATION COMMISSION
105 WEST CAPITOL
JEFFERSON CITY, MO 65102
1-888-ASK-MODOT (1-888-275-6636)

HNTB
715 KIRK DRIVE
KANSAS CITY, MO 64105-1310
TELEPHONE (816) 472-1201
CERTIFICATE OF AUTHORITY NO. 001270

FINAL PLANS

REV.

T:\de-proj\St_Louis_City\Construction\J6I0984\Asbuilts\Bridge\B_A6500_125-205_J6I0984_125.dgn

2:06:13 PM

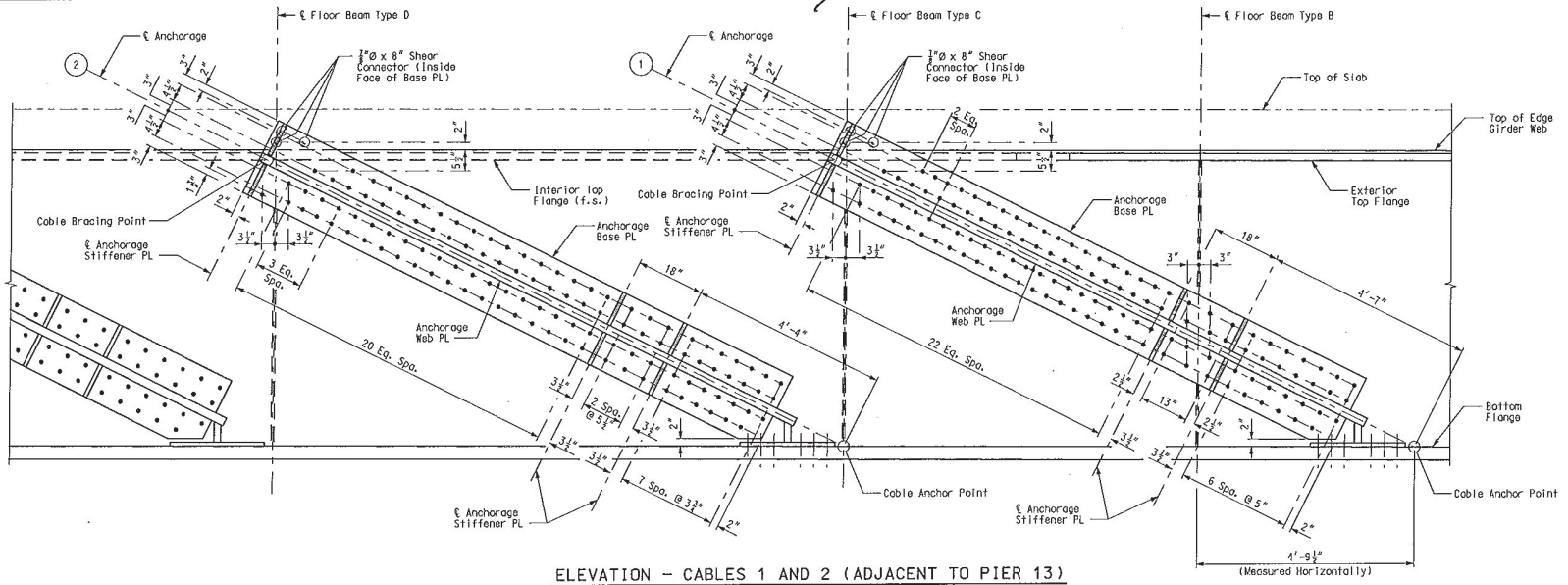

ELEVATION – CABLES 1 AND 2 (ADJACENT TO PIER 13)

(Cable Anchorage Pipe not shown for clarity.)

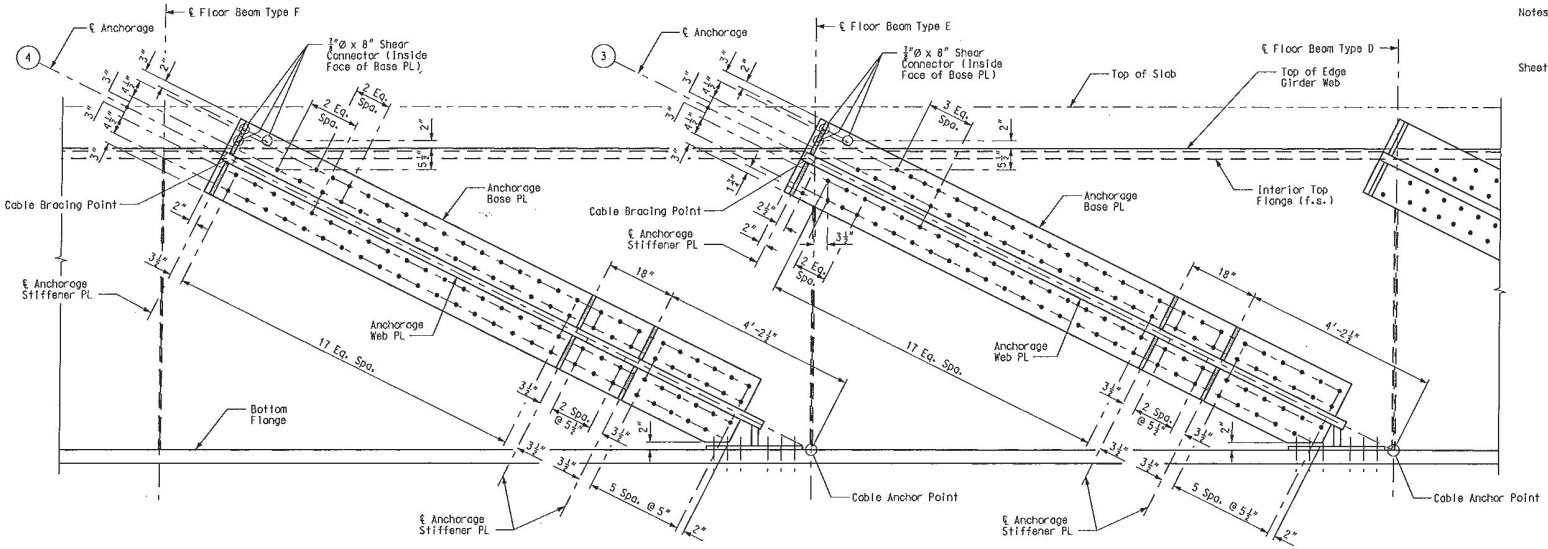

ELEVATION – CABLES 3 AND 4 (ADJACENT TO PIER 13)

(Cable Anchorage Pipe not shown for clarity.)

Notes:

(#) Denotes Stay Cable.

For additional notes and details, see Sheet Nos. BR123 & BR124.

STAY CABLE GIRDER ANCHORAGE DETAILS

DATE 8/20/09
ROUTE I-70 | STATE MO/IL
DISTRICT 6 | SHEET NO. BR126
COUNTY ST. LOUIS CITY – MO ST. CLAIR – IL
JOB NO. J6I0984
CONTRACT ID. 091208-601
PROJECT NO. I-70-9 (20)
BRIDGE NO. A6500

DESCRIPTION | DATE

MISSOURI HIGHWAYS AND TRANSPORTATION COMMISSION
105 WEST CAPITOL
JEFFERSON CITY, MO 65102
1-888-ASK-MODOT (1-888-275-6636)

HNTB
715 KIRK DRIVE
KANSAS CITY, MO 64105-1310
TELEPHONE (816) 472-1201
CERTIFICATE OF AUTHORITY NO. 001270

FINAL PLANS

REV.

Detailed JUL 2009
Checked JUL 2009

Note: This drawing is not to scale. Follow dimensions.

I:\de-proj\St_Louis_City\Construction\J6I0984\Asbuilts\Bridge\B_A6500_126-205_J6I0984_126.dgn

2:07:03 PM

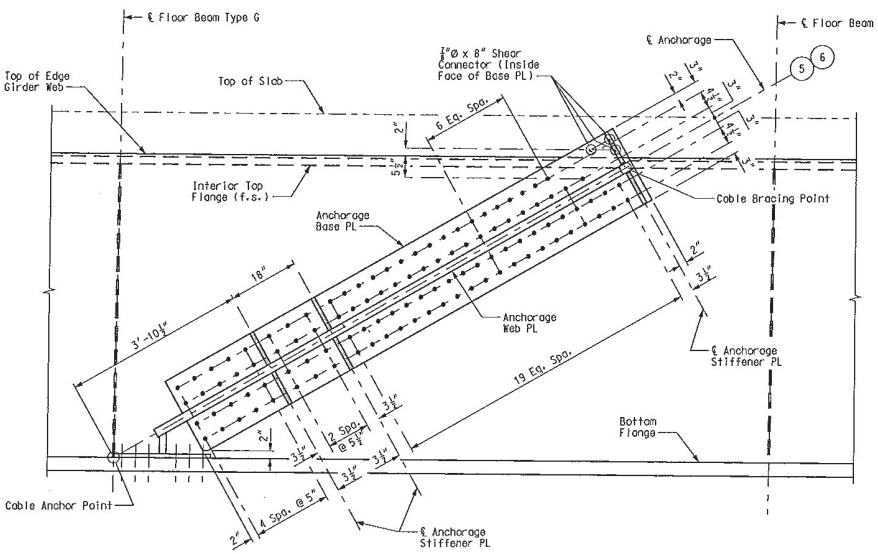

ELEVATION – CABLES 5 AND 6

(Cable Anchorage Pipe not shown for clarity.)

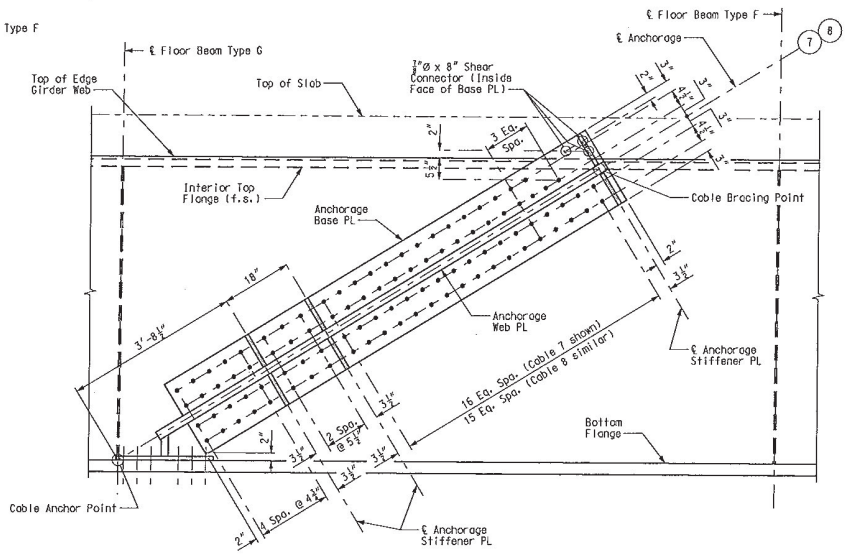

ELEVATION – CABLES 7 AND 8

(Cable Anchorage Pipe not shown for clarity.)

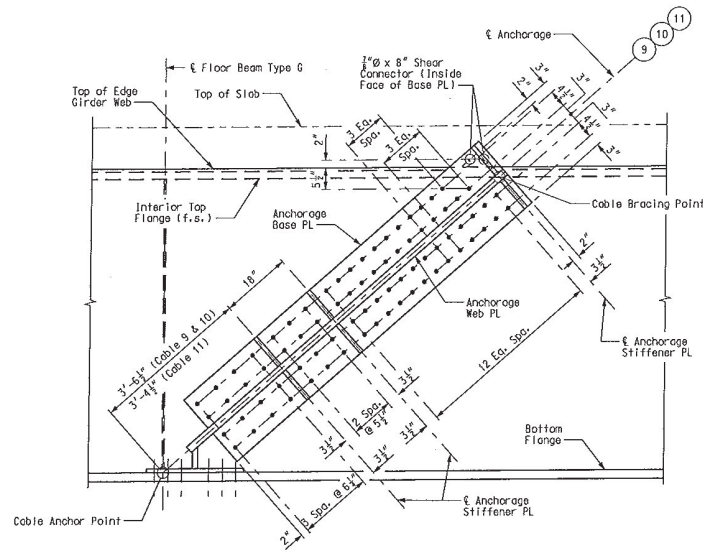

ELEVATION – CABLES 9, 10, AND 11

(Cable Anchorage Pipe not shown for clarity.)

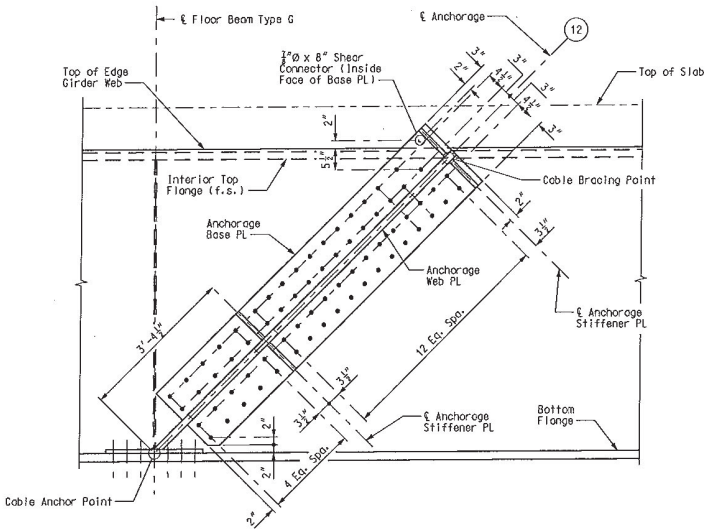

ELEVATION – CABLE 12

(Cable Anchorage Pipe not shown for clarity.)

Notes:

(#) Denotes Stay Cable.

For additional notes and details, see Sheet Nos. BR123 & BR124.

STAY CABLE GIRDER ANCHORAGE DETAILS

DATE	8/20/09
ROUTE	I-70
STATE	MO/IL
DISTRICT	6
SHEET NO.	BR127
COUNTY	ST. LOUIS CITY – MO ST. CLAIR – IL
JOB NO.	J6I0984
CONTRACT ID.	091208-601
PROJECT NO.	I-70-9 (20)
BRIDGE NO.	A6500

DESCRIPTION | DATE

MISSOURI HIGHWAYS AND TRANSPORTATION COMMISSION

105 WEST CAPITOL
JEFFERSON CITY, MO 65102
1-888-ASK-MODOT (1-888-275-6636)

HNTB
715 KIRK DRIVE
KANSAS CITY, MO 64105-1310
TELEPHONE: (816) 472-1201
CERTIFICATE OF AUTHORITY NO. 001270

FINAL PLANS

REV.

Detailed JUL 2009
Checked JUL 2009

Note: This drawing is not to scale. Follow dimensions.

T:\de-proj\St_Louis_City\Construction\J6I0984\Asbuilts\Bridge\B_A6500_127-205_J6I0984_127.dgn

2:08:10 PM

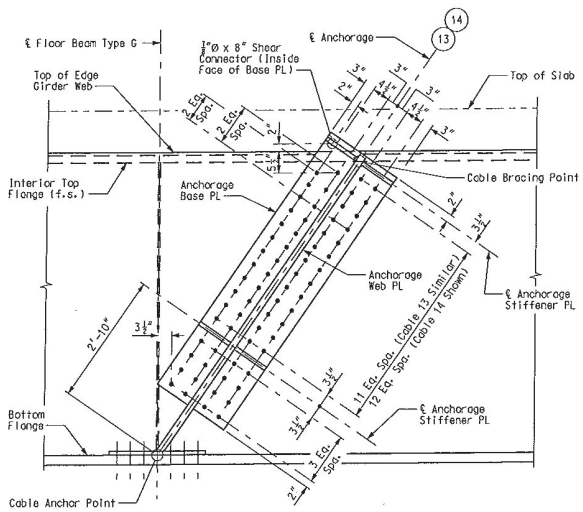

ELEVATION – CABLES 13 AND 14

(Cable Anchorage Pipe not shown for clarity.)

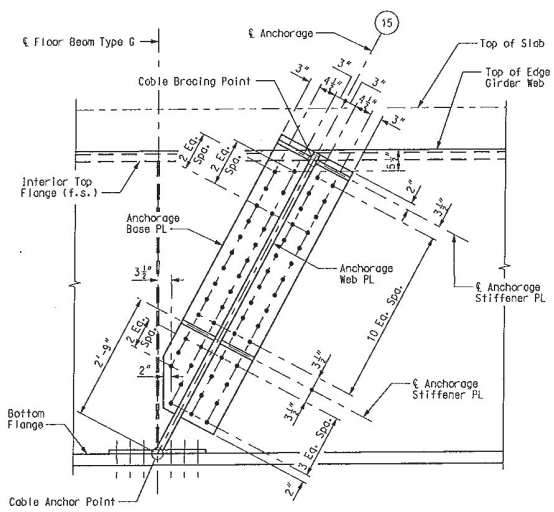

ELEVATION – CABLE 15

(Cable Anchorage Pipe not shown for clarity.)

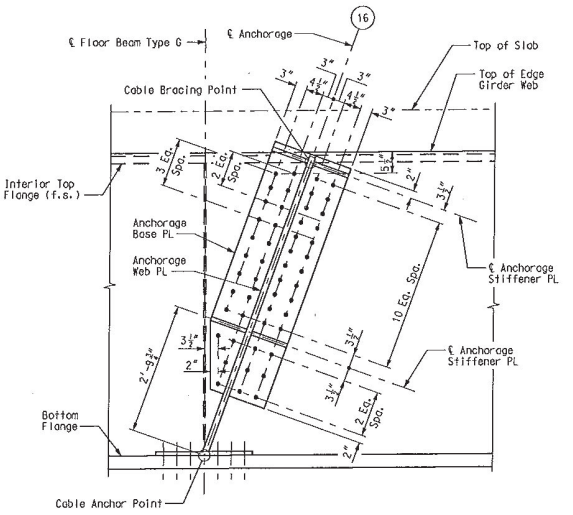

ELEVATION – CABLE 16

(Cable Anchorage Pipe not shown for clarity.)

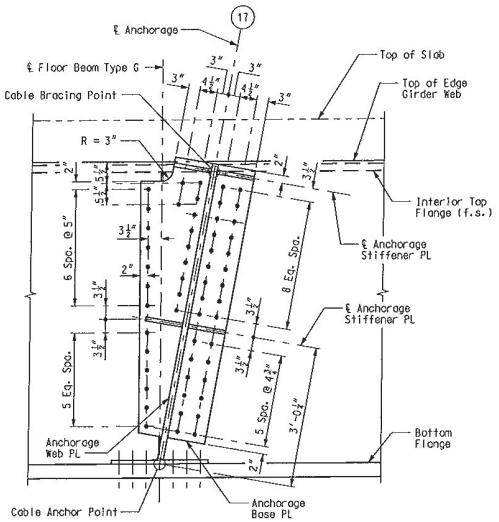

ELEVATION – CABLE 17

(Cable Anchorage Pipe not shown for clarity.)

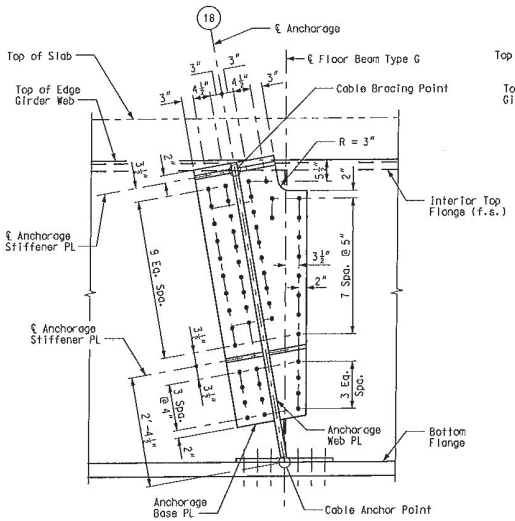

ELEVATION – CABLE 18

(Cable Anchorage Pipe not shown for clarity.)

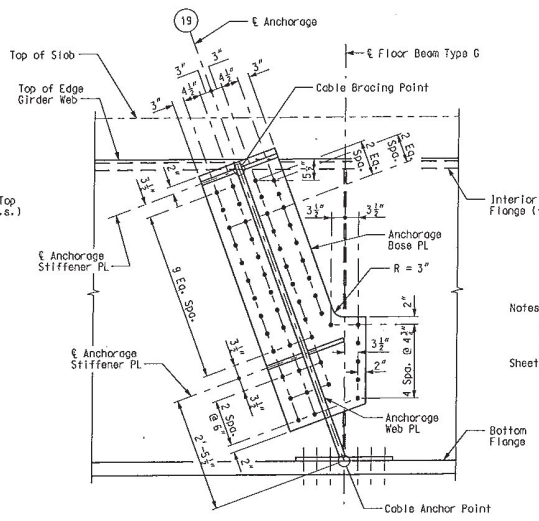

ELEVATION – CABLE 19

(Cable Anchorage Pipe not shown for clarity.)

Notes:

(#) Denotes Stay Cable.

For additional notes and details, see Sheet Nos. BR123 & BR124.

STAY CABLE GIRDER ANCHORAGE DETAILS

DATE 8/20/09

ROUTE I-70 | STATE MO/IL

DISTRICT 6 | SHEET NO. BR128

COUNTY ST. LOUIS CITY - MO ST. CLAIR - IL

JOB NO. J610984

CONTRACT ID. 091208-601

PROJECT NO. I-70-9 (20)

BRIDGE NO. A6500

DESCRIPTION | DATE

MISSOURI HIGHWAYS AND TRANSPORTATION COMMISSION

105 WEST CAPITOL JEFFERSON CITY, MO 65102 1-888-ASK-MODOT (1-888-275-6636)

HNTB

715 KIRK DRIVE KANSAS CITY, MO 64105-1310 TELEPHONE (816) 472-1201 CERTIFICATE OF AUTHORITY NO. 001270

FINAL PLANS

REV.

Detailed JUL 2009
Checked JUL 2009

Note: This drawing is not to scale. Follow dimensions.

T:\de-proj\St_Louis_City\Construction\J610984\Asbuilts\Bridge\B_A6500_128-205_J610984_128.dgn 2:08:58 PM

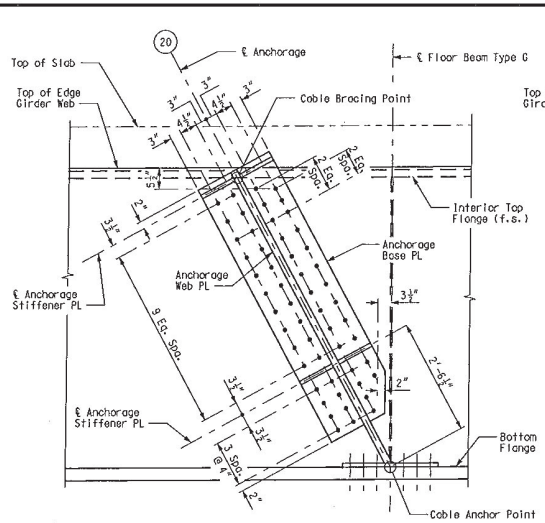

ELEVATION – CABLE 20

(Cable Anchorage Pipe not shown for clarity.)

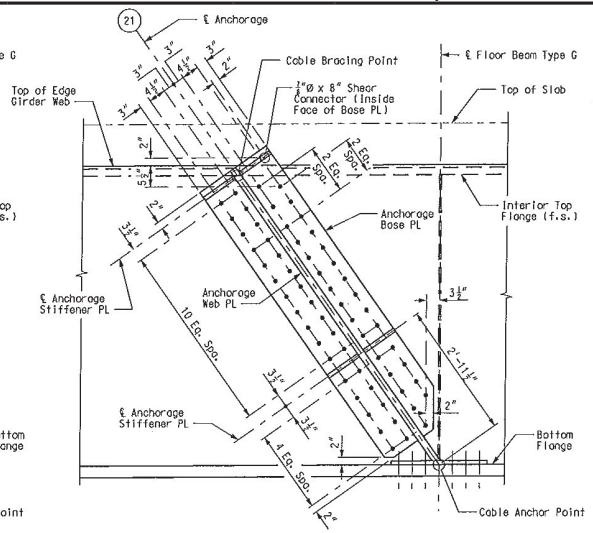

ELEVATION – CABLE 21

(Cable Anchorage Pipe not shown for clarity.)

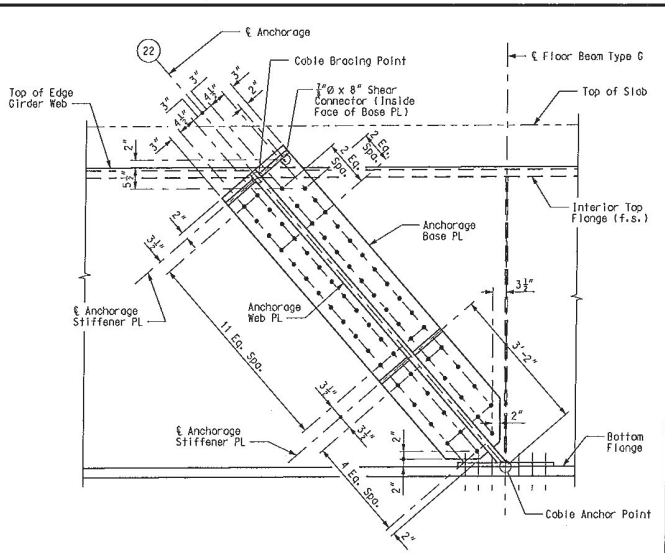

ELEVATION – CABLE 22

(Cable Anchorage Pipe not shown for clarity.)

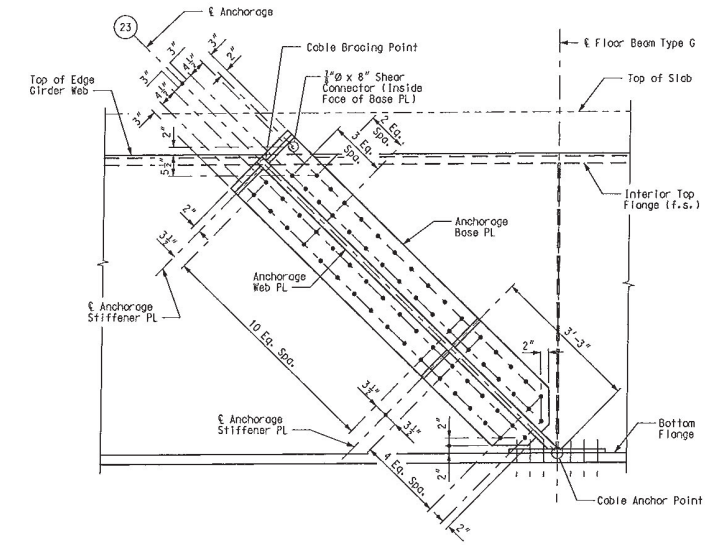

ELEVATION – CABLE 23

(Cable Anchorage Pipe not shown for clarity.)

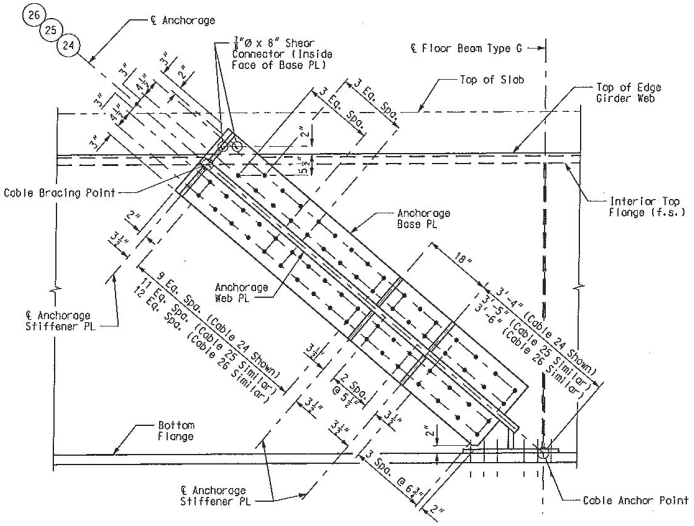

ELEVATION – CABLES 24, 25, AND 26

(Cable Anchorage Pipe not shown for clarity.)

Notes:

(#) Denotes Stay Cable.

For additional notes and details, see Sheet Nos. BR123 & BR124.

STAY CABLE GIRDER ANCHORAGE DETAILS

DATE	8/20/09
ROUTE	I-70
STATE	MO/IL
DISTRICT	6
SHEET NO.	BR129
COUNTY	ST. LOUIS CITY – MO ST. CLAIR – IL
JOB NO.	J6I0984
CONTRACT ID.	091208-601
PROJECT NO.	I-70-9 (20)
BRIDGE NO.	A6500

DESCRIPTION | DATE

MISSOURI HIGHWAYS AND TRANSPORTATION COMMISSION
105 WEST CAPITOL
JEFFERSON CITY, MO 65102
1-888-ASK-MODOT (1-888-275-6636)

HNTB
715 KIRK DRIVE
KANSAS CITY, MO 64105-1310
TELEPHONE (816) 472-1201
CERTIFICATE OF AUTHORITY NO. 001270

FINAL PLANS

REV.

Detailed JUL 2009
Checked JUL 2009

Note: This drawing is not to scale. Follow dimensions.

T:\de-proj\St_Louis_City\Construction\J6I0984\Asbuilts\Bridge\B_A6500_129-205_J6I0984_129.dgn

2:10:08 PM

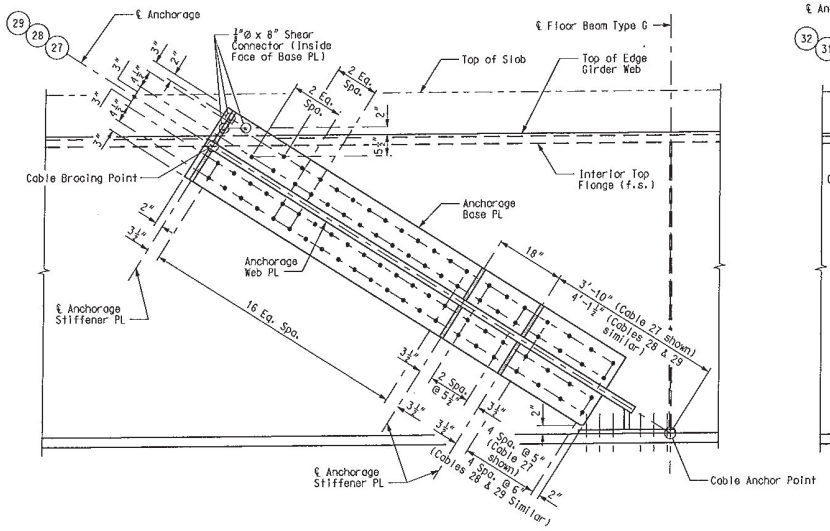

ELEVATION – CABLES 27, 28, AND 29

(Cable Anchorage Pipe not shown for clarity.)

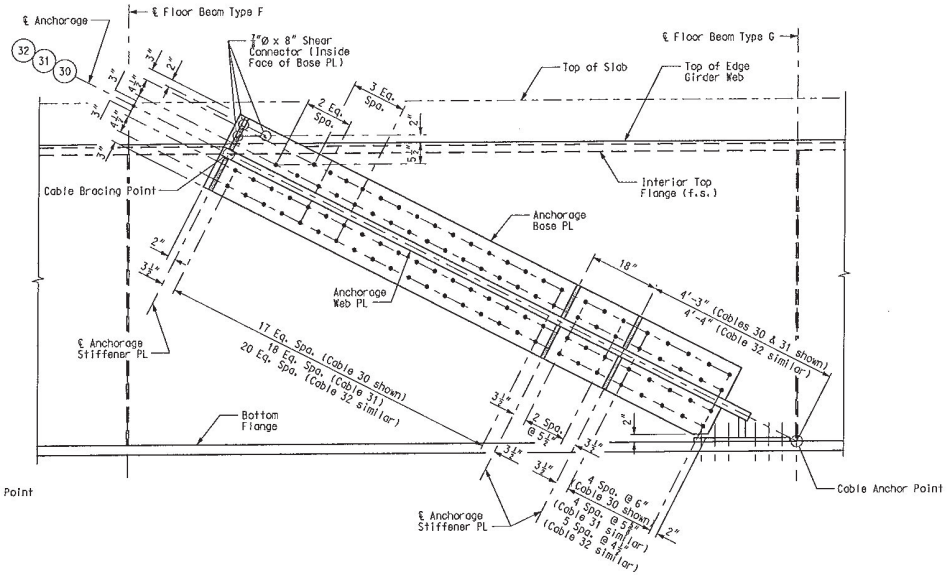

ELEVATION – CABLES 30, 31, AND 32

(Cable Anchorage Pipe not shown for clarity.)

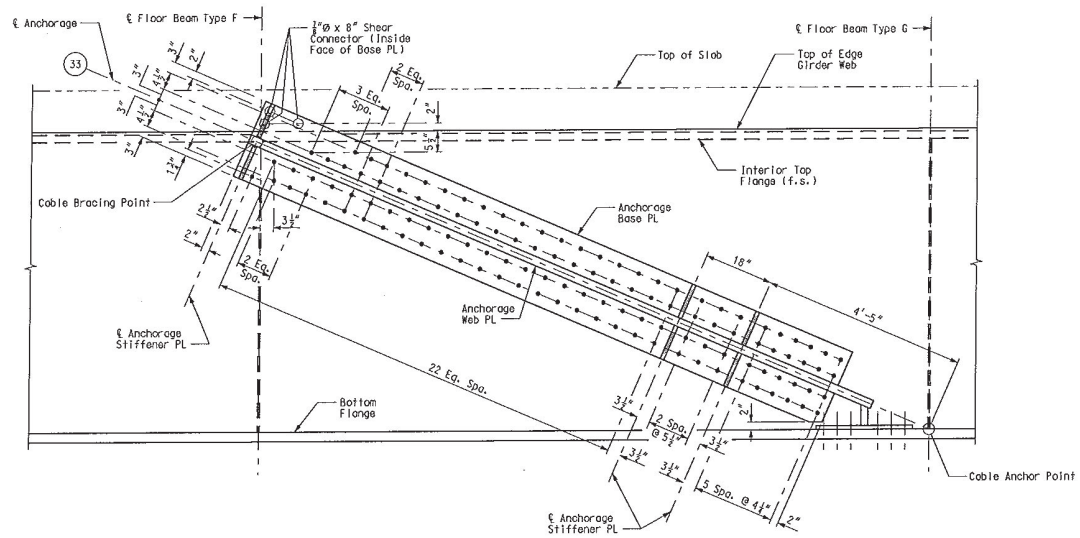

ELEVATION – CABLE 33

(Cable Anchorage Pipe not shown for clarity.)

Notes:

(#) Denotes Stay Cable.

For additional notes and details, see Sheet Nos. BR123 & BR124.

STAY CABLE GIRDER ANCHORAGE DETAILS

DATE	8/20/09
ROUTE	I-70
STATE	MO/IL
DISTRICT	6
SHEET NO.	BR130
COUNTY	ST. LOUIS CITY - MO ST. CLAIR - IL
JOB NO.	J6I0984
CONTRACT ID.	091208-601
PROJECT NO.	I-70-9 (20)
BRIDGE NO.	A6500

DESCRIPTION | DATE

MISSOURI HIGHWAYS AND TRANSPORTATION COMMISSION
105 WEST CAPITOL
JEFFERSON CITY, MO 65102
1-888-ASK-MODOT (1-888-275-6636)

HNTB
715 KIRK DRIVE
KANSAS CITY, MO 64105-1310
TELEPHONE (816) 472-1201
CERTIFICATE OF AUTHORITY NO. 001870

FINAL PLANS

REV.

Detailed JUL 2009
Checked JUL 2009

Note: This drawing is not to scale. Follow dimensions.

T:\de-proj\St_Louis_City\Construction\J6I0984\Asbuilts\Bridge\B_A6500_130-205_J6I0984_130.dgn

2:10:45 PM

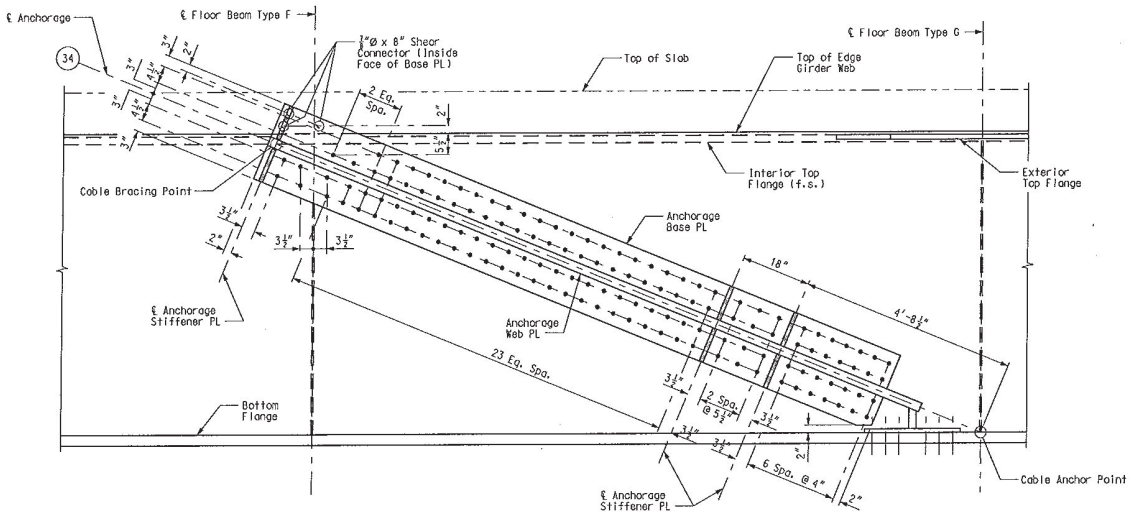

ELEVATION – CABLE 34

(Cable Anchorage Pipe not shown for clarity.)

Notes:

(34) Denotes Stay Cable.

For additional notes and details, see Sheet Nos. BR123 & BR124.

STAY CABLE GIRDER ANCHORAGE DETAILS

DATE 8/20/09
ROUTE I-70 | STATE MO/IL
DISTRICT 6 | SHEET NO. BR131
COUNTY ST. LOUIS CITY – MO ST. CLAIR – IL
JOB NO. J6I0984
CONTRACT ID. 091208-601
PROJECT NO. I-70-9 (20)
BRIDGE NO. A6500

DESCRIPTION | DATE

MISSOURI HIGHWAYS AND TRANSPORTATION COMMISSION
105 WEST CAPITOL
JEFFERSON CITY, MO 65102
1-888-ASK-MODOT (1-888-275-6636)

HNTB
715 KIRK DRIVE
KANSAS CITY, MO 64105-1310
TELEPHONE (816) 472-1201
CERTIFICATE OF AUTHORITY NO. 001270

FINAL PLANS

REV.

Detailed JUL 2009
Checked JUL 2009

Note: This drawing is not to scale. Follow dimensions.

Sheet No. 131 of 205

T:\de-proj\St_Louis_City\Construction\J6I0984\Asbuilts\Bridge\B_A6500_131-205_J6I0984_131.dgn

2:11:31 PM

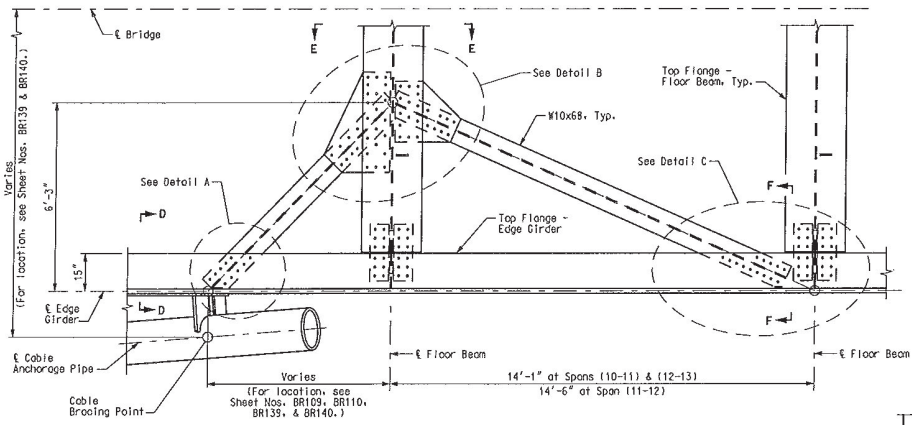

PLAN - TOP FLANGE BRACING

(Plan shown for Stay Cables 9 thru 16 & 20 thru 26; Plan at Stay Cables 6 thru 8 & 27 thru 29 is similar.)

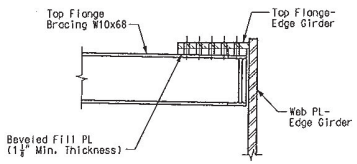

SECTION D-D

(Cable Anchorage Details not shown for clarity.)

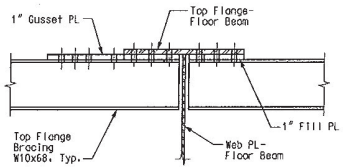

AT STAY CABLES 6 THRU 8 & 27 THRU 29

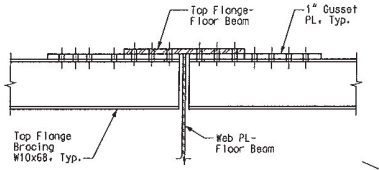

AT STAY CABLES 9 THRU 16 & 20 THRU 26

SECTION E-E

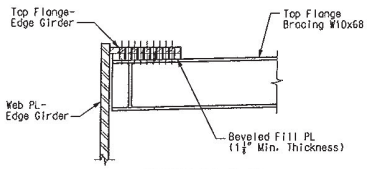

SECTION F-F

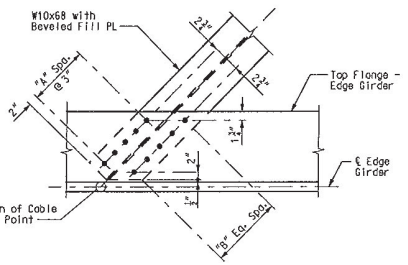

DETAIL A

STAY CABLE	"A"	"B"
6, 7, 28, & 29	3	3
8-11 & 24-27	4	4
12, 13, 22, & 23	5	5
14-16, 20, & 21	6	6

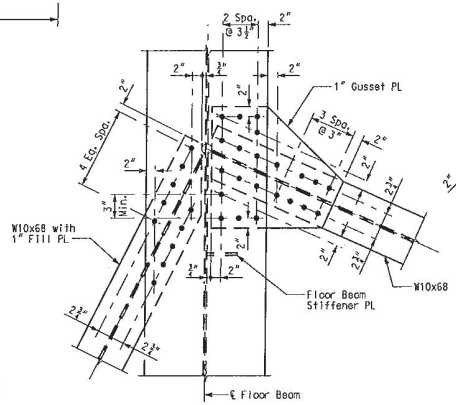

AT STAY CABLES 6 THRU 8 & 27 THRU 29

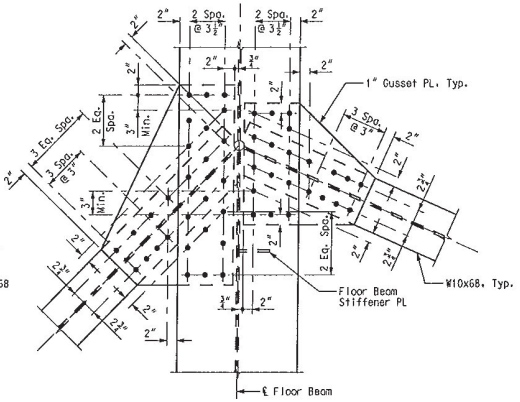

AT STAY CABLES 9 THRU 16 & 20 THRU 26

DETAIL B

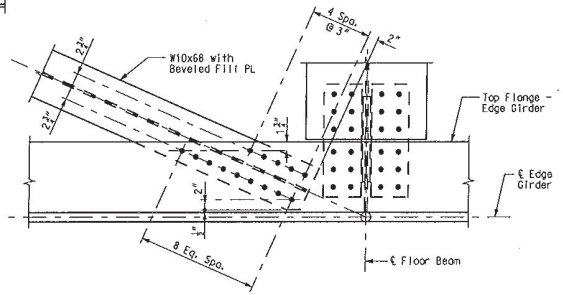

DETAIL C

Notes:
For locations of top flange bracing, see Sheet Nos. BR109 & BR110.
All connections at top flange bracing are 1"Ø H.S. Bolts, ASTM A325, Type 3.
Bolt pitch at top flange bracing connections did not exceed 7".
Structural steel for top flange bracing conform to ASTM A709 Grade 50W and was included in the pay item "Fabricated Structural Low Alloy Steel (Plate Girder) A709, Gr. HPS50W".

MISCELLANEOUS STEEL DETAILS

DATE 8/20/09
ROUTE I-70 | STATE MO/IL
DISTRICT 6 | SHEET NO. BR132
COUNTY ST. LOUIS CITY - MO ST. CLAIR - IL
JOB NO. J6I0984
CONTRACT ID. 091208-601
PROJECT NO. I-70-9 (20)
BRIDGE NO. A6500

DESCRIPTION | DATE

MISSOURI HIGHWAYS AND TRANSPORTATION COMMISSION
105 WEST CAPITOL
JEFFERSON CITY, MO 65102
1-888-ASK-MODOT (1-888-275-6636)

HNTB
715 KIRK DRIVE
KANSAS CITY, MO 64105-1310
TELEPHONE (816) 472-1201
CERTIFICATE OF AUTHORITY NO. 001270

FINAL PLANS

REV.

Detailed JUL 2009
Checked JUL 2009

Note: This drawing is not to scale. Follow dimensions.

T:\de-proj\St_Louis_City\Construction\J6I0984\Asbuilts\Bridge\B_A6500_132-205_J6I0984_132.dgn

1:59:36 PM

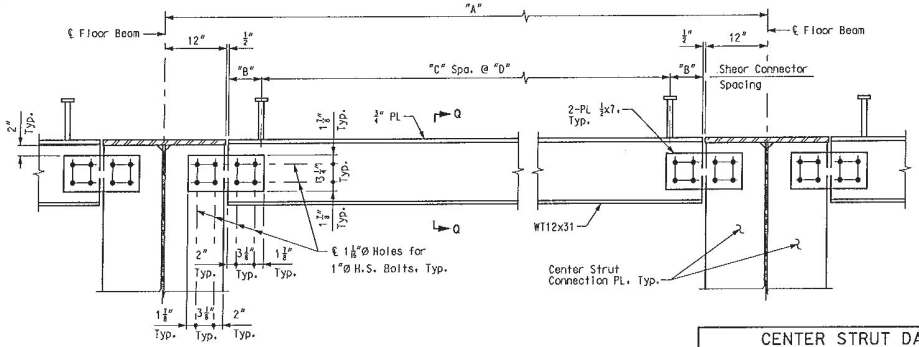

CENTER STRUT TYPES 1, 2, & 3

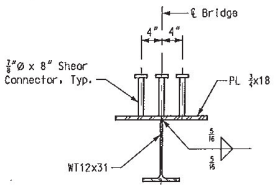

SECTION Q-Q

Scale: 1" = 1'-0"

CENTER STRUT DATA				
TYPE	"A"	"B"	"C"	"D"
1	14'-1"	3"	12	11 1/2"
2	14'-6"	2 1/2"	12	12"
3	10'-6"	5 1/2"	10	9"

Notes:
For locations of center struts, see Sheet Nos. BR109 & BR110.

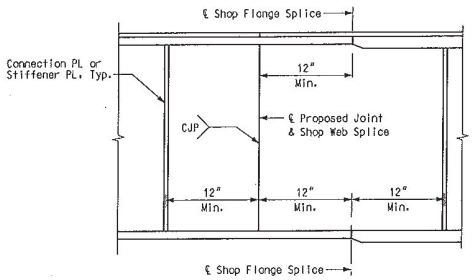

WELDED SHOP WEB SPLICE

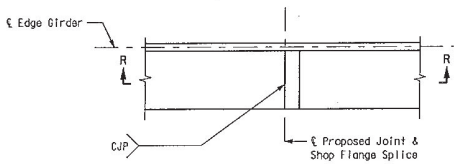

PLAN - TOP FLANGE

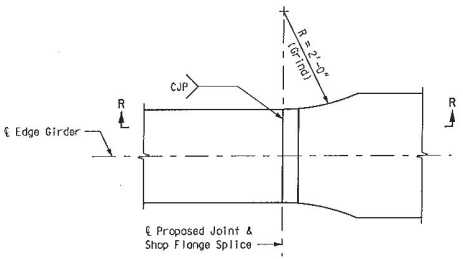

PLAN - BOTTOM FLANGE

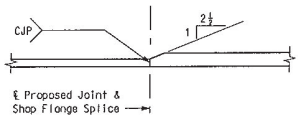

SECTION R-R

WELDED SHOP FLANGE SPLICE

Note:
Welded shop web and flange splices may be permitted when detailed on the shop drawings and approved by the engineer. No additional payment will be made for optional welded shop web and flange splices.

MISCELLANEOUS STEEL DETAILS

DATE 8/20/09
ROUTE I-70 | STATE MO/IL
DISTRICT 6 | SHEET NO. BR133
COUNTY ST. LOUIS CITY - MO ST. CLAIR - IL
JOB NO. J6I0984
CONTRACT ID. 091208-601
PROJECT NO. I-70-9 (20)
BRIDGE NO. A6500

DESCRIPTION | DATE

MISSOURI HIGHWAYS AND TRANSPORTATION COMMISSION
105 WEST CAPITOL
JEFFERSON CITY, MO 65102
1-888-ASK-MODOT (1-888-275-6636)

HNTB
715 KIRK DRIVE
KANSAS CITY, MO 64105-1310
TELEPHONE (816) 472-1201
CERTIFICATE OF AUTHORITY NO. 001270

FINAL PLANS

REV.

Detailed JUL 2009
Checked JUL 2009

Note: This drawing is not to scale. Follow dimensions.

T:\de-proj\St_Louis_City\Construction\J6I0984\Asbuilts\Bridge\B_A6500_133-205_J6I0984_133.dgn

2:27:59 PM

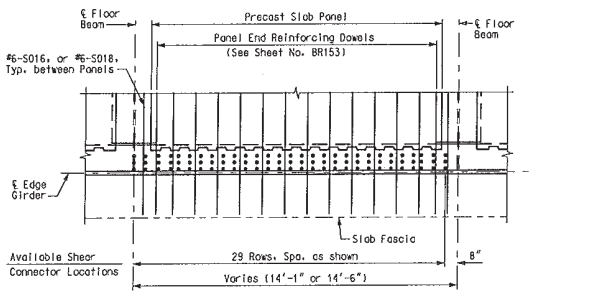

TYPICAL SHEAR CONNECTOR PLACEMENT BETWEEN FLOOR BEAMS

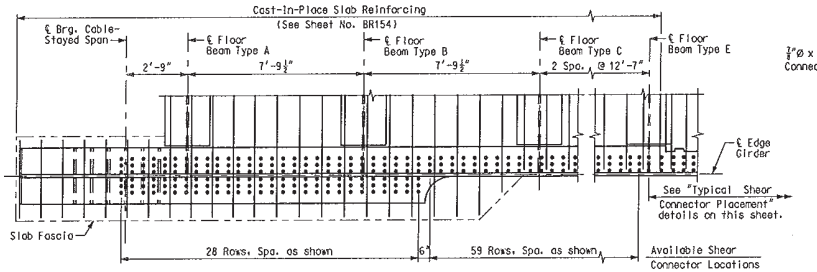

SHEAR CONNECTOR PLACEMENT AT FIELD PIECE 1 (COUNTERWEIGHT)

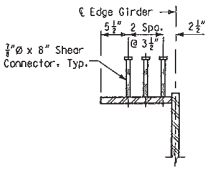

TYPICAL ROW

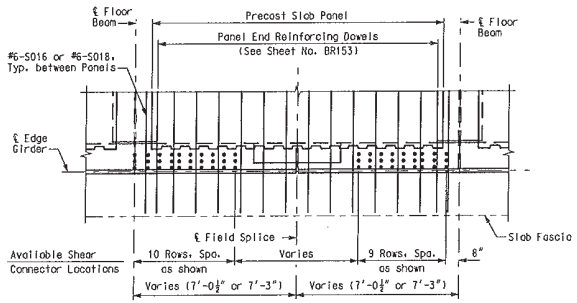

TYPICAL SHEAR CONNECTOR PLACEMENT AT FIELD SPLICES

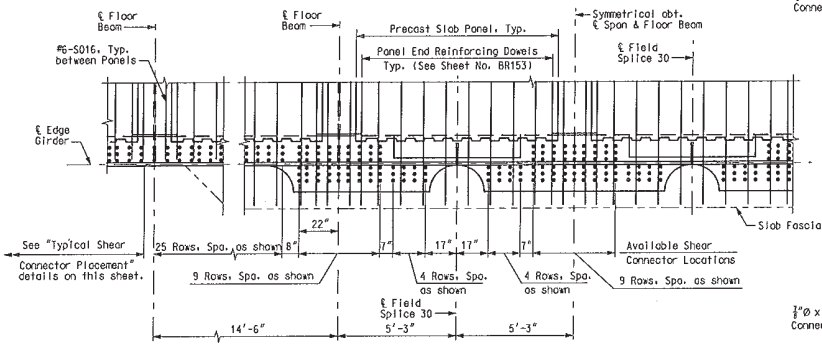

SHEAR CONNECTOR PLACEMENT AT FIELD PIECE 30

SHEAR CONNECTOR PLACEMENT AT FIELD PIECE 31

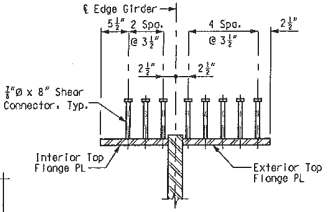

ROW AT EXTERIOR TOP FLANGE OF FIELD PIECE 14

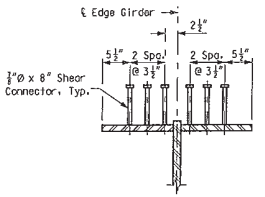

ROW AT EXTERIOR TOP FLANGE OF FIELD PIECE 1, 30, or 31

SHEAR CONNECTOR DETAILS

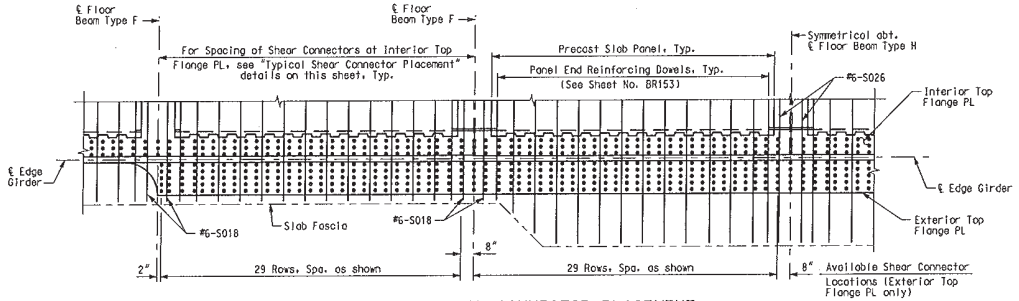

SHEAR CONNECTOR PLACEMENT AT FIELD PIECE 14

(Lateral Restrainer and Stiffeners not shown for clarity.)

Notes:
Shear connectors were spaced not closer than 5¼" on center in the longitudinal direction.
Shear connectors are unpainted.
Shear connectors were field-welded.
For Field Piece details and number of required shear connectors, see Sheet Nos. BR111 thru BR116.
For Floor Beam details, see Sheet Nos. BR117 thru BR122.
For Field Splice details, see Sheet No. BR136.

MISCELLANEOUS STEEL DETAILS

DATE 8/20/09
ROUTE I-70 | STATE MO/IL
DISTRICT 6 | SHEET NO. BR135
COUNTY ST. LOUIS CITY - MO ST. CLAIR - IL
JOB NO. J6I0984
CONTRACT ID. 091208-601
PROJECT NO. I-70-9 (20)
BRIDGE NO. A6500

DESCRIPTION | DATE

MISSOURI HIGHWAYS AND TRANSPORTATION COMMISSION
105 WEST CAPITOL JEFFERSON CITY, MO 65102
1-888-ASK-MODOT (1-888-275-6636)

HNTB
715 KIRK DRIVE KANSAS CITY, MO 64105-1310 TELEPHONE (816) 472-1201 CERTIFICATE OF AUTHORITY NO. 001270

FINAL PLANS

REV.

Detailed JUL 2009
Checked JUL 2009

Note: This drawing is not to scale. Follow dimensions.

I:\de-proj\St_Louis_City\Construction\J6I0984\Asbuilts\Bridge\B_A6500_135-205_J6I0984_135.dgn 1:57:37 PM

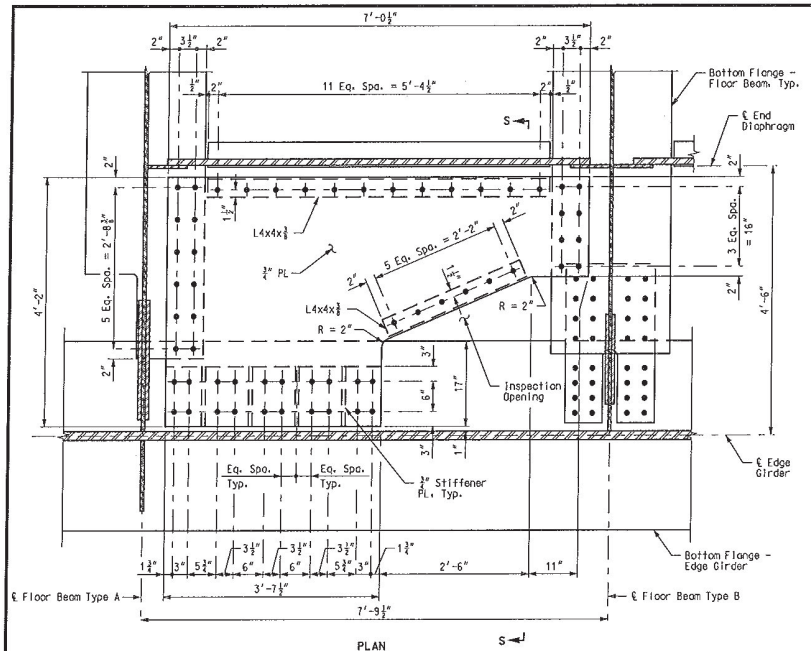

PLAN

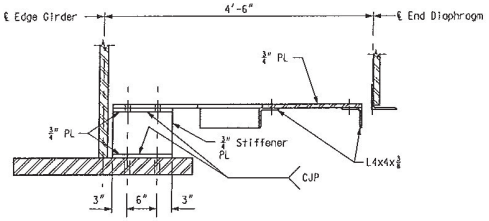

SECTION S-S

HORIZONTAL DIAPHRAGM AT FLOOR BEAM TYPES A & B

(Precast Counterweight Panels and Stay Cable Anchorage not shown for clarity.)

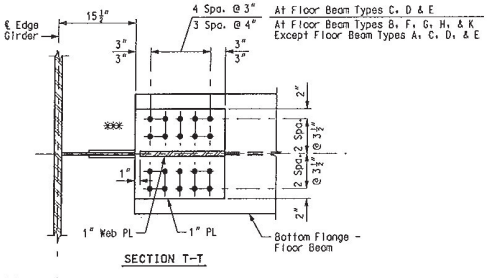

SECTION T-T

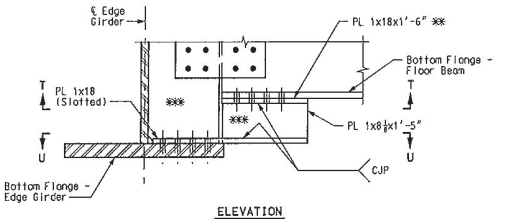

ELEVATION

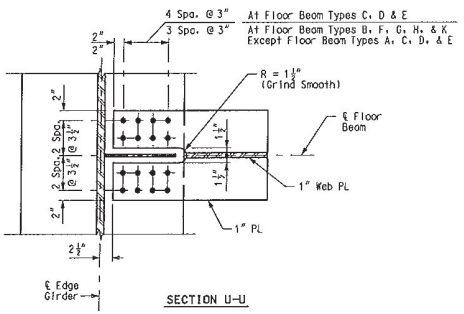

SECTION U-U

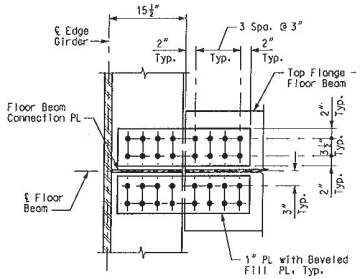

SECTION W-W

LOWER FLOOR BEAM CONNECTION

✱✱ Additional 1-#8" X 18 X 1'-6" fill plate used for Floor Beam Type J
✱✱✱ See shop drawings for detail changes for Type "F"

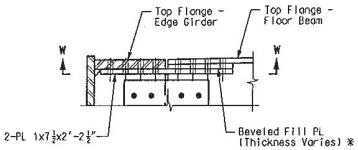

ELEVATION - FLOOR BEAM TYPES B, E, G & K

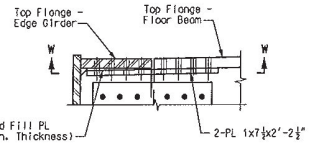

ELEVATION - FLOOR BEAM TYPES C, D & F

UPPER FLOOR BEAM CONNECTION

✱ ⅜" Min. at Floor Beam Types B & E;
⅝" Min. at Floor Beam Types G & K

Notes:
All bolts shown for Horizontal Diaphragm, Lower Floor Beam End Connection, and Upper Floor Beam End Connection are 1"Ø ASTM A325, Type 3 Bolts.

MISCELLANEOUS STEEL DETAILS

DATE 8/20/09
ROUTE I-70 | STATE MO/IL
DISTRICT 6 | SHEET NO. BR134
COUNTY ST. LOUIS CITY - MO ST. CLAIR - IL
JOB NO. J6I0984
CONTRACT ID. 091208-601
PROJECT NO. I-70-9 (20)
BRIDGE NO. A6500

DESCRIPTION | DATE

MISSOURI HIGHWAYS AND TRANSPORTATION COMMISSION
105 WEST CAPITOL JEFFERSON CITY, MO 65102 1-888-ASK-MODOT (1-888-275-6636)
HNTB
715 KIRK DRIVE KANSAS CITY, MO 64105-1310 TELEPHONE (816) 472-1201 CERTIFICATE OF AUTHORITY NO. 001210

FINAL PLANS

REV.

Detailed JUL 2009
Checked JUL 2009

Note: This drawing is not to scale. Follow dimensions.

I:\de-proj\St_Louis_City\Construction\J6I0984\Asbuilts\Bridge\B_A6500_134-205_J6I0984_134_NCR012.dgn 2:01:09 PM

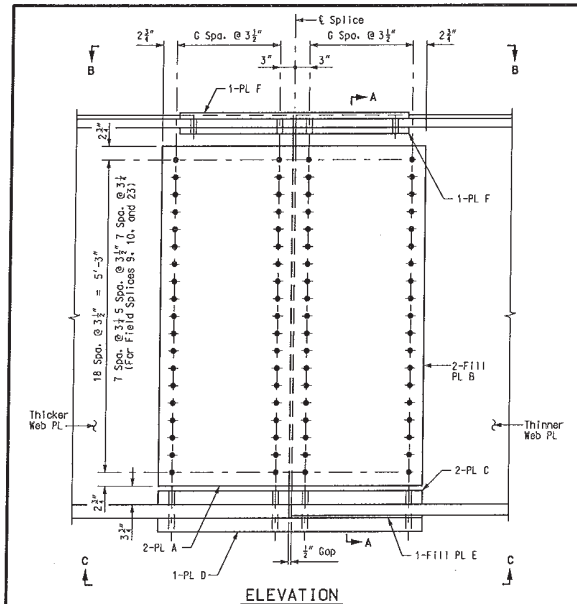

ELEVATION

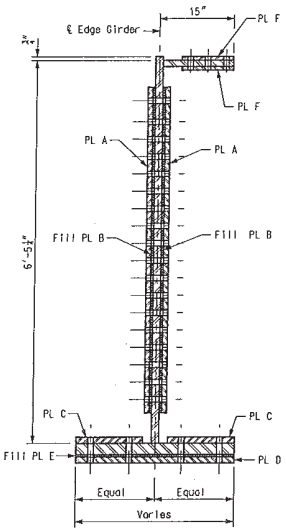

SECTION A-A

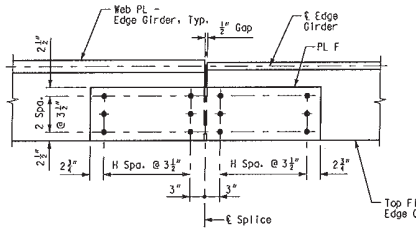

VIEW B-B

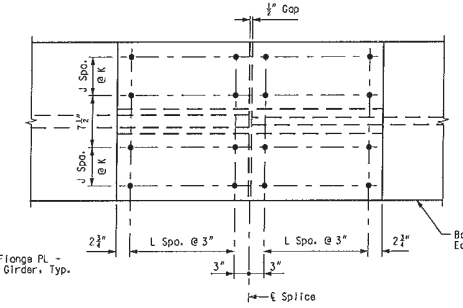

VIEW C-C

FIELD SPLICE DATA

LOCATION	PL A	PL B	PL C	PL D	PL E	PL F	G	H	J	K	L
F.S. 1	1 ¼x60 ½x5'-8 ½"	¼x30x5'-8 ½"	2 ¾x17x11'-5 ½"	2 ¾x38x11'-5 ½"	———	1 ¼x12x4'-5 ½"	7	6	3	4"	21
F.S. 2	1 ¼x53 ½x5'-8 ½"	———	2 ¾x17x10'-11 ½"	2 ¾x38x10'-11 ½"	———	1 ¼x12x4'-5 ½"	6	6	3	4"	20
F.S. 3	¾x46 ½x5'-8 ½"	⅜x23x5'-8 ½"	2 ¾x15x10'-11 ½"	2 ¾x34x10'-11 ½"	½x34x5'-5 ½"	1 ¼x12x4'-5 ½"	5	6	3	3 ½"	20
F.S. 4	¾x46 ½x5'-8 ½"	———	2 ¾x15x7'-5 ½"	2 ¾x34x7'-5 ½"	———	1 ¼x12x4'-5 ½"	5	6	3	3 ½"	13
F.S. 5	¾x46 ½x5'-8 ½"	———	2 ¾x14x7'-5 ½"	2 ¾x32x7'-5 ½"	⅝x32x3'-8 ½"	1 ¼x12x4'-5 ½"	5	6	3	3 ½"	13
F.S. 6	1x53 ½x5'-8 ½"	———	1 ¾x14x5'-5 ½"	1 ¾x32x5'-5 ½"	———	1 ¼x12x4'-5 ½"	6	6	3	3 ½"	9
F.S. 7	¾x46 ½x5'-8 ½"	———	1 ¾x14x5'-5 ½"	1 ¾x32x5'-5 ½"	———	1 ¼x12x4'-5 ½"	5	6	3	3 ½"	9
F.S. 8	¾x46 ½x5'-8 ½"	———	1 ¾x14x5'-5 ½"	1 ¾x32x5'-5 ½"	¼x32x2'-8 ½"	1 ¼x12x4'-5 ½"	5	6	3	3 ½"	9
F.S. 9	⅝x46 ½x5'-8 ½"	———	1 ¾x14x5'-5 ½"	1 ¾x32x5'-5 ½"	———	1 ¼x12x4'-5 ½"	5	6	3	3 ½"	9
F.S. 10	⅝x46 ½x5'-8 ½"	———	2x14x5'-11 ½"	1 ¾x32x5'-11 ½"	¾x32x2'-11 ½"	1 ¼x12x4'-5 ½"	5	6	3	3 ½"	10
F.S. 11	1x53 ½x5'-8 ½"	———	2 ¾x14x6'-11 ½"	2 ¾x32x6'-11 ½"	¼x32x3'-5 ½"	1 ¼x12x4'-5 ½"	6	6	3	3 ½"	12
F.S. 12	1x53 ½x5'-8 ½"	¼x26 ½x5'-8 ½"	2 ¾x14x7'-11 ½"	2 ¾x32x7'-11 ½"	¾x32x3'-11 ½"	1 ¼x12x4'-5 ½"	6	6	3	3 ½"	14
F.S. 13	1 ¼x60 ½x5'-8 ½"	⅜x30x5'-8 ½"	3x15x10'-11 ½"	2 ¾x34x10'-11 ½"	¼x34x5'-5 ½"	1 ¼x12x4'-5 ½"	7	6	3	3 ½"	20
F.S. 14	1 ⅜x60 ½x5'-8 ½"	———	2 ¾x16x10'-11 ½"	2 ¾x36x10'-11 ½"	¼x36x5'-5 ½"	1 ¼x12x4'-5 ½"	7	6	3	3 ½"	20
F.S. 15	1x53 ½x5'-8 ½"	¼x26 ½x5'-8 ½"	2 ¾x15x9'-11 ½"	2 ¾x34x9'-11 ½"	¼x34x4'-11 ½"	1 ¼x12x4'-5 ½"	6	6	3	3 ½"	18
F.S. 16	¾x46 ½x5'-8 ½"	⅜x23x5'-8 ½"	2 ¾x14x7'-5 ½"	2 ¾x32x7'-5 ½"	¼x32x3'-8 ½"	1 ¼x12x4'-5 ½"	5	6	3	3 ½"	13
F.S. 17	¾x46 ½x5'-8 ½"	———	2 ¾x14x6'-11 ½"	2 ¾x32x6'-11 ½"	¼x32x3'-5 ½"	1 ¼x12x4'-5 ½"	5	6	3	3 ½"	12
F.S. 18	¾x46 ½x5'-8 ½"	———	2 ¾x14x5'-11 ½"	2x32x5'-11 ½"	———	1 ¼x12x4'-5 ½"	5	6	3	3 ½"	10
F.S. 19	¾x46 ½x5'-8 ½"	———	2 ¾x14x5'-5 ½"	2x32x5'-5 ½"	———	1 ¼x12x4'-5 ½"	5	6	3	3 ½"	9
F.S. 20	¾x46 ½x5'-8 ½"	———	2x14x5'-5 ½"	1 ¾x32x5'-5 ½"	———	1 ¼x12x4'-5 ½"	5	6	3	3 ½"	9
F.S. 21	¾x46 ½x5'-8 ½"	———	2x14x5'-5 ½"	1 ¾x32x5'-5 ½"	———	1 ¼x12x4'-5 ½"	5	6	3	3 ½"	9
F.S. 22	¾x46 ½x5'-8 ½"	———	2x14x5'-5 ½"	1 ¾x32x5'-5 ½"	———	1 ¼x12x4'-5 ½"	5	6	3	3 ½"	9
F.S. 23	⅝x46 ½x5'-8 ½"	———	2x14x5'-5 ½"	1 ¾x32x5'-5 ½"	———	1 ¼x12x4'-5 ½"	5	6	3	3 ½"	9
F.S. 24	¾x46 ½x5'-8 ½"	———	2x14x5'-5 ½"	1 ¾x32x5'-5 ½"	———	1 ¼x12x4'-5 ½"	5	6	3	3 ½"	9
F.S. 25	¾x46 ½x5'-8 ½"	———	2x14x5'-5 ½"	1 ¾x32x5'-5 ½"	———	1 ¼x12x4'-5 ½"	5	6	3	3 ½"	9
F.S. 26	¾x46 ½x5'-8 ½"	⅜x23x5'-8 ½"	2x15x7'-5 ½"	1 ¾x34x7'-5 ½"	———	1 ¼x12x4'-5 ½"	5	6	3	3 ½"	13
F.S. 27	1x53 ½x5'-8 ½"	———	2x15x6'-5 ½"	1 ¾x34x6'-5 ½"	———	1 ¼x12x4'-5 ½"	6	6	3	3 ½"	11
F.S. 28	1x53 ½x5'-8 ½"	⅜x26 ½x5'-8 ½"	2 ¼x15x6'-11 ½"	2x34x6'-11 ½"	¼x34x3'-5 ½"	1 ¼x12x4'-5 ½"	6	6	3	3 ½"	12
F.S. 29	¾x46 ½x5'-8 ½"	⅜x23x5'-8 ½"	2 ¾x15x7'-5 ½"	2 ¾x34x7'-5 ½"	¼x34x3'-8 ½"	1 ¼x12x4'-5 ½"	5	6	3	3 ½"	13
F.S. 30	1x53 ½x5'-8 ½"	¾x26 ½x5'-8 ½"	2 ¼x16x7'-5 ½"	2x36x7'-5 ½"	¼x36x3'-8 ½"	1 ¼x12x5'-7 ½"	6	8	3	3 ¾"	13

Notes:
All Fasteners were 1"Ø ASTM A325, Type 3 bolts.
Minimum installation bolt tension required for slip resistance are 51.0 kips per bo
All splice plates meet the requirements of ASTM A709, Grade HPS70W-2.
Bolt threads and thread run-out are excluded from the shear plane.
All splice plates have a Class B contact surface preparation.
All splice plates are considered fracture critical members.
Bedding material supporting precast prestressed slab panels have beeb modified at top flange splice locations to maintain a constant dimension from top of edge girder top flange to bottom of panels. See Sheet No. BR151 for details.
Place top flange splice bolts such that the bolt heads are above the top flange and the nuts are below the top flange.

FIELD SPLICE DETAILS

DATE 8/20/09
ROUTE I-70 STATE MO/IL
DISTRICT 6 SHEET NO. BR136
COUNTY ST. LOUIS CITY - MO ST. CLAIR - IL
JOB NO. J6I0984
CONTRACT ID. 091208-601
PROJECT NO. I-70-9 (20)
BRIDGE NO. A6500

DESCRIPTION | DATE

MISSOURI HIGHWAYS AND TRANSPORTATION COMMISSION
105 WEST CAPITOL
JEFFERSON CITY, MO 65102
1-888-ASK-MODOT (1-888-275-6636)

HNTB
715 KIRK DRIVE
KANSAS CITY, MO 64105-1310
TELEPHONE (816) 472-1201
CERTIFICATE OF AUTHORITY NO. 001270

FINAL PLANS

REV.

Detailed JUL 2009
Checked JUL 2009

Note: This drawing is not to scale. Follow dimensions.

T:\de-proj\St_Louis_City\Construction\J6I0984\Asbuilts\Bridge\B_A6500_136-205_J6I0984_136.dgn 2:03:23 PM

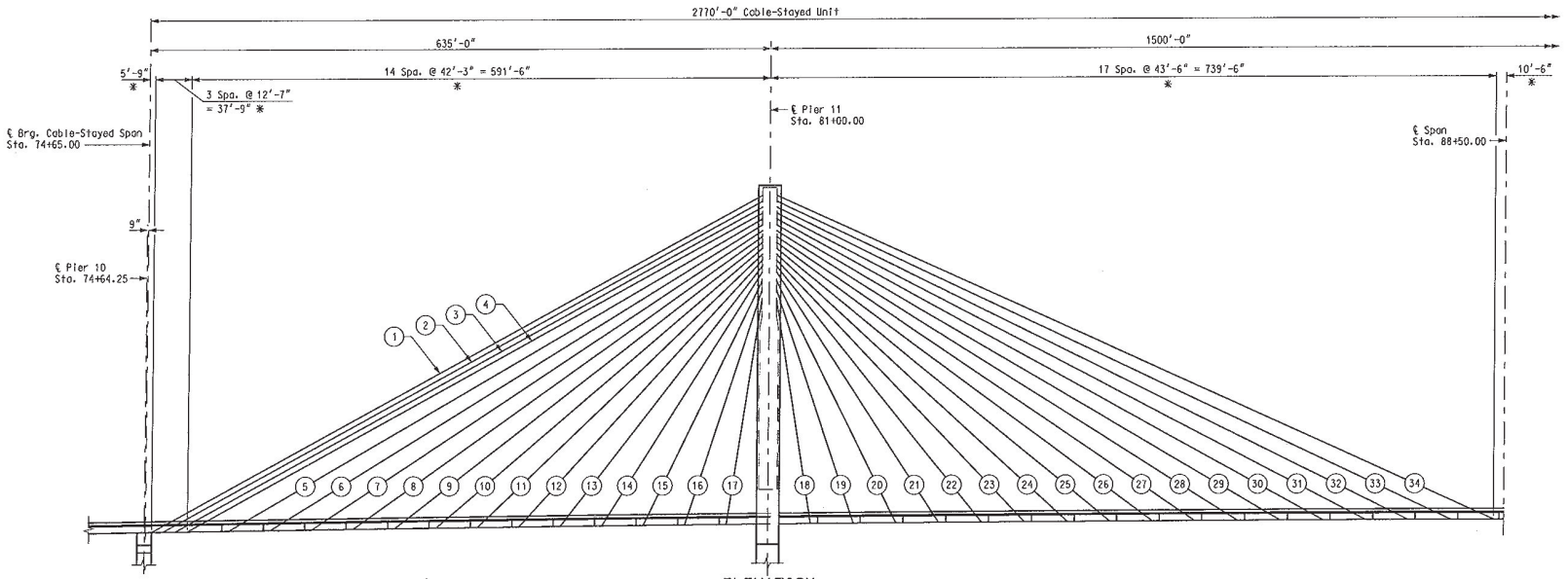

ELEVATION

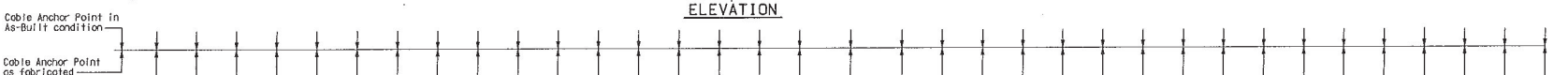

STAY CABLE	℄ BRG.	1	2	3	4	5	6	7	8	9	10	11	12	13	14	15	16	17	℄ PIER 11	18	19	20	21	22	23	24	25	26	27	28	29	30	31	32	33	34
WEB CAMBER	0	0	0	0	0	0	0	0	0	0	0	0	0	0	0	0	0	0	0	0	0	0	0	0	0	0	0	0	0	0	0	0	0	0	0	0

CAMBER DIAGRAM FOR EDGE GIRDER WEB (IN.)

ACCUMULATED EDGE GIRDER SHORTENING (IN.)

STAY CABLE	℄ BRG.	1	2	3	4	5	6	7	8	9	10	11	12	13	14	15	16	17	℄ PIER 11	18	19	20	21	22	23	24	25	26	27	28	29	30	31	32	33	34
SHORTENING	3.58	3.58	3.54	3.48	3.40	3.19	3.02	2.83	2.63	2.41	2.16	1.91	1.62	1.34	1.08	0.83	0.58	0.28	0.00	0.26	0.53	0.82	1.09	1.38	1.64	1.92	2.18	2.45	2.69	2.92	3.13	3.32	3.48	3.62	3.77	3.92

Notes:

(#) Denotes Stay Cable Number

* Dimensions measured horizontally from Cable Anchor Points at bottom of edge girder web.

Edge Girder Shortening, as shown in the table, is provided as information only and is the accumulated shortening of the girder due to dead loads and built-in erection forces from the Suggested Erection Sequence shown on Sheet Nos. BR179 thru BR183. Girder Shortening is measured horizontally from the centerline of bearing stiffener at Pier 11. Positive shortening indicates that the length of the girder decreases under load. The steel fabricator has adjusted the length for elastic shortening of the girders based on the Contractor's approved erection sequence so that the structure is at theoretical line and grade under full dead load.

Edge Girder Shortening is measured at the Cable Anchor Point. See Sheet No. BR111 for details.

Camber requirements for the edge girder webs, as shown in the table, are provided as information only and result from the construction steps in the Suggested Erection Sequence shown on Sheet Nos. BR179 thru BR183. The steel fabricator has camber the girders as required per the Contractor's approved erection sequence.

CABLE LAYOUT AND EDGE GIRDER SHORTENING

Detailed JUL 2009
Checked JUL 2009

Note: This drawing is not to scale. Follow dimensions.

Sheet No. 137 of 205

T:\de-proj\St_Louis_City\Construction\J6I0984\Asbuilts\Bridge\B_A6500_137-205_J6I0984_137.dgn 2:06:22 PM

DATE 8/20/09
ROUTE I-70 STATE MO/IL
DISTRICT 6 SHEET NO. BR137
COUNTY ST. LOUIS CITY - MO ST. CLAIR - IL
JOB NO. J6I0984
CONTRACT ID. 091208-601
PROJECT NO. I-70-9 (20)
BRIDGE NO. A6500

DESCRIPTION | DATE

MISSOURI HIGHWAYS AND TRANSPORTATION COMMISSION
105 WEST CAPITOL
JEFFERSON CITY, MO 65102
1-888-ASK-MODOT (1-888-275-6636)

HNTB
715 KIRK DRIVE
KANSAS CITY, MO 64105-1310
TELEPHONE (816) 472-1201
CERTIFICATE OF AUTHORITY NO. 001270

FINAL PLANS

REV.

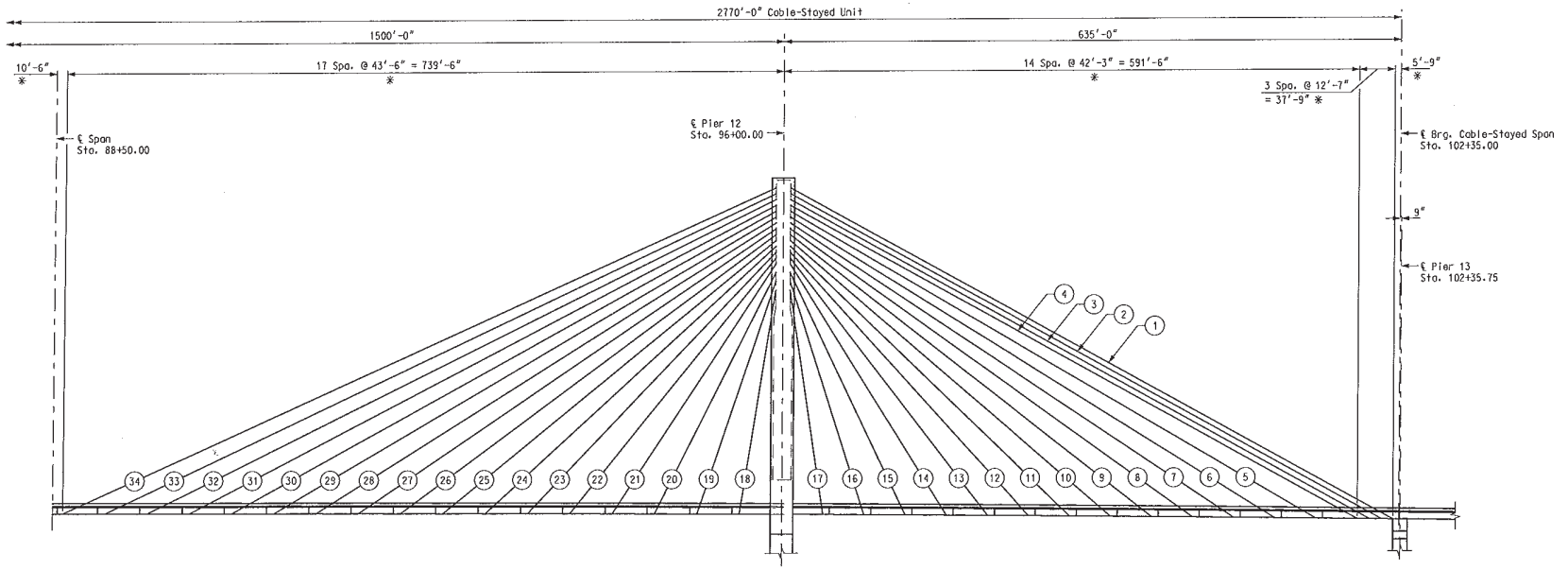

ELEVATION

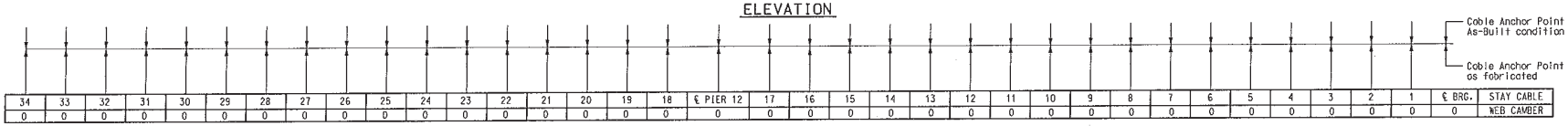

34	33	32	31	30	29	28	27	26	25	24	23	22	21	20	19	18	℄ PIER 12	17	16	15	14	13	12	11	10	9	8	7	6	5	4	3	2	1	℄ BRG.	STAY CABLE
0	0	0	0	0	0	0	0	0	0	0	0	0	0	0	0	0	0	0	0	0	0	0	0	0	0	0	0	0	0	0	0	0	0	0	0	WEB CAMBER

CAMBER DIAGRAM FOR EDGE GIRDER WEB (IN.)

ACCUMULATED EDGE GIRDER SHORTENING (IN.)																																				
34	33	32	31	30	29	28	27	26	25	24	23	22	21	20	19	18	℄ PIER 12	17	16	15	14	13	12	11	10	9	8	7	6	5	4	3	2	1	℄ BRG.	STAY CABLE
3.23	3.10	2.99	2.88	2.76	2.62	2.45	2.27	2.08	1.85	1.62	1.39	1.18	0.94	0.70	0.47	0.23	0.00	0.25	0.50	0.73	0.94	1.15	1.38	1.61	1.82	2.02	2.20	2.35	2.50	2.64	2.80	2.86	2.92	2.94	2.94	SHORTENING

Notes:

(#) Denotes Stay Cable Number

* Dimensions measured horizontally from Cable Anchor Points at bottom of edge girder web.
For additional notes and details, see Sheet No. BR137.

CABLE LAYOUT AND EDGE GIRDER SHORTENING

DATE
8/20/09

ROUTE	STATE
I-70	MO/IL
DISTRICT	SHEET NO.
6	BR138

COUNTY
ST. LOUIS CITY - MO
ST. CLAIR - IL

JOB NO.
J6I0984

CONTRACT ID.
091208-601

PROJECT NO.
I-70-9 (20)

BRIDGE NO.
A6500

DESCRIPTION | DATE

MISSOURI HIGHWAYS AND TRANSPORTATION COMMISSION
105 WEST CAPITOL
JEFFERSON CITY, MO 65102
1-888-ASK-MODOT (1-888-275-6636)
HNTB
715 KIRK DRIVE
KANSAS CITY, MO 64105-1310
TELEPHONE (816) 472-1201
CERTIFICATE OF AUTHORITY NO. 000270

FINAL PLANS

REV.

Detailed JUL 2009
Checked JUL 2009

Note: This drawing is not to scale. Follow dimensions.

T:\de-proj\St_Louis_City\Construction\J6I0984\Asbuilts\Bridge\B_A6500_138-205_J6I0984_138.dgn 8:45:36 AM

CABLE DATA

STAY CABLE	CABLE ANCHOR POINT (AT EDGE GIRDER)			CABLE BRACING POINT			CABLE ANCHOR POINT (AT TOWER)			LONG. DISTANCE BETWEEN ANCHOR POINTS	VERT. DISTANCE BETWEEN ANCHOR POINTS	TRANS. DISTANCE BETWEEN ANCHOR POINTS	LOWER CABLE ANGLE TO VERT. PLANE (ANGLE A)	THEORETICAL CABLE ANGLE TO HORIZ. (ANGLE B)	LOWER CATENARY ANGLE TO HORIZ. (ANGLE C)	PROJECTED LOWER CATENARY ANGLE TO HORIZ. (ANGLE D)	PROJECTED LOWER CATENARY ANGLE TO LOCAL TANGENT (ANGLE E)	UPPER CATENARY ANGLE TO HORIZ. (ANGLE F)	MIDPOINT SAG	THEORETICAL CABLE LENGTH (STRAIGHT LINE)	THEORETICAL CABLE LENGTH (CATENARY)
	STATION AT PIER 11 (FEET)	TRANS. OFFSET (FEET)	ELEVATION (FEET)	STATION AT PIER 11 (FEET)	TRANS. OFFSET (FEET)	ELEVATION (FEET)	STATION AT PIER 11 (FEET)	TRANS. OFFSET (FEET)	ELEVATION (FEET)	(FEET)	(FEET)	(FEET)	(DEGREES)	(DEGREES)	(DEGREES)	(DEGREES)	(DEGREES)	(DEGREES)	(FEET)	(FEET)	(FEET)
1	74+70.75	47.33	474.73	74+83.13	46.54	480.76	80+94.67	7.47	792.00	623.92	317.27	39.87	3°39'21.8"	26°54'24.0"	25°53'35.5"	25°56'20.7"	27°06'39.2"	27°54'08.2"	3.446	701.086	701.142
2	74+83.33	47.33	474.47	74+95.69	46.55	480.51	80+94.67	8.39	786.00	611.33	311.53	38.94	3°38'42.1"	26°57'20.5"	25°58'58.3"	26°01'42.8"	27°08'42.7"	27°54'43.4"	3.245	687.236	687.288
3	74+95.92	47.33	474.23	75+08.17	46.56	480.28	80+94.67	9.31	780.00	598.75	305.77	38.02	3°38'00.6"	27°00'21.1"	26°13'18.4"	26°16'03.0"	27°19'53.4"	27°46'45.1"	2.568	673.382	673.415
4	75+08.50	47.33	474.00	75+20.73	46.56	480.06	80+94.67	10.23	774.00	586.17	300.00	37.10	3°37'17.4"	27°03'26.1"	26°19'17.9"	26°22'01.8"	27°22'30.4"	27°47'00.0"	2.362	659.523	659.551
5	75+50.75	47.33	473.31	75+62.38	46.56	479.42	80+94.67	11.16	768.00	543.92	294.69	36.18	3°48'18.9"	28°23'45.4"	27°41'32.8"	27°44'40.3"	28°32'45.9"	29°05'24.8"	2.148	619.677	619.703
6	75+93.00	47.33	472.74	76+04.01	46.56	478.90	80+94.67	12.08	762.00	501.67	289.26	35.25	4°01'11.4"	29°54'25.0"	29°10'29.9"	29°14'06.3"	29°51'33.4"	30°37'41.9"	2.122	580.160	580.188
7	76+35.25	47.33	472.30	76+45.58	46.56	478.50	80+94.67	13.00	756.00	459.42	283.70	34.33	4°16'25.5"	31°37'30.5"	30°54'23.4"	30°58'36.7"	31°25'25.3"	32°19'58.3"	1.977	541.045	541.071
8	76+77.50	47.33	471.99	76+87.10	46.56	478.23	80+94.67	13.92	750.00	417.17	278.01	33.41	4°34'44.0"	33°35'45.3"	32°55'31.1"	33°00'32.1"	33°16'42.1"	34°15'22.7"	1.751	502.428	502.451
9	77+19.75	47.33	471.81	77+28.56	46.57	478.08	80+94.67	14.85	744.00	374.92	272.19	32.49	4°57'08.7"	35°52'39.0"	35°19'26.4"	35°25'30.6"	35°31'02.1"	36°25'24.1"	1.375	464.439	464.456
10	77+62.00	47.33	471.77	77+69.99	46.57	478.06	80+94.67	15.77	738.00	332.67	266.23	31.56	5°25'12.9"	38°32'42.0"	38°05'22.1"	38°12'51.1"	38°07'44.0"	38°59'41.4"	1.079	427.251	427.263
11	78+04.25	47.33	471.85	78+11.39	46.58	478.16	80+94.67	16.69	732.00	290.42	260.15	30.64	6°01'23.2"	41°41'44.6"	41°18'45.7"	41°28'12.1"	41°13'09.1"	42°04'27.3"	0.870	391.099	391.109
12	78+46.50	47.33	472.04	78+52.75	46.58	478.35	80+94.67	17.61	726.00	248.17	253.96	29.72	6°49'44.8"	45°27'25.4"	45°04'27.5"	45°16'41.8"	44°59'30.4"	45°50'04.9"	0.843	356.323	356.333
13	78+88.75	47.33	472.25	78+94.06	46.59	478.56	80+94.67	18.54	720.00	205.92	247.75	28.80	7°57'40.4"	49°59'42.9"	49°38'40.5"	49°55'05.5"	49°37'54.2"	50°20'27.1"	0.764	323.436	323.447
14	79+31.00	47.33	472.46	79+35.31	46.60	478.77	80+94.67	19.46	714.00	163.67	241.54	27.88	9°39'56.5"	55°29'48.6"	55°15'01.9"	55°37'59.6"	55°20'48.2"	55°44'24.3"	0.553	293.094	293.103
15	79+73.25	47.33	472.67	79+76.56	46.61	478.97	80+94.67	20.84	705.00	121.42	232.33	26.49	12°18'30.0"	61°51'26.2"	61°41'14.1"	62°14'24.0"	61°57'12.6"	62°01'31.5"	0.412	263.476	263.483
16	80+15.50	47.33	472.88	80+17.75	46.62	479.18	80+94.67	22.23	696.00	79.17	223.12	25.11	17°35'47.7"	69°34'57.1"	69°26'45.0"	70°19'56.0"	70°02'44.7"	69°43'03.0"	0.404	238.072	238.087
17	80+57.75	47.33	473.10	80+58.84	46.63	479.38	80+94.67	23.61	687.00	36.92	213.90	23.72	32°43'35.6"	78°24'23.3"	78°21'04.2"	80°09'39.2"	79°52'27.9"	78°27'40.5"	0.261	218.359	218.379
18	81+43.50	47.33	473.52	81+42.37	46.63	479.80	81+05.33	23.61	687.00	38.17	213.48	23.72	31°51'53.8"	78°06'43.1"	78°02'43.7"	79°48'21.9"	80°05'33.2"	78°10'40.0"	0.306	218.154	218.181
19	81+87.00	47.33	473.74	81+84.68	46.62	480.01	81+05.33	22.23	696.00	81.67	222.26	25.11	17°05'23.1"	68°58'20.7"	68°51'22.2"	69°42'43.7"	69°59'55.0"	69°05'14.7"	0.335	238.114	238.124
20	82+30.50	47.33	473.96	82+27.08	46.61	480.22	81+05.33	20.84	705.00	125.17	231.04	26.49	11°57'01.2"	61°01'27.3"	60°49'27.2"	61°21'19.8"	61°38'31.1"	61°13'18.4"	0.473	264.099	264.108
21	82+74.00	47.33	474.18	82+69.56	46.60	480.44	81+05.33	19.46	714.00	168.67	239.82	27.88	9°23'03.6"	54°31'02.1"	54°16'11.9"	54°38'06.5"	54°55'17.8"	54°45'41.6"	0.544	294.517	294.525
22	83+17.50	47.33	474.39	83+12.04	46.59	480.65	81+05.33	18.54	720.00	212.17	245.61	28.80	7°43'46.5"	48°55'08.0"	48°37'11.0"	48°52'44.3"	49°09'55.6"	49°12'52.2"	0.643	325.831	325.839
23	83+61.00	47.33	474.61	83+54.56	46.58	480.86	81+05.33	17.61	726.00	255.67	251.39	29.72	6°37'50.2"	44°19'27.2"	43°56'17.8"	44°07'49.6"	44°25'00.9"	44°42'18.5"	0.841	359.784	359.794
24	84+04.50	47.33	474.83	83+97.13	46.58	481.07	81+05.33	16.69	732.00	299.17	257.17	30.64	5°50'53.5"	40°32'07.0"	40°08'06.7"	40°16'57.4"	40°34'08.7"	40°55'50.4"	0.904	395.697	395.707
25	84+48.00	47.33	475.05	84+39.72	46.57	481.29	81+05.33	15.77	738.00	342.67	262.95	31.56	5°15'46.7"	37°23'05.1"	36°52'14.0"	36°59'12.5"	37°16'23.0"	37°53'31.1"	1.215	433.083	433.098
26	84+91.50	47.33	475.25	84+82.35	46.56	481.49	81+05.33	14.85	744.00	386.17	268.75	32.49	4°48'31.8"	34°44'26.8"	34°11'39.4"	34°17'17.7"	34°33'19.4"	35°16'48.5"	1.360	471.599	471.614
27	85+35.00	47.33	475.44	85+24.97	46.55	481.68	81+05.33	13.92	750.00	429.67	274.56	33.41	4°26'46.4"	32°30'03.4"	31°48'08.9"	31°52'47.5"	32°06'57.0"	33°11'19.5"	1.832	510.995	511.019
28	85+78.50	47.33	475.60	85+67.65	46.55	481.84	81+05.33	13.00	756.00	473.17	280.40	34.33	4°09'00.0"	30°35'08.2"	29°55'14.0"	29°55'14.0"	30°07'31.4"	31°18'17.3"	2.024	551.083	551.110
29	86+22.00	47.33	475.73	86+10.37	46.54	481.98	81+05.33	12.08	762.00	516.67	286.27	35.25	3°54'12.6"	28°55'59.1"	28°10'48.5"	28°14'08.1"	28°24'33.3"	29°40'30.9"	2.205	591.724	591.753
30	86+65.50	47.33	475.84	86+53.12	46.53	482.09	81+05.33	11.16	768.00	560.17	292.16	36.18	3°41'42.6"	27°29'44.1"	26°44'09.8"	26°47'02.4"	26°55'35.5"	28°14'41.1"	2.348	632.812	632.842
31	87+09.00	47.33	475.93	86+95.84	46.52	482.19	81+05.33	10.23	774.00	603.67	298.07	37.10	3°31'00.4"	26°14'08.2"	25°22'33.6"	25°25'04.2"	25°31'45.1"	27°04'57.7"	2.799	674.266	674.305
32	87+52.50	47.33	476.00	87+38.64	46.52	482.26	81+05.33	9.31	780.00	647.17	304.00	38.02	3°21'44.3"	25°07'24.9"	24°16'57.7"	24°19'10.9"	24°23'59.7"	25°57'11.1"	2.882	716.023	716.061
33	87+96.00	47.33	476.04	87+81.31	46.50	482.31	81+05.33	8.39	786.00	690.67	309.96	38.94	3°13'38.2"	24°08'09.5"	23°04'22.1"	23°06'20.2"	23°09'16.8"	25°10'54.3"	3.822	758.033	758.095
34	88+39.50	47.33	476.06	88+24.13	46.50	482.33	81+05.33	7.47	792.00	734.17	315.94	39.87	3°06'29.5"	23°15'13.4"	22°10'51.7"	22°12'37.9"	22°13'44.9"	24°18'34.0"	4.045	800.257	800.322

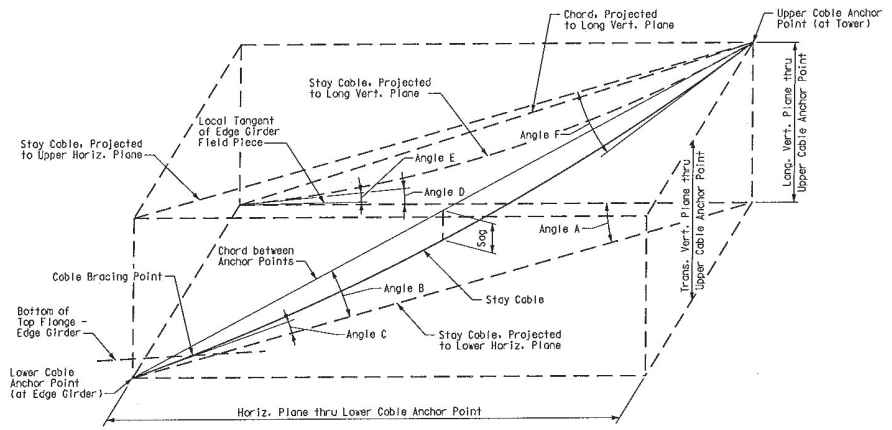

CABLE DATA DIAGRAM

Notes:
The theoretical cable length shown is calculated between cable anchor points. The Contractor determined the required length of cable based upon the stay cable anchorage hardware provided and the distance between the anchorage points.
Cable geometry and lengths are based on theoretical cable anchor points shown above. Final cable geometry is account for the axial shortening in the deck system due to dead loads and final erection forces at beginning of service life.
Computed sag is based upon the mass of the cable and the initial dead load force in the cable upon completion of the structure, as calculated per the Suggested Erection Sequence shown on Sheet Nos. BR179 thru BR183.
For locations of cable anchor points and cable bracing points, see Sheet Nos. BR92, BR93, BR111 thru BR116, BR123, and BR124.
Cable data shown on this sheet only apply to cables anchored at Pier 11 on the right side plane of cables when looking upstation. To obtain the cable data for the cables laying on the left side plane of cables multiply the transverse offset values with -1.0.

STAY CABLE GEOMETRY

DATE 8/20/09
ROUTE I-70 | STATE MO/IL
DISTRICT 6 | SHEET NO. BR139
COUNTY ST. LOUIS CITY - MO, ST. CLAIR - IL
JOB NO. J6I0984
CONTRACT ID. 091208-601
PROJECT NO. I-70-9 (20)
BRIDGE NO. A6500

DESCRIPTION | DATE

MISSOURI HIGHWAYS AND TRANSPORTATION COMMISSION
105 WEST CAPITOL
JEFFERSON CITY, MO 65102
1-888-ASK-MODOT (1-888-275-6636)

HNTB
715 KIRK DRIVE
KANSAS CITY, MO 64105-1310
TELEPHONE: 816 472-1201
CERTIFICATE OF AUTHORITY NO. 001270

FINAL PLANS

REV.

Detailed JUL 2009
Checked JUL 2009

Note: This drawing is not to scale. Follow dimensions.

Sheet No. 139 of 205

T:\de-proj\St_Louis_City\Construction\J6I0984\Asbuilts\Bridge\B_A6500_139-205_J6I0984_139.dgn 2:09:58 PM

CABLE DATA

STAY CABLE	CABLE ANCHOR POINT (AT EDGE GIRDER) STATION AT PIER 12 (FEET)	TRANS. OFFSET (FEET)	ELEVATION (FEET)	CABLE BRACING POINT STATION AT PIER 12 (FEET)	TRANS. OFFSET (FEET)	ELEVATION (FEET)	CABLE ANCHOR POINT (AT TOWER) STATION AT PIER 12 (FEET)	TRANS. OFFSET (FEET)	ELEVATION (FEET)	LONG. DISTANCE BETWEEN ANCHOR POINTS (FEET)	VERT. DISTANCE BETWEEN ANCHOR POINTS (FEET)	TRANS. DISTANCE BETWEEN ANCHOR POINTS (FEET)	LOWER CABLE ANGLE TO VERT. PLANE (ANGLE A) (DEGREES)	THEORETICAL CABLE ANGLE TO HORIZ. (ANGLE B) (DEGREES)	LOWER CATENARY ANGLE TO HORIZ. (ANGLE C) (DEGREES)	PROJECTED LOWER CATENARY ANGLE TO HORIZ. (ANGLE D) (DEGREES)	PROJECTED LOWER CATENARY ANGLE TO LOCAL TANGENT (ANGLE E) (DEGREES)	UPPER CATENARY ANGLE TO HORIZ. (ANGLE F) (DEGREES)	MIDPOINT SAG (FEET)	THEORETICAL CABLE LENGTH (STRAIGHT LINE) (FEET)	THEORETICAL CABLE LENGTH (CATENARY) (FEET)
1	102+29.25	47.33	470.16	102+16.42	46.51	476.51	96+05.33	7.47	792.00	623.92	321.84	39.87	3°39'21.8"	27°14'19.6"	26°15'57.5"	26°18'44.3"	26°01'33.0"	28°11'41.6"	3.328	703.166	703.219
2	102+16.67	47.33	470.22	102+03.88	46.52	476.57	96+05.33	8.39	786.00	611.33	315.78	38.94	3°38'42.1"	27°16'14.5"	26°20'24.2"	26°23'10.3"	26°05'59.0"	28°11'09.8"	3.123	689.173	689.221
3	102+04.08	47.33	470.29	101+91.42	46.53	476.63	96+05.33	9.31	780.00	598.75	309.71	38.02	3°38'00.6"	27°18'14.2"	26°33'46.8"	26°36'32.9"	26°19'21.6"	28°02'06.5"	2.440	675.181	675.211
4	101+91.50	47.33	470.35	101+78.85	46.53	476.69	96+05.33	10.23	774.00	586.17	303.65	37.10	3°37'17.4"	27°20'19.0"	26°35'17.9"	26°38'03.0"	26°20'51.7"	28°04'44.0"	2.421	661.189	661.219
5	101+49.25	47.33	470.56	101+37.29	46.54	476.90	96+05.33	11.16	768.00	543.92	297.44	36.18	3°48'18.9"	28°37'07.2"	27°53'16.6"	27°56'25.0"	27°39'13.6"	29°20'21.7"	2.240	620.987	621.015
6	101+07.00	47.33	470.77	100+95.76	46.54	477.11	96+05.33	12.08	762.00	501.67	291.23	35.25	4°01'11.4"	30°04'29.2"	29°21'02.0"	29°24'38.2"	29°07'27.9"	30°47'18.7"	2.107	581.142	581.169
7	100+64.75	47.33	470.98	100+54.24	46.55	477.32	96+05.33	13.00	756.00	459.42	285.02	34.33	4°16'25.5"	31°44'36.6"	31°00'01.2"	31°04'14.9"	30°47'03.6"	32°28'29.8"	2.049	541.735	541.764
8	100+22.50	47.33	471.19	100+12.76	46.55	477.52	96+05.33	13.92	750.00	417.17	278.81	33.41	4°34'44.0"	33°40'17.1"	32°56'54.4"	33°01'55.5"	32°44'44.2"	34°22'56.8"	1.890	502.869	502.896
9	99+80.25	47.33	471.41	99+71.37	46.56	477.73	96+05.33	14.85	744.00	374.92	272.59	32.49	4°57'08.7"	35°55'05.5"	35°21'37.3"	35°27'41.6"	35°10'30.3"	36°28'05.8"	1.387	464.678	464.695
10	99+38.00	47.33	471.62	99+29.96	46.57	477.94	96+05.33	15.77	738.00	332.67	266.38	31.56	5°25'12.9"	38°33'38.6"	38°03'46.2"	38°11'15.2"	37°54'03.9"	39°03'06.5"	1.179	427.345	427.359
11	98+95.75	47.33	471.83	98+88.60	46.58	478.15	96+05.33	16.69	732.00	290.42	260.17	30.64	6°01'23.2"	41°41'53.3"	41°18'17.8"	41°27'44.1"	41°10'32.8"	42°05'11.7"	0.893	391.114	391.124
12	98+53.50	47.33	472.04	98+47.25	46.58	478.35	96+05.33	17.61	726.00	248.17	253.96	29.72	6°49'44.8"	45°27'25.4"	45°04'11.3"	45°16'25.6"	44°59'14.3"	45°50'20.6"	0.853	356.323	356.334
13	98+11.25	47.33	472.25	98+05.94	46.59	478.56	96+05.33	18.54	720.00	205.92	247.75	28.80	7°57'40.4"	49°59'42.9"	49°38'39.2"	49°55'04.1"	49°37'52.8"	50°20'28.5"	0.765	323.436	323.447
14	97+69.00	47.33	472.46	97+64.69	46.60	478.77	96+05.33	19.46	714.00	163.67	241.54	27.88	9°39'56.5"	55°29'48.6"	55°15'00.9"	55°37'58.5"	55°20'47.2"	55°44'25.4"	0.553	293.094	293.103
15	97+26.75	47.33	472.67	97+23.43	46.61	478.97	96+05.33	20.84	705.00	121.42	232.33	26.49	12°18'30.0"	61°51'26.2"	61°41'07.2"	62°14'17.1"	61°57'05.8"	62°01'38.3"	0.417	263.476	263.484
16	96+84.50	47.33	472.88	96+82.25	46.62	479.18	96+05.33	22.23	696.00	79.17	223.12	25.11	17°35'47.7"	69°34'57.1"	69°26'56.0"	70°20'06.6"	70°02'55.3"	69°42'52.3"	0.395	238.072	238.086
17	96+42.25	47.33	473.10	96+41.16	46.63	479.38	96+05.33	23.61	687.00	36.92	213.90	23.72	32°43'35.6"	78°24'23.3"	78°21'01.2"	80°09'36.6"	79°52'25.3"	78°27'43.5"	0.265	218.359	218.380
18	95+56.50	47.33	473.52	95+57.63	46.63	479.80	95+94.67	23.61	687.00	38.17	213.48	23.72	31°51'53.8"	78°06'43.1"	78°02'49.0"	79°48'26.4"	80°05'37.1"	78°10'34.8"	0.299	218.154	218.180
19	95+13.00	47.33	473.74	95+15.32	46.62	480.01	95+94.67	22.23	696.00	81.67	222.26	25.11	17°05'23.1"	68°58'20.7"	68°51'25.9"	69°42'47.3"	69°59'58.6"	69°05'11.1"	0.332	238.114	238.124
20	94+69.50	47.33	473.96	94+72.92	46.61	480.22	95+94.67	20.84	705.00	125.17	231.04	26.49	11°57'01.2"	61°01'27.3"	60°50'02.3"	61°21'54.4"	61°39'05.7"	61°12'44.3"	0.450	264.099	264.107
21	94+26.00	47.33	474.18	94+30.44	46.60	480.44	95+94.67	19.46	714.00	168.67	239.82	27.88	9°23'03.6"	54°31'02.1"	54°15'22.2"	54°37'17.0"	54°54'28.3"	54°46'30.1"	0.574	294.517	294.526
22	93+82.50	47.33	474.39	93+87.96	46.59	480.65	95+94.67	18.54	720.00	212.17	245.61	28.80	7°43'46.5"	48°55'08.0"	48°36'03.7"	48°51'37.1"	49°08'48.4"	49°13'57.9"	0.683	325.831	325.840
23	93+39.00	47.33	474.61	93+45.44	46.58	480.86	95+94.67	17.61	726.00	255.67	251.39	29.72	6°37'50.2"	44°19'27.2"	43°56'40.8"	44°08'12.6"	44°25'23.9"	44°41'56.1"	0.828	359.784	359.794
24	92+95.50	47.33	474.83	93+02.87	46.58	481.07	95+94.67	16.69	732.00	299.17	257.17	30.64	5°50'53.5"	40°32'07.0"	40°08'34.1"	40°17'24.8"	40°34'36.1"	40°55'23.6"	0.886	395.697	395.706
25	92+52.00	47.33	475.05	92+60.29	46.57	481.29	95+94.67	15.77	738.00	342.67	262.95	31.56	5°15'46.7"	37°23'05.1"	36°52'36.9"	36°59'35.5"	37°16'46.0"	37°53'08.8"	1.200	433.083	433.097
26	92+08.50	47.33	475.25	92+17.66	46.56	481.50	95+94.67	14.85	744.00	386.17	268.75	32.49	4°48'31.8"	34°44'26.8"	34°11'44.7"	34°17'23.0"	34°33'24.8"	35°16'43.3"	1.356	471.599	471.614
27	91+65.00	47.33	475.44	91+75.05	46.55	481.68	95+94.67	13.92	750.00	429.67	274.56	33.41	4°26'46.4"	32°30'03.4"	31°46'38.0"	31°51'16.5"	32°05'26.1"	33°12'47.5"	1.898	510.995	511.021
28	91+21.50	47.33	475.60	91+32.35	46.55	481.84	95+94.67	13.00	756.00	473.17	280.40	34.33	4°09'00.0"	30°35'08.2"	29°51'47.0"	29°55'41.0"	30°07'56.4"	31°17'51.1"	2.003	551.083	551.109
29	90+78.00	47.33	475.73	90+89.64	46.54	481.98	95+94.67	12.08	762.00	516.67	286.27	35.25	3°54'12.6"	28°55'59.1"	28°11'45.5"	28°15'05.2"	28°15'05.2"	29°39'35.5"	2.159	591.724	591.752
30	90+34.50	47.33	475.84	90+46.89	46.53	482.10	95+94.67	11.16	768.00	560.17	292.16	36.18	3°41'42.6"	27°29'44.1"	26°45'04.1"	26°47'56.7"	26°56'29.8"	28°13'48.3"	2.302	632.812	632.841
31	89+91.00	47.33	475.93	90+04.18	46.52	482.19	95+94.67	10.23	774.00	603.67	298.07	37.10	3°31'00.4"	26°14'08.2"	25°22'38.7"	25°25'09.4"	25°31'50.3"	27°04'52.7"	2.794	674.266	674.305
32	89+47.50	47.33	476.00	89+61.39	46.52	482.27	95+94.67	9.31	780.00	647.17	304.00	38.02	3°21'44.3"	25°07'24.9"	24°15'09.6"	24°17'22.7"	24°22'11.5"	25°58'56.3"	2.984	716.023	716.063
33	89+04.00	47.33	476.04	89+18.72	46.50	482.31	95+94.67	8.39	786.00	690.67	309.96	38.94	3°13'38.2"	24°08'09.5"	23°03'38.4"	23°05'36.5"	23°08'33.1"	25°11'36.5"	3.865	758.033	758.096
34	88+60.50	47.33	476.06	88+75.92	46.50	482.34	95+94.67	7.47	792.00	734.17	315.94	39.87	3°06'29.5"	23°15'13.4"	22°08'06.1"	22°09'52.1"	22°10'59.2"	24°21'14.3"	4.217	800.257	800.327

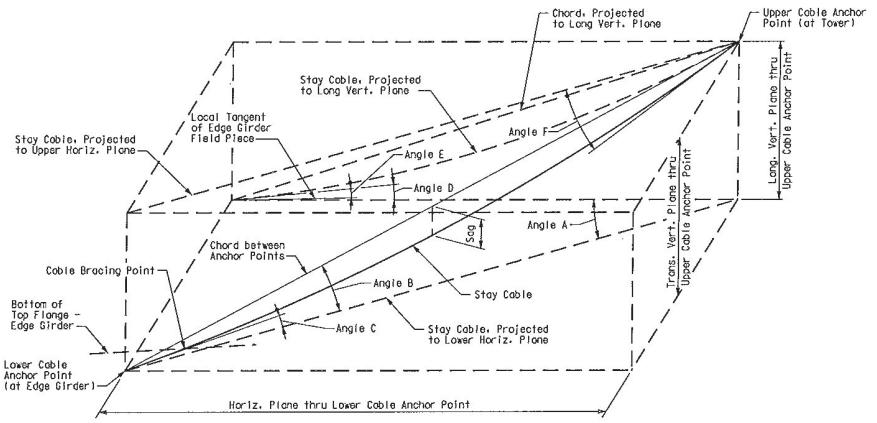

CABLE DATA DIAGRAM

Notes:
The theoretical cable length shown is calculated between cable anchor points. The Contractor determined the required length of cable based upon the stay cable anchorage hardware provided and the distance between the anchorage points.
Cable geometry and lengths are based on theoretical cable anchor points shown above. Final cable geometry is in account for the axial shortening in the deck system due to dead loads and final erection forces at beginning of service life.
Computed sag is based upon the mass of the cable and the initial dead load force in the cable upon completion of the structure, as calculated per the Suggested Erection Sequence shown on Sheet Nos. BR179 thru BR183.
For locations of cable anchor points and cable bracing points, see Sheet Nos. BR92, BR93, BR111 thru BR116, BR123, and BR124.
Cable data shown on this sheet only apply to cables anchored at Pier 12 on the right side plane of cables when looking upstation. To obtain the cable data for the cables laying on the left side plane of cables multiply the transverse offset values with -1.0.

STAY CABLE GEOMETRY

Detailed JUL 2009
Checked JUL 2009

Note: This drawing is not to scale. Follow dimensions.

DATE 8/20/09
ROUTE I-70 | STATE MO/IL
DISTRICT 6 | SHEET NO. BR140
COUNTY ST. LOUIS CITY - MO ST. CLAIR - IL
JOB NO. J6I0984
CONTRACT ID. 091208-601
PROJECT NO. I-70-9 (20)
BRIDGE NO. A6500

DESCRIPTION | DATE

MISSOURI HIGHWAYS AND TRANSPORTATION COMMISSION
105 WEST CAPITOL
JEFFERSON CITY, MO 65102
1-888-ASK-MODOT (1-888-275-6636)
HNTB
715 KIRK DRIVE
KANSAS CITY, MO 64105-1310
TELEPHONE (816) 472-1201
CERTIFICATE OF AUTHORITY NO. 001270

FINAL PLANS

REV.

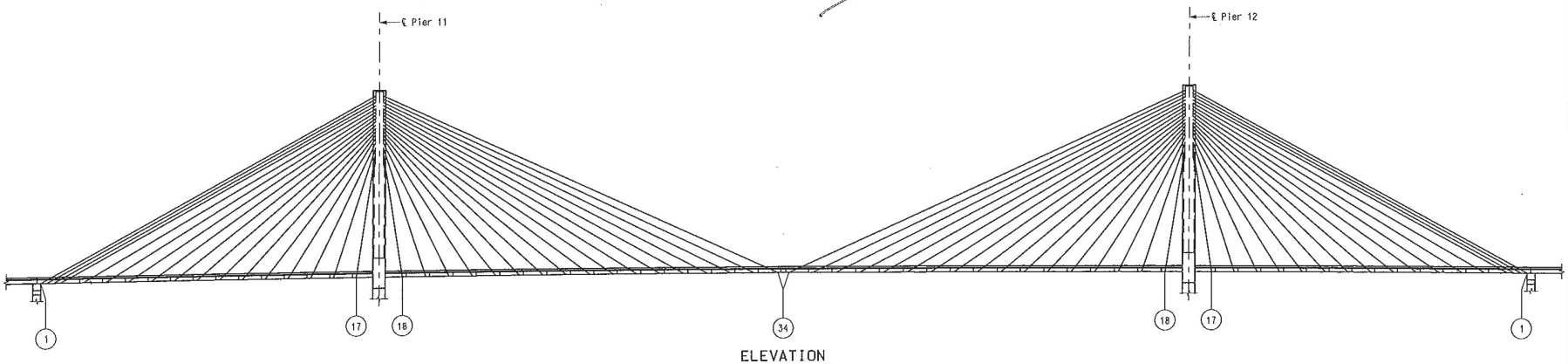

ELEVATION

STAY CABLE SCHEDULE

STAY CABLE	CABLE DATA			CABLE FORCES																
							THERMAL LOAD		LIVE LOAD+IMPACT		DESIGN LOAD (STRENGTH I)					DESIGN LOAD (STRENGTH III)				
	NUMBER OF 0.6" DIAMETER, 7 WIRE STRANDS	STEEL AREA	PE PIPE DIAMETER	INITIAL DEAD LOAD *	LONG TERM LOSSES	FINAL DEAD LOAD *	MAXIMUM	MINIMUM	MAXIMUM	MINIMUM	CABLE FORCE MAXIMUM	CABLE STRESS MAXIMUM	CABLE FORCE MINIMUM	CABLE STRESS MINIMUM	STRESS RANGE	CABLE FORCE MAXIMUM	CABLE STRESS MAXIMUM	CABLE FORCE MINIMUM	CABLE STRESS MINIMUM	STRESS RANGE
		(SQ. IN.)	(IN.)	(KIPS)	(KIPS)	(KIPS)	(KIPS)	(KIPS)	(KIPS)	(KIPS)	(KIPS)	(KSI)	(KIPS)	(KSI)	(KSI)	(KIPS)	(KSI)	(KIPS)	(KSI)	(KSI)
1	73	15.84	9.84	1123	20	1143	19	-28	405	-241	2397	151	366	23	128	1861	117	629	40	78
2	73	15.84	9.84	1146	31	1176	18	-26	334	-185	2285	144	512	32	112	1847	117	702	44	72
3	61	13.24	8.86	1123	49	1172	17	-25	278	-143	2157	163	588	44	119	1793	135	726	55	81
4	61	13.24	8.86	1149	19	1167	16	-24	240	-114	2055	155	671	51	105	1738	131	773	58	73
5	55	11.94	7.87	1000	41	1040	9	-13	191	-51	1763	148	709	59	88	1484	124	744	62	62
6	55	11.94	7.87	921	23	943	4	-6	195	-20	1622	136	722	61	75	1353	113	688	58	56
7	55	11.94	7.87	831	37	868	1	-1	200	-5	1526	128	689	58	70	1270	106	599	50	56
8	55	11.94	7.87	777	69	846	2	-1	234	-28	1563	131	593	50	81	1265	106	528	44	62
9	43	9.33	7.87	731	14	746	3	-2	246	-39	1461	157	531	57	100	1143	122	483	52	71
10	43	9.33	7.87	728	72	800	3	-2	241	-38	1517	163	531	57	106	1201	129	491	53	76
11	37	8.03	7.09	670	21	691	2	-2	217	-28	1327	165	503	63	103	1030	128	468	58	70
12	37	8.03	7.09	583	7	590	1	-1	181	-16	1125	140	454	57	84	862	107	426	53	54
13	37	8.03	7.09	535	-2	534	1	-1	168	-12	1029	128	421	52	76	784	98	404	50	47
14	31	6.73	6.30	522	-6	515	1	-1	160	-16	997	148	396	59	89	757	112	401	60	53
15	31	6.73	6.30	560	-10	549	2	-1	153	-28	1041	155	397	59	96	801	119	428	64	55
16	31	6.73	6.30	471	-24	446	5	-2	110	-33	850	126	306	45	81	674	100	356	53	47
17	31	6.73	6.30	605	-39	566	15	-7	69	-36	950	141	389	58	83	838	125	443	66	59
18	31	6.73	6.30	523	-44	479	13	-6	67	-42	842	125	319	47	78	735	109	381	57	53
19	31	6.73	6.30	569	-31	538	11	-6	135	-48	1023	152	354	53	99	800	119	422	63	56
20	31	6.73	6.30	496	9	505	5	-3	144	-31	965	143	340	51	93	729	108	386	57	51
21	31	6.73	6.30	507	21	529	1	-1	167	-24	1027	153	369	55	98	754	112	388	58	54
22	37	8.03	7.09	608	35	643	0	0	190	-19	1215	151	468	58	93	921	115	458	57	58
23	37	8.03	7.09	602	11	613	0	0	171	-13	1135	141	478	59	82	888	111	447	56	55
24	37	8.03	7.09	678	16	694	0	-1	204	-15	1306	163	536	67	96	1029	128	481	60	68
25	43	9.33	7.87	726	14	739	0	0	213	-16	1386	149	571	61	87	1107	119	503	54	65
26	43	9.33	7.87	769	9	778	0	0	239	-20	1489	160	598	64	96	1183	127	520	56	71
27	55	11.94	7.87	799	31	830	0	0	243	-21	1567	131	621	52	79	1273	107	549	46	61
28	55	11.94	7.87	871	17	888	1	0	250	-19	1657	139	686	57	81	1342	112	614	51	61
29	55	11.94	7.87	922	27	948	1	-1	245	-13	1724	144	744	62	82	1419	119	658	55	64
30	55	11.94	7.87	990	25	1015	1	-1	254	-10	1828	153	807	68	86	1504	126	703	59	67
31	61	13.24	8.86	1033	2	1035	1	-1	262	-22	1883	142	806	61	81	1563	118	704	53	65
32	61	13.24	8.86	1093	35	1128	0	-1	301	-50	2107	159	772	58	101	1742	132	694	52	79
33	73	15.84	9.84	1170	8	1179	1	-2	330	-93	2258	143	716	45	97	1848	117	710	45	72
34	73	15.84	9.84	1196	46	1241	3	-4	365	-149	2438	154	581	37	117	1957	124	685	43	80

Notes:

(#) Denotes Stay Cable Number

Negative forces indicate a reduction in tension in the cable.
* Initial dead load at beginning of service life. Final dead load after long term creep and shrinkage losses.

STAY CABLE SCHEDULE

DATE 8/20/09
ROUTE I-70 | STATE MO/IL
DISTRICT 6 | SHEET NO. BR141
COUNTY ST. LOUIS CITY - MO ST. CLAIR - IL
JOB NO. J6I0984
CONTRACT ID. 091208-601
PROJECT NO. I-70-9 (20)
BRIDGE NO. A6500

DESCRIPTION | DATE

MISSOURI HIGHWAYS AND TRANSPORTATION COMMISSION
105 WEST CAPITOL
JEFFERSON CITY, MO 65102
1-888-ASK-MODOT (1-888-275-6636)
HNTB
715 KIRK DRIVE
KANSAS CITY, MO 64105-1310
TELEPHONE 816 472-1201
CERTIFICATE OF AUTHORITY NO. 001270

FINAL PLANS

REV.

Detailed JUL 2009
Checked JUL 2009

Note: This drawing is not to scale. Follow dimensions.

T:\de-proj\St_Louis_City\Construction\J6I0984\Asbuilts\Bridge\B_A6500_141-205_J6I0984_141.dgn

8:54:55 AM

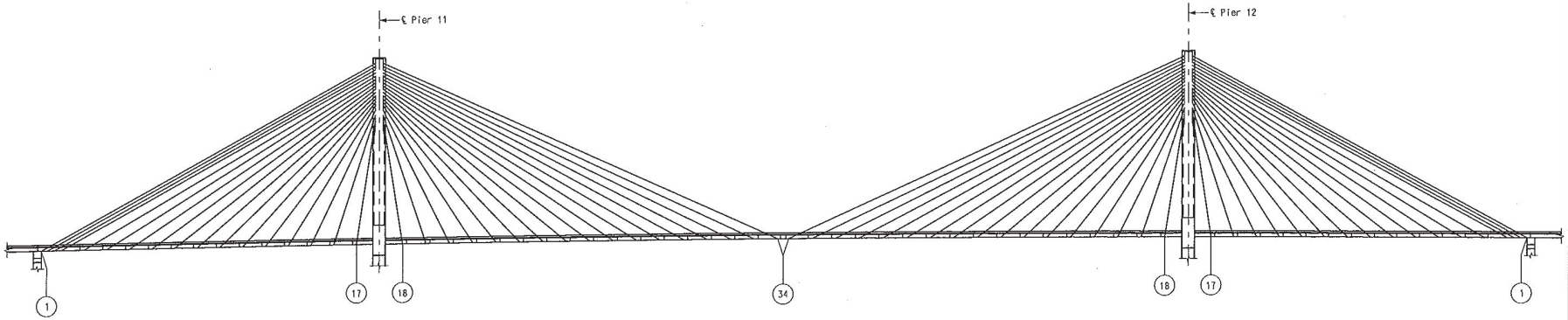

ELEVATION

STAY CABLE SCHEDULE

STAY CABLE	CABLE FORCES																								
	DESIGN LOAD (STRENGTH IV)					DESIGN LOAD (STRENGTH V)					DESIGN LOAD (SERVICE I)					DESIGN LOAD (SERVICE II)					DESIGN LOAD (FATIGUE)				
	CABLE FORCE MAXIMUM (KIPS)	CABLE STRESS MAXIMUM (KSI)	CABLE FORCE MINIMUM (KIPS)	CABLE STRESS MINIMUM (KSI)	STRESS RANGE (KSI)	CABLE FORCE MAXIMUM (KIPS)	CABLE STRESS MAXIMUM (KSI)	CABLE FORCE MINIMUM (KIPS)	CABLE STRESS MINIMUM (KSI)	STRESS RANGE (KSI)	CABLE FORCE MAXIMUM (KIPS)	CABLE STRESS MAXIMUM (KSI)	CABLE FORCE MINIMUM (KIPS)	CABLE STRESS MINIMUM (KSI)	STRESS RANGE (KSI)	CABLE FORCE MAXIMUM (KIPS)	CABLE STRESS MAXIMUM (KSI)	CABLE FORCE MINIMUM (KIPS)	CABLE STRESS MINIMUM (KSI)	STRESS RANGE (KSI)	CABLE FORCE MAXIMUM (KIPS)	CABLE STRESS MAXIMUM (KSI)	CABLE FORCE MINIMUM (KIPS)	CABLE STRESS MINIMUM (KSI)	STRESS RANGE (KSI)
1	1858	117	919	58	59	2287	144	415	26	118	1718	108	702	44	64	1715	108	775	49	59	13	1	-10	-1	1
2	1901	120	943	60	60	2195	139	546	34	104	1653	104	809	51	53	1648	104	874	55	49	11	1	-8	0	1
3	1886	142	926	70	72	2082	157	612	46	111	1570	119	850	64	54	1566	118	907	69	50	9	1	-6	0	1
4	1859	140	944	71	69	1990	150	688	52	98	1503	114	913	69	45	1500	113	965	73	40	7	1	-5	0	1
5	1648	138	835	70	68	1704	143	713	60	83	1281	107	891	75	33	1298	109	920	77	32	10	1	-2	0	1
6	1493	125	772	65	60	1566	131	710	60	72	1169	98	867	73	25	1199	100	889	75	26	15	1	-1	0	1
7	1372	115	698	58	57	1474	124	662	55	68	1094	92	804	67	24	1129	95	824	69	26	17	1	0	0	1
8	1337	112	650	54	58	1503	126	571	48	78	1114	93	718	60	33	1150	96	739	62	34	19	2	-1	0	2
9	1180	126	611	65	61	1397	150	513	55	95	1033	111	657	70	40	1069	115	678	73	42	20	2	-1	0	2
10	1265	136	608	65	70	1453	156	515	55	101	1076	115	657	70	45	1113	119	676	72	47	19	2	-1	0	2
11	1092	136	560	70	66	1266	158	490	61	97	936	117	617	77	40	973	121	632	79	42	18	2	-1	0	2
12	933	116	487	61	56	1069	133	444	55	78	790	98	550	68	30	825	103	561	70	33	16	2	-1	0	2
13	847	105	445	55	50	977	122	414	52	70	721	90	509	63	26	755	94	516	64	30	16	2	-1	0	2
14	826	123	429	64	59	945	140	395	59	82	700	104	486	72	32	733	109	490	73	36	15	2	-1	0	2
15	895	133	454	67	66	989	147	403	60	87	738	110	498	74	36	768	114	501	74	40	15	2	-2	0	2
16	764	114	374	56	58	812	121	316	47	74	614	91	393	58	33	632	94	396	59	35	11	2	-2	0	2
17	978	145	463	69	77	926	138	400	59	78	716	106	481	72	35	720	107	489	73	34	6	1	-3	0	1
18	852	127	407	60	66	820	122	331	49	73	635	94	407	60	34	637	95	414	62	33	6	1	-2	0	1
19	913	136	453	67	68	974	145	367	55	90	740	110	462	69	41	763	113	465	69	44	12	2	-3	0	2
20	826	123	405	60	63	914	136	349	52	84	684	102	436	65	37	714	106	436	65	41	13	2	-2	0	2
21	847	126	418	62	64	967	144	371	55	89	716	106	464	69	37	755	112	466	69	43	15	2	-1	0	2
22	1020	127	506	63	64	1151	143	463	58	86	850	106	574	71	34	894	111	580	72	39	17	2	-1	0	2
23	969	121	504	63	58	1082	135	467	58	77	800	100	574	72	28	836	104	584	73	31	15	2	-1	0	2
24	1097	137	567	71	66	1249	156	518	65	91	922	115	642	80	35	959	119	658	82	37	18	2	-1	0	2
25	1168	125	607	65	60	1329	142	550	59	84	982	105	683	73	32	1017	109	704	75	33	18	2	-1	0	2
26	1228	132	641	69	63	1426	153	573	61	92	1053	113	717	77	36	1088	117	743	80	37	19	2	-1	0	2
27	1312	110	667	56	54	1509	126	597	50	76	1115	93	746	63	31	1146	96	772	65	31	19	2	-1	0	2
28	1403	118	728	61	57	1594	134	663	56	78	1179	99	821	69	30	1213	102	846	71	31	20	2	-1	0	2
29	1499	126	771	65	61	1663	139	717	60	79	1231	103	881	74	29	1268	106	905	76	30	19	2	-1	0	2
30	1604	134	828	69	65	1763	148	775	65	83	1306	109	950	80	30	1345	113	977	82	31	20	2	-1	0	2
31	1635	124	864	65	58	1820	137	774	58	79	1350	102	962	73	29	1375	104	1003	76	28	19	1	-1	0	2
32	1788	135	907	69	67	2036	154	743	56	98	1513	114	956	72	42	1523	115	1019	77	38	20	2	-2	0	2
33	1871	118	965	61	57	2177	137	703	44	93	1627	103	943	60	43	1614	102	1029	65	37	20	1	-3	0	1
34	1971	124	975	62	63	2340	148	594	37	110	1760	111	855	54	57	1725	109	965	61	48	20	1	-5	0	2

Notes:

(#) Denotes Stay Cable Number

Negative forces indicate a reduction in tension in the cable.

STAY CABLE SCHEDULE

Detailed JUL 2009
Checked JUL 2009

Note: This drawing is not to scale. Follow dimensions.

Sheet No. 142 of 205

T:\de-proj\St_Louis_City\Construction\J6I0984\Asbuilts\Bridge\B_A6500_142-205_J6I0984_142.dgn

8:55:30 AM

DATE 8/20/09
ROUTE I-70 STATE MO/IL
DISTRICT 6 SHEET NO. BR142
COUNTY ST. LOUIS CITY - MO ST. CLAIR - IL
JOB NO. J6I0984
CONTRACT ID. 091208-601
PROJECT NO. I-70-9 (20)
BRIDGE NO. A6500

DESCRIPTION | DATE

MISSOURI HIGHWAYS AND TRANSPORTATION COMMISSION
105 WEST CAPITOL
JEFFERSON CITY, MO 65102
1-888-ASK-MODOT (1-888-275-6636)

HNTB
715 KIRK DRIVE
KANSAS CITY, MO 64105-1310
TELEPHONE (816) 472-1201
CERTIFICATE OF AUTHORITY NO. 001270

FINAL PLANS

REV.

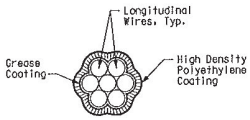

SECTION THRU STRAND

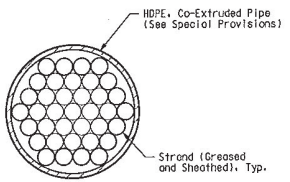

SECTION A-A

Notes:
HDPE denotes High Density Polyethylene.
Stay-Cable anchorage and assembly as shown are schematic.
Anchorages provided by the Contractor has provide for future cable replacement.
Unused strand holes in anchorages are filled so to seal the anchorage but yet allow future installation of strand.
The Guide Pipe at the Upper Cable Anchorage are sized and supplied by the stay-cable supplier. The size of this pipe are coordinated with the Tower Cable Anchorage Details. The dimensions associated with the Tower Cable Anchorage System and the Stay-Cable Girder Anchorage System as shown in these Plans are based on the the VSL SSI 2000 Stay-Cable System. Should another Stay-Cable System be furnished, the Contractor is responsible for revising these systems to suit the furnished Stay-Cable System. The revised anchorage systems are subject to review and approval by the Engineer.
The Stay-Cable supplier designed and furnish a positive restraint system to prevent unseating of the wedges.
The Stay-Cables are supplied with damping devices that provide 1% of critical damping.
Stay-Cable material, fabrication, testing and installation are in accordance with PTI Recommendations for Stay-Cable Design, Testing and Installation, 5th Edition as well as the Plans, Specifications and Special Provisions.
For additional specifications regarding the Stay-Cables, See Special Provision "Stay-Cables".
All costs associated with the materials, fabrication and installation of the Stay-Cables shall be included in the pay item "Stay-Cables". This includes the fixed and adjustable anchorages, damping devices, anti-vandalism pipe, HDPE cable pipe, expansion sleeve, upper guide pipes and strand.
For Suggested Erection Sequence, see Sheet Nos. BR179 thru BR183.
For Stay Cable Girder Anchorage Details, see Sheet Nos. BR123 thru BR131.
For Tower Cable Anchorage Details, see Sheet Nos. BR88 thru BR93.

STAY CABLE ANCHORAGE ASSEMBLY

DATE 8/20/09
ROUTE I-70 | STATE MO/IL
DISTRICT 6 | SHEET NO. BR143
COUNTY ST. LOUIS CITY - MO ST. CLAIR - IL
JOB NO. J6I0984
CONTRACT ID. 091208-601
PROJECT NO. I-70-9 (20)
BRIDGE NO. A6500

DESCRIPTION | DATE

MISSOURI HIGHWAYS AND TRANSPORTATION COMMISSION
105 WEST CAPITOL
JEFFERSON CITY, MO 65102
1-888-ASK-MODOT (1-888-275-6636)

HNTB
715 KIRK DRIVE
KANSAS CITY, MO 64105-1310
TELEPHONE (816) 472-1201
CERTIFICATE OF AUTHORITY NO: 001270

FINAL PLANS

REV.

Detailed JUL 2009
Checked JUL 2009

Note: This drawing is not to scale. Follow dimensions.

T:\de-proj\St_Louis_City\Construction\J6I0984\Asbuilts\Bridge\B_A6500_143-205_J6I0984_143.dgn

2:34:43 PM

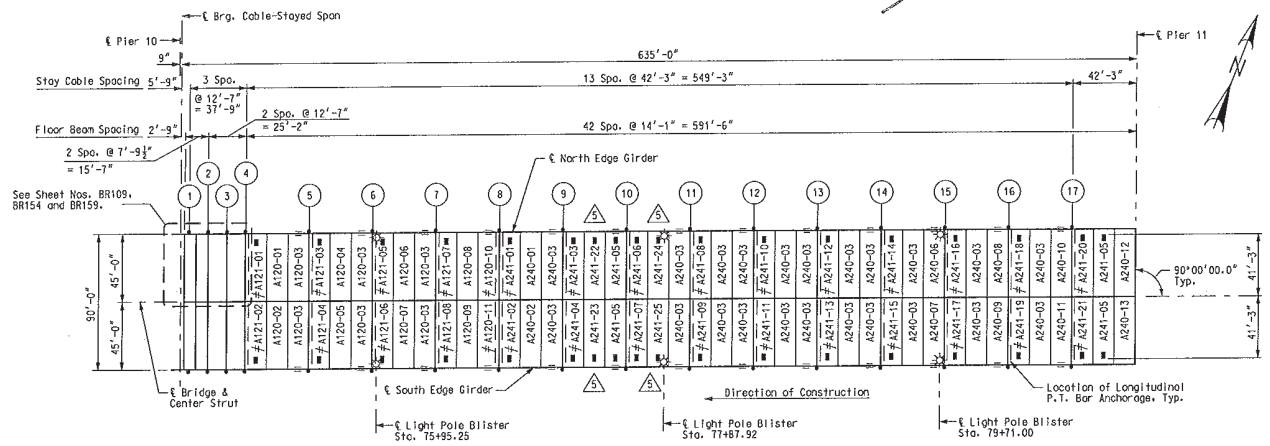

SPAN (10-11)

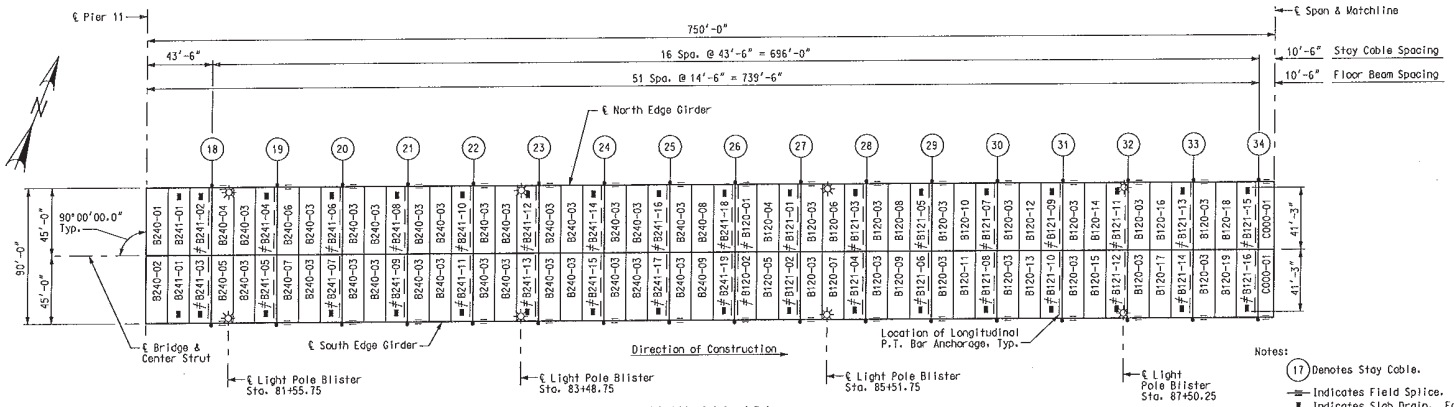

SPAN (11-12)

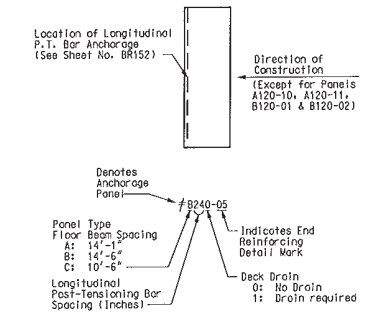

PRECAST PANEL LEGEND

Notes:

(17) Denotes Stay Cable.

—≡— Indicates Field Splice.

▮ Indicates Slab Drain. For locations and details, see Sheet Nos. BR163 & BR164.

☼ Indicates location of Light Pole Blister. For details, see Sheet No. BR168.

For Precast Slab Panel details, see Sheet Nos. BR146 thru BR150.

For Cast-in-Place Slab detail at edge of slab at Pier 11, see Sheet No. BR157.

For Cast-in-Place Slab and reinforcing at floor beams, see Sheet Nos. BR154 thru BR158.

For End Reinforcing Detail, see Sheet No. BR153.

For Post-tensioning Bar Anchorage Details, see Sheet No. BR152.

For Framing Plan, see Sheet No. BR109.

All costs associated with materials, fabrication and installation of the deck are included in the pay item "Precast Prestressed Slab Panels". This include the concrete and reinforcing steel in the precast and cast-in-place concrete and the post-tensioning system, including grouting and stressing.

PRECAST SLAB PANEL LAYOUT

DATE 5/17/10

ROUTE I-70 | STATE MO/IL

DISTRICT 6 | SHEET NO. BR144

COUNTY ST. LOUIS CITY - MO ST. CLAIR - IL

JOB NO. J6I0984

CONTRACT ID. 091208-601

PROJECT NO. I-70-9 (20)

BRIDGE NO. A6500

REV.	DATE	DESCRIPTION
A	5-17-10	Added slab drains

MISSOURI HIGHWAYS AND TRANSPORTATION COMMISSION
105 WEST CAPITOL
JEFFERSON CITY, MO 65102
1-888-ASK-MODOT (1-888-275-6636)

HNTB
715 KIRK DRIVE
KANSAS CITY, MO 64105-1310
TELEPHONE (816) 472-1201
CERTIFICATE OF AUTHORITY NO. 001270

FINAL PLANS

Detailed JUL 2009
Checked JUL 2009

Note: This drawing is not to scale. Follow dimensions.

I:\de-proj\St_Louis_City\Construction\J6I0984\Asbuilts\Bridge\B_A6500_144-205_J6I0984_144.dgn 2:35:54 PM

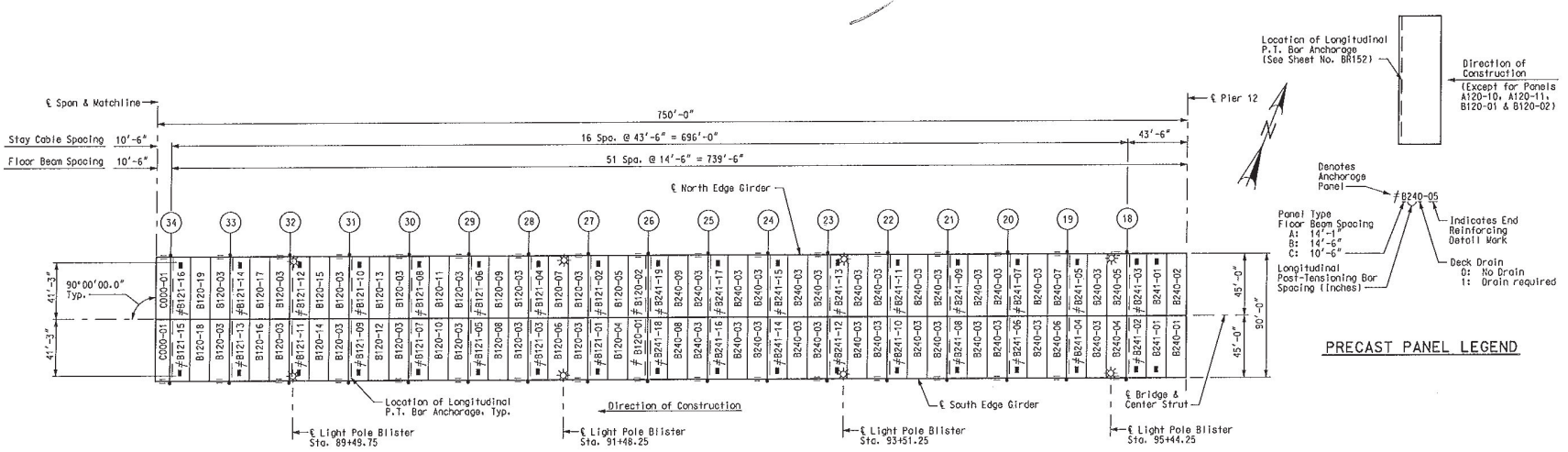

SPAN (11-12)

PRECAST PANEL LEGEND

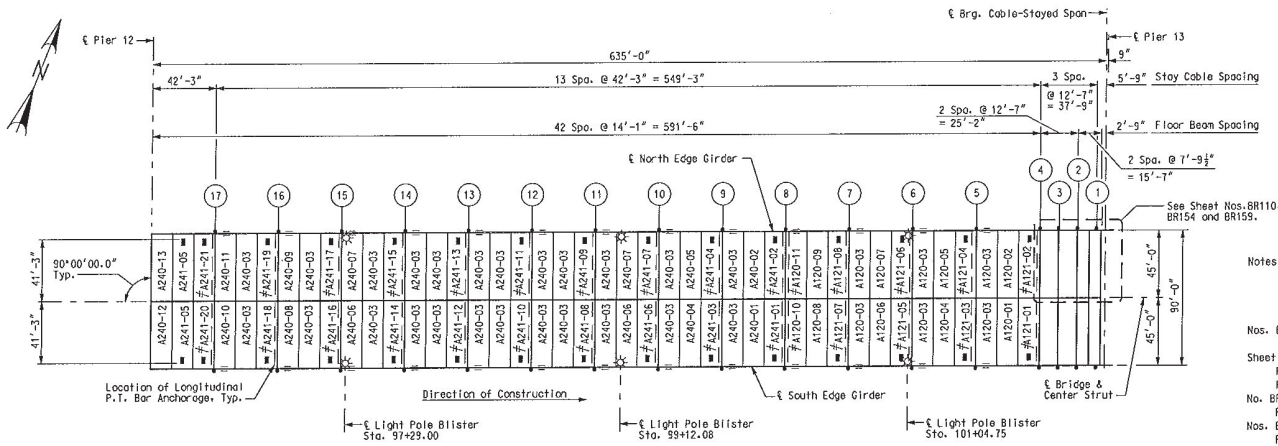

SPAN (12-13)

Notes:

(17) Denotes Stay Cable.

—▭— Indicates Field Splice.

▮ Indicates Slab Drain. For locations and details, see Sheet Nos. BR163 & BR164.

☼ Indicates location of Light Pole Blister. For details, see Sheet No. BR168.

For Precast Slab Panel details, see Sheet Nos. BR146 thru BR150.

For Cast-in-Place Slab detail at edge of slab at Pier 12, see Sheet No. BR157.

For Cast-in-Place Slab and reinforcing at floor beams, see Sheet Nos. BR154 thru BR158.

For End Reinforcing Detail, see Sheet No. BR153.

For Post-tensioning Bar Anchorage Details, see Sheet No. BR152.

For Framing Plan, see Sheet No. BR110.

All costs associated with materials, fabrication and installation of the deck are included in the pay item "Precast Prestressed Slab Panels". This includes the concrete and reinforcing steel in the precast and cost-in-place concrete and the post-tensioning system, including grouting and stressing.

PRECAST SLAB PANEL LAYOUT

DATE 8/20/09
ROUTE I-70 STATE MO/IL
DISTRICT 6 SHEET NO. BR145
COUNTY ST. LOUIS CITY - MO ST. CLAIR - IL
JOB NO. J6I0984
CONTRACT ID. 091208-601
PROJECT NO. I-70-9 (20)
BRIDGE NO. A6500

DESCRIPTION | DATE

MISSOURI HIGHWAYS AND TRANSPORTATION COMMISSION
MoDOT
105 WEST CAPITOL
JEFFERSON CITY, MO 65102
1-888-ASK-MODOT (1-888-275-6636)

HNTB
715 KIRK DRIVE
KANSAS CITY, MO 64105-1310
TELEPHONE (816) 472-1201
CERTIFICATE OF AUTHORITY NO. 001270

FINAL PLANS

REV.

Detailed JUL 2009
Checked JUL 2009

Note: This drawing is not to scale. Follow dimensions.

T:\de-proj\St_Louis_City\Construction\J6I0984\Asbuilts\Bridge\B_A6500_145-205_J6I0984_145.dgn 2:36:56 PM

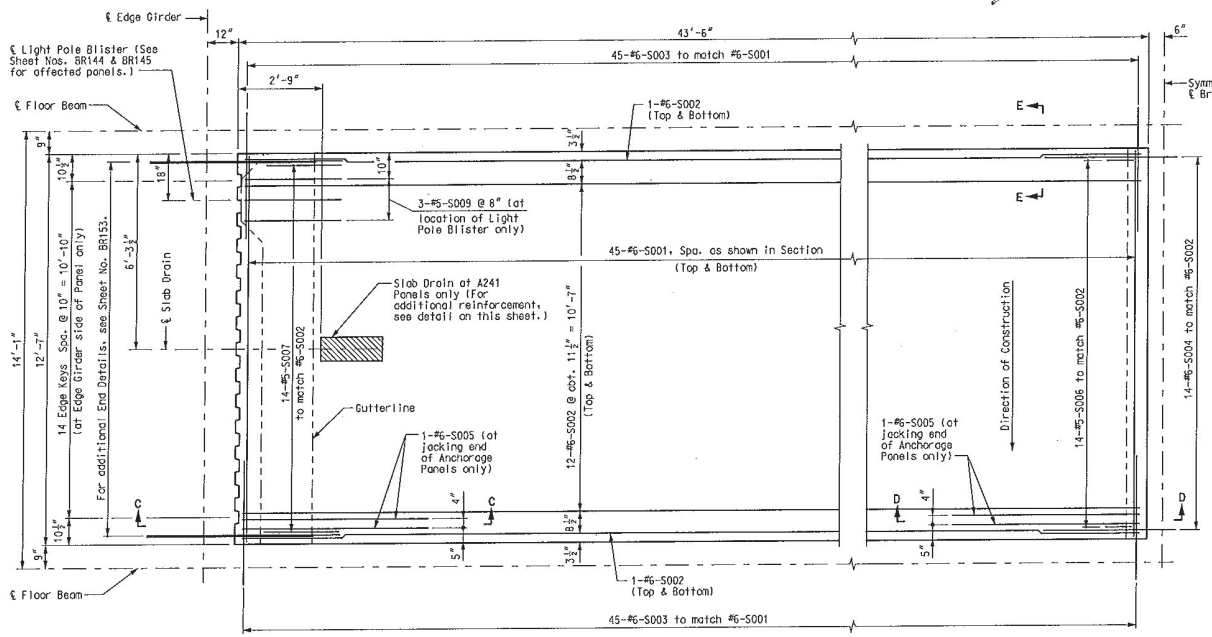

PRECAST SLAB PANEL A240 AND A241

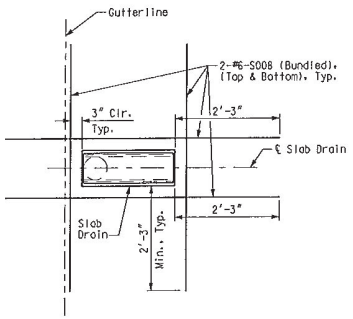

ADDITIONAL REINFORCEMENT AT SLAB DRAIN

Note:
Standard slab reinforcing steel shall be field cut, as required to clear slab drain. Repairs to epoxy coating shall be in accordance with Missouri Standard Specification No. 710.3.3.

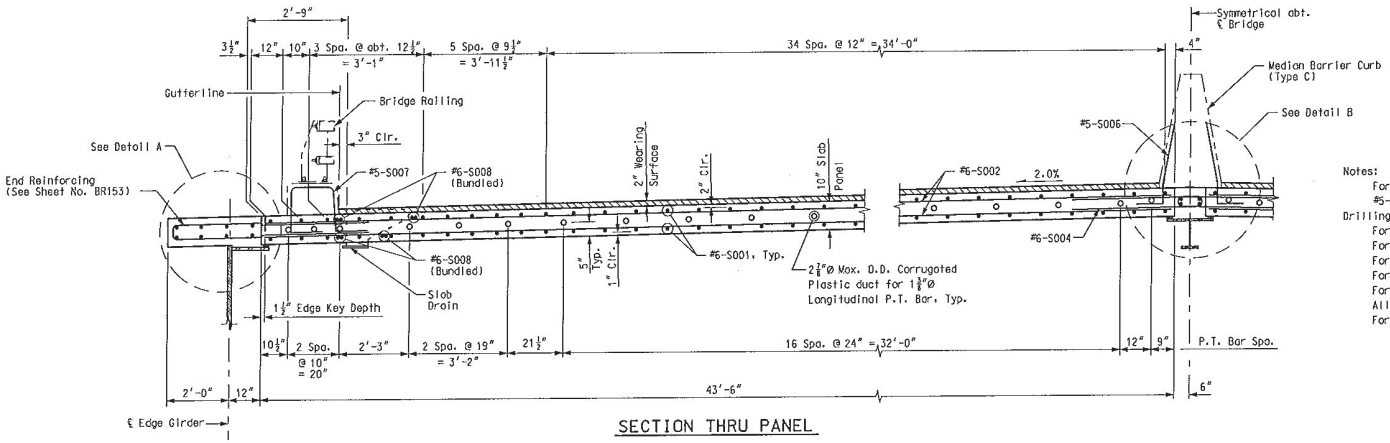

SECTION THRU PANEL

Notes:
For location of Precast Slab Panels, see Sheet Nos. BR144 & BR145.
#5-S006, #5-S007, and #5-S009 bars shall be cast into the panels. Drilling of bars into the panel will not be permitted..
For Details A, B, & Sections C-C thru E-E, see Sheet No. BR151.
For Edge Key Detail, see Sheet No. BR151.
For Bridge Railing Details, see Sheet Nos. BR167 thru BR169.
For Median Barrier Curb (Type C) Details, see Sheet No. BR170.
For Slab Drain Details, see Sheet Nos. BR163 thru BR166.
All reinforcing steel shall be epoxy coated.
For P.T. Bar Anchorage Details, see Sheet No. BR152.

PRECAST SLAB PANEL DETAILS

DATE 8/20/09
ROUTE I-70 | STATE MO/IL
DISTRICT 6 | SHEET NO. BR146
COUNTY ST. LOUIS CITY - MO, ST. CLAIR - IL
JOB NO. J6I0984
CONTRACT ID. 091208-601
PROJECT NO. I-70-9 (20)
BRIDGE NO. A6500

DESCRIPTION | DATE

MISSOURI HIGHWAYS AND TRANSPORTATION COMMISSION
105 WEST CAPITOL
JEFFERSON CITY, MO 65102
1-888-ASK-MODOT (1-888-275-6636)

HNTB
715 KIRK DRIVE
KANSAS CITY, MO 64105-1310
TELEPHONE (816) 472-1201
CERTIFICATE OF AUTHORITY NO. 001270

FINAL PLANS

REV.

Detailed JUL 2009
Checked JUL 2009

Note: This drawing is not to scale. Follow dimensions.

T:\de-proj\St_Louis_City\Construction\J6I0984\Asbuilts\Bridge\B_A6500_146-205_J6I0984_146.dgn

8:59:38 AM

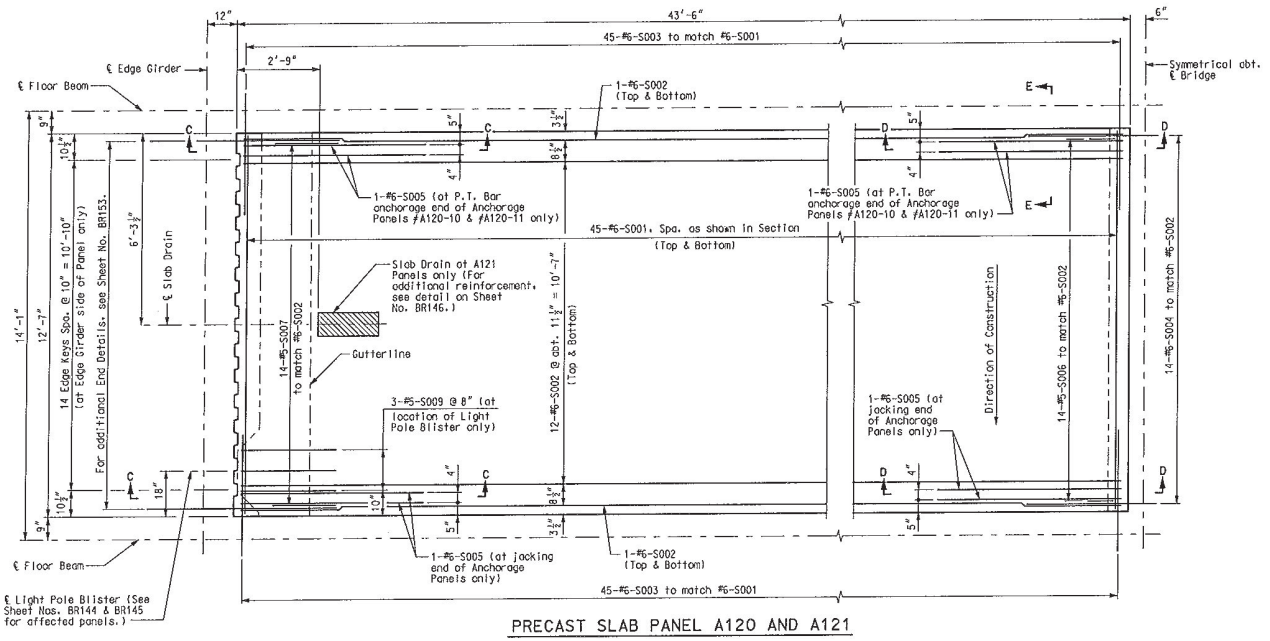

PRECAST SLAB PANEL A120 AND A121

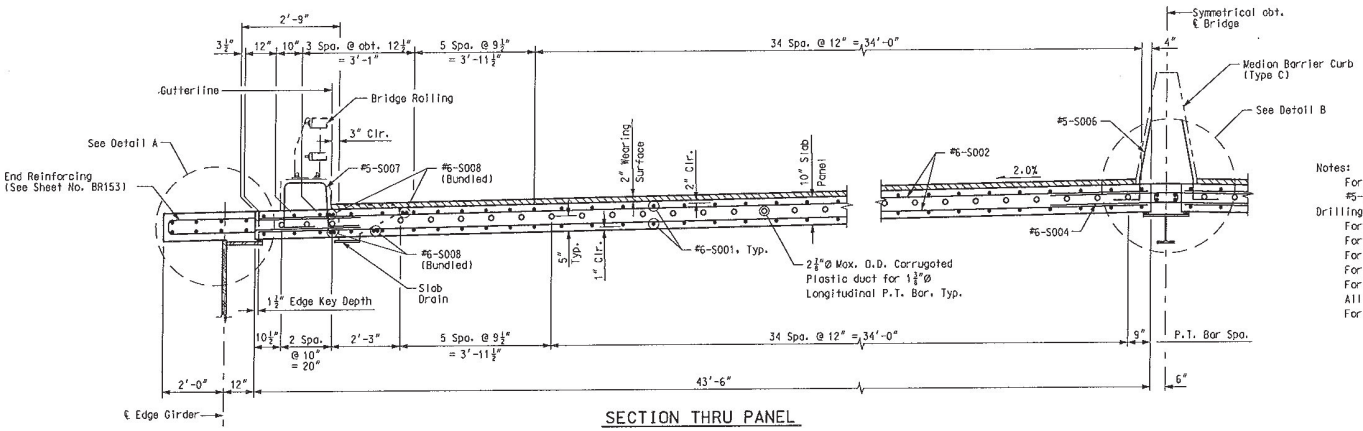

SECTION THRU PANEL

Notes:
For location of Precast Slab Panels, see Sheet Nos. BR144 & BR145.
#5-S006, #5-S007, and #5-S009 bars are cast into the panels.
Drilling of bars into the panel will not be permitted.
For Details A, B, & Sections C-C thru E-E, see Sheet No. BR151.
For Edge Key Detail, see Sheet No. BR151.
For Bridge Rolling Details, see Sheet Nos. BR167 thru BR169.
For Median Barrier Curb (Type C) Details, see Sheet No. BR170.
For Slab Drain Details, see Sheet Nos. BR163 thru BR166.
All reinforcing steel is epoxy coated.
For P.T. Bar Anchorage Details, see Sheet No. BR152.

PRECAST SLAB PANEL DETAILS

DATE 8/20/09
ROUTE I-70 | STATE MO/IL
DISTRICT 6 | SHEET NO. BR147
COUNTY ST. LOUIS CITY - MO, ST. CLAIR - IL
JOB NO. J6I0984
CONTRACT ID. 091208-601
PROJECT NO. I-70-9 (20)
BRIDGE NO. A6500

DESCRIPTION | DATE

MISSOURI HIGHWAYS AND TRANSPORTATION COMMISSION
105 WEST CAPITOL
JEFFERSON CITY, MO 65102
1-888-ASK-MODOT (1-888-275-6636)

HNTB
715 KIRK DRIVE
KANSAS CITY, MO 64105-1310
TELEPHONE (816) 472-1201
CERTIFICATE OF AUTHORITY NO. 001270

FINAL PLANS

REV.

Detailed JUL 2009
Checked JUL 2009

Note: This drawing is not to scale. Follow dimensions.

I:\de-proj\St_Louis_City\Construction\J6I0984\Asbuilts\Bridge\B_A6500_147-205_J6I0984_147.dgn 2:37:54 PM

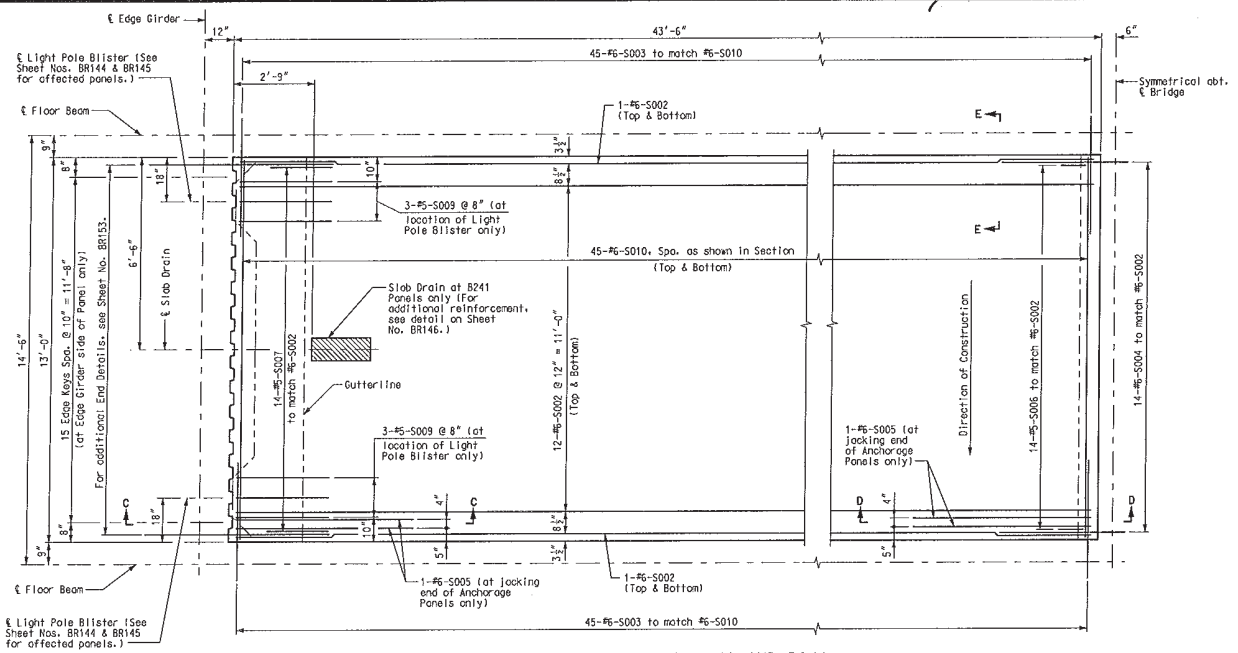

PRECAST SLAB PANEL B240 AND B241

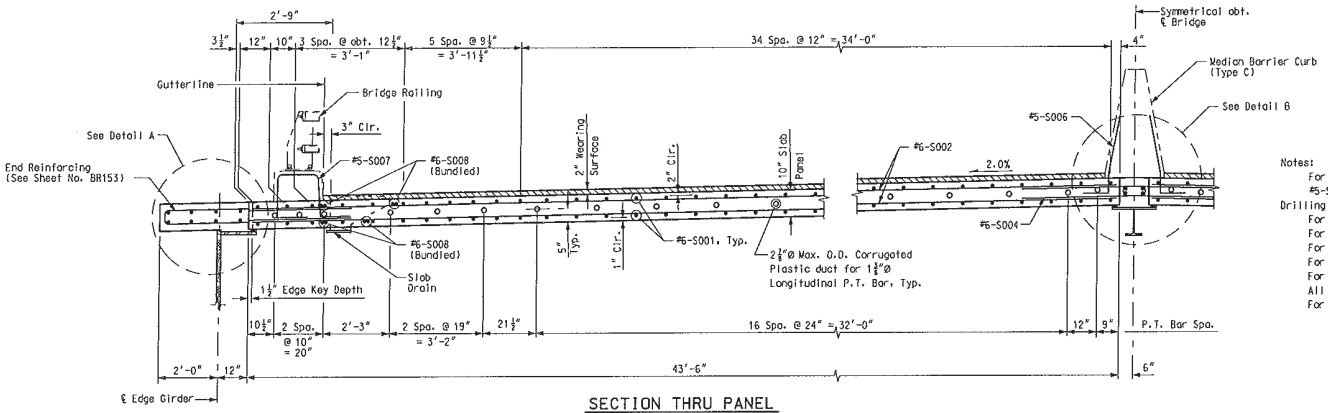

SECTION THRU PANEL

Notes:
For location of Precast Slab Panels, see Sheet Nos. BR144 & BR145.
#5-S006, #5-S007, and #5-S009 bars are cast into the panels.
Drilling of bars into the panel will not be permitted.
For Details A, B, & Sections C-C thru E-E, see Sheet No. BR151.
For Edge Key Detail, see Sheet No. BR151.
For Bridge Railing Details, see Sheet Nos. BR167 thru BR169.
For Median Barrier Curb (Type C) Details, see Sheet No. BR170.
For Slab Drain Details, see Sheet Nos. BR163 thru BR166.
All reinforcing steel are epoxy coated.
For P.T. Bar Anchorage Details, see Sheet No. BR152.

PRECAST SLAB PANEL DETAILS

DATE 8/20/09
ROUTE I-70 STATE MO/IL
DISTRICT 6 SHEET NO. BR148
COUNTY ST. LOUIS CITY - MO ST. CLAIR - IL
JOB NO. J6I0984
CONTRACT ID. 091208-601
PROJECT NO. I-70-9 (20)
BRIDGE NO. A6500

DESCRIPTION | DATE

MISSOURI HIGHWAYS AND TRANSPORTATION COMMISSION
105 WEST CAPITOL
JEFFERSON CITY, MO 65102
1-888-ASK-MODOT (1-888-275-6636)

HNTB
715 KIRK DRIVE
KANSAS CITY, MO 64105-1310
TELEPHONE (816) 472-1201
CERTIFICATE OF AUTHORITY NO. 001270

FINAL PLANS

REV.

Detailed JUL 2009
Checked JUL 2009

Note: This drawing is not to scale. Follow dimensions.

Sheet No. 148 of 205

T:\de-proj\St_Louis_City\Construction\J6I0984\Asbuilts\Bridge\B_A6500_148-205_J6I0984_148.dgn 2:38:41 PM

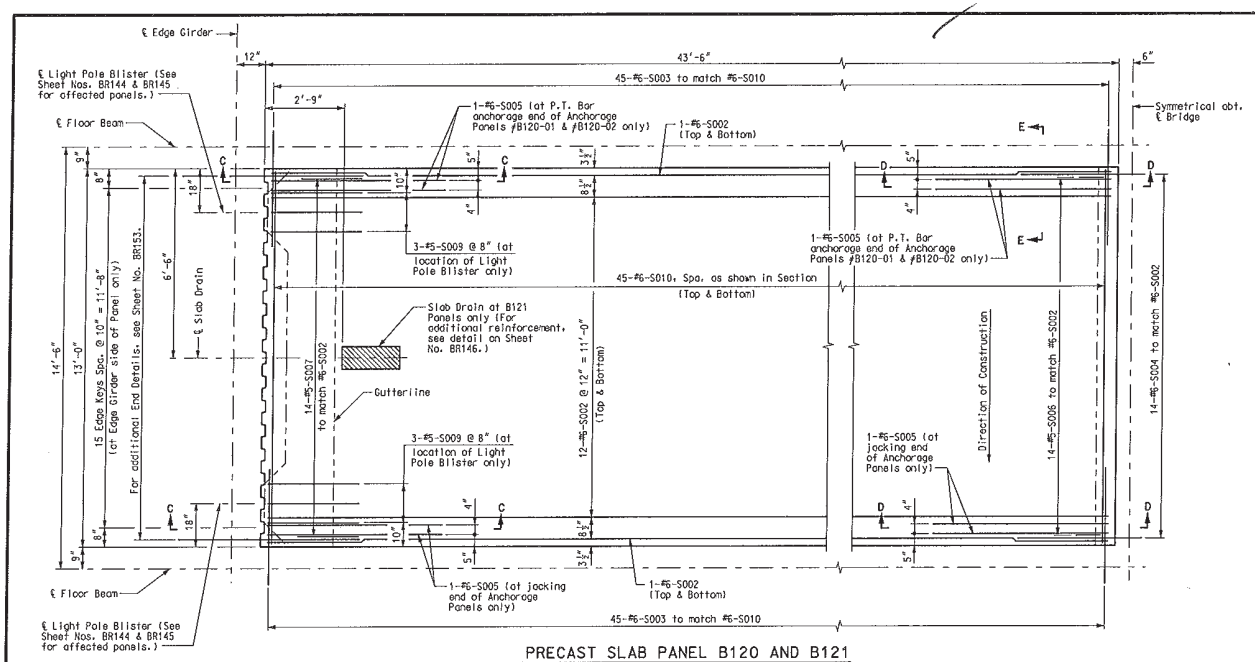

PRECAST SLAB PANEL B120 AND B121

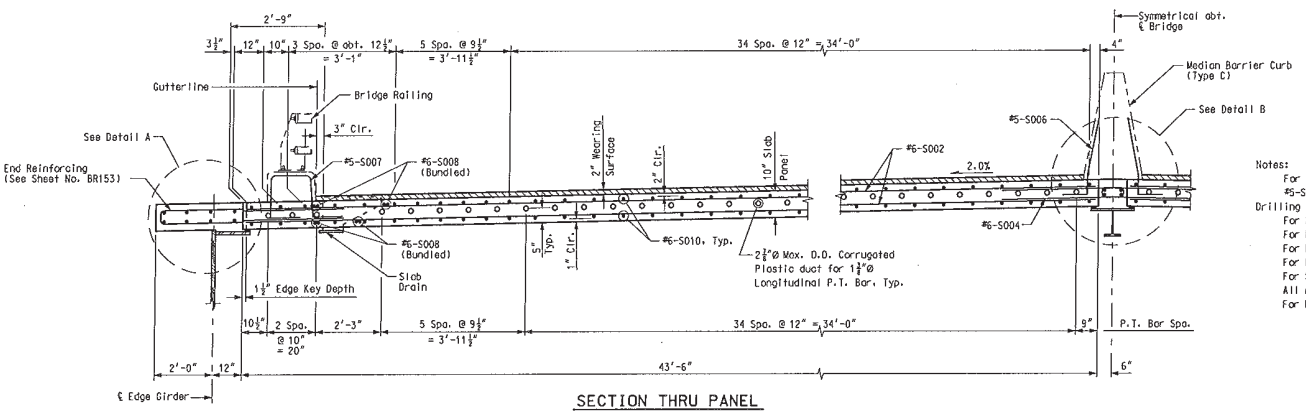

SECTION THRU PANEL

Notes:

For location of Precast Slab Panels, see Sheet Nos. BR144 & BR145.
#5-S006, #5-S007, and #5-S009 bars are cast into the panels.
Drilling of bars into the panel will not be permitted.
For Details A, B, & Sections C-C thru E-E, see Sheet No. BR151.
For Edge Key Detail, see Sheet No. BR151.
For Bridge Railing Details, see Sheet Nos. BR167 thru BR169.
For Median Barrier Curb (Type C) Details, see Sheet No. BR170.
For Slab Drain Details, see Sheet Nos. BR163 thru BR166.
All reinforcing steel are epoxy coated.
For P.T. Bar Anchorage Details, see Sheet No. BR152.

PRECAST SLAB PANEL DETAILS

DATE 8/20/09
ROUTE I-70 | STATE MO/IL
DISTRICT 6 | SHEET NO. BR149
COUNTY ST. LOUIS CITY - MO ST. CLAIR - IL
JOB NO. J6I0984
CONTRACT ID. 091208-601
PROJECT NO. I-70-9 (20)
BRIDGE NO. A6500

DESCRIPTION | DATE | REV.

MISSOURI HIGHWAYS AND TRANSPORTATION COMMISSION
105 WEST CAPITOL
JEFFERSON CITY, MO 65102
1-888-ASK-MODOT (1-888-275-6636)

HNTB
715 KIRK DRIVE
KANSAS CITY, MO 64105-1310
TELEPHONE (816) 472-1201
CERTIFICATE OF AUTHORITY NO. 001070

FINAL PLANS

Detailed JUL 2009
Checked JUL 2009

Note: This drawing is not to scale. Follow dimensions.

T:\de-proj\St_Louis_City\Construction\J6I0984\Asbuilts\Bridge\B_A6500_149-205_J6I0984_149.dgn
2:40:04 PM

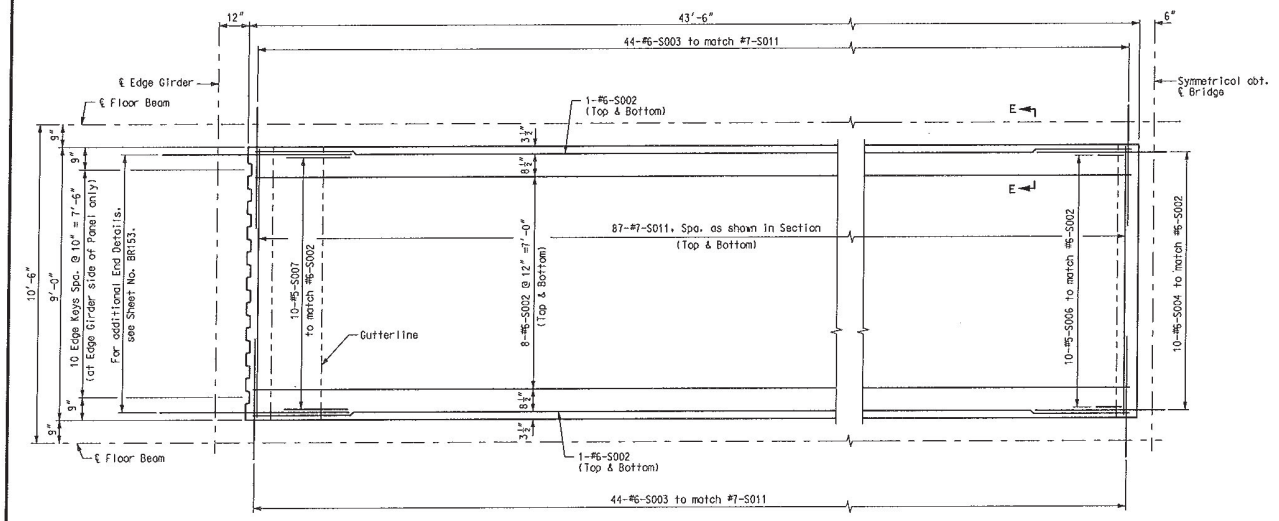

PRECAST SLAB PANEL C000

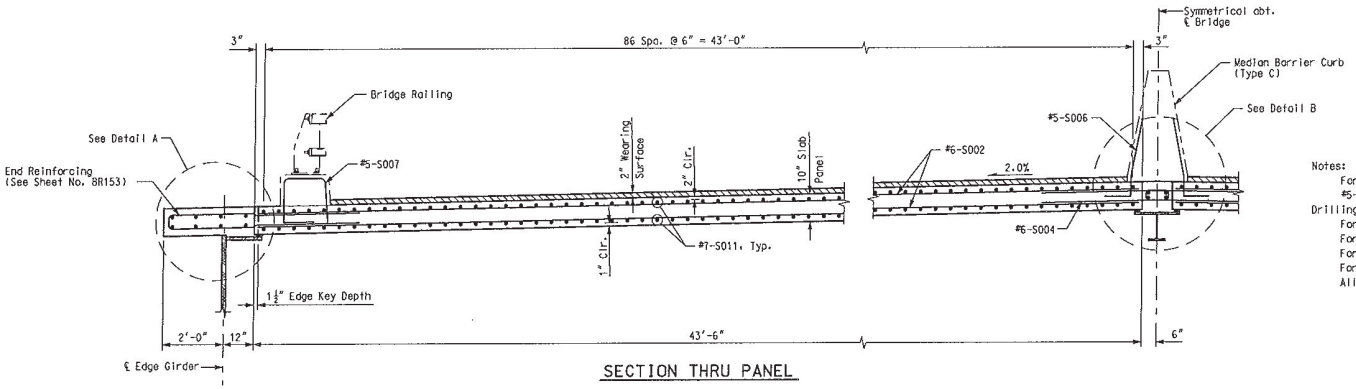

SECTION THRU PANEL

Notes:

For location of Precast Slab Panels, see Sheet Nos. BR144 & BR145.
#5-S006 and #5-S007 bars cast into the panels.
Drilling of bars into the panel was not be permitted.
For Details A, B, & Section E-E, see Sheet No. BR151.
For Edge Key Detail, see Sheet No. BR151.
For Bridge Railing Details, see Sheet Nos. BR167 thru BR169.
For Median Barrier Curb (Type C) Details, see Sheet No. BR170.
All reinforcing steel is epoxy coated.

PRECAST SLAB PANEL DETAILS

DATE 8/20/09
ROUTE I-70 | STATE MO/IL
DISTRICT 6 | SHEET NO. BR150
COUNTY ST. LOUIS CITY - MO, ST. CLAIR - IL
JOB NO. J6I0984
CONTRACT ID. 091208-601
PROJECT NO. I-70-9 (20)
BRIDGE NO. A6500

DATE | DESCRIPTION

MISSOURI HIGHWAYS AND TRANSPORTATION COMMISSION
105 WEST CAPITOL
JEFFERSON CITY, MO 65102
1-888-ASK-MODOT (1-888-275-6636)

HNTB
715 KIRK DRIVE
KANSAS CITY, MO 64105-1310
TELEPHONE (816) 472-1201
CERTIFICATE OF AUTHORITY NO. 001270

FINAL PLANS

REV.

Detailed JUL 2009
Checked JUL 2009

Note: This drawing is not to scale. Follow dimensions.

T:\de-proj\St_Louis_City\Construction\J6I0984\Asbuilts\Bridge\B_A6500_150-205_J6I0984_150.dgn 2:46:39 PM

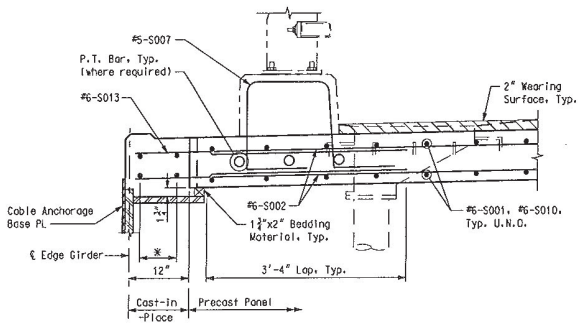

AT CABLE ANCHORAGE

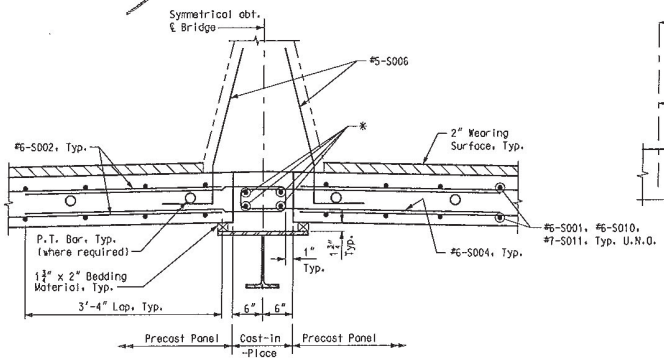

DETAIL B

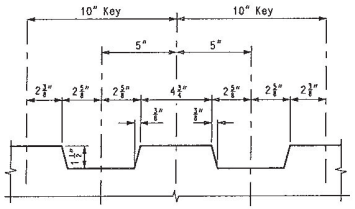

EDGE KEY DETAIL

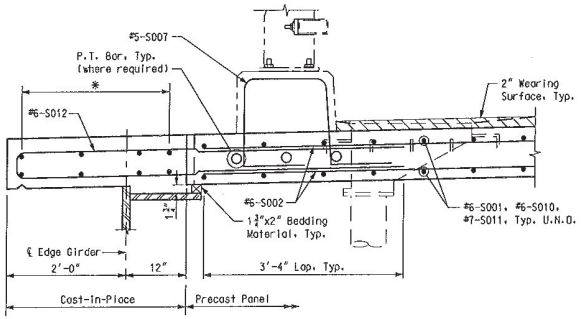

BETWEEN CABLES

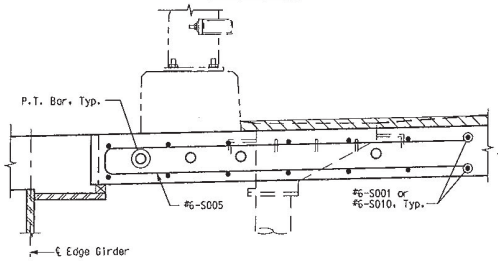

SECTION C-C

(For additional information, see Detail A on this sheet.)

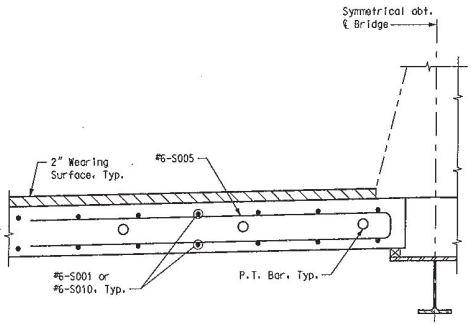

SECTION D-D

(For additional information, see Detail B on this sheet.)

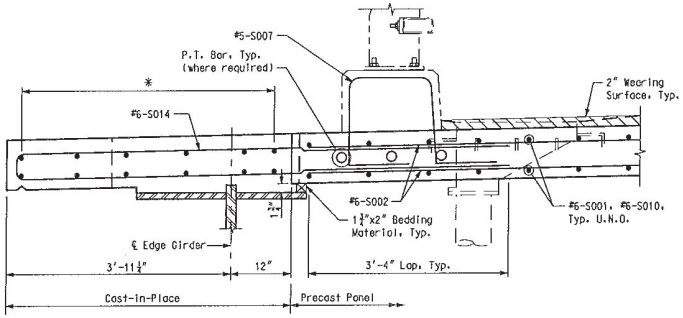

AT PIER TABLE

DETAIL A

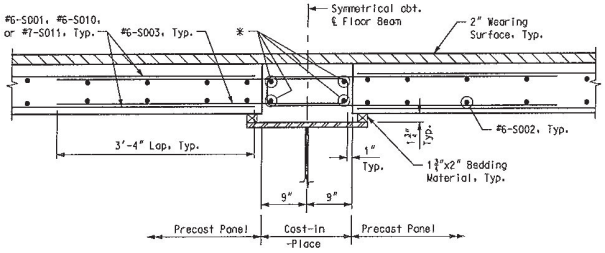

SECTION E-E

Notes:

* For reinforcing in cost-in-place portions of slab, see Sheet Nos. BR154 thru BR158.

For location of Details A, B, & Sections C-C thru E-E, see Sheet Nos. BR146 thru BR150.

For Drainage Details, see Sheet Nos. BR163 thru BR166.

For P.T. Bar Anchorage Details, see Sheet No. BR152.

Continuous bedding material satisfied the requirements of ASTM D 1751 with the following additional requirement: A 1½" thick test specimen was not compress more than ⅜" when subjected to a uniform compressive stress equal to 350 psi. Sampling and testing methods conform to ASTM D 1751.

Bedding materials positively bonded to the top of the structural steel flanges with a non-corrosive bonding agent approved by the bedding material manufacturer prior to the placement of the panels. The cost was included in the pay item, "Precast Prestressed Slab Panels".

All galvanized embeds is galvanized in accordance with ASTM A123 after fabrication.

Contractor submitted shop drawings of the precast panel to the Engineer for approval.

The Contractor devised a scheme for lifting the precast panels and were submitted the scheme to the Engineer for review. For concrete that has attained a minimum compressive strength of 4000 psi: Allowable Tension = 190 psi; Allowable Compression = 2400 psi.

Insert for the lifting devices was provided by the Contractor and approved by the Engineer. Insert shall provide an approximate factor of safety of 3. All inserts are galvanized. The cost was included in the pay item "Precast Prestressed Slab Panels".

MISC. PRECAST SLAB PANEL DETAILS

DATE 8/20/09
ROUTE I-70 | STATE MO/IL
DISTRICT 6 | SHEET NO. BR151
COUNTY ST. LOUIS CITY + MO ST. CLAIR - IL
JOB NO. J6I0984
CONTRACT ID. 091208-601
PROJECT NO. I-70-9 (20)
BRIDGE NO. A6500

DESCRIPTION | DATE

MISSOURI HIGHWAYS AND TRANSPORTATION COMMISSION
105 WEST CAPITOL
JEFFERSON CITY, MO 65102
1-888-ASK-MODOT (1-888-275-6636)

HNTB
715 KIRK DRIVE
KANSAS CITY, MO 64105-1310
TELEPHONE (816) 472-1201
CERTIFICATE OF AUTHORITY NO. 001270

FINAL PLANS

REV.

Detailed JUL 2009
Checked JUL 2009

Note: This drawing is not to scale. Follow dimensions.

T:\de-proj\St_Louis_City\Construction\J6I0984\Asbuilts\Bridge\B_A6500_151-205_J6I0984_151.dgn

2:50:28 PM

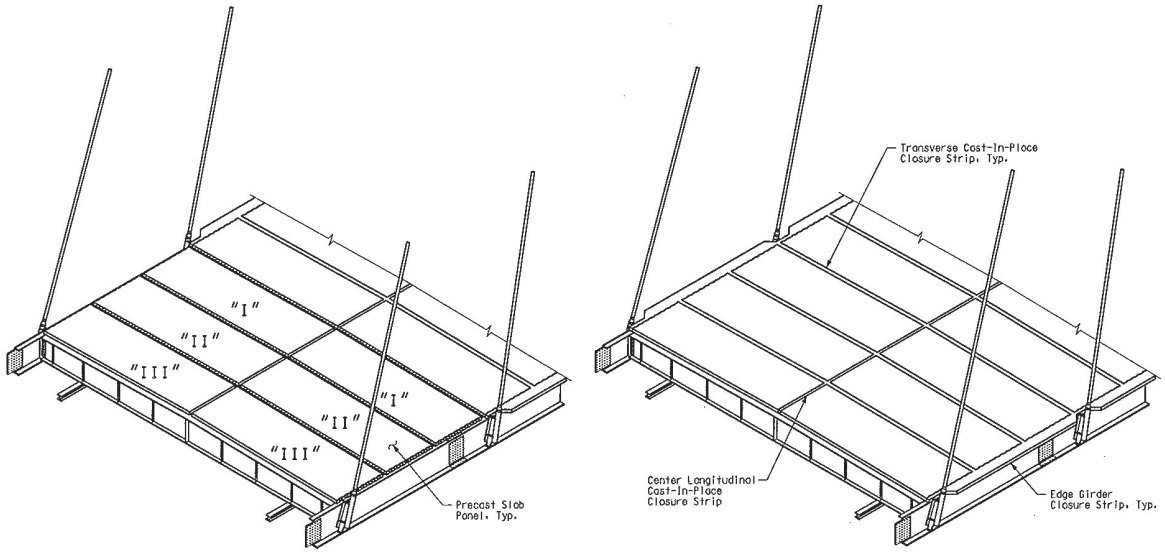

PRECAST PANEL ERECTION SEQUENCE

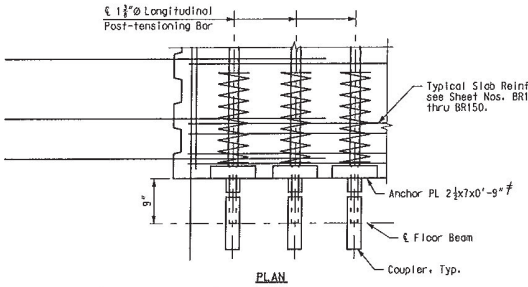

PLAN

#Anchor plate dimensions shown are minimum for anchorage devices that are not tested. Alternative anchor plates may be used provided they pass the Special Anchorage Device Acceptance Test, detailed in Article 10.3.2.3 of "AASHTO LRFD Bridge Construction Specifications".

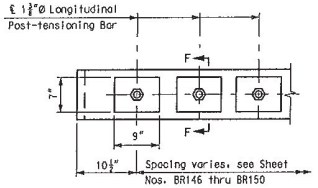

ELEVATION

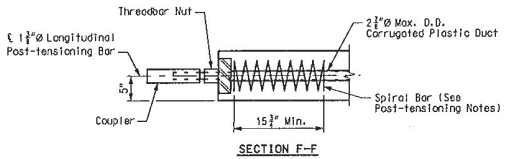

SECTION F-F

LONGITUDINAL P.T. BAR ANCHORAGE DETAILS

(Grout tube is not shown for clarity)

Post-tensioning Notes:

Spiral tie at each post-tensioned bar are conform to AASHTO M32 and are 6"Ø spirals of W5.5 smooth wire with a minimum of 9 turns and a pitch equal to 1¾". Cost for the spiral bars are included in the price-bid for "Precast Prestressed Slab Panels".

Threaded post-tensioning bars are conform to the requirements of AASHTO M275, Grade 150, Type II.

Post-tensioning bar, spiral tie, anchor plate, threadbar nut and coupler are epoxy coated.

Jacking stress for longitudinal post-tensioning bars are be 105 ksi.

Post-tensioning bar for the effective prestress at the beginning of service (creep and shrinkage of the concrete and relaxation of steel not included) is 100.7 ksi.

Assumed friction loss coefficient is:

k=0.0002/ft.

Assumed anchor set is ⅛".

Fabrication lengths for post-tensioning bars rea consider effects of elastic elongation during stressing.

Adequate embedment of P.T. bars into coupler is provided to adequately develop the strength of the bar.

Ducts for post-tensioning bars are grouted following jacking of all bars within a set of precast slab panels (Panels "I", "II", & "III" at each side of ℄ Bridge). Vent and grout tubes shall be provided as required to achieve adequate grout distributon throughout the length of each duct.

Notes:

For Precast Slab Panel Suggested Erection Sequence, see Sheet No. BR180.

Costs associated with the materials, fabrication and installation of the precast panels shall be included in the pay item, "Precast Prestressed Slab Panels". Include the post-tensioning bar, anchor plate, threadbar nut, coupler and duct.

MISC. PRECAST SLAB PANEL DETAILS

DATE 8/20/09
ROUTE I-70 STATE MO/IL
DISTRICT 6 SHEET NO. BR152
COUNTY ST. LOUIS CITY - MO ST. CLAIR - IL
JOB NO. J6I0984
CONTRACT ID. 091208-601
PROJECT NO. I-70-9 (20)
BRIDGE NO. A6500

DESCRIPTION | DATE

MISSOURI HIGHWAYS AND TRANSPORTATION COMMISSION
105 WEST CAPITOL JEFFERSON CITY, MO 65102
1-888-ASK-MODOT (1-888-275-6636)

HNTB
715 KIRK DRIVE
KANSAS CITY, MO 64105-1310
TELEPHONE (816) 472-1201
CERTIFICATE OF AUTHORITY NO. 001270

FINAL PLANS

REV.

Detailed JUL 2009
Checked JUL 2009

Note: This drawing is not to scale. Follow dimensions.

T:\de-proj\St_Louis_City\Construction\J6I0984\Asbuilts\Bridge\B_A6500_152-205_J6I0984_152.dgn

7-31-26 AM

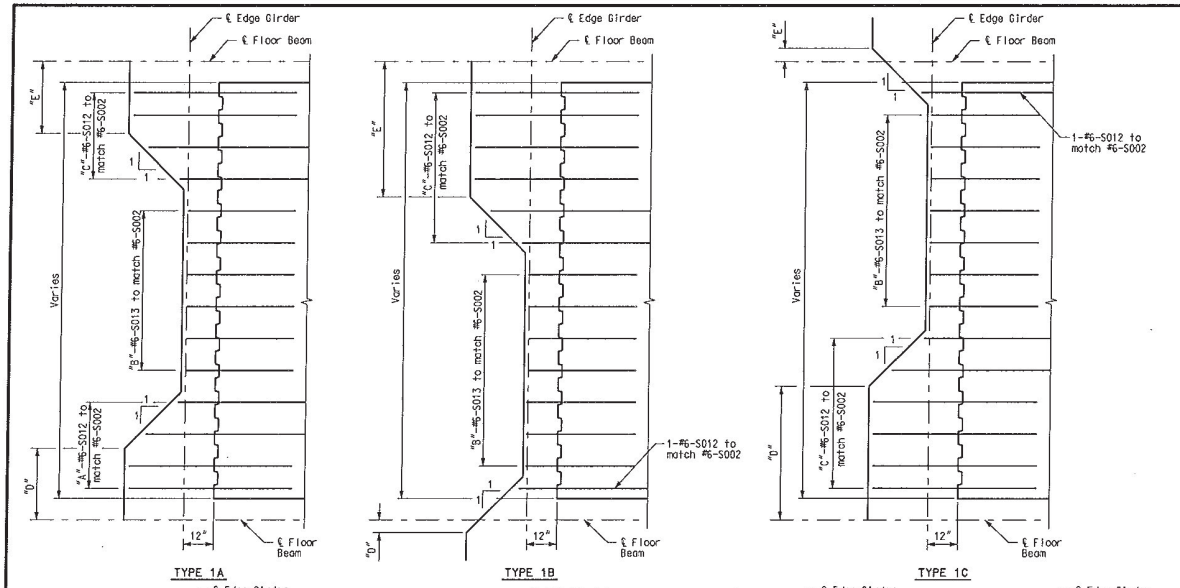

TYPE 1A TYPE 1B TYPE 1C

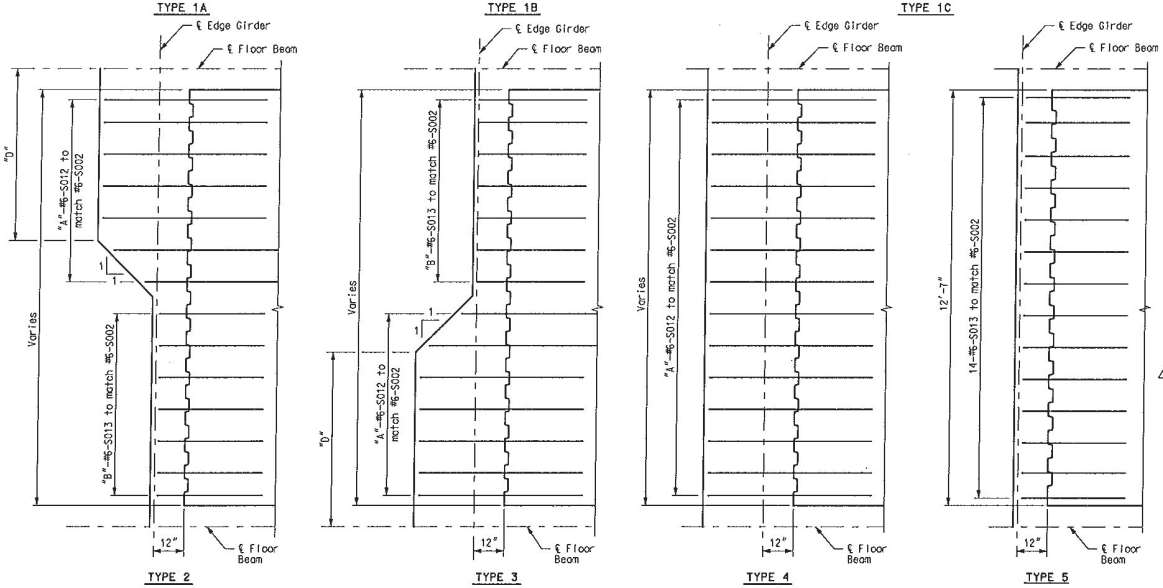

TYPE 2 TYPE 3 TYPE 4 TYPE 5

END REINFORCING DETAIL

PRECAST PANEL DATA						
PANEL	TYPE	"A"	"B"	"C"	"D"	"E"
A120-01	2	12	2	--	9'-7"	--
A120-02	3	12	2	--	9'-7"	--
A120-03	4	14	--	--	--	--
A120-04	2	12	2	--	9'-8"	--
A120-05	3	12	2	--	9'-8"	--
A120-06	2	13	1	--	10'-7"	--
A120-07	3	13	1	--	10'-7"	--
A120-08	2	14	0	--	11'-7"	--
A120-09	3	14	0	--	11'-7"	--
≠A120-10	4	14	--	--	--	--
≠A120-11	4	14	--	--	--	--
≠A121-01	5	--	--	--	--	--
≠A121-02	5	--	--	--	--	--
≠A121-03	3	10	4	--	7'-7"	--
≠A121-04	2	10	4	--	7'-7"	--
≠A121-05	3	9	5	--	7'-0"	--
≠A121-06	2	9	5	--	7'-0"	--
≠A121-07	3	8	6	--	6'-4"	--
≠A121-08	2	8	6	--	6'-4"	--
A240-01	2	14	0	--	12'-7"	--
A240-02	3	14	0	--	12'-7"	--
A240-03	4	14	--	--	--	--
A240-04	2	14	0	--	13'-10"	--
A240-05	3	14	0	--	13'-10"	--
A240-06	4	14	--	--	--	--
A240-07	4	14	--	--	--	--
A240-08	3	14	0	--	13'-0"	--
A240-09	2	14	0	--	13'-0"	--
A240-10	3	14	0	--	11'-10"	--
A240-11	2	14	0	--	11'-10"	--
A240-12	*	--	--	--	--	--
A240-13	*	--	--	--	--	--
≠A241-01	1C	--	5	8	5'-9"	18"
≠A241-02	1B	--	5	8	18"	5'-9"
≠A241-03	1C	--	6	7	5'-0"	3"
≠A241-04	1B	--	6	7	3"	5'-0"
A241-05	4	14	--	--	--	--
≠A241-06	1A	6	6	2	4'-3"	8"
≠A241-07	1A	2	6	6	8"	4'-3"
≠A241-08	1A	5	6	3	3'-7"	21"
≠A241-09	1A	3	6	5	21"	3'-7"
≠A241-10	1A	5	4	5	2'-9"	2'-11"
≠A241-11	1A	5	4	5	2'-11"	2'-9"
≠A241-12	1A	4	4	6	22"	4'-2"
≠A241-13	1A	6	4	4	4'-2"	22"
≠A241-14	1A	2	5	7	11"	5'-5"
≠A241-15	1A	7	5	2	5'-5"	11"
≠A241-16	1A	2	4	8	0"	6'-7"
≠A241-17	1A	8	4	2	6'-7"	0"
≠A241-18	1B	--	3	10	13"	7'-11"
≠A241-19	1C	--	3	10	7'-11"	13"
≠A241-20	2	11	3	--	9'-4"	--
≠A241-21	3	11	3	--	9'-4"	--
A241-22	2	14	0	--	13'-10"	--
A241-23	3	14	0	--	13'-10"	--
A241-24	4	14	--	--	--	--
A241-25	4	14	--	--	--	--

5 * For End Reinforcing Detail at Pier Table, see Sheet No. BR157.

Notes:
Contractor has coordinate the placement of all reinforcing bars in the precast slab panels with the placement of all shear connectors shown on Sheet Nos. BR111 thru BR121 and BR133.
For additional shear connector placement information, see Sheet No. BR135.
Exposed cut ends and areas of damaged epoxy coating was repaired before visible oxidation of the surface occurs. Patching material, compatible with the coating and inert in concrete, was applied as recommended by the manufacturer. The material is epoxy and must be suitable for application in the field.

PRECAST PANEL DATA						
PANEL	TYPE	"A"	"B"	"C"	"D"	"E"
≠B120-01	4	14	--	--	--	--
≠B120-02	4	14	--	--	--	--
B120-03	4	14	--	--	--	--
B120-04	3	14	0	--	13'-1"	--
B120-05	2	14	0	--	13'-1"	--
B120-06	3	14	0	--	12'-0"	--
B120-07	2	14	0	--	12'-0"	--
B120-08	3	13	1	--	11'-0"	--
B120-09	2	13	1	--	11'-0"	--
B120-10	3	12	2	--	10'-0"	--
B120-11	2	12	2	--	10'-0"	--
B120-12	3	11	3	--	9'-0"	--
B120-13	2	11	3	--	9'-0"	--
B120-14	3	10	4	--	8'-1"	--
B120-15	2	10	4	--	8'-1"	--
B120-16	3	9	5	--	7'-1"	--
B120-17	2	9	5	--	7'-1"	--
B120-18	3	8	6	--	6'-1"	--
B120-19	2	8	6	--	6'-1"	--
≠B121-01	1B	--	5	8	17"	6'-2"
≠B121-02	1C	--	5	8	6'-2"	17"
≠B121-03	2	9	5	--	6'-11"	--
≠B121-04	3	9	5	--	6'-11"	--
≠B121-05	2	10	4	--	7'-7"	--
≠B121-06	3	10	4	--	7'-7"	--
≠B121-07	2	10	4	--	8'-4"	--
≠B121-08	3	10	4	--	8'-4"	--
≠B121-09	2	11	3	--	9'-0"	--
≠B121-10	3	11	3	--	9'-0"	--
≠B121-11	2	11	3	--	9'-8"	--
≠B121-12	3	11	3	--	9'-8"	--
≠B121-13	2	12	2	--	10'-4"	--
≠B121-14	3	12	2	--	10'-4"	--
≠B121-15	2	13	1	--	11'-0"	--
≠B121-16	3	13	1	--	11'-0"	--
B240-01	*	--	--	--	--	--
B240-02	*	--	--	--	--	--
B240-03	4	14	--	--	--	--
B240-04	2	14	0	--	12'-3"	--
B240-05	3	14	0	--	12'-3"	--
B240-06	2	14	0	--	13'-5"	--
B240-07	3	14	0	--	13'-5"	--
B240-08	3	14	0	--	14'-2"	--
B240-09	2	14	0	--	14'-2"	--
B241-01	4	14	--	--	--	--
≠B241-02	3	12	2	--	9'-9"	--
≠B241-03	2	12	2	--	9'-9"	--
≠B241-04	1C	--	3	10	8'-4"	13"
≠B241-05	1B	--	3	10	13"	8'-4"
≠B241-06	1A	9	3	2	7'-0"	0"
≠B241-07	1A	2	3	9	0"	7'-0"
≠B241-08	1A	7	5	2	5'-8"	11"
≠B241-09	1A	2	5	7	11"	5'-8"
≠B241-10	1A	6	4	4	4'-4"	23"
≠B241-11	1A	4	4	6	23"	4'-4"
≠B241-12	1A	5	5	4	3'-2"	2'-9"
≠B241-13	1A	4	5	5	2'-9"	3'-2"
≠B241-14	1A	4	5	5	2'-0"	3'-8"
≠B241-15	1A	5	5	4	3'-8"	2'-0"
≠B241-16	1A	2	6	6	10"	4'-6"
≠B241-17	1A	6	6	2	4'-6"	10"
≠B241-18	1B	--	6	7	4"	5'-4"
≠B241-19	1C	--	6	7	5'-4"	4"
C000-01	4	10	--	--	--	--

MISC. PRECAST SLAB PANEL DETAILS

DATE 5/17/10
ROUTE I-70 | STATE MO/IL
DISTRICT 6 | SHEET NO. BR153
COUNTY ST. LOUIS CITY - MO, ST. CLAIR - IL
JOB NO. J6I0984
CONTRACT ID. 091208-601
PROJECT NO. I-70-9 (20)
BRIDGE NO. A6500

DATE	DESCRIPTION
5-17-10	1 Added panel marks

MISSOURI HIGHWAYS AND TRANSPORTATION COMMISSION
105 WEST CAPITOL
JEFFERSON CITY, MO 65102
1-888-ASK-MODOT (1-888-275-6636)

HNTB
715 KIRK DRIVE
KANSAS CITY, MO 64105-1310
TELEPHONE (816) 472-1201
CERTIFICATE OF AUTHORITY NO. 001270

FINAL PLANS REV.

Detailed JUL 2009
Checked JUL 2009

Note: This drawing is not to scale. Follow dimensions.

I:\de-proj\St_Louis_City\Construction\J6I0984\Asbuilts\Bridge\B_A6500_153-205_J6I0984_153.dgn 7:33:04 AM

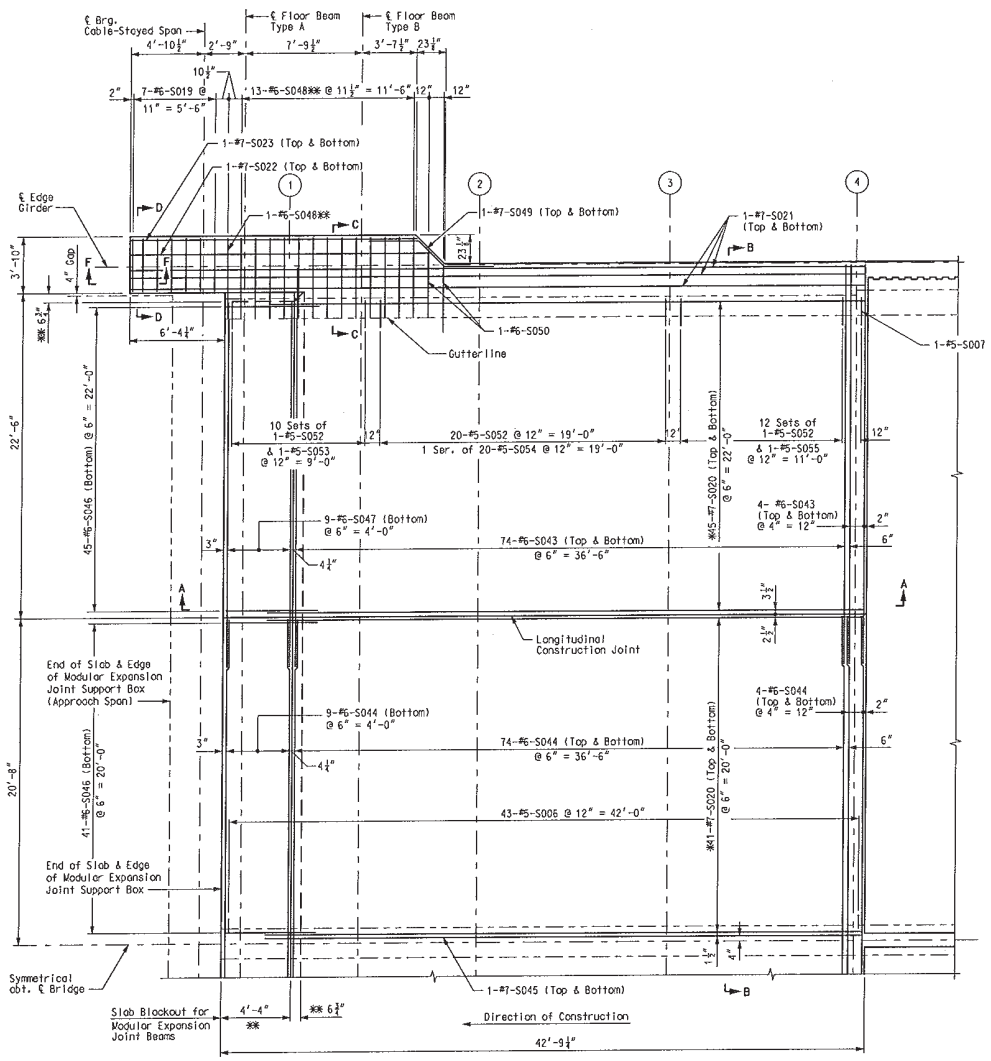

PARTIAL PLAN
(Pier 10 shown, Pier 13 similar)

Notes:

(3) Denotes Stay Cable.

For location of cable anchorage cutouts, see Sheet No. BR153.
For Sections A-A thru D-D and Section F-F, see Sheet No. BR155.

* Field cut to fit. #7-S020 bars are field cut to clear modular expansion joint hardware.

** Dimensions dependent upon modular expansion joint selection. Reinforcing lengths and spacing are adjusted as required.

CAST-IN-PLACE SLAB DETAILS

DATE
8/20/09
ROUTE I-70 STATE MO/IL
DISTRICT 6 SHEET NO. BR154
COUNTY
ST. LOUIS CITY - MO
ST. CLAIR - IL
JOB NO.
J610984
CONTRACT ID.
091208-601
PROJECT NO.
I-70-9 (20)
BRIDGE NO.
A6500

DESCRIPTION | DATE

MISSOURI HIGHWAYS AND TRANSPORTATION COMMISSION
105 WEST CAPITOL
JEFFERSON CITY, MO 65102
1-888-ASK-MODOT (1-888-275-6636)

HNTB
715 KIRK DRIVE
KANSAS CITY, MO 64105-4310
(816) 472-1201
CERTIFICATE OF AUTHORITY
NO. 001270

FINAL PLANS

REV.

Detailed JUL 2009
Checked JUL 2009

Note: This drawing is not to scale. Follow dimensions.

T:\de-proj\St_Louis_City\Construction\J610984\Asbuilts\Bridge\B_A6500_154-205_J610984_154.dgn

7:35:17 AM

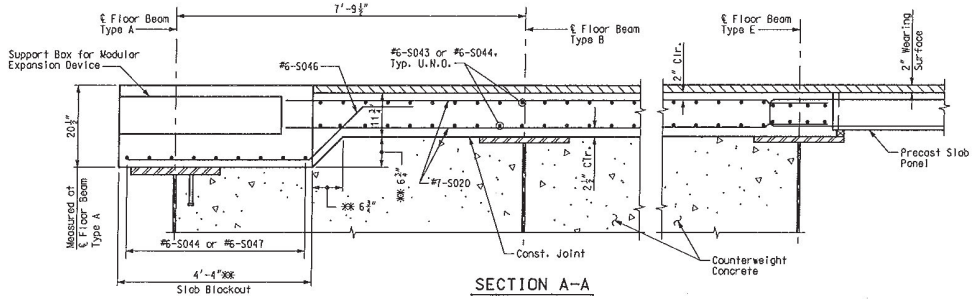

SECTION A-A

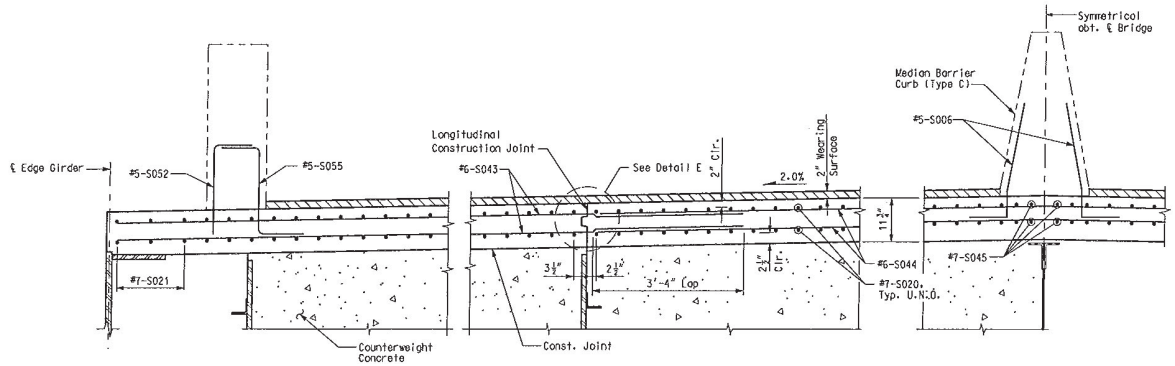

SECTION B-B

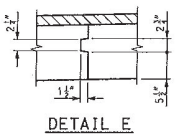

DETAIL E

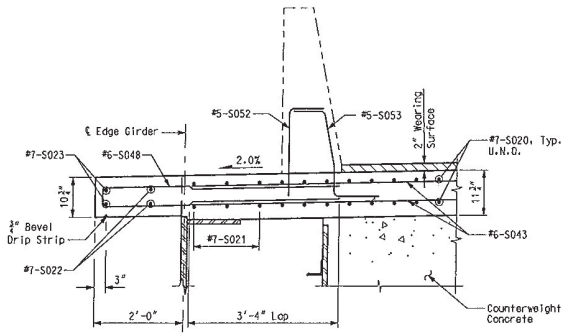

SECTION C-C

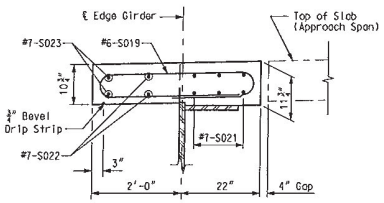

SECTION D-D

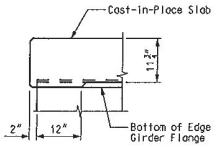

SECTION F-F

Notes:
For locations of Sections A-A thru D-D and Section F-F, see Sheet No. BR154.
** Dimensions dependent upon modular expansion joint selection. Reinforcing lengths and spacing are adjusted as required.

CAST-IN-PLACE SLAB DETAILS

DATE 8/20/09
ROUTE I-70 | STATE MO/IL
DISTRICT 6 | SHEET NO. BR155
COUNTY ST. LOUIS CITY - MO ST. CLAIR - IL
JOB NO. J6I0984
CONTRACT ID. 091208-601
PROJECT NO. I-70-9 (20)
BRIDGE NO. A6500

DESCRIPTION | DATE

MISSOURI HIGHWAYS AND TRANSPORTATION COMMISSION
105 WEST CAPITOL
JEFFERSON CITY, MO 65102
1-888-ASK-MODOT (1-888-275-6636)

HNTB
715 KIRK DRIVE
KANSAS CITY, MO 64105-1310
TELEPHONE (816) 472-1201
CERTIFICATE OF AUTHORITY NO. 001270

FINAL PLANS

REV.

Detailed JUL 2009
Checked JUL 2009

Note: This drawing is not to scale. Follow dimensions.

T:\de-proj\St_Louis_City\Construction\J6I0984\Asbuilts\Bridge\B_A6500_155-205_J6I0984_155.dgn 7:36:20 AM

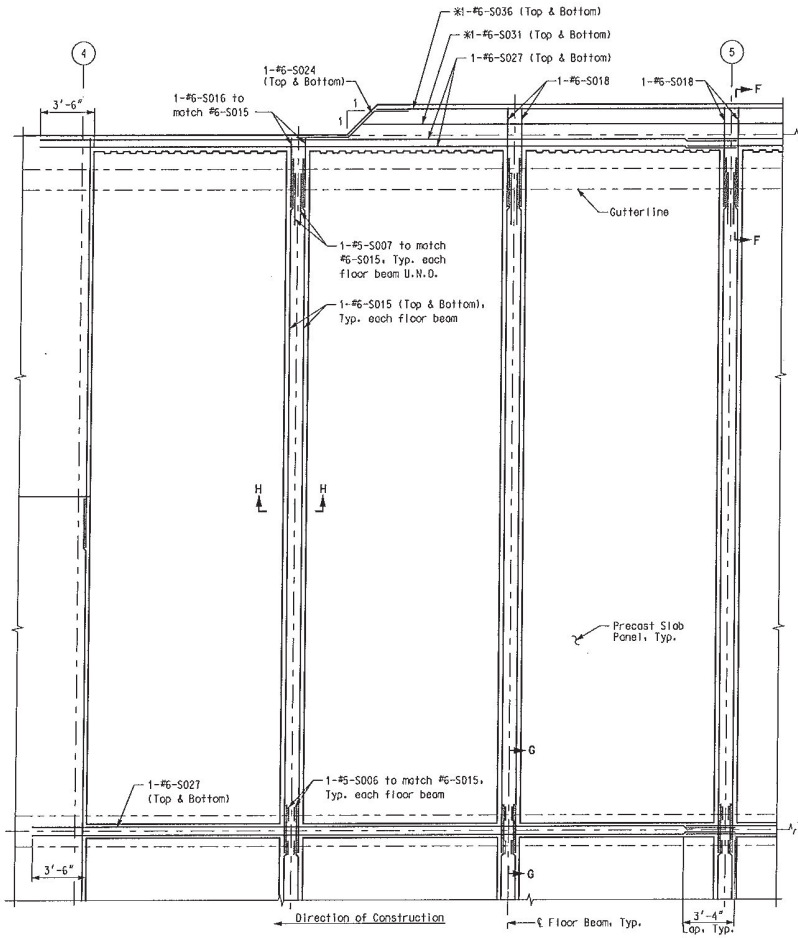

PARTIAL PLAN

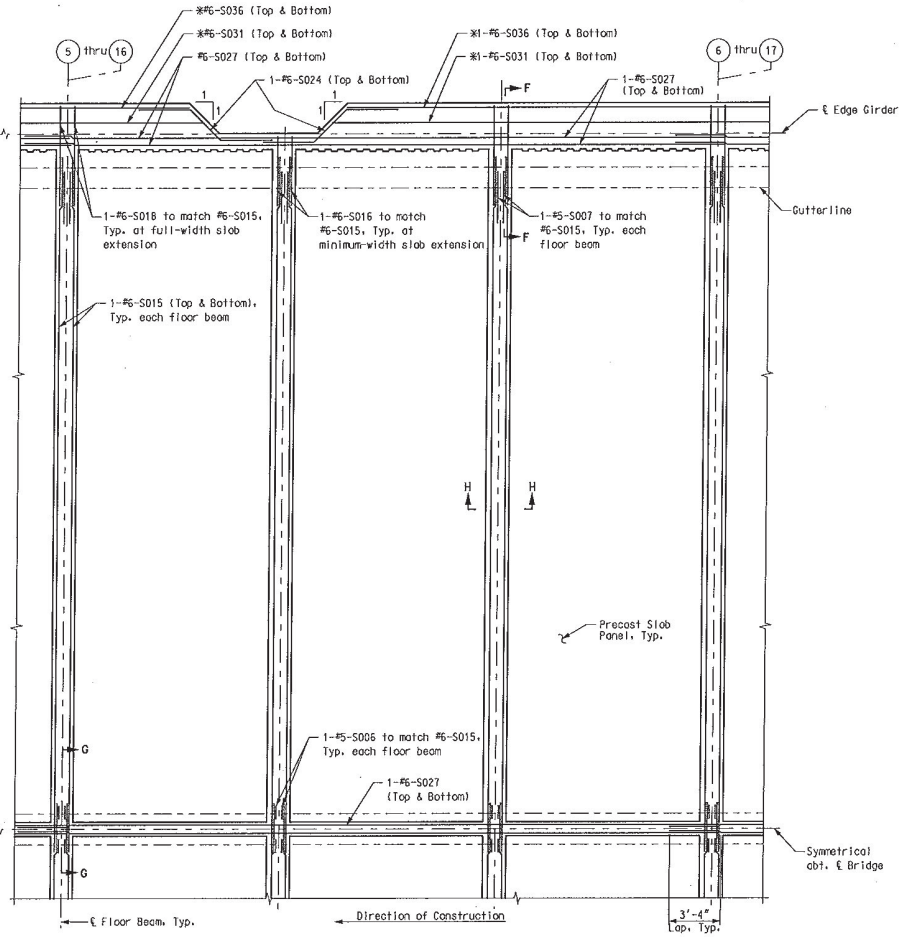

PARTIAL PLAN

Notes:

(5) Denotes Stay Cable.

※ Field cut to fit.
For location and spacing of end reinforcing in Precast Slab Panels, see Sheet No. BR153.
For Sections F-F thru H-H see Sheet No. BR158.
For location of cable anchorage cutouts, see Sheet No. BR153.

CAST-IN-PLACE SLAB DETAILS

DATE 8/20/09
ROUTE I-70 | STATE MO/IL
DISTRICT 6 | SHEET NO. BR156
COUNTY ST. LOUIS CITY – MO ST. CLAIR – IL
JOB NO. J610984
CONTRACT ID. 091208-601
PROJECT NO. I-70-9 (20)
BRIDGE NO. A6500

DESCRIPTION | DATE

MISSOURI HIGHWAYS AND TRANSPORTATION COMMISSION
105 WEST CAPITOL
JEFFERSON CITY, MO 65102
1-888-ASK-MODOT (1-888-275-6636)

HNTB
715 KIRK DRIVE
KANSAS CITY, MO 64105-1310
TELEPHONE (816) 472-1201
CERTIFICATE OF AUTHORITY NO. 001270

FINAL PLANS

REV.

Detailed JUL 2009
Checked JUL 2009

Note: This drawing is not to scale. Follow dimensions.

T:\de-proj\St_Louis_City\Construction\J610984\Asbuilts\Bridge\B_A6500_156-205_J610984_156.dgn

12:13:02 PM

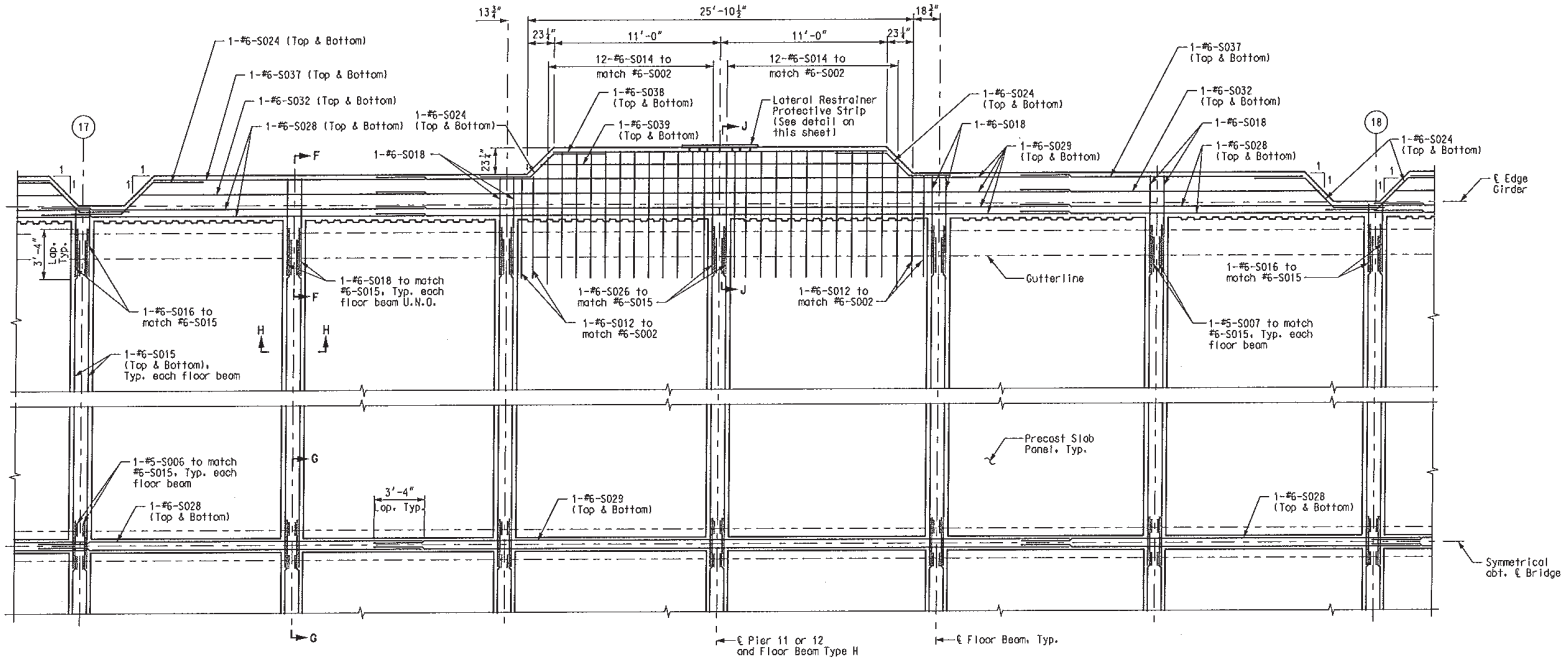

PARTIAL PLAN

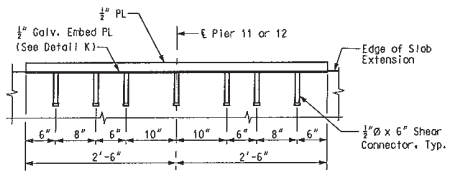

PLAN – LATERAL RESTRAINER PROTECTIVE STRIP

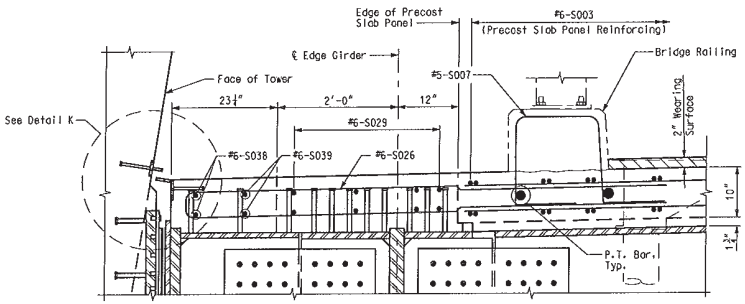

SECTION J-J

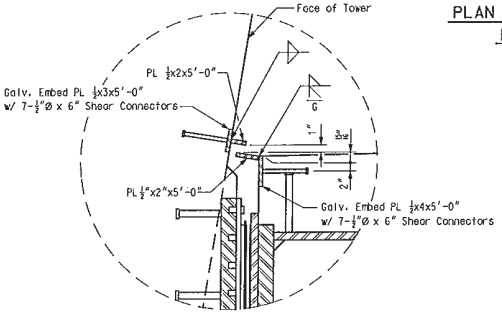

DETAIL K

Notes:

(17) Denotes Stay Cable.

For location of cable anchorage cutouts, see Sheet No. BR153.

For location and spacing of additional end reinforcing in Precast Slab Panels, see Sheet No. BR153.

For Sections F-F thru H-H, see Sheet No. BR158.

Bars #6-S012 and #6-S014 are included in the pay item "Precast Prestressed Slab Panels". See Detail A on Sheet No. BR151.

All costs associated with the materials, fabrication and installation of the galvanized embed plates and shear studs was included in the pay item "Fabricated Structural Carbon Steel (Miscellaneous)".

CAST-IN-PLACE SLAB DETAILS

DATE 8/20/09
ROUTE I-70 STATE MO/IL
DISTRICT 6 SHEET NO. BR157
COUNTY ST. LOUIS CITY - MO ST. CLAIR - IL
JOB NO. J6I0984
CONTRACT ID. 091208-601
PROJECT NO. I-70-9 (20)
BRIDGE NO. A6500

DESCRIPTION | DATE

MISSOURI HIGHWAYS AND TRANSPORTATION COMMISSION
105 WEST CAPITOL
JEFFERSON CITY, MO 65102
1-888-ASK-MODOT (1-888-275-6636)

HNTB
715 KIRK DRIVE
KANSAS CITY, MO 64105-1310
TELEPHONE (816) 472-1201
CERTIFICATE OF AUTHORITY NO. 001270

FINAL PLANS

REV.

Detailed JUL 2009
Checked JUL 2009

Note: This drawing is not to scale. Follow dimensions.

Sheet No. 157 of 205

T:\de-proj\St_Louis_City\Construction\J6I0984\Asbuilts\Bridge\B_A6500_157-205_J6I0984_157.dgn

7:39:35 AM

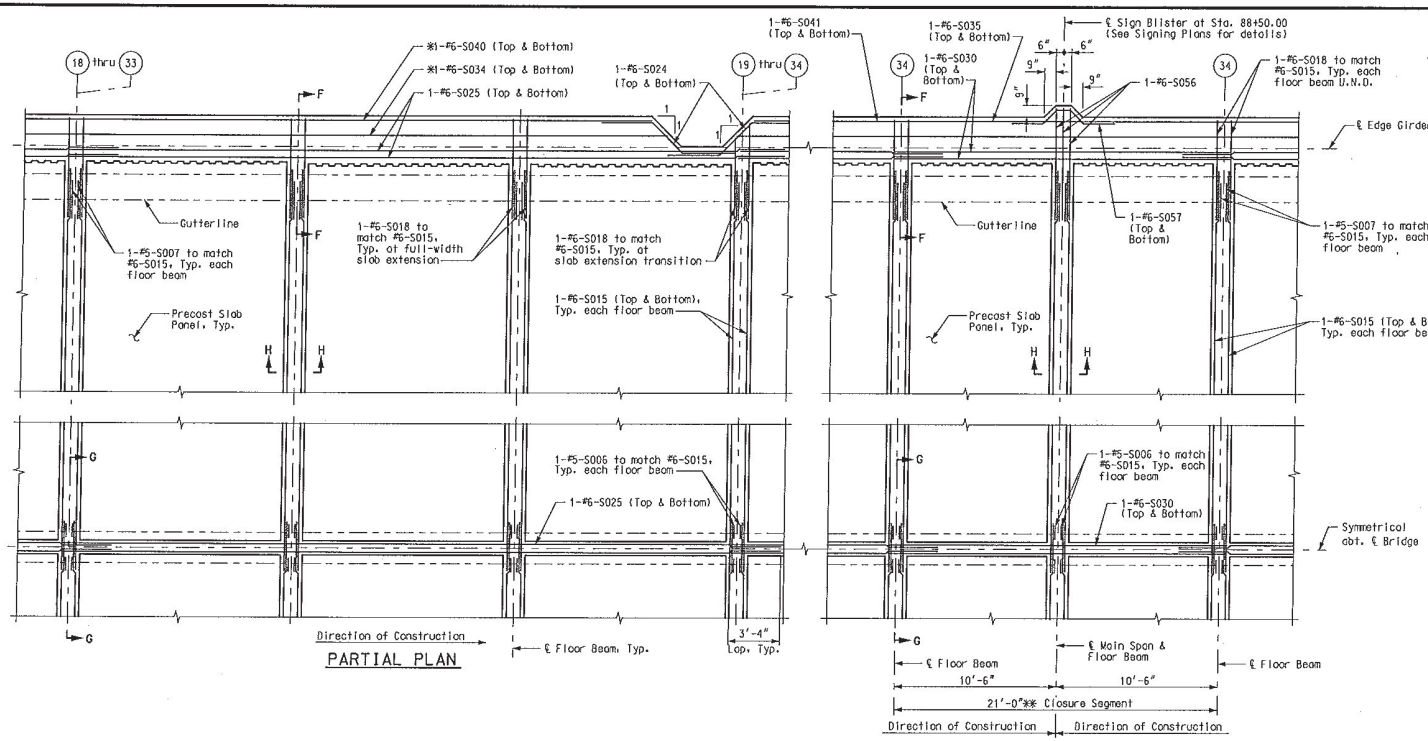

PARTIAL PLAN

PARTIAL PLAN

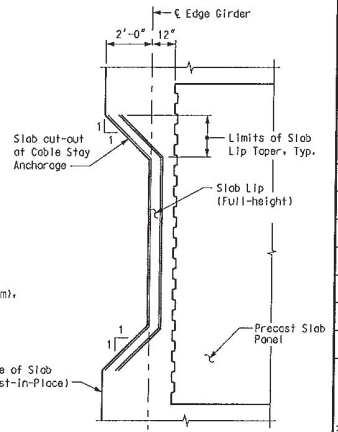

LIP DETAIL - PLAN VIEW

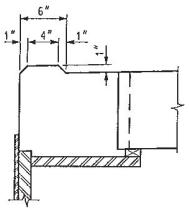

LIP DETAIL - SECTION

Note:
Taper slab lip from full height to zero height within specified limits. See Lip Detail - Plan View.

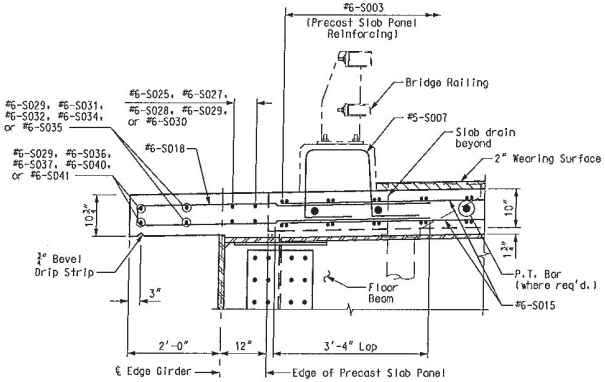

SECTION F-F

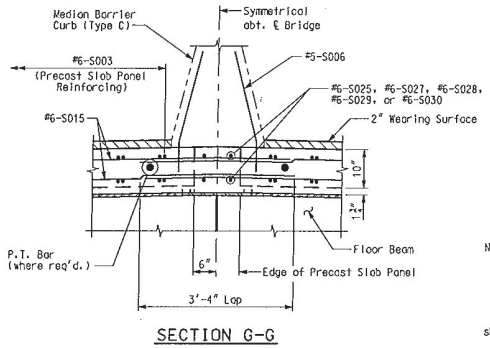

SECTION G-G

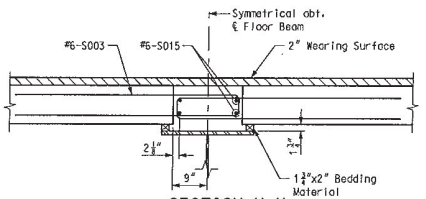

SECTION H-H

(Some Precast Slab Panel reinforcing not shown for clarity)

Notes:

(34) Denotes Stay Cable.

* Field cut to fit.

** Field verify dimension at time of closure. Notify the Engineer if dimension shown varies from actual dimension by more than 2".

For additional locations of Sections F-F thru H-H, see Sheet Nos. BR156 & BR157.

For location and spacing of end reinforcing in Precast Slab Panels and cable anchorage cutouts, see Sheet No. BR153.

CAST-IN-PLACE SLAB DETAILS

DATE 8/20/09
ROUTE I-70 | STATE MO/IL
DISTRICT 6 | SHEET NO. BR158
COUNTY ST. LOUIS CITY - MO, ST. CLAIR - IL
JOB NO. J6I0984
CONTRACT ID. 091208-601
PROJECT NO. I-70-9 (20)
BRIDGE NO. A6500

DESCRIPTION | DATE

MISSOURI HIGHWAYS AND TRANSPORTATION COMMISSION
105 WEST CAPITOL
JEFFERSON CITY, MO 65102
1-888-ASK-MODOT (1-888-275-6636)

HNTB
715 KIRK DRIVE
KANSAS CITY, MO 64105-1310
TELEPHONE (816) 472-1201
CERTIFICATE OF AUTHORITY NO. 001270

FINAL PLANS

REV.

Detailed JUL 2009
Checked JUL 2009

Note: This drawing is not to scale. Follow dimensions.

T:\de-proj\St_Louis_City\Construction\J6I0984\Asbuilts\Bridge\B_A6500_158-205_J6I0984_158.dgn 12:17:07 PM

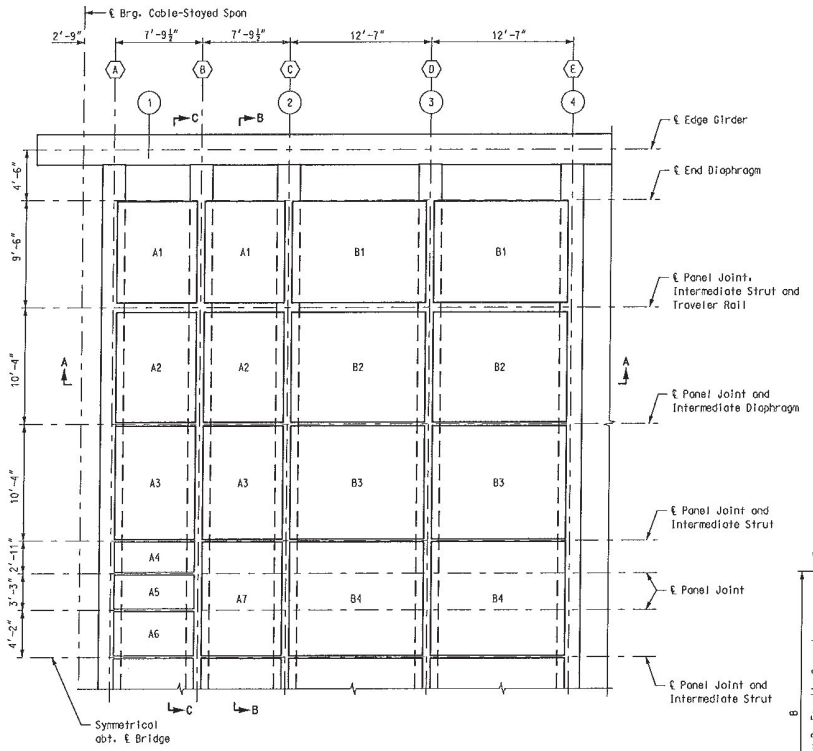

PLAN - PRECAST COUNTERWEIGHT PANEL

Notes:

(#) Denotes Stay Cable.

⟨#⟩ Denotes Floor Beam Type.

For Sections A-A thru C-C, see Sheet No. BR160.

All cast-in-place concrete placed above the top flanges of the edge girders and floor beams was included in the pay item "Precast Prestressed Slab Panels".

All cast-in-place counterweight concrete, (below the top of the floor beam top flange) precast counterweight panels, Intermediate Struts, Intermediate Diaphragms, End Diaphragms, Seal Plates, associated fasteners, and bedding materials was included in the pay item "Counterweight Concrete". This include all labor, materials and incidentals required for the fabrication and installation of these items.

The concrete for the cast-in-place counterweight is Class B. The unit weight of the counterweight concrete is 135-pcf.

The concrete for the precast counterweight panels is Class A-1. Lifting devices may be added to the panels, lifting devices are the responsibility of the Contractor and has incidental to the cost of "Counterweight Concrete".

Steel for the Intermediate Struts, Intermediate Diaphragms, and End Diaphragms are ASTM A709, Grade 50W. Steel for the Seal Plates are ASTM A709, Grade 50, galvanized.

Bolts connecting struts and diaphragms to the floor beams are 1" diameter, A325, Type 3.

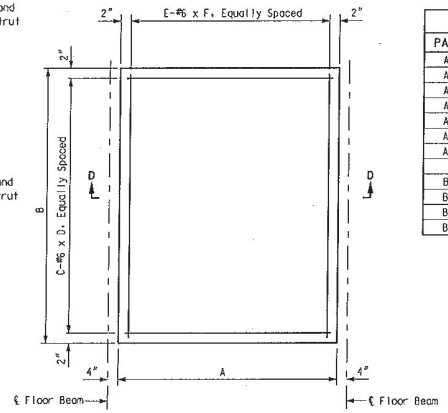

PLAN - PANEL REINFORCEMENT

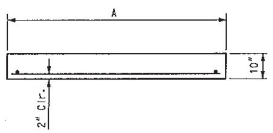

SECTION D-D

COUNTERWEIGHT - SUGGESTED ERECTION SEQUENCE

Erect Field Piece, including steel attachments and details. See Sheet Nos. BR181 thru BR183 for details.

Place precast counterweight panels, bedding material, and seal plates, see Sheet No. BR160 for Counterweight Plan. Install Shear Connectors to web of Floor Beams

Cast counterweight in successive lifts in accordance with Sheet No. BR160 and Sheet Nos. BR181 thru BR183. The counterweight concrete shall obtain a minimum compressive strength of 2000 psi prior to placing additional lifts of concrete.

The erection sequence shown is not represented as being the complete step-by-step procedure and is included for information only. The Contractor has determine the complete erection sequence and equipment required for erection of the bridge.

Whether the Contractor proposes an alternate sequence or one similar to that shown on this drawing, the Contractor has prepared a detailed erection sequence, including calculations and detailed drawings, to be submitted to the Engineer for review as port of the shop drawings.

The Contractor was responsible for the erection sequence in its entirety. The Contractor's bid was based solely upon the erection sequence proposed by the Contractor.

PRECAST PANEL DATA

PANEL	A	B	C	D	E	F
A1	7'-1½"	9'-0"	14	6'-9½"	8	8'-8"
A2	7'-1½"	9'-9"	15	6'-9½"	8	9'-5"
A3	7'-1½"	10'-0½"	15	6'-9½"	8	9'-8½"
A4	7'-1½"	2'-8"	5	6'-9½"	8	2'-4"
A5	7'-1½"	3'-0"	5	6'-9½"	8	2'-8"
A6	7'-1½"	3'-11"	6	6'-9½"	8	3'-7"
A7	7'-1½"	10'-1"	15	6'-9½"	8	9'-9"
B1	11'-11"	9'-0"	14	11'-7"	13	8'-8"
B2	11'-11"	9'-9"	15	11'-7"	13	9'-5"
B3	11'-11"	10'-0½"	15	11'-7"	13	9'-8½"
B4	11'-11"	10'-1"	15	11'-7"	13	9'-9"

COUNTERWEIGHT DETAILS

DATE 8/20/09
ROUTE I-70 | STATE MO/IL
DISTRICT 6 | SHEET NO. BR159
COUNTY ST. LOUIS CITY - MO, ST. CLAIR - IL
JOB NO. J6I0984
CONTRACT ID. 091208-601
PROJECT NO. I-70-9 (20)
BRIDGE NO. A6500

DESCRIPTION | DATE

MISSOURI HIGHWAYS AND TRANSPORTATION COMMISSION
105 WEST CAPITOL
JEFFERSON CITY, MO 65102
1-888-ASK-MODOT (1-888-275-6636)

HNTB
715 KIRK DRIVE
KANSAS CITY, MO 64105-1310
TELEPHONE: (816) 472-1201
CERTIFICATE OF AUTHORITY NO. 001270

FINAL PLANS

REV.

Detailed JUL 2009
Checked JUL 2009

Note: This drawing is not to scale. Follow dimensions.

Sheet No. 159 of 205

T:\de-proj\St_Louis_City\Construction\J6I0984\Asbuilts\Bridge\B_A6500_159-205_J6I0984_159.dgn 8:07:37 AM

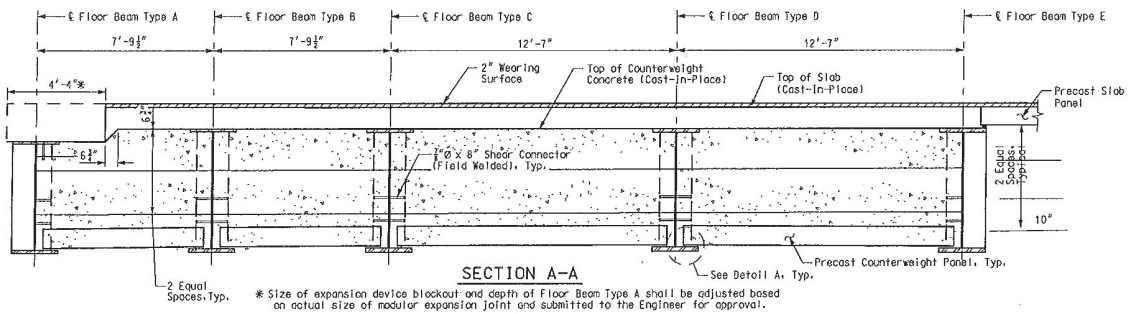

SECTION A-A

* Size of expansion device blockout and depth of Floor Beam Type A shall be adjusted based on actual size of modular expansion joint and submitted to the Engineer for approval.

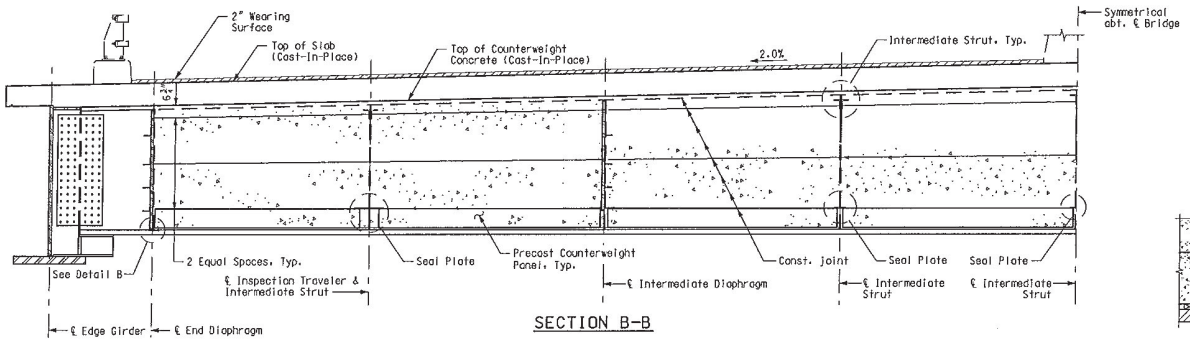

SECTION B-B

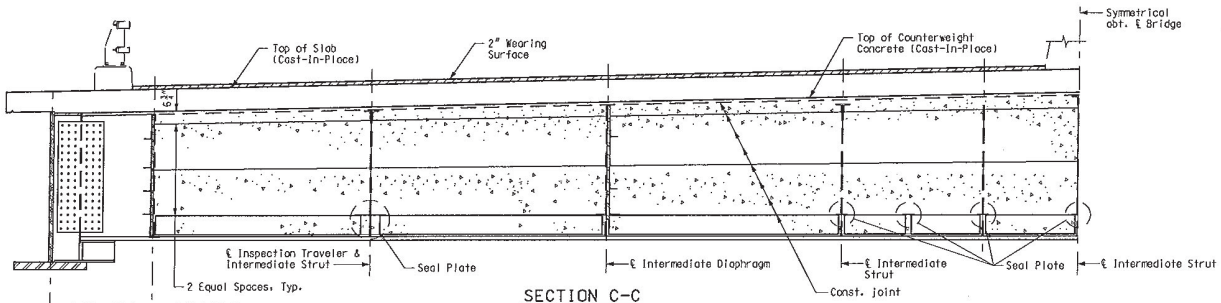

SECTION C-C

(Detail and dimensions are similar to Section B-B, except as noted.)

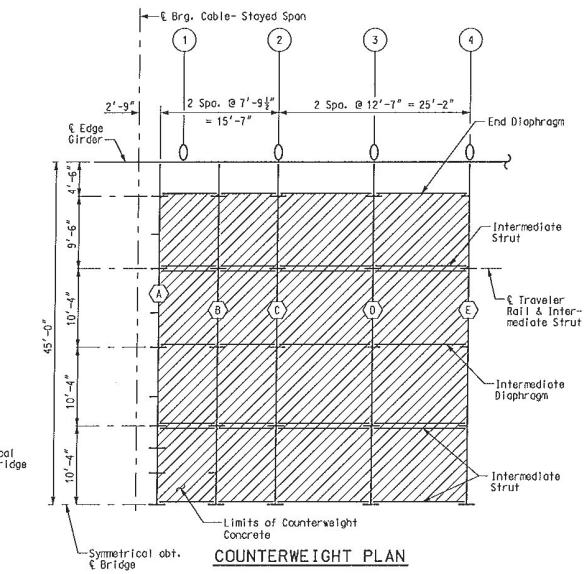

COUNTERWEIGHT PLAN

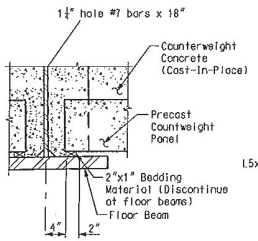

DETAIL A

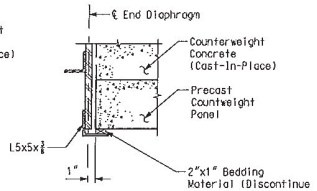

DETAIL B

Notes:

(#) Denotes Stay Cable.

⟨#⟩ Denotes Floor Beam Type.

Shear connectors shown attached to the web are installed after placement of the precast panels.

For Floor Beam details, see Sheet Nos. BR117 thru BR122.

For location of Sections A-A, B-B, and C-C and additional notes, see Sheet No. BR159.

For details of cast-in-place slab, see Sheet No. BR154.

COUNTERWEIGHT DETAILS

DATE 8/20/09
ROUTE I-70 STATE MO/IL
DISTRICT 6 SHEET NO. BR160
COUNTY ST. LOUIS CITY - MO ST. CLAIR - IL
JOB NO. J6I0984
CONTRACT ID. 091208-601
PROJECT NO. I-70-9 (20)
BRIDGE NO. A6500

DESCRIPTION | DATE

MISSOURI HIGHWAYS AND TRANSPORTATION COMMISSION
105 WEST CAPITOL JEFFERSON CITY, MO 65102
1-888-ASK-MODOT (1-888-275-6636)

HNTB
715 KIRK DRIVE KANSAS CITY, MO 64105-1310
TELEPHONE (816) 472-1201
CERTIFICATE OF AUTHORITY NO. 001210

FINAL PLANS

REV.

Detailed JUL 2009
Checked JUL 2009

Note: This drawing is not to scale. Follow dimensions.

Sheet No. 160 of 205

T:\de-proj\St_Louis_City\Construction\J6I0984\Asbuilts\Bridge\B_A6500_160-205_J6I0984_160.dgn 9:43:56 AM

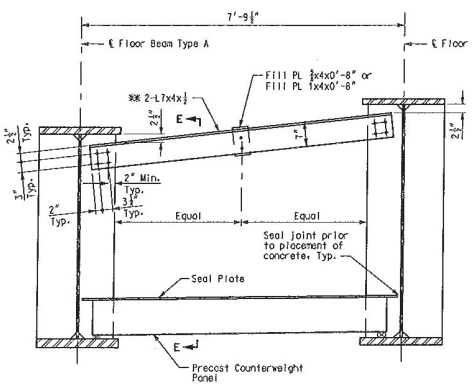

INTERMEDIATE STRUT DETAIL
FLOOR BEAM TYPES A AND B

**Install after placement of precast counterweight panels and prior to placement of counterweight concrete.

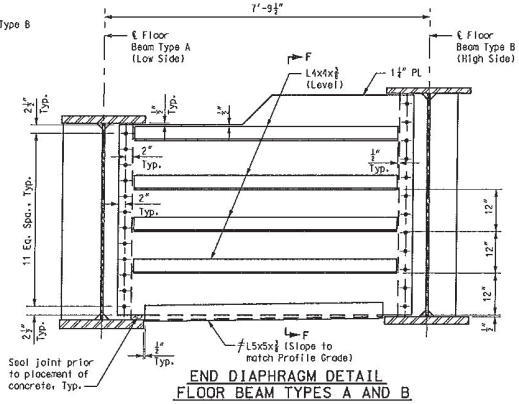

END DIAPHRAGM DETAIL
FLOOR BEAM TYPES A AND B

(Looking away from ℄ Edge Girder. Precast Panel not shown for clarity)

#Align top of horizontal leg with top of bottom flange of floor beam.

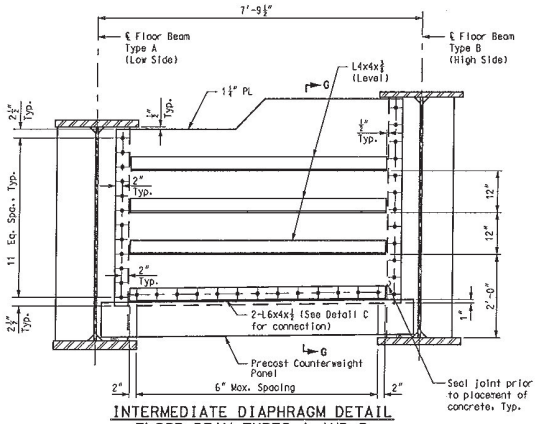

INTERMEDIATE DIAPHRAGM DETAIL
FLOOR BEAM TYPES A AND B

(Looking away from ℄ Bridge)

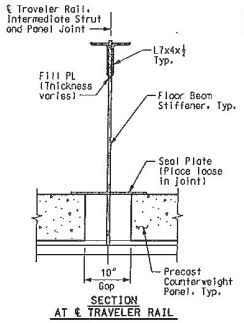

SECTION
AT ℄ TRAVELER RAIL

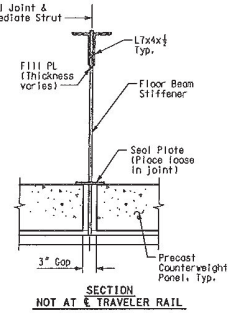

SECTION
NOT AT ℄ TRAVELER RAIL

SECTION E-E

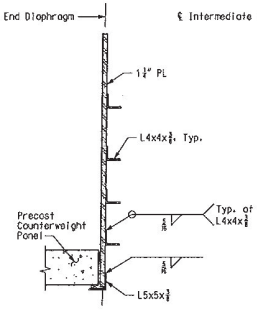

SECTION F-F

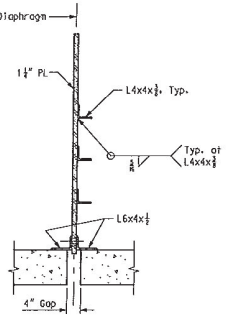

SECTION G-G

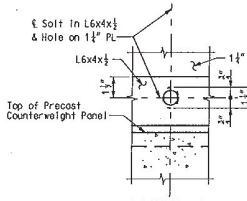

DETAIL C

Field-bolt L6x4x½ angles to 1¼" PL following placement of precast counterweight concrete panels. 6" leg of L6x4x½ shall be flush with top of precast counterweight concrete panels.

Notes:

For Precast Counterweight Panel Plan, see Sheet No. BR159.

For location of Intermediate Strut and End Diaphragm, see Partial Framing Plan on Sheet No. BR109.

For Intermediate Strut Detail, End Diaphragm Detail, Intermediate Diaphragm Detail at Floor Beam Types B thru E, and Seal Plate Detail, see Sheet No. BR162.

Intermediate Strut, Intermediate Diaphragm and End Diaphragm at Floor Beam Types A and B were fabricated to account for actual depth of Floor Beam Type A and to eliminate interference with expansion joint blockout. See Sheet No. BR172 for Expansion Joint Details.

For additional notes, see Sheet Nos. BR159 and BR160.

COUNTERWEIGHT DETAILS

DATE 8/20/09
ROUTE I-70 | STATE MO/IL
DISTRICT 6 | SHEET NO. BR161
COUNTY ST. LOUIS CITY - MO, ST. CLAIR - IL
JOB NO. J6I0984
CONTRACT ID. 091208-601
PROJECT NO. I-70-9 (20)
BRIDGE NO. A6500

DESCRIPTION | DATE

MISSOURI HIGHWAYS AND TRANSPORTATION COMMISSION
105 WEST CAPITOL
JEFFERSON CITY, MO 65102
1-888-ASK-MODOT (1-888-275-6636)

HNTB
715 KIRK DRIVE
KANSAS CITY, MO 64105-3310
TELEPHONE: (816) 472-1201
CERTIFICATE OF AUTHORITY NO. 001370

FINAL PLANS

REV.

Detailed JUL 2009
Checked JUL 2009

Note: This drawing is not to scale. Follow dimensions.

Sheet No. 161 of 205

I:\de-proj\St_Louis_City\Construction\J6I0984\Asbuilts\Bridge\B_A6500_161-205_J6I0984_161.dgn 7:56:53 AM

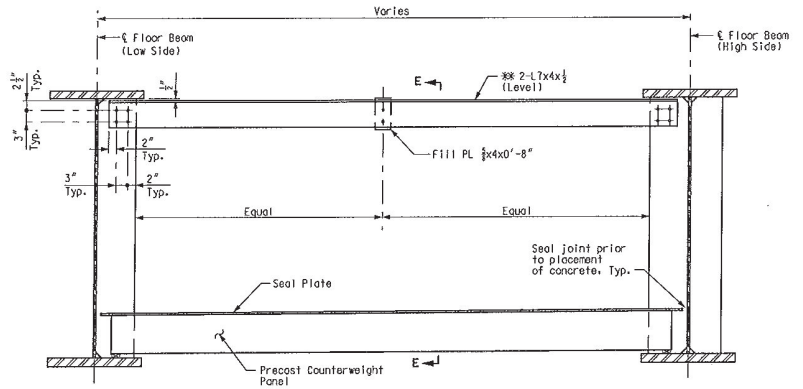

INTERMEDIATE STRUT DETAIL - FLOOR BEAM TYPES B THRU E

** Install after placement of precast counterweight panels and prior to placement of counterweight concrete.

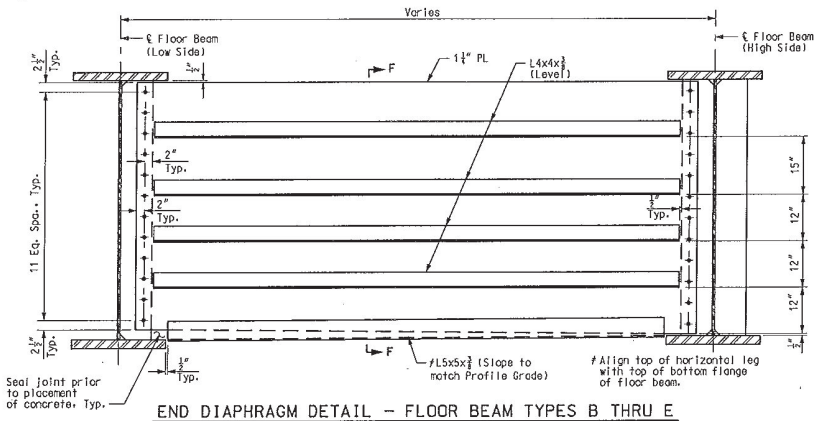

END DIAPHRAGM DETAIL - FLOOR BEAM TYPES B THRU E

(Looking away from ℄ Edge Girder, Precast Panel not shown for clarity)

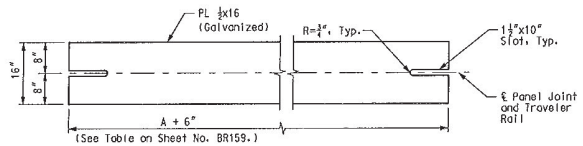

AT JOINT ALONG ℄ INSPECTION TRAVELER

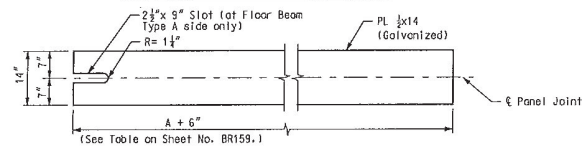

AT JOINT BETWEEN PANELS A4 & A5

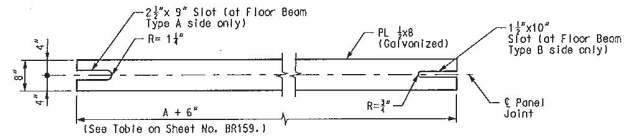

AT JOINT BETWEEN PANELS A5 & A6

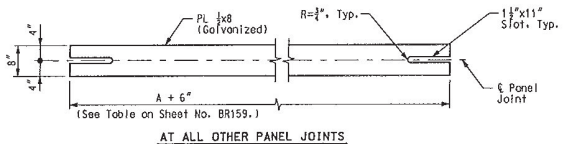

AT ALL OTHER PANEL JOINTS

SEAL PLATE DETAILS

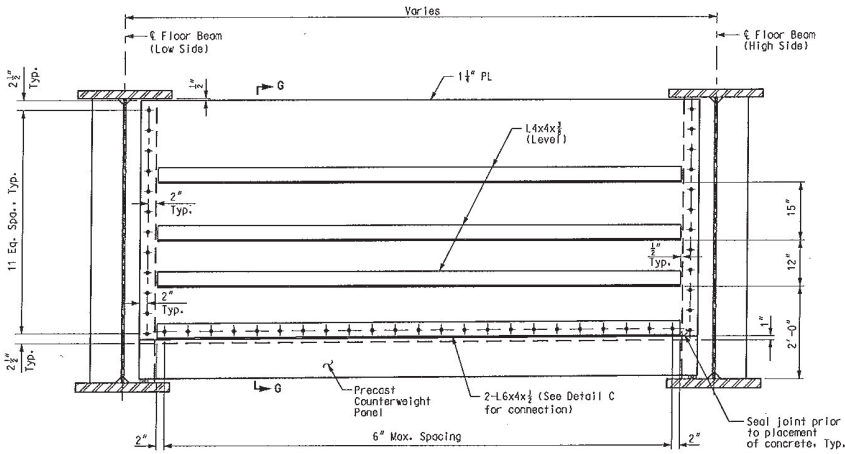

INTERMEDIATE DIAPHRAGM DETAIL - FLOOR BEAM TYPES B THRU E

(Looking away from ℄ Bridge)

Notes:
For Sections E-E thru G-G, Detail C, additional notes & details, see Sheet No. BR161.
For additional notes, see Sheet Nos. BR159 and BR160.

COUNTERWEIGHT DETAILS

DATE 8/20/09
ROUTE I-70 STATE MO/IL
DISTRICT 6 SHEET NO. BR162
COUNTY ST. LOUIS CITY - MO ST. CLAIR - IL
JOB NO. J6I0984
CONTRACT ID. 091208-601
PROJECT NO. I-70-9 (20)
BRIDGE NO. A6500

DESCRIPTION | DATE

MISSOURI HIGHWAYS AND TRANSPORTATION COMMISSION
105 WEST CAPITOL
JEFFERSON CITY, MO 65102
1-888-ASK-MODOT (1-888-275-6636)

HNTB
715 KIRK DRIVE
KANSAS CITY, MO 64105-1310
TELEPHONE (816) 472-1201
CERTIFICATE OF AUTHORITY NO. 001270

FINAL PLANS

REV.

Detailed JUL 2009
Checked JUL 2009

Note: This drawing is not to scale. Follow dimensions.

T:\de-proj\St_Louis_City\Construction\J6I0984\Asbuilts\Bridge\B_A6500_162-205_J6I0984_162.dgn 12:20:36 PM

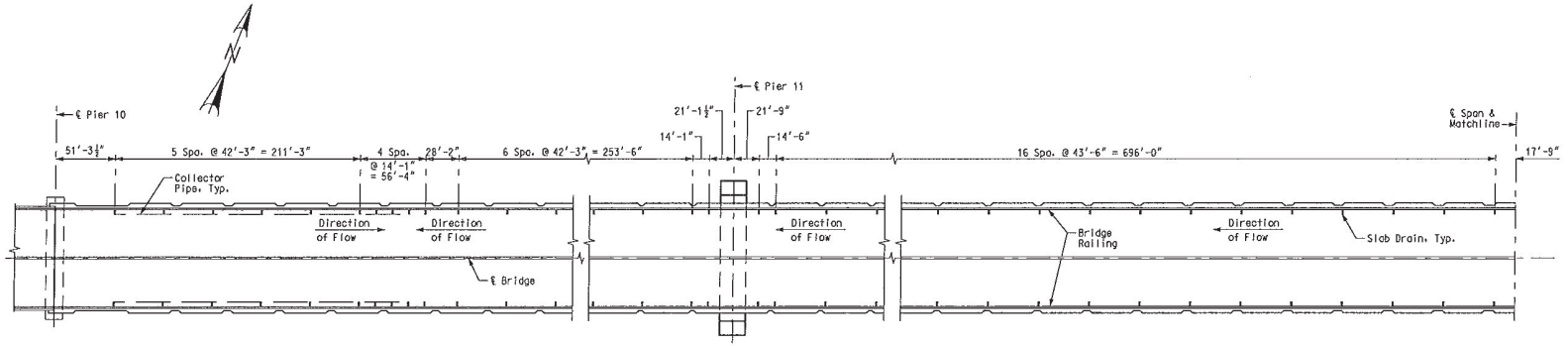

SPAN (10-11)

SPAN (11-12)

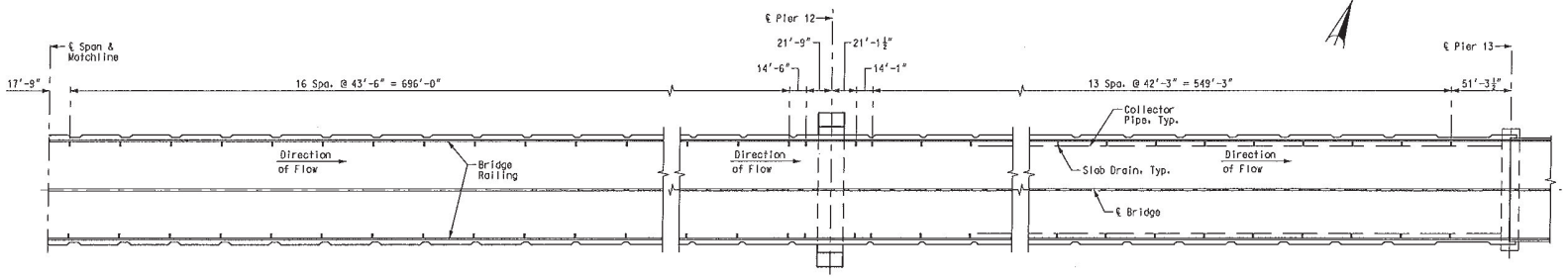

SPAN (11-12)

SPAN (12-13)

Notes:
For Slab Drain details, see Sheet No. BR164.
For additional details of drainage and collector pipe, see Sheet Nos. BR165 & BR166.
All costs associated with materials, fabrication and installation of the drainage system was included in the pay item, "Drainage System (on Structure)". This includes the scuppers, downspouts, bracket assemblies, collector pipe system, support brackets, drain pan, pier piping system and splash block.

SLAB DRAIN WITH GRATE LAYOUT

DATE 5/17/10
ROUTE I-70 | STATE MO/IL
DISTRICT 6 | SHEET NO. BR163
COUNTY ST. LOUIS CITY - MO ST. CLAIR - IL
JOB NO. J6I0984
CONTRACT ID. 091208-601
PROJECT NO. I-70-9 (20)
BRIDGE NO. A6500

DATE	DESCRIPTION
5-17-10	5 Added slab drains

MISSOURI HIGHWAYS AND TRANSPORTATION COMMISSION
105 WEST CAPITOL
JEFFERSON CITY, MO 65102
1-888-ASK-MODOT (1-888-275-6636)

HNTB
715 KIRK DRIVE
KANSAS CITY, MO 64105-1310
TELEPHONE (816) 472-1201
CERTIFICATE OF AUTHORITY NO. 001270

FINAL PLANS

Detailed JUL 2009
Checked JUL 2009

Note: This drawing is not to scale. Follow dimensions.

Sheet No. 163 of 205

T:\de-proj\St_Louis_City\Construction\J6I0984\Asbuilts\Bridge\B_A6500_163-205_J6I0984_163.dgn

7:58:47 AM

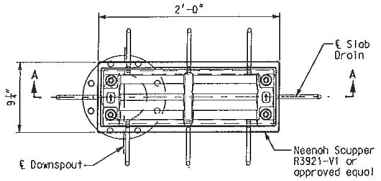

PLAN - SLAB DRAIN

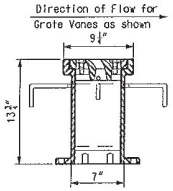

SECTION B-B

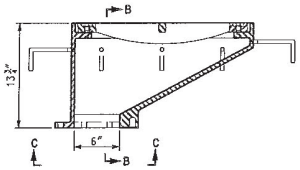

SECTION A-A

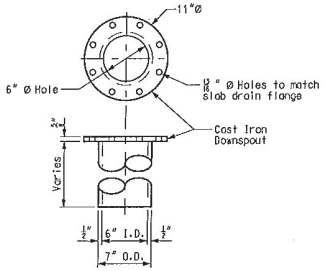

DOWNSPOUT

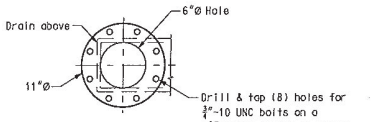

VIEW C-C

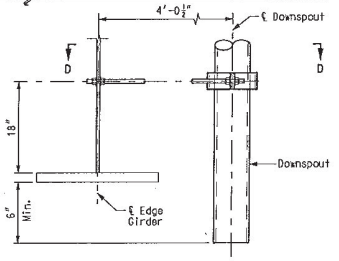

AT ALL OTHERS

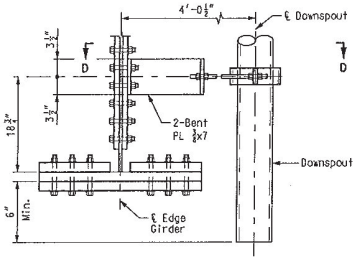

AT STA. 77+54.96

ELEVATION - EDGE GIRDER BRACKET ASSEMBLY

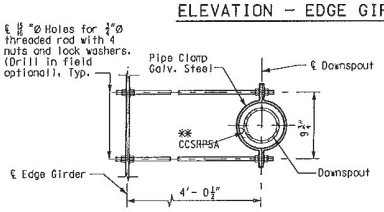

AT ALL OTHERS

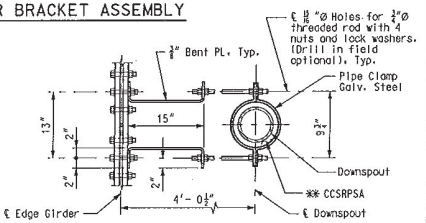

AT STA. 77+54.96

SECTION D-D

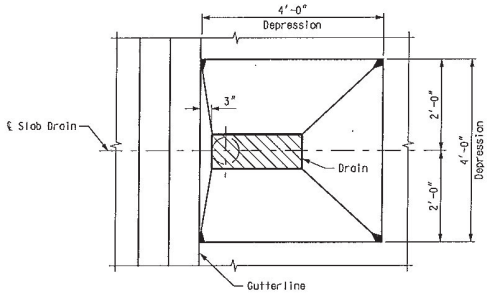

PLAN - DEPRESSION AT SLAB DRAIN

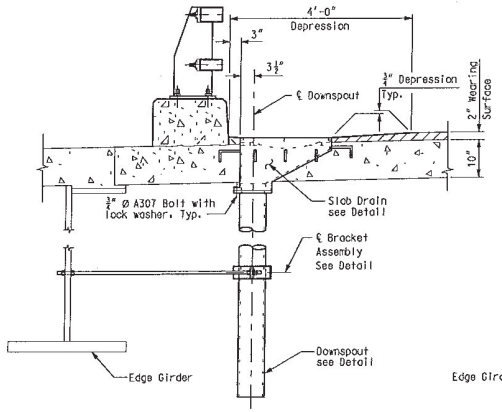

WITHOUT COLLECTOR PIPE

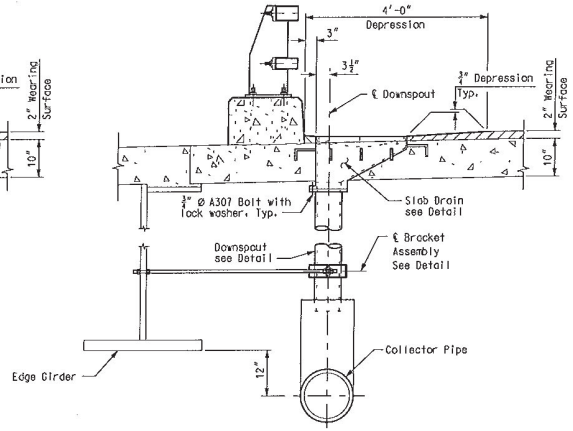

WITH COLLECTOR PIPE

ELEVATION - SLAB DRAIN AND DOWNSPOUT

Notes:
All cast iron parts are gray iron conforming to the requirements of AASHTO M105, Class 35B.
Bolts and threaded rods conform to the requirements of ASTM A307, heavy hex, hot-dip galvonized.
Nuts conform to the requirements of ASTM A563, heavy hex, hot-dip galvonized.
Lock washers are spring steel, hot-dip galvonized.
For the layout of the slab drains, see Sheet No. BR163.
For the location of the slab drains in the precast panels, see Sheet Nos. BR144 thru BR149.
For additional notes, see Sheet No. BR165.

** Closed Cell Sponge Rubber Pressure Sensitive Adhesive (CCSRPSA).

SLAB DRAIN WITH GRATE

DATE 8/20/09
ROUTE I-70 | STATE MO/IL
DISTRICT 6 | SHEET NO. BR164
COUNTY ST. LOUIS CITY - MO ST. CLAIR - IL
JOB NO. J6I0984
CONTRACT ID. 091208-601
PROJECT NO. I-70-9 (20)
BRIDGE NO. A6500

DESCRIPTION | DATE

MISSOURI HIGHWAYS AND TRANSPORTATION COMMISSION
105 WEST CAPITOL
JEFFERSON CITY, MO 65102
1-888-ASK-MODOT (1-888-275-6636)

HNTB
715 KIRK DRIVE
KANSAS CITY, MO 64105-1310
TELEPHONE (816) 472-1201
CERTIFICATE OF AUTHORITY NO. 001270

FINAL PLANS

REV.

Detailed JUL 2009
Checked JUL 2009

Note: This drawing is not to scale. Follow dimensions.

Sheet No. 164 of 205

T:\de-proj\St_Louis_City\Construction\J6I0984\Asbuilts\Bridge\B_A6500_164-205_J6I0984_164.dgn

8:30:11 AM

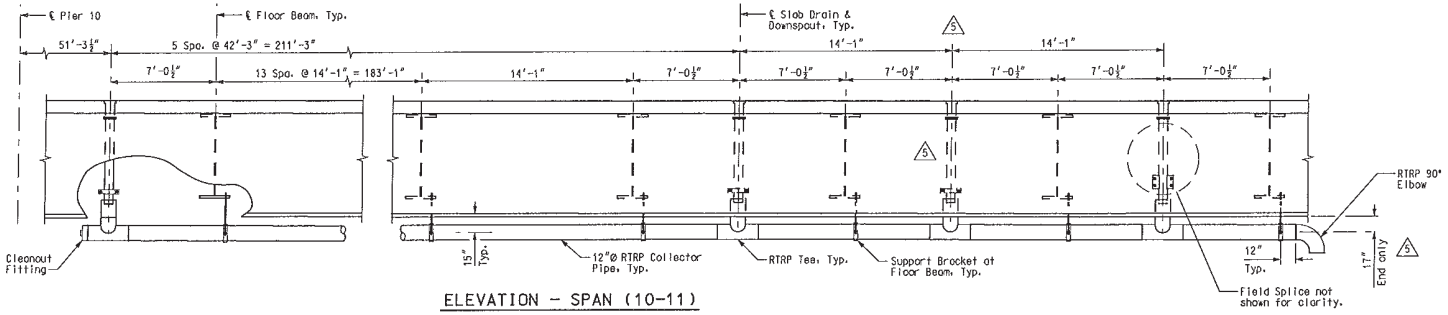

ELEVATION - SPAN (10-11)

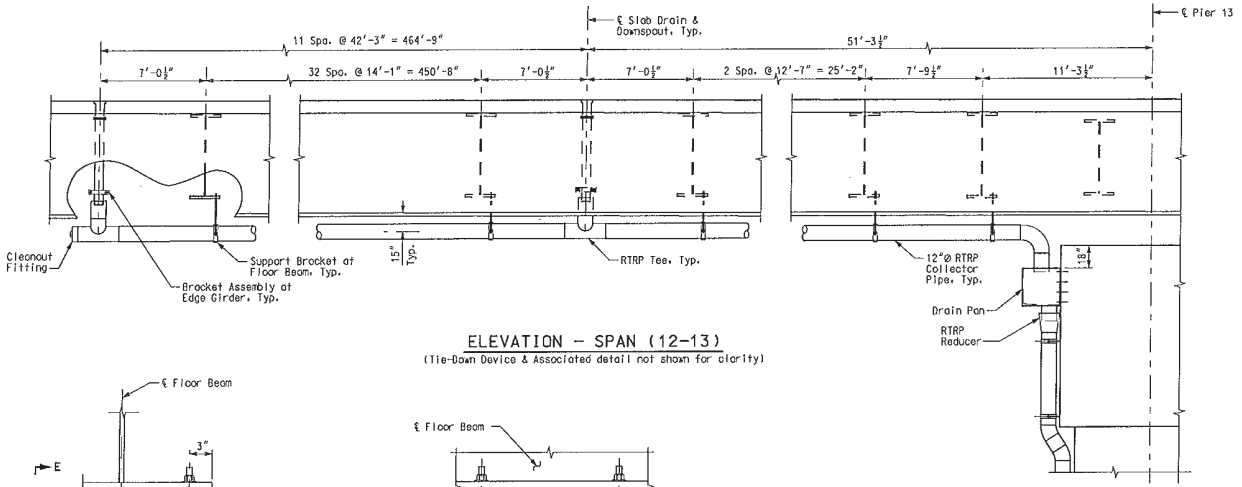

ELEVATION - SPAN (12-13)

(Tie-Down Device & Associated detail not shown for clarity)

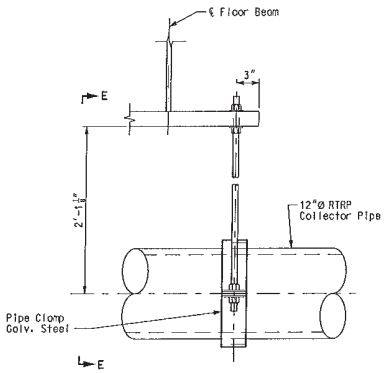

ELEVATION
FLOOR BEAM SUPPORT BRACKET

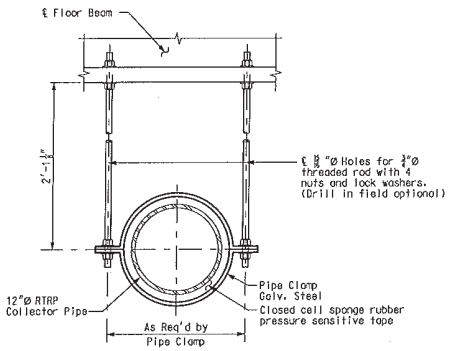

SECTION E-E

Notes:

For additional specifications, see Special Provision "Drainage System".
Concrete in splash block is Class B.
Welded wire fabric in splash block conform to ASTM A497.
Bolts and threaded rods are conform to the requirements of ASTM A307, heavy hex, hot-dip galvanized.
Nuts conform to the requirements of ASTM A563, heavy hex, hot-dip galvanized.
Lock washers are spring steel, hot-dip galvanized.
Drain pan are fiberglass.
Welding shall be in conformance with AWS D1.1, current edition.
Pipe attached to drain pan are fiberglass.
Epoxy anchor compound is Epcon C6 Epoxy or approved equal. Install in accordance with manufacturer's recommendations.
All costs associated with the materials, fabrication and installation of the drainage system, including slab drains, downspouts, pipe clamps, fabric pads, brackets, collector pipe and fittings, drain pans, splash blocks and associated hardware and fasteners are included in the pay item "Drainage System (On Structure)".
For the layout of the slab drains, see Sheet No. BR163.
For the location of the slab drains in the precast panels, see Sheet Nos. BR144 thru BR149.
For additional notes, see Sheet No. BR164.

SLAB DRAINAGE DETAILS

DATE 5/17/10
ROUTE I-70 | STATE MO/IL
DISTRICT 6 | SHEET NO. BR165
COUNTY ST. LOUIS CITY - MO, ST. CLAIR - IL
JOB NO. J6I0984
CONTRACT ID. 091208-601
PROJECT NO. I-70-9 (20)
BRIDGE NO. A6500

DATE	DESCRIPTION
5-17-10	1 Added slab drain & dimension

MISSOURI HIGHWAYS AND TRANSPORTATION COMMISSION
105 WEST CAPITOL
JEFFERSON CITY, MO 65102
1-888-ASK-MODOT (1-888-275-6636)

HNTB
715 KIRK DRIVE
KANSAS CITY, MO 64105-1310
TELEPHONE (816) 472-1201
CERTIFICATE OF AUTHORITY NO. 001270

FINAL PLANS

REV.

Detailed JUL 2009
Checked JUL 2009

Note: This drawing is not to scale. Follow dimensions.

T:\de-proj\St_Louis_City\Construction\J6I0984\Asbuilts\Bridge\B_A6500_165-205_J6I0984_165.dgn

8:34:47 AM

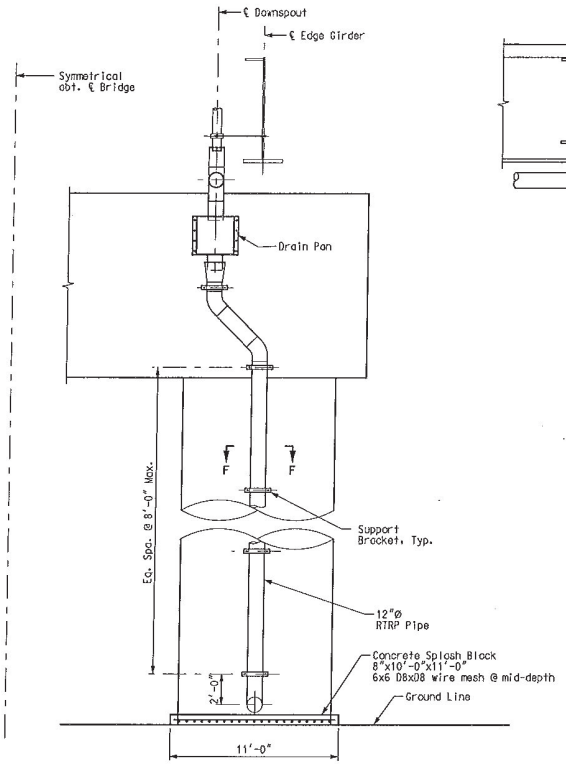

ELEVATION

(Deck, Floor Beam & Tie-Down Device not shown for clarity)

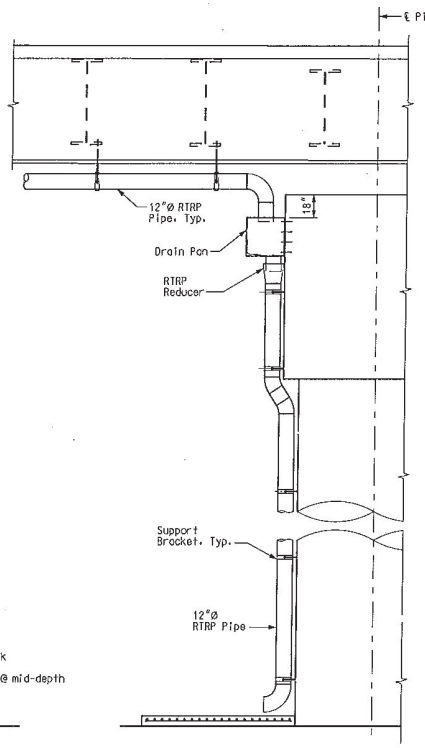

END VIEW

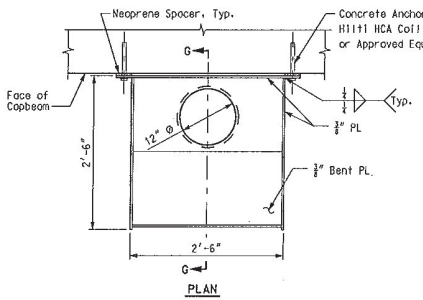

PLAN

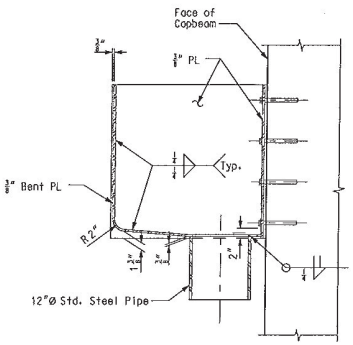

SECTION G-G

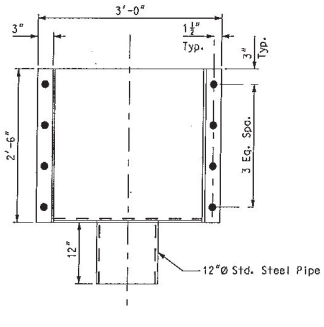

ELEVATION

DRAIN PAN DETAILS

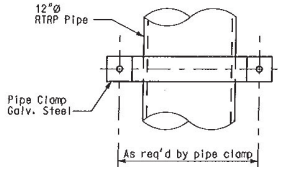

ELEVATION

PIER SUPPORT BRACKET

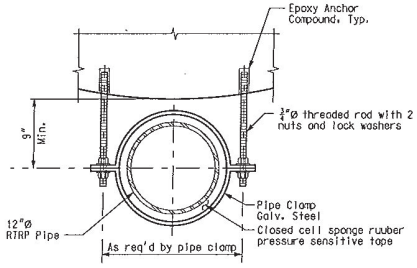

SECTION F-F

Notes:
For slab drainage notes, see Sheet No. BR165.

SLAB DRAINAGE DETAILS

DATE 8/20/09
ROUTE I-70 | STATE MO/IL
DISTRICT 6 | SHEET NO. BR166
COUNTY ST. LOUIS CITY - MO ST. CLAIR - IL
JOB NO. J6I0984
CONTRACT ID. 091208-601
PROJECT NO. I-70-9 (20)
BRIDGE NO. A6500

DESCRIPTION | DATE

MISSOURI HIGHWAYS AND TRANSPORTATION COMMISSION
105 WEST CAPITOL
JEFFERSON CITY, MO 65102
1-888-ASK-MODOT (1-888-275-6636)

HNTB
715 KIRK DRIVE
KANSAS CITY, MO 64105-1310
TELEPHONE (816) 472-1201
CERTIFICATE OF AUTHORITY NO. 001270

FINAL PLANS

REV.

Detailed JUL 2009
Checked JUL 2009

Note: This drawing is not to scale. Follow dimensions.

T:\de-proj\St_Louis_City\Construction\J6I0984\Asbuilts\Bridge\B_A6500_166-205_J6I0984_166.dgn 12:40:49 PM

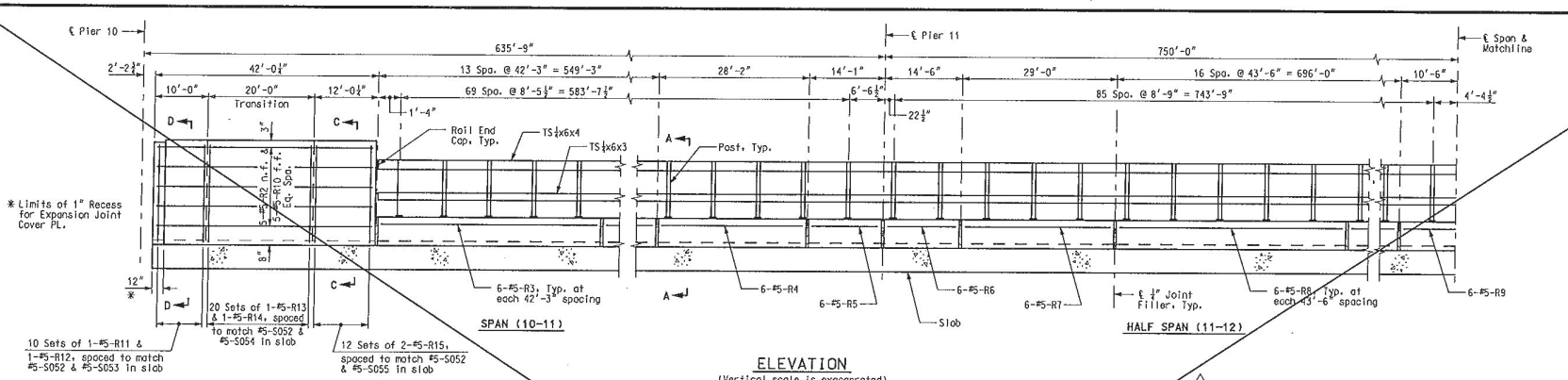

ELEVATION
(Vertical scale is exaggerated)

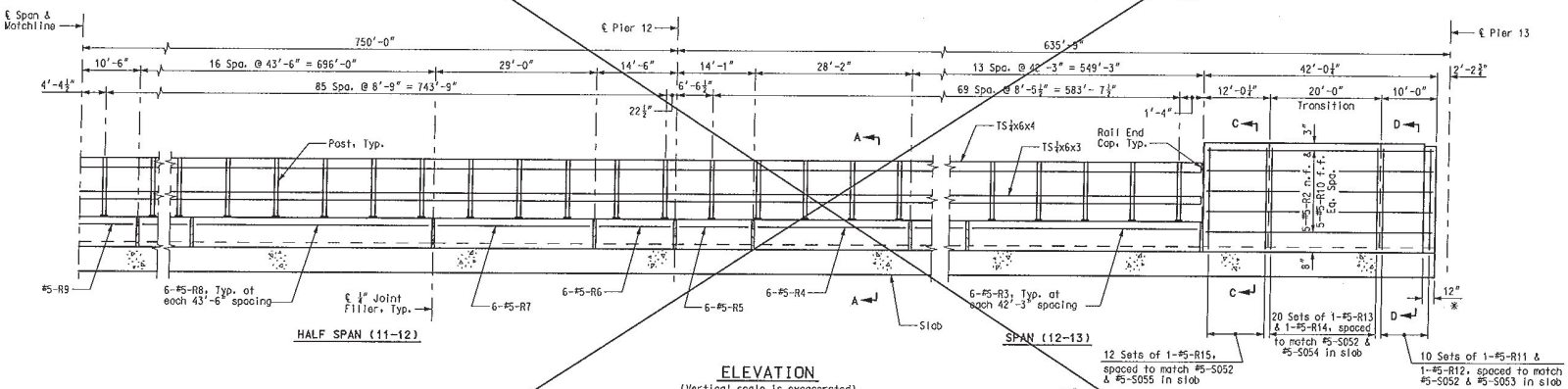

ELEVATION
(Vertical scale is exaggerated)

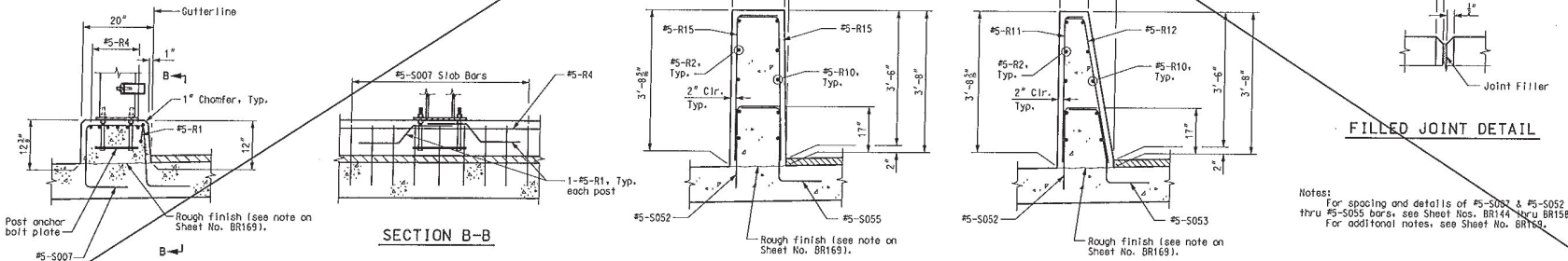

Notes:
For spacing and details of #5-S052 & #5-S052 thru #5-S055 bars, see Sheet Nos. BR144 thru BR158.
For additional notes, see Sheet No. BR169.

BRIDGE RAILING

Detailed JUL 2009
Checked JUL 2009

Note: This drawing is not to scale. Follow dimensions.

Sheet No. 167 of 205

DATE	9/23/11
ROUTE	I-70
STATE	MO/IL
DISTRICT	6
SHEET NO.	BR167
COUNTY	ST. LOUIS CITY - MO ST. CLAIR - IL
JOB NO.	J6I0984
CONTRACT ID.	091208-601
PROJECT NO.	I-70-9 (20)
BRIDGE NO.	A6500

DESCRIPTION	DATE
⚠ Sheet deleted	9-23-11

MISSOURI HIGHWAYS AND TRANSPORTATION COMMISSION
105 WEST CAPITOL
JEFFERSON CITY, MO 65102
1-888-ASK-MODOT (1-888-275-6636)

HNTB
715 KIRK DRIVE
KANSAS CITY, MO 64105-1310
TELEPHONE (816) 472-1201
CERTIFICATE OF AUTHORITY NO. 001370

FINAL PLANS

REV.

I:\de-proj\St_Louis_City\Construction\J6I0984\Asbuilts\Bridge\B_A6500_167-205_J6I0984_167_REV009.dgn
2:19:34 PM

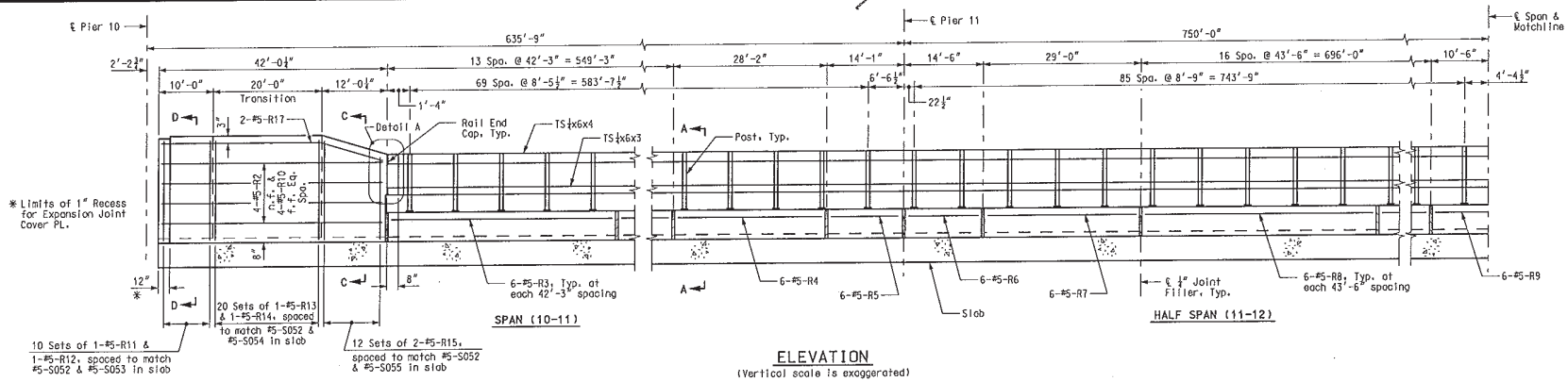

ELEVATION
(Vertical scale is exaggerated)

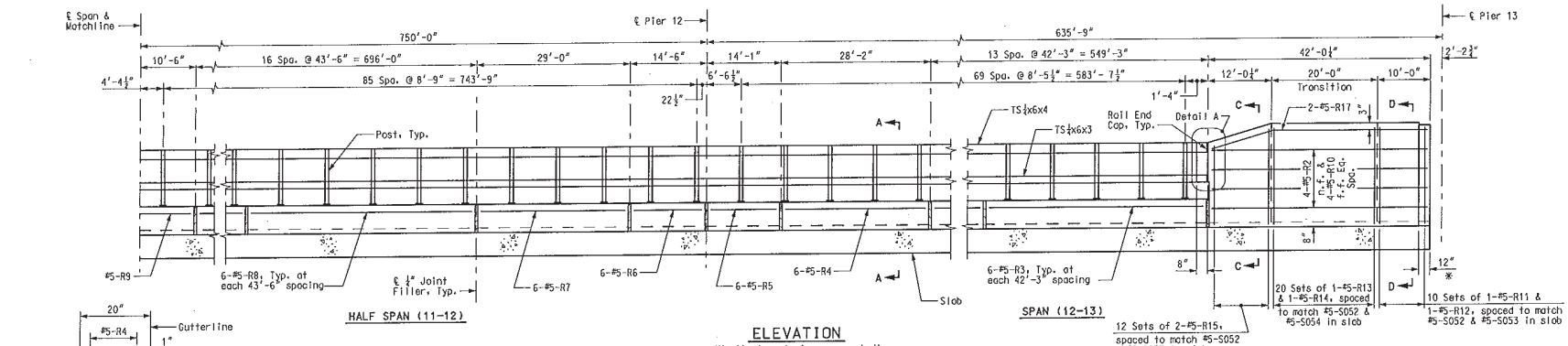

ELEVATION
(Vertical scale is exaggerated)

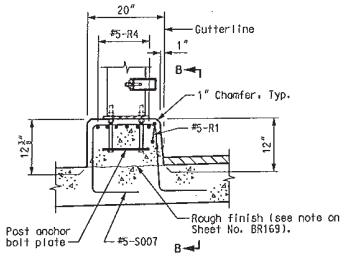

SECTION A-A
(Shown near ℄ Post)

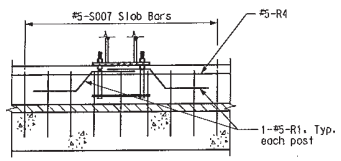

SECTION B-B

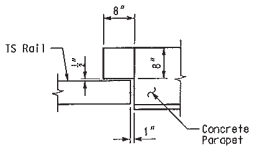

VIEW F-F

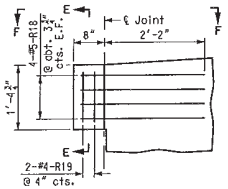

DETAIL A

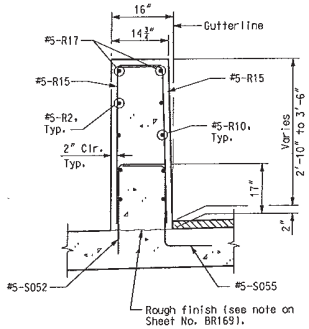

SECTION C-C

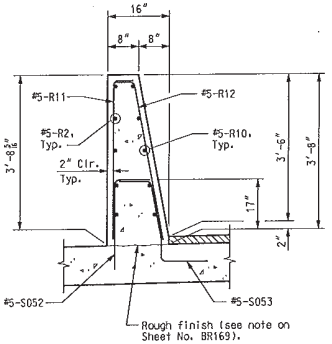

SECTION D-D

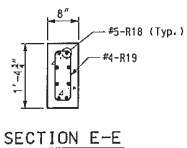

SECTION E-E

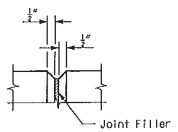

FILLED JOINT DETAIL

Notes:
For spacing and details of #5-S007 & #5-S052 thru #5-S055 bars, see Sheet Nos. BR144 thru BR158.
For additional notes, see Sheet No. BR169.

BRIDGE RAILING

Detailed JUL 2009
Checked JUL 2009

Note: This drawing is not to scale. Follow dimensions.

Sheet No.167Aof 205

T:\de-proj\St_Louis_City\Construction\J6I0984\Asbuilts\Bridge\B_A6500_167-205_J6I0984_167A_REV009.dgn

12:46:34 PM

DATE	9/23/11
ROUTE	I-70
STATE	MO/IL
DISTRICT	6
SHEET NO.	BR167A
COUNTY	ST. LOUIS CITY - MO ST. CLAIR - IL
JOB NO.	J6I0984
CONTRACT ID.	091208-601
PROJECT NO.	I-70-9 (20)
BRIDGE NO.	A6500

DATE	DESCRIPTION
9-23-11	⚠ Sheet added

MISSOURI HIGHWAYS AND TRANSPORTATION COMMISSION
105 WEST CAPITOL
JEFFERSON CITY, MO 65102
1-888-ASK-MODOT (1-888-275-6636)

HNTB
715 KIRK DRIVE
KANSAS CITY, MO 64105-1310
TELEPHONE (816) 472-1201
CERTIFICATE OF AUTHORITY NO. 001270

FINAL PLANS

REV.

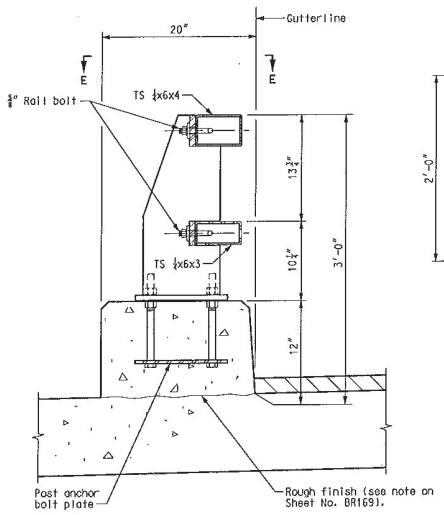

SECTION THRU RAIL
(Shown near ℄ Post)

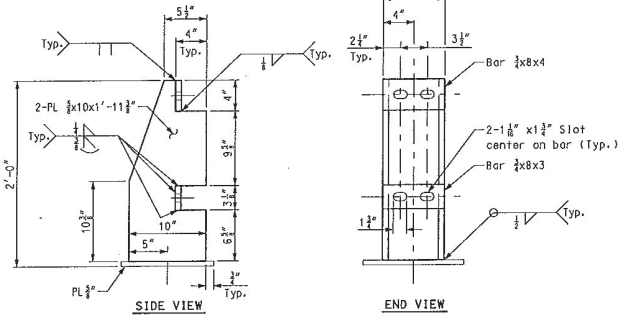

POST DETAILS

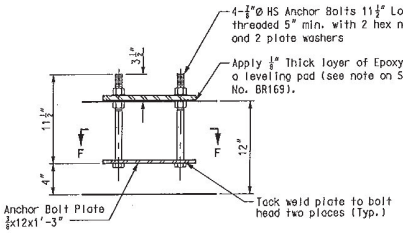

POST ANCHOR BOLT DETAILS

LIGHT POLE BLISTER LOCATIONS	
STATION	STATION
75+95.25	89+49.75
77+87.92	91+46.25
79+71.00	93+51.25
81+55.75	95+44.25
83+48.75	97+29.00
85+51.75	99+12.08
87+50.25	101+04.75

Notes:
Provide one Light Blister on each Bridge Rail at the Stations shown in table. (28 total)

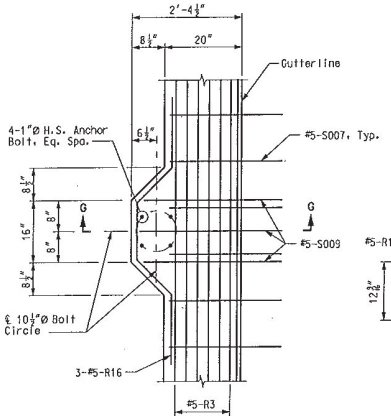

PLAN

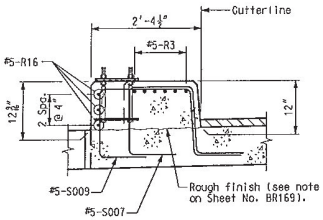

SECTION G-G

LIGHT POLE BLISTER DETAILS

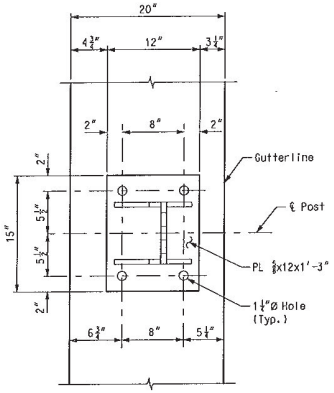

VIEW E-E
(Anchor bolts, Rails, and Rail bolts not shown for clarity.)

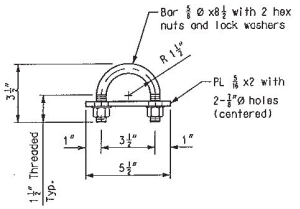

RAIL BOLT DETAIL

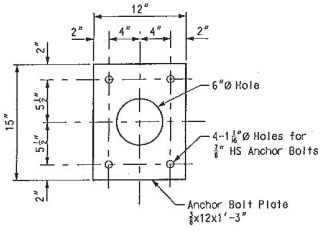

SECTION F-F

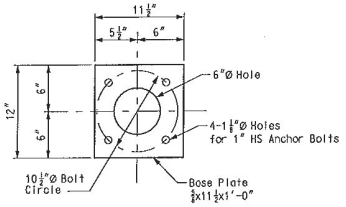

VIEW H-H

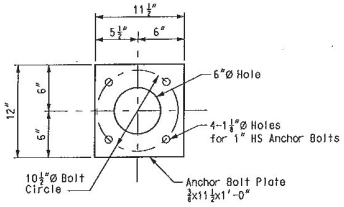

SECTION J-J

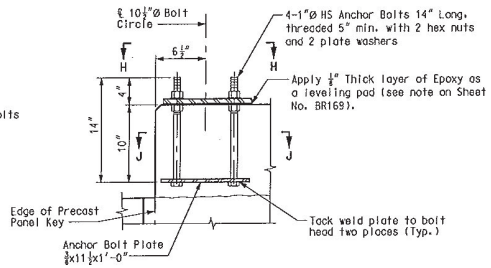

LIGHT POLE ANCHOR BOLT DETAILS

Notes:
For additional details and notes, see Sheet Nos. BR167 and BR169.

BRIDGE RAILING

DATE 8/20/09
ROUTE I-70 | STATE MO/IL
DISTRICT 6 | SHEET NO. BR168
COUNTY ST. LOUIS CITY - MO ST. CLAIR - IL
JOB NO. J6I0984
CONTRACT ID. 091208-601
PROJECT NO. I-70-9 (20)
BRIDGE NO. A6500

DESCRIPTION | DATE

MISSOURI HIGHWAYS AND TRANSPORTATION COMMISSION
105 WEST CAPITOL
JEFFERSON CITY, MO 65102
1-888-ASK-MODOT (1-888-275-6636)

HNTB
715 KIRK DRIVE
KANSAS CITY, MO 64105-1310
TELEPHONE (816) 472-1201
CERTIFICATE OF AUTHORITY NO. 001270

FINAL PLANS

Detailed JUL 2009
Checked JUL 2009

Note: This drawing is not to scale. Follow dimensions.

Sheet No. 168 of 205

T:\de-proj\St_Louis_City\Construction\J6I0984\Asbuilts\Bridge\B_A6500_168-205_J6I0984_168.dgn

12:48:16 PM

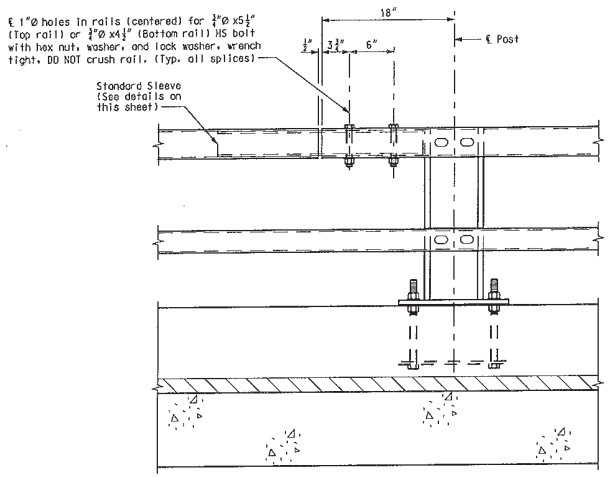

STANDARD SPLICE
(Top or bottom rail)

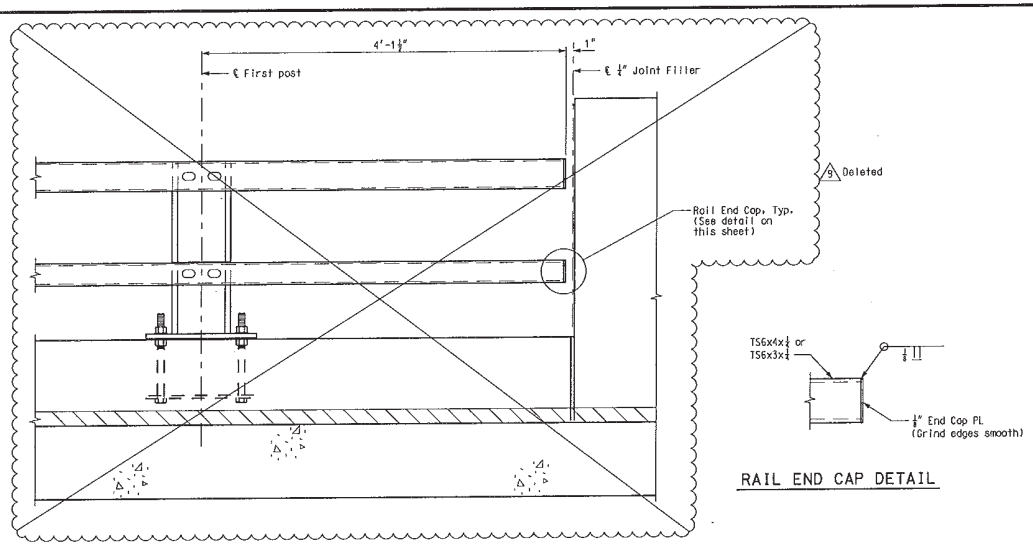

RAIL END CAP DETAIL

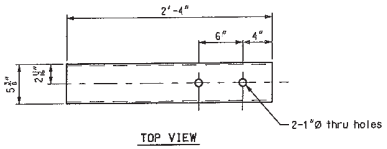

TOP VIEW

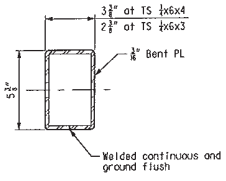

END VIEW

STANDARD SLEEVE DETAILS

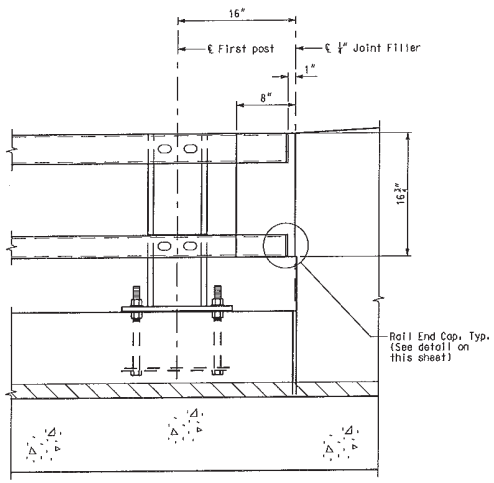

ELEVATION
(Showing end of railing)
9 Added

Notes:

Bridge rail structural tubing conform to ASTM A500 or ASTM A501, Grade A or B. If ASTM A500 Structural tubing is used, railing was tested in accordance with ASTM E436 after galvanizing.

Posts, plates and all other structural steel conform to ASTM A709, Grade 36.

High strength anchor bolts conform to ASTM A449.

Bolts conform to ASTM A325.

Nuts conform to ASTM A563 of appropriate grade and finish to match the anchor bolts and bolts.

Washers are in accordance with ASTM F436.

All railing structural steel, with the exception of the Anchor Bolt Plate, are galvanized in accordance with ASTM A153. Grind all edges smooth before galvanizing.

Anchor Bolt Plate were unpainted and non-galvanized.

Vent holes in the railing tubes are on the underside of the rail members and shown on the fabrication drawings.

Posts are set plumb transversely and perpendicular to the longitudinal grade.

At post locations, field drill two 1⅛" diameter holes in the rails to receive rail bolts. See post details for hole spacing.

Rails shall be continuous across a minimum of two posts. Only one rail (top or bottom) splice in any one span between posts.

The surface of the superstructure beneath the railing curb is rough finished with a minimum amplitude of ¼".

Epoxy leveling pad is Sikadur 32, Hi-Mod or equivalent. Epoxy was placed within the neat lines of the base plate and the anchor bolts tightened while the epoxy is still workable. Any excess epoxy squeeze was immediately removed.

All costs associated with the materials, fabrication and installation of the bridge railing was included in the pay item "Bridge Railing". This include the concrete curb, reinforcing steel, post anchor bolt plate, anchor bolts, base plate, posts, railing and associated hardware.

BRIDGE RAILING

DATE 9/23/11
ROUTE I-70 | STATE MO/IL
DISTRICT 6 | SHEET NO. BR169
COUNTY ST. LOUIS CITY - MO, ST. CLAIR - IL
JOB NO. J6I0984
CONTRACT ID. 091208-601
PROJECT NO. I-70-9 (20)
BRIDGE NO. A6500

REV.	DATE	DESCRIPTION
A	9-23-11	Revised Railing Ends

MISSOURI HIGHWAYS AND TRANSPORTATION COMMISSION
105 WEST CAPITOL
JEFFERSON CITY, MO 65102
1-888-ASK-MODOT (1-888-275-6636)
HNTB
715 KIRK DRIVE
KANSAS CITY, MO 64105-1310
TELEPHONE (816) 472-1201
CERTIFICATE OF AUTHORITY NO. 001270

FINAL PLANS

Detailed JUL 2009
Checked JUL 2009

Note: This drawing is not to scale. Follow dimensions.

T:\de-proj\St_Louis_City\Construction\J6I0984\Asbuilts\Bridge\B_A6500_169-205_J6I0984_169_REV009.dgn
10:22:15 AM

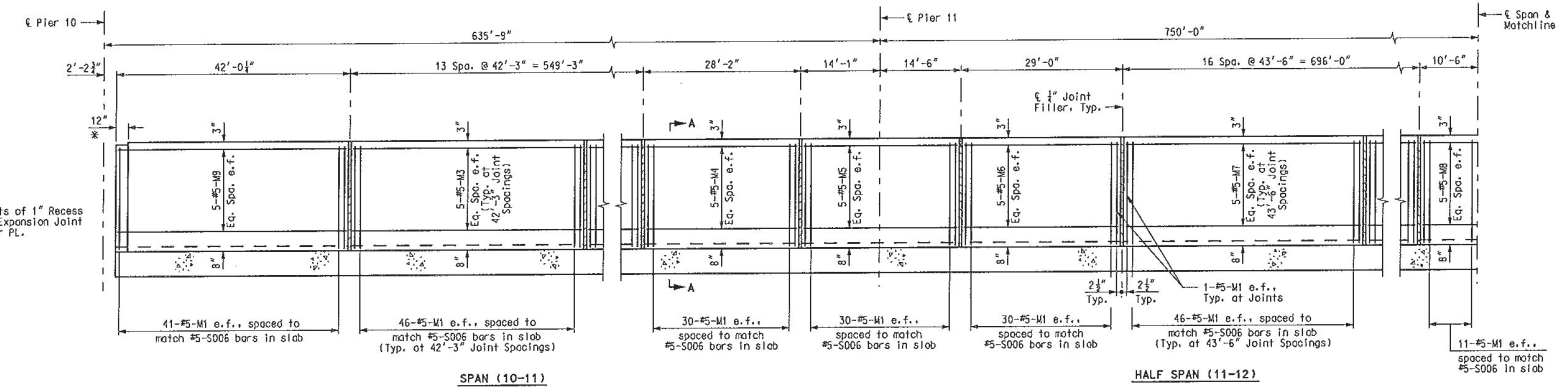

ELEVATION

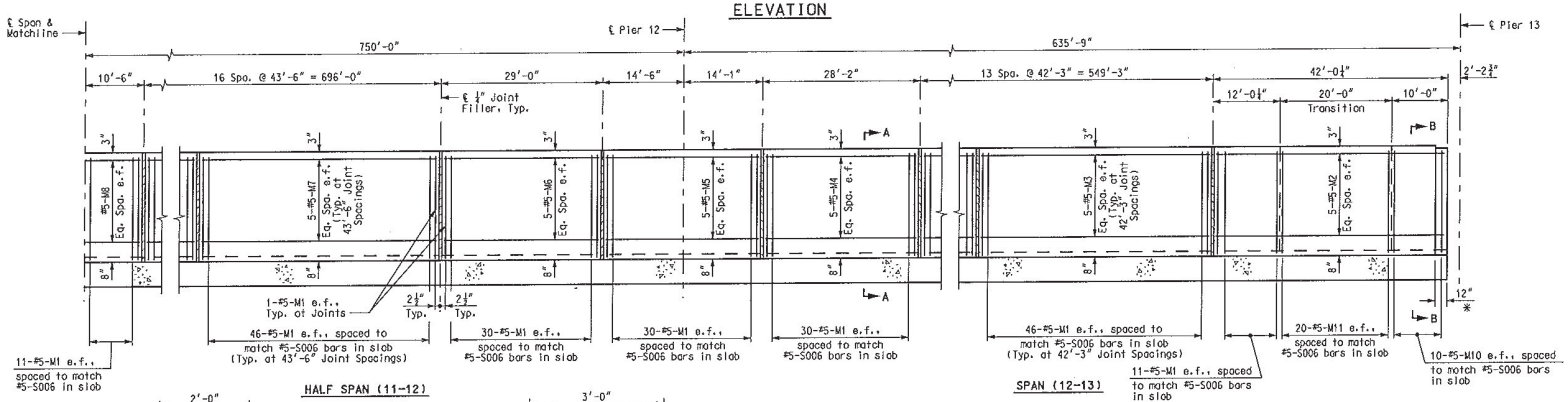

ELEVATION

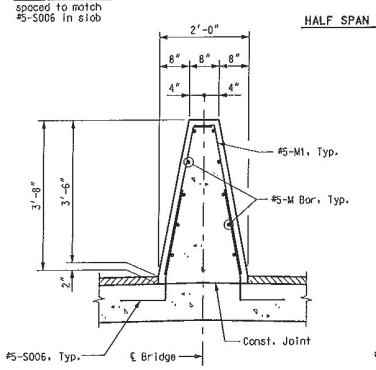

SECTION A-A

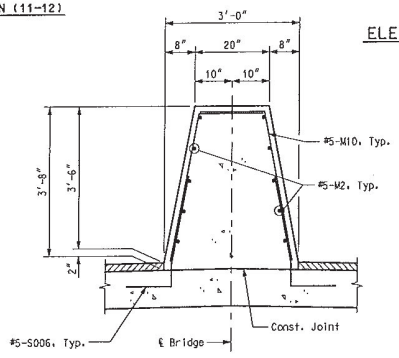

SECTION B-B

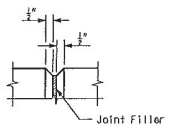

FILLED JOINT DETAIL

Notes:
e.f. denotes each face.
For spacing and details of #5-S006 bars, see Precast Slab Panel Details and Cast-In-Place Slab Details.
Top of Median Barrier Curb (Type C) was built parallel to grade with median barrier curb joints built normal to grade.
All exposed edges of Median Barrier Curb (Type C) are a ¾" bevel, unless otherwise noted.
Payment for all concrete and reinforcement, complete-in-place, was considered completely covered by the contract unit price for "Median Barrier Curb (Type C)" per linear foot.
Concrete in the Median Barrier Curb (Type C) is Class B-1.
Measurement of Median Barrier Curb (Type C) is to the nearest linear foot, measured from end of slab at Pier 10 to end of slab at Pier 13.
The curb is cured by application of Type 1-D or Type 2 Liquid Membrane-Forming Compound in accordance with Sec 1055. Surface sealing for concrete in accordance with Sec 703 is not required. Application of linseed oil at the Contractor's expense is permitted.
Concrete traffic barrier delineators are placed on top of the Median Barrier Curb (Type C) as shown on Missouri Standard Plans 617.10 and in accordance with Section 617. Concrete traffic delineators are considered completely covered by the contract unit price for "Median Barrier Curb (Type C)".

MEDIAN BARRIER CURB (TYPE C)

Detailed JUL 2009
Checked JUL 2009

Note: This drawing is not to scale. Follow dimensions.

T:\de-proj\St_Louis_City\Construction\J6I0984\Asbuilts\Bridge\B_A6500_170-205_J6I0984_170.dgn

10:27:32 AM

DATE 8/20/09
ROUTE I-70 | STATE MO/IL
DISTRICT 6 | SHEET NO. BR170
COUNTY ST. LOUIS CITY - MO ST. CLAIR - IL
JOB NO. J6I0984
CONTRACT ID. 091208-601
PROJECT NO. I-70-9 (20)
BRIDGE NO. A6500

DESCRIPTION | DATE

MISSOURI HIGHWAYS AND TRANSPORTATION COMMISSION
105 WEST CAPITOL
JEFFERSON CITY, MO 65102
1-888-ASK-MODOT (1-888-275-6636)

HNTB
715 KIRK DRIVE
KANSAS CITY, MO 64105-1310
TELEPHONE (816) 472-1201
CERTIFICATE OF AUTHORITY NO. 001270

FINAL PLANS

REV.

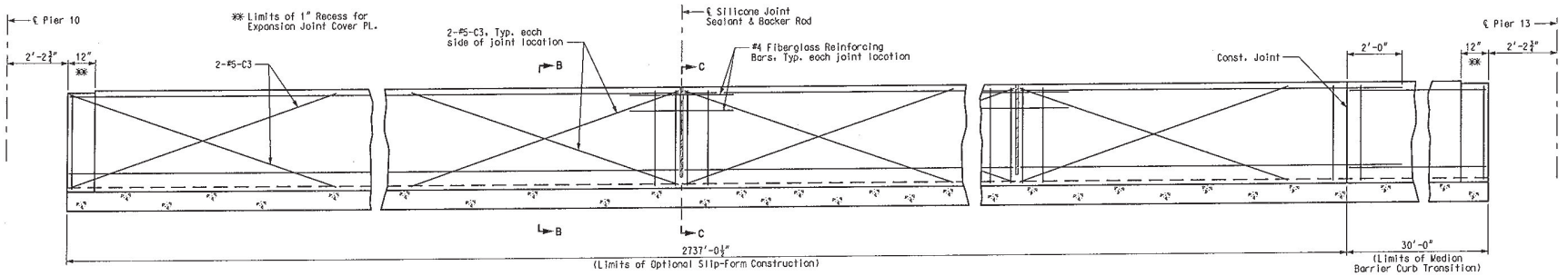

ELEVATION

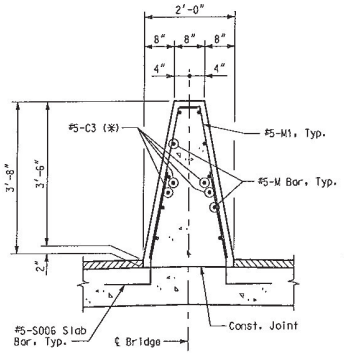

SECTION B-B

(✻) Each side of joint location.

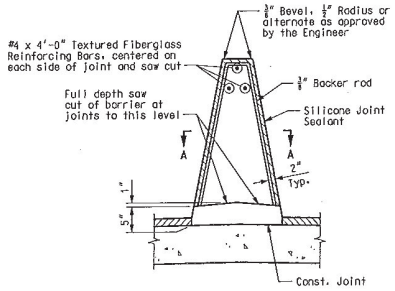

SECTION C-C

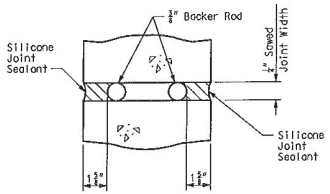

SECTION A-A

Notes:

Top of Median Barrier Curb (Type C) was built parallel to grade with median barrier curb joints built normal to grade.

Payment for all concrete and reinforcement, complete-in-place, was considered completely covered by the contract unit price for "Median Barrier Curb (Type C)" per linear foot.

Concrete in the Median Barrier Curb (Type C) was Class B-1.

Measurement of Median Barrier Curb (Type C) is to the nearest linear foot, measured along the gutterline from end of slab at Pier 10 to end of slab at Pier 13.

The curb is cured by application of Type 1-D or Type 2 Liquid Membrane-Forming Compound in accordance with Section 1055. Surface sealing for concrete in accordance with Section 703 is not required. Application of linseed oil at the Contractor's expense is permitted.

Joint sealant and backer rods are used on all slip-form barrier curbs instead of joint filler and shall be in accordance with Section 717 for silicone joint sealant for saw cut and formed joints.

C Bars (Slip-Form option only) were used in addition to cast-in-place conventional forming reinforcement for Median Barrier Curb (Type C).

For Slip-form option, all sides of the Median Barrier Curb (Type C) have a vertically broomed finish and the curb top has a transversely broomed finish.

Cost of silicone joint sealant and backer rods, complete-in-place, will be considered completely covered by the contract unit price for "Median Barrier Curb (Type C)".

Concrete traffic barrier delineators are placed on top of the Median Barrier Curb (Type C) as shown on Missouri Standard Plans 617.10 and in accordance with Section 617. Concrete traffic barrier delineators will be considered completely covered by the contract unit price for "Median Barrier Curb (Type C)".

OPTIONAL SLIP-FORM MEDIAN BARRIER CURB (TYPE C)

DATE 8/20/09
ROUTE I-70 STATE MO/IL
DISTRICT 6 SHEET NO. BR171
COUNTY ST. LOUIS CITY - MO ST. CLAIR - IL
JOB NO. J6I0984
CONTRACT ID. 091208-601
PROJECT NO. I-70-9 (20)
BRIDGE NO. A6500

DESCRIPTION | DATE

MISSOURI HIGHWAYS AND TRANSPORTATION COMMISSION
105 WEST CAPITOL
JEFFERSON CITY, MO 65102
1-888-ASK-MODOT (1-888-275-6636)

HNTB
715 KIRK DRIVE
KANSAS CITY, MO 64105-1310
TELEPHONE (816) 472-1201
CERTIFICATE OF AUTHORITY NO. 001270

FINAL PLANS

REV.

Detailed JUL 2009
Checked JUL 2009

Note: This drawing is not to scale. Follow dimensions.

T:\de-proj\St_Louis_City\Construction\J6I0984\Asbuilts\Bridge\B_A6500_171-205_J6I0984_171.dgn

12:39:55 PM

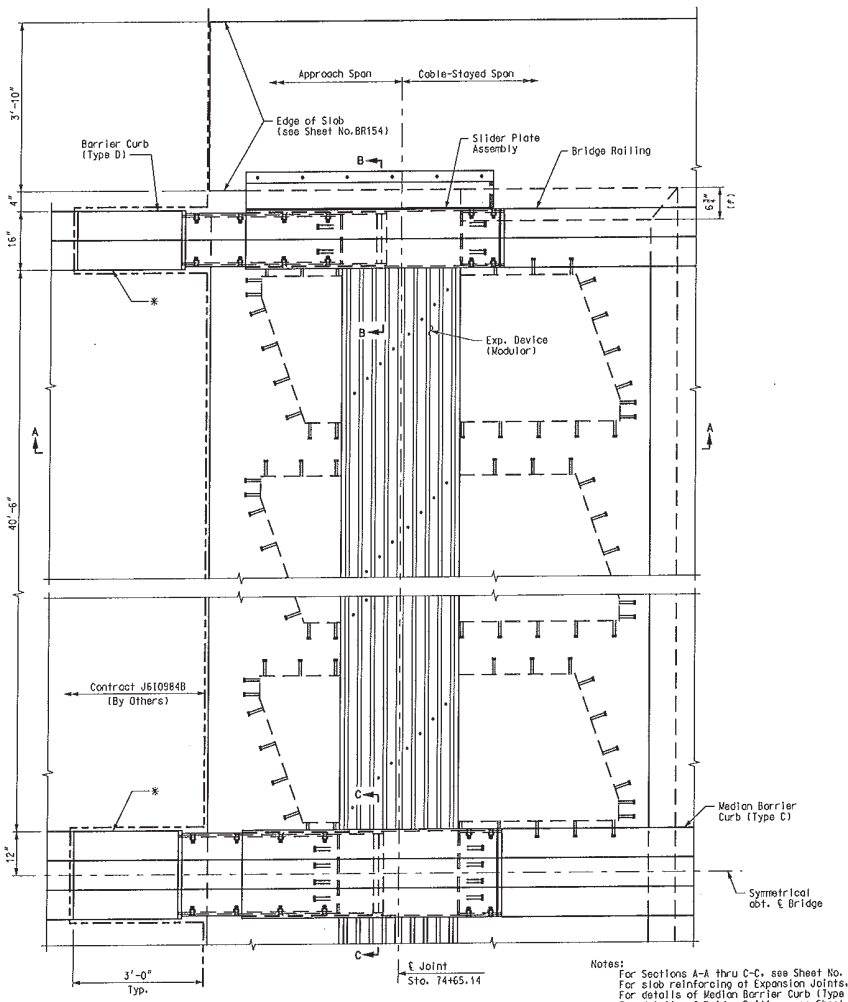

PLAN - PIER 10

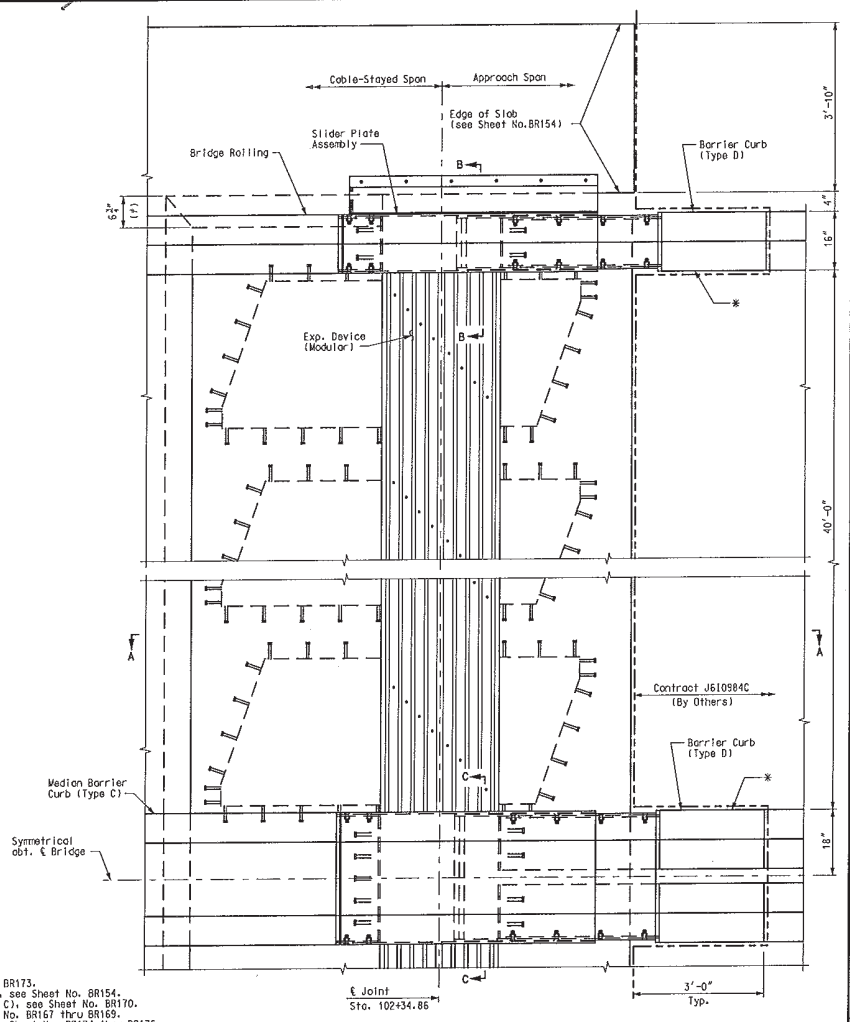

PLAN - PIER 13

Notes:
For Sections A-A thru C-C, see Sheet No. BR173.
For slab reinforcing at Expansion Joints, see Sheet No. BR154.
For details of Median Barrier Curb (Type C), see Sheet No. BR170.
For details of Bridge Railing, see Sheet No. BR167 thru BR169.
For details of Slider Plate Assembly, see Sheet No. BR174 thru BR176.
Design movements for modular expansion device are 9.75 inches for closing and 18.6 inches for opening (LRFD Service I).
The cost of materials, fabrication, and installation of Expansion Joint, including the slider plate assemblies, included in the pay item "Modular Expansion Joint System".
* Reinforcing steel for barrier curb & median barrier curb in this region will be supplied & installed by others. Concrete & slider plate assembly will be supplied and installed by this contract.
† Dimensions are based on the D.S. Brown Steelflex D-720 Joint System. Contractor is responsible for all modifications should the joint supplied have different dimensions. All modifications were at no additional cost. Modifications shall be submitted to the Engineer for review and approval.
Plan dimensions are based on installation at 60°F. The expansion gap and other dimensions shall be increased or decreased 1⅜" for each 10° fall or rise in temperature at installation.

EXPANSION JOINT DETAILS - PIERS 10 & 13

DATE 8/20/09
ROUTE I-70 | STATE MO/IL
DISTRICT 6 | SHEET NO. BR172
COUNTY ST. LOUIS CITY - MO / ST. CLAIR - IL
JOB NO. J6I0984
CONTRACT NO. 091208-601
PROJECT NO. I-70-9 (20)
BRIDGE NO. A6500

DESCRIPTION | DATE

MISSOURI HIGHWAYS AND TRANSPORTATION COMMISSION
105 WEST CAPITOL
JEFFERSON CITY, MO 65102
1-888-ASK-MODOT (1-888-275-6636)

HNTB
715 KIRK DRIVE
KANSAS CITY, MO 64105-1310
TELEPHONE (816) 472-1201
CERTIFICATE OF AUTHORITY NO. 001270

FINAL PLANS

REV.

Detailed JUL 2009
Checked JUL 2009

Note: This drawing is not to scale. Follow dimensions.

Sheet No. 172 of 205

T:\de-proj\St_Louis_City\Construction\J6I0984\Asbuilts\Bridge\B_A6500_172-205_J6I0984_172.dgn

12:45:27 PM

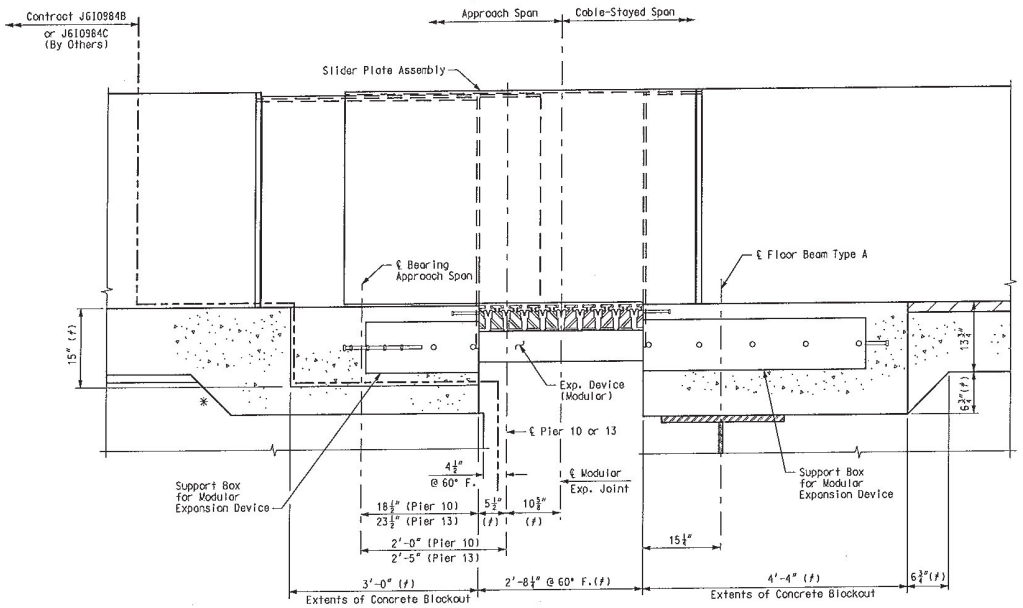

SECTION A-A

* Approach slab details shown for Pier 13, details at Pier 10 are similar.

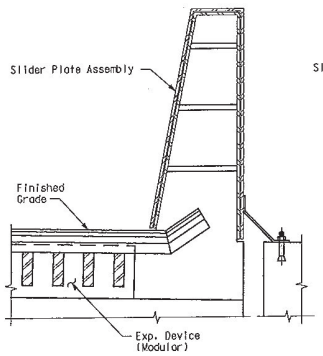

SECTION B-B

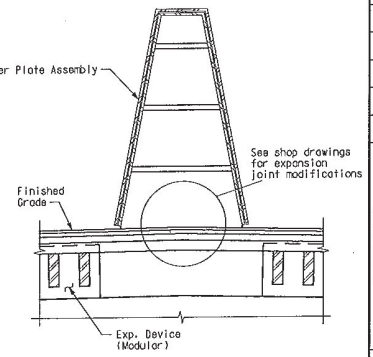

SECTION C-C

Notes:
For additional notes and locations of Sections A-A thru C-C, see Sheet No. BR172.

EXPANSION JOINT DETAILS – PIERS 10 & 13

DATE 8/20/09
ROUTE I-70 | STATE MO/IL
DISTRICT 6 | SHEET NO. BR173
COUNTY ST. LOUIS CITY - MO, ST. CLAIR - IL
JOB NO. J6I0984
CONTRACT ID. 091208-601
PROJECT NO. I-70-9 (20)
BRIDGE NO. A6500

DESCRIPTION | DATE

MISSOURI HIGHWAYS AND TRANSPORTATION COMMISSION
MoDOT
105 WEST CAPITOL
JEFFERSON CITY, MO 65102
1-888-ASK-MODOT (1-888-275-6636)

HNTB
715 KIRK DRIVE
KANSAS CITY, MO 64105-4310
TELEPHONE (816) 472-1201
CERTIFICATE OF AUTHORITY NO. 001270

FINAL PLANS

REV.

Detailed JUL 2009
Checked JUL 2009

Note: This drawing is not to scale. Follow dimensions.

T:\de-proj\St_Louis_City\Construction\J6I0984\Asbuilts\Bridge\B_A6500_173-205_J6I0984_173.dgn

1:13:37 PM

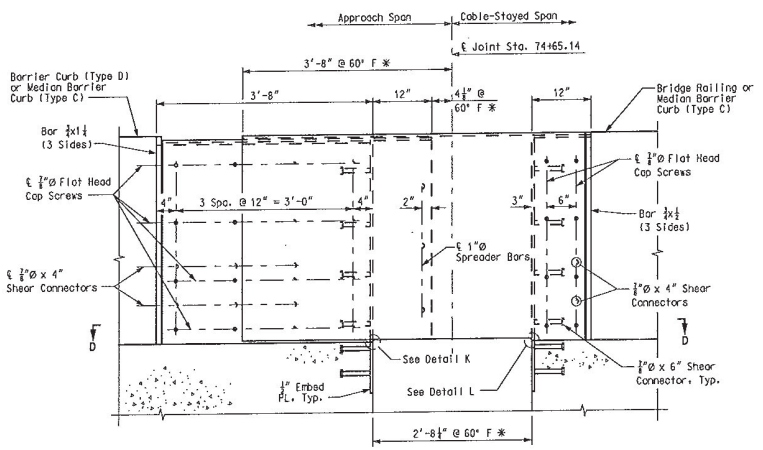

ELEVATION - COVER PLATES AT PIER 10

(Elevation shown at Bridge Railing; Median Barrier Curb (Type C) similar.)

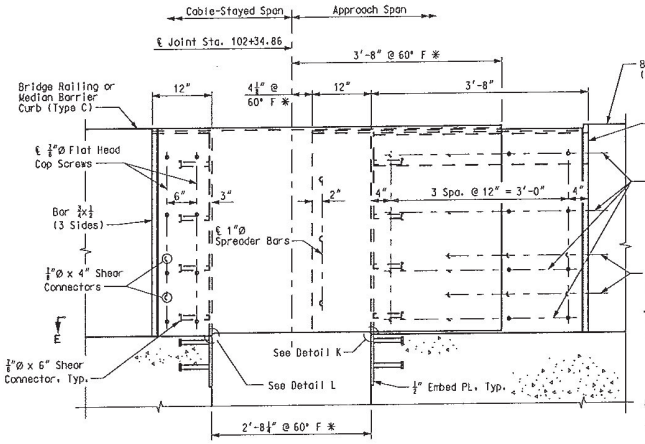

ELEVATION - COVER PLATES AT PIER 13

(Elevation shown at Bridge Railing; Median Barrier Curb (Type C) similar.)

Notes:

For Sections F-F thru J-J and Details K thru P, see Sheet No. BR175.

For Sections R-R thru W-W, see Sheet No. BR176.

Contractor has furnish all components of Expansion Joint shown on this sheet.

✱ Gap dimension @ 60°F is dependant upon modular expansion joint selection. Contractor is responsible for coordinating any revisions required due to deviations from dimensions shown.

All plates were be ASTM A709 Grade 50 material and are hot-dip galvanized after fabrication in accordance with ASTM A123.

All cap screws are ⅞"Ø x3" flat countersunk head cap screw ASTM F835-04 and are hot-dip galvanized in accordance with ASTM A153.

Anchor studs, washers and nuts conform to the requirements of ASTM A307 and are galvanized in accordance to ASTM A153.

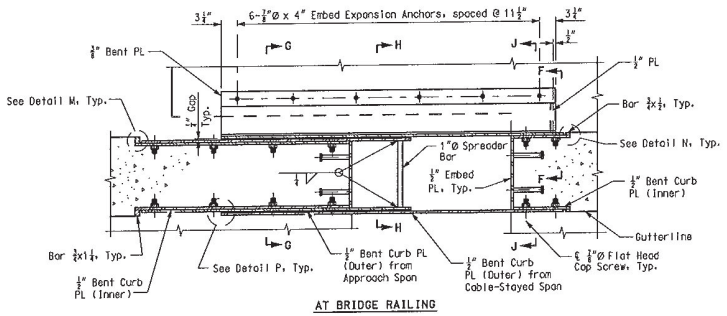

AT BRIDGE RAILING

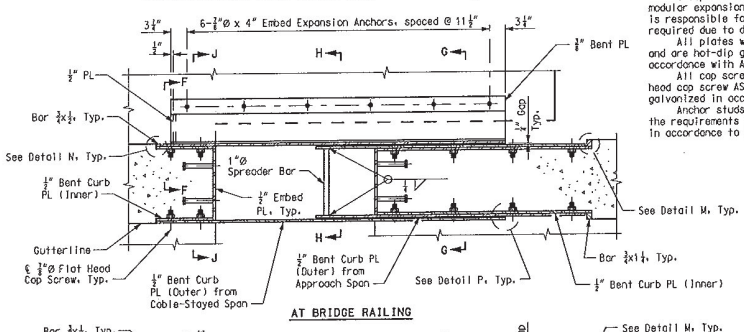

AT BRIDGE RAILING

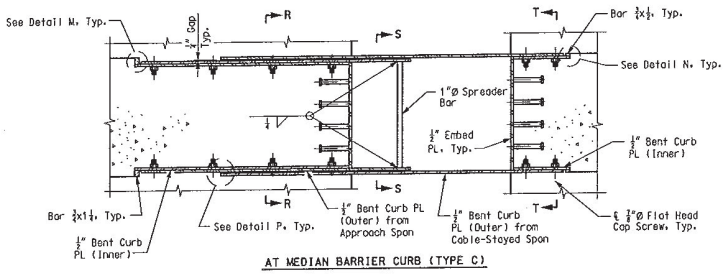

AT MEDIAN BARRIER CURB (TYPE C)

SECTION D-D

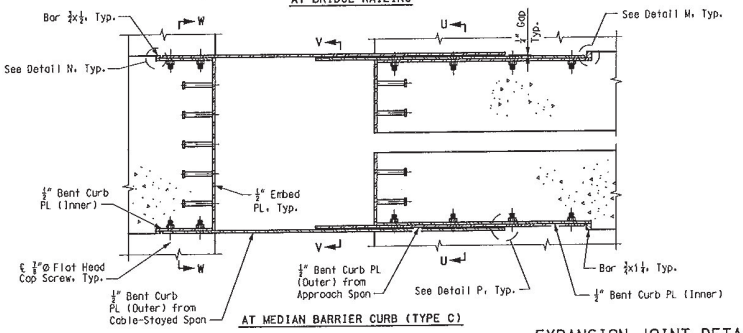

AT MEDIAN BARRIER CURB (TYPE C)

SECTION E-E

EXPANSION JOINT DETAILS - PIERS 10 & 13

DATE	8/20/09
ROUTE	I-70
STATE	MO/IL
DISTRICT	6
SHEET NO.	BR174
COUNTY	ST. LOUIS CITY - MO ST. CLAIR - IL
JOB NO.	J6I0984
CONTRACT ID.	091208-601
PROJECT NO.	I-70-9 (20)
BRIDGE NO.	A6500

DESCRIPTION | DATE

MISSOURI HIGHWAYS AND TRANSPORTATION COMMISSION

105 WEST CAPITOL JEFFERSON CITY, MO 65102 1-888-ASK-MODOT (1-888-275-6636)

HNTB
715 KIRK DRIVE
KANSAS CITY, MO 64105-1310
TELEPHONE (816) 472-1201
CERTIFICATE OF AUTHORITY NO. 001270

FINAL PLANS

REV.

Detailed JUL 2009
Checked JUL 2009

Note: This drawing is not to scale. Follow dimensions.

T:\de-proj\St_Louis_City\Construction\J6I0984\Asbuilts\Bridge\B_A6500_174-205_J6I0984_174.dgn

12:47:32 PM

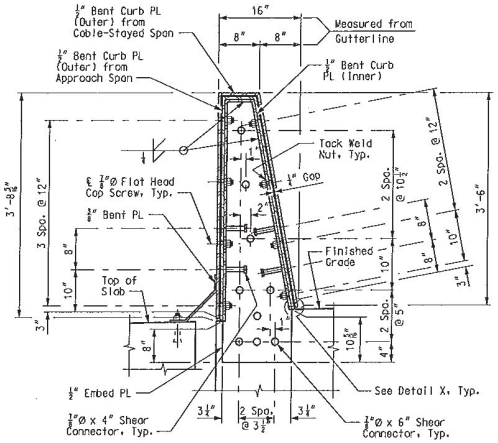

SECTION G-G

(Section shown at Pier 10: Pier 13 is opposite-hand.)

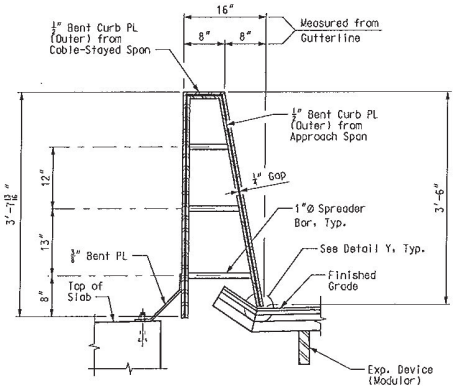

SECTION H-H

(Section shown at Pier 10: Pier 13 is opposite-hand.)

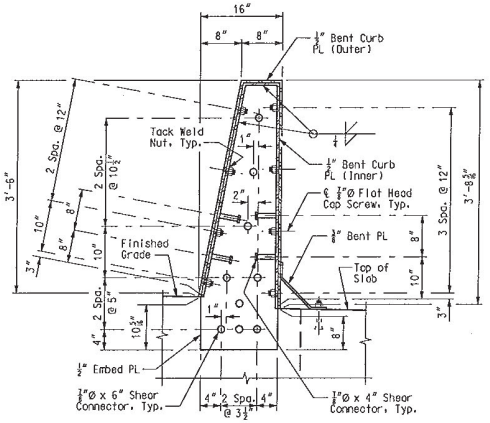

SECTION J-J

(Section shown at Pier 10: Pier 13 is opposite-hand.)

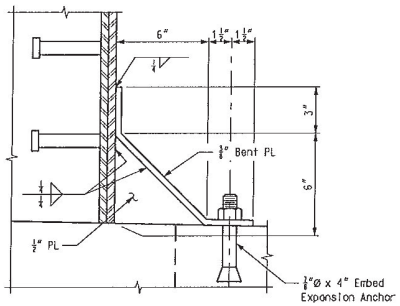

SECTION F-F

(Section shown at Pier 10: Pier 13 is opposite-hand.)

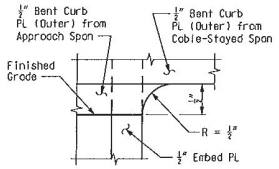

DETAIL K

(Section shown at Pier 10: Pier 13 is opposite-hand.)

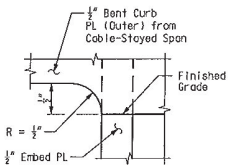

DETAIL L

(Section shown at Pier 10: Pier 13 is opposite-hand.)

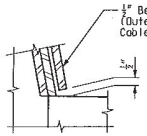

DETAIL X

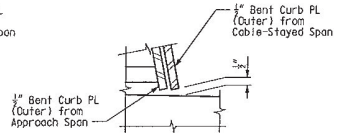

DETAIL Y

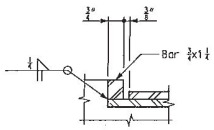

DETAIL M

(Section shown at Pier 10: Pier 13 is opposite-hand.)

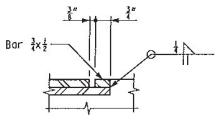

DETAIL N

(Section shown at Pier 10: Pier 13 is opposite-hand.)

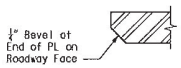

DETAIL P

(Section shown at Pier 10: Pier 13 is opposite-hand.)

Notes:
For location of Sections F-F thru J-J and Details K thru P, see Sheet No. BR174.
For additional notes, see Sheet Nos. BR172 & BR174.

EXPANSION JOINT DETAILS - PIERS 10 & 13

DATE 8/20/09
ROUTE I-70 | STATE MO/IL
DISTRICT 6 | SHEET NO. BR175
COUNTY ST. LOUIS CITY - MO ST. CLAIR - IL
JOB NO. J6I0984
CONTRACT ID. 091208-601
PROJECT NO. I-70-9 (20)
BRIDGE NO. A6500

DESCRIPTION | DATE

MISSOURI HIGHWAYS AND TRANSPORTATION COMMISSION
105 WEST CAPITOL
JEFFERSON CITY, MO 65102
1-888-ASK-MODOT (1-888-275-6636)

HNTB
715 KIRK DRIVE
KANSAS CITY, MO 64105-1310
TELEPHONE (816) 472-1201
CERTIFICATE OF AUTHORITY NO. 001270

FINAL PLANS

REV.

Detailed JUL 2009
Checked JUL 2009

Note: This drawing is not to scale. Follow dimensions.

T:\de-proj\St_Louis_City\Construction\J6I0984\Asbuilts\Bridge\B_A6500_175-205_J6I0984_175.dgn 1:15:58 PM

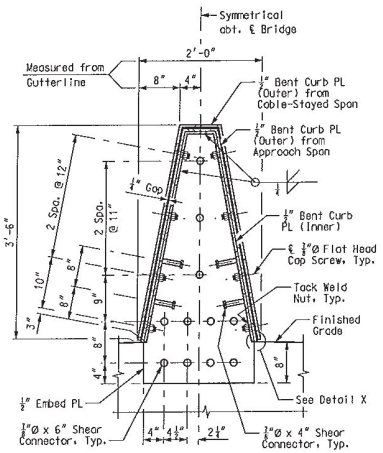

SECTION R-R

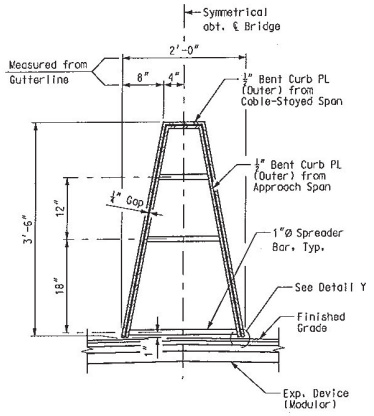

SECTION S-S

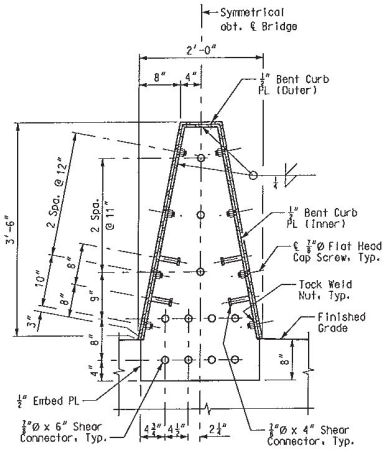

SECTION T-T

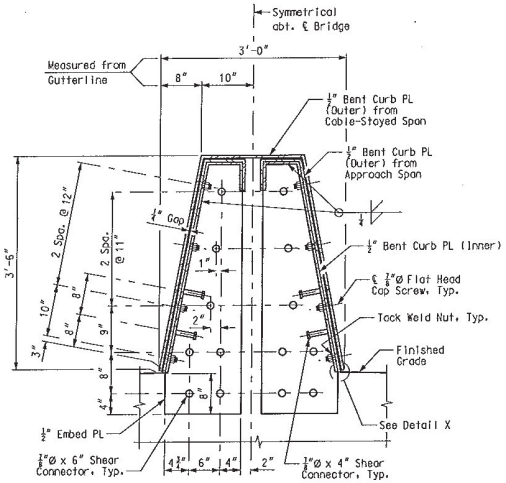

SECTION U-U

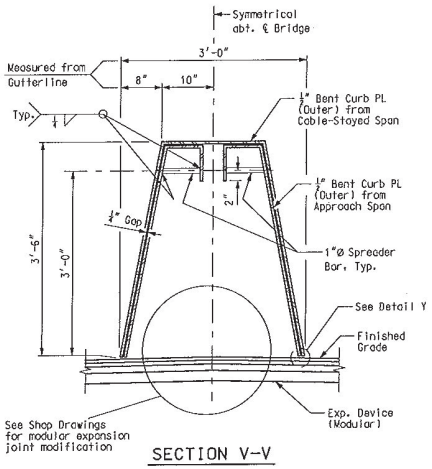

SECTION V-V

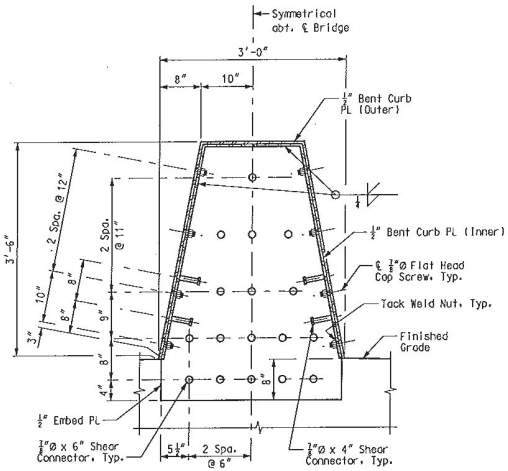

SECTION W-W

Notes:
For location of Sections R-R thru W-W, see Sheet No. BR174.
For Details X & Y, see Sheet No. BR175.
For additional notes, see Sheet Nos. BR172 & BR174.

EXPANSION JOINT DETAILS – PIERS 10 & 13

DATE 8/20/09
ROUTE I-70 | STATE MO/IL
DISTRICT 6 | SHEET NO. BR176
COUNTY ST. LOUIS CITY - MO ST. CLAIR - IL
JOB NO. J6I0984
CONTRACT ID. 091208-601
PROJECT NO. I-70-9 (20)
BRIDGE NO. A6500

DESCRIPTION | DATE

MISSOURI HIGHWAYS AND TRANSPORTATION COMMISSION
105 WEST CAPITOL
JEFFERSON CITY, MO 65102
1-888-ASK-MODOT (1-888-275-6636)

HNTB
715 KIRK DRIVE
KANSAS CITY, MO 64105-1310
TELEPHONE (816) 483-1600
CERTIFICATE OF AUTHORITY NO. 001270

FINAL PLANS

REV.

Detailed JUL 2009
Checked JUL 2009

Note: This drawing is not to scale. Follow dimensions.

T:\de-proj\St_Louis_City\Construction\J6I0984\Asbuilts\Bridge\B_A6500_176-205_J6I0984_176.dgn

1:19:01 PM

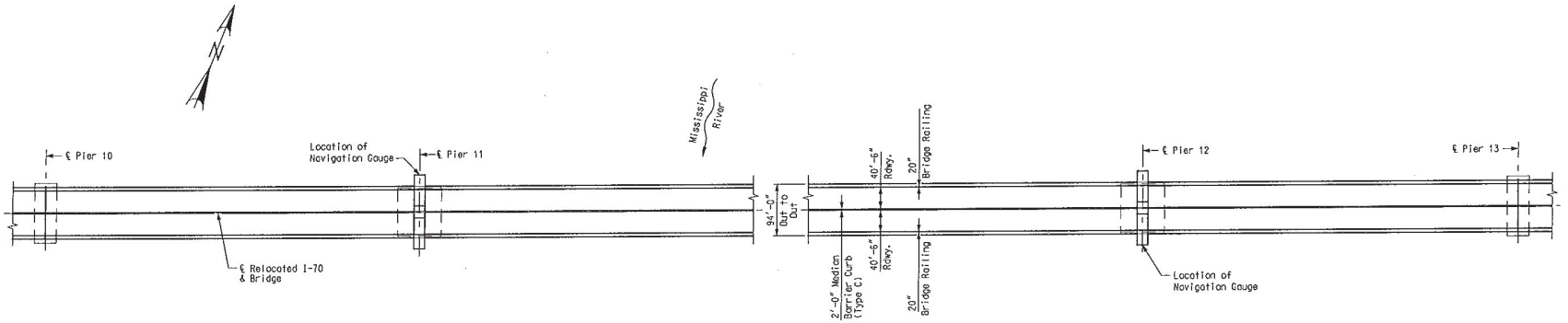

PLAN

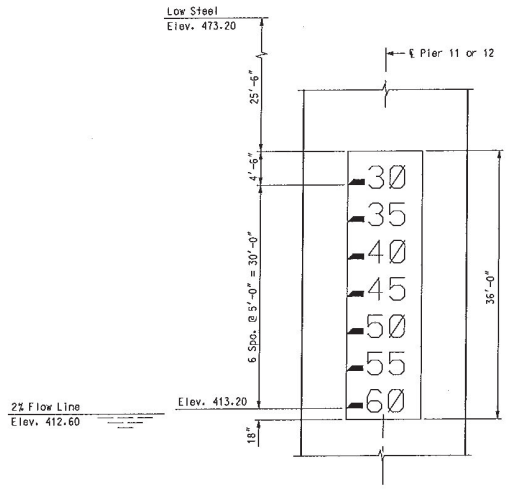

NAVIGATION GAUGE
(Dimensions shown are vertical)

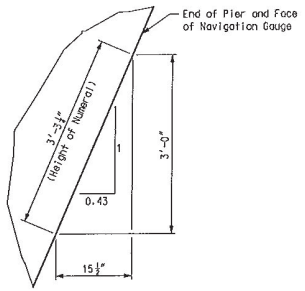

SCHEMATIC VIEW OF PAINTED NUMERAL

Notes:

The navigation gauge is pointed on the upstream side of Pier 11 and the downstream side of Pier 12, using block numerals and footmarks on a white background.

Numerals conform to those in "Standard Alphabets for Highway Signs", U.S. Department of Transportation, Federal Highway Administration, with a height of 36" (measured vertically).

The length of the footmarks must be no less than the width fo a single numeral used (except numerals 1 and 4), and the thickness is the same os the width of stroke of the numeral. The footmarks extend to the nearest margin of the white background.

The minimum width of white background is not be less than three times the width of a single numeral (except numerals 1 and 4) plus the width of each additional numeral (when multiple numerals are used), plus numeral spacing.

Paint is of good quality, resistent to chalking or bleeding.

The cost of the clearance gauge shall be incidental to the cost of the Piers.

NAVIGATION CLEARANCE GAUGE – PIERS 11 & 12

DATE 5/17/10
ROUTE I-70 | STATE MO/IL
DISTRICT 6 | SHEET NO. BR177
COUNTY ST. LOUIS CITY – MO ST. CLAIR – IL
JOB NO. J6I0984
CONTRACT ID. 091208-601
PROJECT NO. I-70-9 (20)
BRIDGE NO. A6500

REV.	DATE	DESCRIPTION
1	5-17-10	Revised per ATC

MISSOURI HIGHWAYS AND TRANSPORTATION COMMISSION
105 WEST CAPITOL
JEFFERSON CITY, MO 65102
1-888-ASK-MODOT (1-888-275-6636)

HNTB
715 KIRK DRIVE
KANSAS CITY, MO 64105-1310
TELEPHONE (816) 472-1201
CERTIFICATE OF AUTHORITY
MO. 001270

FINAL PLANS

Detailed JUL 2009
Checked JUL 2009

Note: This drawing is not to scale. Follow dimensions.

T:\de-proj\St_Louis_City\Construction\J6I0984\Asbuilts\Bridge\B_A6500_177-205_J6I0984_177.dgn

12:50:14 PM

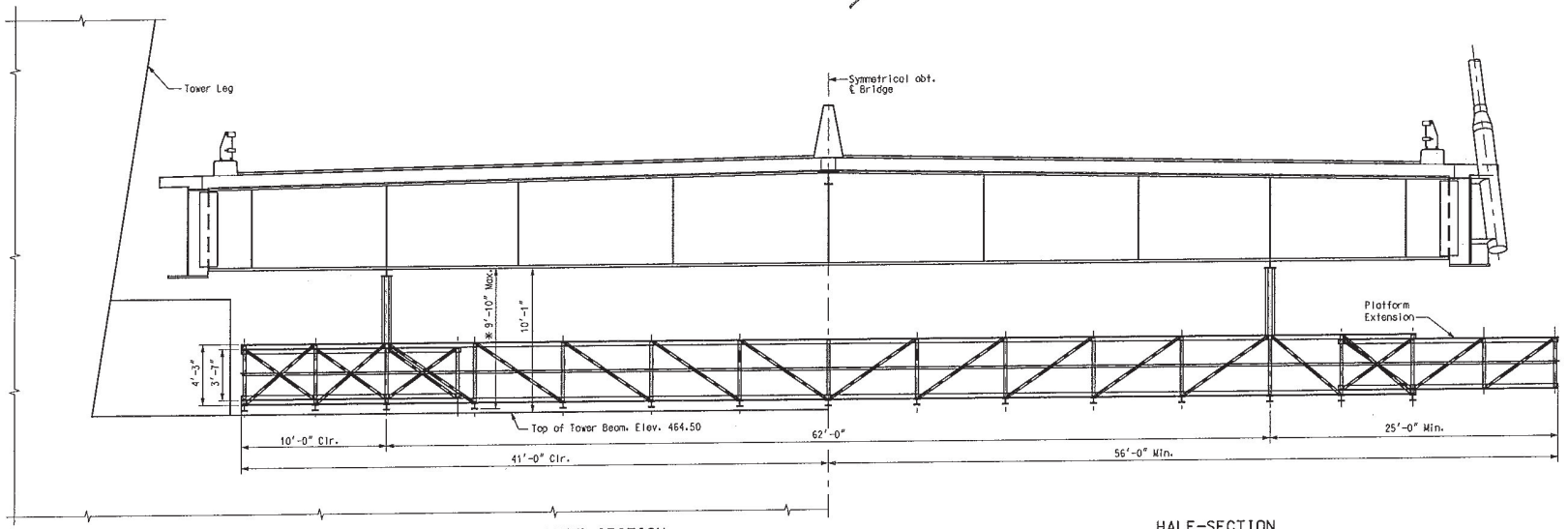

HALF-SECTION
(Traveler Collapsed)
(Lateral Restrainer and Bearing Not Shown)

HALF-SECTION
(Traveler Extended)

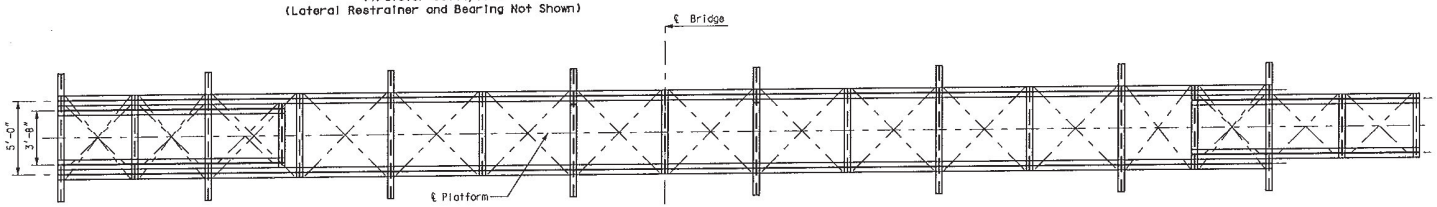

* Inspection Traveler Support System is of sufficient height to provide approximately 6'-0" minimum between the walkway and the bottom of the floor beam. A distance of 6'-6" between the walkway and the bottom of the floor beam are set the elevation of the access platform. See Sheet Nos. BR99 thru BR101 for Inspection Traveler Access Details.

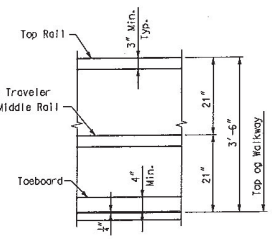

RAILING DIAGRAM

Notes:

The inspection traveler platform shown on this sheet is schematic in nature. The platform and rails, platform suspension system, access, propulsion and power systems are to be developed by the traveler manufacturer. See Special Provision "Inspection Traveler".

The structural system for the traveler is galvanized steel with yield strength no less than 36 ksi.

3 Traveler rails that are bolted to the bottom of the floor beams are made from uncoated A709, Gr. 50W steel. Bolts connecting the traveler rail to the floor beam are A325, type 3.

Walkways are consist of non-skid galvanized steel floor grating planks, similar to eight-diamond safety grating. The walkway less than 36" wide. The walkway are equipped with railing in accordance with the Railing Diagram shown on this sheet.

In addition to dead load and any permanent equipment loading, the traveler is designed for a minimum uniform live load of 50 psf plus two concentrated loads of 200 pounds positioned to produce the maximum stress.

The traveler is designed for a wind speed of 30 mph during operation and 70 mph while parked.

The Contractor has provide a method for emergency egress when the traveler is at any position along the span.

The total dead load of the traveler did not exceed 40 kips.

INSPECTION TRAVELER DETAILS

DATE 11/25/09
ROUTE I-70 | STATE MO/IL
DISTRICT 6 | SHEET NO. BR178
COUNTY ST. LOUIS CITY - MO ST. CLAIR - IL
JOB NO. J6I0984
CONTRACT ID. 091208-601
PROJECT NO. I-70-9 (20)
BRIDGE NO. A6500

REV.	DESCRIPTION	DATE
3	Revised traveler rail	11-25-09

MISSOURI HIGHWAYS AND TRANSPORTATION COMMISSION
105 WEST CAPITOL
JEFFERSON CITY, MO 65102
1-888-ASK-MODOT (1-888-275-6636)

HNTB
715 KIRK DRIVE
KANSAS CITY, MO 64105-1310
TELEPHONE: 816-472-1201
CERTIFICATE OF AUTHORITY NO. 001270

FINAL PLANS

Detailed JUL 2009
Checked JUL 2009

Note: This drawing is not to scale. Follow dimensions.

Sheet No. 178 of 205

T:\de-proj\St_Louis_City\Construction\J6I0984\Asbuilts\Bridge\B_A6500_178-205_J6I0984_178.dgn

12:59:36 PM

4 BLANK SHEET → ~~SUGGESTED ERECTION SEQUENCE - PIERS 11 & 12~~

DATE 5/17/10
ROUTE I-70 | STATE MO/IL
DISTRICT 6 | SHEET NO. BR179
COUNTY ST. LOUIS CITY - MO ST. CLAIR - IL
JOB NO. J6I0984
CONTRACT ID. 091208-601
PROJECT NO. I-70-9 (20)
BRIDGE NO. A6500

DESCRIPTION	DATE
4 Revised per ATC	5-17-10

MISSOURI HIGHWAYS AND TRANSPORTATION COMMISSION
105 WEST CAPITOL
JEFFERSON CITY, MO 65102
1-888-ASK-MODOT (1-888-275-6636)

HNTB
715 KIRK DRIVE
KANSAS CITY, MO 64105-1310
TELEPHONE (816) 347-2601
CERTIFICATE OF AUTHORITY NO. 001270

FINAL PLANS

REV.

Detailed JUL 2009
Checked JUL 2009

Note: This drawing is not to scale. Follow dimensions.

T:\de-proj\St_Louis_City\Construction\J6I0984\Asbuilts\Bridge\B_A6500_179-205_J6I0984_179.dgn

1:21:22 PM

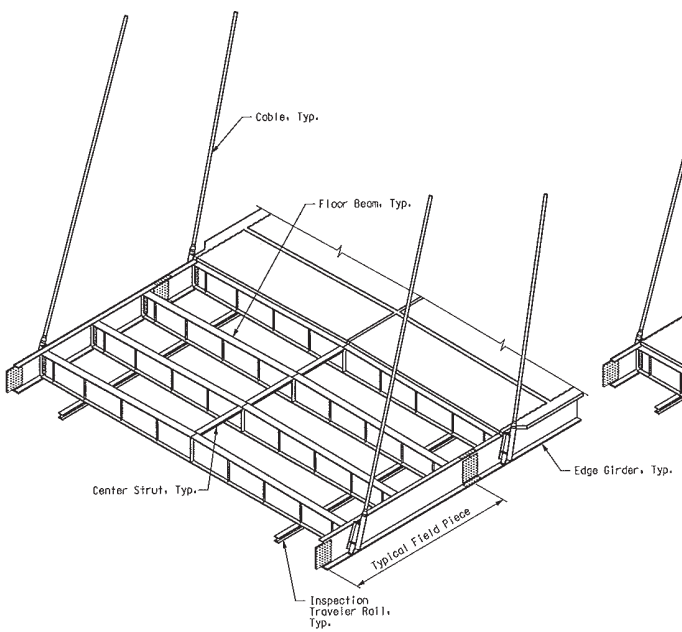

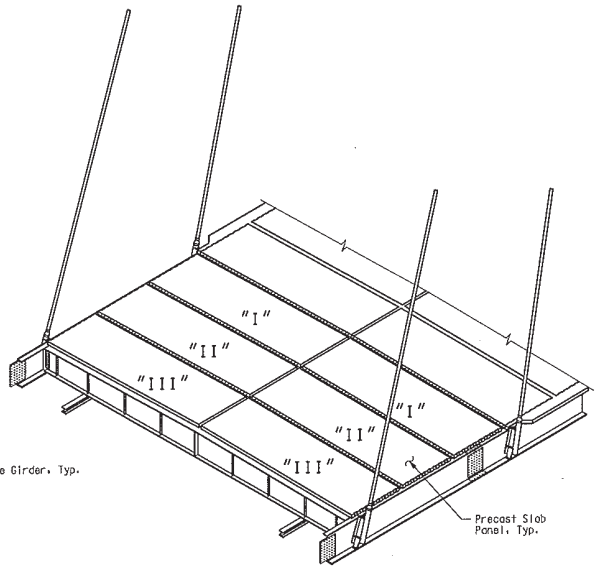

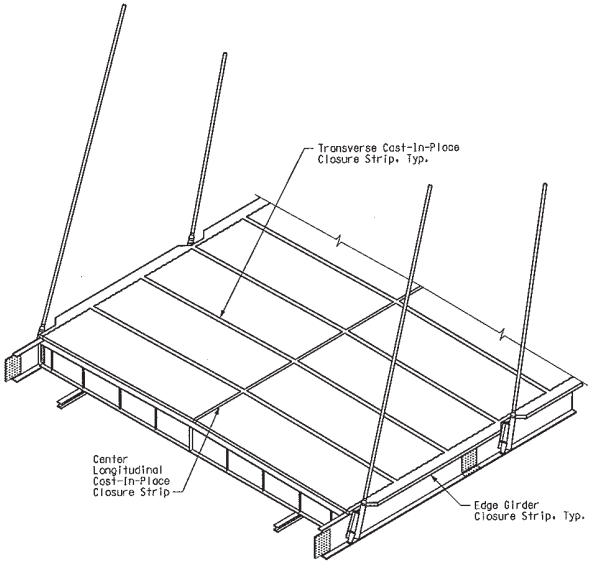

TYPICAL SUPERSTRUCTURE ERECTION SEQUENCE (T.S.E.S.) BEYOND PIER TABLE

1. Pre-assemble steel "Field Piece" (edge girders, floor beams, center struts and traveler rail).
2. Lift "Field Piece" in place with erection derrick, install and tighten all bolts in edge girder field splice, connect center strut between field sections, release erection derrick, install and partially stress cables.
3. Place precast slab panels "I", followed by slab panels "II" and "III" in that order.
4. Place longitudinal post-tensioning bars, couplers, floor beam shear connectors, center strut shear connectors and joint reinforcing at center longitudinal and transverse closure strips.
5. Place the transverse cast-in-place closure strips between all precast slab panels.
   Note: The portion of the transverse cast-in-place closure strips over the edge girder is not placed at this time.
6. After concrete closure strips have reached a minimum of 4500 psi, stress the longitudinal post-tensioning bars.
   Note: Jacking is to be approximately symmetric about the centerline of bridge with no more than 3 post-tensioning bars stressed unbalanced about the centerline of the bridge (typical per field section).
   After all bars are stressed to the required force/stress, the longitudinal ducts shall be grouted.
7. Install shear connectors and joint reinforcing along the edge girders, place cast-in-place concrete over the edge girders and center longitudinal closure strip.
   Note: Do not stress stay cables again until cast-in-place concrete over the edge girder has reached a minimum of 4500 psi.

PIER TABLE ERECTION SEQUENCE

Note:
The pier table shall be defined as Field Piece 14 and any temporary falsework required for stability.

1. Install temporary vertical bearings at towers.
2. Erect temporary falsework, edge girders, floor beams, center struts, traveler rails, temporary longitudinal restraint and temporary lateral restraint.
   Note: Longitudinal positioning of the Pier Table shall be offset 4.0' towards the west for Pier 11 and 3.8' towards the east for Pier 12.
3. Place precast slab panels on steel starting at bays nearest tower centerline.
   Note: At no time shall there be more than one precast slab panel out of balance about the centerline of the bent.
4. Place longitudinal post-tensioning bars, couplers, shear connectors and joint reinforcing at all closure strips including those along the edge girders.
5. Place concrete at all cast-in-place closure strips, including those over the edge girders.
6. After cast-in-place concrete has reached a minimum of 4500 psi, stress the longitudinal post-tensioning bars.
   Note: Jacking is to be approximately symmetric about the centerline of bridge with no more than 3 post-tensioning bars stressed unbalanced about the centerline of the bridge. After all bars are stressed to the required force, the longitudinal ducts shall be grouted.

The erection sequence shown is not represented as being the complete step-by-step procedure and is included for information only. The Contractor shall determine the complete erection sequence and equipment required for erection of the bridge.

Whether the Contractor proposes an alternate sequence or one similar to that shown on this drawing, the Contractor shall prepare a detailed erection sequence, including calculations and detailed drawings, to be submitted to the Engineer for review as part of the shop drawings. See Special Provision "Erection of Cable-Stayed Spans" for additional information.

The Contractor shall be responsible for the erection sequence in its entirety. The Contractor's bid shall be based solely upon the erection sequence proposed by the Contractor.

SUGGESTED ERECTION SEQUENCE - TYPICAL SUPERSTRUCTURE

DATE 8/20/09
ROUTE I-70 | STATE MO/IL
DISTRICT 6 | SHEET NO. BR180
COUNTY ST. LOUIS CITY - MO, ST. CLAIR - IL
JOB NO. J6I0984
CONTRACT ID. 091208-601
PROJECT NO. I-70-9 (20)
BRIDGE NO. A6500

DESCRIPTION | DATE

MISSOURI HIGHWAYS AND TRANSPORTATION COMMISSION
105 WEST CAPITOL
JEFFERSON CITY, MO 65102
1-888-ASK-MODOT (1-888-275-6636)

HNTB
715 KIRK DRIVE
KANSAS CITY, MO 64105-1310
TELEPHONE (816) 472-1201
CERTIFICATE OF AUTHORITY NO. 001270

FINAL PLANS

REV.

Detailed JUL 2009
Checked JUL 2009

Note: This drawing is not to scale. Follow dimensions.

T:\de-proj\St_Louis_City\Construction\J6I0984\Asbuilts\Bridge\B_A6500_180-205_J6I0984_180.dgn

1:21:46 PM

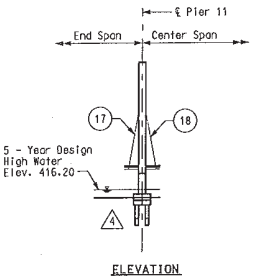

ELEVATION

STAGE 1

1. Erect pier table per Pier Table Erection Sequence on Sheet No. BR180. See note regarding Pier Table offset on Sheet No. BR180.
2. Install Stay Cables 17 and 18, stress to lift steel from falsework.
3. Remove falsework.

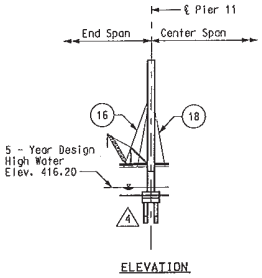

ELEVATION

STAGE 2

1. Construct end span derrick and erect structural steel for Field Piece 13 per T.S.E.S. in end span.
2. Install Stay Cables 16 and stress to initial load.
3. Place precast slab panels on Field Piece 13 and complete T.S.E.S.
4. Stress Stay Cables 16 to camber deck to intermediate erection profile.
5. Move end span derrick forward onto Field Piece 13.

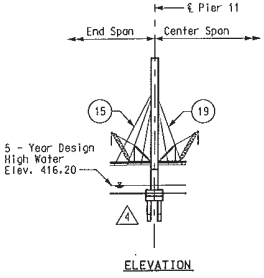

ELEVATION

STAGE 3

1. Construct center span derrick and erect structural steel for Field Piece 15 per T.S.E.S. in center span.
2. Install Stay Cables 19 and stress to initial load.
3. Place precast slab panels on Field Piece 15 per T.S.E.S..
4. Erect structural steel for Field Piece 12 per T.S.E.S. in end span.
5. Complete T.S.E.S. for Field Piece 15.
6. Install Stay Cables 15 and stress to initial load.
7. Stress Stay Cables 19 to camber deck to intermediate erection profile.
8. Place precast slab panels on Field Piece 12 per T.S.E.S..
9. Move center span derrick forward onto Field Piece 15.

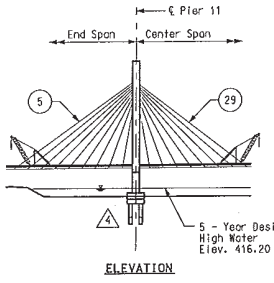

ELEVATION

STAGES 4 THRU 13

1. Erect structural steel for Field Piece 16 per T.S.E.S. in center span.
2. Install Stay Cables 20 and stress to initial load.
3. Place precast slab panels on Field Piece 16 per T.S.E.S..
4. Complete T.S.E.S. for Field Piece 12.
5. Stress Stay Cables 15 to camber deck to intermediate erection profile.
6. Move end span derrick forward onto Field Piece 12.
7. Erect structural steel for Field Piece 11 per T.S.E.S. in end span.
8. Complete T.S.E.S. for Field Piece 16.
9. Install Stay Cables 14 and stress to initial load.
10. Stress Stay Cables 20 to camber deck to intermediate erection profile.
11. Place precast slab panels on Field Piece 11 per T.S.E.S..
12. Move center span derrick forward onto Field Piece 16.
13. Repeat Steps 1 thru 12 (above) for erection between Stay Cables 5 thru 15 and 20 thru 29.

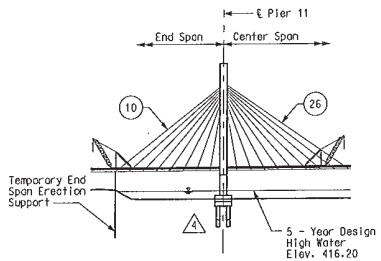

ELEVATION

TEMPORARY END SPAN ERECTION SUPPORT

Construct temporary end span erection support and all related connections to provide support for the end span. This support should only be engaged during periods of inactivity or for wind speeds over 30mph.

Stations of centerline for Temporary End Span Erection Supports are Sta. 77+62.00 and Sta. 99+38.00.

Temporary End Span Erection Support is intended to provide vertical and lateral restraint for the superstructure during periods of high wind during erection as specified.

Temporary End Span Erection Support shall allow for longitudinal movement.

Maximum anticipated vertical reactions due to unfactored wind loads at each support are 1305 kips downward and 320 kips upward (uplift).

Maximum anticipated lateral reaction due to unfactored wind loads at each support is 25 kips.

Assumed lateral stiffness of Temporary End Span Erection Support is 9.5 kips/inch.

Temporary End span Erection Support is assumed to be vertically rigid.

ERECTION SEQUENCE NOTES

The following sequence is presented for the west half structure and is viewed from the South looking North. The same sequence can be followed for east half structure viewed from the North looking South.

The following assumptions were used to develop the erection sequence presented:

1. Lifting of the steel field piece and precast slab panels beyond the pier table is facilitated by one stiffleg derrick crane on travelers at each end of the cantilever construction. The assumed total dead load for each stiffleg derrick crane and respective traveler system is 216 tons.
   Note: The maximum crane reactions are assumed to be distributed directly to the edge girders thru four point loads, 48 tons at each front reaction and 60 tons at each rear reaction.
2. For general erection loads, see "Construction" notes on Sheet No. BR7.
3. The definition of "Field Piece" used throughout this erection sequence is assumed to include two edge girder pieces, three floorbeams, center struts and traveler rails pre-assembled prior to lifting in place (except Field Pieces 1, 14, and 31).
4. The Contractor shall concurrently stress the cables on each side of the centerline of the bridge. At no time shall the cable forces be more than 5% unbalanced about the centerline of the bridge.

REACTIONS DURING ERECTION - PIERS 10 AND 13

Maximum anticipated vertical reaction at each elevated temporary edge girder support during erection is approximately 140 kips (downward).

Maximum anticipated vertical reaction at each tie-down device during erection is approximately 240 kips (downward).

Minimum anticipated vertical reaction at each tie-down device during erection is approximately 90 kips (uplift).

Note: The reported values are unfactored, are due to dead load/erection loads only, and are dependent upon the assumed erection sequence.

REACTIONS DURING ERECTION - PIERS 11 AND 12

Maximum anticipated vertical reaction at each temporary vertical bearing during erection is approximately 1185 kips.

Maximum anticipated longitudinal reaction at each temporary longitudinal restraint during erection is approximately 600 kips.
Note: The reported values are unfactored, are due to dead load/erection loads only, and are dependent upon the assumed erection sequence.

The erection sequence shown is not represented as being the complete step-by-step procedure and is included for information only. The Contractor shall determine the complete erection sequence and equipment required for erection of the bridge.

Whether the Contractor proposes an alternate sequence or one similar to that shown on this drawing, the Contractor shall prepare a detailed erection sequence, including calculations and detailed drawings, to be submitted to the Engineer for review as part of the shop drawings. See Special Provision "Erection of Cable-Stayed Spans" for additional information.

The Contractor shall be responsible for the erection sequence in its entirety. The Contractor's bid shall be based solely upon the erection sequence proposed by the Contractor.

Notes:

(#) Denotes Stay Cable.

For steel framing plan, see Sheet Nos. BR109 & BR110.
For precast slab panel layout, see Sheet Nos. BR144 & BR145.
For stay cable schedule, see Sheet Nos. BR141 & BR142.
For Typical Superstructure Erection Sequence (T.S.E.S.), see Sheet No. BR180.

SUGGESTED ERECTION SEQUENCE

DATE 5/17/10
ROUTE I-70 | STATE MO/IL
DISTRICT 6 | SHEET NO. BR181
COUNTY ST. LOUIS CITY - MO ST. CLAIR - IL
JOB NO. J6I0984
CONTRACT ID. 091208-601
PROJECT NO. I-70-9 (20)
BRIDGE NO. A6500

DATE	DESCRIPTION
5-17-10	1 Revised per ATC

MISSOURI HIGHWAYS AND TRANSPORTATION COMMISSION
105 WEST CAPITOL
JEFFERSON CITY, MO 65102
1-888-ASK-MODOT (1-888-275-6636)
HNTB
715 KIRK DRIVE
KANSAS CITY, MO 64105-1310
TELEPHONE (816) 472-1201
CERTIFICATE OF AUTHORITY NO. 001270

FINAL PLANS REV.

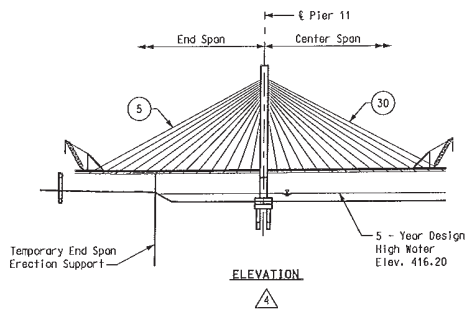

STAGE 14

1. Erect structural steel for Field Piece 26 per T.S.E.S. in center span.
2. Install Stay Cables 30 and stress to initial load.
3. Place precast slab panels on Field Piece 26 per T.S.E.S..
4. Complete T.S.E.S. for Field Piece 2.
5. Complete T.S.E.S. for Field Piece 26.
6. Move end span derrick forward onto Field Piece 2.
7. Stress Stay Cables 30 to camber deck to intermediate erection profile.
8. Move center span derrick forward onto Field Piece 26.

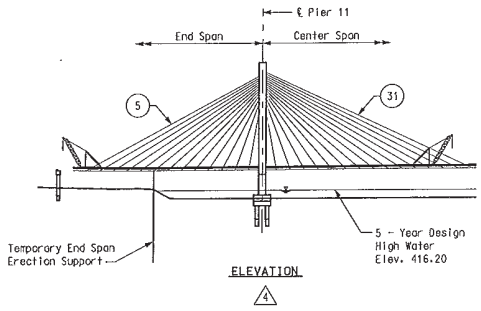

STAGE 15

1. Erect structural steel for Field Piece 27 per T.S.E.S. in center span.
2. Install Stay Cables 31 and stress to initial load.
3. Stress Stay Cables 5 to camber deck to intermediate erection profile.
4. Install Elevated temporary edge girder support at anchor pier (See Sheet No. BR181 for anticipated reactions.). Prepare to receive Field Piece 1.

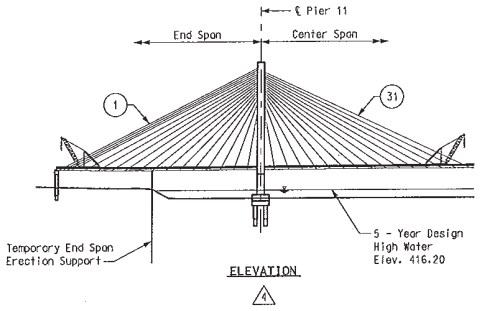

STAGE 16

1. Erect structural steel for Field Piece 1 per T.S.E.S. in end span with free end located on the elevated temporary support at anchor pier.
2. Install Stay Cables 4 and stress to initial load.
3. Remove Elevated Temporary Edge Girder Support at anchor Pier and all related connections to the superstructure.
4. Install Stay Cables 3,2, & 1 and stress to intial load.
5. Place precast slab panels on Field Piece 27 and complete T.S.E.S.
6. Place precast slab panels on Field Piece 1 and complete T.S.E.S. between Stay Cables 4 and 5 only.
7. Stress Stay Cables 31 to camber deck to intermediate erection profile.
8. Move center span derrick forward onto Field Piece 27.

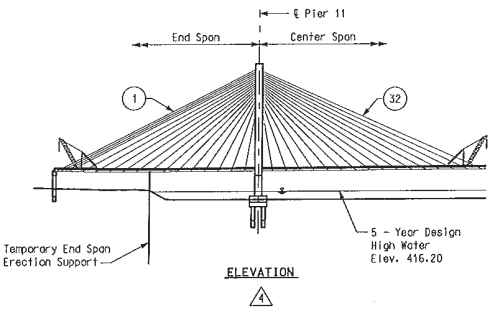

STAGE 17

1. Erect structural steel for Field Piece 28 per T.S.E.S. in center span.
2. Install Stay Cables 32 and stress to initial load.
3. Stress Stay Cables 3 to camber deck to intermediate erection profile.
4. Add precast counterweight panels to Field Piece 1 which represents the first of eight counterweight segements.
5. Place precast slab panels on Field Piece 28 per T.S.E.S..
6. Add second segment of counterweight to Field Piece 1.
7. Complete T.S.E.S. for Field Piece 28.
8. Stress Stay Cables 32 to camber deck to intermediate erection profile.
9. Move center span derrick forward onto Field Piece 28.

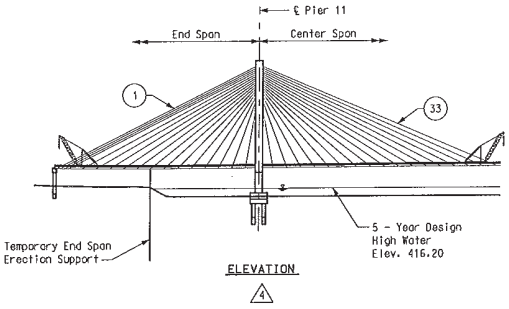

STAGE 18

1. Erect structural steel for Field Piece 29 per T.S.E.S. in center span.
2. Install Stay Cables 33 and stress to initial load.
3. Stress Stay Cables 4 to camber deck to intermediate erection profile.
4. Stress Stay Cables 2 to camber deck to intermediate erection profile.
5. Add third segment of counterweight to Field Piece 1.
6. Place precast slab panels on Field Piece 29 per T.S.E.S.
7. Add fourth segment of counterweight to Field Piece 1.
8. Complete T.S.E.S. for Field Piece 29.
9. Stress Stay Cables 33 to camber deck to intermediate erection profile.
10. Stress Stay Cables 1 to camber deck to intermediate erection profile.
11. Move center span derrick forward onto Field Piece 29.

The erection sequence shown is not represented as being the complete step-by-step procedure and is included for information only. The Contractor shall determine the complete erection sequence and equipment required for erection of the bridge.

Whether the Contractor proposes an alternate sequence or one similar to that shown on this drawing, the Contractor shall prepare a detailed erection sequence, including calculations and detailed drawings, to be submitted to the Engineer for review as part of the shop drawings. See Special Provision "Erection of Cable-Stayed Spans" for additional information.

The Contractor shall be responsible for the erection sequence in its entirety. The Contractor's bid shall be based solely upon the erection sequence proposed by the Contractor.

Notes:

(#) Denotes Stay Cable

For additional notes and details, see Sheet No. BR181.

SUGGESTED ERECTION SEQUENCE

DATE 5/17/10
ROUTE I-70 | STATE MO/IL
DISTRICT 6 | SHEET NO. BR182
COUNTY ST. LOUIS CITY - MO ST. CLAIR - IL
JOB NO. J6I0984
CONTRACT ID. 091208-601
PROJECT NO. I-70-9 (20)
BRIDGE NO. A6500

DATE	DESCRIPTION
5-17-10	⚠ Revised per ATC

MISSOURI HIGHWAYS AND TRANSPORTATION COMMISSION
105 WEST CAPITOL
JEFFERSON CITY, MO 65102
1-888-ASK-MODOT (1-888-275-6636)

HNTB
715 KIRK DRIVE
KANSAS CITY, MO 64105-1310
TELEPHONE (816) 472-1201
CERTIFICATE OF AUTHORITY NO. 001210

FINAL PLANS

REV.

Detailed JUL 2009
Checked JUL 2009

Note: This drawing is not to scale. Follow dimensions.

T:\de-proj\St_Louis_City\Construction\J6I0984\Asbuilts\Bridge\B_A6500_182-205_J6I0984_182.dgn

1:25:53 PM

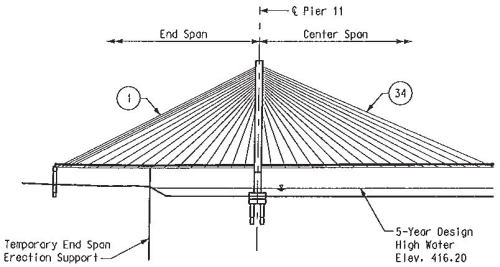

ELEVATION

STAGE 19 ⚠4

1. Erect structural steel for Field Piece 30 per T.S.E.S. in center span.
2. Install Stay Cables 34 and stress to initial load.
3. Add fifth segment of counterweight to Field Piece 1.
4. Place precast slab panels on Field Piece 30 per T.S.E.S.
5. Add sixth segment of counterweight to Field Piece 1.
6. Complete T.S.E.S. for Field Piece 30.
7. Add seventh segment of counterweight to Field Piece 1.
8. Install Tie-Down Device at Anchor Pier (see Sheet No. BR181 for anticipated reactions).
9. Remove temporary longitudinal restrainers at tower. Anticipated longitudinal movement of cantilever end due to release of longitudinal restrainers is approximately 24.0" at west half of cantilever and approximately 23.0" at east half cantilever. Direction of anticipated movement of both east and west sides is toward ℄ Mainspan.
10. Reinstall temporary longitudinal restrainers at tower.
11. Uninstall Tie-Down Device at Anchor Pier.
12. Add eighth/final segment of counterweight to Field Piece 1.
13. Remove end span and center span derricks from the bridge.
14. Stress Stay Cables 34 to camber deck to intermediate erection profile.
15. Install Tie-Down Device at Anchor Pier (see Sheet No. BR181 for anticipated reactions).
16. Remove temporary longitudinal restrainers at tower. Anticipated longitudinal movement of cantilever end due to release of longitudinal restrainers is approximately 21.4" at west half of cantilever and approximately 21.8" at east half cantilever. Direction of anticipated movement of both east and west sides is toward ℄ Mainspan.

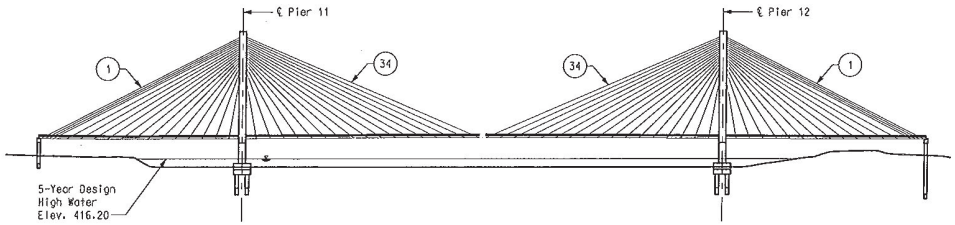

ELEVATION

STAGE 20 THRU 38 ⚠4

1. Repeat Stages 1 thru 19 for construction of east half of bridge.

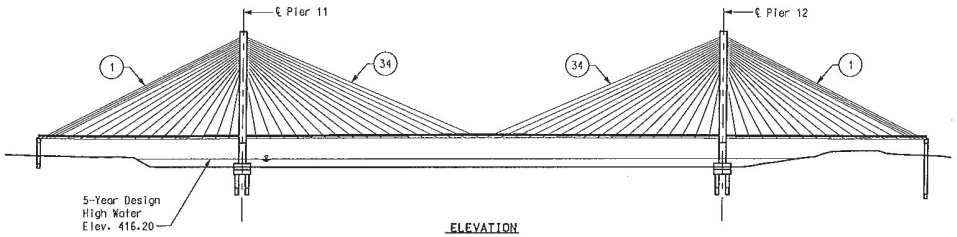

ELEVATION ⚠4

STAGE 39

1. Stress Cables 34 to camber both cantilevers to profile grade elevation.
2. Install closure piece (Field Piece 31) and connect edge girder field splices at east and west cantilevers.
3. Place precast slab panels on Field Piece 31. Place shear connectors, joint reinforcing at closure strips, and longitudinal and transverse cast-in-place closure strips between precast slab panels.
4. Place cast-in-place concrete over edge girders.
5. Install permanent longitudinal lock-up device and transverse restrainers at towers.
6. Construct barrier curbs, median barrier curb, and wearing surface.
7. Make final stay cable adjustments as required and shim bearings at pylon.
8. Install cable ties.

The erection sequence shown is not represented as being the complete step-by-step procedure and is included for information only. The Contractor shall determine the complete erection sequence and equipment required for erection of the bridge.

Whether the Contractor proposes an alternate sequence or one similar to that shown on this drawing, the Contractor shall prepare a detailed erection sequence, including calculations and detailed drawings, to be submitted to the Engineer for review as part of the shop drawings. See Special Provision "Erection of Cable-Stayed Spans" for additional information.

The Contractor shall be responsible for the erection sequence in its entirety. The Contractor's bid shall be based solely upon the erection sequence proposed by the Contractor.

Notes:

(#) Denotes Stay Cable

For additional notes and details, see Sheet No. BR181.

SUGGESTED ERECTION SEQUENCE

DATE 5/17/10
ROUTE I-70 | STATE MO/IL
DISTRICT 6 | SHEET NO. BR183
COUNTY ST. LOUIS CITY - MO, ST. CLAIR - IL
JOB NO. J6I0984
CONTRACT ID. 091208-601
PROJECT NO. I-70-9 (20)
BRIDGE NO. A6500

DESCRIPTION	DATE
⚠4 Revised per ATC	5-17-10

MISSOURI HIGHWAYS AND TRANSPORTATION COMMISSION
105 WEST CAPITOL
JEFFERSON CITY, MO 65102
1-888-ASK-MODOT (1-888-275-6636)
HNTB
715 KIRK DRIVE
KANSAS CITY, MO 64105-1310
TELEPHONE (816) 472-1201
CERTIFICATE OF AUTHORITY NO. 001270

FINAL PLANS

REV.

Detailed JUL 2009
Checked JUL 2009

Note: This drawing is not to scale. Follow dimensions.

T:\de-proj\St_Louis_City\Construction\J6I0984\Asbuilts\Bridge\B_A6500_183-205_J6I0984_183.dgn 1:26:30 PM

BILL OF REINFORCING STEEL (4)

NO. REQ'D.	MARK NO. SIZE	MARK NO. MARK	LOCATION	EPOXY (E)	SHAPE NO.	STIRRUP (S)	SUBSTR. (X)	VARIES (V)	NO. EACH	DIMENSIONS B FT. IN.	C FT. IN.	D FT. IN.	E FT. IN.	F FT. IN.	H FT. IN.	K FT. IN.	NOMINAL LENGTH FT. IN.	ACTUAL LENGTH FT. IN.	WEIGHT LBS.
			SUBSTRUCTURE																
			PIER 10																
168	11	H1001	Beam	E	19		X			2'-0"	58'-1"						60'-1"	59'-9"	53,332
48	11	H1002	Beam	E	20		X			58'-1"							58'-1"	58'-1"	14,813
24	6	H1003	Beam	E	5		X			11'-4"	12"	12"					13'-4"	13'-1"	472
8	6	H1004	Beam	E	20		X			43'-2"							43'-2"	43'-2"	519
14	6	H1005	Beam	E	19		X			3'-10"	10'-6"						14'-4"	14'-3"	300
28	6	H1006	Beam	E	19		X			12"	13'-0"						14'-0"	13'-11"	585
7	6	H1007	Beam	E	5		X			21'-6"	12"	12"					23'-6"	23'-3"	244
10	6	H1008	Beam	E	5		X			4'-4"	5'-7"	5'-7"					15'-6"	15'-3"	229
26	4	H1009	Beam	E	20		X			5'-6"							5'-6"	5'-6"	96
592	6	P1001	Drilled Shaft		16		X			9'-0"							28'-4"	28'-4"	25,194
116	6	P1002	Drilled Shaft		16		X			9'-0"	2'-2"						30'-6"	30'-6"	5,314
64	6	P1003	Beam	E	16		X			9'-0"							28'-4"	28'-4"	2,724
208	7	U1001	Beam	E	53	S	X			4'-8"	11'-6"						33'-10"	33'-4"	14,172
104	7	U1002	Beam	E	5		X			11'-6"	14"	14"					13'-10"	13'-6"	2,870
9	7	U1003	Beam	E	5		X			5'-6"	4'-6"	4'-6"					14'-6"	14'-2"	261
20	7	U1004	Beam	E	5		X			5'-6"	5'-0"	5'-0"					15'-6"	15'-2"	620
22	7	U1005	Beam	E	5		X			5'-6"	5'-3"	5'-3"					16'-0"	15'-8"	704
33	7	U1006	Beam	E	5		X			5'-6"	5'-8"	5'-8"					16'-10"	16'-6"	1,113
104	7	U1007	Beam	E	53	S	X			6'-10"	11'-6"						38'-2"	37'-8"	8,007
15	8	U1008	Beam	E	5		X			4'-6"	12'-8"	12'-8"					29'-10"	29'-5"	1,178
11	11	U1009	Beam	E	5		X			7'-6"	14'-2"	14'-2"					35'-10"	35'-2"	2,055
48	4	U1010	Beam	E	5		X			6"	19"	19"					3'-8"	3'-6"	112
60	18	V1001	Drilled Shaft		20		X			44'-3"							44'-3"	44'-3"	36,108
60	18	V1002	Drilled Shaft		20		X			46'-3"							46'-3"	46'-3"	37,740
60	18	V1003	Column	E	20		X			47'-1"							47'-1"	47'-1"	38,420
60	18	V1004	Column	E	20		X			45'-1"							45'-1"	45'-1"	36,788
28	6	V1005	Beam	E	20		X			11'-6"							11'-6"	11'-6"	484
18	W	5W1001	Beam	E	22		X			2'-1"	9 3/8"						33'-2"	33'-2"	100

Note:
Two additional W5W1001, #4-H1009, #6-V1005, #8-U1008 and #11-U1009 are included in Bill of Reinforcing Steel for testing.

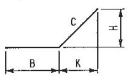

SHAPE 2



SHAPE 3

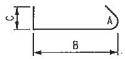

SHAPE 4

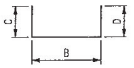

SHAPE 5



SHAPE 7

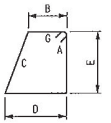

SHAPE 13

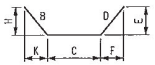

SHAPE 15

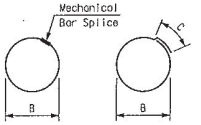

SHAPE 16



SHAPE 17

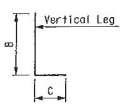

SHAPE 19



SHAPE 20

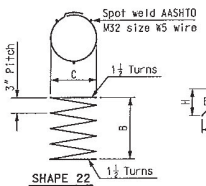

SHAPE 22

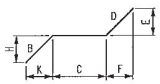

SHAPE 23

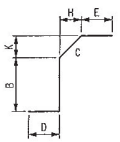

SHAPE 27

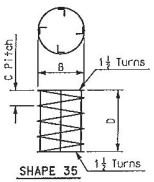

SHAPE 35

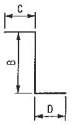

SHAPE 39

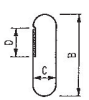

SHAPE 45

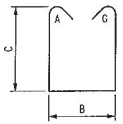

SHAPE 47



SHAPE 53

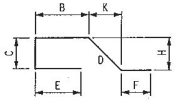

SHAPE 54

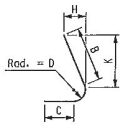

SHAPE 65

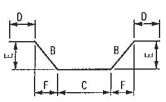

SHAPE 75

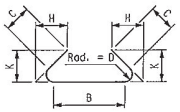

SHAPE 88

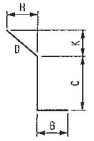

SHAPE 89

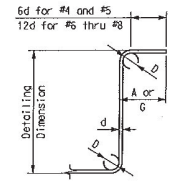

90° STIRRUP

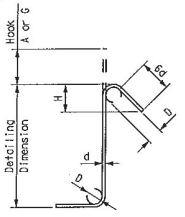

135° STIRRUP

STIRRUP HOOK DIMENSIONS

BAR SIZE	D (IN.)	GRADES 40 - 50 - 60 KSI 90° HOOK HOOK A OR G	135° HOOK HOOK A OR G	135° HOOK APPROX. H
#4	2"	4½"	4 1/8"	3"
#5	2½"	6"	5 1/8"	3½"
#6	4½"	12"	8"	4½"
#7	5½"	14"	9"	5 1/8"
#8	6"	16"	10½"	6"

Note:
Unless otherwise noted, diameter "D" is the same for all bends and hooks on a bar.

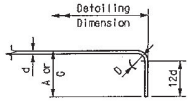

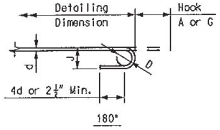

END HOOK DIMENSIONS

BAR SIZE	D (IN.)	ALL GRADES 180° HOOKS HOOK A OR G	180° HOOKS J	90° HOOKS HOOK A OR G
#3	2½"	5"	3"	6"
#4	3"	6"	4"	8"
#5	3½"	7"	5"	10"
#6	4½"	8"	6"	12"
#7	5½"	10"	7"	14"
#8	6"	11"	8"	16"
#9	9½"	15"	11½"	19"
#10	10½"	17"	13½"	22"
#11	12"	19"	14½"	2'-0"
#14	18½"	2'-3"	21½"	2'-7"

Notes:
All standard hooks and bends other than 180 degree are to be bent with the same procedure as for 90 degree standard hooks.
Hooks and bends shall be in accordance with the procedures as shown on this sheet.
E = Epoxy coated reinforcement.
S = Stirrup.
X = Bar is included in substructure quantities.
V = Bar dimensions vary in equal increments between dimensions shown on this line and the following line.
No. Each = Number of bars of each length.
Nominal lengths are based on out to out dimensions shown in bending diagrams and are listed for fabricators use. (Nearest inch)
Actual lengths are measured along centerline bar to the nearest inch.
Payweights are based on actual lengths.
Reinforcing Steel (Grade 60) fy = 60,000 psi.

BAR BENDING DIAGRAM

DATE 5/17/10
ROUTE I-70 STATE MO/IL
DISTRICT 6 SHEET NO. BR184
COUNTY ST. LOUIS CITY - MO ST. CLAIR - IL
JOB NO. J6I0984
CONTRACT ID. 091208-601
PROJECT NO. I-70-9 (20)
BRIDGE NO. A6500

REV.	DATE	DESCRIPTION
A	5-17-10	Revised per ATC

MISSOURI HIGHWAYS AND TRANSPORTATION COMMISSION
105 WEST CAPITOL
JEFFERSON CITY, MO 65102
1-888-ASK-MODOT (1-888-275-6636)

HNTB
715 KIRK DRIVE
KANSAS CITY, MO 64105-1310
TELEPHONE (816) 472-1201
CERTIFICATE OF AUTHORITY NO. 001270

FINAL PLANS

Detailed JUL 2009
Checked JUL 2009

Note: This drawing is not to scale. Follow dimensions.

T:\de-proj\St_Louis_City\Construction\J6I0984\Asbuilts\Bridge\B_A6500_184-205_J6I0984_184.dgn 1:27:12 PM

BILL OF REINFORCING STEEL

NO. REQ'D.	MARK NO. SIZE	MARK NO. MARK	LOCATION	EPOXY (E)	SHAPE NO.	STIRRUP (S)	SUBSTR. (X)	VARIES (V)	NO. EACH	DIMENSIONS B FT.	B IN.	C FT.	C IN.	D FT.	D IN.	E FT.	E IN.	F FT.	F IN.	H FT.	H IN.	K FT.	K IN.	NOMINAL LENGTH FT.	NOMINAL LENGTH IN.	ACTUAL LENGTH FT.	ACTUAL LENGTH IN.	WEIGHT LBS.
			PIER 11																									
1064	11	P1101	Vertical		20		X			40′	-8″													40′	-8″	40′	-8″	229,890
202	11	P1102	Vertical		20		X			30′	-0″													30′	-0″	30′	-0″	32,197
280	7	P1103	Horizontal		88		X			20′	-11″	2′	-0″	3″						23″		23″		26′	-2″	26′	-2″	14,976
512	7	P1104	Horizontal		88		X			18′	-0″	2′	-0″	3″						23″		23″		23′	-3″	23′	-3″	24,332
512	7	P1105	Horizontal		65		X			15′	-4″	2′	-0″	3″						10′	-10 3/8″	10′	-10 3/8″	16′	-11″	16′	-11″	17,704
7032	5	P1106	Horizontal		3	S	X			3′	-6″													4′	-0″	4′	-0″	29,338
13674	5	P1107	Horizontal		3	S	X			12′	-0″													12′	-6″	12′	-6″	178,275
3904	5	P1108	Horizontal		4	S	X			5′	-6″	6″												6′	-6″	6′	-5″	26,128
624	5	P1109	Horizontal		3	S	X			18′	-0″													18′	-6″	18′	-6″	12,040
352	11	P1110	Vertical		2		X			22′	-2″	17′	-9″							9′	-4 3/8″	15′	-0 3/8″	39′	-11″	39′	-11″	74,651
348	11	P1111	Vertical		2		X			29′	-0″	10′	-11″							5′	-9 3/8″	9′	-3 3/8″	39′	-11″	39′	-11″	73,803
32	11	P1112	Vertical		20		X			18′	-6″													18′	-6″	18′	-6″	3,145
32	11	P1113	Vertical		20		X			25′	-4″													25′	-4″	25′	-4″	4,307
16	11	P1114	Vertical		20		X			12′	-0″													12′	-0″	12′	-0″	1,020
16	11	P1115	Vertical		20		X			18′	-10″													18′	-10″	18′	-10″	1,601
32	11	P1116	Vertical		20		X			15′	-3″													15′	-3″	15′	-3″	2,593
32	11	P1117	Vertical		20		X			22′	-1″													22′	-1″	22′	-1″	3,755
60	11	P1118	Vertical		20		X			15′	-4″													15′	-4″	15′	-4″	4,888
60	11	P1119	Vertical		20		X			8′	-6″													8′	-6″	8′	-6″	2,710
8	11	P1120	Vertical		20		X			22′	-8″													22′	-8″	22′	-8″	963
8	11	P1121	Vertical		20		X			29′	-6″													29′	-6″	29′	-6″	1,254
8	11	P1122	Vertical		20		X			23′	-7″													23′	-7″	23′	-7″	1,002
8	11	P1123	Vertical		20		X			30′	-5″													30′	-5″	30′	-5″	1,293
8	11	P1124	Vertical		20		X			24′	-6″													24′	-6″	24′	-6″	1,041
8	11	P1125	Vertical		20		X			31′	-4″													31′	-4″	31′	-4″	1,332
8	11	P1126	Vertical		20		X			25′	-6″													25′	-6″	25′	-6″	1,084
8	11	P1127	Vertical		20		X			32′	-4″													32′	-4″	32′	-4″	1,374
156	11	P1128	Vertical		20		X			26′	-3″													26′	-3″	26′	-3″	21,757
156	11	P1129	Vertical		20		X			33′	-1″													33′	-1″	33′	-1″	27,420
16	11	P1130	Vertical		20		X			16′	-0″													16′	-0″	16′	-0″	1,360
16	11	P1131	Vertical		20		X			22′	-10″													22′	-10″	22′	-10″	1,941
48	11	P1132	Vertical		20		X			16′	-10″	13′	-7″	6		Added	6					6 31′	-1″	16′	-10″	16′	-10″	4,293
80	11	P1133	Vertical	6	23 20		X			27′	-9″	11′	-4″	6′	-2″	4′	-4 3/8″	4′	-4 3/8″	9′	-7 1/4″	9′	-7 1/4″	27′	-9″	27′	-9″	(11,795)
32	11	P1134	Vertical		20		X			13′	-9″											6 13.212		13′	-9″	13′	-9″	2,338
250	11	P1135	Vertical		23		X			13′	-7″	11′	-4″	16′	-2″	11′	-5 1/8″	11′	-5 1/8″	9′	-7 1/4″	9′	-7 1/4″	41′	-1″	41′	-1″	54,569
620	7	P1136	Horizontal		4	S	X			46′	-1″	2′	-0″											48′	-10″	48′	-8″	61,674
960	5	P1137	Horizontal		3	S	X			6′	-8″													7′	-2″	7′	-2″	7,176
190	7	P1138	Horizontal		5		X			39′	-7″	2′	-0″	2′	-0″									43′	-7″	43′	-3″	16,797
232	5	P1139	Vertical		5		X			2′	-0″	3′	-2″	3′	-2″									8′	-4″	8′	-1″	1,956
80	5	P1140	Horizontal		5		X			2′	-0″	9′	-10″	9′	-10″									21′	-8″	21′	-5″	1,787
40	5	P1141	Horizontal		5		X			2′	-0″	5′	-10″	5′	-10″									13′	-8″	13′	-5″	560
28	11	P1142	Vertical		20		X			16′	-4″													16′	-4″	16′	-4″	2,430
32	11	P1143	Vertical		20		X			9′	-6″													9′	-6″	9′	-6″	1,615
392	5	P1144	Horizontal		3	S	X			5′	-8″													6′	-2″	6′	-2″	2,521
408	5	P1145	Horizontal		3	S	X			7′	-8″													8′	-2″	8′	-2″	3,475
408	5	P1146	Horizontal		3	S	X			9′	-8″													10′	-2″	10′	-2″	4,326
408	5	P1147	Horizontal		3	S	X			11′	-8″													12′	-2″	12′	-2″	5,177
128	5	P1148	Horizontal		5		X			16″		3′	-2″	3′	-2″									7′	-8″	7′	-5″	990
64	7	P1149	Horizontal		4	S	X			17″		2′	-0″											4′	-2″	4′	-0″	523
104	6	P1150	Horizontal		5		X			21′	-4″	3′	-7″	3′	-7″									28′	-6″	28′	-3″	4,413
38	8	P1151	Vertical		53	S	X			2′	-11″	8′	-3″											24′	-1″	23′	-6″	2,384
76	8	P1152	Vertical		53	S	X			3′	-6″	8′	-3″											25′	-3″	24′	-8″	5,005
38	8	P1153	Vertical		13	S	X			2′	-0″	8′	-4″	3′	-3″	8′	-3″							23′	-7″	23′	-0″	2,334
24	11	P1154	Horizontal		20		X			14′	-6″													14′	-6″	14′	-6″	1,849
46	10	P1155	Horizontal		17		X			40′	-1″													41′	-6″	41′	-6″	8,214
23	10	P1156	Horizontal		20		X			60′	-0″													60′	-0″	60′	-0″	5,938

BILL OF REINFORCING STEEL

NO. REQ'D.	MARK NO. SIZE	MARK NO. MARK	LOCATION	EPOXY (E)	SHAPE NO.	STIRRUP (S)	SUBSTR. (X)	VARIES (V)	NO. EACH	DIMENSIONS B FT.	B IN.	C FT.	C IN.	D FT.	D IN.	E FT.	E IN.	F FT.	F IN.	H FT.	H IN.	K FT.	K IN.	NOMINAL LENGTH FT.	NOMINAL LENGTH IN.	ACTUAL LENGTH FT.	ACTUAL LENGTH IN.	WEIGHT LBS.
23652	8		PIER 11—CONT'D																									
1312	11	T1101	Vertical		20		X			30′	-4″													30′	-4″	30′	-4″	211,443
136	11	T1102	Vertical		20		X			16′	-6″													16′	-6″	16′	-6″	11,922
288	11	T1103	Vertical		20		X			23′	-4″													23′	-4″	23′	-4″	35,703
1800	5	T1104	Horizontal		4	S	X			11′	-9″	6″												12′	-9″	12′	-8″	23,780
900	5	T1105	Horizontal		4	S	X			21′	-8″	6″												22′	-8″	22′	-7″	21,199
3572	6	T1106	Horizontal		53	S	X			20″		21′	-8″											48′	-0″	47′	-7″	255,291
2624	6	T1107	Horizontal		53	S	X			20″		11′	-9″											28′	-2″	27′	-9″	109,370
72	6	T1108	Horizontal		53	S	X			20″		9′	-2″											23′	-0″	22′	-7″	2,442
25732	5	T1109	Horizontal		4	S	X			(20″)		6″												(2′	-8″)	(2′	-7″)	(69,333)
40	11	T1110	Vertical		20		X			25′	-8″	2′	-8″	8		11								25′	-8″	25′	-8″	5,455
64	7	T1111	Vertical		20		X			12′	-0″													12′	-0″	12′	-0″	1,570
4	11	T1112	Vertical		20		X			38′	-7″													38′	-7″	38′	-7″	820
16	11	T1113	Vertical		20		X			23′	-11″													23′	-11″	23′	-11″	2,033
24	11	T1114	Vertical		20		X			30′	-11″													30′	-11″	30′	-11″	3,942
144	11	T1115	Vertical		20		X			23′	-6″													23′	-6″	23′	-6″	17,979
640	5	T1116	Horizontal		4	S	X			2′	-2″	6″												3′	-2″	3′	-1″	2,058
1860	11	T1117	Vertical		20		X			37′	-3″													37′	-3″	37′	-3″	368,111
156	11	T1118	Vertical		20		X			30′	-2″													30′	-2″	30′	-2″	25,003
8	11	T1120	Vertical		20		X			7′	-0″													7′	-0″	7′	-0″	298
8	11	T1121	Vertical		20		X			8′	-3″													8′	-3″	8′	-3″	351
8	11	T1122	Vertical		20		X			15′	-8″													15′	-8″	15′	-8″	666
4	11	T1123	Vertical		20		X			34′	-5″													34′	-5″	34′	-5″	731
8	11	T1124	Vertical		20		X			18′	-7″													18′	-7″	18′	-7″	790
8	11	T1125	Vertical		20		X			20′	-10″													20′	-10″	20′	-10″	886
4	11	T1126	Vertical		20		X			14′	-4″													14′	-4″	14′	-4″	305
4	11	T1127	Vertical		20		X			12′	-6″													12′	-6″	12′	-6″	266
324	11	T1128	Vertical		20		X			38′	-9″													38′	-9″	38′	-9″	66,705
12	11	T1129	Vertical		20		X			10′	-2″													10′	-2″	10′	-2″	648
4	11	T1130	Vertical		20		X			18′	-9″													18′	-9″	18′	-9″	398
4	11	T1131	Vertical		20		X			8′	-11″													8′	-11″	8′	-11″	189
4	11	T1132	Vertical		20		X			21′	-7″													21′	-7″	21′	-7″	459
16	11	T1133	Vertical		20		X			8′	-6″													8′	-6″	8′	-6″	723
8	11	T1134	Vertical		20		X			7′	-10″													7′	-10″	7′	-10″	333
192	6	T1135	Horizontal		53	S	X			20″		3′	-6″											11′	-8″	11′	-3″	3,244
192	6	T1136	Horizontal		53	S	X			20″		6′	-1″											16′	-10″	16′	-5″	4,734
608	6	T1137	Horizontal		53	S	X			20″		4′	-6″											13′	-8″	13′	-3″	12,100
96	6	T1138	Horizontal		53	S	X			20″		5′	-7″											15′	-10″	15′	-5″	2,223
536	6	T1139	Horizontal		53	S	X			20″		5′	-1″											14′	-10″	14′	-5″	11,606
720	6	T1140	Horizontal		47	S	X			5′	-1″	20″												10′	-3″	10′	-0″	10,814
324	11	T1141	Vertical		20		X			47′	-9″													47′	-9″	47′	-9″	82,197
16	11	T1142	Vertical		20		X			4′	-11″													4′	-11″	4′	-11″	418
8	11	T1143	Vertical		20		X			4′	-6″													4′	-6″	4′	-6″	191
16	11	T1144	Vertical		20		X			4′	-7″													4′	-7″	4′	-7″	390
56	11	T1145	Vertical		20		X			4′	-4″													4′	-4″	4′	-4″	1,289
48	11	T1146	Vertical		20		X			4′	-2″													4′	-2″	4′	-2″	1,063
8	11	T1147	Vertical		20		X			42′	-1″													42′	-1″	42′	-1″	1,789
4	11	T1148	Vertical		20		X			42′	-10″													42′	-10″	42′	-10″	910
96	11	T1149	Vertical		20		X			4′	-3″													4′	-3″	4′	-3″	2,168
316	11	T1150	Vertical		20		X			44′	-0″													44′	-0″	44′	-0″	73,872
8	6	T1151	Horizontal		4	S	X			32′	-4″	12″												34′	-0″	33′	-11″	408
36	6	T1152	Horizontal		15		X			2′	-7″	12′	-2″	2′	-7″	2′	-6 3/8″	4 1/4″		2′	-6 3/8″	4 1/4″		17′	-4″	17′	-4″	937
24	6	T1153	Horizontal		4	S	X	V	8	31′	-8″	12″												33′	-4″	33′	-3″	1,206
			Increment = 2 1/2″							32′	-1″	12″												33′	-9″	33′	-8″	
10	6	T1154	Horizontal		4	S	X			11′	-5″	12″												13′	-1″	13′	-0″	195
250	6	T1155	Horizontal		4	S	X	V	10	5′	-0″	12″												6′	-8″	6′	-7″	3,630
			Increment = 3 1/2″							11′	-2″	12″												12′	-10″	12′	-9″	
12	6	T1156	Horizontal		53	S	X	V	4	20″		16′	-7″											37′	-10″	37′	-5″	683
			Increment = 6″							20″		17′	-1″											38′	-10″	38′	-5″	
32	6	T1157	Horizontal		4	S	X	V	8	29′	-10″	12″												31′	-6″	31′	-5″	1,528
			Increment = 3″							30′	-7″	12″												32′	-3″	32′	-2″	
16	6	T1158	Horizontal		53	S	X	V	4	20″		14′	-6″											33′	-8″	33′	-3″	817
			Increment = 6″							20″		15′	-3″											35′	-2″	34′	-9″	
24	6	T1159	Horizontal		4	S	X	V	8	28′	-1″	12″												29′	-9″	29′	-8″	1,077
			Increment = 2 1/2″							28′	-6 3/8″	12″												30′	-3″	30′	-1″	
16	6	T1160	Horizontal		53	S	X	V	4	20″		12′	-9″											30′	-2″	29′	-9″	733
			Increment = 6″							20″		13′	-6″											31′	-8″	31′	-3″	

Notes:
For Bar Bending Diagram, see Sheet No. BR184.

BILL OF REINFORCING STEEL

DATE 4/19/12
ROUTE I-70 STATE MO/IL
DISTRICT 6 SHEET NO. BR185
COUNTY ST. LOUIS CITY - MO ST. CLAIR - IL
JOB NO. J6I0984
CONTRACT ID. 091208-601
PROJECT NO. I-70-9 (20)
BRIDGE NO. A6500

DATE	DESCRIPTION
3-3-10	1 Revised Reinforcing Steel
6-10-11	2 Revised Reinforcing Steel
4-19-12	3 Revised Reinforcing Steel

MISSOURI HIGHWAYS AND TRANSPORTATION COMMISSION
105 WEST CAPITOL
JEFFERSON CITY, MO 65102
1-888-ASK-MODOT (1-888-275-6636)

HNTB
715 KIRK DRIVE
KANSAS CITY, MO 64105-1310
TELEPHONE (816) 472-1201
CERTIFICATE OF AUTHORITY NO. 001270

FINAL PLANS REV.

Detailed JUL 2009
Checked JUL 2009

Note: This drawing is not to scale. Follow dimensions.

Sheet No. 185 of 205

T:\de-proj\St_Louis_City\Construction\J6I0984\Asbuilts\Bridge\B_A6500_185-205_J6I0984_185_REV011.dgn 1:29:34 PM

BILL OF REINFORCING STEEL

NO. REQ'D.	MARK NO. SIZE	MARK NO. MARK	LOCATION	EPOXY (E)	SHAPE NO.	STIRRUP (S)	SUBSTR. (X)	VARIES (V)	NO. EACH	DIMENSIONS B FT.	B IN.	C FT.	C IN.	D FT.	D IN.	E FT.	E IN.	F FT.	F IN.	H FT.	H IN.	K FT.	K IN.	NOMINAL LENGTH FT.	NOMINAL LENGTH IN.	ACTUAL LENGTH FT.	ACTUAL LENGTH IN.	WEIGHT LBS.
			PIER 11–CONT'D																									
88	6T1161		Horizontal		4	S	X	V	8	24′	-2″	12″												25′	-10″	25′	-9″	3,574
			Increment = 3⅛″							26′	-9″	12″												28′	-4″			
48	1T1162		Vertical		20		X			4′	-1″													4′	-1″	4′	-1″	1,041
24	1T1163		Vertical		20		X			3′	-11″													3′	-11″	3′	-11″	499
20	1T1164		Vertical		20		X			11′	-3″													11′	-3″	11′	-3″	1,195
8	1T1165		Vertical		20		X			10′	-7″													10′	-7″	10′	-7″	450
152	1T1166		Vertical		20		X			18′	-11″													18′	-11″	18′	-11″	15,277
204	1T1167		Vertical		20		X			13′	-10″													13′	-10″	13′	-10″	14,993
4	6T1168		Horizontal		4	S	X			23′	-11″	12″												25′	-7″	25′	-6″	153
4	6T1169		Horizontal		4	S	X			23′	-9″	12″												25′	-5″	25′	-4″	152
4	6T1170		Vertical		20		X			2′	-11″													2′	-11″	2′	-11″	18
4	6T1171		Vertical		20		X			6′	-3″													6′	-3″	6′	-3″	38
4	6T1172		Vertical		20		X			9′	-7″													9′	-7″	9′	-7″	58
4	6T1173		Vertical		20		X			12′	-11″													12′	-11″	12′	-11″	78
4	6T1174		Vertical		20		X			15′	-5″													15′	-5″	15′	-5″	93
4	6T1175		Vertical		20		X			18′	-9″													18′	-9″	18′	-9″	113
4	6T1176		Vertical		20		X			22′	-1″													22′	-1″	22′	-1″	133
6	6T1177		Vertical		20		X			25′	-2″													25′	-2″	25′	-2″	227
101	6T1178		Horizontal		4	S	X			21′	-8″	12″												23′	-4″	23′	-3″	3,527
20	6T1179		Horizontal		5		X			21′	-8″	12″		12″										8′	-8″	8′	-8″	937
72	6T1180		Vertical		20		X			8′	-8″													6′	-8″	6′	-5″	1,002
104	6T1181		Vertical		5		X			18″		2′	-7″	2′	-7″									10′	-2″	9′	-11″	179
12	6T1182		Vertical		5		X			18″		2′	-7″	6′	-1″									8′	-9″	8′	-6″	230
18	6T1183		Vertical		5		X			3′	-7″	2′	-7″	2′	-7″									25′	-1″	25′	-1″	4,798
36	1T1184		Vertical		20		X			25′	-1″													6′	-9″	6′	-8″	280
28	6T1185		Horizontal		4	S	X			5′	-1″	12″												6′	-2″	6′	-1″	256
28	6T1186		Horizontal		4	S	X			4′	-6″	12″												13′	-5″	13′	-4″	320
16	6T1187		Horizontal		4	S	X			11′	-9″	12″												10′	-6″	10′	-3″	770
72	5T1188		Top & Bottom		5		X			8′	-8″	11″		11″										19′	-2″	18′	-11″	513
26	5T1189		Top & Bottom		5		X			17′	-4″	11″		11″										7′	-9″	7′	-6″	47
6	5T1190		Top		5		X			5′	-11″	11″		11″										8′	-1″	7′	-10″	49
6	5T1191		Bottom		5		X			5′	-11″	15″		11″										13′	-0″	12′	-9″	40
3	5T1192		Top		5		X			11′	-2″	11″		11″										14′	-0″	13′	-9″	43
3	5T1193		Bottom		5		X			11′	-2″	23″		11″										3′	-1″	2′	-10″	15
5	5T1194		Top		5		X			15″		11″		11″										3′	-6″	3′	-3″	17
5	5T1195		Bottom		5		X			15″		16″		11″										5′	-11″	5′	-8″	30
5	5T1196		Top		5		X			4′	-1″	11″		11″										6′	-4″	6′	-1″	32
5	5T1197		Bottom		5		X			4′	-1″	16″		11″										10′	-5″	10′	-2″	32
3	5T1198		Top		5		X			8′	-7″	11″		11″										10′	-9″	10′	-6″	33
3	5T1199		Bottom		5		X			8′	-7″	15″		11″										4′	-3″	4′	-0″	13
3	5T11100		Top		5		X			2′	-5″	11″		11″										5′	-7″	5′	-4″	17
3	5T11101		Bottom		5		X			2′	-5″	23″		15″										4′	-6″	4′	-3″	53
12	5T11102		Top		5		X			2′	-8″	11″		11″										4′	-11″	4′	-8″	58
12	5T11103		Bottom		5		X			2′	-8″	16″		11″										4′	-8″	4′	-5″	28
6	5T11104		Top		5		X			2′	-10″	11″		11″										5′	-8″	5′	-5″	34
6	5T11105		Bottom		5		X			2′	-10″	23″		11″										9′	-3″	9′	-0″	56
6	5T11106		Horizontal		5		X			3′	-7″	2′	-10″	2′	-10″									8′	-9″	8′	-6″	35
4	5T11107		Horizontal		5		X			3′	-1″	2′	-10″	2′	-10″									5′	-0″	5′	-0″	63
12	5T11108		Horizontal		20		X			5′	-0″									6⅜″		6⅜″		4′	-9″	4′	-9″	20
4	5T11109		Horizontal		2		X			4′	-0″	9″												15′	-2″	14′	-9″	2,993
76	8T11110		Vertical		5		X			22″		6′	-8″	6′	-8″									16′	-6″	16′	-1″	6,527
152	8T11111		Vertical		5		X			3′	-2″	6′	-8″	6′	-8″									15′	-9″	15′	-4″	3,111
76	8T11112		Vertical		5		X			2′	-5″	6′	-8″	6′	-8″									14′	-6″	14′	-6″	4,930
64	1T11113		Horizontal		20		X			14′	-6″													405′	-9″	405′	-9″	1,219
2	6T11114		Spiral		35		X			3′	-6″	5″		14′	-7″									7′	-6″	7′	-2″	352
24	7T11115		Vertical		5		X			18″		3′	-0″	3′	-0″									6′	-7″	6′	-7″	14
2	5T11116		Trans. Brg.		20		X			6′	-7″													2′	-5″	3′	-10″	2′	-5″	8′	-8″	8′	-8″	127
14	5T11117		Trans. Brg.		15		X			2′	-5″	3′	-10″	2′	-5″	20½″		20½″		20½″		20½″		10′	-2″	10′	-2″	106
10	5T11118		Trans. Brg.		2		X			7′	-8″	2′	-6″							21¼″		21¼″		4′	-6″	4′	-6″	42
14	4T11119		Horizontal		20		X			4′	-6″													5′	-6″	5′	-4″	71
20	4T11120		Horizontal		5		X			3′	-2″	14″		14″										13′	-4″	13′	-3″	199
10	6T11121		Horizontal		4	S	X			11′	-8″	12″												16′	-11″	16′	-11″	915
36	6T11122		Horizontal		15		X			2′	-7″	11′	-9″	2′	-7″	2′	-6⅝″	4½″		2′	-6⅝″	4¾″		2′	-8″	2′	-7″	5604
2080	5T11123		Horizontal		4	S	X			20″		6″												26′	-1″	26′	-1″	35
8	W5W1101		Spiral		22		X			18″		9⅛″																

Added 8

BILL OF REINFORCING STEEL

NO. REQ'D.	MARK NO. SIZE	MARK NO. MARK	LOCATION	EPOXY (E)	SHAPE NO.	STIRRUP (S)	SUBSTR. (X)	VARIES (V)	NO. EACH	DIMENSIONS B FT.	B IN.	C FT.	C IN.	D FT.	D IN.	E FT.	E IN.	F FT.	F IN.	H FT.	H IN.	K FT.	K IN.	NOMINAL LENGTH FT.	NOMINAL LENGTH IN.	ACTUAL LENGTH FT.	ACTUAL LENGTH IN.	WEIGHT LBS.
			PIER 12																									
1064	11P1201		Vertical		20		X			40′	-8″													40′	-8″	40′	-8″	229,890
202	11P1202		Vertical		20		X			30′	-0″													30′	-0″	30′	-0″	32,197
280	7P1203		Horizontal		88		X			20′	-11″	2′	-0″	3″										23″		23″		24,332
512	7P1204		Horizontal		88		X			18′	-0″	2′	-0″	3″										23″		23″		24,332
512	7P1205		Horizontal		65		X			15′	-4″	2′	-0″	3″										10′	-10¼″	10′	-10⅛″	17,704
7032	5P1206		Horizontal		3	S	X			3′	-6″													4′	-0″	4′	-0″	29,338
13674	5P1207		Horizontal		3	S	X			12′	-0″													12′	-6″	12′	-6″	178,275
3904	5P1208		Horizontal		4	S	X			5′	-6″	6″												6′	-6″	6′	-5″	26,128
624	5P1209		Horizontal		3	S	X			18′	-0″													18′	-6″	18′	-6″	12,040
352	11P1210		Vertical		2		X			22′	-2″	17′	-9″											9′	-4⅛″	15′	-0⅜″	39′	-11″	74,651
348	11P1211		Vertical		2		X			29′	-0″	10′	-11″											5′	-9⅜″	9′	-3⅛″	39′	-11″	73,803
32	11P1212		Vertical		20		X			18′	-6″													18′	-6″	18′	-6″	3,145
32	11P1213		Vertical		20		X			25′	-4″													25′	-4″	25′	-4″	4,307
16	11P1214		Vertical		20		X			12′	-0″													12′	-0″	12′	-0″	1,020
16	11P1215		Vertical		20		X			18′	-10″													18′	-10″	18′	-10″	1,601
32	11P1216		Vertical		20		X			15′	-3″													15′	-3″	15′	-3″	2,593
32	11P1217		Vertical		20		X			22′	-1″													22′	-1″	22′	-1″	3,755
60	11P1218		Vertical		20		X			15′	-4″													15′	-4″	15′	-4″	4,888
60	11P1219		Vertical		20		X			8′	-6″													8′	-6″	8′	-6″	2,710
8	11P1220		Vertical		20		X			22′	-8″													22′	-8″	22′	-8″	963
8	11P1221		Vertical		20		X			29′	-6″													29′	-6″	29′	-6″	1,254
8	11P1222		Vertical		20		X			23′	-7″													23′	-7″	23′	-7″	1,002
8	11P1223		Vertical		20		X			30′	-5″													30′	-5″	30′	-5″	1,293
8	11P1224		Vertical		20		X			24′	-6″													24′	-6″	24′	-6″	1,041
8	11P1225		Vertical		20		X			31′	-4″													31′	-4″	31′	-4″	1,332
8	11P1226		Vertical		20		X			25′	-6″													25′	-6″	25′	-6″	1,084
8	11P1227		Vertical		20		X			32′	-4″													32′	-4″	32′	-4″	1,374
156	11P1228		Vertical		20		X			26′	-3″													26′	-3″	26′	-3″	21,757
156	11P1229		Vertical		20		X			33′	-1″													33′	-1″	33′	-1″	27,420
16	11P1230		Vertical		20		X			16′	-0″													16′	-0″	16′	-0″	1,360
16	11P1231		Vertical		20		X			22′	-10″													22′	-10″	22′	-10″	1,941
48	11P1232		Vertical		20		X			16′	-10″	13′	-7″ 6			Added 6						6 31′	-1″	16′	-10″	16′	-10″	4,293
80	11P1233		Vertical 6		23 20		X			27′	-9″	11′	-4″	6′	-2″	4′	-4½″	4′	-4½″	9′	-7½″	9′	-7½″	27′	-9″	27′	-9″	11,795
32	11P1234		Vertical		20		X			13′	-9″											6 13,212		13′	-9″	13′	-9″	2,338
250	11P1235		Vertical		23		X			13′	-7″	11′	-4″	16′	-2″	11′	-5½″	11′	-5½″	9′	-7½″	9′	-7½″	41′	-1″	41′	-1″	54,569
620	7P1236		Horizontal		4	S	X			46′	-1″	2′	-0″											48′	-10″	48′	-8″	61,674
960	5P1237		Horizontal		3	S	X			6′	-8″													7′	-2″	7′	-2″	7,176
190	7P1238		Horizontal		5		X			39′	-7″	2′	-0″	2′	-0″									43′	-7″	43′	-3″	16,797
232	5P1239		Vertical		5		X			2′	-0″	3′	-2″	3′	-2″									8′	-4″	8′	-1″	1,956
80	5P1240		Horizontal		5		X			2′	-0″	9′	-10″	9′	-10″									21′	-8″	21′	-5″	1,787
40	5P1241		Horizontal		5		X			2′	-0″	5′	-10″	5′	-10″									13′	-8″	13′	-5″	560
28	11P1242		Vertical		20		X			16′	-4″													16′	-4″	16′	-4″	2,430
32	11P1243		Vertical		20		X			9′	-6″													9′	-6″	9′	-6″	1,615
392	5P1244		Horizontal		3	S	X			5′	-8″													6′	-2″	6′	-2″	2,521
408	5P1245		Horizontal		3	S	X			7′	-8″													8′	-2″	8′	-2″	3,475
408	5P1246		Horizontal		3	S	X			9′	-8″													10′	-2″	10′	-2″	4,326
408	5P1247		Horizontal		3	S	X			11′	-8″													12′	-2″	12′	-2″	5,177
128	5P1248		Horizontal		5		X			16″		3′	-2″	3′	-2″									7′	-8″	7′	-5″	990
64	7P1249		Horizontal		4	S	X			17″		2′	-0″											4′	-2″	4′	-0″	523
104	6P1250		Horizontal		5		X			21′	-4″	3′	-7″	3′	-7″									28′	-6″	28′	-3″	4,413
38	8P1251		Vertical		53	S	X			2′	-11″	8′	-3″											24′	-1″	23′	-6″	2,384
76	8P1252		Vertical		53	S	X			3′	-6″	8′	-3″											25′	-3″	24′	-8″	5,005
38	8P1253		Vertical		13	S	X			2′	-0″	8′	-4″	3′	-3″	8′	-3″							23′	-7″	23′	-0″	2,334
24	11P1254		Horizontal		20		X			14′	-6″													14′	-6″	14′	-6″	1,849
46	10P1255		Horizontal		17		X			40′	-1″													41′	-6″	41′	-6″	8,214
23	10P1256		Horizontal		20		X			60′	-0″													60′	-0″	60′	-0″	5,938

Notes:
For Bar Bending Diagram, see Sheet No. 8R184.

BILL OF REINFORCING STEEL

DESCRIPTION	DATE
Revised Reinforcing Steel	9-3-10
Revised Reinforcing Steel	6-10-11

DATE 6/10/11
ROUTE I-70 STATE MO/IL
DISTRICT 6 SHEET NO. 8R186
COUNTY ST. LOUIS CITY – MO ST. CLAIR – IL
JOB NO. J6I0984
CONTRACT ID. 091208-601
PROJECT NO. I-70-9 (20)
BRIDGE NO. A6500

MISSOURI HIGHWAYS AND TRANSPORTATION COMMISSION
105 WEST CAPITOL
JEFFERSON CITY, MO 65102
1-888-ASK-MODOT (1-888-275-6636)

HNTB
715 KIRK DRIVE
KANSAS CITY, MO 64105-1310
(816) 472-1201 FAX (816) 472-7220
CERTIFICATE OF AUTHORITY NO. 001270

FINAL PLANS

Detailed JUL 2009
Checked JUL 2009

Note: This drawing is not to scale. Follow dimensions.

T:\de-proj\St_Louis_City\Construction\J6I0984\Asbuilts\Bridge\B_A6500_186-205_J6I0984_186_REV008.dgn 1:30:21 PM

BILL OF REINFORCING STEEL

NO. REQ'D.	MARK NO. SIZE	MARK NO. MARK	LOCATION	EPOXY (E)	SHAPE NO.	STIRRUP (S)	SUBSTR. (X)	VARIES (V)	NO. EACH	DIMENSIONS B FT.	B IN.	C FT.	C IN.	D FT.	D IN.	E FT.	E IN.	F FT.	F IN.	H FT.	H IN.	K FT.	K IN.	NOMINAL LENGTH FT.	NOMINAL LENGTH IN.	ACTUAL LENGTH FT.	ACTUAL LENGTH IN.	WEIGHT LBS.
23652	8		PIER 12-CONT'D																									
1312		11T1201	Vertical		20		X			30'	-4"													30'	-4"	30'	-4"	211,443
136		11T1202	Vertical		20		X			16'	-6"													16'	-6"	16'	-6"	11,922
288		11T1203	Vertical		20		X			23'	-4"													23'	-4"	23'	-4"	35,703
1800		5T1204	Horizontal		4	S	X			11'	-9"	6"												12'	-9"	12'	-8"	23,780
900		5T1205	Horizontal		4	S	X			21'	-8"	6"												22'	-8"	22'	-7"	21,199
3572		6T1206	Horizontal		53	S	X					20"	21'	-8"										48'	-0"	47'	-7"	255,291
2624		6T1207	Horizontal		53	S	X					20"	11'	-9"										28'	-2"	27'	-9"	109,370
72		6T1208	Horizontal		53	S	X					20"	9'	-2"										23'	-0"	22'	-7"	2,442
25732		6T1209	Horizontal		4	S	X					20"			6"									2'	-8"	2'	-7"	69,333
40		11T1210	Vertical		20		X			25'	-8"													25'	-8"	25'	-8"	5,455
4		11T1212	Vertical		20		X			38'	-7"													38'	-7"	38'	-7"	820
16		11T1213	Vertical		20		X			23'	-11"													23'	-11"	23'	-11"	2,033
24		11T1214	Vertical		20		X			30'	-11"													30'	-11"	30'	-11"	3,942
144		11T1215	Vertical		20		X			23'	-6"													23'	-6"	23'	-6"	17,979
1860		11T1217	Vertical		20		X			37'	-3"													37'	-3"	37'	-3"	368,111
156		11T1218	Vertical		20		X			30'	-2"													30'	-2"	30'	-2"	25,003
8		11T1220	Vertical		20		X			7'	-0"													7'	-0"	7'	-0"	298
64		7T1121	Vertical		20		X			12'	-0"													12'	-0"	12'	-0"	1,570
8		11T1221	Vertical		20		X			8'	-3"													8'	-3"	8'	-3"	351
8		11T1222	Vertical		20		X			15'	-8"													15'	-8"	15'	-8"	666
4		11T1223	Vertical		20		X			34'	-5"													34'	-5"	34'	-5"	731
8		11T1224	Vertical		20		X			18'	-7"													18'	-7"	18'	-7"	790
8		11T1225	Vertical		20		X			20'	-10"													20'	-10"	20'	-10"	886
640		5T1126	Horizontal		4	S	X			2'	-2"	6"												3'	-2"	3'	-1"	2,056
4		11T1226	Vertical		20		X			14'	-4"													14'	-4"	14'	-4"	305
4		11T1227	Vertical		20		X			12'	-6"													12'	-6"	12'	-6"	266
324		11T1228	Vertical		20		X			38'	-9"													38'	-9"	38'	-9"	66,705
12		11T1229	Vertical		20		X			10'	-2"													10'	-2"	10'	-2"	648
4		11T1230	Vertical		20		X			18'	-9"													18'	-9"	18'	-9"	398
4		11T1231	Vertical		20		X			8'	-11"													8'	-11"	8'	-11"	189
4		11T1232	Vertical		20		X			21'	-7"													21'	-7"	21'	-7"	459
16		11T1233	Vertical		20		X			8'	-6"													8'	-6"	8'	-6"	723
8		11T1234	Vertical		20		X			7'	-10"													7'	-10"	7'	-10"	333
192		6T1235	Horizontal		53	S	X					20"	3'	-6"										11'	-8"	11'	-3"	3,244
192		6T1236	Horizontal		53	S	X					20"	6'	-1"										16'	-10"	16'	-5"	4,734
608		6T1237	Horizontal		53	S	X					20"	4'	-6"										13'	-8"	13'	-3"	12,100
96		6T1238	Horizontal		53	S	X					20"	5'	-7"										15'	-10"	15'	-5"	2,223
536		6T1239	Horizontal		53	S	X					20"	5'	-1"										14'	-10"	14'	-5"	11,606
720		6T1240	Horizontal		47	S	X			5'	-7"	20"												10'	-3"	10'	-0"	10,814
324		11T1241	Vertical		20		X			47'	-9"													47'	-9"	47'	-9"	82,197
16		11T1242	Vertical		20		X			4'	-11"													4'	-11"	4'	-11"	418
8		11T1243	Vertical		20		X			4'	-6"													4'	-6"	4'	-6"	191
16		11T1244	Vertical		20		X			4'	-7"													4'	-7"	4'	-7"	390
56		11T1245	Vertical		20		X			4'	-4"													4'	-4"	4'	-4"	1,289
48		11T1246	Vertical		20		X			4'	-2"													4'	-2"	4'	-2"	1,063
8		11T1247	Vertical		20		X			42'	-1"													42'	-1"	42'	-1"	1,789
4		11T1248	Vertical		20		X			42'	-10"													42'	-10"	42'	-10"	910
96		11T1249	Vertical		20		X			4'	-3"													4'	-3"	4'	-3"	2,168
316		11T1250	Vertical		20		X			44'	-0"													44'	-0"	44'	-0"	73,872
8		6T1251	Horizontal		4	S	X			32'	-4"	12"												34'	-0"	33'	-11"	408
36		6T1252	Horizontal		15		X			2'	-7"	12'	-2"	2'	-7"	2'	-6 3/8"	4 1/2"	2'	-6 3/8"	4 1/2"			17'	-4"	17'	-4"	937
24		6T1253	Horizontal		4	S	X	V	8	31'	-8"	12"												33'	-4"	33'	-3"	1,206
			Increment = 2 1/2"							32'	-1"	12"												33'	-9"	33'	-8"	
10		6T1254	Horizontal		4	S	X			11'	-5"	12"												13'	-1"	13'	-0"	195
250		6T1255	Horizontal		4	S	X	V	10	5'	-0"	12"												6'	-8"	6'	-7"	3,630
			Increment = 3 1/8"							11'	-2"	12"												12'	-10"	12'	-9"	
12		6T1256	Horizontal		53	S	X	V	4			20"	16'	-7"										37'	-10"	37'	-5"	683
			Increment = 6"									20"	17'	-1"										38'	-10"	38'	-5"	
32		6T1257	Horizontal		4	S	X	V	8	29'	-10"	12"												31'	-6"	31'	-5"	1,528
			Increment = 3"							30'	-7"	12"												32'	-3"	32'	-2"	
16		6T1258	Horizontal		53	S	X	V	4			20"	14'	-6"										33'	-8"	33'	-3"	817
			Increment = 6"									20"	15'	-3"										35'	-2"	34'	-9"	
24		6T1259	Horizontal		4	S	X	V	8	28'	-1"	12"												29'	-9"	29'	-8"	1,077
			Increment = 2 1/2"							28'	-6 3/8"	12"												30'	-3"	30'	-1"	
16		6T1260	Horizontal		53	S	X	V	4			20"	12'	-9"										30'	-2"	29'	-9"	733
			Increment = 6"									20"	13'	-6"										31'	-8"	31'	-3"	

BILL OF REINFORCING STEEL

NO. REQ'D.	MARK NO. SIZE	MARK NO. MARK	LOCATION	EPOXY (E)	SHAPE NO.	STIRRUP (S)	SUBSTR. (X)	VARIES (V)	NO. EACH	DIMENSIONS B FT.	B IN.	C FT.	C IN.	D FT.	D IN.	E FT.	E IN.	F FT.	F IN.	H FT.	H IN.	K FT.	K IN.	NOMINAL LENGTH FT.	NOMINAL LENGTH IN.	ACTUAL LENGTH FT.	ACTUAL LENGTH IN.	WEIGHT LBS.
			PIER 12-CONT'D																									
88		6T1261	Horizontal		4	S	X	V	8	24'	-2"	12"												25'	-10"	25'	-9"	3,574
			Increment = 3 1/8"							26'	-9"	12"												28'	-5"	28'	-4"	
48		11T1262	Vertical		20		X			4'	-1"													4'	-1"	4'	-1"	1,041
24		11T1263	Vertical		20		X			3'	-11"													3'	-11"	3'	-11"	499
20		11T1264	Vertical		20		X			11'	-3"													11'	-3"	11'	-3"	1,195
8		11T1265	Vertical		20		X			10'	-7"													10'	-7"	10'	-7"	450
152		11T1266	Vertical		20		X			18'	-11"													18'	-11"	18'	-11"	15,277
204		11T1267	Vertical		20		X			13'	-10"													13'	-10"	13'	-10"	14,993
4		6T1268	Horizontal		4	S	X			23'	-11"	12"												25'	-7"	25'	-6"	153
4		6T1269	Horizontal		4	S	X			23'	-9"	12"												25'	-5"	25'	-4"	152
4		6T1270	Horizontal		20		X			2'	-11"													2'	-11"	2'	-11"	18
4		6T1271	Horizontal		20		X			6'	-3"													6'	-3"	6'	-3"	38
4		6T1272	Horizontal		20		X			9'	-7"													9'	-7"	9'	-7"	58
4		6T1273	Horizontal		20		X			12'	-11"													12'	-11"	12'	-11"	78
4		6T1274	Horizontal		20		X			15'	-5"													15'	-5"	15'	-5"	93
4		6T1275	Horizontal		20		X			18'	-9"													18'	-9"	18'	-9"	113
4		6T1276	Horizontal		20		X			22'	-1"													22'	-1"	22'	-1"	133
6		6T1277	Horizontal		20		X			25'	-2"													25'	-2"	25'	-2"	227
101		6T1278	Horizontal		4	S	X			21'	-8"	12"												23'	-4"	23'	-3"	3,527
20		6T1279	Horizontal		5		X			21'	-8"	12"		12"										23'	-8"	23'	-5"	703
72		6T1280	Vertical		20		X			8'	-8"													8'	-8"	8'	-8"	937
104		6T1281	Vertical		5		X					18"	2'	-7"	2'	-7"								6'	-8"	6'	-5"	1,002
12		6T1282	Vertical		5		X					18"	2'	-7"	6'	-1"								10'	-2"	9'	-11"	179
18		6T1283	Vertical		5		X					3'	-7"	2'	-7"	2'	-7"							8'	-9"	8'	-6"	230
36		11T1284	Vertical		20		X			25'	-1"													25'	-1"	25'	-1"	4,798
28		6T1285	Horizontal		4	S	X			5'	-1"	12"												6'	-9"	6'	-8"	280
28		6T1286	Horizontal		4	S	X			4'	-6"	12"												6'	-2"	6'	-1"	256
16		6T1287	Horizontal		4	S	X			11'	-9"	12"												13'	-5"	13'	-4"	320
72		5T1288	Top & Bottom		5		X			8'	-8"	11"		11"										10'	-6"	10'	-3"	770
26		5T1289	Top & Bottom		5		X			17'	-4"	11"		11"										19'	-2"	18'	-11"	513
6		5T1290	Top		5		X			5'	-11"	11"		11"										7'	-9"	7'	-6"	47
6		5T1291	Bottom		5		X			5'	-11"	15"		11"										8'	-1"	7'	-10"	49
3		5T1292	Top		5		X			11'	-2"	11"		11"										13'	-0"	12'	-9"	40
3		5T1293	Bottom		5		X			11'	-2"	23"		11"										14'	-0"	13'	-9"	43
5		5T1294	Top		5		X					15"	11"		11"									3'	-1"	2'	-10"	15
5		5T1295	Bottom		5		X					15"	16"		11"									3'	-6"	3'	-3"	17
5		5T1296	Top		5		X			4'	-1"	11"		11"										5'	-11"	5'	-8"	30
5		5T1297	Bottom		5		X			4'	-1"	16"		11"										6'	-4"	6'	-1"	32
3		5T1298	Top		5		X			8'	-7"	11"		11"										10'	-5"	10'	-2"	32
3		5T1299	Bottom		5		X			8'	-7"	15"		11"										10'	-9"	10'	-6"	33
3		5T12100	Top		5		X			2'	-5"	11"		11"										4'	-3"	4'	-0"	13
3		5T12101	Bottom		5		X			2'	-5"	23"		15"										5'	-7"	5'	-4"	17
12		5T12102	Top		5		X			2'	-8"	11"		11"										4'	-6"	4'	-3"	53
12		5T12103	Bottom		5		X			2'	-8"	16"		11"										4'	-11"	4'	-8"	58
6		5T12104	Top		5		X			2'	-10"	11"		11"										4'	-8"	4'	-5"	28
6		5T12105	Bottom		5		X			2'	-10"	23"		11"										5'	-8"	5'	-5"	34
6		5T12106	Horizontal		5		X			3'	-7"	2'	-10"	2'	-10"									9'	-3"	9'	-0"	56
4		5T12107	Horizontal		5		X			3'	-1"	2'	-10"	2'	-10"									8'	-9"	8'	-6"	35
12		5T12108	Horizontal		20		X			5'	-0"													5'	-0"	5'	-0"	63
4		5T12109	Horizontal		2		X			4'	-0"	9"								6 3/8"		6 3/8"		4'	-9"	4'	-9"	20
76		8T12110	Vertical		5		X					22"	6'	-8"	6'	-8"								15'	-2"	14'	-9"	2,993
152		8T12111	Vertical		5		X					3'	-2"	6'	-8"	6'	-8"							16'	-6"	16'	-1"	6,527
76		8T12112	Vertical		5		X					2'	-5"	6'	-8"	6'	-8"							15'	-9"	15'	-4"	3,111
64		11T12113	Horizontal		20		X					14'	-6"											14'	-6"	14'	-6"	4,930
2		6T12114	Spiral		35		X					3'	-6"		5"		14'	-7"						405'	-9"	405'	-9"	1,219
24		7T12115	Vertical		5		X					18"	3'	-0"	3'	-0"								7'	-6"	7'	-2"	352
2		5T12116	Trans. Brg.		20		X					6'	-7"											6'	-7"	6'	-7"	14
14		5T12117	Trans. Brg.		15		X					2'	-5"	3'	-10"	2'	-5"	20 1/2"		20 1/2"		20 1/2"		8'	-8"	8'	-8"	127
10		5T12118	Trans. Brg.		2		X					7'	-8"	2'	-6"							21 1/4"		10'	-2"	10'	-2"	106
14		4T12119	Horizontal		20		X					4'	-6"											4'	-6"	4'	-6"	42
20		4T12120	Horizontal		5		X					3'	-2"	14"		14"								5'	-6"	5'	-4"	71
10		6T12121	Horizontal		4	S	X					11'	-8"	12"										13'	-4"	13'	-3"	199
36		6T12122	Horizontal		15		X					2'	-7"	11'	-9"	2'	-7"	2'	-6 3/8"	4 1/2"	2'	-6 3/8"	4 1/2"	16'	-11"	16'	-11"	915
2080		5T12123	Horizontal		4	S	X					20"		6"										2'	-8"	2'	-7"	5604
8		W5W1201	Spiral		22		X					18"		9 1/8"										26'	-1"	26'	-1"	35

Added 8

Notes:
For Bar Bending Diagram, see Sheet No. BR184.

BILL OF REINFORCING STEEL

DATE 4/19/12
ROUTE I-70 | STATE MO/IL
DISTRICT 6 | SHEET NO. BR187
COUNTY ST. LOUIS CITY - MO, ST. CLAIR - IL
JOB NO. J6I0984
CONTRACT ID. 091208-601
PROJECT NO. I-70-9 (20)
BRIDGE NO. A6500

DATE	DESCRIPTION
6-10-11	8 Revised Reinforcing Steel
4-19-12	8 Revised Reinforcing Steel

MISSOURI HIGHWAYS AND TRANSPORTATION COMMISSION
105 WEST CAPITOL
JEFFERSON CITY, MO 65102
1-888-ASK-MODOT (1-888-275-6636)
HNTB
715 KIRK DRIVE
KANSAS CITY, MO 64105-1310
TELEPHONE (816) 472-1201
CERTIFICATE OF AUTHORITY NO. 001270

FINAL PLANS

Detailed JUL 2009
Checked JUL 2009

Note: This drawing is not to scale. Follow dimensions.

T:\de-proj\St_Louis_City\Construction\J6I0984\Asbuilts\Bridge\B_A6500_187-205_J6I0984_187_REV011.dgn 1:31:05 PM

BILL OF REINFORCING STEEL ⚠4

NO. REQ'D.	MARK NO. SIZE	MARK	LOCATION	EPOXY (E)	SHAPE NO.	STIRRUP (S)	SUBSTR. (X)	VARIES (V)	NO. EACH	DIMENSIONS B FT.	B IN.	C FT.	C IN.	D FT.	D IN.	E FT.	E IN.	F FT.	F IN.	H FT.	H IN.	K FT.	K IN.	NOMINAL LENGTH FT.	NOMINAL LENGTH IN.	ACTUAL LENGTH FT.	ACTUAL LENGTH IN.	WEIGHT LBS.
			PIER 13																									
168	11H1301		Beam	E	19		X			2′	-0″	58′	-4″											60′	-4″	60′	-0″	53,555
48	11H1302		Beam	E	20		X			58′	-4″													58′	-4″	58′	-4″	14,876
24	6H1303		Beam	E	5		X			11′	-4″	12″		12″										13′	-4″	13′	-1″	472
14	6H1304		Beam	E	19		X			12″		54′	-8″											55′	-8″	55′	-7″	1,169
14	6H1305		Beam	E	5		X			10′	-6″	12″		2′	-8″									14′	-2″	13′	-11″	293
28	6H1306		Beam	E	19		X			12″		13′	-9″											14′	-9″	14′	-8″	617
7	6H1307		Beam	E	5		X			19′	-0″	12″		12″										21′	-0″	20′	-9″	218
10	6H1308		Beam	E	5		X			4′	-4″	5′	-7″	5′	-7″									15′	-6″	15′	-3″	229
26	6H1309		Beam	E	20		X			11′	-6″													11′	-6″	11′	-6″	449
24	6H1310		Beam	E	5		X			3′	-1″	12″		12″										5′	-1″	4′	-10″	174
580	6P1301		Drilled Shaft		16		X			9′	-0″													28′	-4″	28′	-4″	24,683
516	6P1302		Drilled Shaft		16		X			9′	-0″	2′	-2″											30′	-6″	30′	-6″	23,638
64	6P1303		Beam	E	16		X			9′	-0″													28′	-4″	28′	-4″	2,724
212	7U1301		Beam	E	53	S	X			4′	-8″	11′	-6″											33′	-10″	33′	-4″	14,444
104	7U1302		Beam	E	5		X			11′	-6″	14″		14″										13′	-10″	13′	-6″	2,870
22	7U1303		Beam	E	5		X			11′	-6″	3′	-9″	3′	-9″									19′	-0″	18′	-8″	839
83	7U1304		Beam	E	5		X			5′	-6″	3′	-9″	3′	-9″									13′	-0″	12′	-8″	2,149
24	7U1305		Beam	E	5		X			5′	-6″	2′	-10″	2′	-10″									11′	-2″	10′	-10″	531
24	7U1306		Beam	E	5		X			5′	-6″	3′	-1″	3′	-1″									11′	-8″	11′	-4″	556
20	7U1307		Beam	E	5		X			5′	-6″	3′	-4″	3′	-4″									12′	-2″	11′	-10″	484
106	7U1308		Beam	E	53	S	X			6′	-10″	11′	-6″											38′	-2″	37′	-8″	8,161
13	8U1309		Beam	E	5		X			4′	-6″	13′	-11″	13′	-11″									32′	-4″	31′	-11″	1,108
9	11U1310		Beam	E	5		X			7′	-6″	15′	-4″	15′	-4″									38′	-2″	37′	-6″	1,793
26	6U1311		Beam	E	5		X			3′	-3″	5′	-3″	5′	-3″									13′	-9″	13′	-6″	527
60	18V1301		Drilled Shaft		20		X			26′	-3″													26′	-3″	44′	-3″	21,420
60	18V1302		Drilled Shaft		20		X			24′	-3″													24′	-3″	46′	-3″	19,788
240	18V1303		Drilled Shaft		20		X			60′	-0″													60′	-0″	50′	-0″	195,840
60	18V1304		Column	E	20		X			43′	-1″													43′	-1″	43′	-1″	35,156
62	18V1305		Column	E	20		X			41′	-1″													41′	-1″	41′	-1″	34,641
26	6V1306		Beam	E	20		X			16′	-10″													16′	-10″	16′	-10″	657
26	6V1307		Beam	E	20		X			7′	-8″													7′	-8″	7′	-8″	299
32	WSW1301		Beam	E	22		X			12″		9 3/8″												19′	-9″	19′	-9″	106

BILL OF REINFORCING STEEL

NO. REQ'D.	MARK NO. SIZE	MARK	LOCATION	EPOXY (E)	SHAPE NO.	STIRRUP (S)	SUBSTR. (X)	VARIES (V)	NO. EACH	DIMENSIONS B FT.	B IN.	C FT.	C IN.	D FT.	D IN.	E FT.	E IN.	F FT.	F IN.	H FT.	H IN.	K FT.	K IN.	NOMINAL LENGTH FT.	NOMINAL LENGTH IN.	ACTUAL LENGTH FT.	ACTUAL LENGTH IN.	WEIGHT LBS.

Notes:
For Bar Bending Diagram, see Sheet No. BR184.
Two additional #18-V1305 are included in Bill of Reinforcing Steel for testing.

BILL OF REINFORCING STEEL

DATE 5/17/10
ROUTE I-70 STATE MO/IL
DISTRICT 6 SHEET NO. BR188
COUNTY ST. LOUIS CITY - MO ST. CLAIR - IL
JOB NO. J6I0984
CONTRACT ID. 091208-601
PROJECT NO. I-70-9 (20)
BRIDGE NO. A6500

DESCRIPTION	DATE
⚠4 Revised per ATC	5-17-10

MISSOURI HIGHWAYS AND TRANSPORTATION COMMISSION
105 WEST CAPITOL
JEFFERSON CITY, MO 65102
1-888-ASK-MODOT (1-888-275-6636)

HNTB
715 KIRK DRIVE
KANSAS CITY, MO 64105-1310
TELEPHONE (816) 472-1201
CERTIFICATE OF AUTHORITY NO. 001270

FINAL PLANS

Detailed JUL 2009
Checked JUL 2009

Note: This drawing is not to scale. Follow dimensions.

T:\de-proj\St_Louis_City\Construction\J6I0984\Asbuilts\Bridge\B_A6500_188-205_J6I0984_188.dgn 1:35:34 PM

⚠4 BLANK SHEET → BILL OF REINFORCING STEEL

Detailed JUL 2009
Checked JUL 2009

Note: This drawing is not to scale. Follow dimensions.

Sheet No. 189 of 205

DATE 5/17/10
ROUTE I-70
STATE MO/IL
DISTRICT 6
SHEET NO. BR189
COUNTY ST. LOUIS CITY - MO ST. CLAIR - IL
JOB NO. J610984
CONTRACT ID. 091208-601
PROJECT NO. I-70-9 (20)
BRIDGE NO. A6500

DATE	DESCRIPTION
5-17-10	⚠4 Revised per ATC

MISSOURI HIGHWAYS AND TRANSPORTATION COMMISSION
105 WEST CAPITOL
JEFFERSON CITY, MO 65102
1-888-ASK-MODOT (1-888-275-6636)

HNTB
715 KIRK DRIVE
KANSAS CITY, MO 64105-1310
TELEPHONE (816) 472-1201
CERTIFICATE OF AUTHORITY
NO. 001270

FINAL PLANS

REV.

T:\de-proj\St_Louis_City\Construction\J610984\Asbuilts\Bridge\B_A6500_189-205_J610984_189.dgn

1:36:08 PM

BILL OF REINFORCING STEEL ⚠4

NO. REQ'D.	MARK NO. SIZE	MARK	LOCATION	EPOXY (E)	SHAPE NO.	STIRRUP (S)	SUBSTR. (X)	VARIES (V)	NO. EACH	DIMENSIONS B FT.	B IN.	C FT.	C IN.	D FT.	D IN.	E FT.	E IN.	F FT.	F IN.	H FT.	H IN.	K FT.	K IN.	NOMINAL LENGTH FT.	NOMINAL LENGTH IN.	ACTUAL LENGTH FT.	ACTUAL LENGTH IN.	WEIGHT LBS.
			FOUNDATION – PIER 11 ~~(ALTERNATIVE)~~																									
420	18	F1171	Footing		20		X			54′-6″														54′-6″		54′-6″		311,304
294	18	F1172	Footing		20		X			54′-0″														54′-0″		54′-0″		215,914
234	18	F1173	Footing		20		X			50′-3″														50′-3″		50′-3″		159,916
262	18	F1174	Footing		20		X			37′-0″														37′-0″		37′-0″		131,838
234	18	F1175	Footing		20		X			37′-3″														37′-3″		37′-3″		118,544
262	18	F1176	Footing		20		X			50′-0″														50′-0″		50′-0″		178,160
1264	11	F1177	Footing		5	S	X			19′-6″		2′-0″		2′-0″										23′-6″		22′-10″		153,340
202	11	F1178	Footing		20		X			26′-7″														26′-7″		26′-7″		28,530
532	11	F1179	Footing		2		X			19′-9″		6′-10″								2′-8 3/8″		6′-3 3/8″		26′-7″		26′-7″		75,138
532	11	F1180	Footing		2		X			19′-9″		13′-8″								5′-4 1/8″		12′-6 1/4″		33′-5″		33′-5″		94,453
324	6P	1170	Drilled Shaft		16		X			10′-6″		2′-2″												35′-2″		35′-2″		17,114
732	6P	1171	Drilled Shaft		16		X			10′-6″														33′-0″		33′-0″		36,282
252	18	V1171	Drilled Shaft		20		X			60′-0″														60′-0″		60′-0″		205,632
252	18	V1172	Drilled Shaft		20		X			44′-0″														44′-0″		44′-0″		150,797

~~BILL OF REINFORCING STEEL~~ ⚠4

NO. REQ'D.	MARK NO. SIZE	MARK	LOCATION	EPOXY (E)	SHAPE NO.	STIRRUP (S)	SUBSTR. (X)	VARIES (V)	NO. EACH	DIMENSIONS B FT.	B IN.	C FT.	C IN.	D FT.	D IN.	E FT.	E IN.	F FT.	F IN.	H FT.	H IN.	K FT.	K IN.	NOMINAL LENGTH FT.	NOMINAL LENGTH IN.	ACTUAL LENGTH FT.	ACTUAL LENGTH IN.	WEIGHT LBS.
			FOUNDATION – PIER 12																									
220	9F	1201	Vert.		19		X			46′-0″		19″												47′-7″		47′-4″		35,405
220	9F	1202	Vert.		20		X			41′-3″														41′-3″		41′-3″		30,655
292	8F	1203	Vert.		20		X			45′-3″														45′-3″		45′-3″		35,279
464	7F	1204	Horiz.		53	S	X			2′-2″		15′-8″												37′-3″		36′-8″		34,775
464	7F	1205	Horiz.		53	S	X			2′-2″		21′-3″												48′-4″		47′-10″		45,366
464	7F	1206	Horiz.		53	S	X			2′-2″		15′-7″												37′-0″		36′-6″		34,617
464	7F	1207	Horiz.		53	S	X			2′-9″		7′-1″												21′-2″		20′-8″		19,600
518	7F	1208	Horiz.		4	S	X			38′-4″		14″												40′-3″		40′-1″		42,440
260	7F	1209	Horiz.		4	S	X			41′-4″		14″												43′-3″		43′-1″		22,896
4304	5F	1210	Horiz.		4	S	X			2′-2″		6″												3′-2″		3′-1″		13,841
552	5F	1211	Horiz.		4	S	X			2′-9″		6″												3′-9″		3′-8″		2,111
58	11F	1212	Horiz.		19		X			2′-0″		38′-9″												40′-9″		40′-5″		12,455
58	11F	1213	Horiz.		19		X			2′-0″		46′-6″												50′-6″		50′-2″		15,459
20	11F	1214	Horiz.		19		X	V	4	2′-0″		34′-5″												36′-5″		36′-1″		4,051
			Increment = 12 1/4″							2′-0″		38′-6″												40′-6″		40′-2″		
20	11F	1215	Horiz.		19		X	V	4	2′-0″		44′-2″												46′-2″		45′-10″		5,087
			Increment = 12 1/4″							2′-0″		48′-3″												50′-3″		49′-11″		
58	11F	1216	Horiz.		19		X			2′-0″		38′-2″												40′-2″		39′-10″		12,275
58	11F	1217	Horiz.		19		X			2′-0″		47′-11″												49′-11″		49′-7″		15,279
20	11F	1218	Horiz.		19		X	V	4	2′-0″		34′-3″												36′-3″		35′-11″		4,025
			Increment = 11 3/4″							2′-0″		38′-2″												40′-2″		39′-10″		
20	11F	1219	Horiz.		19		X	V	4	2′-0″		44′-0″												46′-0″		45′-8″		5,061
			Increment = 11 1/4″							2′-0″		47′-11″												49′-11″		49′-7″		
138	11F	1220	Horiz.		5		X			37′-5″		2′-0″		2′-0″										41′-5″		40′-9″		29,878
20	11F	1221	Horiz.		5		X	V	4	28′-0″		2′-0″		2′-0″										32′-0″		31′-4″		3,803
			Increment = 26 3/4″							36′-11″		2′-0″		2′-0″										40′-11″		40′-3″		
138	11F	1222	Horiz.		5		X			36′-4″		2′-0″		2′-0″										40′-4″		39′-8″		29,083
20	11F	1223	Horiz.		5		X	V	4	27′-4″		2′-0″		2′-0″										31′-4″		30′-8″		3,737
			Increment = 27″							36′-4″		2′-0″		2′-0″										40′-4″		39′-8″		
58	11F	1224	Horiz.		19		X			2′-0″		37′-6″												39′-6″		39′-2″		12,069
58	11F	1225	Horiz.		18		X			2′-0″		47′-2″												49′-2″		48′-10″		15,048
8	11F	1226	Horiz.		19		X	V	4	2′-0″		36′-2″												38′-2″		37′-10″		1,631
			Increment = 13″							2′-0″		37′-3″												39′-3″		38′-11″		
8	11F	1227	Horiz.		19		X	V	4	2′-0″		34′-2″												36′-2″		35′-10″		1,546
			Increment = 13″							2′-0″		35′-3″												37′-3″		36′-11″		
8	11F	1228	Horiz.		19		X	V	4	2′-0″		43′-10″												45′-10″		45′-6″		1,955
			Increment = 12″							2′-0″		44′-10″												46′-10″		46′-6″		
4	11F	1229	Horiz.		19		X			2′-0″		33′-2″												35′-2″		34′-10″		740
8	11F	1230	Horiz.		19		X	V	4	2′-0″		45′-11″												47′-11″		47′-7″		2,044
			Increment = 12″							2′-0″		46′-11″												48′-11″		48′-7″		
4	11F	1231	Horiz.		19		X			2′-0″		42′-10″												44′-10″		44′-6″		946
138	11F	1232	Horiz.		5		X			35′-5″		2′-0″		2′-0″										39′-5″		38′-9″		28,411
8	11F	1233	Horiz.		5		X	V	4	32′-11″		2′-0″		2′-0″										36′-11″		36′-3″		1,583
			Increment = 24″							34′-11″		2′-0″		2′-0″										38′-11″		38′-3″		
12	11F	1234	Horiz.		5		X	V	4	26′-9″		2′-0″		2′-0″										30′-9″		30′-1″		2,048
			Increment = 24 1/2″							30′-10″		2′-0″		2′-0″										34′-10″		34′-2″		
208	7F	1235	Horiz.		4	S	X			22′-2″		14″												24′-1″		23′-11″		10,168
58	9F	1237	Horiz.		19		X			6′-0″		42′-0″												48′-0″		47′-9″		9,416
58	9F	1238	Horiz.		19		X			19″		41′-6″												43′-1″		42′-10″		8,447
8	9F	1239	Horiz.		19		X	V	4	6′-0″		37′-8″												43′-8″		43′-5″		1,195
			Increment = 12″							6′-0″		38′-8″												44′-8″		44′-5″		
8	9F	1240	Horiz.		19		X	V	4	19″		36′-9″												38′-4″		38′-1″		1,049
			Increment = 12″							19″		37′-9″												39′-4″		39′-1″		
10	9F	1241	Horiz.		5		X	V	2	30′-8″		6′-0″		6′-0″										42′-8″		42′-2″		1,530
			Increment = 17″							36′-4″		6′-0″		6′-0″										48′-4″		47′-10″		
10	9F	1242	Horiz.		5		X	V	2	29′-8″		19″		19″										32′-10″		32′-4″		1,196
			Increment = 17″							35′-4″		19″		19″										38′-6″		38′-0″		
12	9F	1243	Horiz.		19		X	V	4	6′-0″		39′-0″												45′-0″		44′-9″		1,867
			Increment = 12″							6′-0″		41′-0″												47′-0″		46′-9″		
202	11F	1244	Vert.		20		X			22′-8″														22′-8″		22′-8″		24,326
532	11F	1245	Vert.		2		X			15′-10″		6′-10″								2′-8 3/8″		6′-3 3/8″		22′-8″		22′-8″		64,068
532	11F	1246	Vert.		2		X			15′-10″		13′-8″								5′-4 1/8″		12′-6 1/4″		29′-6″		29′-6″		83,382
69	9F	1247	Horiz.		5		X			36′-9″		19″		19″										39′-11″		39′-5″		9,247
69	9F	1248	Horiz.		5		X			37′-9″		6′-0″		6′-0″										49′-9″		49′-3″		11,554
12	9F	1249	Horiz.		19		X	V	4	19″		38′-3″												39′-10″		39′-7″		1,856
			Increment = 12″							19″		40′-3″												41′-10″		41′-7″		

Notes:
For Bar Bending Diagram, see Sheet No. BR184.

BILL OF REINFORCING STEEL

Detailed JUL 2009
Checked JUL 2009

Note: This drawing is not to scale. Follow dimensions.

Sheet No. 190 of 205

DATE 5/17/10
ROUTE I-70 | STATE MO/IL
DISTRICT 6 | SHEET NO. BR190
COUNTY ST. LOUIS CITY - MO, ST. CLAIR - IL
JOB NO. J6I0984
CONTRACT ID. 091208-601
PROJECT NO. I-70-9 (20)
BRIDGE NO. A6500

DATE	DESCRIPTION
5-17-10	⚠4 Revised per ATC

MISSOURI HIGHWAYS AND TRANSPORTATION COMMISSION
105 WEST CAPITOL
JEFFERSON CITY, MO 65102
1-888-ASK-MODOT (1-888-275-6636)

HNTB
715 KIRK DRIVE
KANSAS CITY, MO 64105-1310
TELEPHONE (816) 472-1201
CERTIFICATE OF AUTHORITY NO. 001270

FINAL PLANS

REV.

T:\de-proj\St_Louis_City\Construction\J6I0984\Asbuilts\Bridge\B_A6500_190-205_J6I0984_190.dgn 1:36:52 PM

~~BILL OF REINFORCING STEEL~~ ⚠4

NO. REQ'D.	MARK NO. SIZE	MARK	LOCATION	EPOXY (E)	SHAPE NO.	STIRRUP (S)	SUBSTR. (X)	VARIES (V)	NO. EACH	DIMENSIONS B FT. IN.	C FT. IN.	D FT. IN.	E FT. IN.	F FT. IN.	H FT. IN.	K FT. IN.	NOMINAL LENGTH FT. IN.	ACTUAL LENGTH FT. IN.	WEIGHT LBS.
			FOUNDATION – PIER 12-CONT'D																
376	9K	1201	Vert.		23		X			6′-0″	16″	4′-4″	3′-0 3/8″	3′-0 3/8″	4′-2 3/4″	4′-2 3/4″	11′-8″	11′-8″	14,915
936	8K	1202	Vert.		23		X			3′-5″	2′-2″	7′-6″	5′-3 3/8″	5′-3 3/8″	2′-5″	2′-5″	13′-1″	13′-1″	32,697
204	8K	1203	Vert.		23		X			3′-5″	17″	13′-9″	9′-8 3/8″	9′-8 3/8″	2′-5″	2′-5″	18′-7″	18′-7″	10,122
408	9K	1204	Vert.		20		X			13′-9″							13′-9″	13′-9″	19,074
408	11K	1205	Vert.		20		X			43′-3″							43′-3″	43′-3″	93,753
440	8K	1206	Vert.		20		X			27′-6″							27′-6″	27′-6″	32,307
132	8K	1207	Vert.		23		X			3′-5″	17″	7′-6″	5′-3 3/8″	5′-3 3/8″	2′-5″	2′-5″	12′-4″	12′-4″	4,347
200	9K	1208	Vert.		20		X			31′-6″							31′-6″	31′-6″	21,420
176	9K	1209	Vert.		20		X			33′-6″							33′-6″	33′-6″	20,046
224	8K	1210	Vert.		20		X			29′-6″							29′-6″	29′-6″	17,643
32	8K	1211	Vert.		20		X			17′-8″							17′-8″	17′-8″	1,509
292	8K	1212	Vert.		20		X			34′-3″							34′-3″	34′-3″	26,703
40	7K	1213	Horiz.		53	S	X			2′-9″	7′-1″						21′-2″	20′-8″	1,690
896	8K	1214	Vert.		23		X			3′-5″	2′-2″	18″	12 3/4″	12 3/4″	2′-5″	2′-5″	7′-1″	7′-1″	16,946
220	9K	1215	Vert.		23		X			4′-4″	4′-9″	4′-4″	23 1/4″	3′-10 5/8″	23 1/4″	3′-10 1/2″	13′-5″	13′-5″	10,036
1024	7K	1216	Horiz.		53	S	X			4′-0″	22′-3″						54′-0″	53′-6″	111,978
256	7K	1217	Horiz.		53	S	X			4′-0″	21′-6″						52′-6″	52′-0″	27,210
1000	7K	1218	Horiz.		20		X			42′-10″							42′-10″	42′-10″	87,551
600	7K	1219	Horiz.		20		X			34′-7″							34′-7″	34′-7″	42,413
300	7K	1220	Horiz.		20		X			60′-0″							60′-0″	60′-0″	36,792
12	7K	1221	Horiz.		4	S	X			35′-11″	14″						37′-10″	37′-8″	924
6	7K	1222	Horiz.		4	S	X			58′-3″	14″						60′-2″	60′-0″	736
12	7K	1223	Horiz.		4	S	X			44′-0″	14″						45′-11″	45′-9″	1,122
120	7K	1224	Horiz.		4	S	X			7′-0″	14″						8′-11″	8′-9″	2,146
72	7K	1225	Horiz.		4	S	X			11′-0″	14″						12′-11″	12′-9″	1,876
24	7K	1226	Horiz.		4	S	X			10′-0″	14″						11′-11″	11′-9″	576
24	7K	1227	Horiz.		4	S	X			50′-0″	14″						51′-11″	51′-9″	2,539
24	7K	1228	Horiz.		4	S	X			47′-0″	14″						48′-11″	48′-9″	2,391
96	7K	1229	Horiz.		7		X			11′-3″	18′-0″						32′-8″	32′-8″	6,410
32	7K	1230	Horiz.		7		X			10′-6″	16′-6″						30′-4″	30′-4″	1,984
196	8K	1231	Vert.		20		X			39′-2″							39′-2″	39′-2″	20,497
128	7K	1232	Cover		20		X			6′-3″							6′-3″	6′-3″	1,635
128	7K	1233	Cover		20		X			9′-7″							9′-7″	9′-7″	2,507
128	7K	1234	Cover		20		X			11′-8″							11′-8″	11′-8″	3,052
128	7K	1235	Cover		20		X			13′-1″							13′-1″	13′-1″	3,423
128	7K	1236	Cover		20		X			14′-2″							14′-2″	14′-2″	3,706
128	7K	1237	Cover		20		X			14′-10″							14′-10″	14′-10″	3,881
160	7K	1238	Cover		20		X			15′-3″							15′-3″	15′-3″	4,987
128	7K	1239	Cover		20		X			4′-7″							4′-7″	4′-7″	1,199
128	7K	1240	Cover		20		X			8′-7″							8′-7″	8′-7″	2,246
128	7K	1241	Cover		20		X			10′-10″							10′-10″	10′-10″	2,834
128	7K	1242	Cover		20		X			12′-5″							12′-5″	12′-5″	3,249
128	7K	1243	Cover		20		X			13′-6″							13′-6″	13′-6″	3,532
128	7K	1244	Cover		20		X			14′-3″							14′-3″	14′-3″	3,728
160	7K	1245	Cover		20		X			14′-8″							14′-8″	14′-8″	4,797

BILL OF REINFORCING STEEL ⚠4

NO. REQ'D.	MARK NO. SIZE	MARK	LOCATION	EPOXY (E)	SHAPE NO.	STIRRUP (S)	SUBSTR. (X)	VARIES (V)	NO. EACH	DIMENSIONS B FT. IN.	C FT. IN.	D FT. IN.	E FT. IN.	F FT. IN.	H FT. IN.	K FT. IN.	NOMINAL LENGTH FT. IN.	ACTUAL LENGTH FT. IN.	WEIGHT LBS.
			FOUNDATION – PIER 12 ~~(ALTERNATIVE)~~																
420	18F	1271	Footing		20		X			54′-6″							54′-6″		311,304
294	18F	1272	Footing		20		X			54′-0″							54′-0″	54′-0″	215,914
234	18F	1273	Footing		20		X			50′-3″							50′-3″	50′-3″	159,916
262	18F	1274	Footing		20		X			37′-0″							37′-0″	37′-0″	131,838
234	18F	1275	Footing		20		X			37′-3″							37′-3″	37′-3″	118,544
262	18F	1276	Footing		20		X			50′-0″							50′-0″	50′-0″	178,160
1264	11F	1277	Footing		5	S	X			19′-6″	2′-0″	2′-0″					23′-6″	22′-10″	153,340
202	11F	1278	Footing		20		X			26′-7″							26′-7″	26′-7″	28,530
532	11F	1279	Footing		2		X			19′-9″	6′-10″				2′-8 1/8″	6′-3 1/8″	26′-7″	26′-7″	15,138
532	11F	1280	Footing		2		X			19′-9″	13′-8″				5′-4 1/8″	12′-6 1/8″	33′-5″	33′-5″	94,453
384	6P	1270	Drilled Shaft		16		X			10′-6″	2′-2″						35′-2″	35′-2″	20,283
732	6P	1271	Drilled Shaft		16		X			10′-6″							33′-0″	33′-0″	36,282
252	18V	1271	Drilled Shaft		20		X			60′-0″							60′-0″	60′-0″	205,632
252	18V	1272	Drilled Shaft		20		X			53′-6″							53′-6″	53′-6″	183,355

Notes:
For Bar Bending Diagram, see Sheet No. BR184.

BILL OF REINFORCING STEEL

Detailed JUL 2009
Checked JUL 2009

Note: This drawing is not to scale. Follow dimensions.

Sheet No. 191 of 205

T:\de-proj\St_Louis_City\Construction\J6I0984\Asbuilts\Bridge\B_A6500_191-205_J6I0984_191.dgn 1:37:23 PM

DESCRIPTION
⚠ Revised per ATC
DATE 5-17-10

DATE 5/17/10
ROUTE I-70
STATE MO/IL
DISTRICT 6
SHEET NO. BR191
COUNTY ST. LOUIS CITY – MO ST. CLAIR – IL
JOB NO. J6I0984
CONTRACT ID. 091208-601
PROJECT NO. I-70-9 (20)
BRIDGE NO. A6500

MISSOURI HIGHWAYS AND TRANSPORTATION COMMISSION
105 WEST CAPITOL
JEFFERSON CITY, MO 65102
1-888-ASK-MODOT (1-888-275-6636)

HNTB
715 KIRK DRIVE
KANSAS CITY, MO 64105-1310
TELEPHONE (816) 472-1201
CERTIFICATE OF AUTHORITY NO. 001270

FINAL PLANS

REV.

BILL OF REINFORCING STEEL

NO. REQ'D.	MARK NO. SIZE	MARK	LOCATION	EPOXY (E)	SHAPE NO.	STIRRUP (S)	SUBSTR. (X)	VARIES (V)	NO. EACH	DIMENSIONS B FT.	B IN.	C FT.	C IN.	D FT.	D IN.	E FT.	E IN.	F FT.	F IN.	H FT.	H IN.	K FT.	K IN.	NOMINAL LENGTH FT.	NOMINAL LENGTH IN.	ACTUAL LENGTH FT.	ACTUAL LENGTH IN.	WEIGHT LBS.
			SUPERSTRUCTURE																									
			PANEL A120-01 (PER PANEL)																									
90	6S001		Slab Panel	E	20					12′-3″														12′-3″		12′-3″		1,656
28	6S002		Slab Panel	E	20					43′-1″														43′-1″		43′-1″		1,812
90	6S003		Slab Panel	E	5					7″		4′-11″		4′-11″										10′-5″		10′-2″		1,374
14	6S004		Slab Panel	E	5					5.5″		4′-5″		4′-5″										9′-4″		9′-1″		191
14	5S006		Slab Panel	E	89					10″		10″		2′-5″						5 3/8″		2′-4 1/2″		4′-1″		4′-0″		58
14	5S007		Slab Panel	E	54					16″		18″		18″		10″		10″		18″		1 1/2″		6′-0″		5′-8″		83
12	6S012		Slab Panel	E	5					5.5″		6′-5″		6′-5″										13′-4″		13′-1″		236
2	6S013		Slab Panel	E	5					5.5″		4′-5″		4′-5″										9′-4″		9′-1″		27
			PANEL A120-02 (PER PANEL)																									
90	6S001		Slab Panel	E	20					12′-3″														12′-3″		12′-3″		1,656
28	6S002		Slab Panel	E	20					43′-1″														43′-1″		43′-1″		1,812
90	6S003		Slab Panel	E	5					7″		4′-11″		4′-11″										10′-5″		10′-2″		1,374
14	6S004		Slab Panel	E	5					5.5″		4′-5″		4′-5″										9′-4″		9′-1″		191
14	5S006		Slab Panel	E	89					10″		10″		2′-5″						5 3/8″		2′-4 1/2″		4′-1″		4′-0″		58
14	5S007		Slab Panel	E	54					16″		18″		18″		10″		10″		18″		1 1/2″		6′-0″		5′-8″		83
12	6S012		Slab Panel	E	5					5.5″		6′-5″		6′-5″										13′-4″		13′-1″		236
2	6S013		Slab Panel	E	5					5.5″		4′-5″		4′-5″										9′-4″		9′-1″		27
			PANEL A120-03 (PER PANEL)																									
90	6S001		Slab Panel	E	20					12′-3″														12′-3″		12′-3″		1,656
28	6S002		Slab Panel	E	20					43′-1″														43′-1″		43′-1″		1,812
90	6S003		Slab Panel	E	5					7″		4′-11″		4′-11″										10′-5″		10′-2″		1,374
14	6S004		Slab Panel	E	5					5.5″		4′-5″		4′-5″										9′-4″		9′-1″		191
14	5S006		Slab Panel	E	89					10″		10″		2′-5″						5 3/8″		2′-4 1/2″		4′-1″		4′-0″		58
14	5S007		Slab Panel	E	54					16″		18″		18″		10″		10″		18″		1 1/2″		6′-0″		5′-8″		83
14	6S012		Slab Panel	E	5					5.5″		6′-5″		6′-5″										13′-4″		13′-1″		275
			PANEL A120-04 (PER PANEL)																									
90	6S001		Slab Panel	E	20					12′-3″														12′-3″		12′-3″		1,656
28	6S002		Slab Panel	E	20					43′-1″														43′-1″		43′-1″		1,812
90	6S003		Slab Panel	E	5					7″		4′-11″		4′-11″										10′-5″		10′-2″		1,374
14	6S004		Slab Panel	E	5					5.5″		4′-5″		4′-5″										9′-4″		9′-1″		191
14	5S006		Slab Panel	E	89					10″		10″		2′-5″						5 3/8″		2′-4 1/2″		4′-1″		4′-0″		58
14	5S007		Slab Panel	E	54					16″		18″		18″		10″		10″		18″		1 1/2″		6′-0″		5′-8″		83
14	6S012		Slab Panel	E	5					5.5″		6′-5″		6′-5″										13′-4″		13′-1″		275
			PANEL A120-05 (PER PANEL)																									
90	6S001		Slab Panel	E	20					12′-3″														12′-3″		12′-3″		1,656
28	6S002		Slab Panel	E	20					43′-1″														43′-1″		43′-1″		1,812
90	6S003		Slab Panel	E	5					7″		4′-11″		4′-11″										10′-5″		10′-2″		1,374
14	6S004		Slab Panel	E	5					5.5″		4′-5″		4′-5″										9′-4″		9′-1″		191
14	5S006		Slab Panel	E	89					10″		10″		2′-5″						5 3/8″		2′-4 1/2″		4′-1″		4′-0″		58
14	5S007		Slab Panel	E	54					16″		18″		18″		10″		10″		18″		1 1/2″		6′-0″		5′-8″		83
12	6S012		Slab Panel	E	5					5.5″		6′-5″		6′-5″										13′-4″		13′-1″		236
2	6S013		Slab Panel	E	5					5.5″		4′-5″		4′-5″										9′-4″		9′-1″		27
			PANEL A120-06 (PER PANEL)																									
90	6S001		Slab Panel	E	20					12′-3″														12′-3″		12′-3″		1,656
28	6S002		Slab Panel	E	20					43′-1″														43′-1″		43′-1″		1,812
90	6S003		Slab Panel	E	5					7″		4′-11″		4′-11″										10′-5″		10′-2″		1,374
14	6S004		Slab Panel	E	5					5.5″		4′-5″		4′-5″										9′-4″		9′-1″		191
14	5S006		Slab Panel	E	89					10″		10″		2′-5″						5 3/8″		2′-4 1/2″		4′-1″		4′-0″		58
14	5S007		Slab Panel	E	54					16″		18″		18″		10″		10″		18″		1 1/2″		6′-0″		5′-8″		83
13	6S012		Slab Panel	E	5					5.5″		6′-5″		6′-5″										13′-4″		13′-1″		255
1	6S013		Slab Panel	E	5					5.5″		4′-5″		4′-5″										9′-4″		9′-1″		14

BILL OF REINFORCING STEEL

NO. REQ'D.	MARK NO. SIZE	MARK	LOCATION	EPOXY (E)	SHAPE NO.	STIRRUP (S)	SUBSTR. (X)	VARIES (V)	NO. EACH	DIMENSIONS B FT.	B IN.	C FT.	C IN.	D FT.	D IN.	E FT.	E IN.	F FT.	F IN.	H FT.	H IN.	K FT.	K IN.	NOMINAL LENGTH FT.	NOMINAL LENGTH IN.	ACTUAL LENGTH FT.	ACTUAL LENGTH IN.	WEIGHT LBS.
			PANEL A120-07 (PER PANEL)																									
90	6S001		Slab Panel	E	20					12′-3″														12′-3″		12′-3″		1,656
28	6S002		Slab Panel	E	20					43′-1″														43′-1″		43′-1″		1,812
90	6S003		Slab Panel	E	5					7″		4′-11″		4′-11″										10′-5″		10′-2″		1,374
14	6S004		Slab Panel	E	5					5.5″		4′-5″		4′-5″										9′-4″		9′-1″		191
14	5S006		Slab Panel	E	89					10″		10″		2′-5″						5 3/8″		2′-4 1/2″		4′-1″		4′-0″		58
14	5S007		Slab Panel	E	54					16″		18″		18″		10″		10″		18″		1 1/2″		6′-0″		5′-8″		83
14	6S012		Slab Panel	E	5					5.5″		6′-5″		6′-5″										13′-4″		13′-1″		275
			PANEL A120-08 (PER PANEL)																									
90	6S001		Slab Panel	E	20					12′-3″														12′-3″		12′-3″		1,656
28	6S002		Slab Panel	E	20					43′-1″														43′-1″		43′-1″		1,812
90	6S003		Slab Panel	E	5					7″		4′-11″		4′-11″										10′-5″		10′-2″		1,374
14	6S004		Slab Panel	E	5					5.5″		4′-5″		4′-5″										9′-4″		9′-1″		191
14	5S006		Slab Panel	E	89					10″		10″		2′-5″						5 3/8″		2′-4 1/2″		4′-1″		4′-0″		58
14	5S007		Slab Panel	E	54					16″		18″		18″		10″		10″		18″		1 1/2″		6′-0″		5′-8″		83
14	6S012		Slab Panel	E	5					5.5″		6′-5″		6′-5″										13′-4″		13′-1″		275
			PANEL A120-09 (PER PANEL)																									
90	6S001		Slab Panel	E	20					12′-3″														12′-3″		12′-3″		1,656
28	6S002		Slab Panel	E	20					43′-1″														43′-1″		43′-1″		1,812
90	6S003		Slab Panel	E	5					7″		4′-11″		4′-11″										10′-5″		10′-2″		1,374
14	6S004		Slab Panel	E	5					5.5″		4′-5″		4′-5″										9′-4″		9′-1″		191
14	5S006		Slab Panel	E	89					10″		10″		2′-5″						5 3/8″		2′-4 1/2″		4′-1″		4′-0″		58
14	5S007		Slab Panel	E	54					16″		18″		18″		10″		10″		18″		1 1/2″		6′-0″		5′-8″		83
14	6S012		Slab Panel	E	5					5.5″		6′-5″		6′-5″										13′-4″		13′-1″		275
			PANEL A120-10 (PER PANEL)																									
90	6S001		Slab Panel	E	20					12′-3″														12′-3″		12′-3″		1,656
28	6S002		Slab Panel	E	20					43′-1″														43′-1″		43′-1″		1,812
90	6S003		Slab Panel	E	5					7″		4′-11″		4′-11″										10′-5″		10′-2″		1,374
14	6S004		Slab Panel	E	5					5.5″		4′-5″		4′-5″										9′-4″		9′-1″		191
4	6S005		Slab Panel	E	5					5.5″		6′-8″		6′-8″										13′-10″		13′-7″		82
14	5S006		Slab Panel	E	89					10″		10″		2′-5″						5 3/8″		2′-4 1/2″		4′-1″		4′-0″		58
14	5S007		Slab Panel	E	54					16″		18″		18″		10″		10″		18″		1 1/2″		6′-0″		5′-8″		83
14	6S012		Slab Panel	E	5					5.5″		6′-5″		6′-5″										13′-4″		13′-1″		275
			PANEL A120-11 (PER PANEL)																									
90	6S001		Slab Panel	E	20					12′-3″														12′-3″		12′-3″		1,656
28	6S002		Slab Panel	E	20					43′-1″														43′-1″		43′-1″		1,812
90	6S003		Slab Panel	E	5					7″		4′-11″		4′-11″										10′-5″		10′-2″		1,374
14	6S004		Slab Panel	E	5					5.5″		4′-5″		4′-5″										9′-4″		9′-1″		191
4	6S005		Slab Panel	E	5					5.5″		6′-8″		6′-8″										13′-10″		13′-7″		82
14	5S006		Slab Panel	E	89					10″		10″		2′-5″						5 3/8″		2′-4 1/2″		4′-1″		4′-0″		58
14	5S007		Slab Panel	E	54					16″		18″		18″		10″		10″		18″		1 1/2″		6′-0″		5′-8″		83
14	6S012		Slab Panel	E	5					5.5″		6′-5″		6′-5″										13′-4″		13′-1″		275
			PANEL A121-01 (PER PANEL)																									
90	6S001		Slab Panel	E	20					12′-3″														12′-3″		12′-3″		1,656
28	6S002		Slab Panel	E	20					43′-1″														43′-1″		43′-1″		1,812
90	6S003		Slab Panel	E	5					7″		4′-11″		4′-11″										10′-5″		10′-2″		1,374
14	6S004		Slab Panel	E	5					5.5″		4′-5″		4′-5″										9′-4″		9′-1″		191
4	6S005		Slab Panel	E	5					5.5″		6′-8″		6′-8″										13′-10″		13′-7″		82
14	5S006		Slab Panel	E	89					10″		10″		2′-5″						5 3/8″		2′-4 1/2″		4′-1″		4′-0″		58
14	5S007		Slab Panel	E	54					16″		18″		18″		10″		10″		18″		1 1/2″		6′-0″		5′-8″		83
16	6S008		Slab Panel	E	20					7′-0″														7′-0″		7′-0″		168
14	6S013		Slab Panel	E	5					5.5″		4′-5″		4′-5″										9′-4″		9′-1″		191

Notes:
For Bar Bending Diagram, see Sheet No. BR184.

BILL OF REINFORCING STEEL

Detailed JUL 2009
Checked JUL 2009

Note: This drawing is not to scale. Follow dimensions.

Sheet No. 192 of 205

T:\de-proj\St_Louis_City\Construction\J6I0984\Asbuilts\Bridge\B_A6500_192-205_J6I0984_192.dgn 8:09:21 AM

DATE 8/20/09
ROUTE I-70
STATE MO/IL
DISTRICT 6
SHEET NO. BR192
COUNTY ST. LOUIS CITY - MO ST. CLAIR - IL
JOB NO. J6I0984
CONTRACT ID. 091208-601
PROJECT NO. I-70-9 (20)
BRIDGE NO. A6500

DESCRIPTION | DATE | REV.

FINAL PLANS

MISSOURI HIGHWAYS AND TRANSPORTATION COMMISSION
105 WEST CAPITOL
JEFFERSON CITY, MO 65102
1-888-ASK-MODOT (1-888-275-6636)

HNTB
715 KIRK DRIVE
KANSAS CITY, MO 64105-1310
TELEPHONE 816.472.1201
CERTIFICATE OF AUTHORITY NO. 001270

BILL OF REINFORCING STEEL

NO. REQ'D.	MARK NO. SIZE	MARK	LOCATION	EPOXY (E)	SHAPE NO.	STIRRUP (S)	SUBSTR. (X)	VARIES (V)	NO. EACH	DIMENSIONS B FT.	B IN.	C FT.	C IN.	D FT.	D IN.	E FT.	E IN.	F FT.	F IN.	H FT.	H IN.	K FT.	K IN.	NOMINAL LENGTH FT.	NOMINAL LENGTH IN.	ACTUAL LENGTH FT.	ACTUAL LENGTH IN.	WEIGHT LBS.
			PANEL A121-02 (PER PANEL)																									
90	6S001	Slab Panel		E	20					12′	-3″													12′	-3″	12′	-3″	1,656
28	6S002	Slab Panel		E	20					43′	-1″													43′	-1″	43′	-1″	1,812
90	6S003	Slab Panel		E	5					7″		4′	-11″	4′	-11″									10′	-5″	10′	-2″	1,374
14	6S004	Slab Panel		E	5					5.5″		4′	-5″	4′	-5″									9′	-4″	9′	-1″	191
4	6S005	Slab Panel		E	5					5.5″		6′	-8″	6′	-8″									13′	-10″	13′	-7″	82
14	5S006	Slab Panel		E	89					10″		10″		2′	-5″					5⅜″		2′	-4½″	4′	-1″	4′	-0″	58
14	5S007	Slab Panel		E	54					16″		18″		18″		10″		10″		18″		1½″		6′	-0″	5′	-8″	83
16	6S008	Slab Panel		E	20					6′	-6″													7′	-0″	7′	-0″	168
14	6S013	Slab Panel		E	5					5.5″		4′	-5″	4′	-5″									9′	-4″	9′	-1″	191
			PANEL A121-03 (PER PANEL)																									
90	6S001	Slab Panel		E	20					12′	-3″													12′	-3″	12′	-3″	1,656
28	6S002	Slab Panel		E	20					43′	-1″													43′	-1″	43′	-1″	1,812
90	6S003	Slab Panel		E	5					7″		4′	-11″	4′	-11″									10′	-5″	10′	-2″	1,374
14	6S004	Slab Panel		E	5					5.5″		4′	-5″	4′	-5″									9′	-4″	9′	-1″	191
4	6S005	Slab Panel		E	5					5.5″		6′	-8″	6′	-8″									13′	-10″	13′	-7″	82
14	5S006	Slab Panel		E	89					10″		10″		2′	-5″					5⅜″		2′	-4½″	4′	-1″	4′	-0″	58
14	5S007	Slab Panel		E	54					16″		18″		18″		10″		10″		18″		1½″		6′	-0″	5′	-8″	83
16	6S008	Slab Panel		E	20					6′	-6″													7′	-0″	7′	-0″	168
10	6S012	Slab Panel		E	5					5.5″		6′	-5″	6′	-5″									13′	-4″	13′	-1″	197
4	6S013	Slab Panel		E	5					5.5″		4′	-5″	4′	-5″									9′	-4″	9′	-1″	55
			PANEL A121-04 (PER PANEL)																									
90	6S001	Slab Panel		E	20					12′	-3″													12′	-3″	12′	-3″	1,656
28	6S002	Slab Panel		E	20					43′	-1″													43′	-1″	43′	-1″	1,812
90	6S003	Slab Panel		E	5					7″		4′	-11″	4′	-11″									10′	-5″	10′	-2″	1,374
14	6S004	Slab Panel		E	5					5.5″		4′	-5″	4′	-5″									9′	-4″	9′	-1″	191
4	6S005	Slab Panel		E	5					5.5″		6′	-8″	6′	-8″									13′	-10″	13′	-7″	82
14	5S006	Slab Panel		E	89					10″		10″		2′	-5″					5⅜″		2′	-4½″	4′	-1″	4′	-0″	58
14	5S007	Slab Panel		E	54					16″		18″		18″		10″		10″		18″		1½″		6′	-0″	5′	-8″	83
16	6S008	Slab Panel		E	20					6′	-6″													7′	-0″	7′	-0″	168
10	6S012	Slab Panel		E	5					5.5″		6′	-5″	6′	-5″									13′	-4″	13′	-1″	197
4	6S013	Slab Panel		E	5					5.5″		4′	-5″	4′	-5″									9′	-4″	9′	-1″	55
			PANEL A121-05 (PER PANEL)																									
90	6S001	Slab Panel		E	20					12′	-3″													12′	-3″	12′	-3″	1,656
28	6S002	Slab Panel		E	20					43′	-1″													43′	-1″	43′	-1″	1,812
90	6S003	Slab Panel		E	5					7″		4′	-11″	4′	-11″									10′	-5″	10′	-2″	1,374
14	6S004	Slab Panel		E	5					5.5″		4′	-5″	4′	-5″									9′	-4″	9′	-1″	191
4	6S005	Slab Panel		E	5					5.5″		6′	-8″	6′	-8″									13′	-10″	13′	-7″	82
14	5S006	Slab Panel		E	89					10″		10″		2′	-5″					5⅜″		2′	-4½″	4′	-1″	4′	-0″	58
14	5S007	Slab Panel		E	54					16″		18″		18″		10″		10″		18″		1½″		6′	-0″	5′	-8″	83
16	6S008	Slab Panel		E	20					6′	-6″													7′	-0″	7′	-0″	168
10	6S012	Slab Panel		E	5					5.5″		6′	-5″	6′	-5″									13′	-4″	13′	-1″	197
4	6S013	Slab Panel		E	5					5.5″		4′	-5″	4′	-5″									9′	-4″	9′	-1″	55
			PANEL A121-06 (PER PANEL)																									
90	6S001	Slab Panel		E	20					12′	-3″													12′	-3″	12′	-3″	1,656
28	6S002	Slab Panel		E	20					43′	-1″													43′	-1″	43′	-1″	1,812
90	6S003	Slab Panel		E	5					7″		4′	-11″	4′	-11″									10′	-5″	10′	-2″	1,374
14	6S004	Slab Panel		E	5					5.5″		4′	-5″	4′	-5″									9′	-4″	9′	-1″	191
4	6S005	Slab Panel		E	5					5.5″		6′	-8″	6′	-8″									13′	-10″	13′	-7″	82
14	5S006	Slab Panel		E	89					10″		10″		2′	-5″					5⅜″		2′	-4½″	4′	-1″	4′	-0″	58
14	5S007	Slab Panel		E	54					16″		18″		18″		10″		10″		18″		1½″		6′	-0″	5′	-8″	83
16	6S008	Slab Panel		E	20					6′	-6″													7′	-0″	7′	-0″	168
3	5S009	Slab Panel		E	54					2′	-1″	18″		18″		10″		10″		18″		1½″		6′	-9″	6′	-5″	20
9	6S012	Slab Panel		E	5					5.5″		6′	-5″	6′	-5″									13′	-4″	13′	-1″	177
5	6S013	Slab Panel		E	5					5.5″		4′	-5″	4′	-5″									9′	-4″	9′	-1″	68

BILL OF REINFORCING STEEL

NO. REQ'D.	MARK NO. SIZE	MARK	LOCATION	EPOXY (E)	SHAPE NO.	STIRRUP (S)	SUBSTR. (X)	VARIES (V)	NO. EACH	DIMENSIONS B FT.	B IN.	C FT.	C IN.	D FT.	D IN.	E FT.	E IN.	F FT.	F IN.	H FT.	H IN.	K FT.	K IN.	NOMINAL LENGTH FT.	NOMINAL LENGTH IN.	ACTUAL LENGTH FT.	ACTUAL LENGTH IN.	WEIGHT LBS.
			PANEL A121-07 (PER PANEL)																									
90	6S001	Slab Panel		E	20					12′	-3″													12′	-3″	12′	-3″	1,656
28	6S002	Slab Panel		E	20					43′	-1″													43′	-1″	43′	-1″	1,812
90	6S003	Slab Panel		E	5					7″		4′	-11″	4′	-11″									10′	-5″	10′	-2″	1,374
14	6S004	Slab Panel		E	5					5.5″		4′	-5″	4′	-5″									9′	-4″	9′	-1″	191
4	6S005	Slab Panel		E	5					5.5″		6′	-8″	6′	-8″									13′	-10″	13′	-7″	82
14	5S006	Slab Panel		E	89					10″		10″		2′	-5″					5⅜″		2′	-4½″	4′	-1″	4′	-0″	58
14	5S007	Slab Panel		E	54					16″		18″		18″		10″		10″		18″		1½″		6′	-0″	5′	-8″	83
16	6S008	Slab Panel		E	20					6′	-6″													7′	-0″	7′	-0″	168
8	6S012	Slab Panel		E	5					5.5″		6′	-5″	6′	-5″									13′	-4″	13′	-1″	157
6	6S013	Slab Panel		E	5					5.5″		4′	-5″	4′	-5″									9′	-4″	9′	-1″	82
			PANEL A121-08 (PER PANEL)																									
90	6S001	Slab Panel		E	20					12′	-3″													12′	-3″	12′	-3″	1,656
28	6S002	Slab Panel		E	20					43′	-1″													43′	-1″	43′	-1″	1,812
90	6S003	Slab Panel		E	5					7″		4′	-11″	4′	-11″									10′	-5″	10′	-2″	1,374
14	6S004	Slab Panel		E	5					5.5″		4′	-5″	4′	-5″									9′	-4″	9′	-1″	191
4	6S005	Slab Panel		E	5					5.5″		6′	-8″	6′	-8″									13′	-10″	13′	-7″	82
14	5S006	Slab Panel		E	89					10″		10″		2′	-5″					5⅜″		2′	-4½″	4′	-1″	4′	-0″	58
14	5S007	Slab Panel		E	54					16″		18″		18″		10″		10″		18″		1½″		6′	-0″	5′	-8″	83
16	6S008	Slab Panel		E	20					6′	-6″													7′	-0″	7′	-0″	168
8	6S012	Slab Panel		E	5					5.5″		6′	-5″	6′	-5″									13′	-4″	13′	-1″	157
6	6S013	Slab Panel		E	5					5.5″		4′	-5″	4′	-5″									9′	-4″	9′	-1″	82
			PANEL A240-01 (PER PANEL)																									
90	6S001	Slab Panel		E	20					12′	-3″													12′	-3″	12′	-3″	1,656
28	6S002	Slab Panel		E	20					43′	-1″													43′	-1″	43′	-1″	1,812
90	6S003	Slab Panel		E	5					7″		4′	-11″	4′	-11″									10′	-5″	10′	-2″	1,374
14	6S004	Slab Panel		E	5					5.5″		4′	-5″	4′	-5″									9′	-4″	9′	-1″	191
14	5S006	Slab Panel		E	89					10″		10″		2′	-5″					5⅜″		2′	-4½″	4′	-1″	4′	-0″	58
14	5S007	Slab Panel		E	54					16″		18″		18″		10″		10″		18″		1½″		6′	-0″	5′	-8″	83
14	6S012	Slab Panel		E	5					5.5″		6′	-5″	6′	-5″									13′	-4″	13′	-1″	275
			PANEL A240-02 (PER PANEL)																									
90	6S001	Slab Panel		E	20					12′	-3″													12′	-3″	12′	-3″	1,656
28	6S002	Slab Panel		E	20					43′	-1″													43′	-1″	43′	-1″	1,812
90	6S003	Slab Panel		E	5					7″		4′	-11″	4′	-11″									10′	-5″	10′	-2″	1,374
14	6S004	Slab Panel		E	5					5.5″		4′	-5″	4′	-5″									9′	-4″	9′	-1″	191
14	5S006	Slab Panel		E	89					10″		10″		2′	-5″					5⅜″		2′	-4½″	4′	-1″	4′	-0″	58
14	5S007	Slab Panel		E	54					16″		18″		18″		10″		10″		18″		1½″		6′	-0″	5′	-8″	83
14	6S012	Slab Panel		E	5					5.5″		6′	-5″	6′	-5″									13′	-4″	13′	-1″	275
			PANEL A240-03 (PER PANEL)																									
90	6S001	Slab Panel		E	20					12′	-3″													12′	-3″	12′	-3″	1,656
28	6S002	Slab Panel		E	20					43′	-1″													43′	-1″	43′	-1″	1,812
90	6S003	Slab Panel		E	5					7″		4′	-11″	4′	-11″									10′	-5″	10′	-2″	1,374
14	6S004	Slab Panel		E	5					5.5″		4′	-5″	4′	-5″									9′	-4″	9′	-1″	191
14	5S006	Slab Panel		E	89					10″		10″		2′	-5″					5⅜″		2′	-4½″	4′	-1″	4′	-0″	58
14	5S007	Slab Panel		E	54					16″		18″		18″		10″		10″		18″		1½″		6′	-0″	5′	-8″	83
14	6S012	Slab Panel		E	5					5.5″		6′	-5″	6′	-5″									13′	-4″	13′	-1″	275
			PANEL A240-04 (PER PANEL)																									
90	6S001	Slab Panel		E	20					12′	-3″													12′	-3″	12′	-3″	1,656
28	6S002	Slab Panel		E	20					43′	-1″													43′	-1″	43′	-1″	1,812
90	6S003	Slab Panel		E	5					7″		4′	-11″	4′	-11″									10′	-5″	10′	-2″	1,374
14	6S004	Slab Panel		E	5					5.5″		4′	-5″	4′	-5″									9′	-4″	9′	-1″	191
14	5S006	Slab Panel		E	89					10″		10″		2′	-5″					5⅜″		2′	-4½″	4′	-1″	4′	-0″	58
14	5S007	Slab Panel		E	54					16″		18″		18″		10″		10″		18″		1½″		6′	-0″	5′	-8″	83
14	6S012	Slab Panel		E	5					5.5″		6′	-5″	6′	-5″									13′	-4″	13′	-1″	275

Notes:
For Bar Bending Diagram, see Sheet No. BR184.

BILL OF REINFORCING STEEL

Detailed JUL 2009
Checked JUL 2009

Note: This drawing is not to scale. Follow dimensions.

Sheet No. 193 of 205

T:\de-proj\St_Louis_City\Construction\J6I0984\Asbuilts\Bridge\B_A6500_193-205_J6I0984_193.dgn 8:20:15 AM

DATE 8/20/09
ROUTE I-70 | STATE MO/IL
DISTRICT 6 | SHEET NO. BR193
COUNTY ST. LOUIS CITY - MO ST. CLAIR - IL
JOB NO. J6I0984
CONTRACT ID. 091208-601
PROJECT NO. I-70-9 (20)
BRIDGE NO. A6500

DESCRIPTION | DATE

MISSOURI HIGHWAYS AND TRANSPORTATION COMMISSION
105 WEST CAPITOL
JEFFERSON CITY, MO 65102
1-888-ASK-MODOT (1-888-275-6636)

HNTB
715 KIRK DRIVE
KANSAS CITY, MO 64105-1310
TELEPHONE (816) 472-1201
CERTIFICATE OF AUTHORITY NO. 001270

FINAL PLANS

REV.

BILL OF REINFORCING STEEL

NO. REQ'D.	MARK NO. SIZE	MARK NO. MARK	LOCATION	EPOXY (E)	SHAPE NO.	STIRRUP (S)	SUBSTR. (X)	VARIES (V)	NO. EACH	DIMENSIONS B FT.	B IN.	C FT.	C IN.	D FT.	D IN.	E FT.	E IN.	F FT.	F IN.	H FT.	H IN.	K FT.	K IN.	NOMINAL LENGTH FT.	NOMINAL LENGTH IN.	ACTUAL LENGTH FT.	ACTUAL LENGTH IN.	WEIGHT LBS.
			PANEL A240-05 (PER PANEL)																									
90	6S001	Slab Panel		E	20					12′	-3″													12′	-3″	12′	-3″	1,656
28	6S002	Slab Panel		E	20					43′	-1″													43′	-1″	43′	-1″	1,812
90	6S003	Slab Panel		E	5					7″		4′	-11″	4′	-11″									10′	-5″	10′	-2″	1,374
14	6S004	Slab Panel		E	5					5.5″		4′	-5″	4′	-5″									9′	-4″	9′	-1″	191
14	5S006	Slab Panel		E	89					10″		10″		2′	-5″					5 3/8″		2′	-4 1/2″	4′	-1″	4′	-0″	58
14	5S007	Slab Panel		E	54					16″		18″		18″		10″		10″		18″		1 1/2″		6′	-0″	5′	-8″	83
14	6S012	Slab Panel		E	5					5.5″		6′	-5″	6′	-5″									13′	-4″	13′	-1″	275
			PANEL A240-06 (PER PANEL)																									
90	6S001	Slab Panel		E	20					12′	-3″													12′	-3″	12′	-3″	1,656
28	6S002	Slab Panel		E	20					43′	-1″													43′	-1″	43′	-1″	1,812
90	6S003	Slab Panel		E	5					7″		4′	-11″	4′	-11″									10′	-5″	10′	-2″	1,374
14	6S004	Slab Panel		E	5					5.5″		4′	-5″	4′	-5″									9′	-4″	9′	-1″	191
14	5S006	Slab Panel		E	89					10″		10″		2′	-5″					5 3/8″		2′	-4 1/2″	4′	-1″	4′	-0″	58
14	5S007	Slab Panel		E	54					16″		18″		18″		10″		10″		18″		1 1/2″		6′	-0″	5′	-8″	83
3	5S009	Slab Panel		E	54					2′	-1″	18″		18″		10″		10″		18″		1 1/2″		6′	-9″	6′	-5″	20
14	6S012	Slab Panel		E	5					5.5″		6′	-5″	6′	-5″									13′	-4″	13′	-1″	275
			PANEL A240-07 (PER PANEL)																									
90	6S001	Slab Panel		E	20					12′	-3″													12′	-3″	12′	-3″	1,656
28	6S002	Slab Panel		E	20					43′	-1″													43′	-1″	43′	-1″	1,812
90	6S003	Slab Panel		E	5					7″		4′	-11″	4′	-11″									10′	-5″	10′	-2″	1,374
14	6S004	Slab Panel		E	5					5.5″		4′	-5″	4′	-5″									9′	-4″	9′	-1″	191
14	5S006	Slab Panel		E	89					10″		10″		2′	-5″					5 3/8″		2′	-4 1/2″	4′	-1″	4′	-0″	58
14	5S007	Slab Panel		E	54					16″		18″		18″		10″		10″		18″		1 1/2″		6′	-0″	5′	-8″	83
3	5S009	Slab Panel		E	54					2′	-1″	18″		18″		10″		10″		18″		1 1/2″		6′	-9″	6′	-5″	20
14	6S012	Slab Panel		E	5					5.5″		6′	-5″	6′	-5″									13′	-4″	13′	-1″	275
			PANEL A240-08 (PER PANEL)																									
90	6S001	Slab Panel		E	20					12′	-3″													12′	-3″	12′	-3″	1,656
28	6S002	Slab Panel		E	20					43′	-1″													43′	-1″	43′	-1″	1,812
90	6S003	Slab Panel		E	5					7″		4′	-11″	4′	-11″									10′	-5″	10′	-2″	1,374
14	6S004	Slab Panel		E	5					5.5″		4′	-5″	4′	-5″									9′	-4″	9′	-1″	191
14	5S006	Slab Panel		E	89					10″		10″		2′	-5″					5 3/8″		2′	-4 1/2″	4′	-1″	4′	-0″	58
14	5S007	Slab Panel		E	54					16″		18″		18″		10″		10″		18″		1 1/2″		6′	-0″	5′	-8″	83
14	6S012	Slab Panel		E	5					5.5″		6′	-5″	6′	-5″									13′	-4″	13′	-1″	275
			PANEL A240-09 (PER PANEL)																									
90	6S001	Slab Panel		E	20					12′	-3″													12′	-3″	12′	-3″	1,656
28	6S002	Slab Panel		E	20					43′	-1″													43′	-1″	43′	-1″	1,812
90	6S003	Slab Panel		E	5					7″		4′	-11″	4′	-11″									10′	-5″	10′	-2″	1,374
14	6S004	Slab Panel		E	5					5.5″		4′	-5″	4′	-5″									9′	-4″	9′	-1″	191
14	5S006	Slab Panel		E	89					10″		10″		2′	-5″					5 3/8″		2′	-4 1/2″	4′	-1″	4′	-0″	58
14	5S007	Slab Panel		E	54					16″		18″		18″		10″		10″		18″		1 1/2″		6′	-0″	5′	-8″	83
14	6S012	Slab Panel		E	5					5.5″		6′	-5″	6′	-5″									13′	-4″	13′	-1″	275
			PANEL A240-10 (PER PANEL)																									
90	6S001	Slab Panel		E	20					12′	-3″													12′	-3″	12′	-3″	1,656
28	6S002	Slab Panel		E	20					43′	-1″													43′	-1″	43′	-1″	1,812
90	6S003	Slab Panel		E	5					7″		4′	-11″	4′	-11″									10′	-5″	10′	-2″	1,374
14	6S004	Slab Panel		E	5					5.5″		4′	-5″	4′	-5″									9′	-4″	9′	-1″	191
14	5S006	Slab Panel		E	89					10″		10″		2′	-5″					5 3/8″		2′	-4 1/2″	4′	-1″	4′	-0″	58
14	5S007	Slab Panel		E	54					16″		18″		18″		10″		10″		18″		1 1/2″		6′	-0″	5′	-8″	83
14	6S012	Slab Panel		E	5					5.5″		6′	-5″	6′	-5″									13′	-4″	13′	-1″	275
			PANEL A240-11 (PER PANEL)																									
90	6S001	Slab Panel		E	20					12′	-3″													12′	-3″	12′	-3″	1,656
28	6S002	Slab Panel		E	20					43′	-1″													43′	-1″	43′	-1″	1,812
90	6S003	Slab Panel		E	5					7″		4′	-11″	4′	-11″									10′	-5″	10′	-2″	1,374
14	6S004	Slab Panel		E	5					5.5″		4′	-5″	4′	-5″									9′	-4″	9′	-1″	191
14	5S006	Slab Panel		E	89					10″		10″		2′	-5″					5 3/8″		2′	-4 1/2″	4′	-1″	4′	-0″	58
14	5S007	Slab Panel		E	54					16″		18″		18″		10″		10″		18″		1 1/2″		6′	-0″	5′	-8″	83
14	6S012	Slab Panel		E	5					5.5″		6′	-5″	6′	-5″									13′	-4″	13′	-1″	275

BILL OF REINFORCING STEEL

NO. REQ'D.	MARK NO. SIZE	MARK NO. MARK	LOCATION	EPOXY (E)	SHAPE NO.	STIRRUP (S)	SUBSTR. (X)	VARIES (V)	NO. EACH	DIMENSIONS B FT.	B IN.	C FT.	C IN.	D FT.	D IN.	E FT.	E IN.	F FT.	F IN.	H FT.	H IN.	K FT.	K IN.	NOMINAL LENGTH FT.	NOMINAL LENGTH IN.	ACTUAL LENGTH FT.	ACTUAL LENGTH IN.	WEIGHT LBS.
			PANEL A240-12 (PER PANEL)																									
90	6S001	Slab Panel		E	20					12′	-3″													12′	-3″	12′	-3″	1,656
28	6S002	Slab Panel		E	20					43′	-1″													43′	-1″	43′	-1″	1,812
90	6S003	Slab Panel		E	5					7″		4′	-11″	4′	-11″									10′	-5″	10′	-2″	1,374
14	6S004	Slab Panel		E	5					5.5″		4′	-5″	4′	-5″									9′	-4″	9′	-1″	191
14	5S006	Slab Panel		E	89					10″		10″		2′	-5″					5 3/8″		2′	-4 1/2″	4′	-1″	4′	-0″	58
14	5S007	Slab Panel		E	54					16″		18″		18″		10″		10″		18″		1 1/2″		6′	-0″	5′	-8″	83
2	6S012	Slab Panel		E	5					5.5″		6′	-5″	6′	-5″									13′	-4″	13′	-1″	39
12	6S014	Slab Panel		E	5					5.5″		8′	-4″	8′	-4″									17′	-2″	16′	-11″	305
			PANEL A240-13 (PER PANEL)																									
90	6S001	Slab Panel		E	20					12′	-3″													12′	-3″	12′	-3″	1,656
28	6S002	Slab Panel		E	20					43′	-1″													43′	-1″	43′	-1″	1,812
90	6S003	Slab Panel		E	5					7″		4′	-11″	4′	-11″									10′	-5″	10′	-2″	1,374
14	6S004	Slab Panel		E	5					5.5″		4′	-5″	4′	-5″									9′	-4″	9′	-1″	191
14	5S006	Slab Panel		E	89					10″		10″		2′	-5″					5 3/8″		2′	-4 1/2″	4′	-1″	4′	-0″	58
14	5S007	Slab Panel		E	54					16″		18″		18″		10″		10″		18″		1 1/2″		6′	-0″	5′	-8″	83
2	6S012	Slab Panel		E	5					5.5″		6′	-5″	6′	-5″									13′	-4″	13′	-1″	39
12	6S014	Slab Panel		E	5					5.5″		8′	-4″	8′	-4″									17′	-2″	16′	-11″	305
			PANEL A241-01 (PER PANEL)																									
90	6S001	Slab Panel		E	20					12′	-3″													12′	-3″	12′	-3″	1,656
28	6S002	Slab Panel		E	20					43′	-1″													43′	-1″	43′	-1″	1,812
90	6S003	Slab Panel		E	5					7″		4′	-11″	4′	-11″									10′	-5″	10′	-2″	1,374
14	6S004	Slab Panel		E	5					5.5″		4′	-5″	4′	-5″									9′	-4″	9′	-1″	191
4	6S005	Slab Panel		E	5					5.5″		6′	-8″	6′	-8″									13′	-10″	13′	-7″	82
14	5S006	Slab Panel		E	89					10″		10″		2′	-5″					5 3/8″		2′	-4 1/2″	4′	-1″	4′	-0″	58
14	5S007	Slab Panel		E	54					16″		18″		18″		10″		10″		18″		1 1/2″		6′	-0″	5′	-8″	83
16	6S008	Slab Panel		E	20					6′	-6″													7′	-0″	7′	-0″	168
9	6S012	Slab Panel		E	5					5.5″		6′	-5″	6′	-5″									13′	-4″	13′	-1″	177
5	6S013	Slab Panel		E	5					5.5″		4′	-5″	4′	-5″									9′	-4″	9′	-1″	68
			PANEL A241-02 (PER PANEL)																									
90	6S001	Slab Panel		E	20					12′	-3″													12′	-3″	12′	-3″	1,656
28	6S002	Slab Panel		E	20					43′	-1″													43′	-1″	43′	-1″	1,812
90	6S003	Slab Panel		E	5					7″		4′	-11″	4′	-11″									10′	-5″	10′	-2″	1,374
14	6S004	Slab Panel		E	5					5.5″		4′	-5″	4′	-5″									9′	-4″	9′	-1″	191
4	6S005	Slab Panel		E	5					5.5″		6′	-8″	6′	-8″									13′	-10″	13′	-7″	82
14	5S006	Slab Panel		E	89					10″		10″		2′	-5″					5 3/8″		2′	-4 1/2″	4′	-1″	4′	-0″	58
14	5S007	Slab Panel		E	54					16″		18″		18″		10″		10″		18″		1 1/2″		6′	-0″	5′	-8″	83
16	6S008	Slab Panel		E	20					6′	-6″													7′	-0″	7′	-0″	168
9	6S012	Slab Panel		E	5					5.5″		6′	-5″	6′	-5″									13′	-4″	13′	-1″	177
5	6S013	Slab Panel		E	5					5.5″		4′	-5″	4′	-5″									9′	-4″	9′	-1″	68
			PANEL A241-03 (PER PANEL)																									
90	6S001	Slab Panel		E	20					12′	-3″													12′	-3″	12′	-3″	1,656
28	6S002	Slab Panel		E	20					43′	-1″													43′	-1″	43′	-1″	1,812
90	6S003	Slab Panel		E	5					7″		4′	-11″	4′	-11″									10′	-5″	10′	-2″	1,374
14	6S004	Slab Panel		E	5					5.5″		4′	-5″	4′	-5″									9′	-4″	9′	-1″	191
4	6S005	Slab Panel		E	5					5.5″		6′	-8″	6′	-8″									13′	-10″	13′	-7″	82
14	5S006	Slab Panel		E	89					10″		10″		2′	-5″					5 3/8″		2′	-4 1/2″	4′	-1″	4′	-0″	58
14	5S007	Slab Panel		E	54					16″		18″		18″		10″		10″		18″		1 1/2″		6′	-0″	5′	-8″	83
16	6S008	Slab Panel		E	20					6′	-6″													7′	-0″	7′	-0″	168
8	6S012	Slab Panel		E	5					5.5″		6′	-5″	6′	-5″									13′	-4″	13′	-1″	157
6	6S013	Slab Panel		E	5					5.5″		4′	-5″	4′	-5″									9′	-4″	9′	-1″	82
			PANEL A241-04 (PER PANEL)																									
90	6S001	Slab Panel		E	20					12′	-3″													12′	-3″	12′	-3″	1,656
28	6S002	Slab Panel		E	20					43′	-1″													43′	-1″	43′	-1″	1,812
90	6S003	Slab Panel		E	5					7″		4′	-11″	4′	-11″									10′	-5″	10′	-2″	1,374
14	6S004	Slab Panel		E	5					5.5″		4′	-5″	4′	-5″									9′	-4″	9′	-1″	191
4	6S005	Slab Panel		E	5					5.5″		6′	-8″	6′	-8″									13′	-10″	13′	-7″	82
14	5S006	Slab Panel		E	89					10″		10″		2′	-5″					5 3/8″		2′	-4 1/2″	4′	-1″	4′	-0″	58
14	5S007	Slab Panel		E	54					16″		18″		18″		10″		10″		18″		1 1/2″		6′	-0″	5′	-8″	83
16	6S008	Slab Panel		E	20					6′	-6″													7′	-0″	7′	-0″	168
8	6S012	Slab Panel		E	5					5.5″		6′	-5″	6′	-5″									13′	-4″	13′	-1″	157
6	6S013	Slab Panel		E	5					5.5″		4′	-5″	4′	-5″									9′	-4″	9′	-1″	82

Notes:
For Bar Bending Diagram, see Sheet No. BR184.

BILL OF REINFORCING STEEL

Detailed JUL 2009
Checked JUL 2009

Note: This drawing is not to scale. Follow dimensions.

Sheet No. 194 of 205

T:\de-proj\SL_Louis_City\Construction\J6I0984\Asbuilts\Bridge\B_A6500_194-205_J6I0984_194.dgn

8:40:54 AM

DATE 8/20/09
ROUTE I-70 STATE MO/IL
DISTRICT 6 SHEET NO. BR194
COUNTY ST. LOUIS CITY - MO ST. CLAIR - IL
JOB NO. J6I0984
CONTRACT ID. 091208-601
PROJECT NO. I-70-9 (20)
BRIDGE NO. A6500

DESCRIPTION | DATE

MISSOURI HIGHWAYS AND TRANSPORTATION COMMISSION
105 WEST CAPITOL
JEFFERSON CITY, MO 65102
1-888-ASK-MODOT (1-888-275-6636)

HNTB
715 KIRK DRIVE
KANSAS CITY, MO 64105-1310
TELEPHONE (816) 472-1201
CERTIFICATE OF AUTHORITY NO. 001270

FINAL PLANS

REV.

BILL OF REINFORCING STEEL

NO. REQ'D.	MARK NO. SIZE MARK	LOCATION	EPOXY (E)	SHAPE NO.	STIRRUP (S)	SUBSTR. (X)	VARIES (V)	NO. EACH	B FT. IN.	C FT. IN.	D FT. IN.	E FT. IN.	F FT. IN.	H FT. IN.	K FT. IN.	NOMINAL LENGTH FT. IN.	ACTUAL LENGTH FT. IN.	WEIGHT LBS.
		PANEL A241-05 (PER PANEL)																
90	6S001	Slab Panel	E	20					12'-3"							12'-3"	12'-3"	1,656
28	6S002	Slab Panel	E	20					43'-1"							43'-1"	43'-1"	1,812
90	6S003	Slab Panel	E	5					7"	4'-11"	4'-11"					10'-5"	10'-2"	1,374
14	6S004	Slab Panel	E	5					5.5"	4'-5"	4'-5"					9'-4"	9'-1"	191
14	5S006	Slab Panel	E	89					10"	10"	2'-5"			5 3/8"	2'-4 1/2"	4'-1"	4'-0"	58
14	5S007	Slab Panel	E	54					16"	18"	18"	10"	10"	18"	1 1/2"	6'-0"	5'-8"	83
16	6S008	Slab Panel	E	20					6'-6"							7'-0"	7'-0"	168
14	6S012	Slab Panel	E	5					5.5"	6'-5"	6'-5"					13'-4"	13'-1"	275
		PANEL A241-06 (PER PANEL)																
90	6S001	Slab Panel	E	20					12'-3"							12'-3"	12'-3"	1,656
28	6S002	Slab Panel	E	20					43'-1"							43'-1"	43'-1"	1,812
90	6S003	Slab Panel	E	5					7"	4'-11"	4'-11"					10'-5"	10'-2"	1,374
14	6S004	Slab Panel	E	5					5.5"	4'-5"	4'-5"					9'-4"	9'-1"	191
4	6S005	Slab Panel	E	5					5.5"	6'-8"	6'-8"					13'-10"	13'-7"	82
14	5S006	Slab Panel	E	89					10"	10"	2'-5"			5 3/8"	2'-4 1/2"	4'-1"	4'-0"	58
14	5S007	Slab Panel	E	54					16"	18"	18"	10"	10"	18"	1 1/2"	6'-0"	5'-8"	83
16	6S008	Slab Panel	E	20					6'-6"							7'-0"	7'-0"	168
8	6S012	Slab Panel	E	5					5.5"	6'-5"	6'-5"					13'-4"	13'-1"	157
6	6S013	Slab Panel	E	5					5.5"	4'-5"	4'-5"					9'-4"	9'-1"	82
		PANEL A241-07 (PER PANEL)																
90	6S001	Slab Panel	E	20					12'-3"							12'-3"	12'-3"	1,656
28	6S002	Slab Panel	E	20					43'-1"							43'-1"	43'-1"	1,812
90	6S003	Slab Panel	E	5					7"	4'-11"	4'-11"					10'-5"	10'-2"	1,374
14	6S004	Slab Panel	E	5					5.5"	4'-5"	4'-5"					9'-4"	9'-1"	191
4	6S005	Slab Panel	E	5					5.5"	6'-8"	6'-8"					13'-10"	13'-7"	82
14	5S006	Slab Panel	E	89					10"	10"	2'-5"			5 3/8"	2'-4 1/2"	4'-1"	4'-0"	58
14	5S007	Slab Panel	E	54					16"	18"	18"	10"	10"	18"	1 1/2"	6'-0"	5'-8"	83
16	6S008	Slab Panel	E	20					6'-6"							7'-0"	7'-0"	168
8	6S012	Slab Panel	E	5					5.5"	6'-5"	6'-5"					13'-4"	13'-1"	157
6	6S013	Slab Panel	E	5					5.5"	4'-5"	4'-5"					9'-4"	9'-1"	82
		PANEL A241-08 (PER PANEL)																
90	6S001	Slab Panel	E	20					12'-3"							12'-3"	12'-3"	1,656
28	6S002	Slab Panel	E	20					43'-1"							43'-1"	43'-1"	1,812
90	6S003	Slab Panel	E	5					7"	4'-11"	4'-11"					10'-5"	10'-2"	1,374
14	6S004	Slab Panel	E	5					5.5"	4'-5"	4'-5"					9'-4"	9'-1"	191
4	6S005	Slab Panel	E	5					5.5"	6'-8"	6'-8"					13'-10"	13'-7"	82
14	5S006	Slab Panel	E	89					10"	10"	2'-5"			5 3/8"	2'-4 1/2"	4'-1"	4'-0"	58
14	5S007	Slab Panel	E	54					16"	18"	18"	10"	10"	18"	1 1/2"	6'-0"	5'-8"	83
16	6S008	Slab Panel	E	20					6'-6"							7'-0"	7'-0"	168
8	6S012	Slab Panel	E	5					5.5"	6'-5"	6'-5"					13'-4"	13'-1"	157
6	6S013	Slab Panel	E	5					5.5"	4'-5"	4'-5"					9'-4"	9'-1"	82
		PANEL A241-09 (PER PANEL)																
90	6S001	Slab Panel	E	20					12'-3"							12'-3"	12'-3"	1,656
28	6S002	Slab Panel	E	20					43'-1"							43'-1"	43'-1"	1,812
90	6S003	Slab Panel	E	5					7"	4'-11"	4'-11"					10'-5"	10'-2"	1,374
14	6S004	Slab Panel	E	5					5.5"	4'-5"	4'-5"					9'-4"	9'-1"	191
4	6S005	Slab Panel	E	5					5.5"	6'-8"	6'-8"					13'-10"	13'-7"	82
14	5S006	Slab Panel	E	89					10"	10"	2'-5"			5 3/8"	2'-4 1/2"	4'-1"	4'-0"	58
14	5S007	Slab Panel	E	54					16"	18"	18"	10"	10"	18"	1 1/2"	6'-0"	5'-8"	83
16	6S008	Slab Panel	E	20					6'-6"							7'-0"	7'-0"	168
8	6S012	Slab Panel	E	5					5.5"	6'-5"	6'-5"					13'-4"	13'-1"	157
6	6S013	Slab Panel	E	5					5.5"	4'-5"	4'-5"					9'-4"	9'-1"	82

BILL OF REINFORCING STEEL

NO. REQ'D.	MARK NO. SIZE MARK	LOCATION	EPOXY (E)	SHAPE NO.	STIRRUP (S)	SUBSTR. (X)	VARIES (V)	NO. EACH	B FT. IN.	C FT. IN.	D FT. IN.	E FT. IN.	F FT. IN.	H FT. IN.	K FT. IN.	NOMINAL LENGTH FT. IN.	ACTUAL LENGTH FT. IN.	WEIGHT LBS.
		PANEL A241-10 (PER PANEL)																
90	6S001	Slab Panel	E	20					12'-3"							12'-3"	12'-3"	1,656
28	6S002	Slab Panel	E	20					43'-1"							43'-1"	43'-1"	1,812
90	6S003	Slab Panel	E	5					7"	4'-11"	4'-11"					10'-5"	10'-2"	1,374
14	6S004	Slab Panel	E	5					5.5"	4'-5"	4'-5"					9'-4"	9'-1"	191
4	6S005	Slab Panel	E	5					5.5"	6'-8"	6'-8"					13'-10"	13'-7"	82
14	5S006	Slab Panel	E	89					10"	10"	2'-5"			5 3/8"	2'-4 1/2"	4'-1"	4'-0"	58
14	5S007	Slab Panel	E	54					16"	18"	18"	10"	10"	18"	1 1/2"	6'-0"	5'-8"	83
16	6S008	Slab Panel	E	20					6'-6"							7'-0"	7'-0"	168
10	6S012	Slab Panel	E	5					5.5"	6'-5"	6'-5"					13'-4"	13'-1"	197
4	6S013	Slab Panel	E	5					5.5"	4'-5"	4'-5"					9'-4"	9'-1"	55
		PANEL A241-11 (PER PANEL)																
90	6S001	Slab Panel	E	20					12'-3"							12'-3"	12'-3"	1,656
28	6S002	Slab Panel	E	20					43'-1"							43'-1"	43'-1"	1,812
90	6S003	Slab Panel	E	5					7"	4'-11"	4'-11"					10'-5"	10'-2"	1,374
14	6S004	Slab Panel	E	5					5.5"	4'-5"	4'-5"					9'-4"	9'-1"	191
4	6S005	Slab Panel	E	5					5.5"	6'-8"	6'-8"					13'-10"	13'-7"	82
14	5S006	Slab Panel	E	89					10"	10"	2'-5"			5 3/8"	2'-4 1/2"	4'-1"	4'-0"	58
14	5S007	Slab Panel	E	54					16"	18"	18"	10"	10"	18"	1 1/2"	6'-0"	5'-8"	83
16	6S008	Slab Panel	E	20					6'-6"							7'-0"	7'-0"	168
10	6S012	Slab Panel	E	5					5.5"	6'-5"	6'-5"					13'-4"	13'-1"	197
4	6S013	Slab Panel	E	5					5.5"	4'-5"	4'-5"					9'-4"	9'-1"	55
		PANEL A241-12 (PER PANEL)																
90	6S001	Slab Panel	E	20					12'-3"							12'-3"	12'-3"	1,656
28	6S002	Slab Panel	E	20					43'-1"							43'-1"	43'-1"	1,812
90	6S003	Slab Panel	E	5					7"	4'-11"	4'-11"					10'-5"	10'-2"	1,374
14	6S004	Slab Panel	E	5					5.5"	4'-5"	4'-5"					9'-4"	9'-1"	191
4	6S005	Slab Panel	E	5					5.5"	6'-8"	6'-8"					13'-10"	13'-7"	82
14	5S006	Slab Panel	E	89					10"	10"	2'-5"			5 3/8"	2'-4 1/2"	4'-1"	4'-0"	58
14	5S007	Slab Panel	E	54					16"	18"	18"	10"	10"	18"	1 1/2"	6'-0"	5'-8"	83
16	6S008	Slab Panel	E	20					6'-6"							7'-0"	7'-0"	168
10	6S012	Slab Panel	E	5					5.5"	6'-5"	6'-5"					13'-4"	13'-1"	197
4	6S013	Slab Panel	E	5					5.5"	4'-5"	4'-5"					9'-4"	9'-1"	55
		PANEL A241-13 (PER PANEL)																
90	6S001	Slab Panel	E	20					12'-3"							12'-3"	12'-3"	1,656
28	6S002	Slab Panel	E	20					43'-1"							43'-1"	43'-1"	1,812
90	6S003	Slab Panel	E	5					7"	4'-11"	4'-11"					10'-5"	10'-2"	1,374
14	6S004	Slab Panel	E	5					5.5"	4'-5"	4'-5"					9'-4"	9'-1"	191
4	6S005	Slab Panel	E	5					5.5"	6'-8"	6'-8"					13'-10"	13'-7"	82
14	5S006	Slab Panel	E	89					10"	10"	2'-5"			5 3/8"	2'-4 1/2"	4'-1"	4'-0"	58
14	5S007	Slab Panel	E	54					16"	18"	18"	10"	10"	18"	1 1/2"	6'-0"	5'-8"	83
16	6S008	Slab Panel	E	20					6'-6"							7'-0"	7'-0"	168
10	6S012	Slab Panel	E	5					5.5"	6'-5"	6'-5"					13'-4"	13'-1"	197
4	6S013	Slab Panel	E	5					5.5"	4'-5"	4'-5"					9'-4"	9'-1"	55
		PANEL A241-14 (PER PANEL)																
90	6S001	Slab Panel	E	20					12'-3"							12'-3"	12'-3"	1,656
28	6S002	Slab Panel	E	20					43'-1"							43'-1"	43'-1"	1,812
90	6S003	Slab Panel	E	5					7"	4'-11"	4'-11"					10'-5"	10'-2"	1,374
14	6S004	Slab Panel	E	5					5.5"	4'-5"	4'-5"					9'-4"	9'-1"	191
4	6S005	Slab Panel	E	5					5.5"	6'-8"	6'-8"					13'-10"	13'-7"	82
14	5S006	Slab Panel	E	89					10"	10"	2'-5"			5 3/8"	2'-4 1/2"	4'-1"	4'-0"	58
14	5S007	Slab Panel	E	54					16"	18"	18"	10"	10"	18"	1 1/2"	6'-0"	5'-8"	83
16	6S008	Slab Panel	E	20					6'-6"							7'-0"	7'-0"	168
9	6S012	Slab Panel	E	5					5.5"	6'-5"	6'-5"					13'-4"	13'-1"	177
5	6S013	Slab Panel	E	5					5.5"	4'-5"	4'-5"					9'-4"	9'-1"	68

Notes:
For Bar Bending Diagram, see Sheet No. BR184.

BILL OF REINFORCING STEEL

Detailed JUL 2009
Checked JUL 2009

Note: This drawing is not to scale. Follow dimensions.

DATE 8/20/09
ROUTE I-70 STATE MO/IL
DISTRICT 6 SHEET NO. BR195
COUNTY ST. LOUIS CITY - MO ST. CLAIR - IL
JOB NO. J6I0984
CONTRACT ID. 091208-601
PROJECT NO. I-70-9 (20)
BRIDGE NO. A6500

DESCRIPTION | DATE

MISSOURI HIGHWAYS AND TRANSPORTATION COMMISSION
105 WEST CAPITOL
JEFFERSON CITY, MO 65102
1-888-ASK-MODOT (1-888-275-6636)

HNTB
715 KIRK DRIVE
KANSAS CITY, MO 64105-1310
TELEPHONE (816) 472-1201
CERTIFICATE OF AUTHORITY
NO. 001270

FINAL PLANS
REV.

T:\de-proj\St_Louis_City\Construction\J6I0984\Asbuilts\Bridge\B_A6500_195-205_J6I0984_195.dgn
9:00:08 AM

BILL OF REINFORCING STEEL

NO. REQ'D.	MARK NO. SIZE	MARK NO. MARK	LOCATION	EPOXY (E)	SHAPE NO.	STIRRUP (S)	SUBSTR. (X)	VARIES (V)	NO. EACH	DIMENSIONS B FT. IN.	C FT. IN.	D FT. IN.	E FT. IN.	F FT. IN.	H FT. IN.	K FT. IN.	NOMINAL LENGTH FT. IN.	ACTUAL LENGTH FT. IN.	WEIGHT LBS.
			PANEL A241-15 (PER PANEL)																
90	6S001		Slab Panel	E	20					12'-3"							12'-3"	12'-3"	1,656
28	6S002		Slab Panel	E	20					43'-1"							43'-1"	43'-1"	1,812
90	6S003		Slab Panel	E	5					7"	4'-11"	4'-11"					10'-5"	10'-2"	1,374
14	6S004		Slab Panel	E	5					5.5"	4'-5"	4'-5"					9'-4"	9'-1"	191
4	6S005		Slab Panel	E	5					5.5"	6'-8"	6'-8"					13'-10"	13'-7"	82
14	5S006		Slab Panel	E	89					10"	10"	2'-5"			5 3/8"	2'-4 1/2"	4'-1"	4'-0"	58
14	5S007		Slab Panel	E	54					16"	18"	18"	10"	10"	18"	1 1/2"	6'-0"	5'-8"	83
16	6S008		Slab Panel	E	20					6'-6"							7'-0"	7'-0"	168
9	6S012		Slab Panel	E	5					5.5"	6'-5"	6'-5"					13'-4"	13'-1"	177
5	6S013		Slab Panel	E	5					5.5"	4'-5"	4'-5"					9'-4"	9'-1"	68
			PANEL A241-16 (PER PANEL)																
90	6S001		Slab Panel	E	20					12'-3"							12'-3"	12'-3"	1,656
28	6S002		Slab Panel	E	20					43'-1"							43'-1"	43'-1"	1,812
90	6S003		Slab Panel	E	5					7"	4'-11"	4'-11"					10'-5"	10'-2"	1,374
14	6S004		Slab Panel	E	5					5.5"	4'-5"	4'-5"					9'-4"	9'-1"	191
4	6S005		Slab Panel	E	5					5.5"	6'-8"	6'-8"					13'-10"	13'-7"	82
14	5S006		Slab Panel	E	89					10"	10"	2'-5"			5 3/8"	2'-4 1/2"	4'-1"	4'-0"	58
14	5S007		Slab Panel	E	54					16"	18"	18"	10"	10"	18"	1 1/2"	6'-0"	5'-8"	83
16	6S008		Slab Panel	E	20					6'-6"							7'-0"	7'-0"	168
10	6S012		Slab Panel	E	5					5.5"	6'-5"	6'-5"					13'-4"	13'-1"	197
4	6S013		Slab Panel	E	5					5.5"	4'-5"	4'-5"					9'-4"	9'-1"	55
			PANEL A241-17 (PER PANEL)																
90	6S001		Slab Panel	E	20					12'-3"							12'-3"	12'-3"	1,656
28	6S002		Slab Panel	E	20					43'-1"							43'-1"	43'-1"	1,812
90	6S003		Slab Panel	E	5					7"	4'-11"	4'-11"					10'-5"	10'-2"	1,374
14	6S004		Slab Panel	E	5					5.5"	4'-5"	4'-5"					9'-4"	9'-1"	191
4	6S005		Slab Panel	E	5					5.5"	6'-8"	6'-8"					13'-10"	13'-7"	82
14	5S006		Slab Panel	E	89					10"	10"	2'-5"			5 3/8"	2'-4 1/2"	4'-1"	4'-0"	58
14	5S007		Slab Panel	E	54					16"	18"	18"	10"	10"	18"	1 1/2"	6'-0"	5'-8"	83
16	6S008		Slab Panel	E	20					6'-6"							7'-0"	7'-0"	168
10	6S012		Slab Panel	E	5					5.5"	6'-5"	6'-5"					13'-4"	13'-1"	197
4	6S013		Slab Panel	E	5					5.5"	4'-5"	4'-5"					9'-4"	9'-1"	55
			PANEL A241-18 (PER PANEL)																
90	6S001		Slab Panel	E	20					12'-3"							12'-3"	12'-3"	1,656
28	6S002		Slab Panel	E	20					43'-1"							43'-1"	43'-1"	1,812
90	6S003		Slab Panel	E	5					7"	4'-11"	4'-11"					10'-5"	10'-2"	1,374
14	6S004		Slab Panel	E	5					5.5"	4'-5"	4'-5"					9'-4"	9'-1"	191
4	6S005		Slab Panel	E	5					5.5"	6'-8"	6'-8"					13'-10"	13'-7"	82
14	5S006		Slab Panel	E	89					10"	10"	2'-5"			5 3/8"	2'-4 1/2"	4'-1"	4'-0"	58
14	5S007		Slab Panel	E	54					16"	18"	18"	10"	10"	18"	1 1/2"	6'-0"	5'-8"	83
16	6S008		Slab Panel	E	20					6'-6"							7'-0"	7'-0"	168
11	6S012		Slab Panel	E	5					5.5"	6'-5"	6'-5"					13'-4"	13'-1"	216
3	6S013		Slab Panel	E	5					5.5"	4'-5"	4'-5"					9'-4"	9'-1"	41
			PANEL A241-19 (PER PANEL)																
90	6S001		Slab Panel	E	20					12'-3"							12'-3"	12'-3"	1,656
28	6S002		Slab Panel	E	20					43'-1"							43'-1"	43'-1"	1,812
90	6S003		Slab Panel	E	5					7"	4'-11"	4'-11"					10'-5"	10'-2"	1,374
14	6S004		Slab Panel	E	5					5.5"	4'-5"	4'-5"					9'-4"	9'-1"	191
4	6S005		Slab Panel	E	5					5.5"	6'-8"	6'-8"					13'-10"	13'-7"	82
14	5S006		Slab Panel	E	89					10"	10"	2'-5"			5 3/8"	2'-4 1/2"	4'-1"	4'-0"	58
14	5S007		Slab Panel	E	54					16"	18"	18"	10"	10"	18"	1 1/2"	6'-0"	5'-8"	83
16	6S008		Slab Panel	E	20					6'-6"							7'-0"	7'-0"	168
11	6S012		Slab Panel	E	5					5.5"	6'-5"	6'-5"					13'-4"	13'-1"	216
3	6S013		Slab Panel	E	5					5.5"	4'-5"	4'-5"					9'-4"	9'-1"	41

BILL OF REINFORCING STEEL (5)

NO. REQ'D.	MARK NO. SIZE	MARK NO. MARK	LOCATION	EPOXY (E)	SHAPE NO.	STIRRUP (S)	SUBSTR. (X)	VARIES (V)	NO. EACH	DIMENSIONS B FT. IN.	C FT. IN.	D FT. IN.	E FT. IN.	F FT. IN.	H FT. IN.	K FT. IN.	NOMINAL LENGTH FT. IN.	ACTUAL LENGTH FT. IN.	WEIGHT LBS.
			PANEL A241-20 (PER PANEL)																
90	6S001		Slab Panel	E	20					12'-3"							12'-3"	12'-3"	1,656
28	6S002		Slab Panel	E	20					43'-1"							43'-1"	43'-1"	1,812
90	6S003		Slab Panel	E	5					7"	4'-11"	4'-11"					10'-5"	10'-2"	1,374
14	6S004		Slab Panel	E	5					5.5"	4'-5"	4'-5"					9'-4"	9'-1"	191
4	6S005		Slab Panel	E	5					5.5"	6'-8"	6'-8"					13'-10"	13'-7"	82
14	5S006		Slab Panel	E	89					10"	10"	2'-5"			5 3/8"	2'-4 1/2"	4'-1"	4'-0"	58
14	5S007		Slab Panel	E	54					16"	18"	18"	10"	10"	18"	1 1/2"	6'-0"	5'-8"	83
16	6S008		Slab Panel	E	20					6'-6"							7'-0"	7'-0"	168
11	6S012		Slab Panel	E	5					5.5"	6'-5"	6'-5"					13'-4"	13'-1"	216
3	6S013		Slab Panel	E	5					5.5"	4'-5"	4'-5"					9'-4"	9'-1"	41
			PANEL A241-21 (PER PANEL)																
90	6S001		Slab Panel	E	20					12'-3"							12'-3"	12'-3"	1,656
28	6S002		Slab Panel	E	20					43'-1"							43'-1"	43'-1"	1,812
90	6S003		Slab Panel	E	5					7"	4'-11"	4'-11"					10'-5"	10'-2"	1,374
14	6S004		Slab Panel	E	5					5.5"	4'-5"	4'-5"					9'-4"	9'-1"	191
4	6S005		Slab Panel	E	5					5.5"	6'-8"	6'-8"					13'-10"	13'-7"	82
14	5S006		Slab Panel	E	89					10"	10"	2'-5"			5 3/8"	2'-4 1/2"	4'-1"	4'-0"	58
14	5S007		Slab Panel	E	54					16"	18"	18"	10"	10"	18"	1 1/2"	6'-0"	5'-8"	83
16	6S008		Slab Panel	E	20					6'-6"							7'-0"	7'-0"	168
11	6S012		Slab Panel	E	5					5.5"	6'-5"	6'-5"					13'-4"	13'-1"	216
3	6S013		Slab Panel	E	5					5.5"	4'-5"	4'-5"					9'-4"	9'-1"	41
			PANEL A241-22 (PER PANEL)																
90	6S001		Slab Panel	E	20					12'-3"							12'-3"	12'-3"	1,656
28	6S002		Slab Panel	E	20					43'-1"							43'-1"	43'-1"	1,812
90	6S003		Slab Panel	E	5					7"	4'-11"	4'-11"					10'-5"	10'-2"	1,374
14	6S004		Slab Panel	E	5					5.5"	4'-5"	4'-5"					9'-4"	9'-1"	191
4	6S005		Slab Panel	E	89					10"	10"	2'-5"			5 3/8"	2'-4 1/2"	4'-1"	4'-0"	58
14	5S006		Slab Panel	E	54					16"	18"	18"	10"	10"	18"	1 1/2"	6'-0"	5'-8"	83
16	6S008		Slab Panel	E	20					6'-6"							7'-0"	7'-0"	168
14	6S012		Slab Panel	E	5					5.5"	6'-5"	6'-5"					13'-4"	13'-1"	275
			PANEL A241-23 (PER PANEL)																
90	6S001		Slab Panel	E	20					12'-3"							12'-3"	12'-3"	1,656
28	6S002		Slab Panel	E	20					43'-1"							43'-1"	43'-1"	1,812
90	6S003		Slab Panel	E	5					7"	4'-11"	4'-11"					10'-5"	10'-2"	1,374
14	6S004		Slab Panel	E	5					5.5"	4'-5"	4'-5"					9'-4"	9'-1"	191
14	5S006		Slab Panel	E	89					10"	10"	2'-5"			5 3/8"	2'-4 1/2"	4'-1"	4'-0"	58
14	5S007		Slab Panel	E	54					16"	18"	18"	10"	10"	18"	1 1/2"	6'-0"	5'-8"	83
16	6S008		Slab Panel	E	20					6'-6"							7'-0"	7'-0"	168
14	6S012		Slab Panel	E	5					5.5"	6'-5"	6'-5"					13'-4"	13'-1"	275
			PANEL A241-24 (PER PANEL)																
90	6S001		Slab Panel	E	20					12'-3"							12'-3"	12'-3"	1,656
28	6S002		Slab Panel	E	20					43'-1"							43'-1"	43'-1"	1,812
90	6S003		Slab Panel	E	5					7"	4'-11"	4'-11"					10'-5"	10'-2"	1,374
14	6S004		Slab Panel	E	5					5.5"	4'-5"	4'-5"					9'-4"	9'-1"	191
14	5S006		Slab Panel	E	89					10"	10"	2'-5"			5 3/8"	2'-4 1/2"	4'-1"	4'-0"	58
14	5S007		Slab Panel	E	54					16"	18"	18"	10"	10"	18"	1 1/2"	6'-0"	5'-8"	83
16	6S008		Slab Panel	E	20					6'-6"							7'-0"	7'-0"	168
3	5S009		Slab Panel	E	54					2'-1"	18"	18"	10"	10"	18"	1 1/2"	6'-9"	6'-5"	20
14	6S012		Slab Panel	E	5					5.5"	6'-5"	6'-5"					13'-4"	13'-1"	275
			PANEL A241-25 (PER PANEL)																
90	6S001		Slab Panel	E	20					12'-3"							12'-3"	12'-3"	1,656
28	6S002		Slab Panel	E	20					43'-1"							43'-1"	43'-1"	1,812
90	6S003		Slab Panel	E	5					7"	4'-11"	4'-11"					10'-5"	10'-2"	1,374
14	6S004		Slab Panel	E	5					5.5"	4'-5"	4'-5"					9'-4"	9'-1"	191
14	5S006		Slab Panel	E	89					10"	10"	2'-5"			5 3/8"	2'-4 1/2"	4'-1"	4'-0"	58
14	5S007		Slab Panel	E	54					16"	18"	18"	10"	10"	18"	1 1/2"	6'-0"	5'-8"	83
16	6S008		Slab Panel	E	20					6'-6"							7'-0"	7'-0"	168
3	5S009		Slab Panel	E	54					2'-1"	18"	18"	10"	10"	18"	1 1/2"	6'-9"	6'-5"	20
14	6S012		Slab Panel	E	5					5.5"	6'-5"	6'-5"					13'-4"	13'-1"	275

Notes:
For Bar Bending Diagram, see Sheet No. BR184.

BILL OF REINFORCING STEEL

Detailed JUL 2009
Checked JUL 2009

Note: This drawing is not to scale. Follow dimensions.

Sheet No. 196 of 205

T:\de-proj\St_Louis_City\Construction\J6I0984\Asbuilts\Bridge\B_A6500_196-205_J6I0984_196.dgn 9:15:09 AM

DATE 5/17/10
ROUTE I-70 STATE MO/IL
DISTRICT 6 SHEET NO. BR196
COUNTY ST. LOUIS CITY - MO ST. CLAIR - IL
JOB NO. J6I0984
CONTRACT ID. 091208-601
PROJECT NO. I-70-9 (20)
BRIDGE NO. A6500

REV.	DESCRIPTION	DATE
A	Added panel types	5-17-10

MISSOURI HIGHWAYS AND TRANSPORTATION COMMISSION
105 WEST CAPITOL
JEFFERSON CITY, MO 65102
1-888-ASK-MODOT (1-888-275-6636)

HNTB
715 KIRK DRIVE
KANSAS CITY, MO 64105-1310
TELEPHONE (816) 483-1600
CERTIFICATE OF AUTHORITY NO. 001270

FINAL PLANS

BILL OF REINFORCING STEEL (5)

NO. REQ'D.	MARK NO. SIZE	MARK	LOCATION	EPOXY (E)	SHAPE NO.	STIRRUP (S)	SUBSTR. (X)	VARIES (V)	NO. EACH	DIMENSIONS B FT.	B IN.	C FT.	C IN.	D FT.	D IN.	E FT.	E IN.	F FT.	F IN.	H FT.	H IN.	K FT.	K IN.	NOMINAL LENGTH FT.	NOMINAL LENGTH IN.	ACTUAL LENGTH FT.	ACTUAL LENGTH IN.	WEIGHT LBS.
			PANEL B120-01 (PER PANEL)																									
28	6S002		Slab Panel	E	20					43′-1″														43′-1″		43′-1″		1,812
90	6S003		Slab Panel	E	5					7″		4′-11″		4′-11″										10′-5″		10′-2″		1,374
14	6S004		Slab Panel	E	5					5.5″		4′-5″		4′-5″										9′-4″		9′-1″		191
4	6S005		Slab Panel	E	5					5.5″		6′-8″		6′-8″										13′-10″		13′-7″		82
14	5S006		Slab Panel	E	89					10″		10″		2′-5″						5 3/8″		2′-4 1/2″		4′-1″		4′-0″		58
14	5S007		Slab Panel	E	54					16″		18″		18″		10″		10″		18″		1 1/2″		6′-0″		5′-8″		83
90	6S010		Slab Panel	E	20					12′-8″														12′-8″		12′-8″		1,712
14	6S012		Slab Panel	E	5					5.5″		6′-5″		6′-5″										13′-4″		13′-1″		275
			PANEL B120-02 (PER PANEL)																									
28	6S002		Slab Panel	E	20					43′-1″														43′-1″		43′-1″		1,812
90	6S003		Slab Panel	E	5					7″		4′-11″		4′-11″										10′-5″		10′-2″		1,374
14	6S004		Slab Panel	E	5					5.5″		4′-5″		4′-5″										9′-4″		9′-1″		191
4	6S005		Slab Panel	E	5					5.5″		6′-8″		6′-8″										13′-10″		13′-7″		82
14	5S006		Slab Panel	E	89					10″		10″		2′-5″						5 3/8″		2′-4 1/2″		4′-1″		4′-0″		58
14	5S007		Slab Panel	E	54					16″		18″		18″		10″		10″		18″		1 1/2″		6′-0″		5′-8″		83
90	6S010		Slab Panel	E	20					12′-8″														12′-8″		12′-8″		1,712
14	6S012		Slab Panel	E	5					5.5″		6′-5″		6′-5″										13′-4″		13′-1″		275
			PANEL B120-03 (PER PANEL)																									
28	6S002		Slab Panel	E	20					43′-1″														43′-1″		43′-1″		1,812
90	6S003		Slab Panel	E	5					7″		4′-11″		4′-11″										10′-5″		10′-2″		1,374
14	6S004		Slab Panel	E	5					5.5″		4′-5″		4′-5″										9′-4″		9′-1″		191
4	6S005		Slab Panel	E	5					5.5″		6′-8″		6′-8″										13′-10″		13′-7″		82
14	5S006		Slab Panel	E	89					10″		10″		2′-5″						5 3/8″		2′-4 1/2″		4′-1″		4′-0″		58
14	5S007		Slab Panel	E	54					16″		18″		18″		10″		10″		18″		1 1/2″		6′-0″		5′-8″		83
90	6S010		Slab Panel	E	20					12′-8″														12′-8″		12′-8″		1,712
14	6S012		Slab Panel	E	5					5.5″		6′-5″		6′-5″										13′-4″		13′-1″		275
			PANEL B120-04 (PER PANEL)																									
28	6S002		Slab Panel	E	20					43′-1″														43′-1″		43′-1″		1,812
90	6S003		Slab Panel	E	5					7″		4′-11″		4′-11″										10′-5″		10′-2″		1,374
14	6S004		Slab Panel	E	5					5.5″		4′-5″		4′-5″										9′-4″		9′-1″		191
14	5S006		Slab Panel	E	89					10″		10″		2′-5″						5 3/8″		2′-4 1/2″		4′-1″		4′-0″		58
14	5S007		Slab Panel	E	54					16″		18″		18″		10″		10″		18″		1 1/2″		6′-0″		5′-8″		83
90	6S010		Slab Panel	E	20					12′-8″														12′-8″		12′-8″		1,712
14	6S012		Slab Panel	E	5					5.5″		6′-5″		6′-5″										13′-4″		13′-1″		275
			PANEL B120-05 (PER PANEL)																									
28	6S002		Slab Panel	E	20					43′-1″														43′-1″		43′-1″		1,812
90	6S003		Slab Panel	E	5					7″		4′-11″		4′-11″										10′-5″		10′-2″		1,374
14	6S004		Slab Panel	E	5					5.5″		4′-5″		4′-5″										9′-4″		9′-1″		191
14	5S006		Slab Panel	E	89					10″		10″		2′-5″						5 3/8″		2′-4 1/2″		4′-1″		4′-0″		58
14	5S007		Slab Panel	E	54					16″		18″		18″		10″		10″		18″		1 1/2″		6′-0″		5′-8″		83
90	6S010		Slab Panel	E	20					12′-8″														12′-8″		12′-8″		1,712
14	6S012		Slab Panel	E	5					5.5″		6′-5″		6′-5″										13′-4″		13′-1″		275
			PANEL B120-06 (PER PANEL)																									
28	6S002		Slab Panel	E	20					43′-1″														43′-1″		43′-1″		1,812
90	6S003		Slab Panel	E	5					7″		4′-11″		4′-11″										10′-5″		10′-2″		1,374
14	6S004		Slab Panel	E	5					5.5″		4′-5″		4′-5″										9′-4″		9′-1″		191
14	5S006		Slab Panel	E	89					10″		10″		2′-5″						5 3/8″		2′-4 1/2″		4′-1″		4′-0″		58
14	5S007		Slab Panel	E	54					16″		18″		18″		10″		10″		18″		1 1/2″		6′-0″		5′-8″		83
3	5S009		Slab Panel	E	54					2′-1″		18″		18″		10″		10″		18″		1 1/2″		6′-9″		6′-5″		20
90	6S010		Slab Panel	E	20					12′-8″														12′-8″		12′-8″		1,712
14	6S012		Slab Panel	E	5					5.5″		6′-5″		6′-5″										13′-4″		13′-1″		275
			PANEL B120-07 (PER PANEL)																									
28	6S002		Slab Panel	E	20					43′-1″														43′-1″		43′-1″		1,812
90	6S003		Slab Panel	E	5					7″		4′-11″		4′-11″										10′-5″		10′-2″		1,374
14	6S004		Slab Panel	E	5					5.5″		4′-5″		4′-5″										9′-4″		9′-1″		191
14	5S006		Slab Panel	E	89					10″		10″		2′-5″						5 3/8″		2′-4 1/2″		4′-1″		4′-0″		58
14	5S007		Slab Panel	E	54					16″		18″		18″		10″		10″		18″		1 1/2″		6′-0″		5′-8″		83
3	5S009		Slab Panel	E	54					2′-1″		18″		18″		10″		10″		18″		1 1/2″		6′-9″		6′-5″		20
90	6S010		Slab Panel	E	20					12′-8″														12′-8″		12′-8″		1,712
14	6S012		Slab Panel	E	5					5.5″		6′-5″		6′-5″										13′-4″		13′-1″		275

BILL OF REINFORCING STEEL (5)

NO. REQ'D.	MARK NO. SIZE	MARK	LOCATION	EPOXY (E)	SHAPE NO.	STIRRUP (S)	SUBSTR. (X)	VARIES (V)	NO. EACH	DIMENSIONS B FT.	B IN.	C FT.	C IN.	D FT.	D IN.	E FT.	E IN.	F FT.	F IN.	H FT.	H IN.	K FT.	K IN.	NOMINAL LENGTH FT.	NOMINAL LENGTH IN.	ACTUAL LENGTH FT.	ACTUAL LENGTH IN.	WEIGHT LBS.
			PANEL B120-08 (PER PANEL)																									
28	6S002		Slab Panel	E	20					43′-1″														43′-1″		43′-1″		1,812
90	6S003		Slab Panel	E	5					7″		4′-11″		4′-11″										10′-5″		10′-2″		1,374
14	6S004		Slab Panel	E	5					5.5″		4′-5″		4′-5″										9′-4″		9′-1″		191
14	5S006		Slab Panel	E	89					10″		10″		2′-5″						5 3/8″		2′-4 1/2″		4′-1″		4′-0″		58
14	5S007		Slab Panel	E	54					16″		18″		18″		10″		10″		18″		1 1/2″		6′-0″		5′-8″		83
90	6S010		Slab Panel	E	20					12′-8″														12′-8″		12′-8″		1,712
13	6S012		Slab Panel	E	5					5.5″		6′-5″		6′-5″										13′-4″		13′-1″		255
1	6S013		Slab Panel	E	5					5.5″		4′-5″		4′-5″										9′-4″		9′-1″		14
			PANEL B120-09 (PER PANEL)																									
28	6S002		Slab Panel	E	20					43′-1″														43′-1″		43′-1″		1,812
90	6S003		Slab Panel	E	5					7″		4′-11″		4′-11″										10′-5″		10′-2″		1,374
14	6S004		Slab Panel	E	5					5.5″		4′-5″		4′-5″										9′-4″		9′-1″		191
14	5S006		Slab Panel	E	89					10″		10″		2′-5″						5 3/8″		2′-4 1/2″		4′-1″		4′-0″		58
14	5S007		Slab Panel	E	54					16″		18″		18″		10″		10″		18″		1 1/2″		6′-0″		5′-8″		83
90	6S010		Slab Panel	E	20					12′-8″														12′-8″		12′-8″		1,712
13	6S012		Slab Panel	E	5					5.5″		6′-5″		6′-5″										13′-4″		13′-1″		255
1	6S013		Slab Panel	E	5					5.5″		4′-5″		4′-5″										9′-4″		9′-1″		14
			PANEL B120-10 (PER PANEL)																									
28	6S002		Slab Panel	E	20					43′-1″														43′-1″		43′-1″		1,812
90	6S003		Slab Panel	E	5					7″		4′-11″		4′-11″										10′-5″		10′-2″		1,374
14	6S004		Slab Panel	E	5					5.5″		4′-5″		4′-5″										9′-4″		9′-1″		191
14	5S006		Slab Panel	E	89					10″		10″		2′-5″						5 3/8″		2′-4 1/2″		4′-1″		4′-0″		58
14	5S007		Slab Panel	E	54					16″		18″		18″		10″		10″		18″		1 1/2″		6′-0″		5′-8″		83
90	6S010		Slab Panel	E	20					12′-8″														12′-8″		12′-8″		1,712
12	6S012		Slab Panel	E	5					5.5″		6′-5″		6′-5″										13′-4″		13′-1″		236
2	6S013		Slab Panel	E	5					5.5″		4′-5″		4′-5″										9′-4″		9′-1″		27
			PANEL B120-11 (PER PANEL)																									
28	6S002		Slab Panel	E	20					43′-1″														43′-1″		43′-1″		1,812
90	6S003		Slab Panel	E	5					7″		4′-11″		4′-11″										10′-5″		10′-2″		1,374
14	6S004		Slab Panel	E	5					5.5″		4′-5″		4′-5″										9′-4″		9′-1″		191
14	5S006		Slab Panel	E	89					10″		10″		2′-5″						5 3/8″		2′-4 1/2″		4′-1″		4′-0″		58
14	5S007		Slab Panel	E	54					16″		18″		18″		10″		10″		18″		1 1/2″		6′-0″		5′-8″		83
90	6S010		Slab Panel	E	20					12′-8″														12′-8″		12′-8″		1,712
12	6S012		Slab Panel	E	5					5.5″		6′-5″		6′-5″										13′-4″		13′-1″		236
2	6S013		Slab Panel	E	5					5.5″		4′-5″		4′-5″										9′-4″		9′-1″		27
			PANEL B120-12 (PER PANEL)																									
28	6S002		Slab Panel	E	20					43′-1″														43′-1″		43′-1″		1,812
90	6S003		Slab Panel	E	5					7″		4′-11″		4′-11″										10′-5″		10′-2″		1,374
14	6S004		Slab Panel	E	5					5.5″		4′-5″		4′-5″										9′-4″		9′-1″		191
14	5S006		Slab Panel	E	89					10″		10″		2′-5″						5 3/8″		2′-4 1/2″		4′-1″		4′-0″		58
14	5S007		Slab Panel	E	54					16″		18″		18″		10″		10″		18″		1 1/2″		6′-0″		5′-8″		83
90	6S010		Slab Panel	E	20					12′-8″														12′-8″		12′-8″		1,712
11	6S012		Slab Panel	E	5					5.5″		6′-5″		6′-5″										13′-4″		13′-1″		216
3	6S013		Slab Panel	E	5					5.5″		4′-5″		4′-5″										9′-4″		9′-1″		41
			PANEL B120-13 (PER PANEL)																									
28	6S002		Slab Panel	E	20					43′-1″														43′-1″		43′-1″		1,812
90	6S003		Slab Panel	E	5					7″		4′-11″		4′-11″										10′-5″		10′-2″		1,374
14	6S004		Slab Panel	E	5					5.5″		4′-5″		4′-5″										9′-4″		9′-1″		191
14	5S006		Slab Panel	E	89					10″		10″		2′-5″						5 3/8″		2′-4 1/2″		4′-1″		4′-0″		58
14	5S007		Slab Panel	E	54					16″		18″		18″		10″		10″		18″		1 1/2″		6′-0″		5′-8″		83
90	6S010		Slab Panel	E	20					12′-8″														12′-8″		12′-8″		1,712
11	6S012		Slab Panel	E	5					5.5″		6′-5″		6′-5″										13′-4″		13′-1″		216
3	6S013		Slab Panel	E	5					5.5″		4′-5″		4′-5″										9′-4″		9′-1″		41

Notes:
For Bar Bending Diagram, see Sheet No. BR184.

BILL OF REINFORCING STEEL

Detailed JUL 2009
Checked JUL 2009

Note: This drawing is not to scale. Follow dimensions.

Sheet No. 197 of 205

T:\de-proj\St_Louis_City\Construction\J6I0984\Asbuilts\Bridge\B_A6500_197-205_J6I0984_197.dgn 9:06:31 AM

DATE 5/17/10
ROUTE I-70 STATE MO/IL
DISTRICT 6 SHEET NO. BR197
COUNTY ST. LOUIS CITY - MO ST. CLAIR - IL
JOB NO. J6I0984
CONTRACT ID. 091208-601
PROJECT NO. I-70-9 (20)
BRIDGE NO. A6500

DESCRIPTION
DATE
5-17-10 (4) Moved panel types

MISSOURI HIGHWAYS AND TRANSPORTATION COMMISSION
MoDOT
105 WEST CAPITOL
JEFFERSON CITY, MO 65102
1-888-ASK-MODOT (1-888-275-6636)

HNTB
715 KIRK DRIVE
KANSAS CITY, MO 64105-1310
TELEPHONE (816) 472-1201
CERTIFICATE OF AUTHORITY NO. 001210

FINAL PLANS

REV.

BILL OF REINFORCING STEEL ⚠5

NO. REQ'D.	MARK NO. (SIZE MARK)	LOCATION	EPOXY (E)	SHAPE NO.	STIRRUP (S)	SUBSTR. (X)	VARIES (V)	NO. EACH	B FT. IN.	C FT. IN.	D FT. IN.	E FT. IN.	F FT. IN.	H FT. IN.	K FT. IN.	NOMINAL LENGTH FT. IN.	ACTUAL LENGTH FT. IN.	WEIGHT LBS.
		PANEL B120-14 (PER PANEL)																
28	6S002	Slab Panel	E	20					43'-1"							43'-1"	43'-1"	1,812
90	6S003	Slab Panel	E	5					7"	4'-11"	4'-11"					10'-5"	10'-2"	1,374
14	6S004	Slab Panel	E	5					5.5"	4'-5"	4'-5"					9'-4"	9'-1"	191
14	5S006	Slab Panel	E	89					10"	10"	2'-5"			5 3/8"	2'-4 1/2"	4'-1"	4'-0"	58
14	5S007	Slab Panel	E	54					16"	18"	18"	10"	10"	18"	1 1/2"	6'-0"	5'-8"	83
90	6S010	Slab Panel	E	20					12'-8"							12'-8"	12'-8"	1,712
10	6S012	Slab Panel	E	5					5.5"	6'-5"	6'-5"					13'-4"	13'-1"	197
4	6S013	Slab Panel	E	5					5.5"	4'-5"	4'-5"					9'-4"	9'-1"	55
		PANEL B120-15 (PER PANEL)																
28	6S002	Slab Panel	E	20					43'-1"							43'-1"	43'-1"	1,812
90	6S003	Slab Panel	E	5					7"	4'-11"	4'-11"					10'-5"	10'-2"	1,374
14	6S004	Slab Panel	E	5					5.5"	4'-5"	4'-5"					9'-4"	9'-1"	191
14	5S006	Slab Panel	E	89					10"	10"	2'-5"			5 3/8"	2'-4 1/2"	4'-1"	4'-0"	58
14	5S007	Slab Panel	E	54					16"	18"	18"	10"	10"	18"	1 1/2"	6'-0"	5'-8"	83
90	6S010	Slab Panel	E	20					12'-8"							12'-8"	12'-8"	1,712
10	6S012	Slab Panel	E	5					5.5"	6'-5"	6'-5"					13'-4"	13'-1"	197
4	6S013	Slab Panel	E	5					5.5"	4'-5"	4'-5"					9'-4"	9'-1"	55
		PANEL B120-16 (PER PANEL)																
28	6S002	Slab Panel	E	20					43'-1"							43'-1"	43'-1"	1,812
90	6S003	Slab Panel	E	5					7"	4'-11"	4'-11"					10'-5"	10'-2"	1,374
14	6S004	Slab Panel	E	5					5.5"	4'-5"	4'-5"					9'-4"	9'-1"	191
14	5S006	Slab Panel	E	89					10"	10"	2'-5"			5 3/8"	2'-4 1/2"	4'-1"	4'-0"	58
14	5S007	Slab Panel	E	54					16"	18"	18"	10"	10"	18"	1 1/2"	6'-0"	5'-8"	83
90	6S010	Slab Panel	E	20					12'-8"							12'-8"	12'-8"	1,712
9	6S012	Slab Panel	E	5					5.5	6'-5"	6'-5"					13'-4"	13'-1"	177
5	6S013	Slab Panel	E	5					5.5"	4'-5"	4'-5"					9'-4"	9'-1"	68
		PANEL B120-17 (PER PANEL)																
28	6S002	Slab Panel	E	20					43'-1"							43'-1"	43'-1"	1,812
90	6S003	Slab Panel	E	5					7"	4'-11"	4'-11"					10'-5"	10'-2"	1,374
14	6S004	Slab Panel	E	5					5.5"	4'-5"	4'-5"					9'-4"	9'-1"	191
14	5S006	Slab Panel	E	89					10"	10"	2'-5"			5 3/8"	2'-4 1/2"	4'-1"	4'-0"	58
14	5S007	Slab Panel	E	54					16"	18"	18"	10"	10"	18"	1 1/2"	6'-0"	5'-8"	83
90	6S010	Slab Panel	E	20					12'-8"							12'-8"	12'-8"	1,712
9	6S012	Slab Panel	E	5					5.5"	6'-5"	6'-5"					13'-4"	13'-1"	177
5	6S013	Slab Panel	E	5					5.5"	4'-5"	4'-5"					9'-4"	9'-1"	68
		PANEL B120-18 (PER PANEL)																
28	6S002	Slab Panel	E	20					43'-1"							43'-1"	43'-1"	1,812
90	6S003	Slab Panel	E	5					7"	4'-11"	4'-11"					10'-5"	10'-2"	1,374
14	6S004	Slab Panel	E	5					5.5"	4'-5"	4'-5"					9'-4"	9'-1"	191
14	5S006	Slab Panel	E	89					10"	10"	2'-5"			5 3/8"	2'-4 1/2"	4'-1"	4'-0"	58
14	5S007	Slab Panel	E	54					16"	18"	18"	10"	10"	18"	1 1/2"	6'-0"	5'-8"	83
90	6S010	Slab Panel	E	20					12'-8"							12'-8"	12'-8"	1,712
9	6S012	Slab Panel	E	5					5.5"	6'-5"	6'-5"					13'-4"	13'-1"	177
5	6S013	Slab Panel	E	5					5.5"	4'-5"	4'-5"					9'-4"	9'-1"	68
		PANEL B120-19 (PER PANEL)																
28	6S002	Slab Panel	E	20					43'-1"							43'-1"	43'-1"	1,812
90	6S003	Slab Panel	E	5					7"	4'-11"	4'-11"					10'-5"	10'-2"	1,374
14	6S004	Slab Panel	E	5					5.5"	4'-5"	4'-5"					9'-4"	9'-1"	191
14	5S006	Slab Panel	E	89					10"	10"	2'-5"			5 3/8"	2'-4 1/2"	4'-1"	4'-0"	58
14	5S007	Slab Panel	E	54					16"	18"	18"	10"	10"	18"	1 1/2"	6'-0"	5'-8"	83
90	6S010	Slab Panel	E	20					12'-8"							12'-8"	12'-8"	1,712
9	6S012	Slab Panel	E	5					5.5"	6'-5"	6'-5"					13'-4"	13'-1"	177
5	6S013	Slab Panel	E	5					5.5"	4'-5"	4'-5"					9'-4"	9'-1"	68

BILL OF REINFORCING STEEL ⚠5

NO. REQ'D.	MARK NO. (SIZE MARK)	LOCATION	EPOXY (E)	SHAPE NO.	STIRRUP (S)	SUBSTR. (X)	VARIES (V)	NO. EACH	B FT. IN.	C FT. IN.	D FT. IN.	E FT. IN.	F FT. IN.	H FT. IN.	K FT. IN.	NOMINAL LENGTH FT. IN.	ACTUAL LENGTH FT. IN.	WEIGHT LBS.
		PANEL B121-01 (PER PANEL)																
28	6S002	Slab Panel	E	20					43'-1"							43'-1"	43'-1"	1,812
90	6S003	Slab Panel	E	5					7"	4'-11"	4'-11"					10'-5"	10'-2"	1,374
14	6S004	Slab Panel	E	5					5.5"	4'-5"	4'-5"					9'-4"	9'-1"	191
4	6S005	Slab Panel	E	5					5.5"	6'-8"	6'-8"					13'-10"	13'-7"	82
14	5S006	Slab Panel	E	89					10"	10"	2'-5"			5 3/8"	2'-4 1/2"	4'-1"	4'-0"	58
14	5S007	Slab Panel	E	54					16"	18"	18"	10"	10"	18"	1 1/2"	6'-0"	5'-8"	83
16	6S008	Slab Panel	E	20					6'-6"							7'-0"	7'-0"	168
90	6S010	Slab Panel	E	20					12'-8"							12'-8"	12'-8"	1,712
9	6S012	Slab Panel	E	5					5.5"	6'-5"	6'-5"					13'-4"	13'-1"	177
5	6S013	Slab Panel	E	5					5.5"	4'-5"	4'-5"					9'-4"	9'-1"	68
		PANEL B121-02 (PER PANEL)																
28	6S002	Slab Panel	E	20					43'-1"							43'-1"	43'-1"	1,812
90	6S003	Slab Panel	E	5					7"	4'-11"	4'-11"					10'-5"	10'-2"	1,374
14	6S004	Slab Panel	E	5					5.5"	4'-5"	4'-5"					9'-4"	9'-1"	191
4	6S005	Slab Panel	E	5					5.5"	6'-8"	6'-8"					13'-10"	13'-7"	82
14	5S006	Slab Panel	E	89					10"	10"	2'-5"			5 3/8"	2'-4 1/2"	4'-1"	4'-0"	58
14	5S007	Slab Panel	E	54					16"	18"	18"	10"	10"	18"	1 1/2"	6'-0"	5'-8"	83
16	6S008	Slab Panel	E	20					6'-6"							7'-0"	7'-0"	168
90	6S010	Slab Panel	E	20					12'-8"							12'-8"	12'-8"	1,712
9	6S012	Slab Panel	E	5					5.5"	6'-5"	6'-5"					13'-4"	13'-1"	177
5	6S013	Slab Panel	E	5					5.5"	4'-5"	4'-5"					9'-4"	9'-1"	68
		PANEL B121-03 (PER PANEL)																
28	6S002	Slab Panel	E	20					43'-1"							43'-1"	43'-1"	1,812
90	6S003	Slab Panel	E	5					7"	4'-11"	4'-11"					10'-5"	10'-2"	1,374
14	6S004	Slab Panel	E	5					5.5"	4'-5"	4'-5"					9'-4"	9'-1"	191
4	6S005	Slab Panel	E	5					5.5"	6'-8"	6'-8"					13'-10"	13'-7"	82
14	5S006	Slab Panel	E	89					10"	10"	2'-5"			5 3/8"	2'-4 1/2"	4'-1"	4'-0"	58
14	5S007	Slab Panel	E	54					16"	18"	18"	10"	10"	18"	1 1/2"	6'-0"	5'-8"	83
16	6S008	Slab Panel	E	20					6'-6"							7'-0"	7'-0"	168
90	6S010	Slab Panel	E	20					12'-8"							12'-8"	12'-8"	1,712
9	6S012	Slab Panel	E	5					5.5"	6'-5"	6'-5"					13'-4"	13'-1"	177
5	6S013	Slab Panel	E	5					5.5"	4'-5"	4'-5"					9'-4"	9'-1"	68
		PANEL B121-04 (PER PANEL)																
28	6S002	Slab Panel	E	20					43'-1"							43'-1"	43'-1"	1,812
90	6S003	Slab Panel	E	5					7"	4'-11"	4'-11"					10'-5"	10'-2"	1,374
14	6S004	Slab Panel	E	5					5.5"	4'-5"	4'-5"					9'-4"	9'-1"	191
4	6S005	Slab Panel	E	5					5.5"	6'-8"	6'-8"					13'-10"	13'-7"	82
14	5S006	Slab Panel	E	89					10"	10"	2'-5"			5 3/8"	2'-4 1/2"	4'-1"	4'-0"	58
14	5S007	Slab Panel	E	54					16"	18"	18"	10"	10"	18"	1 1/2"	6'-0"	5'-8"	83
16	6S008	Slab Panel	E	20					6'-6"							7'-0"	7'-0"	168
90	6S010	Slab Panel	E	20					12'-8"							12'-8"	12'-8"	1,712
9	6S012	Slab Panel	E	5					5.5"	6'-5"	6'-5"					13'-4"	13'-1"	177
5	6S013	Slab Panel	E	5					5.5"	4'-5"	4'-5"					9'-4"	9'-1"	68
		PANEL B121-05 (PER PANEL)																
28	6S002	Slab Panel	E	20					43'-1"							43'-1"	43'-1"	1,812
90	6S003	Slab Panel	E	5					7"	4'-11"	4'-11"					10'-5"	10'-2"	1,374
14	6S004	Slab Panel	E	5					5.5"	4'-5"	4'-5"					9'-4"	9'-1"	191
4	6S005	Slab Panel	E	5					5.5"	6'-8"	6'-8"					13'-10"	13'-7"	82
14	5S006	Slab Panel	E	89					10"	10"	2'-5"			5 3/8"	2'-4 1/2"	4'-1"	4'-0"	58
14	5S007	Slab Panel	E	54					16"	18"	18"	10"	10"	18"	1 1/2"	6'-0"	5'-8"	83
16	6S008	Slab Panel	E	20					6'-6"							7'-0"	7'-0"	168
90	6S010	Slab Panel	E	20					12'-8"							12'-8"	12'-8"	1,712
10	6S012	Slab Panel	E	5					5.5"	6'-5"	6'-5"					13'-4"	13'-1"	197
4	6S013	Slab Panel	E	5					5.5"	4'-5"	4'-5"					9'-4"	9'-1"	55

Notes:
For Bar Bending Diagram, see Sheet No. BR184.

BILL OF REINFORCING STEEL

Detailed JUL 2009
Checked JUL 2009

Note: This drawing is not to scale. Follow dimensions.

Sheet No. 198 of 205

DATE 5/17/10
ROUTE I-70 | STATE MO/IL
DISTRICT 6 | SHEET NO. BR198
COUNTY ST. LOUIS CITY - MO ST. CLAIR - IL
JOB NO. J6I0984
CONTRACT ID. 091208-601
PROJECT NO. I-70-9 (20)
BRIDGE NO. A6500

DATE	DESCRIPTION
5-17-10	⚠5 Moved panel types

MISSOURI HIGHWAYS AND TRANSPORTATION COMMISSION
105 WEST CAPITOL
JEFFERSON CITY, MO 65102
1-888-ASK-MODOT (1-888-275-6636)

HNTB
715 KIRK DRIVE
KANSAS CITY, MO 64105-1310
TELEPHONE (816) 472-1201
CERTIFICATE OF AUTHORITY
NO. 001270

FINAL PLANS
REV.

BILL OF REINFORCING STEEL (5)

NO. REQ'D.	MARK NO. SIZE	MARK NO. MARK	LOCATION	EPOXY (E)	SHAPE NO.	STIRRUP (S)	SUBSTR. (X)	VARIES (V)	NO. EACH	DIMENSIONS B FT.	B IN.	C FT.	C IN.	D FT.	D IN.	E FT.	E IN.	F FT.	F IN.	H FT.	H IN.	K FT.	K IN.	NOMINAL LENGTH FT.	NOMINAL LENGTH IN.	ACTUAL LENGTH FT.	ACTUAL LENGTH IN.	WEIGHT LBS.
			PANEL B121-06 (PER PANEL)																									
28	6S002	Slab Panel		E	20					43′	-1″													43′	-1″	43′	-1″	1,812
90	6S003	Slab Panel		E	5					7″		4′	-11″	4′	-11″									10′	-5″	10′	-2″	1,374
14	6S004	Slab Panel		E	5					5.5″		4′	-5″	4′	-5″									9′	-4″	9′	-1″	191
4	6S005	Slab Panel		E	5					5.5″		6′	-8″	6′	-8″									13′	-10″	13′	-7″	82
14	5S006	Slab Panel		E	89					10″		10″		2′	-5″					5⅜″	2′-4½″			4′	-1″	4′	-0″	58
14	5S007	Slab Panel		E	54					16″		18″		18″		10″		10″		18″	1½″			6′	-0″	5′	-8″	83
16	6S008	Slab Panel		E	20					6′	-6″													7′	-0″	7′	-0″	168
90	6S010	Slab Panel		E	20					12′	-8″													12′	-8″	12′	-8″	1,712
10	6S012	Slab Panel		E	5					5.5″		6′	-5″	6′	-5″									13′	-4″	13′	-1″	197
4	6S013	Slab Panel		E	5					5.5″		4′	-5″	4′	-5″									9′	-4″	9′	-1″	55
			PANEL B121-07 (PER PANEL)																									
28	6S002	Slab Panel		E	20					43′	-1″													43′	-1″	43′	-1″	1,812
90	6S003	Slab Panel		E	5					7″		4′	-11″	4′	-11″									10′	-5″	10′	-2″	1,374
14	6S004	Slab Panel		E	5					5.5″		4′	-5″	4′	-5″									9′	-4″	9′	-1″	191
4	6S005	Slab Panel		E	5					5.5″		6′	-8″	6′	-8″									13′	-10″	13′	-7″	82
14	5S006	Slab Panel		E	89					10″		10″		2′	-5″					5⅜″	2′-4½″			4′	-1″	4′	-0″	58
14	5S007	Slab Panel		E	54					16″		18″		18″		10″		10″		18″	1½″			6′	-0″	5′	-8″	83
16	6S008	Slab Panel		E	20					6′	-6″													7′	-0″	7′	-0″	168
90	6S010	Slab Panel		E	20					12′	-8″													12′	-8″	12′	-8″	1,712
10	6S012	Slab Panel		E	5					5.5″		6′	-5″	6′	-5″									13′	-4″	13′	-1″	197
4	6S013	Slab Panel		E	5					5.5″		4′	-5″	4′	-5″									9′	-4″	9′	-1″	55
			PANEL B121-08 (PER PANEL)																									
28	6S002	Slab Panel		E	20					43′	-1″													43′	-1″	43′	-1″	1,812
90	6S003	Slab Panel		E	5					7″		4′	-11″	4′	-11″									10′	-5″	10′	-2″	1,374
14	6S004	Slab Panel		E	5					5.5″		4′	-5″	4′	-5″									9′	-4″	9′	-1″	191
4	6S005	Slab Panel		E	5					5.5″		6′	-8″	6′	-8″									13′	-10″	13′	-7″	82
14	5S006	Slab Panel		E	89					10″		10″		2′	-5″					5⅜″	2′-4½″			4′	-1″	4′	-0″	58
14	5S007	Slab Panel		E	54					16″		18″		18″		10″		10″		18″	1½″			6′	-0″	5′	-8″	83
16	6S008	Slab Panel		E	20					6′	-6″													7′	-0″	7′	-0″	168
90	6S010	Slab Panel		E	20					12′	-8″													12′	-8″	12′	-8″	1,712
10	6S012	Slab Panel		E	5					5.5″		6′	-5″	6′	-5″									13′	-4″	13′	-1″	197
4	6S013	Slab Panel		E	5					5.5″		4′	-5″	4′	-5″									9′	-4″	9′	-1″	55
			PANEL B121-09 (PER PANEL)																									
28	6S002	Slab Panel		E	20					43′	-1″													43′	-1″	43′	-1″	1,812
90	6S003	Slab Panel		E	5					7″		4′	-11″	4′	-11″									10′	-5″	10′	-2″	1,374
14	6S004	Slab Panel		E	5					5.5″		4′	-5″	4′	-5″									9′	-4″	9′	-1″	191
4	6S005	Slab Panel		E	5					5.5″		6′	-8″	6′	-8″									13′	-10″	13′	-7″	82
14	5S006	Slab Panel		E	89					10″		10″		2′	-5″					5⅜″	2′-4½″			4′	-1″	4′	-0″	58
14	5S007	Slab Panel		E	54					16″		18″		18″		10″		10″		18″	1½″			6′	-0″	5′	-8″	83
16	6S008	Slab Panel		E	20					6′	-6″													7′	-0″	7′	-0″	168
90	6S010	Slab Panel		E	20					12′	-8″													12′	-8″	12′	-8″	1,712
10	6S012	Slab Panel		E	5					5.5″		6′	-5″	6′	-5″									13′	-4″	13′	-1″	216
3	6S013	Slab Panel		E	5					5.5″		4′	-5″	4′	-5″									9′	-4″	9′	-1″	41
			PANEL B121-10 (PER PANEL)																									
28	6S002	Slab Panel		E	20					43′	-1″													43′	-1″	43′	-1″	1,812
90	6S003	Slab Panel		E	5					7″		4′	-11″	4′	-11″									10′	-5″	10′	-2″	1,374
14	6S004	Slab Panel		E	5					5.5″		4′	-5″	4′	-5″									9′	-4″	9′	-1″	191
4	6S005	Slab Panel		E	5					5.5″		6′	-8″	6′	-8″									13′	-10″	13′	-7″	82
14	5S006	Slab Panel		E	89					10″		10″		2′	-5″					5⅜″	2′-4½″			4′	-1″	4′	-0″	58
14	5S007	Slab Panel		E	54					16″		18″		18″		10″		10″		18″	1½″			6′	-0″	5′	-8″	83
16	6S008	Slab Panel		E	20					6′	-6″													7′	-0″	7′	-0″	168
90	6S010	Slab Panel		E	20					12′	-8″													12′	-8″	12′	-8″	1,712
11	6S012	Slab Panel		E	5					5.5″		6′	-5″	6′	-5″									13′	-4″	13′	-1″	216
3	6S013	Slab Panel		E	5					5.5″		4′	-5″	4′	-5″									9′	-4″	9′	-1″	41

BILL OF REINFORCING STEEL (5)

NO. REQ'D.	MARK NO. SIZE	MARK NO. MARK	LOCATION	EPOXY (E)	SHAPE NO.	STIRRUP (S)	SUBSTR. (X)	VARIES (V)	NO. EACH	DIMENSIONS B FT.	B IN.	C FT.	C IN.	D FT.	D IN.	E FT.	E IN.	F FT.	F IN.	H FT.	H IN.	K FT.	K IN.	NOMINAL LENGTH FT.	NOMINAL LENGTH IN.	ACTUAL LENGTH FT.	ACTUAL LENGTH IN.	WEIGHT LBS.
			PANEL B121-11 (PER PANEL)																									
28	6S002	Slab Panel		E	20					43′	-1″													43′	-1″	43′	-1″	1,812
90	6S003	Slab Panel		E	5					7″		4′	-11″	4′	-11″									10′	-5″	10′	-2″	1,374
14	6S004	Slab Panel		E	5					5.5″		4′	-5″	4′	-5″									9′	-4″	9′	-1″	191
4	6S005	Slab Panel		E	5					5.5″		6′	-8″	6′	-8″									13′	-10″	13′	-7″	82
14	5S006	Slab Panel		E	89					10″		10″		2′	-5″					5⅜″	2′-4½″			4′	-1″	4′	-0″	58
14	5S007	Slab Panel		E	54					16″		18″		18″		10″		10″		18″	1½″			6′	-0″	5′	-8″	83
16	6S008	Slab Panel		E	20					6′	-6″													7′	-0″	7′	-0″	168
3	5S009	Slab Panel		E	54					2′	-1″	18″		18″		10″		10″		18″	1½″			6′	-9″	6′	-5″	20
90	6S010	Slab Panel		E	20					12′	-8″													12′	-8″	12′	-8″	1,712
11	6S012	Slab Panel		E	5					5.5″		6′	-5″	6′	-5″									13′	-4″	13′	-1″	216
3	6S013	Slab Panel		E	5					5.5″		4′	-5″	4′	-5″									9′	-4″	9′	-1″	41
			PANEL B121-12 (PER PANEL)																									
28	6S002	Slab Panel		E	20					43′	-1″													43′	-1″	43′	-1″	1,812
90	6S003	Slab Panel		E	5					7″		4′	-11″	4′	-11″									10′	-5″	10′	-2″	1,374
14	6S004	Slab Panel		E	5					5.5″		4′	-5″	4′	-5″									9′	-4″	9′	-1″	191
4	6S005	Slab Panel		E	5					5.5″		6′	-8″	6′	-8″									13′	-10″	13′	-7″	82
14	5S006	Slab Panel		E	89					10″		10″		2′	-5″					5⅜″	2′-4½″			4′	-1″	4′	-0″	58
14	5S007	Slab Panel		E	54					16″		18″		18″		10″		10″		18″	1½″			6′	-0″	5′	-8″	83
16	6S008	Slab Panel		E	20					6′	-6″													7′	-0″	7′	-0″	168
3	5S009	Slab Panel		E	54					2′	-1″	18″		18″		10″		10″		18″	1½″			6′	-9″	6′	-5″	20
90	6S010	Slab Panel		E	20					12′	-8″													12′	-8″	12′	-8″	1,712
11	6S012	Slab Panel		E	5					5.5″		6′	-5″	6′	-5″									13′	-4″	13′	-1″	216
3	6S013	Slab Panel		E	5					5.5″		4′	-5″	4′	-5″									9′	-4″	9′	-1″	41
			PANEL B121-13 (PER PANEL)																									
28	6S002	Slab Panel		E	20					43′	-1″													43′	-1″	43′	-1″	1,812
90	6S003	Slab Panel		E	5					7″		4′	-11″	4′	-11″									10′	-5″	10′	-2″	1,374
14	6S004	Slab Panel		E	5					5.5″		4′	-5″	4′	-5″									9′	-4″	9′	-1″	191
4	6S005	Slab Panel		E	5					5.5″		6′	-8″	6′	-8″									13′	-10″	13′	-7″	82
14	5S006	Slab Panel		E	89					10″		10″		2′	-5″					5⅜″	2′-4½″			4′	-1″	4′	-0″	58
14	5S007	Slab Panel		E	54					16″		18″		18″		10″		10″		18″	1½″			6′	-0″	5′	-8″	83
16	6S008	Slab Panel		E	20					6′	-6″													7′	-0″	7′	-0″	168
90	6S010	Slab Panel		E	20					12′	-8″													12′	-8″	12′	-8″	1,712
12	6S012	Slab Panel		E	5					5.5″		6′	-5″	6′	-5″									13′	-4″	13′	-1″	236
2	6S013	Slab Panel		E	5					5.5″		4′	-5″	4′	-5″									9′	-4″	9′	-1″	27
			PANEL B121-14 (PER PANEL)																									
28	6S002	Slab Panel		E	20					43′	-1″													43′	-1″	43′	-1″	1,812
90	6S003	Slab Panel		E	5					7″		4′	-11″	4′	-11″									10′	-5″	10′	-2″	1,374
14	6S004	Slab Panel		E	5					5.5″		4′	-5″	4′	-5″									9′	-4″	9′	-1″	191
4	6S005	Slab Panel		E	5					5.5″		6′	-8″	6′	-8″									13′	-10″	13′	-7″	82
14	5S006	Slab Panel		E	89					10″		10″		2′	-5″					5⅜″	2′-4½″			4′	-1″	4′	-0″	58
14	5S007	Slab Panel		E	54					16″		18″		18″		10″		10″		18″	1½″			6′	-0″	5′	-8″	83
16	6S008	Slab Panel		E	20					6′	-6″													7′	-0″	7′	-0″	168
90	6S010	Slab Panel		E	20					12′	-8″													12′	-8″	12′	-8″	1,712
13	6S012	Slab Panel		E	5					5.5″		6′	-5″	6′	-5″									13′	-4″	13′	-1″	255
1	6S013	Slab Panel		E	5					5.5″		4′	-5″	4′	-5″									9′	-4″	9′	-1″	14
			PANEL B121-15 (PER PANEL)																									
28	6S002	Slab Panel		E	20					43′	-1″													43′	-1″	43′	-1″	1,812
90	6S003	Slab Panel		E	5					7″		4′	-11″	4′	-11″									10′	-5″	10′	-2″	1,374
14	6S004	Slab Panel		E	5					5.5″		4′	-5″	4′	-5″									9′	-4″	9′	-1″	191
4	6S005	Slab Panel		E	5					5.5″		6′	-8″	6′	-8″									13′	-10″	13′	-7″	82
14	5S006	Slab Panel		E	89					10″		10″		2′	-5″					5⅜″	2′-4½″			4′	-1″	4′	-0″	58
14	5S007	Slab Panel		E	54					16″		18″		18″		10″		10″		18″	1½″			6′	-0″	5′	-8″	83
16	6S008	Slab Panel		E	20					6′	-6″													7′	-0″	7′	-0″	168
90	6S010	Slab Panel		E	20					12′	-8″													12′	-8″	12′	-8″	1,712
13	6S012	Slab Panel		E	5					5.5″		6′	-5″	6′	-5″									13′	-4″	13′	-1″	255
1	6S013	Slab Panel		E	5					5.5″		4′	-5″	4′	-5″									9′	-4″	9′	-1″	14

Notes:
For Bar Bending Diagram, see Sheet No. BR184.

BILL OF REINFORCING STEEL

Detailed JUL 2009
Checked JUL 2009

Note: This drawing is not to scale. Follow dimensions.

Sheet No. 199 of 205

T:\de-proj\St_Louis_City\Construction\J6I0984\Asbuilts\Bridge\B_A6500_199-205_J6I0984_199.dgn 1:41:15 PM

DATE 5/17/10
ROUTE I-70 STATE MO/IL
DISTRICT 6 SHEET NO. BR199
COUNTY ST. LOUIS CITY - MO ST. CLAIR - IL
JOB NO. J6I0984
CONTRACT ID. 091208-601
PROJECT NO. I-70-9 (20)
BRIDGE NO. A6500

NO.	DESCRIPTION	DATE
1	Moved panel types	5-17-10

MISSOURI HIGHWAYS AND TRANSPORTATION COMMISSION
105 WEST CAPITOL
JEFFERSON CITY, MO 65102
1-888-ASK-MODOT (1-888-275-6636)

HNTB
715 KIRK DRIVE
KANSAS CITY, MO 64105-1310
TELEPHONE (816) 472-1201
CERTIFICATE OF AUTHORITY NO. 001270

FINAL PLANS

REV.

BILL OF REINFORCING STEEL (5)

NO. REQ'D.	MARK NO. SIZE	MARK	LOCATION	EPOXY (E)	SHAPE NO.	STIRRUP (S)	SUBSTR. (X)	VARIES (V)	NO. EACH	DIMENSIONS B FT.	B IN.	C FT.	C IN.	D FT.	D IN.	E FT.	E IN.	F FT.	F IN.	H FT.	H IN.	K FT.	K IN.	NOMINAL LENGTH FT.	NOMINAL LENGTH IN.	ACTUAL LENGTH FT.	ACTUAL LENGTH IN.	WEIGHT LBS.
			PANEL B121-16 (PER PANEL)																									
28	6S002	Slab Panel		E	20					43′	-1″													43′	-1″	43′	-1″	1,812
90	6S003	Slab Panel		E	5					7″		4′	-11″	4′	-11″									10′	-5″	10′	-2″	1,374
14	6S004	Slab Panel		E	5					5.5″		4′	-5″	4′	-5″									9′	-4″	9′	-1″	191
4	6S005	Slab Panel		E	5					5.5″		6′	-8″	6′	-8″									13′	-10″	13′	-7″	82
14	5S006	Slab Panel		E	89					10″		10″		2′	-5″					5 3/8″		2′	-4 1/2″	4′	-1″	4′	-0″	58
14	5S007	Slab Panel		E	54					16″		18″		18″		10″		10″		18″		1 1/2″		6′	-0″	5′	-8″	83
16	6S008	Slab Panel		E	20					6′	-6″													7′	-0″	7′	-0″	168
90	6S010	Slab Panel		E	20					12′	-8″													12′	-8″	12′	-8″	1,712
13	6S012	Slab Panel		E	5					5.5″		6′	-5″	6′	-5″									13′	-4″	13′	-1″	255
1	6S013	Slab Panel		E	5					5.5″		4′	-5″	4′	-5″									9′	-4″	9′	-1″	14
			PANEL B240-01 (PER PANEL)																									
28	6S002	Slab Panel		E	20					43′	-1″													43′	-1″	43′	-1″	1,812
90	6S003	Slab Panel		E	5					7″		4′	-11″	4′	-11″									10′	-5″	10′	-2″	1,374
14	6S004	Slab Panel		E	5					5.5″		4′	-5″	4′	-5″									9′	-4″	9′	-1″	191
14	5S006	Slab Panel		E	89					10″		10″		2′	-5″					5 3/8″		2′	-4 1/2″	4′	-1″	4′	-0″	58
14	5S007	Slab Panel		E	54					16″		18″		18″		10″		10″		18″		1 1/2″		6′	-0″	5′	-8″	83
90	6S010	Slab Panel		E	20					12′	-8″													12′	-8″	12′	-8″	1,712
2	6S012	Slab Panel		E	5					5.5″		6′	-5″	6′	-5″									13′	-4″	13′	-1″	39
12	6S014	Slab Panel		E	5					5.5″		8′	-4″	8′	-4″									17′	-2″	16′	-11″	305
			PANEL B240-02 (PER PANEL)																									
28	6S002	Slab Panel		E	20					43′	-1″													43′	-1″	43′	-1″	1,812
90	6S003	Slab Panel		E	5					7″		4′	-11″	4′	-11″									10′	-5″	10′	-2″	1,374
14	6S004	Slab Panel		E	5					5.5″		4′	-5″	4′	-5″									9′	-4″	9′	-1″	191
14	5S006	Slab Panel		E	89					10″		10″		2′	-5″					5 3/8″		2′	-4 1/2″	4′	-1″	4′	-0″	58
14	5S007	Slab Panel		E	54					16″		18″		18″		10″		10″		18″		1 1/2″		6′	-0″	5′	-8″	83
90	6S010	Slab Panel		E	20					12′	-8″													12′	-8″	12′	-8″	1,712
2	6S012	Slab Panel		E	5					5.5″		6′	-5″	6′	-5″									13′	-4″	13′	-1″	39
12	6S014	Slab Panel		E	5					5.5″		8′	-4″	8′	-4″									17′	-2″	16′	-11″	305
			PANEL B240-03 (PER PANEL)																									
28	6S002	Slab Panel		E	20					43′	-1″													43′	-1″	43′	-1″	1,812
90	6S003	Slab Panel		E	5					7″		4′	-11″	4′	-11″									10′	-5″	10′	-2″	1,374
14	6S004	Slab Panel		E	5					5.5″		4′	-5″	4′	-5″									9′	-4″	9′	-1″	191
14	5S006	Slab Panel		E	89					10″		10″		2′	-5″					5 3/8″		2′	-4 1/2″	4′	-1″	4′	-0″	58
14	5S007	Slab Panel		E	54					16″		18″		18″		10″		10″		18″		1 1/2″		6′	-0″	5′	-8″	83
90	6S010	Slab Panel		E	20					12′	-8″													12′	-8″	12′	-8″	1,712
14	6S012	Slab Panel		E	5					5.5″		6′	-5″	6′	-5″									13′	-4″	13′	-1″	275
			PANEL B240-04 (PER PANEL)																									
28	6S002	Slab Panel		E	20					43′	-1″													43′	-1″	43′	-1″	1,812
90	6S003	Slab Panel		E	5					7″		4′	-11″	4′	-11″									10′	-5″	10′	-2″	1,374
14	6S004	Slab Panel		E	5					5.5″		4′	-5″	4′	-5″									9′	-4″	9′	-1″	191
14	5S006	Slab Panel		E	89					10″		10″		2′	-5″					5 3/8″		2′	-4 1/2″	4′	-1″	4′	-0″	58
14	5S007	Slab Panel		E	54					16″		18″		18″		10″		10″		18″		1 1/2″		6′	-0″	5′	-8″	83
3	5S009	Slab Panel		E	54					2′	-1″	18″		18″		10″		10″		18″		1 1/2″		6′	-9″	6′	-5″	20
90	6S010	Slab Panel		E	20					12′	-8″													12′	-8″	12′	-8″	1,712
14	6S012	Slab Panel		E	5					5.5″		6′	-5″	6′	-5″									13′	-4″	13′	-1″	275
			PANEL B240-05 (PER PANEL)																									
28	6S002	Slab Panel		E	20					43′	-1″													43′	-1″	43′	-1″	1,812
90	6S003	Slab Panel		E	5					7″		4′	-11″	4′	-11″									10′	-5″	10′	-2″	1,374
14	6S004	Slab Panel		E	5					5.5″		4′	-5″	4′	-5″									9′	-4″	9′	-1″	191
14	5S006	Slab Panel		E	89					10″		10″		2′	-5″					5 3/8″		2′	-4 1/2″	4′	-1″	4′	-0″	58
14	5S007	Slab Panel		E	54					16″		18″		18″		10″		10″		18″		1 1/2″		6′	-0″	5′	-8″	83
3	5S009	Slab Panel		E	54					2′	-1″	18″		18″		10″		10″		18″		1 1/2″		6′	-9″	6′	-5″	20
90	6S010	Slab Panel		E	20					12′	-8″													12′	-8″	12′	-8″	1,712
14	6S012	Slab Panel		E	5					5.5″		6′	-5″	6′	-5″									13′	-4″	13′	-1″	275

BILL OF REINFORCING STEEL (5)

NO. REQ'D.	MARK NO. SIZE	MARK	LOCATION	EPOXY (E)	SHAPE NO.	STIRRUP (S)	SUBSTR. (X)	VARIES (V)	NO. EACH	DIMENSIONS B FT.	B IN.	C FT.	C IN.	D FT.	D IN.	E FT.	E IN.	F FT.	F IN.	H FT.	H IN.	K FT.	K IN.	NOMINAL LENGTH FT.	NOMINAL LENGTH IN.	ACTUAL LENGTH FT.	ACTUAL LENGTH IN.	WEIGHT LBS.
			PANEL B240-06 (PER PANEL)																									
28	6S002	Slab Panel		E	20					43′	-1″													43′	-1″	43′	-1″	1,812
90	6S003	Slab Panel		E	5					7″		4′	-11″	4′	-11″									10′	-5″	10′	-2″	1,374
14	6S004	Slab Panel		E	5					5.5″		4′	-5″	4′	-5″									9′	-4″	9′	-1″	191
14	5S006	Slab Panel		E	89					10″		10″		2′	-5″					5 3/8″		2′	-4 1/2″	4′	-1″	4′	-0″	58
14	5S007	Slab Panel		E	54					16″		18″		18″		10″		10″		18″		1 1/2″		6′	-0″	5′	-8″	83
90	6S010	Slab Panel		E	20					12′	-8″													12′	-8″	12′	-8″	1,712
14	6S012	Slab Panel		E	5					5.5″		6′	-5″	6′	-5″									13′	-4″	13′	-1″	275
			PANEL B240-07 (PER PANEL)																									
28	6S002	Slab Panel		E	20					43′	-1″													43′	-1″	43′	-1″	1,812
90	6S003	Slab Panel		E	5					7″		4′	-11″	4′	-11″									10′	-5″	10′	-2″	1,374
14	6S004	Slab Panel		E	5					5.5″		4′	-5″	4′	-5″									9′	-4″	9′	-1″	191
14	5S006	Slab Panel		E	89					10″		10″		2′	-5″					5 3/8″		2′	-4 1/2″	4′	-1″	4′	-0″	58
14	5S007	Slab Panel		E	54					16″		18″		18″		10″		10″		18″		1 1/2″		6′	-0″	5′	-8″	83
90	6S010	Slab Panel		E	20					12′	-8″													12′	-8″	12′	-8″	1,712
14	6S012	Slab Panel		E	5					5.5″		6′	-5″	6′	-5″									13′	-4″	13′	-1″	275
			PANEL B240-08 (PER PANEL)																									
28	6S002	Slab Panel		E	20					43′	-1″													43′	-1″	43′	-1″	1,812
90	6S003	Slab Panel		E	5					7″		4′	-11″	4′	-11″									10′	-5″	10′	-2″	1,374
14	6S004	Slab Panel		E	5					5.5″		4′	-5″	4′	-5″									9′	-4″	9′	-1″	191
14	5S006	Slab Panel		E	89					10″		10″		2′	-5″					5 3/8″		2′	-4 1/2″	4′	-1″	4′	-0″	58
14	5S007	Slab Panel		E	54					16″		18″		18″		10″		10″		18″		1 1/2″		6′	-0″	5′	-8″	83
90	6S010	Slab Panel		E	20					12′	-8″													12′	-8″	12′	-8″	1,712
14	6S012	Slab Panel		E	5					5.5″		6′	-5″	6′	-5″									13′	-4″	13′	-1″	275
			PANEL B240-09 (PER PANEL)																									
28	6S002	Slab Panel		E	20					43′	-1″													43′	-1″	43′	-1″	1,812
90	6S003	Slab Panel		E	5					7″		4′	-11″	4′	-11″									10′	-5″	10′	-2″	1,374
14	6S004	Slab Panel		E	5					5.5″		4′	-5″	4′	-5″									9′	-4″	9′	-1″	191
14	5S006	Slab Panel		E	89					10″		10″		2′	-5″					5 3/8″		2′	-4 1/2″	4′	-1″	4′	-0″	58
14	5S007	Slab Panel		E	54					16″		18″		18″		10″		10″		18″		1 1/2″		6′	-0″	5′	-8″	83
90	6S010	Slab Panel		E	20					12′	-8″													12′	-8″	12′	-8″	1,712
14	6S012	Slab Panel		E	5					5.5″		6′	-5″	6′	-5″									13′	-4″	13′	-1″	275
			PANEL B241-01 (PER PANEL)																									
28	6S002	Slab Panel		E	20					43′	-1″													43′	-1″	43′	-1″	1,812
90	6S003	Slab Panel		E	5					7″		4′	-11″	4′	-11″									10′	-5″	10′	-2″	1,374
14	6S004	Slab Panel		E	5					5.5″		4′	-5″	4′	-5″									9′	-4″	9′	-1″	191
14	5S006	Slab Panel		E	89					10″		10″		2′	-5″					5 3/8″		2′	-4 1/2″	4′	-1″	4′	-0″	58
14	5S007	Slab Panel		E	54					16″		18″		18″		10″		10″		18″		1 1/2″		6′	-0″	5′	-8″	83
16	6S008	Slab Panel		E	20					6′	-6″													7′	-0″	7′	-0″	168
90	6S010	Slab Panel		E	20					12′	-8″													12′	-8″	12′	-8″	1,712
14	6S012	Slab Panel		E	5					5.5″		6′	-5″	6′	-5″									13′	-4″	13′	-1″	275
			PANEL B241-02 (PER PANEL)																									
28	6S002	Slab Panel		E	20					43′	-1″													43′	-1″	43′	-1″	1,812
90	6S003	Slab Panel		E	5					7″		4′	-11″	4′	-11″									10′	-5″	10′	-2″	1,374
14	6S004	Slab Panel		E	5					5.5″		4′	-5″	4′	-5″									9′	-4″	9′	-1″	191
4	6S005	Slab Panel		E	5					5.5″		6′	-8″	6′	-8″									13′	-10″	13′	-7″	82
14	5S006	Slab Panel		E	89					10″		10″		2′	-5″					5 3/8″		2′	-4 1/2″	4′	-1″	4′	-0″	58
14	5S007	Slab Panel		E	54					16″		18″		18″		10″		10″		18″		1 1/2″		6′	-0″	5′	-8″	83
16	6S008	Slab Panel		E	20					6′	-6″													7′	-0″	7′	-0″	168
90	6S010	Slab Panel		E	20					12′	-8″													12′	-8″	12′	-8″	1,712
12	6S012	Slab Panel		E	5					5.5″		6′	-5″	6′	-5″									13′	-4″	13′	-1″	236
2	6S013	Slab Panel		E	5					5.5″		4′	-5″	4′	-5″									9′	-4″	9′	-1″	27

Notes:
For Bar Bending Diagram, see Sheet No. BR184.

BILL OF REINFORCING STEEL

Detailed JUL 2009
Checked JUL 2009

Note: This drawing is not to scale. Follow dimensions.

Sheet No. 200 of 205

T:\de-proj\St_Louis_City\Construction\J6I0984\Asbuilts\Bridge\B_A6500_200-205_J6I0984_200.dgn 1:50:55 PM

DATE 5/17/10
ROUTE I-70 STATE MO/IL
DISTRICT 6 SHEET NO. BR200
COUNTY ST. LOUIS CITY - MO ST. CLAIR - IL
JOB NO. J6I0984
CONTRACT ID. 091208-601
PROJECT NO. I-70-9 (20)
BRIDGE NO. A6500

DATE	DESCRIPTION
5-17-10	(4) Moved panel types

MISSOURI HIGHWAYS AND TRANSPORTATION COMMISSION
105 WEST CAPITOL
JEFFERSON CITY, MO 65102
1-888-ASK-MODOT (1-888-275-6636)

HNTB
715 KIRK DRIVE
KANSAS CITY, MO 64105-1310
TELEPHONE (816) 472-1201
CERTIFICATE OF AUTHORITY NO. 001270

FINAL PLANS

REV.

BILL OF REINFORCING STEEL (5)

NO. REQ'D.	MARK NO. SIZE	MARK NO. MARK	LOCATION	EPOXY (E)	SHAPE NO.	STIRRUP (S)	SUBSTR. (X)	VARIES (V)	NO. EACH	DIMENSIONS B FT.	B IN.	C FT.	C IN.	D FT.	D IN.	E FT.	E IN.	F FT.	F IN.	H FT.	H IN.	K FT.	K IN.	NOMINAL LENGTH FT.	NOMINAL LENGTH IN.	ACTUAL LENGTH FT.	ACTUAL LENGTH IN.	WEIGHT LBS.
			PANEL B241-03 (PER PANEL)																									
28	6S002		Slab Panel	E	20					43′	-1″													43′	-1″	43′	-1″	1,812
90	6S003		Slab Panel	E	5					7″		4′	-11″	4′	-11″									10′	-5″	10′	-2″	1,374
14	6S004		Slab Panel	E	5					5.5″		4′	-5″	4′	-5″									9′	-4″	9′	-1″	191
4	6S005		Slab Panel	E	5					5.5″		6′	-8″	6′	-8″									13′	-10″	13′	-7″	82
14	5S006		Slab Panel	E	89					10″		10″		2′	-5″					5 3/8″		2′	-4 1/2″	4′	-1″	4′	-0″	58
14	5S007		Slab Panel	E	54					16″		18″		18″		10″		10″		18″		1 1/2″		6′	-0″	5′	-8″	83
16	6S008		Slab Panel	E	20					6′	-6″													7′	-0″	7′	-0″	168
90	6S010		Slab Panel	E	20					12′	-8″													12′	-8″	12′	-8″	1,712
12	6S012		Slab Panel	E	5					5.5″		6′	-5″	6′	-5″									13′	-4″	13′	-1″	236
2	6S013		Slab Panel	E	5					5.5″		4′	-5″	4′	-5″									9′	-4″	9′	-1″	27
			PANEL B241-04 (PER PANEL)																									
28	6S002		Slab Panel	E	20					43′	-1″													43′	-1″	43′	-1″	1,812
90	6S003		Slab Panel	E	5					7″		4′	-11″	4′	-11″									10′	-5″	10′	-2″	1,374
14	6S004		Slab Panel	E	5					5.5″		4′	-5″	4′	-5″									9′	-4″	9′	-1″	191
4	6S005		Slab Panel	E	5					5.5″		6′	-8″	6′	-8″									13′	-10″	13′	-7″	82
14	5S006		Slab Panel	E	89					10″		10″		2′	-5″					5 3/8″		2′	-4 1/2″	4′	-1″	4′	-0″	58
14	5S007		Slab Panel	E	54					16″		18″		18″		10″		10″		18″		1 1/2″		6′	-0″	5′	-8″	83
16	6S008		Slab Panel	E	20					6′	-6″													7′	-0″	7′	-0″	168
90	6S010		Slab Panel	E	20					12′	-8″													12′	-8″	12′	-8″	1,712
11	6S012		Slab Panel	E	5					5.5″		6′	-5″	6′	-5″									13′	-4″	13′	-1″	216
3	6S013		Slab Panel	E	5					5.5″		4′	-5″	4′	-5″									9′	-4″	9′	-1″	41
			PANEL B241-05 (PER PANEL)																									
28	6S002		Slab Panel	E	20					43′	-1″													43′	-1″	43′	-1″	1,812
90	6S003		Slab Panel	E	5					7″		4′	-11″	4′	-11″									10′	-5″	10′	-2″	1,374
14	6S004		Slab Panel	E	5					5.5″		4′	-5″	4′	-5″									9′	-4″	9′	-1″	191
4	6S005		Slab Panel	E	5					5.5″		6′	-8″	6′	-8″									13′	-10″	13′	-7″	82
14	5S006		Slab Panel	E	89					10″		10″		2′	-5″					5 3/8″		2′	-4 1/2″	4′	-1″	4′	-0″	58
14	5S007		Slab Panel	E	54					16″		18″		18″		10″		10″		18″		1 1/2″		6′	-0″	5′	-8″	83
16	6S008		Slab Panel	E	20					6′	-6″													7′	-0″	7′	-0″	168
90	6S010		Slab Panel	E	20					12′	-8″													12′	-8″	12′	-8″	1,712
11	6S012		Slab Panel	E	5					5.5″		6′	-5″	6′	-5″									13′	-4″	13′	-1″	216
3	6S013		Slab Panel	E	5					5.5″		4′	-5″	4′	-5″									9′	-4″	9′	-1″	41
			PANEL B241-06 (PER PANEL)																									
28	6S002		Slab Panel	E	20					43′	-1″													43′	-1″	43′	-1″	1,812
90	6S003		Slab Panel	E	5					7″		4′	-11″	4′	-11″									10′	-5″	10′	-2″	1,374
14	6S004		Slab Panel	E	5					5.5″		4′	-5″	4′	-5″									9′	-4″	9′	-1″	191
4	6S005		Slab Panel	E	5					5.5″		6′	-8″	6′	-8″									13′	-10″	13′	-7″	82
14	5S006		Slab Panel	E	89					10″		10″		2′	-5″					5 3/8″		2′	-4 1/2″	4′	-1″	4′	-0″	58
14	5S007		Slab Panel	E	54					16″		18″		18″		10″		10″		18″		1 1/2″		6′	-0″	5′	-8″	83
16	6S008		Slab Panel	E	20					6′	-6″													7′	-0″	7′	-0″	168
90	6S010		Slab Panel	E	20					12′	-8″													12′	-8″	12′	-8″	1,712
11	6S012		Slab Panel	E	5					5.5″		6′	-5″	6′	-5″									13′	-4″	13′	-1″	216
3	6S013		Slab Panel	E	5					5.5″		4′	-5″	4′	-5″									9′	-4″	9′	-1″	41
			PANEL B241-07 (PER PANEL)																									
28	6S002		Slab Panel	E	20					43′	-1″													43′	-1″	43′	-1″	1,812
90	6S003		Slab Panel	E	5					7″		4′	-11″	4′	-11″									10′	-5″	10′	-2″	1,374
14	6S004		Slab Panel	E	5					5.5″		4′	-5″	4′	-5″									9′	-4″	9′	-1″	191
4	6S005		Slab Panel	E	5					5.5″		6′	-8″	6′	-8″									13′	-10″	13′	-7″	82
14	5S006		Slab Panel	E	89					10″		10″		2′	-5″					5 3/8″		2′	-4 1/2″	4′	-1″	4′	-0″	58
14	5S007		Slab Panel	E	54					16″		18″		18″		10″		10″		18″		1 1/2″		6′	-0″	5′	-8″	83
16	6S008		Slab Panel	E	20					6′	-6″													7′	-0″	7′	-0″	168
90	6S010		Slab Panel	E	20					12′	-8″													12′	-8″	12′	-8″	1,712
11	6S012		Slab Panel	E	5					5.5″		6′	-5″	6′	-5″									13′	-4″	13′	-1″	216
3	6S013		Slab Panel	E	5					5.5″		4′	-5″	4′	-5″									9′	-4″	9′	-1″	41

BILL OF REINFORCING STEEL (5)

NO. REQ'D.	MARK NO. SIZE	MARK NO. MARK	LOCATION	EPOXY (E)	SHAPE NO.	STIRRUP (S)	SUBSTR. (X)	VARIES (V)	NO. EACH	DIMENSIONS B FT.	B IN.	C FT.	C IN.	D FT.	D IN.	E FT.	E IN.	F FT.	F IN.	H FT.	H IN.	K FT.	K IN.	NOMINAL LENGTH FT.	NOMINAL LENGTH IN.	ACTUAL LENGTH FT.	ACTUAL LENGTH IN.	WEIGHT LBS.
			PANEL B241-08 (PER PANEL)																									
28	6S002		Slab Panel	E	20					43′	-1″													43′	-1″	43′	-1″	1,812
90	6S003		Slab Panel	E	5					7″		4′	-11″	4′	-11″									10′	-5″	10′	-2″	1,374
14	6S004		Slab Panel	E	5					5.5″		4′	-5″	4′	-5″									9′	-4″	9′	-1″	191
4	6S005		Slab Panel	E	5					5.5″		6′	-8″	6′	-8″									13′	-10″	13′	-7″	82
14	5S006		Slab Panel	E	89					10″		10″		2′	-5″					5 3/8″		2′	-4 1/2″	4′	-1″	4′	-0″	58
14	5S007		Slab Panel	E	54					16″		18″		18″		10″		10″		18″		1 1/2″		6′	-0″	5′	-8″	83
16	6S008		Slab Panel	E	20					6′	-6″													7′	-0″	7′	-0″	168
90	6S010		Slab Panel	E	20					12′	-8″													12′	-8″	12′	-8″	1,712
9	6S012		Slab Panel	E	5					5.5″		6′	-5″	6′	-5″									13′	-4″	13′	-1″	177
5	6S013		Slab Panel	E	5					5.5″		4′	-5″	4′	-5″									9′	-4″	9′	-1″	68
			PANEL B241-09 (PER PANEL)																									
28	6S002		Slab Panel	E	20					43′	-1″													43′	-1″	43′	-1″	1,812
90	6S003		Slab Panel	E	5					7″		4′	-11″	4′	-11″									10′	-5″	10′	-2″	1,374
14	6S004		Slab Panel	E	5					5.5″		4′	-5″	4′	-5″									9′	-4″	9′	-1″	191
4	6S005		Slab Panel	E	5					5.5″		6′	-8″	6′	-8″									13′	-10″	13′	-7″	82
14	5S006		Slab Panel	E	89					10″		10″		2′	-5″					5 3/8″		2′	-4 1/2″	4′	-1″	4′	-0″	58
14	5S007		Slab Panel	E	54					16″		18″		18″		10″		10″		18″		1 1/2″		6′	-0″	5′	-8″	83
16	6S008		Slab Panel	E	20					6′	-6″													7′	-0″	7′	-0″	168
90	6S010		Slab Panel	E	20					12′	-8″													12′	-8″	12′	-8″	1,712
9	6S012		Slab Panel	E	5					5.5″		6′	-5″	6′	-5″									13′	-4″	13′	-1″	177
5	6S013		Slab Panel	E	5					5.5″		4′	-5″	4′	-5″									9′	-4″	9′	-1″	68
			PANEL B241-10 (PER PANEL)																									
28	6S002		Slab Panel	E	20					43′	-1″													43′	-1″	43′	-1″	1,812
90	6S003		Slab Panel	E	5					7″		4′	-11″	4′	-11″									10′	-5″	10′	-2″	1,374
14	6S004		Slab Panel	E	5					5.5″		4′	-5″	4′	-5″									9′	-4″	9′	-1″	191
4	6S005		Slab Panel	E	5					5.5″		6′	-8″	6′	-8″									13′	-10″	13′	-7″	82
14	5S006		Slab Panel	E	89					10″		10″		2′	-5″					5 3/8″		2′	-4 1/2″	4′	-1″	4′	-0″	58
14	5S007		Slab Panel	E	54					16″		18″		18″		10″		10″		18″		1 1/2″		6′	-0″	5′	-8″	83
16	6S008		Slab Panel	E	20					6′	-6″													7′	-0″	7′	-0″	168
90	6S010		Slab Panel	E	20					12′	-8″													12′	-8″	12′	-8″	1,712
10	6S012		Slab Panel	E	5					5.5″		6′	-5″	6′	-5″									13′	-4″	13′	-1″	197
4	6S013		Slab Panel	E	5					5.5″		4′	-5″	4′	-5″									9′	-4″	9′	-1″	55
			PANEL B241-11 (PER PANEL)																									
28	6S002		Slab Panel	E	20					43′	-1″													43′	-1″	43′	-1″	1,812
90	6S003		Slab Panel	E	5					7″		4′	-11″	4′	-11″									10′	-5″	10′	-2″	1,374
14	6S004		Slab Panel	E	5					5.5″		4′	-5″	4′	-5″									9′	-4″	9′	-1″	191
4	6S005		Slab Panel	E	5					5.5″		6′	-8″	6′	-8″									13′	-10″	13′	-7″	82
14	5S006		Slab Panel	E	89					10″		10″		2′	-5″					5 3/8″		2′	-4 1/2″	4′	-1″	4′	-0″	58
14	5S007		Slab Panel	E	54					16″		18″		18″		10″		10″		18″		1 1/2″		6′	-0″	5′	-8″	83
16	6S008		Slab Panel	E	20					6′	-6″													7′	-0″	7′	-0″	168
90	6S010		Slab Panel	E	20					12′	-8″													12′	-8″	12′	-8″	1,712
10	6S012		Slab Panel	E	5					5.5″		6′	-5″	6′	-5″									13′	-4″	13′	-1″	197
4	6S013		Slab Panel	E	5					5.5″		4′	-5″	4′	-5″									9′	-4″	9′	-1″	55
			PANEL B241-12 (PER PANEL)																									
28	6S002		Slab Panel	E	20					43′	-1″													43′	-1″	43′	-1″	1,812
90	6S003		Slab Panel	E	5					7″		4′	-11″	4′	-11″									10′	-5″	10′	-2″	1,374
14	6S004		Slab Panel	E	5					5.5″		4′	-5″	4′	-5″									9′	-4″	9′	-1″	191
4	6S005		Slab Panel	E	5					5.5″		6′	-8″	6′	-8″									13′	-10″	13′	-7″	82
14	5S006		Slab Panel	E	89					10″		10″		2′	-5″					5 3/8″		2′	-4 1/2″	4′	-1″	4′	-0″	58
14	5S007		Slab Panel	E	54					16″		18″		18″		10″		10″		18″		1 1/2″		6′	-0″	5′	-8″	83
16	6S008		Slab Panel	E	20					6′	-6″													7′	-0″	7′	-0″	168
3	5S009		Slab Panel	E	54					2′	-1″	18″		18″		10″		10″		18″		1 1/2″		6′	-8″	6′	-5″	20
90	6S010		Slab Panel	E	20					12′	-8″													12′	-8″	12′	-8″	1,712
9	6S012		Slab Panel	E	5					5.5″		6′	-5″	6′	-5″									13′	-4″	13′	-1″	177
5	6S013		Slab Panel	E	5					5.5″		4′	-5″	4′	-5″									9′	-4″	9′	-1″	68

Notes:
For Bar Bending Diagram, see Sheet No. BR184.

BILL OF REINFORCING STEEL

Detailed JUL 2009
Checked JUL 2009

Note: This drawing is not to scale. Follow dimensions.

Sheet No. 201 of 205

DATE 5/17/10
ROUTE I-70 STATE MO/IL
DISTRICT 6 SHEET NO. BR201
COUNTY ST. LOUIS CITY - MO ST. CLAIR - IL
JOB NO. J6I0984
CONTRACT ID. 091208-601
PROJECT NO. I-70-9 (20)
BRIDGE NO. A6500

DATE	DESCRIPTION
5-17-10	(4) Moved panel types

MISSOURI HIGHWAYS AND TRANSPORTATION COMMISSION
105 WEST CAPITOL
JEFFERSON CITY, MO 65102
1-888-ASK-MODOT (1-888-275-6636)

HNTB
715 KIRK DRIVE
KANSAS CITY, MO 64105-1310
TELEPHONE (816) 472-1201
CERTIFICATE OF AUTHORITY NO. 001270

FINAL PLANS

REV.

T:\de-proj\St_Louis_City\Construction\J6I0984\Asbuilts\Bridge\B_A6500_201-205_J6I0984_201.dgn
1:59:01 PM

BILL OF REINFORCING STEEL ⚠5

NO. REQ'D.	MARK NO. (SIZE MARK)	LOCATION	EPOXY (E)	SHAPE NO.	STIRRUP (S)	SUBSTR. (X)	VARIES (V)	NO. EACH	B (FT. IN.)	C (FT. IN.)	D (FT. IN.)	E (FT. IN.)	F (FT. IN.)	H (FT. IN.)	K (FT. IN.)	NOMINAL LENGTH (FT. IN.)	ACTUAL LENGTH (FT. IN.)	WEIGHT (LBS.)
		PANEL B241-13 (PER PANEL)																
28	6S002	Slab Panel	E	20					43'-1"							43'-1"	43'-1"	1,812
90	6S003	Slab Panel	E	5					7"	4'-11"	4'-11"					10'-5"	10'-2"	1,374
14	6S004	Slab Panel	E	5					5.5"	4'-5"	4'-5"					9'-4"	9'-1"	191
4	6S005	Slab Panel	E	5					5.5"	6'-8"	6'-8"					13'-10"	13'-7"	82
14	5S006	Slab Panel	E	89					10"	10"	2'-5"			5 3/8"	2'-4 1/2"	4'-1"	4'-0"	58
14	5S007	Slab Panel	E	54					16"	18"	18"	10"	10"	18"	1 1/2"	6'-0"	5'-8"	83
16	6S008	Slab Panel	E	20					6'-6"							7'-0"	7'-0"	168
3	5S009	Slab Panel	E	54					2'-1"	18"	18"	10"	10"	18"	1 1/2"	6'-9"	6'-5"	20
90	6S010	Slab Panel	E	20					12'-8"							12'-8"	12'-8"	1,712
9	6S012	Slab Panel	E	5					5.5"	6'-5"	6'-5"					13'-4"	13'-1"	177
5	6S013	Slab Panel	E	5					5.5"	4'-5"	4'-5"					9'-4"	9'-1"	68
		PANEL B241-14 (PER PANEL)																
28	6S002	Slab Panel	E	20					43'-1"							43'-1"	43'-1"	1,812
90	6S003	Slab Panel	E	5					7"	4'-11"	4'-11"					10'-5"	10'-2"	1,374
14	6S004	Slab Panel	E	5					5.5"	4'-5"	4'-5"					9'-4"	9'-1"	191
4	6S005	Slab Panel	E	5					5.5"	6'-8"	6'-8"					13'-10"	13'-7"	82
14	5S006	Slab Panel	E	89					10"	10"	2'-5"			5 3/8"	2'-4 1/2"	4'-1"	4'-0"	58
14	5S007	Slab Panel	E	54					16"	18"	18"	10"	10"	18"	1 1/2"	6'-0"	5'-8"	83
16	6S008	Slab Panel	E	20					6'-6"							7'-0"	7'-0"	168
90	6S010	Slab Panel	E	20					12'-8"							12'-8"	12'-8"	1,712
9	6S012	Slab Panel	E	5					5.5"	6'-5"	6'-5"					13'-4"	13'-1"	177
5	6S013	Slab Panel	E	5					5.5"	4'-5"	4'-5"					9'-4"	9'-1"	68
		PANEL B241-15 (PER PANEL)																
28	6S002	Slab Panel	E	20					43'-1"							43'-1"	43'-1"	1,812
90	6S003	Slab Panel	E	5					7"	4'-11"	4'-11"					10'-5"	10'-2"	1,374
14	6S004	Slab Panel	E	5					5.5"	4'-5"	4'-5"					9'-4"	9'-1"	191
4	6S005	Slab Panel	E	5					5.5"	6'-8"	6'-8"					13'-10"	13'-7"	82
14	5S006	Slab Panel	E	89					10"	10"	2'-5"			5 3/8"	2'-4 1/2"	4'-1"	4'-0"	58
14	5S007	Slab Panel	E	54					16"	18"	18"	10"	10"	18"	1 1/2"	6'-0"	5'-8"	83
16	6S008	Slab Panel	E	20					6'-6"							7'-0"	7'-0"	168
90	6S010	Slab Panel	E	20					12'-8"							12'-8"	12'-8"	1,712
9	6S012	Slab Panel	E	5					5.5"	6'-5"	6'-5"					13'-4"	13'-1"	177
5	6S013	Slab Panel	E	5					5.5"	4'-5"	4'-5"					9'-4"	9'-1"	68
		PANEL B241-16 (PER PANEL)																
28	6S002	Slab Panel	E	20					43'-1"							43'-1"	43'-1"	1,812
90	6S003	Slab Panel	E	5					7"	4'-11"	4'-11"					10'-5"	10'-2"	1,374
14	6S004	Slab Panel	E	5					5.5"	4'-5"	4'-5"					9'-4"	9'-1"	191
4	6S005	Slab Panel	E	5					5.5"	6'-8"	6'-8"					13'-10"	13'-7"	82
14	5S006	Slab Panel	E	89					10"	10"	2'-5"			5 3/8"	2'-4 1/2"	4'-1"	4'-0"	58
14	5S007	Slab Panel	E	54					16"	18"	18"	10"	10"	18"	1 1/2"	6'-0"	5'-8"	83
16	6S008	Slab Panel	E	20					6'-6"							7'-0"	7'-0"	168
90	6S010	Slab Panel	E	20					12'-8"							12'-8"	12'-8"	1,712
8	6S012	Slab Panel	E	5					5.5"	6'-5"	6'-5"					13'-4"	13'-1"	157
6	6S013	Slab Panel	E	5					5.5"	4'-5"	4'-5"					9'-4"	9'-1"	82
		PANEL B241-17 (PER PANEL)																
28	6S002	Slab Panel	E	20					43'-1"							43'-1"	43'-1"	1,812
90	6S003	Slab Panel	E	5					7"	4'-11"	4'-11"					10'-5"	10'-2"	1,374
14	6S004	Slab Panel	E	5					5.5"	4'-5"	4'-5"					9'-4"	9'-1"	191
4	6S005	Slab Panel	E	5					5.5"	6'-8"	6'-8"					13'-10"	13'-7"	82
14	5S006	Slab Panel	E	89					10"	10"	2'-5"			5 3/8"	2'-4 1/2"	4'-1"	4'-0"	58
14	5S007	Slab Panel	E	54					16"	18"	18"	10"	10"	18"	1 1/2"	6'-0"	5'-8"	83
16	6S008	Slab Panel	E	20					6'-6"							7'-0"	7'-0"	168
90	6S010	Slab Panel	E	20					12'-8"							12'-8"	12'-8"	1,712
8	6S012	Slab Panel	E	5					5.5"	6'-5"	6'-5"					13'-4"	13'-1"	157
6	6S013	Slab Panel	E	5					5.5"	4'-5"	4'-5"					9'-4"	9'-1"	82

BILL OF REINFORCING STEEL ⚠5

NO. REQ'D.	MARK NO. (SIZE MARK)	LOCATION	EPOXY (E)	SHAPE NO.	STIRRUP (S)	SUBSTR. (X)	VARIES (V)	NO. EACH	B (FT. IN.)	C (FT. IN.)	D (FT. IN.)	E (FT. IN.)	F (FT. IN.)	H (FT. IN.)	K (FT. IN.)	NOMINAL LENGTH (FT. IN.)	ACTUAL LENGTH (FT. IN.)	WEIGHT (LBS.)
		PANEL B241-18 (PER PANEL)																
28	6S002	Slab Panel	E	20					43'-1"							43'-1"	43'-1"	1,812
90	6S003	Slab Panel	E	5					7"	4'-11"	4'-11"					10'-5"	10'-2"	1,374
14	6S004	Slab Panel	E	5					5.5"	4'-5"	4'-5"					9'-4"	9'-1"	191
4	6S005	Slab Panel	E	5					5.5"	6'-8"	6'-8"					13'-10"	13'-7"	82
14	5S006	Slab Panel	E	89					10"	10"	2'-5"			5 3/8"	2'-4 1/2"	4'-1"	4'-0"	58
14	5S007	Slab Panel	E	54					16"	18"	18"	10"	10"	18"	1 1/2"	6'-0"	5'-8"	83
16	6S008	Slab Panel	E	20					6'-6"							7'-0"	7'-0"	168
90	6S010	Slab Panel	E	20					12'-8"							12'-8"	12'-8"	1,712
8	6S012	Slab Panel	E	5					5.5"	6'-5"	6'-5"					13'-4"	13'-1"	157
6	6S013	Slab Panel	E	5					5.5"	4'-5"	4'-5"					9'-4"	9'-1"	82
		PANEL B241-19 (PER PANEL)																
28	6S002	Slab Panel	E	20					43'-1"							43'-1"	43'-1"	1,812
90	6S003	Slab Panel	E	5					7"	4'-11"	4'-11"					10'-5"	10'-2"	1,374
14	6S004	Slab Panel	E	5					5.5"	4'-5"	4'-5"					9'-4"	9'-1"	191
4	6S005	Slab Panel	E	5					5.5"	6'-8"	6'-8"					13'-10"	13'-7"	82
14	5S006	Slab Panel	E	89					10"	10"	2'-5"			5 3/8"	2'-4 1/2"	4'-1"	4'-0"	58
14	5S007	Slab Panel	E	54					16"	18"	18"	10"	10"	18"	1 1/2"	6'-0"	5'-8"	83
16	6S008	Slab Panel	E	20					6'-6"							7'-0"	7'-0"	168
90	6S010	Slab Panel	E	20					12'-8"							12'-8"	12'-8"	1,712
8	6S012	Slab Panel	E	5					5.5"	6'-5"	6'-5"					13'-4"	13'-1"	157
6	6S013	Slab Panel	E	5					5.5"	4'-5"	4'-5"					9'-4"	9'-1"	82
		PANEL C000-01 (PER PANEL)																
20	6S002	Slab Panel	E	20					43'-1"							43'-1"	43'-1"	1,294
88	6S003	Slab Panel	E	5					7"	4'-11"	4'-11"					10'-5"	10'-2"	1,344
10	6S004	Slab Panel	E	5					5.5"	4'-5"	4'-5"					9'-4"	9'-1"	136
10	5S006	Slab Panel	E	89					10"	10"	2'-5"			5 3/8"	2'-4 1/2"	4'-1"	4'-0"	42
10	5S007	Slab Panel	E	54					16"	18"	18"	10"	10"	18"	1 1/2"	6'-0"	5'-8"	59
174	7S011	Slab Panel	E	20					8'-8"							8'-8"	8'-8"	3,082
10	6S012	Slab Panel	E	5					5.5"	6'-5"	6'-5"					13'-4"	13'-1"	197
		CAST-IN-PLACE SLAB																
920	5S006	Slab	E	89					10"	10"	2'-5"			5 3/8"	2'-4 1/2"	4'-1"	4'-0"	3,838
752	5S007	Slab	E	54					16"	18"	18"	10"	10"	18"	1 1/2"	6'-0"	5'-8"	4,445
1496	6S015	Slab	E	20					45'-6"							45'-6"	45'-6"	102,238
112	6S016	Slab	E	5					6"	4'-5"	4'-5"					9'-4"	9'-1"	1,528
628	6S018	Slab	E	5					6"	6'-5"	6'-5"					13'-4"	13'-1"	12,341
28	6S019	Slab	E	45					3'-6"	7"	18"					3'-4"	3'-4"	140
688	7S020	Slab	E	20					40'-0"							40'-0"	40'-0"	56,251
24	7S021	Slab	E	20					48'-9"							48'-9"	48'-9"	2,391
8	7S022	Slab	E	20					19'-9"							19'-9"	19'-9"	323
10	7S023	Slab	E	20					18'-9"							18'-9"	18'-9"	383
504	6S024	Slab	E	23					3'-4"	2'-9"	3'-4"	2'-4 3/8"	2'-4 3/8"	2'-4 3/8"	2'-4 3/8"	9'-5"	9'-5"	7,128
384	6S025	Slab	E	20					46'-10"							46'-10"	46'-10"	27,012
8	6S026	Slab	E	5					6"	8'-4"	8'-4"					17'-2"	16'-11"	203
312	6S027	Slab	E	20					45'-7"							45'-7"	45'-7"	21,361
48	6S028	Slab	E	20					26'-9"							26'-9"	26'-9"	1,929
40	6S029	Slab	E	20					46'-0"							46'-0"	46'-0"	2,764
12	6S030	Slab	E	20					22'-2"							22'-2"	22'-2"	400
104	6S031	Slab	E	20					35'-10"							35'-10"	35'-10"	5,597
16	6S032	Slab	E	20					19'-6"							19'-6"	19'-6"	469
128	6S034	Slab	E	20					37'-0"							37'-0"	37'-0"	7,113
4	6S035	Slab	E	20					45'-0"							45'-0"	45'-0"	270
104	6S036	Slab	E	20					33'-9"							33'-9"	33'-9"	5,272
16	6S037	Slab	E	20					18'-6"							18'-6"	18'-6"	445
8	6S038	Slab	E	20					22'-0"							22'-0"	22'-0"	264
8	6S039	Slab	E	20					24'-0"							24'-0"	24'-0"	288
128	6S040	Slab	E	20					35'-0"							35'-0"	35'-0"	6,729
4	6S041	Slab	E	20					43'-0"							43'-0"	43'-0"	258
624	6S043	Slab	E	20					27'-9"							27'-9"	27'-9"	26,009
330	6S044	Slab	E	20					41'-0"							41'-0"	41'-0"	20,322
8	7S045	Slab	E	20					40'-0"							40'-0"	40'-0"	654
344	6S046	Slab	E	23					4'-1"	20"	10"	7"	7"	2'-10 5/8"	2'-10 5/8"	7'-3"	7'-3"	3,746
36	6S047	Slab	E	20					25'-5"							25'-5"	25'-5"	1,374
56	6S048	Slab	E	5					6"	5'-3"	5'-3"					11'-0"	10'-9"	904

Notes:
For Bar Bending Diagram, see Sheet No. BR184.
⚠5 Two additional ~~#5-M8 and~~ #7-S023 are included in Bill of Reinforcing Steel for testing.

Detailed JUL 2009
Checked JUL 2009

Note: This drawing is not to scale. Follow dimensions.

BILL OF REINFORCING STEEL

DATE 5/17/10
ROUTE I-70 | STATE MO/IL
DISTRICT 6 | SHEET NO. BR202
COUNTY ST. LOUIS CITY - MO ST. CLAIR - IL
JOB NO. J6I0984
CONTRACT ID. 091208-601
PROJECT NO. I-70-9 (20)
BRIDGE NO. A6500

DATE	DESCRIPTION
5-17-10	⚠5 Moved panel types

MISSOURI HIGHWAYS AND TRANSPORTATION COMMISSION
MoDOT
105 WEST CAPITOL
JEFFERSON CITY, MO 65102
1-888-ASK-MODOT (1-888-275-6636)

HNTB
715 KIRK DRIVE
KANSAS CITY, MO 64105-1310
TELEPHONE (816) 472-1201
CERTIFICATE OF AUTHORITY
NO. 001270

FINAL PLANS
REV.

T:\de-proj\St_Louis_City\Construction\J6I0984\Asbuilts\Bridge\B_A6500_202-205_J6I0984_202.dgn
2:06:48 PM

BILL OF REINFORCING STEEL (4) (5)

NO. REQ'D.	MARK NO. SIZE	MARK NO. MARK	LOCATION	EPOXY (E)	SHAPE NO.	STIRRUP (S)	SUBSTR. (X)	VARIES (V)	NO. EACH	DIMENSIONS B FT. IN.	C FT. IN.	D FT. IN.	E FT. IN.	F FT. IN.	H FT. IN.	K FT. IN.	NOMINAL LENGTH FT. IN.	ACTUAL LENGTH FT. IN.	WEIGHT LBS.
			CAST-IN-PLACE SLAB-CONT'D																
8	6S049		Slab	E	23					4'-4"	2'-9"	4'-4"	3'-0 3/4"	3'-0 3/4"	3'-0 3/4"	3'-0 3/4"	11'-5"	11'-5"	137
8	6S050		Slab	E	5					6"	4'-9"	4'-9"					10'-0"	9'-9"	117
168	5S052		Slab	E	19					2'-1"	10"						2'-11"	2'-10"	496
40	5S053		Slab	E	27					10"	15"	10"	10"		2 3/8"	14 3/4"	3'-9"	3'-6"	146
80	5S054		Slab	E	27			V	4	10"	15"	10"	10"		2 3/8"	14 3/4"	3'-9"	3'-6"	292
			Increment = 0							10"	15"	10"	10"		0.0000	15"	3'-9"	3'-6"	
48	5S055		Slab	E	39					2'-1"	10"	10"					3'-9"	3'-6"	175
6	6S056		Slab	E	5					6"	1'-2"	1'-2"					14'-10"	14'-7"	131
4	6S057		Slab	E	75					13"	9"	2'-0"	9 1/4"	9 1/2"			6'-11"	6'-8"	40
			MEDIAN BARRIER CURB																
6108		5M1	Median Barrier	E	2					3'-5"	5"				4 7/8"	1/8"	3'-10"	3'-10"	24,421
10		5M2	Median Barrier	E	23					11'-10"	20'-0"	9'-10"	3"	9'-10"	3 1/2"	11'-10"	41'-8"	41'-8"	435
260		5M3	Median Barrier	E	20					41'-11"							41'-11"	41'-11"	11,367
20		5M4	Median Barrier	E	20					27'-10"							27'-10"	27'-10"	581
20		5M5	Median Barrier	E	20					28'-3"							28'-3"	28'-3"	589
20		5M6	Median Barrier	E	20					28'-8"							28'-8"	28'-8"	598
320		5M7	Median Barrier	E	20					43'-2"							43'-2"	43'-2"	14,407
12		5M8	Median Barrier	E	20					10'-2"							10'-2"	10'-2"	127
10		5M9	Median Barrier	E	20					41'-8"							41'-8"	41'-8"	435
20		5M10	Median Barrier	E	2					3'-5"	11"				16 5/8"	3 1/8"	4'-10"	4'-10"	101
40		5M11	Median Barrier	E	2			V	2	3'-5"	5"				4 1/2"	1/8"	3'-10"	3'-10"	181
			Increment = 3/8"							3'-5"	11"				16 3/8"	3 1/8"	4'-10"	4'-10"	
16 (9)			BRIDGE RAILING																695 (9)
1248		5R1	Bridge Rail	E	23					11"	6 1/2"	11"	8 1/2"	7"	8 1/2"	7"	2'-5"	2'-5"	3,146
(20)		5R2	Bridge Rail	E	20					41'-8"							41'-8"	41'-8"	(869)
312		5R3	Bridge Rail	E	20					41'-11"							41'-11"	41'-11"	13,640
24		5R4	Bridge Rail	E	20					27'-10"							27'-10"	27'-10"	697
24		5R5	Bridge Rail	E	20					13'-9"							13'-9"	13'-9"	344
24		5R6	Bridge Rail	E	20					14'-2"							14'-2"	14'-2"	355
24		5R7	Bridge Rail	E	20					28'-8"							28'-8"	28'-8"	718
384		5R8	Bridge Rail	E	20					43'-2"							43'-2"	43'-2"	17,289
12		5R9	Bridge Rail	E	20					20'-8"							20'-8"	20'-8"	259
(20)		5R10	Bridge Rail	E	23			V	4	11'-10"	20'-0"	9'-10"	1/2"	9'-9 3/8"	5/8"	11'-10"	41'-8"	41'-8"	(869)
(16) (9)			Increment = 0							11'-10"	20'-0"	9'-10"	3 1/4"	9'-10"	4 1/2"	11'-9 1/2"	41'-8"	41'-8"	(695) (9)
40		5R11	Bridge Rail	E	19					3'-4"	5"						3'-9"	3'-8"	153
40		5R12	Bridge Rail	E	2					3'-5"	5"				4 7/8"	1/8"	3'-10"	3'-10"	160
80		5R13	Bridge Rail	E	19			V	4	3'-4"	5"						3'-9"	3'-8"	327
			Increment = 3/8"							3'-4"	11"						4'-3"	4'-2"	
80		5R14	Bridge Rail	E	2			V	4	3'-5"	5"				4 7/8"	1/8"	3'-10"	3'-10"	337
			Increment = 1/4"							3'-4"	11"				13"	1/8"	4'-3"	4'-3"	384 (9)
96		5R15	Bridge Rail	E	19			V	8	3'-4"	11"						4'-3"	4'-2"	(417)
	(9) Added		Increment = 3/4"		(9) Added					2'-8"	11"	(9) Added				(9) Added	3'-7"	3'-6"	
84		5R16	Light Blister	E	75					13"	14"	18"	9 1/4"	9 1/2"			6'-4"	6'-1"	533
8		5R17	Bridge Rail	E	2					29'-10"	11'-10 1/4"				8"	11'-10"	41'-9"	41'-9"	348
32		5R18	Bridge Rail	E	20					2'-8"							2'-8"	2'-8"	89
8		4R19	Bridge Rail	E	53	S				4"	12 1/4"						3'-6"	3'-3"	17
																		(9) Added	
			TOTALS																70
	2																		206
	2			E															226
	4																(9) 225		(208)
	4			E															784,728
	5																(11) (8) 784.638		156,163
	5			E													(9) 156.219		1,072,500
	6																		2,300,702
	6			E															275,856
	7																		130,111
	7			E															44,708
	8																		2,286
	8			E															28,304
	10																		3,783,554
	11																		140,424
	11			E															3,780,720
	18																(6) 3,783,554		145,005
	18			E															9,274,776
			TOTALS														(6) 9,277,610		2,875,105
			TOTALS	E															

(11) (8) 9,284,120 (9) 2,875,178

BILL OF REINFORCING STEEL (4) (5)

NO. REQ'D.	MARK NO. SIZE	MARK NO. MARK	LOCATION	EPOXY (E)	SHAPE NO.	STIRRUP (S)	SUBSTR. (X)	VARIES (V)	NO. EACH	DIMENSIONS B FT. IN.	C FT. IN.	D FT. IN.	E FT. IN.	F FT. IN.	H FT. IN.	K FT. IN.	NOMINAL LENGTH FT. IN.	ACTUAL LENGTH FT. IN.	WEIGHT LBS.
			REINFORCING STEEL (BRIDGES)																
	2																		70
	4																		226
	5																(11) (8) 788.638		784,728
	6																		962,539
	7																		275,856
	8																		44,708
	10																		28,304
	11																(6) 3,080,632		3,077,798
	18																		310,896
			TOTALS														(6) 5,487,959	5,485,125	
																	(11) (8) 5,398,069		
			REINFORCING STEEL (EPOXY COATED)																
	2			E															206
	4			E															208
	6			E															13,385
	7			E															57,781
	8			E															2,286
	11			E															140,424
	18			E															145,005
			TOTALS	E															359,295
			PIERS 11 AND 12 FOUNDATIONS																
	6			E															109,961
	11			E															702,922
	18			E															2,976,768
			TOTALS	E															3,789,651
			PRECAST PRESTRESSED SLAB PANELS																
	5			E															62,808
	6			E															2,287,317
	7			E															72,330
			TOTALS	E															2,422,455
			BRIDGE RAILING AND MEDIAN BARRIER CURB														(9) Added		
(4)	(9) Added			(E)	(9) Added														(17)
5				E													(9) 93.411		93,355
			TOTALS	E	(9) Added												(9) Added		93,428

(5) Notes:
For Bar Bending Diagram, see Sheet No. BR184.
Two additional #5-W8 are included in Bill of Reinforcing Steel for testing.

BILL OF REINFORCING STEEL

Detailed JUL 2009
Checked JUL 2009

Note: This drawing is not to scale. Follow dimensions.

Sheet No. 203 of 205

T:\de-proj\St_Louis_City\Construction\J6I0984\Asbuilts\Bridge\B_A6500_203-205_J6I0984_203_REV011.dgn

2:10:14 PM

DATE 4/19/12
ROUTE I-70
STATE MO/IL
DISTRICT 6
SHEET NO. BR203
COUNTY ST. LOUIS CITY - MO ST. CLAIR - IL
JOB NO. J6I0984
CONTRACT ID. 091208-601
PROJECT NO. I-70-9 (20)
BRIDGE NO. A6500

DATE	DESCRIPTION
5-17-10	(4) Revised per A1c
5-17-10	(5) Moved bars from Sheet No. BR202
9-3-10	(4) Revised Reinforcing Steel
6-10-11	(4) Revised Reinforcing Steel
7-8-11	(4) Revised Reinforcing Steel
4-19-12	(4) Revised Reinforcing Steel

MISSOURI HIGHWAYS AND TRANSPORTATION COMMISSION
105 WEST CAPITOL
JEFFERSON CITY, MO 65102
1-888-ASK-MODOT (1-888-275-6636)

HNTB
715 KIRK DRIVE
KANSAS CITY, MO 64105-1310
TELEPHONE (816) 472-1201
CERTIFICATE OF AUTHORITY NO. 001270

FINAL PLANS

REV.

4 BLANK SHEET → ~~AS-BUILT DRILLED SHAFT DATA~~

DATE 5/17/10
ROUTE I-70 | STATE MO/IL
DISTRICT 6 | SHEET NO. BR204
COUNTY ST. LOUIS CITY - MO, ST. CLAIR - IL
JOB NO. J6I0984
CONTRACT ID. 091208-601
PROJECT NO. I-70-9 (20)
BRIDGE NO. A6500

DATE	DESCRIPTION
5-17-10	4 Revised per AIC

MISSOURI HIGHWAYS AND TRANSPORTATION COMMISSION
105 WEST CAPITOL
JEFFERSON CITY, MO 65102
1-888-ASK-MODOT (1-888-275-6636)

HNTB
715 KIRK DRIVE
KANSAS CITY, MO 64105-1310
TELEPHONE (816) 472-1201
CERTIFICATE OF AUTHORITY
MO. 001270

FINAL PLANS

REV.

Detailed JUL 2009
Checked JUL 2009

Note: This drawing is not to scale. Follow dimensions.

T:\de-proj\St_Louis_City\Construction\J6I0984\Asbuilts\Bridge\B_A6500_204-205_J6I0984_204.dgn

2:11:17 PM

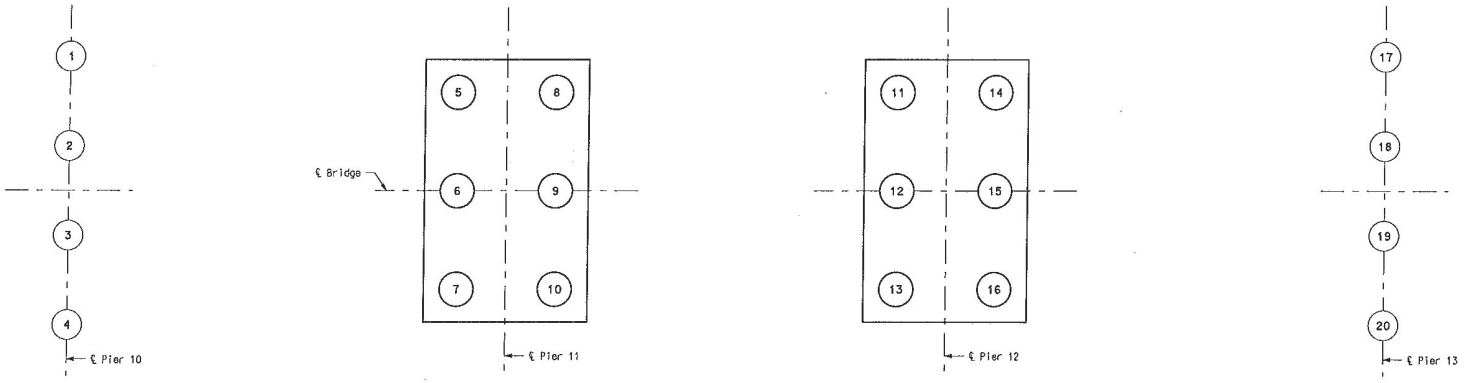

PART PLAN SHOWING
DRILLED SHAFT NUMBERING FOR RECORDING
"AS BUILT DRILLED SHAFT" DATA

△4

"AS BUILT DRILLED SHAFT" DATA

SHAFT NO.	BOTTOM OF DRILLED SHAFT (ELEV.)	BOTTOM OF ROCK SOCKET (ELEV.)	REMARKS
		PIER 10	
1	400.6	385.1	
2	399.6	384.9	
3	398.5	382.9	
4	402.7	388.4	
		PIER 11	
5	318.3	293.7	
6	318.3	293.6	
7	317.7	293.9	
8	317.1	290.1	
9	316.7	294.1	
10	317.2	293.6	
		PIER 12	
11	303.2	285.1	
12	305.0	286.9	
13	301.7	284.1	
14	301.6	284.0	
15	301.0	283.5	
16	302.3	285.2	
		PIER 13	
17	296.1	281.3	
18	295.8	280.5	
19	295.9	281.4	
20	295.8	280.9	

△4

NOTE:
THIS SHEET COMPLETED BY MoDOT CONSTRUCTION PERSONNEL.

AS-BUILT DRILLED SHAFT DATA - FOUNDATION

DATE 5/17/10
ROUTE I-70 | STATE MO/IL
DISTRICT 6 | SHEET NO. BR205
COUNTY ST. LOUIS CITY - MO ST. CLAIR - IL
JOB NO. J6I0984
CONTRACT ID. 091208-601
PROJECT NO. I-70-9 (20)
BRIDGE NO. A6500

DATE	DESCRIPTION
5-17-10	△4 Revised per ATC

MISSOURI HIGHWAYS AND TRANSPORTATION COMMISSION
105 WEST CAPITOL
JEFFERSON CITY, MO 65102
1-888-ASK-MODOT (1-888-275-6636)

HNTB
715 KIRK DRIVE
KANSAS CITY, MO 64105-1310
TELEPHONE: (816) 472-1201
CERTIFICATE OF AUTHORITY NO. 001270

FINAL PLANS

Detailed JUL 2009
Checked JUL 2009

Note: This drawing is not to scale. Follow dimensions.

Sheet No. 205 of 205

T:\de-proj\St_Louis_City\Construction\J6I0984\Asbuilts\Bridge\B_A6500_205-205_J6I0984_205.dgn

2:06:45 PM

MISSOURI HIGHWAYS AND TRANSPORTATION COMMISSION

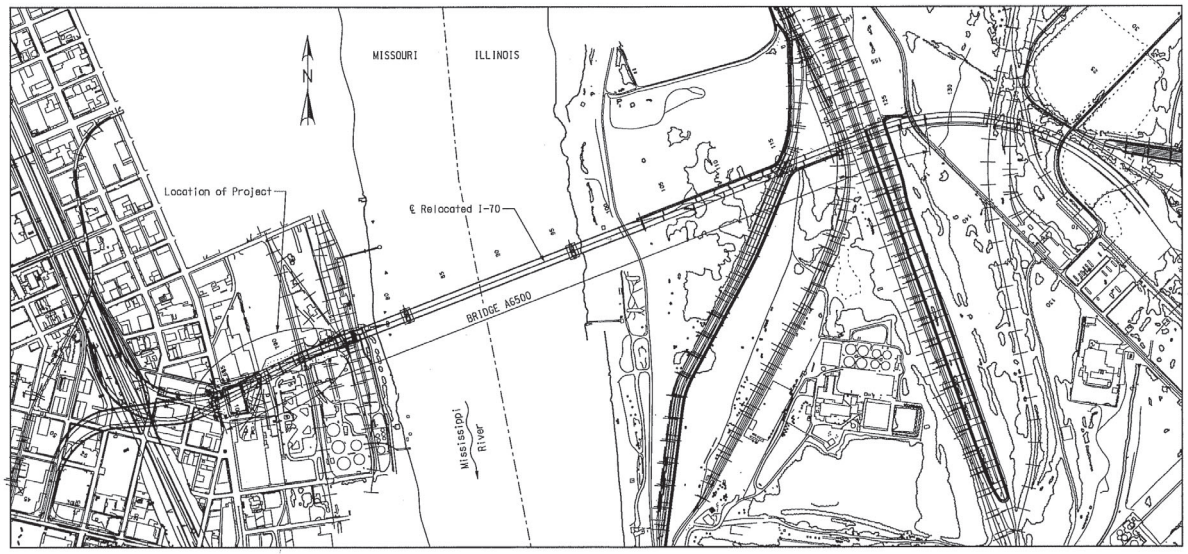

INDEX OF DRAWINGS

1 TITLE SHEET
2 OVERALL MISSISSIPPI RIVER BRIDGE LAYOUT
3 GENERAL PLAN AND ELEVATION - UNITS 1 AND 2
4 GENERAL PLAN AND ELEVATION - UNIT 3
5 GENERAL NOTES AND ESTIMATED QUANTITIES
6 SUBSTRUCTURE LAYOUT
7 BORING DATA (1 OF 4)
8 BORING DATA (2 OF 4)
9 BORING DATA (3 OF 4)
10 BORING DATA (4 OF 4)
11 ABUTMENT 1 - PLANS
12 ABUTMENT 1 - PLANS
13 ABUTMENT 1 - DETAILS
14 ABUTMENT 1 - DETAILS
15 ABUTMENT 1 - WING DETAILS
16 VERTICAL DRAIN AT ABUTMENT
17 PIER 2 - ELEVATION
18 PIER 2 - PLAN AND DETAILS
19 PIER 2 - DETAILS
20 PIER 3 - PLAN AND ELEVATION
21 PIER 3 - DETAILS
22 PIER 4 - PLAN AND ELEVATION
23 PIER 4 - DETAILS
24 PIER 5 - PLAN AND ELEVATION
25 PIER 5 - DETAILS
26 PIER 6 - PLAN AND ELEVATION
27 PIER 6 - DETAILS
28 PIER 7 - PLAN AND ELEVATION
29 PIER 7 - DETAILS
30 PIER 8 - PLAN AND ELEVATION
31 PIER 8 - DETAILS
32 PIER 9 - PLAN AND ELEVATION
33 PIER 9 - DETAILS
34 PIER 10 (FOR INFORMATION ONLY)
35 ANCHOR ROD SETTING PLANS
36 DETAILS OF TYPE "N" PTFE BEARINGS
37 FRAMING PLAN - UNIT 1
38 FRAMING PLAN - UNIT 2
39 FRAMING PLAN - UNIT 3
40 TYPE NU 63 P/S GIRDER - SPAN (1-2) GIRDERS 1 THRU 5
41 TYPE NU 63 P/S GIRDER - SPAN (1-2) GIRDERS 6 THRU 11
42 TYPE NU 70 P/S GIRDER - SPAN (2-3) GIRDERS 1 THRU 4
43 TYPE NU 70 P/S GIRDER - SPAN (2-3) GIRDERS 5 THRU 8
44 TYPE NU 70 P/S GIRDER - SPAN (2-3) GIRDERS 9 AND 10
45 TYPE NU 70 P/S GIRDER - SPAN (2-3) GIRDERS 11 AND 12
46 TYPE NU 70 P/S GIRDER - SPAN (3-4) GIRDERS 1 THRU 12
47 TYPE NU 70 P/S GIRDER - SPAN (4-5) GIRDERS 1 THRU 12
48 TYPE NU 70 P/S GIRDER - SPAN (5-6) GIRDERS 1 THRU 8
49 TYPE NU 70 P/S GIRDER - SPAN (6-7) GIRDERS 1 THRU 8
50 TYPE NU 70 P/S GIRDER - SPAN (7-8) GIRDERS 1 AND 2
51 TYPE NU 70 P/S GIRDER - SPAN (7-8) GIRDERS 3 AND 4
52 TYPE NU 70 P/S GIRDER - SPAN (7-8) GIRDERS 5 AND 6
53 TYPE NU 70 P/S GIRDER - SPAN (7-8) GIRDERS 7 AND 8
54 TYPE NU 70 P/S GIRDER - SPAN (8-9) GIRDERS 1 THRU 4
55 TYPE NU 70 P/S GIRDER - SPAN (8-9) GIRDERS 5 AND 6
56 TYPE NU 70 P/S GIRDER - SPAN (8-9) GIRDERS 7 AND 8
57 TYPE NU 70 P/S GIRDER - SPAN (9-10) GIRDERS 1 THRU 8
58 NU-GIRDER DETAILS - 1
59 NU-GIRDER DETAILS - 2
60 NU-GIRDER DETAILS - 3
61 NU-GIRDER DETAILS - 4
62 STEEL INTERMEDIATE DIAPHRAGM DETAILS - NU 63 GIRDER
63 STEEL INTERMEDIATE DIAPHRAGM DETAILS - NU 70 GIRDER
64 DIAPHRAGMS AT PIER 2 - PLANS
65 DIAPHRAGMS AT PIER 2 - ELEVATIONS (SPAN 1-2)
66 DIAPHRAGMS AT PIER 2 - ELEVATIONS (SPAN 2-3)
67 DIAPHRAGMS AT PIER 2 - DETAILS
68 DIAPHRAGM AT PIER 3
69 DIAPHRAGM AT PIER 4
70 DIAPHRAGMS AT PIER 5 - PLANS AND DETAILS
71 DIAPHRAGMS AT PIER 5 - ELEVATIONS
72 DIAPHRAGM AT PIER 6
73 DIAPHRAGM AT PIER 7
74 DIAPHRAGM AT PIER 8
75 DIAPHRAGM AT PIER 9
76 DIAPHRAGM AT PIER 10
77 THEORETICAL SLAB HAUNCHING DIAGRAM - UNITS 1 AND 2
78 THEORETICAL SLAB HAUNCHING DIAGRAM - UNIT 3
79 THEORETICAL SLAB HAUNCHING DIAGRAM - UNIT 3
80 THEORETICAL BOTTOM OF SLAB ELEVATIONS AND GIRDER CAMBER DIAGRAM - UNITS 1 AND 2
81 THEORETICAL BOTTOM OF SLAB ELEVATIONS AND GIRDER CAMBER DIAGRAM - UNIT 3
82 SLAB GEOMETRY AND OFFSETS - UNITS 1 AND 2
83 SLAB GEOMETRY AND OFFSETS - UNIT 3
84 SLAB PLAN SHOWING REINFORCING - UNITS 1 AND 2
85 SLAB PLAN SHOWING REINFORCING - UNIT 3
86 PRECAST PRESTRESSED PANEL DETAILS
87 SLAB CROSS SECTION - UNIT 1
88 SLAB CROSS SECTION - UNIT 2
89 SLAB CROSS SECTION - UNIT 3
90 SLAB POURING SEQUENCE - UNITS 1 AND 2
91 SLAB POURING SEQUENCE - UNIT 3
92 DRAINAGE PLAN AND ELEVATION - UNITS 1 AND 2
93 DRAINAGE PLAN AND ELEVATION - UNIT 3
94 DRAINAGE SYSTEM DETAILS - 1
95 DRAINAGE SYSTEM DETAILS - 2
96 DRY STANDPIPE
97 BRIDGE LIGHTING LAYOUT
98 LEFT BARRIER CURB (TYPE D) - ELEVATIONS
99 RIGHT BARRIER CURB (TYPE D) - ELEVATIONS
100 BARRIER CURB (TYPE D) - DETAILS
101 MEDIAN BARRIER CURB (TYPE C)
102 MEDIAN BARRIER CURB TRANSITION (TYPE C)
103 LEFT BARRIER CURB (TYPE D) AT ABUTMENT 1
104 RIGHT BARRIER CURB (TYPE D) AT ABUTMENT 1
105 SLIP-FORM BARRIER CURB (TYPE D)
106 SLIP-FORM MEDIAN BARRIER CURB (TYPE C)
107 DETAILS OF FLAT PLATE EXPANSION DEVICES AT PIER 2 (RAMP B & RAMP 10)
108 DETAILS OF FLAT PLATE EXPANSION DEVICE AT PIER 5
109 DETAILS OF EXPANSION DEVICE AT MEDIAN BARRIER CURB AT PIER 5
110 MODULAR EXPANSION JOINT DETAILS - PIER 10
111 BRIDGE APPROACH SLAB AT RAMP B
112 BRIDGE APPROACH SLAB AT RAMP 10
113 BAR BENDING DIAGRAMS
114 BILL OF REINFORCING STEEL
115 BILL OF REINFORCING STEEL
116 BILL OF REINFORCING STEEL
117 BILL OF REINFORCING STEEL
118 BILL OF REINFORCING STEEL
119 BILL OF REINFORCING STEEL
120 BILL OF REINFORCING STEEL
121 BILL OF REINFORCING STEEL
122 BILL OF REINFORCING STEEL
123 AS BUILT PILE DATA
124 AS BUILT DRILLED SHAFT DATA - UNITS 1 AND 2
125 AS BUILT DRILLED SHAFT DATA - UNIT 3

I-70 MISSISSIPPI RIVER BRIDGE
MISSOURI APPROACH

Detailed JUL 2009
Checked JUL 2009

Note: This drawing is not to scale. Follow dimensions.

Sheet No. 1 of 125

DATE 8/20/09
ROUTE I-70 | STATE MO
DISTRICT 6 | SHEET NO. BR1
COUNTY St. Louis City - MO
JOB NO. J6I0984B
CONTRACT ID. 100127-601
PROJECT NO. I-70-5 (315)
BRIDGE NO. A6500

DESCRIPTION | DATE

MISSOURI HIGHWAYS AND TRANSPORTATION COMMISSION
105 WEST CAPITOL
JEFFERSON CITY, MO 65102
1-888-ASK-MODOT (1-888-275-6636)

HNTB
715 KIRK DRIVE
KANSAS CITY, MO 64105-1310
TELEPHONE (816) 472-1201
CERTIFICATE OF AUTHORITY NO. 001270

FINAL PLANS

REV.

T:\de-proj\St_Louis_City\Construction\J6I0984B\Asbuilts\Bridge\B_A6500_001-125_J6I0984B_001.dgn

2:00:11 PM

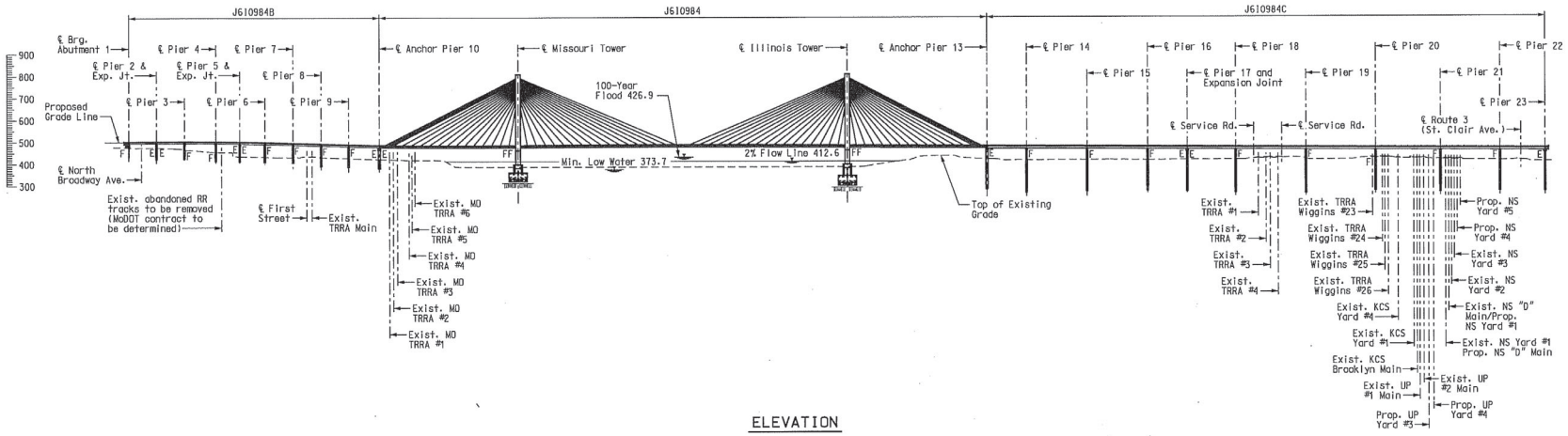

ELEVATION

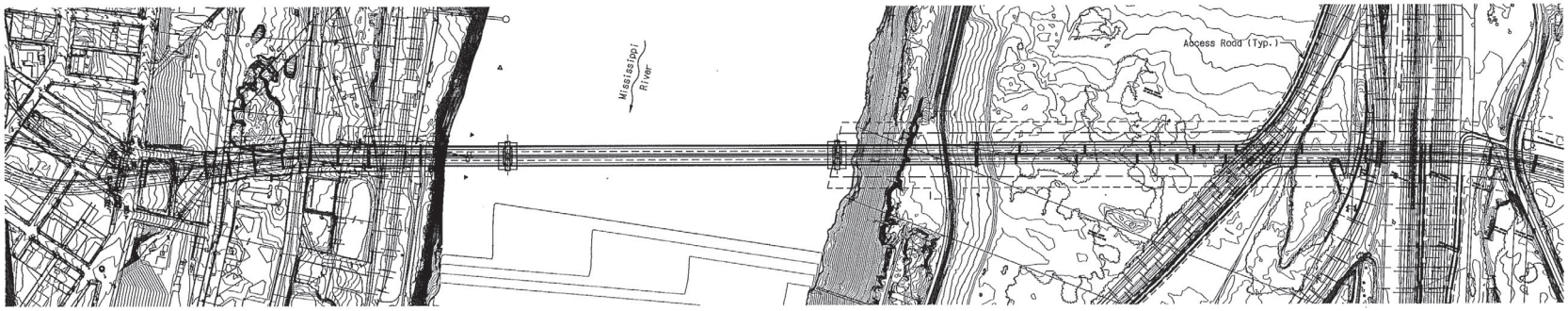

PLAN

SCALE
0 250' 500' 750' 1000' 1250'

OVERALL MISSISSIPPI RIVER BRIDGE LAYOUT

Detailed JUL 2009
Checked JUL 2009

Note: This drawing is not to scale. Follow dimensions.

Sheet No. 2 of 125

T:\de-proj\St_Louis_City\Construction\J6I0984B\Asbuilts\Bridge\B_A6500_002-125_J6I0984B_002.dgn

8:26:21 AM

DATE 8/20/09
ROUTE I-70 STATE MO
DISTRICT 6 SHEET NO. BR2
COUNTY St. Louis City - MO
JOB NO. J6I0984B
CONTRACT ID. 100127-601
PROJECT NO. I-70-5(315)
BRIDGE NO. A6500

DESCRIPTION | DATE

MISSOURI HIGHWAYS AND TRANSPORTATION COMMISSION
105 WEST CAPITOL
JEFFERSON CITY, MO 65102
1-888-ASK-MODOT (1-888-275-6636)

HNTB
715 KIRK DRIVE
KANSAS CITY, MO 64105-1310
TELEPHONE (816) 472-1201
CERTIFICATE OF AUTHORITY NO. 001170

FINAL PLANS

REV.

MISSOURI HIGHWAYS AND TRANSPORTATION COMMISSION

(125') Simple Composite Prestressed Concrete NU-Girder Span
(129'-144'-110') Continuous Composite Prestressed Concrete NU-Girder Spans
(115'-128'-128'-124'-138.25') Continuous Composite Prestressed Concrete NU-Girder Spans

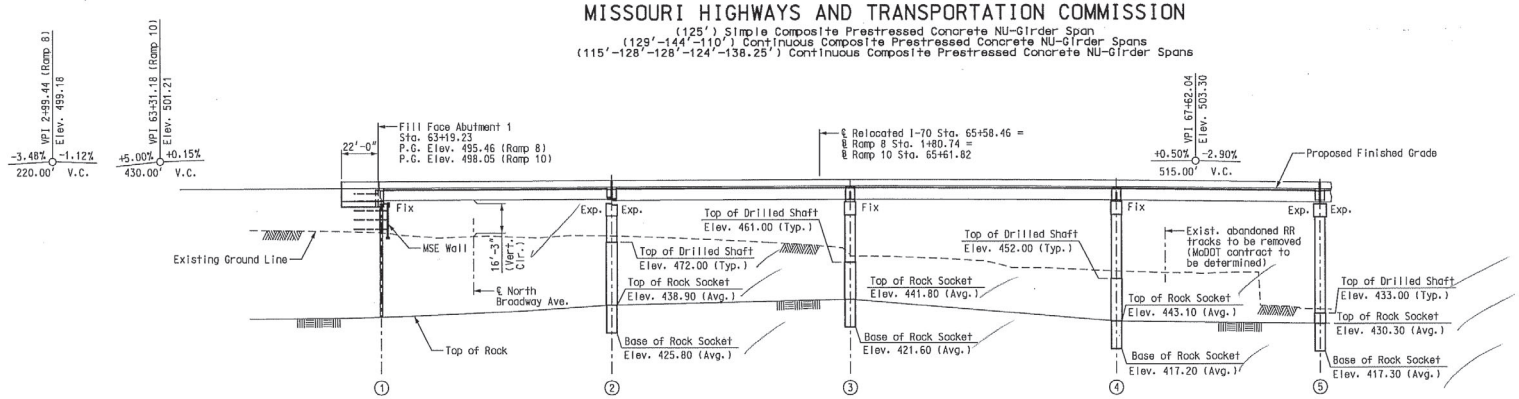

PART GENERAL ELEVATION

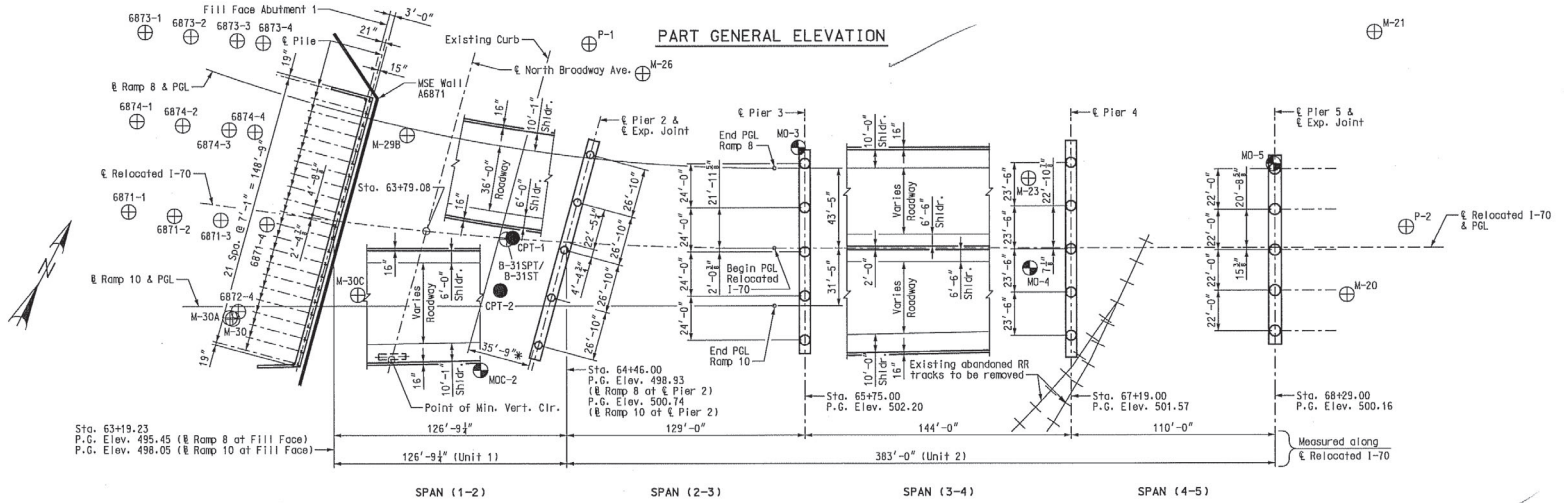

* Minimum Horizontal Clearance

PART PLAN

BENCHMARK NO. 13:

SET "X" ON TOP OF THE NORTH BARRIER WALL AT RAMP 8 NEAR THE ABUTMENT
ELEVATION = 498.61

BENCHMARK NO. 14:

SET "X" ON TOP OF THE SOUTH BARRIER WALL AT RAMP 8 NEAR THE ABUTMENT
ELEVATION = 500.61

BENCHMARK NO. 15:

SET "X" ON TOP OF THE NORTH BARRIER WALL AT RAMP 10 NEAR THE ABUTMENT
ELEVATION = 500.94

BENCHMARK NO. 16:

SET "X" ON TOP OF THE SOUTH BARRIER WALL AT RAMP 10 NEAR THE ABUTMENT
ELEVATION = 501.48

Notice and Disclaimer Regarding Boring Log Data

The locations of all subsurface borings for this structure are shown on the bridge plan sheets for this structure. Boring data for the locations shown ⊕ are located on Sheet Nos. 7 thru 10. The boring data for all locations indicated, as well as any other boring logs or other factual records of subsurface data and investigations performed by the department for the design of the project, will be provided in the bridge electronic deliverable file or will be available from the Project Contact upon written request as outlined in the Project Special Provisions. No greater significance or weight should be given to the boring data depicted on the plan sheets than is subsurface data available from the district or elsewhere.

These borings represent the findings from the drill hole at the location and time shown. Any extensions, interpolations or extensions beyond the diameter of the drilling instrument are not warranted and should only be used by others, for any reason, at their own risk. Any claims for either Type I or II changed site condition by a bidder or contractor or those claiming under them will be judged by the Engineer based on his/her engineering judgement as to the range of possible reasonable expectations that those borings produced.

Notes:

"⊕" Indicates location of borings drilled in 2008.

"●" Indicates approximate location of CPT's performed in 2008.

"⊕" Indicates approximate location of borings drilled prior to 2008.

All stations are along ℄ Relocated I-70.
All dimensions are horizontal.
MSE wall and roadway fill was completed to the final roadway section and up to the elevation of the bottom of the concrete beam within the limits of the structure and for not less than 100 feet in back of the MSE wall. Corrugated metal pipe pile spacers was not placed per the special provisions prior to construction of the MSE wall. Pile driving started after the rate of settlement at settlement gauges (Roadway item) was less than 1/4 inch per two-week period for two consecutive two-week periods and approval is given by the Engineer. See roadway and MSE wall plans for embankment construction requirements.

Detailed OCT 2009
Checked OCT 2009

Note: This drawing is not to scale. Follow dimensions.

Sheet No. 3 of 125

GENERAL PLAN AND ELEVATION – UNITS 1 AND 2

FINAL PLANS

DATE	8/20/09
ROUTE	I-70
STATE	MO
DISTRICT	6
SHEET NO.	BR3
COUNTY	St. Louis City - MO
JOB NO.	J6I0984B
CONTRACT ID.	100127-601
PROJECT NO.	I-70-5(315)
BRIDGE NO.	A6500

DESCRIPTION | DATE | REV.

MISSOURI HIGHWAYS AND TRANSPORTATION COMMISSION
105 WEST CAPITOL
JEFFERSON CITY, MO 65102
1-888-ASK-MODOT (1-888-275-6636)

HNTB
715 KIRK DRIVE
KANSAS CITY, MO 64105-1310
TELEPHONE (816) 472-1201
CERTIFICATE OF AUTHORITY NO. 001270

T:\de-proj\St_Louis_City\Construction\J6I0984B\Asbuilts\Bridge\B_A6500_003-125_J6I0984B_003.dgn 7:26:36 AM

MISSOURI HIGHWAYS AND TRANSPORTATION COMMISSION

(125') Simple Composite Prestressed Concrete NU-Girder Span
(129'-144'-110') Continuous Composite Prestressed Concrete NU-Girder Spans
(115'-128'-128'-124'-138.25') Continuous Composite Prestressed Concrete NU-Girder Spans

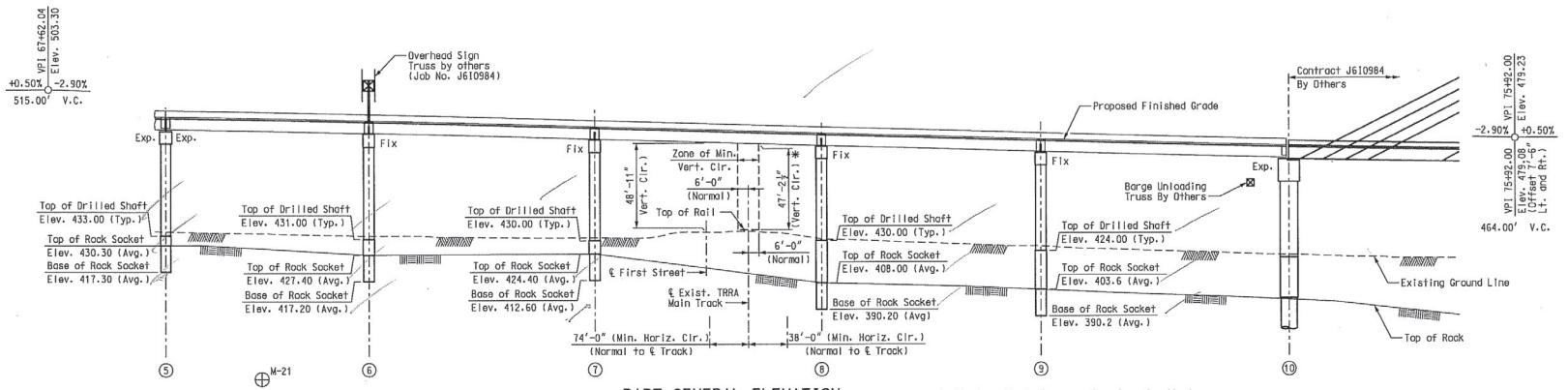

PART GENERAL ELEVATION

* Final vertical clearance from top of rails to bottom of superstructure to be at least 23'-6".

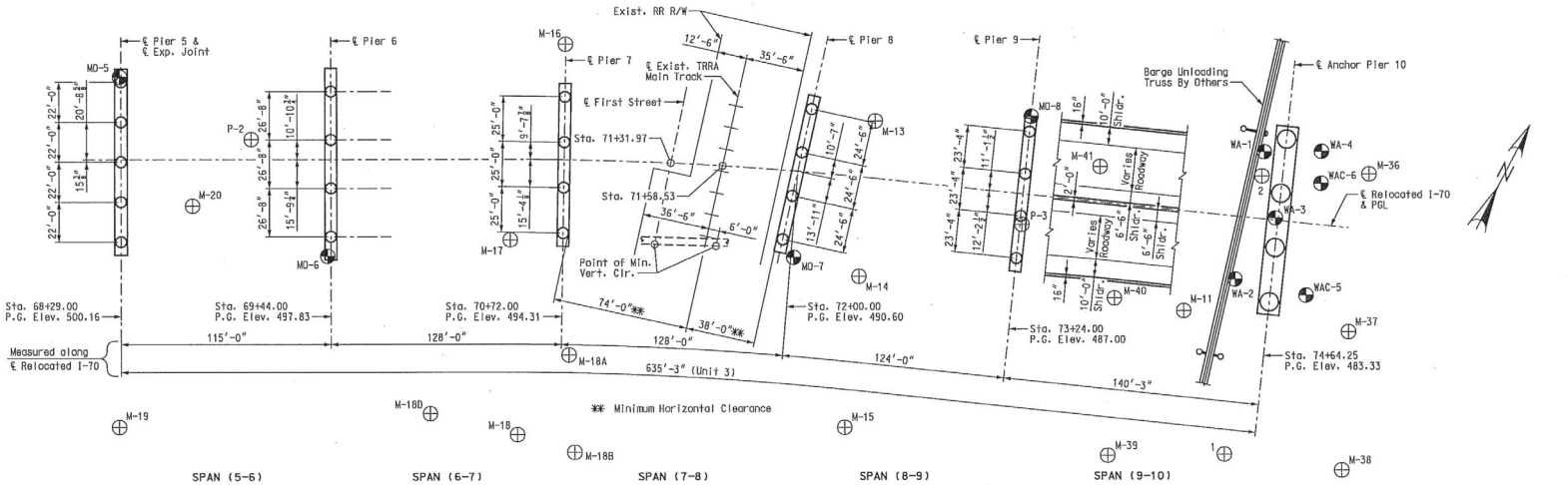

PART PLAN

Notes:
"⊕" Indicates location of borings drilled in 2008.
"⊕" Indicates approximate location of borings drilled prior to 2008.
All stations are along ℄ Relocated I-70.
All dimensions are horizontal.
Boring data for the locations shown ⊕ are shown on Sheet Nos. 7 thru 10.

GENERAL PLAN AND ELEVATION – UNIT 3

Detailed JUL 2009
Checked JUL 2009

Note: This drawing is not to scale. Follow dimensions.

T:\de-proj\St_Louis_City\Construction\J6I0984B\Asbuilts\Bridge\B_A6500_004-125_J6I0984B_004.dgn 7:56:36 AM

DATE 8/20/09
ROUTE I-70 | STATE MO
DISTRICT 6 | SHEET NO. BR4
COUNTY St. Louis City - MO
JOB NO. J6I0984B
CONTRACT ID. 100127-601
PROJECT NO. I-70-5(315)
BRIDGE NO. A6500

DESCRIPTION | DATE | REV.

MISSOURI HIGHWAYS AND TRANSPORTATION COMMISSION
105 WEST CAPITOL
JEFFERSON CITY, MO 65102
1-888-ASK-MODOT (1-888-275-6636)

HNTB
715 KIRK DRIVE
KANSAS CITY, MO 64105-1310
TELEPHONE (816) 472-1201
CERTIFICATE OF AUTHORITY NO. 001270

FINAL PLANS

GENERAL NOTES:

Design Specifications:
2007 - AASHTO LRFD 4th Edition and 2008 Interims
Load and Resistance Factor Design
Seismic Design Category = Seismic Zone 2
Seismic Peak Horizontal Ground Acceleration = 0.13g (975-yr.); 0.21g (2500-yr.)

Design Loading:
HL-93 (LRFD Superstructure, LRFD Substructure)
35#/Sq. Ft. Future Wearing Surface
Earth 120#/Cu. Ft., Equivalent Fluid Pressure 45#/Cu. Ft.
Superstructure: Simply-supported, non-composite for dead load.
Continuous composite for live load.

Design Unit Stresses:

Class B Concrete (Substructure)	f'c =	3,000 psi
Class B-2 Concrete (Drilled Shafts and Rock Sockets)	f'c =	5,500 psi
Class B-2 Concrete (Superstructure, except Prestressed Girders, Barrier Curb and Median Barrier Curb)	f'c =	4,000 psi
Class B-1 Concrete (Barrier Curb and Median Barrier Curb)	f'c =	4,000 psi
Reinforcing Steel (Grade 60)	fy =	60,000 psi
Structural Carbon Steel (ASTM A709 Grade 36)	fy =	36,000 psi
Steel Pile (ASTM A709 Grade 36)	fy =	36,000 psi

Neoprene Pads:
Bearings were 60 durometer neoprene pads, except as noted.

Fabricated Steel Connections:
Field connections was made with 3/4" diameter high strength bolts and 13/16" diameter holes, except as noted.

Joint Filler:
All joint filler was in accordance with Sec 1057 for preformed sponge rubber expansion and partition joint filler, except as noted.

Reinforcing Steel:
Minimum clearance to reinforcing steel was 1-1/2", unless otherwise shown.

Concrete Protective Coatings:
Protective coating for concrete piers (gray epoxy) was applied as shown on the bridge plans and in accordance with Sec 711.

Miscellaneous:
A minimum vertical clearance of 15'-0" over existing North Broadway Ave. and a minimum lateral clearance of 5'-3" from shoulder line was maintained during construction.
A minimum vertical clearance of 21'-0" from top of rails and a minimum horizontal clearance of 12'-0" from the centerline of track to nearest temporary construction falsework was maintained at all times during construction. See Special Provisions for flagging requirements and railroad insurance.
Erosion control measures are to be installed and properly maintained during construction activities in order that Railroad's right-of-way is protected at all times from project runoff and siltation.
High strength bolts, nuts, and washers were sampled for quality assurance as specified in Sec 106 and Field Section (FS-712) from Materials Manual.
"Sec" refers to the sections in the standard and supplemental specifications unless specified otherwise.

Abbreviations:
E.F. denotes Each Face
N.F. denotes Near Face
F.F. denotes Far Face
U.N.O. denotes unless noted otherwise

FINAL QUANTITIES

Item		Substr.	Superstr.	Total
Bridge Approach Slab (Bridge)	sq. yard	---	0	0
Drilled Shafts (5 ft. 6 in. Dia.)	linear foot	306.0	---	306.0
Drilled Shafts (6 ft. 6 in. Dia.)	linear foot	219.9	---	219.9
Rock Sockets (5 ft. 0 in. Dia.)	linear foot	296.0	---	296.0
Rock Sockets (6 ft. 0 in. Dia.)	linear foot	260.2	---	260.2
Supplementary Television Camera Inspection	each	0	---	0
Foundation Inspection Holes	linear foot	920.0	---	920.0
Concrete Coring	linear foot	0.0	---	0.0
Sonic Logging Testing	each	36	---	36
Structural Steel Piles (14 in)	linear foot	1,263	---	1,263
Pile Point Reinforcement	each	22	---	22
Class B Concrete (Substructure)	cu. yard	2,956.1	---	2,956.1
* Barrier Curb (Type D)	linear foot	---	2,708	2,708
* Median Barrier Curb (Type C)	linear foot	---	895	895
Median Barrier Curb Transition (Type C)	linear foot	---	18	18
Slab on Concrete NU-Girder	sq. yard	---	12,939	12,939
NU 63 (1600) Prestressed Concrete NU-Girder	linear foot	---	1,385	1,385
NU 70 (1800) Prestressed Concrete NU-Girder	linear foot	---	9,623	9,623
Reinforcing Steel (Bridges)	pound	799,110	---	799,110
Mechanical Bar Splice	each	1,164	---	1,164
Standpipe	lump sum	---	---	1
Reinforcing Steel (Epoxy Coated)	pound	108,360	---	108,360
Protective Coating - Concrete Bents and Piers (Epoxy)	lump sum	---	---	1
Expansion Device (Flat Plate)	linear foot	---	214	214
Steel Intermediate Diaphragm for P/S Concrete Girders	each	---	154	154
Drainage System (On Structure)	lump sum	---	1	1
Vertical Drain at End Bents	each	---	---	1
Laminated Neoprene Bearing Pad	each	---	36	36
Laminated Neoprene Bearing Pad (Tapered)	each	---	87	87
Type N PTFE Bearing	each	---	51	51
Corrugated Metal Pipe Pile Spacers	each	0	---	0

Notes:
All concrete above the construction joint in the abutment is included in the Estimated Quantities for Slab on Concrete NU-Girder.
All reinforcement in the abutment is included in the Estimated Quantities for Slab on Concrete NU-Girder.
All reinforcement in the pier concrete diaphragms except reinforcement embedded in the beam cap is included in the Estimated Quantities for Slab on Concrete NU-Girder.
All concrete above the pier beam cap is included in the Estimated Quantities for Slab on Concrete NU-Girder.
Cost of channel shear connectors C4 x 5.4 (ASTM A709 Grade 36) in place was considered completely covered by the contract unit price for Structural Steel Piles (14 in.).
Laminated Neoprene Bearing Pads (Tapered and Non-Tapered) were in accordance with Sec 716.
* Barrier curb and median barrier curb was slip-form option.
Cost of any required excavation for bridge was considered completely covered by the contract unit price for other items.

FINAL QUANTITIES FOR SLAB ON CONCRETE NU-GIRDER

Item		Total
Class B-2 Concrete	cu. yard	3,274.0
Reinforcing Steel	pound	24,900
Reinforcing Steel (Epoxy Coated)	pound	813,390

Notes:
The table of Estimated Quantities for Slab on Concrete NU-Girder represents the quantities used by the State in preparing the cost estimate for concrete slabs. The area of the concrete slab was measured to the nearest square yard with the horizontal dimensions as shown on the plan of slab. Payment for prestressed panels, conventional forms, all concrete, and coated and uncoated reinforcing steel was considered completely covered by the contract unit price for the slab. Variations may be encountered in the estimated quantities but the variations cannot be used for an adjustment in the contract unit price.
Method of forming the slabs were as shown on the plans and in accordance with Sec 703. All hardware for forming the slab to be left in place as a permanent part of the structure was coated in accordance with ASTM A123 or ASTM B633 with a thickness class SC 4 and a finish type I, II, or III.

Precast Prestressed Panels:
The Estimated Quantities for Slab on Concrete NU-Girder are based on skewed precast prestressed end panels.
Class B-2 Concrete quantity is based on minimum top flange thickness and minimum joint material thickness.
The prestressed panel quantities are not included in the table of Estimated Quantities for Slab on Concrete NU-Girder.

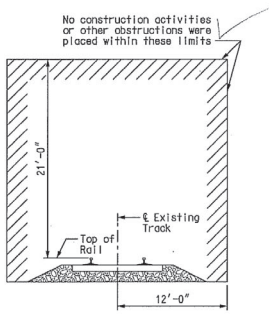

MINIMUM CONSTRUCTION CLEARANCE ENVELOPE
(Normal to ℄ Track)

FOUNDATION DATA

	Pier No.		1	2	3	4	5	6	7	8	9
Driven Pile	Type and Size		HP14x73	---	---	---	---	---	---	---	---
	Number		22	---	---	---	---	---	---	---	---
	Average Length	foot	57	---	---	---	---	---	---	---	---
	Pile Driving Verification Method		Dynamic Bearing Formula	---	---	---	---	---	---	---	---
	Design Bearing	ton	109	---	---	---	---	---	---	---	---
	Minimum Tip Penetration	Elev	438.00	---	---	---	---	---	---	---	---
	Criteria for Minimum Tip Penetration		Penetration of anticipated soft geotechnical layers	---	---	---	---	---	---	---	---
	Hammer Energy Required	ft-lbs	43,225	---	---	---	---	---	---	---	---
Rock Sockets	Foundation Material		---	Rock	Rock	Rock	Rock	Rock	Rock	Rock	Rock
	Number		---	5	5	5	5	4	4	4	4
	Design Side Friction	ksf	---	14.6	14.6	14.6	14.6	14.6	14.6	14.6	14.6

Notes:
Minimum energy requirement of hammer is based on plan length and design bearing of piles.
All piles was driven to refusal on rock.
Manufactured pile point reinforcement was used on all piles in this structure.

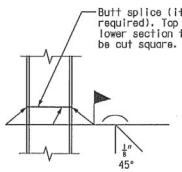

STEEL PILE SPLICE

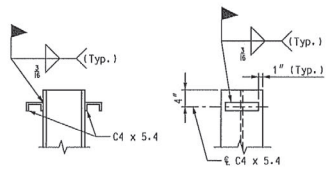

DETAILS OF PILE ANCHORS

GENERAL NOTES AND ESTIMATED QUANTITIES

DATE 8/20/09
ROUTE I-70 | STATE MO
DISTRICT 6 | SHEET NO. BR5
COUNTY St. Louis City - MO
JOB NO. J6I0984B
CONTRACT ID. 100127-601
PROJECT NO. I-70-5(315)
BRIDGE NO. A6500

DESCRIPTION | DATE

MISSOURI HIGHWAYS AND TRANSPORTATION COMMISSION
105 WEST CAPITOL
JEFFERSON CITY, MO 65102
1-888-ASK-MODOT (1-888-275-6636)

HNTB
715 KIRK DRIVE
KANSAS CITY, MO 64105-1310
(816) 472-1201
CERTIFICATE OF AUTHORITY NO. 001270

FINAL PLANS

Detailed JUL 2009
Checked JUL 2009

Note: This drawing is not to scale. Follow dimensions.

REV.

I:\de-proj\St_Louis_City\Construction\J6I0984B\Asbuilts\Bridge\B_A6500_005-125_J6I0984B_005.dgn
10:29:40 AM

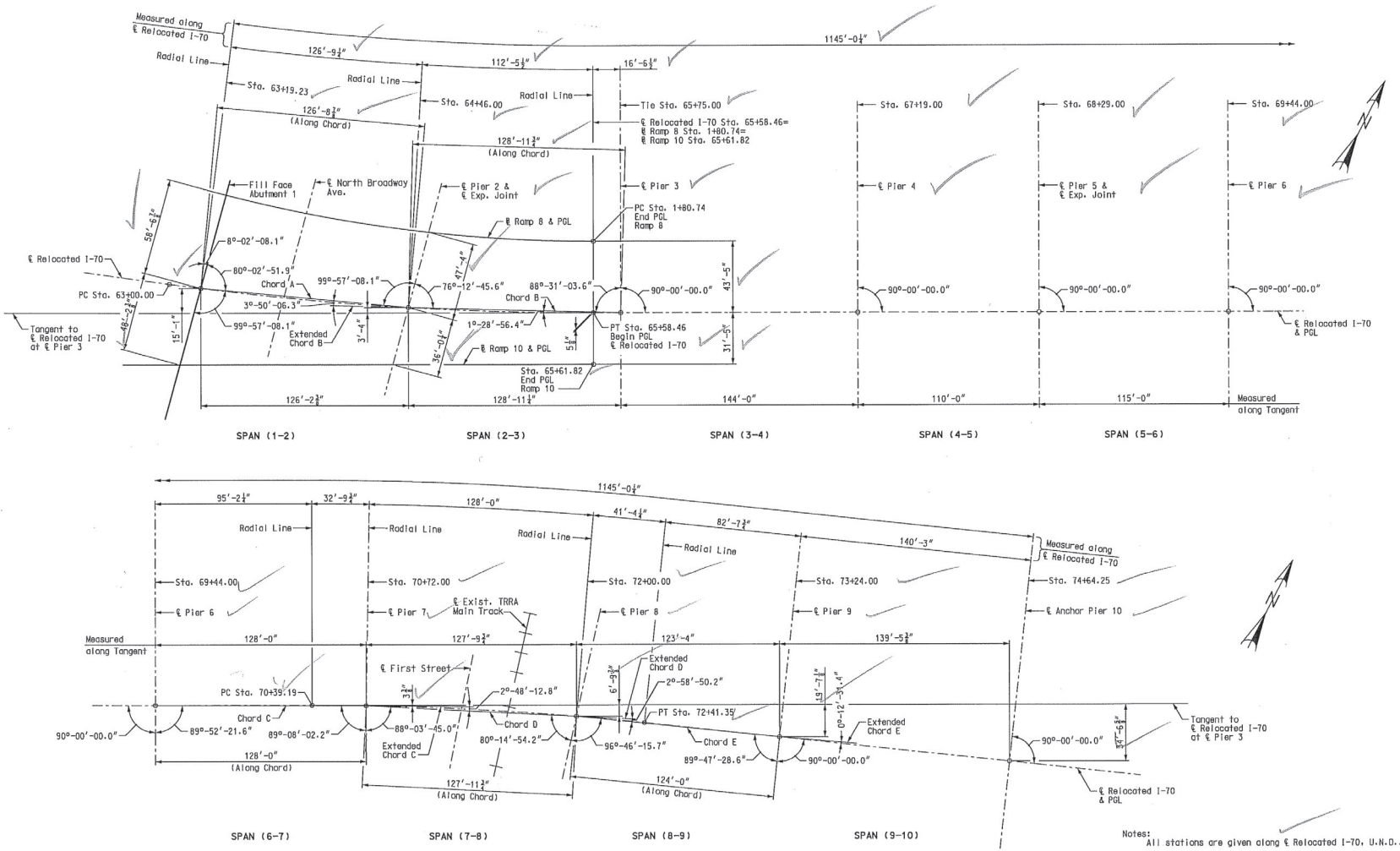

Notes:
All stations are given along ℄ Relocated I-70, U.N.D..

CURVE DATA

Curve R08-1		Curve I-70-1		Curve I-70-2	
PI	3+92.80	PI	64+29.43	PI	71+40.36
PC	1+80.74	PC	63+00.00	PC	70+39.19
PCC	5+97.24	PT	65+58.46	PT	72+41.35
Δ	26° 34′ 40.7″ (RT)	Δ	7° 48′ 56.5″ (LT)	Δ	6° 07′ 12.7″ (RT)
D	6° 22′ 52.5″	D	3° 01′ 26.2″	D	3° 01′ 38.5″
L	416.50′	L	258.46′	L	202.16′
T	212.07′	T	129.43′	T	101.18′
R	897.88′	R	1,894.74′	R	1,892.60′

SUBSTRUCTURE LAYOUT

Detailed JUL 2009
Checked JUL 2009

Note: This drawing is not to scale. Follow dimensions.

Sheet No. 6 of 125

T:\de-proj\St_Louis_City\Construction\J6I0984B\Asbuilts\Bridge\B_A6500_006-125_J6I0984B_006.dgn

4:33:32 PM

DATE 8/20/09
ROUTE I-70
STATE MO
DISTRICT 6
SHEET NO. BR6
COUNTY St. Louis City - MO
JOB NO. J6I0984B
CONTRACT ID. 100127-601
PROJECT NO. I-70-5(315)
BRIDGE NO. A6500

DESCRIPTION | DATE

MISSOURI HIGHWAYS AND TRANSPORTATION COMMISSION
105 WEST CAPITOL
JEFFERSON CITY, MO 65102
1-888-ASK-MODOT (1-888-275-6636)

HNTB
715 KIRK DRIVE
KANSAS CITY, MO 64105-4310
TELEPHONE (816) 472-1201
CERTIFICATE OF AUTHORITY NO. 001270

FINAL PLANS

REV.

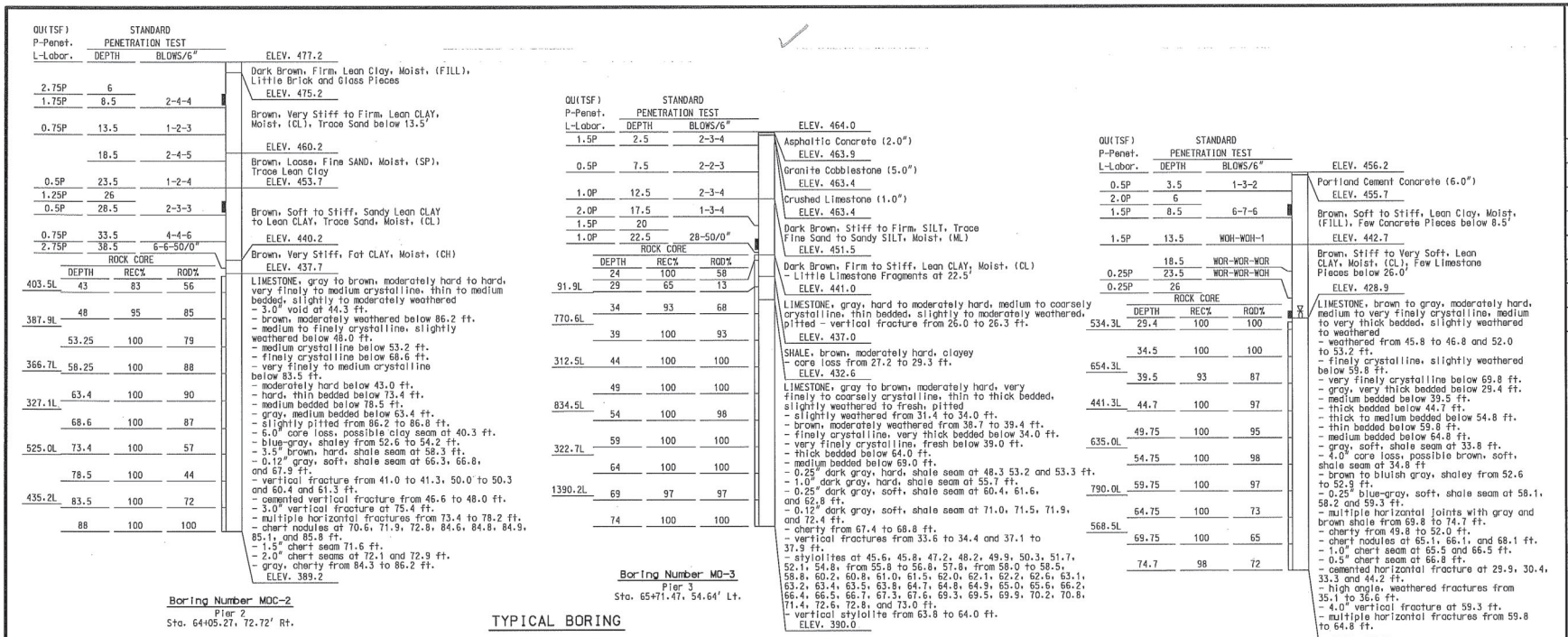

TYPICAL BORING

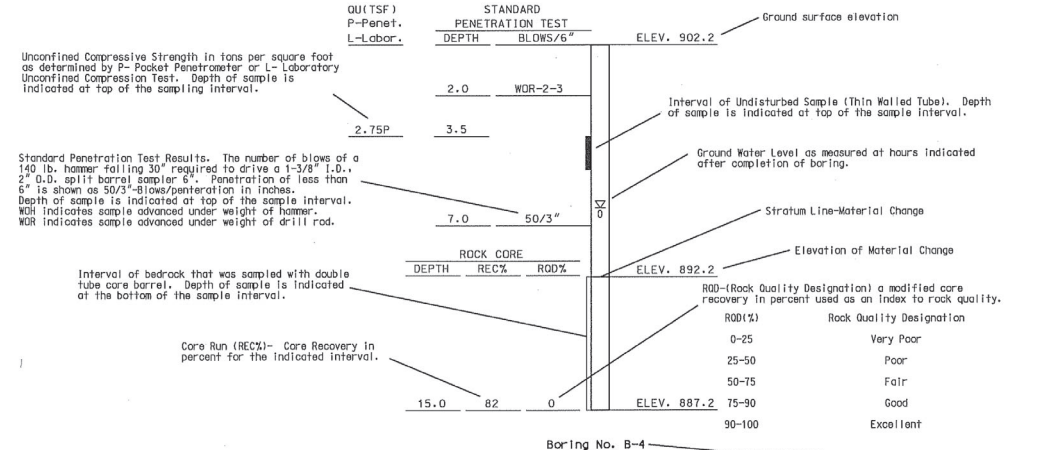

Note: This drawing is not to scale. Follow dimensions.

General Notes:

The borings shown in these plans were drilled by Geotechnology, Inc., under the direction of HNTB Corporation, between September 29, 2008 and December 31, 2008.
For boring locations in plan, see Sheet No. 3 through 4.
The ground water levels shown were recorded during time of drilling. Porosity of soil strata, weather conditions, seasonal changes, site topography, etc., may cause changes in the water levels reported.
The boring information shown on this drawing is abbreviated. A complete copy of boring logs and test results are available upon request to the Department.
For notice and disclaimer regarding boring log data, see Sheet No. 3.

BORING DATA (1 OF 4)

Detailed JUL 2009
Checked JUL 2009

Sheet No. 7 of 125

DATE 8/20/09
ROUTE I-70 STATE MO
DISTRICT 6 SHEET NO. BR7
COUNTY St. Louis City - MO
JOB NO. J6I0984B
CONTRACT ID. 100127-601
PROJECT NO. I-70-5(315)
BRIDGE NO. A6500

DESCRIPTION | DATE | REV.

FINAL PLANS

HNTB
715 KIRK DRIVE
KANSAS CITY, MO 64105-1310
TELEPHONE (816) 472-1201
CERTIFICATE OF AUTHORITY NO. 001270

MISSOURI HIGHWAYS AND TRANSPORTATION COMMISSION
105 WEST CAPITOL
JEFFERSON CITY, MO 65102
1-888-ASK-MODOT (1-888-275-6636)

T:\de-proj\St_Louis_City\Construction\J6I0984B\Asbuilts\Bridge\B_A6500_007-125_J6I0984B_007.dgn 11:42:55 AM

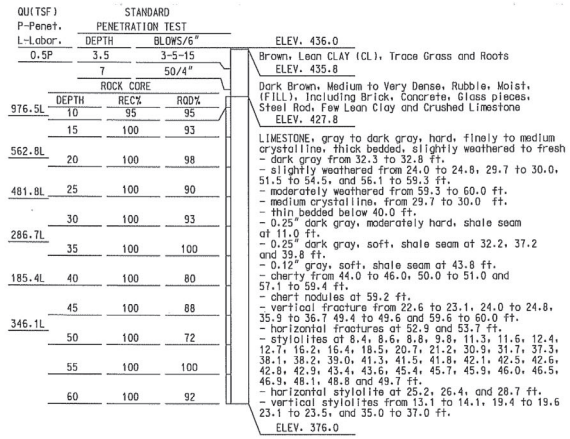

Boring Number MO-5
Pier 5
Sta. 68+28.22, 45.56' Lt.

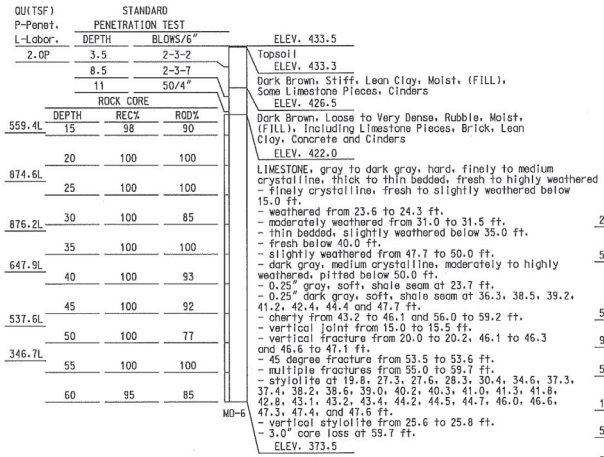

Boring Number MO-6
Pier 6
Sta. 69+42.17, 53.13' Rt.

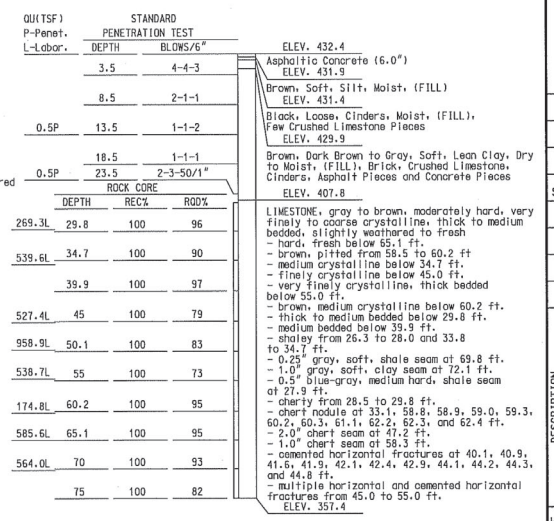

Boring Number MO-7
Pier 8
Sta. 72+01.66, 47.44 Rt.

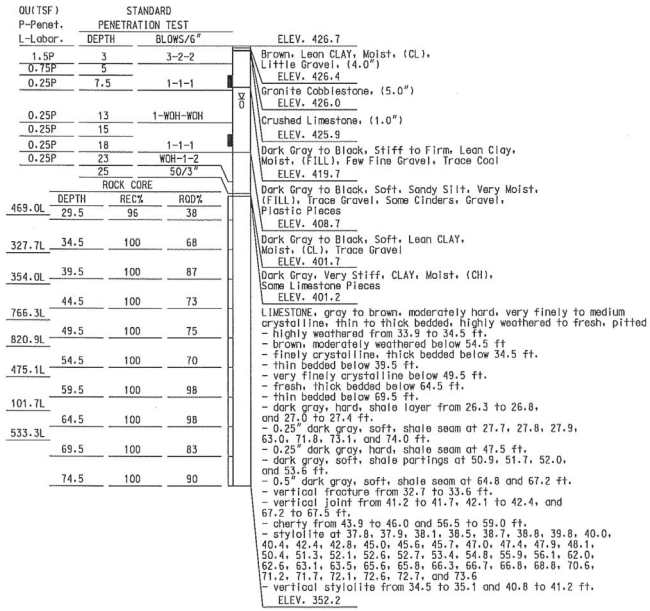

Boring Number MO-8
Pier 9
Sta. 73+23.93, 42.92' Lt.

Note:
For Typical Boring and General Notes, see Sheet No. 7.

BORING DATA (2 OF 4)

Detailed JUL 2009
Checked JUL 2009

Note: This drawing is not to scale. Follow dimensions.

Sheet No. 8 of 125

T:\de-proj\St_Louis_City\Construction\J6I0984B\Asbuilts\Bridge\B_A6500_008-125_J6I0984B_008.dgn

11:44:32 AM

DATE 8/20/09
ROUTE I-70
STATE MO
DISTRICT 6
SHEET NO. BR8
COUNTY St. Louis City - MO
JOB NO. J6I0984B
CONTRACT ID. 100127-601
PROJECT NO. I-70-5(315)
BRIDGE NO. A6500

DESCRIPTION | DATE

MISSOURI HIGHWAYS AND TRANSPORTATION COMMISSION
105 WEST CAPITOL
JEFFERSON CITY, MO 65102
1-888-ASK-MODOT (1-888-275-6636)

HNTB
715 KIRK DRIVE
KANSAS CITY, MO 64105-1310
TELEPHONE (816) 472-1201
CERTIFICATE OF AUTHORITY
MO. 001070

FINAL PLANS

REV.

QU(TSF) P-Penet. L-Labor.	STANDARD PENETRATION TEST DEPTH	BLOWS/6"	
			ELEV. 422.1
	3.5	3-4-5	Top 3.0 inches is Topsoil
			ELEV. 421.9
1.25P	8.5	1-1-WOH	Brown, Medium Stiff, Lean CLAY, Dry, (FILL), With Crushed Limestone, Cinders, Brick
	11		
0.25P	13.5	WOH-WOH-1	ELEV. 411.6
			Gray, Loose, CINDERS, Wet, (FILL), With Lean Clay, Gravel
	18.5	50	ELEV. 409.1
			Gray, Soft, Lean CLAY, Wet, (FILL), With Cinders
			ELEV. 403.1
			Gray LIMESTONE
			ELEV. 402.6

Boring Number WA-1
Anchor Pier 10
Sta. 74+52.89, 36.80' Lt.

QU(TSF) P-Penet. L-Labor.	STANDARD PENETRATION TEST DEPTH	BLOWS/6"		
				ELEV. 422.2
	3.5	2-2-4		
	8.5	1-WOH-3		Dark Gray, Loose, CINDERS, Moist to Wet (FILL), Trace Brick, Wood, Gravel Crushed Limestone and Lean Clay, With Brick Pieces
	13.5	2-1-1		
				ELEV. 403.4
1.25P	18.5	WOH-1-2		Gray, Stiff, Lean CLAY, Wet (CL), Trace Limestone Pieces
	ROCK CORE			ELEV. 400.2
452.9L	DEPTH	REC%	ROD%	
	27.5	93	52	LIMESTONE, gray to brown, moderately hard, fine to medium crystalline, weathered to fresh, very thin to thick bedded
324.9L				- brown below 45.5 ft.
	32.5	100	87	- medium crystalline, slightly weathered below 32.5 ft.
				- fresh, medium bedded below 75.7 ft.
	37.7	100	89	- gray, fine crystalline, slightly weathered below 60.5 ft.
586.7L	40.5	100	71	- fine crystalline below 37.7 ft.
				- medium crystalline below 65.7 ft.
	45.5	97	63	- finely crystalline, thin to medium bedded below 70.5 ft.
351.9L	50.5	100	93	- medium crystalline below 85.6 ft.
				- thick bedded below 50.5 ft.
239.8L	55.5	100	88	- very thin bedded from 71.5 to 73.3 ft.
				- thick bedded below 80.6 ft.
391.5L	60.5	98	90	- 4" core loss, possible shale seam at 24.5 ft.
				- blue-gray, shale, medium hard interbeds from 23.2 to 24.4 ft.
491.2L	65.7	100	74	- brown-gray, shaley from 28.8 to 29.6 ft.
				- 0.5" gray, soft, clay seam at 70.4 ft.
509.8L	70.5	99	76	- 0.25" gray, medium stiff, shale seams at 71.3, 71.6, and 75.4 ft.
				- 0.12" gray, soft, shale seams at 72.4 and 74.4 ft.
857.6L	75.7	100	54	- 1" gray, medium stiff, clay seam at 64.8 ft.
				- vertical fracture from 27.0 to 27.5, 28.0 to 29.4, 47.5 to 49.5 ft.
527.8L	80.6	100	78	- numerous cemented horizontal fractures from 32.5 to 45.5 ft.
				- 45 degree cemented fracture at 50.3 ft.
	85.6	100	99	- fractured from 71.5 to 73.3 ft.
				- cemented horizontal fracture at 76.6, 78.4, 78.5, and 79.1 ft.
	90.8	100	99	- chert nodules at 39.3, 39.7, 39.8, 40.0, 40.4, 52.1, 52.3, 52.9, 54.1, 54.3, and 55.1 ft.
				- 2" chert seams at 40.6 and 41.3 ft.
				- 1.5" chert seam at 54.0 ft.
				- 3" chert seam at 55.5 ft.
				- chert nodule at 57.3 ft.
				- calcite nodule at 87.4 ft.
				ELEV. 331.4

Boring Number WA-2
Anchor Pier 10
Sta. 74+44.23, 34.46' Rt.

QU(TSF) P-Penet. L-Labor.	STANDARD PENETRATION TEST DEPTH	BLOWS/6"		
				ELEV. 421.5
	3.5	2-1-2		3.0 inches Topsoil
				ELEV. 421.3
0.5P	8.5	1-1-1		Brown to Gray, Soft, Lean CLAY, Dry to Wet, (FILL) With Brick Pieces and Cinders
1.25P	11			- Stiff at 12 ft.
	13.5	WOH-1-1		
1.25P	18.5	2-2-3		ELEV. 403.0
	ROCK CORE			Gray, Stiff, Lean CLAY, Wet, (CL)
515.8L	DEPTH	REC%	ROD%	ELEV. 399.5
	24	100	75	LIMESTONE, gray to brown, moderately hard, very finely to coarsely crystaline, thin to thickly bedded, slightly weathered to fresh
	29	97	95	- brown below 45.3 ft.
387.9L				- thick bedded and medium crystalline below 24.0 ft.
	34	100	87	- gray to brown, medium bedded, finely crystalline, and moderately weathered below 44.0 ft.
				- medium crystaline and medium to thick bedded below 49.0 ft.
	39	98	88	- 45 degree fracture at 27.3 ft.
705.1L				- medium to thick bedded below 29.0 ft.
	44	100	47	- medium bedded and finely crystaline below 34.0 ft.
				- very finely crystalline and thin bedded below 39.0 ft.
	49	97	80	- gray to dark gray, fresh, and finely crystaline below 73.7 ft.
227.4L				- medium bedded below 68.8 ft.
	54	93	83	- dark gray and thick bedded below 78.2 ft.
				- gray and medium to thick bedded below 83.5 ft.
	58.6	89	71	- 0.25" greenish-gray, soft, shale seam at 28.9 ft.
				- greenish-gray and shaley below 28.9 ft.
246.8L	63.7	100	56	- 3.0" greenish-gray, hard, shale seam at 29.4 ft.
				- 0.5" gray, soft, clay seam at 64.2 ft.
	68.8	100	69	- 0.25" gray, soft, shale seam at 64.8 and 74.8 ft.
				- 0.25" gray, soft, clay seam at 66.4 ft.
	73.7	100	90	- 0.25" gray, moderately hard, shale seam at 69.8, 69.9, 70.8, and 72.8 ft.
327.1L	78.2	100	94	- 0.12" gray, soft, shale seam at 79.3 ft.
				- cemented horizontal fractures at 34.2, 34.3, 35.3, 36.9, 38.3, 38.4, 69.7, 69.8, 70.8, 72.2, 72.9, 73.1, and 73.3 ft.
	83.5	100	89	- multiple horizontal fractures from 39.0 to 44.0 and 58.6 to 63.7 ft.
204.3L				- cemented vertical fracture from 47.6 to 49.0 ft.
	88.5	100	95	- 1.0" chert seam at 39.3, 39.8, and 41.0 ft.
				- chert nodules at 53.5 and 54.0 ft.
				- chert nodules at 57.1 and 57.7 ft.
				- cherty at 81.3 ft.
				ELEV. 333.0

Boring Number WA-3
Anchor Pier 10
Sta. 74+62.74, 1.30' Lt.

Note:
For Typical Boring and General Notes, see Sheet No. 7.

BORING DATA (3 OF 4)

DATE 8/20/09
ROUTE I-70 STATE MO
DISTRICT 6 SHEET NO. BR9
COUNTY St. Louis City - MO
JOB NO. J6I0984B
CONTRACT ID. 100127-601
PROJECT NO. I-70-5(315)
BRIDGE NO. A6500

DESCRIPTION | DATE

MISSOURI HIGHWAYS AND TRANSPORTATION COMMISSION
105 WEST CAPITOL
JEFFERSON CITY, MO 65102
1-888-ASK-MODOT (1-888-275-6636)

HNTB
715 KIRK DRIVE
KANSAS CITY, MO 64105-1310
TELEPHONE (816) 472-1201
CERTIFICATE OF AUTHORITY NO. 001210

FINAL PLANS

REV.

Detailed JUL 2009
Checked JUL 2009

Note: This drawing is not to scale. Follow dimensions.

T:\de-proj\St_Louis_City\Construction\J6I0984B\Asbuilts\Bridge\B_A6500_009-125_J6I0984B_009.dgn

11:49:59 AM

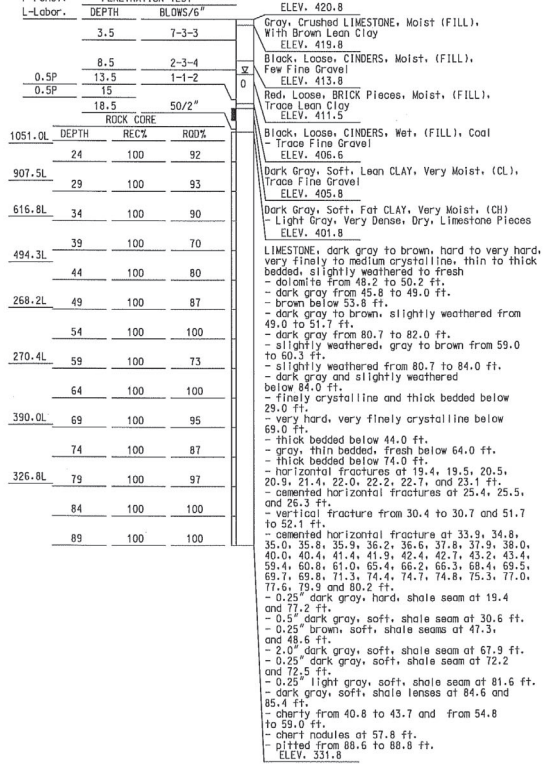

Boring Number WA-4
Anchor Pier 10
Sta. 74+83.82, 40.28' Lt.

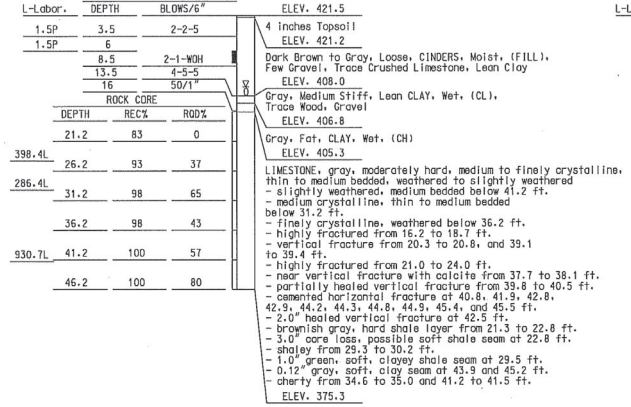

Boring Number WAC-5
Anchor Pier 10
Sta. 74+83.79, 39.25' Rt.

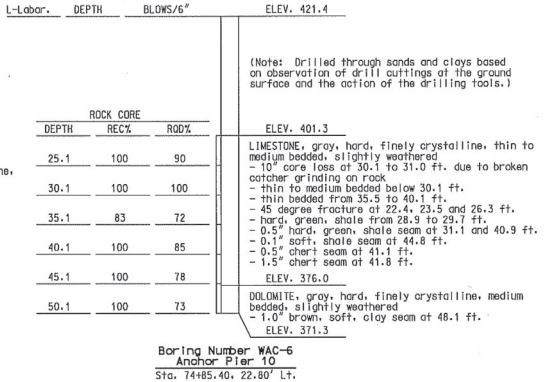

Boring Number WAC-6
Anchor Pier 10
Sta. 74+85.40, 22.80' Lt.

Note:
For Typical Boring and General Notes, see Sheet No. 7.

BORING DATA (4 OF 4)

Detailed JUL 2009
Checked JUL 2009

Note: This drawing is not to scale. Follow dimensions.

Sheet No. 10 of 125

T:\de-proj\St_Louis_City\Construction\J6I0984B\Asbuilts\Bridge\B_A6500_010-125_J6I0984B_010.dgn

11:52:07 AM

DATE 8/20/09
ROUTE I-70
STATE MO
DISTRICT 6
SHEET NO. BR10
COUNTY St. Louis City - MO
JOB NO. J6I0984B
CONTRACT ID. 100127-601
PROJECT NO. I-70-S(315)
BRIDGE NO. A6500

DESCRIPTION | DATE

MISSOURI HIGHWAYS AND TRANSPORTATION COMMISSION
105 WEST CAPITOL
JEFFERSON CITY, MO 65102
1-888-ASK-MODOT (1-888-275-6636)

HNTB
715 KIRK DRIVE
KANSAS CITY, MO 64105-1310
TELEPHONE (816) 472-1201
CERTIFICATE OF AUTHORITY NO. 001670

FINAL PLANS

REV.

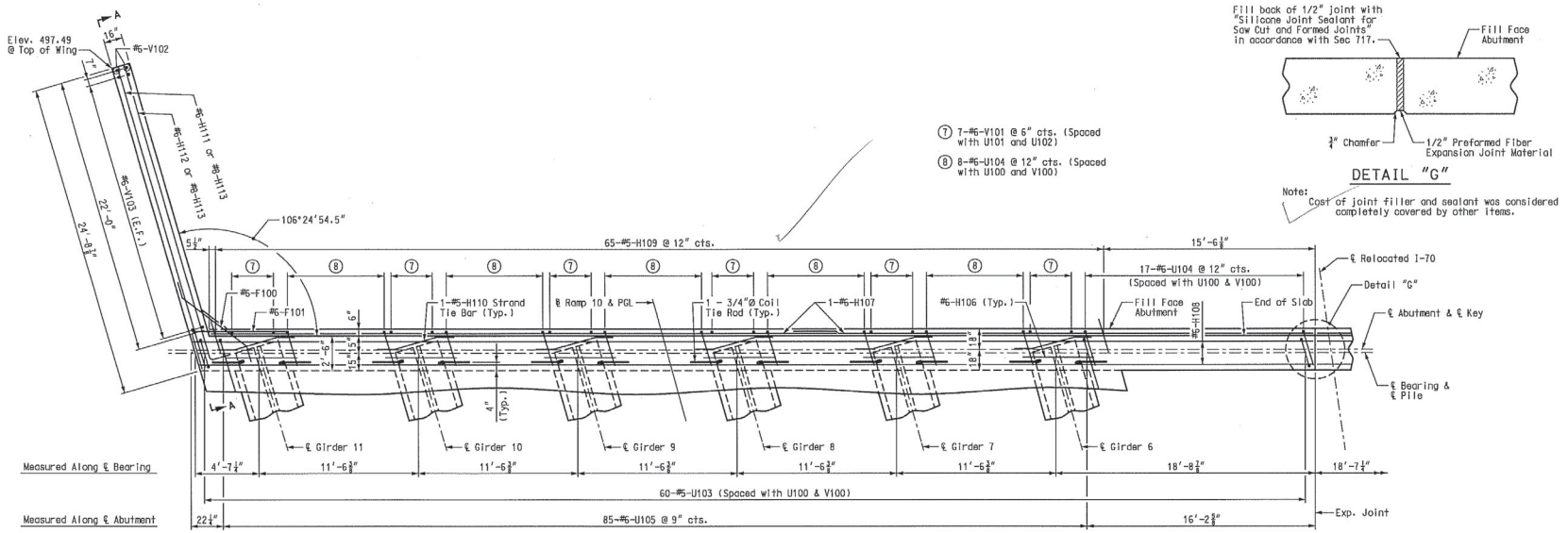

PART PLAN

Note:
Lap for #6-H107 bars = 3'-1" (Min.).

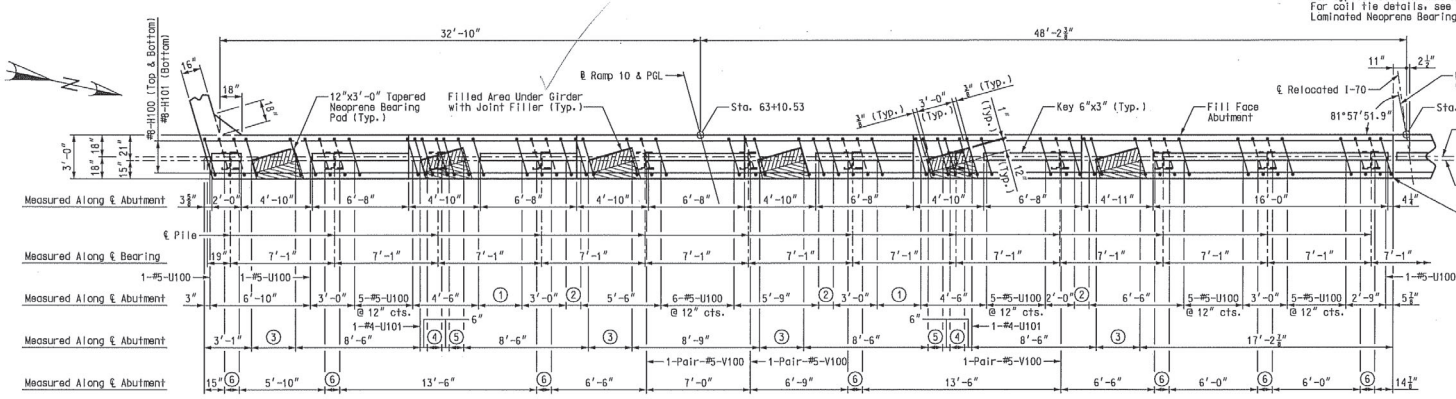

① 4-#5-U100 @ 12" cts.
② 2-#5-U100 @ 12" cts.
③ 7-#4-U101 @ 6" cts.
④ 3-#4-U102 @ 6" cts.
⑤ 3-#4-U101 @ 6" cts.
⑥ 2-Pair-#5-V100 @ 12" cts.

PART PLAN OF BEAM

DETAIL "G"

Fill back of ½" joint with "Silicone Joint Sealant for Saw Cut and Formed Joints" in accordance with Sec 717.

Fill Face Abutment

¾" Chamfer

½" Preformed Fiber Expansion Joint Material

Note:
Cost of joint filler and sealant was considered completely covered by other items.

Notes:
For reinforcement of the barrier curb, see Sheet Nos. 98, 99, and 104.
Bend F100 bars in the field to clear girders.
All reinforcing bars in the substructure beams or caps were field adjusted to clear piles by at least 1-1/2".
All concrete in the abutment above top of beam and below top of slab was Class B-2.
Strands at end of girder were field bent or cut in field to maintain 1-1/2" minimum clearance to fill face of abutment.
All U bars and pairs of V bars are to be placed parallel to ℄ Girders.
For Elevation A-A, see Sheet No. 15.
For detail of Bearing Pads, see Sheet No. 14.
For Typical Section Thru Key, see Sheet No. 14.
For coil tie details, see Sheet No. 62.
Laminated Neoprene Bearing Pads was oriented along ℄ girders.

ABUTMENT 1 – PLANS

Detailed JUL 2009
Checked JUL 2009

Note: This drawing is not to scale. Follow dimensions.

Sheet No. 11 of 125

T:\de-proj\St_Louis_City\Construction\J6I0984B\Asbuilts\Bridge\B_A6500_011-125_J6I0984B_011.dgn

2:06:06 PM

DATE 8/20/09
ROUTE I-70 STATE MO
DISTRICT 6 SHEET NO. BR11
COUNTY St. Louis City - MO
JOB NO. J6I0984B
CONTRACT ID. 100127-601
PROJECT NO. I-70-5(315)
BRIDGE NO. A6500

DESCRIPTION | DATE

MISSOURI HIGHWAYS AND TRANSPORTATION COMMISSION
105 WEST CAPITOL
JEFFERSON CITY, MO 65102
1-888-ASK-MODOT (1-888-275-6636)

HNTB
715 KIRK DRIVE
KANSAS CITY, MO 64105-1310
TELEPHONE (816) 472-1201
CERTIFICATE OF AUTHORITY NO. 001270

FINAL PLANS

REV.

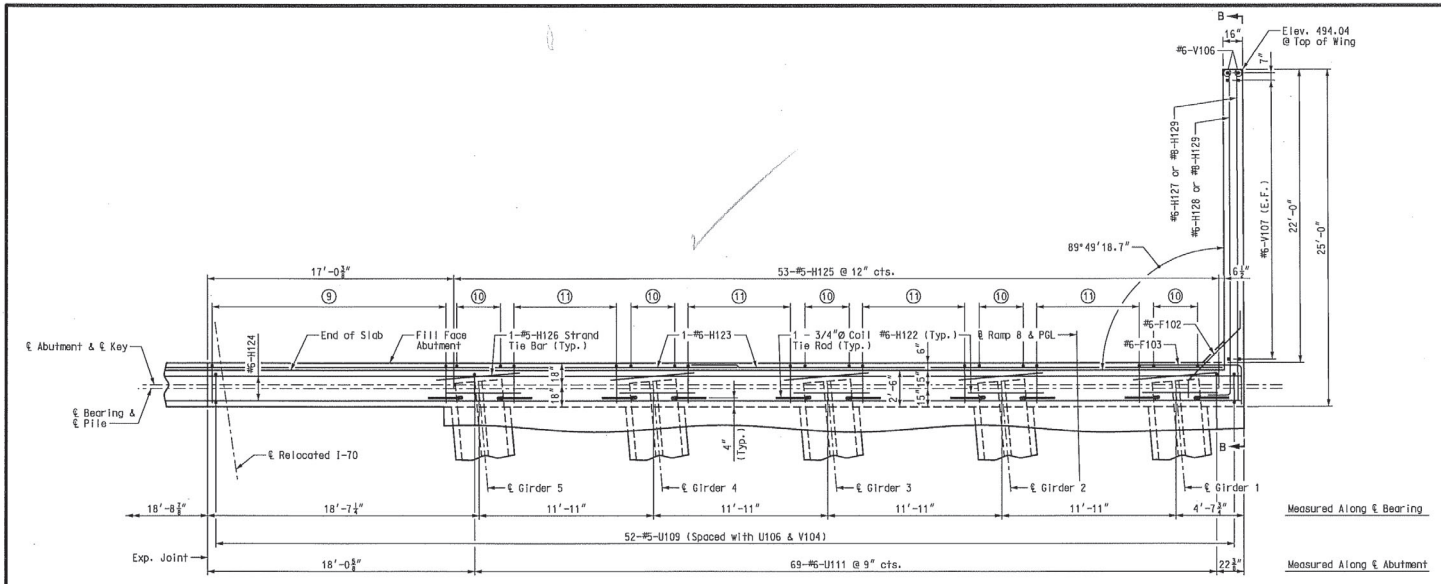

PART PLAN

Note:
Lap for #6-H123 bars = 3'-1" (Min.).

⑨ 17-#6-U110 @ 12" cts. (Spaced with U106 and V104)

⑩ 7-#6-V105 @ 6" cts. (Spaced with U107 and U108)

⑪ 8-#6-U110 @ 12" cts. (Spaced with U106 and V104)

Notes:
For reinforcement of the barrier curb, see Sheet Nos. 98, 99, and 103.
Bend F102 bars in the field to clear girders.
All reinforcing bars in the substructure beams or caps were field adjusted to clear piles by at least 1-1/2".
All concrete in the abutment above top of beam and below top of slab was Class B-2.
Strands at end of girder were field bent or cut in field to maintain 1-1/2" minimum clearance to fill face of abutment.
All U bars and pairs of V bars are to be placed parallel to ℄ Girders.
For Elevation B-B, see Sheet No. 15.
For detail of Bearing Pads, see Sheet No. 14.
For Typical Section Thru Key, see Sheet No. 14.
For coil tie details, see Sheet No. 62.
Laminated Neoprene Bearing Pads was oriented along ℄ girders.

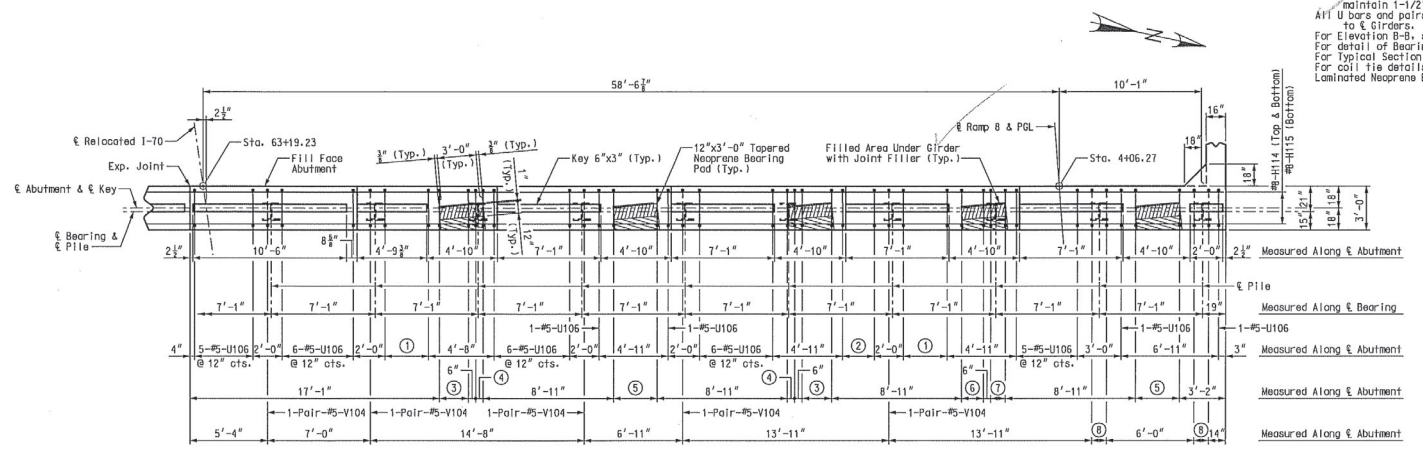

PART PLAN OF BEAM

① 4-#5-U106 @ 12" cts.
② 3-#5-U106 @ 12" cts.
③ 5-#4-U107 & 5-#4-U112 @ 6" cts.
④ 2-#4-U108 & 2-#4-U112 @ 6" cts.
⑤ 7-#4-U107 & 7-#4-U112 @ 6" cts.
⑥ 4-#4-U107 & 4-#4-U112 @ 6" cts.
⑦ 3-#4-U108 & 3-#4-U112 @ 6" cts.
⑧ 2-Pair-#5-V104 @ 12" cts.

ABUTMENT 1 - PLANS

Detailed JUL 2009
Checked JUL 2009

Note: This drawing is not to scale. Follow dimensions.

Sheet No. 12 of 125

T:\de-proj\St_Louis_City\Construction\J6I0984B\Asbuilts\Bridge\B_A6500_012-125_J6I0984B_012.dgn

2:09:12 PM

DATE 8/20/09
ROUTE I-70 STATE MO
DISTRICT 6 SHEET NO. BR12
COUNTY St. Louis City - MO
JOB NO. J6I0984B
CONTRACT ID. 100127-601
PROJECT NO. I-70-5(315)
BRIDGE NO. A6500

DESCRIPTION | DATE

MISSOURI HIGHWAYS AND TRANSPORTATION COMMISSION
105 WEST CAPITOL
JEFFERSON CITY, MO 65102
1-888-ASK-MODOT (1-888-275-6636)

HNTB
715 KIRK DRIVE
KANSAS CITY, MO 64105-1310
TELEPHONE (816) 472-1201
CERTIFICATE OF AUTHORITY NO. 001270

FINAL PLANS

REV.

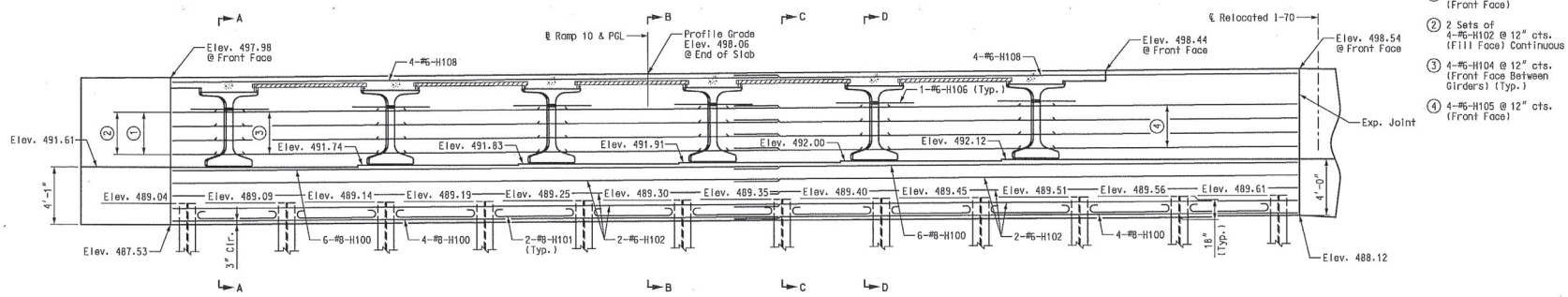

PART ELEVATION NEAR ABUTMENT

(Looking Back Station)

Notes:
Lap for #6-H102 bars = 3'-1" (Min.).
Lap for #6-H108 bars = 4'-5" (Min.).
Lap for #8-H100 bars = 6'-10" (Min.).

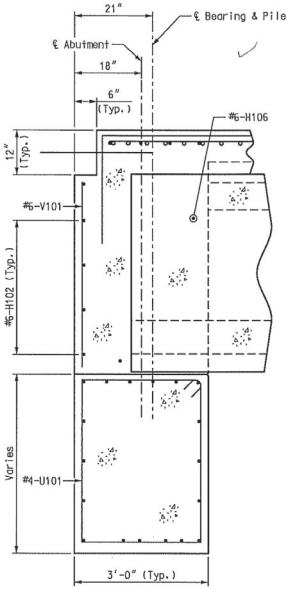

SECTION A-A

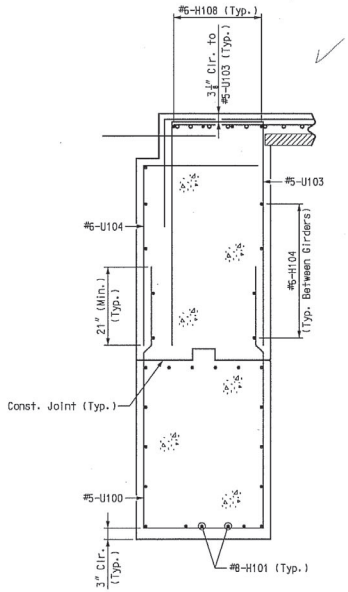

SECTION B-B

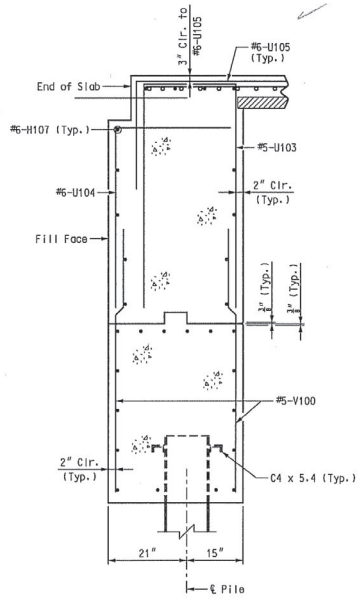

SECTION C-C

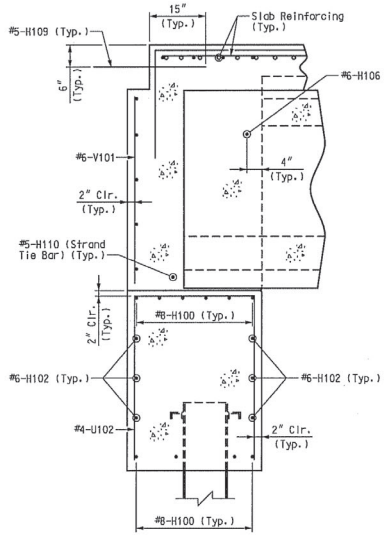

SECTION D-D

Notes:
For details of Abutment not shown, see Sheet Nos. 11, 12, 14, and 15.

ABUTMENT 1 - DETAILS

DATE	8/20/09
ROUTE	I-70
STATE	MO
DISTRICT	6
SHEET NO.	BR13
COUNTY	St. Louis City - MO
JOB NO.	J6I0984B
CONTRACT ID.	100127-601
PROJECT NO.	I-70-5(315)
BRIDGE NO.	A6500

DESCRIPTION | DATE

MISSOURI HIGHWAYS AND TRANSPORTATION COMMISSION
105 WEST CAPITOL
JEFFERSON CITY, MO 65102
1-888-ASK-MODOT (1-888-275-6636)

HNTB
715 KIRK DRIVE
KANSAS CITY, MO 64105-1310
TELEPHONE (816) 472-1201
CERTIFICATE OF AUTHORITY NO. 001270

FINAL PLANS

REV.

Detailed JUL 2009
Checked JUL 2009

Note: This drawing is not to scale. Follow dimensions.

T:\de-proj\St_Louis_City\Construction\J6I0984B\Asbuilts\Bridge\B_A6500_013-125_J6I0984B_013.dgn

1:19:03 PM

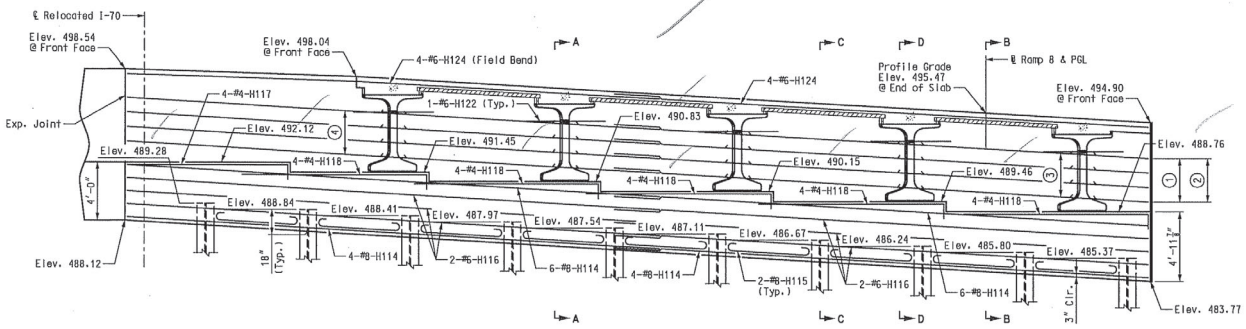

① 4-#6-H119 @ 12" cts. (Front Face)

② 2 Sets of 4-#6-H116 @ 12" cts. (Fill Face) Continuous

③ 4-#6-H120 @ 12" cts. (Front Face Between Girders) (Typ.)

④ 4-#6-H121 @ 12" cts. (Front Face)

PART ELEVATION NEAR ABUTMENT

(Looking Back Station)

Notes:
Lap for #6-H116 bars = 3'-1" (Min.).
Lap for #6-H124 bars = 4'-5" (Min.).
Lap for #8-H114 bars = 6'-10" (Min.).

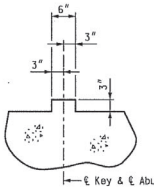

TYPICAL SECTION THRU KEY

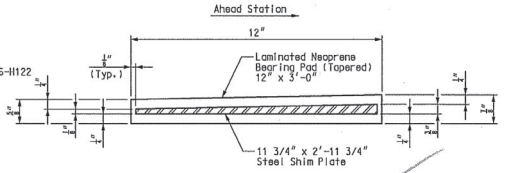

TYPICAL SECTION THRU LAMINATED NEOPRENE BEARING PAD

11 Required on Abutment 1

Notes:
The required shim plate was placed between layers of elastomer and molded together to form an integral unit.
Shop drawings are not required for laminated neoprene bearings on structures without sole plates.

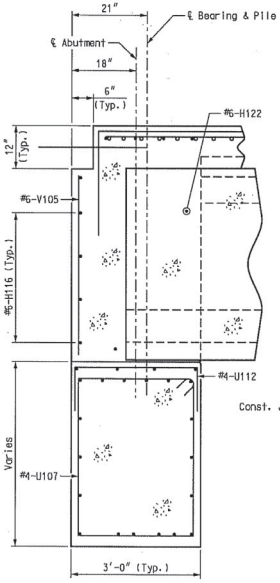

SECTION A-A

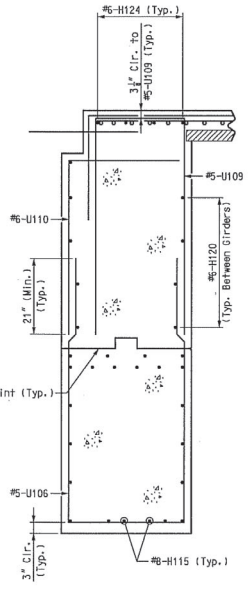

SECTION B-B

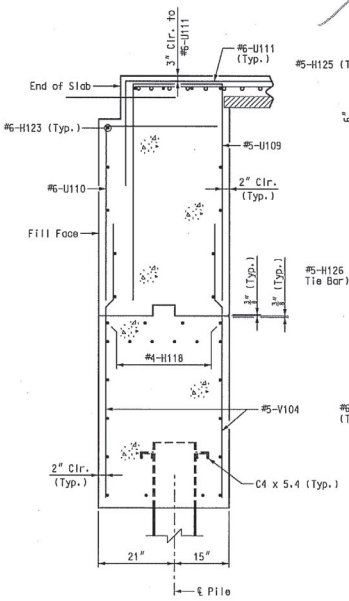

SECTION C-C

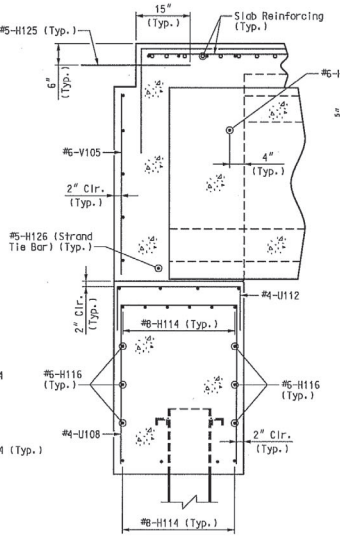

SECTION D-D

Notes:
All piles was HP14x73.
For details of Abutment not shown, see Sheet Nos. 11, 12, 13, and 15.
For details of steel pile splice, see Sheet No. 5.
For Details of Pile Anchors, see Sheet No. 5.

✻✻ SUBSTRUCTURE QUANTITY TABLE FOR ABUTMENT 1

Item		Quantity
Structural Steel Piles (14 in.)	linear foot	1,263
Pile Point Reinforcement	each	22
Class B Concrete (Substructure)	cu. yard	82.0
Corrugated Metal Pipe Pile Spacers	each	0

✻✻ These quantities are included in the final quantities table on Sheet No. 5.

ABUTMENT 1 - DETAILS

Detailed JUL 2009
Checked JUL 2009

Note: This drawing is not to scale. Follow dimensions.

Sheet No. 14 of 125

T:\de-proj\St_Louis_City\Construction\J6I0984B\Asbuilts\Bridge\B_A6500_014-125_J6I0984B_014.dgn

8:12:11 AM

DATE 8/20/09
ROUTE I-70 | STATE MO
DISTRICT 6 | SHEET NO. BR14
COUNTY St. Louis City - MO
JOB NO. J6I0984B
CONTRACT ID. 100127-601
PROJECT NO. I-70-5(315)
BRIDGE NO. A6500

DESCRIPTION | DATE | REV.

MISSOURI HIGHWAYS AND TRANSPORTATION COMMISSION
105 WEST CAPITOL
JEFFERSON CITY, MO 65102
1-888-ASK-MODOT (1-888-275-6636)

HNTB
715 KIRK DRIVE
KANSAS CITY, MO 64105-1310
TELEPHONE: 816-472-1201
CERTIFICATE OF AUTHORITY NO. 001270

FINAL PLANS

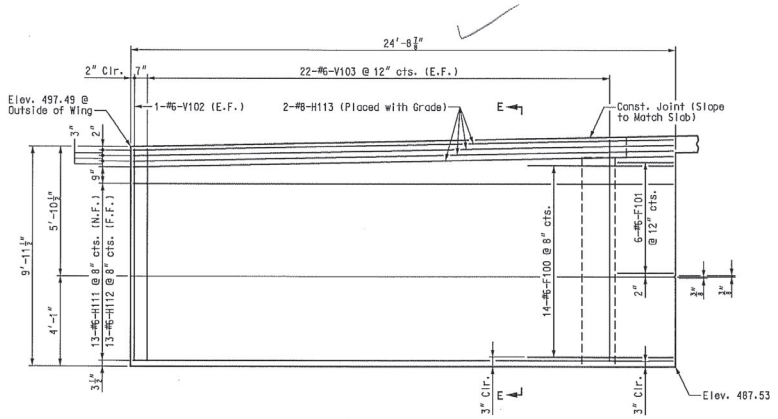

ELEVATION A–A

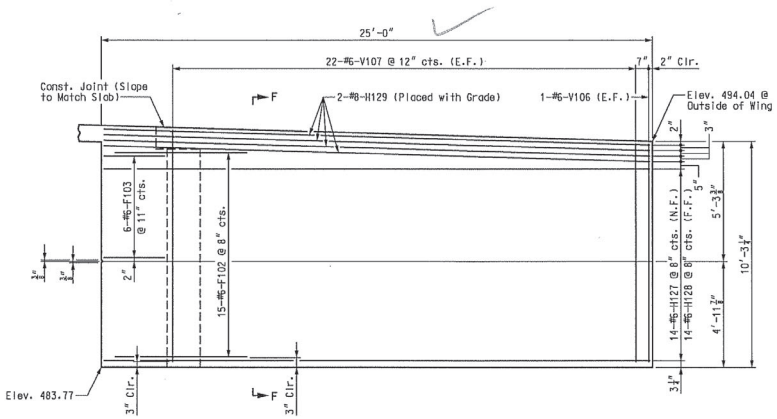

ELEVATION B–B

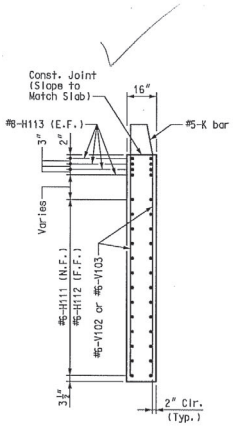

SECTION E–E

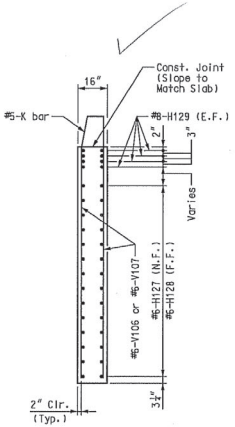

SECTION F–F

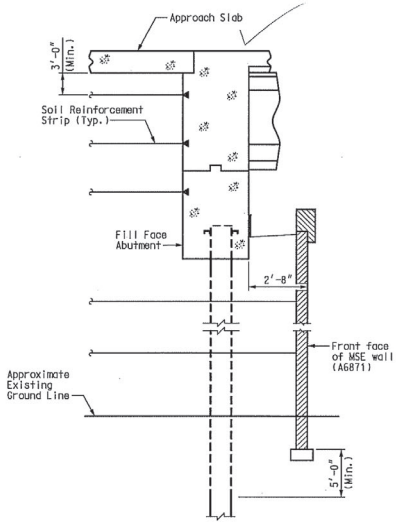

TYPICAL SECTION AT ABUTMENT AND MSE WALL

Notes:
For details and location of soil reinforcement strip attachment to abutment, see mechanically stabilized earth wall drawings. Reinforcing strips was designed to resist 5.7 Kips/ft along fill face of abutment (LRFD Extreme Event I). Provide minimum of 3 layers of strips to resist the required load. Cost of strips and attachments to fill face of abutment, and complete-in-place was considered completely covered by the contract unit price for Class B Concrete (Substructure) per cubic yard.
Coordinate placement of reinforcing strips with vertical drain core.
For details of vertical drain at abutment, see Sheet No. 16.

Notes:
For reinforcement of the barrier curb, see Sheet Nos. 98, 99, 103, and 104.
For location of Elevations A-A and B-B, see Sheet Nos. 11 and 12.

ABUTMENT 1 – WING DETAILS

DATE 8/20/09
ROUTE I-70 | STATE MO
DISTRICT 6 | SHEET NO. BR15
COUNTY St. Louis City - MO
JOB NO. J6I0984B
CONTRACT ID. 100127-601
PROJECT NO. I-70-S(135)
BRIDGE NO. A6500

DESCRIPTION | DATE

MISSOURI HIGHWAYS AND TRANSPORTATION COMMISSION
105 WEST CAPITOL
JEFFERSON CITY, MO 65102
1-888-ASK-MODOT (1-888-275-6636)

HNTB
715 KIRK DRIVE
KANSAS CITY, MO 64105-1310
(816) 472-1201 FAX (816) 472-2201
CERTIFICATE OF AUTHORITY NO. 001270

FINAL PLANS

Detailed JUL 2009
Checked JUL 2009

Note: This drawing is not to scale. Follow dimensions.

Sheet No. 15 of 125

T:\de-proj\St_Louis_City\Construction\J6I0984B\Asbuilts\Bridge\B_A6500_015-125_J6I0984B_015.dgn

11:19:20 AM

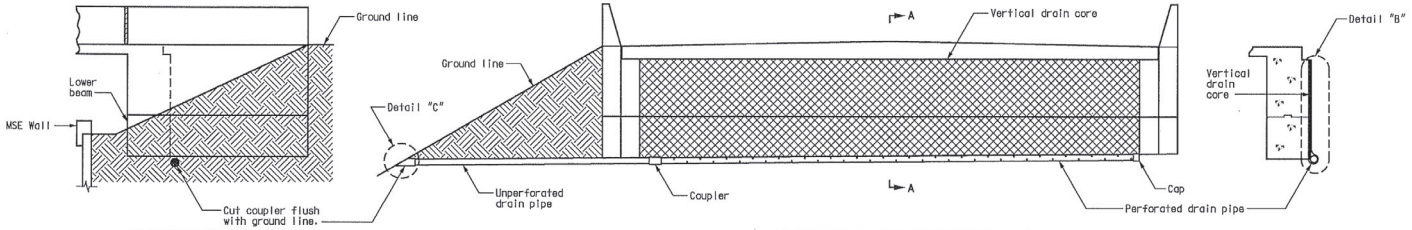

ELEVATION OF WING

ELEVATION AT ABUTMENT

SECTION A–A

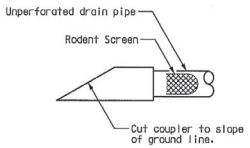

DETAIL "C"

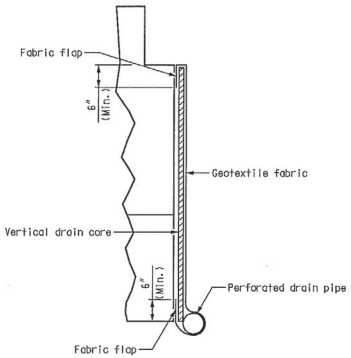

DETAIL "B"

Notes:
Drain pipe was 6" diameter corrugated metallic-coated steel pipe underdrain and 6" diameter corrugated polyethylene (PE) drain pipe.
Drain pipe placed at fill face of abutment and slope to lowest grade of ground line, also missing the lower beam of abutment by 1-1/2". (See elevation at abutment.)
Perforated pipe was placed at fill face side of the bottom of abutment and plain pipe was used where the vertical drain ends to the exit at ground line.
Coordinate placement of drain core and soil reinforcement strips at fill face abutment.

DATE 8/20/09
ROUTE I-70 | STATE MO
DISTRICT 6 | SHEET NO. BR16
COUNTY St. Louis City - MO
JOB NO. J6I0984B
CONTRACT ID. 100127-601
PROJECT NO. I-70-5(315)
BRIDGE NO. A6500

DESCRIPTION | DATE

MISSOURI HIGHWAYS AND TRANSPORTATION COMMISSION
105 WEST CAPITOL
JEFFERSON CITY, MO 65102
1-888-ASK-MODOT (1-888-275-6636)

HNTB
715 KIRK DRIVE
KANSAS CITY, MO 64105-1310
TELEPHONE (816) 472-1201
CERTIFICATE OF AUTHORITY NO. 001270

FINAL PLANS

REV.

Detailed JUL 2009
Checked JUL 2009

Note: This drawing is not to scale. Follow dimensions.

Sheet No. 16 of 125

VERTICAL DRAIN AT ABUTMENT

T:\de-proj\St_Louis_City\Construction\J6I0984B\Asbuilts\Bridge\B_A6500_016-125_J6I0984B_016.dgn

2:29:01 PM

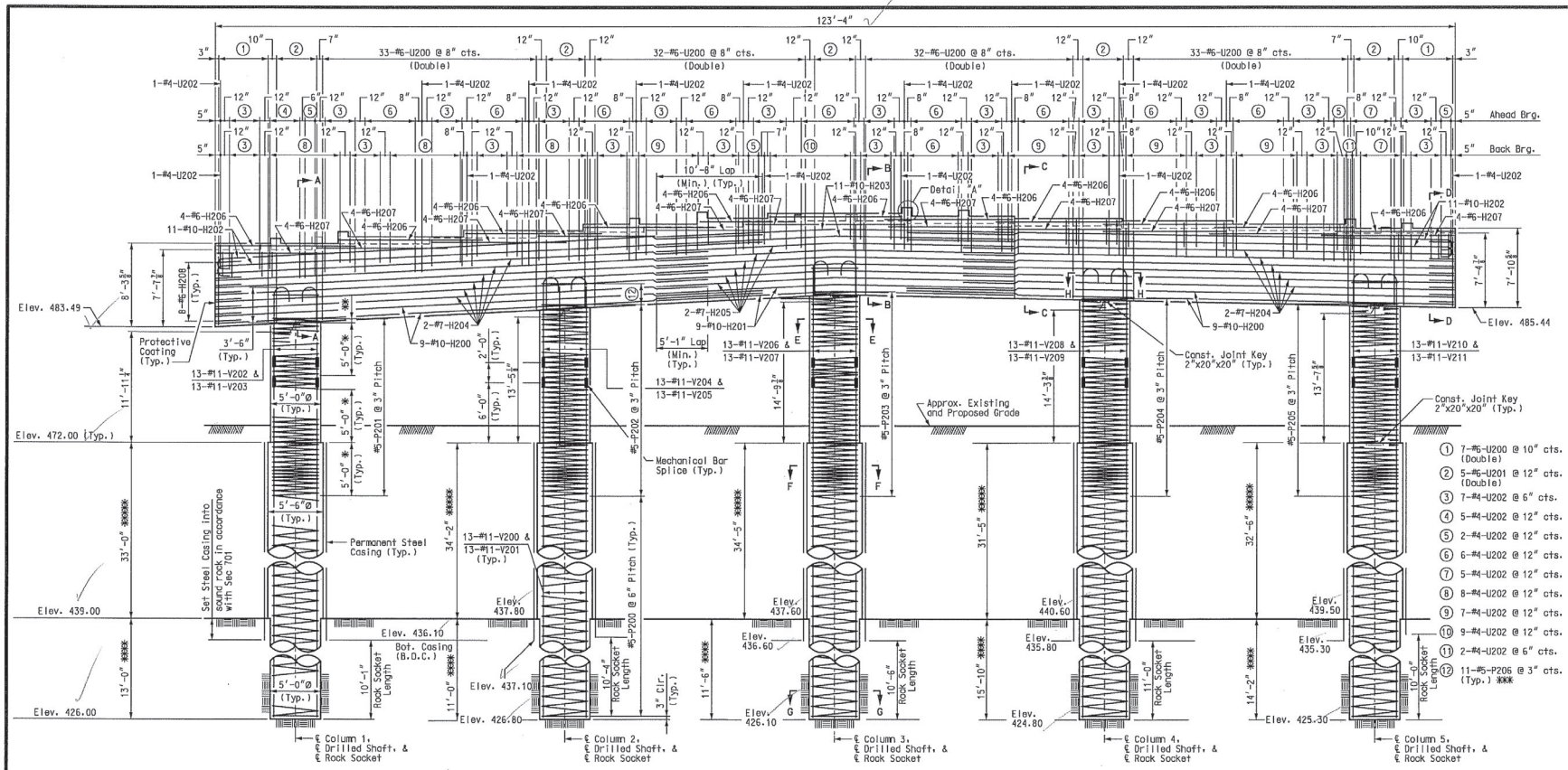

ELEVATION

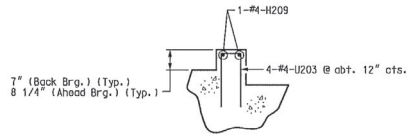

DETAIL "A"
(14 locations total)

GIRDER SEAT ELEVATIONS		
Girder	Back Brg.	Ahead Brg.
1	491.81	491.18
2	492.45	491.75
3	493.06	492.32
4	493.72	492.93
5	494.30	493.44
6	494.76	494.06
7	494.26	494.02
8	494.04	493.79
9	493.75	493.55
10	493.42	493.32
11	493.07	493.06
12	---	492.81

Notes:
An additional 4 feet was added to #11-V200, #11-V201, and #5-P200 lengths for possible change in drilled shaft or rock socket depth. This excess length was included in the reinforcement lap.
Sonic logging testing was performed on all drilled shafts and rock sockets.
The contractor used a mechanical bar splice for #11-V-Bars at the specified locations. The total bar lengths for bars indicated in the bill of reinforcing steel are determined based on the end of the bars being located at end of adjacent bar. No additional payment was made for any additional bar lengths required for the mechanical bar splices.
Mechanical bar splices were in accordance with Sec 706.
The hooks of V-Bars embedded in the beam cap were oriented inward. Bending the hooks outward, away from the column core, is not allowed.
The thickness of steel casing was meet all the requirements of Sec 701 with the minimum thickness being 3/8 inch. Thicker casing was not required for installation.
For Details of Type "N" PTFE Bearings, see Sheet No. 36.
For Substructure Quantity Table, see Sheet No. 19.

* Lapping of spiral reinforcement in this region is not permitted.
** Continue spiral bars to the bottom of the beam cap stirrup reinforcing bar.
*** Splice locations were staggered.
Anchorage of spiral reinforcement was provided by 1-1/2" extra turns of spiral bar at each end of spiral unit.
**** Pay Items Rock Socket (5 ft. 0 in. Dia.).
***** Pay Items Drilled Shaft (5 ft. 6 in. Dia.).
The cost of any required excavation to the top of the drilled shafts was considered completely covered by the contract unit price for Drilled Shaft (5 ft. 6 in. Dia.).
All reinforcing bars in the tops of substructure beams or caps were spaced to clear anchor rod wells for bearings by at least 1/2".
For Anchor Rod Setting Plans, see Sheet No. 35.
For Anchor Rod Well Details, see Sheet No. 35.
For plan view, see Sheet No. 18.
For Sections A-A, B-B, C-C, D-D, E-E, F-F, G-G, and H-H, see Sheet Nos. 18 and 19.

PIER 2 - ELEVATION

DATE 8/20/09
ROUTE I-70 | STATE MO
DISTRICT 6 | SHEET NO. BR17
COUNTY St. Louis City - MO
JOB NO. J6I0984B
CONTRACT ID. 100127-601
PROJECT NO. I-70-5(315)
BRIDGE NO. A6500

DESCRIPTION | DATE

MISSOURI HIGHWAYS AND TRANSPORTATION COMMISSION
105 WEST CAPITOL JEFFERSON CITY, MO 65102 1-888-ASK-MODOT (1-888-275-6636)

HNTB
715 KIRK DRIVE KANSAS CITY, MO 64105-1310 TELEPHONE (816) 472-1201 CERTIFICATE OF AUTHORITY NO. 001270

FINAL PLANS

Detailed JUL 2009
Checked JUL 2009

Note: This drawing is not to scale. Follow dimensions.

Sheet No. 17 of 125

REV.

T:\de-proj\St_Louis_City\Construction\J6I0984B\Asbuilts\Bridge\B_A6500_017-125_J6I0984B_017.dgn 11:05:24 AM

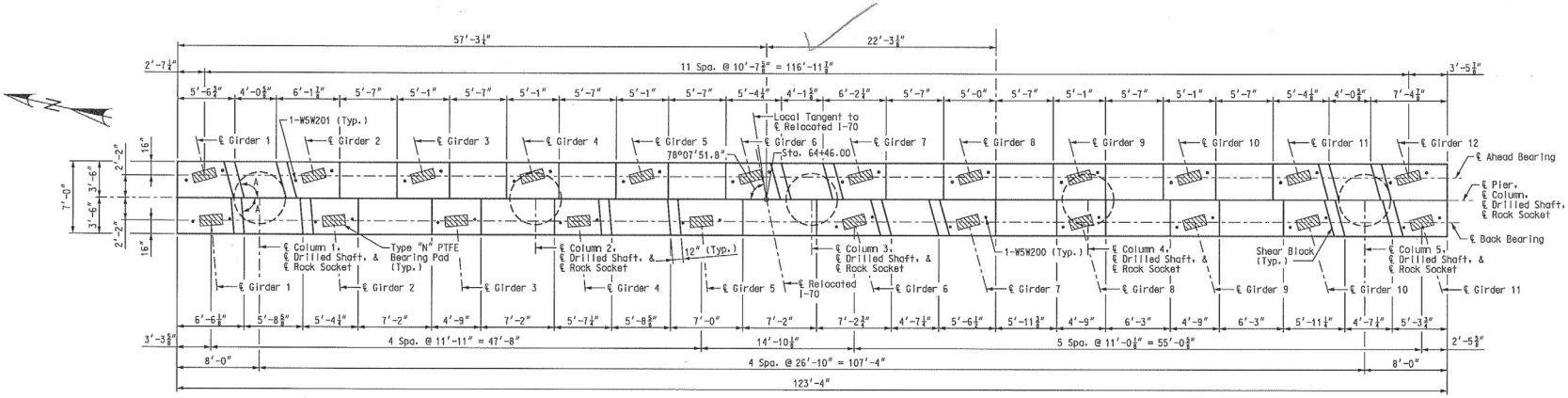

PLAN

SHEAR BLOCK ORIENTATION TABLE	
Location	A
Girders 1,2,4, & 5 (Back Brg.)	85°-07'-16.0"
Girders 6,7,10, & 11 (Back Brg.)	74°-43'-49.2"
Girders 1,2,6,7,11, & 12 (Ahead Brg.)	105°-16'-10.8"

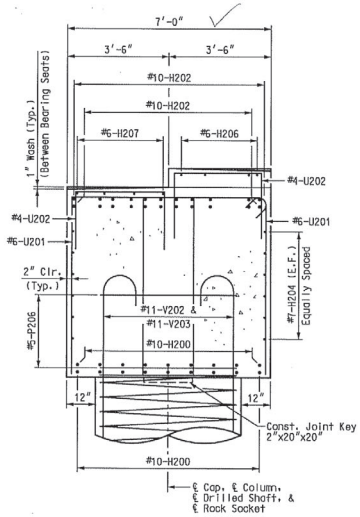

SECTION A-A

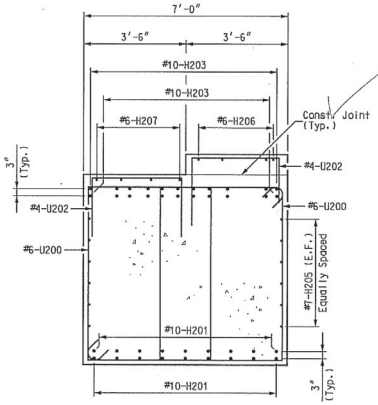

SECTION B-B

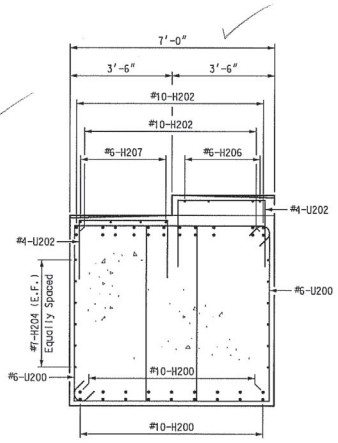

SECTION C-C

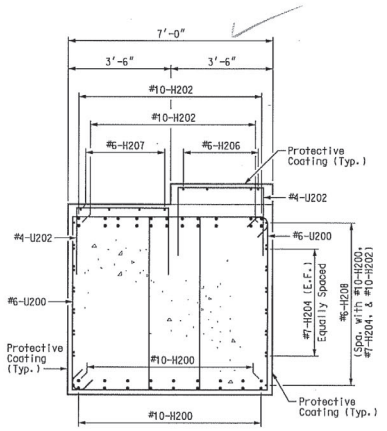

SECTION D-D

Notes:
For location of Sections A-A, B-B, C-C, and D-D, see Sheet No. 17.
Seal back face of beam, top of beam, ends of beam, and front face of beam with Protective Coating - Concrete Bents and Piers (Gray Epoxy).
For elevation view, see Sheet No. 17.

PIER 2 - PLAN AND DETAILS

DATE	8/20/09
ROUTE	I-70
STATE	MO
DISTRICT	6
SHEET NO.	BR18
COUNTY	St. Louis City - MO
JOB NO.	J6I0984B
CONTRACT ID.	100127-601
PROJECT NO.	I-70-5(315)
BRIDGE NO.	A6500

DESCRIPTION | DATE

MISSOURI HIGHWAYS AND TRANSPORTATION COMMISSION
105 WEST CAPITOL
JEFFERSON CITY, MO 65102
1-888-ASK-MODOT (1-888-275-6636)

HNTB
715 KIRK DRIVE
KANSAS CITY, MO 64105-1310
TELEPHONE (816) 472-1201
CERTIFICATE OF AUTHORITY NO. 001270

FINAL PLANS

Detailed JUL 2009
Checked JUL 2009

Note: This drawing is not to scale. Follow dimensions.

Sheet No. 18 of 125

T:\de-proj\St_Louis_City\Construction\J6I0984B\Asbuilts\Bridge\B_A6500_018-125_J6I0984B_018.dgn

11:21:45 AM

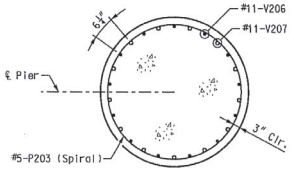

SECTION E-E
(5'-0" Diameter)

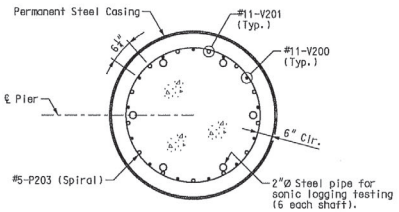

SECTION F-F
(5'-6" Diameter)

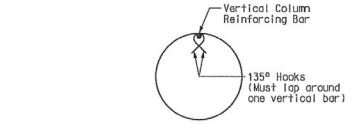

DETAIL OF SEISMIC
STIRRUP BAR (#5-P206)

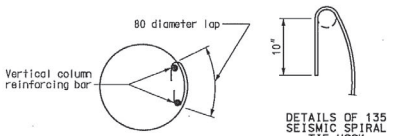

ANCHOR SPLICES IN SPIRAL AROUND VERTICAL BAR
(USE FOR INTERMEDIATE SPLICES OF SPIRALS)

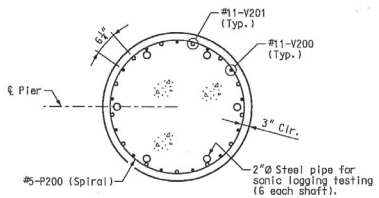

SECTION G-G
(5'-0" Diameter)

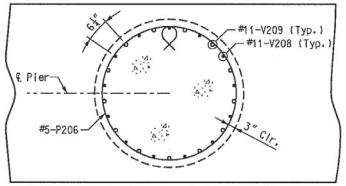

SECTION H-H

Note:
For location of Sections E-E, F-F, G-G, and H-H, see Sheet No. 17.

****** SUBSTRUCTURE QUANTITY TABLE FOR PIER 2

Item		Quantity
Drilled Shafts (5 ft. 6 in. Dia.)	linear foot	165.5
Rock Sockets (5 ft. 0 in. Dia.)	linear foot	65.5
Supplementary Television Camera Inspection	each	0
Foundation Inspection Holes	linear foot	115.5
Concrete Coring	linear foot	0
Sonic Logging Testing	each	5
Class B Concrete (Substructure)	cu. yard	295.0
Reinforcing Steel (Bridges)	pound	60,960
Mechanical Bar Splice	each	130
Reinforcing Steel (Epoxy Coated)	pound	44,430

****** These quantities are included in the final quantities table on Sheet No. 5.

PIER 2 - DETAILS

DATE 8/20/09
ROUTE I-70 | STATE MO
DISTRICT 6 | SHEET NO. BR19
COUNTY St. Louis City - MO
JOB NO. J6I0984B
CONTRACT ID. 100127-601
PROJECT NO. I-70-5(315)
BRIDGE NO. A6500

DESCRIPTION	DATE

MISSOURI HIGHWAYS AND TRANSPORTATION COMMISSION
MoDOT
105 WEST CAPITOL
JEFFERSON CITY, MO 65102
1-888-ASK-MODOT (1-888-275-6636)

HNTB
715 KIRK DRIVE
KANSAS CITY, MO 64105-1310
TELEPHONE (816) 472-1201
CERTIFICATE OF AUTHORITY NO. 001270

FINAL PLANS

REV.

Detailed JUL 2009
Checked JUL 2009

Note: This drawing is not to scale. Follow dimensions.

T:\de-proj\St_Louis_City\Construction\J6I0984B\Asbuilts\Bridge\B_A6500_019-125_J6I0984B_019.dgn

11:26:11 AM

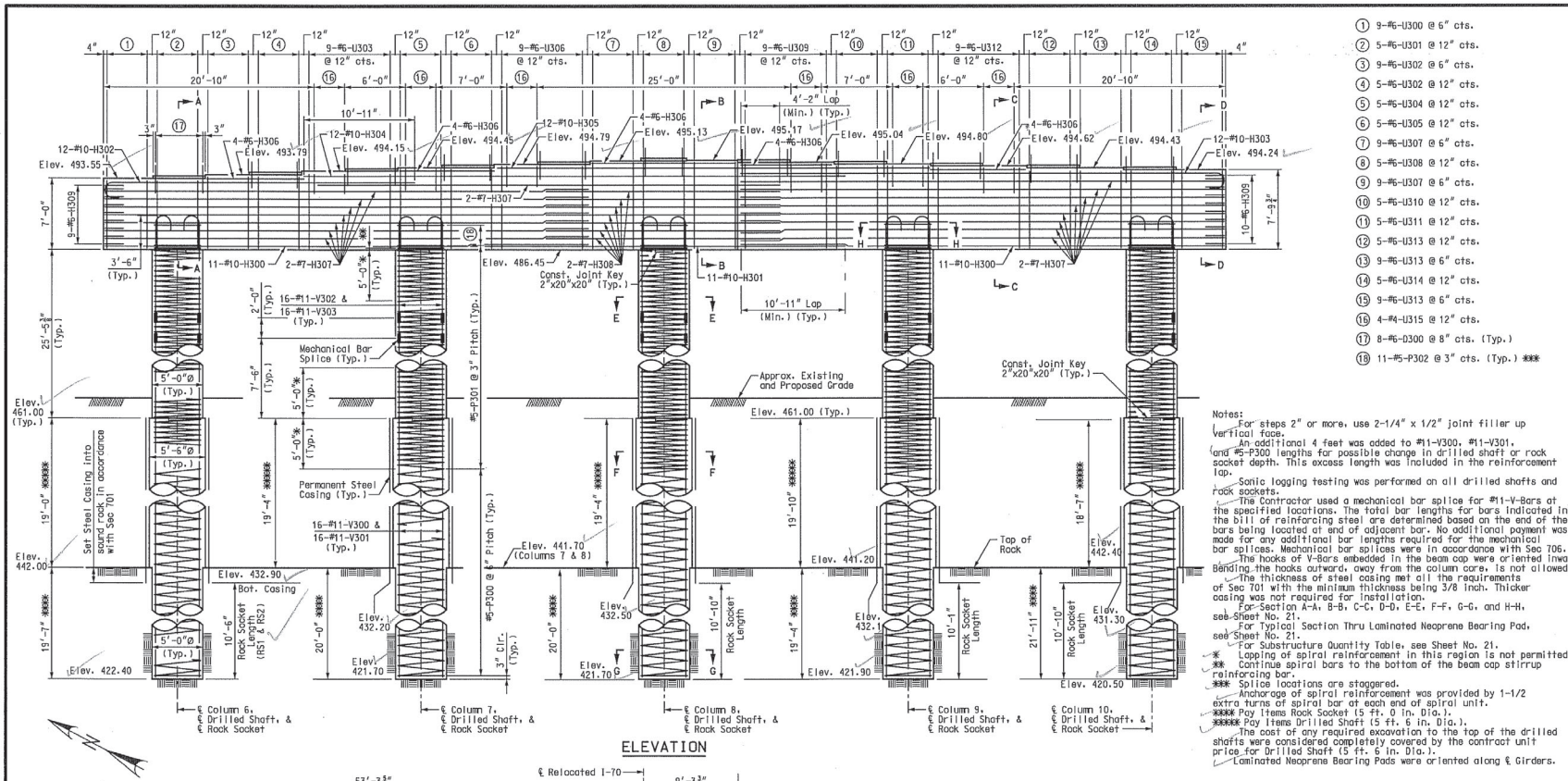

① 9-#6-U300 @ 6" cts.
② 5-#6-U301 @ 12" cts.
③ 9-#6-U302 @ 6" cts.
④ 5-#6-U302 @ 12" cts.
⑤ 5-#6-U304 @ 12" cts.
⑥ 5-#6-U305 @ 12" cts.
⑦ 9-#6-U307 @ 6" cts.
⑧ 5-#6-U308 @ 12" cts.
⑨ 9-#6-U307 @ 6" cts.
⑩ 5-#6-U310 @ 12" cts.
⑪ 5-#6-U311 @ 12" cts.
⑫ 5-#6-U313 @ 12" cts.
⑬ 9-#6-U313 @ 6" cts.
⑭ 5-#6-U314 @ 12" cts.
⑮ 9-#6-U313 @ 6" cts.
⑯ 4-#4-U315 @ 12" cts.
⑰ 8-#6-D300 @ 8" cts. (Typ.)
⑱ 11-#5-P302 @ 3" cts. (Typ.) ***

Notes:
For steps 2" or more, use 2-1/4" x 1/2" joint filler up vertical face.
An additional 4 feet was added to #11-V300, #11-V301, and #5-P300 lengths for possible change in drilled shaft or rock socket depth. This excess length was included in the reinforcement lap.
Sonic logging testing was performed on all drilled shafts and rock sockets.
The Contractor used a mechanical bar splice for #11-V-Bars at the specified locations. The total bar lengths for bars indicated in the bill of reinforcing steel are determined based on the end of the bars being located at end of adjacent bar. No additional payment was made for any additional bar lengths required for the mechanical bar splices. Mechanical bar splices were in accordance with Sec 706.
The hooks of V-Bars embedded in the beam cap were oriented inward. Bending the hooks outward, away from the column core, is not allowed.
The thickness of steel casing met all the requirements of Sec 701 with the minimum thickness being 3/8 inch. Thicker casing was not required for installation.
For Section A-A, B-B, C-C, D-D, E-E, F-F, G-G, and H-H, see Sheet No. 21.
For Typical Section Thru Laminated Neoprene Bearing Pad, see Sheet No. 21.
For Substructure Quantity Table, see Sheet No. 21.
* Lapping of spiral reinforcement in this region is not permitted.
** Continue spiral bars to the bottom of the beam cap stirrup reinforcing bar.
*** Splice locations are staggered.
Anchorage of spiral reinforcement was provided by 1-1/2 extra turns of spiral bar at each end of spiral unit.
**** Pay Items Rock Socket (5 ft. 0 in. Dia.).
***** Pay Items Drilled Shaft (5 ft. 6 in. Dia.).
The cost of any required excavation to the top of the drilled shafts were considered completely covered by the contract unit price for Drilled Shaft (5 ft. 6 in. Dia.).
Laminated Neoprene Bearing Pads were oriented along ℄ Girders.

PIER 3 – PLAN AND ELEVATION

Detailed JUL 2009
Checked JUL 2009

Note: This drawing is not to scale. Follow dimensions.

Sheet No. 20 of 125

DATE 8/20/09
ROUTE I-70 STATE MO
DISTRICT 6 SHEET NO. BR20
COUNTY St. Louis City - MO
JOB NO. J6I0984B
CONTRACT ID. 100127-601
PROJECT NO. I-70-5(315)
BRIDGE NO. A6500

DESCRIPTION | DATE

MISSOURI HIGHWAYS AND TRANSPORTATION COMMISSION
105 WEST CAPITOL
JEFFERSON CITY, MO 65102
1-888-ASK-MODOT (1-888-275-6636)

HNTB
715 KIRK DRIVE
KANSAS CITY, MO 64105-1310
TELEPHONE (816) 472-1201
CERTIFICATE OF AUTHORITY NO. 001270

FINAL PLANS

REV.

T:\de-proj\St_Louis_City\Construction\J6I0984B\Asbuilts\Bridge\B_A6500_020-125_J6I0984B_020.dgn 8:37:05 AM

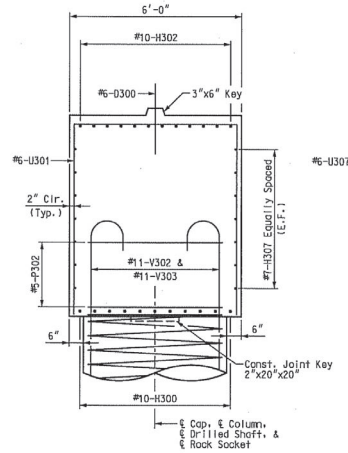

SECTION A-A

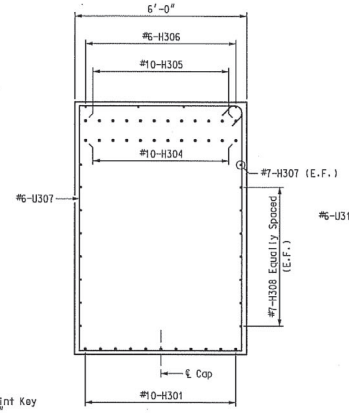

SECTION B-B

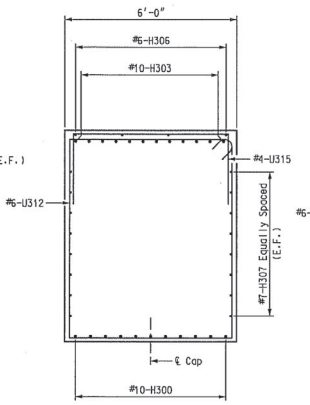

SECTION C-C

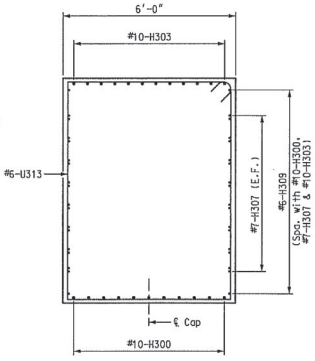

SECTION D-D

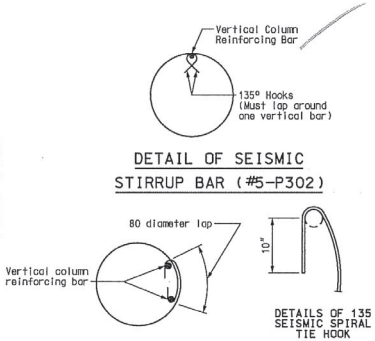

ANCHOR SPLICES IN SPIRAL AROUND VERTICAL BAR
(USE FOR INTERMEDIATE SPLICES OF SPIRALS)

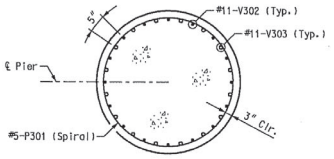

SECTION E-E
(5'-0" Diameter)

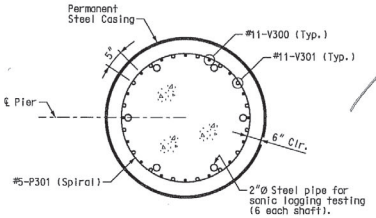

SECTION F-F
(5'-6" Diameter)

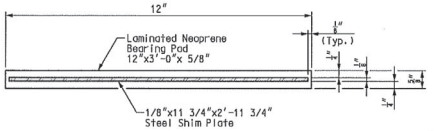

TYPICAL SECTION THRU LAMINATED NEOPRENE BEARING PAD
PIER 3
24 Required on Pier 3

Notes:
The required shim plate was placed between layers of elastomer and molded together to form an integral unit.
Shop drawings are not required for laminated neoprene bearings on structures without sole plates.

Note:
For location of Sections A-A, B-B, C-C, D-D, E-E, F-F, G-G, and H-H, see Sheet No. 20.

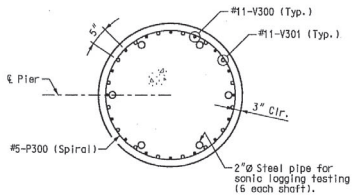

SECTION G-G
(5'-0" Diameter)

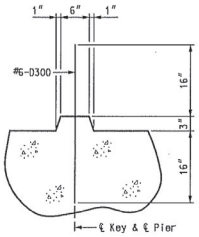

TYPICAL SECTION
THRU KEY

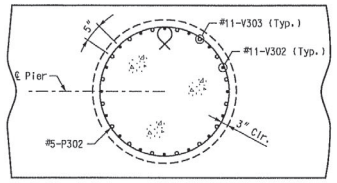

SECTION H-H

✻✻ SUBSTRUCTURE QUANTITY TABLE FOR PIER 3

Item		Quantity
Drilled Shafts (5 ft. 6 in. Dia.)	linear foot	96.0
Rock Sockets (5 ft. 0 in. Dia.)	linear foot	100.8
Supplementary Television Camera Inspection	each	0
Foundation Inspection Holes	linear foot	150.5
Concrete Coring	linear foot	0
Sonic Logging Testing	each	5
Class B Concrete (Substructure)	cu. yard	290.7
Reinforcing Steel (Bridges)	pound	103,610
Mechanical Bar Splice	each	160

✻✻ These quantities are included in the final quantities table on Sheet No. 5.

PIER 3 - DETAILS

Detailed JUL 2009
Checked JUL 2009

Note: This drawing is not to scale. Follow dimensions.

Sheet No. 21 of 125

DATE 8/20/09
ROUTE I-70 | STATE MO
DISTRICT 6 | SHEET NO. BR21
COUNTY St. Louis City - MO
JOB NO. J6I0984B
CONTRACT ID. 100127-601
PROJECT NO. I-70-5(315)
BRIDGE NO. A6500

DESCRIPTION | DATE

MISSOURI HIGHWAYS AND TRANSPORTATION COMMISSION
105 WEST CAPITOL
JEFFERSON CITY, MO 65102
1-888-ASK-MODOT (1-888-275-6636)

HNTB
715 KIRK DRIVE
KANSAS CITY, MO 64105-1310
TELEPHONE (816) 472-1201
CERTIFICATE OF AUTHORITY NO. 001270

FINAL PLANS

REV.

T:\de-proj\St_Louis_City\Construction\J6I0984B\Asbuilts\Bridge\B_A6500_021-125_J6I0984B_021.dgn
8:13:20 AM

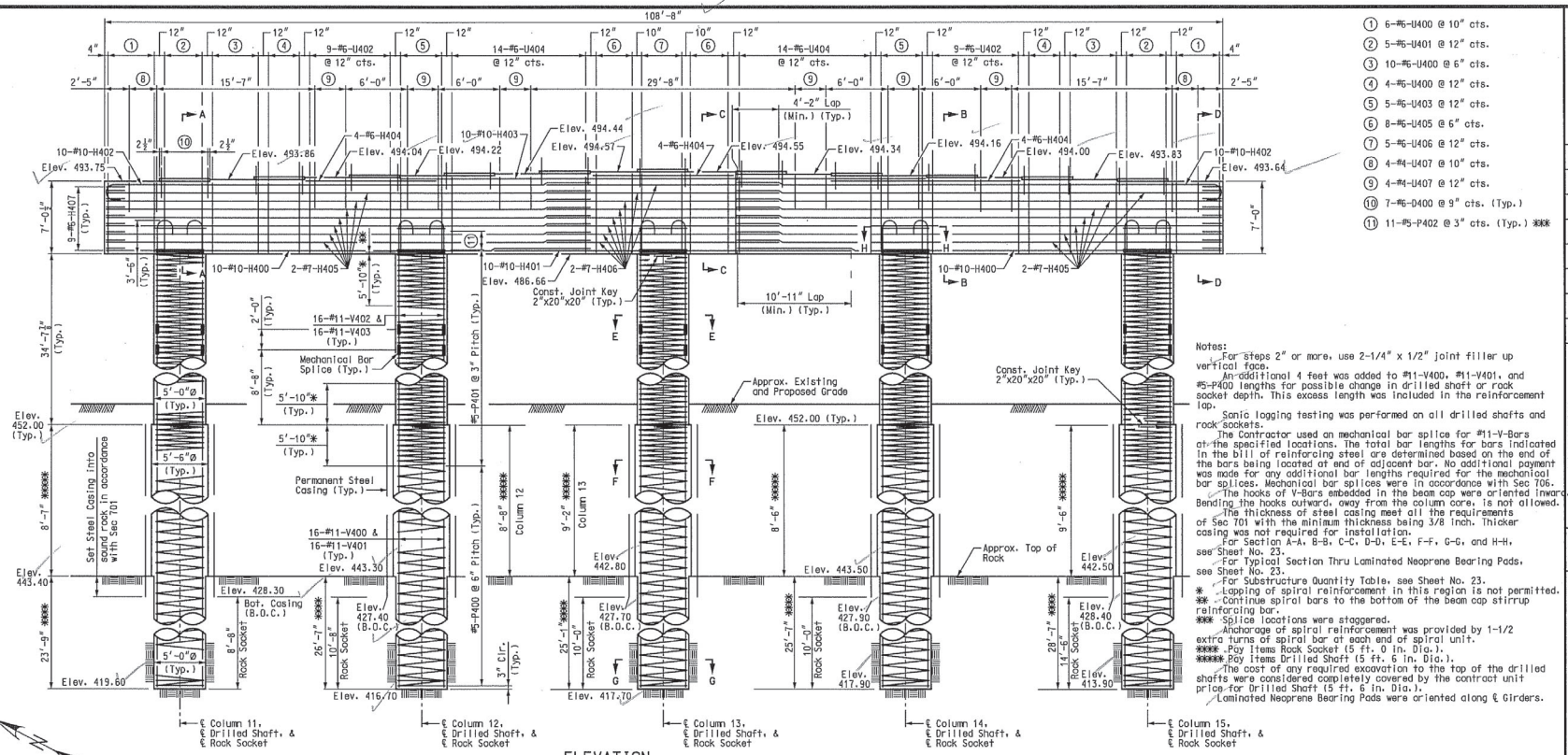

ELEVATION

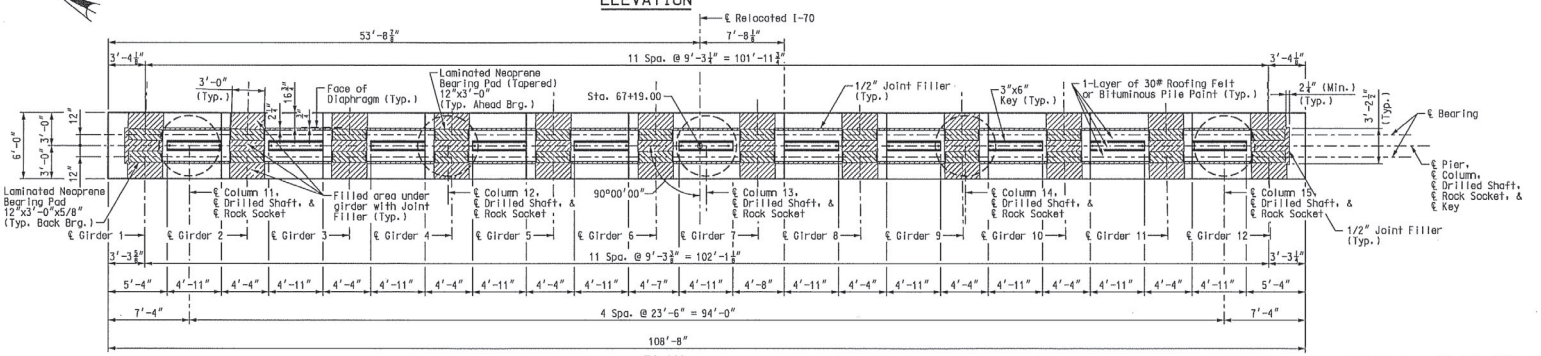

PLAN

Notes:
For steps 2" or more, use 2-1/4" x 1/2" joint filler up vertical face.
An additional 4 feet was added to #11-V400, #11-V401, and #5-P400 lengths for possible change in drilled shaft or rock socket depth. This excess length was included in the reinforcement lap.
Sonic logging testing was performed on all drilled shafts and rock sockets.
The Contractor used an mechanical bar splice for #11-V-Bars at the specified locations. The total bar lengths for bars indicated in the bill of reinforcing steel are determined based on the end of the bars being located at end of adjacent bar. No additional payment was made for any additional bar lengths required for the mechanical bar splices. Mechanical bar splices were in accordance with Sec 706.
The hooks of V-Bars embedded in the beam cap were oriented inward. Bending the hooks outward, away from the column core, is not allowed.
The thickness of steel casing meet all the requirements of Sec 701 with the minimum thickness being 3/8 inch. Thicker casing was not required for installation.
For Section A-A, B-B, C-C, D-D, E-E, F-F, G-G, and H-H, see Sheet No. 23.
For Typical Section Thru Laminated Neoprene Bearing Pads, see Sheet No. 23.
For Substructure Quantity Table, see Sheet No. 23.
* Lapping of spiral reinforcement in this region is not permitted.
** Continue spiral bars to the bottom of the beam cap stirrup reinforcing bar.
*** Splice locations were staggered.
Anchorage of spiral reinforcement was provided by 1-1/2 extra turns of spiral bar at each end of spiral unit.
**** Pay Items Rock Socket (5 ft. 0 in. Dia.).
***** Pay Items Drilled Shaft (5 ft. 6 in. Dia.).
The cost of any required excavation to the top of the drilled shafts were considered completely covered by the contract unit price for Drilled Shaft (5 ft. 6 in. Dia.).
Laminated Neoprene Bearing Pads were oriented along ℄ Girders.

PIER 4 – PLAN AND ELEVATION

DATE 8/20/09
ROUTE I-70 | STATE MO
DISTRICT 6 | SHEET NO. BR22
COUNTY St. Louis City - MO
JOB NO. J6I0984B
CONTRACT ID. 100127-601
PROJECT NO. I-70-5(315)
BRIDGE NO. A6500

DESCRIPTION | DATE

MISSOURI HIGHWAYS AND TRANSPORTATION COMMISSION
105 WEST CAPITOL
JEFFERSON CITY, MO 65102
1-888-ASK-MODOT (1-888-275-6636)

HNTB
715 KIRK DRIVE
KANSAS CITY, MO 64105-1310
TELEPHONE (816) 472-1201
CERTIFICATE OF AUTHORITY NO. 001270

FINAL PLANS

Detailed JUL 2009
Checked JUL 2009

Note: This drawing is not to scale. Follow dimensions.

REV.

T:\de-proj\St_Louis_City\Construction\J6I0984B\Asbuilts\Bridge\B_A6500_022-125_J6I0984B_022.dgn 8:48:09 AM

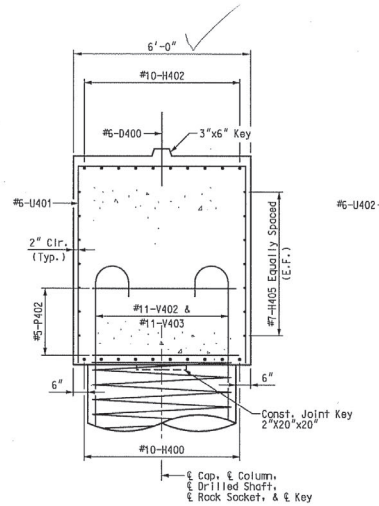

SECTION A-A

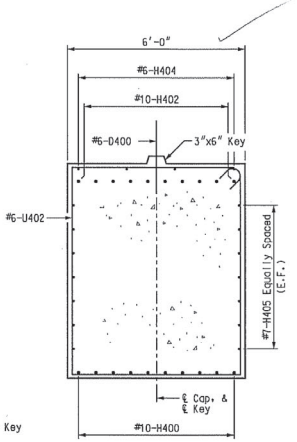

SECTION B-B

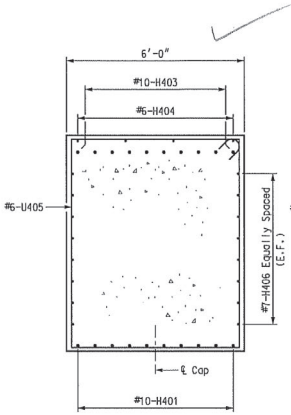

SECTION C-C

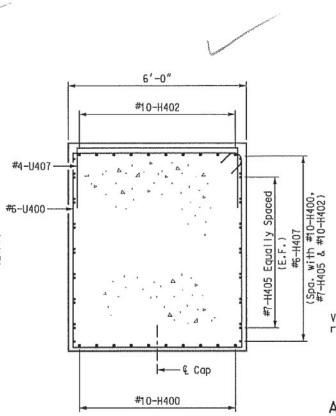

SECTION D-D

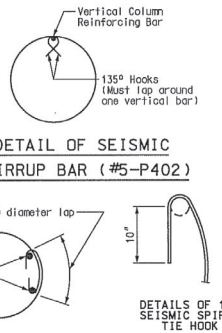

ANCHOR SPLICES IN SPIRAL AROUND VERTICAL BAR
(USE FOR INTERMEDIATE SPLICES OF SPIRALS)

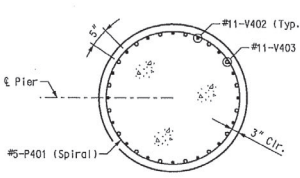

SECTION E-E
(5'-0" Diameter)

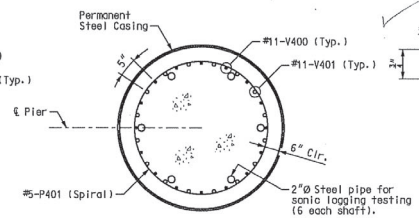

SECTION F-F
(5'-6" Diameter)

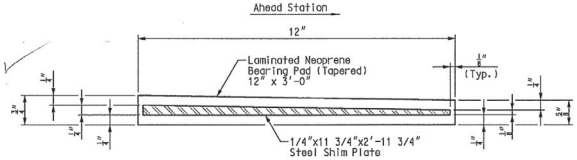

TYPICAL SECTION THRU
LAMINATED NEOPRENE BEARING PAD
PIER 4 (AHEAD BRG.)
(12 Required on Pier 4)

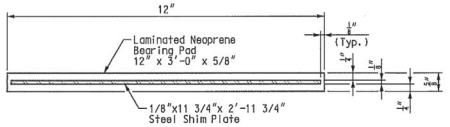

TYPICAL SECTION THRU
LAMINATED NEOPRENE BEARING PAD
PIER 4 (BACK BRG.)
(12 Required on Pier 4)

Notes:
The required shim plate was placed between layers of elastomer and molded together to form an integral unit.
Shop drawings are not required for laminated neoprene bearings on structures without sole plates.

Note: For location of Sections A-A, B-B, C-C, D-D, E-E, F-F, G-G, and H-H, see Sheet No. 22.

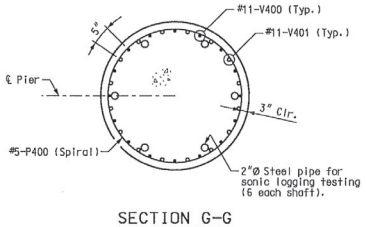

SECTION G-G
(5'-0" Diameter)

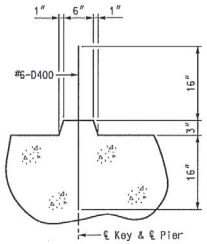

TYPICAL SECTION
THRU KEY

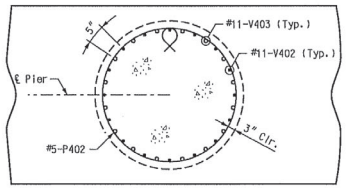

SECTION H-H

**SUBSTRUCTURE QUANTITY TABLE FOR PIER 4

Item		Quantity
Drilled Shafts (5 ft. 6 in. Dia.)	linear foot	44.5
Rock Sockets (5 ft. 0 in. Dia.)	linear foot	129.7
Supplementary Television Camera Inspection	each	0
Foundation Inspection Holes	linear foot	173.5
Concrete Coring	linear foot	0
Sonic Logging Testing	each	5
Class B Concrete (Substructure)	cu. yard	306.4
Reinforcing Steel (Bridges)	pound	105,290
Mechanical Bar Splice	each	160

** These quantities are included in the final quantities table on Sheet No. 5.

PIER 4 - DETAILS

Detailed JUL 2009
Checked JUL 2009

Note: This drawing is not to scale. Follow dimensions.

Sheet No. 23 of 125

T:\de-proj\St_Louis_City\Construction\J6I0984B\Asbuilts\Bridge\B_A6500_023-125_J6I0984B_023.dgn

11:38:57 AM

DATE 8/20/09
ROUTE I-70 | STATE MO
DISTRICT 6 | SHEET NO. BR23
COUNTY St. Louis City - MO
JOB NO. J6I0984B
CONTRACT ID. 100127-601
PROJECT NO. I-70-5(315)
BRIDGE NO. A6500

DESCRIPTION | DATE

MISSOURI HIGHWAYS AND TRANSPORTATION COMMISSION
105 WEST CAPITOL
JEFFERSON CITY, MO 65102
1-888-ASK-MODOT (1-888-275-6636)

HNTB
715 KIRK DRIVE
KANSAS CITY, MO 64105-1310
TELEPHONE (816) 472-1201
CERTIFICATE OF AUTHORITY NO. 001270

FINAL PLANS

REV.

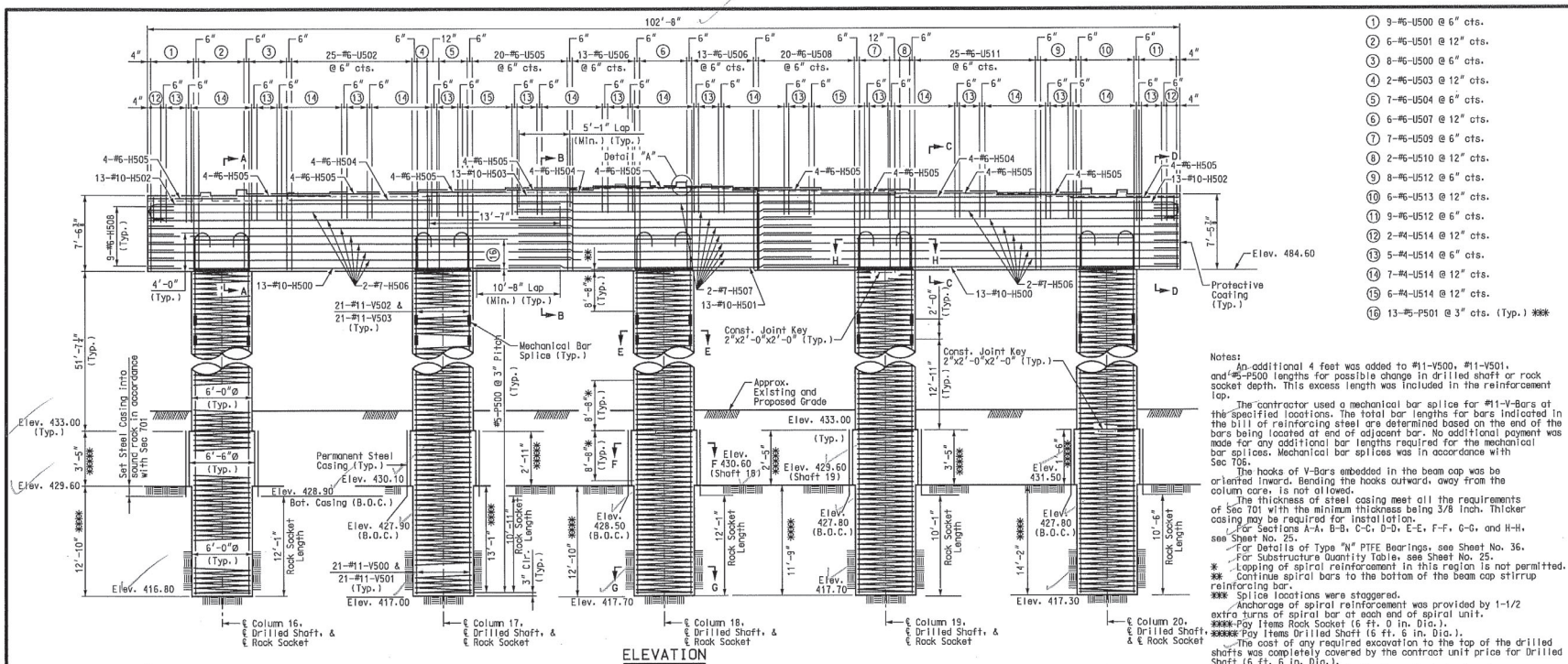

① 9-#6-U500 @ 6" cts.
② 6-#6-U501 @ 12" cts.
③ 8-#6-U500 @ 6" cts.
④ 2-#6-U503 @ 12" cts.
⑤ 7-#6-U504 @ 6" cts.
⑥ 6-#6-U507 @ 12" cts.
⑦ 7-#6-U509 @ 6" cts.
⑧ 2-#6-U510 @ 12" cts.
⑨ 8-#6-U512 @ 6" cts.
⑩ 6-#6-U513 @ 12" cts.
⑪ 9-#6-U512 @ 6" cts.
⑫ 2-#4-U514 @ 12" cts.
⑬ 5-#4-U514 @ 6" cts.
⑭ 7-#4-U514 @ 12" cts.
⑮ 6-#4-U514 @ 12" cts.
⑯ 13-#5-P501 @ 3" cts. (Typ.) ***

Notes:
An additional 4 feet was added to #11-V500, #11-V501, and #5-P500 lengths for possible change in drilled shaft or rock socket depth. This excess length was included in the reinforcement lap.
The contractor used a mechanical bar splice for #11-V-Bars at the specified locations. The total bar lengths for bars indicated in the bill of reinforcing steel are determined based on the end of the bars being located at end of adjacent bar. No additional payment was made for any additional bar lengths required for the mechanical bar splices. Mechanical bar splices was in accordance with Sec 706.
The hooks of V-Bars embedded in the beam cap was be oriented inward. Bending the hooks outward, away from the column core, is not allowed.
The thickness of steel casing meet all the requirements of Sec 701 with the minimum thickness being 3/8 inch. Thicker casing may be required for installation.
For Sections A-A, B-B, C-C, D-D, E-E, F-F, G-G, and H-H, see Sheet No. 25.
For Details of Type "N" PTFE Bearings, see Sheet No. 36.
For Substructure Quantity Table, see Sheet No. 25.
* Lapping of spiral reinforcement in this region is not permitted.
** Continue spiral bars to the bottom of the beam cap stirrup reinforcing bar.
*** Splice locations were staggered.
Anchorage of spiral reinforcement was provided by 1-1/2 extra turns of spiral bar at each end of spiral unit.
**** Pay Items Rock Socket (6 ft. 0 in. Dia.).
***** Pay Items Drilled Shaft (6 ft. 6 in. Dia.).
The cost of any required excavation to the top of the drilled shafts was completely covered by the contract unit price for Drilled Shaft (6 ft. 6 in. Dia.).
All reinforcing bars in the tops of substructure beams or caps were spaced to clear anchor rod wells for bearings by at least 1/2".
For Anchor Rod Setting Plans, see Sheet No. 35.
For Anchor Rod Well Details, see Sheet No. 35.
For Detail "A" see Sheet No. 25.

GIRDER SEAT ELEVATIONS

Girder	Back Brg.	Ahead Brg.
1	492.10	491.56
2	492.24	492.00
3	492.43	492.30
4	492.65	492.71
5	492.80	492.63
6	492.98	492.37
7	492.86	492.12
8	492.74	491.81
9	492.57	---
10	492.41	---
11	492.21	---
12	492.04	---

PIER 5 – PLAN AND ELEVATION

Detailed JUL 2009
Checked JUL 2009

Note: This drawing is not to scale. Follow dimensions.

Sheet No. 24 of 125

DATE 8/20/09
ROUTE I-70 STATE MO
DISTRICT 6 SHEET NO. BR24
COUNTY St. Louis City - MO
JOB NO. J6I0984B
CONTRACT ID. 100127-601
PROJECT NO. I-70-5(315)
BRIDGE NO. A6500

DESCRIPTION | DATE

MISSOURI HIGHWAYS AND TRANSPORTATION COMMISSION
105 WEST CAPITOL
JEFFERSON CITY, MO 65102
1-888-ASK-MODOT (1-888-275-6636)
HNTB
715 KIRK DRIVE
KANSAS CITY, MO 64105-1310
TELEPHONE (816) 472-1201
CERTIFICATE OF AUTHORITY NO. 001270

FINAL PLANS

REV.

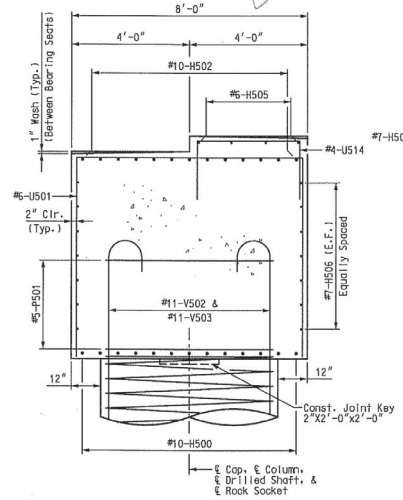

SECTION A-A

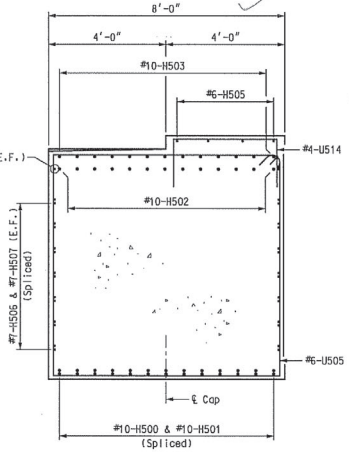

SECTION B-B

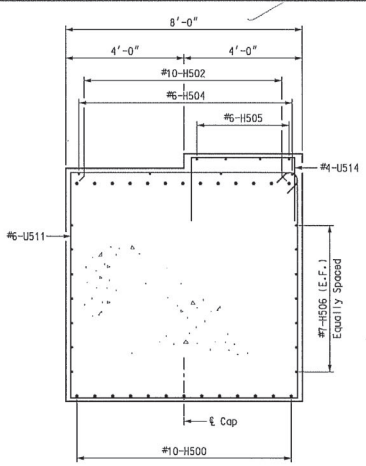

SECTION C-C

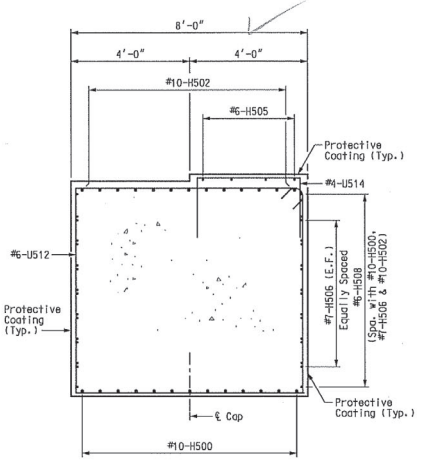

SECTION D-D

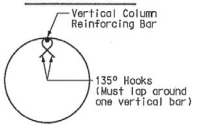

DETAIL OF SEISMIC
STIRRUP BAR (#5-P501)

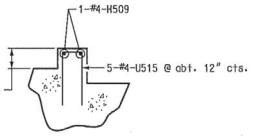

DETAIL "A"
(12 locations total)

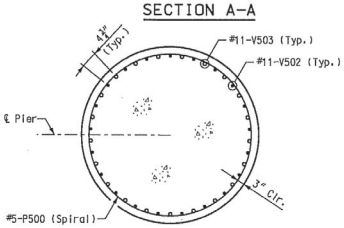

SECTION E-E
(6'-0" Diameter)

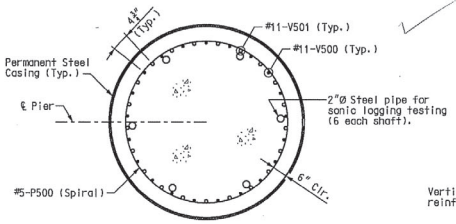

SECTION F-F
(6'-6" Diameter)

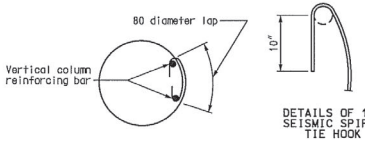

DETAILS OF 135
SEISMIC SPIRAL
TIE HOOK

ANCHOR SPLICES IN SPIRAL AROUND VERTICAL BAR
(USE FOR INTERMEDIATE SPLICES OF SPIRALS)

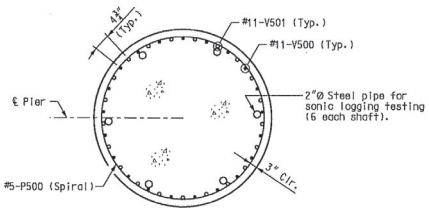

SECTION G-G
(6'-0" Diameter)

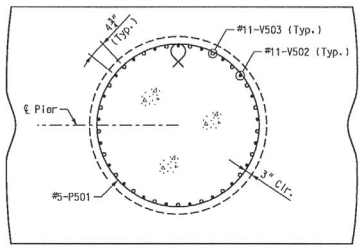

SECTION H-H

Notes:
For location of Sections A-A, B-B, C-C, D-D, E-E, F-F, G-G, and H-H, see Sheet No. 24.
Seal back face of beam, top of beam, ends of beam, and front face of beam with Protective Coating-Concrete Bents and Piers (Gray Epoxy).

✻✻ SUBSTRUCTURE QUANTITY TABLE FOR PIER 5

Item		Quantity
Drilled Shafts (6 ft. 6 in. Dia.)	linear foot	13.6
Rock Sockets (6 ft. 0 in. Dia.)	linear foot	64.9
Supplementary Television Camera Inspection	each	0
Foundation Inspection Holes	linear foot	117.0
Concrete Coring	linear foot	0
Sonic Logging Testing	each	5
Class B Concrete (Substructure)	cu. yard	506.7
Reinforcing Steel (Bridges)	pound	112,420
Mechanical Bar Splice	each	210
Reinforcing Steel (Epoxy Coated)	pound	30,350

✻✻ These quantities are included in the final quantities table on Sheet No. 5.

PIER 5 - DETAILS

Detailed JUL 2009
Checked JUL 2009

Note: This drawing is not to scale. Follow dimensions.

Sheet No. 25 of 125

T:\de-proj\St_Louis_City\Construction\J6I0984B\Asbuilts\Bridge\B_A6500_025-125_J6I0984B_025.dgn

11:43:10 AM

DATE 8/20/09
ROUTE I-70 STATE MO
DISTRICT 6 SHEET NO. BR25
COUNTY St. Louis City - MO
JOB NO. J6I0984B
CONTRACT ID. 100127-601
PROJECT NO. I-70-5(315)
BRIDGE NO. A6500

DESCRIPTION | DATE | REV.

FINAL PLANS

MISSOURI HIGHWAYS AND TRANSPORTATION COMMISSION
105 WEST CAPITOL
JEFFERSON CITY, MO 65102
1-888-ASK-MODOT (1-888-275-6636)

HNTB
715 KIRK DRIVE
KANSAS CITY, MO 64105-1310
TELEPHONE (816) 472-1201
CERTIFICATE OF AUTHORITY NO. 001270

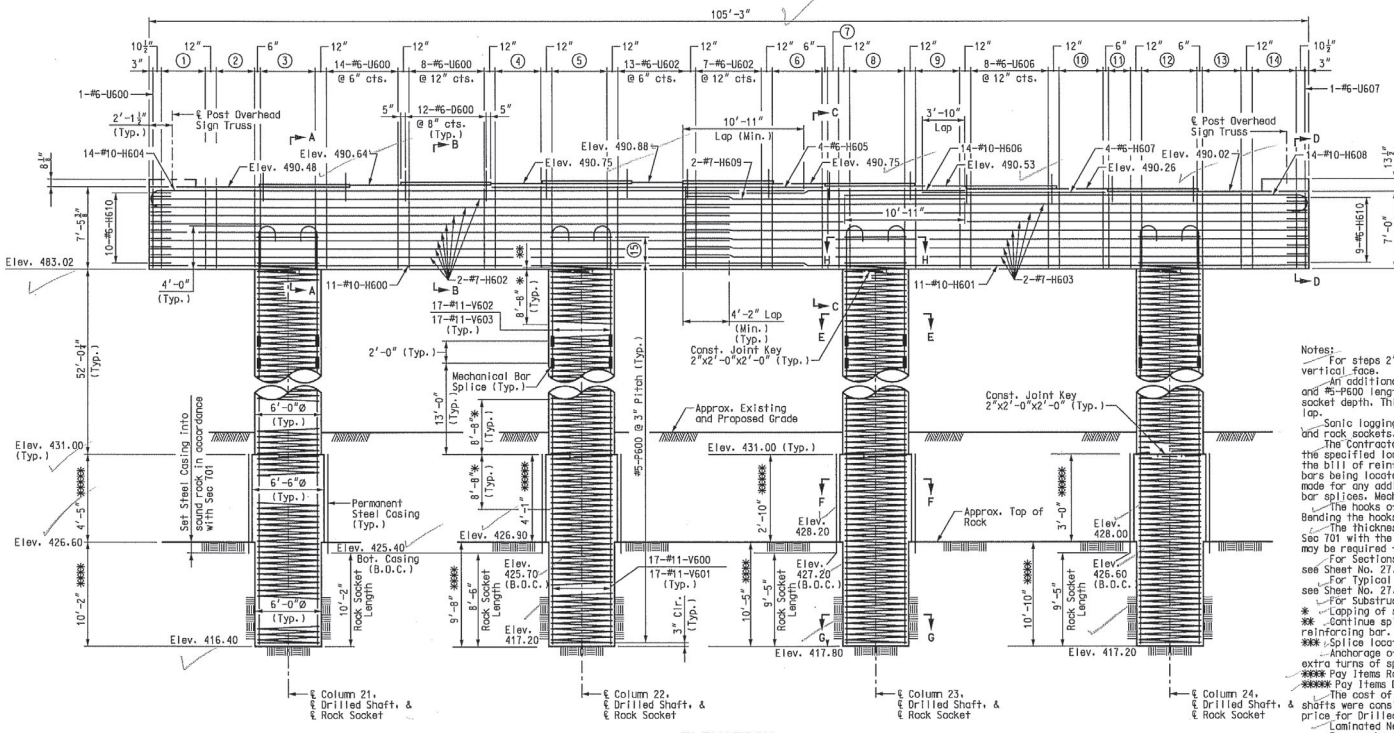

ELEVATION

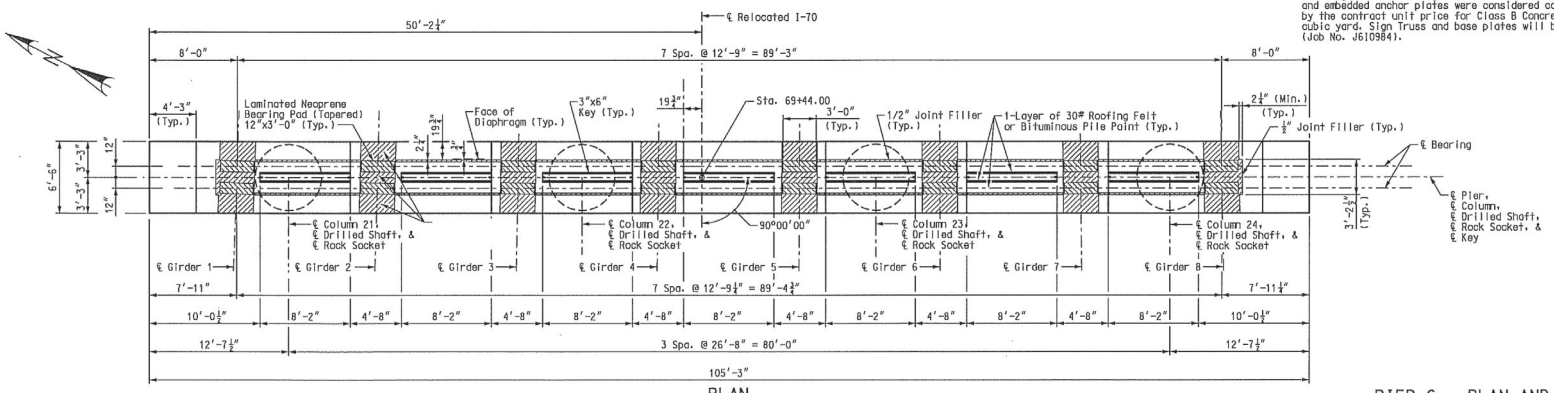

PLAN

1. 5-#6-U600 @ 12" cts.
2. 8-#6-U600 @ 6" cts.
3. 6-#6-U601 @ 12" cts.
4. 9-#6-U602 @ 6" cts.
5. 6-#6-U603 @ 12" cts.
6. 10-#6-U602 @ 6" cts.
7. 3-#6-U604 @ 6" cts.
8. 6-#6-U605 @ 12" cts.
9. 9-#6-U604 @ 6" cts.
10. 9-#6-U606 @ 6" cts.
11. 5-#6-U607 @ 6" cts.
12. 6-#6-U608 @ 12" cts.
13. 8-#6-U607 @ 6" cts.
14. 5-#6-U607 @ 12" cts.
15. 13-#5-P601 @ 3" cts. ***

Notes:
- For steps 2" or more, use 2-1/4" x 1/2" joint filler up vertical face.
- An additional 4 feet was added to #11-V600, #11-V601 and #5-P600 lengths for possible change in drilled shaft or rock socket depth. This excess length was included in the reinforcement lap.
- Sonic logging testing was performed on all drilled shafts and rock sockets.
- The Contractor used a mechanical bar splice for #11-V-Bars at the specified locations. The total bar lengths for bars indicated in the bill of reinforcing steel are determined based on the end of the bars being located at end of adjacent bar. No additional payment was made for any additional bar lengths required for the mechanical bar splices. Mechanical bar splices was in accordance with Sec 706.
- The hooks of V-Bars embedded in the beam cap were oriented inward Bending the hooks outward, away from the column core, is not allowed.
- The thickness of steel casing meet all the requirements of Sec 701 with the minimum thickness being 3/8 inch. Thicker casing may be required for installation.
- For Sections A-A, B-B, C-C, D-D, E-E, F-F, G-G, and H-H, see Sheet No. 27.
- For Typical Section Thru Laminated Neoprene Bearing Pad, see Sheet No. 27.
- For Substructure Quantity Table, see Sheet No. 27.

* Lapping of spiral reinforcement in this region is not permitted.

** Continue spiral bars to the bottom of the beam cap stirrup reinforcing bar.

*** Splice locations were staggered.

**** Anchorage of spiral reinforcement was provided by 1-1/2 extra turns of spiral bar at each end of spiral unit.

***** Pay Items Rock Socket (6 ft. 0 in. Dia.).

****** Pay Items Drilled Shaft (6 ft. 6 in. Dia.).

- The cost of any required excavation to the top of the drilled shafts were considered completely covered by the contract unit price for Drilled Shaft (6 ft. 6 in. Dia.).
- Laminated Neoprene Bearing Pads were oriented along ℄ Girders.
- For overhead sign truss pedestal details, see Sheet No. 27.
- Sign truss anchorages, which include anchor rods, nuts, washers, and embedded anchor plates were considered completely covered by the contract unit price for Class B Concrete (Substructure) per cubic yard. Sign Truss and base plates will be by Others (Job No. J610984).

PIER 6 – PLAN AND ELEVATION

Detailed JUL 2009
Checked JUL 2009

Note: This drawing is not to scale. Follow dimensions.

DATE 8/20/09
ROUTE I-70 | STATE MO
DISTRICT 6 | SHEET NO. BR26
COUNTY St. Louis City - MO
JOB NO. J610984B
CONTRACT ID. 100127-601
PROJECT NO. I-70-5(315)
BRIDGE NO. A6500

DESCRIPTION | DATE

MISSOURI HIGHWAYS AND TRANSPORTATION COMMISSION
105 WEST CAPITOL
JEFFERSON CITY, MO 65102
1-888-ASK-MODOT (1-888-275-6636)
HNTB
715 KIRK DRIVE
KANSAS CITY, MO 64105-1310
TELEPHONE (816) 472-1201
CERTIFICATE OF AUTHORITY NO. 001270

FINAL PLANS

REV.

T:\de-proj\St_Louis_City\Construction\J610984B\Asbuilts\Bridge\B_A6500_026-125_J610984B_026.dgn
8:58:03 AM

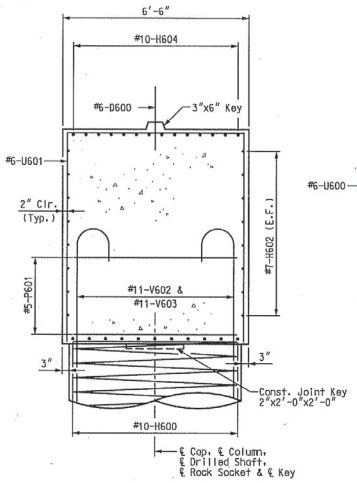

SECTION A–A

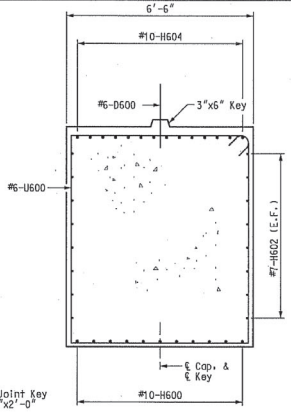

SECTION B–B

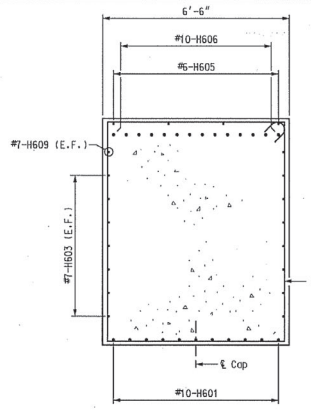

SECTION C–C

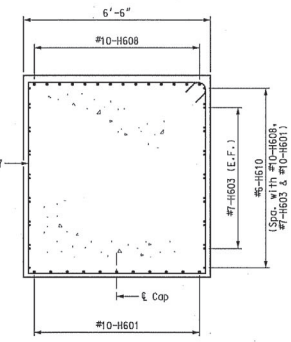

SECTION D–D
(Pedestal not shown)

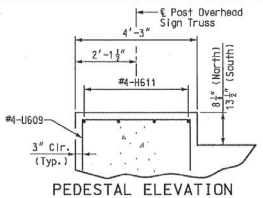

PEDESTAL ELEVATION

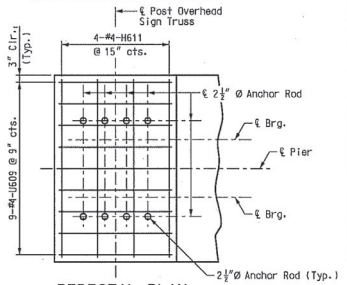

PEDESTAL PLAN

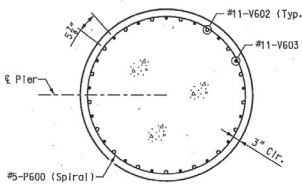

SECTION E–E
(6'-0" Diameter)

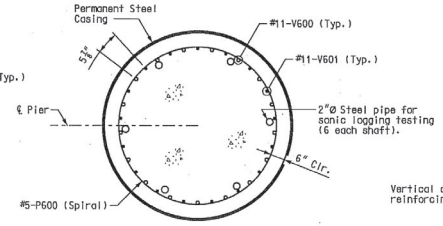

SECTION F–F
(6'-6" Diameter)

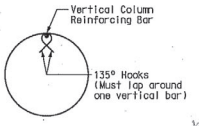

DETAIL OF SEISMIC STIRRUP BAR (#5-P601)

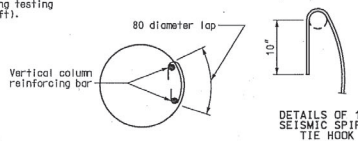

ANCHOR SPLICES IN SPIRAL AROUND VERTICAL BAR
(USE FOR INTERMEDIATE SPLICES OF SPIRALS)

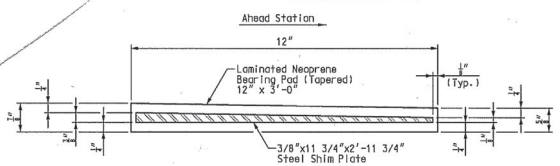

TYPICAL SECTION THRU LAMINATED NEOPRENE BEARING PAD
PIER 6
16 Required on Pier 6

Notes:
The required shim plate was placed between layers of elastomer and molded together to form an integral unit.
Shop drawings are not required for laminated neoprene bearings on structures without sole plates.

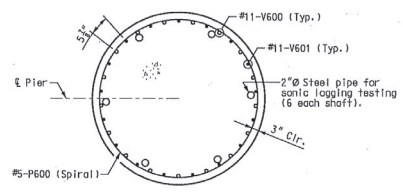

SECTION G–G
(6'-0" Diameter)

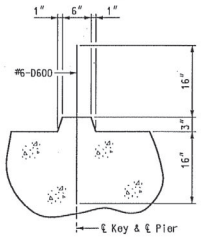

TYPICAL SECTION
THRU KEY

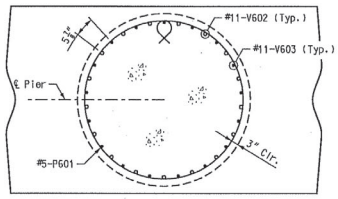

SECTION H–H

Notes:
For location of Sections A-A, B-B, C-C, D-D, E-E, F-F, G-G, and H-H, see Sheet No. 26.
For Anchor rod setting plan, see Sheet No. 35.

✻✻ SUBSTRUCTURE QUANTITY TABLE FOR PIER 6

Item		Quantity
Drilled Shafts (6 ft. 6 in. Dia.)	linear foot	14.3
Rock Sockets (6 ft. 0 in. Dia.)	linear foot	41.1
Supplementary Television Camera Inspection	each	0
Foundation Inspection Holes	linear foot	98.5
Concrete Coring	linear foot	0
Sonic Logging Testing	each	4
Class B Concrete (Substructure)	cu. yard	409.3
Reinforcing Steel (Bridges)	pound	103,720
Mechanical Bar Splice	each	136

✻✻ These quantities are included in the final quantities table on Sheet No. 5.

PIER 6 – DETAILS

DATE 8/20/09
ROUTE I-70 | STATE MO
DISTRICT 6 | SHEET NO. BR27
COUNTY St. Louis City – MO
JOB NO. J6I0984B
CONTRACT ID. 100127-601
PROJECT NO. I-70-5(315)
BRIDGE NO. A6500

DESCRIPTION | DATE

MISSOURI HIGHWAYS AND TRANSPORTATION COMMISSION
105 WEST CAPITOL
JEFFERSON CITY, MO 65102
1-888-ASK-MODOT (1-888-275-6636)

HNTB
715 KIRK DRIVE
KANSAS CITY, MO 64105-1310
TELEPHONE (816) 472-1201
CERTIFICATE OF AUTHORITY NO. 001270

FINAL PLANS

Detailed JUL 2009
Checked JUL 2009

Note: This drawing is not to scale. Follow dimensions.

T:\de-proj\St_Louis_City\Construction\J6I0984B\Asbuilts\Bridge\B_A6500_027-125_J6I0984B_027.dgn
8:14:42 AM

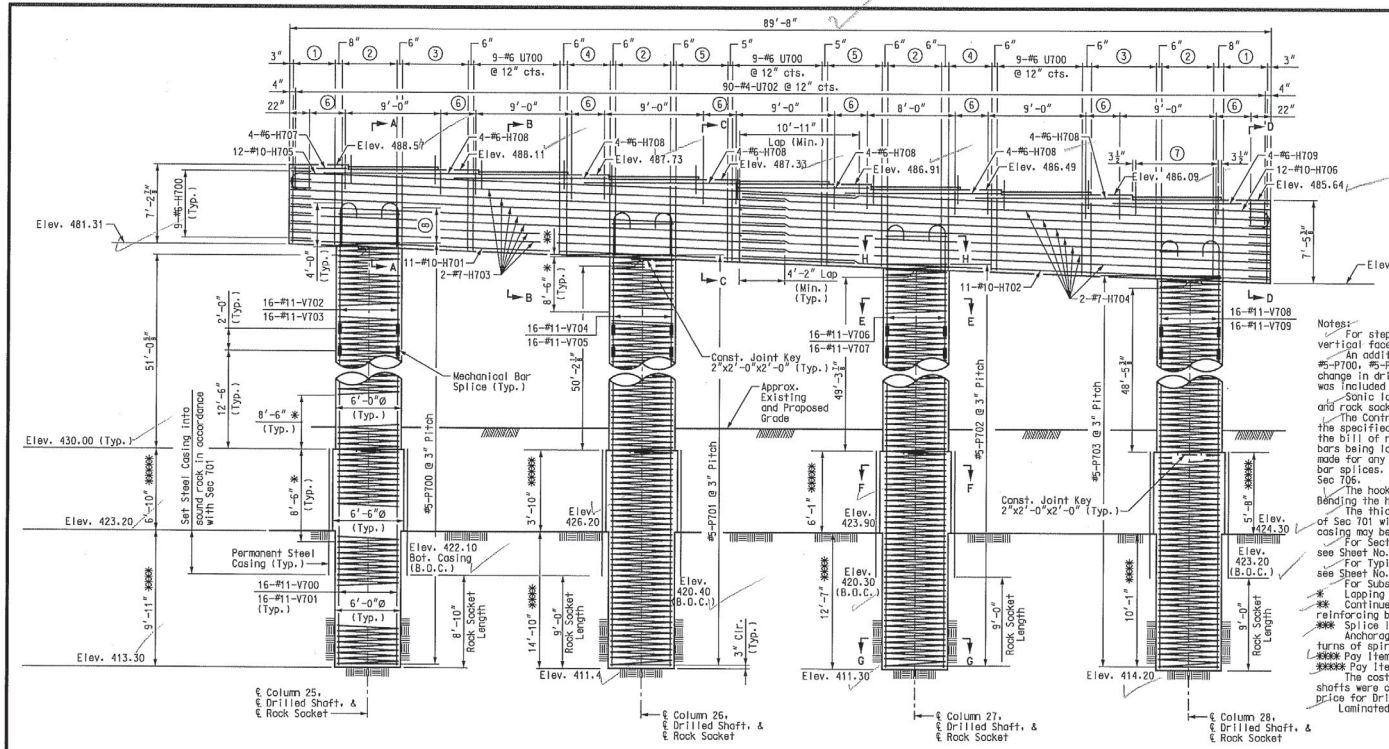

ELEVATION

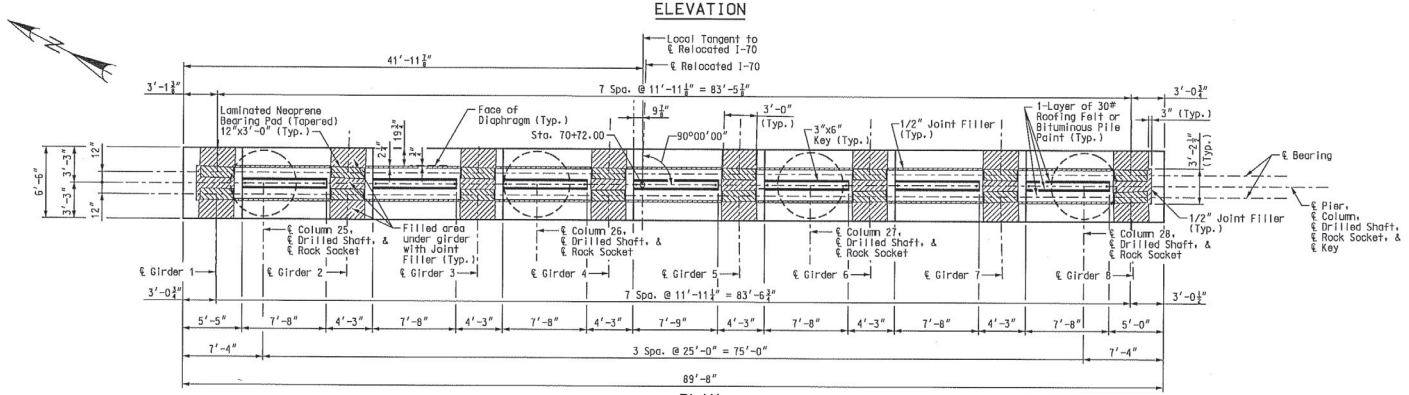

PLAN

Notes:
For steps 2" or more, use 2-1/4" x 1/2" joint filler up vertical face.
An additional 4 feet was added to #11-V700, #11-V701, #5-P700, #5-P701, #5-P702, and #5-P703 lengths for possible change in drilled shaft or rock socket depth. This excess length was included in the reinforcement lap.
Sonic logging testing was performed on all drilled shafts and rock sockets.
The Contractor used a mechanical bar splice for #11-V-Bars at the specified locations. The total bar lengths for bars indicated in the bill of reinforcing steel are determined based on the end of the bars being located at end of adjacent bar. No additional payment was made for any additional bar lengths required for the mechanical bar splices. Mechanical bar splices were in accordance with Sec 706.
The hooks of V-Bars embedded in the beam cap were oriented inward. Bending the hooks outward, away from the column core, is not allowed.
The thickness of steel casing meet all the requirements of Sec 701 with the minimum thickness being 3/8 inch. Thicker casing may be required for installation.
For Sections A-A, B-B, C-C, D-D, E-E, F-F, G-G, and H-H, see Sheet No. 29.
For Typical Section Thru Laminated Neoprene Bearing Pad, see Sheet No. 29.
For Substructure Quantity Table, see Sheet No. 29.
* Lapping of spiral reinforcement in this region was not permitted.
** Continue spiral bars to the bottom of the beam cap stirrup reinforcing bar.
*** Splice locations were staggered.
Anchorage of spiral reinforcement was provided by 1-1/2 extra turns of spiral bar at each end of spiral unit.
**** Pay Items Rock Socket (6 ft. 0 in. Dia.).
***** Pay Items Drilled Shaft (6 ft. 6 in. Dia.).
The cost of any required excavation to the top of the drilled shafts were considered completely covered by the contract unit price for Drilled Shaft (6 ft. 6 in. Dia.).
Laminated Neoprene Bearing Pads were oriented along ℄ Girders.

① 7-#6-U700 @ 8" cts.
② 6-#6-U701 @ 12" cts.
③ 13-#6-U700 @ 6" cts.
④ 9-#6-U700 @ 6" cts.
⑤ 11-#6-U700 @ 6" cts.
⑥ 4-#4-U702 @ 12" cts.
⑦ 11-#6-D700 @ 8½" cts. (Typ.)
⑧ 13-#5 P704 @ 3" cts. (Typ.) ***

PIER 7 – PLAN AND ELEVATION

Detailed JUL 2009
Checked JUL 2009

Note: This drawing is not to scale. Follow dimensions.

Sheet No. 28 of 125

T:\de-proj\St_Louis_City\Construction\J6I0984B\Asbuilts\Bridge\B_A6500_028-125_J6I0984B_028.dgn

9:01:16 AM

8/20/09

DESCRIPTION | DATE

DATE 8/20/09
ROUTE I-70 | STATE MO
DISTRICT 6 | SHEET NO. BR28
COUNTY St. Louis City - MO
JOB NO. J6I0984B
CONTRACT ID. 100127-601
PROJECT NO. I-70-5(315)
BRIDGE NO. A6500

MISSOURI HIGHWAYS AND TRANSPORTATION COMMISSION
105 WEST CAPITOL
JEFFERSON CITY, MO 65102
1-888-ASK-MODOT (1-888-275-6636)

HNTB
715 KIRK DRIVE
KANSAS CITY, MO 64105-1310
TELEPHONE (816) 472-1201
CERTIFICATE OF AUTHORITY NO. 000170

FINAL PLANS

REV.

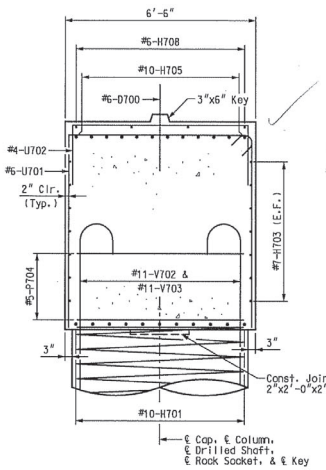

SECTION A-A

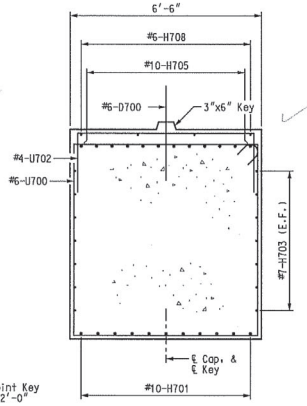

SECTION B-B

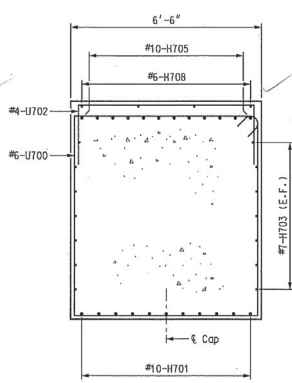

SECTION C-C

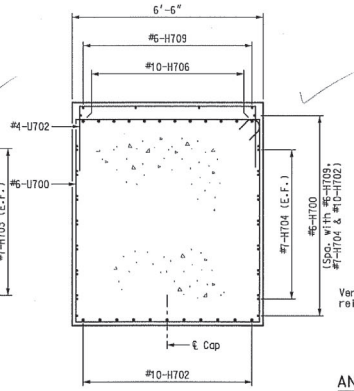

SECTION D-D

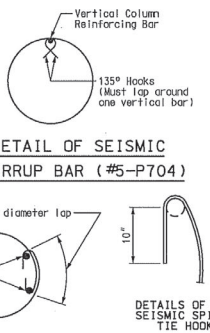

ANCHOR SPLICES IN SPIRAL AROUND VERTICAL BAR
(USE FOR INTERMEDIATE SPLICES OF SPIRALS)

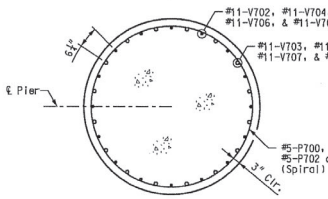

SECTION E-E
(6'-0" Diameter)

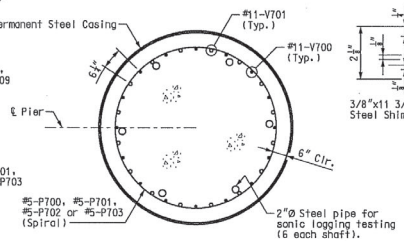

SECTION F-F
(6'-6" Diameter)

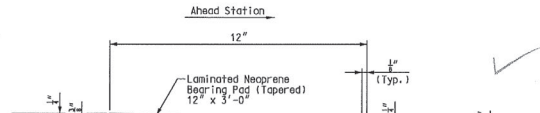

TYPICAL SECTION THRU
LAMINATED NEOPRENE BEARING PAD
PIER 7 (BACK BRG.)
(8 Required on Pier 7)

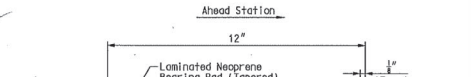

TYPICAL SECTION THRU
LAMINATED NEOPRENE BEARING PAD
PIER 7 (AHEAD BRG.)
(8 Required on Pier 7)

Notes:
The required shim plate was placed between layers of elastomer and molded together to form an integral unit.
Shop drawings are not required for laminated neoprene bearings on structures without sole plates.

Note:
For location of Sections A-A, B-B, C-C, D-D, E-E, F-F, G-G, and H-H, see Sheet No. 28.

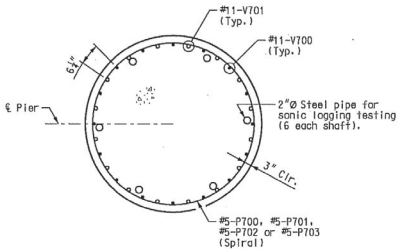

SECTION G-G
(6'-0" Diameter)

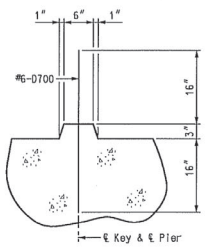

TYPICAL SECTION
THRU KEY

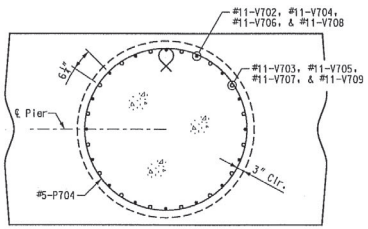

SECTION H-H

**SUBSTRUCTURE QUANTITY TABLE FOR PIER 7

Item		Quantity
Drilled Shafts (6 ft. 6 in. Dia.)	linear foot	22.4
Rock Sockets (6 ft. 0 in. Dia.)	linear foot	47.4
Supplementary Television Camera Inspection	each	0
Foundation Inspection Holes	linear foot	96.5
Concrete Coring	linear foot	0
Sonic Logging Testing	each	4
Class B Concrete (Substructure)	cu. yard	365.2
Reinforcing Steel (Bridges)	pound	95,760
Mechanical Bar Splice	each	128

** These quantities are included in the final quantities table on Sheet No. 5.

PIER 7 - DETAILS

Detailed JUL 2009
Checked JUL 2009

Note: This drawing is not to scale. Follow dimensions.

Sheet No. 29 of 125

T:\de-proj\St_Louis_City\Construction\J6I0984B\Asbuilts\Bridge\B_A6500_029-125_J6I0984B_029.dgn

11:48:33 AM

DATE 8/20/09
ROUTE I-70 | STATE MO
DISTRICT 6 | SHEET NO. BR29
COUNTY St. Louis City - MO
JOB NO. J6I0984B
CONTRACT ID. 100127-601
PROJECT NO. I-70-5(315)
BRIDGE NO. A6500

DESCRIPTION | DATE

MISSOURI HIGHWAYS AND TRANSPORTATION COMMISSION
105 WEST CAPITOL
JEFFERSON CITY, MO 65102
1-888-ASK-MODOT (1-888-275-6636)

HNTB
715 KIRK DRIVE
KANSAS CITY, MO 64105-1310
TELEPHONE (816) 472-1201
CERTIFICATE OF AUTHORITY NO. 001270

FINAL PLANS

REV.

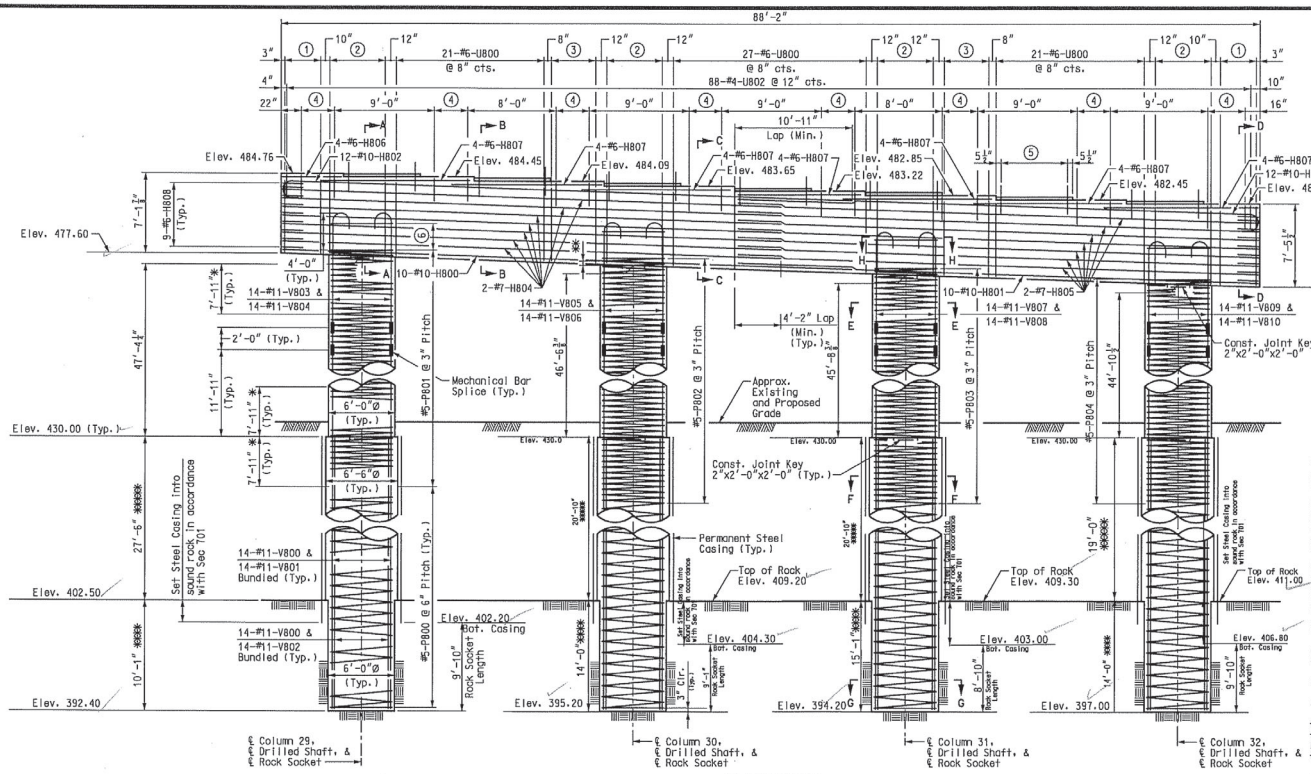

ELEVATION

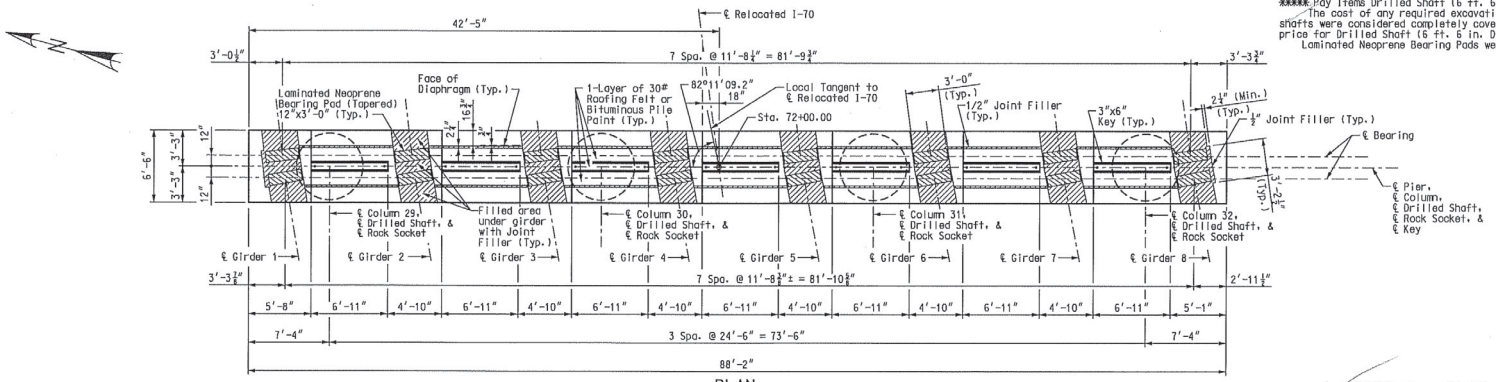

PLAN

Notes:
For steps 2" or more, use 2-1/4" x 1/2" joint filler up vertical face.
An additional 4 feet was added to #11-V800, #11-V801, #11-V802, and #5-P800 lengths for possible change in drilled shaft or rock socket depth. This excess length was included in the reinforcement lap.
Sonic logging testing was performed on all drilled shafts and rock sockets.
The Contractor used a mechanical bar splice for #11-V-Bars at the specified locations. The total bar lengths for bars indicated in the bill of reinforcing steel are determined based on the end of the bars being located at end of adjacent bar. No additional payment was made for any additional bar lengths required for the mechanical bar splices. Mechanical bar splices were in accordance with Sec 706.
The hooks of V-Bars embedded in the beam cap were oriented inward. Bending the hooks outward, away from the column core, is not allowed.
The thickness of steel casing meet all the requirements of Sec 701 with the minimum thickness being 3/8 inch. Thicker casing was not required for installation.
For Sections A-A, B-B, C-C, D-D, E-E, F-F, G-G, and H-H, see Sheet No. 31.
For Typical Section Thru Laminated Neoprene Bearing Pad, see Sheet No. 31.
For Substructure Quantity Table, see Sheet No. 31.
* Lapping of spiral reinforcement in this region is not permitted.
** Continue spiral bars to the bottom of the beam cap stirrup reinforcing bar.
*** Splice locations were staggered.
Anchorage of spiral reinforcement was provided by 1-½ extra turns of spiral bar at each end of spiral unit.
**** Pay Items Rock Socket (6 ft. 0 in. Dia.).
***** Pay Items Drilled Shaft (6 ft. 6 in. Dia.).
The cost of any required excavation to the top of the drilled shafts were considered completely covered by the contract unit price for Drilled Shaft (6 ft. 6 in. Dia.).
Laminated Neoprene Bearing Pads were oriented along ℄ Girders.

PIER 8 - PLAN AND ELEVATION

DATE 8/20/09
ROUTE I-70 | STATE MO
DISTRICT 6 | SHEET NO. BR30
COUNTY St. Louis City - MO
JOB NO. J6I0984B
CONTRACT ID. 100127-601
PROJECT NO. I-70-5(315)
BRIDGE NO. A6500

DESCRIPTION | DATE

MISSOURI HIGHWAYS AND TRANSPORTATION COMMISSION
105 WEST CAPITOL
JEFFERSON CITY, MO 65102
1-888-ASK-MODOT (1-888-275-6636)
HNTB
715 KIRK DRIVE
KANSAS CITY, MO 64105-4310
TELEPHONE (816) 472-1201
CERTIFICATE OF AUTHORITY NO. 001270

FINALS PLANS

REV.

Detailed JUL 2009
Checked JUL 2009

Note: This drawing is not to scale. Follow dimensions.

I:\de-proj\St_Louis_City\Construction\J6I0984B\Asbuilts\Bridge\B_A6500_030-125_J6I0984B_030.dgn

9:11:22 AM

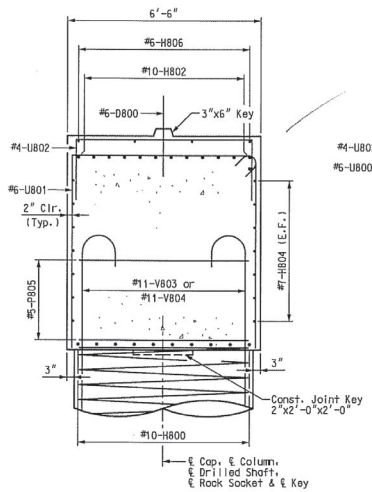

SECTION A-A

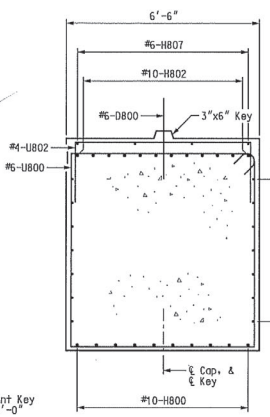

SECTION B-B

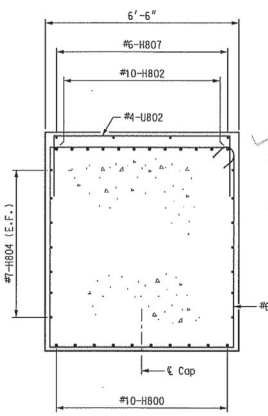

SECTION C-C

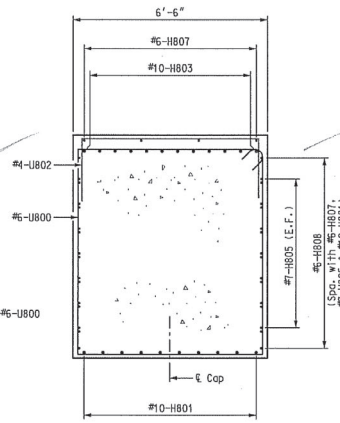

SECTION D-D

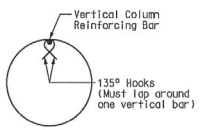

DETAIL OF SEISMIC STIRRUP BAR (#5-P805)

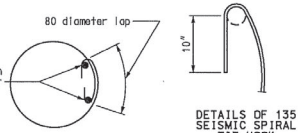

DETAILS OF 135 SEISMIC SPIRAL TIE HOOK

ANCHOR SPLICES IN SPIRAL AROUND VERTICAL BAR (USE FOR INTERMEDIATE SPLICES OF SPIRALS)

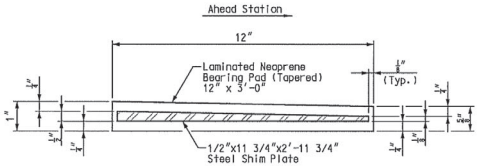

TYPICAL SECTION THRU LAMINATED NEOPRENE BEARING PAD

PIER 8

16 Required on Pier 8

Notes:
The required shim plate was placed between layers of elastomer and molded together to form an integral unit.
Shop drawings are not required for laminated neoprene bearings on structures without sole plates.

Note:
For location of Sections A-A, B-B, C-C, D-D, E-E, F-F, G-G, and H-H, see Sheet No. 30.

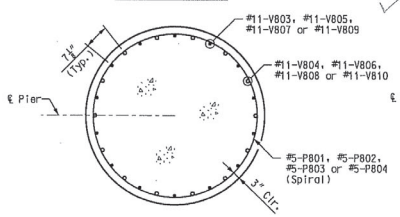

SECTION E-E

(6'-0" Diameter)

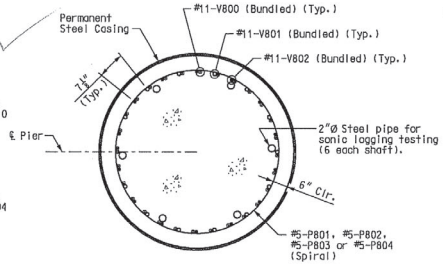

SECTION F-F

(6'-6" Diameter)

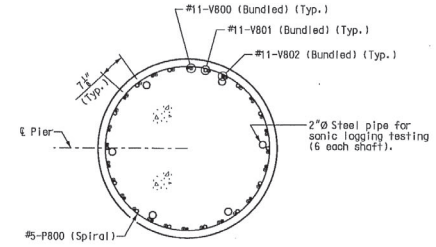

SECTION G-G

(6'-0" Diameter)

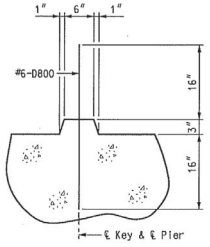

TYPICAL SECTION THRU KEY

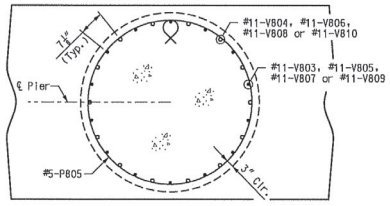

SECTION H-H

**SUBSTRUCTURE QUANTITY TABLE FOR PIER 8

Item		Quantity
Drilled Shafts (6 ft. 6 in. Dia.)	linear foot	88.0
Rock Sockets (6 ft. 0 in. Dia.)	linear foot	53.2
Supplementary Television Camera Inspection	each	0
Foundation Inspection Holes	linear foot	80.5
Concrete Coring	linear foot	0
Sonic Logging Testing	each	4
Class B Concrete (Substructure)	cu. yard	346.9
Reinforcing Steel (Bridges)	pound	115,560
Mechanical Bar Splice	each	112

** These quantities are included in the final quantities table on Sheet No. 5.

PIER 8 - DETAILS

Detailed JUL 2009
Checked JUL 2009

Note: This drawing is not to scale. Follow dimensions.

Sheet No. 31 of 125

DATE 8/20/09
ROUTE I-70 STATE MO
DISTRICT 6 SHEET NO. BR31
COUNTY St. Louis City MO
JOB NO. J6I0984B
CONTRACT ID. 100127-601
PROJECT NO. I-70-5(315)
BRIDGE NO. A6500

DESCRIPTION | DATE

MISSOURI HIGHWAYS AND TRANSPORTATION COMMISSION
MoDOT
105 WEST CAPITOL
JEFFERSON CITY, MO 65102
1-888-ASK-MODOT (1-888-275-6636)

HNTB
715 KIRK DRIVE
KANSAS CITY, MO 64105-1310
TELEPHONE (816) 472-1201
CERTIFICATE OF AUTHORITY NO. 001270

FINAL PLANS

REV.

T:\de-proj\St_Louis_City\Construction\J6I0984B\Asbuilts\Bridge\B_A6500_031-125_J6I0984B_031.dgn

11:51:19 AM

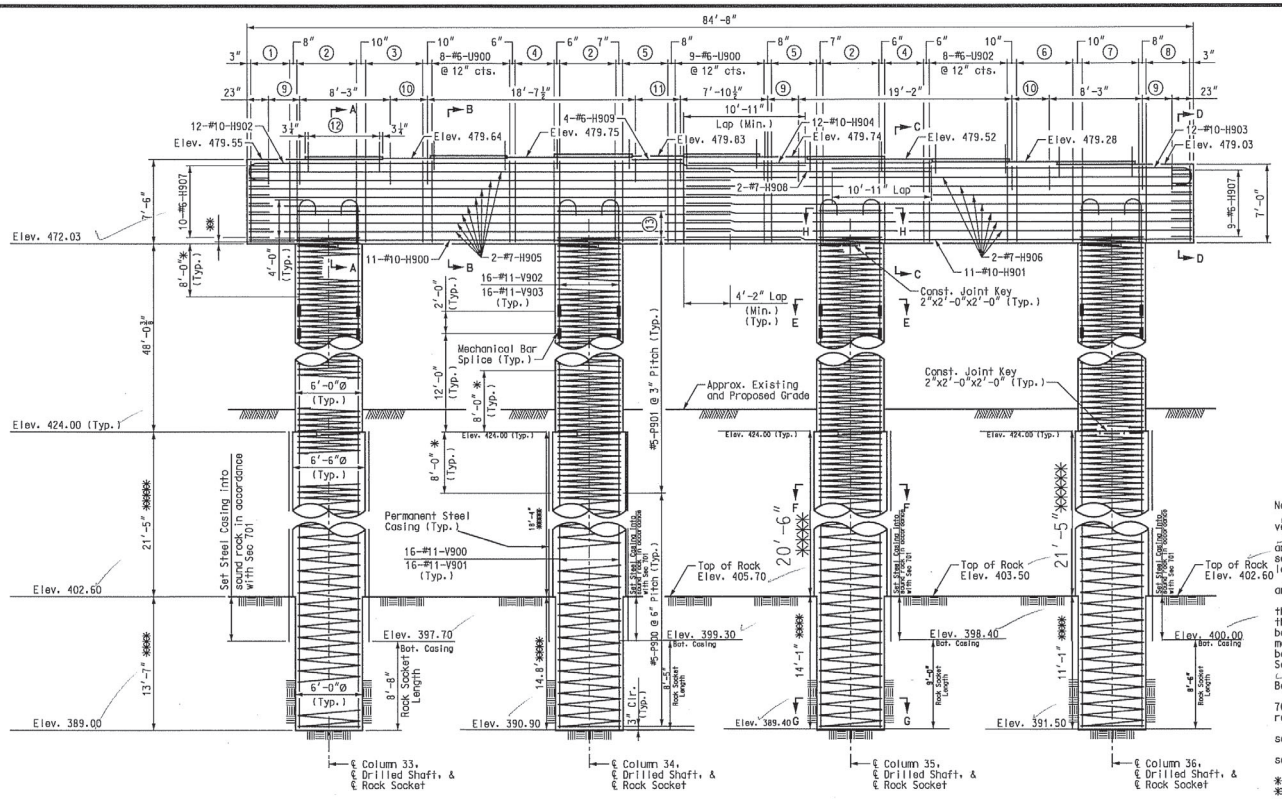

ELEVATION

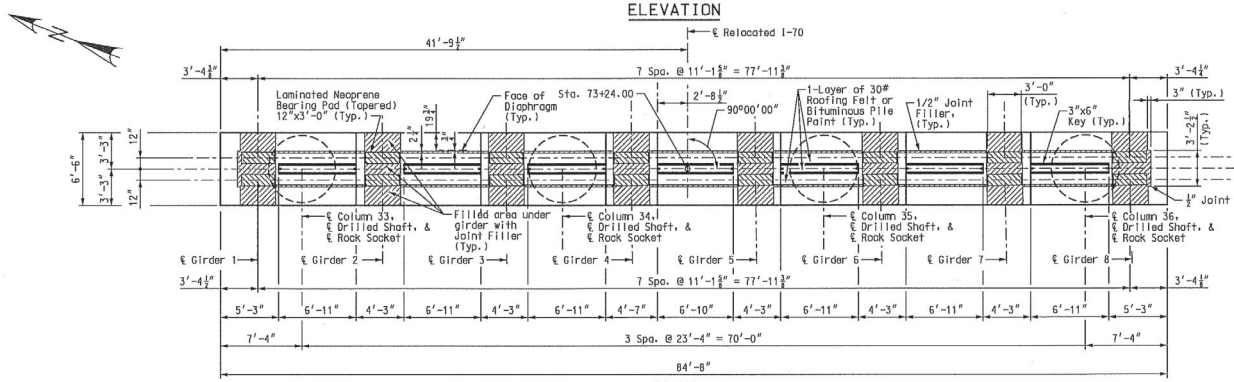

PLAN

① 7-#6-U900 @ 8" cts.
② 6-#6-U901 @ 12" cts.
③ 7-#6-U900 @ 10" cts.
④ 8-#6-U900 @ 6" cts.
⑤ 7-#6-U900 @ 8" cts.
⑥ 7-#6-U902 @ 10" cts.
⑦ 6-#6-U903 @ 12" cts.
⑧ 7-#6-U902 @ 8" cts.
⑨ 5-#4-U904 @ 8" cts.
⑩ 5-#4-U904 @ 10" cts.
⑪ 9-#4-U904 @ 6" cts.
⑫ 10-#6-D900 @ 8½" cts., (Typ.)
⑬ 13-#5-P902 @ 3" cts., (Typ.) ***

Notes:
For steps 2" or more, use 2-1/4" x 1/2" joint filler up vertical face.
An additional 4 feet was added to #11-V900, #11-V901, and #5-P900 lengths for possible change in drilled shaft or rock socket depth. This excess length was included in the reinforcement lap.
Sonic logging testing was performed on all drilled shafts and rock sockets.
The Contractor used a mechanical bar splice for #11-V-Bars at the specified locations. The total bar lengths for bars indicated in the bill of reinforcing steel are determined based on the end of the bars being located at end of adjacent bar. No additional payment was made for any additional bar lengths required for the mechanical bar splices. Mechanical bar splices were in accordance with Sec 706.
The hooks of V-Bars embedded in the beam cap were oriented inward. Bending the hooks outward, away from the column core, is not allowed.
The thickness of steel casing meet all the requirements of Sec 701 with the minimum thickness being 3/8 inch. Thicker casing was not required for installation.
For Section A-A, B-B, C-C, D-D, E-E, F-F, G-G, and H-H, see Sheet No. 33.
For Typical Section Thru Laminated Neoprene Bearing Pad, see Sheet No. 33.
For Substructure Quantity Table, see Sheet No. 33.
* Lapping of spiral reinforcement in this region is not permitted.
** Continue spiral bars to the bottom of the beam cap stirrup reinforcing bar.
*** Splice locations were staggered.
Anchorage of spiral reinforcement was provided by 1-1/2 extra turns of spiral bar at each end of spiral unit.
**** Pay Items Rock Socket (6 ft. 0 in. Dia.).
***** Pay Items Drilled Shaft (6 ft. 6 in. Dia.).
The cost of any required excavation to the top of the drilled shafts were considered completely covered by the contract unit price for Drilled Shaft (6 ft. 6 in. Dia.).
Laminated Neoprene Bearing Pads were oriented along ℄ Girders.

PIER 9 – PLAN AND ELEVATION

Detailed JUL 2009
Checked JUL 2009

Note: This drawing is not to scale. Follow dimensions.

Sheet No. 32 of 125

DATE 8/20/09
ROUTE I-70 STATE MO
DISTRICT 6 SHEET NO. BR32
COUNTY St. Louis City - MO
JOB NO. J6I0984B
CONTRACT ID. 100127-601
PROJECT NO. I-70-5(315)
BRIDGE NO. A6500

DESCRIPTION | DATE

MISSOURI HIGHWAYS AND TRANSPORTATION COMMISSION
105 WEST CAPITOL
JEFFERSON CITY, MO 65102
1-888-ASK-MODOT (1-888-275-6636)

HNTB
715 KIRK DRIVE
KANSAS CITY, MO 64105-1310
TELEPHONE (816) 472-1201
CERTIFICATE OF AUTHORITY NO. 001270

FINAL PLANS

REV.

T:\de-proj\St_Louis_City\Construction\J6I0984B\Asbuilts\Bridge\B_A6500_032-125_J6I0984B_032.dgn 9:22:51 AM

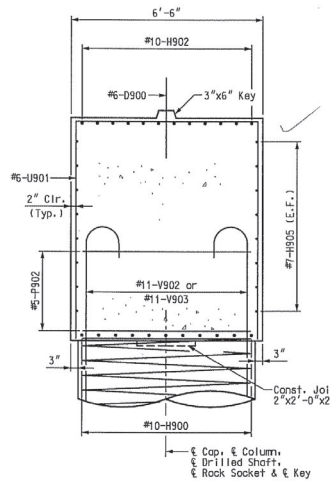

SECTION A-A

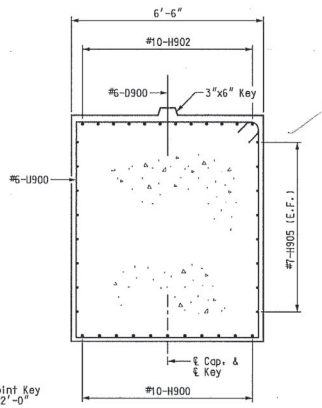

SECTION B-B

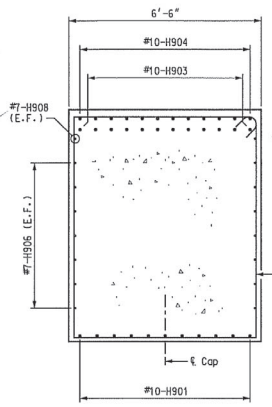

SECTION C-C

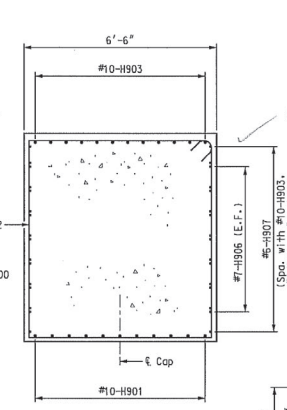

SECTION D-D

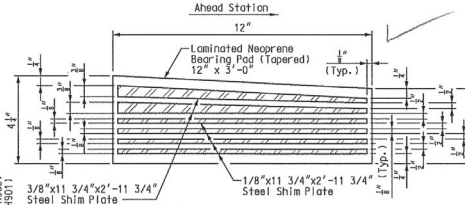

TYPICAL SECTION THRU
LAMINATED NEOPRENE BEARING PAD
PIER 9 (BACK BRG.)

(Girders 1, 2, 7 & 8)
(4 Required on Pier 9)

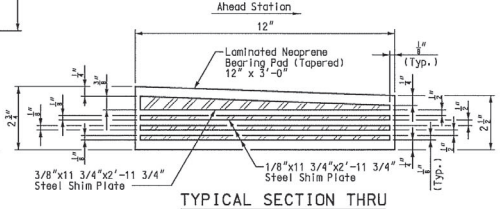

TYPICAL SECTION THRU
LAMINATED NEOPRENE BEARING PAD
PIER 9 (BACK BRG.)

(Girders 3, 4, 5 & 6)
(4 Required on Pier 9)

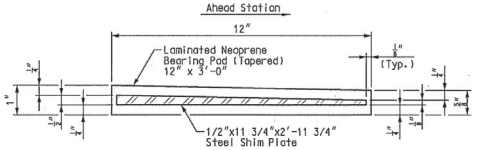

TYPICAL SECTION THRU
LAMINATED NEOPRENE BEARING PAD
PIER 9 (AHEAD BRG.)

(8 Required on Pier 9)

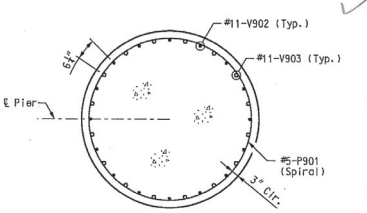

SECTION E-E
(6'-0" Diameter)

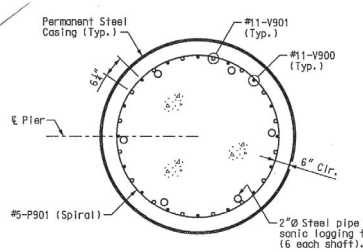

SECTION F-F
(6'-6" Diameter)

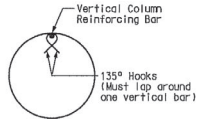

DETAIL OF SEISMIC
STIRRUP BAR (#5-P902)

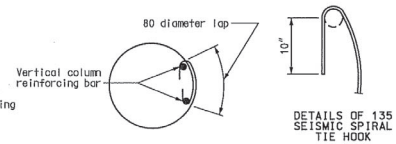

ANCHOR SPLICES IN SPIRAL AROUND VERTICAL BAR
(USE FOR INTERMEDIATE SPLICES OF SPIRALS)

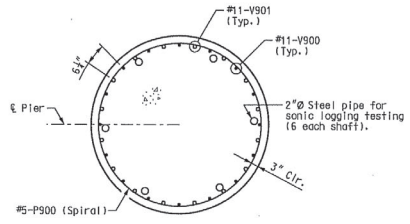

SECTION G-G
(6'-0" Diameter)

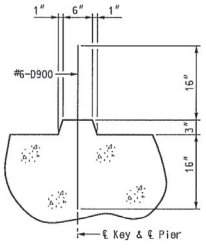

TYPICAL SECTION
THRU KEY

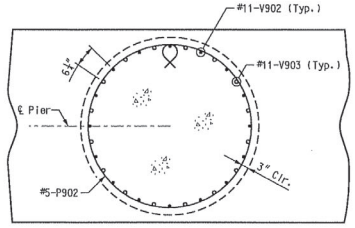

SECTION H-H

Notes:
The required shim plate was placed between layers of elastomer and molded together to form an integral unit.
Shop drawings are not required for laminated neoprene bearings on structures without sole plates.

Note:
For location of Sections A-A, B-B, C-C, D-D, E-E, F-F, G-G, and H-H, see Sheet No. 32.

** SUBSTRUCTURE QUANTITY TABLE FOR PIER 9

Item		Quantity
Drilled Shafts (6 ft. 6 in. Dia.)	linear foot	81.6
Rock Sockets (6 ft. 0 in. Dia.)	linear foot	53.6
Supplementary Television Camera Inspection	each	0
Foundation Inspection Holes	linear foot	88.0
Concrete Coring	linear foot	0
Sonic Logging Testing	each	4
Class B Concrete (Substructure)	cu. yard	353.9
Reinforcing Steel (Bridges)	pound	101,790
Mechanical Bar Splice	each	128

** These quantities are included in the final quantities table on Sheet No. 5.

PIER 9 - DETAILS

Detailed JUL 2009
Checked JUL 2009

Note: This drawing is not to scale. Follow dimensions.

Sheet No. 33 of 125

DATE 8/20/09
ROUTE I-70 | STATE MO
DISTRICT 6 | SHEET NO. BR33
COUNTY St. Louis City - MO
JOB NO. J6I0984B
CONTRACT ID. 100127-601
PROJECT NO. I-70-5(315)
BRIDGE NO. A6500

DESCRIPTION | DATE | REV.

MISSOURI HIGHWAYS AND TRANSPORTATION COMMISSION
105 WEST CAPITOL
JEFFERSON CITY, MO 65102
1-888-ASK-MODOT (1-888-275-6636)

HNTB
715 KIRK DRIVE
KANSAS CITY, MO 64105-1310
TELEPHONE (816) 472-1201
CERTIFICATE OF AUTHORITY NO. 001270

FINAL PLANS

T:\de-proj\St_Louis_City\Construction\J6I0984B\Asbuilts\Bridge\B_A6500_033-125_J6I0984B_033.dgn
11:58:31 AM

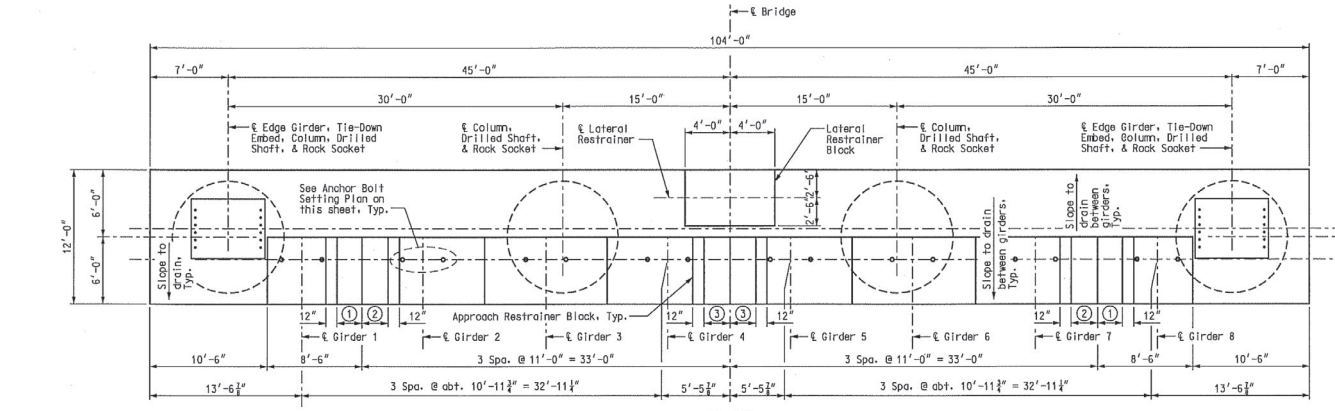

PLAN

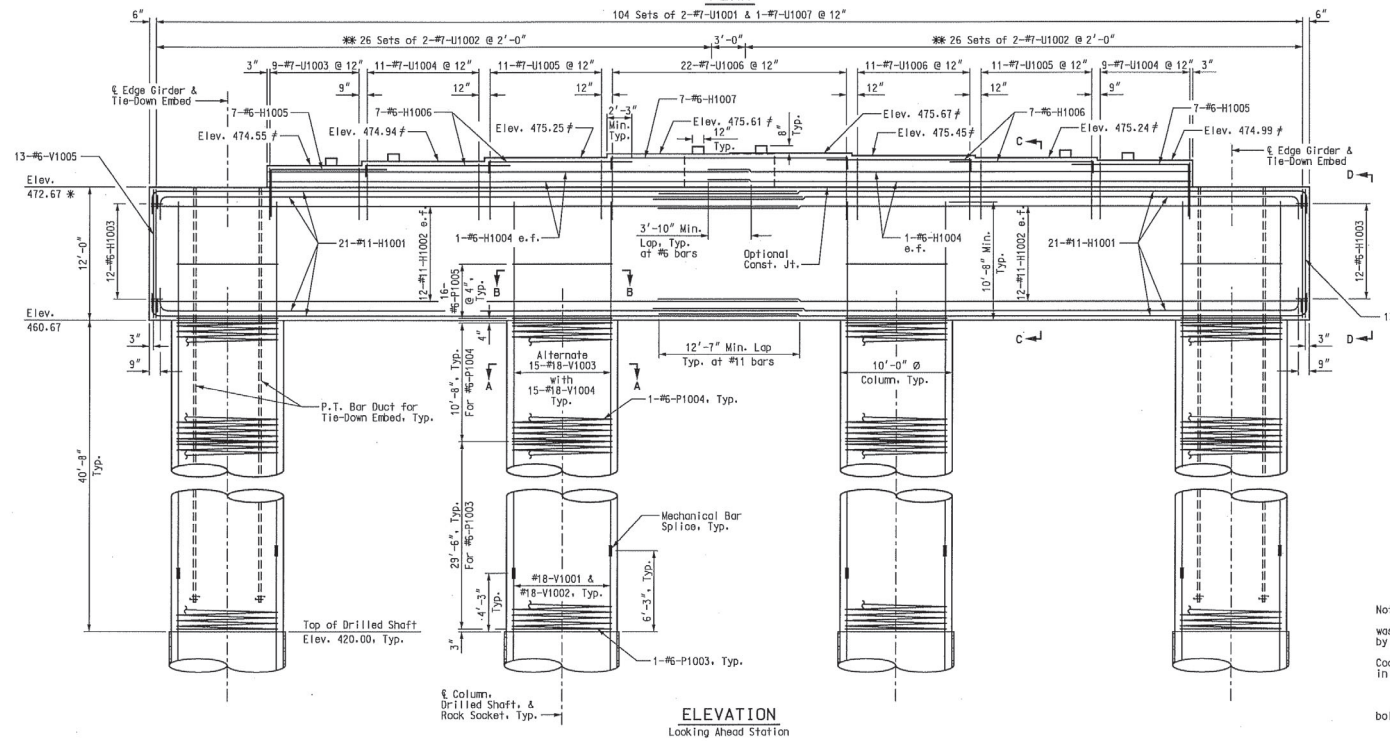

ELEVATION

Looking Ahead Station

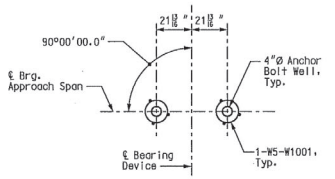

ANCHOR BOLT WELL SETTING PLAN

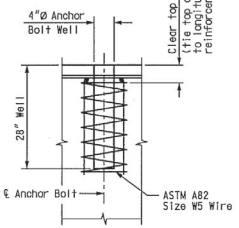

ANCHOR BOLT WELL DETAIL

Notes:
All reinforcing bars in the top of the capbeam was spaced to clear anchor bolt wells for bearings by at least 1/2".
Seal top and all faces of capbeam with Protective Coating in accordance with Sec. 711.3.2, will be peformed in Contract J6I0984.
* Elevation taken at ℄ Pier.
Elevation taken at ℄ Brg. Approach Span.
** Space to clear Column Reinforcing and anchor bolt wells.

PIER 10 (FOR INFORMATION ONLY)

DATE 8/20/09
ROUTE I-70 STATE MO
DISTRICT 6 SHEET NO. BR34
COUNTY St. Louis City - MO
JOB NO. J6I0984B
CONTRACT ID. 100127-601
PROJECT NO. I-70-5(315)
BRIDGE NO. A6500

DESCRIPTION | DATE

MISSOURI HIGHWAYS AND TRANSPORTATION COMMISSION
105 WEST CAPITOL
JEFFERSON CITY, MO 65102
1-888-ASK-MODOT (1-888-275-6636)

HNTB
715 KIRK DRIVE
KANSAS CITY, MO 64105-1310
TELEPHONE (816) 472-1201
CERTIFICATE OF AUTHORITY NO. 001070

FINAL PLANS

REV.

Detailed JUL 2009
Checked JUL 2009

Note: This drawing is not to scale. Follow dimensions.

T:\de-proj\St_Louis_City\Construction\J6I0984B\Asbuilts\Bridge\B_A6500_034-125_J6I0984B_034.dgn 3:22:37 PM

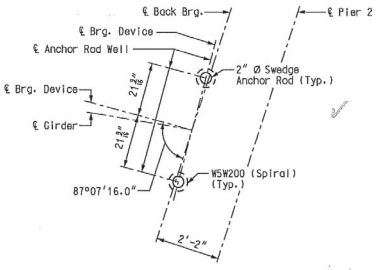

ANCHOR ROD SETTING PLAN
PIER 2 SPAN (1-2) (GIRDERS 1 THRU 5)

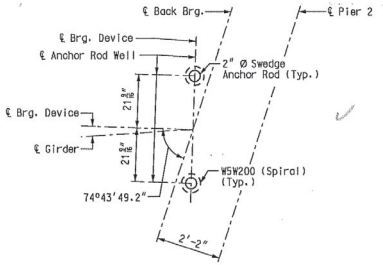

ANCHOR ROD SETTING PLAN
PIER 2 SPAN (1-2) (GIRDERS 6 THRU 11)

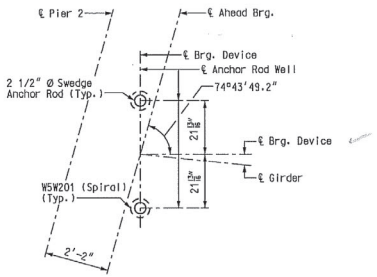

ANCHOR ROD SETTING PLAN
PIER 2 SPAN (2-3)

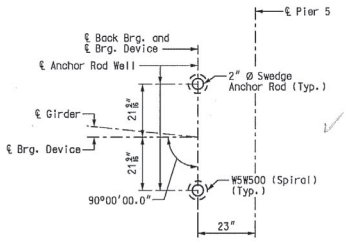

ANCHOR ROD SETTING PLAN
PIER 5 SPAN (4-5)

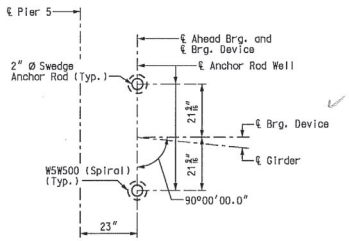

ANCHOR ROD SETTING PLAN
PIER 5 SPAN (5-6)

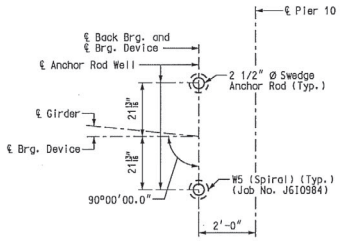

ANCHOR ROD SETTING PLAN
PIER 10 SPAN (9-10)
(For information only)

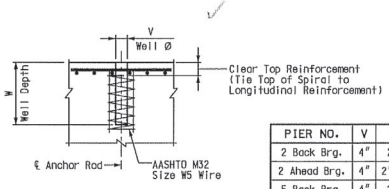

ANCHOR ROD WELL DETAIL

PIER NO.	V	W
2 Back Brg.	4"	21"
2 Ahead Brg.	4"	2'-4"
5 Back Brg.	4"	21"
5 Ahead Brg.	4"	21"

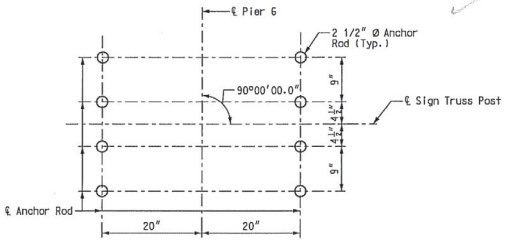

ANCHOR ROD SETTING PLAN
PIER 6 (SIGN TRUSS PEDESTALS)

Note:
For details of sign truss anchorage and anchor rod length, see Missouri Standard Plans Drawing 903.60 (Post Type V).

ANCHOR ROD SETTING PLANS

DATE 8/20/09
ROUTE I-70 | STATE MO
DISTRICT 6 | SHEET NO. BR35
COUNTY St. Louis City - MO
JOB NO. J6I0984B
CONTRACT ID. 100127-601
PROJECT NO. I-70-5(315)
BRIDGE NO. A6500

DESCRIPTION | DATE

MISSOURI HIGHWAYS AND TRANSPORTATION COMMISSION
105 WEST CAPITOL
JEFFERSON CITY, MO 65102
1-888-ASK-MODOT (1-888-275-6636)

HNTB
715 KIRK DRIVE
KANSAS CITY, MO 64105-1310
TELEPHONE (816) 472-1201
CERTIFICATE OF AUTHORITY NO. 001270

FINAL PLANS REV.

Detailed JUL 2009
Checked JUL 2009

Note: This drawing is not to scale. Follow dimensions.

T:\de-proj\St_Louis_City\Construction\J6I0984B\Asbuilts\Bridge\B_A6500_035-125_J6I0984B_035.dgn

3:23:33 PM



ELEVATION OF GALVANIZED STEEL STOPPER PLATE

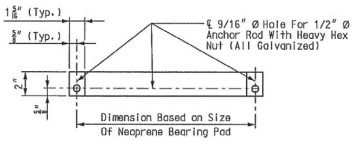

PLAN OF GALVANIZED STEEL STOPPER PLATE

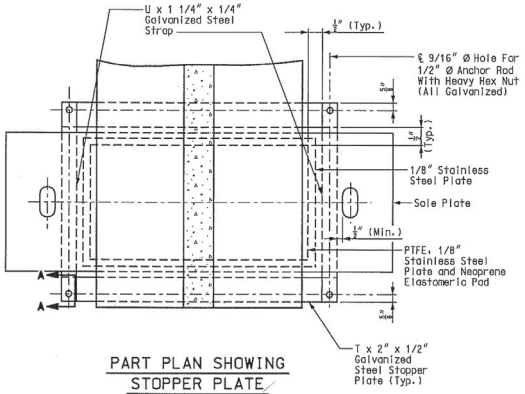

PART PLAN SHOWING STOPPER PLATE

Notes:
Stopper plates and straps were provided to prevent loss of support due to creeping of PTFE bearings. Payment for fabricating and installing the stopper plates and straps were completely covered by the contract unit price for Type N PTFE Bearing.
The bottom face of the 1/8" stainless steel plate that is welded to the sole plate was lubricated with a lubricant that is approved by the bearing manufacturer.

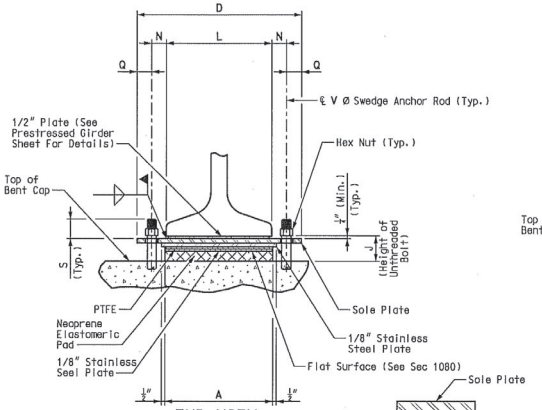

END VIEW

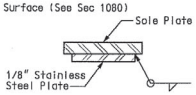

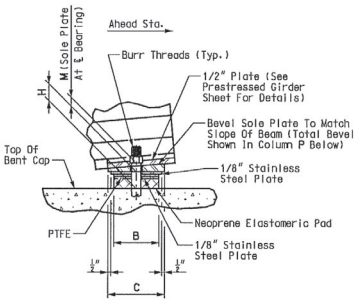

SIDE VIEW

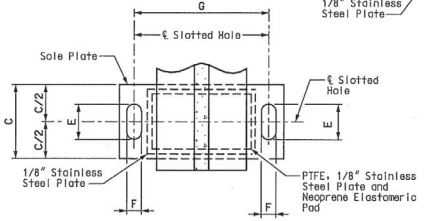

PART PLAN

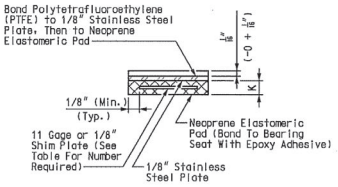

NEOPRENE ELASTOMERIC PAD

PTFE SLIDING BEARINGS

PIER NO.	A	B	C	D	E	F	G	H	J	K	L	M	N	P	Q	R	S	T	U	V	W	NUMBER OF SHIM PLATES(*)	NUMBER REQUIRED
2 Back	2'-2"	12"	2'-5"	4'-1 1/2"	17 1/2"	2 1/4"	3'-7 1/8"	3 3/16"	5 1/4"	3 1/8"	3'-2 3/8"	1 1/2"	2 3/8"	1/2"	3"	1/16"	2 1/2"	2'-5 1/2"	17"	2"	18"	5	11
2 Ahead	2'-3"	11"	2'-4 1/8"	4'-3 1/4"	18 1/2"	2 3/4"	3'-7 7/8"	4 11/16"	6 1/4"	4 3/8"	3'-2 3/8"	1 1/2"	2 3/8"	1/4"	3 3/4"	1/8"	3"	2'-6 1/2"	16"	2 1/2"	2'-1"	7	12
5 Back	21"	11"	2'-5 1/2"	4'-1 1/4"	19"	2 1/4"	3'-7 1/8"	2 3/8"	4 1/16"	1 3/8"	3'-2 3/8"	1 3/16"	2 3/8"	-3/8"	3"	1/8"	2 1/2"	2'-0 1/2"	16"	2"	18"	3	12
5 Ahead	2'-3"	11"	2'-6 1/2"	4'-1 1/4"	20 1/4"	2 1/4"	3'-7 1/8"	2 13/16"	4 11/16"	2 1/2"	3'-2 3/8"	1 13/16"	2 3/8"	-1/2"	3"	3/16"	2 1/2"	2'-6 1/2"	16"	2"	18"	4	8
10 Back	2'-1"	12"	2'-7 1/8"	4'-3 1/8"	20 1/2"	2 3/4"	3'-7 7/8"	3 3/16"	5 5/16"	3 1/8"	3'-2 3/8"	1 13/16"	2 3/8"	-1/2"	3 3/4"	1/4"	3"	2'-4 1/2"	17"	2 1/2"	2'-1"	5	8
																						TOTAL BEARINGS	51

(*) The required shim plate was placed between layers of elastomer and molded together to form an integral unit.

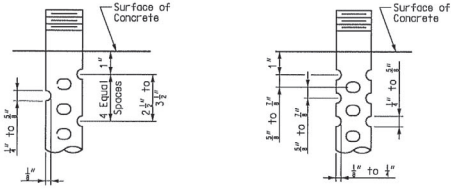

DETAIL FOR 3/4"Ø THRU 2 1/2"Ø ANCHOR RODS

OPTIONAL DETAIL FOR 1 3/4"Ø THRU 2 1/2"Ø ANCHOR RODS

SWEDGE ANCHOR ROD DETAILS

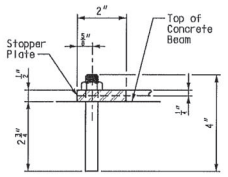

SECTION A-A

Notes:
Anchor rods were Ø ASTM F1554 Grade 55 swedged rods and was extend into the concrete with AASHTO M291 (ASTM A563) Grade A Hex or Heavy Hex nuts. Actual manufacturer's certified mill test reports (chemical and mechanical) was provided. Swedging was 1" less than extension into the concrete.
Anchor rod was placed at the ℄ of slotted hole at 60°F. Bearing position shall be adjusted for each 10° fall or rise in temperature at installation.
All structural steel for the anchor rods and heavy hexagon nuts were coated with a minimum of two coats of inorganic zinc primer (5 mils minimum).
Neoprene Elastomeric Pads were 70 Durometer.
Structural steel for sole plate was ASTM A709 Grade 36 and was coated with a minimum of two coats of inorganic zinc primer (5 mils minimum). The stainless steel plate was protected from any coating.
Type N PTFE Bearings were in accordance with Sec 716.

DETAILS OF TYPE "N" PTFE BEARINGS

DATE 8/20/09
ROUTE I-70 | STATE MO
DISTRICT 6 | SHEET NO. BR36
COUNTY St. Louis City - MO
JOB NO. J6I0984B
CONTRACT ID. 100127-601
PROJECT NO. I-70-5(315)
BRIDGE NO. A6500

DESCRIPTION | DATE

MISSOURI HIGHWAYS AND TRANSPORTATION COMMISSION
105 WEST CAPITOL
JEFFERSON CITY, MO 65102
1-888-ASK-MODOT (1-888-275-6636)

HNTB
715 KIRK DRIVE
KANSAS CITY, MO 64105-1310
TELEPHONE (816) 472-1201
CERTIFICATE OF AUTHORITY NO. 001270

FINAL PLANS

REV.

Detailed JUL 2009
Checked JUL 2009

Note: This drawing is not to scale. Follow dimensions.

T:\de-proj\St_Louis_City\Construction\J6I0984B\Asbuilts\Bridge\B_A6500_036-125_J6I0984B_036.dgn
3:37:50 PM

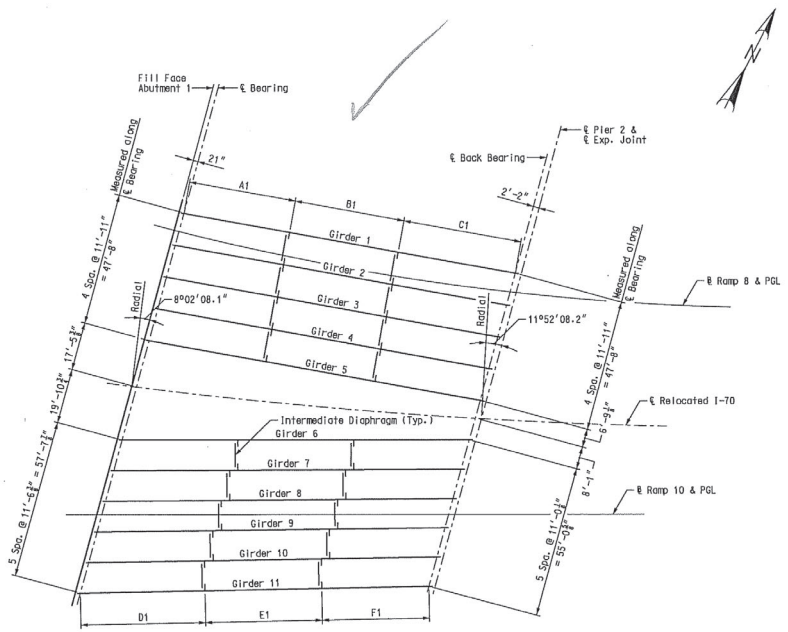

SPAN (1-2)

FRAMING PLAN

INTERMEDIATE DIAPHRAGM LAYOUT DIMENSIONS – UNIT 1						
Location	A1	B1	C1	D1	E1	F1
Girder 1	38′-4 7/8″	40′-5 3/4″	42′-6 1/8″	–	–	–
Girder 2	39′-5 1/8″	40′-5 3/4″	41′-6 1/8″	39′-5 1/4″	40′-5 3/4″	41′-6 1/8″
Girder 3	40′-5 3/4″	40′-5 3/4″	40′-5 3/8″	40′-5 3/4″	40′-5 3/4″	40′-5 3/8″
Girder 4	41′-6 1/8″	40′-5 3/4″	39′-5 1/4″	41′-6 1/8″	40′-5 3/4″	39′-5 1/4″
Girder 5	–	–	–	42′-6 1/2″	40′-5 3/4″	38′-4 1/8″
Girder 6	40′-3 3/8″	41′-9 7/8″	43′-3 3/8″	–	–	–
Girder 7	40′-3 3/8″	41′-10 3/8″	43′-4 1/4″	43′-4″	41′-9 1/2″	40′-4 3/8″
Girder 8	40′-3 3/4″	41′-10 3/8″	43′-5 1/8″	43′-4 1/2″	41′-10 3/8″	40′-4 3/8″
Girder 9	40′-4 1/4″	41′-11 1/2″	43′-5 3/8″	43′-5 3/8″	41′-10 3/8″	40′-5″
Girder 10	40′-4 1/2″	42′-0″	43′-6 3/8″	43′-6 3/8″	41′-11 1/2″	40′-5 1/4″
Girder 11	–	–	–	43′-7 1/4″	42′-0″	40′-5 3/8″

Note:
Dimensions "A", "B", "C", "D", "E", and "F" measured along ℄ Girder.

FRAMING PLAN – UNIT 1

DATE 8/20/09
ROUTE I-70 | STATE MO
DISTRICT 6 | SHEET NO. BR37
COUNTY St. Louis City - MO
JOB NO. J6I0984B
CONTRACT ID. 100127-601
PROJECT NO. I-70-5(315)
BRIDGE NO. A6500

DESCRIPTION | DATE

MISSOURI HIGHWAYS AND TRANSPORTATION COMMISSION
105 WEST CAPITOL
JEFFERSON CITY, MO 65102
1-888-ASK-MODOT (1-888-275-6636)

HNTB
715 KIRK DRIVE
KANSAS CITY, MO 64105-1310
TELEPHONE (816) 472-1201
CERTIFICATE OF AUTHORITY NO. 001270

FINAL PLANS

REV.

Detailed JUL 2009
Checked JUL 2009

Note: This drawing is not to scale. Follow dimensions.

I:\de-proj\St_Louis_City\Construction\J6I0984B\Asbuilts\Bridge\B_A6500_037-125_J6I0984B_037.dgn 7:52:28 AM

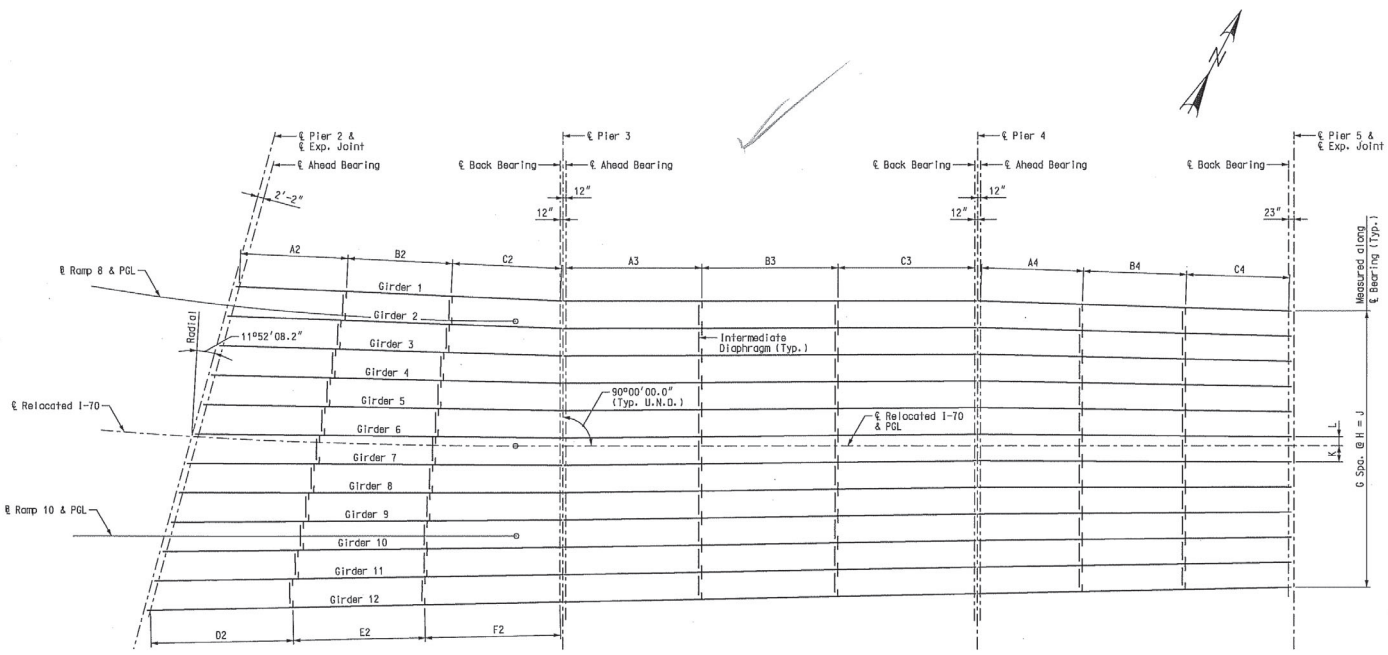

FRAMING PLAN

INTERMEDIATE DIAPHRAGM LAYOUT DIMENSIONS - UNIT 2

Location	A2	B2	C2	D2	E2	F2	A3	B3	C3	A4	B4	C4
Girder 1	36'-5 1/4"	37'-7 7/8"	37'-5 5/8"	-	-	-	47'-4"	47'-4"	47'-4"	35'-8 5/8"	35'-8 3/8"	35'-8 1/4"
Girder 2	37'-4 1/8"	38'-6 7/8"	38'-5 1/8"	38'-9 1/2"	37'-7 3/8"	37'-10 3/4"	47'-4"	47'-4"	47'-4"	35'-8 1/2"	35'-8 1/4"	35'-8 3/8"
Girder 3	38'-2 3/4"	39'-6"	39'-4 1/2"	39'-9 1/8"	38'-6 7/8"	38'-9 3/8"	47'-4"	47'-4"	47'-4"	35'-8 1/2"	35'-8 1/2"	35'-8 3/8"
Girder 4	39'-1 1/2"	40'-5 1/8"	40'-4 1/8"	40'-8 3/8"	39'-6"	39'-8 1/2"	47'-4"	47'-4"	47'-4"	35'-8 3/8"	35'-8 3/8"	35'-8 1/2"
Girder 5	40'-0 1/8"	41'-4 1/4"	41'-3 3/8"	41'-8"	40'-5 1/8"	40'-6 1/4"	47'-4"	47'-4"	47'-4"	35'-8 3/8"	35'-8 3/8"	35'-8 1/2"
Girder 6	40'-11"	42'-3 3/8"	42'-3 3/8"	42'-7 7/8"	41'-4 1/4"	41'-5 3/8"	47'-4"	47'-4"	47'-4 1/8"	35'-8 3/8"	35'-8 3/8"	35'-8 1/2"
Girder 7	41'-9 3/4"	43'-2 3/8"	43'-2 3/8"	43'-7 1/8"	42'-3 3/8"	42'-4 1/2"	47'-4"	47'-4"	47'-4 1/8"	35'-8 3/8"	35'-8 3/8"	35'-8 3/4"
Girder 8	42'-8 3/4"	44'-1 7/8"	44'-2"	44'-6 1/4"	43'-2 3/8"	43'-3 1/4"	47'-4"	47'-4"	47'-4 1/8"	35'-8 3/8"	35'-8 3/8"	35'-8 3/4"
Girder 9	43'-7 3/8"	45'-1"	45'-1 3/8"	45'-6 1/4"	44'-1 7/8"	44'-2 1/8"	47'-4 1/8"	47'-4"	47'-4 1/8"	35'-8 3/8"	35'-8 3/8"	35'-8 3/4"
Girder 10	44'-6 1/2"	46'-0 1/4"	46'-1 1/4"	46'-6"	45'-1"	45'-1"	47'-4 1/8"	47'-4"	47'-4 1/8"	35'-8 3/8"	35'-8 3/8"	35'-8 3/4"
Girder 11	47'-5 1/2"	46'-0 1/4"	45'-11 7/8"	47'-5 1/2"	46'-0 1/4"	45'-11 7/8"	47'-4 1/8"	47'-4"	47'-4 1/8"	35'-8 3/8"	35'-8 3/8"	35'-8 1/2"
Girder 12	-	-	-	48'-5"	46'-11 1/2"	46'-10 1/8"	47'-4 1/8"	47'-4 1/8"	47'-4 1/8"	35'-8 1/2"	35'-8 1/2"	35'-8 3/4"

GIRDER LAYOUT DIMENSIONS - UNIT 2

Location	G	H	J	K	L
Pier 2 ℄ Ahead Brg.	11	10'-7 5/8"	116'-11 7/8"	9'-7 1/8"	12 1/4"
Pier 3 ℄ Back Brg.	11	9'-6 1/2"	104'-11 1/2"	6'-9 1/2"	2'-9"
Pier 3 ℄ Ahead Brg.	11	9'-6 1/2"	104'-10 1/8"	6'-9 3/8"	2'-9"
Pier 4 ℄ Back Brg.	11	9'-3 3/8"	102'-1 1/8"	5'-3"	4'-0 3/8"
Pier 4 ℄ Ahead Brg.	11	9'-3 1/4"	101'-11 3/4"	5'-2 3/4"	4'-0 1/2"
Pier 5 ℄ Back Brg.	11	8'-9 1/8"	96'-4 3/8"	5'-7 1/8"	3'-1 1/4"

41'-11 1/2"	50'-2"
41'-11 1/2"	50'-0 5/8"

50'-4 3/8"	41'-11 1/2"	50'-0 3/8"
	42'-0"	49'-11"

Note: Dimensions "A", "B", "C", "D", "E", and "F" measured along ℄ Girder.

FRAMING PLAN - UNIT 2

Detailed JUL 2009
Checked JUL 2009

Note: This drawing is not to scale. Follow dimensions.

T:\de-proj\St_Louis_City\Construction\J6I0984B\Asbuilts\Bridge\B_A6500_038-125_J6I0984B_038_REV5.dgn

DATE 8/20/09
ROUTE I-70 | STATE MO
DISTRICT 6 | SHEET NO. BR38
COUNTY St. Louis City - MO
JOB NO. J6I0984B
CONTRACT ID. 100127-601
PROJECT NO. I-70-5 (315)
BRIDGE NO. A6500

DATE	DESCRIPTION
5-29-10	1 Revised diaphragm dimensions

MISSOURI HIGHWAYS AND TRANSPORTATION COMMISSION
105 WEST CAPITOL
JEFFERSON CITY, MO 65102
1-888-ASK-MODOT (1-888-275-6636)

HNTB
715 KIRK DRIVE
KANSAS CITY, MO 64105-1310
TEL (816) 472-1201
CERTIFICATE OF AUTHORITY NO. 001270

FINAL PLANS REV.

1:32:22 PM

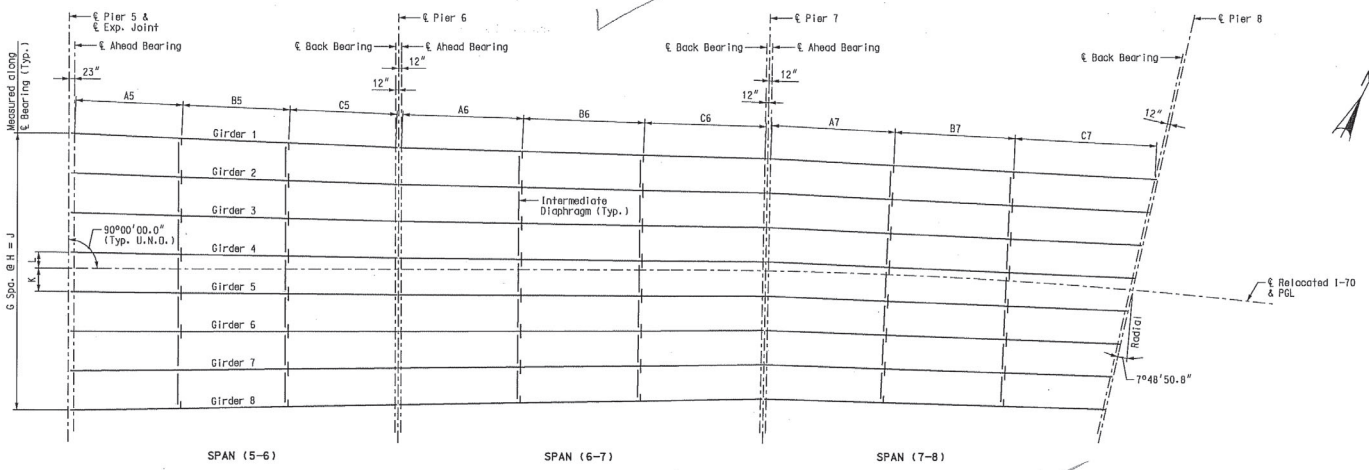

FRAMING PLAN

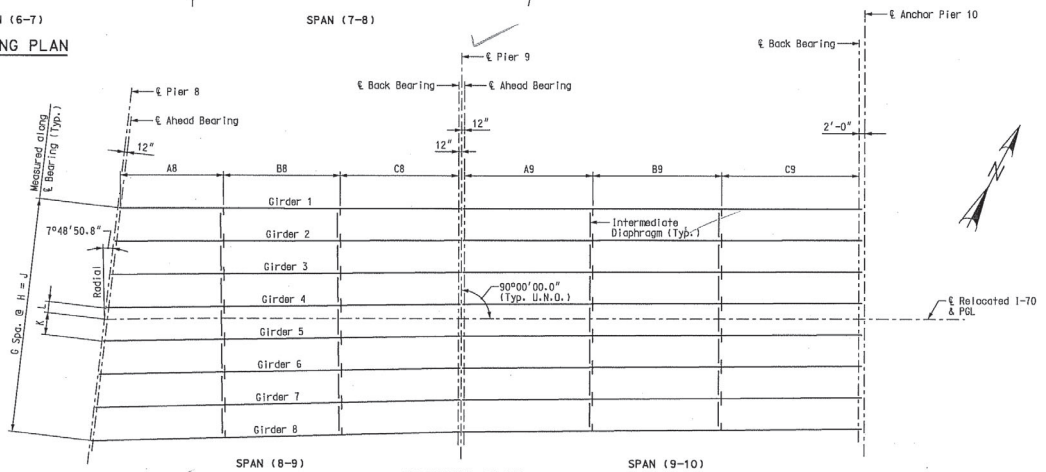

FRAMING PLAN

GIRDER LAYOUT DIMENSIONS – UNIT 3

Location	G	H	J	K	L
Pier 5 ℄ Ahead Brg.	7	13'-8 3/8"	96'-1 1/8"	8'-2"	5'-6 3/8"
Pier 6 ℄ Back Brg.	7	12'-9 1/4"	89'-4 3/4"	8'-9 1/2"	3'-11 1/2"
Pier 6 ℄ Ahead Brg.	7	12'-9"	89'-3"	8'-9 1/2"	3'-11 1/2"
Pier 7 ℄ Back Brg.	7	11'-11 1/4"	83'-6 3/4"	8'-9 1/2"	3'-1 3/8"
Pier 7 ℄ Ahead Brg.	7	11'-11 1/8"	83'-5 1/2"	8'-10"	3'-1 1/8"
Pier 8 ℄ Back Brg.	7	11'-8 3/8"	81'-10 5/8"	7'-6 3/8"	4'-1 3/4"
Pier 8 ℄ Ahead Brg.	7	11'-8 1/4"	81'-9 3/4"	7'-6 1/2"	4'-2 1/2"
Pier 9 ℄ Back Brg.	7	11'-1 5/8"	77'-11 3/8"	6'-1 1/2"	5'-0 1/2"
Pier 9 ℄ Ahead Brg.	7	11'-1 3/8"	77'-11 3/8"	6'-1 3/8"	5'-0 1/4"
Pier 10 ℄ Back Brg.	7	10'-11 1/4"	76'-10 1/2"	5'-5 3/8"	5'-5 3/8"

INTERMEDIATE DIAPHRAGM LAYOUT DIMENSIONS – UNIT 3

Location	A5	B5	C5	A6	B6	C6	A7	B7	C7	A8	B8	C8	A9	B9	C9
Girder 1	37'-4 3/8"	37'-4 3/4"	37'-4 3/4"	42'-3"	42'-3"	42'-2 7/8"	42'-11 3/4"	41'-10 1/4"	49'-1 1/2"	35'-8"	40'-9"	41'-2 1/4"	45'-9 1/4"	45'-9 1/4"	45'-9 1/2"
Girder 2	37'-4 3/8"	37'-4 1/2"	37'-4 1/2"	42'-2 1/4"	42'-2 1/4"	42'-2"	42'-8"	41'-10 1/2"	47'-0 3/4"	37'-1 1/2"	40'-9"	41'-0 3/8"	45'-9 1/4"	45'-9 1/4"	45'-9 3/8"
Girder 3	37'-4 1/2"	37'-4 1/2"	37'-4 1/2"	42'-1 1/4"	42'-1 1/4"	42'-1 1/4"	42'-4 1/4"	41'-10 1/2"	44'-11 3/4"	38'-7"	40'-9"	40'-11"	45'-9 1/4"	45'-9 1/4"	45'-9 1/4"
Girder 4	37'-4 3/8"	37'-4 1/2"	37'-4 1/2"	42'-0 1/2"	42'-0 1/2"	42'-0 1/2"	42'-0 1/2"	41'-10 1/2"	42'-11"	40'-0 1/4"	40'-9"	40'-9 3/8"	45'-9 1/4"	45'-9 1/4"	45'-9 1/4"
Girder 5	37'-4 3/8"	37'-4 3/8"	37'-4 1/2"	41'-11 5/8"	41'-11 3/8"	41'-11 5/8"	41'-8 1/2"	41'-10 1/2"	40'-10"	41'-5 3/4"	40'-9"	40'-8 1/2"	45'-9 1/4"	45'-9 1/4"	45'-9 1/4"
Girder 6	37'-4 3/8"	37'-4 1/2"	37'-4 1/2"	41'-10 3/4"	41'-10 3/4"	41'-10 7/8"	41'-5 1/2"	41'-10 1/2"	38'-9 1/4"	42'-11 1/2"	40'-9"	40'-6 1/4"	45'-9 1/4"	45'-9 1/4"	45'-9 1/2"
Girder 7	37'-4 3/8"	37'-4 1/2"	37'-4 1/2"	41'-10"	41'-10"	41'-10 1/8"	41'-1 1/2"	41'-10 1/2"	36'-8 3/8"	44'-4 1/4"	40'-9"	40'-5 1/4"	45'-9 1/4"	45'-9 1/4"	45'-9 1/8"
Girder 8	37'-4 1/2"	37'-4 1/2"	37'-4 1/2"	41'-9 1/4"	41'-9 1/4"	41'-9 1/4"	40'-9 3/4"	41'-10 1/2"	34'-7 1/2"	45'-10 1/4"	40'-9"	40'-3 3/8"	45'-9 1/4"	45'-9 1/4"	45'-9 1/8"

Notes:
Dimensions "A", "B" and "C" measured along ℄ Girder.
Dimensions "G", "H", "J", "K" and "L" measured along ℄ Bearing.

FRAMING PLAN – UNIT 3

DATE 8/20/09
ROUTE I-70 | STATE MO
DISTRICT 6 | SHEET NO. BR39
COUNTY St. Louis City - MO
JOB NO. J6I0984B
CONTRACT ID. 100127-601
PROJECT NO. I-70-5 (315)
BRIDGE NO. A6500

DESCRIPTION | DATE

MISSOURI HIGHWAYS AND TRANSPORTATION COMMISSION
105 WEST CAPITOL
JEFFERSON CITY, MO 65102
1-888-ASK-MODOT (1-888-275-6636)

HNTB
715 KIRK DRIVE
KANSAS CITY, MO 64105-1310
TELEPHONE (816) 472-1201
CERTIFICATE OF AUTHORITY NO. 00210

FINAL PLANS REV.

Detailed JUL 2009
Checked JUL 2009

Note: This drawing is not to scale. Follow dimensions.

T:\de-proj\St_Louis_City\Construction\J6I0984B\Asbuilts\Bridge\B_A6500_039-125_J6I0984B_039.dgn 8:04:29 AM

Notes:
Concrete for prestressed girders was Class A-1 with f'c = 8000 psi and f'ci = 6500 psi.
(+) indicates prestressing strand.
Use 46 strands with an initial prestress force of 2021 kips.
Prestressing tendons was uncoated, seven-wire, low-relaxation strands, 0.6 inch diameter in accordance with AASHTO M 203, Grade 270. Pretensioned members are in accordance with Sec 1029.
For top flange cross-slope and step details and dimensions, see Sheet No. 58.

Girders were lifted by devices designed by the fabricator.
** At the contractor's option the location for bent-up strands may be varied from that shown. The total number of bent-up strands did not be changed. One strand tie bar is required for each layer of bent-up strands except at abutments which require one bar on the bottom layer of strands only. No additional payment will be made if additional strand tie bars are required.
*** Girder top flange was steel troweled to a smooth finish for 8" at the edges, as shown. Bond breaker was applied to this region only. The center portion was rough finished by scarifying the surface transversely with a wire brush, and no laitance remained on the surface.
**** Prestressing strands at Pier 2 were trimmed to within 1/8 inch of concrete if exposed or 1 inch of concrete if encased. Exposed ends of girders were given 2 coats of an asphalt paint. Ends of girders which will be encased in concrete diaphragms was not painted.

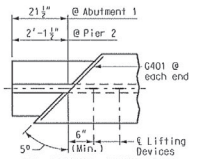

ALL GIRDERS (ABUT. 1) INTERIOR GIRDERS (PIER 2)

Reinforcing Steel Notes:
Reinforcing steel conformed to the requirements of AASHTO M 31, Grade 60. Welded Wire Reinforcement (WWR) conformed to the requirements of AASHTO M 221.
All dimensions were out-to-out.
Hooks and bends were in accordance with the CRSI Manual of Standard Practice for Detailing Reinforced Concrete Structures, Stirrup and Tie Dimensions.
Minimum clearance to reinforcing was 1", unless otherwise shown.
Actual lengths were measured along centerline of bar to the nearest inch.

Notes:
Cost of 3/4" Ø coil tie rods placed in diaphragms were considered completely covered by the contract unit price for Prestressed Concrete NU-Girder per linear foot.
Coil ties were held in place in the forms by slotted wire-setting-studs projecting through forms. Studs were left in place or replaced with temporary plugs until girders are erected, then replaced by coil tie rods.
For location of coil inserts at drainage scuppers, see Sheet No. 92.
For location of coil ties, see Sheet Nos. 12, 14, 62, 64, 65 and 67.
The 1-1/2" Ø holes were casted in the web for steel intermediate diaphragms. See Sheet No. 62 for details. Drilling was not allowed.
For details of diaphragms, see Sheet Nos. 12, 14, 64, 65 and 67.
For Girder Camber Diagram, see Sheet No. 80.
For location of slotted well for expansion joint attachment to girder, see Sheet No. 107.

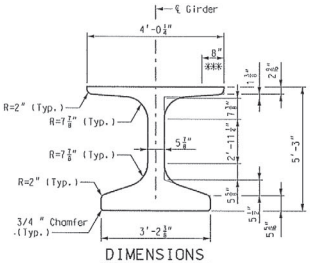

DIMENSIONS

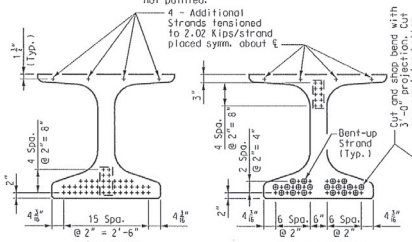

STRAND ARRANGEMENTS

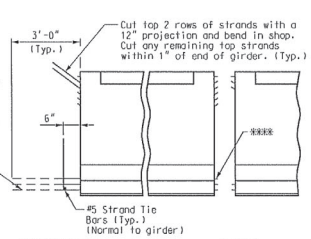

STRAND DETAILS AT GIRDER ENDS

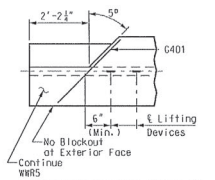

EXTERIOR GIRDERS (PIER 2)
TOP FLANGE BLOCK-OUT DETAILS

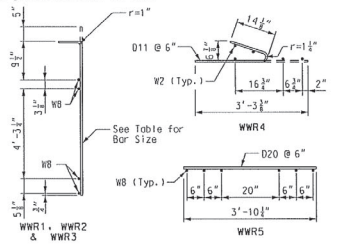

WELDED WIRED BENDING DIAGRAMS

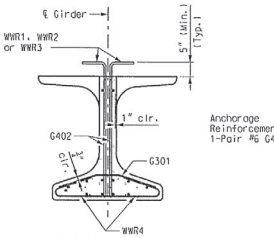

SECTION A-A
Strands not shown for clarity.

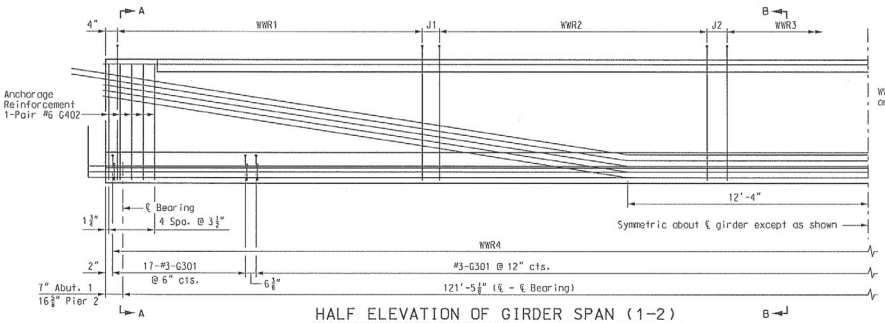

HALF ELEVATION OF GIRDER SPAN (1-2)

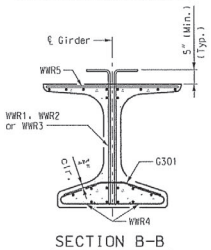

SECTION B-B
Strands not shown for clarity.

BILL OF REINFORCING STEEL - EACH GIRDER

NO.	SIZE & MARK	ACTUAL LENGTH	SHAPE	BENDING DIAGRAM
141	3 G301	2'-11⅜"	15	13" 7⅞" 13" 3" 3" SHAPE 15
2	4 G401	3'-10½"	20	
20	6 G402	5'-1"	20	
				SHAPE 20

WELDED WIRE REINFORCEMENT
(WWR4 & WWR5 as shown in Welded Wired Bending Diagrams)

GIRDER NO.	WWR1 BAR SIZE	S1	L1	J1	WWR2 BAR SIZE	S2	L2	J2	WWR3 BAR SIZE	S3	L3
1-5	D20	9"	25'-6"	9"	D20	12"	31'-0"	13⅜"	D20	24"	6'-0"

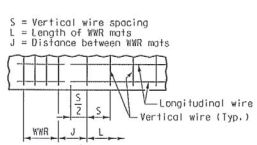

REINFORCEMENT PLACEMENT DETAIL

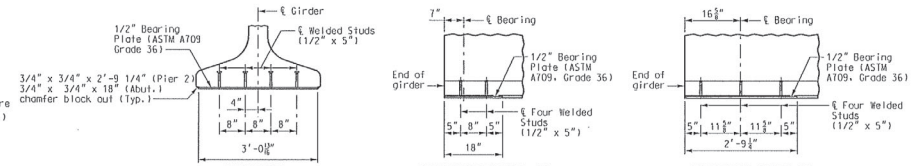

BEARING PLATE DETAILS

Galvanize the 1/2" bearing plate (ASTM A709 Grade 36) in accordance with ASTM A123.

Cost of furnishing, galvanizing, and installing the 1/2" bearing plate (ASTM A709 Grade 36) and welded studs in the prestressed girder will be considered completely covered by the contract unit price for Prestressed Concrete NU-Girder per linear foot.

TYPE NU 63 P/S GIRDER - SPAN (1-2)
GIRDERS 1 THRU 5

Detailed JUL 2009
Checked JUL 2009

Note: This drawing is not to scale. Follow dimensions.

Sheet No. 40 of 125

DATE 8/20/09
ROUTE I-70 | STATE MO
DISTRICT 6 | SHEET NO. BR40
COUNTY St. Louis City - MO
JOB NO. J6I0984B
CONTRACT ID. 100127-601
PROJECT NO. I-70-5 (315)
BRIDGE NO. A6500

DESCRIPTION | DATE

MISSOURI HIGHWAYS AND TRANSPORTATION COMMISSION
105 WEST CAPITOL
JEFFERSON CITY, MO 65102
1-888-ASK-MODOT (1-888-275-6636)

HNTB
715 KIRK DRIVE
KANSAS CITY, MO 64105-1310
TELEPHONE (816) 472-1201
CERTIFICATE OF AUTHORITY NO. 001270

FINAL PLANS

REV.

T:\de-proj\St_Louis_City\Construction\J6I0984B\Asbuilts\Bridge\B_A6500_040-125_J6I0984B_040.dgn
11:36:16 AM

Notes:
Concrete for prestressed girders was Class A-1 with f'c = 8000 psi and f'ci = 6500 psi.
(+) indicates prestressing strand.
Use 46 strands with an initial prestress force of 2021 kips.
Prestressing tendons were uncoated, seven-wire, low-relaxation strands, 0.6 inch diameter in accordance with AASHTO M 203, Grade 270. Pretensioned members were in accordance with Sec 1029.
For top flange cross-slope and step details and dimensions, see Sheet No. 58.

Girders were lifted by devices designed by the fabricator.
** At the contractor's option the location for bent-up strands may be varied from that shown. The total number of bent-up strands did not be changed. One strand tie bar is required for each layer of bent-up strands except at abutments which require one bar on the bottom layer of strands only. No additional payment will be made if additional strand tie bars are required.
*** Girder top flange was steel troweled to a smooth finish for 8" at the edges, as shown. Bond breaker was applied to this region only. The center portion was rough finished by scarifying the surface transversely with a wire brush, and no laitance remained on the surface.
**** Prestressing strands at Pier 2 were trimmed to within 1/8 inch of concrete if exposed or 1 inch of concrete if encased. Exposed ends of girders were given 2 coats of an asphalt paint. Ends of girders which will be encased in concrete diaphragms was not painted.

Reinforcing Steel Notes:
Reinforcing steel conformed to the requirements of AASHTO M 31, Grade 60. Welded Wire Reinforcement (WWR) conformed to the requirements of AASHTO M 221.
All dimensions were out-to-out.
Hooks and bends were in accordance with the CRSI Manual of Standard Practice for Detailing Reinforced Concrete Structures, Stirrup and Tie Dimensions.
Minimum clearance to reinforcing was 1", unless otherwise shown.
Actual lengths were measured along centerline of bar to the nearest inch.

Notes:
Cost of 3/4" Ø coil tie rods placed in diaphragms were considered completely covered by the contract unit price for Prestressed Concrete NU-Girder per linear foot.
Coil ties were held in place in the forms by slotted wire-setting-studs projecting through forms. Studs were left in place or replaced with temporary plugs until girders are erected, then replaced by coil tie rods.
For location of coil inserts at drainage scuppers, see Sheet No. 92.
For location of coil ties, see Sheet Nos. 12, 14, 62, 64, 65 and 67.
The 1-1/2" Ø holes were casted in the web for steel intermediate diaphragms. See Sheet No. 62 for details.
Drilling was not allowed.
For details of diaphragms, see Sheet Nos. 12, 14, 64, 65 and 67.
For Girder Camber Diagram, see Sheet No. 80.
For location of slotted well for expansion joint attachment to girder, see Sheet No. 107.

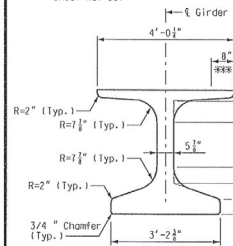

DIMENSIONS

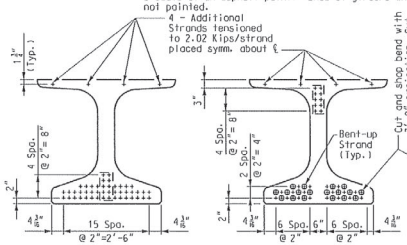

STRAND ARRANGEMENTS

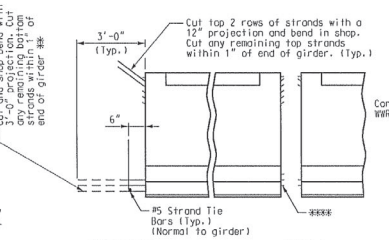

STRAND DETAILS AT GIRDER ENDS

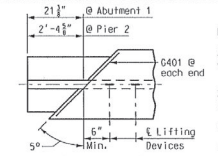

ALL GIRDERS (ABUT. 1) INTERIOR GIRDERS (PIER 2)

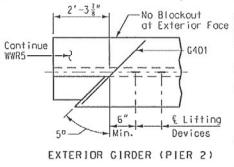

EXTERIOR GIRDER (PIER 2)

TOP FLANGE BLOCK-OUT DETAILS

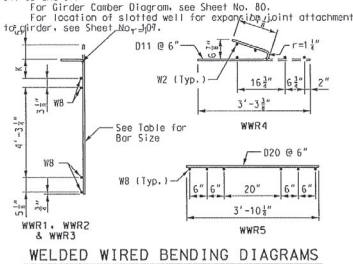

WELDED WIRED BENDING DIAGRAMS

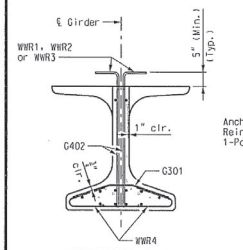

SECTION A-A
Strands not shown for clarity.

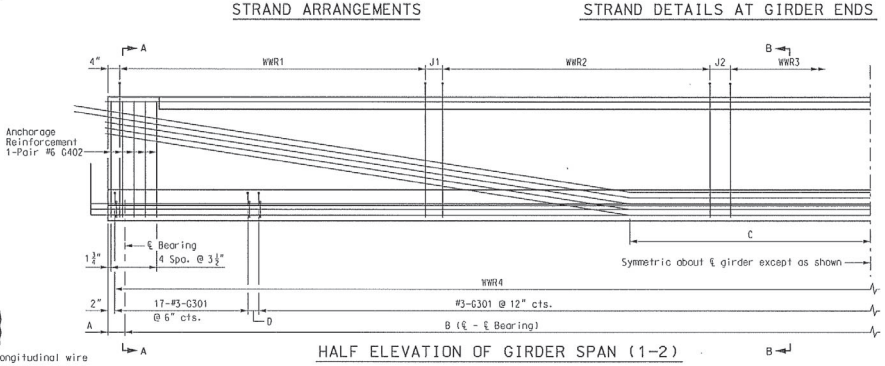

HALF ELEVATION OF GIRDER SPAN (1-2)

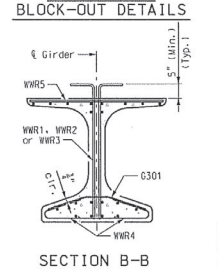

SECTION B-B
Strands not shown for clarity.

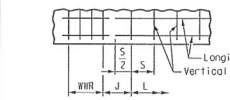

REINFORCEMENT PLACEMENT DETAIL

S = Vertical wire spacing
L = Length of WWR mats
J = Distance between WWR mats

BILL OF REINFORCING STEEL

GIRDER NO.	NO.	SIZE & MARK	ACTUAL LENGTH	SHAPE	BENDING DIAGRAM
6-9	145	3 G301	2'-11⅜"	15	
10,11	146	3 G301	2'-11⅜"	15	
6-11	2	4 G401	3'-11⅞"	20	
6-11	20	6 G402	5'-1"	20	

SHAPE 15
SHAPE 20

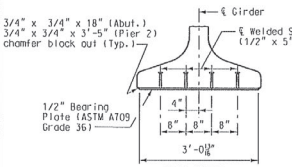

END VIEW

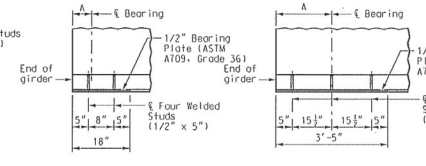

SIDE VIEW (ABUT. 1) SIDE VIEW (PIER 2)

BEARING PLATE DETAILS

Galvanize the 1/2" bearing plate (ASTM A709 Grade 36) in accordance with ASTM A123.

Cost of furnishing, galvanizing, and installing the 1/2" bearing plate (ASTM A709 Grade 36) and welded studs in the prestressed girder will be considered completely covered by the contract unit price for Prestressed Concrete NU-Girder per linear foot.

TABLE OF DIMENSIONS

Girder No.	A		B	C	D
	Abut. 1	Pier 2			
6	7"	20⅛"	125'-4⅜"	12'-9¼"	8"
7	7"	20⅜"	125'-6¼"	12'-9⅜"	8⅛"
8	7"	20⅜"	125'-7⅞"	12'-9½"	9⅛"
9	7"	20¼"	125'-9½"	12'-9⅝"	10⅛"
10	7"	20¼"	125'-11⅛"	12'-9⅞"	5⅛"
11	7"	20⅛"	126'-0⅛"	12'-10"	6"

WELDED WIRE REINFORCEMENT
(WWR4 & WWR5 as shown in Welded Wired Bending Diagrams)

GIRDER No.	WWR1					WWR2					WWR3				
	BAR SIZE	S1	L1	J1	K1	BAR SIZE	S2	L2	J2	K2	BAR SIZE	S3	L3	K3
6	D20	9"	25'-6"	9"	8⅛"	D20	12"	31'-0"	15"	10⅝"	D20	24"	10'-0"	10⅜"
7	D20	9"	25'-6"	9"	8⅛"	D20	12"	31'-0"	15⅜"	9⅜"	D20	24"	10'-0"	9⅝"
8	D20	9"	25'-6"	9"	8"	D20	12"	31'-0"	16⅛"	8¼"	D20	24"	10'-0"	8⅜"
9	D20	9"	25'-6"	9"	7½"	D20	12"	31'-0"	17⅜"	7½"	D20	24"	10'-0"	7¼"
10	D20	9"	25'-6"	9"	7⅛"	D20	12"	31'-0"	18⅛"	7⅜"	D20	24"	10'-0"	6⅞"
11	D20	9"	25'-6"	9"	9⅛"	D20	12"	31'-0"	19"	8"	D20	24"	10'-0"	7⅛"

TYPE NU 63 P/S GIRDER - SPAN (1-2)
GIRDERS 6 THRU 11

Detailed JUL 2009
Checked JUL 2009

Note: This drawing is not to scale. Follow dimensions.

Sheet No. 41 of 125

DATE 8/20/09
ROUTE I-70 | STATE MO
DISTRICT 6 | SHEET NO. BR41
COUNTY St. Louis City - MO
JOB NO. J6I0984B
CONTRACT ID. 100127-601
PROJECT NO. I-70-5 (315)
BRIDGE NO. A6500

DESCRIPTION | DATE

MISSOURI HIGHWAYS AND TRANSPORTATION COMMISSION
105 WEST CAPITOL
P.O. BOX 270
JEFFERSON CITY, MO 65102
1-888-ASK-MODOT (1-888-275-6636)

HNTB
715 KIRK DRIVE
KANSAS CITY, MO 64105-1310
TELEPHONE (816) 472-1201
CERTIFICATE OF AUTHORITY NO. 001270

FINAL PLANS

REV.

T:\de-proj\St_Louis_City\Construction\J6I0984B\Asbuilts\Bridge\B_A6500_041-125_J6I0984B_041.dgn 11:35:58 AM

Notes:
Concrete for prestressed girders were Class A-1 with f'c = 8000 psi and f'ci = 6500 psi.
(+) Indicates prestressing strand.
Use 34 strands with an initial prestress force of 1494 kips.
Prestressing tendons were uncoated, seven-wire, low-relaxation strands, 0.6 inch diameter in accordance with AASHTO M 203, Grade 270. Pretensioned members were in accordance with Sec 1029.
For top flange cross-slope and step details and dimensions, see Sheet No. 58.

Girders were lifted by devices designed by the fabricator.
** At the contractor's option the location for bent-up strands may be varied from that shown. The total number of bent-up strands did not be changed. One strand tie bar is required for each layer of bent-up strands except at abutments which require one bar on the bottom layer of strands only. No additional payment will be made if additional strand tie bars are required.
*** Girder top flange was steel troweled to a smooth finish for 8" at the edges, as shown. Bond breaker was applied to this region only. The center portion was rough finished by scarifying the surface transversely with a wire brush, and no laitance remained on the surface.
**** Prestressing strands at Pier 2 were trimmed to within 1/8 inch of concrete if exposed or 1 inch of concrete if encased. Exposed ends of girders were given 2 coats of an asphalt paint. Ends of girders which will be encased in concrete diaphragms was not painted.

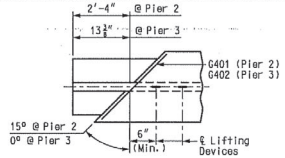

INTERIOR GIRDERS (PIER 2)
ALL GIRDERS (PIER 3)

Reinforcing Steel Notes:
Reinforcing steel conformed to the requirements of AASHTO M 31, Grade 60. Welded Wire Reinforcement (WWR) conformed to the requirements of AASHTO M 221.
All dimensions were out-to-out.
Hooks and bends were in accordance with the CRSI Manual of Standard Practice for Detailing Reinforced Concrete Structures, Stirrup and Tie Dimensions.
Minimum clearance to reinforcing was 1", unless otherwise shown.
Actual lengths were measured along centerline of bar to the nearest inch.

Notes:
Cost of 3/4" Ø coil tie rods placed in diaphragms were considered completely covered by the contract unit price for Prestressed Concrete NU-Girder per linear foot.
Coil ties were held in place in the forms by slotted wire-setting-studs projecting through forms. Studs were left in place or replaced with temporary plugs until girders are erected, then replaced by coil tie rods.
For location of coil inserts at drainage scuppers, see Sheet No. 92.
For location of coil ties, see Sheet Nos. 12, 14, 62, 64, 65 and 67.
The 1-1/2" Ø holes were casted in the web for steel intermediate diaphragms. See Sheet No. 62 for details. Drilling was not allowed.
For details of diaphragms, see Sheet Nos. 12, 14, 64, 65 and 67.
For Girder Camber Diagram, see Sheet No. 80.
For location of slotted well for expansion joint attachment to girder, see Sheet No. 107.

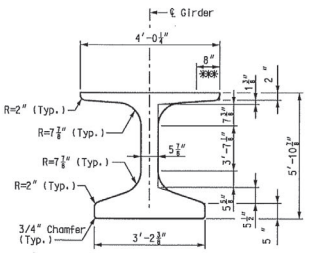

DIMENSIONS

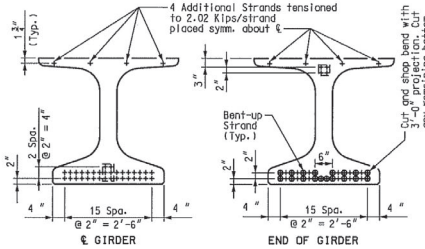

STRAND ARRANGEMENTS

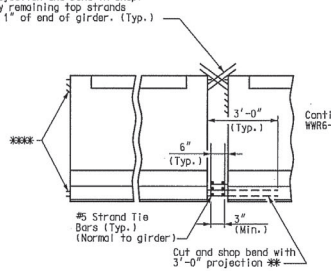

STRAND DETAILS AT GIRDER ENDS

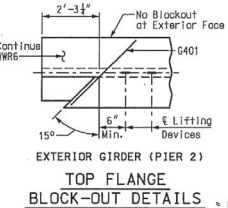

EXTERIOR GIRDER (PIER 2)
TOP FLANGE BLOCK-OUT DETAILS

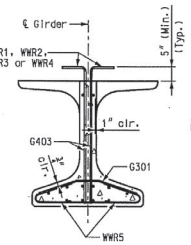

SECTION A-A
Strands not shown for clarity.

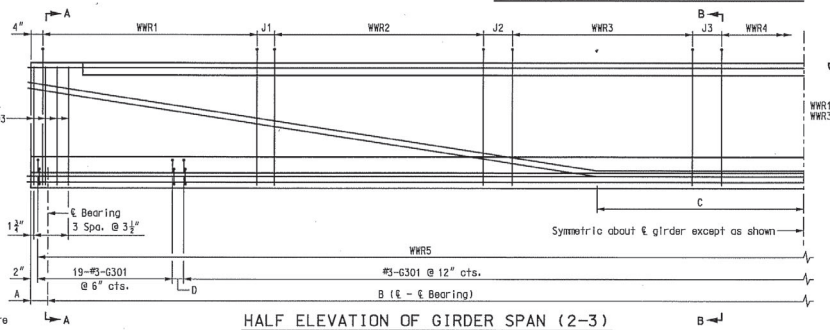

HALF ELEVATION OF GIRDER SPAN (2-3)

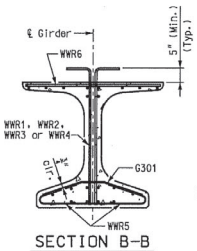

SECTION B-B
Strands not shown for clarity.

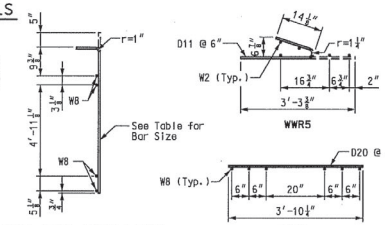

WELDED WIRED BENDING DIAGRAMS

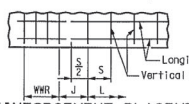

REINFORCEMENT PLACEMENT DETAIL
S = Vertical wire spacing
L = Length of WWR mats
J = Distance between WWR mats

BILL OF REINFORCING STEEL

GIRDER NO.	NO.	SIZE & MARK	ACTUAL LENGTH	SHAPE	BENDING DIAGRAM
1	133	3 G301	2'-11⅜"	15	
2	136	3 G301	2'-11⅜"	15	
3	139	3 G301	2'-11⅜"	15	
4	142	3 G301	2'-11⅜"	15	
1-4	1	4 G401	3'-11⅜"	20	
1-4	1	4 G402	3'-10¼"	20	
1-4	16	6 G403	5'-8"	20	

4½" 13" 7⅞" 13" 4½"
SHAPE 15
SHAPE 20

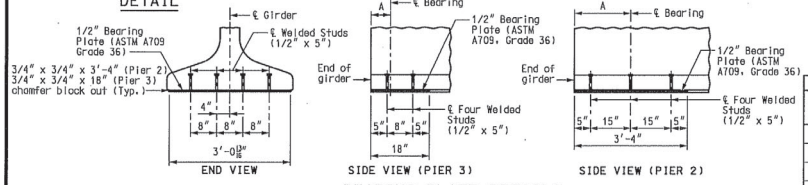

BEARING PLATE DETAILS

Galvanize the 1/2" bearing plate (ASTM A709 Grade 36) in accordance with ASTM A123.

Cost of furnishing, galvanizing, and installing the 1/2" bearing plate (ASTM A709 Grade 36) and welded studs in the prestressed girder will be considered completely covered by the contract unit price for Prestressed Concrete NU-Girder per linear foot.

TABLE OF DIMENSIONS

Girder No.	A		B	C	D
	Pier 2	Pier 3			
1	20"	7"	111'-7"	11'-4⅜"	9"
2	19¾"	7"	114'-4⅛"	11'-7⅜"	7½"
3	19¾"	7"	117'-1⅜"	11'-11⅛"	6"
4	19¾"	7"	119'-10¾"	12'-2½"	4⅝"

WELDED WIRE REINFORCEMENT
(WWR5 & WWR6 as shown in Welded Wired Bending Diagrams)

GIRDER No.	WWR1				WWR2				WWR3				WWR4		
	BAR SIZE	S1	L1	J1	BAR SIZE	S2	L2	J2	BAR SIZE	S3	L3	J3	BAR SIZE	S4	L4
1	D20	6"	16'-0"	6"	D20	12"	24'-0"	12"	D20	18"	9'-0"	13"	D20	24"	10'-0"
2	D20	6"	16'-0"	6"	D20	12"	24'-0"	12"	D20	18"	9'-0"	17½"	D20	24"	12'-0"
3	D20	6"	16'-0"	6"	D20	12"	24'-0"	12"	D20	18"	9'-0"	10"	D20	24"	16'-0"
4	D20	6"	16'-0"	6"	D20	12"	24'-0"	12"	D20	18"	9'-0"	14⅝"	D20	24"	18'-0"

TYPE NU 70 P/S GIRDER – SPAN (2-3)
GIRDERS 1 THRU 4

Detailed JUL 2009
Checked JUL 2009

Note: This drawing is not to scale. Follow dimensions.

Sheet No. 42 of 2

DATE 8/20/09
ROUTE I-70 | STATE MO
DISTRICT 6 | SHEET NO. BR42
COUNTY St. Louis City - MO
JOB NO. J6I0984B
CONTRACT ID. 100127-601
PROJECT NO. I-70-5 (315)
BRIDGE NO. A6500

DESCRIPTION | DATE

MISSOURI HIGHWAYS AND TRANSPORTATION COMMISSION
105 WEST CAPITOL
JEFFERSON CITY, MO 65102
1-888-ASK-MODOT (1-888-275-6636)

HNTB
715 KIRK DRIVE
KANSAS CITY, MO 64105-1310
TEL: (816) 483-1600
CERTIFICATE OF AUTHORITY NO. 001370

FINAL PLANS

REV.

T L I 48 B B 42 2 I 48 42 24 22 M

Notes:
Concrete for prestressed girders was Class A-1 with f'c = 8000 psi and f'ci = 6500 psi.
(+) indicates prestressing strand.
Use 40 strands with an initial prestress force of 1758 kips.
Prestressing tendons was uncoated, seven-wire, low-relaxation strands, 0.6 inch diameter in accordance with AASHTO M 203, Grade 270. Pretensioned members are in accordance with Sec 1029.
For top flange cross-slope and step details and dimensions, see Sheet No. 58.

Girders were lifted by devices designed by the fabricator.
** At the contractor's option the location for bent-up strands may be varied from that shown. The total number of bent-up strands did not be changed. One strand tie bar is required for each layer of bent-up strands except at abutments which require one bar on the bottom layer of strands only. No additional payment will be made if additional strand tie bars are required.
*** Girder top flange was steel troweled to a smooth finish for 8" at the edges, as shown. Bond breaker was applied to this region only. The center portion was rough finished by scarifying the surface transversely with a wire brush, and no laitance remained on the surface.
**** Prestressing strands at Pier 2 were trimmed to within 1/8 inch of concrete if exposed or 1 inch of concrete if encased. Exposed ends of girders were given 2 coats of an asphalt paint. Ends of girders which will be encased in concrete diaphragms was not painted.

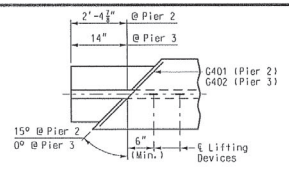

TOP FLANGE BLOCK-OUT DETAIL

Reinforcing Steel Notes:
Reinforcing steel conformed to the requirements of AASHTO M 31, Grade 60. Welded Wire Reinforcement (WWR) conformed to the requirements of AASHTO M 221.
All dimensions were out-to-out.
Hooks and bends were in accordance with the CRSI Manual of Standard Practice for Detailing Reinforced Concrete Structures, Stirrup and Tie Dimensions.
Minimum clearance to reinforcing was 1", unless otherwise shown.
Actual lengths were measured along centerline of bar to the nearest inch.

Notes:
Cost of 3/4" Ø coil tie rods placed in diaphragms were considered completely covered by the contract unit price for Prestressed Concrete NU-Girder per linear foot.
Coil ties were held in place in the forms by slotted wire-setting-studs projecting through forms. Studs were left in place or replaced with temporary plugs until girders are erected, then replaced by coil tie rods.
For location of coil inserts at drainage scuppers, see Sheet No. 92.
For location of coil ties, see Sheet Nos. 12, 14, 62, 64, 65 and 67.
The 1-1/2" Ø holes were casted in the web for steel intermediate diaphragms. See Sheet No. 62 for details.
Drilling was not allowed.
For details of diaphragms, see Sheet Nos. 12, 14, 64, 65 and 67.
For Girder Camber Diagram, see Sheet No. 80.
For location of slotted well for expansion joint attachment to girder, see Sheet No. 107.

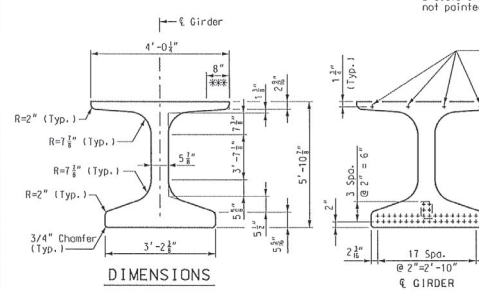

DIMENSIONS

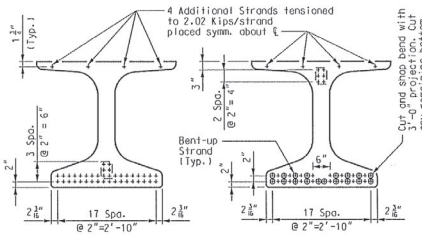

STRAND ARRANGEMENTS

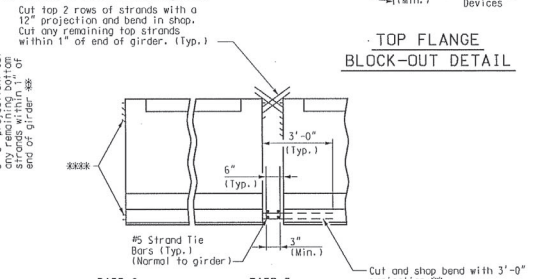

STRAND DETAILS AT GIRDER ENDS

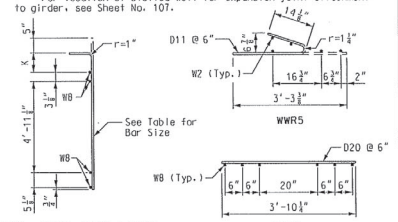

WELDED WIRED BENDING DIAGRAMS

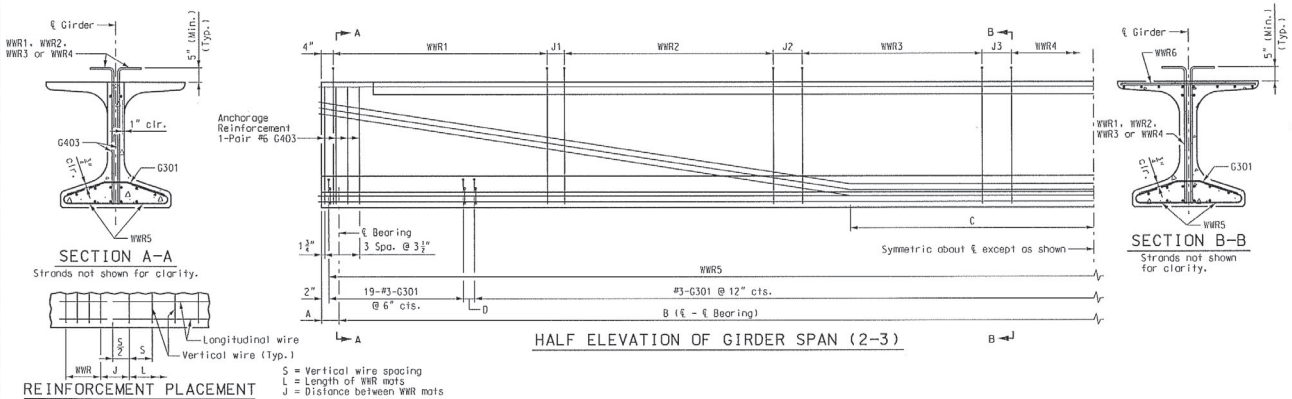

HALF ELEVATION OF GIRDER SPAN (2-3)

REINFORCEMENT PLACEMENT DETAIL

S = Vertical wire spacing
L = Length of WWR mats
J = Distance between WWR mats

BILL OF REINFORCING STEEL

GIRDER NO.	NO.	SIZE & MARK	ACTUAL LENGTH	SHAPE	BENDING DIAGRAM
5	144	3 G301	2'-11¾"	15	
6	147	3 G301	2'-11¾"	15	
7	150	3 G301	2'-11¾"	15	
8	153	3 G301	2'-11¾"	15	
					SHAPE 15
5-8	1	4 G401	3'-11⅝"	20	
5-8	1	4 G402	3'-10½"	20	
5-8	16	6 G403	5'-8"	20	
					SHAPE 20

WELDED WIRE REINFORCEMENT
(WWR5 & WWR6 as shown in Welded Wired Bending Diagrams)

GIRDER No.	WWR1 BAR SIZE	S1	L1	J1	K1	WWR2 BAR SIZE	S2	L2	J2	K2	WWR3 BAR SIZE	S3	L3	J3	K3	WWR4 BAR SIZE	S4	L4	K4
5	D20	6"	16'-0"	6"	8¾"	D20	12"	24'-0"	12"	8¾"	D20	18"	12'-0"	19⅝"	7⅞"	D20	24"	14'-0"	7⅞"
6	D20	6"	16'-0"	6"	9¼"	D20	12"	24'-0"	12"	9¼"	D20	18"	12'-0"	12¼"	8¼"	D20	24"	18'-0"	7⅞"
7	D20	6"	16'-0"	6"	7⅛"	D20	12"	24'-0"	12"	7⅜"	D20	18"	12'-0"	17"	7⅜"	D20	24"	20'-0"	7⅝"
8	D20	6"	16'-0"	6"	7⅛"	D20	12"	24'-0"	12"	7⅛"	D20	18"	12'-0"	21¾"	7⅛"	D20	24"	22'-0"	7⅝"

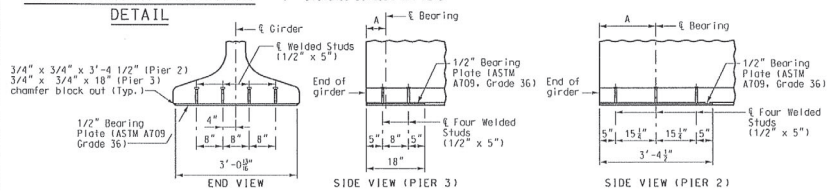

BEARING PLATE DETAILS

Galvanize the 1/2" bearing plate (ASTM A709 Grade 36) in accordance with ASTM A123.

Cost of furnishing, galvanizing, and installing the 1/2" bearing plate (ASTM A709 Grade 36) and welded studs in the prestressed girder will be considered completely covered by the contract unit price for Prestressed Concrete NU-Girder per linear foot.

TABLE OF DIMENSIONS

Girder No.	A Pier 2	A Pier 3	B	C	D
5	20¼"	7"	122'-8"	12'-5½"	9¾"
6	20⅛"	7"	125'-5½"	12-9¼"	8¼"
7	20"	7"	128'-3"	13'-0⅜"	7"
8	19⅞"	7"	131'-0¾"	13'-4"	5¾"

TYPE NU 70 P/S GIRDER - SPAN (2-3)
GIRDERS 5 THRU 8

Detailed JUL 2009
Checked JUL 2009

Note: This drawing is not to scale. Follow dimensions.

Sheet No. 43 of 125

DATE 8/20/09
ROUTE I-70
STATE MO
DISTRICT 6
SHEET NO. BR43
COUNTY St. Louis City - MO
JOB NO. J6I0984B
CONTRACT ID. 100127-601
PROJECT NO. I-70-5 (315)
BRIDGE NO. A6500

DESCRIPTION | DATE

MISSOURI HIGHWAYS AND TRANSPORTATION COMMISSION
105 WEST CAPITOL
JEFFERSON CITY, MO 65102
1-888-ASK-MODOT (1-888-275-6636)

HNTB
715 KIRK DRIVE
KANSAS CITY, MO 64105-1310
TELEPHONE (816) 472-1201
CERTIFICATE OF AUTHORITY NO. 001670

FINAL PLANS

REV.

T:\de-proj\St_Louis_City\Construction\J6I0984B\Asbuilts\Bridge\B_A6500_043-125_J6I0984B_043.dgn
11:35:39 AM

Notes:
Concrete for prestressed girders was Class A-1 with f'c = 8000 psi and f'ci = 6500 psi.
(+) indicates prestressing strand.
Use 46 strands with an initial prestress force of 2021 kips.
Prestressing tendons was uncoated, seven-wire, low-relaxation strands, 0.6 inch diameter in accordance with AASHTO M 203, Grade 270. Pretensioned members are in accordance with Sec 1029.
For top flange cross-slope and step details and dimensions, see Sheet No. 58.

Girders were lifted by devices designed by the fabricator.
** At the contractor's option the location for bent-up strands may be varied from that shown. The total number of bent-up strands did not be changed. One strand tie bar is required for each layer of bent-up strands except at abutments which require one bar on the bottom layer of strands only. No additional payment will be made if additional strand tie bars are required.
*** Girder top flange was steel troweled to a smooth finish for 8" at the edges, as shown. Bond breaker was applied to this region only. The center portion was rough finished by scarifying the surface transversely with a wire brush, and no laitance remained on the surface.
**** Prestressing strands at Pier 2 were trimmed to within 1/8 inch of concrete if exposed or 1 inch of concrete if encased. Exposed ends of girders were given 2 coats of an asphalt paint. Ends of girders which will be encased in concrete diaphragms was not painted.

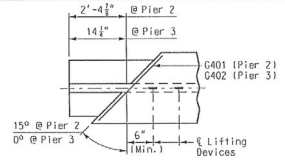

TOP FLANGE BLOCK-OUT DETAIL

Reinforcing Steel Notes:
Reinforcing steel conformed to the requirements of AASHTO M 31, Grade 60. Welded Wire Reinforcement (WWR) conformed to the requirements of AASHTO M 221.
All dimensions were out-to-out.
Hooks and bends were in accordance with the CRSI Manual of Standard Practice for Detailing Reinforced Concrete Structures. Stirrup and Tie Dimensions.
Minimum clearance to reinforcing was 1", unless otherwise shown.
Actual lengths were measured along centerline of bar to the nearest inch.

Notes:
Cost of 3/4" Ø coil tie rods placed in diaphragms were considered completely covered by the contract unit price for Prestressed Concrete NU-Girder per linear foot.
Coil ties were held in place in the forms by slotted wire-setting-studs projecting through forms. Studs were left in place or replaced with temporary plugs until girders are erected, then replaced by coil tie rods.
For location of coil inserts at drainage scuppers, see Sheet No. 92.
For location of coil ties, see Sheet Nos. 12, 14, 62, 64, 65 and 67.
The 1-1/2" Ø holes were casted in the web for steel intermediate diaphragms. See Sheet No. 62 for details. Drilling was not allowed.
For details of diaphragms, see Sheet Nos. 12, 14, 64, 65 and 67.
For Girder Camber Diagram, see Sheet No. 80.
For location of slotted well for expansion joint attachment to girder, see Sheet No. 107.

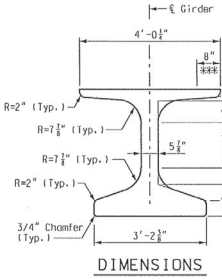

DIMENSIONS

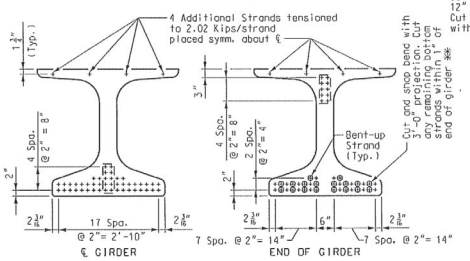

STRAND ARRANGEMENTS

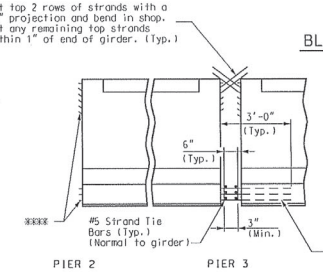

STRAND DETAILS AT GIRDER ENDS

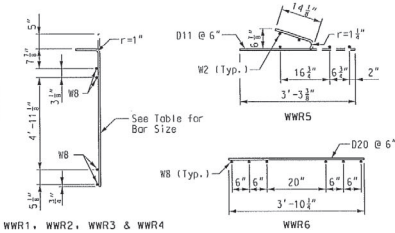

WELDED WIRED BENDING DIAGRAMS

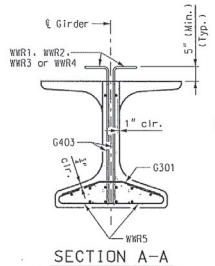

SECTION A-A
Strands not shown for clarity.

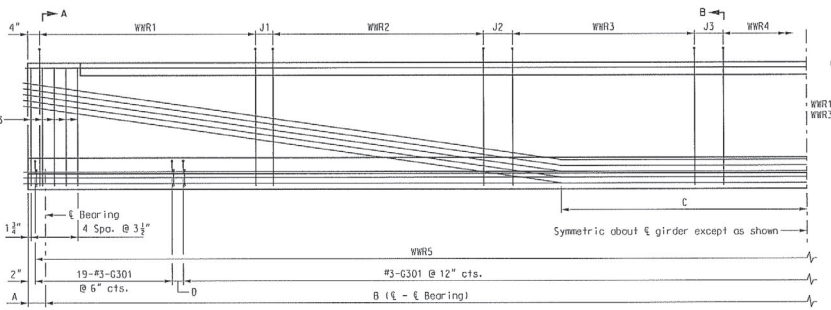

HALF ELEVATION OF GIRDER SPAN (2-3)

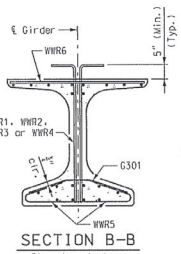

SECTION B-B
Strands not shown for clarity.

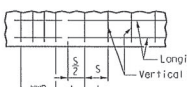

REINFORCEMENT PLACEMENT DETAIL

S = Vertical wire spacing
L = Length of WWR mats
J = Distance between WWR mats

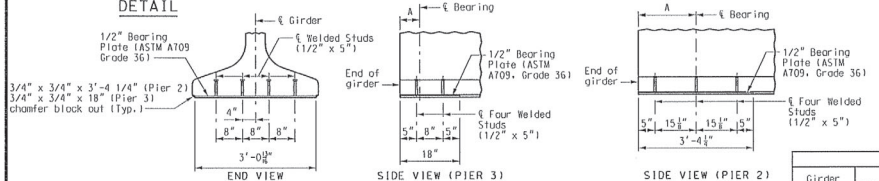

BEARING PLATE DETAILS

Galvanize the 1/2" bearing plate (ASTM A709 Grade 36) in accordance with ASTM A123.

Cost of furnishing, galvanizing, and installing the 1/2" bearing plate (ASTM A709 Grade 36) and welded studs in the prestressed girder will be considered completely covered by the contract unit price for Prestressed Concrete NU-Girder per linear foot.

BILL OF REINFORCING STEEL

GIRDER NO.	NO.	SIZE & MARK	ACTUAL LENGTH	SHAPE	BENDING DIAGRAM
9	155	3 G301	2'-11⅜"	15	
10	158	3 G301	2'-11⅜"	15	
9-10	1	4 G401	3'-11⅜"	20	
9-10	1	4 G402	3'-10¼"	20	
9-10	20	6 G403	5'-8"	20	

SHAPE 15
SHAPE 20

WELDED WIRE REINFORCEMENT
(WWR5 & WWR6 as shown in Welded Wired Bending Diagrams)

GIRDER NO.	WWR1 BAR SIZE	WWR1 S1	WWR1 L1	WWR1 J1	WWR2 BAR SIZE	WWR2 S2	WWR2 L2	WWR2 J2	WWR3 BAR SIZE	WWR3 S3	WWR3 L3	WWR3 J3	WWR4 BAR SIZE	WWR4 S4	WWR4 L4
9	D20	6"	16'-0"	6"	D20	12"	24'-0"	12"	D20	18"	12'-0"	14⅝"	D20	24"	26'-0"
10	D20	6"	16'-0"	6"	D20	12"	24'-0"	12"	D20	18"	12'-0"	19½"	D20	24"	28'-0"

TABLE OF DIMENSIONS

Girder No.	A Pier 2	A Pier 3	B	C	D
9	20⅛"	7"	133'-10¼"	6'-9⅜"	10⅜"
10	20"	7"	136'-8"	6'-11⅜"	9½"

TYPE NU 70 P/S GIRDER - SPAN (2-3)
GIRDERS 9 AND 10

Detailed JUL 2009
Checked JUL 2009

Note: This drawing is not to scale. Follow dimensions.

Sheet No. 44 of 125

DATE 8/20/09
ROUTE I-70 STATE MO
DISTRICT 6 SHEET NO. BR44
COUNTY St. Louis City - MO
JOB NO. J6I0984B
CONTRACT ID. 100127-601
PROJECT NO. I-70-5 (315)
BRIDGE NO. A6500

DESCRIPTION | DATE

MISSOURI HIGHWAYS AND TRANSPORTATION COMMISSION
105 WEST CAPITOL
JEFFERSON CITY, MO 65102
1-888-ASK-MODOT (1-888-275-6636)

HNTB
715 KIRK DRIVE
KANSAS CITY, MO 64105-1310
TELEPHONE (816) 472-1201
CERTIFICATE OF AUTHORITY NO. 001270

FINAL PLANS

REV.

f:\de-proj\St_Louis_City\Construction\J6I0984B\Asbuilts\Bridge\B_A6500_044-125_J6I0984B_044.dgn
11:45:41 AM

Notes:
Concrete for prestressed girders was Class A-1 with f'c = 8000 psi and f'ci = 6500 psi.
(+) indicates prestressing strand.
Use 52 strands with an initial prestress force of 2285 kips.
Prestressing tendons was uncoated, seven-wire, low-relaxation strands, 0.6 inch diameter in accordance with AASHTO M 203, Grade 270. Pretensioned members are in accordance with Sec 1029.
For top flange cross-slope and step details and dimensions, see Sheet No. 58.

Girders were lifted by devices designed by the fabricator.
** At the contractor's option the location for bent-up strands may be varied from that shown. The total number of bent-up strands did not be changed. One strand tie bar is required for each layer of bent-up strands except at abutments which require one bar on the bottom layer of strands only. No additional payment will be made if additional strand tie bars are required.
*** Girder top flange was steel troweled to a smooth finish for 8" at the edges, as shown. Bond breaker was applied to this region only. The center portion was rough finished by scarifying the surface transversely with a wire brush, and no laitance remained on the surface.
**** Prestressing strands at Pier 2 were trimmed to within 1/8 inch of concrete if exposed or 1 inch of concrete if encased. Exposed ends of girders were given 2 coats of an asphalt paint. Ends of girders which will be encased in concrete diaphragms was not painted.

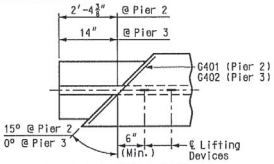

INTERIOR GIRDERS (PIER 2)
ALL GIRDERS (PIER 3)

Reinforcing Steel Notes:
Reinforcing steel conformed to the requirements of AASHTO M 31, Grade 60. Welded Wire Reinforcement (WWR) conformed to the requirements of AASHTO M 221.
All dimensions were out-to-out.
Hooks and bends were in accordance with the CRSI Manual of Standard Practice for Detailing Reinforced Concrete Structures, Stirrup and Tie Dimensions.
Minimum clearance to reinforcing was 1", unless otherwise shown.
Actual lengths were measured along centerline of bar to the nearest inch.

Notes:
Cost of 3/4" Ø coil tie rods placed in diaphragms were considered completely covered by the contract unit price for Prestressed Concrete NU-Girder per linear foot.
Coil ties were held in place in the forms by slotted wire-setting-studs projecting through forms. Studs were left in place or replaced with temporary plugs until girders are erected, then replaced by coil tie rods.
For location of coil inserts at drainage scuppers, see Sheet No. 92.
For location of coil ties, see Sheet Nos. 12, 14, 62, 64, 65 and 67.
The 1-1/2" Ø holes were casted in the web for steel intermediate diaphragms. See Sheet No. 62 for details.
Drilling was not allowed.
For details of diaphragms, see Sheet Nos. 12, 14, 64, 65 and 67.
For Girder Camber Diagram, see Sheet No. 80.
For location of slotted well for expansion joint attachment to girder, see Sheet No. 107.

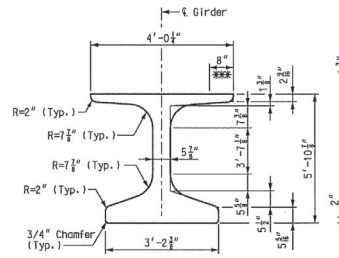

DIMENSIONS

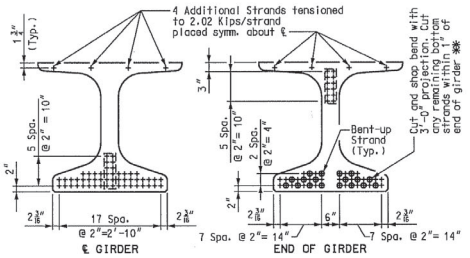

STRAND ARRANGEMENTS

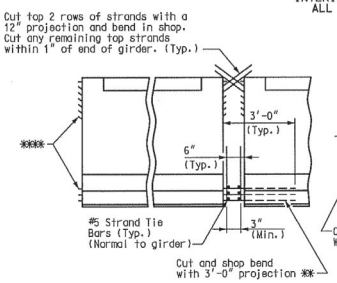

STRAND DETAILS AT GIRDER ENDS

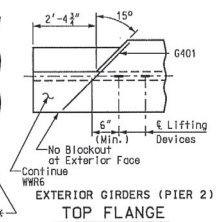

EXTERIOR GIRDERS (PIER 2)
TOP FLANGE BLOCK-OUT DETAILS

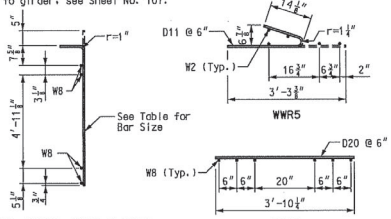

WWR1, WWR2, WWR3 & WWR4
WELDED WIRED BENDING DIAGRAMS

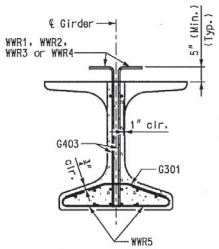

SECTION A-A
Strands not shown for clarity.

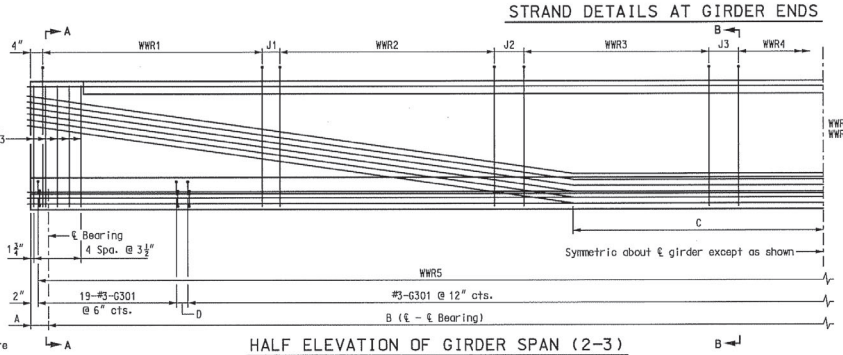

HALF ELEVATION OF GIRDER SPAN (2-3)

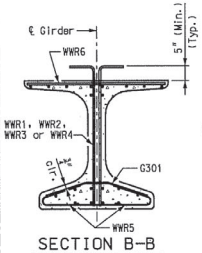

SECTION B-B
Strands not shown for clarity.

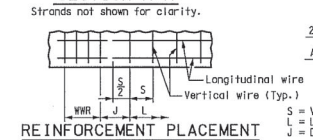

REINFORCEMENT PLACEMENT DETAIL
S = Vertical wire spacing
L = Length of WWR mats
J = Distance between WWR mats

BILL OF REINFORCING STEEL					
GIRDER NO.	NO.	SIZE & MARK	ACTUAL LENGTH	SHAPE	BENDING DIAGRAM
11	161	3 G301	2'-11 3/8"	15	
12	164	3 G301	2'-11 3/8"	15	
11-12	1	4 G401	3'-11 7/8"	20	
11-12	1	4 G402	3'-10 1/4"	20	
11-12	20	6 G403	5'-8"	20	

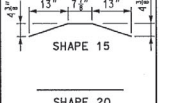

SHAPE 15

SHAPE 20

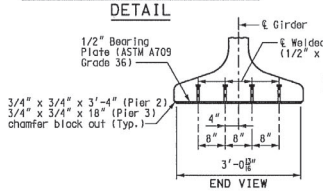

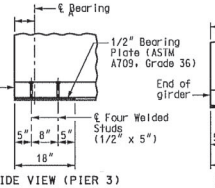

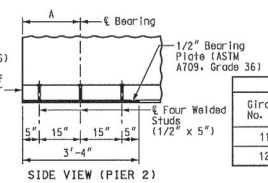

BEARING PLATE DETAILS

Galvanize the 1/2" bearing plate (ASTM A709 Grade 36) in accordance with ASTM A123.

Cost of furnishing, galvanizing, and installing the 1/2" bearing plate (ASTM A709 Grade 36) and welded studs in the prestressed girder will be considered completely covered by the contract unit price for Prestressed Concrete NU-Girder per linear foot.

TABLE OF DIMENSIONS					
Girder No.	A		B	C	D
	Pier 2	Pier 3			
11	20"	7"	139'-5 5/8"	7'-1"	8 1/4"
12	19 7/8"	7"	142'-3 3/8"	7'-2 3/4"	7 1/8"

WELDED WIRE REINFORCEMENT (WWR5 & WWR6 as shown in Welded Wired Bending Diagrams)																
GIRDER NO.	WWR1				WWR2				WWR3				WWR4			
	BAR SIZE	S1	L1	J1	BAR SIZE	S2	L2	J2	BAR SIZE	S3	L3	J3	BAR SIZE	S4	L4	
11	D20	6"	16'-0"	6"	D20	12"	35'-0"	12"	D20	18"	9'-0"	12 1/4"	D20	24"	16'-0"	
12	D20	6"	16'-0"	6"	D20	12"	35'-0"	12"	D20	18"	9'-0"	17 1/8"	D20	24"	18'-0"	

TYPE NU 70 P/S GIRDER - SPAN (2-3)
GIRDERS 11 AND 12

Detailed JUL 2009
Checked JUL 2009

Note: This drawing is not to scale. Follow dimensions.

Sheet No. 45 of 125

DATE 8/20/09
ROUTE I-70 | STATE MO
DISTRICT 6 | SHEET NO. BR45
COUNTY St. Louis City - MO
JOB NO. J6I0984B
CONTRACT ID. 100127-601
PROJECT NO. I-70-5 (315)
BRIDGE NO. A6500

DESCRIPTION | DATE

MISSOURI HIGHWAYS AND TRANSPORTATION COMMISSION
105 WEST CAPITOL
JEFFERSON CITY, MO 65102
1-888-ASK-MODOT (1-888-275-6636)

HNTB
715 KIRK DRIVE
KANSAS CITY, MO 64105-1310
PHONE: (816) 472-1201
CERTIFICATE OF AUTHORITY NO. 001270

FINAL PLANS

REV.

T:\de-proj\St_Louis_City\Construction\J6I0984B\Asbuilts\Bridge\B_A6500_045-125_J6I0984B_045.dgn
1:03:39 PM

Notes:
Concrete for prestressed girders were Class A-1 with f'c = 8000 psi and f'ci = 6500 psi.
(+) indicates prestressing strand.
Use 50 strands with an initial prestress force of 2198 kips.
Prestressing tendons was uncoated, seven-wire, low-relaxation strands, 0.6 inch diameter in accordance with AASHTO M 203, Grade 270. Pretensioned members were in accordance with Sec 1029.
For top flange cross-slope and step details and dimensions, see Sheet No. 59.

Girders were lifted by devices designed by the fabricator.
** At the contractor's option the location for bent-up strands may be varied from that shown. The total number of bent-up strands were not changed. One strand tie bar is required for each layer of bent-up strands except at abutments which require one bar on the bottom layer of strands only. No additional payment was made if additional strand tie bars are required.
*** Girder top flange was steel troweled to a smooth finish for 8" at the edges, as shown. Bond breaker was applied to this region only. The center portion was rough finished by scarifying the surface transversely with a wire brush, and no laitance remained on the surface.

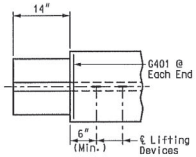

TOP FLANGE BLOCK-OUT DETAIL

Reinforcing Steel Notes:
Reinforcing steel conformed to the requirements of AASHTO M 31, Grade 60. Welded Wire Reinforcement (WWR) conformed to the requirements of AASHTO M 221.
All dimensions were out-to-out.
Hooks and bends were in accordance with the CRSI Manual of Standard Practice for Detailing Reinforced Concrete Structures, Stirrup and Tie Dimensions.
Minimum clearance to reinforcing were 1", unless otherwise shown.
Actual lengths were measured along centerline of bar to the nearest inch.

Notes:
Cost of 3/4" Ø coil tie rods placed in diaphragms was considered completely covered by the contract unit price for Prestressed Concrete NU-Girder per linear foot.
Coil ties were held in place in the forms by slotted wire-setting-studs projecting through forms. Studs are to be left in place or replaced with temporary plugs until girders are erected, then replaced by coil tie rods.
For location of coil inserts at drainage scuppers, see Sheet No. 92.
For location of coil ties, see Sheet Nos. 63, 68 and 69.
The 1-1/2" Ø holes were casted in the web for steel intermediate diaphragms, see Sheet No. 63 for details.
Drilling is not allowed.
For details of diaphragms, see Sheet Nos. 68 & 69.
For Girder Camber Diagram, see Sheet No. 80.

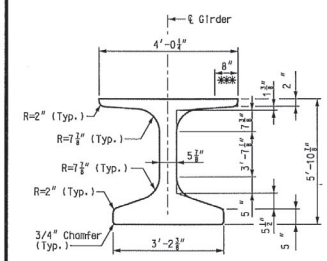

DIMENSIONS

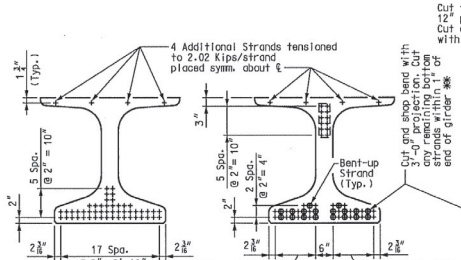

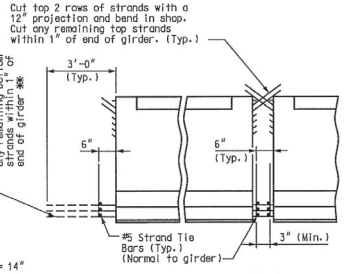

STRAND ARRANGEMENTS

STRAND DETAILS AT GIRDER ENDS

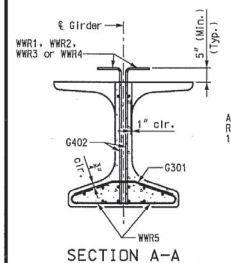

SECTION A-A
Strands not shown for clarity.

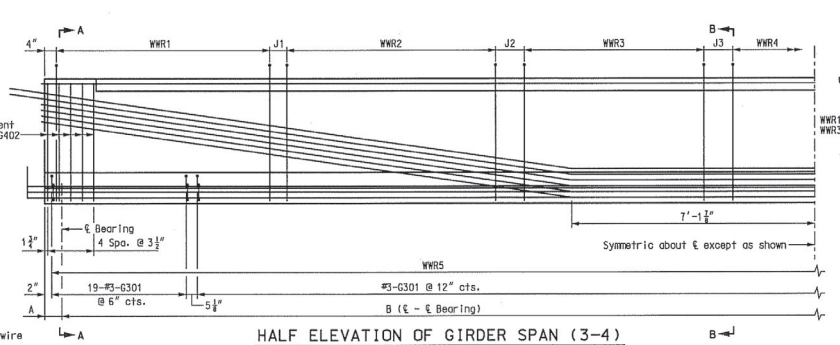

HALF ELEVATION OF GIRDER SPAN (3-4)

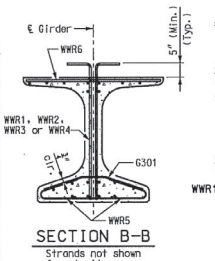

SECTION B-B
Strands not shown for clarity.

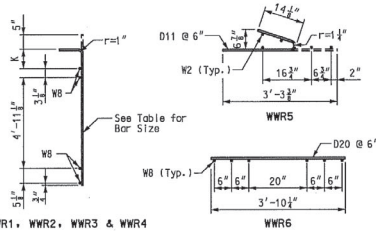

WELDED WIRED BENDING DIAGRAMS

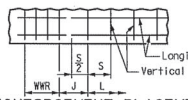

REINFORCEMENT PLACEMENT DETAIL

S = Vertical wire spacing
L = Length of WWR mats
J = Distance between WWR mats

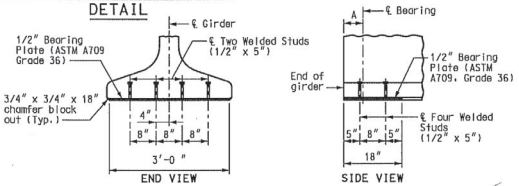

BEARING PLATE DETAILS

Galvanize the 1/2" bearing plate (ASTM A709 Grade 36) in accordance with ASTM A123.

Cost of furnishing, galvanizing, and installing the 1/2" bearing plate (ASTM A709 Grade 36) and welded studs in the prestressed girder will be considered completely covered by the contract unit price for Prestressed Concrete NU-Girder per liner foot.

BILL OF REINFORCING STEEL - EACH GIRDER

NO.	SIZE & MARK	ACTUAL LENGTH	SHAPE	BENDING DIAGRAM
163	3 G301	2'-11⅜"	15	4½" 13" 7¾" 13" 4½"
2	4 G401	3'-10¼"	20	
20	6 G402	5'-8"	20	

SHAPE 15

SHAPE 20

TABLE OF DIMENSIONS

Girder No.	A		B
	Pier 3	Pier 4	
1-5	7⅜"	7"	142'-0"
6-8	7¼"	7"	142'-0¼"
9-11	7⅛"	7"	142'-0⅛"
12	7"	7"	142'-0⅜"

WELDED WIRE REINFORCEMENT
(WWR5 & WWR6 as shown in Welded Wired Bending Diagrams)

GIRDER NO.	WWR1					WWR2					WWR3					WWR4				
	BAR SIZE	S1	L1	J1	K1	BAR SIZE	S2	L2	J2	K2	BAR SIZE	S3	L3	J3	K3	BAR SIZE	S4	L4	K4	
1	D20	6"	14'-0"	6"	8⅜"	D20	12"	33'-0"	12"	11 "	D20	18"	12'-0"	9¼"	11 "	D20	24"	20'-0"	11 "	
2-12	D20	6"	14'-0"	6"	9¼"	D20	12"	33'-0"	12"	10⅛"	D20	18"	12'-0"	9¼"	11⅛"	D20	24"	20'-0"	11⅛"	

TYPE NU 70 P/S GIRDER - SPAN (3-4)
GIRDERS 1 THRU 12

Detailed JUL 2009
Checked JUL 2009

Note: This drawing is not to scale. Follow dimensions.

Sheet No. 46 of

DATE 8/20/09
ROUTE I-70 | STATE MO
DISTRICT 6 | SHEET NO. BR46
COUNTY St. Louis City - MO
JOB NO. J6I0984B
CONTRACT ID. 100127-601
PROJECT NO. I-70-5 (315)
BRIDGE NO. A6500

DESCRIPTION | DATE

MISSOURI HIGHWAYS AND TRANSPORTATION COMMISSION
105 WEST CAPITOL AVENUE
JEFFERSON CITY, MO 65102
1-888-ASK-MODOT (1-888-275-6636)

HNTB
715 KIRK DRIVE
KANSAS CITY, MO 64105-1310
TELEPHONE (816) 472-1201
CERTIFICATE OF AUTHORITY NO. 001270

FINAL PLANS

REV.

6 48 B B 6 46 6 48 46 4 4

Notes:
Concrete for prestressed girders are Class A-1 with f'c = 8000 psi and f'ci = 6500 psi.
(+) indicates prestressing strand.
Use 30 strands with an initial prestress force of 1319 kips.
Prestressing tendons was uncoated, seven-wire, low-relaxation strands, 0.6 inch diameter in accordance with AASHTO M 203, Grade 270.
Pretensioned members were in accordance with Sec 1029.

Girders were lifted by devices designed by the fabricator.
** At the contractor's option the location for bent-up strands was varied from that shown. The total number of bent-up strands were bot changed. One strand tie bar is required for each layer of bent-up strands except at abutments which require one bar on the bottom layer of strands only. No additional payment was made if additional strand tie bars are required.
*** Girder top flange was steel troweled to a smooth finish for 8" at the edges, as shown. Bond breaker was applied to this region only. The center portion was rough finished by scarifying the surface transversely with a wire brush, and no laitance did remain on the surface.
**** Prestressing strands at Pier 2 was trimmed to within 1/8 inch of concrete if exposed or 1 inch if encased. Exposed ends of girders shall be given 2 coats of an asphalt paint. Ends of girders which will be encased in concrete diaphragms was not painted.

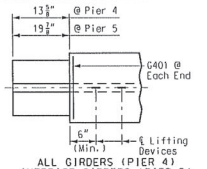

ALL GIRDERS (PIER 4)
INTERIOR GIRDERS (PIER 5)

Reinforcing Steel Notes:
Reinforcing steel conformed to the requirements of AASHTO M 31, Grade 60. Welded Wire Reinforcement (WWR) conformed to the requirements of AASHTO M 221.
All dimensions are out-to-out.
Hooks and bends were in accordance with the CRSI Manual of Standard Practice for Detailing Reinforced Concrete Structures, Stirrup and Tie Dimensions.
Minimum clearance to reinforcing was 1", unless otherwise shown.
Actual lengths are measured along centerline of bar to the nearest inch.

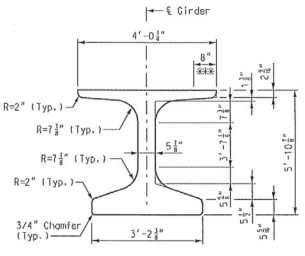

DIMENSIONS

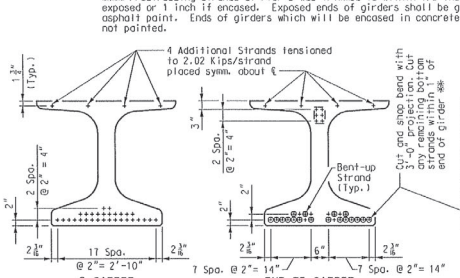

STRAND ARRANGEMENTS

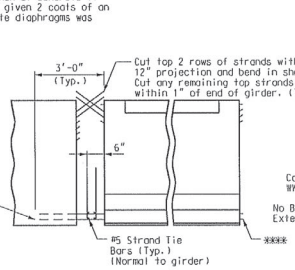

STRAND DETAILS AT GIRDER ENDS

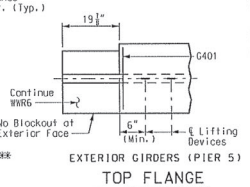

TOP FLANGE BLOCK-OUT DETAILS

Notes:
Cost of 3/4" Ø coil tie rods placed in diaphragms were considered completely covered by the contract unit price for Prestressed Concrete NU-Girder per linear foot.
Coil ties were held in place in the forms by slotted wire-setting-studs projecting through forms. Studs are to be left in place or replaced with temporary plugs until girders are erected, then replaced by coil tie rods.
For location of coil inserts at drainage scuppers, see Sheet No. 92.
For location of coil ties, see Sheet Nos. 63, 69, 70 and 71.
The 1-1/2" Ø holes were casted in the web for steel intermediate diaphragms, see Sheet No. 63 for details.
Drilling is not allowed.
For details of diaphragms, see Sheet Nos. 69, 70 and 71.
For Girder Camber Diagram, see Sheet No. 80.
For location of slotted wall for expansion joint attachment to girder, see Sheet No. 108.

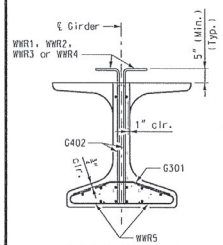

SECTION A-A
Strands not shown for clarity.

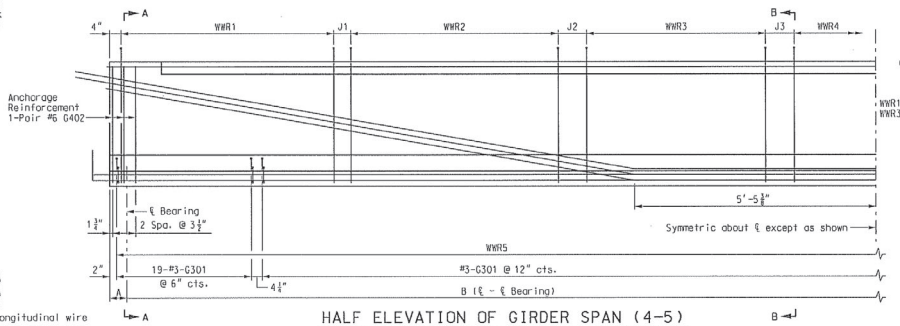

HALF ELEVATION OF GIRDER SPAN (4-5)

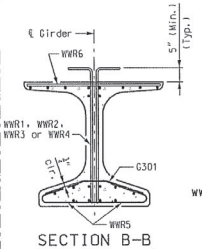

SECTION B-B
Strands not shown for clarity.

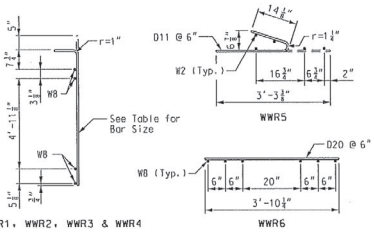

WELDED WIRED BENDING DIAGRAMS

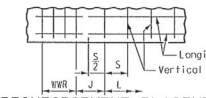

REINFORCEMENT PLACEMENT DETAIL

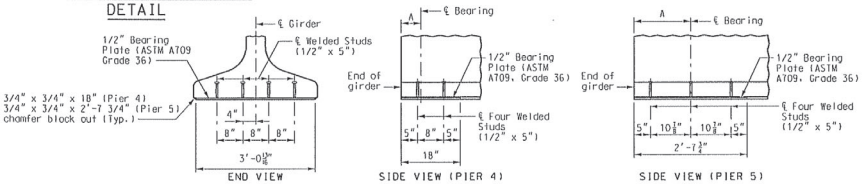

BEARING PLATE DETAILS

Galvanize the 1/2" bearing plate (ASTM A709 Grade 36) in accordance with ASTM A123.

Cost of furnishing, galvanizing, and installing the 1/2" bearing plate (ASTM A709 Grade 36) and welded studs in the prestressed girder will be considered completely covered by the contract unit price for Prestressed Concrete NU-Girder per linear foot.

BILL OF REINFORCING STEEL - EACH GIRDER				
NO.	SIZE & MARK	ACTUAL LENGTH	SHAPE	BENDING DIAGRAM
129	3 G301	2'-11⅞"	15	
2	4 G401	3'-10½"	20	
12	6 G402	5'-8"	20	

SHAPE 15

SHAPE 20

TABLE OF DIMENSIONS			
Girder No.	A		B
	Pier 3	Pier 4	
1	7"	15⅝"	107'-1⅜"
2	7¼"	15½"	107'-1⅜"
3	7½"	15⅜"	107'-1⅜"
4	7¾"	15⅜"	107'-1⅜"
5	7⅞"	15½"	107'-1⅜"
6	8"	15⅝"	107'-1¼"
7	8⅛"	15⅝"	107'-1⅜"
8	8¼"	15¼"	107'-1⅜"
9	8⅜"	15⅜"	107'-1⅛"
10	8"	15½"	107'-1⅜"
11	7⅞"	15½"	107'-1⅜"
12	7⅝"	15⅜"	107'-1⅜"

WELDED WIRE REINFORCEMENT
(WWR5 & WWR6 as shown in Welded Wired Bending Diagrams)

GIRDER NO.	WWR1				WWR2				WWR3				WWR4		
	BAR SIZE	S1	L1	J1	BAR SIZE	S2	L2	J2	BAR SIZE	S3	L3	J3	BAR SIZE	S4	L4
1-12	D20	6"	14'-0"	6"	D20	12"	8'-0"	12"	D20	18"	12'-0"	8¼"	D20	24"	36'-0"

TYPE NU 70 P/S GIRDER - SPAN (4-5)
GIRDERS 1 THRU 12

Detailed JUL 2009
Checked JUL 2009

Note: This drawing is not to scale. Follow dimensions.

DATE 8/20/09
ROUTE I-70
STATE MO
DISTRICT 6
SHEET NO. BR47
COUNTY St. Louis City - MO
JOB NO. J6I0984B
CONTRACT ID. 100127-601
PROJECT NO. I-70-5 (315)
BRIDGE NO. A6500

DESCRIPTION | DATE

MISSOURI HIGHWAYS AND TRANSPORTATION COMMISSION
105 WEST CAPITOL AVENUE
JEFFERSON CITY, MO 65102
1-888-ASK-MODOT (1-888-275-6636)

HNTB
715 KIRK DRIVE
KANSAS CITY, MO 64105-1310
TELEPHONE (816) 472-1201
CERTIFICATE OF AUTHORITY NO. 001270

FINAL PLANS
REV.

T:\de-proj\St_Louis_City\Construction\J6I0984B\Asbuilts\Bridge\B_A6500_047-125_J6I0984B_047.dgn
11:34:41 AM

Notes:
Concrete for prestressed girders are Class A-1 with f'c = 8000 psi and f'ci = 6500 psi.
(+) indicates prestressing strand.
Use 38 strands with an initial prestress force of 1670 kips.
Prestressing tendons were uncoated, seven-wire, low-relaxation strands, 0.6 inch diameter in accordance with AASHTO M 203, Grade 270. Pretensioned members were in accordance with Sec 1029.
For top flange cross-slope and step details and dimensions, see Sheet No. 59.

Girders were lifted by devices designed by the fabricator.
** At the contractor's option the location for bent-up strands were varied from that shown. The total number of bent-up strands were not changed. One strand tie bar is required for each layer of bent-up strands except at abutments which require one bar on the bottom layer of strands only. No additional payment was made if additional strand tie bars are required.
*** Girder top flange were steel troweled to a smooth finish for 8" at the edges, as shown. Bond breaker was applied to this region only. The center portion was rough finished by scarifying the surface transversely with a wire brush, and no laitance was remain on the surface.
**** Prestressing strands at Pier 5 were trimmed to within 1/8 inch of concrete if exposed or 1 inch if encased. Exposed ends of girders were given 2 coats of an asphalt paint. Ends of girders which will be encased in concrete diaphragms was not painted

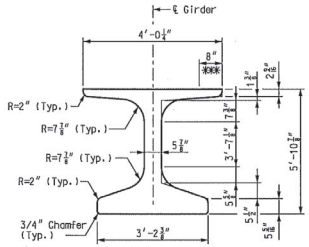

DIMENSIONS

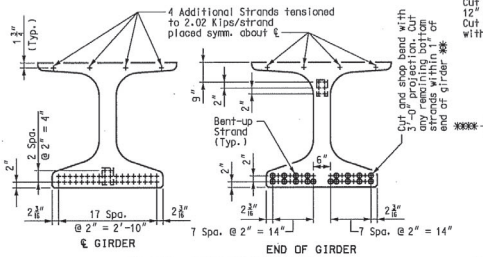

STRAND ARRANGEMENTS

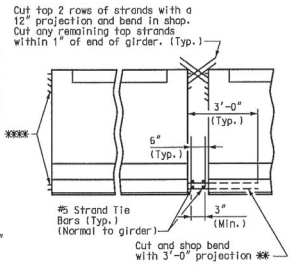

STRAND DETAILS AT GIRDER ENDS

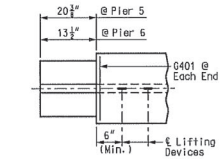

INTERIOR GIRDERS (PIER 5)
ALL GIRDERS (PIER 6)

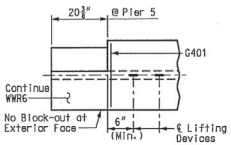

EXTERIOR GIRDERS (PIER 5)

TOP FLANGE BLOCK-OUT DETAILS

Reinforcing Steel Notes:
Reinforcing steel did conform to the requirements of AASHTO M 31, Grade 60. Welded Wire Reinforcement (WWR) did conform to the requirements of AASHTO M 221.
All dimensions are out-to-out.
Hooks and bends were in accordance with the CRSI Manual of Standard Practice for Detailing Reinforced Concrete Structures, Stirrup and Tie Dimensions.
Minimum clearance to reinforcing was 1", unless otherwise shown.
Actual lengths are measured along centerline of bar to the nearest inch.

Notes:
Cost of 3/4" Ø coil tie rods placed in diaphragms was considered completely covered by the contract unit price for Prestressed Concrete NU-Girder per linear foot.
Coil ties were held in place in the forms by slotted wire-setting-studs projecting through forms. Studs were left in place or replaced with temporary plugs until girders are erected, then replaced by coil tie rods.
For location of coil inserts at drainage scuppers, see Sheet No. 93.
For location of coil ties, see Sheet Nos. 70, 71, 72 and 63.
The 1-1/2" Ø holes was casted in the web for steel intermediate diaphragms, see Sheet No. 63 for details.
Drilling is not allowed.
For details of diaphragms, see Sheet Nos. 70, 71 and 72.
For Girder Camber Diagram, see Sheet No. 81.
For location of slotted well for expansion joint attachment to girder, see Sheet No. 108.

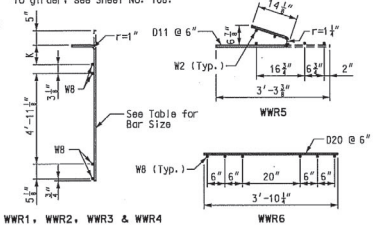

WELDED WIRED BENDING DIAGRAMS

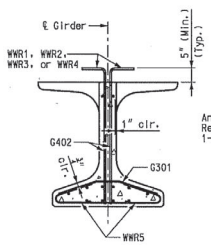

SECTION A-A
Strands not shown for clarity.

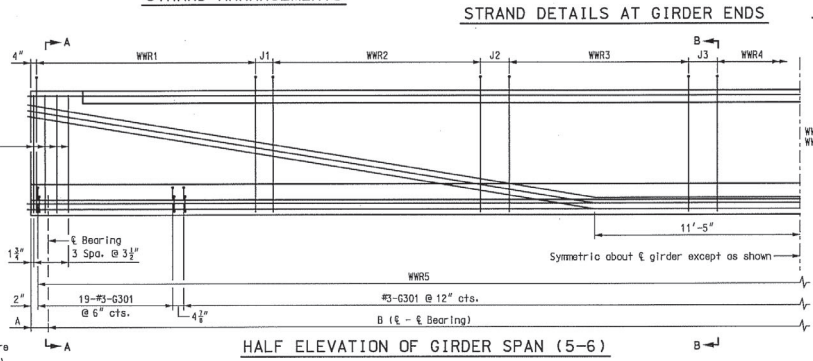

HALF ELEVATION OF GIRDER SPAN (5-6)

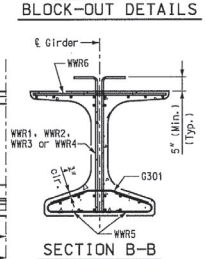

SECTION B-B
Strands not shown for clarity.

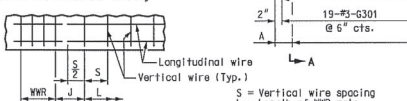

REINFORCEMENT PLACEMENT DETAIL

S = Vertical wire spacing
L = Length of WWR mats
J = Distance between WWR mats

BILL OF REINFORCING STEEL

GIRDER NO.	NO.	SIZE & MARK	ACTUAL LENGTH	SHAPE	BENDING DIAGRAM
1-8	134	3 G301	2'-11⅞"	15	
1-8	2	4 G401	3'-10½"	20	
1-8	1	6 G402	5'-8"	20	

SHAPE 15
SHAPE 20

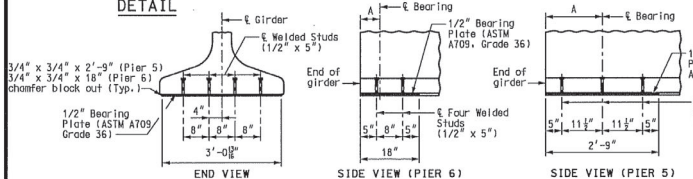

BEARING PLATE DETAILS

Galvanize the 1/2" bearing plate (ASTM A709 Grade 36) in accordance with ASTM A123.

Cost of furnishing, galvanizing, and installing the 1/2" bearing plate (ASTM A709 Grade 36) and welded studs in the prestressed girder will be considered completely covered by the contract unit price for Prestressed Concrete NU-Girder per linear foot.

TABLE OF DIMENSIONS

Girder No.	A		B
	Pier 5	Pier 6	
1	16½"	7"	112'-2¼"
2	16⅜"	7⅜"	112'-1⅜"
3	16¼"	8"	112'-1½"
4	16"	8⅛"	112'-1⅜"
5	15⅞"	8⅛"	112'-1¼"
6	15⅞"	8⅛"	112'-1⅜"
7	16"	8⅛"	112'-1⅜"
8	16⅛"	8¼"	112'-1½"

WELDED WIRE REINFORCEMENT
(WWR5 & WWR6 as shown in Welded Wired Bending Diagrams)

GIRDER No.	WWR1					WWR2					WWR3					WWR4				
	BAR SIZE	S1	L1	J1	K1	BAR SIZE	S2	L2	J2	K2	BAR SIZE	S3	L3	J3	K3	BAR SIZE	S4	L4	K4	
1	D20	5"	25'-0"	6"	11¼"	D20	12"	18'-0"	12"	9¼"	D20	18"	6'-0"	14¾"	7¾"	D20	24"	10'-0"	7¾"	
2	D20	5"	25'-0"	6"	9¾"	D20	12"	18'-0"	12"	8¼"	D20	18"	6'-0"	14¾"	7¾"	D20	24"	10'-0"	7¾"	
3	D20	5"	25'-0"	6"	8¼"	D20	12"	18'-0"	12"	7¾"	D20	18"	6'-0"	14¾"	7¾"	D20	24"	10'-0"	7¾"	
4-8	D20	5"	25'-0"	6"	7¾"	D20	12"	18'-0"	12"	7¾"	D20	18"	6'-0"	14¾"	7¾"	D20	24"	10'-0"	7¾"	

TYPE NU 70 P/S GIRDER - SPAN (5-6)
GIRDERS 1 THRU 8

Detailed JUL 2009
Checked JUL 2009

Note: This drawing is not to scale. Follow dimensions.

Sheet No. 48 of

84B B B 48 84B 48

DATE 8/20/09
ROUTE I-70 | STATE MO
DISTRICT 6 | SHEET NO. BR48
COUNTY St. Louis City - MO
JOB NO. J6I0984B
CONTRACT ID. 100127-601
PROJECT NO. I-70-5 (315)
BRIDGE NO. A6500

DESCRIPTION | DATE

MISSOURI HIGHWAYS AND TRANSPORTATION COMMISSION
105 WEST CAPITOL
JEFFERSON CITY, MO 65102
1-888-ASK-MODOT (1-888-275-6636)

HNTB
715 KIRK DRIVE
KANSAS CITY, MO 64105-1310
(816) 472-1201
CERTIFICATE OF AUTHORITY NO. 001270

FINAL PLANS

REV.

44

Notes:
Concrete for prestressed girders are Class A-1 with f'c = 8000 psi and f'ci = 6500 psi.
(+) Indicates prestressing strand.
Use 44 strands with an initial prestress force of 1933 kips.
Prestressing tendons was uncoated, seven-wire, low-relaxation strands, 0.6 inch diameter in accordance with AASHTO M 203, Grade 270. Pretensioned members were in accordance with Sec 1029.
For top flange cross-slope and step details and dimensions, see Sheet No. 60.

Girders were lifted by devices designed by the fabricator.
** At the contractor's option the location for bent-up strands were varied from that shown. The total number of bent-up strands were not changed. One strand tie bar is required for each layer of bent-up strands except at abutments which require one bar on the bottom layer of strands only. No additional payment will be made if additional strand tie bars are required.
*** Girder top flange were steel troweled to a smooth finish for 8" at the edges, as shown. Bond breaker was applied to this region only. The center portion was rough finished by scarifying the surface transversely with a wire brush, and no laitance was remain on the surface.

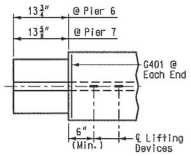

TOP FLANGE BLOCK-OUT DETAIL

Reinforcing Steel Notes:
Reinforcing steel was conform to the requirements of AASHTO M 31, Grade 60. Welded Wire Reinforcement (WWR) did conform to the requirements of AASHTO M 221.
All dimensions are out-to-out.
Hooks and bends were in accordance with the CRSI Manual of Standard Practice for Detailing Reinforced Concrete Structures, Stirrup and Tie Dimensions.
Minimum clearance to reinforcing was 1", unless otherwise shown.
Actual lengths are measured along centerline of bar to the nearest inch.

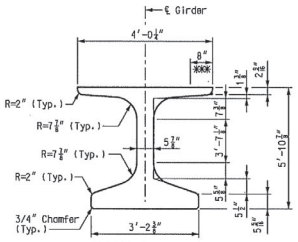

DIMENSIONS

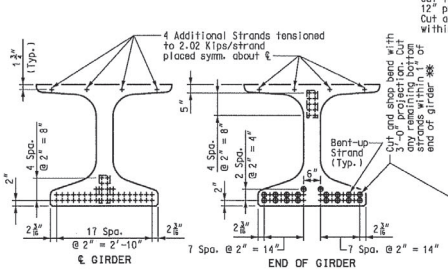

STRAND ARRANGEMENTS

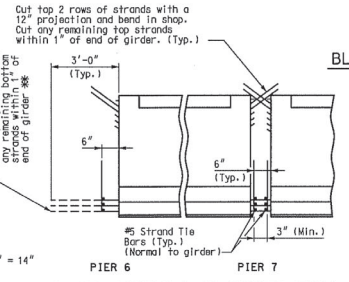

STRAND DETAILS AT GIRDER ENDS

Notes:
Cost of 3/4" Ø coil tie rods placed in diaphragms was considered completely covered by the contract unit price for Prestressed Concrete NU-Girder per linear foot.
Coil ties was held in place in the forms by slotted wire-setting-studs projecting through forms. Studs are to be left in place or replaced with temporary plugs until girders are erected, then replaced by coil tie rods.
For location of coil inserts at drainage scuppers, see Sheet No. 93.
For location of coil ties, see Sheet Nos. 72, 73 and 63.
The 1-1/2" Ø holes were casted in the web for steel intermediate diaphragms, see Sheet No. 63 for details.
Drilling is not allowed.
For details of diaphragms, see Sheet Nos. 72 and 73.
For Girder Camber Diagram, see Sheet No. 81.

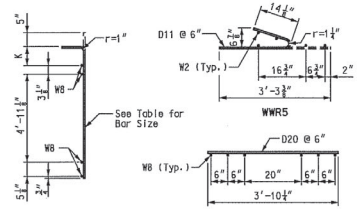

WELDED WIRED BENDING DIAGRAMS

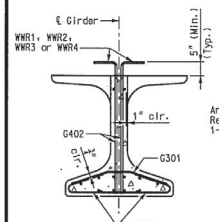

SECTION A-A
Strands not shown for clarity.

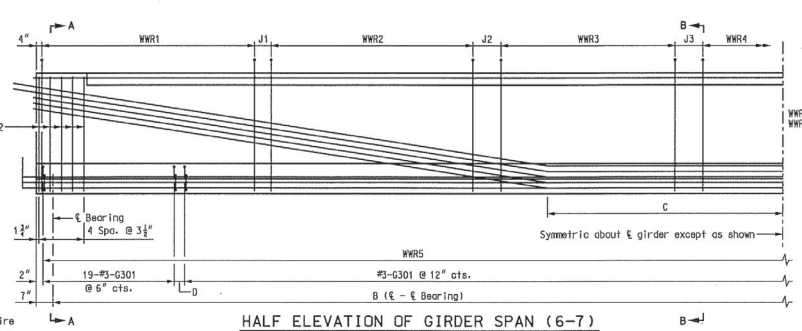

HALF ELEVATION OF GIRDER SPAN (6-7)

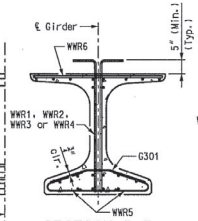

SECTION B-B
Strands not shown for clarity.

BILL OF REINFORCING STEEL

GIRDER NO.	NO.	SIZE & MARK	ACTUAL LENGTH	SHAPE	BENDING DIAGRAM
1	148	3 G301	2'-11⅜"	15	
2-6	147	3 G301	2'-11⅜"	15	
7-8	146	3 G301	2'-11⅜"	15	
1-8	2	4 G401	3'-10¼"	20	
1-8	20	6 G402	5'-8"	20	

SHAPE 20

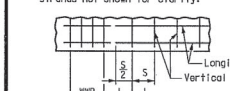

REINFORCEMENT PLACEMENT DETAIL

S = Vertical wire spacing
L = Length of WWR mats
J = Distance between WWR mats

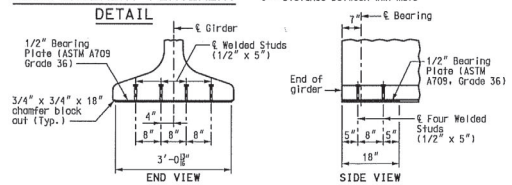

BEARING PLATE DETAILS

Galvanize the 1/2" bearing plate (ASTM A709 Grade 36) in accordance with ASTM A123.

Cost of furnishing, galvanizing, and installing the 1/2" bearing plate (ASTM A709 Grade 36) and welded studs in the prestressed girder was considered completely covered by the contract unit price for Prestressed Concrete NU-Girder per linear foot.

TABLE OF DIMENSIONS

Girder No.	B	C	D
1	126'-8⅜"	12'-9½"	3½"
2	126'-6¼"	12'-9¼"	8⅛"
3	126'-3¾"	12'-9"	6⅛"
4	126'-1¼"	12'-8⅜"	5⅛"
5	125'-10⅛"	12'-8⅛"	4⅛"
6	125'-8⅜"	12'-8¼"	3½"
7	125'-6⅛"	12'-8"	8⅛"
8	125'-3¾"	12'-7¾"	6⅛"

WELDED WIRE REINFORCEMENT
(WWR5 & WWR6 as shown in Welded Wired Bending Diagrams)

GIRDER No.	WWR1 BAR SIZE	S1	L1	J1	K1	WWR2 BAR SIZE	S2	L2	J2	K2	WWR3 BAR SIZE	S3	L3	J3	K3	WWR4 BAR SIZE	S4	L4	K4
1	D20	6"	13'-0"	6"	10¾"	D20	12"	31'-0"	12"	10¾"	D20	18"	9'-0"	13⅛"	8⅜"	D20	24"	16'-0"	8¼"
2	D20	6"	13'-0"	6"	9¼"	D20	12"	31'-0"	12"	9¼"	D20	18"	9'-0"	12⅛"	8¼"	D20	24"	16'-0"	8¼"
3	D20	6"	13'-0"	6"	8¼"	D20	12"	31'-0"	12"	8¼"	D20	18"	9'-0"	22⅞"	7⅜"	D20	24"	14'-0"	7⅜"
4	D20	6"	13'-0"	6"	7¾"	D20	12"	31'-0"	12"	7¾"	D20	18"	9'-0"	21⅜"	7⅜"	D20	24"	14'-0"	7⅜"
5	D20	6"	13'-0"	6"	8¼"	D20	12"	31'-0"	12"	7¼"	D20	18"	9'-0"	20⅛"	7⅜"	D20	24"	14'-0"	7⅜"
6	D20	6"	13'-0"	6"	8¼"	D20	12"	31'-0"	12"	8¼"	D20	18"	9'-0"	19⅛"	8¼"	D20	24"	14'-0"	8¼"
7	D20	6"	13'-0"	6"	9¼"	D20	12"	31'-0"	12"	9¼"	D20	18"	9'-0"	18⅛"	9¼"	D20	24"	14'-0"	9¼"
8	D20	6"	13'-0"	6"	9¾"	D20	12"	31'-0"	12"	10¾"	D20	18"	9'-0"	16⅞"	11¾"	D20	24"	14'-0"	10¾"

TYPE NU 70 P/S GIRDER - SPAN (6-7)
GIRDERS 1 THRU 8

Detailed JUL 2009
Checked JUL 2009

Note: This drawing is not to scale. Follow dimensions.

DATE 8/20/09
ROUTE I-70 STATE MO
DISTRICT 6 SHEET NO. BR49
COUNTY St. Louis City - MO
JOB NO. J6I0984B
CONTRACT ID. 100127-601
PROJECT NO. I-70-5 (315)
BRIDGE NO. A6500

DESCRIPTION | DATE

MISSOURI HIGHWAYS AND TRANSPORTATION COMMISSION
105 WEST CAPITOL
JEFFERSON CITY, MO 65102
1-888-ASK-MODOT (1-888-275-6636)

HNTB
715 KIRK DRIVE
KANSAS CITY, MO 64105-1310
TELEPHONE (816) 472-1201
CERTIFICATE OF AUTHORITY NO. 001270

FINAL PLANS

REV.

Notes:
Concrete for prestressed girders are Class A-1 with f'c = 8000 psi and f'ci = 6500 psi.
(+) indicates prestressing strand.
Use 48 strands with an initial prestress force of 2109 kips.
Prestressing tendons was uncoated, seven-wire, low-relaxation strands, 0.6 inch diameter in accordance with AASHTO M 203, Grade 270. Pretensioned members were in accordance with Sec 1029.
For top flange cross-slope and step details and dimensions, see Sheet No. 60.

Girders were lifted by devices designed by the fabricator.
** At the contractor's option the location for bent-up strands may be varied from that shown. The total number of bent-up strands were changed. One strand tie bar is required for each layer of bent-up strands except at abutments which require one bar on the bottom layer of strands only. No additional payment was made for additional strand tie bars are required.
*** Girder top flange were steel troweled to a smooth finish for 8" at the edges, as shown. Bond breaker was applied to this region only. The center portion was rough finished by scarifying the surface transversely with a wire brush, and no laitance was left remaining on the surface.

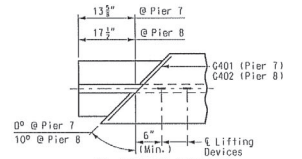

ALL GIRDERS (PIER 7)
GIRDER 2 (PIER 8)

Reinforcing Steel Notes:
Reinforcing steel conformed to the requirements of AASHTO M 31, Grade 60. Welded Wire Reinforcement (WWR) conformed to the requirements of AASHTO M 221.
All dimensions are out-to-out.
Hooks and bends were in accordance with the CRSI Manual of Standard Practice for Detailing Reinforced Concrete Structures, Stirrup and Tie Dimensions.
Minimum clearance to reinforcing was 1", unless otherwise shown.
Actual lengths are measured along centerline of bar to the nearest inch.

Notes:
Cost of 3/4" Ø coil tie rods placed in diaphragms was considered completely covered by the contract unit price for Prestressed Concrete NU-Girder per linear foot
Coil ties were held in place in the forms by slotted wire-setting-studs projecting through forms. Studs are to be left in place or replaced with temporary plugs until girders are erected, then replaced by coil tie rods.
For location of coil inserts at drainage scuppers, see Sheet No. 93.
For location of coil ties, see Sheet Nos. 73, 74 and 63.
The 1-1/2" Ø holes was casted in the web for steel intermediate diaphragms, see Sheet No. 63 for details. Drilling is not allowed.
For details of diaphragms, see Sheet Nos. 73 and 74.
For Girder Camber Diagram, see Sheet No. 81.

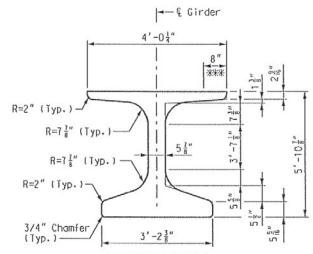

DIMENSIONS

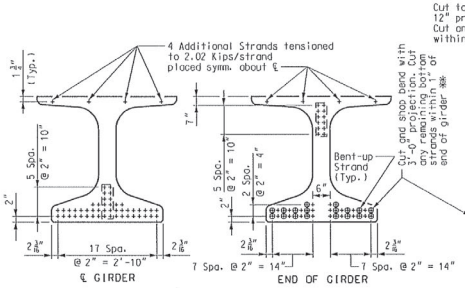

STRAND ARRANGEMENTS

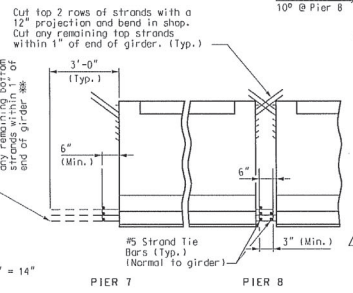

STRAND DETAILS AT GIRDER ENDS

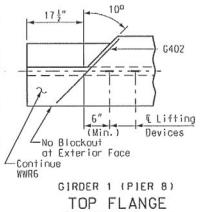

TOP FLANGE BLOCK-OUT DETAILS

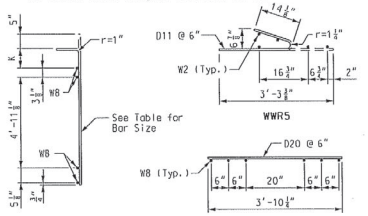

WELDED WIRED BENDING DIAGRAMS

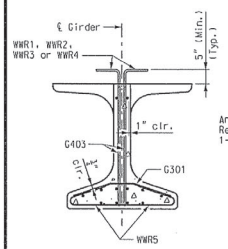

SECTION A-A
Strands not shown for clarity.

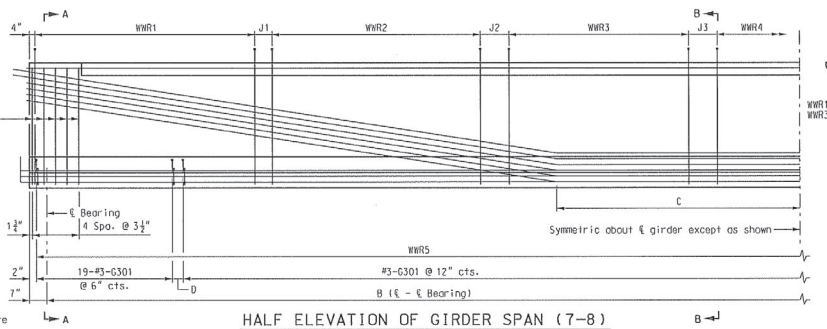

HALF ELEVATION OF GIRDER SPAN (7-8)

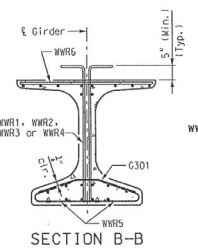

SECTION B-B
Strands not shown for clarity.

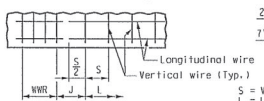

REINFORCEMENT PLACEMENT DETAIL
S = Vertical wire spacing
L = Length of WWR mats
J = Distance between WWR mats

BILL OF REINFORCING STEEL

GIRDER NO.	NO.	SIZE & MARK	ACTUAL LENGTH	SHAPE	BENDING DIAGRAM
1	155	3 G301	2'-11⅛"	15	
2	153	3 G301	2'-11⅛"	15	
1-2	1	4 G401	3'-10¼"	20	
1-2	1	4 G402	3'-11"	20	
1-2	20	6 G403	5'-8"	20	

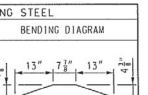

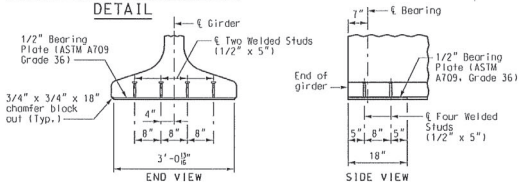

BEARING PLATE DETAILS

Galvanize the 1/2" bearing plate (ASTM A709 Grade 36) in accordance with ASTM A123.

Cost of furnishing, galvanizing, and installing the 1/2" bearing plate (ASTM A709 Grade 36) and welded studs in the prestressed girder will be considered completely covered by the contract unit price for Prestressed Concrete NU-Girder per linear foot.

TABLE OF DIMENSIONS

Girder No.	B	C	D
1	133'-11¾"	6'-9"	4⅛"
2	131'-7⅛"	6'-7⅜"	2½"

WELDED WIRE REINFORCEMENT
(WWR5 & WWR6 as shown in Welded Wired Bending Diagrams)

GIRDER No.	WWR1					WWR2					WWR3					WWR4				
	BAR SIZE	S1	L1	J1	K1	BAR SIZE	S2	L2	J2	K2	BAR SIZE	S3	L3	J3	K3	BAR SIZE	S4	L4	K4	
1	D20	6"	11'-6"	6"	8½"	D20	12"	14'-0"	12"	7¾"	D20	18"	19'-6"	20⅜"	7¾"	D20	24"	38'-0"	7¾"	
2	D20	6"	13'-6"	6"	7¾"	D20	12"	30'-0"	12"	7¾"	D20	18"	9'-0"	12½"	7¾"	D20	24"	22'-0"	7¾"	

TYPE NU 70 P/S GIRDER - SPAN (7-8)
GIRDERS 1 AND 2

Detailed JUL 2009
Checked JUL 2009

Note: This drawing is not to scale. Follow dimensions.

Sheet No. 50 of 125

DATE 8/20/09
ROUTE I-70 | STATE MO
DISTRICT 6 | SHEET NO. BR50
COUNTY St. Louis City - MO
JOB NO. J6I0984B
CONTRACT ID. 100127-601
PROJECT NO. I-70-5 (315)
BRIDGE NO. A6500

DESCRIPTION | DATE

MISSOURI HIGHWAYS AND TRANSPORTATION COMMISSION
105 WEST CAPITOL
JEFFERSON CITY, MO 65102
1-888-ASK-MODOT (1-888-275-6636)

HNTB
715 KIRK DRIVE
KANSAS CITY, MO 64105-1310
TELEPHONE (816) 472-1201
CERTIFICATE OF AUTHORITY NO. 000270

FINAL PLANS

REV.

T:\de-proj\St_Louis_City\Construction\J6I0984B\Asbuilts\Bridge\B_A6500_050-125_J6I0984B_050.dgn
11:34:24 AM

Notes:
Concrete for prestressed girders are Class A-1 with f'c = 8000 psi and f'ci = 6500 psi.
(+) Indicates prestressing strand.
Use 44 strands with an initial prestress force of 1933 kips.
Prestressing tendons was uncoated, seven-wire, low-relaxation strands, 0.6 inch diameter in accordance with AASHTO M 203, Grade 270. Pretensioned members were in accordance with Sec 1029.
For top flange cross-slope and step details and dimensions, see Sheet No. 60.

Girders were lifted by devices designed by the fabricator.
✱✱ At the contractor's option the location for bent-up strands were not varied from that shown. The total number of bent-up strands were not changed. One strand tie bar is required for each layer of bent-up strands except at abutments which require one bar on the bottom layer of strands only. No additional payment was made for additional strand tie bars are required.
✱✱✱ Girder top flange was steel troweled to a smooth finish for 8" at the edges, as shown. Bond breaker was applied to this region only. The center portion was rough finished by scarifying the surface transversely with a wire brush, and no laitance remained on the surface.

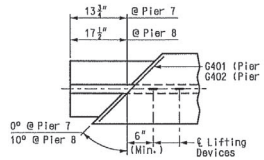

TOP FLANGE BLOCK-OUT DETAIL

Reinforcing Steel Notes:
Reinforcing steel conformed to the requirements of AASHTO M 31, Grade 60. Welded Wire Reinforcement (WWR) conformed to the requirements of AASHTO M 221.
All dimensions are out-to-out.
Hooks and bends was in accordance with the CRSI Manual of Standard Practice for Detailing Reinforced Concrete Structures, Stirrup and Tie Dimensions.
Minimum clearance to reinforcing was 1", unless otherwise shown.
Actual lengths are measured along centerline of bar to the nearest inch.

Notes:
Cost of 3/4" Ø coil tie rods placed in diaphragms was considered completely covered by the contract unit price for Prestressed Concrete NU-Girder per linear foot.
Coil ties was held in place in the forms by slotted wire-setting-studs projecting through forms. Studs are to be left in place or replaced with temporary plugs until girders are erected, then replaced by coil tie rods.
For location of coil inserts at drainage scuppers, see Sheet No. 93.
For location of coil ties, see Sheet Nos. 73, 74 and 63.
The 1-1/2" Ø holes was casted in the web for steel intermediate diaphragms, see Sheet No. 63 for details.
Drilling is not allowed.
For details of diaphragms, see Sheet Nos. 73 and 74.
For Girder Camber Diagram, see Sheet No. 81.

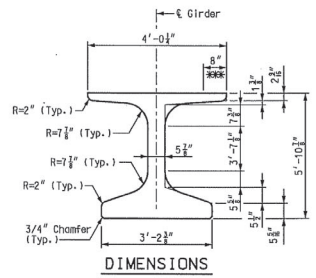

DIMENSIONS

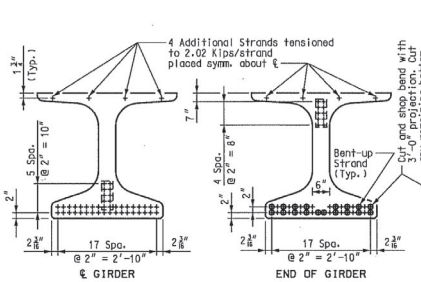

STRAND ARRANGEMENTS

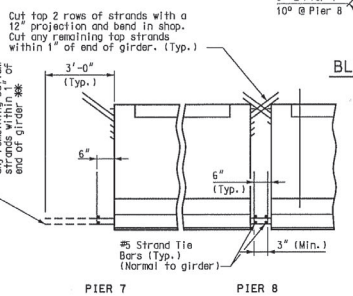

STRAND DETAILS AT GIRDER ENDS

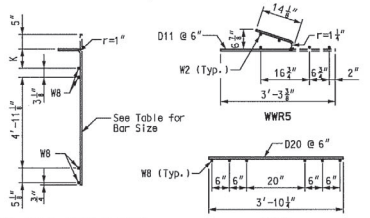

WELDED WIRED BENDING DIAGRAMS

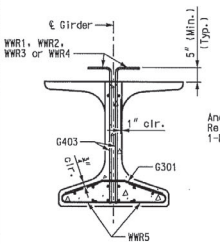

SECTION A-A
Strands not shown for clarity.

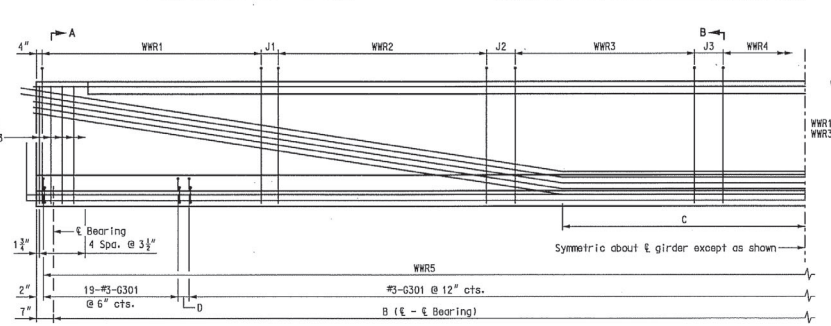

HALF ELEVATION OF GIRDER SPAN (7-8)

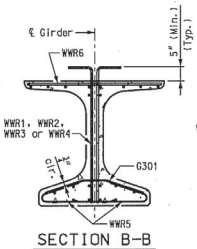

SECTION B-B
Strands not shown for clarity.

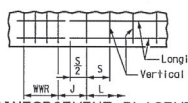

REINFORCEMENT PLACEMENT DETAIL
S = Vertical wire spacing
L = Length of WWR mats
J = Distance between WWR mats

BILL OF REINFORCING STEEL

GIRDER NO.	NO.	SIZE & MARK	ACTUAL LENGTH	SHAPE	BENDING DIAGRAM
3	150	3 G301	2'-11⅜"	15	
4	148	3 G301	2'-11⅜"	15	
3-4	1	4 G401	3'-10¼"	20	
3-4	1	4 G402	3'-11"	20	
3-4	20	6 G403	5'-8"	20	

SHAPE 15
SHAPE 20

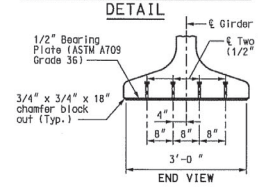

BEARING PLATE DETAILS

Galvanize the 1/2" bearing plate (ASTM A709 Grade 36) in accordance with ASTM A123.

Cost of furnishing, galvanizing, and installing the 1/2" bearing plate (ASTM A709 Grade 36) and welded studs in the prestressed girder will be considered completely covered by the contract unit price for Prestressed Concrete NU-Girder per linear foot.

TABLE OF DIMENSIONS			
Girder No.	B	C	D
3	129'-2½"	13'-0½"	6¼"
4	126'-10"	12'-9⅝"	4"

WELDED WIRE REINFORCEMENT
(WWR5 & WWR6 as shown in Welded Wired Bending Diagrams)

GIRDER No.	WWR1					WWR2					WWR3					WWR4				
	BAR SIZE	S1	L1	J1	K1	BAR SIZE	S2	L2	J2	K2	BAR SIZE	S3	L3	J3	K3	BAR SIZE	S4	L4	K4	
3	D20	6"	12'-6"	6"	8¼"	D20	12"	32'-0"	12"	7¾"	D20	18"	7'-6"	16¼"	7¾"	D20	24"	20'-0"	7¾"	
4	D20	6"	12'-6"	6"	8¾"	D20	12"	32'-0"	12"	7¾"	D20	18"	7'-6"	14"	7¾"	D20	24"	18'-0"	7¾"	

TYPE NU 70 P/S GIRDER - SPAN (7-8)
GIRDERS 3 AND 4

Detailed JUL 2009
Checked JUL 2009

Note: This drawing is not to scale. Follow dimensions.

DATE 8/20/09
ROUTE I-70 | STATE MO
DISTRICT 6 | SHEET NO. BR51
COUNTY St. Louis City - MO
JOB NO. J6I0984B
CONTRACT ID. 100127-601
PROJECT NO. I-70-5 (315)
BRIDGE NO. A6500

DESCRIPTION | DATE

MISSOURI HIGHWAYS AND TRANSPORTATION COMMISSION
105 WEST CAPITOL
JEFFERSON CITY, MO 65102
1-888-ASK-MODOT (1-888-275-6636)
HNTB
715 KIRK DRIVE
KANSAS CITY, MO 64105-1310
TELEPHONE (816) 472-1201
CERTIFICATE OF AUTHORITY NO. 000270

FINAL PLANS
REV.

Notes:
Concrete for prestressed girders are Class A-1 with f'c = 8000 psi and f'ci = 6500 psi.
(+) indicates prestressing strand.
Use 42 strands with an initial prestress force of 1846 kips.
Prestressing tendons was uncoated, seven-wire, low-relaxation strands, 0.6 inch diameter in accordance with AASHTO M 203, Grade 270. Pretensioned members was in accordance with Sec 1029.
For top flange cross-slope and step details and dimensions, see Sheet No. 60.

Girders were lifted by devices designed by the fabricator.
** At the contractor's option the location for bent-up strands were not varied from that shown. The total number of bent-up strands were not changed. One strand tie bar is required for each layer of bent-up strands except at abutments which require one bar on the bottom layer of strands only. No additional payment was made for additional strand tie bars are required.
*** Girder top flange was steel troweled to a smooth finish for 8" at the edges, as shown. Bond breaker was applied to this region only. The center portion was rough finished by scarifying the surface transversely with a wire brush, and no laitance remained on the surface.

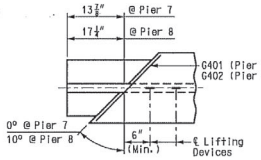

TOP FLANGE BLOCK-OUT DETAIL

Reinforcing Steel Notes:
Reinforcing steel conformed to the requirements of AASHTO M 31, Grade 60. Welded Wire Reinforcement (WWR) conformed to the requirements of AASHTO M 221.
All dimensions are out-to-out.
Hooks and bends was in accordance with the CRSI Manual of Standard Practice for Detailing Reinforced Concrete Structures, Stirrup and Tie Dimensions.
Minimum clearance to reinforcing was 1", unless otherwise shown.
Actual lengths are measured along centerline of bar to the nearest inch.

Notes:
Cost of 3/4" Ø coil tie rods placed in diaphragms was considered completely covered by the contract unit price for Prestressed Concrete NU-Girder per linear foot.
Coil ties was held in place in the forms by slotted wire-setting-studs projecting through forms. Studs are to be left in place or replaced with temporary plugs until girders are erected, then replaced by coil tie rods.
For location of coil inserts at drainage scuppers, see Sheet No. 93.
For location of coil ties, see Sheet Nos. 73, 74 and 63.
The 1-1/2" Ø holes was casted in the web for steel intermediate diaphragms, see Sheet No. 63 for details.
Drilling is not allowed.
For details of diaphragms, see Sheet Nos. 73 and 74.
For Girder Camber Diagram, see Sheet No. 81.

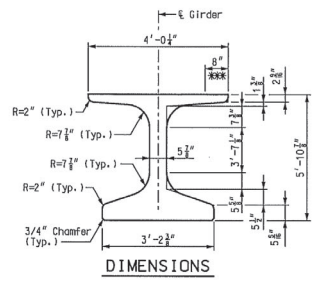

DIMENSIONS

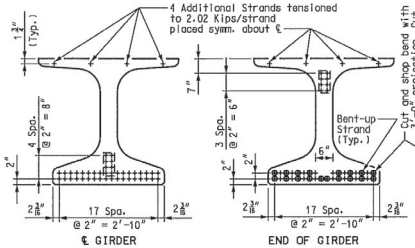

STRAND ARRANGEMENTS

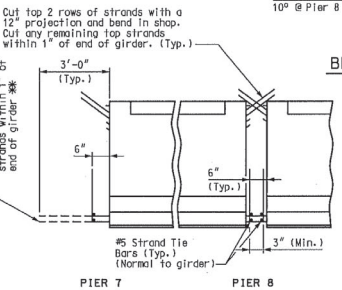

STRAND DETAILS AT GIRDER ENDS

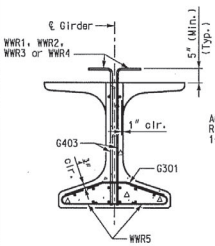

SECTION A-A
Strands not shown for clarity.

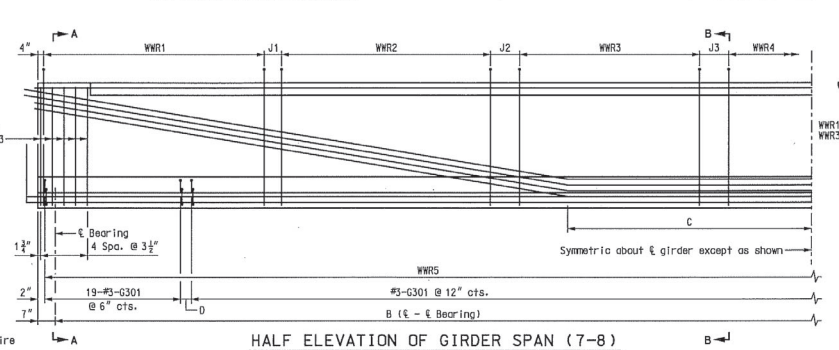

HALF ELEVATION OF GIRDER SPAN (7-8)

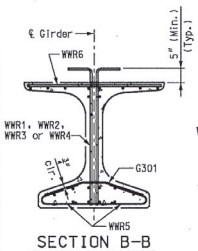

SECTION B-B
Strands not shown for clarity.

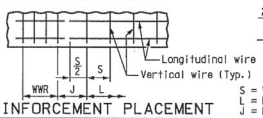

REINFORCEMENT PLACEMENT DETAIL

S = Vertical wire spacing
L = Length of WWR mats
J = Distance between WWR mats

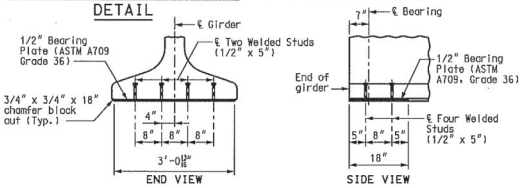

BEARING PLATE DETAILS

Galvanize the 1/2" bearing plate (ASTM A709 Grade 36) in accordance with ASTM A123.

Cost of furnishing, galvanizing, and installing the 1/2" bearing plate (ASTM A709 Grade 36) and welded studs in the prestressed girder will be considered completely covered by the contract unit price for Prestressed Concrete NU-Girder per linear foot.

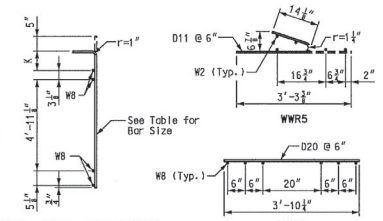

WELDED WIRED BENDING DIAGRAMS

BILL OF REINFORCING STEEL

GIRDER NO.	NO.	SIZE & MARK	ACTUAL LENGTH	SHAPE	BENDING DIAGRAM
5	145	3 G301	2'-11 1/2"	15	
6	143	3 G301	2'-11 1/2"	15	
5-6	1	4 G401	3'-10 1/4"	20	
5-6	1	4 G402	3'-11"	20	
5-6	20	6 G403	5'-8"	20	

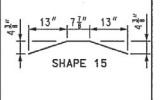

TABLE OF DIMENSIONS

Girder No.	B	C	D
5	124'-5 5/8"	12'-6 3/4"	7 1/2"
6	122'-0 3/8"	12'-3 7/8"	5 1/2"

WELDED WIRE REINFORCEMENT
(WWR5 & WWR6 as shown in Welded Wired Bending Diagrams)

GIRDER No.	WWR1					WWR2					WWR3					WWR4				
	BAR SIZE	S1	L1	J1	K1	BAR SIZE	S2	L2	J2	K2	BAR SIZE	S3	L3	J3	K3	BAR SIZE	S4	L4	K4	
5	D20	5"	12'-6"	6"	9 1/4"	D20	12"	31'-0"	12"	8 1/4"	D20	18"	7'-6"	23 3/4"	7 1/4"	D20	24"	16'-0"	7 1/4"	
6	D20	5"	12'-6"	6"	9 1/4"	D20	12"	31'-0"	12"	8 1/4"	D20	18"	7'-6"	21 1/2"	7 1/4"	D20	24"	14'-0"	7 1/4"	

TYPE NU 70 P/S GIRDER - SPAN (7-8)
GIRDERS 5 AND 6

Detailed JUL 2009
Checked JUL 2009

Note: This drawing is not to scale. Follow dimensions.

Sheet No. 52 of 25

DATE 8/20/09
ROUTE I-70 | STATE MO
DISTRICT 6 | SHEET NO. BR52
COUNTY St. Louis City - MO
JOB NO. J6I0984B
CONTRACT ID. 100127-601
PROJECT NO. I-70-5 (315)
BRIDGE NO. A6500

DESCRIPTION | DATE

MISSOURI HIGHWAYS AND TRANSPORTATION COMMISSION
105 WEST CAPITOL
JEFFERSON CITY, MO 65102
1-888-ASK-MODOT (1-888-275-6636)
HNTB
715 KIRK DRIVE
KANSAS CITY, MO 64105-1310
TELEPHONE (816) 472-1201
CERTIFICATE OF AUTHORITY NO. 001670

FINAL PLANS

REV.

B B B 5 52 25 B 52 2 2

Notes:
Concrete for prestressed girders are Class A-1 with f'c = 8000 psi and f'ci = 6500 psi.
(+) indicates prestressing strand.
Use 40 strands with an initial prestress force of 1758 kips.
Prestressing tendons were uncoated, seven-wire, low-relaxation strands, 0.6 inch diameter in accordance with AASHTO M 203, Grade 270. Pretensioned members were in accordance with Sec 1029.
For top flange cross-slope and step details and dimensions, see Sheet No. 60.

Girders were lifted by devices designed by the fabricator.
** At the contractor's option the location for bent-up strands were not varied from that shown. The total number of bent-up strands were not changed. One strand tie bar is required for each layer of bent-up strands except at abutments which require one bar on the bottom layer of strands only. No additional payment was made for additional strand tie bars are required.
*** Girder top flange was steel troweled to a smooth finish for 8" at the edges, as shown. Bond breaker was applied to this region only. The center portion was rough finished by scarifying the surface transversely with a wire brush, and no laitance remained on the surface.

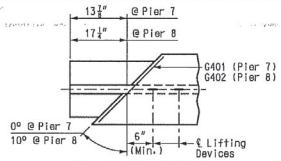

ALL GIRDERS (PIER 7)
GIRDER 7 (PIER 8)

Reinforcing Steel Notes:
Reinforcing steel conformed to the requirements of AASHTO M 31, Grade 60. Welded Wire Reinforcement (WWR) conformed to the requirements of AASHTO M 221.
All dimensions are out-to-out.
Hooks and bends was in accordance with the CRSI Manual of Standard Practice for Detailing Reinforced Concrete Structures, Stirrup and Tie Dimensions.
Minimum clearance to reinforcing was 1", unless otherwise shown.
Actual lengths are measured along centerline of bar to the nearest inch.

Notes:
Cost of 3/4" Ø coil tie rods placed in diaphragms was considered completely covered by the contract unit price for Prestressed Concrete NU-Girder per linear foot.
Coil ties was held in place in the forms by slotted wire-setting-studs projecting through forms. Studs are to be left in place or replaced with temporary plugs until girders are erected, then replaced by coil tie rods.
For location of coil inserts at drainage scuppers, see Sheet No. 93.
For location of coil ties, see Sheet Nos. 73, 74 and 63.
The 1-1/2" Ø holes was casted in the web for steel intermediate diaphragms, see Sheet No. 63 for details.
Drilling is not allowed.
For details of diaphragms, see Sheet Nos. 73 and 74.
For Girder Camber Diagram, see Sheet No. 81.

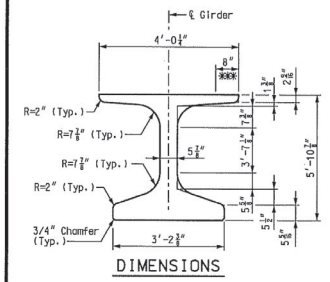

DIMENSIONS

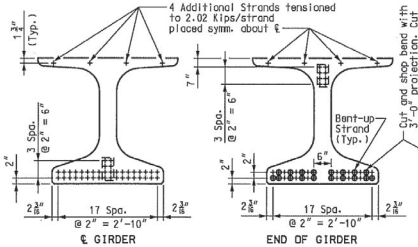

STRAND ARRANGEMENTS

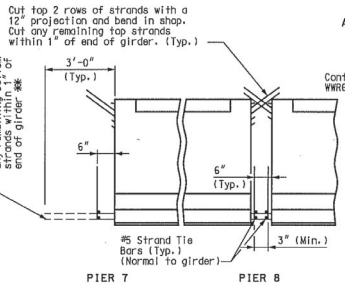

STRAND DETAILS AT GIRDER ENDS

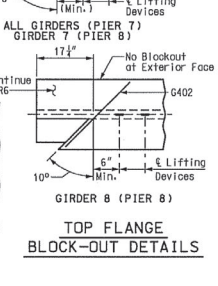

GIRDER 8 (PIER 8)
TOP FLANGE BLOCK-OUT DETAILS

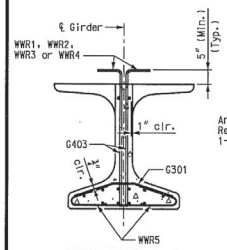

SECTION A-A
Strands not shown for clarity.

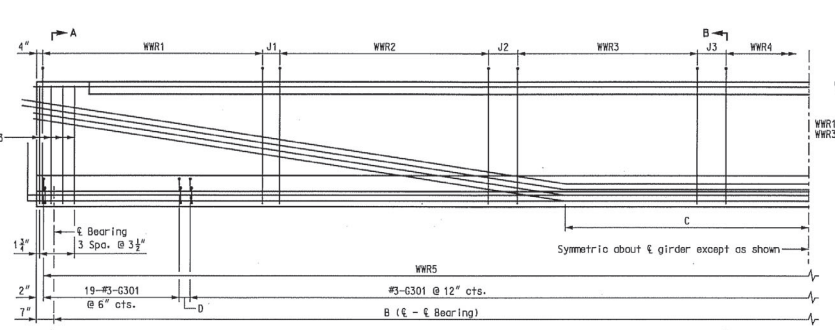

HALF ELEVATION OF GIRDER SPAN (7-8)

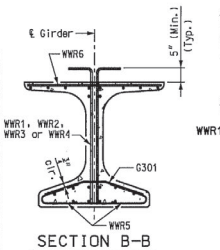

SECTION B-B
Strands not shown for clarity.

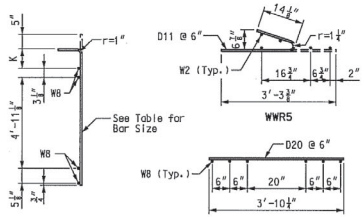

WELDED WIRED BENDING DIAGRAMS

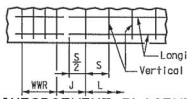

REINFORCEMENT PLACEMENT DETAIL
S = Vertical wire spacing
L = Length of WWR mats
J = Distance between WWR mats

BILL OF REINFORCING STEEL

GIRDER NO.	NO.	SIZE & MARK	ACTUAL LENGTH	SHAPE	BENDING DIAGRAM
7	141	3 G301	2'-11⅜"	15	
8	138	3 G301	2'-11⅜"	15	
7-8	1	4 G401	3'-10½"	20	
7-8	1	4 G402	3'-11"	20	
7-8	16	6 G403	5'-8"	20	

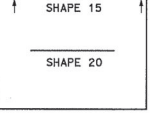

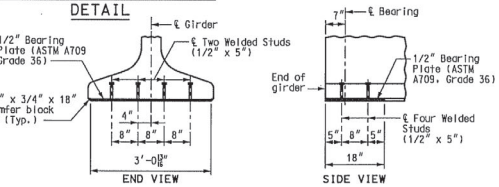

BEARING PLATE DETAILS

Galvanize the 1/2" bearing plate (ASTM A709 Grade 36) in accordance with ASTM A123.

Cost of furnishing, galvanizing, and installing the 1/2" bearing plate (ASTM A709 Grade 36) and welded studs in the prestressed girder will be considered completely covered by the contract unit price for Prestressed Concrete NU-Girder per linear foot.

TABLE OF DIMENSIONS

Girder No.	B	C	D
7	119'-8⅜"	12'-1"	3¼"
8	117'-3¾"	11'-10⅛"	6⅞"

WELDED WIRE REINFORCEMENT
(WWR5 & WWR6 as shown in Welded Wired Bending Diagrams)

GIRDER No.	WWR1 BAR SIZE	S1	L1	J1	K1	WWR2 BAR SIZE	S2	L2	J2	K2	WWR3 BAR SIZE	S3	L3	J3	K3	WWR4 BAR SIZE	S4	L4	K4
7	D20	6"	12'-0"	6"	9¾"	D20	12"	29'-0"	12"	8¾"	D20	18"	7'-6"	13⅛"	7¾"	D20	24"	18'-0"	7¾"
8	D20	6"	10'-0"	6"	9¾"	D20	12"	8'-0"	12"	8¾"	D20	18"	21'-0"	16⅛"	7¾"	D20	24"	34'-0"	7¾"

TYPE NU 70 P/S GIRDER - SPAN (7-8)
GIRDERS 7 AND 8

Detailed JUL 2009
Checked JUL 2009

Note: This drawing is not to scale. Follow dimensions.

DATE 8/20/09
ROUTE I-70 | STATE MO
DISTRICT 6 | SHEET NO. BR53
COUNTY St. Louis City - MO
JOB NO. J6I0984B
CONTRACT ID. 100127-601
PROJECT NO. I-70-5 (315)
BRIDGE NO. A6500

DESCRIPTION | DATE

MISSOURI HIGHWAYS AND TRANSPORTATION COMMISSION
105 WEST CAPITOL
JEFFERSON CITY, MO 65102
1-888-ASK-MODOT (1-888-275-6636)
HNTB
715 KIRK DRIVE
KANSAS CITY, MO 64105-1310
TELEPHONE (816) 472-1201
CERTIFICATE OF AUTHORITY NO. 001270

FINAL PLANS

REV.

Notes:
Concrete for prestressed girders are Class A-1 with f'c = 8000 psi and f'ci = 6500 psi.
(+) indicates prestressing strand.
Use 38 strands with an initial prestress force of 1670 kips.
Prestressing tendons were uncoated, seven-wire, low-relaxation strands, 0.6 inch diameter in accordance with AASHTO M 203, Grade 270. Pretensioned members were in accordance with Sec 1029.
For top flange cross-slope and step details and dimensions, see Sheet No. 61.

Girders were lifted by devices designed by the fabricator.
** At the contractor's option the location for bent-up strands were not varied from that shown. The total number of bent-up strands were not changed. One strand tie bar is required for each layer of bent-up strands except at abutments which require one bar on the bottom layer of strands only. No additional payment was made for additional strand tie bars are required.
*** Girder top flange was steel troweled to a smooth finish for 8" at the edges, as shown. Bond breaker was applied to this region only. The center portion was rough finished by scarifying the surface transversely with a wire brush, and no laitance remained on the surface.

Reinforcing Steel Notes:
Reinforcing steel conformed to the requirements of AASHTO M 31, Grade 60. Welded Wire Reinforcement (WWR) conformed to the requirements of AASHTO M 221.
All dimensions are out-to-out.
Hooks and bends was in accordance with the CRSI Manual of Standard Practice for Detailing Reinforced Concrete Structures, Stirrup and Tie Dimensions.
Minimum clearance to reinforcing was 1", unless otherwise shown.
Actual lengths are measured along centerline of bar to the nearest inch.

Notes:
Cost of 3/4" Ø coil tie rods placed in diaphragms was considered completely covered by the contract unit price for Prestressed Concrete NU-Girder per linear foot.
Coil ties was held in place in the forms by slotted wire-setting-studs projecting through forms. Studs are to be left in place or replaced with temporary plugs until girders are erected, then replaced by coil tie rods.
For location of coil inserts at drainage scuppers, see Sheet No. 93.
For location of coil ties, see Sheet Nos. 73, 74 and 63.
The 1-1/2" Ø holes was casted in the web for steel intermediate diaphragms, see Sheet No. 63 for details.
Drilling is not allowed.
For details of diaphragms, see Sheet Nos. 73 and 74.
For Girder Camber Diagram, see Sheet No. 81.

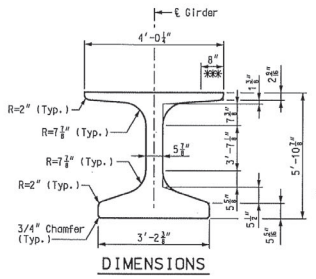

DIMENSIONS

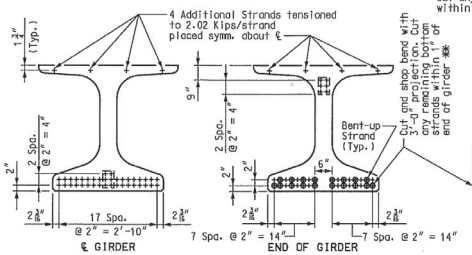

STRAND ARRANGEMENTS

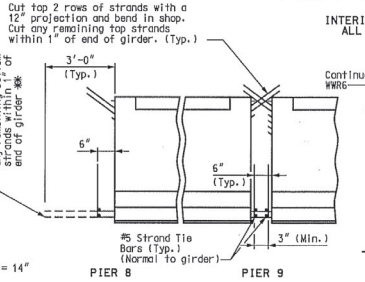

STRAND DETAILS AT GIRDER ENDS

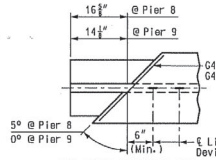

INTERIOR GIRDERS (PIER 8)
ALL GIRDERS (PIER 9)

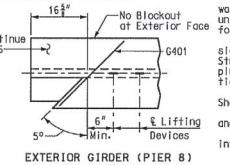

EXTERIOR GIRDER (PIER 8)

TOP FLANGE BLOCK-OUT DETAILS

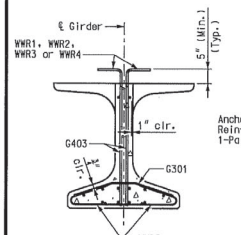

SECTION A-A
Strands not shown for clarity.

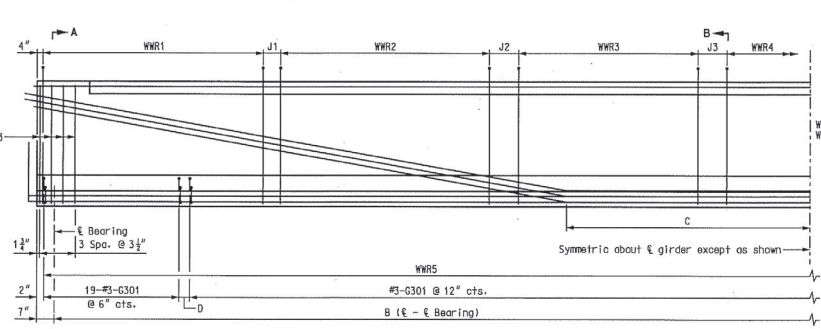

HALF ELEVATION OF GIRDER SPAN (8-9)

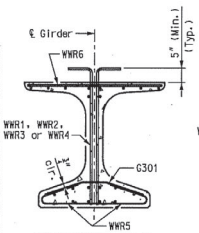

SECTION B-B
Strands not shown for clarity.



REINFORCEMENT PLACEMENT DETAIL

S = Vertical wire spacing
L = Length of WWR mats
J = Distance between WWR mats

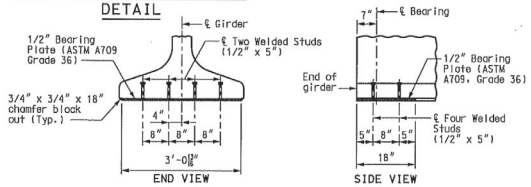

BEARING PLATE DETAILS

Galvanize the 1/2" bearing plate (ASTM A709 Grade 36) in accordance with ASTM A123.

Cost of furnishing, galvanizing, and installing the 1/2" bearing plate (ASTM A709 Grade 36) and welded studs in the prestressed girder will be considered completely covered by the contract unit price for Prestressed Concrete NU-Girder per linear foot.

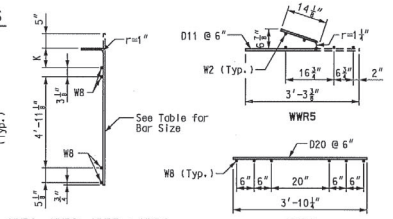

WELDED WIRED BENDING DIAGRAMS

BILL OF REINFORCING STEEL

GIRDER NO.	NO.	SIZE & MARK	ACTUAL LENGTH	SHAPE	BENDING DIAGRAM
1	139	3 G301	2'-11⅜"	15	
2	140	3 G301	2'-11⅜"	15	
3	141	3 G301	2'-11⅜"	15	
4	142	3 G301	2'-11⅜"	15	
1-4	1	4 G401	3'-10⅜"	20	
1-4	1	4 G402	3'-10¼"	20	
1-4	16	6 G403	5'-8"	20	

SHAPE 15: 13" 7¾" 13" ¾"
SHAPE 20

TABLE OF DIMENSIONS

Girder No.	B	C	D
1	117'-7¼"	11'-10¼"	2⅝"
2	118'-11⅛"	12'-0⅛"	4⅜"
3	120'-3"	12'-1⅜"	6⅛"
4	121'-6⅝"	12'-3¼"	8⅛"

WELDED WIRE REINFORCEMENT
(WWR5 & WWR6 as shown in Welded Wired Bending Diagrams)

GIRDER No.	WWR1 BAR SIZE	S1	L1	J1	K1	WWR2 BAR SIZE	S2	L2	J2	K2	WWR3 BAR SIZE	S3	L3	J3	K3	WWR4 BAR SIZE	S4	L4	K4
1	D20	6"	17'-0"	6"	11⅜"	D20	12"	5'-0"	12"	10⅛"	D20	18"	18'-0"	18⅜"	8⅜"	D20	24"	32'-0"	8¼"
2	D20	6"	11'-6"	6"	10¼"	D20	12"	28'-0"	12"	9¼"	D20	18"	7'-6"	14⅜"	7¼"	D20	24"	20'-0"	7¼"
3	D20	6"	12'-6"	6"	10¼"	D20	12"	30'-0"	12"	9¼"	D20	18"	7'-6"	22½"	7¼"	D20	24"	14'-0"	7¼"
4	D20	6"	12'-6"	6"	8¾"	D20	12"	30'-0"	12"	8¼"	D20	18"	7'-6"	18½"	7¼"	D20	24"	16'-0"	7¼"

TYPE NU 70 P/S GIRDER - SPAN (8-9)
GIRDERS 1 THRU 4

Detailed JUL 2009
Checked JUL 2009

Note: This drawing is not to scale. Follow dimensions.

Sheet No. 54 of 5

DATE 8/20/09
ROUTE I-70 STATE MO
DISTRICT 6 SHEET NO. BR54
COUNTY St. Louis City - MO
JOB NO. J6I0984B
CONTRACT ID. 100127-601
PROJECT NO. I-70-5 (315)
BRIDGE NO. A6500

DESCRIPTION | DATE

MISSOURI HIGHWAYS AND TRANSPORTATION COMMISSION
105 WEST CAPITOL
JEFFERSON CITY, MO 65102
1-888-ASK-MODOT (1-888-275-6636)

HNTB
715 KIRK DRIVE
KANSAS CITY, MO 64105-1310
TELEPHONE (816) 472-1201
CERTIFICATE OF AUTHORITY NO. 001270

FINAL PLANS

REV.

Notes:
Concrete for prestressed girders are Class A-1 with f'c = 8000 psi and f'ci = 6500 psi.
(+) indicates prestressing strand.
Use 40 strands with an initial prestress force of 1758 kips.
Prestressing tendons were uncoated, seven-wire, low-relaxation strands, 0.6 inch diameter in accordance with AASHTO M 203, Grade 270. Pretensioned members were in accordance with Sec 1029.
For top flange cross-slope and step details and dimensions, see Sheet No. 61.

Girders were lifted by devices designed by the fabricator.
** At the contractor's option the location for bent-up strands were not varied from that shown. The total number of bent-up strands were not changed. One strand tie bar is required for each layer of bent-up strands except at abutments which require one bar on the bottom layer of strands only. No additional payment was made for additional strand tie bars are required.
*** Girder top flange was steel troweled to a smooth finish for 8" at the edges, as shown. Bond breaker was applied to this region only. The center portion was rough finished by scarifying the surface transversely with a wire brush, and no laitance remained on the surface.

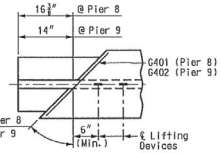

TOP FLANGE BLOCK-OUT DETAIL

Reinforcing Steel Notes:
Reinforcing steel conformed to the requirements of AASHTO M 31, Grade 60. Welded Wire Reinforcement (WWR) conformed to the requirements of AASHTO M 221.
All dimensions are out-to-out.
Hooks and bends was in accordance with the CRSI Manual of Standard Practice for Detailing Reinforced Concrete Structures, Stirrup and Tie Dimensions.
Minimum clearance to reinforcing was 1", unless otherwise shown.
Actual lengths are measured along centerline of bar to the nearest inch.

Notes:
Cost of 3/4" Ø coil tie rods placed in diaphragms was considered completely covered by the contract unit price for Prestressed Concrete NU-Girder per linear foot.
Coil ties was held in place in the forms by slotted wire-setting-studs projecting through forms. Studs are to be left in place or replaced with temporary plugs until girders are erected, then replaced by coil tie rods.
For location of coil inserts at drainage scuppers, see Sheet No. 93.
For location of coil ties, see Sheet Nos. 73, 74 and 63.
The 1-1/2" Ø holes was casted in the web for steel intermediate diaphragms, see Sheet No. 63 for details. Drilling is not allowed.
For details of diaphragms, see Sheet Nos. 73 and 74.
For Girder Camber Diagram, see Sheet No. 81.

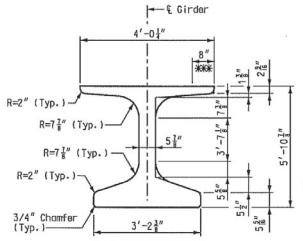

DIMENSIONS

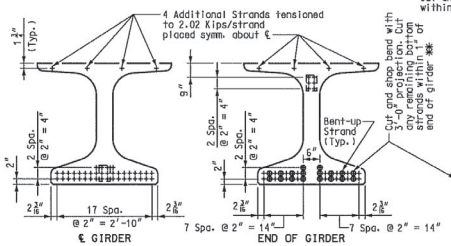

STRAND ARRANGEMENTS

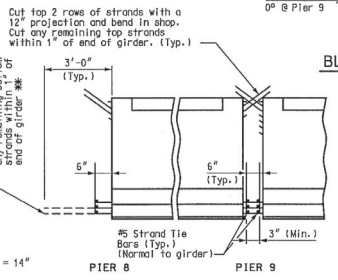

STRAND DETAILS AT GIRDER ENDS

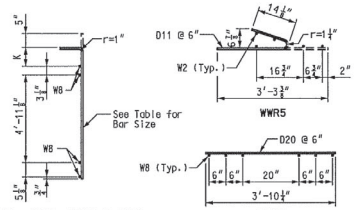

WELDED WIRED BENDING DIAGRAMS

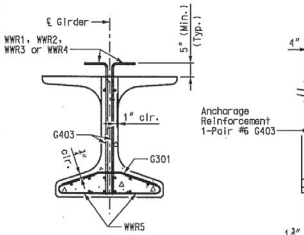

SECTION A-A
Strands not shown for clarity.

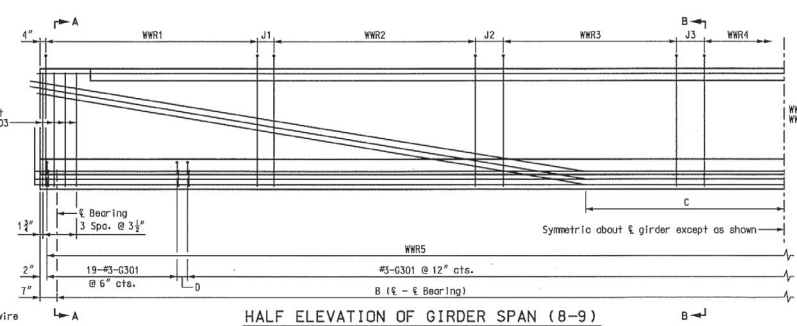

HALF ELEVATION OF GIRDER SPAN (8-9)

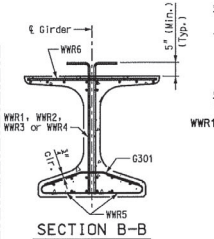

SECTION B-B
Strands not shown for clarity.

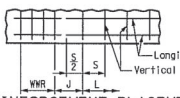

REINFORCEMENT PLACEMENT DETAIL

S = Vertical wire spacing
L = Length of WWR mats
J = Distance between WWR mats

BILL OF REINFORCING STEEL

GIRDER NO.	NO.	SIZE & MARK	ACTUAL LENGTH	SHAPE	BENDING DIAGRAM
5	144	3 G301	2'-11⅜"	15	
6	145	3 G301	2'-11⅜"	15	
5-6	1	4 G401	3'-11"	20	
5-6	1	4 G402	3'-10¼"	20	
5-6	16	6 G403	5'-8"	20	

SHAPE 15
SHAPE 20

TABLE OF DIMENSIONS

Girder No.	B	C	D
5	122'-10⅛"	12'-4⅛"	4½"
6	124'-2⅛"	12'-6½"	6½"

WELDED WIRE REINFORCEMENT
(WWR5 & WWR6 as shown in Welded Wired Bending Diagrams)

GIRDER No.	WWR1					WWR2					WWR3					WWR4				
	BAR SIZE	S1	L1	J1	K1	BAR SIZE	S2	L2	J2	K2	BAR SIZE	S3	L3	J3	K3	BAR SIZE	S4	L4	K4
5	D20	6"	12'-6"	6"	8¾"	D20	12"	32'-0"	12"	8¼"	D20	18"	6'-0"	20½"	7¾"	D20	24"	16'-0"	7¾"
6	D20	6"	12'-6"	6"	8¾"	D20	12"	32'-0"	12"	8¼"	D20	18"	6'-0"	16½"	8¼"	D20	24"	18'-0"	8¼"

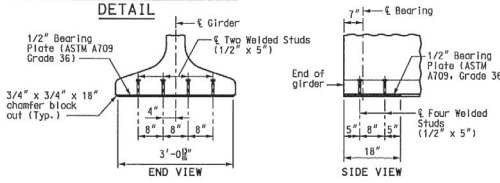

BEARING PLATE DETAILS

Galvanize the 1/2" bearing plate (ASTM A709 Grade 36) in accordance with ASTM A123.

Cost of furnishing, galvanizing, and installing the 1/2" bearing plate (ASTM A709 Grade 36) and welded studs in the prestressed girder was considered completely covered by the contract unit price for Prestressed Concrete NU-Girder per linear foot.

Detailed JUL 2009
Checked JUL 2009

Note: This drawing is not to scale. Follow dimensions.

Sheet No. 55 of 125

TYPE NU 70 P/S GIRDER - SPAN (8-9)
GIRDERS 5 AND 6

DATE 8/20/09
ROUTE I-70 | STATE MO
DISTRICT 6 | SHEET NO. BR55
COUNTY St. Louis City - MO
JOB NO. J6I0984B
CONTRACT ID. 100127-601
PROJECT NO. I-70-5 (315)
BRIDGE NO. A6500

DESCRIPTION | DATE

MISSOURI HIGHWAYS AND TRANSPORTATION COMMISSION
105 WEST CAPITOL
JEFFERSON CITY, MO 65102
1-888-ASK-MODOT (1-888-275-6636)

HNTB
715 KIRK DRIVE
KANSAS CITY, MO 64105-1310
TELEPHONE: 816 472-1201
CERTIFICATE OF AUTHORITY NO. 001270

FINAL PLANS

REV.

T:\de-proj\St_Louis_City\Construction\J6I0984B\Asbuilts\Bridge\B_A6500_055-125_J6I0984B_055.dgn
7:58:45 AM

Notes:
Concrete for prestressed girders are Class A-1 with f'c = 8000 psi and f'ci = 6500 psi.
(+) Indicates prestressing strand.
Use 44 strands with an initial prestress force of 1933 kips.
Prestressing tendons were uncoated, seven-wire, low-relaxation strands, 0.6 inch diameter in accordance with AASHTO M 203, Grade 270. Pretensioned members were in accordance with Sec 1029.
For top flange cross-slope and step details and dimensions, see Sheet No. 61.

Girders were lifted by devices designed by the fabricator.
** At the contractor's option the location for bent-up strands were not varied from that shown. The total number of bent-up strands were not changed. One strand tie bar is required for each layer of bent-up strands except at abutments which require one bar on the bottom layer of strands only. No additional payment was made for additional strand tie bars are required.
*** Girder top flange was steel troweled to a smooth finish for 8" at the edges, as shown. Bond breaker was applied to this region only. The center portion was rough finished by scarifying the surface transversely with a wire brush, and no laitance remained on the surface.

Reinforcing Steel Notes:
Reinforcing steel conformed to the requirements of AASHTO M 31, Grade 60. Welded Wire Reinforcement (WWR) conformed to the requirements of AASHTO M 221.
All dimensions are out-to-out.
Hooks and bends was in accordance with the CRSI Manual of Standard Practice for Detailing Reinforced Concrete Structures, Stirrup and Tie Dimensions.
Minimum clearance to reinforcing was 1", unless otherwise shown.
Actual lengths are measured along centerline of bar to the nearest inch.

Notes:
Cost of 3/4" Ø coil tie rods placed in diaphragms was considered completely covered by the contract unit price for Prestressed Concrete NU-Girder per linear foot.
Coil ties was held in place in the forms by slotted wire-setting-studs projecting through forms. Studs are to be left in place or replaced with temporary plugs until girders are erected, then replaced by coil tie rods.
For location of coil inserts at drainage scuppers, see Sheet No. 93.
For location of coil ties, see Sheet Nos. 73, 74 and 63.
The 1-1/2" Ø holes was casted in the web for steel intermediate diaphragms, see Sheet No. 63 for details.
Drilling is not allowed.
For details of diaphragms, see Sheet Nos. 73 and 74.
For Girder Camber Diagram, see Sheet No. 81.

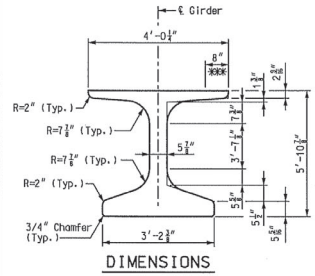

DIMENSIONS

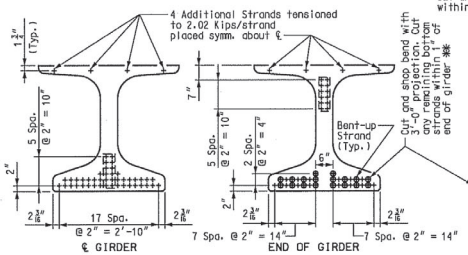

STRAND ARRANGEMENTS

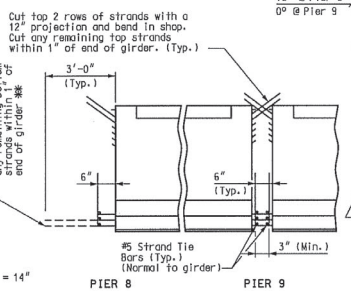

STRAND DETAILS AT GIRDER ENDS

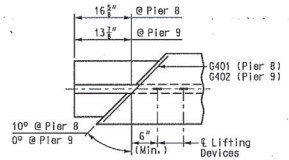

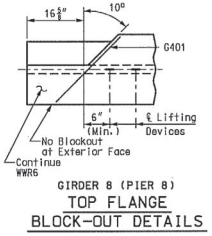

TOP FLANGE BLOCK-OUT DETAILS

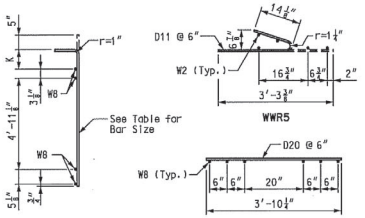

WELDED WIRED BENDING DIAGRAMS

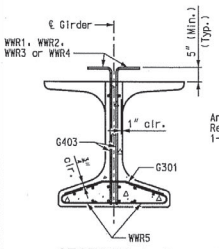

SECTION A-A
Strands not shown for clarity.

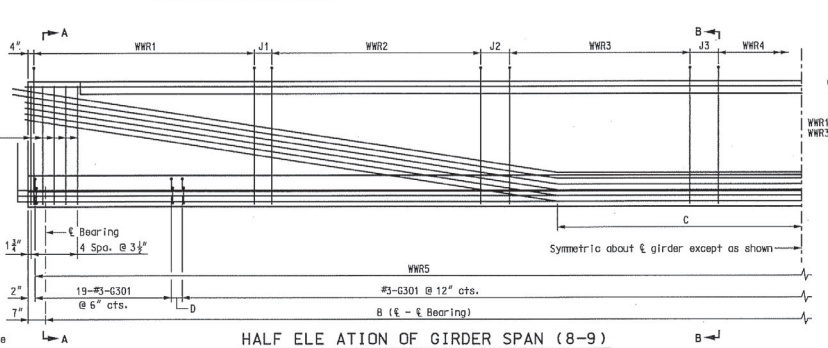

HALF ELE ATION OF GIRDER SPAN (8-9)

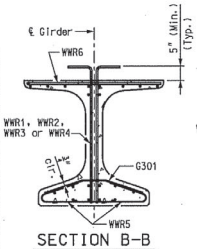

SECTION B-B
Strands not shown for clarity.

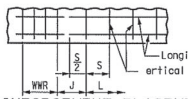

REINFORCEMENT PLACEMENT DETAIL

S = ertical wire spacing
L = Length of WWR mats
J = Distance between WWR mats

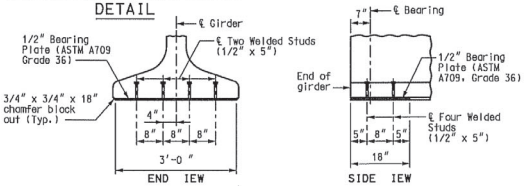

BEARING PLATE DETAILS

Galvanize the 1/2" bearing plate (ASTM A709 Grade 36) in accordance with ASTM A123.

Cost of furnishing, galvanizing, and installing the 1/2" bearing plate (ASTM A709 Grade 36) and welded studs in the prestressed girder will be considered completely covered by the contract unit price for Prestressed Concrete NU-Girder per linear foot.

TABLE OF DIMENSIONS			
Girder No.	B	C	D
7	125'-7"	6'-4"	2½"
8	126'-11⅛"	6'-4⅞"	4⅝"

BILL OF REINFORCING STEEL					
GIRDER NO.	NO.	SIZE & MARK	ACTUAL LENGTH	SHAPE	BENDING DIAGRAM
7	147	3 G301	2'-11⅜"	15	
8	148	3 G301	2'-11⅜"	15	
7-8	1	4 G401	3'-11"	20	
7-8	1	4 G402	3'-10¼"	20	
7-8	20	6 G403	5'-8"	20	

SHAPE 15
SHAPE 20

WELDED WIRE REINFORCEMENT (WWR5 & WWR6 as shown in Welded Wired Bending Diagrams)																				
GIRDER No.	WWR1					WWR2					WWR3					WWR4				
	BAR SIZE	S1	L1	J1	K1	BAR SIZE	S2	L2	J2	K2	BAR SIZE	S3	L3	J3	K3	BAR SIZE	S4	L4	K4	
7	D20	6"	12'-0"	6"	9¼"	D20	12"	28'-0"	12"	8¾"	D20	18"	9'-0"	18⅛"	8⅞"	D20	24"	22'-0"	8¾"	
8	D20	6"	10'-6"	6"	9¼"	D20	12"	23'-0"	12"	9¼"	D20	18"	12'-0"	20⅜"	9¼"	D20	24"	30'-0"	9¼"	

TYPE NU 70 P/S GIRDER - SPAN (8-9)
GIRDERS 7 AND 8

Detailed JUL 2009
Checked JUL 2009

Note: This drawing is not to scale. Follow dimensions.

Sheet No. 56 of 5

DATE 8/20/09
ROUTE I-70 | STATE MO
DISTRICT 6 | SHEET NO. BR56
COUNTY St. Louis City - MO
JOB NO. J6I0984B
CONTRACT ID. 100127-601
PROJECT NO. I-70-5 (315)
BRIDGE NO. A6500

DESCRIPTION | DATE

MISSOURI HIGHWAYS AND TRANSPORTATION COMMISSION
105 WEST CAPITOL
JEFFERSON CITY, MO 65102
1-888-ASK-MODOT (1-888-275-6636)
MoDOT
HNTB
715 KIRK DR. E
KANSAS CITY, MO 64105-1310
TELEPHONE (816) 472-1201
CERTIFICATE OF AUTHORITY NO. 001270

FINAL PLANS

Notes:
Concrete for prestressed girders are Class A-1 with f'c = 8000 psi and f'ci = 6500 psi.
(+) indicates prestressing strand.
Use 50 strands with an initial prestress force of 2197 kips.
Prestressing tendons were uncoated, seven-wire, low-relaxation strands, 0.6 inch diameter in accordance with AASHTO M 203, Grade 270. Pretensioned members were in accordance with Sec 1029.
For top flange cross-slope and step details and dimensions, see Sheet No. 61.

Girders were lifted by devices designed by the fabricator.
** At the contractor's option the location for bent-up strands were not varied from that shown. The total number of bent-up strands were not changed. One strand tie bar is required for each layer of bent-up strands except at abutments which require one bar on the bottom layer of strands only. No additional payment was made if additional strand tie bars are required.
*** Girder top flange were steel troweled to a smooth finish for 8" at the edges, as shown. Bond breaker was applied to this region only. The center portion was rough finished by scarifying the surface transversely with a wire brush, and no laitance remained on the surface.
**** Prestressing strands at Pier 10 were trimmed to within 1/8 inch of concrete if exposed or 1 inch if encased. Exposed ends of girders were given 2 coats of an asphalt paint. Ends of girders which will be encased in concrete diaphragms were not painted.

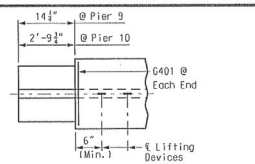

TOP FLANGE BLOCK-OUT DETAIL

Reinforcing Steel Notes:
Reinforcing steel conformed to the requirements of AASHTO M 31, Grade 60. Welded Wire Reinforcement (WWR) conformed to the requirements of AASHTO M 221.
All dimensions are out-to-out.
Hooks and bends was in accordance with the CRSI Manual of Standard Practice for Detailing Reinforced Concrete Structures, Stirrup and Tie Dimensions.
Minimum clearance to reinforcing was 1", unless otherwise shown.
Actual lengths are measured along centerline of bar to the nearest inch.

Notes:
Cost of 3/4" Ø coil tie rods placed in diaphragms was considered completely covered by the contract unit price for Prestressed Concrete NU-Girder per linear foot.
Coil ties was held in place in the forms by slotted wire-setting-studs projecting through forms. Studs are to be left in place or replaced with temporary plugs until girders are erected, then replaced by coil tie rods.
For location of coil inserts at drainage scuppers, see Sheet No. 93.
For location of coil ties, see Sheet Nos. 73, 74 and 63.
The 1-1/2" Ø holes was casted in the web for steel intermediate diaphragms, see Sheet No. 63 for details. Drilling is not allowed.
For details of diaphragms, see Sheet Nos. 73 and 74.
For Girder Camber Diagram, see Sheet No. 81.

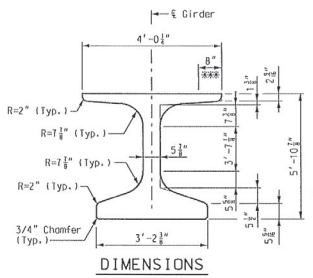

DIMENSIONS

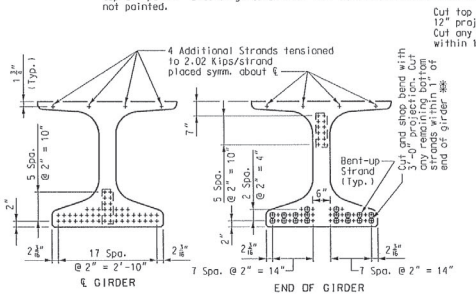

STRAND ARRANGEMENTS

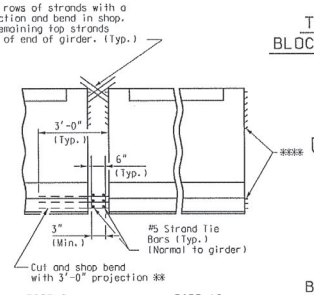

STRAND DETAILS AT GIRDER ENDS

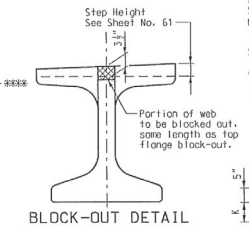

BLOCK-OUT DETAIL AT PIER 10

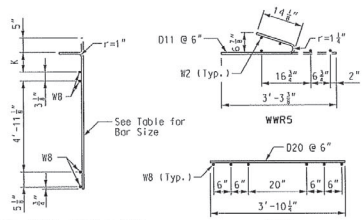

WELDED WIRED BENDING DIAGRAMS

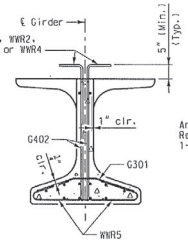

SECTION A-A
Strands not shown for clarity.

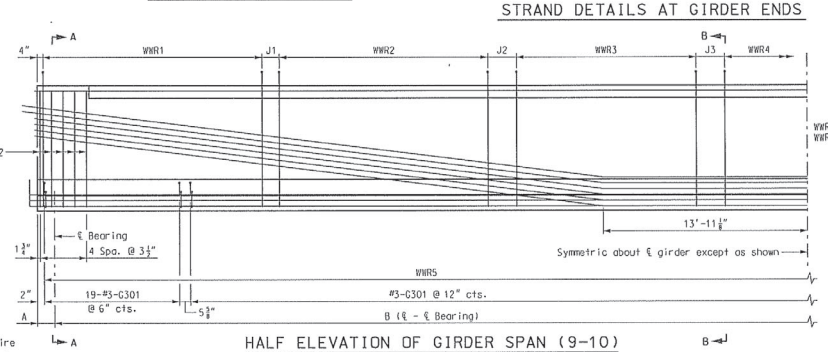

HALF ELEVATION OF GIRDER SPAN (9-10)

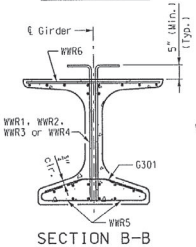

SECTION B-B
Strands not shown for clarity.

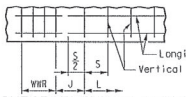

REINFORCEMENT PLACEMENT DETAIL
S = Vertical wire spacing
L = Length of WWR mats
J = Distance between WWR mats

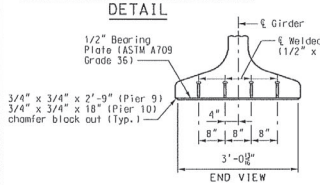

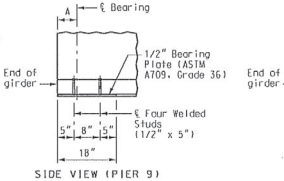

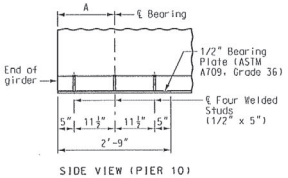

BEARING PLATE DETAILS

Galvanize the 1/2" bearing plate (ASTM A709 Grade 36) in accordance with ASTM A123.

Cost of furnishing, galvanizing, and installing the 1/2" bearing plate (ASTM A709 Grade 36) and welded studs in the prestressed girder will be considered completely covered by the contract unit price for Prestressed Concrete NU-Girder per linear foot.

BILL OF REINFORCING STEEL

GIRDER NO.	NO.	SIZE & MARK	ACTUAL LENGTH	SHAPE	BENDING DIAGRAM
1-8	159	3 G301	2'-11⅜"	15	
1-8	2	4 G401	3'-10¾"	20	
1-8	16	6 G402	5'-8"	20	

SHAPE 15
SHAPE 20

WELDED WIRE REINFORCEMENT
(WWR5 & WWR6 as shown in Welded Wired Bending Diagrams)

GIRDER No.	WWR1 BAR SIZE	S1	L1	J1	K1	WWR2 BAR SIZE	S2	L2	J2	K2	WWR3 BAR SIZE	S3	L3	J3	K3	WWR4 BAR SIZE	S4	L4	K4
1	D20	6"	17'-0"	6"	16¼"	D20	12"	34'-0"	12"	13¼"	D20	18"	9'-0"	21⅜"	7¼"	D20	24"	12'-0"	7¼"
2	D20	6"	17'-0"	6"	14¼"	D20	12"	34'-0"	12"	11¾"	D20	18"	9'-0"	21⅜"	7¼"	D20	24"	12'-0"	7¾"
3	D20	6"	17'-0"	6"	13¼"	D20	12"	34'-0"	12"	10¾"	D20	18"	9'-0"	21⅜"	7½"	D20	24"	12'-0"	7¾"
4	D20	6"	17'-0"	6"	11¾"	D20	12"	34'-0"	12"	9⅜"	D20	18"	9'-0"	21⅜"	7½"	D20	24"	12'-0"	7¾"
5-8	D20	6"	17'-0"	6"	10¾"	D20	12"	34'-0"	12"	9¼"	D20	18"	9'-0"	21⅜"	7½"	D20	24"	12'-0"	7¾"

TABLE OF DIMENSIONS

Girder No.	A		B
	Pier 9	Pier 10	
1	7"	16¼"	137'-4"
2	7⅛"	16¼"	137'-3⅜"
3	7⅛"	16¼"	137'-3⅛"
4-8	7¼"	16⅜"	137'-3⅛"

TYPE NU 70 P/S GIRDER - SPAN (9-10)
GIRDERS 1 THRU 8

Detailed JUL 2009
Checked JUL 2009

Note: This drawing is not to scale. Follow dimensions.

DATE 8/20/09
ROUTE I-70 STATE MO
DISTRICT 6 SHEET NO. BR57
COUNTY St. Louis City - MO
JOB NO. J6I0984B
CONTRACT ID. 100127-601
PROJECT NO. I-70-5 (315)
BRIDGE NO. A6500

DESCRIPTION | DATE

MISSOURI HIGHWAYS AND TRANSPORTATION COMMISSION
105 WEST CAPITOL JEFFERSON CITY, MO 65102 1-888-275-6636 1-800-454-MODOT

HNTB
715 KIRK DRIVE KANSAS CITY, MO 64105-1310 816.472.1201
CERTIFICATE OF AUTHORITY NO. 001270

FINAL PLANS REV.

SPAN 1-2

Location	Top of Girder Slope		Girder Steps									
	Rise	Side of Girder										
Girder 1	2 3/4"	Right	Step Length	-	-	-	-	-	-	-	-	-
			Step Height	-	-	-	-	-	-	-	-	-
Girder 2	2 3/4"	Right	Step Length	-	-	-	-	-	-	-	-	-
			Step Height	-	-	-	-	-	-	-	-	-
Girder 3	2 3/4"	Right	Step Length	-	-	-	-	-	-	-	-	-
			Step Height	-	-	-	-	-	-	-	-	-
Girder 4	2 3/4"	Right	Step Length	-	-	-	-	-	-	-	-	-
			Step Height	-	-	-	-	-	-	-	-	-
Girder 5	2 3/4"	Right	Step Length	-	-	-	-	-	-	-	-	-
			Step Height	-	-	-	-	-	-	-	-	-
Girder 6	1/8"	Left	Step Length	19'-0"	10'-0"	10'-0"	13'-0"	20'-8 1/8"	11'-0"	9'-0"	8'-0"	27'-0"
			Step Height	0"	1/2"	1"	1 1/2"	2"	1 1/2"	1"	1/2"	0"
Girder 7	1/8"	Left	Step Length	24'-0"	19'-0"	38'-9 5/8"	13'-0"	33'-0"	-	-	-	-
			Step Height	0"	1/2"	1"	1/2"	0"	-	-	-	-
Girder 8	1/8"	Left	Step Length	-	-	-	-	-	-	-	-	-
			Step Height	-	-	-	-	-	-	-	-	-
Girder 9	1/8"	Left	Step Length	-	-	-	-	-	-	-	-	-
			Step Height	-	-	-	-	-	-	-	-	-
Girder 10	1/8"	Left	Step Length	-	-	-	-	-	-	-	-	-
			Step Height	-	-	-	-	-	-	-	-	-
Girder 11	1/8"	Left	Step Length	3'-0"	20'-0"	85'-4"	10'-0"	10'-0"	-	-	-	-
			Step Height	1"	1/2"	0"	1/2"	1"	-	-	-	-

SPAN 2-3

Location	Top of Girder Slope		Girder Steps	
	Rise	Side of Girder		
Girder 1	2 1/4"	Right	Step Length	-
			Step Height	-
Girder 2	2 1/4"	Right	Step Length	-
			Step Height	-
Girder 3	2 1/4"	Right	Step Length	-
			Step Height	-
Girder 4	2 1/4"	Right	Step Length	-
			Step Height	-
Girder 5	2 1/4"	Right	Step Length	-
			Step Height	-
Girder 6	2 1/4"	Right	Step Length	-
			Step Height	-
Girder 7	-	-	Step Length	-
			Step Height	-
Girder 8	-	-	Step Length	-
			Step Height	-
Girder 9	-	-	Step Length	-
			Step Height	-
Girder 10	-	-	Step Length	-
			Step Height	-
Girder 11	-	-	Step Length	-
			Step Height	-
Girder 12	-	-	Step Length	-
			Step Height	-

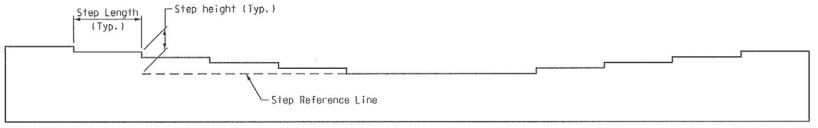

GIRDER ELEVATION

(Not showing Girder cross-slope)

(Showing condition in which steps increase towards ends. Other conditions exist where steps increase towards midspan.)

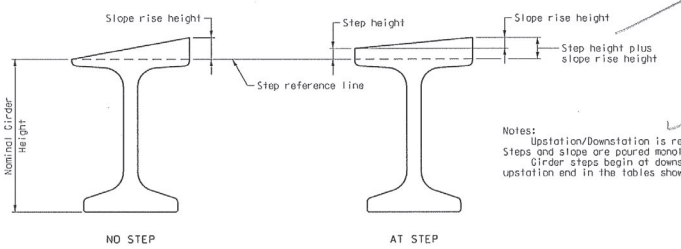

Notes:
Upstation/Downstation is referenced from ℄ Relocated I-70.
Steps and slope are poured monolithically with girder.
Girder steps begin at downstation end and move toward upstation end in the tables shown from left to right.

SECTION THRU GIRDER

(Showing slope on right side of girder)

NU-GIRDER DETAILS - 1

Detailed JUL 2009
Checked JUL 2009

Note: This drawing is not to scale. Follow dimensions.

Sheet No. 58 of 125

T:\de-proj\St_Louis_City\Construction\J6I0984B\Asbuilts\Bridge\B_A6500_058-125_J6I0984B_058.dgn

11:33:46 AM

DATE 8/20/09
ROUTE I-70 | STATE MO
DISTRICT 6 | SHEET NO. BR58
COUNTY St. Louis City - MO
JOB NO. J6I0984B
CONTRACT ID. 100127-601
PROJECT NO. I-70-5 (315)
BRIDGE NO. A6500

DESCRIPTION | DATE

MISSOURI HIGHWAYS AND TRANSPORTATION COMMISSION
105 WEST CAPITOL
JEFFERSON CITY, MO 65102
1-888-ASK-MODOT (1-888-275-6636)

HNTB
715 KIRK DRIVE
KANSAS CITY, MO 64105-1310
TELEPHONE (816) 472-1201
CERTIFICATE OF AUTHORITY NO. 001210

FINAL PLANS

REV.

SPAN 3-4

Location	Top of Girder Slope		Girder Steps														
	Rise	Side of Girder															
Girder 1	1"	Right	Step Length	2'-0"	10'-0"	11'-0"	9'-0"	8'-0"	10'-0"	26'-2 3/8"	9'-0"	7'-0"	6'-0"	7'-0"	8'-0"	7'-0"	23'-0"
			Step Height	1/2"	1"	1 1/2"	2"	2 1/2"	3"	3 1/2"	3"	2 1/2"	2"	1 1/2"	1"	1/2"	0"
Girder 2	1"	Right	Step Length	7'-0"	14'-0"	11'-0"	13'-0"	36'-2 3/8"	9'-0"	9'-0"	9'-0"	9'-0"	26'-0"	-	-	-	-
			Step Height	1/2"	1"	1 1/2"	2"	2 1/2"	2"	1/2"	1"	1/2"	0"	-	-	-	-
Girder 3	1"	Right	Step Length	5'-0"	19'-0"	17'-0"	43'-2 3/8"	11'-0"	13'-0"	35'-0"	-	-	-	-	-	-	-
			Step Height	0	1/2"	1"	1 1/2"	1"	1/2"	0"	-	-	-	-	-	-	-
Girder 4	1"	Right	Step Length	25'-0"	30'-0"	19'-2 3/8"	17'-0"	52'-0"	-	-	-	-	-	-	-	-	-
			Step Height	0"	1/2"	1"	1/2"	0"	-	-	-	-	-	-	-	-	-
Girder 5	1"	Right	Step Length	-	-	-	-	-	-	-	-	-	-	-	-	-	-
			Step Height	-	-	-	-	-	-	-	-	-	-	-	-	-	-
Girder 6	1"	Right	Step Length	-	-	-	-	-	-	-	-	-	-	-	-	-	-
			Step Height	-	-	-	-	-	-	-	-	-	-	-	-	-	-
Girder 7	-	-	Step Length	-	-	-	-	-	-	-	-	-	-	-	-	-	-
			Step Height	-	-	-	-	-	-	-	-	-	-	-	-	-	-
Girder 8	-	-	Step Length	-	-	-	-	-	-	-	-	-	-	-	-	-	-
			Step Height	-	-	-	-	-	-	-	-	-	-	-	-	-	-
Girder 9	-	-	Step Length	-	-	-	-	-	-	-	-	-	-	-	-	-	-
			Step Height	-	-	-	-	-	-	-	-	-	-	-	-	-	-
Girder 10	-	-	Step Length	-	-	-	-	-	-	-	-	-	-	-	-	-	-
			Step Height	-	-	-	-	-	-	-	-	-	-	-	-	-	-
Girder 11	-	-	Step Length	-	-	-	-	-	-	-	-	-	-	-	-	-	-
			Step Height	-	-	-	-	-	-	-	-	-	-	-	-	-	-
Girder 12	-	-	Step Length	-	-	-	-	-	-	-	-	-	-	-	-	-	-
			Step Height	-	-	-	-	-	-	-	-	-	-	-	-	-	-

SPAN 5-6

Location	Top of Girder Slope		Girder Steps															
	Rise	Side of Girder																
Girder 1	1"	Right	Step Length	6'-0"	6'-0"	5'-0"	5'-0"	5'-0"	4'-0"	6'-0"	45'-1 1/2"	5'-0"	4'-0"	5'-0"	6'-0"	4'-0"	6'-0"	2'-0"
			Step Height	3 1/2"	3"	2 1/2"	2"	1 1/2"	1"	1/2"	0"	1/2"	1"	1 1/2"	2"	2 1/2"	3"	3 1/2"
Girder 2	1"	Right	Step Length	9'-0"	6'-0"	7'-0"	7'-0"	60'-1 1/4"	7'-0"	8'-0"	8'-0"	2'-0"	-	-	-	-	-	-
			Step Height	2"	1 1/2"	1"	1/2"	0"	1/2"	1"	1 1/2"	2"	-	-	-	-	-	-
Girder 3	1"	Right	Step Length	15'-0"	86'-1 1/4"	13'-0"	-	-	-	-	-	-	-	-	-	-	-	-
			Step Height	1/2"	0"	1/2"	-	-	-	-	-	-	-	-	-	-	-	-
Girder 4	1"	Right	Step Length	-	-	-	-	-	-	-	-	-	-	-	-	-	-	-
			Step Height	-	-	-	-	-	-	-	-	-	-	-	-	-	-	-
Girder 5	1"	Left	Step Length	-	-	-	-	-	-	-	-	-	-	-	-	-	-	-
			Step Height	-	-	-	-	-	-	-	-	-	-	-	-	-	-	-
Girder 6	1"	Left	Step Length	-	-	-	-	-	-	-	-	-	-	-	-	-	-	-
			Step Height	-	-	-	-	-	-	-	-	-	-	-	-	-	-	-
Girder 7	1"	Left	Step Length	-	-	-	-	-	-	-	-	-	-	-	-	-	-	-
			Step Height	-	-	-	-	-	-	-	-	-	-	-	-	-	-	-
Girder 8	1"	Left	Step Length	-	-	-	-	-	-	-	-	-	-	-	-	-	-	-
			Step Height	-	-	-	-	-	-	-	-	-	-	-	-	-	-	-

Notes:
Girders located in Span 4-5 do not require steps or slopes at the top of girder. For additional details, see Sheet No. 58.

NU-GIRDER DETAILS - 2

DATE 8/20/09
ROUTE I-70 | STATE MO
DISTRICT 6 | SHEET NO. BR59
COUNTY St. Louis City - MO
JOB NO. J6I0984B
CONTRACT ID. 100127-601
PROJECT NO. I-70-5 (315)
BRIDGE NO. A6500

DESCRIPTION | DATE

MISSOURI HIGHWAYS AND TRANSPORTATION COMMISSION
105 WEST CAPITOL
JEFFERSON CITY, MO 65102
1-888-ASK-MODOT (1-888-275-6636)

HNTB
715 KIRK DRIVE
KANSAS CITY, MO 64105-1310
TELEPHONE (816) 472-1201
CERTIFICATE OF AUTHORITY NO. 001270

FINAL PLANS

REV.

Detailed JUL 2009
Checked JUL 2009

Note: This drawing is not to scale. Follow dimensions.

T:\de-proj\St_Louis_City\Construction\J6I0984B\Asbuilts\Bridge\B_A6500_059-125_J6I0984B_059.dgn

11:33:12 AM

SPAN 6-7

Location	Top of Girder Slope		Girder Steps										
	Rise	Side of Girder											
Girder 1	1 1/4"	Left	Step Length	15'-0"	10'-0"	10'-0"	9'-0"	11'-0"	11'-0"	61'-10 3/8"	-	-	-	-
			Step Height	3"	2 3/4"	2"	1 1/2"	1"	1/2"	0"	-	-	-	-
Girder 2	1 1/4"	Left	Step Length	20'-0"	19'-0"	17'-0"	71'-8 1/4"	-	-	-	-	-	-	-
			Step Height	1 1/2"	1"	1/2"	0"	-	-	-	-	-	-	-
Girder 3	1 1/4"	Left	Step Length	21'-0"	106'-5 3/4"	-	-	-	-	-	-	-	-	-
			Step Height	1/2"	0"	-	-	-	-	-	-	-	-	-
Girder 4	1 1/4"	Left	Step Length	-	-	-	-	-	-	-	-	-	-	-
			Step Height	-	-	-	-	-	-	-	-	-	-	-
Girder 5	1"	Left	Step Length	120'-0 3/8"	7'-0"	-	-	-	-	-	-	-	-	-
			Step Height	0"	1/2"	-	-	-	-	-	-	-	-	-
Girder 6	1"	Left	Step Length	57'-10 3/8"	16'-0"	53'-0"	-	-	-	-	-	-	-	-
			Step Height	0"	1/2"	1"	-	-	-	-	-	-	-	-
Girder 7	1"	Left	Step Length	38'-8 1/8"	9'-0"	9'-0"	11'-0"	25'-0"	34'-0"	-	-	-	-	-
			Step Height	0"	3/4"	1"	1 1/2"	2"	1 1/2"	-	-	-	-	-
Girder 8	1"	Left	Step Length	32'-5 3/4"	8'-0"	6'-0"	6'-0"	7'-0"	9'-0"	6'-0"	2'-0"	17'-0"	17'-0"	16'-0"
			Step Height	0"	1/2"	1"	1 1/2"	2"	2 1/2"	3"	3 1/2"	3"	2 3/4"	2"

SPAN 7-8

Location	Top of Girder Slope		Girder Steps								
	Rise	Side of Girder									
Girder 1	1 3/4"	Left	Step Length	123'-1 1/4"	12'-0"	-	-	-	-	-	-
			Step Height	0"	3/4"	-	-	-	-	-	-
Girder 2	1 3/4"	Left	Step Length	-	-	-	-	-	-	-	-
			Step Height	-	-	-	-	-	-	-	-
Girder 3	1 3/4"	Left	Step Length	6'-0"	124'-4 1/2"	-	-	-	-	-	-
			Step Height	1/2"	0"	-	-	-	-	-	-
Girder 4	1 3/4"	Left	Step Length	3'-0"	112'-0"	7'-0"	6'-0"	-	-	-	-
			Step Height	1/2"	0"	1/2"	1"	-	-	-	-
Girder 5	1 3/4"	Left	Step Length	104'-7 1/8"	7'-0"	6'-0"	8'-0"	-	-	-	-
			Step Height	0"	1/2"	1"	1 1/2"	-	-	-	-
Girder 6	1 3/4"	Left	Step Length	3'-0"	4'-0"	96'-2 1/8"	7'-0"	5'-0"	8'-0"	-	-
			Step Height	1"	3/4"	0"	1/2"	1"	1 1/2"	-	-
Girder 7	1 3/4"	Left	Step Length	4'-0"	3'-0"	88'-10 3/8"	7'-0"	7'-0"	5'-0"	6'-0"	-
			Step Height	1"	1/2"	0"	1/2"	1"	1 1/2"	2"	-
Girder 8	1 3/4"	Left	Step Length	4'-0"	3'-0"	2'-0"	88'-5 3/4"	6'-0"	5'-0"	6'-0"	4'-0"
			Step Height	1 1/2"	1"	1/2"	0"	1/2"	1"	1 1/2"	2"

Note:
For additional details, see Sheet No. 58.

NU-GIRDER DETAILS - 3

DATE
8/20/09

ROUTE: I-70 | STATE: MO
DISTRICT: 6 | SHEET NO.: BR60
COUNTY: St. Louis City - MO
JOB NO.: J6I0984B
CONTRACT ID.: 100127-601
PROJECT NO.: I-70-5 (315)
BRIDGE NO.: A6500

REV.	DESCRIPTION	DATE

MISSOURI HIGHWAYS AND TRANSPORTATION COMMISSION
105 WEST CAPITOL
JEFFERSON CITY, MO 65102
1-888-ASK-MODOT (1-888-275-6636)

HNTB
715 KIRK DRIVE
KANSAS CITY, MO 64105-1310
TELEPHONE (816) 472-1201
CERTIFICATE OF AUTHORITY NO. 001270

FINAL PLANS

Detailed JUL 2009
Checked JUL 2009

Note: This drawing is not to scale. Follow dimensions.

T:\de-proj\St_Louis_City\Construction\J6I0984B\Asbuilts\Bridge\B_A6500_060-125_J6I0984B_060.dgn

11:47:43 AM

SPAN 8-9

Location	Top of Girder Slope		Girder Steps																		
	Rise	Side of Girder																			
Girder 1	1 5/8"	Left	Step Length	68'-9 1/4"	8'-0"	7'-0"	7'-0"	6'-0"	5'-0"	6'-0"	4'-0"	7'-0"	-	-	-	-	-	-	-	-	-
			Step Height	0"	1/2"	1"	1 1/2"	2"	2 1/2"	3"	3 1/2"	4"	-	-	-	-	-	-	-	-	-
Girder 2	1 3/4"	Left	Step Length	84'-1 1/8"	8'-0"	7'-0"	7'-0"	6'-0"	8'-0"	-	-	-	-	-	-	-	-	-	-	-	-
			Step Height	0"	1/2"	1"	1 1/2"	2"	2 1/2"	-	-	-	-	-	-	-	-	-	-	-	-
Girder 3	1 3/8"	Left	Step Length	87'-5"	8'-0"	8'-0"	7'-0"	6'-0"	5'-0"	-	-	-	-	-	-	-	-	-	-	-	-
			Step Height	0"	1/2"	1"	1 1/2"	2"	2 1/2"	-	-	-	-	-	-	-	-	-	-	-	-
Girder 4	1 3/8"	Left	Step Length	5'-0"	96'-8 3/8"	10'-0"	11'-0"	-	-	-	-	-	-	-	-	-	-	-	-	-	-
			Step Height	1/2"	0"	1/2"	1"	-	-	-	-	-	-	-	-	-	-	-	-	-	-
Girder 5	1 1/2"	Left	Step Length	10'-0"	7'-0"	107'-0 1/8"	-	-	-	-	-	-	-	-	-	-	-	-	-	-	-
			Step Height	1"	1/2"	0"	-	-	-	-	-	-	-	-	-	-	-	-	-	-	-
Girder 6	1 1/2"	Left	Step Length	12'-0"	62'-0"	51'-4 1/8"	-	-	-	-	-	-	-	-	-	-	-	-	-	-	-
			Step Height	1"	1/2"	0"	-	-	-	-	-	-	-	-	-	-	-	-	-	-	-
Girder 7	1 1/2"	Left	Step Length	9'-0"	69'-0"	11'-0"	37'-9"	-	-	-	-	-	-	-	-	-	-	-	-	-	-
			Step Height	1 1/2"	1"	1/2"	0"	-	-	-	-	-	-	-	-	-	-	-	-	-	-
Girder 8	1 1/2"	Left	Step Length	81'-0"	10'-0"	11'-0"	26'-1 1/8"	-	-	-	-	-	-	-	-	-	-	-	-	-	-
			Step Height	1 1/2"	1"	1/2"	0"	-	-	-	-	-	-	-	-	-	-	-	-	-	-

SPAN 9-10

| Location | Top of Girder Slope | | Girder Steps | | | | | | | | | | | | | | | | | | |

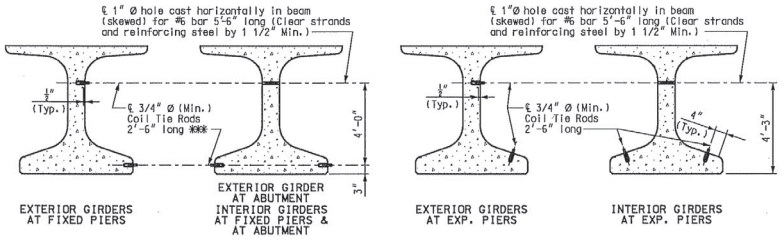

DETAILS OF COIL TIES

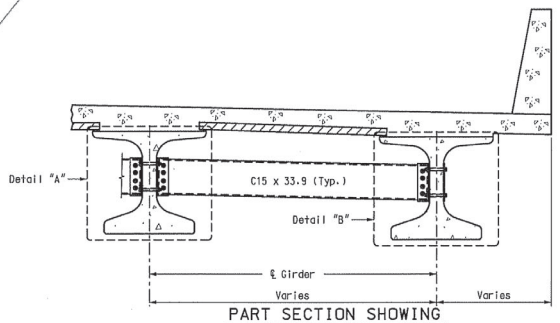

PART SECTION SHOWING INTERMEDIATE DIAPHRAGMS

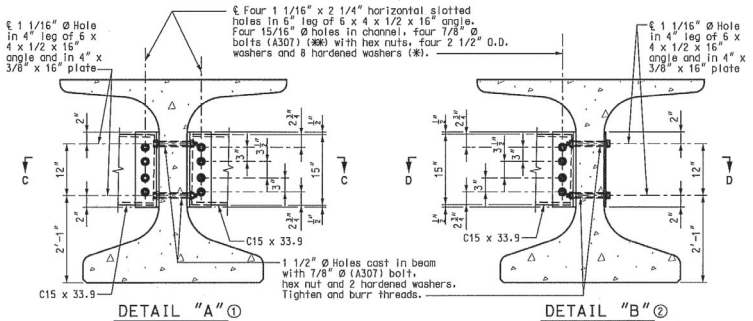

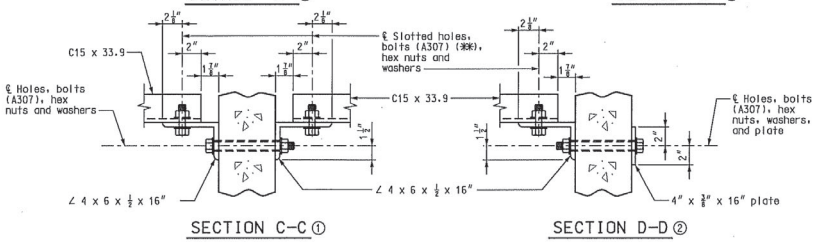

① Showing interior girder at square diaphragms.

② Showing interior girder at skewed diaphragms and exterior girder at all diaphragms.

Notes:
(*) In lieu of 2-1/2" outside diameter washers, contractor may substitute a 3/16" (Min. thickness) plate with four 15/16" Ø holes and one hardened washer per bolt.
(**) Bolts were tightened to provide a tension of one-half that specified in Sec 712 for high strength bolt installation. A325 bolts may be substituted for and installed in accordance with the requirements for the specified A307 bolts.
All diaphragm materials including bolts, nuts, and washers are galvanized.
Fabricated structural steel is ASTM A709 Grade 36 except as noted.
Payment for furnishing and installing steel intermediate diaphragms was considered completely covered by the contract unit price for Steel Intermediate Diaphragm for P/S Concrete Girders.
Shop drawings were not be required for steel intermediate diaphragms and angle connections.
For location of intermediate diaphragms, see Sheet No. 37.
*** Length of coil tie rods at exterior girders at Ramp 8 Abutment 1 = 3'-0"
Length of coil tie rods at exterior girders at Ramp 10 Abutment 1 = 2'-11 3/4"

STEEL INTERMEDIATE DIAPHRAGM DETAILS – NU 63 GIRDER

DATE 8/20/09
ROUTE I-70 | STATE MO
DISTRICT 6 | SHEET NO. BR62
COUNTY St. Louis City - MO
JOB NO. J6I0984B
CONTRACT ID. 100127-601
PROJECT NO. I-70-5 (315)
BRIDGE NO. A6500

DESCRIPTION | DATE

MISSOURI HIGHWAYS AND TRANSPORTATION COMMISSION
105 WEST CAPITOL
JEFFERSON CITY, MO 65102
1-888-ASK-MODOT (1-888-275-6636)
HNTB
715 KIRK DRIVE
KANSAS CITY, MO 64105-1310
TELEPHONE (816) 472-1201
CERTIFICATE OF AUTHORITY NO. 001270

FINAL PLANS

REV.

Detailed JUL 2009
Checked JUL 2009

Note: This drawing is not to scale. Follow dimensions.

6 B B B 6 62 2 6 B 62

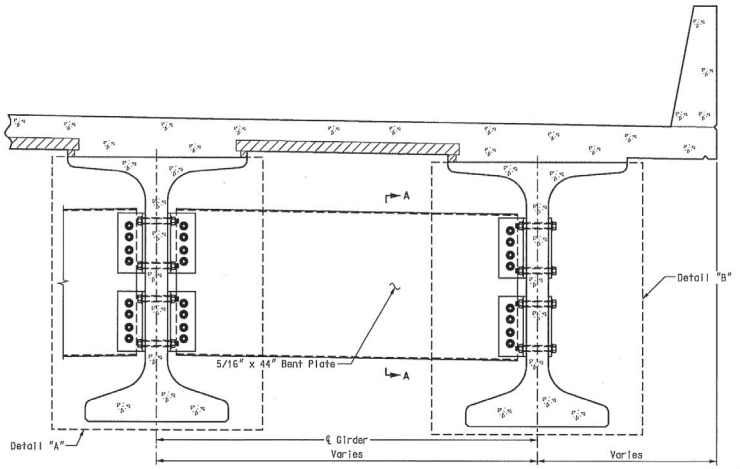

PART SECTION SHOWING
INTERMEDIATE DIAPHRAGMS

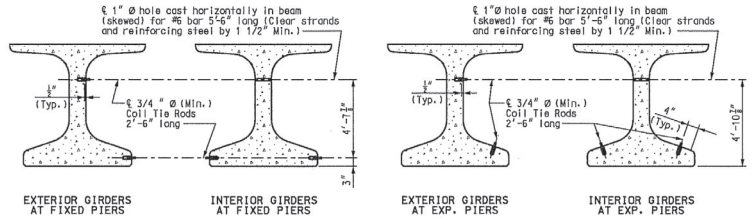

DETAILS OF COIL TIES

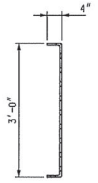

SECTION A-A

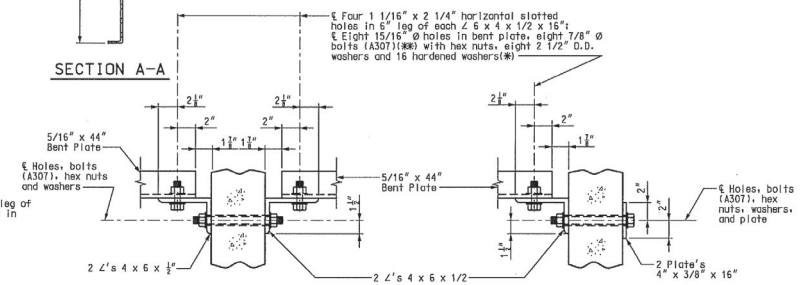

SECTION C-C ①

SECTION D-D ②

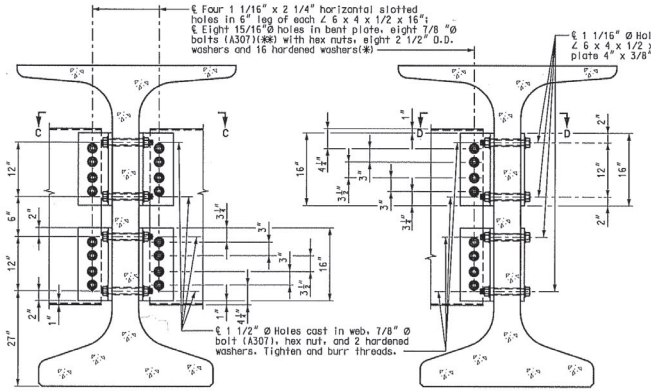

DETAIL "A" ①

DETAIL "B" ②

① Showing interior girder at square diaphragms.

② Showing interior girder at skewed diaphragms and exterior girder at all diaphragms.

Notes:
(✻) In lieu of 2-1/2" outside diameter washers, contractor may substitute a 3/16" (Min. thickness) plate with four 15/16" Ø holes and one hardened washer per bolt.
(✻✻) Bolts were tightened to provide a tension of one-half that specified in Sec 712 for high strength bolt installation. A325 bolts may be substituted for and installed in accordance with the requirements for the specified A307 bolts.
All diaphragm materials including bolts, nuts, and washers are galvanized.
Fabricated structural steel is ASTM A709 Grade 36 except as noted.
Payment for furnishing and installing steel intermediate diaphragms was considered completely covered by the contract unit price for Steel Intermediate Diaphragm for P/S Concrete Girders.
Shop drawings was not required for steel intermediate diaphragms and angle connections.
For location of intermediate diaphragms, see Sheet Nos. 38 and 39.

STEEL INTERMEDIATE DIAPHRAGM DETAILS - NU 70 GIRDER

DATE 8/20/09
ROUTE I-70 | STATE MO
DISTRICT 6 | SHEET NO. BR63
COUNTY St. Louis City - MO
JOB NO. J6I0984B
CONTRACT ID. 100127-601
PROJECT NO. I-70-5 (315)
BRIDGE NO. A6500

DESCRIPTION | DATE

MISSOURI HIGHWAYS AND TRANSPORTATION COMMISSION
105 WEST CAPITOL
JEFFERSON CITY, MO 65102
1-888-ASK-MODOT (1-888-275-6636)

HNTB
715 KIRK DRIVE
KANSAS CITY, MO 64105-1310
TELEPHONE (816) 472-1201
CERTIFICATE OF AUTHORITY NO. 001070

FINAL PLANS

Detailed JUL 2009
Checked JUL 2009

Note: This drawing is not to scale. Follow dimensions.

I:\de-proj\St_Louis_City\Construction\J6I0984B\Asbuilts\Bridge\B_A6500_063-125_J6I0984B_063.dgn

REV. 8:05:22 AM

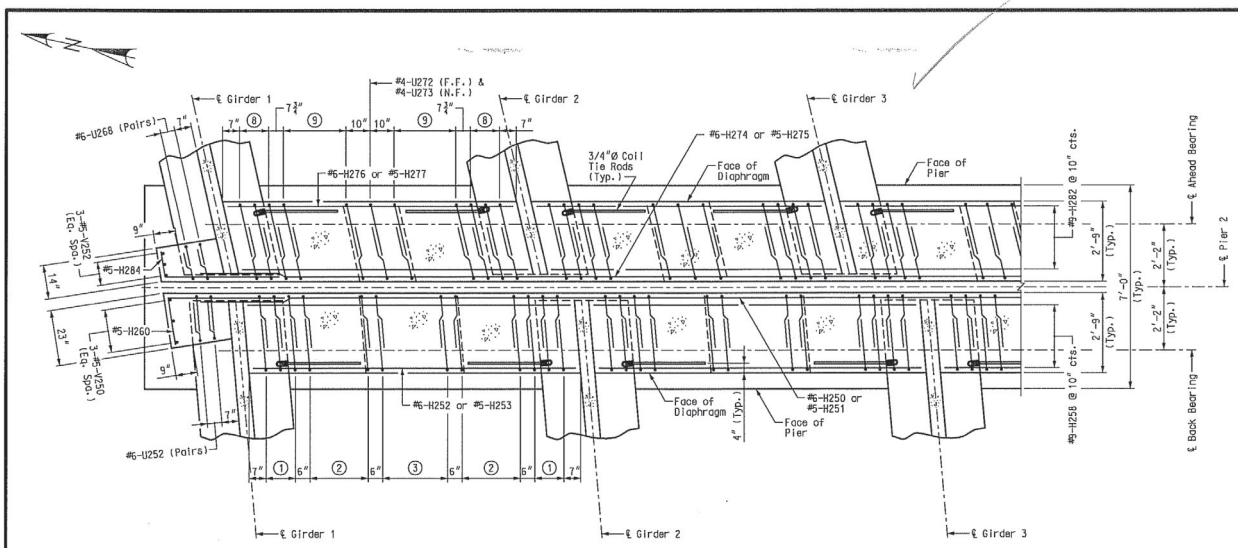

TYPICAL PART PLAN NEAR RAMP 8

① #6-U250 (F.F.) & #6-U251 (N.F.)
② #6-U254 (F.F.) & #6-U255 (N.F.)
③ #4-U256 (F.F.) & #4-U257 (N.F.)
④ #6-U258 (F.F.) & #6-U259 (N.F.)
⑤ #6-U262 (F.F.) & #6-U263 (N.F.)
⑥ #4-U264 (F.F.) & #4-U265 (N.F.)
⑦ 3-#5-V251 @ Eq. Spa.
⑧ #6-U266 (F.F.) & #6-U267 (N.F.)
⑨ #6-U270 (F.F.) & #6-U271 (N.F.)
⑩ 3-#5-V252 @ Eq. Spa.

Notes:
Diaphragms at piers were built vertical.
For location and details of coil ties, see Sheet No. 62 and 63.
For girder spacing see Sheet Nos. 37 and 38.
Seal inside face and ends of diaphragms with Protective Coating - Concrete Bents and Piers (Epoxy).
For elevations and details of diaphragms, see Sheet Nos. 65, 66 and 67.

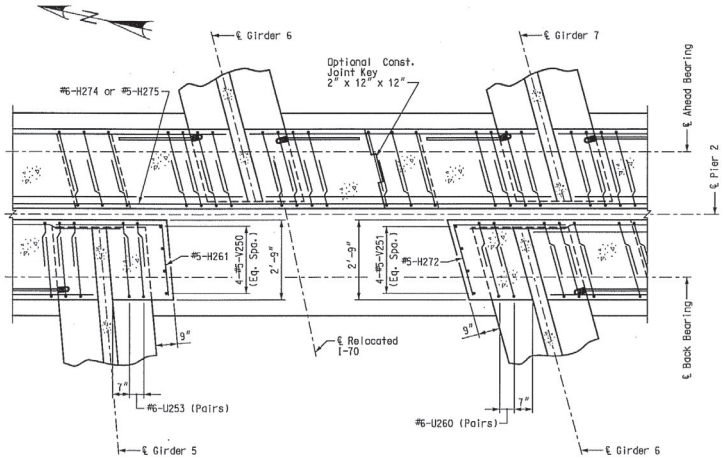

PART PLAN NEAR GORE

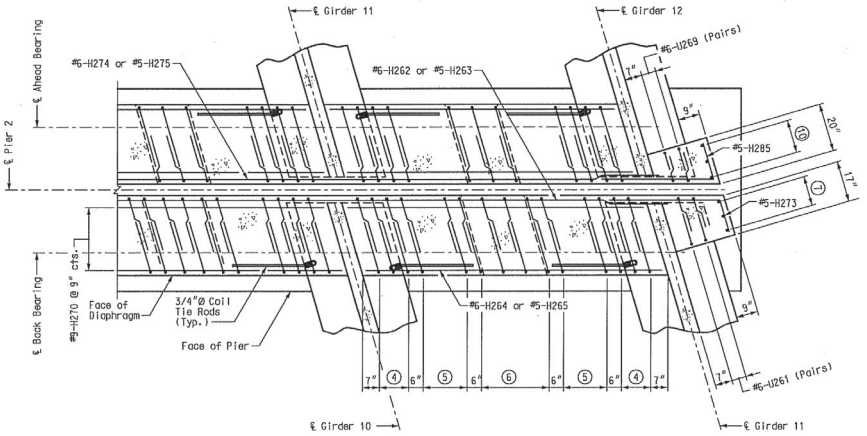

TYPICAL PART PLAN NEAR RAMP 10

DIAPHRAGMS AT PIER 2 - PLANS

Detailed JUL 2009
Checked JUL 2009

Note: This drawing is not to scale. Follow dimensions.

Sheet No. 64 of

6 4B B B 6 64 6 4B 64

DATE
8/20/09
ROUTE I-70 | STATE MO
DISTRICT 6 | SHEET NO. BR64
COUNTY
St. Louis City - MO
JOB NO.
J6I0984B
CONTRACT ID.
100127-601
PROJECT NO.
I-70-5(315)
BRIDGE NO.
A6500

DESCRIPTION	DATE

MISSOURI HIGHWAYS AND TRANSPORTATION COMMISSION
105 WEST CAPITOL
JEFFERSON CITY, MO 65102
1-888-ASK-MODOT (1-888-275-6636)

HNTB
715 KIRK DRIVE
KANSAS CITY, MO 64105-1310
TELEPHONE (816) 472-1201
CERTIFICATE OF AUTHORITY
NO. 001270

FINAL PLANS

REV.

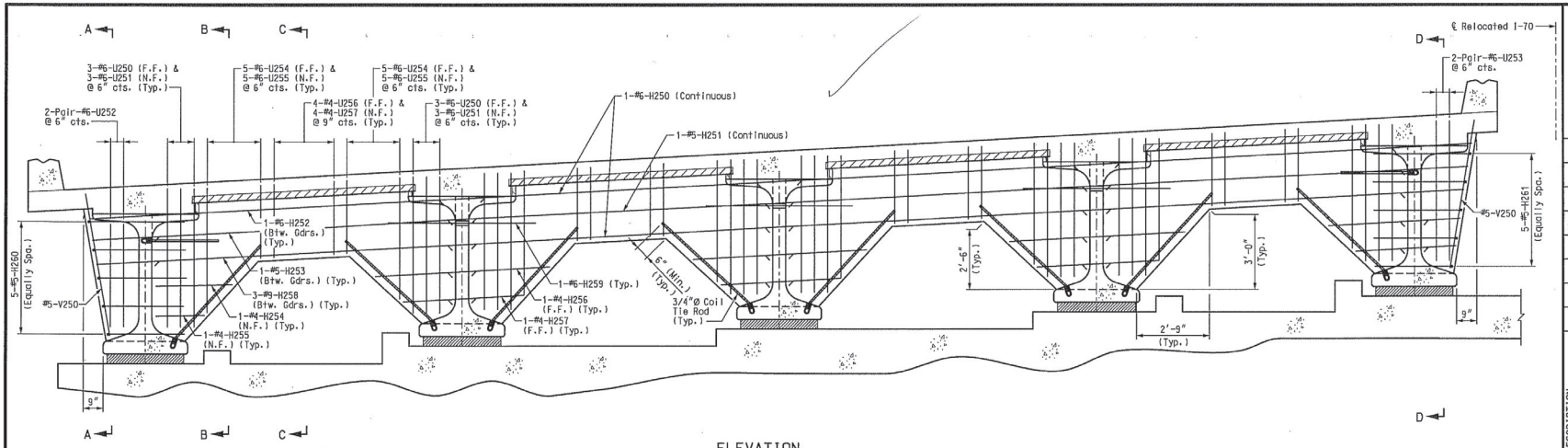

ELEVATION

(Ramp 8)
(Looking Upstation)

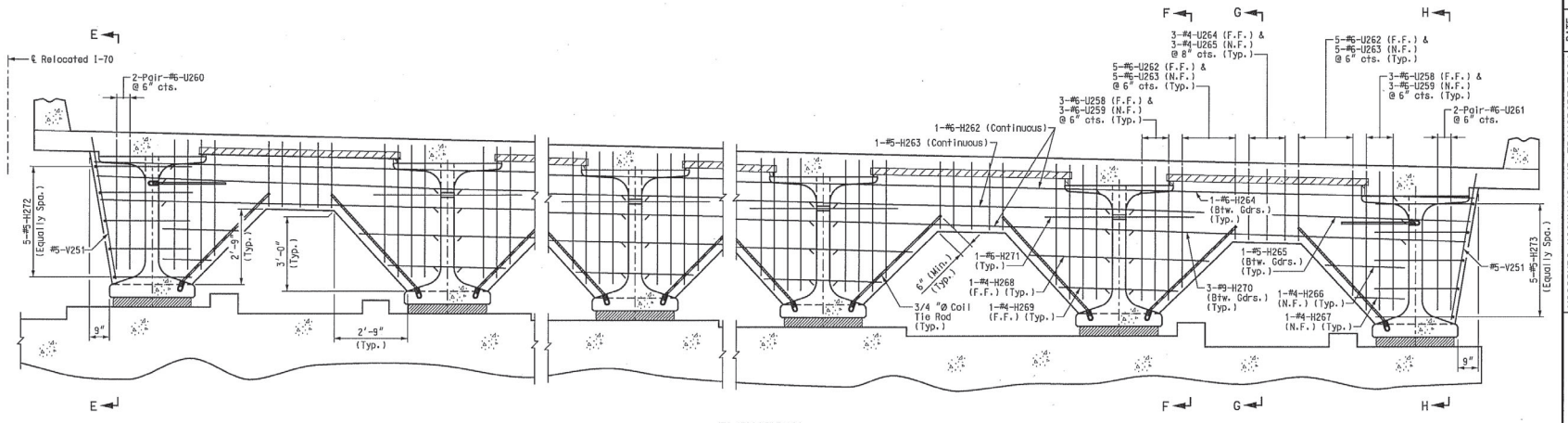

ELEVATION

(Ramp 10)
(Looking Upstation)

Notes:
For plans and details of diaphragms, see Sheet Nos. 64 and 67.
For Sections A-A, B-B, C-C, D-D, E-E, F-F, G-G, and H-H, see Sheet No. 67.

DIAPHRAGMS AT PIER 2 – ELEVATIONS (SPAN 1-2)

Detailed JUL 2009
Checked JUL 2009

Note: This drawing is not to scale. Follow dimensions.

Sheet No. 65 of 125

T L 61 B B B 65 65 125 61 B 65

DATE 8/20/09
ROUTE I-70 | STATE MO
DISTRICT 6 | SHEET NO. BR65
COUNTY St. Louis City - MO
JOB NO. J6I0984B
CONTRACT ID. 100127-601
PROJECT NO. I-70-5(315)
BRIDGE NO. A6500

DESCRIPTION | DATE

MISSOURI HIGHWAYS AND TRANSPORTATION COMMISSION
105 WEST CAPITOL
JEFFERSON CITY, MO 65102
1-888-ASK-MODOT (1-888-275-6636)

HNTB
715 KIRK DRIVE
KANSAS CITY, MO 64105-1310
TELEPHONE (816) 472-1201
CERTIFICATE OF AUTHORITY NO. 001270

FINAL PLANS

REV.

1 M

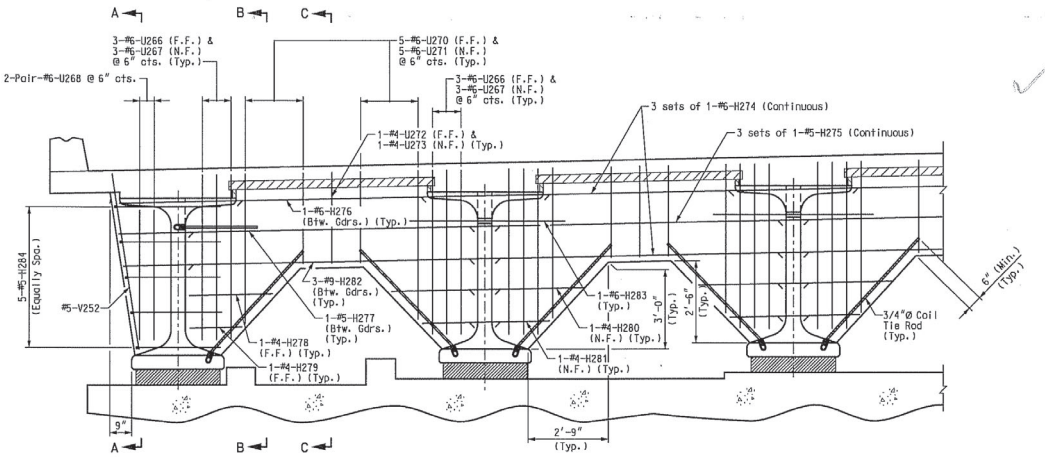

TYPICAL PART ELEVATION NEAR RAMP 8

(Looking Upstation)

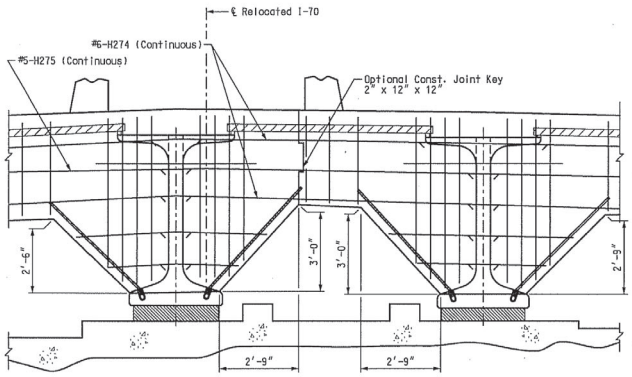

PART ELEVATION NEAR GORE

(Near Const. Joint)
(Looking Upstation)

Note:
Use minimum lap length of 3'-6" between #6-H274 bars.
Use minimum lap length of 2'-11" between #5-H275 bars.

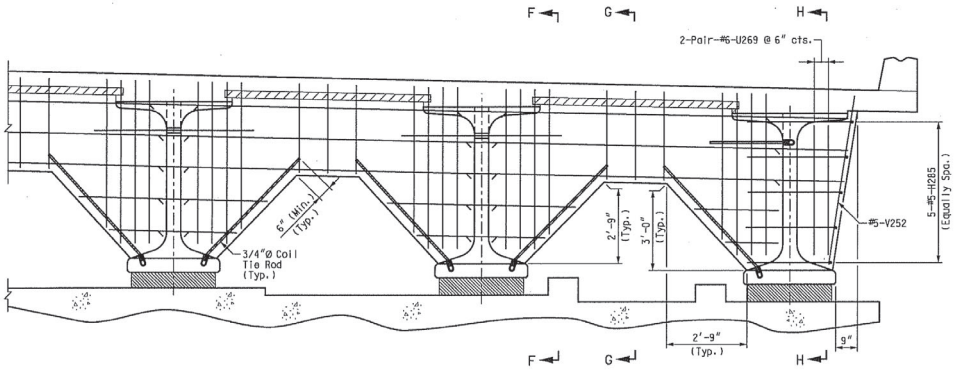

TYPICAL PART ELEVATION NEAR RAMP 10

(Looking Upstation)

Notes:
For plans and details of diaphragms, see Sheet Nos. 64 and 67.
For Sections A-A, B-B, C-C, D-D, E-E, F-F, G-G, and H-H, see Sheet No. 67.

DIAPHRAGMS AT PIER 2 – ELEVATIONS (SPAN 2-3)

Detailed JUL 2009
Checked JUL 2009

Note: This drawing is not to scale. Follow dimensions.

Sheet No. 66 of

6 B B B 6 66 6 B 66

DATE
8/20/09

ROUTE	STATE
I-70	MO
DISTRICT	SHEET NO.
6	BR66

COUNTY
St. Louis City - MO

JOB NO.
J6I0984B

CONTRACT ID.
100127-601

PROJECT NO.
I-70-5(315)

BRIDGE NO.
A6500

DESCRIPTION	DATE

MISSOURI HIGHWAYS AND TRANSPORTATION COMMISSION
105 WEST CAPITOL
JEFFERSON CITY, MO 65102
1-888-ASK-MODOT (1-888-275-6636)

HNTB
715 KIRK DRIVE
KANSAS CITY, MO 64105-1310
TELEPHONE (816) 472-1201
CERTIFICATE OF AUTHORITY
NO. 001270

FINAL PLANS

REV.

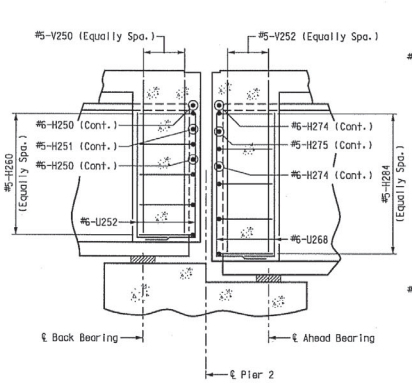

SECTION A-A

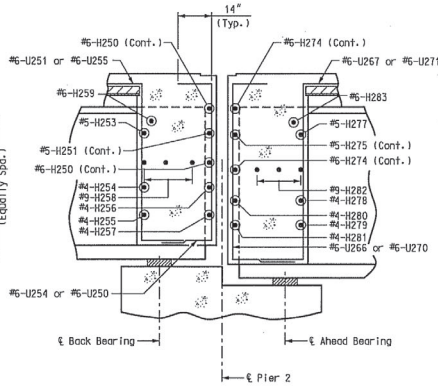

SECTION B-B

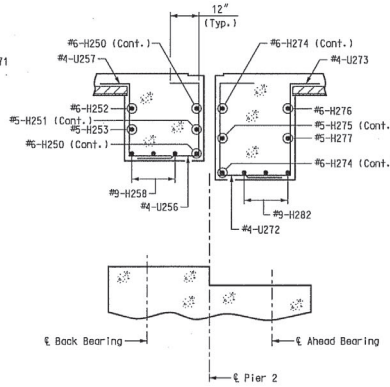

SECTION C-C

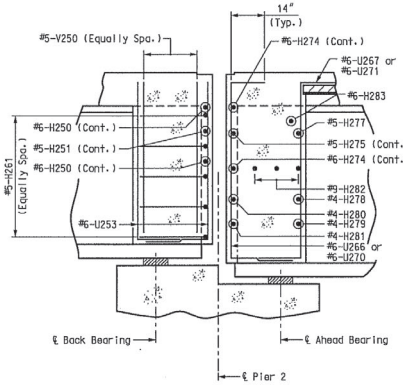

SECTION D-D

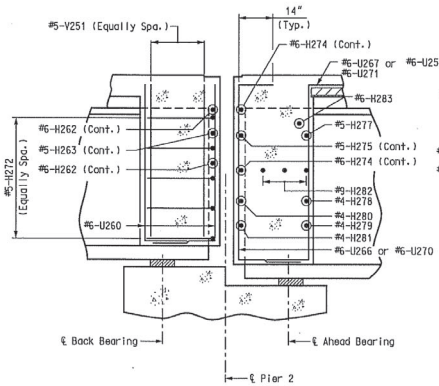

SECTION E-E

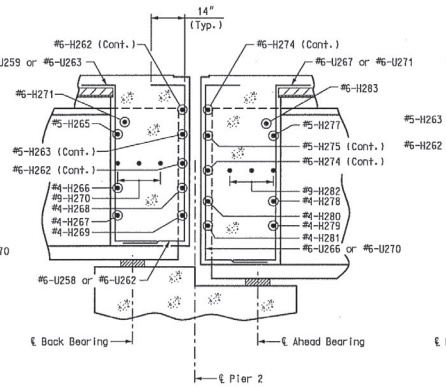

SECTION F-F

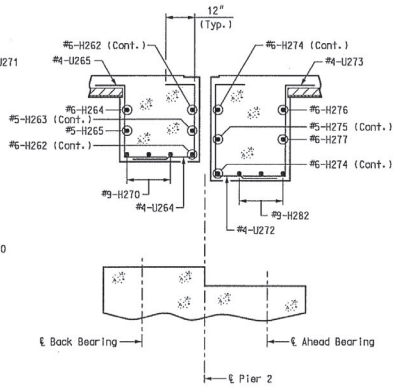

SECTION G-G

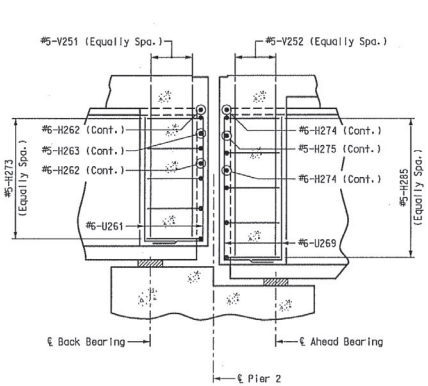

SECTION H-H

Note:
For location of Section A-A, B-B, C-C, D-D, E-E, F-F, G-G and H-H see Sheet Nos. 65 and 66.

DIAPHRAGMS AT PIER 2 - DETAILS

Detailed JUL 2009
Checked JUL 2009

Note: This drawing is not to scale. Follow dimensions.

T L 61 B B B 65 67 125 61 B 67

DATE 8/20/09
ROUTE I-70 STATE MO
DISTRICT 6 SHEET NO. BR67
COUNTY St. Louis City - MO
JOB NO. J6I0984B
CONTRACT ID. 100127-601
PROJECT NO. I-70-5 (315)
BRIDGE NO. A6500

DESCRIPTION | DATE

MISSOURI HIGHWAYS AND TRANSPORTATION COMMISSION
105 WEST CAPITOL
JEFFERSON CITY, MO 65102
1-888-ASK-MODOT (1-888-275-6636)

HNTB
715 KIRK DRIVE
KANSAS CITY, MO 64105-1310
TELEPHONE (816) 472-1201
CERTIFICATE OF AUTHORITY NO. 001270

FINAL PLANS REV. 1 7 M

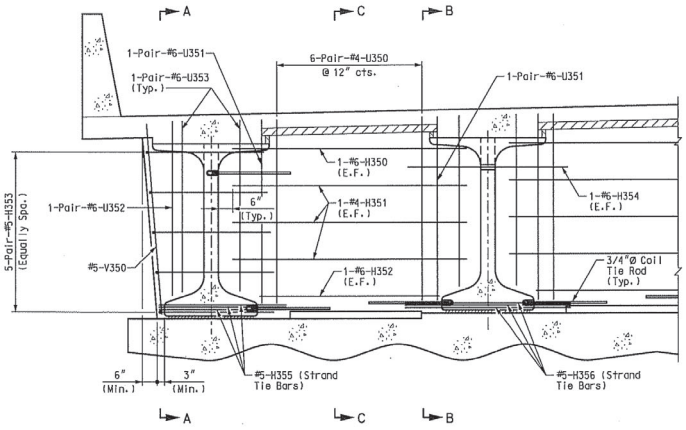

TYPICAL PART ELEVATION

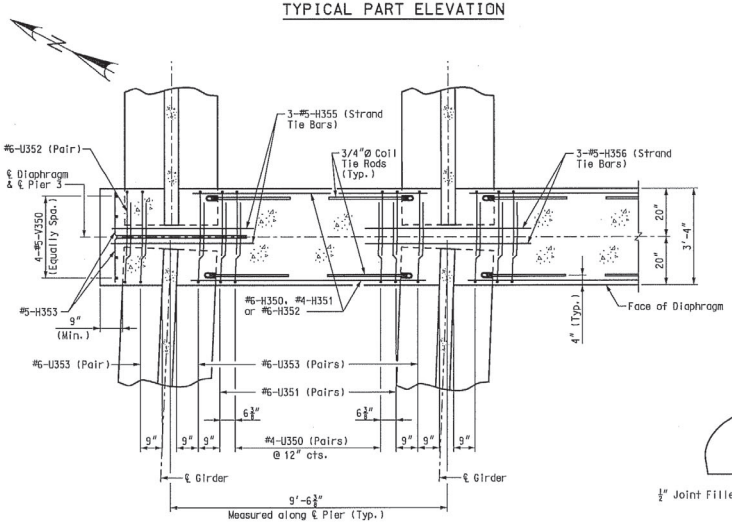

TYPICAL PART PLAN

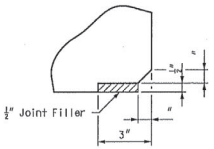

DETAIL "A"

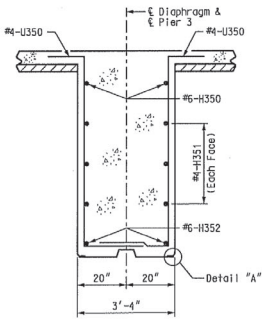

SECTION C-C

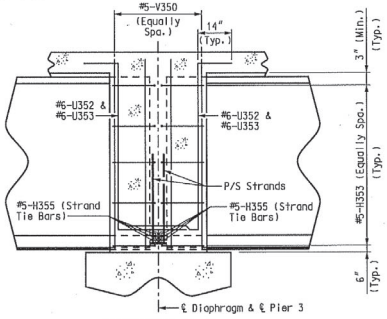

SECTION A-A

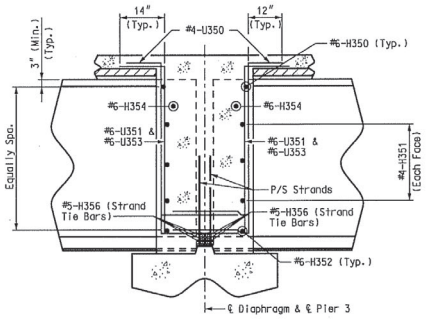

SECTION B-B

Notes:
For location of #5-H355 and #5-H356 (Strand Tie Bars), see Sheet Nos. 42 thru 46.
Diaphragms at Piers were built vertical.
For location and details of coil ties, see Sheet No. 63.

DIAPHRAGM AT PIER 3

DATE 8/20/09
ROUTE I-70 STATE MO
DISTRICT 6 SHEET NO. BR68
COUNTY St. Louis City - MO
JOB NO. J6I0984B
CONTRACT ID. 100127-601
PROJECT NO. I-70-5 (315)
BRIDGE NO. A6500

DESCRIPTION | DATE

MISSOURI HIGHWAYS AND TRANSPORTATION COMMISSION
105 WEST CAPITOL
JEFFERSON CITY, MO 65102
1-888-ASK-MODOT (1-888-275-6636)

HNTB
715 KIRK DRIVE
KANSAS CITY, MO 64105-1310
TELEPHONE 816.472.1201
CERTIFICATE OF AUTHORITY NO. 001270

FINAL PLANS REV.

Detailed JUL 2009
Checked JUL 2009

Note: This drawing is not to scale. Follow dimensions.

Sheet No. 68 of

T L 6I 8 B B B 6 68 6I 8 B 68 8 M

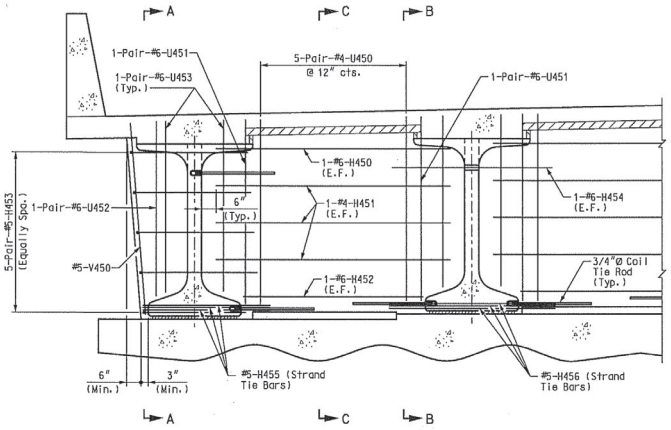

TYPICAL PART ELEVATION

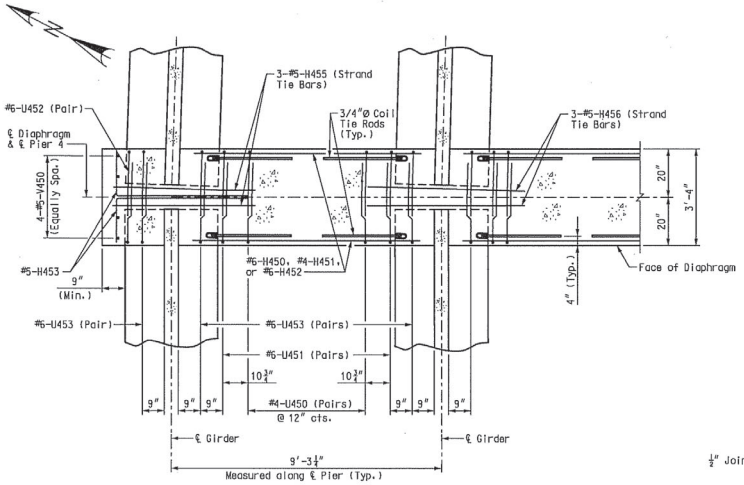

TYPICAL PART PLAN

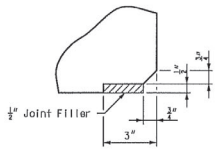

DETAIL "A"

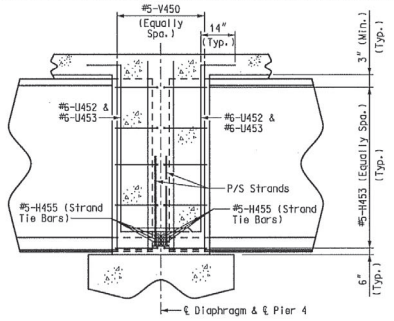

SECTION A-A

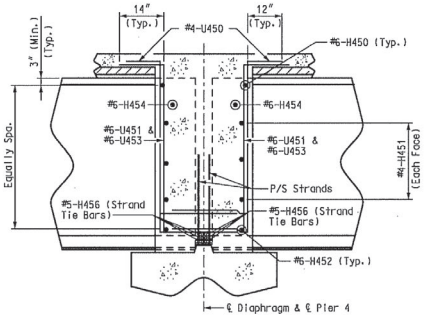

SECTION B-B

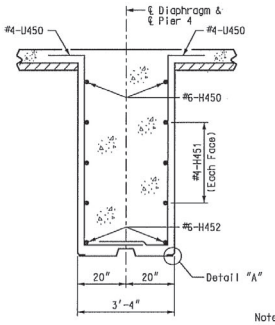

SECTION C-C

Notes:
For location of #5-H455 and #5-H456 (Strand Tie Bars), see Sheet Nos. 46 and 47.
Diaphragms at Piers were built vertical.
For location and details of coil ties, see Sheet No. 63.

DIAPHRAGM AT PIER 4

DATE 8/20/09
ROUTE I-70 STATE MO
DISTRICT 6 SHEET NO. BR69
COUNTY St. Louis City - MO
JOB NO. J6I0984B
CONTRACT ID. 100127-601
PROJECT NO. I-70-5(315)
BRIDGE NO. A6500

DESCRIPTION | DATE

MISSOURI HIGHWAYS AND TRANSPORTATION COMMISSION
105 WEST CAPITOL
JEFFERSON CITY, MO 65102
1-888-ASK-MODOT (1-888-275-6636)

HNTB
715 KIRK DRIVE
KANSAS CITY, MO 64105-1310
TELEPHONE (816) 472-1201
CERTIFICATE OF AUTHORITY NO. 001270

FINAL PLANS REV.

Detailed JUL 2009
Checked JUL 2009

Note: This drawing is not to scale. Follow dimensions.

Sheet No. 69 of 125

T L 6I 9 B B B 65 69 125 6I 9 B 69

12 2 M

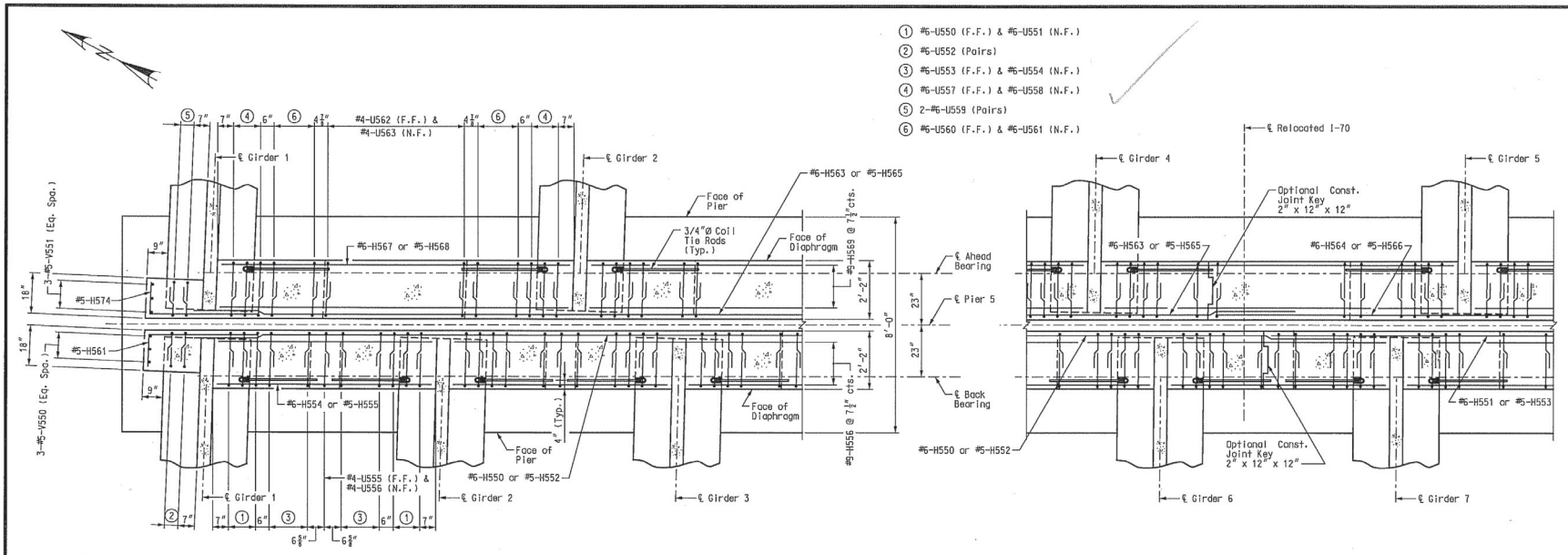

TYPICAL PART PLAN

PART PLAN NEAR CONST. JOINT

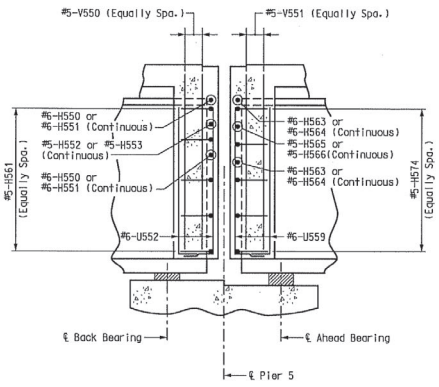

SECTION A-A

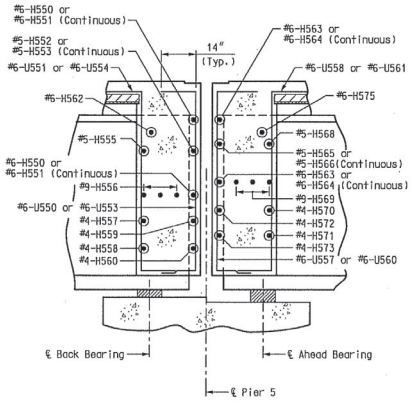

SECTION B-B

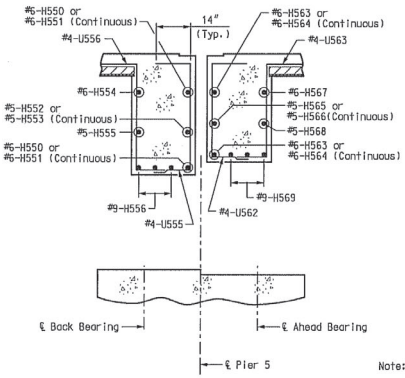

SECTION C-C

Note:
For location of Sections A-A, B-B and C-C see Sheet No. 71.

DIAPHRAGMS AT PIER 5 - PLANS AND DETAILS

DATE 8/20/09
ROUTE I-70 | STATE MO
DISTRICT 6 | SHEET NO. BR70
COUNTY St. Louis City - MO
JOB NO. J6I0984B
CONTRACT ID. 100127-601
PROJECT NO. I-70-5 (315)
BRIDGE NO. A6500

DESCRIPTION | DATE

MISSOURI HIGHWAYS AND TRANSPORTATION COMMISSION
105 WEST CAPITOL
JEFFERSON CITY, MO 65102
1-888-ASK-MODOT (1-888-275-6636)

HNTB
715 KIRK DRIVE
KANSAS CITY, MO 64105-1310
TELEPHONE (816) 472-1201
CERTIFICATE OF AUTHORITY NO. 001270

FINAL PLANS REV.

Detailed JUL 2009
Checked JUL 2009

Note: This drawing is not to scale. Follow dimensions.

Sheet No. 70 of 125

T:\de-proj\St_Louis_City\Construction\J6I0984B\Asbuilts\Bridge\B_A6500_070-125_J6I0984B_070.dgn

2:59:21 PM

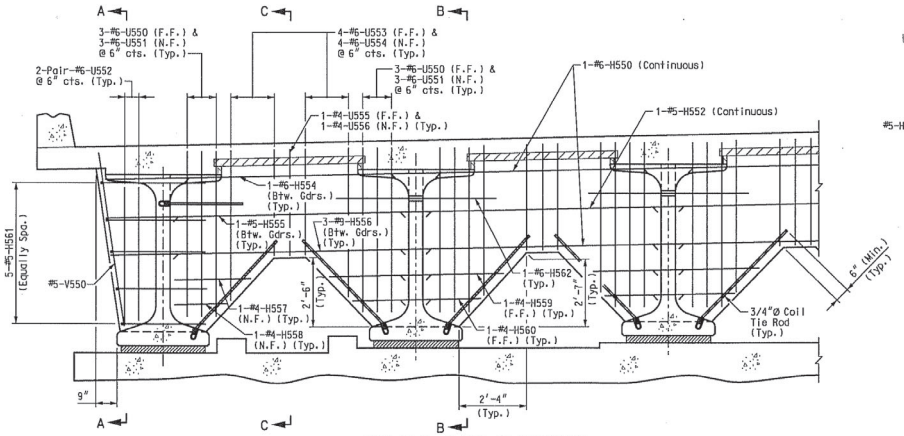

TYPICAL PART ELEVATION

Span (4-5)
(Looking upstation)

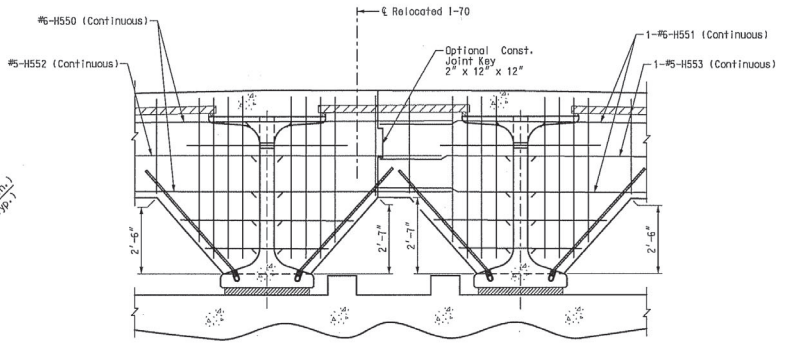

PART ELEVATION

Span (4-5) Near Const. Joint
(Looking Upstation)

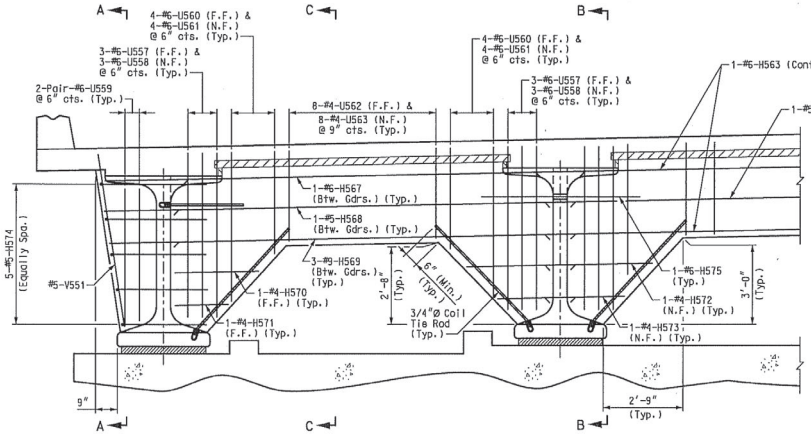

TYPICAL PART ELEVATION

Span (5-6)
(Looking Upstation)

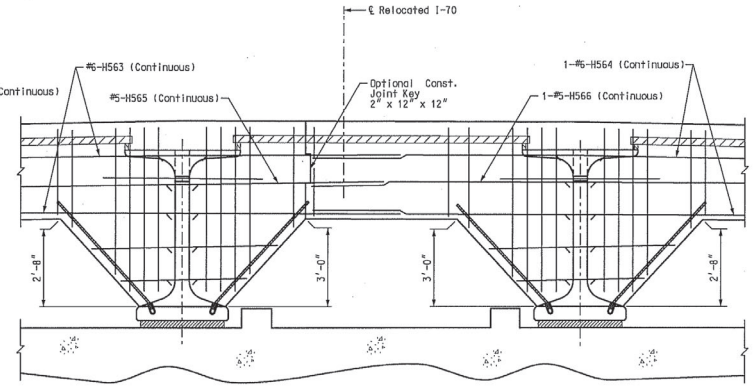

PART ELEVATION

Span (5-6) Near Const. Joint
(Looking Upstation)

Notes:
Use minimum lap length of 3'-6" between #6-H550 and #6-H551, #6-H563 and #6-H564.
Use minimum lap length of 2'-11" between #5-H552 and #5-H553, #5-H565 and #5-H566.

Notes:
Diaphragms at piers were built vertical.
For location and details of coil ties, see Sheet No. 63.
For girder spacing, see Sheet Nos. 38 and 39.
Seal inside face and ends of diaphragm with Protective Coating - Concrete Bents and Piers (Epoxy).
For plans and details of diaphragms, see Sheet No. 70.

DIAPHRAGMS AT PIER 5 - ELEVATIONS

Detailed JUL 2009
Checked JUL 2009

Note: This drawing is not to scale. Follow dimensions.

Sheet No. 71 of 1

DATE 8/20/09
ROUTE I-70 STATE MO
DISTRICT 6 SHEET NO. BR71
COUNTY St. Louis City - MO
JOB NO. J6I0984B
CONTRACT ID. 100127-601
PROJECT NO. I-70-5(315)
BRIDGE NO. A6500

DESCRIPTION | DATE

MISSOURI HIGHWAYS AND TRANSPORTATION COMMISSION
105 WEST CAPITOL
JEFFERSON CITY, MO 65102
1-888-ASK-MODOT (1-888-275-6636)

HNTB
715 KIRK DRIVE
KANSAS CITY, MO 64105-1310
TELEPHONE (816) 472-1201
CERTIFICATE OF AUTHORITY NO. 001270

FINAL PLANS

REV.

B B B 71 1 B 71 1 1

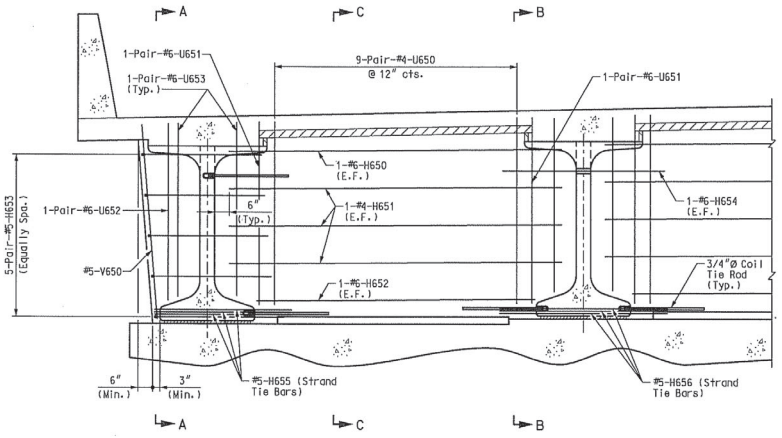

TYPICAL PART ELEVATION

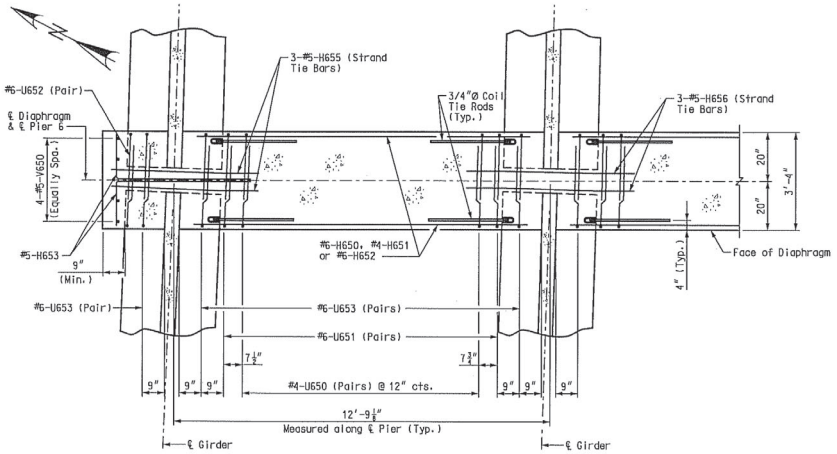

TYPICAL PART PLAN

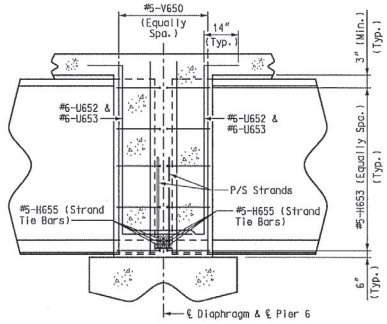

SECTION A-A

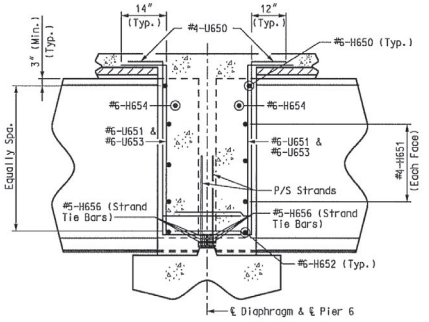

SECTION B-B

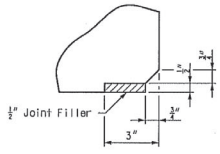

DETAIL "A"

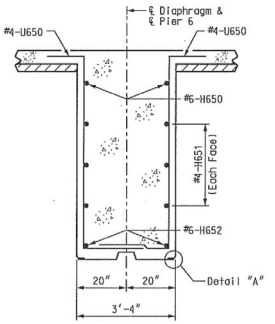

SECTION C-C

Notes:
For location of #5-H655 and #5-H656 (Strand Tie Bars), see Sheet Nos. 48 and 49.
Diaphragms at Piers were built vertical.
For location and details of coil ties, see Sheet No. 63.

DIAPHRAGM AT PIER 6

DATE 8/20/09
ROUTE I-70 | STATE MO
DISTRICT 6 | SHEET NO. BR72
COUNTY St. Louis City - MO
JOB NO. J6I0984B
CONTRACT ID. 100127-601
PROJECT NO. I-70-5(315)
BRIDGE NO. A6500

DESCRIPTION | DATE

MISSOURI HIGHWAYS AND TRANSPORTATION COMMISSION
105 WEST CAPITOL
JEFFERSON CITY, MO 65102
1-888-ASK-MODOT (1-888-275-6636)

HNTB
715 KIRK DRIVE
KANSAS CITY, MO 64105-1310
TELEPHONE (816) 472-1201
CERTIFICATE OF AUTHORITY NO. 001270

FINAL PLANS REV.

Detailed JUL 2009
Checked JUL 2009

Note: This drawing is not to scale. Follow dimensions.

T:\de-proj\St_Louis_City\Construction\J6I0984B\Asbuilts\Bridge\B_A6500_072-125_J6I0984B_072.dgn
2:57:15 PM

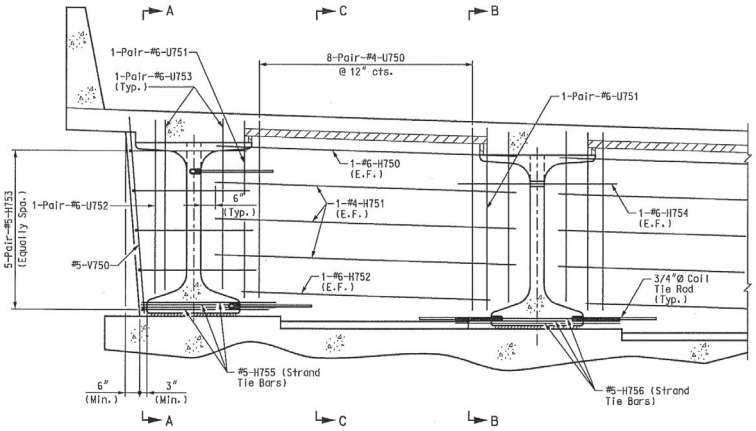

TYPICAL PART ELEVATION

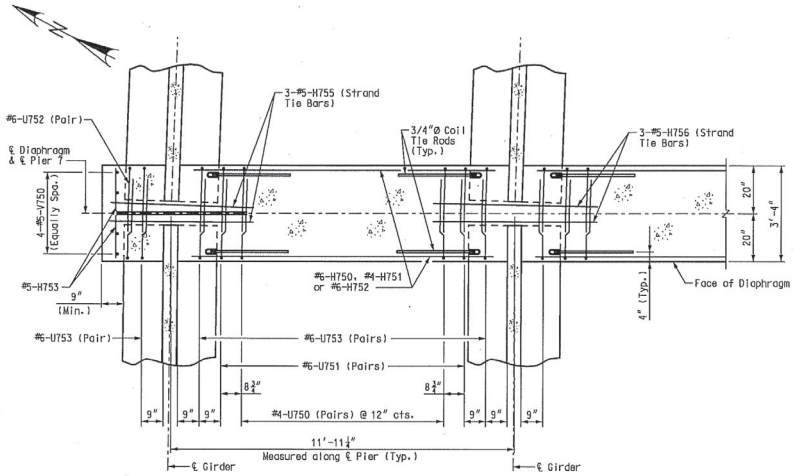

TYPICAL PART PLAN

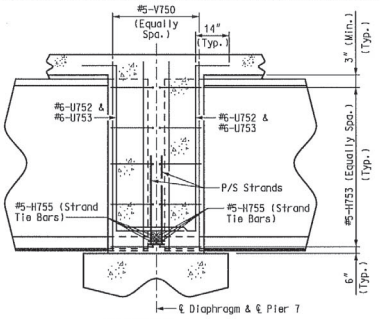

SECTION A-A

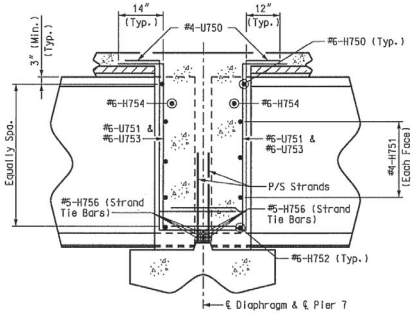

SECTION B-B

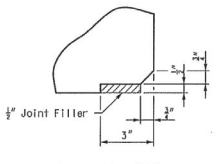

DETAIL "A"

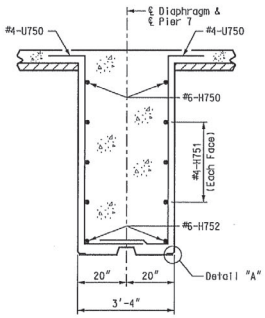

SECTION C-C

Notes:
For location of #5-H755 and #5-H756 (Strand Tie Bars), see Sheet Nos. 49 thru 53.
Diaphragms at Piers were built vertical.
For location and details of coil ties, see Sheet No. 63.

DIAPHRAGM AT PIER 7

DATE	8/20/09
ROUTE	I-70
STATE	MO
DISTRICT	6
SHEET NO.	BR73
COUNTY	St. Louis City - MO
JOB NO.	J6I0984B
CONTRACT ID.	100127-601
PROJECT NO.	I-70-5(315)
BRIDGE NO.	A6500

DESCRIPTION | DATE

MISSOURI HIGHWAYS AND TRANSPORTATION COMMISSION
105 WEST CAPITOL
JEFFERSON CITY, MO 65102
1-888-ASK-MODOT (1-888-275-6636)

HNTB
715 KIRK DRIVE
KANSAS CITY, MO 64105-1310
TELEPHONE (816) 472-1201
CERTIFICATE OF AUTHORITY NO. 001270

FINAL PLANS

REV.

Detailed JUL 2009
Checked JUL 2009

Note: This drawing is not to scale. Follow dimensions.

B B B 73 B 73

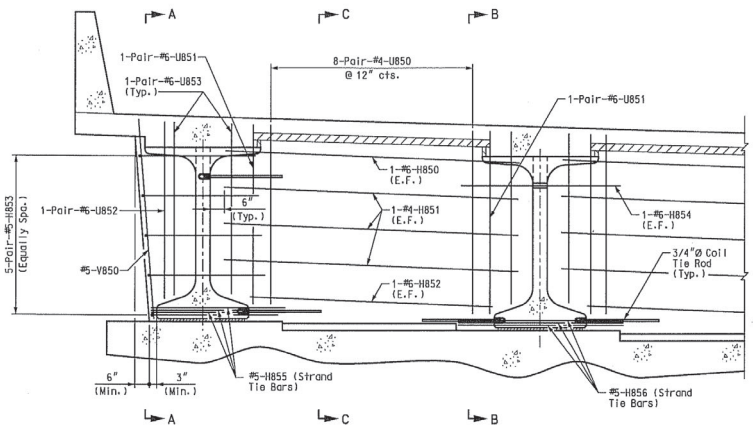

TYPICAL PART ELEVATION

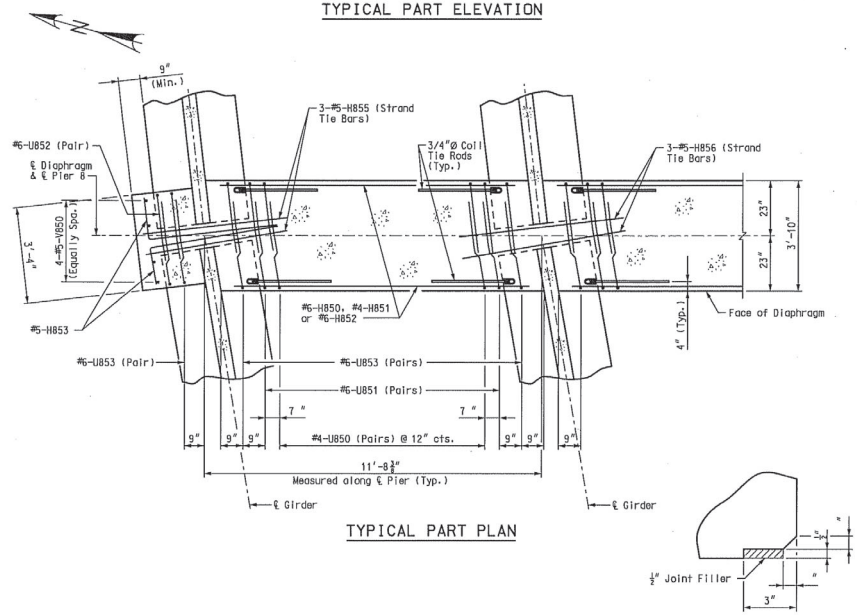

TYPICAL PART PLAN

DETAIL "A"

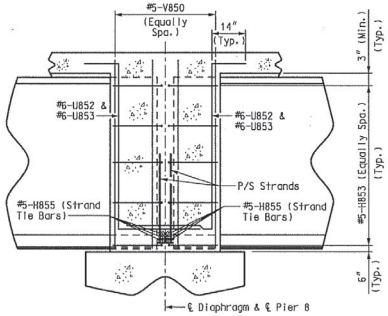

SECTION A-A

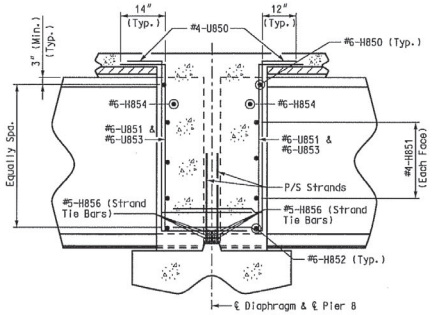

SECTION B-B

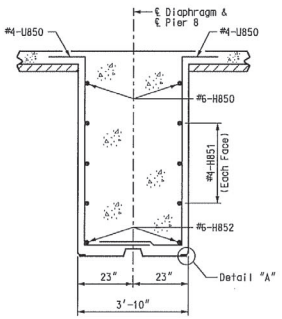

SECTION C-C

Notes:
For location of #5-H855 and #5-H856 (Strand Tie Bars), see Sheet Nos. 50 thru 56.
Diaphragms at Piers were built vertical.
For location and details of coil ties, see Sheet No. 63.

DIAPHRAGM AT PIER 8

DATE 8/20/09
ROUTE I-70 | STATE MO
DISTRICT 6 | SHEET NO. BR74
COUNTY St. Louis City - MO
JOB NO. J6I0984B
CONTRACT ID. 100127-601
PROJECT NO. I-70-5(315)
BRIDGE NO. A6500

DESCRIPTION | DATE

MISSOURI HIGHWAYS AND TRANSPORTATION COMMISSION
MoDOT
105 WEST CAPITOL JEFFERSON CITY, MO 65102 1-888-ASK-MODOT (1-888-275-6636)

HNTB
715 KIRK DRIVE KANSAS CITY, MO 64105-1310 TELEPHONE (816) 472-1201 CERTIFICATE OF AUTHORITY NO. 001270

FINAL PLANS REV.

Detailed JUL 2009
Checked JUL 2009

Note: This drawing is not to scale. Follow dimensions.

T L I 48 B B 74 I 48 74 7 M

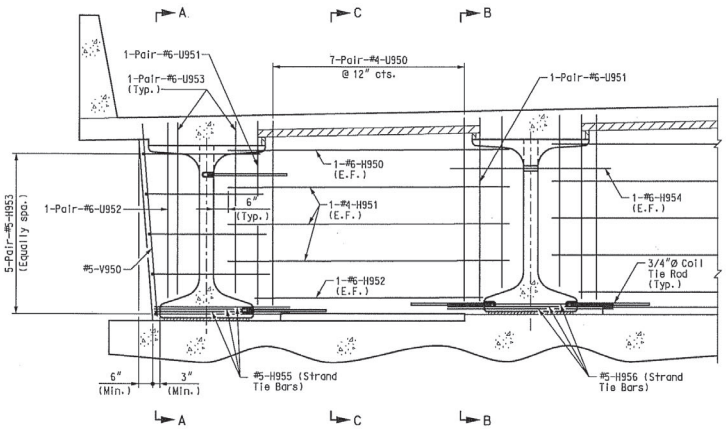

TYPICAL PART ELEVATION

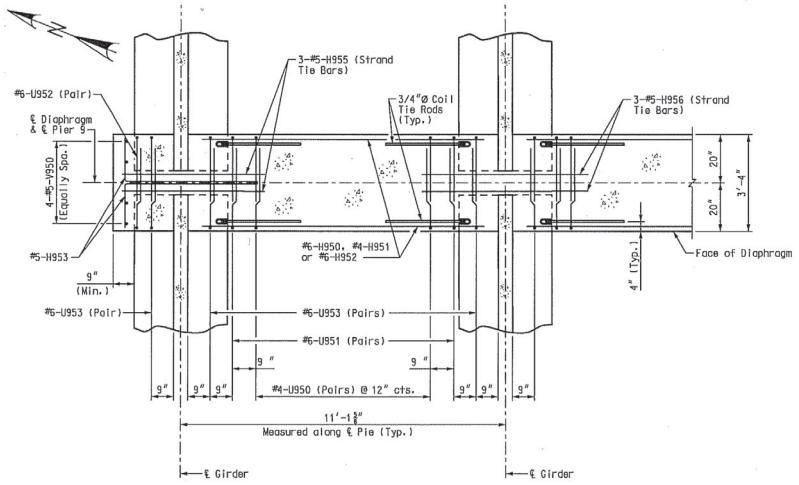

TYPICAL PART PLAN

SECTION A-A

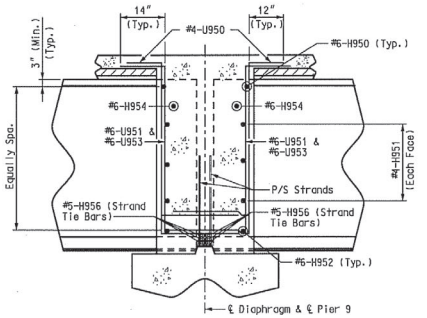

SECTION B-B

DETAIL "A"

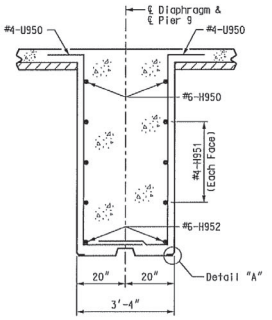

SECTION C-C

Notes:
For location of #5-H955 and #5-H956 (Strand Tie Bars), see Sheet Nos. 54 thru 57.
Diaphragms at Piers were built vertical.
For location and details of coil ties, see Sheet No. 63.

DIAPHRAGM AT PIER 9

DATE	8/20/09
ROUTE	I-70
STATE	MO
DISTRICT	6
SHEET NO.	BR75
COUNTY	St. Louis City - MO
JOB NO.	J6I0984B
CONTRACT ID.	100127-601
PROJECT NO.	I-70-5(315)
BRIDGE NO.	A6500

DESCRIPTION | DATE

MISSOURI HIGHWAYS AND TRANSPORTATION COMMISSION
105 WEST CAPITOL
JEFFERSON CITY, MO 65102
1-888-ASK-MODOT (1-888-275-6636)

HNTB
715 KIRK DRIVE
KANSAS CITY, MO 64105-1310
TELEPHONE (816) 472-1201
CERTIFICATE OF AUTHORITY NO. 001270

FINAL PLANS

REV.

Detailed JUL 2009
Checked JUL 2009

Note: This drawing is not to scale. Follow dimensions.

T L I B B B 5 75 5 I B 75 M

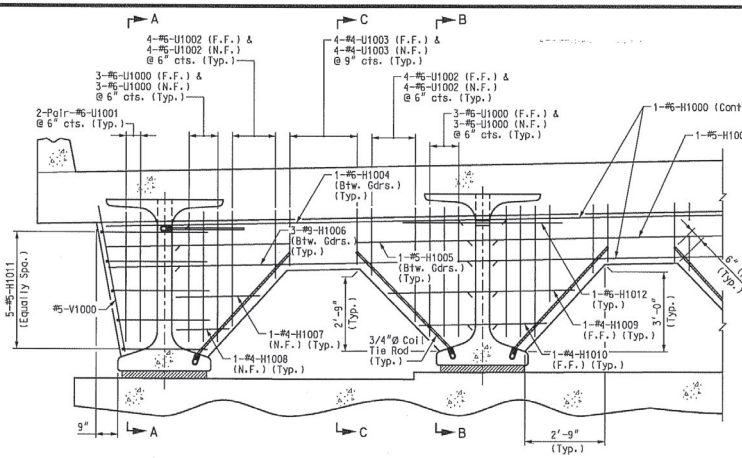

TYPICAL PART ELEVATION

Span (9-10)
(Looking Upstation)

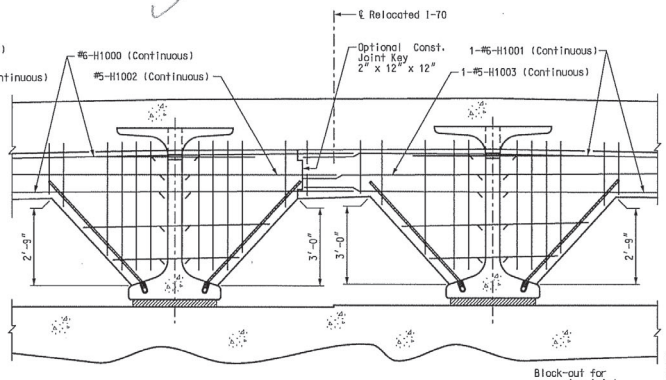

PART ELEVATION

Span (9-10) Near Const. Joint
(Looking Upstation)

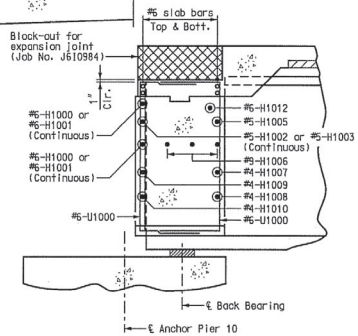

SECTION B-B

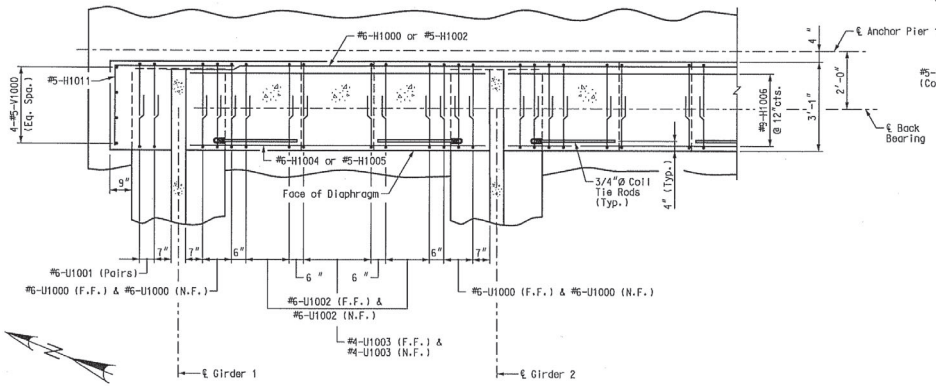

TYPICAL PART PLAN

Notes:
Use minimum lap length of 3'-6" between #6-H1000 and #6-H1001.
Use minimum lap length of 2'-11" between #5-H1002 and #5-H1003.

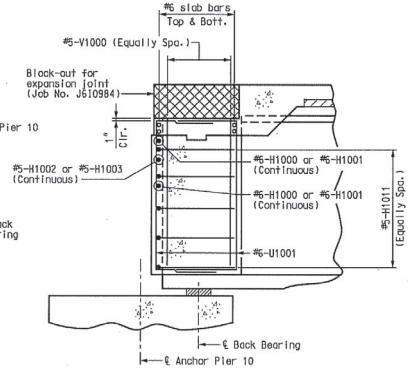

SECTION A-A

Notes:
Diaphragms at piers were built vertical.
For location and details of coil ties, see Sheet No. 63.
For girder spacing, see Sheet No. 39.
Seal inside face and ends of diaphragm with Protective Coating - Concrete Bents and Piers (Epoxy).
Adjust or cut slab and diaphragm reinforcing bars to clear expansion joint support blocks.

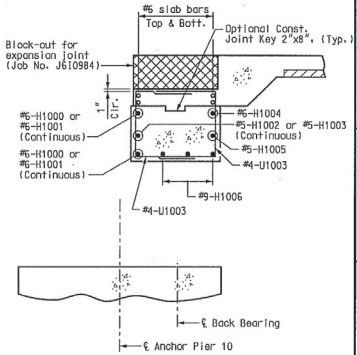

SECTION C-C

DIAPHRAGM AT PIER 10

Detailed JUL 2009
Checked JUL 2009

Note: This drawing is not to scale. Follow dimensions.

Sheet No. 76 of

T L 6I B B B 6 76 6I B 76

DATE 8/20/09
ROUTE I-70 STATE MO
DISTRICT 6 SHEET NO. BR76
COUNTY St. Louis City - MO
JOB NO. J6I0984B
CONTRACT ID. 100127-601
PROJECT NO. I-70-5(315)
BRIDGE NO. A6500

DESCRIPTION | DATE

MISSOURI HIGHWAYS AND TRANSPORTATION COMMISSION
105 WEST CAPITOL
JEFFERSON CITY, MO 65102
1-888-ASK-MODOT (1-888-275-6636)

HNTB
715 KIRK DRIVE
KANSAS CITY, MO 64105-1310
TELEPHONE (816) 472-1201
CERTIFICATE OF AUTHORITY NO. 001270

FINAL PLANS REV. M

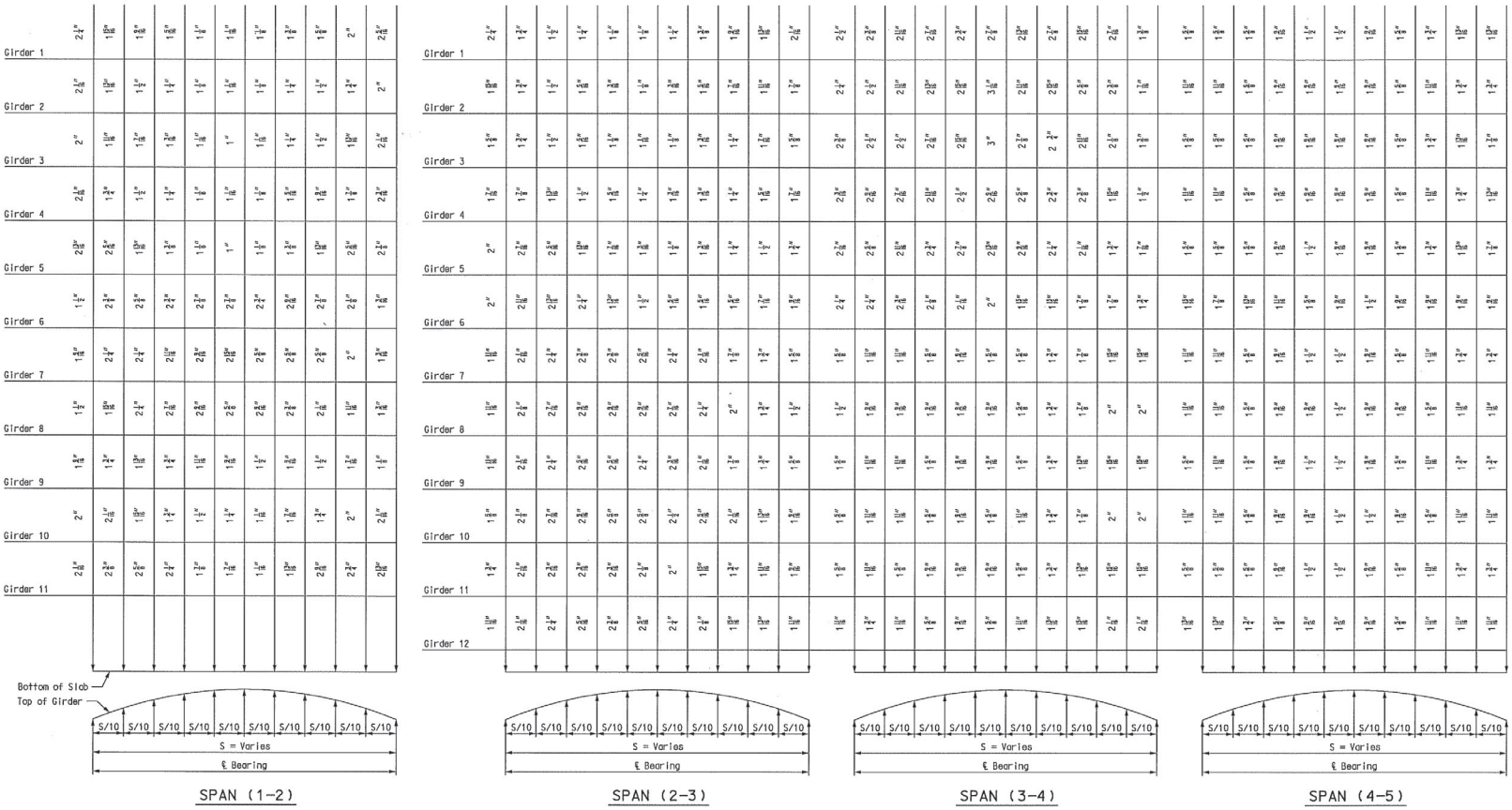

Notes:
If girder camber is different from that shown in the camber diagram, adjustment of the slab haunches, an increase in slab thickness, or a raise in grade uniformly throughout the structure was necessary. No payment was made for additional labor or materials required for variation in haunching, slab thickness, or grade adjustment.
Concrete in the slab haunches is included in the Estimated Quantities for Slab on Concrete NU-Girder.

Detailed JUL 2009
Checked JUL 2009

Note: This drawing is not to scale. Follow dimensions.

Sheet No. 77 of 125

THEORETICAL SLAB HAUNCHING DIAGRAM – UNITS 1 AND UNIT 2

DATE 8/20/09
ROUTE I-70 | STATE MO
DISTRICT 6 | SHEET NO. BR77
COUNTY St. Louis City - MO
JOB NO. J6I0984B
CONTRACT ID. 100127-601
PROJECT NO. I-70-5(315)
BRIDGE NO. A6500

DESCRIPTION | DATE

MISSOURI HIGHWAYS AND TRANSPORTATION COMMISSION
105 WEST CAPITOL
JEFFERSON CITY, MO 65102
1-888-ASK-MODOT (1-888-275-6636)

HNTB
715 KIRK DRIVE
KANSAS CITY, MO 64105-1310
TELEPHONE 816.472.1201
CERTIFICATE OF AUTHORITY NO. 001270

FINAL PLANS REV.

T:\de-proj\St_Louis_City\Construction\J6I0984B\Asbuilts\Bridge\B_A6500_077-125_J6I0984B_077.dgn
8:08:10 AM



Notes:
If girder camber is different from that shown in the camber diagram, adjustment of the slab haunches, an increase in slab thickness, or a raise in grade uniformly throughout the structure was necessary. No payment was made for additional labor or materials required for variation in haunching, slab thickness, or grade adjustment.
Concrete in the slab haunches is included in the Estimated Quantities for Slab on Concrete NU-Girder.

Detailed JUL 2009
Checked JUL 2009

Note: This drawing is not to scale. Follow dimensions.

Sheet No. 78 of 125

THEORETICAL SLAB HAUNCHING DIAGRAM - UNIT 3

DATE 8/20/09
ROUTE I-70 | STATE MO
DISTRICT 6 | SHEET NO. BR78
COUNTY St. Louis City - MO
JOB NO. J6I0984B
CONTRACT ID. 100127-601
PROJECT NO. I-70-5(315)
BRIDGE NO. A6500

DESCRIPTION | DATE | REV.

MISSOURI HIGHWAYS AND TRANSPORTATION COMMISSION
105 WEST CAPITOL
JEFFERSON CITY, MO 65102
1-888-ASK-MODOT (1-888-275-6636)

HNTB
715 KIRK DRIVE
KANSAS CITY, MO 64105-1310
TELEPHONE (816) 472-1201
CERTIFICATE OF AUTHORITY NO. 001270

FINAL PLANS

T:\de-proj\St_Louis_City\Construction\J6I0984B\Asbuilts\Bridge\B_A6500_078-125_J6I0984B_078.dgn
8:09:25 AM

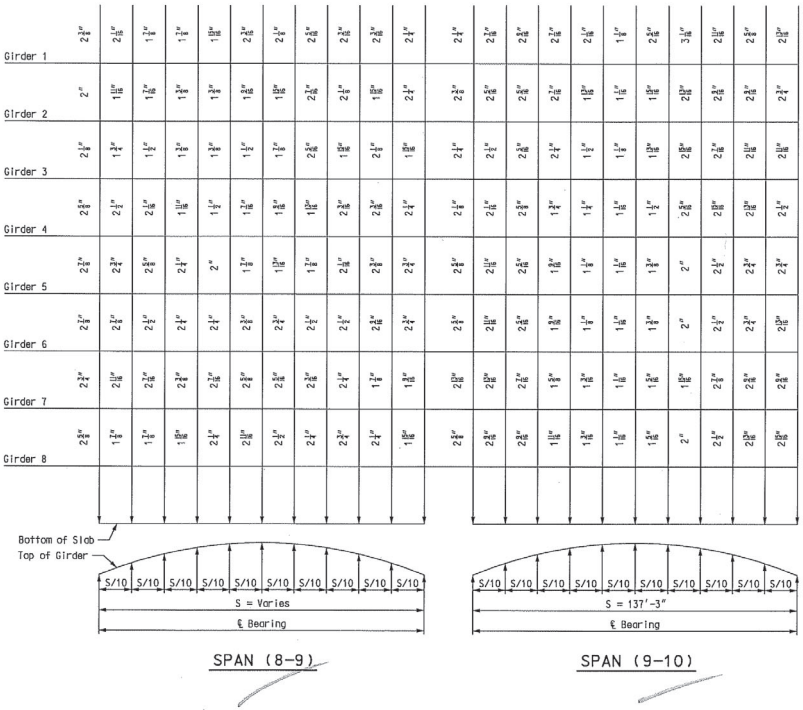

Notes:

If girder camber is different from that shown in the camber diagram, adjustment of the slab haunches, an increase in slab thickness, or a raise in grade uniformly throughout the structure was necessary. No payment was made for additional labor or materials required for variation in haunching, slab thickness, or grade adjustment.

Concrete in the slab haunches is included in the Estimated Quantities for Slab on Concrete NU-Girder.

Detailed JUL 2009
Checked JUL 2009

Note: This drawing is not to scale. Follow dimensions.

Sheet No. 79 of 125

THEORETICAL SLAB HAUNCHING DIAGRAM – UNIT 3

DATE 8/20/09
ROUTE I-70 | STATE MO
DISTRICT 6 | SHEET NO. BR79
COUNTY St. Louis City - MO
JOB NO. J6I0984B
CONTRACT ID. 100127-601
PROJECT NO. I-70-5(315)
BRIDGE NO. A6500

DESCRIPTION | DATE

MISSOURI HIGHWAYS AND TRANSPORTATION COMMISSION
105 WEST CAPITOL
JEFFERSON CITY, MO 65102
1-888-ASK-MODOT (1-888-275-6636)

HNTB
715 KIRK DRIVE
KANSAS CITY, MO 64105-1310
TELEPHONE (816) 472-1201
CERTIFICATE OF AUTHORITY NO. 001270

FINAL PLANS

REV.

T:\de-proj\St_Louis_City\Construction\J6I0984B\Asbuilts\Bridge\B_A6500_079-125_J6I0984B_079.dgn 8:10:07 AM

** THEORETICAL BOTTOM OF SLAB ELEVATIONS AT ℄ OF GIRDER (PRIOR TO FORMING FOR SLAB)

	Span (1-2) (Varies ℄ Brg. - ℄ Brg.)										
	℄ Brg.	0.10	0.20	0.30	0.40	0.50	0.60	0.70	0.80	0.90	℄ Brg.
Girder 1	494.38	494.82	495.24	495.65	496.03	496.39	496.71	497.01	497.28	497.53	497.76
Girder 2	495.06	495.50	495.93	496.34	496.72	497.07	497.39	497.68	497.94	498.18	498.41
Girder 3	495.74	496.18	496.61	497.01	497.39	497.73	498.05	498.33	498.59	498.83	499.05
Girder 4	496.43	496.86	497.28	497.68	498.05	498.40	498.71	498.99	499.24	499.48	499.70
Girder 5	497.11	497.52	497.92	498.30	498.66	499.00	499.31	499.60	499.86	500.11	500.34
Girder 6	497.59	498.10	498.59	499.04	499.45	499.82	500.05	500.24	500.39	500.51	500.60
Girder 7	497.48	497.96	498.41	498.83	499.22	499.55	499.80	499.99	500.14	500.26	500.35
Girder 8	497.38	497.83	498.25	498.63	498.98	499.28	499.53	499.72	499.88	500.00	500.10
Girder 9	497.31	497.72	498.10	498.45	498.75	499.02	499.25	499.45	499.62	499.74	499.84
Girder 10	497.25	497.62	497.97	498.28	498.55	498.78	498.98	499.19	499.35	499.49	499.59
Girder 11	497.22	497.54	497.84	498.11	498.35	498.54	498.69	498.90	499.08	499.22	499.34
	Span (2-3) (Varies ℄ Brg. - ℄ Brg.)										
	℄ Brg.	0.10	0.20	0.30	0.40	0.50	0.60	0.70	0.80	0.90	℄ Brg.
Girder 1	497.85	498.08	498.31	498.54	498.75	498.94	499.12	499.28	499.42	499.55	499.67
Girder 2	498.43	498.65	498.87	499.07	499.25	499.42	499.57	499.71	499.82	499.92	500.01
Girder 3	499.00	499.23	499.42	499.60	499.76	499.90	500.02	500.13	500.21	500.28	500.35
Girder 4	499.58	499.81	499.99	500.14	500.27	500.39	500.48	500.56	500.61	500.65	500.68
Girder 5	500.15	500.39	500.56	500.68	500.79	500.88	500.94	500.99	501.01	501.02	501.02
Girder 6	500.73	500.97	501.14	501.24	501.31	501.37	501.41	501.42	501.41	501.39	501.35
Girder 7	500.61	500.83	501.01	501.17	501.29	501.37	501.42	501.43	501.41	501.37	501.31
Girder 8	500.37	500.60	500.80	500.97	501.09	501.19	501.24	501.25	501.22	501.18	501.12
Girder 9	500.13	500.37	500.58	500.76	500.90	501.00	501.05	501.06	501.04	500.99	500.93
Girder 10	499.89	500.15	500.37	500.56	500.71	500.81	500.87	500.88	500.86	500.81	500.74
Girder 11	499.65	499.92	500.16	500.36	500.52	500.63	500.69	500.70	500.67	500.62	500.55
Girder 12	499.40	499.69	499.94	500.15	500.31	500.43	500.49	500.51	500.48	500.43	500.36
	Span (3-4) (Varies ℄ Brg. - ℄ Brg.)										
	℄ Brg.	0.10	0.20	0.30	0.40	0.50	0.60	0.70	0.80	0.90	℄ Brg.
Girder 1	499.70	499.94	500.16	500.35	500.51	500.57	500.48	500.36	500.21	500.02	499.82
Girder 2	500.03	500.24	500.44	500.60	500.73	500.76	500.68	500.56	500.40	500.21	500.00
Girder 3	500.36	500.54	500.71	500.84	500.93	500.95	500.87	500.74	500.59	500.40	500.19
Girder 4	500.69	500.84	500.97	501.07	501.14	501.14	501.05	500.93	500.77	500.58	500.37
Girder 5	501.02	501.14	501.24	501.31	501.35	501.33	501.24	501.12	500.96	500.77	500.56
Girder 6	501.36	501.44	501.51	501.55	501.55	501.52	501.43	501.31	501.15	500.96	500.74
Girder 7	501.31	501.40	501.47	501.50	501.50	501.46	501.38	501.26	501.11	500.93	500.72
Girder 8	501.12	501.21	501.28	501.31	501.31	501.27	501.20	501.08	500.92	500.74	500.53
Girder 9	500.93	501.02	501.09	501.12	501.12	501.09	501.01	500.89	500.74	500.55	500.35
Girder 10	500.74	500.83	500.90	500.94	500.94	500.90	500.82	500.70	500.55	500.37	500.16
Girder 11	500.55	500.64	500.71	500.75	500.75	500.71	500.63	500.52	500.36	500.18	499.98
Girder 12	500.36	500.45	500.52	500.55	500.55	500.51	500.44	500.32	500.17	499.99	499.79
	Span (4-5) (Varies ℄ Brg. - ℄ Brg.)										
	℄ Brg.	0.10	0.20	0.30	0.40	0.50	0.60	0.70	0.80	0.90	℄ Brg.
Girder 1	499.80	499.73	499.65	499.56	499.46	499.33	499.20	499.04	498.88	498.69	498.50
Girder 2	499.98	499.92	499.84	499.75	499.64	499.52	499.38	499.22	499.05	498.87	498.68
Girder 3	500.17	500.10	500.02	499.93	499.82	499.70	499.56	499.40	499.23	499.05	498.85
Girder 4	500.36	500.28	500.20	500.11	500.00	499.88	499.74	499.58	499.41	499.22	499.03
Girder 5	500.54	500.47	500.39	500.29	500.18	500.06	499.91	499.76	499.58	499.40	499.20
Girder 6	500.73	500.65	500.57	500.47	500.36	500.24	500.09	499.94	499.76	499.58	499.38
Girder 7	500.70	500.63	500.54	500.44	500.33	500.20	500.05	499.89	499.72	499.53	499.33
Girder 8	500.52	500.44	500.36	500.26	500.15	500.02	499.87	499.71	499.54	499.35	499.15
Girder 9	500.33	500.26	500.17	500.08	499.97	499.84	499.69	499.54	499.36	499.17	498.98
Girder 10	500.15	500.07	499.99	499.90	499.78	499.66	499.52	499.36	499.18	499.00	498.80
Girder 11	499.96	499.89	499.81	499.71	499.60	499.48	499.34	499.18	499.01	498.82	498.63
Girder 12	499.78	499.71	499.62	499.53	499.42	499.30	499.16	499.00	498.83	498.65	498.45

** Elevations are based on a constant slab thic ness of 9" and include allowance for theoretical dead load deflections due to weight of Slab (including Prestressed Panel) and Barrier Curbs.

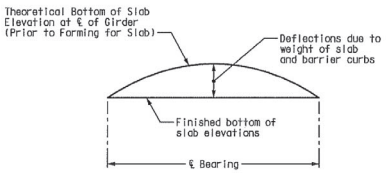

TYPICAL SLAB ELEVATIONS DIAGRAM

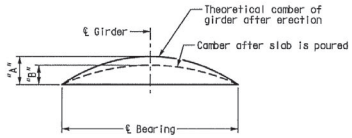

	Span (1-2)		Span (2-3)		Span (3-4)		Span (4-5)	
	"A"	"B"	"A"	"B"	"A"	"B"	"A"	"B"
Girder 1	5 1/16"	2 3/8"	3 3/16"	1 7/8"	5 3/16"	2 5/16"	2 1/16"	1 3/8"
Girder 2	5 1/16"	2 1/16"	3 1/4"	1 3/8"	5 3/16"	2 1/4"	2 1/16"	1 3/8"
Girder 3	5 1/16"	2 1/16"	3 1/4"	1 5/16"	5 3/16"	2 1/4"	2 1/16"	1 3/8"
Girder 4	5 1/16"	2 1/16"	3 3/16"	1 1/2"	5 3/16"	2 1/4"	2 1/16"	1 3/8"
Girder 5	5 1/16"	2 1/16"	4 3/16"	2 1/16"	5 3/16"	2 1/4"	2 1/16"	1 3/8"
Girder 6	5 1/8"	2 3/16"	4 3/16"	2 1/16"	5 3/16"	2 1/4"	2 1/16"	1 3/8"
Girder 7	5 1/8"	2"	4 1/4"	1 15/16"	5 3/16"	2 1/4"	2 1/16"	1 3/8"
Girder 8	5 1/8"	2"	4 1/16"	1 1/4"	5 3/16"	2 1/4"	2 1/16"	1 3/8"
Girder 9	5 1/8"	2"	4 1/16"	2 1/16"	5 3/16"	2 1/4"	2 1/16"	1 3/8"
Girder 10	5 1/8"	2"	5"	1 15/16"	5 3/16"	2 1/4"	2 1/16"	1 3/8"
Girder 11	5 1/8"	2 1/4"	5 1/16"	2 3/16"	5 3/16"	2 1/4"	2 1/16"	1 3/8"
Girder 12	----	----	5 1/16"	2 3/16"	5 3/16"	2 3/16"	2 1/16"	1 3/8"

Conversion factors for girder camber
0.1 pt. = 0.314 x 0.5 pt.
0.2 pt. = 0.593 x 0.5 pt.
0.3 pt. = 0.813 x 0.5 pt.
0.4 pt. = 0.952 x 0.5 pt.

GIRDER CAMBER DIAGRAM

THEORETICAL BOTTOM OF SLAB ELEVATIONS AND GIRDER CAMBER DIAGRAM – UNITS 1 AND 2

DATE 8/20/09
ROUTE I-70 | STATE MO
DISTRICT 6 | SHEET NO. BR80
COUNTY St. Louis City - MO
JOB NO. J6I0984B
CONTRACT ID. 100127-601
PROJECT NO. I-70-5(315)
BRIDGE NO. A6500

DESCRIPTION | DATE | REV.

MISSOURI HIGHWAYS AND TRANSPORTATION COMMISSION
105 WEST CAPITOL
JEFFERSON CITY, MO 65102
1-888-ASK-MODOT (1-888-275-6636)

HNTB
715 KIRK DRIVE
KANSAS CITY, MO 64105-1310
TELEPHONE (816) 472-1201
CERTIFICATE OF AUTHORITY NO. 001270

FINAL PLANS

Detailed JUL 2009
Chec ed JUL 2009

Note: This drawing is not to scale. Follow dimensions.

Sheet No. 80 of

0 8 B B B 00 080 0 8 B 080

✱✱ THEORETICAL BOTTOM OF SLAB ELEVATIONS AT ℄ OF GIRDER (PRIOR TO FORMING FOR SLAB)

	Span (5-6) (Varies ℄ Brg. - ℄ Brg.)										
	℄ Brg.	0.10	0.20	0.30	0.40	0.50	0.60	0.70	0.80	0.90	℄ Brg.
Girder 1	498.44	498.30	498.15	497.98	497.79	497.59	497.47	497.37	497.25	497.11	496.95
Girder 2	498.72	498.58	498.43	498.27	498.08	497.88	497.72	497.57	497.40	497.21	497.00
Girder 3	498.99	498.86	498.71	498.54	498.35	498.14	497.96	497.76	497.54	497.30	497.05
Girder 4	499.27	499.13	498.98	498.81	498.62	498.41	498.18	497.94	497.68	497.39	497.09
Girder 5	499.21	499.07	498.92	498.74	498.55	498.33	498.09	497.83	497.55	497.25	496.93
Girder 6	498.94	498.80	498.64	498.47	498.28	498.07	497.83	497.57	497.29	496.99	496.68
Girder 7	498.67	498.53	498.37	498.20	498.01	497.80	497.56	497.31	497.03	496.73	496.42
Girder 8	498.39	498.25	498.09	497.92	497.72	497.51	497.28	497.03	496.75	496.47	496.17
	Span (6-7) (Varies ℄ Brg. - ℄ Brg.)										
	℄ Brg.	0.10	0.20	0.30	0.40	0.50	0.60	0.70	0.80	0.90	℄ Brg.
Girder 1	496.93	496.84	496.72	496.57	496.40	496.19	495.96	495.70	495.42	495.13	494.84
Girder 2	496.97	496.84	496.69	496.51	496.29	496.05	495.77	495.46	495.13	494.80	494.46
Girder 3	497.01	496.84	496.63	496.41	496.15	495.87	495.55	495.20	494.83	494.45	494.07
Girder 4	497.05	496.82	496.58	496.31	496.01	495.68	495.32	494.93	494.53	494.11	493.69
Girder 5	496.88	496.64	496.39	496.11	495.80	495.46	495.08	494.66	494.22	493.76	493.30
Girder 6	496.63	496.39	496.14	495.86	495.55	495.21	494.84	494.38	493.90	493.41	492.91
Girder 7	496.37	496.14	495.88	495.61	495.30	494.97	494.60	494.10	493.59	493.06	492.52
Girder 8	496.12	495.87	495.61	495.33	495.02	494.69	494.32	493.80	493.25	492.70	492.14
	Span (7-8) (Varies ℄ Brg. - ℄ Brg.)										
	℄ Brg.	0.10	0.20	0.30	0.40	0.50	0.60	0.70	0.80	0.90	℄ Brg.
Girder 1	494.80	494.61	494.28	493.94	493.59	493.22	492.83	492.42	492.00	491.56	491.08
Girder 2	494.41	494.20	493.88	493.56	493.22	492.85	492.47	492.06	491.63	491.20	490.73
Girder 3	494.02	493.76	493.45	493.12	492.78	492.42	492.04	491.64	491.23	490.81	490.38
Girder 4	493.63	493.33	493.02	492.70	492.36	492.00	491.63	491.24	490.84	490.43	490.01
Girder 5	493.24	492.91	492.59	492.27	491.94	491.59	491.22	490.84	490.45	490.05	489.64
Girder 6	492.84	492.48	492.17	491.85	491.52	491.18	490.82	490.44	490.06	489.66	489.27
Girder 7	492.45	492.05	491.74	491.43	491.10	490.76	490.41	490.05	489.67	489.29	488.90
Girder 8	492.06	491.61	491.31	490.99	490.67	490.33	489.99	489.63	489.27	488.90	488.53
	Span (8-9) (Varies ℄ Brg. - ℄ Brg.)										
	℄ Brg.	0.10	0.20	0.30	0.40	0.50	0.60	0.70	0.80	0.90	℄ Brg.
Girder 1	491.00	490.58	490.16	489.73	489.28	488.82	488.35	487.86	487.37	486.86	486.36
Girder 2	490.66	490.28	489.89	489.50	489.09	488.66	488.22	487.77	487.30	486.82	486.33
Girder 3	490.31	489.96	489.61	489.25	488.88	488.49	488.08	487.65	487.22	486.77	486.31
Girder 4	489.95	489.64	489.32	489.00	488.66	488.30	487.93	487.54	487.13	486.71	486.29
Girder 5	489.58	489.30	489.02	488.73	488.42	488.10	487.75	487.37	486.97	486.57	486.16
Girder 6	489.21	488.96	488.71	488.45	488.18	487.89	487.54	487.16	486.76	486.35	485.94
Girder 7	488.84	488.61	488.40	488.18	487.94	487.68	487.35	486.96	486.56	486.14	485.71
Girder 8	488.47	488.24	488.05	487.86	487.65	487.43	487.11	486.73	486.32	485.91	485.49
	Span (9-10) (137'-3" ℄ Brg. - ℄ Brg.)										
	℄ Brg.	0.10	0.20	0.30	0.40	0.50	0.60	0.70	0.80	0.90	℄ Brg.
Girder 1	486.28	485.80	485.32	484.82	484.31	483.79	483.40	483.02	482.63	482.24	481.86
Girder 2	486.26	485.84	485.41	484.96	484.50	484.03	483.65	483.26	482.87	482.47	482.08
Girder 3	486.25	485.87	485.49	485.09	484.67	484.24	483.87	483.48	483.09	482.69	482.30
Girder 4	486.23	485.90	485.56	485.21	484.84	484.46	484.09	483.70	483.31	482.91	482.52
Girder 5	486.10	485.79	485.48	485.15	484.80	484.45	484.08	483.70	483.30	482.91	482.52
Girder 6	485.88	485.57	485.26	484.93	484.58	484.23	483.86	483.48	483.08	482.69	482.30
Girder 7	485.66	485.35	485.04	484.70	484.36	484.01	483.64	483.25	482.86	482.47	482.08
Girder 8	485.43	485.12	484.80	484.46	484.11	483.75	483.39	483.01	482.63	482.24	481.86

✱✱ Elevations are based on a constant slab thickness of 9" and include allowance for theoretical dead load deflections due to weight of Slab (including Prestressed Panel) and Barrier Curbs.

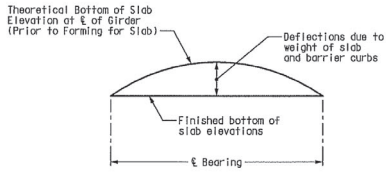

TYPICAL SLAB ELEVATIONS DIAGRAM

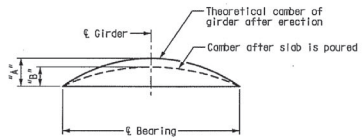

	Span (5-6)		Span (6-7)		Span (7-8)		Span (8-9)		Span (9-10)	
	"A"	"B"	"A"	"B"	"A"	"B"	"A"	"B"	"A"	"B"
Girder 1	3 11/16"	2 1/16"	4 1/2"	2 1/4"	5 3/16"	2 7/16"	3 13/16"	2 3/16"	5 3/16"	2 1/2"
Girder 2	3 11/16"	1 7/8"	4 3/8"	1 13/16"	5 1/8"	2"	3 13/16"	1 7/8"	5 3/16"	2 3/16"
Girder 3	3 11/16"	1 7/8"	4 1/2"	1 7/8"	4 1/2"	1 1/4"	3 7/8"	1 13/16"	5 3/16"	2 3/16"
Girder 4	3 11/16"	1 7/8"	4 1/2"	1 7/8"	4 1/2"	1 7/8"	3 7/8"	1 1/4"	5 3/16"	2 3/16"
Girder 5	3 11/16"	1 7/8"	4 1/2"	1 7/8"	4 3/8"	1 13/16"	4 1/4"	2"	5 3/16"	2 3/16"
Girder 6	3 11/16"	1 7/8"	4 1/2"	1 7/8"	4 5/16"	2 1/16"	4 1/4"	1 13/16"	5 3/16"	2 3/16"
Girder 7	3 11/16"	1 7/8"	4 1/2"	1 7/8"	3 13/16"	1 13/16"	4 3/16"	1 3/8"	5 3/16"	2 3/16"
Girder 8	3 11/16"	2 1/16"	4 1/2"	2 3/16"	3 13/16"	2 1/4"	4 3/16"	2"	5 3/16"	2 3/16"

Conversion factors for girder camber
0.1 pt. = 0.314 x 0.5 pt.
0.2 pt. = 0.593 x 0.5 pt.
0.3 pt. = 0.813 x 0.5 pt.
0.4 pt. = 0.952 x 0.5 pt.

GIRDER CAMBER DIAGRAM

THEORETICAL BOTTOM OF SLAB ELEVATIONS AND GIRDER CAMBER DIAGRAM - UNIT 3

DATE 8/20/09
ROUTE I-70 | STATE MO
DISTRICT 6 | SHEET NO. BR81
COUNTY St. Louis City - MO
JOB NO. J6I0984B
CONTRACT ID. 100127-601
PROJECT NO. I-70-5(315)
BRIDGE NO. A6500

DESCRIPTION | DATE

MISSOURI HIGHWAYS AND TRANSPORTATION COMMISSION
105 WEST CAPITOL
JEFFERSON CITY, MO 65102
1-888-ASK-MODOT (1-888-275-6636)

HNTB
715 KIRK DRIVE
KANSAS CITY, MO 64105-1310
TELEPHONE (816) 472-1201
CERTIFICATE OF AUTHORITY NO. 001270

FINAL PLANS REV.

Detailed JUL 2009
Checked JUL 2009

Note: This drawing is not to scale. Follow dimensions.

T L I 8 B B B 5 81 125 I 8 B 81 125 M

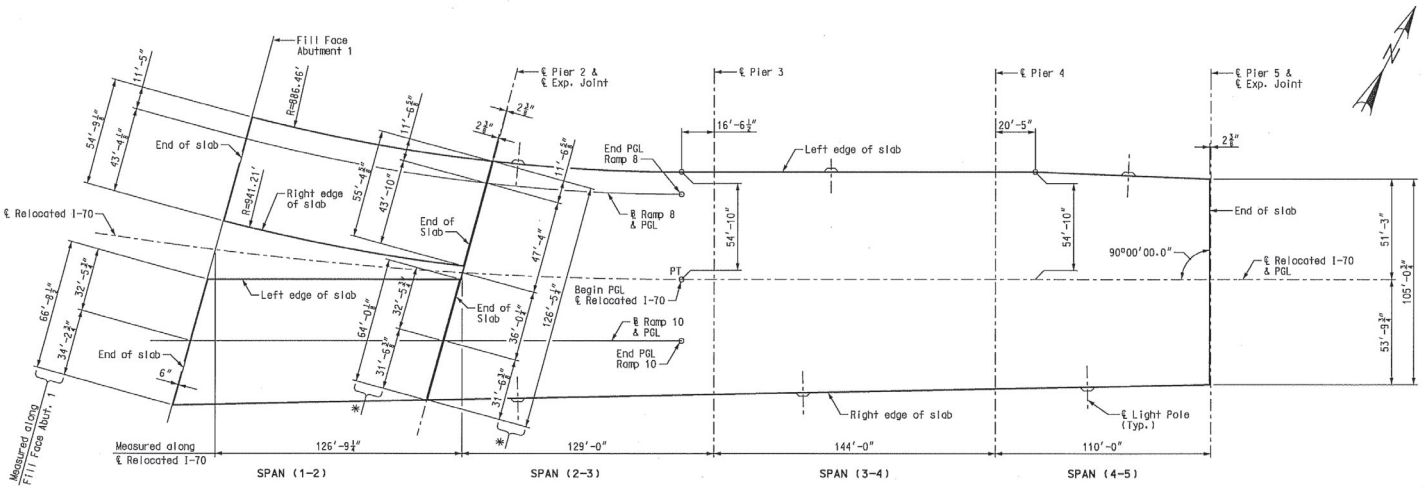

PLAN OF SLAB

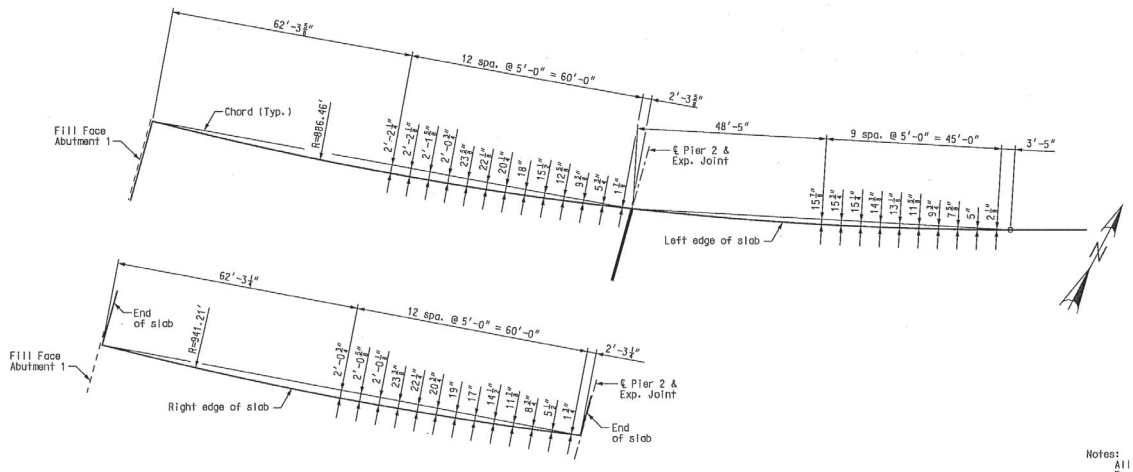

ENLARGED PLAN OF SLAB SHOWING CURVE ORDINATES

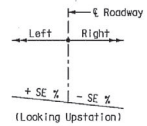

TYPICAL SLAB SE DIAGRAM

Note:
For values of SE, see SE Data Tables, this sheet.

SE DATA TABLE - RAMP 8		
Sta.	SE Left	SE Right
1+80.74	3.87%	-3.87%
2+66.74	5.80%	-5.80%
5+93.91	5.80%	-5.80%

SE DATA TABLE - RAMP 10		
Sta.	SE Left	SE Right
62+48.13	-2.00%	2.00%
63+14.79	0.00%	0.00%
63+81.46	2.00%	-2.00%
65+61.82	2.00%	-2.00%

Notes:
All dimensions are horizontal.
For bridge lighting layout and mounting blisters, see Sheet No. 97.
For details of optional slab closure pour, see Sheet No. 88.

SLAB GEOMETRY AND OFFSETS - UNITS 1 AND 2

DATE 8/20/09
ROUTE I-70 | STATE MO
DISTRICT 6 | SHEET NO. BR82
COUNTY St. Louis City - MO
JOB NO. J6I0984B
CONTRACT ID. 100127-601
PROJECT NO. I-70-5(315)
BRIDGE NO. A6500

DESCRIPTION | DATE

MISSOURI HIGHWAYS AND TRANSPORTATION COMMISSION
105 WEST CAPITOL
JEFFERSON CITY, MO 65102
1-888-ASK-MODOT (1-888-275-6636)

HNTB
715 KIRK DRIVE
KANSAS CITY, MO 64105-1310
TELEPHONE (816) 472-1201
CERTIFICATE OF AUTHORITY NO. 001170

FINAL PLANS REV.

Detailed JUL 2009
Checked JUL 2009

Note: This drawing is not to scale. Follow dimensions.

T:\de-proj\St_Louis_City\Construction\J6I0984B\Asbuilts\Bridge\B_A6500_082-125_J6I0984B_082.dgn

1:52:52 PM

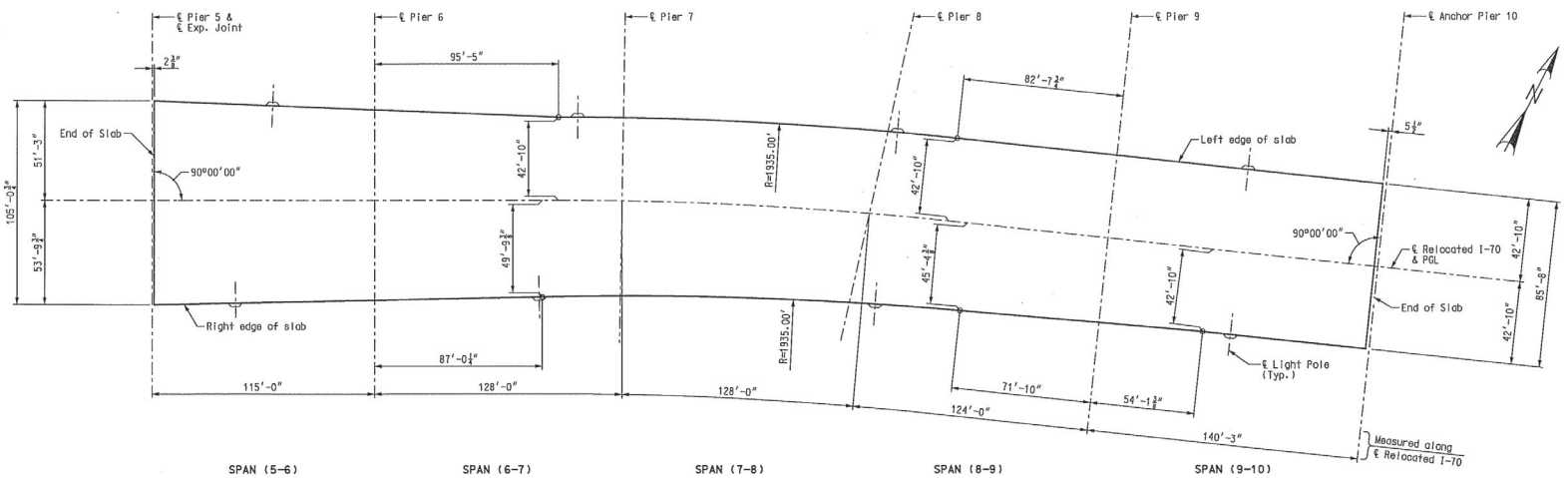

PLAN OF SLAB

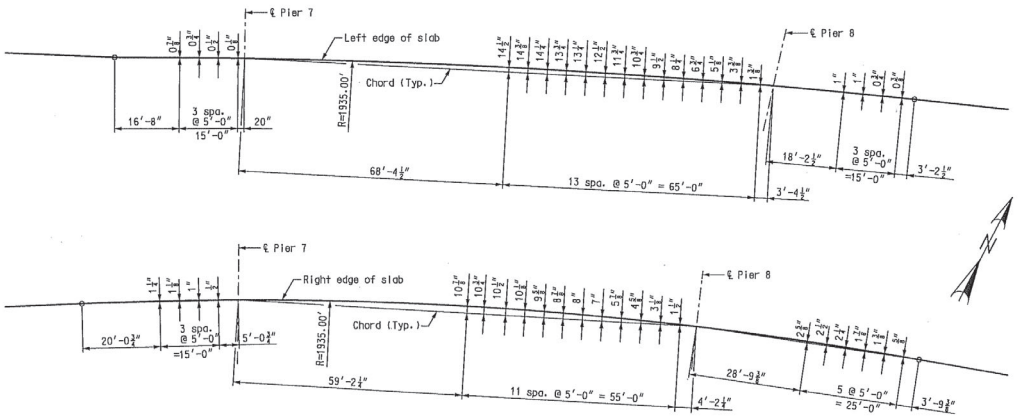

ENLARGED PLAN OF SLAB SHOWING CURVE ORDINATES

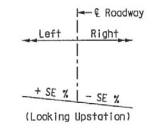

TYPICAL SLAB SE DIAGRAM

Note:
For values of SE, see SE Data Tables, this sheet.

SE DATA TABLE - RELOCATED I-70		
Sta.	SE Left	SE Right
65+58.46	-3.87%	-2.00%
66+41.49	-2.00%	-2.00%
66+65.00	-2.00%	-2.00%
68+90.00	-2.00%	-2.00%
69+55.00	0.00%	-2.00%
70+20.00	1.80%	-2.00%
70+84.89	3.60%	-3.60%
70+85.00	3.60%	-3.60%
72+00.00	3.60%	-3.60%
72+65.00	1.80%	-2.00%
73+30.00	0.00%	-2.00%
73+95.00	-2.00%	-2.00%
74+64.25	-2.00%	-2.00%

Notes:
All dimensions are horizontal.
For bridge lighting layout and mounting blisters, see Sheet No. 97.
For details of optional slab closure pour, see Sheet No. 89.

SLAB GEOMETRY AND OFFSETS - UNIT 3

DATE 8/20/09
ROUTE I-70 STATE MO
DISTRICT 6 SHEET NO. BR83
COUNTY St. Louis City - MO
JOB NO. J6I0984B
CONTRACT ID. 100127-601
PROJECT NO. I-70-5(315)
BRIDGE NO. A6500

DESCRIPTION | DATE

MISSOURI HIGHWAYS AND TRANSPORTATION COMMISSION
105 WEST CAPITOL
JEFFERSON CITY, MO 65102
1-888-ASK-MODOT (1-888-275-6636)
HNTB
715 KIRK DRIVE
KANSAS CITY, MO 64105-1310
TELEPHONE (816) 472-1201
CERTIFICATE OF AUTHORITY NO. 001270

FINAL PLANS

REV.

Detailed JUL 2009
Checked JUL 2009

Note: This drawing is not to scale. Follow dimensions.

T:\de-proj\St_Louis_City\Construction\J6I0984B\Asbuilts\Bridge\B_A6500_083-125_J6I0984B_083.dgn

1:52:31 PM

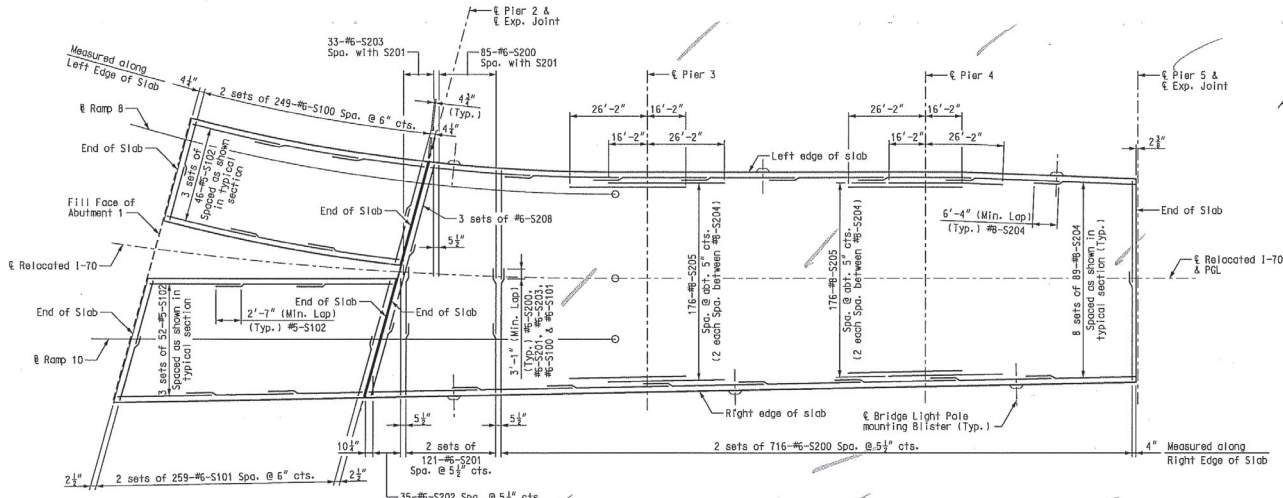

TOP REINFORCING

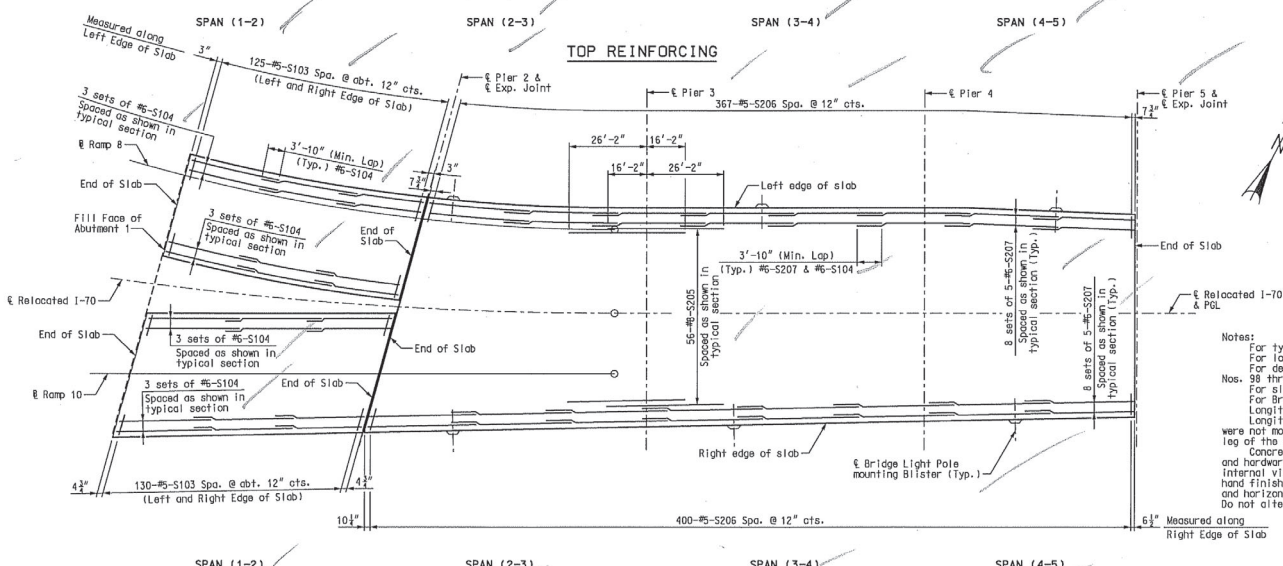

BOTTOM REINFORCING

Notes:
For typical bridge sections, see Sheet Nos. 87 and 88.
For location of slab drains, see Sheet No. 92.
For details and reinforcing of barrier curbs, see Sheet Nos. 98 thru 102.
For slab pouring sequence, see Sheet No. 90.
For Bridge Lighting Layout and mounting blisters, see Sheet No. 97.
Longitudinal slab dimensions are measured horizontally.
Longitudinal reinforcing steel were placed so that ends were not more than 1" ± from the vertical plate and the vertical leg of the angle at expansion device (Pier 2 and Pier 5).
Concrete was forced under and around the joint members and hardware. Proper consolidation was achieved by localized internal vibration. Finishing of the concrete was achieved by hand finishing within one foot of the expansion device. The vertical and horizontal concrete vent holes were offset from each other. Do not alternate holes at the 12" spacing.

SLAB PLAN SHOWING REINFORCING – UNITS 1 AND 2

Detailed JUL 2009
Checked JUL 2009

Note: This drawing is not to scale. Follow dimensions.

Sheet No. 84 of

84B B B 84 84B 84

DATE 8/20/09
ROUTE I-70 | STATE MO
DISTRICT 6 | SHEET NO. BR84
COUNTY St. Louis City - MO
JOB NO. J6I0984B
CONTRACT ID. 100127-601
PROJECT NO. I-70-5(315)
BRIDGE NO. A6500

DESCRIPTION | DATE

MISSOURI HIGHWAYS AND TRANSPORTATION COMMISSION
105 WEST CAPITOL
JEFFERSON CITY, MO 65102
1-888-ASK-MODOT (1-888-275-6636)

HNTB
715 KIRK DRIVE
KANSAS CITY, MO 64105-1310
TELEPHONE: (816) 472-1201
CERTIFICATE OF AUTHORITY NO. 001270

FINAL PLANS REV.

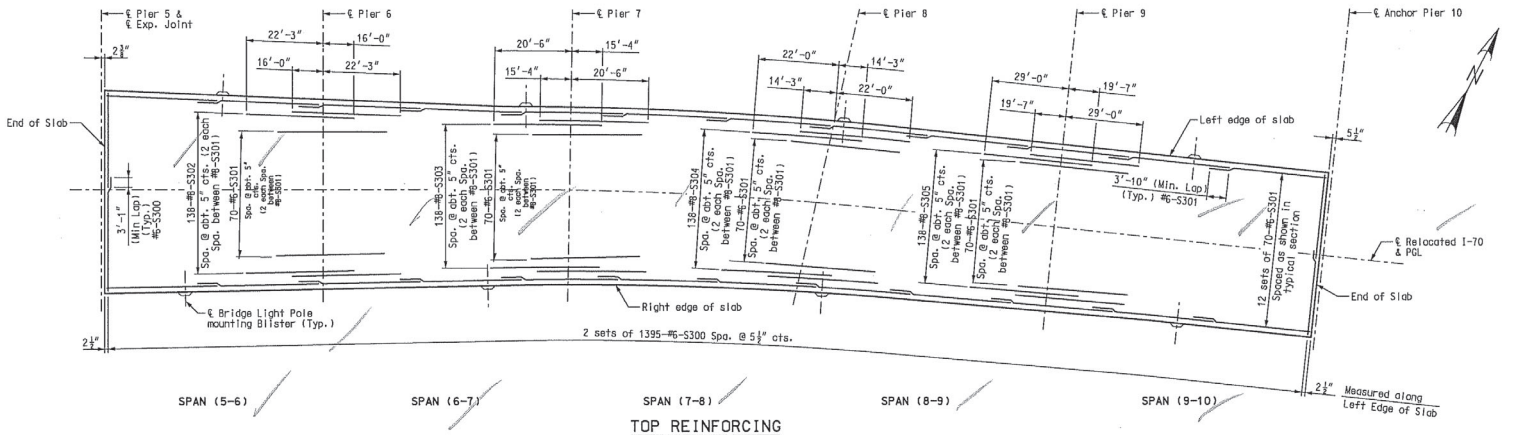

TOP REINFORCING

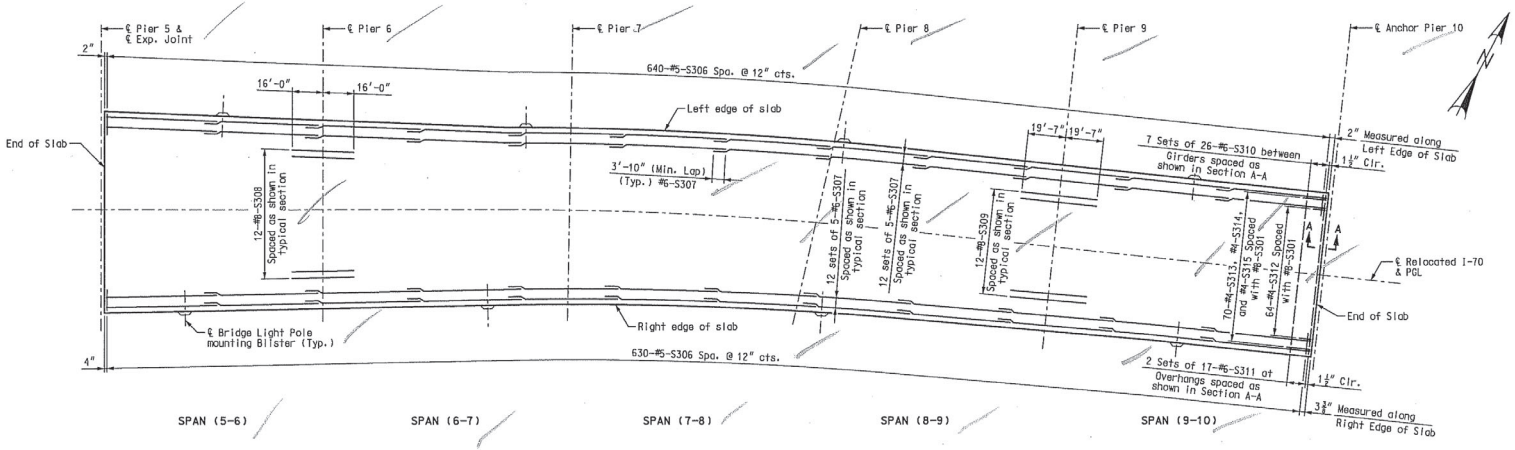

BOTTOM REINFORCING

Notes:
For typical bridge section, see Sheet No. 89.
For location of slab drains, see Sheet No. 93.
For details and reinforcing of barrier curbs, see Sheet Nos. 98 thru 102.
For slab pouring sequence, see Sheet No. 91.
For Bridge Lighting Layout and mounting blisters, see Sheet No. 97.
Longitudinal slab dimensions are measured horizontally.
Longitudinal reinforcing steel was placed so that ends was not be more than 1"± from the vertical plate and the vertical leg of the angle at expansion device (Pier 5 and Anchor Pier 10).
Concrete was forced under and around the joint members and hardware. Proper consolidation was achieved by localized internal vibration. Finishing of the concrete was achieved by hand finishing within one foot of the expansion device. The vertical and horizontal concrete vent holes was offset from each other. Do not alternate holes at the 12" spacing.
For Section A-A, see Sheet No. 89.

SLAB PLAN SHOWING REINFORCING - UNIT 3

DATE 8 20 09
ROUTE I-70 | STATE MO
DISTRICT 6 | SHEET NO. BR85
COUNTY St. Louis City - MO
JOB NO. J6I0984B
CONTRACT ID. 100127-601
PROJECT NO. I-70-5(315)
BRIDGE NO. A6500

DESCRIPTION | DATE

MISSOURI HIGHWAYS AND TRANSPORTATION COMMISSION
MoDOT
105 WEST CAPITOL
JEFFERSON CITY, MO 65102
1-888-ASK-MODOT (1-888-275-6636)

HNTB
715 KIRK DRIVE
KANSAS CITY, MO 64105-1310
TELEPHONE (816) 472-1201
CERTIFICATE OF AUTHORITY NO. 001270

FINAL PLANS

Detailed JUL 2009
Checked JUL 2009

Note: This drawing is not to scale. Follow dimensions.

T L I 8 B B B 5 85 125 I 8 B 85 REV. 12 2 M

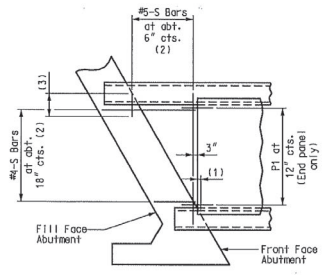

PANELS-SQUARED ENDS

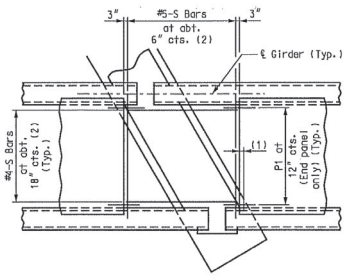

PLAN OF PRECAST PRESTRESSED PANELS PLACEMENT

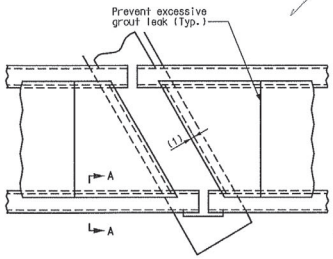

PANELS-SKEWED ENDS

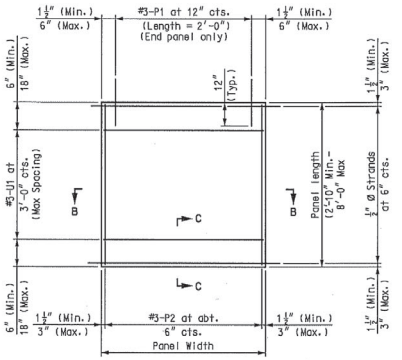

PLAN OF PRECAST PRESTRESSED PANEL

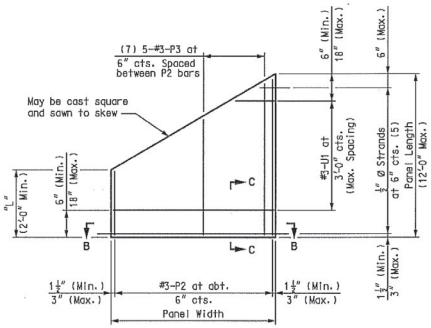

PLAN OF PRECAST PRESTRESSED PANEL (SKEWED END-OPTIONAL)

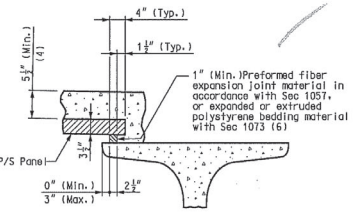

SECTION A-A

Note:
Slab haunching diagram on Sheet Nos.77 thru 79 were used to determining thickness of preformed fiber expansion joint material or polystyrene bedding material within the limits noted in general notes.

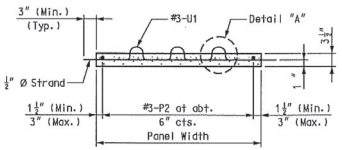

SECTION B-B

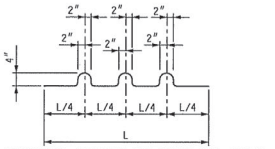

(U1 Bars may be oriented at right angles to location and spacing shown. U1 Bars were placed between P1 bars.)

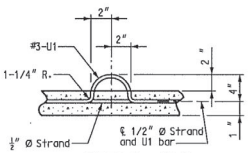

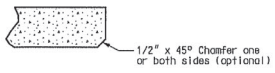

SECTION C-C

NOTES:

Cost of S-bars will be considered completely covered by the contract unit price for the slab.
S-bars are not listed in the bill of reinforcing.
(1) End panels was dimensioned 1" min. to 1-1/2" max. from the inside face of diaphragm.
(2) S-bars shown are bottom steel in slab between panels and used with squared end panels only.
(3) Extend S-bars 18 inches beyond the front face of abutments only.
(4) In order to maintain minimum slab thickness, it may be necessary to raise the grade uniformly throughout the structure. No payment was made for additional labor or materials required for necessary grade adjustment.
(5) Any strand 2'-0" or shorter has a #4 reinforcing bar on each side of it, centered between strands. Strands 2'-0" or shorter may then be debonded at the fabricator's option.
(6) All panel support pads were glued to the girder. When support thickness exceeds 1-1/2", the pads were glued top and bottom. The glue used was the type recommended by the panel support pads manufacturer.
(7) Use #3-P3 bars if panel is skewed 45° or greater.
(8) Minimum reinforcement steel length was 2'-0".

GENERAL NOTES:

PRESTRESSED PANELS

Concrete for prestressed panels was Class A-1 with f'c = 6,000 psi, f'ci = 4,000 psi.

The top surface of all panels were receive a scored finish with a depth of scoring of 1/8" perpendicular to the prestressing strands in the panels.

Prestressing tendons were high-tensile strength, uncoated seven-wire, low-relaxation strands for prestressed concrete in accordance with AASHTO M 203 Grade 270, with nominal diameter of strand = 1/2" and nominal area = 0.153 sq.in. and minimum ultimate strength = 41.31 kips (270 ksi). Larger strands may be used with the same spacing and initial tension.

Initial prestressing force = 31.0 kips/strand.

The method and sequence of releasing the strands are shown on the shop drawings.

Suitable anchorage devices for lifting panels may be cast in panels, provided the devices are shown on the shop drawings and approved by the engineer. Panel lengths were determined by the contractor and shown on the shop drawings.

When square end panels are used at skewed supports, the skewed portion are cast full depth. No separate payment will be made for additional concrete and reinforcing required.

Support from diaphragm forms is required under the optional skewed end until cast-in-place concrete has reached 3,000 psi compressive strength.

Minimum preformed fiber expansion joint material or polystyrene bedding material thickness is 1 inch. Thicker material may be used on one or both sides of the girder to reduce cast-in-place concrete thickness to within tolerances. No more than 3 inches total thickness was used.

The same thickness of preformed fiber expansion joint material was used under any one edge of any panel except at locations where top flange thickness may be stepped. The maximum change in thickness between adjacent panels is 1/4 inch.

The polystyrene bedding material may be cut with a transition to match haunch height above top of flange.

Slab thickness over prestressed panels may vary due to girder camber.

At the contractor's option, in lieu of increasing and varying the girder top flange thickness as shown in the plans, the haunch height may be achieved by sloping the top flange and providing a constant joint filler thickness. Dimensions are shown on the shop drawings.

In spans with splayed girder lines, the contractor may provide rectangular panels in lieu of tapered panels, and vary the location of joint filler, as measured from edge of flange, to a max. of 3".

REINFORCING STEEL:

All dimensions are out-to-out.

Minimum clearance to reinforcing steel was 1-1/2", unless otherwise shown.

Hooks and bends are in accordance with the CRSI Manual of Standard Practice for Detailing Reinforced Concrete Structures. Stirrup and Tie Dimensions.

Actual lengths are measured along centerline of bar to the nearest inch.

The prestressed panel quantities are not included in the table of estimated quantities for the slab.

If U1 bars interfere with placement of slab steel, U1 loops may be bent over, as necessary, to clear slab steel.

Welded wire fabric or welded deformed bar mats providing a minimum area of reinforcing perpendicular to strands of 0.22 sq. in./ft., with spacing parallel to strands sufficient to insure proper handling, may be used in lieu of the #3-P2 bars shown. Wire or bar diameter are not be larger than 0.375 inch. The above alternative reinforcement criteria may be used in lieu of the #3-P3 bars, when required, and placed over a width not less than 2 feet.

The reinforcing steel was tied securely to the 1/2" Ø strands with the following maximum spacing in each direction:

#3-P2 bars at 16 inches.

Welded wire fabric or welded deformed bar mats at 2'-0".

Tie the #3-U1 bars to the #3-P2 bars, to the welded wire fabric or the welded deformed bar mats at about 3'-0" centers.

All reinforcement other than prestressing strands is epoxy coated.

Precast panels may be in contact with stirrup reinforcing in diaphragms.

PRECAST PRESTRESSED PANEL DETAILS

DATE 8/20/09
ROUTE I-70 STATE MO
DISTRICT 6 SHEET NO. BR86
COUNTY St. Louis City - MO
JOB NO. J6I0984B
CONTRACT ID. 100127-601
PROJECT NO. I-70-5(315)
BRIDGE NO. A6500

DESCRIPTION | DATE

MISSOURI HIGHWAYS AND TRANSPORTATION COMMISSION
105 WEST CAPITOL
JEFFERSON CITY, MO 65102
1-888-ASK-MODOT (1-888-275-6636)
HNTB
715 KIRK DRIVE
KANSAS CITY, MO 64105-4310
TELEPHONE (816) 472-1201
CERTIFICATE OF AUTHORITY NO. 001270

FINAL PLANS

Detailed JUL 2009
Checked JUL 2009

Note: This drawing is not to scale. Follow dimensions.

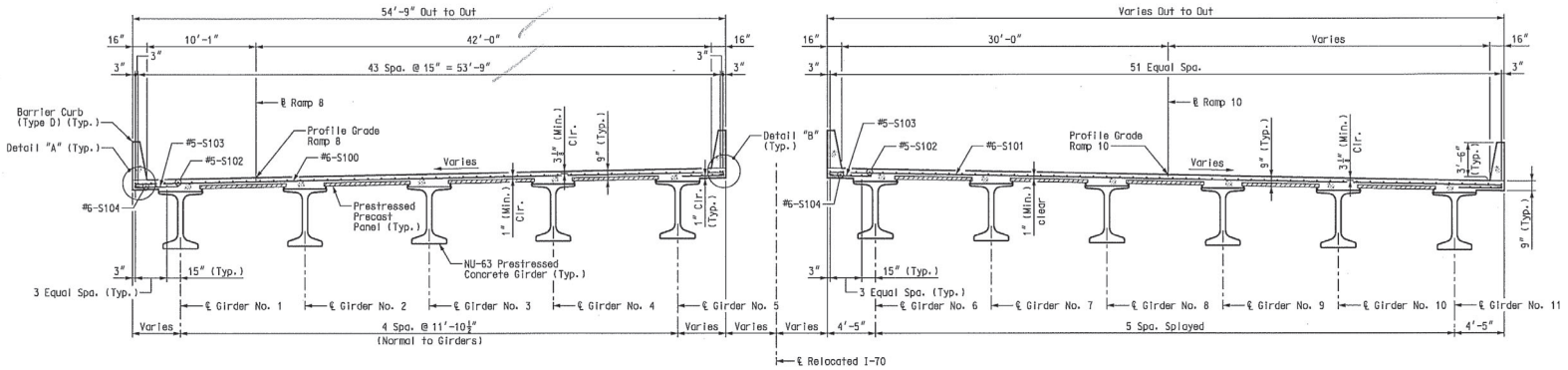

TYPICAL BRIDGE SECTION

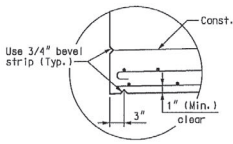

DETAIL "A"

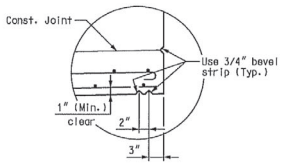

DETAIL "B"

Notes:
Longitudinal slab dimensions are measured horizontally. All dimensions are perpendicular to ℄ Ramp 8 or ℄ Ramp 10, unless noted otherwise.
For slab pouring sequence, see Sheet No. 90.
For theoretical slab haunching diagram, see Sheet No. 77.
For details and reinforcement of barrier curbs not shown, see Sheet Nos. 98 thru 102.
For details of precast panels, see Sheet No. 86.

SLAB CROSS SECTION – UNIT 1

DATE 8/20/09
ROUTE I-70 | STATE MO
DISTRICT 6 | SHEET NO. BR87
COUNTY St. Louis City - MO
JOB NO. J6I0984B
CONTRACT ID. 100127-601
PROJECT NO. I-70-5(315)
BRIDGE NO. A6500

DESCRIPTION | DATE

MISSOURI HIGHWAYS AND TRANSPORTATION COMMISSION
MoDOT
105 WEST CAPITOL
JEFFERSON CITY, MO 65102
1-888-ASK-MODOT (1-888-275-6636)

HNTB
715 KIRK DRIVE
KANSAS CITY, MO 64105-1310
TELEPHONE (816) 472-1201
CERTIFICATE OF AUTHORITY NO. 001270

FINAL PLANS REV.

Detailed JUL 2009
Checked JUL 2009

Note: This drawing is not to scale. Follow dimensions.

Sheet No. 87 of 125

T L I 8 B B B 5 87 125 I 8 B 87

1285 M

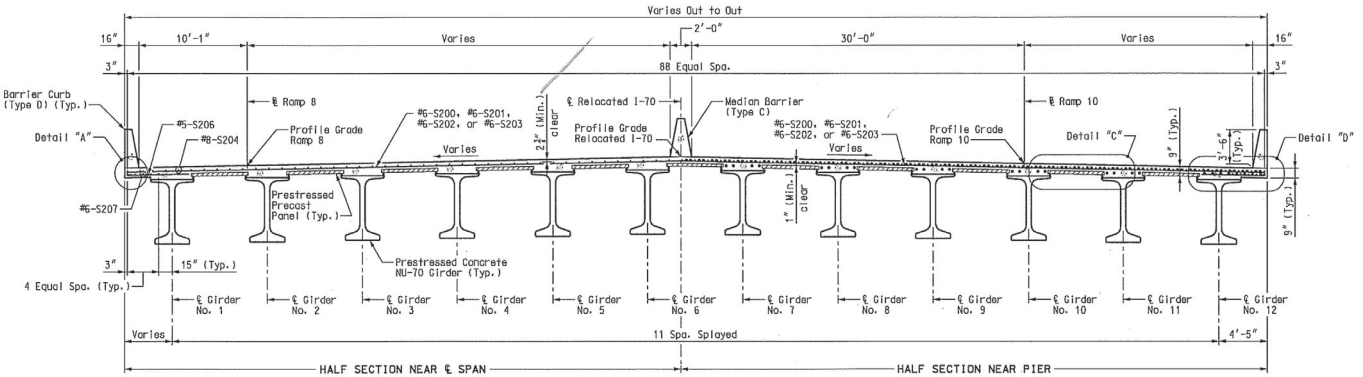

TYPICAL SECTION

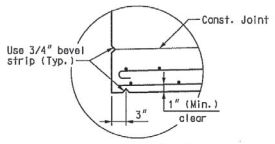

DETAIL "A"

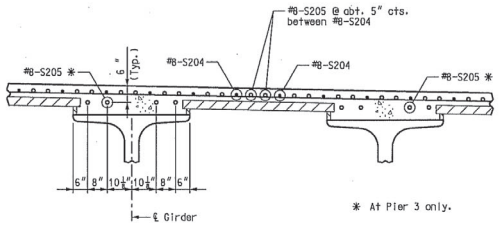

✱ At Pier 3 only.

DETAIL "C"

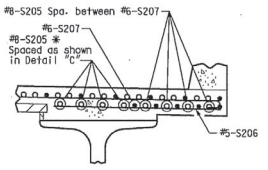

Note:
Right overhang shown, left overhang similar.

DETAIL "D" (PIER 3)

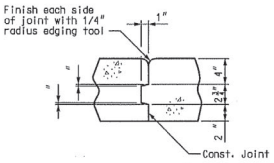

DETAIL "E"

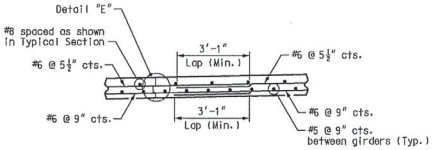

LONGITUDINAL JOINT DETAIL

Notes:
Longitudinal slab dimensions are measured horizontally. All measurements perpendicular to centerline I-70 unless otherwise noted.
For slab pouring sequence, see Sheet No. 90.
For theoretical slab haunching diagram, see Sheet No. 77.
For details and reinforcement of barrier curbs not shown, see Sheet Nos. 98 thru 102.
For details of precast panels, see Sheet No. 86.

SLAB CROSS SECTION – UNIT 2

DATE 8/20/09
ROUTE I-70 STATE MO
DISTRICT 6 SHEET NO. BR88
COUNTY St. Louis City - MO
JOB NO. J6I0984B
CONTRACT ID. 100127-601
PROJECT NO. I-70-5(315)
BRIDGE NO. A6500

DESCRIPTION | DATE

MISSOURI HIGHWAYS AND TRANSPORTATION COMMISSION
105 WEST CAPITOL
JEFFERSON CITY, MO 65102
1-888-ASK-MODOT (1-888-275-6636)

HNTB
715 KIRK DRIVE
KANSAS CITY, MO 64105-1310
TELEPHONE (816) 472-1201
CERTIFICATE OF AUTHORITY NO. 001270

FINAL PLANS

REV.

Detailed JUL 2009
Checked JUL 2009

Note: This drawing is not to scale. Follow dimensions.

Sheet No. 88 of

T L I 8 8 B B 88 I 8 8 88

M

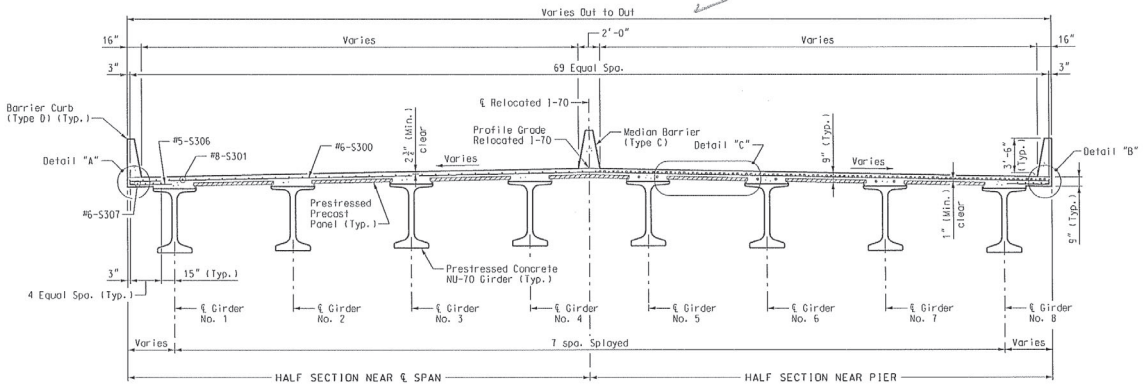

TYPICAL SECTION

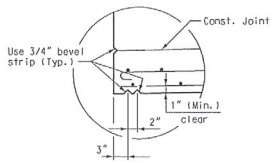

DETAIL "A"

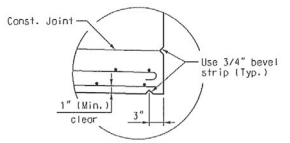

DETAIL "B"

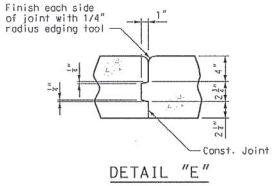

DETAIL "E"

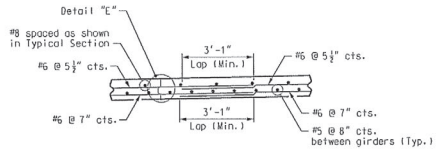

LONGIUDINAL JOINT DETAIL

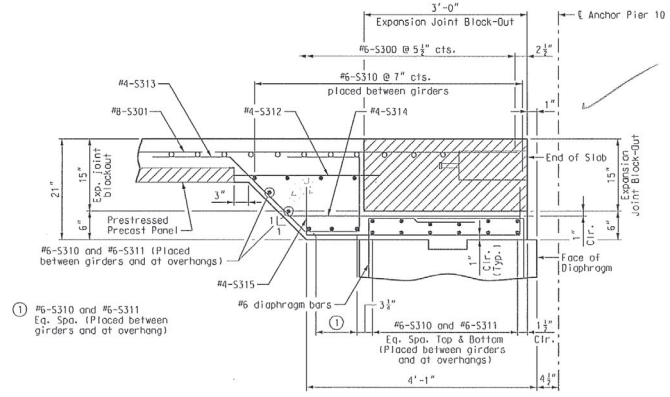

SECTION A-A

Notes:
Concrete in block-out will be placed with the expansion joint by others (Job No. J6I0984).
Adjust #4-S312, #4-S313, #4-S314, and #4-S315 to clear girder webs.
For end diaphragm details at Anchor Pier 10, see Sheet No. 76.

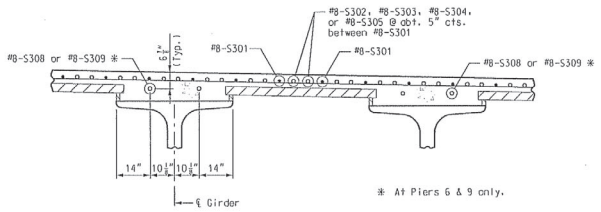

✻ At Piers 6 & 9 only.

DETAIL "C"

Notes:
Longitudinal slab dimensions are measured horizontally.
For slab pouring sequence, see Sheet No. 91.
For theoretical slab haunching diagram, see Sheets Nos. 78 and 79.
For details and reinforcement of barrier curbs not shown, see Sheet Nos. 98 thru 102.
For details of precast panels, see Sheet No. 86.
For girder flange and Block-Out details at Pier 10, see Sheet No. 57.

SLAB CROSS SECTION - UNIT 3

Detailed JUL 2009
Checked JUL 2009

Note: This drawing is not to scale. Follow dimensions.

Sheet No. 89 of 125

T:\de-proj\St_Louis_City\Construction\J6I0984B\Asbuilts\Bridge\B_A6500_089-125_J6I0984B_089.dgn

11:04:37 AM

DATE 8/20/09
ROUTE I-70 | STATE MO
DISTRICT 6 | SHEET NO. BR89
COUNTY St. Louis City - MO
JOB NO. J6I0984B
CONTRACT ID. 100127-601
PROJECT NO. I-70-5(315)
BRIDGE NO. A6500

DESCRIPTION | DATE

MISSOURI HIGHWAYS AND TRANSPORTATION COMMISSION
105 WEST CAPITOL
JEFFERSON CITY, MO 65102
1-888-ASK-MODOT (1-888-275-6636)

HNTB
715 KIRK DRIVE
KANSAS CITY, MO 64105-1310
TELEPHONE (816) 472-1201
CERTIFICATE OF AUTHORITY NO. 001270

FINAL PLANS

REV.

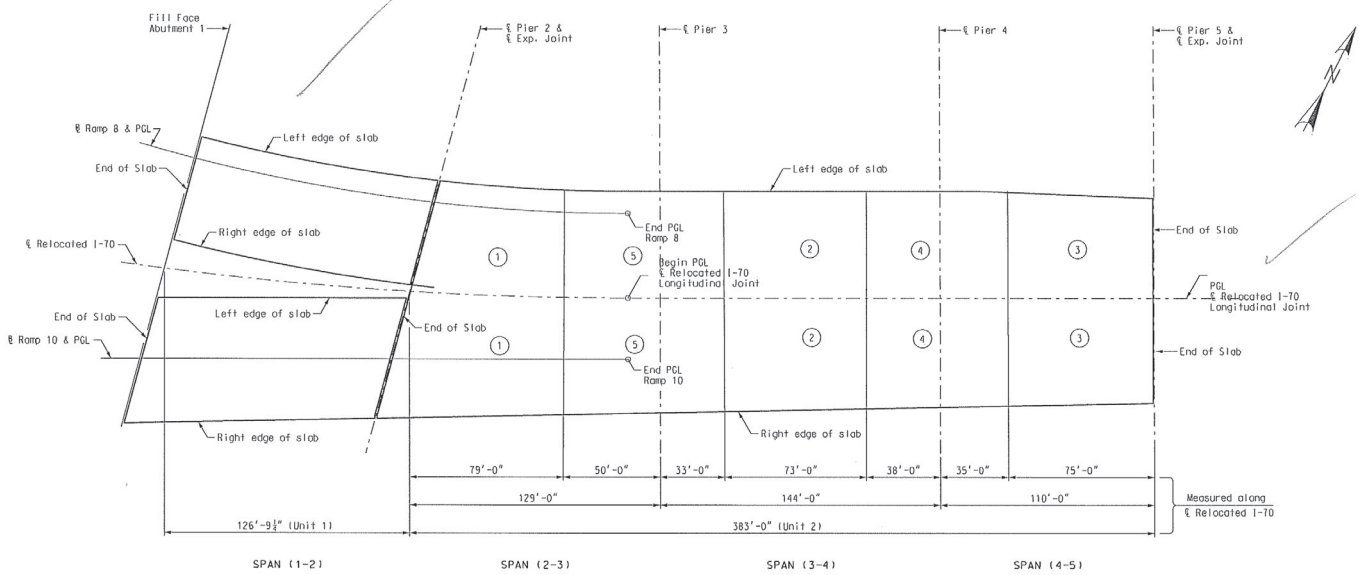

SLAB POURING SEQUENCE

	Sequence of Pours	Min. rate of pour cu. yds./hr.
	Direction	With Retarder
Alternate "C" pours	1 + 5 + 2 + 4 + 3	65
	End to End	

Notes:
Longitudinal dimensions are measured horizontally.
No transverse construction joints used but would have been placed normal to ℄ Relocated I-70.
The contractor poured and satisfactorily finish the roadway slabs for Span (1-2) at a rate not less than 25 cu.yd. per hour.
The contractor furnished an approved retarder to retard the set of the concrete to 2.5 hours and poured and satisfactorily finish the slab pours at the rate given.
The concrete diaphragm at the intermediate piers and integral abutment was poured a minimum of 30 minutes and a maximum of 2 hours before the slab is poured.
End diaphragms at expansion devices was poured monolithic with the slab.

SLAB POURING SEQUENCE – UNITS 1 AND 2

DATE 8/20/09
ROUTE I-70 | STATE MO
DISTRICT 6 | SHEET NO. BR90
COUNTY St. Louis City - MO
JOB NO. J6I0984B
CONTRACT ID. 100127-601
PROJECT NO. I-70-5 (315)
BRIDGE NO. A6500

DESCRIPTION | DATE

MISSOURI HIGHWAYS AND TRANSPORTATION COMMISSION
105 WEST CAPITOL
JEFFERSON CITY, MO 65102
1-888-ASK-MODOT (1-888-275-6636)

HNTB
715 KIRK DRIVE
KANSAS CITY, MO 64105-1310
TELEPHONE (816) 472-1201
CERTIFICATE OF AUTHORITY NO. 001270

FINAL PLANS REV.

Detailed JUL 2009
Checked JUL 2009

Note: This drawing is not to scale. Follow dimensions.

T:\de-proj\St_Louis_City\Construction\J6I0984B\Asbuilts\Bridge\B_A6500_090-125_J6I0984B_090.dgn
2:31:37 PM

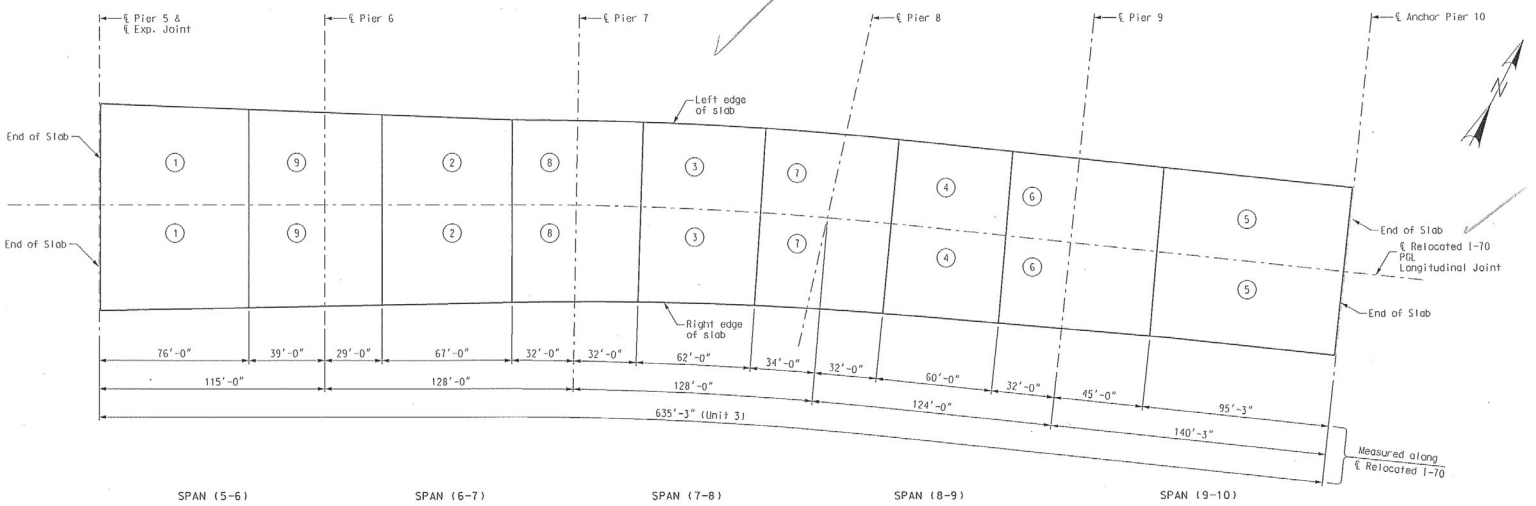

SLAB POURING SEQUENCE

	Sequence of Pours	Min. rate of pour cu. yds./hr.
	Direction	With Retarder
Alternate "D" pours	1 + 9 + 2 + 8 + 3 + 7 + 4 + 6 + 5	65
	End to End	

Notes:
Longitudinal dimensions are measured horizontally.
No transverse construction joints were used, but would have been placed normal to ℄ Relocated I-70.
The contractor furnished an approved retarder to retard the set of the concrete to 2.5 hours and poured and satisfactorily finish the slab pours at the rate given.
The concrete diaphragm at the intermediate piers were poured a minimum of 30 minutes and a maximum of 2 hours before the slab is poured.
End diaphragms at expansion devices were poured monolithic with the slab.

SLAB POURING SEQUENCE - UNIT 3

DATE 8/20/09
ROUTE I-70 | STATE MO
DISTRICT 6 | SHEET NO. BR91
COUNTY St. Louis City - MO
JOB NO. J6I0984B
CONTRACT ID. 100127-601
PROJECT NO. I-70-5 (315)
BRIDGE NO. A6500

DESCRIPTION | DATE

MISSOURI HIGHWAYS AND TRANSPORTATION COMMISSION
MoDOT
105 WEST CAPITOL
JEFFERSON CITY, MO 65102
1-888-ASK-MODOT (1-888-275-6636)

HNTB
715 KIRK DRIVE
KANSAS CITY, MO 64105-1310
TELEPHONE (816) 472-1201
CERTIFICATE OF AUTHORITY
NO. 001270

FINAL PLANS REV.

Detailed JUL 2009
Checked JUL 2009

Note: This drawing is not to scale. Follow dimensions.

Sheet No. 91 of 125

I:\de-proj\St_Louis_City\Construction\J6I0984B\Asbuilts\Bridge\B_A6500_091-125_J6I0984B_091.dgn

2:39:29 PM

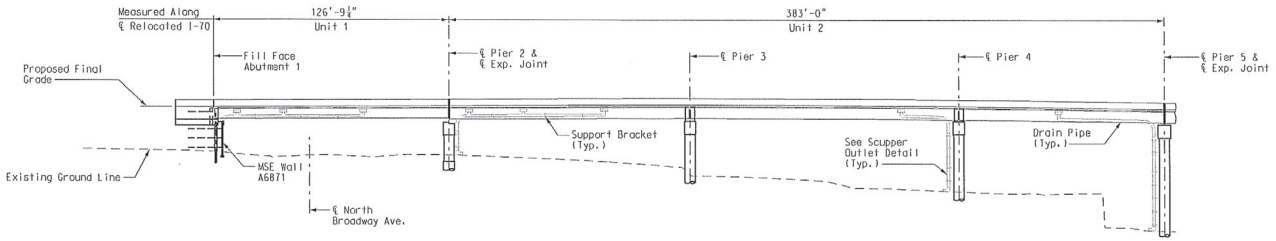

PART ELEVATION

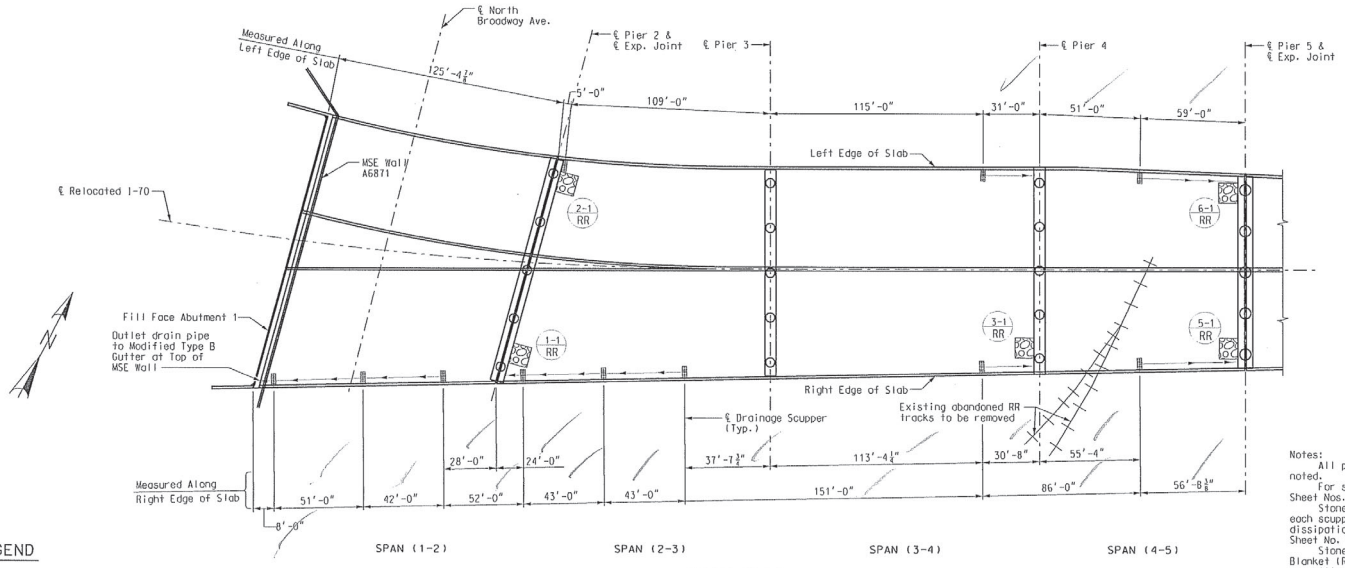

PART PLAN

LEGEND

- Drainage Scupper
- Fiberglass Drain Pipe
- Stone Riprap Check Basin

Notes:

All pipe were 12" fiberglass unless otherwise noted.

For scupper and pipe connection details, see Sheet Nos. 94 and 95.

Stone rip rap check basins were located at each scupper outlet point as shown for velocity dissipation. Check basin dimensions are given on Sheet No. 95.

Stone riprap check basins are Type 2 Rock Blanket (Roadway Item).

All drainage scuppers were Neenah designation R 3921-V1 or approved equal.

Layout lengths provided along outside edge of slab. Elevation view shows drainage pipe slope for scuppers and pipe located at right edge of slab only. Pipe slope follows the longitudinal slope of the roadway. Where a backslope is required for outletting purposes, the slope was 0.5 %.

See roadway plans for bridge scupper connection to existing drainage facilities.

BRIDGE STRUCTURE DRAINAGE PLAN AND ELEVATION - UNITS 1 AND 2

92 125

DATE PREPARED 8-20-09
ROUTE I-70 | STATE MO
DISTRICT 6 | SHEET NO. BR92
COUNTY St. Louis City - MO
JOB NO. J6I0984B
CONTRACT ID. 100127-601
PROJECT NO. I-70-5 (315)
BRIDGE NO. A6500

DESCRIPTION | DATE

MISSOURI HIGHWAYS AND TRANSPORTATION COMMISSION
105 WEST CAPITOL
JEFFERSON CITY, MO 65102
1-888-ASK-MODOT (1-888-275-6636)

FINAL PLANS REV.

T:\de-proj\St_Louis_City\Construction\J6I0984B\Asbuilts\MSD AS-BUILT\B_A6500_092-125_J6I0984B_092.dgn 2:43:23 PM

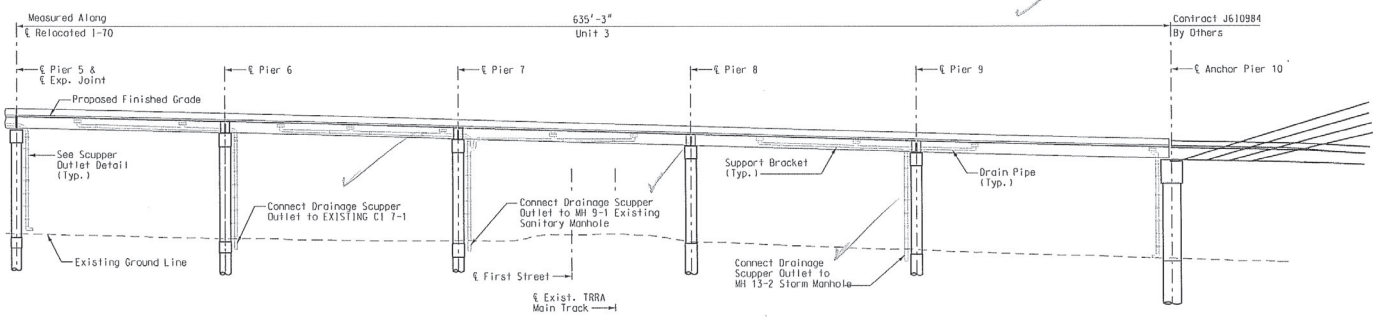

PART ELEVATION

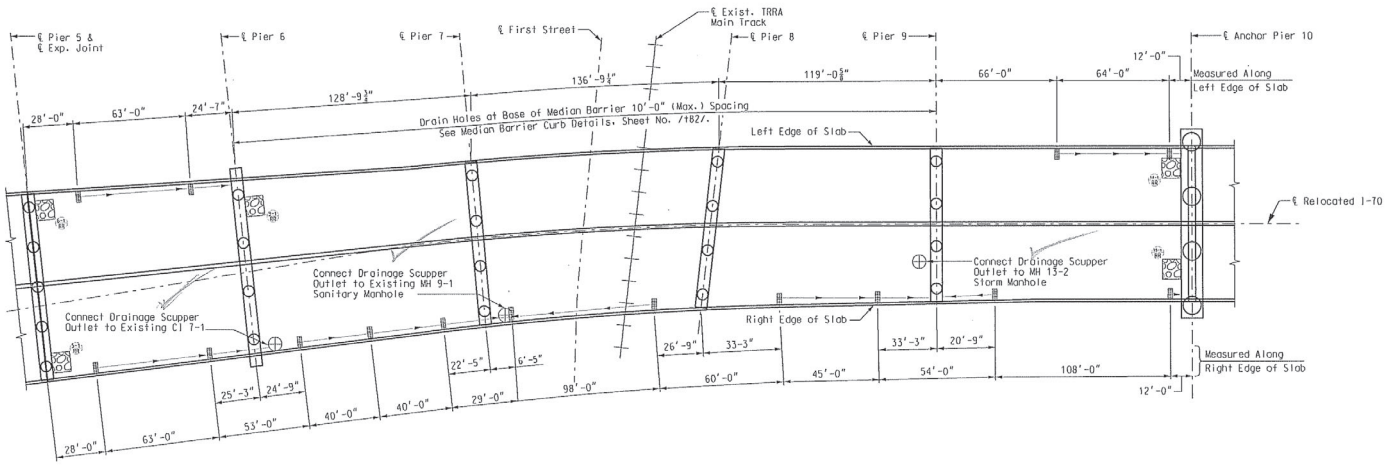

PART PLAN

Notes:
For drainage system notes, see Sheet No. 92.
For legend, see Sheet No. 92.

DRAINAGE PLAN AND ELEVATION – UNIT 3

Detailed JUL 2009
Checked JUL 2009

Note: This drawing is not to scale. Follow dimensions.

Sheet No. 93 of 125

T:\de-proj\St_Louis_City\Construction\J610984B\Asbuilts\Bridge\B_A6500_093-125_J610984B_093 (msd).dgn

12:04:56 PM

DATE
8/20/09
ROUTE
I-70
STATE
MO
DISTRICT
6
SHEET NO.
BR93
COUNTY
St. Louis City - MO
JOB NO.
J610984B
CONTRACT ID.
100127-601
PROJECT NO.
I-70-5 (315)
BRIDGE NO.
A6500

DESCRIPTION
DATE

MISSOURI HIGHWAYS AND TRANSPORTATION COMMISSION
105 WEST CAPITOL
JEFFERSON CITY, MO 65102
1-888-ASK-MODOT (1-888-275-6636)

HNTB
715 KIRK DRIVE
KANSAS CITY, MO 64105-1310
TELEPHONE (816) 472-1201
CERTIFICATE OF AUTHORITY
NO. 001210

FINAL PLANS

REV.

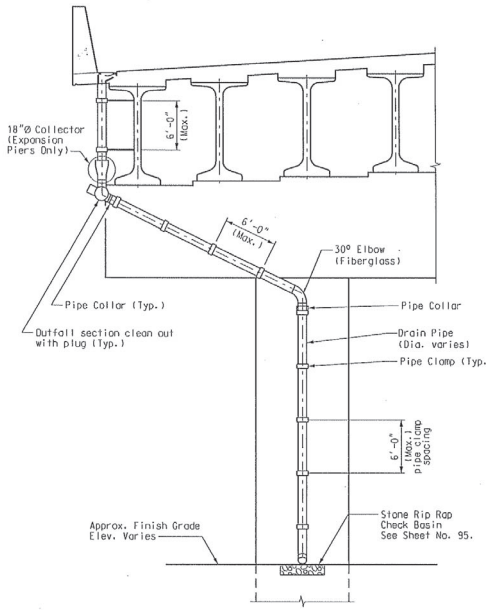

ELEVATION
SCUPPER OUTFALL

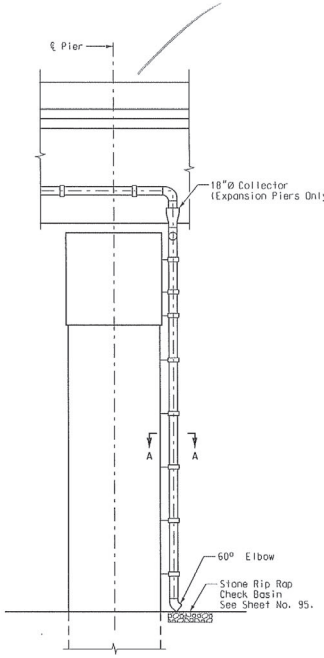

END VIEW
SCUPPER OUTFALL

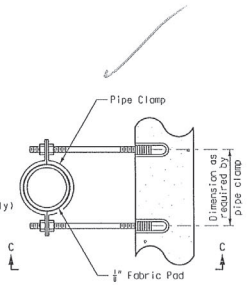

SUPPORT BRACKET

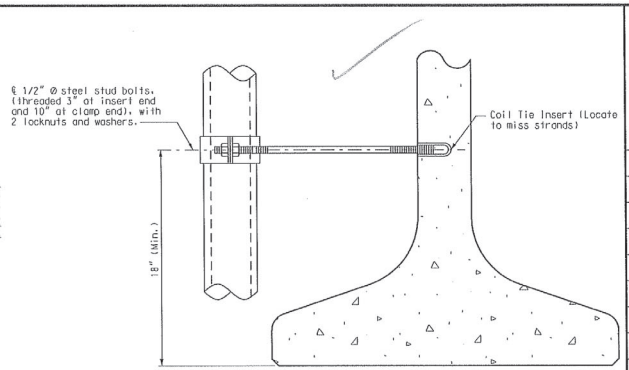

VIEW C-C

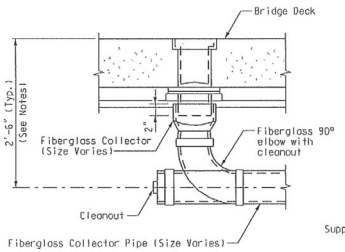

COLLECTOR PIPE
DETAIL - END SECTION

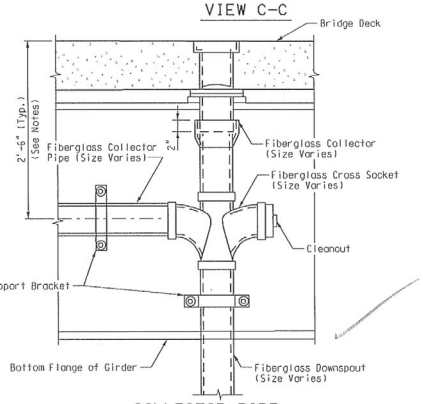

COLLECTOR PIPE
DETAIL - OUTFALL SECTION

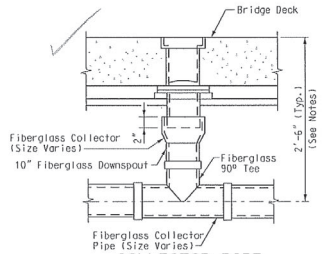

COLLECTOR PIPE
DETAIL - TEE SECTION

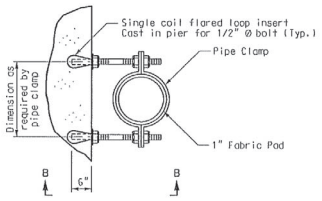

SECTION A-A

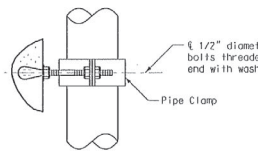

VIEW B-B

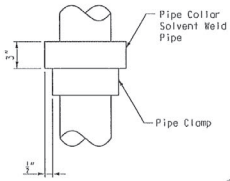

PIPE COLLAR DETAIL

Notes:
In areas where the pipe collector system flows opposite the bridge profile, the typical height varies as necessary to meet a minimum 0.5% slope.
All downspouts from scuppers have 6" unless otherwise stated.
All fiberglass collectors and pipe clamps match the pipe size(s) shown in the drainage plan and profile.
All pipe clamps, fabric pad inserts, collectors and other work necessary to install the system were considered completely covered by the contract unit price for Drainage System (On Structure).

DRAINAGE SYSTEM DETAILS - 1

DATE 8/20/09
ROUTE 1-70 | STATE MO
DISTRICT 6 | SHEET NO. BR94
COUNTY St. Louis City - MO
JOB NO. J6I0984B
CONTRACT ID. 100127-601
PROJECT NO. I-70-5 (315)
BRIDGE NO. A6500

DESCRIPTION | DATE

MISSOURI HIGHWAYS AND TRANSPORTATION COMMISSION
105 WEST CAPITOL
JEFFERSON CITY, MO 65102
1-888-ASK-MODOT (1-888-275-6636)

HNTB
715 KIRK DRIVE
KANSAS CITY, MO 64105-1310
TELEPHONE (816) 472-1201
CERTIFICATE OF AUTHORITY NO. 001270

FINAL PLANS

REV.

Detailed JUL 2009
Checked JUL 2009

Note: This drawing is not to scale. Follow dimensions.

T:\de-proj\St_Louis_City\Construction\J6I0984B\Asbuilts\Bridge\B_A6500_094-125_J6I0984B_094.dgn
11:54:31 AM

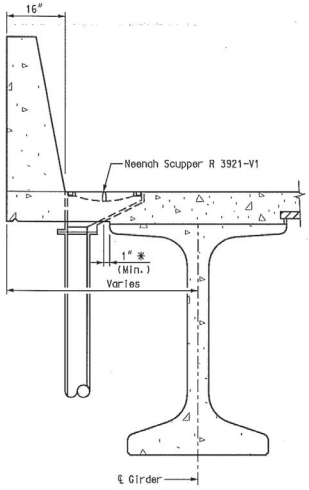

SCUPPER TYPICAL SECTION

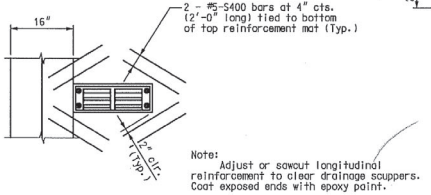

PLAN

Note:
Adjust or sawcut longitudinal reinforcement to clear drainage scuppers. Coat exposed ends with epoxy paint.

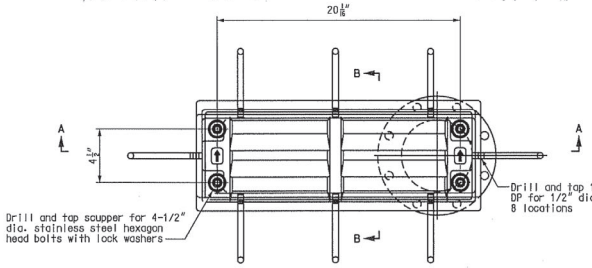

PLAN

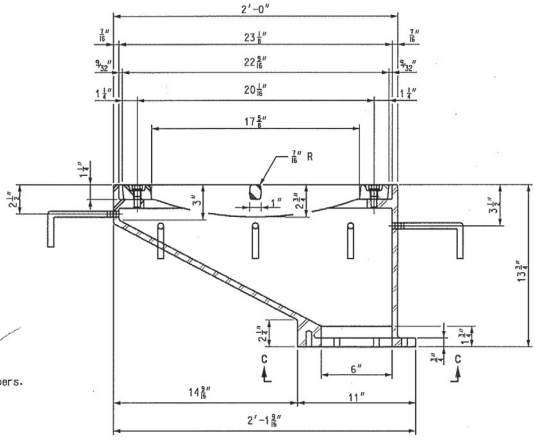

SECTION A-A

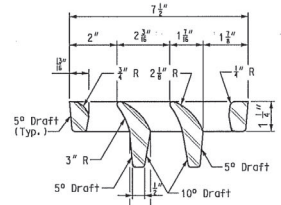

VANE GRATE DETAIL

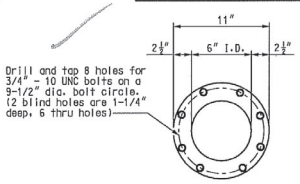

VIEW C-C

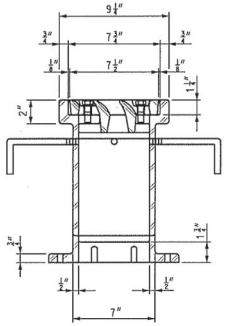

SECTION B-B

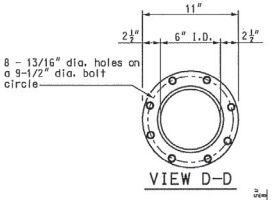

VIEW D-D

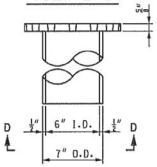

DOWNSPOUT

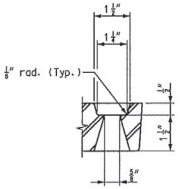

GRATE BOLT HOLE DETAIL

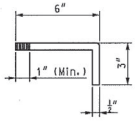

ANCHOR STUD DETAIL

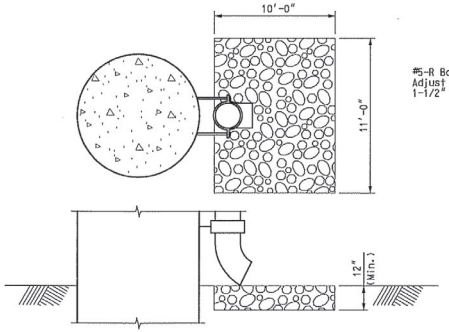

STONE RIPRAP CHECK BASIN DETAIL

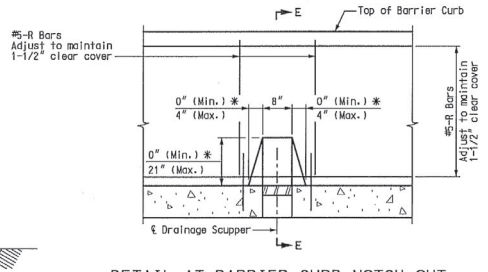

DETAIL AT BARRIER CURB NOTCH-OUT AT DRAINAGE SCUPPER

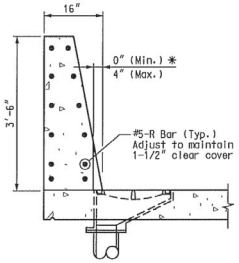

SECTION E-E

Notes:
All cast iron parts were gray iron conforming to the requirements of AASHTO M 105, Class 35B.
Bolts, anchor studs, washers and nuts conforms to the requirements of ASTM A 307 and are galvanized according to AASHTO M 232.
As an alternate, bolts, anchor studs, washers and nuts may be stainless steel according to Sec 1080.
All castings conforms to the requirements of AASHTO M 306.
Structural steel weldments of equal sections and of the same configuration may be substituted for the cast iron scupper frame. Fillet or full penetration welds was used for the weldments. Details were submitted to the Engineer for approval. Structural steel weldments was not substituted for the cast iron scupper grate. Structural steel frames and downspouts were galvanized according to AASHTO M111.
All fiberglass pipe conforms to ASTM D 2996 with a short-time rupture strength hoop tensile stress of 30,000 psi min. Color is concrete gray.
* Drainage scupper may overlap gutterline up to 4" to maintain 1" clearance to top flange of girder.
When scupper overlaps gutterline, the barrier will be notched as shown to allow for removal of the grate.
Payment for scupper, grate, downspout, and all hardware were considered completely covered by the contract unit price for Drainage System (On Structure).

DRAINAGE SYSTEM DETAILS - 2

DATE 8/20/09
ROUTE I-70 STATE MO
DISTRICT 6 SHEET NO. BR95
COUNTY St. Louis City - MO
JOB NO. J6I0984B
CONTRACT ID. 100127-601
PROJECT NO. I-70-5 (315)
BRIDGE NO. A6500

DESCRIPTION | DATE

MISSOURI HIGHWAYS AND TRANSPORTATION COMMISSION
105 WEST CAPITOL
JEFFERSON CITY, MO 65102
1-888-ASK-MODOT (1-888-275-6636)

HNTB
715 KIRK DRIVE
KANSAS CITY, MO 64105-1310
TELEPHONE (816) 472-1201
CERTIFICATE OF AUTHORITY NO. 001270

FINAL PLANS REV. 5

Detailed JUL 2009
Checked JUL 2009

Note: This drawing is not to scale. Follow dimensions.

Sheet No. 95 of 5

9 B B B 5 95 5 9 B 95

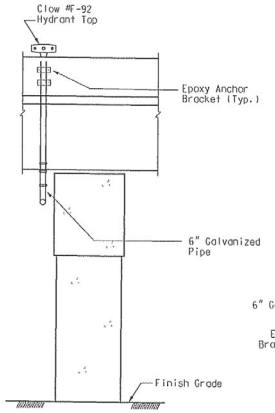

ELEVATION LOOKING NORTH
AT PIER 7

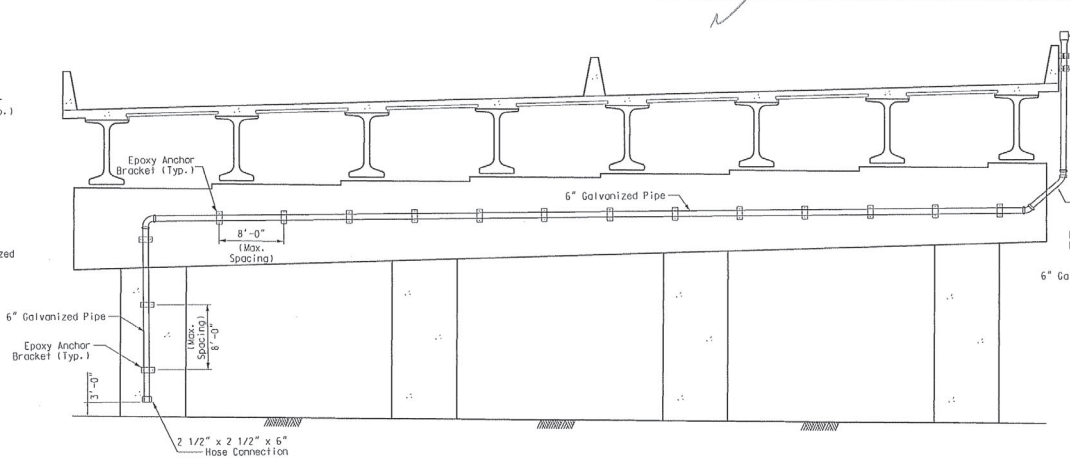

ELEVATION LOOKING EAST
AT PIER 7

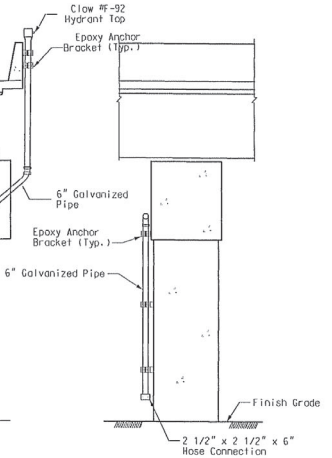

ELEVATION LOOKING NORTH
AT PIER 7

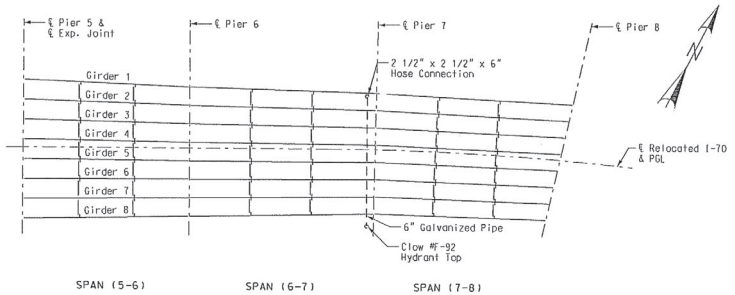

PART FRAMING PLAN

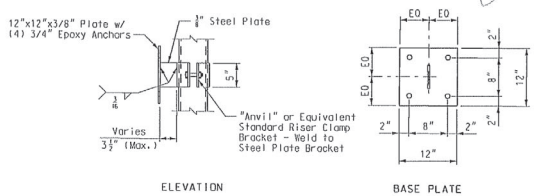

EPOXY ANCHOR BRACKET

General Notes:
1. Payment for pipe, fittings, hangers, anchors and all hardware was included in pay item "Standpipe".

Structural Notes:
1. Steel conforms to the following grades:
   All Angles, Base Plates, Conn. Plates (U.N.O.)----------A36
   Bolts----------A325
2. Fabricator is responsible for the design of connections not designed on the drawings. Any connection that is not shown or is not completely detailed on the structural drawings were designed by a structural engineer, registered in the state of Missouri.
3. The minimum plate thickness are be 3/8". The minimum bolt diameter is 3/4". The minimum weld is 3/16" and the minimum design load on any connection was 10k unless noted otherwise.
4. All elements are hot dip galvanized.

Adhesive Anchors:
1. Adhesive anchors that were provided have the following embedments and allowable working loads (U.N.O.)

	Anchor Dia.	Min. Emb.	Tension Cap (lb.)	Shear Cap (lb.)
Concrete	3/4"	6 5/8"	7,400	4,300

Pipe and Fittings:
1. All pipe is schedule 40 hot-dipped galvanized meeting the requirements of ASTM-A53, NFPA 13, and is factory mutual approved. Piping have grooved ends compatible with fittings.
2. All fittings are standard victaulic grooved joint cast ductile iron conforming to ASTM A-536, Grade 64-45-12. Fittings are hot-dipped galvanized to ASTM A-153.

DRY STANDPIPE

Detailed JUL 2009
Checked JUL 2009

Note: This drawing is not to scale. Follow dimensions.

Sheet No. 96 of 125

T:\de-proj\St_Louis_City\Construction\J6I0984B\Asbuilts\Bridge\B_A6500_096-125_J6I0984B_096.dgn

12:01:56 PM

DATE 8/20/09
ROUTE I-70 | STATE MO
DISTRICT 6 | SHEET NO. BR96
COUNTY St. Louis City - MO
JOB NO. J6I0984B
CONTRACT ID. 100127-601
PROJECT NO. I-70-5 (315)
BRIDGE NO. A6500

DESCRIPTION	DATE

MISSOURI HIGHWAYS AND TRANSPORTATION COMMISSION
105 WEST CAPITOL
JEFFERSON CITY, MO 65102
1-888-ASK-MODOT (1-888-275-6636)

HNTB
715 KIRK DRIVE
KANSAS CITY, MO 64105-1310
TELEPHONE (816) 472-1201
CERTIFICATE OF AUTHORITY NO. 001270

FINAL PLANS REV.

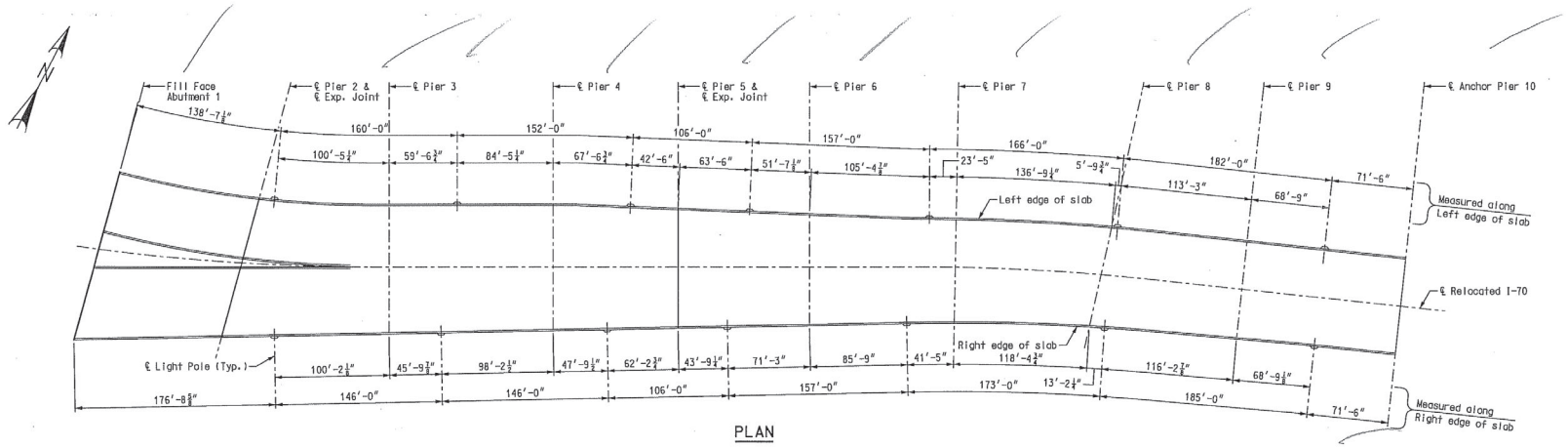

PLAN

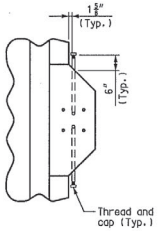

PLAN SHOWING CONDUIT

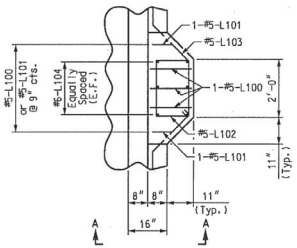

LIGHT POLE MOUNTING PLAN SHOWING REINFORCEMENT

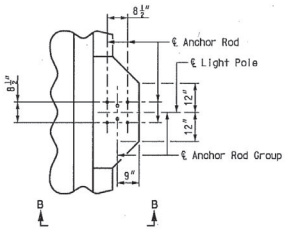

LIGHT POLE MOUNTING PLAN

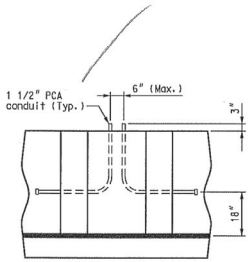

ELEVATION SHOWING CONDUIT

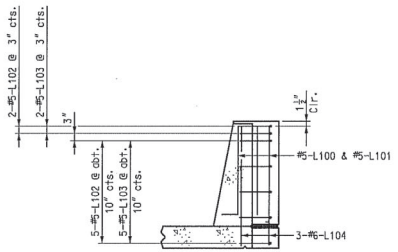

ELEVATION A-A

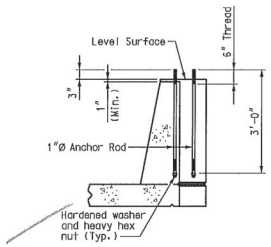

ELEVATION B-B

Notes:
Anchor rods and nuts are AASHTO M314-90 Grade 55. Anchor rods, nuts and washers are fully galvanized.
Anchor rods were placed vertically.
Light poles and wiring are to be furnished in contract J6I0984, by Others.
Cost of anchor rods, nuts, washers and conduits was considered completely covered by contract unit price for "Barrier Curb (Type D)" per linear foot.

BRIDGE LIGHTING LAYOUT

DATE 8/20/09
ROUTE I-70 STATE MO
DISTRICT 6 SHEET NO. BR97
COUNTY St. Louis City - MO
JOB NO. J6I0984B
CONTRACT ID. 100127-601
PROJECT NO. I-70-5 (315)
BRIDGE NO. A6500

DESCRIPTION | DATE

MISSOURI HIGHWAYS AND TRANSPORTATION COMMISSION
105 WEST CAPITOL
JEFFERSON CITY, MO 65102
1-888-ASK-MODOT (1-888-275-6636)

HNTB
715 KIRK DRIVE
KANSAS CITY, MO 64105-1310
TELEPHONE (816) 472-1201
CERTIFICATE OF AUTHORITY NO. 001270

FINAL PLANS REV. M

Detailed JUL 2009
Checked JUL 2009

Note: This drawing is not to scale. Follow dimensions.

Sheet No. 97 of

T L I 9 B B B 97 I 9 B 97

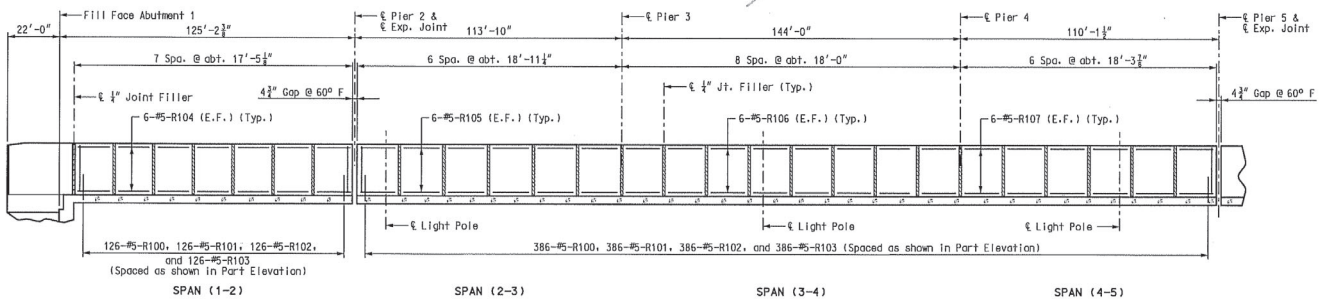

SECTION NEAR BARRIER CURB (TYPE D)

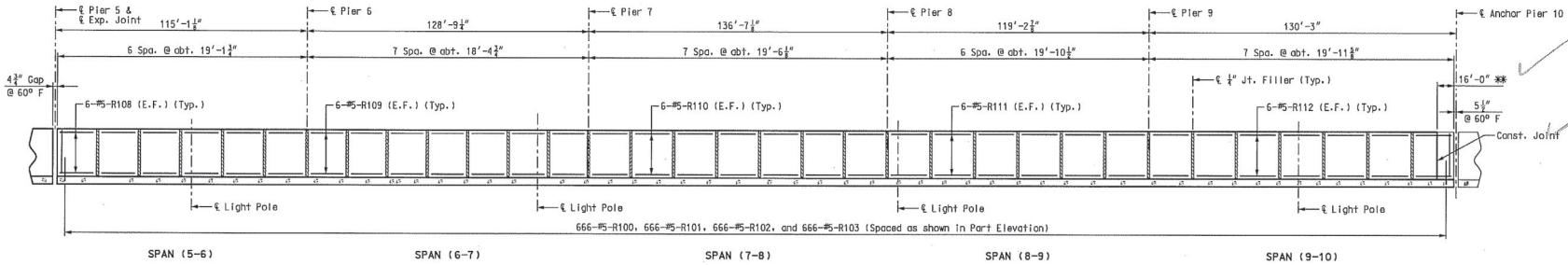

SECTION NEAR BARRIER CURB (TYPE D)

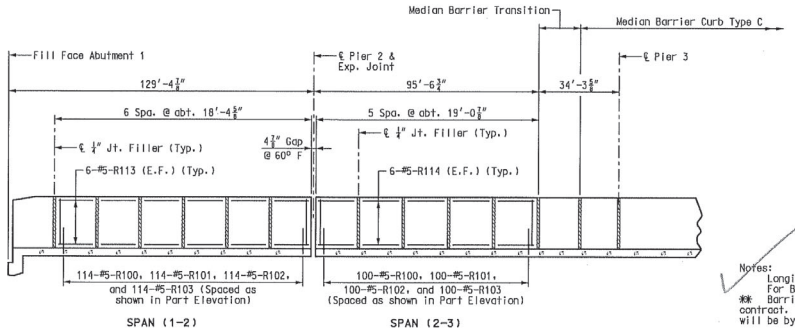

SECTION NEAR BARRIER CURB (TYPE D) RAMP 10

Notes:
Longitudinal dimensions are horizontal.
For Bridge Lighting Layout, see Sheet No. 97.
** Barrier reinforcement within this segment is included in this contract. Forming and placement of concrete within this segment will be by others (Contract J6I0984).

LEFT BARRIER CURB (TYPE D) – ELEVATIONS

DATE 8/20/09
ROUTE I-70 STATE MO
DISTRICT 6 SHEET NO. BR98
COUNTY St. Louis City - MO
JOB NO. J6I0984B
CONTRACT ID. 100127-601
PROJECT NO. I-70-5(315)
BRIDGE NO. A6500

DESCRIPTION | DATE | REV.

MISSOURI HIGHWAYS AND TRANSPORTATION COMMISSION
105 WEST CAPITOL
JEFFERSON CITY, MO 65102
1-888-ASK-MODOT (1-888-275-6636)

HNTB
715 KIRK DRIVE
KANSAS CITY, MO 64105-1310
TELEPHONE (816) 472-1201
CERTIFICATE OF AUTHORITY NO. 001270

FINAL PLANS

Detailed JUL 2009
Checked JUL 2009

Note: This drawing is not to scale. Follow dimensions.

T:\de-proj\St_Louis_City\Construction\J6I0984B\Asbuilts\Bridge\B_A6500_098-125_J6I0984B_098.dgn

3:39:19 PM

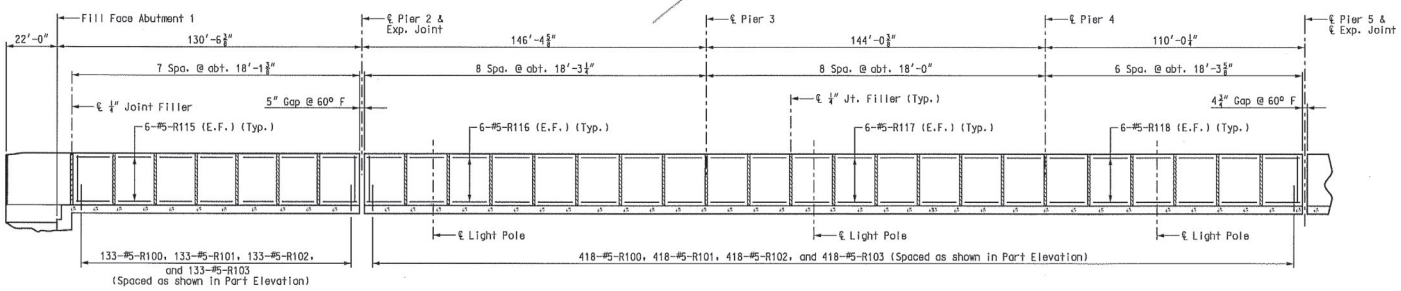

SECTION NEAR BARRIER CURB (TYPE D)

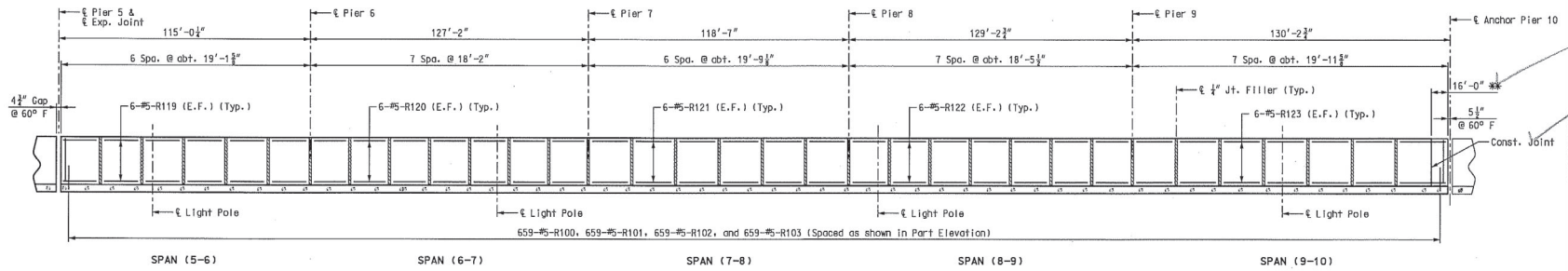

SECTION NEAR BARRIER CURB (TYPE D)

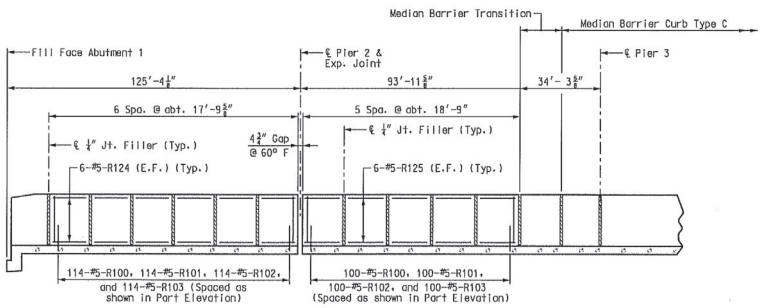

SECTION NEAR BARRIER CURB (TYPE D) RAMP 8

Notes:
Longitudinal dimensions are horizontal.
For Bridge Lighting Layout, see Sheet No. 97.
** Barrier reinforcement within this segment is included in this contract. Forming and placement of concrete within this segment will be by others (Contract J6I0984).

RIGHT BARRIER CURB (TYPE D) – ELEVATIONS

DATE 8/20/09
ROUTE I-70 STATE MO
DISTRICT 6 SHEET NO. BR99
COUNTY St. Louis City - MO
JOB NO. J6I0984B
CONTRACT ID. 100127-601
PROJECT NO. I-70-5(315)
BRIDGE NO. A6500

DESCRIPTION | DATE | REV.

MISSOURI HIGHWAYS AND TRANSPORTATION COMMISSION
105 WEST CAPITOL
JEFFERSON CITY, MO 65102
1-888-ASK-MODOT (1-888-275-6636)

HNTB
715 KIRK DRIVE
KANSAS CITY, MO 64105-1310
TELEPHONE (816) 472-1201
CERTIFICATE OF AUTHORITY NO. 001270

FINAL PLANS

Detailed JUL 2009
Checked JUL 2009

Note: This drawing is not to scale. Follow dimensions.

T:\de-proj\St_Louis_City\Construction\J6I0984B\Asbuilts\Bridge\B_A6500_099-125_J6I0984B_099.dgn 3:40:57 PM

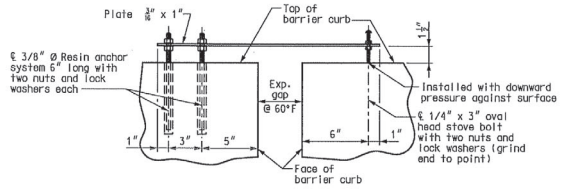

PART ELEVATION OF BARRIER CURB
SHOWING MOVEMENT GAUGE

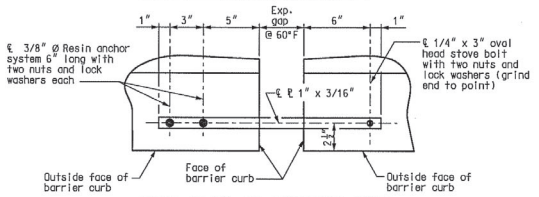

PART PLAN OF BARRIER CURB
SHOWING MOVEMENT GAUGE

Notes:
A movement gauge was provided on one side of bridge at all barrier curb expansion joints.
All steel was galvanized.
Cost of movement gauge, complete-in-place, was completely covered by the contract unit price for Barrier Curb (Type D).

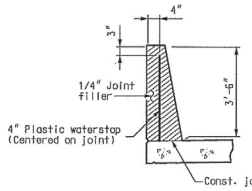

DETAILS OF PLASTIC WATERSTOP

Notes:
Plastic waterstop was placed in all barrier curb filled joints, except structures with superelevation, use on all lower barrier curb joints only.
Cost of plastic waterstop, complete-in-place, was completely covered by the contract unit price for Barrier Curb (Type D).

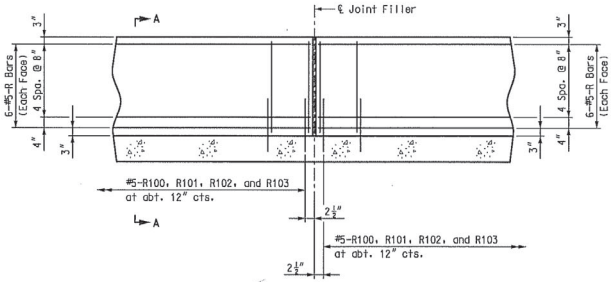

PART ELEVATION
(Cast-in-place Conventional Forming)

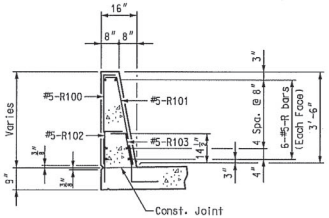

PART SECTION A–A

Notes:
Use a minimum lap of 2'-11" for #5 horizontal barrier curb (Type D) bars.
The cross-sectional area above the slab = 3.52 sq. ft. (based on a 2% cross slope). Cross-sectional area varied at superelevated sections.

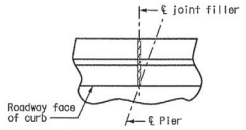

PART PLAN SHOWING
BARRIER CURB JOINT

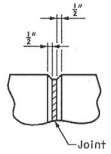

FILLED JOINT DETAIL

Notes:
Concrete in the barrier curb (Type D) was Class B-1.
Top of barrier curb (Type D) was built parallel to grade with barrier curb joints (except at abutment) normal to grade.
All exposed edges of barrier curb (Type D) was either a 1/2" radius or a 3/8" bevel, unless otherwise noted.
Payment for all concrete and reinforcement, complete-in-place, was completely covered by the contract unit price for Barrier Curb (Type D) per linear foot.
Measurement of barrier curb (Type D) is to the nearest linear foot for each structure, measured along the outside top of slab from end of Wing to end of slab at Anchor Pier 10.
Concrete traffic barrier delineators was placed on top of the barrier curb (Type D) as shown on Missouri Standard Plans 617.10 and in accordance with Sec 617. Concrete traffic barrier delineators was considered completely covered by the contract unit price for "Barrier Curb (Type D)".
The curb was cured by application of Type 1-D or Type 2 Liquid Membrane-Forming Compound in accordance with Sec 1055. Surface sealing for concrete in accordance with Sec 703 is not required. Application of linseed oil at the contractor's expense is permitted.

BARRIER CURB (TYPE D) – DETAILS

DATE 8/20/09
ROUTE I-70 | STATE MO
DISTRICT 6 | SHEET NO. BR100
COUNTY St. Louis City - MO
JOB NO. J6I0984B
CONTRACT ID. 100127-601
PROJECT NO. I-70-5(315)
BRIDGE NO. A6500

DESCRIPTION | DATE

MISSOURI HIGHWAYS AND TRANSPORTATION COMMISSION
MoDOT
105 WEST CAPITOL
JEFFERSON CITY, MO 65102
1-888-ASK-MODOT (1-888-275-6636)

HNTB
715 KIRK DRIVE
KANSAS CITY, MO 64105-1310
TELEPHONE (816) 472-1201
CERTIFICATE OF AUTHORITY NO. 001270

FINAL PLANS

Detailed JUL 2009
Checked JUL 2009

Note: This drawing is not to scale. Follow dimensions.

T:\de-proj\St_Louis_City\Construction\J6I0984B\Asbuilts\Bridge\B_A6500_100-125_J6I0984B_100.dgn

1:42:55 PM

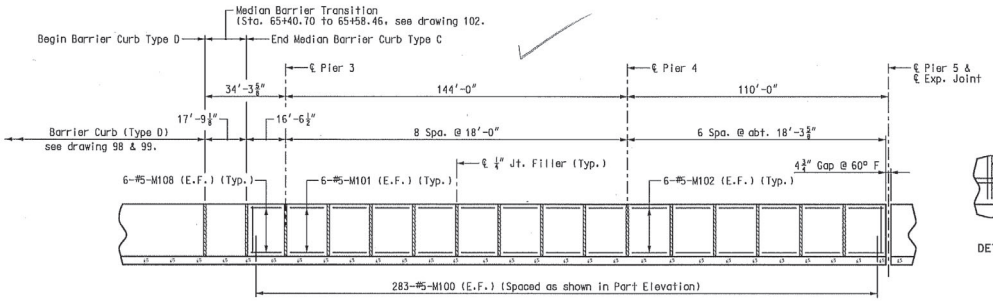

SPAN (2-3) SPAN (3-4) SPAN (4-5)

SECTION NEAR MEDIAN BARRIER CURB (TYPE C)

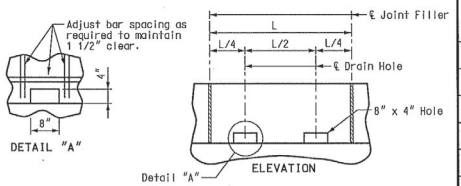

DRAIN HOLE DETAILS
SPANS (6-7) THRU (8-9)

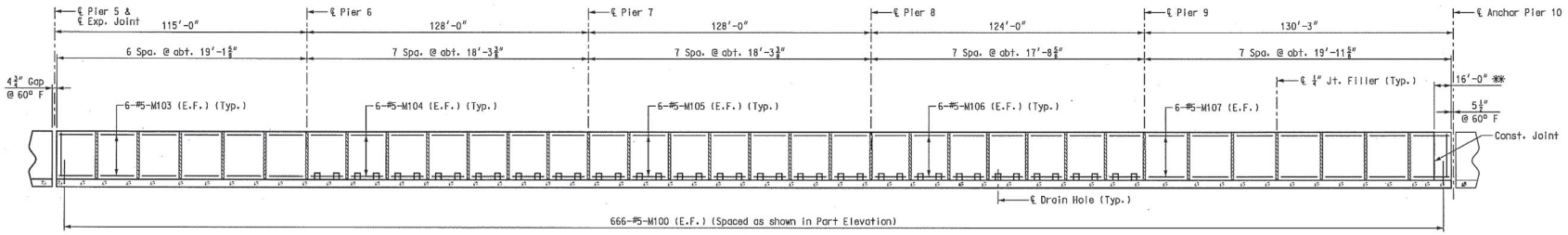

SPAN (5-6) SPAN (6-7) SPAN (7-8) SPAN (8-9) SPAN (9-10)

SECTION NEAR MEDIAN BARRIER CURB (TYPE C)

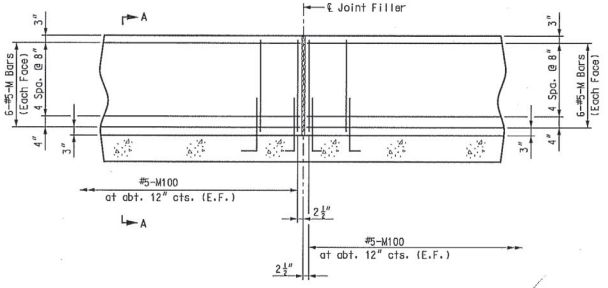

PART SECTION NEAR MEDIAN BARRIER CURB
(CAST-IN-PLACE CONVENTIONAL FORMING)

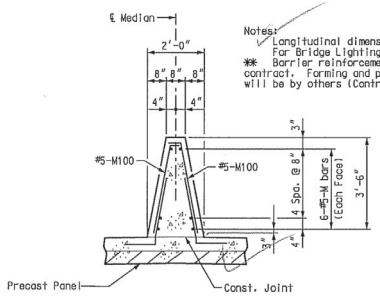

Notes:
Longitudinal dimensions are horizontal.
For Bridge Lighting Layout, see Sheet No. 97.
** Barrier reinforcement within this segment is included in this contract. Forming and placement of concrete within this segment will be by others (Contract J610984).

PART SECTION A-A

Notes:
Use a minimum lap of 2′-11″ for #5 horizontal median barrier curb (Type C) bars.

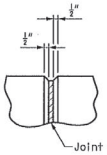

FILLED JOINT DETAIL

Notes:
Cost of furnishing and installing the hooked bars were completely covered by the contract unit price for Median Barrier Curb (Type C).
An epoxy coated #5 Grade 60 reinforcing bar 3′-0″ long was substituted for the threaded rod.
Concrete traffic barrier delineators were placed on top of the median barrier curb (Type C) as shown on Missouri Standard Plans 617.10 and in accordance with Sec 617. Concrete traffic barrier delineators were considered completely covered by the contract unit price for "Median Barrier Curb (Type C)".
Concrete in the median barrier curb (Type C) was Class B-1.
Top of median barrier curb (Type C) was built parallel to grade with median barrier curb joints normal to grade.
All exposed edges of median barrier curb (Type C) was a 1/2″ radius bevel, unless otherwise noted.
Payment for all concrete and reinforcement, complete-in-place, was completely covered by the contract unit price for Median Barrier Curb (Type C) per linear foot.
Measurement of median barrier curb (Type C) is to the nearest linear foot for each structure, measured along the top of slab at ℄ Relocated I-70 from median barrier transition to end of slab at Anchor Pier 10.
Concrete traffic barrier delineators were placed on top of the median barrier curb (Type C) as shown on Missouri Standard Plans 617.10 and in accordance with Sec 617. Concrete traffic barrier delineators were considered completely covered by the contract unit price for "Median Barrier Curb (Type C)".
The curb was cured by application of Type 1-D Liquid Membrane-Forming Compound in accordance with Sec 1055. Surface sealing for concrete in accordance with Sec 703 is not required. Application of linseed oil at the contractors expense was permitted.
Longitudinal dimensions are horizontal.
** Barrier reinforcement within this segment is included in this contract. Forming and placement of concrete within this segment will be by others (Contract J610984).

MEDIAN BARRIER CURB (TYPE C)

DATE 8/20/09
ROUTE I-70 | STATE MO
DISTRICT 6 | SHEET NO. BR101
COUNTY St. Louis City - MO
JOB NO. J610984B
CONTRACT ID. 100127-601
PROJECT NO. I-70-5(315)
BRIDGE NO. A6500

DESCRIPTION | DATE

MISSOURI HIGHWAYS AND TRANSPORTATION COMMISSION
105 WEST CAPITOL
JEFFERSON CITY, MO 65102
1-888-ASK-MODOT (1-888-275-6636)

HNTB
715 KIRK DRIVE
KANSAS CITY, MO 64105-1310
TELEPHONE (816) 472-1201
CERTIFICATE OF AUTHORITY NO. 001270

FINAL PLANS

REV.

Detailed JUL 2009
Checked JUL 2009

Note: This drawing is not to scale. Follow dimensions.

Sheet No. 101 of 125

T:\de-proj\St_Louis_City\Construction\J610984B\Asbuilts\Bridge\B_A6500_101-125_J610984B_101.dgn 1:38:46 PM

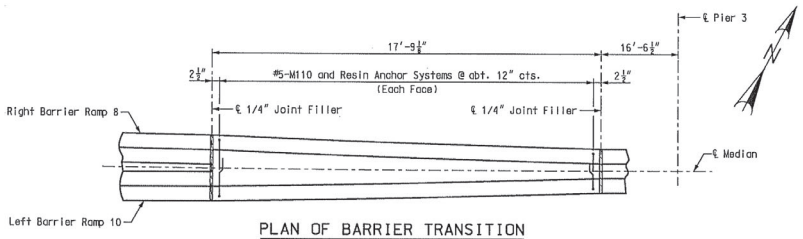

PLAN OF BARRIER TRANSITION

Note: M111 bars not shown for clarity.

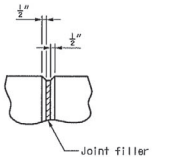

FILLED JOINT DETAIL

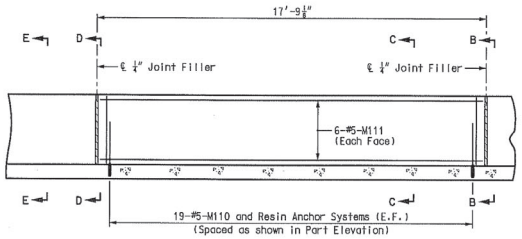

ELEVATION OF BARRIER TRANSITION

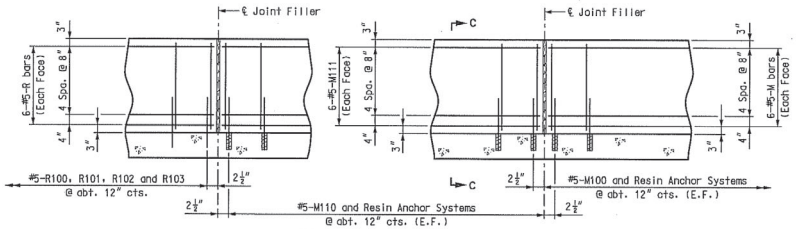

PART ELEVATION

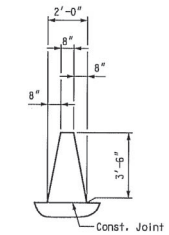

ELEVATION B-B

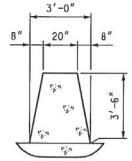

SECTION D-D

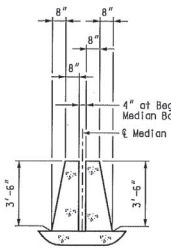

SECTION E-E

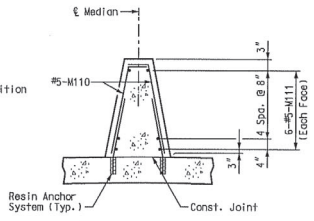

SECTION C-C

Notes:
Use a minimum lap of 2′-11″ for #5 horizontal median barrier curb transition (Type C) bars.

Notes:
Longitudinal dimensions are horizontal.
Concrete in the median barrier curb Transition (Type C) was Class B-1.
The contractor used one of the qualified resin anchor systems in accordance with Sec 1039.
Cost of furnishing and installing the resin anchor system complete-in-place was considered completely covered by the contract unit price for Median Barrier Curb Transitional(Type C).
The minimum embedment depth in concrete with f′c = 4,000 psi for the resin anchor system was required to meet the minimum ultimate pullout strength in accordance with Sec 1039 but was not be less than 5″ or greater than 5 1/2″.
An epoxy coated #5 Grade 60 reinforcing bar 3′-0″ long was substituted for the threaded rod.
Top of median barrier curb transition (Type C) was built parallel to grade with median barrier curb transition (Type C) joints normal to grade.
All exposed edges of median barrier curb transition (Type C) was either a 1/2″ radius or a 3/8″ bevel, unless otherwise noted.
Payment for all concrete and reinforcement, complete-in-place was completely covered by the contract unit price for Median Barrier Curb Transition (Type C) per linear foot.
Measurement of Median Barrier Curb Transition (Type C) is to the nearest linear foot, measured along the top of the slab.
Concrete traffic barrier delineators were placed on top of the median barrier curb transition (Type C) as shown on Missouri Standard Plans 617.10 and in accordance with Sec 617. Concrete traffic barrier delineators were considered completely covered by the contract unit price for "Median Barrier Curb Transition (Type C)".
The curb was cured by application of Type 1-D or Type 2 Liquid Membrane-forming Compound in accordance with Sec 1055. Surface sealing for concrete in accordance with Sec 703 is not required. Application of linseed oil at the contractor's expense is permitted.

MEDIAN BARRIER CURB TRANSITION (TYPE C)

DATE 8/20/09
ROUTE I-70 | STATE MO
DISTRICT 6 | SHEET NO. BR102
COUNTY St. Louis City - MO
JOB NO. J6I0984B
CONTRACT ID. 100127-601
PROJECT NO. I-70-5(315)
BRIDGE NO. A6500

DESCRIPTION | DATE

MISSOURI HIGHWAYS AND TRANSPORTATION COMMISSION
105 WEST CAPITOL
JEFFERSON CITY, MO 65102
1-888-ASK-MODOT (1-888-275-6636)

HNTB
715 KIRK DRIVE
KANSAS CITY, MO 64105-1310
TELEPHONE (816) 472-1201
CERTIFICATE OF AUTHORITY NO. 001270

FINAL PLANS

REV.

Detailed JUL 2009
Checked JUL 2009

Note: This drawing is not to scale. Follow dimensions.

I:\de-proj\St_Louis_City\Construction\J6I0984B\Asbuilts\Bridge\B_A6500_102-125_J6I0984B_102.dgn

3:58:35 PM

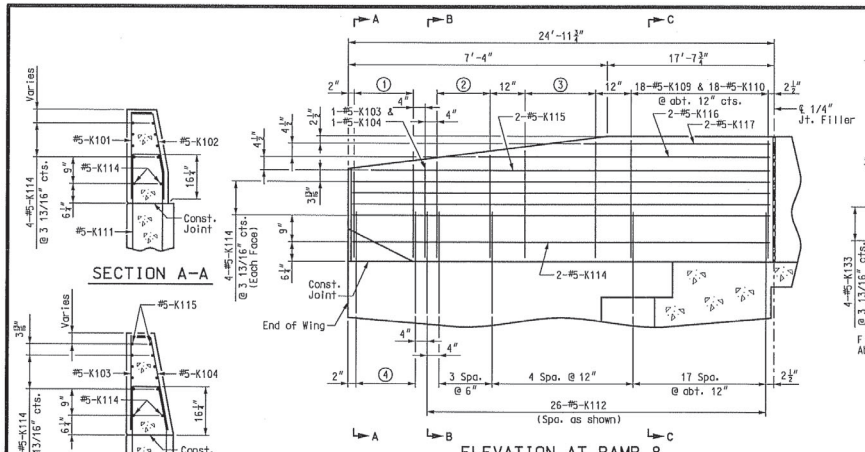

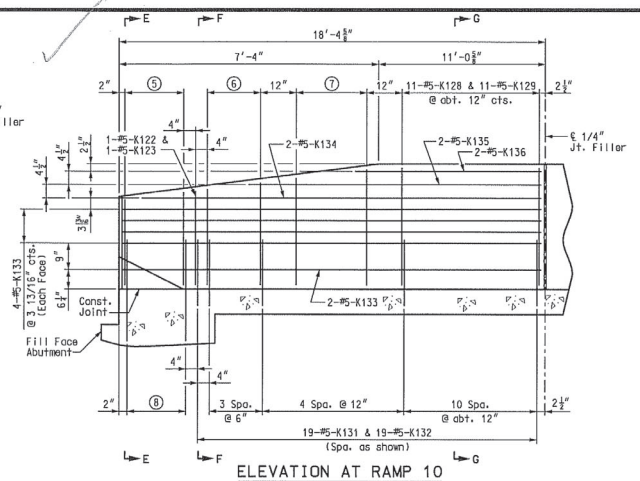

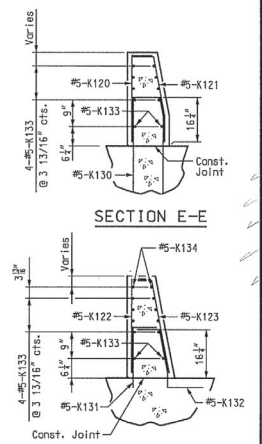

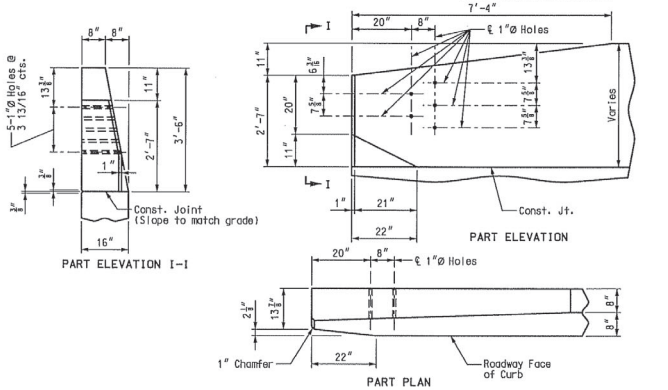

DETAILS OF GUARD RAIL ATTACHMENT

Note: This drawing is not to scale. Follow dimensions.

① 6-#5-K101 & 6-#5-K102 @ 4" cts.

② 4-#5-K105 & 4-#5-K106 @ 6" cts.

③ 3-#5-K107 & 3-#5-K108 @ 12" cts.

④ 6-#5-K111 @ 4" cts.

⑤ 6-#5-K120 & 6-#5-K121 @ 4" cts.

⑥ 4-#5-K124 & 4-#5-K125 @ 6" cts.

⑦ 3-#5-K126 & 3-#5-K127 @ 12" cts.

⑧ 6-#5-K130 @ 4" cts.

Notes:
Concrete traffic barrier delineators were placed on top of the barrier curb (Type D) as shown on Missouri Standard Plans 617.10 and in accordance with Sec 617. Concrete traffic barrier delineators were considered completely covered by the contract unit price for "Barrier Curb (Type D)". Barrier Walls at the end of Ramp 8 will be installed by others (Contract J6U1086).
Guard rail attachment at Ramp 10 barrier end posts. Contract J6U1086 (By others).

LEFT BARRIER CURB (TYPE D) AT ABUTMENT 1

Detailed JUL 2009
Checked JUL 2009

Sheet No. 103 of 125

T:\de-proj\St_Louis_City\Construction\J6I0984B\Asbuilts\Bridge\B_A6500_103-125_J6I0984B_103.dgn

12:41:51 PM

DATE 8/20/09
ROUTE I-70
STATE MO
DISTRICT 6
SHEET NO. BR103
COUNTY St. Louis City - MO
JOB NO. J6I0984B
CONTRACT ID. 100127-601
PROJECT NO. I-70-5(315)
BRIDGE NO. A6500

DESCRIPTION | DATE

MISSOURI HIGHWAYS AND TRANSPORTATION COMMISSION
105 WEST CAPITOL
JEFFERSON CITY, MO 65102
1-888-ASK-MODOT (1-888-275-6636)

HNTB
715 KIRK DRIVE
KANSAS CITY, MO 64105-1310
TELEPHONE (816) 472-1201
CERTIFICATE OF AUTHORITY NO. 001270

FINAL PLANS

REV.

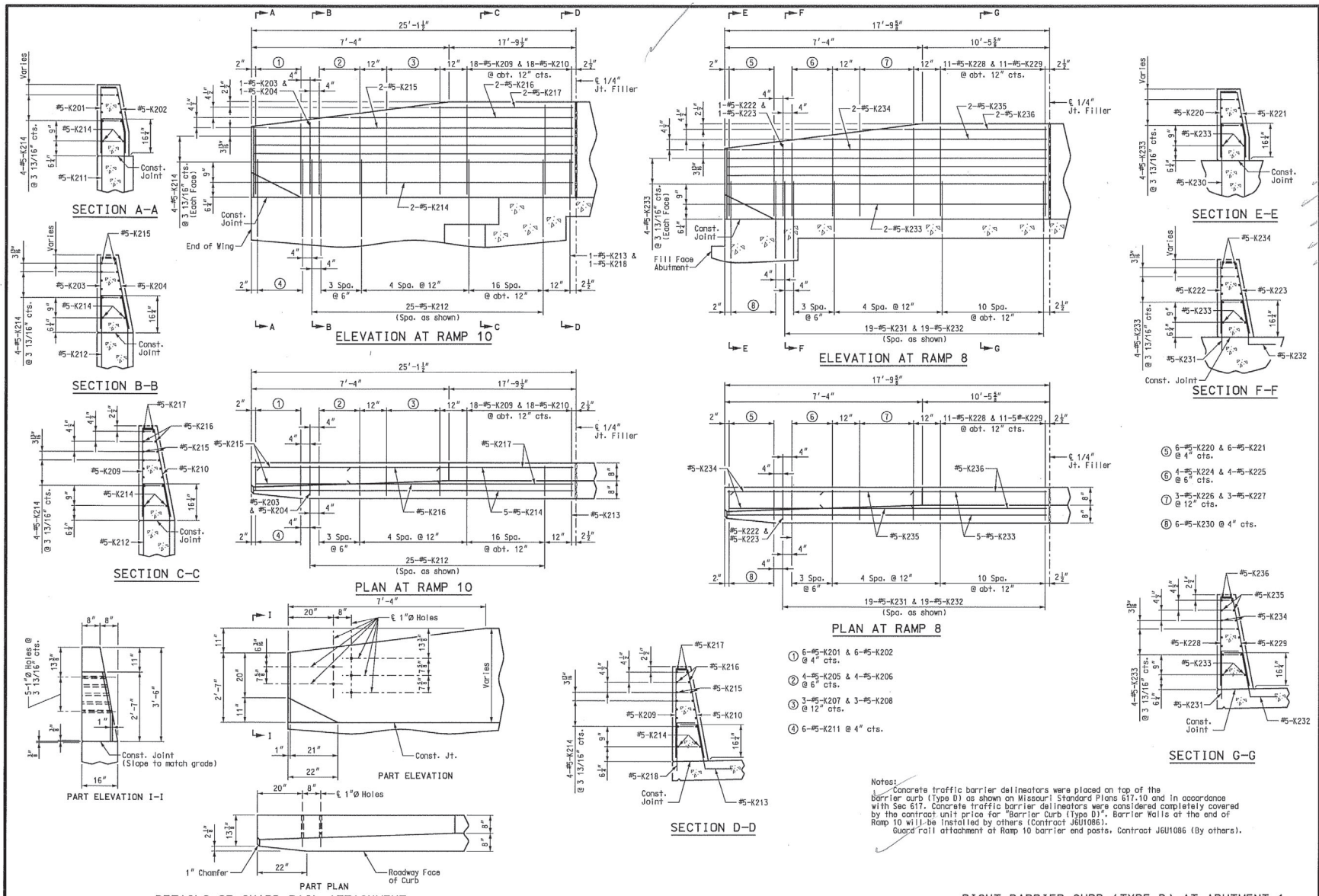

① 6-#5-K201 & 6-#5-K202 @ 4" cts.
② 4-#5-K205 & 4-#5-K206 @ 6" cts.
③ 3-#5-K207 & 3-#5-K208 @ 12" cts.
④ 6-#5-K211 @ 4" cts.
⑤ 6-#5-K220 & 6-#5-K221 @ 4" cts.
⑥ 4-#5-K224 & 4-#5-K225 @ 6" cts.
⑦ 3-#5-K226 & 3-#5-K227 @ 12" cts.
⑧ 6-#5-K230 @ 4" cts.

Notes:
1. Concrete traffic barrier delineators were placed on top of the barrier curb (Type D) as shown on Missouri Standard Plans 617.10 and in accordance with Sec 617. Concrete traffic barrier delineators were considered completely covered by the contract unit price for "Barrier Curb (Type D)". Barrier Walls at the end of Ramp 10 will be installed by others (Contract J6U1086).
2. Guard rail attachment at Ramp 10 barrier end posts, Contract J6U1086 (By others).

DETAILS OF GUARD RAIL ATTACHMENT

RIGHT BARRIER CURB (TYPE D) AT ABUTMENT 1

Detailed JUL 2009
Checked JUL 2009

Note: This drawing is not to scale. Follow dimensions.

Sheet No. 104 of 125

DATE 8/20/09
ROUTE I-70 | STATE MO
DISTRICT 6 | SHEET NO. BR104
COUNTY St. Louis City - MO
JOB NO. J6I0984B
CONTRACT ID. 100127-601
PROJECT NO. I-70-5(315)
BRIDGE NO. A6500

DESCRIPTION | DATE | REV.

FINAL PLANS

MISSOURI HIGHWAYS AND TRANSPORTATION COMMISSION
105 WEST CAPITOL
JEFFERSON CITY, MO 65102
1-888-ASK-MODOT (1-888-275-6636)

HNTB
715 KIRK DRIVE
KANSAS CITY, MO 64105-1310
TELEPHONE (816) 472-1201
CERTIFICATE OF AUTHORITY NO. 001270

T:\de-proj\St_Louis_City\Construction\J6I0984B\Asbuilts\Bridge\B_A6500_104-125_J6I0984B_104.dgn 12:54:10 PM

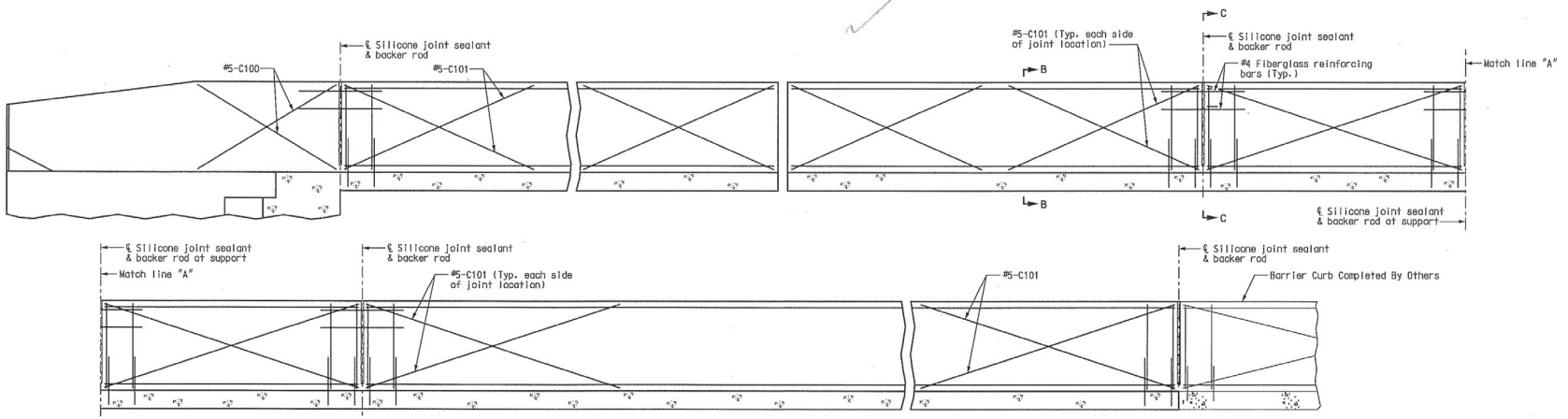

TYPICAL SECTION NEAR LEFT BARRIER CURB (TYPE D) AT SUPPORT LOCATIONS
SLIP-FORM BRIDGE BARRIER CURB (TYPE D)

Notes:
Top of barrier curb (Type D) was built parallel to grade with barrier curb joints (except at abutment) normal to grade.
Payment for all concrete and reinforcement, complete-in-place, was considered completely covered by the contract unit price for Barrier Curb (Type D) per linear foot.
Concrete in the barrier curb (Type D) was Class B-1.
Measurement of barrier curb (Type D) is to the nearest linear foot for each structure, measured along the outside top of slab from end of wing to end of slab at Anchor Pier 10.
The curb was cured by application of Type 1-D Liquid Membrane-Forming Compound in accordance with Sec 1055. Surface sealing for concrete in accordance with Sec 703 is not required. Application of linseed oil at the contractor's expense is permitted.

Notes:
Joint sealant and backer rods was used on all slip-form barrier curbs instead of joint filler and was in accordance with Sec 717 for silicone joint sealant for saw cut and formed joints.
Plastic waterstop was not used with slip-form option.
C Bars (Slip-form option only) was used in addition to cast-in-place conventional forming reinforcement for bridge barrier curb (Type D).
For Slip-Form option, all sides of the barrier curb (Type D) have a vertically broomed finish and the curb top have a transversely broomed finish.
Concrete traffic barrier delineators was placed on top of the barrier curb (Type D) as shown on Missouri Standard Plans 617.10 and in accordance with Sec 617. Concrete traffic barrier delineators was considered completely covered by the contract unit price for "Barrier Curb (Type D)".

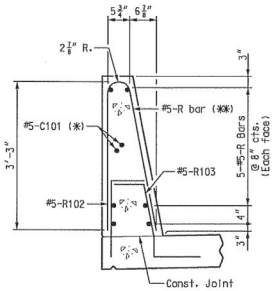

PART SECTION B-B

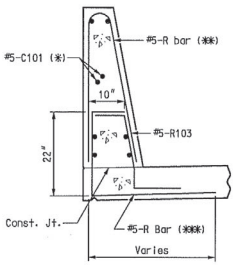

PART SECTION B-B
(Optional #5-R Bar shown)

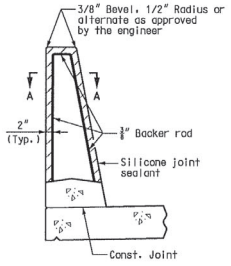

SECTION THRU JOINT

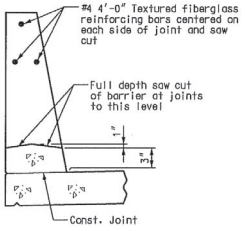

PART SECTION C-C

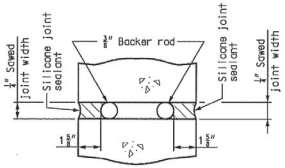

SECTION A-A

Note:
Cost of silicone joint sealant and backer rod, complete-in-place, was considered completely covered by the contract unit price for Barrier Curb (Type D).

Notes:
(*) Each side of joint location (except in transition).
(**) The R100 and R101 bar combination was furnished as two bars. (All dimensions are out-to-out.)
(***) The R102 bar and #5 bottom transverse slab bar in cantilever (P/S panels only) combination may be furnished as one bar at the contractor's option.

(Left barrier curb shown, right barrier curb similar.)

Detailed JUL 2009
Checked JUL 2009

Note: This drawing is not to scale. Follow dimensions.

Sheet No. 105 of 125

SLIP-FORM BARRIER CURB (TYPE D)

DATE 8/20/09
ROUTE I-70
STATE MO
DISTRICT 6
SHEET NO. BR105
COUNTY St. Louis City - MO
JOB NO. J6I0984B
CONTRACT ID. 100127-601
PROJECT NO. I-70-5(315)
BRIDGE NO. A6500

DESCRIPTION | DATE

MISSOURI HIGHWAYS AND TRANSPORTATION COMMISSION
105 WEST CAPITOL
JEFFERSON CITY, MO 65102
1-888-ASK-MODOT (1-888-275-6636)

HNTB
715 KIRK DRIVE
KANSAS CITY, MO 64105-1310
TELEPHONE (816) 472-1201
CERTIFICATE OF AUTHORITY NO. 001270

FINAL PLANS

REV.

T:\de-proj\St_Louis_City\Construction\J6I0984B\Asbuilts\Bridge\B_A6500_105-125_J6I0984B_105.dgn 7:39:34 AM

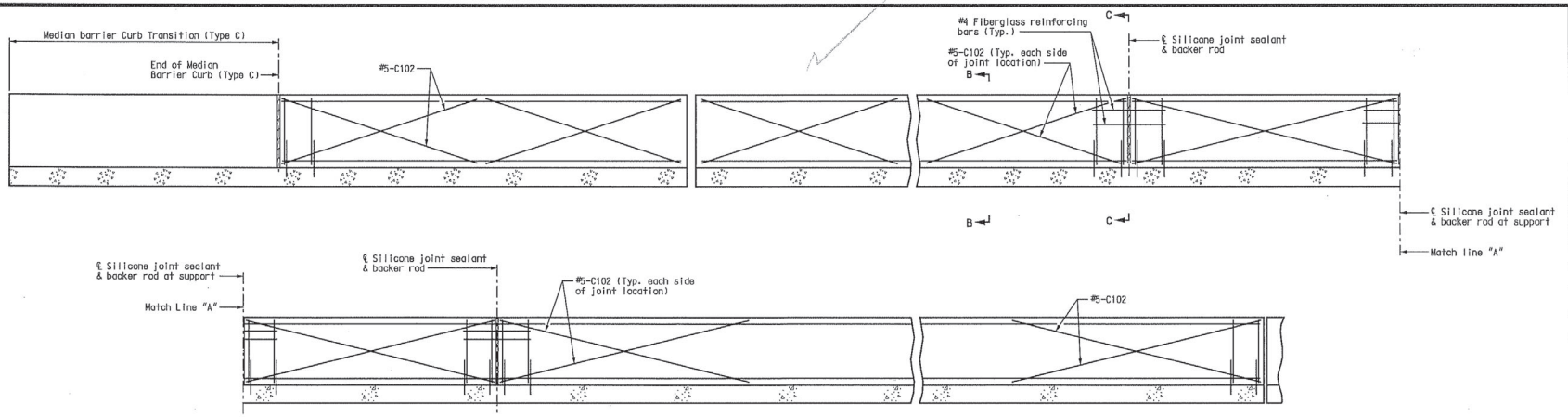

TYPICAL SECTION NEAR MEDIAN BARRIER CURB (TYPE C) AT SUPPORT LOCATIONS

SLIP-FORM MEDIAN BARRIER CURB (TYPE C)

Notes:

Top of median barrier curb (Type C) was built parallel to grade with median barrier curb joints normal to grade.

Payment for all concrete and reinforcement, complete -in-place, was considered completely covered by the contract unit price for Median Barrier Curb (Type C) per linear foot.

Concrete in the median barrier curb (Type C) was Class B-1.

Measurement of median barrier curb (Type C) is to the nearest linear foot for each structure, measured along the top of slab at ℄ Relocated I-70 from median barrier transition to end of slab at Anchor Pier 10.

Concrete traffic barrier delineators are placed on top of the median barrier curb (Type C) as shown on Missouri Standard Plans 617.10 and in accordance with Sec 617. Concrete traffic barrier delineators are considered completely covered by the contract unit price for "Median Barrier Curb (Type C)".

The minimum embedment depth in concrete with f'c = 4,000 psi for the resin anchor system was required to meet the minimum ultimate pullout strength in accordance with Sec 1039 but was not less than 5" or greater than 5 1/2".

The curb was cured by application of Type 1-D or Type 2 Liquid Membrane-Forming Compound in accordance with Sec 1055. Surface sealing for concrete in accordance with Sec 703 is not required. Application of linseed oil at the contractor's expense is permitted.

Notes:

Joint sealant and backer rods are used on all slip-form median barrier curbs (Type C) instead of joint filler and are in accordance with Sec 717 for silicone joint sealant for saw cut and formed joints.

Plastic waterstop was not used with slip-form options.

For Slip-Form Option, all sides of median barrier curb (Type C) have a vertically broomed finish and the curb top have a transversely broomed finish.

C Bars (Slip-form option only) were used in addition to cast-in-place conventional forming reinforcement for bridge median barrier curb (Type C).

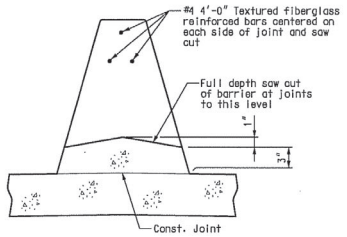

PART SECTION C-C

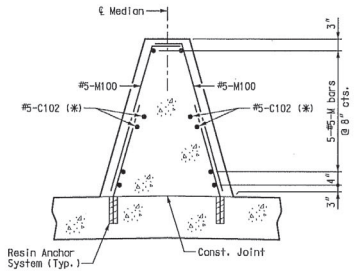

PART SECTION B-B

Note: (*) Each side of joint location.

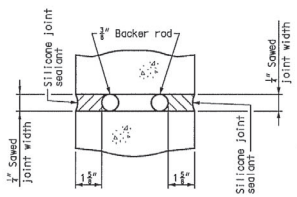

SECTION A-A

Note:

Cost of silicone joint sealant and backer rod, complete-in-place, was considered completely covered by the contract unit price for Median Barrier Curb (Type C).

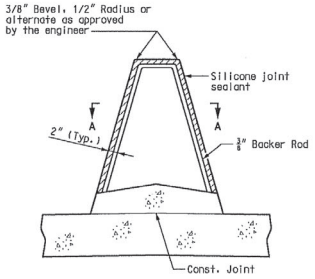

SECTION THRU JOINT

SLIP-FORM MEDIAN BARRIER CURB (TYPE C)

DATE 8/20/09
ROUTE I-70 STATE MO
DISTRICT 6 SHEET NO. BR106
COUNTY St. Louis City - MO
JOB NO. J6I0984B
CONTRACT ID. 100127-601
PROJECT NO. I-70-5(315)
BRIDGE NO. A6500

DESCRIPTION | DATE

MISSOURI HIGHWAYS AND TRANSPORTATION COMMISSION
105 WEST CAPITOL
JEFFERSON CITY, MO 65102
1-888-ASK-MODOT (1-888-275-6636)

HNTB
715 KIRK DRIVE
KANSAS CITY, MO 64105-1310
TELEPHONE (816) 472-1201
CERTIFICATE OF AUTHORITY NO. 001270

FINAL PLANS

REV.

Detailed JUL 2009
Checked JUL 2009

Note: This drawing is not to scale. Follow dimensions.

T:\de-proj\St_Louis_City\Construction\J6I0984B\Asbuilts\Bridge\B_A6500_106-125_J6I0984B_106.dgn 7:41:21 AM

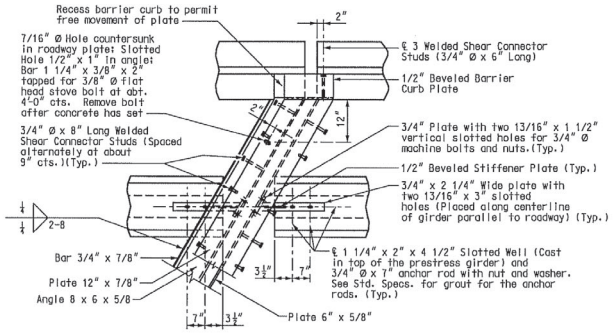

PART PLAN

Note: Concrete vent holes not shown for clarity.

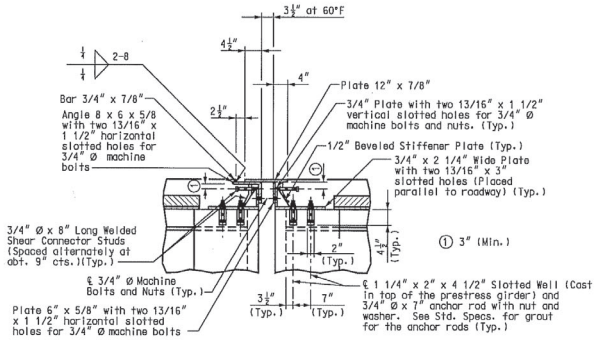

PART SECTION AT PIER

(Horizontal dimensions shown are perpendicular to ℄ of joint.)

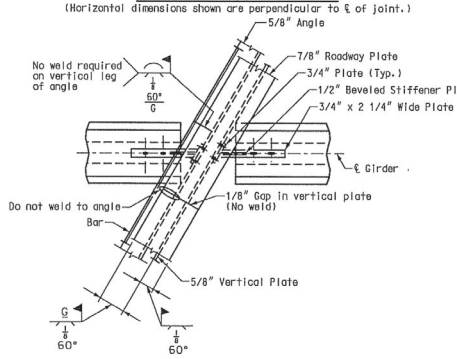

PERMISSIBLE FIELD SPLICE AT PIER

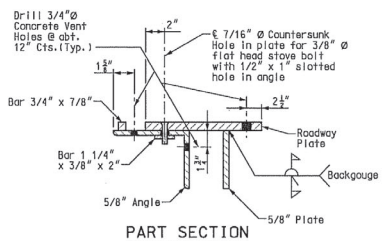

PART SECTION (TYPICAL)

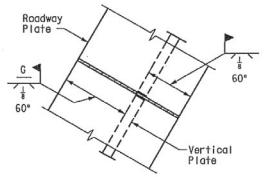

PART PLAN ROADWAY PLATE AND VERTICAL PLATE

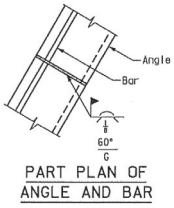

PART PLAN OF ANGLE AND BAR

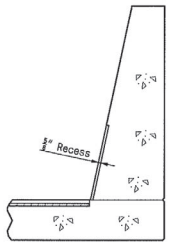

PART PLAN B–B

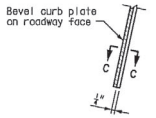

PART ELEVATION AT END OF BEVELED CURB PLATE

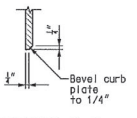

SECTION C–C

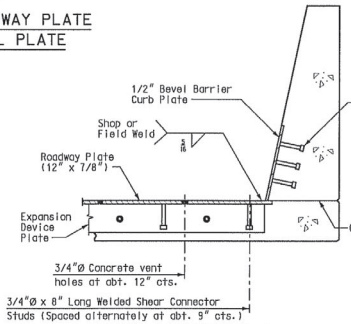

PART SECTION A–A

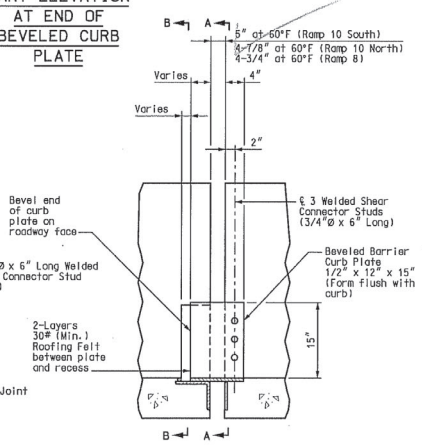

ELEVATION OF BARRIER CURB

(Horizontal dimensions shown are along face of barrier)

DETAILS OF FLAT PLATE EXPANSION DEVICES AT PIER 2 (RAMP 8 & RAMP 10)

GENERAL NOTES:

1. Expansion device was fabricated in one section, except for stage construction and when the length is over 50 feet. A complete joint penetration groove weld splice was required. Welds were ground flush to provide a smooth surface. The expansion device was fabricated and installed to the crown and grade of the roadway.
2. Plan dimensions are based on installation at 60°F. The expansion gap and other dimensions were increased or decreased 1/4" for each 10° fall or rise in temperature at installation.
3. Material for the expansion device was ASTM A709 Grade 36 structural steel. Shear connector studs for the expansion device were in accordance with Sec 1037. Anchor Rods were ASTM F1554 Grade 36 Material.
4. Structural steel for the expansion device and curb plate was coated with a minimum of two coats of inorganic zinc primer (5 mils minimum) in accordance with ASTM A123. Shear connector studs were not be protected from overspray.
5. Payment for furnishing, coating or galvanizing and installing the structural steel for the expansion device was considered completely covered by the contract unit price for Expansion Device (Flat Plate) per linear foot.
6. Concrete was forced under and around flat plate, anchors and angles. Proper consolidation was achieved by localized internal vibration. Finishing of the concrete was achieved by hand finishing within one foot of the expansion device. The vertical and horizontal concrete vent holes were offset from each other. Did not alternate holes at the 12" spacing.
7. Complete joint penetration welds utilized in the fabrication of the expansion device were nondestructively tested by an approved method.
8. For Details of Expansion Device at Median Barrier Curb, see Sheet No. 109.

DATE 8/20/09
ROUTE I-70 | STATE MO
DISTRICT 6 | SHEET NO. BR107
COUNTY St. Louis City - MO
JOB NO. J6I0984B
CONTRACT ID. 100127-601
PROJECT NO. I-70-5(315)
BRIDGE NO. A6500

DESCRIPTION | DATE

MISSOURI HIGHWAYS AND TRANSPORTATION COMMISSION
105 WEST CAPITOL
JEFFERSON CITY, MO 65102
1-888-ASK-MODOT (1-888-275-6636)

HNTB
715 KIRK DRIVE
KANSAS CITY, MO 64105-1310
TELEPHONE (816) 472-1201
CERTIFICATE OF AUTHORITY NO. 001270

FINAL PLANS

REV.

Detailed JUL 2009
Checked JUL 2009

Note: This drawing is not to scale. Follow dimensions.

Sheet No. 107 of 125

T:\de-proj\St_Louis_City\Construction\J6I0984B\Asbuilts\Bridge\B_A6500_107-125_J6I0984B_107.dgn

8:10:08 AM

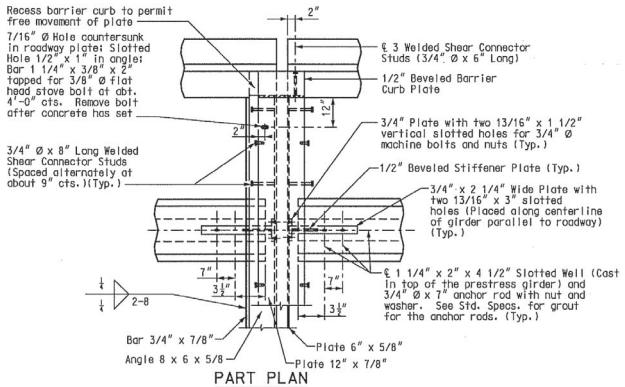

PART PLAN

Note: Concrete vent holes not shown for clarity.

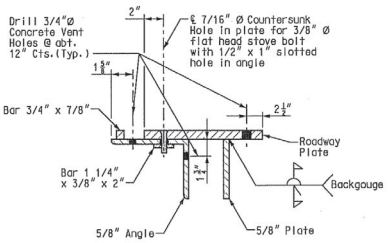

PART SECTION (TYPICAL)

GENERAL NOTES:

Expansion device was fabricated in one section, except for stage construction and when the length was over 50 feet. A complete joint penetration groove weld splice was required. Welds were ground flush to provide a smooth surface. The expansion device was fabricated and installed to the crown and grade of the roadway.

Plan dimensions are based on installation at 60°F. The expansion gap and other dimensions was increased or decreased 7/16" for each 10° fall or rise in temperature at installation.

Material for the expansion device was ASTM A709 Grade 36 structural steel. Shear Connector Studs for the expansion device was in accordance with Sec 1037. Anchor Rods were ASTM F1554 Grade 36 material.

Structural steel for the expansion device and curb plate was coated with a minimum of two coats of inorganic zinc primer (5 mils minimum) or galvanized in accordance with ASTM A123. Shear Connector Studs need not be protected from overspray.

Payment for furnishing, coating or galvanizing and installing the structural steel for the expansion device was considered completely covered by the contract unit price for Expansion Device (Flat Plate) per linear foot.

Concrete was forced under and around flat plate, anchors and angles. Proper consolidation was achieved by localized internal vibration. Finishing of the concrete was achieved by hand finishing within one foot of the expansion device. The vertical and horizontal concrete vent holes were offset from each other. Did not alternate holes at the 12" spacing.

Complete joint penetration welds utilized in the fabrication of the expansion device were nondestructively tested by an approved method.

For Details of Expansion Device at Median Barrier Curb, see Sheet 109.

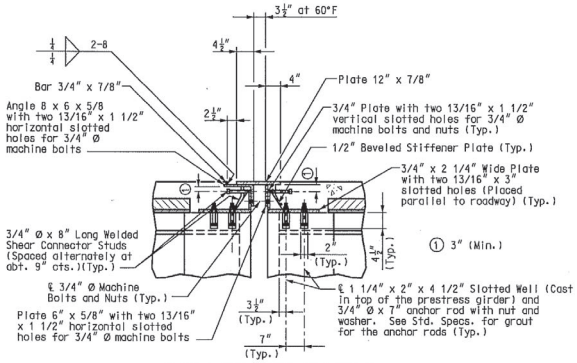

PART SECTION AT PIER

(Horizontal dimensions shown are perpendicular to ℄ of Joint)

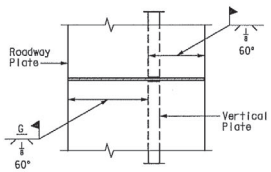

PART PLAN ROADWAY PLATE AND VERTICAL PLATE

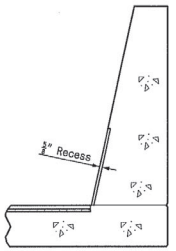

PART SECTION B-B

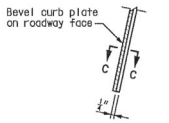

PART ELEVATION AT END OF BEVELED CURB PLATE

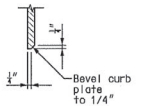

SECTION C-C

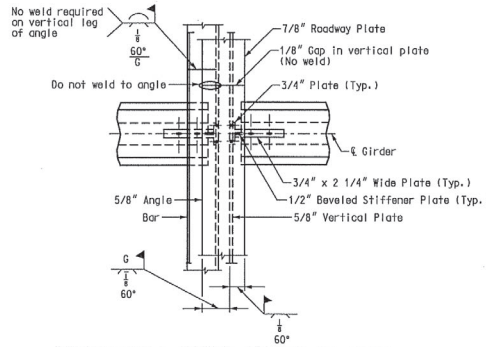

PERMISSIBLE FIELD SPLICE AT PIER

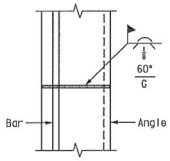

PART PLAN OF ANGLE AND BAR

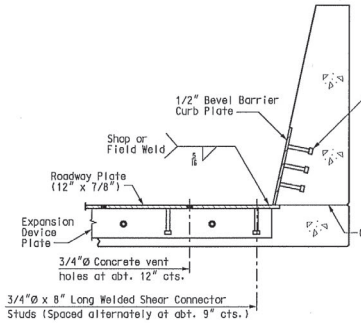

PART SECTION A-A

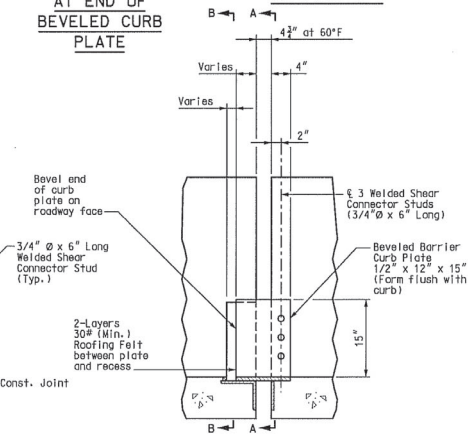

ELEVATION OF BARRIER CURB

(Horizontal dimensions shown are along face of barrier)

DETAILS OF FLAT PLATE EXPANSION DEVICE AT PIER 5

Detailed JUL 2009
Checked JUL 2009

Note: This drawing is not to scale. Follow dimensions.

Sheet No. 108 of 125

T:\de-proj\St_Louis_City\Construction\J6I0984B\Asbuilts\Bridge\B_A6500_108-125_J6I0984B_108.dgn

8:16:14 AM

DATE 8/20/09
ROUTE I-70 | STATE MO
DISTRICT 6 | SHEET NO. BR108
COUNTY St. Louis City - MO
JOB NO. J6I0984B
CONTRACT ID. 100127-601
PROJECT NO. I-70-5(315)
BRIDGE NO. A6500

DESCRIPTION | DATE | REV.

MISSOURI HIGHWAYS AND TRANSPORTATION COMMISSION
105 WEST CAPITOL
JEFFERSON CITY, MO 65102
1-888-ASK-MODOT (1-888-275-6636)

HNTB
715 KIRK DRIVE
KANSAS CITY, MO 64105-1310
TELEPHONE (816) 472-1201
CERTIFICATE OF AUTHORITY NO. 001210

FINAL PLANS

GENERAL NOTES:

(Plan dimensions are based on installation at 60°F. The expansion gap and other dimensions was increased or decreased for each 10° fall or rise in temperature at installation per the flat plate expansion device details.

Material for the expansion device at curb plates was ASTM A709 Grade 36 structural steel. Shear Connector Studs for the median barrier curb plate was in accordance with Sec 1037.

Structural steel for the expansion device at curb plates was coated with a minimum of two coats of inorganic zinc primer (5 mils minimum) in accordance with ASTM A123. Shear Connector Studs need not be protected from overspray.

Payment for furnishing, coating or galvanizing, and installing the structural steel for the expansion device at curb plates was considered completely covered by the contract unit price for Expansion Device (Flat Plate) per linear foot.



PART ELEVATION AT END OF BEVELED CURB PLATE

SECTION C-C

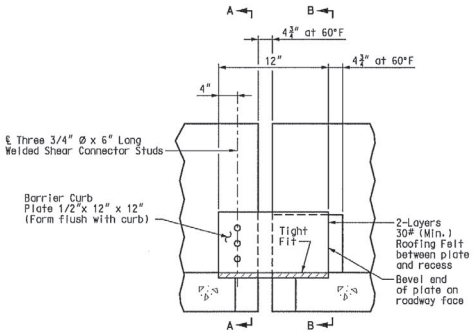

ELEVATION OF MEDIAN BARRIER CURB
(Horizontal dimensions shown are along face of barrier)

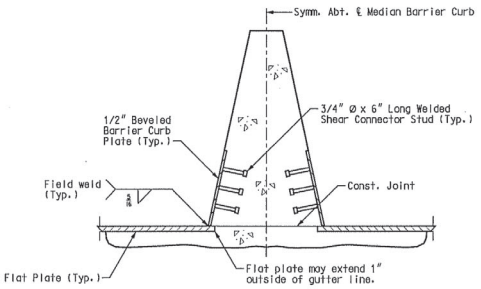

PART SECTION A-A

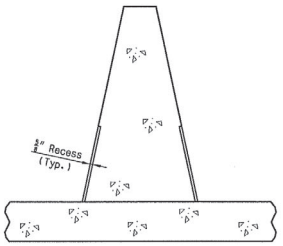

PART SECTION B-B

DETAILS OF EXPANSION DEVICE AT MEDIAN BARRIER CURB AT PIER 5

DATE: 8/20/09
ROUTE: I-70 | STATE: MO
DISTRICT: 6 | SHEET NO.: BR109
COUNTY: St. Louis City - MO
JOB NO.: J6I0984B
CONTRACT ID.: 100127-601
PROJECT NO.: I-70-5(315)
BRIDGE NO.: A6500

DESCRIPTION	DATE

MISSOURI HIGHWAYS AND TRANSPORTATION COMMISSION
105 WEST CAPITOL
JEFFERSON CITY, MO 65102
1-888-ASK-MODOT (1-888-275-6636)

HNTB
715 KIRK DRIVE
KANSAS CITY, MO 64105-1310
TELEPHONE (816) 472-1201
CERTIFICATE OF AUTHORITY NO. 001210

FINAL PLANS

REV.

Detailed JUL 2009
Checked JUL 2009

Note: This drawing is not to scale. Follow dimensions.

T:\de-proj\St_Louis_City\Construction\J6I0984B\Asbuilts\Bridge\B_A6500_109-125_J6I0984B_109.dgn

8:24:31 AM

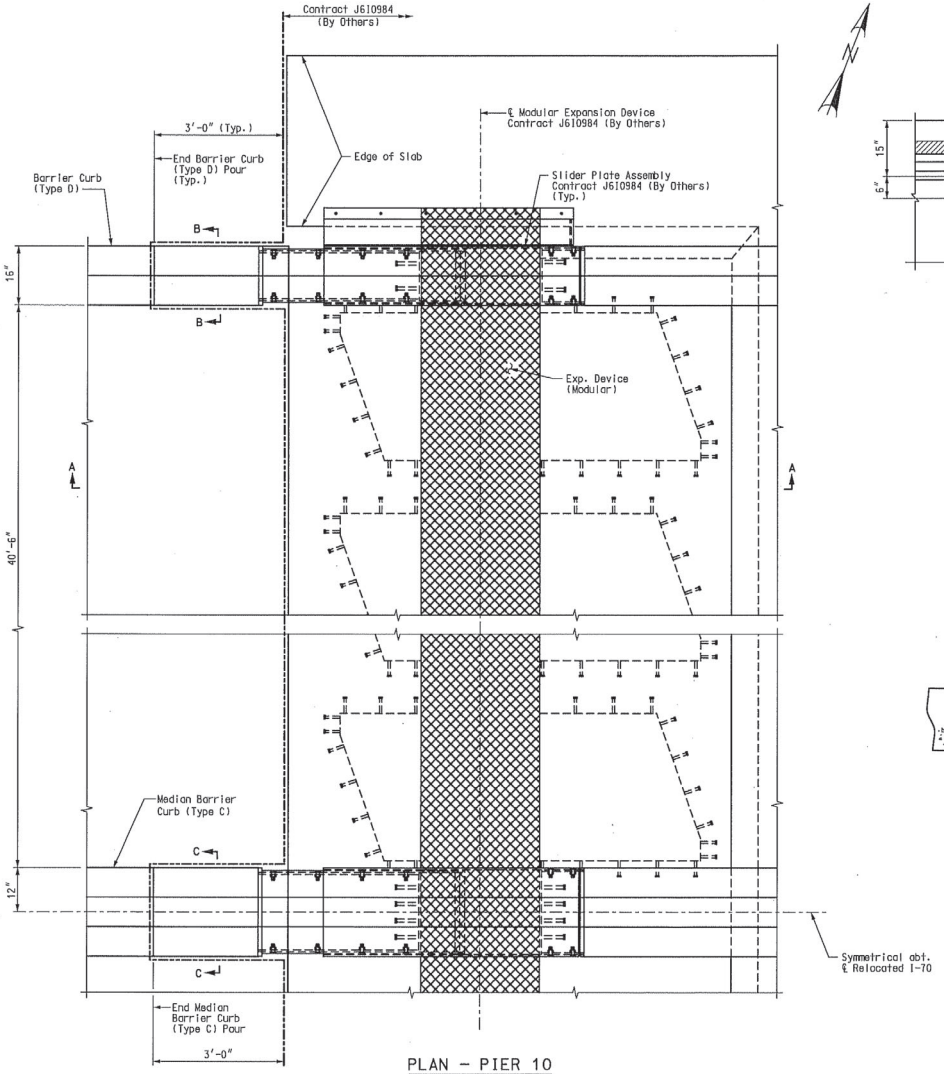

PLAN – PIER 10

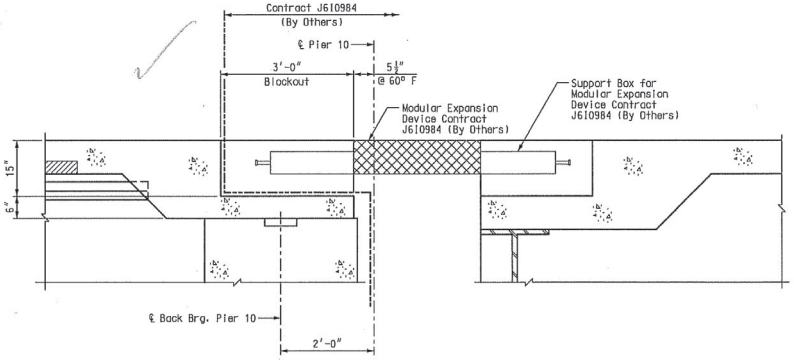

SECTION A–A

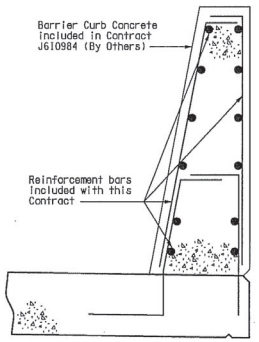

SECTION B–B

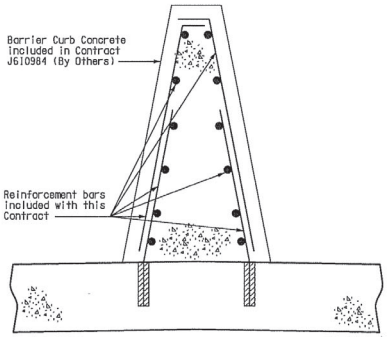

SECTION C–C

Notes:
For slab reinforcing, see Sheet No. 83.
For details of Median Barrier Curb (Type C), see Sheet No 101.
For details of Barrier Curb (Type D), see Sheet Nos. 98 thru 100.

MODULAR EXPANSION JOINT DETAILS – PIER 10

DATE 8/20/09
ROUTE I-70 STATE MO
DISTRICT 6 SHEET NO. BR110
COUNTY St. Louis City - MO
JOB NO. J6I0984B
CONTRACT ID. 100127-601
PROJECT NO. I-70-5(315)
BRIDGE NO. A6500

DESCRIPTION | DATE

MISSOURI HIGHWAYS AND TRANSPORTATION COMMISSION
105 WEST CAPITOL
JEFFERSON CITY, MO 65102
1-888-ASK-MODOT (1-888-275-6636)

HNTB
715 KIRK DRIVE
KANSAS CITY, MO 64105-1310
TELEPHONE (816) 472-1201
CERTIFICATE OF AUTHORITY NO. 001270

FINAL PLANS

REV.

Detailed JUL 2009
Checked JUL 2009

Note: This drawing is not to scale. Follow dimensions.

I:\de-proj\St_Louis_City\Construction\J6I0984B\Asbuilts\Bridge\B_A6500_110-125_J6I0984B_110.dgn

4:59:37 PM

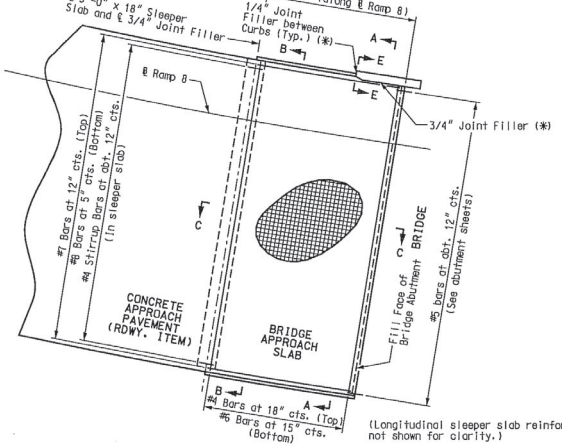

PART PLAN SHOWING REINFORCEMENT

SCALE 1" =10'-0"

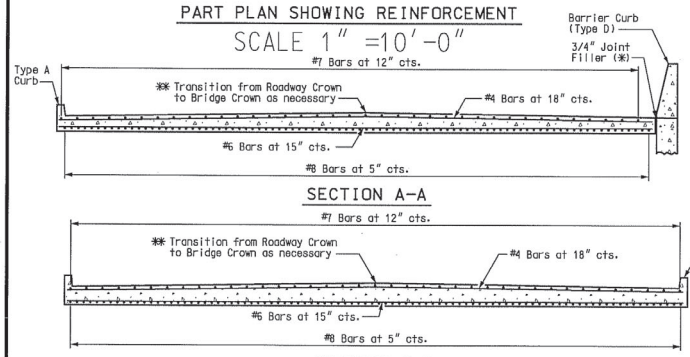

SECTION A-A

SECTION B-B

Note:
With the approval of the engineer, the contractor may crown the bottom of the approach slab to match the crown of the roadway surface.

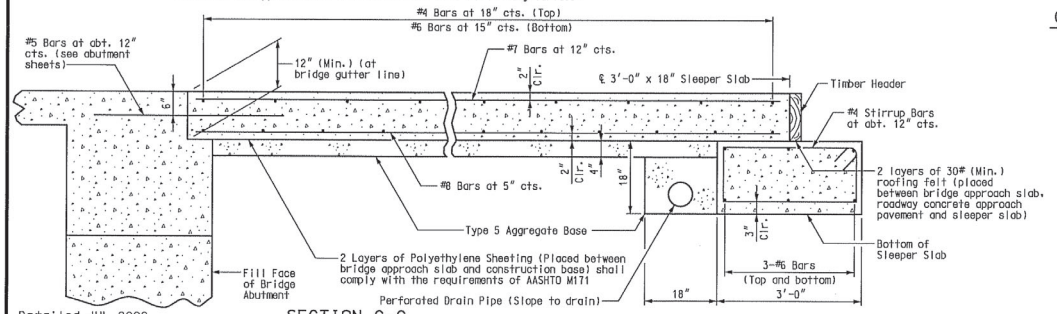

SECTION C-C

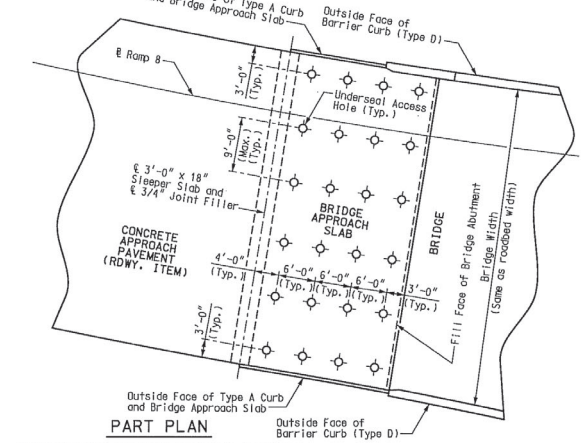

PART PLAN

(Showing Typical Underseal Access Hole Locations)

SCALE 1" =10'-0"

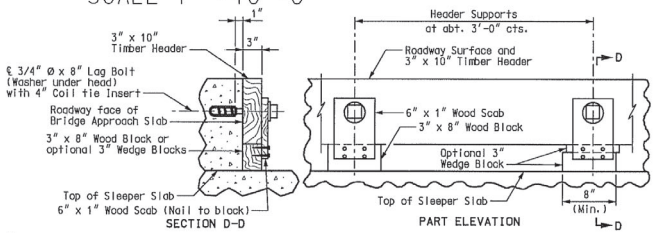

Note: Remove timber header when concrete pavement is placed.

DETAILS OF TIMBER HEADER

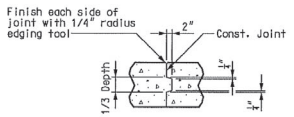

CONST. JOINT DETAIL

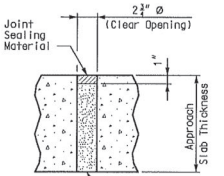

TYPICAL UNDERSEAL ACCESS HOLE DETAIL

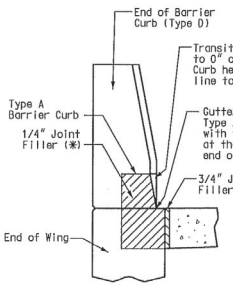

SECTION E-E

(Between Curbs)

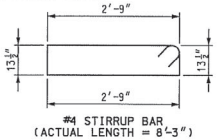

#4 STIRRUP BAR
(ACTUAL LENGTH = 8'-3")

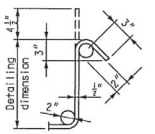

TYPICAL 135° STIRRUP HOOK DIMENSIONS BENDING DIAGRAM

Note:
Nominal lengths are based on out-to-out dimensions shown in bending diagram and are listed for fabricator's use (nearest inch).

GENERAL NOTES:

All concrete for the bridge approach slab and sleeper slab shall be in accordance with Sec 503 (f'c = 4,000 psi).

All joint filler shall be in accordance with Sec 1057 for preformed fiber expansion joint filler, except as noted.

The reinforcing steel in the bridge approach slab and the sleeper slab shall be epoxy coated Grade 60 with Fy = 60,000 psi.

Minimum clearance to reinforcing steel shall be 1-1/2", unless otherwise shown.

The reinforcing steel in the bridge approach slab and the sleeper slab shall be continuous. The transverse reinforcing steel may be made continuous by lap splicing the #4 & #6 bars 18" and 2'-2", respectively.

Mechanical bar splices shall be in accordance with Sec 706.

(*) Seal joint between vertical face of approach slab and wing with "Silicone Joint Sealant for Saw Cut and Formed Joints" in accordance with Sec 717.

Hooks and bends shall be in accordance with the CRSI Manual of Standard Practice for Detailing Reinforced Concrete Structures, Stirrup and Tie Dimensions.

The contractor shall pour and satisfactorily finish the bridge or semi-deep slab before pouring the bridge approach slabs.

Longitudinal construction joints in approach slab and sleeper slab shall be aligned with longitudinal construction joints in bridge or semi-deep slab.

Payment for furnishing all materials, labor and excavation necessary to construct the approach slab, including the timber header, sleeper slab, underdrain, Type 5 aggregate base, joint filler and all other appurtenances and incidental work as shown on this sheet, complete-in-place, will be considered completely covered by the contract unit price for Bridge Approach Slab (Bridge) per square yard.

For Concrete Approach Pavement details, see roadway plans.

See Missouri Standard Plans Drawing 609.00 for details of Type A Curb.

At the contractor's option, Grade 40 reinforcement may be substituted for the Grade 60 #5 dowel bars connecting the bridge approach slab to the bridge abutment. No additional payment will be made for this substitution.

When Grade 40 reinforcement is substituted for the Grade 60 #5 dowel bars connecting the bridge approach slab to the bridge abutment, the reinforcement may be bent up to 90 degrees with a 2" minimum radius near the abutment to allow compaction of the backfill material near the abutment. Damage to epoxy coating shall be repaired in accordance with Sec 710.

Drain pipe may be either 6" diameter corrugated metallic-coated pipe underdrain, 4" diameter corrugated polyvinyl chloride (PVC) drain pipe, or 4" diameter corrugated polyethylene (PE) drain pipe.

** For superelevation transition data, see Sheet No. 82.

Will be performed in Contract J6U1086.

DATE 8/20/09
ROUTE I-70
STATE MO
DISTRICT 6
SHEET NO. BR111
COUNTY St. Louis City - MO
JOB NO. J6I0984B
CONTRACT ID. 100127-601
PROJECT NO. I-70-5(315)
BRIDGE NO. A6500

DESCRIPTION
DATE

MISSOURI HIGHWAYS AND TRANSPORTATION COMMISSION
105 WEST CAPITOL
JEFFERSON CITY, MO 65102
1-888-ASK-MODOT (1-888-275-6636)

HNTB
715 KIRK DRIVE
KANSAS CITY, MO 64105-1310
TEL (816) 472-1201
CERTIFICATE OF AUTHORITY NO. 001270

Detailed JUL 2009
Checked JUL 2009

Note: This drawing is not to scale. Follow dimensions.

Sheet No. 111 of 125

BRIDGE APPROACH SLAB AT RAMP 8

FINAL PLANS

REV.

T:\de-proj\St_Louis_City\Construction\J6I0984B\Asbuilts\Bridge\B_A6500_111-125_J6I0984B_111.dgn

1:39:38 PM

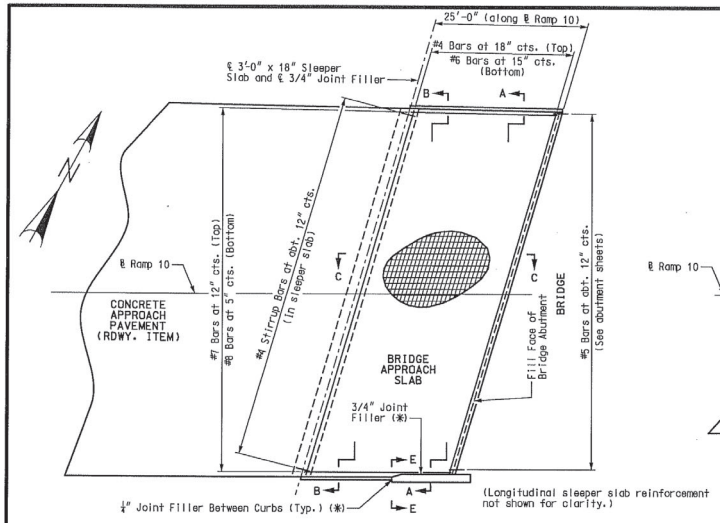

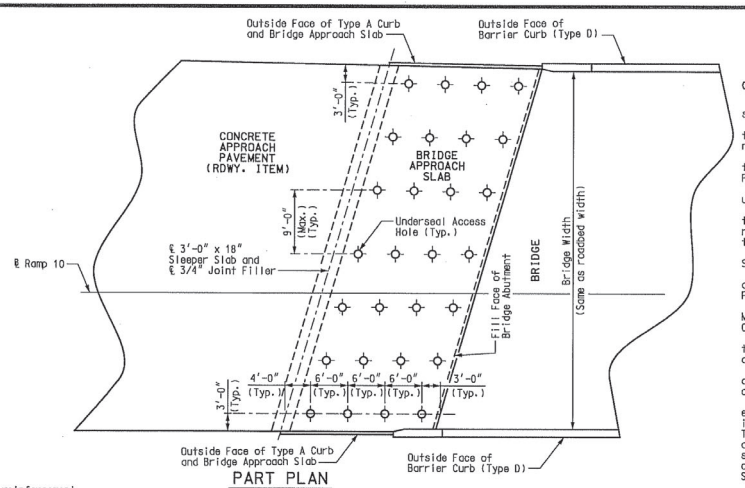

PART PLAN
(Showing Typical Underseal Access Hole Locations)
SCALE 1" =10'-0"

GENERAL NOTES:

All concrete for the bridge approach slab and sleeper slab shall be in accordance with Sec 503 (f'c = 4,000 psi).

All joint filler shall be in accordance with Sec 1057 for preformed fiber expansion joint filler, except as noted.

The reinforcing steel in the bridge approach slab and the sleeper slab shall be epoxy coated Grade 60 with Fy = 60,000 psi.

Minimum clearance to reinforcing steel shall be 1-1/2", unless otherwise shown.

The reinforcing steel in the bridge approach slab and the sleeper slab shall be continuous. The transverse reinforcing steel may be made continuous by lap splicing the #4 & #6 bars 18" and 2'-2", respectively.

Mechanical bar splices shall be in accordance with Sec 706.

(*) Seal joint between vertical face of approach slab and wing with "Silicone Joint Sealant for Saw Cut and Formed Joints" in accordance with Sec 717.

Hooks and bends shall be in accordance with the CRSI Manual of Standard Practice for Detailing Reinforced Concrete Structures, Stirrup and Tie Dimensions.

The contractor shall pour and satisfactorily finish the bridge or semi-deep slab before pouring the bridge approach slabs.

Longitudinal construction joints in approach slab and sleeper slab shall be aligned with longitudinal construction joints in bridge or semi-deep slab.

Payment for furnishing all materials, labor and excavation necessary to construct the approach slab, including the timber header, sleeper slab, underdrain, Type 5 aggregate base, joint filler and all other appurtenances and incidental work as shown on this sheet, complete-in-place, will be considered completely covered by the contract unit price for Bridge Approach Slab (Bridge) per square yard.

For Concrete Approach Pavement details, see roadway plans.

See Missouri Standard Plans Drawing 609.00 for details of Type A Curb.

At the contractor's option, Grade 40 reinforcement may be substituted for the Grade 60 #5 dowel bars connecting the bridge approach slab to the bridge abutment. No additional payment will be made for this substitution.

When Grade 40 reinforcement is substituted for the Grade 60 #5 dowel bars connecting the bridge approach slab to the bridge abutment, the reinforcement may be bent up to 90 degrees with a 2" minimum radius near the abutment to allow compaction of the backfill material near the abutment. Damage to epoxy coating shall be repaired in accordance with Sec 710.

Drain pipe may be either 6" diameter corrugated metallic-coated pipe underdrain, 4" diameter corrugated polyvinyl chloride (PVC) drain pipe, or 4" diameter corrugated polyethylene (PE) drain pipe.

(**) For superelevation transition data, see Sheet No. 82. Will be performed on Contract J6U1086.

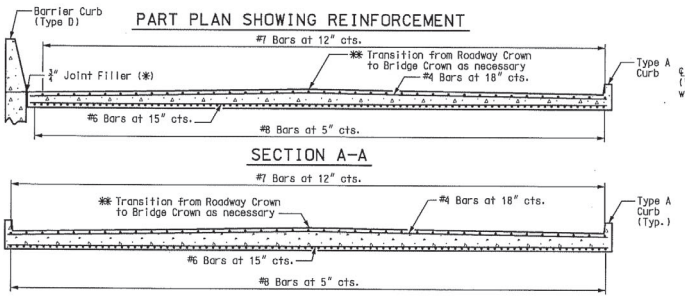

Note:
With the approval of the engineer, the contractor may crown the bottom of the approach slab to match the crown of the roadway surface.

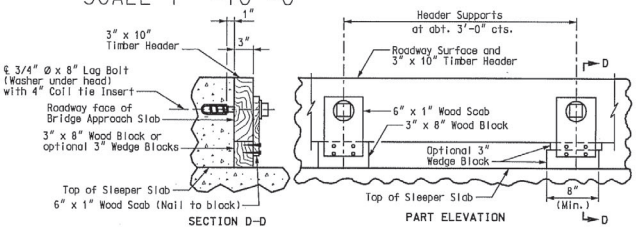

Note: Remove timber header when concrete pavement is placed.

DETAILS OF TIMBER HEADER

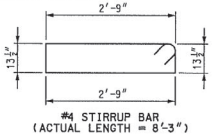

#4 STIRRUP BAR
(ACTUAL LENGTH = 8'-3")

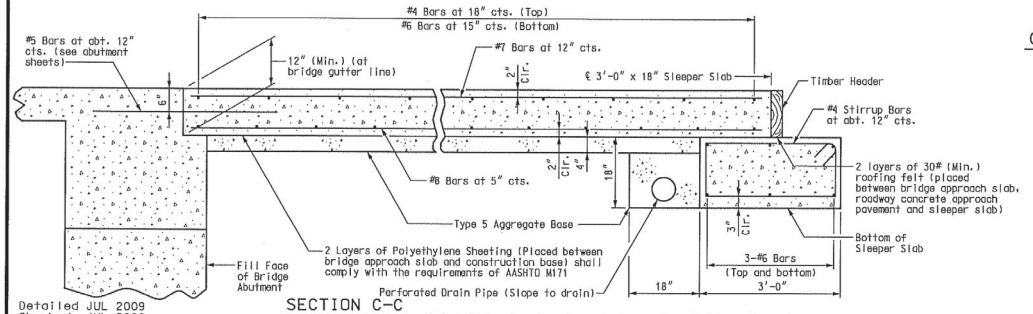

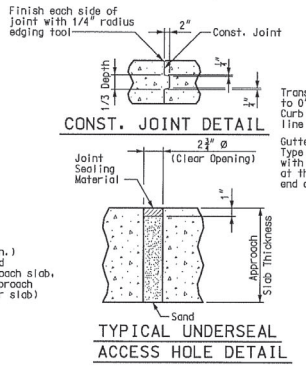

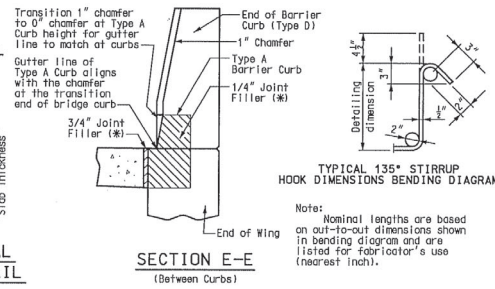

Note:
Nominal lengths are based on out-to-out dimensions shown in bending diagram and are listed for fabricator's use (nearest inch).

BRIDGE APPROACH SLAB AT RAMP 10

Detailed JUL 2009
Checked JUL 2009

Note: This drawing is not to scale. Follow dimensions.

DATE 8/20/09
ROUTE I-70 | STATE MO
DISTRICT 6 | SHEET NO. BR112
COUNTY St. Louis City - MO
JOB NO. J6I0984B
CONTRACT ID. 100127-601
PROJECT NO. I-70-5(315)
BRIDGE NO. A6500

DESCRIPTION | DATE

MISSOURI HIGHWAYS AND TRANSPORTATION COMMISSION
105 WEST CAPITOL
JEFFERSON CITY, MO 65102
1-888-ASK-MODOT (1-888-275-6636)
MoDOT
HNTB
715 KIRK DRIVE
KANSAS CITY, MO 64105-4310
TELEPHONE (816) 472-1201
CERTIFICATE OF AUTHORITY NO. 001270

FINAL PLANS

REV.

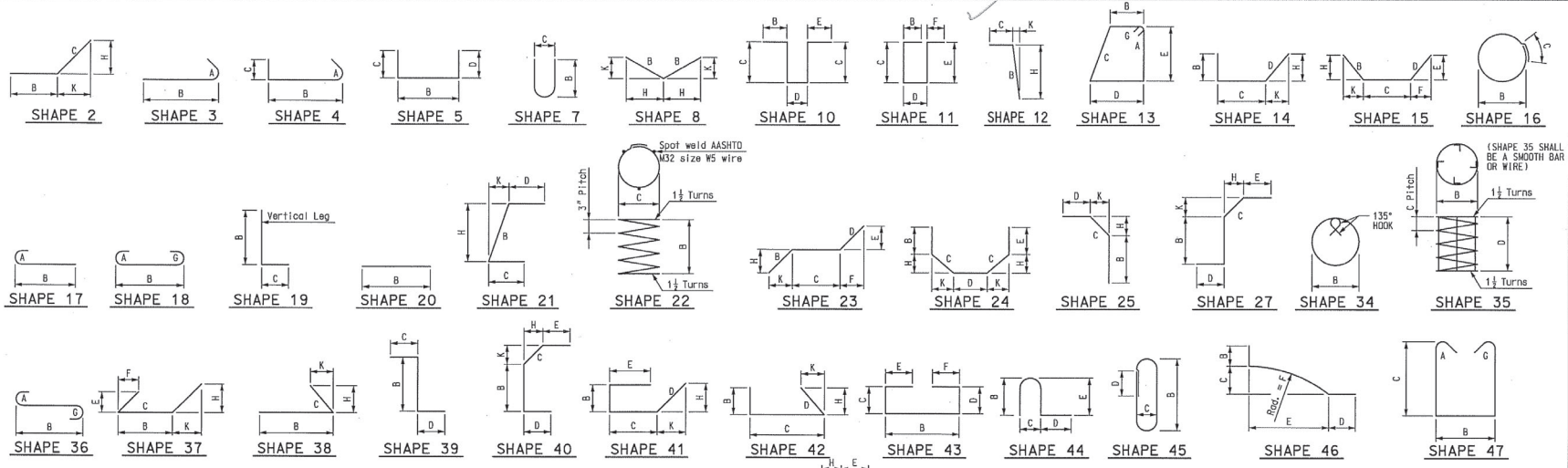

STIRRUP HOOK DIMENSIONS				
Bar Size	D (in)	All Grades		
		90° Hooks	135° Hooks	
		Hook A or G (in)	Hook A or G (in)	Approx. H (in)
#4	2"	4½"	4½"	3"
#5	2½"	6"	5½"	3¾"
#6	4½"	12"	8"	4½"

END HOOK DIMENSIONS				
Bar Size	D (in)	All Grades		
		180° Hooks		90° Hooks
		Hook A or G (in)	J (in)	Hook A or G (in)
#3	2½"	5"	3"	6"
#4	3"	6"	4"	8"
#5	3¾"	7"	5"	10"
#6	4½"	8"	6"	12"
#7	5¼"	10"	7"	14"
#8	6"	11"	8"	16"
#9	9½"	15"	11¼"	19"
#10	10¾"	17"	13¼"	22"
#11	12"	19"	14¾"	2'-0"
#14	18¼"	2'-3"	21¾"	2'-7"
#18	2'-0"	3'-0"	2'-4½"	3'-5"

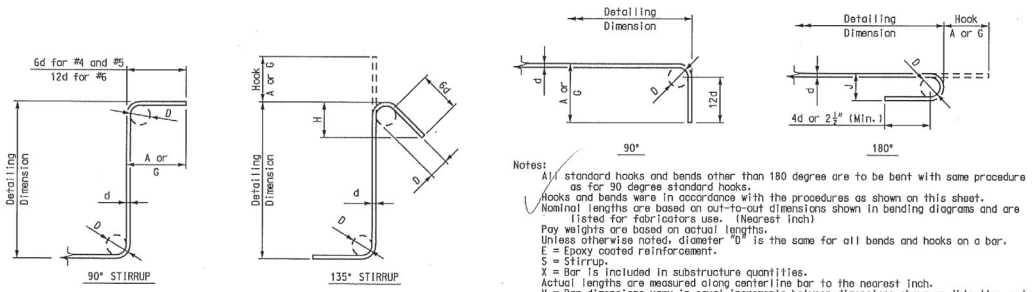

Notes:
All standard hooks and bends other than 180 degree are to be bent with same procedure as for 90 degree standard hooks.
Hooks and bends were in accordance with the procedures as shown on this sheet.
Nominal lengths are based on out-to-out dimensions shown in bending diagrams and are listed for fabricators use. (Nearest inch)
Pay weights are based on actual lengths.
Unless otherwise noted, diameter "D" is the same for all bends and hooks on a bar.
E = Epoxy coated reinforcement.
S = Stirrup.
X = Bar is included in substructure quantities.
Actual lengths are measured along centerline bar to the nearest inch.
V = Bar dimensions vary in equal increments between dimensions shown on this line and the following line.
No. ea. = Number of bars of each length.
Four angle or channel spacers are required for each column spiral. Spacers are to be placed on inside of spirals. Length and weight of column spirals do not include splices or spacers.
Reinforcing steel (Grade 60) fy = 60,000 psi.

BAR BENDING DIAGRAMS

Detailed JUL 2009
Checked JUL 2009

Note: This drawing is not to scale. Follow dimensions.

Sheet No. 113 of 125

T:\de-proj\St_Louis_City\Construction\J6I0984B\Asbuilts\Bridge\B_A6500_113-125_J6I0984B_113.dgn
8:52:24 AM

DATE 8/20/09
ROUTE I-70 STATE MO
DISTRICT 6 SHEET NO. BR113
COUNTY St. Louis City - MO
JOB NO. J6I0984B
CONTRACT ID. 100127-601
PROJECT NO. I-70-5(315)
BRIDGE NO. A6500

DESCRIPTION
DATE

MISSOURI HIGHWAYS AND TRANSPORTATION COMMISSION
105 WEST CAPITOL
JEFFERSON CITY, MO 65102
1-888-ASK-MODOT (1-888-275-6636)

HNTB
715 KIRK DRIVE
KANSAS CITY, MO 64105-1310
TELEPHONE (816) 472-1201
CERTIFICATE OF AUTHORITY NO. 001170

FINAL PLANS

REV.

BILL OF REINFORCING STEEL

NO. REQ'D.	MARK NO. SIZE	MARK NO. MARK	LOCATION	EPOXY (E)	SHAPE NO.	STIRRUP (S)	SUBSTR. (X)	VARIES (V)	NO. EACH	DIMENSIONS B FT. IN.	B IN.	C FT. IN.	C IN.	D FT. IN.	D IN.	E FT. IN.	E IN.	F FT. IN.	F IN.	H FT. IN.	H IN.	K FT. IN.	K IN.	NOMINAL LENGTH FT. IN.	NOMINAL LENGTH IN.	ACTUAL LENGTH FT. IN.	ACTUAL LENGTH IN.	WEIGHT LBS.
			ABUTMENT 1																									
14		6F100	Wingwall		23					14″		5′-9″		14″		8 3/8″		11 1/4″		8 3/8″		11 1/4″		8′-1″		8′-1″		170
6		6F101	Diaphragm		38					6′-6″		2′-8″								2′-6 1/4″		9″		9′-2″		9′-2″		83
15		6F102	Wingwall		23					14″		4′-11″		14″		9 3/8″		9 3/8″		9 3/8″		9 3/8″		7′-3″		7′-3″		163
6		6F103	Diaphragm		19					6′-4″		2′-7″												8′-11″		8′-10″		80
20		8H100	Beam		20					44′-0″														44′-0″		44′-0″		2,350
22		8H101	Beam		18					5′-7″														7′-5″		7′-5″		436
20		6H102	Beam & Diaphragm		20					42′-2″														42′-2″		42′-2″		1,267
4		6H103	Diaphragm		20					3′-8″														3′-8″		3′-8″		22
20		6H104	Diaphragm		20					10′-0″														10′-0″		10′-0″		300
4		6H105	Diaphragm		20					17′-6″														17′-6″		17′-6″		105
6		6H106	Diaphragm		20					5′-6″														5′-6″		5′-6″		50
2		6H107	App. Seat		20					41′-6″														41′-6″		41′-6″		125
8		6H108	Diaphragm	E	20					42′-10″														42′-10″		42′-10″		515
65		5H109	App. Seat	E	20					2′-6″														2′-6″		2′-6″		169
6		5H110	Diaphragm		23					15″		3′-2″		15″		4 1/4″		14 1/8″		4 1/4″		14 1/8″		5′-8″		5′-8″		35
13		6H111	Wingwall		20					24′-5″														24′-5″		24′-5″		477
13		6H112	Wingwall		19					24′-5″		12″												25′-5″		25′-4″		495
10		8H113	Wingwall *	E	20					24′-5″														24′-5″		24′-5″		652
20		8H114	Beam		20					38′-10″														38′-10″		38′-10″		2,074
18		8H115	Beam		18					5′-7″														7′-5″		7′-5″		356
20		6H116	Beam & Diaphragm		20					36′-11″														36′-11″		36′-11″		1,109
4		4H117	Beam		19	S				14″		11′-1″												12′-3″		12′-2″		33
20		4H118	Beam		19	S				14″		15′-0″												16′-2″		16′-1″		215
4		6H119	Diaphragm		20					3′-7″														3′-7″		3′-7″		22
16		6H120	Diaphragm		20					10′-5″														10′-5″		10′-5″		250
4		6H121	Diaphragm		20					17′-9″														17′-9″		17′-9″		107
5		6H122	Diaphragm		20					5′-6″														5′-6″		5′-6″		41
2		6H123	App. Seat		20					36′-3″														36′-3″		36′-3″		109
8		6H124	Diaphragm	E	20					37′-7″														37′-7″		37′-7″		452
53		5H125	App. Seat	E	20					2′-6″														2′-6″		2′-6″		138
5		5H126	Diaphragm		20					5′-9″														5′-9″		5′-9″		30
14		6H127	Wingwall		20					24′-8″														24′-8″		24′-8″		519
14		6H128	Wingwall		19					24′-4″		12″												25′-4″		25′-3″		531
8		8H129	Wingwall	E	20					24′-8″														24′-8″		24′-8″		527
43		5U100	Beam		5	S				2′-9″		6′-0″		6′-0″										14′-9″		14′-6″		650
36		4U101	Beam		53	S				2′-9″		3′-7″												13′-5″		13′-2″		317
6		4U102	Beam		5	S				2′-9″		3′-7″		3′-7″										9′-11″		9′-9″		39
60		5U103	Diaphragm	E	5	S				2′-3″		5′-11″		5′-11″										14′-1″		13′-10″		866
57		6U104	Diaphragm		19	S				5′-0″		2′-9″												7′-9″		7′-8″		656
85		6U105	Diaphragm	E	19	S				3′-4″		5′-1″												8′-5″		8′-4″		1,064
43		5U106	Beam		5	S				2′-8″		7′-6″		7′-6″										17′-8″		17′-5″		781
28		4U107	Beam		53	S				2′-8″		3′-7″												13′-3″		13′-0″		243
7		4U108	Beam		5	S				2′-8″		3′-7″		3′-7″										9′-10″		9′-8″		45
52		5U109	Diaphragm	E	5	S				2′-2″		5′-8″		5′-8″										13′-6″		13′-3″		719
49		6U110	Diaphragm		19	S				4′-9″		2′-8″												7′-5″		7′-4″		540
69		6U111	Diaphragm	E	19	S				3′-4″		4′-11″												8′-3″		8′-2″		846
35		4U112	Beam		5	S				2′-8″		2′-0″		2′-0″										6′-8″		6′-6″		152
34		5V100	Beam & Diaphragm		20					6′-0″														6′-0″		6′-0″		213
42		6V101	Diaphragm		20					5′-0″														5′-0″		5′-0″		315
2		6V102	Wingwall		20					9′-7″														9′-7″		9′-7″		29
44		6V103	Wingwall		20			V	2	9′-7″														9′-7″		9′-7″		647
			Increment = 1/4″							10′-0″														10′-0″		10′-0″		
18		5V104	Beam & Diaphragm		20					7′-6″														7′-6″		7′-6″		141
35		6V105	Diaphragm		20					4′-9″														4′-9″		4′-9″		250
2		6V106	Wingwall		20					9′-10″														9′-10″		9′-10″		30
44		6V107	Wingwall		20			V	2	9′-11″														9′-11″		9′-11″		677
			Increment = 1/8″							10′-7″														10′-7″		10′-7″		

* Two additional #8-H113 are included in the bar bill for testing.

BILL OF REINFORCING STEEL

NO. REQ'D.	MARK NO. SIZE	MARK NO. MARK	LOCATION	EPOXY (E)	SHAPE NO.	STIRRUP (S)	SUBSTR. (X)	VARIES (V)	NO. EACH	DIMENSIONS B FT. IN.	B IN.	C FT. IN.	C IN.	D FT. IN.	D IN.	E FT. IN.	E IN.	F FT. IN.	F IN.	H FT. IN.	H IN.	K FT. IN.	K IN.	NOMINAL LENGTH FT. IN.	NOMINAL LENGTH IN.	ACTUAL LENGTH FT. IN.	ACTUAL LENGTH IN.	WEIGHT LBS.
			PIER 2																									
36		10H200	Beam	E	20		X			54′-5″														54′-5″		54′-5″		8,430
18		10H201	Beam	E	61		X			17′-9″		17′-9″				11 1/2″		17′-8 1/2″		17′-9″		4 3/4″		35′-6″		35′-6″		2,750
44		10H202	Beam	E	17		X			54′-5″														55′-10″		55′-10″		10,571
22		10H203	Beam	E	61		X			17′-9″		17′-9″				11 1/2″		17′-8 1/2″		17′-9″		4 3/4″		35′-6″		35′-6″		3,361
24		7H204	Beam	E	20		X			48′-10″														48′-10″		48′-10″		2,396
12		7H205	Beam	E	61		X			17′-9″		17′-9″				11 1/2″		17′-8 1/2″		17′-9″		4 3/4″		35′-6″		35′-6″		871
44		6H206	Beam	E	20		X			14′-0″														14′-0″		14′-0″		925
44		6H207	Beam	E	20		X			15′-2″														15′-2″		15′-2″		1,002
16		6H208	Beam	E	5	S	X			6′-6″		22″		22″										10′-2″		9′-11″		238
28		4H209	Beam	E	20		X			3′-2″														3′-2″		3′-2″		59
5		5P200	Drilled Shaft		35		X			4′-6″		6″		46′-3″										1330′-11″		1330′-11″		6,941
1		5P201	Column & Drilled Shaft		35		X			4′-6″		3″		17′-2″										992′-10″		992′-10″		1,036
1		5P202	Column & Drilled Shaft		35		X			4′-6″		3″		18′-8″										1076′-9″		1076′-9″		1,123
1		5P203	Column & Drilled Shaft		35		X			4′-6″		3″		20′-0″										1151′-3″		1151′-3″		1,201
1		5P204	Column & Drilled Shaft		35		X			4′-6″		3″		19′-6″										1123′-4″		1123′-4″		1,172
1		5P205	Column & Drilled Shaft		35		X			4′-6″		3″		18′-10″										1086′-0″		1086′-0″		1,133
55		5P206	Beam	E	34	S	X			4′-6″														14′-11″		14′-11″		856
288		6U200	Beam	E	53	S	X			4′-2″		6′-8″												23′-0″		22′-7″		9,769
50		6U201	Beam	E	5	S	X			4′-2″		6′-8″		6′-8″										17′-6″		17′-3″		1,295
322		4U202	Beam	E	5	S	X			3′-2″		2′-0″		2′-0″										7′-2″		7′-0″		1,506
56		4U203	Beam	E	5	S	X			8″		2′-0″		2′-0″										4′-8″		4′-6″		168
65		11V200	Column & Drilled Shaft		20		X			57′-3″														57′-3″		57′-3″		19,771
65		11V201	Column & Drilled Shaft		20		X			59′-3″														59′-3″		59′-3″		20,462
13		11V202	Column		17		X			9′-6″														11′-1″		11′-1″		766
13		11V203	Column		17		X			7′-6″														9′-1″		9′-1″		627
13		11V204	Column		17		X			11′-0″														12′-7″		12′-7″		869
13		11V205	Column		17		X			9′-0″														10′-7″		10′-7″		731
13		11V206	Column		17		X			12′-4″														13′-11″		13′-11″		961
13		11V207	Column		17		X			10′-4″														11′-11″		11′-11″		823
13		11V208	Column		17		X			11′-10″														13′-5″		13′-5″		927
13		11V209	Column		17		X			9′-10″														11′-5″		11′-5″		789
13		11V210	Column		17		X			11′-2″														12′-9″		12′-9″		881
13		11V211	Column		17		X			9′-2″														10′-9″		10′-9″		742
22		W5W200	Beam	E	22		X			18″		9 1/8″												26′-1″		26′-1″		96
24		W5W201	Beam	E	22		X			2′-1″		9 1/8″												33′-2″		33′-2″		133

Note:
For bar bending diagram, see Sheet No. 113.

BILL OF REINFORCING STEEL

Detailed JUL 2009
Checked JUL 2009

Note: This drawing is not to scale. Follow dimensions.

Sheet No. 114 of 125

T:\de-proj\St_Louis_City\Construction\J6I0984B\Asbuilts\Bridge\B_A6500_114-125_J6I0984B_114.dgn

1:25:21 PM

DATE 8/20/09
ROUTE I-70 | STATE MO
DISTRICT 6 | SHEET NO. BR114
COUNTY St. Louis City - MO
JOB NO. J6I0984B
CONTRACT ID. 100127-601
PROJECT NO. I-70-S(315)
BRIDGE NO. A6500

DESCRIPTION | DATE | REV.

MISSOURI HIGHWAYS AND TRANSPORTATION COMMISSION
105 WEST CAPITOL
JEFFERSON CITY, MO 65102
1-888-ASK-MODOT (1-888-275-6636)

HNTB
715 KIRK DRIVE
KANSAS CITY, MO 64105-1310
TELEPHONE: 816 276-2277
CERTIFICATE OF AUTHORITY NO. 001270

FINAL PLANS

BILL OF REINFORCING STEEL

NO. REQ'D.	MARK NO. SIZE	MARK NO. MARK	LOCATION	EPOXY (E)	SHAPE NO.	STIRRUP (S)	SUBSTR. (X)	VARIES (V)	NO. EACH	DIMENSIONS B FT. IN.	C FT. IN.	D FT. IN.	E FT. IN.	F FT. IN.	H FT. IN.	K FT. IN.	NOMINAL LENGTH FT. IN.	ACTUAL LENGTH FT. IN.	WEIGHT LBS.
			PIER 3																
88	6D300		Beam		20		X			2′-11″							2′-11″	2′-11″	386
22	10H300		Beam		20		X			47′-9″							47′-9″	47′-9″	4,520
11	10H301		Beam		20		X			36′-8″							36′-8″	36′-8″	1,736
12	10H302		Beam		17		X			30′-6″							31′-11″	31′-11″	1,648
12	10H303		Beam		17		X			47′-9″							49′-2″	49′-2″	2,539
12	10H304		Beam		20		X			53′-11″							53′-11″	53′-11″	2,784
12	10H305		Beam		20		X			42′-8″							42′-8″	42′-8″	2,203
20	6H306		Beam		20		X			9′-2″							9′-2″	9′-2″	275
32	7H307		Beam		20		X			47′-9″							47′-9″	47′-9″	3,123
14	7H308		Beam		20		X			23′-2″							23′-2″	23′-2″	663
19	6H309		Beam		5	S	X			5′-6″	22″	22″					9′-2″	8′-11″	254
5	5P300		Drilled Shaft		35		X			4′-6″	6″	37′-9″					1093′-3″	1093′-3″	5,701
5	5P301		Column & Drilled Shaft		35		X			4′-6″	3″	30′-8″					1747′-7″	1747′-7″	9,114
55	5P302		Beam		34	S	X			4′-6″							14′-11″	14′-11″	856
9	6U300		Beam		53	S	X			5′-8″	6′-8″						26′-0″	25′-7″	345
5	6U301		Beam		5	S	X			5′-8″	6′-8″	6′-8″					19′-0″	18′-9″	141
14	6U302		Beam		53	S	X			5′-8″	7′-0″						26′-8″	26′-3″	552
9	6U303		Beam		53	S	X			5′-8″	7′-4″						27′-4″	26′-11″	364
5	6U304		Beam		5	S	X			5′-8″	7′-8″	7′-8″					21′-0″	20′-9″	156
5	6U305		Beam		53	S	X			5′-8″	7′-8″						28′-0″	27′-7″	207
9	6U306		Beam		53	S	X			5′-8″	8′-0″						28′-8″	28′-3″	382
18	6U307		Beam		53	S	X			5′-8″	8′-4″						29′-4″	28′-11″	782
5	6U308		Beam		5	S	X			5′-8″	8′-4″	8′-4″					22′-4″	22′-1″	166
9	6U309		Beam		53	S	X			5′-8″	8′-2″						29′-0″	28′-7″	386
5	6U310		Beam		53	S	X			5′-8″	8′-0″						28′-8″	28′-3″	212
5	6U311		Beam		5	S	X			5′-8″	8′-0″	8′-0″					21′-8″	21′-5″	161
9	6U312		Beam		53	S	X			5′-8″	7′-9″						28′-2″	27′-9″	375
23	6U313		Beam		53	S	X			5′-8″	7′-5″						27′-6″	27′-1″	936
5	6U314		Beam		5	S	X			5′-8″	7′-5″	7′-5″					20′-6″	20′-3″	152
24	4U315		Beam		5	S	X			5′-8″	2′-0″	2′-0″					9′-8″	9′-6″	152
80	11V300		Column & Drilled Shaft		20		X			50′-3″							50′-3″	50′-3″	21,358
80	11V301		Column & Drilled Shaft		20		X			52′-3″							52′-3″	52′-3″	22,208
80	11V302		Column		17		X			21′-6″							23′-1″	23′-1″	9,811
80	11V303		Column		17		X			19′-6″							21′-1″	21′-1″	8,961

BILL OF REINFORCING STEEL

NO. REQ'D.	MARK NO. SIZE	MARK NO. MARK	LOCATION	EPOXY (E)	SHAPE NO.	STIRRUP (S)	SUBSTR. (X)	VARIES (V)	NO. EACH	DIMENSIONS B FT. IN.	C FT. IN.	D FT. IN.	E FT. IN.	F FT. IN.	H FT. IN.	K FT. IN.	NOMINAL LENGTH FT. IN.	ACTUAL LENGTH FT. IN.	WEIGHT LBS.
			PIER 4																
77	6D400		Beam		20		X			2′-11″							2′-11″	2′-11″	337
20	10H400		Beam		20		X			46′-11″							46′-11″	46′-11″	4,038
10	10H401		Beam		20		X			36′-4″							36′-4″	36′-4″	1,563
20	10H402		Beam		17		X			46′-11″							48′-4″	48′-4″	4,160
10	10H403		Beam		20		X			50′-10″							50′-10″	50′-10″	2,187
12	6H404		Beam		20		X			14′-0″							14′-0″	14′-0″	252
28	7H405		Beam		20		X			46′-11″							46′-11″	46′-11″	2,685
16	7H406		Beam		20		X			22′-10″							22′-10″	22′-10″	747
18	6H407		Beam		5	S	X			5′-6″	22″	22″					9′-2″	8′-11″	241
5	5P400		Drilled Shaft		35		X			4′-6″	6″	32′-5″					944′-1″	944′-1″	4,923
5	5P401		Column & Drilled Shaft		35		X			4′-6″	3″	40′-8″					2306′-7″	2306′-7″	12,029
55	5P402		Beam		34	S	X			4′-6″							14′-11″	14′-11″	856
40	6U400		Beam		53	S	X			5′-8″	6′-8″						26′-0″	25′-7″	1,537
10	6U401		Beam		5	S	X			5′-8″	6′-8″	6′-8″					19′-0″	18′-9″	282
18	6U402		Beam		53	S	X			5′-8″	7′-0″						26′-8″	26′-3″	710
10	6U403		Beam		5	S	X			5′-8″	7′-2″	7′-2″					20′-0″	19′-9″	297
28	6U404		Beam		53	S	X			5′-8″	7′-2″						27′-0″	26′-7″	1,118
16	6U405		Beam		53	S	X			5′-8″	7′-7″						27′-10″	27′-5″	659
5	6U406		Beam		5	S	X			5′-8″	7′-7″	7′-7″					20′-10″	20′-7″	155
32	4U407		Beam		5	S	X			5′-8″	2′-0″	2′-0″					9′-8″	9′-6″	203
80	11V400		Column & Drilled Shaft		20		X			46′-11″							46′-11″	46′-11″	19,941
80	11V401		Column & Drilled Shaft		20		X			48′-11″							48′-11″	48′-11″	20,792
80	11V402		Column		17		X			29′-6″							31′-1″	31′-1″	13,212
80	11V403		Column		17		X			27′-6″							29′-1″	29′-1″	12,362

Note:
For bar bending diagram, see Sheet No. 113.

BILL OF REINFORCING STEEL

Detailed JUL 2009
Checked JUL 2009

Note: This drawing is not to scale. Follow dimensions.

Sheet No. 115 of 125

T:\de-proj\St_Louis_City\Construction\J6I0984B\Asbuilts\Bridge\B_A6500_115-125_J6I0984B_115.dgn

9:10:36 AM

DATE 8/20/09
ROUTE I-70 STATE MO
DISTRICT 6 SHEET NO. BR115
COUNTY St. Louis City - MO
JOB NO. J6I0984B
CONTRACT ID. 100127-601
PROJECT NO. I-70-5(315)
BRIDGE NO. A6500

DESCRIPTION | DATE

MISSOURI HIGHWAYS AND TRANSPORTATION COMMISSION
105 WEST CAPITOL
JEFFERSON CITY, MO 65102
1-888-ASK-MODOT (1-888-275-6636)

HNTB
715 KIRK DRIVE
KANSAS CITY, MO 64105-1310
TELEPHONE (816) 472-1201
CERTIFICATE OF AUTHORITY NO. 001270

FINAL PLANS REV.

BILL OF REINFORCING STEEL

NO. REQ'D.	MARK NO. SIZE	MARK NO. MARK	LOCATION	EPOXY (E)	SHAPE NO.	STIRRUP (S)	SUBSTR. (X)	VARIES (V)	NO. EACH	DIMENSIONS B	C	D	E	F	H	K	NOMINAL LENGTH	ACTUAL LENGTH	WEIGHT
										FT. IN.	FT. IN.	FT. IN.	FT. IN.	FT. IN.	FT. IN.	FT. IN.	FT. IN.	FT. IN.	LBS.
			PIER 5																
26	10	H500	Beam	E	20		X			41′-7″							41′-7″	41′-7″	4,652
15	10	H501	Beam *	E	20		X			40′-4″							40′-4″	40′-4″	2,603
26	10	H502	Beam	E	17		X			41′-7″							43′-0″	43′-0″	4,811
13	10	H503	Beam	E	20		X			45′-9″							45′-9″	45′-9″	2,559
12	6	H504	Beam	E	20		X			18′-4″							18′-4″	18′-4″	330
44	6	H505	Beam	E	20		X			13′-6″							13′-6″	13′-6″	892
28	7	H506	Beam	E	20		X			41′-7″							41′-7″	41′-7″	2,381
18	7	H507	Beam *	E	20		X			29′-2″							29′-2″	29′-2″	1,073
18	6	H508	Beam	E	5	S	X			7′-6″	22″	22″					11′-2″	10′-11″	295
24	4	H509	Beam	E	20		X			3′-8″							3′-8″	3′-8″	59
5	5	P500	Column & Drilled Shaft		35		X			5′-6″	3″	72′-1″					4976′-1″	4976′-1″	25,950
65	5	P501	Beam	E	34	S	X			5′-6″							18′-1″	18′-1″	1,226
17	6	U500	Beam	E	53	S	X			7′-8″	6′-7″						29′-10″	29′-5″	751
6	6	U501	Beam	E	5	S	X			7′-8″	6′-7″	6′-7″					20′-10″	20′-7″	185
25	6	U502	Beam	E	53	S	X			7′-8″	6′-11″						30′-6″	30′-1″	1,130
2	6	U503	Beam	E	5	S	X			7′-8″	6′-11″	6′-11″					21′-6″	21′-3″	66
7	6	U504	Beam	E	5	S	X			7′-8″	7′-4″	7′-4″					22′-4″	22′-1″	232
20	6	U505	Beam	E	53	S	X			7′-8″	7′-4″						31′-4″	30′-11″	929
26	6	U506	Beam	E	53	S	X			7′-8″	7′-8″						32′-0″	31′-7″	1,233
6	6	U507	Beam	E	5	S	X			7′-8″	7′-8″	7′-8″					23′-0″	22′-9″	205
20	6	U508	Beam	E	53	S	X			7′-8″	7′-4″						31′-4″	30′-11″	929
7	6	U509	Beam	E	5	S	X			7′-8″	7′-4″	7′-4″					22′-4″	22′-1″	232
2	6	U510	Beam	E	5	S	X			7′-8″	7′-1″	7′-1″					21′-10″	21′-7″	65
25	6	U511	Beam	E	53	S	X			7′-8″	7′-1″						30′-10″	30′-5″	1,142
17	6	U512	Beam	E	53	S	X			7′-8″	6′-10″						30′-4″	29′-11″	764
6	6	U513	Beam	E	5	S	X			7′-8″	6′-10″	6′-10″					21′-4″	21′-1″	190
139	4	U514	Beam	E	5	S	X			7′-8″	2′-0″	2′-0″					11′-8″	11′-6″	1,068
60	4	U515	Beam	E	5	S	X			8″	2′-0″	2′-0″					4′-8″	4′-6″	180
105	11	V500	Column & Drilled Shaft		20		X			33′-2″							33′-2″	33′-2″	18,503
105	11	V501	Column & Drilled Shaft		20		X			35′-2″							35′-2″	35′-2″	19,618
105	11	V502	Column		17		X			42′-9″							44′-4″	44′-4″	24,732
105	11	V503	Column		17		X			40′-9″							42′-4″	42′-4″	23,616
40	W5	W500	Beam	E	22		X			18″	9 1/8″						26′-1″	26′-1″	174

* Two additional #7-H507 and #10-H501 are included in the bar bill for testing.

BILL OF REINFORCING STEEL

NO. REQ'D.	MARK NO. SIZE	MARK NO. MARK	LOCATION	EPOXY (E)	SHAPE NO.	STIRRUP (S)	SUBSTR. (X)	VARIES (V)	NO. EACH	DIMENSIONS B	C	D	E	F	H	K	NOMINAL LENGTH	ACTUAL LENGTH	WEIGHT
										FT. IN.	FT. IN.	FT. IN.	FT. IN.	FT. IN.	FT. IN.	FT. IN.	FT. IN.	FT. IN.	LBS.
			PIER 6																
84	6	D600	Beam		20		X			2′-11″							2′-11″	2′-11″	368
11	10	H600	Beam		20		X			59′-6″							59′-6″	59′-6″	2,816
11	10	H601	Beam		20		X			56′-5″							56′-5″	56′-5″	2,670
16	7	H602	Beam		20		X			52′-9″							52′-9″	52′-9″	1,725
14	7	H603	Beam		20		X			56′-5″							56′-5″	56′-5″	1,614
14	10	H604	Beam		17		X			59′-6″							60′-11″	60′-11″	3,670
4	6	H605	Beam		20		X			30′-0″							30′-0″	30′-0″	180
14	10	H606	Beam		20		X			25′-4″							25′-4″	25′-4″	1,526
4	6	H607	Beam		20		X			16′-8″							16′-8″	16′-8″	100
14	10	H608	Beam		17		X			42′-0″							43′-5″	43′-5″	2,616
2	7	H609	Beam		20		X			25′-4″							25′-4″	25′-4″	104
19	6	H610	Beam		5	S	X			6′-0″	22″	22″					9′-8″	9′-5″	269
8	4	H611	Beam		20		X			6′-2″							6′-2″	6′-2″	33
4	5	P600	Column & Drilled Shaft		35		X			5′-6″	3″	74′-6″					5141′-6″	5141′-6″	21,450
52	5	P601	Beam		34	S	X			5′-6″							18′-1″	18′-1″	981
36	6	U600	Beam		53	S	X			6′-2″	7′-1″						27′-10″	27′-5″	1,482
6	6	U601	Beam		5	S	X			6′-2″	7′-1″	7′-1″					20′-4″	20′-1″	181
39	6	U602	Beam		53	S	X			6′-2″	7′-5″						28′-6″	28′-1″	1,645
6	6	U603	Beam		5	S	X			6′-2″	7′-5″	7′-5″					21′-0″	20′-9″	187
12	6	U604	Beam		53	S	X			6′-2″	7′-2″						28′-0″	27′-7″	497
6	6	U605	Beam		5	S	X			6′-2″	7′-2″	7′-2″					20′-6″	20′-3″	182
17	6	U606	Beam		53	S	X			6′-2″	6′-11″						27′-6″	27′-1″	692
19	6	U607	Beam		53	S	X			6′-2″	6′-8″						27′-0″	26′-7″	759
6	6	U608	Beam		5	S	X			6′-2″	6′-8″	6′-8″					19′-6″	19′-3″	173
18	4	U609	Beam		5	S	X			3′-9″	2′-0″	2′-0″					7′-9″	7′-7″	91
68	11	V600	Column & Drilled Shaft		20		X			35′-3″							35′-3″	35′-3″	12,735
68	11	V601	Column & Drilled Shaft		20		X			37′-3″							37′-3″	37′-3″	13,458
68	11	V602	Column		17		X			43′-1″							44′-8″	44′-8″	16,137
68	11	V603	Column		17		X			41′-1″							42′-8″	42′-8″	15,415

Note:
For bar bending diagram, see Sheet No. 113.

BILL OF REINFORCING STEEL

DATE 8/20/09
ROUTE I-70 STATE MO
DISTRICT 6 SHEET NO. BR116
COUNTY St. Louis City - MO
JOB NO. J6I0984B
CONTRACT ID. 100127-601
PROJECT NO. I-70-5(315)
BRIDGE NO. A6500

DESCRIPTION | DATE

MISSOURI HIGHWAYS AND TRANSPORTATION COMMISSION
105 WEST CAPITOL
JEFFERSON CITY, MO 65102
1-888-ASK-MODOT (1-888-275-6636)

HNTB
715 KIRK DRIVE
KANSAS CITY, MO 64105-1310
TELEPHONE (816) 472-1201
CERTIFICATE OF AUTHORITY NO. 001270

FINAL PLANS

REV.

Detailed JUL 2009
Checked JUL 2009

Note: This drawing is not to scale. Follow dimensions.

Sheet No. 116 of 125

I:\de-proj\St_Louis_City\Construction\J6I0984B\Asbuilts\Bridge\B_A6500_116-125_J6I0984B_116.dgn
1:39:50 PM

BILL OF REINFORCING STEEL

NO. REQ'D.	MARK NO. SIZE	MARK NO. MARK	LOCATION	EPOXY (E)	SHAPE NO.	STIRRUP (S)	SUBSTR. (X)	VARIES (V)	NO. EACH	DIMENSIONS B FT. IN.	C FT. IN.	D FT. IN.	E FT. IN.	F FT. IN.	H FT. IN.	K FT. IN.	NOMINAL LENGTH FT. IN.	ACTUAL LENGTH FT. IN.	WEIGHT LBS.
			PIER 7																
77	6	D700	Beam		20		X			2′-11″							2′-11″	2′-11″	337
18	6	H700	Beam		5	S	X			6′-0″	22″	22″					9′-8″	9′-5″	255
11	10	H701	Beam		20		X			52′-3″							52′-3″	52′-3″	2,473
11	10	H702	Beam		20		X			48′-1″							48′-1″	48′-1″	2,276
14	7	H703	Beam		20		X			45′-6″							45′-6″	45′-6″	1,302
14	7	H704	Beam		20		X			48′-1″							48′-1″	48′-1″	1,376
12	10	H705	Beam		17		X			52′-3″							53′-8″	53′-8″	2,773
12	10	H706	Beam		17		X			48′-1″							49′-6″	49′-6″	2,556
4	6	H707	Beam		20		X			5′-1″							5′-1″	5′-1″	31
24	6	H708	Beam		20		X			13′-9″							13′-9″	13′-9″	496
4	6	H709	Beam		20		X			15′-0″							15′-0″	15′-0″	90
1	5	P700	Column & Drilled Shaft		35		X			5′-6″	3″	75′-0″					5175′-9″	5175′-9″	5,398
1	5	P701	Column & Drilled Shaft		35		X			5′-6″	3″	74′-2″					5118′-8″	5118′-8″	5,339
1	5	P702	Column & Drilled Shaft		35		X			5′-6″	3″	73′-3″					5055′-11″	5055′-11″	5,273
1	5	P703	Column & Drilled Shaft		35		X			5′-6″	3″	72′-5″					4998′-10″	4998′-10″	5,214
52	5	P704	Beam		34	S	X			5′-6″							18′-1″	18′-1″	981
107	6	U700	Beam		53	S	X			6′-2″	6′-8″						27′-0″	26′-7″	4,272
24	6	U701	Beam		5	S	X			6′-2″	6′-8″	6′-8″					19′-6″	19′-3″	694
122	4	U702	Beam		5	S	X			6′-2″	2′-0″	2′-0″					10′-2″	10′-0″	815
64	11	V700	Column & Drilled Shaft		20		X			36′-3″							36′-3″	36′-3″	12,326
64	11	V701	Column & Drilled Shaft		20		X			38′-3″							38′-3″	38′-3″	13,006
16	11	V702	Column		17		X			42′-7″							44′-2″	44′-2″	3,755
16	11	V703	Column		17		X			40′-7″							42′-2″	42′-2″	3,585
16	11	V704	Column		17		X			41′-9″							43′-4″	43′-4″	3,684
16	11	V705	Column		17		X			39′-9″							41′-4″	41′-4″	3,514
16	11	V706	Column		17		X			40′-10″							42′-5″	42′-5″	3,606
16	11	V707	Column		17		X			38′-10″							40′-5″	40′-5″	3,436
16	11	V708	Column		17		X			40′-0″							41′-7″	41′-7″	3,535
16	11	V709	Column		17		X			38′-0″							39′-7″	39′-7″	3,365

BILL OF REINFORCING STEEL

NO. REQ'D.	MARK NO. SIZE	MARK NO. MARK	LOCATION	EPOXY (E)	SHAPE NO.	STIRRUP (S)	SUBSTR. (X)	VARIES (V)	NO. EACH	DIMENSIONS B FT. IN.	C FT. IN.	D FT. IN.	E FT. IN.	F FT. IN.	H FT. IN.	K FT. IN.	NOMINAL LENGTH FT. IN.	ACTUAL LENGTH FT. IN.	WEIGHT LBS.
			PIER 8																
70	6	D800	Beam		20		X			2′-11″							2′-11″	2′-11″	307
10	10	H800	Beam		20		X			51′-9″							51′-9″	51′-9″	2,227
10	10	H801	Beam		20		X			47′-1″							47′-1″	47′-1″	2,026
12	10	H802	Beam		17		X			51′-9″							53′-2″	53′-2″	2,745
12	10	H803	Beam		17		X			47′-1″							48′-6″	48′-6″	2,504
14	7	H804	Beam		20		X			45′-0″							45′-0″	45′-0″	1,288
14	7	H805	Beam		20		X			47′-1″							47′-1″	47′-1″	1,347
4	6	H806	Beam		20		X			5′-4″							5′-4″	5′-4″	32
28	6	H807	Beam		20		X			14′-0″							14′-0″	14′-0″	589
18	6	H808	Beam		5	S	X			6′-0″	22″	22″					9′-8″	9′-5″	255
4	5	P800	Drilled Shaft		35		X			5′-6″	6″	29′-10″					1067′-8″	1067′-8″	4,454
1	5	P801	Column & Drilled Shaft		35		X			5′-6″	3″	55′-6″					3840′-7″	3840′-7″	4,006
1	5	P802	Column & Drilled Shaft		35		X			5′-6″	3″	54′-8″					3783′-7″	3783′-7″	3,946
1	5	P803	Column & Drilled Shaft		35		X			5′-6″	3″	53′-10″					3726′-6″	3726′-6″	3,887
1	5	P804	Column & Drilled Shaft		35		X			5′-6″	3″	53′-0″					3669′-5″	3669′-5″	3,827
52	5	P805	Beam		34	S	X			5′-6″							18′-1″	18′-1″	981
99	6	U800	Beam		53	S	X			6′-2″	6′-7″						26′-10″	26′-5″	3,928
24	6	U801	Beam		5	S	X			6′-2″	6′-7″	6′-7″					19′-4″	19′-1″	688
120	4	U802	Beam		5	S	X			6′-2″	2′-0″	2′-0″					10′-2″	10′-0″	802
112	11	V800	Drilled Shaft		20		X			37′-9″							37′-9″	37′-8″	22,463
56	11	V801	Column & Drilled Shaft		20		X			49′-8″							49′-8″	49′-8″	14,777
56	11	V802	Column & Drilled Shaft		20		X			51′-8″							51′-8″	51′-8″	15,372
14	11	V803	Column		17		X			39′-6″							41′-1″	41′-1″	3,056
14	11	V804	Column		17		X			37′-6″							39′-1″	39′-1″	2,907
14	11	V805	Column		17		X			38′-8″							40′-3″	40′-3″	2,994
14	11	V806	Column		17		X			36′-8″							38′-3″	38′-3″	2,845
14	11	V807	Column		17		X			37′-10″							39′-5″	39′-5″	2,932
14	11	V808	Column		17		X			35′-10″							37′-5″	37′-5″	2,783
14	11	V809	Column		17		X			37′-0″							38′-7″	38′-7″	2,870
14	11	V810	Column		17		X			35′-0″							36′-7″	36′-7″	2,721

Note:
For bar bending diagram, see Sheet No. 113.

BILL OF REINFORCING STEEL

Detailed JUL 2009
Checked JUL 2009

Note: This drawing is not to scale. Follow dimensions.

Sheet No. 117 of 125

T:\de-proj\St_Louis_City\Construction\J6I0984B\Asbuilts\Bridge\B_A6500_117-125_J6I0984B_117.dgn 2:02:39 PM

DATE 8/20/09
ROUTE I-70 STATE MO
DISTRICT 6 SHEET NO. BR117
COUNTY St. Louis City - MO
JOB NO. J6I0984B
CONTRACT ID. 100127-601
PROJECT NO. I-70-5(315)
BRIDGE NO. A6500

DESCRIPTION | DATE | REV.

MISSOURI HIGHWAYS AND TRANSPORTATION COMMISSION
105 WEST CAPITOL
JEFFERSON CITY, MO 65102
1-888-ASK-MODOT (1-888-275-6636)

HNTB
715 KIRK DRIVE
KANSAS CITY, MO 64105-1310
TELEPHONE (816) 472-1201
CERTIFICATE OF AUTHORITY NO. 001270

FINAL PLANS

BILL OF REINFORCING STEEL

NO. REQ'D.	MARK NO. SIZE	MARK NO. MARK	LOCATION	EPOXY (E)	SHAPE NO.	STIRRUP (S)	SUBSTR. (X)	VARIES (V)	NO. EACH	DIMENSIONS B FT. IN.	C FT. IN.	D FT. IN.	E FT. IN.	F FT. IN.	H FT. IN.	K FT. IN.	NOMINAL LENGTH FT. IN.	ACTUAL LENGTH FT. IN.	WEIGHT LBS.
			PIER 9																
70		6D900	Beam		20		X			2′-11″							2′-11″	2′-11″	307
11		10H900	Beam		20		X			50′-0″							50′-0″	50′-0″	2,367
11		10H901	Beam		20		X			45′-3″							45′-3″	45′-3″	2,142
12		10H902	Beam		17		X			50′-0″							51′-5″	51′-5″	2,655
12		10H903	Beam		20		X			34′-3″							35′-8″	35′-8″	1,842
12		10H904	Beam		20		X			21′-11″							21′-11″	21′-11″	1,132
16		7H905	Beam		20		X			43′-3″							43′-3″	43′-3″	1,414
14		7H906	Beam		20		X			45′-3″							45′-3″	45′-3″	1,295
19		6H907	Beam		5	S	X			6′-0″	22″	22″					9′-8″	9′-5″	269
2		7H908	Beam		20		X			21′-11″							21′-11″	21′-11″	90
4		6H909	Beam		20		X			4′-3″							4′-3″	4′-3″	26
4		6H910	Beam		20		X			11′-2″							11′-2″	11′-2″	67
4		5P900	Drilled Shaft		35		X			5′-6″	6″	29′-9″					1064′-10″	1064′-10″	4,442
4		5P901	Column & Drilled Shaft		35		X			5′-6″	3″	56′-3″					3892′-0″	3892′-0″	16,237
52		5P902	Beam		34	S	X			5′-6″							18′-1″	18′-1″	981
61		6U900	Beam		53	S	X			6′-2″	7′-2″						28′-0″	27′-7″	2,527
18		6U901	Beam		5	S	X			6′-2″	7′-2″	7′-2″					20′-6″	20′-3″	547
22		6U902	Beam		53	S	X			6′-2″	6′-8″						27′-0″	26′-7″	878
6		6U903	Beam		5	S	X			6′-2″	6′-8″	6′-8″					19′-6″	19′-3″	173
34		4U904	Beam		5	S	X			6′-2″	2′-0″	2′-0″					10′-2″	10′-0″	227
64		11V900	Column & Drilled Shaft		20		X			49′-9″							49′-9″	49′-9″	16,917
64		11V901	Column & Drilled Shaft		20		X			51′-9″							51′-9″	51′-9″	17,597
64		11V902	Column		17		X			40′-1″							41′-8″	41′-8″	14,168
64		11V903	Column		17		X			38′-1″							39′-8″	39′-8″	13,488
			SLAB																
498		6S100	Slab	E	17					29′-1″							29′-9″	29′-9″	22,253
518		6S101	Slab	E	17					34′-9″							35′-5″	35′-5″	27,555
294		5S102	Slab	E	20					44′-9″							44′-9″	44′-9″	13,722
510		5S103	Slab	E	20					3′-9″							3′-9″	3′-9″	1,995
48		6S104	Slab	E	20					45′-7″							45′-7″	45′-7″	3,286
1517		6S200	Slab	E	17					60′-0″							60′-8″	60′-8″	138,231
242		6S201	Slab	E	17					34′-0″							34′-8″	34′-8″	12,601
35		6S202	Slab	E	17			V	1	2′-6″							3′-2″	3′-2″	1,658
			Increment = 20″							59′-3″							59′-11″	59′-11″	
33		6S203	Slab	E	20			V	1	5′-6″							5′-6″	5′-6″	1,623
			Increment = 20½″							60′-0″							60′-0″	60′-0″	
712		8S204	Slab	E	20					55′-7″							55′-7″	55′-7″	105,666
408		8S205	Slab	E	20					42′-4″							42′-4″	42′-4″	46,116
767		5S206	Slab	E	20					4′-0″							4′-0″	4′-0″	3,200
80		6S207	Slab	E	20					53′-4″							53′-4″	53′-4″	6,409
3		6S208	Slab	E	20					44′-1″							44′-1″	44′-1″	199
2790		6S300	Slab	E	17					53′-11″							54′-7″	54′-7″	228,736
1120		6S301	Slab	E	20					59′-1″							59′-1″	59′-1″	106,754
138		8S302	Slab	E	20					38′-3″							38′-3″	38′-3″	14,094
138		8S303	Slab	E	20					35′-10″							35′-10″	35′-10″	13,203
138		8S304	Slab	E	20					36′-3″							36′-3″	36′-3″	13,357
138		8S305	Slab	E	20					48′-7″							48′-7″	48′-7″	17,901
1270		5S306	Slab	E	20					4′-4″							4′-4″	4′-4″	5,740
120		6S307	Slab	E	20					56′-10″							56′-10″	56′-10″	10,244
12		8S308	Slab	E	20					32′-0″							32′-0″	32′-0″	1,025
12		8S309	Slab	E	20					39′-2″							39′-2″	39′-2″	1,255
184		6S310	Slab *	E	20					10′-2″							10′-2″	10′-2″	2,810
34		6S311	Slab	E	20					3′-10″							3′-10″	3′-10″	196
64		4S312	Slab	E	20					4′-10″							4′-10″	4′-10″	207
70		4S313	Slab	E	54					10″	17″	2′-0″	18″	18″	17″	17″	7′-3″	7′-0″	327
70		4S314	Slab	E	20					4′-1″							4′-1″	4′-1″	191
70		4S315	Slab	E	5	S				3′-10″	17″	17″					6′-8″	6′-6″	304
104		5S400	Slab Drain	E	20					2′-0″							2′-0″	2′-0″	217

* Two additional #6-S310 and #9-H270 are included in the bar bill for testing.

BILL OF REINFORCING STEEL

NO. REQ'D.	MARK NO. SIZE	MARK NO. MARK	LOCATION	EPOXY (E)	SHAPE NO.	STIRRUP (S)	SUBSTR. (X)	VARIES (V)	NO. EACH	DIMENSIONS B FT. IN.	C FT. IN.	D FT. IN.	E FT. IN.	F FT. IN.	H FT. IN.	K FT. IN.	NOMINAL LENGTH FT. IN.	ACTUAL LENGTH FT. IN.	WEIGHT LBS.
			PIER 2 BACK RAMP 8 DIAPHRAGM																
2		6H250	Pier 2 Span(1-2) Ramp 8	E	20					51′-1″							51′-1″	51′-1″	153
1		5H251	Pier 2 Span(1-2) Ramp 8	E	20					51′-1″							51′-1″	51′-1″	53
4		6H252	Pier 2 Span(1-2) Ramp 8	E	20					10′-3″							10′-3″	10′-3″	62
4		5H253	Pier 2 Span(1-2) Ramp 8	E	20					11′-1″							11′-1″	11′-1″	46
8		4H254	Pier 2 Span(1-2) Ramp 8	E	20					2′-7″							2′-7″	2′-7″	14
8		4H255	Pier 2 Span(1-2) Ramp 8	E	20					19″							19″	19″	8
3		4H256	Pier 2 Span(1-2) Ramp 8	E	20					6′-3″							6′-3″	6′-3″	13
3		4H257	Pier 2 Span(1-2) Ramp 8	E	20					4′-3″							4′-3″	4′-3″	9
12		9H258	Pier 2 Span(1-2) Ramp 8	E	20					11′-1″							11′-1″	11′-1″	452
3		6H259	Pier 2 Span(1-2) Ramp 8	E	20					5′-6″							5′-6″	5′-6″	25
5		5H260	Pier 2 Span(1-2) Ramp 8	E	38	S		V	1	2′-8″	19″				19″	3″	4′-3″	4′-3″	24
			Increment = 2″							3′-4″	19″				19″	3″	4′-11″	4′-11″	
5		5H261	Pier 2 Span(1-2) Ramp 8	E	19	S		V	1	2′-8″	2′-5″						5′-1″	5′-0″	28
			Increment = 2″							3′-4″	2′-5″						5′-9″	5′-8″	
24		6U250	Pier 2 Span(1-2) Ramp 8	E	5	S				4′-10″	14″	2′-5″					8′-5″	8′-2″	294
24		6U251	Pier 2 Span(1-2) Ramp 8	E	39	S				4′-10″	14″	2′-5″					8′-5″	8′-2″	294
4		6U252	Pier 2 Span(1-2) Ramp 8	E	19	S				3′-5″	10″						4′-3″	4′-2″	25
4		6U253	Pier 2 Span(1-2) Ramp 8	E	19	S				4′-10″	10″						5′-8″	5′-7″	34
40		6U254	Pier 2 Span(1-2) Ramp 8	E	5	S		V	8	2′-8″	14″	2′-5″					6′-3″	6′-0″	411
			Increment = 5″							4′-4″	14″	2′-5″					7′-11″	7′-8″	
40		6U255	Pier 2 Span(1-2) Ramp 8	E	39	S		V	8	2′-8″	14″	2′-5″					6′-3″	6′-0″	411
			Increment = 5″							4′-4″	14″	2′-5″					7′-11″	7′-8″	
16		4U256	Pier 2 Span(1-2) Ramp 8	E	5	S				2′-6″	12″	2′-5″					5′-11″	5′-9″	61
16		4U257	Pier 2 Span(1-2) Ramp 8	E	39	S				2′-6″	12″	2′-5″					5′-11″	5′-9″	61
7		5V250	Pier 2 Span(1-2) Ramp 8	E	20					5′-3″							5′-3″	5′-3″	38
			PIER 2 BACK RAMP 10 DIAPHRAGM																
2		6H262	Pier 2 Span(1-2) Ramp 10	E	20					58′-7″							58′-7″	58′-7″	176
1		5H263	Pier 2 Span(1-2) Ramp 10	E	20					58′-7″							58′-7″	58′-7″	61
5		6H264	Pier 2 Span(1-2) Ramp 10	E	20					9′-3″							9′-3″	9′-3″	69
5		5H265	Pier 2 Span(1-2) Ramp 10	E	20					10′-2″							10′-2″	10′-2″	53
10		4H266	Pier 2 Span(1-2) Ramp 10	E	20					2′-9″							2′-9″	2′-9″	18
10		4H267	Pier 2 Span(1-2) Ramp 10	E	20					20″							20″	20″	11
4		4H268	Pier 2 Span(1-2) Ramp 10	E	20					6′-5″							6′-5″	6′-5″	17
4		4H269	Pier 2 Span(1-2) Ramp 10	E	20					4′-6″							4′-6″	4′-6″	12
17		9H270	Pier 2 Span(1-2) Ramp 10 *	E	20					10′-2″							10′-2″	10′-2″	588
4		6H271	Pier 2 Span(1-2) Ramp 10	E	20					5′-6″							5′-6″	5′-6″	33
5		5H272	Pier 2 Span(1-2) Ramp 10	E	38	S		V	1	2′-8″	2′-6″				2′-5″	8″	5′-2″	5′-2″	29
			Increment = 2″							3′-4″	2′-6″				2′-5″	8″	5′-10″	5′-10″	
5		5H273	Pier 2 Span(1-2) Ramp 10	E	12	S		V	1	13″	2′-8″				12″	3″	3′-9″	3′-9″	21
			Increment = 2″							13″	3′-4″				12″	3″	4′-5″	4′-5″	
30		6U258	Pier 2 Span(1-2) Ramp 10	E	5	S				4′-10″	14″	2′-6″					8′-6″	8′-3″	372
30		6U259	Pier 2 Span(1-2) Ramp 10	E	39	S				4′-10″	14″	2′-6″					8′-6″	8′-3″	372
4		6U260	Pier 2 Span(1-2) Ramp 10	E	19	S				3′-8″	2′-6″						6′-2″	6′-1″	37
4		6U261	Pier 2 Span(1-2) Ramp 10	E	19	S				3′-8″	2′-6″						6′-2″	6′-1″	37
50		6U262	Pier 2 Span(1-2) Ramp 10	E	5	S		V	10	2′-9″	14″	2′-6″					6′-5″	6′-2″	526
			Increment = 5″							4′-5″	14″	2′-6″					8′-1″	7′-10″	
50		6U263	Pier 2 Span(1-2) Ramp 10	E	39	S		V	10	2′-9″	14″	2′-6″					6′-5″	6′-2″	526
			Increment = 5″							4′-5″	14″	2′-6″					8′-1″	7′-10″	
15		4U264	Pier 2 Span(1-2) Ramp 10	E	5	S				2′-5″	12″	2′-6″					5′-11″	5′-9″	58
15		4U265	Pier 2 Span(1-2) Ramp 10	E	39	S				2′-5″	12″	2′-6″					5′-11″	5′-9″	58
7		5V251	Pier 2 Span(1-2) Ramp 10	E	20					5′-4″							5′-4″	5′-4″	39

Note:
For bar bending diagram, see Sheet No. 113.

BILL OF REINFORCING STEEL

Detailed JUL 2009
Checked JUL 2009

Note: This drawing is not to scale. Follow dimensions.

Sheet No. 118 of 125

DATE 8/20/09
ROUTE I-70 | STATE MO
DISTRICT 6 | SHEET NO. BR118
COUNTY St. Louis City - MO
JOB NO. J6I0984B
CONTRACT ID. 100127-601
PROJECT NO. I-70-5(315)
BRIDGE NO. A6500

DESCRIPTION | DATE

MISSOURI HIGHWAYS AND TRANSPORTATION COMMISSION
105 WEST CAPITOL
JEFFERSON CITY, MO 65102
1-888-ASK-MODOT (1-888-275-6636)

HNTB
715 KIRK DRIVE
KANSAS CITY, MO 64105-1310
TELEPHONE (816) 472-1201
CERTIFICATE OF AUTHORITY NO. 001270

FINAL PLANS

REV.

T:\de-proj\St_Louis_City\Construction\J6I0984B\Asbuilts\Bridge\B_A6500_118-125_J6I0984B_118.dgn
9:38:53 AM

BILL OF REINFORCING STEEL

NO. REQ'D.	MARK NO. SIZE	MARK NO. MARK	LOCATION	EPOXY (E)	SHAPE NO.	STIRRUP (S)	SUBSTR. (X)	VARIES (V)	NO. EACH	DIMENSIONS B FT. IN.	C FT. IN.	D FT. IN.	E FT. IN.	F FT. IN.	H FT. IN.	K FT. IN.	NOMINAL LENGTH FT. IN.	ACTUAL LENGTH FT. IN.	WEIGHT LBS.
			PIER 2 AHEAD DIAPHRAGM																
6		6H274	Pier 2 Span(2-3)	E	20					42'-9"							42'-9"	42'-9"	385
3		5H275	Pier 2 Span(2-3)	E	20					42'-4"							42'-4"	42'-4"	132
11		6H276	Pier 2 Span(2-3)	E	20					8'-11"							8'-11"	8'-11"	147
11		5H277	Pier 2 Span(2-3)	E	20					9'-9"							9'-9"	9'-9"	112
22		4H278	Pier 2 Span(2-3)	E	20					2'-9"							2'-9"	2'-9"	40
22		4H279	Pier 2 Span(2-3)	E	20					20"							20"	20"	24
10		4H280	Pier 2 Span(2-3)	E	20					6'-6"							6'-6"	6'-6"	43
10		4H281	Pier 2 Span(2-3)	E	20					4'-2"							4'-2"	4'-2"	28
33		9H282	Pier 2 Span(2-3)	E	20					9'-9"							9'-9"	9'-9"	1,094
10		6H283	Pier 2 Span(2-3)	E	20					5'-6"							5'-6"	5'-6"	83
5		5H284	Pier 2 Span(2-3)	E	12	S		V	1	10"	2'-7"				10"	2"	3'-5"	3'-5"	20
			Increment = 3"							10"	3'-7"				10"	2"	4'-5"	4'-5"	
5		5H285	Pier 2 Span(2-3)	E	38	S		V	1	2'-7"	16"				15"	3"	3'-11"	3'-11"	23
			Increment = 3"							3'-7"	16"				15"	3"	4'-11"	4'-11"	
66		6U266	Pier 2 Span(2-3)	E	5	S				5'-6"	14"	2'-6"					9'-2"	8'-11"	884
66		6U267	Pier 2 Span(2-3)	E	39	S				5'-6"	14"	2'-6"					9'-2"	8'-11"	884
4		6U268	Pier 2 Span(2-3)	E	19	S				4'-3"	10"						5'-1"	5'-0"	30
4		6U269	Pier 2 Span(2-3)	E	19	S				4'-3"	10"						5'-1"	5'-0"	30
110		6U270	Pier 2 Span(2-3)	E	5	S		V	22	3'-4"	14"	2'-6"					7'-0"	6'-9"	1,253
			Increment = 5"							5'-0"	14"	2'-6"					8'-8"	8'-5"	
110		6U271	Pier 2 Span(2-3)	E	39	S		V	22	3'-4"	14"	2'-6"					7'-0"	6'-9"	1,253
			Increment = 5"							5'-0"	14"	2'-6"					8'-8"	8'-5"	
11		4U272	Pier 2 Span(2-3)	E	5	S				3'-3"	12"	2'-6"					6'-9"	6'-7"	48
11		4U273	Pier 2 Span(2-3)	E	39	S				3'-3"	12"	2'-6"					6'-9"	6'-7"	48
6		5V252	Pier 2 Span(2-3)	E	20					5'-11"							5'-11"	5'-11"	37
			PIER 3 DIAPHRAGM																
22		6H350	Pier 3		20					8'-0"							8'-0"	8'-0"	264
66		4H351	Pier 3		20					8'-0"							8'-0"	8'-0"	353
22		6H352	Pier 3		20					5'-11"							5'-11"	5'-11"	196
20		5H353	Pier 3		19	S				4'-0"	16"						5'-4"	5'-3"	110
20		6H354	Pier 3		20					5'-6"							5'-6"	5'-6"	165
12		5H355	Pier 3		20					3'-7"							3'-7"	3'-7"	45
60		5H356	Pier 3		20					4'-8"							4'-8"	4'-8"	292
132		4U350	Pier 3	E	39	S				6'-7"	12"	3'-0"					10'-7"	10'-5"	919
44		6U351	Pier 3	E	39	S				6'-7"	14"	3'-0"					10'-9"	10'-6"	694
4		6U352	Pier 3		19	S				4'-9"	3'-0"						7'-9"	7'-8"	46
48		6U353	Pier 3	E	39	S				5'-7"	14"	3'-0"					9'-9"	9'-6"	685
8		5V350	Pier 3	E	20					6'-7"							6'-7"	6'-7"	55
			PIER 4 DIAPHRAGM																
22		6H450	Pier 4		20					7'-9"							7'-9"	7'-9"	256
66		4H451	Pier 4		20					7'-9"							7'-9"	7'-9"	342
22		6H452	Pier 4		20					5'-8"							5'-8"	5'-8"	187
20		5H453	Pier 4		19	S				4'-0"	16"						5'-4"	5'-3"	111
20		6H454	Pier 4		20					5'-6"							5'-6"	5'-6"	165
12		5H455	Pier 4		20					3'-7"							3'-7"	3'-7"	45
60		5H456	Pier 4		20					4'-8"							4'-8"	4'-8"	292
110		4U450	Pier 4	E	39	S				6'-7"	12"	3'-0"					10'-7"	10'-5"	766
44		6U451	Pier 4	E	39	S				6'-7"	14"	3'-0"					10'-9"	10'-6"	694
4		6U452	Pier 4		19	S				4'-9"	3'-0"						7'-9"	7'-8"	46
48		6U453	Pier 4	E	39	S				5'-7"	14"	3'-0"					9'-9"	9'-6"	685
8		5V450	Pier 4	E	20					6'-7"							6'-7"	6'-7"	55

* Two addtional #4-H572 are included in the bar bill for testing.

BILL OF REINFORCING STEEL

NO. REQ'D.	MARK NO. SIZE	MARK NO. MARK	LOCATION	EPOXY (E)	SHAPE NO.	STIRRUP (S)	SUBSTR. (X)	VARIES (V)	NO. EACH	DIMENSIONS B FT. IN.	C FT. IN.	D FT. IN.	E FT. IN.	F FT. IN.	H FT. IN.	K FT. IN.	NOMINAL LENGTH FT. IN.	ACTUAL LENGTH FT. IN.	WEIGHT LBS.
			PIER 5 BACK DIAPHRAGM																
2		6H550	Pier 5 Span(4-5)	E	20					53'-4"							53'-4"	53'-4"	160
2		6H551	Pier 5 Span(4-5)	E	20					50'-5"							50'-5"	50'-5"	151
1		5H552	Pier 5 Span(4-5)	E	20					52'-6"							52'-6"	52'-6"	55
1		5H553	Pier 5 Span(4-5)	E	20					50'-5"							50'-5"	50'-5"	53
11		6H554	Pier 5 Span(4-5)	E	20					7'-0"							7'-0"	7'-0"	116
11		5H555	Pier 5 Span(4-5)	E	20					7'-11"							7'-11"	7'-11"	91
33		9H556	Pier 5 Span(4-5)	E	20					7'-11"							7'-11"	7'-11"	888
22		4H557	Pier 5 Span(4-5)	E	20					2'-5"							2'-5"	2'-5"	36
22		4H558	Pier 5 Span(4-5)	E	20					18"							18"	18"	22
10		4H559	Pier 5 Span(4-5)	E	20					5'-8"							5'-8"	5'-8"	38
10		4H560	Pier 5 Span(4-5)	E	20					3'-10"							3'-10"	3'-10"	26
10		5H561	Pier 5 Span(4-5)	E	19	S		V	2	2'-9"	14"						3'-11"	3'-10"	43
			Increment = 2"							3'-5"	14"						4'-7"	4'-6"	
10		6H562	Pier 5 Span(4-5)	E	20					5'-6"							5'-6"	5'-6"	83
66		6U550	Pier 5 Span(4-5)	E	5	S				5'-6"	14"	22"					8'-6"	8'-3"	818
66		6U551	Pier 5 Span(4-5)	E	39	S				5'-6"	14"	22"					8'-6"	8'-3"	818
8		6U552	Pier 5 Span(4-5)	E	19	S				4'-6"	14"						5'-8"	5'-7"	67
88		6U553	Pier 5 Span(4-5)	E	5	S		V	22	3'-6"	14"	22"					6'-6"	6'-3"	925
			Increment = 6"							5'-0"	14"	22"					8'-0"	7'-9"	
88		6U554	Pier 5 Span(4-5)	E	39	S		V	22	3'-6"	14"	22"					6'-6"	6'-3"	925
			Increment = 6"							5'-0"	14"	22"					8'-0"	7'-9"	
11		4U555	Pier 5 Span(4-5)	E	5	S				3'-4"	14"	22"					6'-4"	6'-2"	45
11		4U556	Pier 5 Span(4-5)	E	39	S				3'-4"	14"	22"					6'-4"	6'-2"	45
6		5V550	Pier 5 Span(4-5)	E	20					5'-10"							5'-10"	5'-10"	37
			PIER 5 AHEAD DIAPHRAGM																
2		6H563	Pier 5 Span(5-6)	E	20					52'-1"							52'-1"	52'-1"	156
2		6H564	Pier 5 Span(5-6)	E	20					51'-3"							51'-3"	51'-3"	154
1		5H565	Pier 5 Span(5-6)	E	20					51'-5"							51'-5"	51'-5"	54
1		5H566	Pier 5 Span(5-6)	E	20					51'-3"							51'-3"	51'-3"	53
7		6H567	Pier 5 Span(5-6)	E	20					11'-11"							11'-11"	11'-11"	125
7		5H568	Pier 5 Span(5-6)	E	20					12'-11"							12'-11"	12'-11"	94
21		9H569	Pier 5 Span(5-6)	E	20					12'-11"							12'-11"	12'-11"	922
14		4H570	Pier 5 Span(5-6)	E	20					2'-9"							2'-9"	2'-9"	26
14		4H571	Pier 5 Span(5-6)	E	20					19"							19"	19"	15
8		4H572	Pier 5 Span(5-6) *	E	20					6'-6"							6'-6"	6'-6"	35
6		4H573	Pier 5 Span(5-6)	E	20					4'-3"							4'-3"	4'-3"	17
10		5H574	Pier 5 Span(5-6)	E	19	S		V	2	2'-9"	14"						3'-11"	3'-10"	43
			Increment = 2"							3'-5"	14"						4'-7"	4'-6"	
6		6H575	Pier 5 Span(5-6)	E	20					5'-6"							5'-6"	5'-6"	50
42		6U557	Pier 5 Span(5-6)	E	5	S				5'-9"	14"	22"					8'-9"	8'-6"	536
42		6U558	Pier 5 Span(5-6)	E	39	S				5'-9"	14"	22"					8'-9"	8'-6"	536
8		6U559	Pier 5 Span(5-6)	E	19	S				4'-6"	14"						5'-8"	5'-7"	67
56		6U560	Pier 5 Span(5-6)	E	5	S		V	14	3'-9"	14"	22"					6'-9"	6'-6"	610
			Increment = 6"							5'-3"	14"	22"					8'-3"	8'-0"	
56		6U561	Pier 5 Span(5-6)	E	39	S		V	14	3'-9"	14"	22"					6'-9"	6'-6"	610
			Increment = 6"							5'-3"	14"	22"					8'-3"	8'-0"	
56		4U562	Pier 5 Span(5-6)	E	5	S				3'-7"	14"	22"					6'-7"	6'-5"	240
56		4U563	Pier 5 Span(5-6)	E	39	S				3'-7"	14"	22"					6'-7"	6'-5"	240
6		5V551	Pier 5 Span(5-6)	E	20					6'-3"							6'-3"	6'-3"	39

Note:
For bar bending diagram, see Sheet No. 113.

BILL OF REINFORCING STEEL

Detailed JUL 2009
Checked JUL 2009

Note: This drawing is not to scale. Follow dimensions.

Sheet No. 119 of 125

T:\de-proj\St_Louis_City\Construction\J6I0984B\Asbuilts\Bridge\B_A6500_119-125_J6I0984B_119.dgn

2:10:30 PM

DATE 8/20/09
ROUTE I-70 STATE MO
DISTRICT 6 SHEET NO. BR119
COUNTY St. Louis City - MO
JOB NO. J6I0984B
CONTRACT ID. 100127-601
PROJECT NO. I-70-5(315)
BRIDGE NO. A6500

DESCRIPTION | DATE | REV.

MISSOURI HIGHWAYS AND TRANSPORTATION COMMISSION
105 WEST CAPITOL
JEFFERSON CITY, MO 65102
1-888-ASK-MODOT (1-888-275-6636)

HNTB
715 KIRK DRIVE
KANSAS CITY, MO 64105-1310
TELEPHONE (816) 472-1201
CERTIFICATE OF AUTHORITY NO. 001270

FINAL PLANS

BILL OF REINFORCING STEEL

NO. REQ'D.	MARK NO. SIZE	MARK NO. MARK	LOCATION	EPOXY (E)	SHAPE NO.	STIRRUP (S)	SUBSTR. (X)	VARIES (V)	NO. EACH	DIMENSIONS B	C	D	E	F	H	K	NOMINAL LENGTH	ACTUAL LENGTH	WEIGHT
										FT. IN.	FT. IN.	FT. IN.	FT. IN.	FT. IN.	FT. IN.	FT. IN.	FT. IN.	FT. IN.	LBS.
			PIER 6 DIAPHRAGM																
14	6	H650	Pier 6		20					11′-3″							11′-3″	11′-3″	237
42	4	H651	Pier 6		20					11′-3″							11′-3″	11′-3″	316
14	6	H652	Pier 6		20					9′-2″							9′-2″	9′-2″	193
20	5	H653	Pier 6		19	S				4′-0″	16″						5′-4″	5′-3″	110
12	6	H654	Pier 6		20					5′-6″							5′-6″	5′-6″	99
12	5	H655	Pier 6		20					3′-7″							3′-7″	3′-7″	45
36	5	H656	Pier 6		20					4′-8″							4′-8″	4′-8″	175
126	4	U650	Pier 6	E	39	S				6′-7″	12″	3′-0″					10′-7″	10′-5″	877
28	6	U651	Pier 6	E	39	S				6′-7″	14″	3′-0″					10′-9″	10′-6″	442
4	6	U652	Pier 6		19	S				4′-9″	3′-0″						7′-9″	7′-8″	46
32	6	U653	Pier 6	E	39	S				5′-7″	14″	3′-0″					9′-9″	9′-6″	457
8	5	V650	Pier 6	E	20					6′-7″							6′-7″	6′-7″	55
			PIER 7 DIAPHRAGM																
14	6	H750	Pier 7		20					10′-5″							10′-5″	10′-5″	219
42	4	H751	Pier 7		20					10′-5″							10′-5″	10′-5″	292
14	6	H752	Pier 7		20					8′-4″							8′-4″	8′-4″	175
20	5	H753	Pier 7		19	S				4′-0″	16″						5′-4″	5′-3″	110
12	6	H754	Pier 7		20					5′-6″							5′-6″	5′-6″	99
12	5	H755	Pier 7		20					3′-7″							3′-7″	3′-7″	45
36	6	H756	Pier 7		20					4′-8″							4′-8″	4′-8″	252
112	4	U750	Pier 7	E	39	S				6′-7″	12″	3′-0″					10′-7″	10′-5″	779
28	6	U751	Pier 7	E	39	S				6′-7″	14″	3′-0″					10′-9″	10′-6″	442
4	6	U752	Pier 7		19	S				4′-9″	3′-0″						7′-9″	7′-8″	46
32	6	U753	Pier 7	E	39	S				5′-7″	14″	3′-0″					9′-9″	9′-6″	457
8	5	V750	Pier 7	E	20					6′-7″							6′-7″	6′-7″	55
			PIER 8 DIAPHRAGM																
14	6	H850	Pier 8		20					10′-2″							10′-2″	10′-2″	214
42	4	H851	Pier 8		20					10′-2″							10′-2″	10′-2″	285
14	6	H852	Pier 8		20					8′-1″							8′-1″	8′-1″	170
20	5	H853	Pier 8		19	S				4′-0″	16″						5′-4″	5′-3″	110
12	6	H854	Pier 8		20					5′-6″							5′-6″	5′-6″	99
12	5	H855	Pier 8		20					3′-7″							3′-7″	3′-7″	45
36	5	H856	Pier 8		20					4′-8″							4′-8″	4′-8″	175
112	4	U850	Pier 8	E	39	S				6′-7″	12″	3′-6″					11′-1″	10′-11″	817
28	6	U851	Pier 8	E	39	S				6′-7″	14″	3′-6″					11′-3″	11′-0″	463
4	6	U852	Pier 8		19	S				4′-9″	3′-0″						7′-9″	7′-8″	46
32	6	U853	Pier 8	E	39	S				5′-7″	14″	3′-0″					9′-9″	9′-6″	457
8	5	V850	Pier 8	E	20					6′-7″							6′-7″	6′-7″	55
			PIER 9 DIAPHRAGM																
14	6	H950	Pier 9		20					9′-7″							9′-7″	9′-7″	202
42	4	H951	Pier 9		20					9′-7″							9′-7″	9′-7″	269
14	6	H952	Pier 9		20					7′-6″							7′-6″	7′-6″	158
20	5	H953	Pier 9		19	S				4′-0″	16″						5′-4″	5′-3″	110
12	6	H954	Pier 9		20					5′-6″							5′-6″	5′-6″	99
12	5	H955	Pier 9		20					3′-7″							3′-7″	3′-7″	45
36	5	H956	Pier 9		20					4′-8″							4′-8″	4′-8″	175
98	4	U950	Pier 9	E	39	S				6′-7″	12″	3′-0″					10′-7″	10′-5″	682
28	6	U951	Pier 9	E	39	S				6′-7″	14″	3′-0″					10′-9″	10′-6″	442
4	6	U952	Pier 9		19	S				4′-9″	3′-0″						7′-9″	7′-8″	46
32	6	U953	Pier 9	E	39	S				5′-7″	14″	3′-0″					9′-9″	9′-6″	457
8	5	V950	Pier 9	E	20					6′-7″							6′-7″	6′-7″	55

BILL OF REINFORCING STEEL

NO. REQ'D.	MARK NO. SIZE	MARK NO. MARK	LOCATION	EPOXY (E)	SHAPE NO.	STIRRUP (S)	SUBSTR. (X)	VARIES (V)	NO. EACH	DIMENSIONS B	C	D	E	F	H	K	NOMINAL LENGTH	ACTUAL LENGTH	WEIGHT
										FT. IN.	FT. IN.	FT. IN.	FT. IN.	FT. IN.	FT. IN.	FT. IN.	FT. IN.	FT. IN.	LBS.
			PIER 10 BACK DIAPHRAGM																
2	6	H1000	Pier 10 Span(9-10)	E	20					42′-5″							42′-5″	42′-5″	127
2	6	H1001	Pier 10 Span(9-10)	E	20					41′-5″							41′-5″	41′-5″	124
1	5	H1002	Pier 10 Span(9-10)	E	20					41′-10″							41′-10″	41′-10″	44
1	5	H1003	Pier 10 Span(9-10)	E	20					41′-5″							41′-5″	41′-5″	43
7	6	H1004	Pier 10 Span(9-10)	E	20					8′-9″							8′-9″	8′-9″	92
7	5	H1005	Pier 10 Span(9-10)	E	20					10′-2″							10′-2″	10′-2″	74
21	9	H1006	Pier 10 Span(9-10)	E	20					10′-2″							10′-2″	10′-2″	726
14	4	H1007	Pier 10 Span(9-10)	E	20					2′-9″							2′-9″	2′-9″	26
14	4	H1008	Pier 10 Span(9-10)	E	20					21″							21″	21″	16
6	4	H1009	Pier 10 Span(9-10)	E	20					6′-3″							6′-3″	6′-3″	25
6	4	H1010	Pier 10 Span(9-10)	E	20					4′-2″							4′-2″	4′-2″	17
10	5	H1011	Pier 10 Span(9-10)	E	19	S		V	2	2′-9″	2′-9″						5′-6″	5′-5″	60
			Increment = 2″							3′-5″	2′-9″						6′-2″	6′-1″	41
6	6	H1012	Pier 10 Span(9-10)	E	20					5′-6″							5′-6″	5′-6″	50
84	6	U1000	Pier 10 Span(9-10)	E	5	S				5′-0″	2′-9″	2′-9″					10′-6″	10′-3″	1,293
8	6	U1001	Pier 10 Span(9-10)	E	5	S				5′-0″	2′-9″	2′-9″					10′-6″	10′-3″	123
236	6	U1002	Pier 10 Span(9-10)	E	5	S		V	28	3′-4″	2′-9″	2′-9″					8′-10″	8′-7″	2,809
			Increment = 5″							4′-7″	2′-9″	2′-9″					10′-1″	9′-10″	
84	4	U1003	Pier 10 Span(9-10)	E	5	S				2′-9″	2′-9″	2′-9″					8′-3″	8′-1″	412
8	5	V1000	Pier 10 Span(9-10)	E	20					5′-7″							5′-7″	5′-7″	47
			BARRIER CURB																
2816	5	R100	Barrier Curb (Type D)	E	19	S				3′-4″	5″						3′-9″	3′-8″	10,769
2816	5	R101	Barrier Curb (Type D)	E	12	S				3′-4″	5″				3′-3½″	7½″	3′-9″	3′-9″	11,014
2816	5	R102	Barrier Curb (Type D)	E	19	S				21″	9″						2′-6″	2′-5″	7,098
2816	5	R103	Barrier Curb (Type D)	E	27	S				4½″	16¾″	12″	9″		2¾″	14½″	3′-7″	3′-4″	9,790
84	5	R104	Barrier Curb (Type D)	E	20					17′-1″							17′-1″	17′-1″	1,497
72	5	R105	Barrier Curb (Type D)	E	20					18′-7″							18′-7″	18′-7″	1,396
96	5	R106	Barrier Curb (Type D)	E	20					17′-8″							17′-8″	17′-8″	1,769
72	5	R107	Barrier Curb (Type D)	E	20					17′-11″							17′-11″	17′-11″	1,345
72	5	R108	Barrier Curb (Type D)	E	20					18′-9″							18′-9″	18′-9″	1,408
84	5	R109	Barrier Curb (Type D)	E	20					18′-0″							18′-0″	18′-0″	1,577
84	5	R110	Barrier Curb (Type D)	E	20					19′-2″							19′-2″	19′-2″	1,679
72	5	R111	Barrier Curb (Type D)	E	20					19′-6″							19′-6″	19′-6″	1,464
84	5	R112	Barrier Curb (Type D)	E	20					19′-7″							19′-7″	19′-7″	1,716
72	5	R113	Barrier Curb (Type D)	E	20					18′-0″							18′-0″	18′-0″	1,352
60	5	R114	Barrier Curb (Type D)	E	20					18′-8″							18′-8″	18′-8″	1,168
84	5	R115	Barrier Curb (Type D)	E	20					17′-9″							17′-9″	17′-9″	1,555
96	5	R116	Barrier Curb (Type D)	E	20					17′-11″							17′-11″	17′-11″	1,794
96	5	R117	Barrier Curb (Type D)	E	20					17′-8″							17′-8″	17′-8″	1,769
72	5	R118	Barrier Curb (Type D)	E	20					17′-11″							17′-11″	17′-11″	1,345
72	5	R119	Barrier Curb (Type D)	E	20					18′-9″							18′-9″	18′-9″	1,408
84	5	R120	Barrier Curb (Type D)	E	20					17′-10″							17′-10″	17′-10″	1,562
72	5	R121	Barrier Curb (Type D)	E	20					19′-5″							19′-5″	19′-5″	1,458
84	5	R122	Barrier Curb (Type D)	E	20					18′-1″							18′-1″	18′-1″	1,584
84	5	R123	Barrier Curb (Type D)	E	20					19′-7″							19′-7″	19′-7″	1,716
72	5	R124	Barrier Curb (Type D)	E	20					17′-5″							17′-5″	17′-5″	1,308
60	5	R125	Barrier Curb (Type D)	E	20					18′-5″							18′-5″	18′-5″	1,153
8	5	C100	Slip Form B.C. (Type D)	E	20					10′-0″							10′-0″	10′-0″	83
288	5	C101	Slip Form B.C. (Type D)	E	20					17′-5″							17′-5″	17′-5″	5,232

Note:
For bar bending diagram, see Sheet No. 113.

BILL OF REINFORCING STEEL

Detailed JUL 2009
Checked JUL 2009

Note: This drawing is not to scale. Follow dimensions.

T:\de-proj\St_Louis_City\Construction\J6I0984B\Asbuilts\Bridge\B_A6500_120-125_J6I0984B_120.dgn

2:36:39 PM

DATE 8/20/09
ROUTE I-70 STATE MO
DISTRICT 6 SHEET NO. BR120
COUNTY St. Louis City - MO
JOB NO. J6I0984B
CONTRACT ID. 100127-601
PROJECT NO. I-70-5(315)
BRIDGE NO. A6500

DESCRIPTION | DATE

MISSOURI HIGHWAYS AND TRANSPORTATION COMMISSION
105 WEST CAPITOL
JEFFERSON CITY, MO 65102
1-888-ASK-MODOT (1-888-275-6636)

HNTB
715 KIRK DRIVE
KANSAS CITY, MO 64105-1310
TELEPHONE (816) 472-1201
CERTIFICATE OF AUTHORITY NO. 001270

FINAL PLANS

REV.

BILL OF REINFORCING STEEL

NO. REQ'D.	MARK NO. SIZE	MARK NO. MARK	LOCATION	EPOXY (E)	SHAPE NO.	STIRRUP (S)	SUBSTR. (X)	VARIES (V)	NO. EACH	DIMENSIONS B FT. IN.	C FT. IN.	D FT. IN.	E FT. IN.	F FT. IN.	H FT. IN.	K FT. IN.	NOMINAL LENGTH FT. IN.	ACTUAL LENGTH FT. IN.	WEIGHT LBS.
			BARRIER CURB (CONT.)																
1898	5M	100	Median Barrier Curb (Type C)	E	12	S				3′-4″	5″				3′-3 1/4″	7 1/2″	3′-9″	3′-9″	7,424
96	5M	101	Median Barrier Curb (Type C)	E	20					17′-8″							17′-8″	17′-8″	1,769
72	5M	102	Median Barrier Curb (Type C)	E	20					17′-11″							17′-11″	17′-11″	1,345
72	5M	103	Median Barrier Curb (Type C)	E	20					18′-9″							18′-9″	18′-9″	1,408
84	5M	104	Median Barrier Curb (Type C)	E	20					17′-11″							17′-11″	17′-11″	1,570
84	5M	105	Median Barrier Curb (Type C)	E	20					17′-11″							17′-11″	17′-11″	1,570
84	5M	106	Median Barrier Curb (Type C)	E	20					17′-4″							17′-4″	17′-4″	1,519
84	5M	107	Median Barrier Curb (Type C)	E	20					19′-7″							19′-7″	19′-7″	1,716
12	5M	108	Median Barrier Curb (Type C)	E	20					16′-2″							16′-2″	16′-2″	202
38	5M	110	Med. B.C. Trans. (Type C)	E	12	S		V	2	3′-4″	5″				3′-3 1/4″	7 1/2″	3′-9″	3′-9″	168
			Increament = 5/8″							3′-4″	16 1/2″				3′-3 1/4″	7 1/2″	4′-9″	4′-9″	
12	5M	111	Med. B.C. Trans. (Type C)	E	20					17′-5″							17′-5″	17′-5″	218
196	5C	102	Slip Form B.C. (Type C)	E	20					16′-6″							16′-6″	16′-6″	3,373
6	5K	101	Barrier Curb (Type D)	E	19	S				2′-5″	6″						2′-11″	2′-10″	18
6	5K	102	Barrier Curb (Type D)	E	25	S				10″	19″	6″			18 5/8″	3 1/2″	2′-11″	2′-10″	18
1	5K	103	Barrier Curb (Type D)	E	19	S				2′-9″	6″						3′-3″	3′-2″	3
1	5K	104	Barrier Curb (Type D)	E	12	S				2′-9″	6″				2′-8 1/8″	6 1/8″	3′-3″	3′-3″	3
4	5K	105	Barrier Curb (Type D)	E	19	S				2′-10″	6″						3′-4″	3′-3″	14
4	5K	106	Barrier Curb (Type D)	E	12	S				2′-10″	6″				2′-9 3/8″	6 3/8″	3′-4″	3′-4″	14
3	5K	107	Barrier Curb (Type D)	E	19	S				2′-11″	5″						3′-4″	3′-3″	10
3	5K	108	Barrier Curb (Type D)	E	12	S				2′-11″	5″				2′-10 3/8″	6 1/2″	3′-4″	3′-4″	10
18	5K	109	Barrier Curb (Type D)	E	19	S				3′-4″	5″						3′-9″	3′-8″	69
18	5K	110	Barrier Curb (Type D)	E	12	S				3′-4″	5″				3′-3 1/2″	7 1/2″	3′-9″	3′-9″	70
6	5K	111	Barrier Curb (Type D)	E	40	S				9 3/8″	5 3/8″	3′-6″	3′-0 3/8″		5 1/4″	1″	7′-10″	7′-7″	47
26	5K	112	Barrier Curb (Type D)	E	40	S				8 3/8″	16 3/4″	3′-6″	2′-1 1/2″		16 1/2″	3 1/8″	7′-10″	7′-6″	203
10	5K	114	Barrier Curb (Type D)	E	20					24′-7″							24′-7″	24′-7″	256
2	5K	115	Barrier Curb (Type D)	E	20					23′-9″							23′-9″	23′-9″	50
2	5K	116	Barrier Curb (Type D)	E	20					20′-9″							20′-9″	20′-9″	43
2	5K	117	Barrier Curb (Type D)	E	20					17′-9″							17′-9″	17′-9″	37
6	5K	120	Barrier Curb (Type D)	E	19	S				2′-5″	6″						2′-11″	2′-10″	18
6	5K	121	Barrier Curb (Type D)	E	25	S				10″	19″	6″			18 5/8″	3 1/2″	2′-11″	2′-10″	18
1	5K	122	Barrier Curb (Type D)	E	19	S				2′-9″	6″						3′-3″	3′-2″	3
1	5K	123	Barrier Curb (Type D)	E	12	S				2′-9″	6″				2′-8 1/8″	6 1/8″	3′-3″	3′-3″	3
4	5K	124	Barrier Curb (Type D)	E	19	S				2′-10″	6″						3′-4″	3′-3″	14
4	5K	125	Barrier Curb (Type D)	E	12	S				2′-10″	6″				2′-9 3/8″	6 3/8″	3′-4″	3′-4″	14
3	5K	126	Barrier Curb (Type D)	E	19	S				2′-11″	5″						3′-4″	3′-3″	10
3	5K	127	Barrier Curb (Type D)	E	12	S				2′-11″	5″				2′-10 3/8″	6 1/2″	3′-4″	3′-4″	10
11	5K	128	Barrier Curb (Type D)	E	19	S				3′-4″	5″						3′-9″	3′-8″	42
11	5K	129	Barrier Curb (Type D)	E	12	S				3′-4″	5″				3′-3 1/2″	7 1/2″	3′-9″	3′-9″	43
6	5K	130	Barrier Curb (Type D)	E	40	S				9 3/8″	5 3/8″	3′-6″	3′-0 3/8″		5 1/4″	1″	7′-10″	7′-7″	47
19	5K	131	Barrier Curb (Type D)	E	19	S				23″	8″						2′-7″	2′-6″	50
19	5K	132	Barrier Curb (Type D)	E	27	S				4 3/4″	16 3/4″	12″	8″		3 1/8″	16 1/2″	3′-6″	3′-3″	64
10	5K	133	Barrier Curb (Type D)	E	20					18′-0″							18′-0″	18′-0″	188
2	5K	134	Barrier Curb (Type D)	E	20					17′-2″							17′-2″	17′-2″	36
2	5K	135	Barrier Curb (Type D)	E	20					14′-2″							14′-2″	14′-2″	30
2	5K	136	Barrier Curb (Type D)	E	20					11′-2″							11′-2″	11′-2″	23

✱ Two additional #5-K236 are included in the bar bill for testing.

BILL OF REINFORCING STEEL

NO. REQ'D.	MARK NO. SIZE	MARK NO. MARK	LOCATION	EPOXY (E)	SHAPE NO.	STIRRUP (S)	SUBSTR. (X)	VARIES (V)	NO. EACH	DIMENSIONS B FT. IN.	C FT. IN.	D FT. IN.	E FT. IN.	F FT. IN.	H FT. IN.	K FT. IN.	NOMINAL LENGTH FT. IN.	ACTUAL LENGTH FT. IN.	WEIGHT LBS.
			BARRIER CURB (CONT.)																
6	5K	220	Barrier Curb (Type D)	E	19	S				2′-5″	6″						2′-11″	2′-10″	18
6	5K	221	Barrier Curb (Type D)	E	25	S				10″	19″	6″			18 5/8″	3 1/2″	2′-11″	2′-10″	18
1	5K	222	Barrier Curb (Type D)	E	19	S				2′-9″	6″						3′-3″	3′-2″	3
1	5K	223	Barrier Curb (Type D)	E	12	S				2′-9″	6″				2′-8 1/8″	6 1/8″	3′-3″	3′-3″	3
4	5K	224	Barrier Curb (Type D)	E	19	S				2′-10″	6″						3′-4″	3′-3″	14
4	5K	225	Barrier Curb (Type D)	E	12	S				2′-10″	6″				2′-9 3/8″	6 3/8″	3′-4″	3′-4″	14
3	5K	226	Barrier Curb (Type D)	E	19	S				2′-11″	5″						3′-4″	3′-3″	10
3	5K	227	Barrier Curb (Type D)	E	12	S				2′-11″	5″				2′-10 3/8″	6 1/2″	3′-4″	3′-4″	10
11	5K	228	Barrier Curb (Type D)	E	19	S				3′-4″	5″						3′-9″	3′-8″	42
11	5K	229	Barrier Curb (Type D)	E	12	S				3′-4″	5″				3′-3 1/2″	7 1/2″	3′-9″	3′-9″	43
6	5K	230	Barrier Curb (Type D)	E	40	S				9 3/8″	5 3/8″	3′-6″	3′-0 3/8″		5 1/4″	1″	7′-10″	7′-7″	47
19	5K	231	Barrier Curb (Type D)	E	19	S				23″	8″						2′-7″	2′-6″	50
19	5K	232	Barrier Curb (Type D)	E	27	S				4 3/4″	16 3/4″	12″	8″		3 1/8″	16 1/2″	3′-6″	3′-3″	64
10	5K	233	Barrier Curb (Type D)	E	20					17′-5″							17′-5″	17′-5″	182
2	5K	234	Barrier Curb (Type D)	E	20					16′-7″							16′-7″	16′-7″	35
2	5K	235	Barrier Curb (Type D)	E	20					13′-7″							13′-7″	13′-7″	28
4	5K	236	Barrier Curb (Type D) ✱	E	20					10′-7″							10′-7″	10′-7″	44
6	5K	201	Barrier Curb (Type D)	E	19	S				2′-5″	6″						2′-11″	2′-10″	18
6	5K	202	Barrier Curb (Type D)	E	25	S				10″	19″	6″			18 5/8″	3 1/2″	2′-11″	2′-10″	18
1	5K	203	Barrier Curb (Type D)	E	19	S				2′-9″	6″						3′-3″	3′-2″	3
1	5K	204	Barrier Curb (Type D)	E	12	S				2′-9″	6″				2′-8 1/8″	6 1/8″	3′-3″	3′-3″	3
4	5K	205	Barrier Curb (Type D)	E	19	S				2′-10″	6″						3′-4″	3′-3″	14
4	5K	206	Barrier Curb (Type D)	E	12	S				2′-10″	6″				2′-9 3/8″	6 3/8″	3′-4″	3′-4″	14
3	5K	207	Barrier Curb (Type D)	E	19	S				2′-11″	5″						3′-4″	3′-3″	10
3	5K	208	Barrier Curb (Type D)	E	12	S				2′-11″	5″				2′-10 3/8″	6 1/2″	3′-4″	3′-4″	10
18	5K	209	Barrier Curb (Type D)	E	19	S				3′-4″	5″						3′-9″	3′-8″	69
18	5K	210	Barrier Curb (Type D)	E	12	S				3′-4″	5″				3′-3 1/2″	7 1/2″	3′-9″	3′-9″	70
6	5K	211	Barrier Curb (Type D)	E	40	S				9 3/8″	5 3/8″	3′-6″	3′-0 3/8″		5 1/4″	1″	7′-10″	7′-7″	47
25	5K	212	Barrier Curb (Type D)	E	40	S				8 3/4″	16 3/4″	3′-6″	2′-1 1/2″		16 1/2″	3 1/8″	7′-10″	7′-6″	196
1	5K	213	Barrier Curb (Type D)	E	27	S				4 3/4″	16 1/4″	12″	10″		3 1/4″	16 1/2″	3′-8″	3′-5″	4
10	5K	214	Barrier Curb (Type D)	E	20					24′-9″							24′-9″	24′-9″	258
2	5K	215	Barrier Curb (Type D)	E	20					23′-11″							23′-11″	23′-11″	50
2	5K	216	Barrier Curb (Type D)	E	20					20′-11″							20′-11″	20′-11″	44
2	5K	217	Barrier Curb (Type D)	E	20					17′-11″							17′-11″	17′-11″	37
1	5K	218	Barrier Curb (Type D)	E	19	S				23″	8″						2′-7″	2′-6″	3
42	5L	100	Light Pole Mount	E	11	S					3′-2″	14″	3′-2″	6″			8′-0″	7′-6″	329
28	5L	101	Light Pole Mount	E	11	S					3′-2″	7 1/4″	3′-2″	6″			7′-6″	6′-11″	202
98	5L	102	Light Pole Mount	E	53	S				22 1/8″	14 1/8″						7′-1″	6′-10″	698
98	5L	103	Light Pole Mount	E	67	S				18″	20 1/2″	22 1/2″			14 1/2″	14 1/2″	8′-4″	7′-11″	809
84	6L	104	Light Pole Mount	E	20					4′-0″							4′-0″	4′-0″	505

Note:
For bar bending diagram, see Sheet No. 113.

BILL OF REINFORCING STEEL

Detailed JUL 2009
Checked JUL 2009

Note: This drawing is not to scale. Follow dimensions.

Sheet No. 121 of 125

T:\de-proj\St_Louis_City\Construction\J6I0984B\Asbuilts\Bridge\B_A6500_121-125_J6I0984B_121.dgn

DATE 8/20/09
ROUTE I-70
STATE MO
DISTRICT 6
SHEET NO. BR121
COUNTY St. Louis City - MO
JOB NO. J6I0984B
CONTRACT ID. 100127-601
PROJECT NO. I-70-5(315)
BRIDGE NO. A6500

DESCRIPTION
DATE

MISSOURI HIGHWAYS AND TRANSPORTATION COMMISSION
105 WEST CAPITOL
JEFFERSON CITY, MO 65102
1-888-ASK-MODOT (1-888-275-6636)

HNTB
715 KIRK DRIVE
KANSAS CITY, MO 64105-1310
TELEPHONE (816) 472-1201
CERTIFICATE OF AUTHORITY NO. 001270

FINAL PLANS

REV.

3:11:40 PM

BILL OF REINFORCING STEEL

NO. REQ'D.	MARK NO. SIZE	MARK NO. MARK	LOCATION	EPOXY (E)	SHAPE NO.	STIRRUP (S)	SUBSTR. (X)	VARIES (V)	NO. EACH	DIMENSIONS B FT. IN.	C FT. IN.	D FT. IN.	E FT. IN.	F FT. IN.	H FT. IN.	K FT. IN.	NOMINAL LENGTH FT. IN.	ACTUAL LENGTH FT. IN.	WEIGHT LBS.
			TOTALS																
		W5		E															403
		4																	5,224
		4		E															10,760
		5																	163,321
		5		E															135,024
		6																	48,157
		6		E															615,440
		7																	18,773
		7		E															6,720
		8																	5,216
		8		E															213,796
		9		E															4,670
		10																	70,392
		10		E															39,737
		11																	512,910
			SLAB ON CONCRETE NU-GIRDER																
		4																	2,901
		4		E															7,610
		5																	3,889
		5		E															28,642
		6																	12,894
		6		E															558,668
		8																	5,216
		8		E															213,796
		9		E															4,670
			REINFORCING STEEL (BRIDGES)																
		W5		E															403
		4																	2,323
		4		E															3,150
		5																	159,432
		5		E															2,082
		6																	35,263
		6		E															56,267
		7																	18,773
		7		E															6,720
		10																	70,392
		10		E															39,737
		11																	512,910
			BARRIER CURB																
		5		E															95,612
		6		E															505
			SLIP FORM OPTION																
		5		E															8,688

BILL OF REINFORCING STEEL

NO. REQ'D.	MARK NO. SIZE	MARK NO. MARK	LOCATION	EPOXY (E)	SHAPE NO.	STIRRUP (S)	SUBSTR. (X)	VARIES (V)	NO. EACH	DIMENSIONS B FT. IN.	C FT. IN.	D FT. IN.	E FT. IN.	F FT. IN.	H FT. IN.	K FT. IN.	NOMINAL LENGTH FT. IN.	ACTUAL LENGTH FT. IN.	WEIGHT LBS.

Note: For bar bending diagram, see Sheet No. 113.

BILL OF REINFORCING STEEL

DATE 8/20/09
ROUTE I-70 | STATE MO
DISTRICT 6 | SHEET NO. BR122
COUNTY St. Louis City - MO
JOB NO. J6I0984B
CONTRACT ID. 100127-601
PROJECT NO. I-70-5(315)
BRIDGE NO. A6500

DESCRIPTION | DATE

MISSOURI HIGHWAYS AND TRANSPORTATION COMMISSION
MoDOT
105 WEST CAPITOL
JEFFERSON CITY, MO 65102
1-888-ASK-MODOT (1-888-275-6636)

HNTB
715 KIRK DRIVE
KANSAS CITY, MO 64105-1310
TELEPHONE (816) 347-2300
CERTIFICATE OF AUTHORITY
NO. 001270

FINAL PLANS REV.

Detailed JUL 2009
Checked JUL 2009

Note: This drawing is not to scale. Follow dimensions.

T:\de-proj\St_Louis_City\Construction\J6I0984B\Asbuilts\Bridge\B_A6500_122-125_J6I0984B_122.dgn 9:42:44 AM

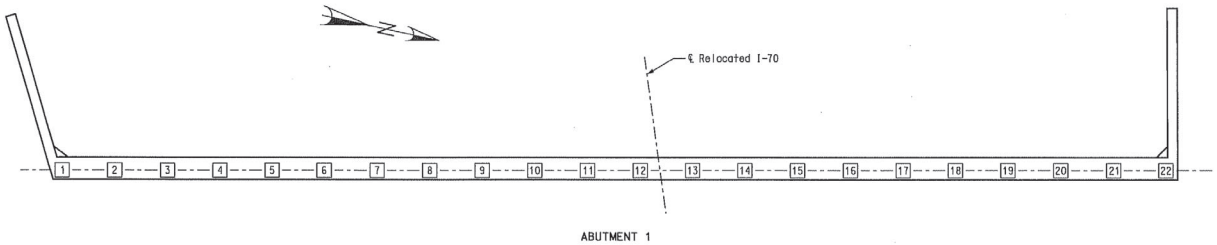

ABUTMENT 1

PART PLAN SHOWING PILE NUMBERING FOR RECORDING "AS BUILT PILE" DATA

"AS BUILT PILE" DATA

PILE NO.	LENGTH IN PLACE (FT.)	DESIGN BEARING (TONS)	REMARKS
			ABUTMENT 1
1	59	*	HP 14 X 73
2	56	*	HP 14 X 73
3	57	*	HP 14 X 73
4	57	*	HP 14 X 73
5	57	*	HP 14 X 73
6	57	*	HP 14 X 73
7	57	*	HP 14 X 73
8	57	*	HP 14 X 73
9	58	*	HP 14 X 73
10	58	*	HP 14 X 73
11	59	*	HP 14 X 73

"AS BUILT PILE" DATA

PILE NO.	LENGTH IN PLACE (FT.)	DESIGN BEARING (TONS)	REMARKS
			ABUTMENT 1 (CONT.)
12	65	*	HP 14 X 73
13	58	*	HP 14 X 73
14	58	*	HP 14 X 73
15	57	*	HP 14 X 73
16	56	*	HP 14 X 73
17	56	*	HP 14 X 73
18	56	*	HP 14 X 73
19	55	*	HP 14 X 73
20	54	*	HP 14 X 73
21	54	*	HP 14 X 73
22	54	*	HP 14 X 73
			* - Driven to refusal on rock

Note: Indicate in Remarks column:
A.) If piling were driven to practical refusal.
B.) Pile batter if other than shown on abutment detail sheet.
C.) Type of piling used.

NOTE: THIS SHEET WAS COMPLETED BY MoDOT CONSTRUCTION PERSONNEL.

AS BUILT PILE DATA

Detailed JUL 2009
Checked JUL 2009

Note: This drawing is not to scale. Follow dimensions.

Sheet No. 123 of 125

T:\de-proj\St_Louis_City\Construction\J6I0984B\Asbuilts\Bridge\B_A6500_123-125_J6I0984B_123.dgn

10:04:39 AM

DATE 8/20/09
ROUTE I-70 | STATE MO
DISTRICT 6 | SHEET NO. BR123
COUNTY St. Louis City - MO
JOB NO. J6I0984B
CONTRACT ID. 100127-601
PROJECT NO. I-70-5(315)
BRIDGE NO. A6500

DESCRIPTION | DATE

MISSOURI HIGHWAYS AND TRANSPORTATION COMMISSION
105 WEST CAPITOL
JEFFERSON CITY, MO 65102
1-888-ASK-MODOT (1-888-275-6636)

HNTB
715 KIRK DRIVE
KANSAS CITY, MO 64105-1310
TELEPHONE (816) 472-1201
CERTIFICATE OF AUTHORITY NO. 001210

FINAL PLANS

REV.

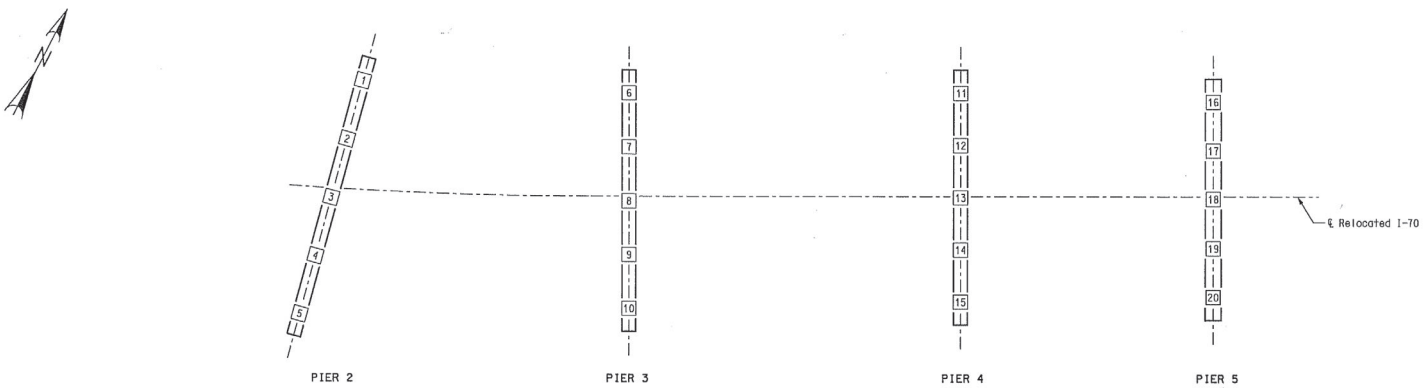

PART PLAN SHOWING DRILLED SHAFT NUMBERING FOR RECORDING "AS BUILT DRILLED SHAFT" DATA

"AS BUILT DRILLED SHAFT" DATA			
SHAFT NO.	BOTTOM OF DRILLED SHAFT (ELEV.)	BOTTOM OF ROCK SOCKET (ELEV.)	REMARKS
			PIER 2
1	439.0	426.0	
2	437.8	426.8	
3	437.6	426.1	
4	440.6	424.8	
5	439.5	425.3	
			PIER 3
6	442.0	422.4	
7	441.7	421.7	
8	441.7	421.7	
9	441.2	421.9	
10	442.4	420.5	

"AS BUILT DRILLED SHAFT" DATA			
SHAFT NO.	BOTTOM OF DRILLED SHAFT (ELEV.)	BOTTOM OF ROCK SOCKET (ELEV.)	REMARKS
			PIER 4
11	443.4	419.6	
12	443.3	416.7	
13	442.8	417.7	
14	443.5	417.9	
15	442.5	413.9	
			PIER 5
16	429.6	416.8	
17	430.1	417.0	
18	430.6	417.7	
19	429.6	417.7	
20	431.5	417.3	

NOTE: THIS SHEET WAS COMPLETED BY MoDOT CONSTRUCTION PERSONNEL.

AS BUILT DRILLED SHAFT DATA - UNITS 1 AND 2

Detailed JUL 2009
Checked JUL 2009

Note: This drawing is not to scale. Follow dimensions.

Sheet No. 124 of 125

DATE 8/20/09
ROUTE I-70 STATE MO
DISTRICT 6 SHEET NO. BR124
COUNTY St. Louis City - MO
JOB NO. J6I0984B
CONTRACT ID. 100127-601
PROJECT NO. I-70-5(315)
BRIDGE NO. A6500

DESCRIPTION | DATE

MISSOURI HIGHWAYS AND TRANSPORTATION COMMISSION
105 WEST CAPITOL
JEFFERSON CITY, MO 65102
1-888-ASK-MODOT (1-888-275-6636)

HNTB
715 KIRK DRIVE
KANSAS CITY, MO 64105-1310
TELEPHONE 816.472.1201
CERTIFICATE OF AUTHORITY NO. 001270

FINAL PLANS

REV.

T:\de-proj\St_Louis_City\Construction\J6I0984B\Asbuilts\Bridge\B_A6500_124-125_J6I0984B_124.dgn 10:07:35 AM

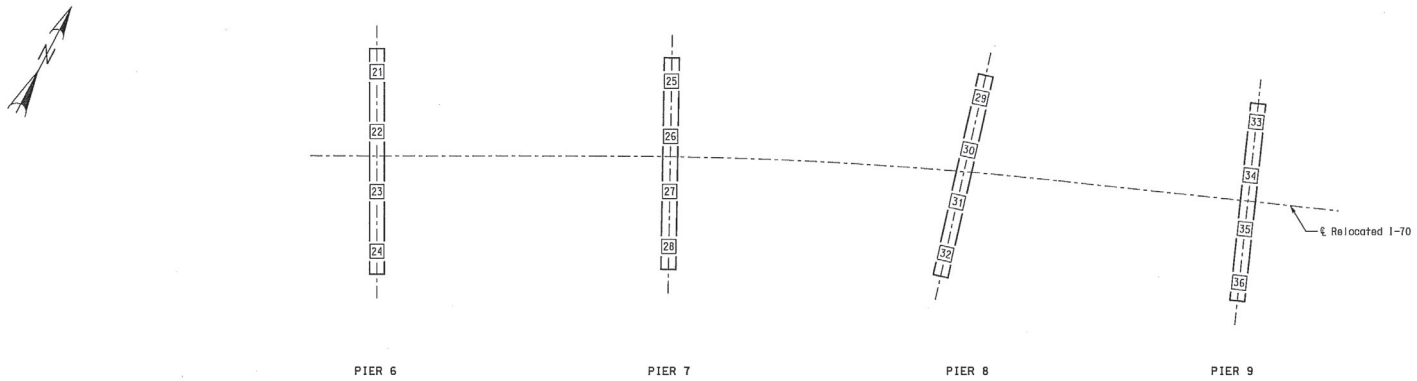

PART PLAN SHOWING DRILLED SHAFT NUMBERING FOR RECORDING "AS BUILT DRILLED SHAFT" DATA

"AS BUILT DRILLED SHAFT" DATA			
SHAFT NO.	BOTTOM OF DRILLED SHAFT (ELEV.)	BOTTOM OF ROCK SOCKET (ELEV.)	REMARKS
			PIER 6
21	426.6	416.4	
22	426.9	417.2	
23	428.2	417.8	
24	428.0	417.2	
			PIER 7
25	423.2	413.3	
26	426.2	411.4	
27	423.9	411.3	
28	424.3	414.2	

"AS BUILT DRILLED SHAFT" DATA			
SHAFT NO.	BOTTOM OF DRILLED SHAFT (ELEV.)	BOTTOM OF ROCK SOCKET (ELEV.)	REMARKS
			PIER 8
29	402.5	392.4	
30	409.2	395.2	
31	409.3	394.2	
32	411.0	397.0	
			PIER 9
33	402.6	389.0	
34	405.7	390.9	
35	403.5	389.4	
36	402.6	391.5	

NOTE: THIS SHEET WAS COMPLETED BY MoDOT CONSTRUCTION PERSONNEL.

DATE 8/20/09
ROUTE I-70 | STATE MO
DISTRICT 6 | SHEET NO. BR125
COUNTY St. Louis City + MO
JOB NO. J6I0984B
CONTRACT ID. 100127-601
PROJECT NO. I-70-5(315)
BRIDGE NO. A6500

DESCRIPTION | DATE

MISSOURI HIGHWAYS AND TRANSPORTATION COMMISSION
105 WEST CAPITOL
JEFFERSON CITY, MISSOURI
1-888-ASK-MODOT (1-888-275-6636)

HNTB
715 KIRK DRIVE
KANSAS CITY, MO 64105-1310
TELEPHONE (816) 472-1201
CERTIFICATE OF AUTHORITY
NO. 001270

FINAL PLANS

REV.

Detailed JUL 2009
Checked JUL 2009

Note: This drawing is not to scale. Follow dimensions.

Sheet No. 125 of 125

AS BUILT DRILLED SHAFT DATA - UNIT 3

T:\de-proj\St_Louis_City\Construction\J6I0984B\Asbuilts\Bridge\B_A6500_125-125_J6I0984B_125.dgn 10:12:27 AM

SEC/SUR 14 TWP 45N RGE 7E

U.I.P. & Rehab. Existing (125') Simple Composite Prestressed Concrete NU-Girder Span
(129'-144'-110')(115'-128'-128'-124'-138.25') Continuous Composite Prestressed Concrete NU-Girder Spans,
(635.75'-1500'-635.75') Cable-Stayed Unit, (195.5'-300'-300'-195.5') Continuous Composite Plate Girder Spans - WB Unit 1
(180'-277'-277'-180') Continuous Composite Plate Girder Spans - EB Unit 1
(190'-301.67'-297.58'-287'-271'-207.88') Continuous Composite Plate Girder Spans - WB Unit 2
(220'-320.67'-318.33'-294.25'-271'-207.88') Continuous Composite Plate Girder Spans - EB Unit 2

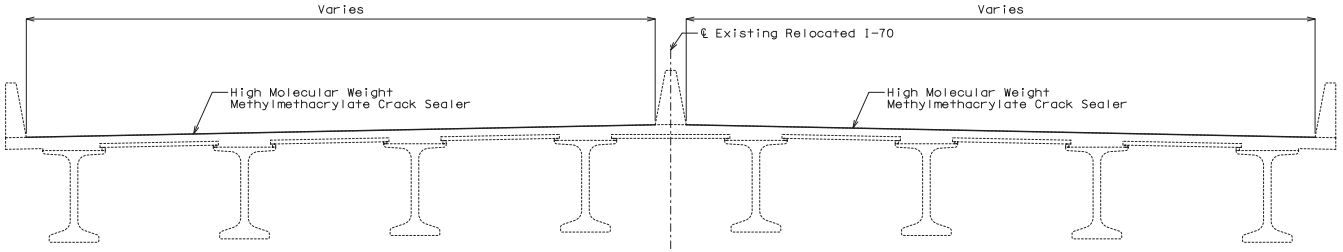

SECTION THRU SLAB (MISSOURI APPROACH) (SPANS 1-9)

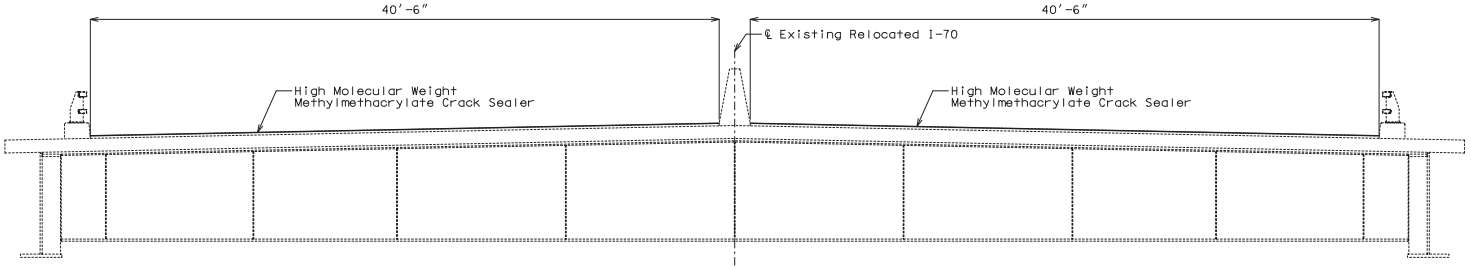

SECTION THRU SLAB (MAIN SPANS) (SPANS 10-12)

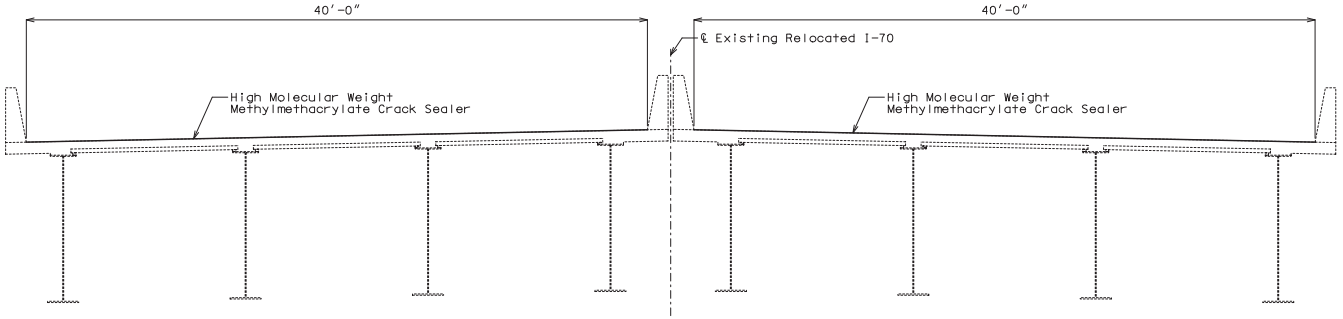

SECTION THRU SLAB (ILLINOIS APPROACH) (SPANS 13-22)

General Notes:

Design Specifications:
2002 AASHTO LFD (17th Ed.) Standard Specifications

Miscellaneous:
Outline of old work is indicated by light dashed lines. Heavy lines indicate new work.

Contractor shall verify all dimensions in field before ordering new material.

Traffic Handling:
Traffic to be maintained on structure during construction. See roadway plans for traffic control.

Estimated Quantities			
	Item		Total
*	High Molecular Weight Methylmethacrylate Crack Sealer (MO Appr.)	sq. yard	12,805
	High Molecular Weight Methylmethacrylate Crack Sealer (Main Spans)	sq. yard	24,917
	High Molecular Weight Methylmethacrylate Crack Sealer (IL Appr.)	sq. yard	22,632

* Includes bridge approach slabs

REPAIRS TO BRIDGE: ROUTE I-70 OVER MISSISSIPPI RIVER, CITY STREETS, RAILROADS & ILLINOIS ROUTE 3

ROUTE I-70 FROM ROUTE I-44 TO ROUTE I-55 (ILLINOIS)
ABOUT 0.1 MILE EAST OF ROUTE I-44
STA. 63+19.23± (Match Existing) (℄ Relocated I-70)

Detailed Mar. 2019
Checked Mar. 2019

Note: This drawing is not to scale. Follow dimensions.

Sheet No. 1 of 1

STATE OF MISSOURI
DANIEL M. SMITH
NUMBER PE-2009B
PROFESSIONAL ENGINEER
THIS SHEET HAS BEEN SIGNED, SEALED AND DATED ELECTRONICALLY.

DATE PREPARED 3/27/2019
ROUTE I-70 | STATE MO
DISTRICT BR | SHEET NO. 1
COUNTY ST. LOUIS CITY - MO, ST. CLAIR - IL
JOB NO. J6I3415
CONTRACT ID.
PROJECT NO.
BRIDGE NO. A65001

DESCRIPTION | DATE

MISSOURI HIGHWAYS AND TRANSPORTATION COMMISSION
105 WEST CAPITOL
JEFFERSON CITY, MO 65102
1-888-ASK-MODOT (1-888-275-6636)

IF A SEAL IS PRESENT ON THIS SHEET IT HAS BEEN ELECTRONICALLY SEALED AND DATED.

MEMORANDUM

Missouri Department of Transportation
Bridge Division
Central Office

TO: John Grana-sl

CC/ATT: Dave Alhvers-cm
Ed Hassinger-sl
Bill Dunn-br
Chad Daniel-br
Kent Nelson(2)-br

FROM: Kurt Gribble, P.E. KG
Structural Liaison Engineer

DATE: April 23, 2012

SUBJECT: Change Order Amendment No. 11
Structure Number A6500
Job No. J6I0984, Route I-70
St. Louis City

Attached is one half-size print of revised sheet numbers 8, 185, 187 and 203.

The changes are a result of some reinforcing steel changes requested by the contractor.

If you have any questions or comments, please do not hesitate to call me at (573) 526-0248.

kg
j:\gribbk\CON-CHAN\J6I0984 A6500 Con Change Revision Number 11.doc
Attachments

ESTIMATED QUANTITIES

ITEM		SUBSTR.	SUPERSTR.	TOTAL
Latex Modified Concrete Wearing Surface (Alternate A)	sq. yard	———	24,800	24,800
Asphalt Wearing Surface (Alternate B)	sq. yard	———	24,800	24,800
Drilled Shafts (10'-0" Dia.)	linear foot	564.0	———	564.0
Rock Sockets (9'-6" Dia.)	linear foot	224.0	———	224.0
Television Camera Inspection	each	8	———	8
SID Inspection	each	8	———	8
Foundation Inspection Holes	linear foot	304.0	———	304.0
Concrete Coring	linear foot	148.0	———	148.0
Sonic Logging Testing	each	8	———	8
Class B-1 Concrete (Substructure)	cu. yard	2165.1	———	2165.1
※ Median Barrier Curb (Type C)	linear foot	———	2767	2767
Class A-1 Concrete	cu. yard	15,536.4	———	15,536.4
Counterweight Concrete	lump sum	———	———	1
Precast Prestressed Concrete Slab Panels	sq. yard	———	28,625	28,625
Reinforcing Steel (Bridges)	pound	5,546,610	———	5,546,610
Mechanical Bar Splice	each	6876	———	6876
Reinforcing Steel (Epoxy Coated)	pound	359,570	———	359,570
Protective Coating - Concrete Bents and Piers (Epoxy)	lump sum	———	———	1
Temporary Coating - Concrete Bents and Piers (Weathering Steel)	lump sum	———	———	1
Protective Coating - Towers (Non-Epoxy)	lump sum	———	———	1
Fabricated Structural Carbon Steel (Miscellaneous)	pound	2040	8740	10,780
Fabricated Structural Low Alloy Steel (Plate Girder) A709, Gr. HPS70W	pound	———	6,456,410	6,456,410
Fabricated Structural Low Alloy Steel (Plate Girder) A709, Gr. HPS50W	pound	———	8,246,730	8,246,730
Drainage System (On Structure)	lump sum	———	———	1
Post-Tensioning System at Towers	lump sum	———	———	1
Inspection Access	lump sum	———	———	1
Stay Cables	lump sum	———	———	1
Stay Cable Testing	lump sum	———	———	1
Tie-Downs	lump sum	———	———	1
Inspection Traveler	lump sum	———	———	1
Lock-Up Device	each	8	———	8
Fabricated Structural Low Alloy Steel (Tower Anchor Box) A709, Gr. HPS50W	pound	1,653,920	———	1,653,920
Bridge Railing	linear foot	———	5534	5534
POT Bearing	each	———	4	4
Modular Expansion Joint System	linear foot	———	172	172

Notes:
※ Median Barrier Curb (Type C) shall be cast-in-place option or slip-form option.

4

ESTIMATED QUANTITIES - CAISSON FOUNDATION

ITEM		TOTAL
Foundation - Pier 11	lump sum	1
Foundation - Pier 12	lump sum	1

4

FOUNDATIONS AT PIERS 11 & 12

ESTIMATED QUANTITIES - ALTERNATIVE FOUNDATION

ITEM		Pier 11	Pier 12	TOTAL
Drilled Shafts (11'-6" Dia.)	linear foot	819.0	1029.0	1848.0
Rock Sockets (9'-6" Dia. x 11'-0")	linear foot	616.0	616.0	1232.0
Television Camera Inspection	each	14	14	28
SID Inspection	each			
Foundation Inspection Holes	linear foot	756.0	756.0	1512.0
Concrete Coring	linear foot	103.5	118.5	222.0
Sonic Logging Testing	each	14	14	28
Drilled Shaft Load Test	each			
Seal Concrete	cu. yard	4040.4	4040.4	8080.8
Class B-1 Concrete (Substructure)	cu. yard	6222.2	6222.2	12,444.4
Reinforcing Steel (Bridges)	pound	3,349,920	3,438,750	6,788,670
Mechanical Bar Splice	each	784	784	1568

351.0	441.0	792.0
132.0	99.0	231.0
6	6	12
6	6	12
192.0	159.0	351.0
81.5	91.0	172.5
6	6	12
1	———	1
2336.4	2336.4	4672.8
3585.2	3585.2	7170.4
1,876,960	1,912,690	3,789,650
1480	1480	2960

114.0 4
194.0 4
134.3 4
5,487,960 6
5,485,130 4
5,492,069 6 11
8176 4
359,300 4
6,849,270 3
7,853,870 3

4 4 4

4 4 4

4 4 4

BILL OF REINFORCING STEEL

NO. REQ'D.	MARK NO. SIZE	MARK NO. MARK	LOCATION	EPOXY (E)	SHAPE NO.	STIRRUP (S)	SUBSTR. (X)	VARIES (V)	NO. EACH	DIMENSIONS B FT.	B IN.	C FT.	C IN.	D FT.	D IN.	E FT.	E IN.	F FT.	F IN.	H FT.	H IN.	K FT.	K IN.	NOMINAL LENGTH FT.	NOMINAL LENGTH IN.	ACTUAL LENGTH FT.	ACTUAL LENGTH IN.	WEIGHT LBS.
			PIER 11																									
1064	11P1101		Vertical		20		X			40′-8″														40′-8″		40′-8″		229.890
202	11P1102		Vertical		20		X			30′-0″														30′-0″		30′-0″		32.197
280	7P1103		Horizontal		88		X			26′-11″		2′-0″		3″						23″		23″		26′-2″		26′-2″		14.976
512	7P1104		Horizontal		88		X			18′-0″		2′-0″		3″						23″		23″		23′-3″		23′-3″		24.332
512	7P1105		Horizontal		66		X			15′-4″		2′-0″		3″						10′-10½″		10′-10½″		16′-11″		16′-11″		17.704
7032	5P1106		Horizontal		3	S	X			3′-6″														4′-0″		4′-0″		29.338
13674	5P1107		Horizontal		3	S	X			12′-0″														12′-6″		12′-6″		178.275
3904	5P1108		Horizontal		4	S	X			5′-6″		6″												6′-6″		6′-5″		26.128
624	5P1109		Horizontal		3	S	X			18′-0″														18′-6″		18′-6″		12.040
352	11P1110		Vertical		2		X			22′-2″		17′-9″								9′-4⅝″		15′-0⅝″		39′-11″		39′-11″		74.651
348	11P1111		Vertical		2		X			29′-0″		10′-11″								5′-9⅜″		9′-3⅛″		39′-11″		39′-11″		73.803
32	11P1112		Vertical		20		X			18′-6″														18′-6″		18′-6″		3.145
32	11P1113		Vertical		20		X			25′-4″														25′-4″		25′-4″		4.307
16	11P1114		Vertical		20		X			12′-0″														12′-0″		12′-0″		1.020
16	11P1115		Vertical		20		X			18′-10″														18′-10″		18′-10″		1.601
32	11P1116		Vertical		20		X			15′-3″														15′-3″		15′-3″		2.593
32	11P1117		Vertical		20		X			22′-1″														22′-1″		22′-1″		3.755
60	11P1118		Vertical		20		X			15′-4″														15′-4″		15′-4″		4.888
60	11P1119		Vertical		20		X			8′-6″														8′-6″		8′-6″		2.710
8	11P1120		Vertical		20		X			22′-8″														22′-8″		22′-8″		963
8	11P1121		Vertical		20		X			29′-6″														29′-6″		29′-6″		1.254
8	11P1122		Vertical		20		X			23′-7″														23′-7″		23′-7″		1.002
8	11P1123		Vertical		20		X			30′-5″														30′-5″		30′-5″		1.293
8	11P1124		Vertical		20		X			24′-6″														24′-6″		24′-6″		1.041
8	11P1125		Vertical		20		X			31′-4″														31′-4″		31′-4″		1.332
8	11P1126		Vertical		20		X			25′-6″														25′-6″		25′-6″		1.084
8	11P1127		Vertical		20		X			32′-4″														32′-4″		32′-4″		1.374
156	11P1128		Vertical		20		X			26′-3″														26′-3″		26′-3″		21.757
156	11P1129		Vertical		20		X			33′-1″														33′-1″		33′-1″		27.420
16	11P1130		Vertical		20		X			16′-0″														16′-0″		16′-0″		1.360
16	11P1131		Vertical		20		X			22′-10″														22′-10″		22′-10″		1.941
48	11P1132		Vertical		20		X			16′-10″		13′-7″		6		Added						6	31′-1″	16′-10″		16′-10″		4.293
80	11P1133		Vertical	6	2300		X			27′-9″		11′-4″		5′-2″		4′-4⅜″		4′-4⅜″		9′-7¾″		9′-7¾″		27′-9″		27′-9″		11.795
32	11P1134		Vertical		20		X			13′-9″												6	13.212	13′-9″		13′-8″		2.338
250	11P1135		Vertical		23		X			13′-7″		11′-4″		15′-2″		11′-5⅛″		11′-5⅛″		9′-7¾″		9′-7¾″		41′-1″		41′-1″		54.569
620	7P1136		Horizontal		4	S	X			46′-1″		2′-0″												48′-10″		48′-8″		61.674
960	5P1137		Horizontal		3	S	X			6′-8″														7′-2″		7′-2″		7.176
190	7P1138		Horizontal		5		X			39′-7″		2′-0″		2′-0″										43′-7″		43′-3″		16.797
232	5P1139		Vertical		5		X			2′-0″		3′-2″		3′-2″										8′-4″		8′-1″		1.955
80	5P1140		Horizontal		5		X			2′-0″		9′-10″		9′-10″										21′-8″		21′-5″		1.787
40	5P1141		Horizontal		5		X			2′-0″		5′-10″		5′-10″										13′-8″		13′-5″		560
28	11P1142		Vertical		20		X			16′-4″														16′-4″		16′-4″		2.430
32	11P1143		Vertical		20		X			9′-6″														9′-6″		9′-6″		1.615
392	5P1144		Horizontal		3	S	X			5′-8″														5′-2″		5′-2″		2.521
408	5P1145		Horizontal		3	S	X			7′-8″														8′-2″		8′-2″		3.475
408	5P1146		Horizontal		3	S	X			9′-8″														10′-2″		10′-2″		4.326
408	5P1147		Horizontal		3	S	X			11′-8″														12′-2″		12′-2″		5.177
128	5P1148		Horizontal		5		X			16″		3′-2″		3′-2″										7′-8″		7′-5″		990
64	7P1149		Horizontal		4	S	X			17″		2′-0″												4′-2″		4′-0″		523
104	6P1150		Horizontal		5		X			21′-4″		3′-7″		3′-7″										28′-6″		28′-3″		4.413
38	8P1151		Vertical		53	S	X			2′-11″		8′-3″												24′-1″		23′-6″		2.384
76	8P1152		Vertical		53	S	X			3′-6″		8′-3″												25′-3″		24′-8″		5.005
38	8P1153		Vertical		13	S	X			2′-0″		8′-4″		3′-3″		8′-3″								23′-7″		23′-0″		2.334
24	11P1154		Horizontal		20		X			14′-6″														14′-6″		14′-5″		1.849
46	10P1155		Horizontal		17		X			40′-1″														41′-6″		41′-6″		8.214
23	10P1156		Horizontal		20		X			60′-0″														60′-0″		60′-0″		5.936

BILL OF REINFORCING STEEL

NO. REQ'D.	MARK NO. SIZE	MARK NO. MARK	LOCATION	EPOXY (E)	SHAPE NO.	STIRRUP (S)	SUBSTR. (X)	VARIES (V)	NO. EACH	DIMENSIONS B FT.	B IN.	C FT.	C IN.	D FT.	D IN.	E FT.	E IN.	F FT.	F IN.	H FT.	H IN.	K FT.	K IN.	NOMINAL LENGTH FT.	NOMINAL LENGTH IN.	ACTUAL LENGTH FT.	ACTUAL LENGTH IN.	WEIGHT LBS.
23652	8		PIER 11-CONT'D																									
1312		11T1101	Vertical		20		X			30′-4″														30′-4″		30′-4″		211.443
136		11T1102	Vertical		20		X			16′-6″														16′-6″		16′-6″		11.922
288		11T1103	Vertical		20		X			23′-4″														23′-4″		23′-4″		35.703
1800		5T1104	Horizontal		4	S	X			11′-9″		6″												12′-9″		12′-8″		23.780
900		5T1105	Horizontal		4	S	X			21′-8″		6″												22′-8″		22′-7″		21.199
3572		6T1106	Horizontal		53	S	X			20″		21′-8″												48′-0″		47′-7″		255.291
2624		6T1107	Horizontal		53	S	X			20″		11′-9″						11	8	2′-9				28′-8″		27′-9″		109.370
72		6T1108	Horizontal		53	S	X			20″		9′-2″												23′-0″		22′-7″		2.442
25732		5T1109	Horizontal		4	S	X			20″		6″												(2′-8″)		(2′-7″)		(69.333)
40		11T1110	Vertical		20		X			25′-8″		21′-4″		8	11									25′-8″		25′-8″		5.455
64		7T1111	Vertical		20		X			12′-0″														12′-0″		12′-0″		1.570
4		11T1112	Vertical		20		X			38′-7″														38′-7″		38′-7″		820
16		11T1113	Vertical		20		X			23′-11″														23′-11″		23′-11″		2.033
24		11T1114	Vertical		20		X			30′-11″														30′-11″		30′-11″		3.942
144		11T1115	Vertical		20		X			23′-6″														23′-6″		23′-6″		17.979
640		5T1116	Horizontal		4	S	X			2′-2″		6″												3′-2″		3′-1″		2.058
1860		11T1117	Vertical		20		X			37′-3″														37′-3″		37′-3″		368.111
156		11T1118	Vertical		20		X			30′-2″														30′-2″		30′-2″		25.003
8		11T1120	Vertical		20		X			7′-0″														7′-0″		7′-0″		298
8		11T1121	Vertical		20		X			8′-3″														8′-3″		8′-3″		351
8		11T1122	Vertical		20		X			15′-8″														15′-8″		15′-8″		666
4		11T1123	Vertical		20		X			34′-5″														34′-5″		34′-5″		731
8		11T1124	Vertical		20		X			18′-7″														18′-7″		18′-7″		790
8		11T1125	Vertical		20		X			20′-10″														20′-10″		20′-10″		886
4		11T1126	Vertical		20		X			14′-4″														14′-4″		14′-4″		305
4		11T1127	Vertical		20		X			12′-6″														12′-6″		12′-6″		266
324		11T1128	Vertical		20		X			38′-9″														38′-9″		38′-9″		65.705
12		11T1129	Vertical		20		X			10′-2″														10′-2″		10′-2″		648
4		11T1130	Vertical		20		X			18′-9″														18′-9″		18′-9″		398
4		11T1131	Vertical		20		X			8′-11″														8′-11″		8′-11″		189
4		11T1132	Vertical		20		X			21′-7″														21′-7″		21′-7″		459
16		11T1133	Vertical		20		X			8′-6″														8′-6″		8′-6″		723
8		11T1134	Vertical		20		X			7′-10″														7′-10″		7′-10″		333
192		6T1135	Horizontal		53	S	X			20″		3′-6″												11′-8″		11′-3″		3.244
192		6T1136	Horizontal		53	S	X			20″		6′-1″												16′-10″		16′-5″		4.734
608		6T1137	Horizontal		53	S	X			20″		4′-6″												13′-8″		13′-3″		12.100
96		6T1138	Horizontal		53	S	X			20″		5′-1″												15′-10″		15′-5″		2.223
536		6T1139	Horizontal		53	S	X			20″		5′-1″												14′-10″		14′-5″		11.006
720		6T1140	Horizontal		47	S	X			5′-7″		20″												10′-3″		10′-0″		10.814
324		11T1141	Vertical		20		X			47′-9″														47′-9″		47′-9″		82.197
16		11T1142	Vertical		20		X			4′-11″														4′-11″		4′-11″		418
8		11T1143	Vertical		20		X			4′-6″														4′-6″		4′-6″		191
16		11T1144	Vertical		20		X			4′-7″														4′-7″		4′-7″		390
96		11T1145	Vertical		20		X			4′-4″														4′-4″		4′-4″		1.289
48		11T1146	Vertical		20		X			4′-2″														4′-2″		4′-2″		1.063
8		11T1147	Vertical		20		X			42′-1″														42′-1″		42′-1″		1.789
4		11T1148	Vertical		20		X			42′-10″														42′-10″		42′-10″		910
96		11T1149	Vertical		20		X			4′-3″														4′-3″		4′-3″		2.188
316		11T1150	Vertical		20		X			44′-0″														44′-0″		44′-0″		73.872
8		6T1151	Horizontal		4	S	X			32′-4″		12″												34′-0″		33′-11″		408
36		6T1152	Horizontal		16		X			2′-7″		12′-8″		2′-7″		2′-6⅝″		4⅜″		2′-6⅝″		4⅜″		17′-4″		17′-4″		937
24		6T1153	Horizontal		4	S	X	V	8	31′-8″		12″												33′-4″		33′-3″		1.206
			Increment = 2½″							32′-1″		12″												33′-9″		33′-8″		
10		6T1154	Horizontal		4	S	X			11′-5″		12″												13′-1″		13′-0″		195
250		6T1155	Horizontal		4	S	X	V	10	5′-0″		12″												6′-8″		6′-7″		3.630
			Increment = 3½″							11′-2″		12″												12′-10″		12′-9″		
12		6T1156	Horizontal		53	S	X	V	4	20″		16′-7″												37′-10″		37′-5″		683
			Increment = 6″							20″		17′-1″												38′-10″		38′-5″		
32		6T1157	Horizontal		4	S	X	V	8	29′-10″		12″												31′-6″		31′-5″		1.528
			Increment = 3″							30′-7″		12″												32′-1″		32′-2″		
16		6T1158	Horizontal		53	S	X	V	4	20″		14′-6″												33′-8″		33′-3″		817
			Increment = 6″							20″		15′-3″												35′-2″		34′-9″		
24		6T1159	Horizontal		4	S	X	V	8	28′-1″		12″												29′-9″		29′-8″		1.077
			Increment = 2½″							28′-6½″		12″												30′-3″		30′-1″		
16		6T1160	Horizontal		53	S	X	V	4	20″		12′-9″												30′-2″		29′-9″		733
			Increment = 6″							20″		13′-6″												31′-8″		31′-3″		

Notes:
For Bar Bending Diagram, see Sheet No. DR184.

BILL OF REINFORCING STEEL

Detailed JUL 2009
Checked JUL 2009

Note: This drawing is not to scale. Follow dimensions.

Sheet No. 185 of 205

\\kcow00\jobs3\46440\Bridges\Plans\CDtoMoDOTA8500\J6I0984\A8500-dgn\B_A8500_185-205_J6I0984_185.dgn

19-APR-2012 11:43

STATE OF MISSOURI
HANS R. HUTTON
NUMBER E-29174
PROFESSIONAL ENGINEER
Hans R. Hutton

DATE 4/19/12

ROUTE	STATE
I-70	MO/IL
DISTRICT	SHEET NO.
6	BR185

COUNTY
ST. LOUIS CITY - MO
ST. CLAIR - IL

JOB NO.
J6I0984

CONTRACT ID.

PROJECT NO.

BRIDGE NO.
A6500

DATE	DESCRIPTION
9-3-10	Revised Reinforcing Steel
5-10-11	Revised Reinforcing Steel
4-19-12	Revised Reinforcing Steel

MISSOURI HIGHWAYS AND TRANSPORTATION COMMISSION
105 WEST CAPITOL
JEFFERSON CITY, MO 65102
1-888-ASK-MODOT (1-888-275-6636)
MoDOT

HNTB
715 KIRK DRIVE
KANSAS CITY, MO 64105-1310
816.472.1201
CERTIFICATE OF AUTHORITY NO. 001270

STATE OF ILLINOIS
HANS R. HUTTON
081-006702
PROFESSIONAL STRUCTURAL ENGINEER
Hans R. Hutton
4-19-2012

REV.

BILL OF REINFORCING STEEL

NO. REQ'D	MARK NO. (SIZE MARK)	LOCATION	EPOXY (E)	SHAPE NO.	STIRRUP (S)	SUBSTR. (X)	VARIES (V)	NO. EACH	B FT. IN.	C FT. IN.	D FT. IN.	E FT. IN.	F FT. IN.	H FT. IN.	K FT. IN.	NOMINAL LENGTH FT. IN.	ACTUAL LENGTH FT. IN.	WEIGHT LBS.
23652	/8\	PIER 12-CONT'D																
1312	11T1201	Vertical		20		X			30'-4"							30'-4"	30'-4"	211,443
136	11T1202	Vertical		20		X			16'-6"							16'-6"	16'-6"	11,922
288	11T1203	Vertical		20		X			23'-4"							23'-4"	23'-4"	35,703
1800	5T1204	Horizontal		4	S	X			11'-9"	6"						12'-9"	12'-8"	23,780
900	5T1205	Horizontal		4	S	X			21'-8"	6"						22'-8"	22'-7"	21,159
3572	6T1206	Horizontal		53	S	X			20"	21'-8"						48'-0"	47'-7"	255,291
2624	6T1207	Horizontal		53	S	X			20"	11'-9"			/11\	/8\ 2'-8"		28'-2"	27'-9"	109,370
72	6T1208	Horizontal		53	S	X			20"	9'-2"				/11\	/8\ 2'-9"	23'-0"	22'-7"	2,442
25732	5T1209	Horizontal		4	S	X			(20")	6"						(2'-8")	(2'-7")	(69,333)
40	11T1210	Vertical		20		X			25'-8"	2'-8" /8\ /11\					/8\ 65,784	25'-8"	25'-8"	5,455
4	11T1212	Vertical		20		X			38'-7"							38'-7"	38'-7"	820
16	11T1213	Vertical		20		X			23'-11"						/11\ 63,728	23'-11"	23'-11"	2,033
24	11T1214	Vertical		20		X			30'-11"							30'-11"	30'-11"	3,942
144	11T1215	Vertical		20		X			23'-6"							23'-6"	23'-6"	17,979
1850	11T1217	Vertical		20		X			37'-3"							37'-3"	37'-3"	368,111
156	11T1218	Vertical		20		X			30'-2"							30'-2"	30'-2"	25,003
8	11T1220	Vertical		20		X			7'-0"							7'-0"	7'-0"	298
64	7T1121	Vertical		20		X			12'-0"							12'-0"	12'-0"	1,570
8	11T1221	Vertical		20		X			8'-3"							8'-3"	8'-3"	351
8	11T1222	Vertical		20		X			15'-8"							15'-8"	15'-8"	666
4	11T1223	Vertical		20		X			34'-5"							34'-5"	34'-5"	731
8	11T1224	Vertical		20		X			18'-7"							18'-7"	18'-7"	790
8	11T1225	Vertical		20		X			20'-10"							20'-10"	20'-10"	886
640	5T1126	Horizontal		4	S	X			2'-2"	6"						3'-2"	3'-1"	2,058
4	11T1226	Vertical		20		X			14'-4"							14'-4"	14'-4"	305
4	11T1227	Vertical		20		X			12'-6"							12'-6"	12'-6"	266
324	11T1228	Vertical		20		X			38'-9"							38'-9"	38'-9"	66,705
12	11T1229	Vertical		20		X			10'-2"							10'-2"	10'-2"	648
4	11T1230	Vertical		20		X			18'-9"							18'-9"	18'-9"	398
4	11T1231	Vertical		20		X			8'-11"							8'-11"	8'-11"	189
4	11T1232	Vertical		20		X			21'-7"							21'-7"	21'-7"	459
16	11T1233	Vertical		20		X			8'-6"							8'-6"	8'-6"	723
8	11T1234	Vertical		20		X			7'-10"							7'-10"	7'-10"	333
192	6T1235	Horizontal		53	S	X			20"	3'-6"						11'-8"	11'-3"	3,244
192	6T1236	Horizontal		53	S	X			20"	6'-1"						16'-10"	16'-5"	4,734
608	6T1237	Horizontal		53	S	X			20"	4'-6"						13'-8"	13'-3"	12,100
96	6T1238	Horizontal		53	S	X			20"	5'-7"						15'-10"	15'-5"	2,223
536	6T1239	Horizontal		53	S	X			20"	5'-1"						14'-10"	14'-5"	11,606
720	6T1240	Horizontal		47	S	X			5'-7"	20"						10'-3"	10'-0"	10,814
324	11T1241	Vertical		20		X			47'-9"							47'-9"	47'-9"	82,197
16	11T1242	Vertical		20		X			4'-11"							4'-11"	4'-11"	418
8	11T1243	Vertical		20		X			4'-6"							4'-6"	4'-6"	191
16	11T1244	Vertical		20		X			4'-7"							4'-7"	4'-7"	390
56	11T1245	Vertical		20		X			4'-4"							4'-4"	4'-4"	1,289
48	11T1246	Vertical		20		X			4'-2"							4'-2"	4'-2"	1,063
8	11T1247	Vertical		20		X			42'-1"							42'-1"	42'-1"	1,789
4	11T1248	Vertical		20		X			42'-10"							42'-10"	42'-10"	910
96	11T1249	Vertical		20		X			4'-3"							4'-3"	4'-3"	2,168
316	11T1250	Vertical		20		X			44'-0"							44'-0"	44'-0"	73,872
8	6T1251	Horizontal		4	S	X			32'-4"	12"						34'-0"	33'-11"	408
36	6T1252	Horizontal		15		X			2'-7"	12'-2"	2'-7"	2'-6⅜"	4½"	2'-6⅜"	4¾"	17'-4"	17'-4"	937
24	6T1253	Horizontal		4	S	X	V	8	31'-8"	12"						33'-4"	33'-3"	1,206
		Increment = 2½"							32'-1"	12"						33'-9"	33'-8"	
10	6T1254	Horizontal		4	S	X			11'-5"	12"						13'-1"	13'-0"	195
250	6T1255	Horizontal		4	S	X	V	10	5'-0"	12"						6'-8"	6'-7"	3,630
		Increment = 3½"							11'-2"	12"						12'-10"	12'-9"	
12	6T1256	Horizontal		53	S	X	V	4	20"	16'-7"						37'-10"	37'-5"	683
		Increment = 6"							20"	17'-1"						38'-10"	38'-5"	
32	6T1257	Horizontal		4	S	X	V	8	29'-10"	12"						31'-6"	31'-5"	1,528
		Increment = 3"							30'-7"	12"						32'-3"	32'-2"	
16	6T1258	Horizontal		53	S	X	V	4	20"	14'-6"						33'-8"	33'-3"	817
		Increment = 6"							20"	15'-3"						35'-2"	34'-9"	
24	6T1259	Horizontal		4	S	X	V	8	28'-1"	12"						29'-9"	29'-8"	1,077
		Increment = 2½"							28'-6½"	12"						30'-3"	30'-1"	
16	6T1260	Horizontal		53	S	X	V	4	20"	12'-9"						30'-2"	29'-9"	733
		Increment = 6"							20"	13'-6"						31'-8"	31'-3"	

BILL OF REINFORCING STEEL

NO. REQ'D	MARK NO. (SIZE MARK)	LOCATION	EPOXY (E)	SHAPE NO.	STIRRUP (S)	SUBSTR. (X)	VARIES (V)	NO. EACH	B FT. IN.	C FT. IN.	D FT. IN.	E FT. IN.	F FT. IN.	H FT. IN.	K FT. IN.	NOMINAL LENGTH FT. IN.	ACTUAL LENGTH FT. IN.	WEIGHT LBS.
		PIER 12-CONT'D																
88	6T1261	Horizontal		4	S	X	V	8	24'-2"	12"						25'-10"	25'-9"	3,574
		Increment = 3½"							26'-9"	12"						28'-5"	28'-4"	
48	11T1262	Vertical		20		X			4'-1"							4'-1"	4'-1"	1,041
24	11T1263	Vertical		20		X			3'-11"							3'-11"	3'-11"	499
20	11T1264	Vertical		20		X			11'-3"							11'-3"	11'-3"	1,195
8	11T1265	Vertical		20		X			10'-7"							10'-7"	10'-7"	450
152	11T1266	Vertical		20		X			18'-11"							18'-11"	18'-11"	15,277
204	11T1267	Vertical		20		X			13'-10"							13'-10"	13'-10"	14,993
4	6T1268	Horizontal		4	S	X			23'-11"	12"						25'-7"	25'-6"	153
4	6T1269	Horizontal		4	S	X			23'-9"	12"						25'-5"	25'-4"	152
4	6T1270	Vertical		20		X			2'-11"							2'-11"	2'-11"	18
4	6T1271	Vertical		20		X			6'-3"							6'-3"	6'-3"	38
4	6T1272	Vertical		20		X			9'-7"							9'-7"	9'-7"	58
4	6T1273	Vertical		20		X			12'-11"							12'-11"	12'-11"	78
4	6T1274	Vertical		20		X			15'-5"							15'-5"	15'-5"	93
4	6T1275	Vertical		20		X			18'-9"							18'-9"	18'-9"	113
4	6T1276	Vertical		20		X			22'-1"							22'-1"	22'-1"	133
6	6T1277	Vertical		20		X			25'-2"							25'-2"	25'-2"	227
101	6T1278	Horizontal		4	S	X			21'-8"	12"						23'-4"	23'-3"	3,527
20	6T1279	Horizontal		5		X			21'-8"	12"	12"					23'-8"	23'-5"	703
72	6T1280	Vertical		20		X			8'-8"							8'-8"	8'-8"	937
104	6T1281	Vertical		5		X			18"	2'-7"	2'-7"					6'-8"	6'-5"	1,002
12	6T1282	Vertical		5		X			18"	2'-7"	6'-1"					10'-2"	9'-11"	179
18	6T1283	Vertical		5		X			3'-7"	2'-7"	2'-7"					8'-9"	8'-6"	230
36	11T1284	Vertical		20		X			25'-1"							25'-1"	25'-1"	4,798
28	6T1285	Horizontal		4	S	X			5'-1"	12"						6'-9"	6'-8"	280
28	6T1286	Horizontal		4	S	X			4'-6"	12"						6'-2"	6'-1"	256
16	6T1287	Horizontal		4	S	X			11'-9"	12"						13'-5"	13'-4"	320
72	5T1288	Top & Bottom		5		X			8'-8"	11"	11"					10'-6"	10'-3"	770
26	5T1289	Top & Bottom		5		X			17'-4"	11"	11"					19'-2"	18'-11"	513
6	5T1290	Top		5		X			5'-11"	11"	11"					7'-9"	7'-6"	47
6	5T1291	Bottom		5		X			5'-11"	15"	11"					8'-1"	7'-10"	49
3	5T1292	Top		5		X			11'-2"	11"	11"					13'-0"	12'-9"	40
3	5T1293	Bottom		5		X			11'-2"	23"	11"					14'-0"	13'-9"	43
5	5T1294	Top		5		X			15"	11"	11"					3'-1"	2'-10"	15
5	5T1295	Bottom		5		X			15"	16"	11"					3'-6"	3'-3"	17
5	5T1296	Top		5		X			4'-1"	11"	11"					5'-11"	5'-8"	30
5	5T1297	Bottom		5		X			4'-1"	16"	11"					6'-4"	6'-1"	32
3	5T1298	Top		5		X			8'-7"	11"	11"					10'-5"	10'-2"	32
3	5T1299	Bottom		5		X			8'-7"	15"	11"					10'-9"	10'-6"	33
3	5T12100	Top		5		X			2'-5"	11"	11"					4'-3"	4'-0"	13
3	5T12101	Bottom		5		X			2'-5"	23"	15"					5'-7"	5'-4"	17
12	5T12102	Top		5		X			2'-8"	11"	11"					4'-6"	4'-3"	53
12	5T12103	Bottom		5		X			2'-8"	16"	11"					4'-11"	4'-8"	58
6	5T12104	Top		5		X			2'-10"	11"	11"					4'-8"	4'-5"	28
6	5T12105	Bottom		5		X			2'-10"	23"	11"					5'-8"	5'-5"	34
6	5T12106	Horizontal		5		X			3'-7"	2'-10"	2'-10"					9'-3"	9'-0"	56
4	5T12107	Horizontal		5		X			3'-1"	2'-10"	2'-10"					8'-9"	8'-6"	35
12	5T12108	Horizontal		20		X			5'-0"							5'-0"	5'-0"	63
4	5T12109	Horizontal		2		X			4'-0"	9"				6⅜"	6⅜"	4'-9"	4'-9"	20
76	8T12110	Vertical		5		X			22"	6'-8"	6'-8"					15'-2"	14'-9"	2,993
152	8T12111	Vertical		5		X			3'-2"	6'-8"	6'-8"					16'-6"	16'-1"	6,527
76	8T12112	Vertical		5		X			2'-5"	6'-8"	6'-8"					15'-9"	15'-4"	3,111
64	11T12113	Horizontal		20		X			14'-6"							14'-6"	14'-6"	4,930
2	6T12114	Spiral		35		X			3'-6"	5"	14'-7"					405'-9"	405'-9"	1,219
24	7T12115	Vertical		5		X			18"	3'-0"	3'-0"					7'-6"	7'-2"	352
2	5T12116	Trans. Brg.		20		X			6'-7"							6'-7"	6'-7"	14
14	5T12117	Trans. Brg.		15		X			2'-5"	3'-10"	2'-5"	20½"	20½"	20½"	20¾"	8'-8"	8'-8"	127
10	5T12118	Trans. Brg.		2		X			7'-8"	2'-6"				21¼"	21¼"	10'-2"	10'-2"	106
14	4T12119	Horizontal		20		X			4'-6"							4'-6"	4'-6"	42
20	4T12120	Horizontal		5		X			3'-2"	14"	14"					5'-6"	5'-4"	71
10	6T12121	Horizontal		4	S	X			11'-8"	12"						13'-4"	13'-3"	199
36	6T12122	Horizontal		15		X			2'-7"	11'-9"	2'-7"	2'-6⅜"	4½"	2'-6⅜"	4¾"	16'-11"	16'-11"	915
2080	5T12123	Horizontal		4	S	X			20"	6"						2'-8"	2'-7"	5604
8	W5W1201	Spiral		22		X			18"	9¼"						26'-1"	26'-1"	35

Added /8\

Notes:
For Bar Bending Diagram, see Sheet No. BR184.

BILL OF REINFORCING STEEL

Detailed JUL 2009
Checked JUL 2009

Note: This drawing is not to scale. Follow dimensions.

\\kcow00\jobs3\46440\Bridges\Plans\CDtoMoDOT A6500\J6I0984\A6500-dgn\B_A6500_187-205_J6I0984_187.dgn

19-APR-2012 11:44

STATE OF MISSOURI — HANS R. HUTTON — NUMBER E-20974 — REGISTERED PROFESSIONAL ENGINEER
Hans R. Hutton

DATE	
4/19/12	
ROUTE I-70	STATE MO/IL
DISTRICT 6	SHEET NO. BR187
COUNTY ST. LOUIS CITY - MO, ST. CLAIR - IL	
JOB NO. J6I0984	
CONTRACT ID.	
PROJECT NO.	
BRIDGE NO. A6500	

DATE	DESCRIPTION
6-10-11	/8\ Revised Reinforcing Steel
4-19-12	/11\ Revised Reinforcing Steel

MISSOURI HIGHWAYS AND TRANSPORTATION COMMISSION
105 WEST CAPITOL
JEFFERSON CITY, MO 65102
1-888-ASK-MODOT (1-888-275-6636)

HNTB
715 KIRK DRIVE
KANSAS CITY, MO 64105-1310
TELEPHONE (816) 472-1201
CERTIFICATE OF AUTHORITY
NO. 001270

LICENSED STRUCTURAL ENGINEER — HANS R. HUTTON — 081-006707 — STATE OF ILLINOIS
expires 11-30-2012
Hans R. Hutton
4-19-2012

REV.

BILL OF REINFORCING STEEL (4) (5)

NO. REQ'D.	MARK NO. SIZE MARK	LOCATION	EPOXY (E)	SHAPE NO.	STIRRUP (S)	SUBSTR. (X)	VARIES (V)	NO. EACH	B FT. IN.	C FT. IN.	D FT. IN.	E FT. IN.	F FT. IN.	H FT. IN.	K FT. IN.	NOMINAL LENGTH FT. IN.	ACTUAL LENGTH FT. IN.	WEIGHT LBS.
		CAST-IN-PLACE SLAB-CONT'D																
8	6S049	Slab	E	23					4'-4"	2'-9"	4'-4"	3'-0¾"	3'-0¾"	3'-0¾"	3'-0¾"	11'-5"	11'-5"	137
8	6S050	Slab	E	5					6"	4'-9"	4'-9"					10'-0"	9'-9"	117
168	5S052	Slab	E	19					2'-1"	10"						2'-11"	2'-10"	496
40	5S053	Slab	E	27					10"	15"	10"	10"		2¾"	14¾"	3'-9"	3'-6"	146
80	5S054	Slab	E	27			V	4	10"	15"	10"	10"		2¾"	14¾"	3'-9"	3'-6"	292
		Increment = 0							10"	15"	10"	10"		0.0000	15"	3'-9"	3'-6"	
48	5S055	Slab	E	39					2'-1"	10"	10"					3'-9"	3'-6"	175
6	6S056	Slab	E	5					6"	7'-2"	7'-2"					14'-10"	14'-7"	131
4	6S057	Slab	E	75					13"	9"	2'-0"	9¼"	9¼"			6'-11"	6'-8"	40
		MEDIAN BARRIER CURB																
6108	5M1	Median Barrier	E	2					3'-5"	5"				4½"	⅞"	3'-10"	3'-10"	24,421
10	5M2	Median Barrier	E	23					11'-10"	20'-0"	9'-10"	3"	9'-10"	3½"	11'-10"	41'-8"	41'-8"	435
260	5M3	Median Barrier	E	20					41'-11"							41'-11"	41'-11"	11,367
20	5M4	Median Barrier	E	20					27'-10"							27'-10"	27'-10"	581
20	5M5	Median Barrier	E	20					28'-3"							28'-3"	28'-3"	589
20	5M6	Median Barrier	E	20					28'-8"							28'-8"	28'-8"	598
320	5M7	Median Barrier	E	20					43'-2"							43'-2"	43'-2"	14,407
12	5M8	Median Barrier	E	20					10'-2"							10'-2"	10'-2"	127
10	5M9	Median Barrier	E	20					41'-8"							41'-8"	41'-8"	435
20	5M10	Median Barrier	E	2					3'-5"	17"				16⅝"	3⅜"	4'-10"	4'-10"	101
40	5M11	Median Barrier	E	2			V	2	3'-5"	5"				4½"	⅞"	3'-10"	3'-10"	181
		Increment = ⅜"							3'-5"	17"				16⅝"	3⅜"	4'-10"	4'-10"	
-16 (9)		BRIDGE RAILING																695 (9)
1248	5R1	Bridge Rail	E	23					11"	6½"	11"	8½"	7"	8½"	7"	2'-5"	2'-5"	3,146
(20)	5R2	Bridge Rail	E	20					41'-8"							41'-8"	41'-8"	(869)
312	5R3	Bridge Rail	E	20					41'-11"							41'-11"	41'-11"	13,640
24	5R4	Bridge Rail	E	20					27'-10"							27'-10"	27'-10"	697
24	5R5	Bridge Rail	E	20					13'-9"							13'-9"	13'-9"	344
24	5R6	Bridge Rail	E	20					14'-2"							14'-2"	14'-2"	355
24	5R7	Bridge Rail	E	20					28'-8"							28'-8"	28'-8"	718
384	5R8	Bridge Rail	E	20					43'-2"							43'-2"	43'-2"	17,289
12	5R9	Bridge Rail	E	20					20'-8"							20'-8"	20'-8"	259
(20)	5R10	Bridge Rail	E	23			V	4	11'-10"	20'-0"	9'-10"	⅝"	9'-9⅝"	⅝"	11'-10"	41'-8"	41'-8"	(869)
-16 (9)		Increment = 0							11'-10"	20'-0"	9'-10"	3⅜"	9'-10"	4½"	11'-9⅜"	41'-8"	41'-8"	695 (9)
40	5R11	Bridge Rail	E	19					3'-4"	5"						3'-9"	3'-8"	153
40	5R12	Bridge Rail	E	2					3'-5"	5"				4½"	⅞"	3'-10"	3'-10"	160
80	5R13	Bridge Rail	E	19			V	4	3'-4"	5"						3'-9"	3'-8"	327
		Increment = ⅜"							3'-4"	11"						4'-3"	4'-2"	
80	5R14	Bridge Rail	E	2			V	4	3'-5"	5"				4½"	⅞"	3'-10"	3'-10"	337
		Increment = ⅜"							3'-4"	11"				13"	⅞"	4'-3"	4'-3"	384 (9)
96	5R15	Bridge Rail	E	19			(V)	(8)	3'-4"	11"						4'-3"	4'-2"	(417)
	(9) Added	(Increment = ⅜")		(9) Added					(2'-8"	11"	(9) Added				(9) Added	(3'-7"	3'-6")	
84	5R16	Light Blister	E	75					13"	14"	18"	9¼"	9¼"			6'-4"	6'-1"	533
8	5R17	Bridge Rail	E	2					29'-10"	11'-10½"				8"	11'-10"	41'-9"	41'-9"	348
32	5R18	Bridge Rail	E	20					2'-8"							2'-8"	2'-8"	89
8	4R19	Bridge Rail	E	53	S				4"	12½"						3'-6"	3'-3"	17
																		(9) Added
		TOTALS																
	2																	70
	2		E															206
	4															(9) 225		226
	4		E															(208)
	5															(1) (8)	788,838	(784,728)
	5		E													(9) 156,219		(156,163)
	6																	1,072,500
	6		E															2,300,702
	7																	275,856
	7		E															130,111
	8																	44,708
	8		E															2,286
	10																	28,304
	11																	3,783,554
	11		E															140,424
	18															(6)	3,783,554	3,780,720
	18		E															145,005
		TOTALS														(6)	9,277,610	9,274,776
		TOTALS	E															2,875,105

(11) (8) 9,281,720
(9) 2,875,178

BILL OF REINFORCING STEEL (4) (5)

NO. REQ'D.	MARK NO. SIZE MARK	LOCATION	EPOXY (E)	NOMINAL LENGTH FT. IN.	ACTUAL LENGTH FT. IN.	WEIGHT LBS.
		REINFORCING STEEL (BRIDGES)				
	2					70
	4					226
	5			(1) (8)	788,838	(784,728)
	6					962,539
	7					275,856
	8					44,708
	10					28,304
	11			(6)	3,080,632	3,077,798
	18					310,896
		TOTALS		(6)	5,487,959	5,485,125
				(11) (8) 5,498,069		
		REINFORCING STEEL (EPOXY COATED)				
	2		E			206
	4		E			208
	6		E			13,385
	7		E			57,781
	8		E			2,286
	11		E			140,424
	18		E			145,005
		TOTALS	E			359,295
		PIERS 11 AND 12 FOUNDATIONS				
	6					109,961
	11					702,922
	18					2,976,768
		TOTALS				3,789,651
		PRECAST PRESTRESSED SLAB PANELS				
	5		E			62,808
	6		E			2,287,317
	7		E			72,330
		TOTALS	E			2,422,455
		BRIDGE RAILING AND MEDIAN BARRIER CURB				
	(4)	(9) Added	(E) (9) Added		(9) Added	(17)
	5		E	(9) 93,411		93,355
		(TOTALS)	(E) (9) Added	(9) Added		93,428

(5) Notes:
For Bar Bending Diagram, see Sheet No. BR184.
Two additional #5-M8 are includedin Bill of Reinforcing Steel for testing.

Detailed JUL 2009
Checked JUL 2009

Note: This drawing is not to scale. Follow dimensions.

Sheet No. 203 of 205

BILL OF REINFORCING STEEL

DATE 4/19/12 | ROUTE I-70 | STATE MO/IL | DISTRICT 6 | SHEET NO. BR203
COUNTY ST. LOUIS CITY - MO ST. CLAIR - IL
JOB NO. J6I0984
CONTRACT ID.
PROJECT NO.
BRIDGE NO. A6500

DATE	DESCRIPTION
5-17-10	(1) Revised per ATC
5-17-10	(2) Moved bars from Sheet No. BR202
9-3-10	(3) Revised Reinforcing Steel
6-10-11	(4) Revised Reinforcing Steel
7-8-11	(5) Revised Reinforcing Steel
4-19-12	(6) Revised Reinforcing Steel

MISSOURI HIGHWAYS AND TRANSPORTATION COMMISSION
105 WEST CAPITOL JEFFERSON CITY, MO 65102 1-888-ASK-MODOT (1-888-275-6636)

HNTB 715 KIRK DRIVE KANSAS CITY, MO 64105-1310 TELEPHONE (816) 472-1201 CERTIFICATE OF AUTHORITY NO. 001270

State of Missouri – Hans R. Hutton – Number E-28974 – Registered Professional Engineer
Licensed Structural Engineer – Hans R. Hutton – 081-006707 – State of Illinois
4-19-2012

REV.

\\kcow00\jobs3\46440\Bridges\Plans\CDtoMoDOTA6500\J6I0984\A6500-dgn\B_A6500_203-205_J6I0984_203.dgn 19-APR-2012 11:45

Missouri
Department
of Transportation

MoDOT

Pete K. Rahn, Director

105 West Capitol Avenue
P.O. Box 270
Jefferson City, MO 65102
(573) 751-2551
Fax (573) 751-6555
www.modot.org

TO: John Grana
Resident Engineer – MRB Project Office

CC/ATT: Dave Ahlvers–cm
Kent Nelson-br (2 copies)
Dean Franke-br
Chad Daniel-br

FROM: Greg Sunde GS
Structural Liaison Engineer

DATE: February 26, 2010

SUBJECT: Construction Change
December 8, 2009 Letting
St. Louis City
Job J6I0984
Bridge No. A6500 (Main Spans over the Mississippi)

Attached are revised Job Special Provisions. This revision (R003) adds the MTA ATC JSPs at the end. Due to that addition, JSP Y in the "Base Line" JSPs is no longer necessary due to duplication and has been struck through.

If you have any questions please contact me at 573-522-2560.

gs
attachment

TABLE OF CONTENTS

(Job Special Provisions shall prevail over General Special Provisions whenever in conflict therewith)

2 REVISED	A.	Potential Construction Delays Due To High Water
	B.	Foundation Construction
	C.	Lock-Up Devices
	D.	Water Transportation For Engineer
	E.	Terminal Railroad Association of St. Louis Requirements for Work in Missouri
	F.	Terminal Railroad Association of St. Louis Requirements for Work in Illinois
	G.	Right-of-Way And Access To Site of Work
	H.	Bridge Work In Navigable Waters
1 REVISED	I.	Inspection Traveler
	J.	HLMR Bearings
	K.	Mass Concrete
	L.	Modular Expansion Joint
	M.	Erection of Cable Stayed Spans
	N.	Mechanical Bar Splices
	O.	Partial Payment For Plate Steel
	P.	Self-Consolidating Concrete For Drilled Shafts
	Q.	Stay Cables
	R.	Inspection Access
	S.	Drainage System (On Structure)
	T.	Precast Prestressed Concrete Slab Panels
	U.	Wearing Surface
1 REVISED	V.	Cooperation Between Contractors And Sequence of Work
	W.	Protective Coatings For Exposed Concrete Surfaces
	X.	Navigation Vertical Clearance Gauges
3 REVISED	Y.	Television Camera Inspection
2 REVISED	Z.	Shear Connector Studs

Attachment to Job Special Provisions
United States Coast Guard Bridge Permit 15-09-8

STATE OF MISSOURI
STEVEN T. HAGUE
NUMBER E-28068
REGISTERED PROFESSIONAL ENGINEER
2/26/10

LICENSED STRUCTURAL ENGINEER
STEVEN T. HAGUE
081-005611
KANSAS CITY MISSOURI
STATE OF ILLINOIS
expires 11-30-2010
signature
2/26/10
date

MISSOURI HIGHWAYS AND TRANSPORTATION COMMISSION
105 W. CAPITOL AVE.
JEFFERSON CITY, MO 65102
Phone (888) 275-6636

HNTB Corporation
715 Kirk Drive
Kansas City, Missouri 64105

Certificate of Authority # 001270
Consultant Phone # 816/472-1201

Job No. J6I0984
Route I-70
St. Louis City
Date Prepared: 2/26/2010

Date: February 26, 2010

Addendum No. 3

TABLE OF CONTENTS, continued

(Job Special Provisions shall prevail over General Special Provisions whenever in conflict therewith)

3 REVISED AA. Drilled Shafts: Section 701, Drilled Shafts, of the Standard Specifications shall be replaced by the following Special Provision

3 REVISED BB. I-70 Mississippi River Bridge, Drilled Shaft Special Provision – Osterberg Cell (O-Cell) Load Testing

STATE OF MISSOURI WAYNE ALAN DURYEE NUMBER E-18780 REGISTERED PROFESSIONAL ENGINEER 2-26-2010	LICENSED PROFESSIONAL ENGINEER WAYNE ALAN DURYEE 062-052632 STATE OF ILLINOIS expires 11-30-20 11 signature 12-20-2010 date	**MISSOURI HIGHWAYS AND TRANSPORTATION COMMISSION** 105 W. CAPITOL AVE. JEFFERSON CITY, MO 65102 Phone (888) 275-6636 **HNTB Corporation** 715 Kirk Drive Kansas City, Missouri 64105 Certificate of Authority # 001270 Consultant Phone # 816/472-1201 Job No. J6I0984 Route I-70 St. Louis City Date Prepared: 2/26/2010
Date: February 26, 2010		

A. POTENTIAL CONSTRUCTION DELAYS DUE TO HIGH WATER

1.0 Description.

2 REVISED

The project completion date will be extended one day for each day the Contractor is unable to progress critical path items of the work when the Mississippi River stage as measured on the St. Louis Gauge (Market Street) is at or above Elevation ~~416.2~~ 410.0 or for any days that critical path items of the work cannot be performed due to a navigation closure of the river by the U.S. Coast Guard. These river delays will be noncompensable. The Contractor's CPM schedule, current at the time of the high water event will be used for the purpose of identifying critical path activities.

B. FOUNDATION CONSTRUCTION

1.0 Description.

1.1 General. Piers 11 and 12 may be constructed as either caissons sunk by open dredging to the depths indicated on the plans or to such other depths as the Engineer may consider necessary as the work progresses or alternatively as drilled shaft foundations with footings and seals as shown on the plans.

2.1 Dredged Caisson Construction.

The term caisson designates a permanent part of the substructure so constructed as to sink gradually into place as material is excavated from within the caisson dredge wells. After caissons have been sunk to required depths and are in approved positions, sealing courses of concrete shall be deposited under water. All dredging wells above such sealing courses shall be filled with water only.

The Contractor must make his own appraisal of the difficulties of sinking through any and all materials to the final founding elevation and must determine the method of construction and caisson mass required for satisfactory sinking at all sinking stages and must be prepared to sink through all soils, rock and other obstructions encountered.

2.1.2 Prequalification of Contractor. The person(s) or firm directing the work described in this Special Provision shall be knowledgeable of dredged caisson type foundation installation procedures and shall have installed dredged caissons in conditions similar to those expected at the project site in accordance with the following minimum experience requirements:

1. A dredged caisson contractor shall have a minimum of three years of dredged caisson installation experience prior to the bid date for this project; or,

2. A contractor without prior dredged caisson experience shall employ a superintendent with a minimum of fifteen years of dredged caisson experience prior to the bid date of this project.

A contractor with limited dredged caisson installation experience may use a combination of the company's and its superintendent's experience. Five years of experience of the superintendent may be counted as equivalent to one year experience for the contractor.

At the preconstruction conference, or no later than 45 days prior to beginning the work described in this Special Provision, the Contractor shall furnish evidence of the following requirements:

A) A signed statement from the superintendent responsible for dredged caisson installation that the project site has been visited, and that all the subsurface information has been inspected. This information would include soil profiles or boring logs furnished in the plans, soil samples, cores, and soil and foundation reports, all available at the following location:

Broadway Maintenance Building
1200 S. Broadway
St. Louis MO 63101

Arrangements to view the rock cores may be made through:

Randy C. Hitt, P.E.
MRB Deputy Project Director
707 N. Second Street
Suite 300
St. Louis, MO 63102
314-236-2961

B) Ability of the Contractor or firm responsible for installation of dredged caissons to complete a project of this type. This is to be supported by a list containing a detailed description of at least three projects completed on which the Contractor and/or superintendent has installed or supervised installation of dredged caissons in similar conditions to those anticipated at the site, and utilized sinking techniques similar to those anticipated for this project. This list of projects shall contain names and phone numbers of the project owners' representatives who can verify the Contractor's participation on the project, and the names of the superintendents who were in charge of the Contractor's operations.

The Engineer will review the information submitted and notify the Contractor within 21 days of receiving the submittal of acceptance or rejection. The Contractor shall take the necessary steps to satisfactorily meet the requirements and submit acceptable experience. Work shall not start until the experience requirements are accepted by the Engineer.

2.1.3 Working Drawings and Computations. Before beginning construction operations the Contractor shall submit to the Engineer drawings and computations showing complete details of the proposed plant, methods of caisson construction, and sinking methods. Submittal shall include design and details of cofferdams, follower cofferdams, cutting edges, detailed geometry control methods used to monitor the caisson, and other construction, if any, which the Contractor may propose to use and which is not fully detailed on the plans.

Sinking diagrams shall be included to show the sequence of operations for construction of the caissons, time and amount of concrete increments, dredging, and the time and amount of addition of cofferdams. The diagram shall show the caisson displacement under each increment of load,

the amount of freeboard on the caisson or follower cofferdam, and the water pressure at critical points for each increment of concrete or cofferdam added to the caisson. The plan shall include the proposed method of keeping the cutting edge plumb as it comes in contact with the rock surface. Acceptable methods may include adding various height "shoes" to the bottom of the cutting edge at selected locations around its perimeter to support the caisson as it encounters the rock or sloping the bottom of the cutting edge to the approximate profile of the rock surface. The rock surface shown on the plans is approximate and based on the borings shown. The Contractor shall make his own determination as to the actual rock surface and the method employed to ensure the caisson remains plumb.

The Contractor shall provide the proposed method of excavation of materials and cleanout of the caisson foundation level at the elevations shown on the plans or to such depth as determined by the Engineer.

Review by the Engineer shall in no way relieve the Contractor of the responsibility to construct the work in accordance with the intent of the plans and these specifications.

The computations and drawings shall be prepared under the direction of a licensed professional engineer or structural engineer and signed and sealed in accordance with the requirements of the jurisdiction where the work is to be performed, and shall be submitted not less than 60 calendar days in advance of the time the Contractor intends to start work to afford sufficient time for the Engineer's review. The cost of furnishing design computations and drawings shall be incidental to the contract and no additional compensation will be allowed the Contractor for any delays resulting from compliance with the above requirements.

The Engineer will review the information submitted and notify the Contractor within 30 days of receipt whether the submittal is accepted or additional information is required.

2.2.0 Materials.

Concrete and concrete construction for caissons shall conform to Sec 501 and 703 as applicable. Concrete shall be cured a minimum of seven days using water curing methods unless otherwise approved by the Engineer.

All concrete in the caissons except the seal shall be Class B-2. Seal concrete shall be Seal Concrete in accordance with Sec 501.

All reinforcing steel shall be ASTM A615, Grade 60 conforming to the requirements of Sec 706.

Structural steel shall conform to the requirements of ASTM A709 Grade 36 or Grade 50 as directed in the plans. Fabrication shall conform to Sec 712. Painting or galvanizing of structural steel in cutting edges will not be required.

2.3.0 Construction Requirements.

2.3.1 Caisson Construction. Reinforced concrete caissons shall be constructed as shown on the plans. Caissons shall be constructed and handled during positioning and sinking so that they will maintain correct shape without warping and if necessary shall be provided with additional braces or struts or other construction as may be required to suit the methods of operation followed by the Contractor during sinking. Methods of constructing caissons and carrying them down to the existing river bed shall be of the Contractor's selection, by any approved method which will enable the caissons to be sunk in correct position.

Temporary follower cofferdams and bracing shall be designed by the Contractor. The follower cofferdam shall be well braced and attached to the top of the caisson to permit construction in the dry of the distribution caps. Upon completion of the pier, the temporary cofferdam shall be entirely removed above the top of the caisson.

It is anticipated that dredging of the caisson will be performed in various phases of concrete construction. The contractor shall provide adequate protection for the reinforcing steel exposed in the top of the caisson to prevent damage to the steel. Reinforcing steel damaged due to the Contractor's dredging operation shall be repaired by using approved couplers or drilled and doweled methods approved by the Engineer.

Caissons must be sunk within the following limits of accuracy:

Transverse to Centerline of Bridge, plus or minus 1.0 foot from plan location.

Longitudinal, plus or minus 1.0 foot from plan location.

Rotation about the vertical axis through the intersection of the centerline of bridge and centerline of pier, plus or minus 1.2 degrees from plan location.

In no case shall the combined values of transverse, longitudinal and rotational errors be such that any corner of the caisson is more than 1.0 foot from planned longitudinal or transverse location.

The limits of accuracy specified above shall apply to any and all levels of the caisson and subshaft.

In addition to the absolute positional requirements shown above, the caisson shall be founded such that the list measured from the bottom of the cutting edge to the top of the subshaft does not exceed 1.5 feet.

To assure location of caissons within the limits specified, special care shall be exercised in sinking the caissons. In preparation for sinking, caissons shall be set on exactly correct horizontal position and shall be maintained at true level. Check measurements for the correctness of position of the caissons shall be made at each increment of sinking. If at any time the caisson has shifted from correct position or correct level, adjustment shall be immediately begun as dredging and sinking is resumed. Caissons shall be sunk by incremental excavation and sinking. Excess excavation permitting large drops of caissons shall be avoided as far as practicable. At no time should the caisson excavation exceed the cutting edge advancement into the river bed by more than 5.0 feet unless it can be shown to the Engineer's

satisfaction that the additional excavation depth is required to sink the caisson or maintain tolerance limits for location.

The Contractor shall establish satisfactory reference and control marks, telltales, and other checking means; and shall maintain a continuous check on the position, list and cutting edge elevation of each caisson where dredging and sinking operations are in progress. The frequency of making position, list and cutting edge elevation readings shall be as directed by the Engineer and shall be performed by the Contractor. The longitudinal and transverse axes of the caissons shall be scribed on the steel cutting edge. These control lines shall be projected upward on the caisson and follower cofferdam, together with elevation points, so that all subsequent caisson construction will have its true geometric relation to the plane of the cutting edge.

The Contractor shall furnish satisfactory sounding equipment and operating personnel to check and record dredging depths, dredged widths of the chambers, elevations of materials under cutting edges, heights of water inside of wells, and similar pertinent information for each caisson during dredging operations. Sounding lines shall be suitably mounted on reels for expeditious handling and shall be accurate to within 0.5 feet. These facilities, equipment, and personnel shall be made available at all times to the Engineer to assist him in making independent checks on the work.

The Contractor shall make all excavations of every nature, in whatever material may be encountered, and do all work necessary to sink or build foundations to required depths, including the removal of all timbers, piling, logs, boulders, rip-rap or other obstacles which may be encountered, regardless if such obstacles are indicated on the boring logs. There will be no direct payment for operations of sinking caissons, nor for the removal of any obstacles encountered, nor for delays on account of unforeseen excavation operations, nor for any unanticipated conditions or materials, but payment therefor shall be covered by the prices paid for the caissons.

Excavated material shall not be deposited against caissons so as to create unbalanced lateral pressures, unless so directed by the Engineer.

All work in the river shall comply with the provisions of the permits issued by the U.S. Coast Guard and by the Corps of Engineers.

Care shall be taken during the sinking operations, especially in sand stratas, to prevent the "blowing in" or inflow of materials under the cutting edges. Such measures shall include the maintenance of balanced hydrostatic pressures inside and outside the caisson and care to keep excavation levels at or near the cutting edge elevations.

No excavation shall be made outside of caissons, and the natural stream bed adjacent to the structure shall not be disturbed without the written permission of the Engineer. If construction operations should cause settlements of the ground outside the caissons, the Contractor shall, when directed by the Engineer, backfill all such excavations or depressions to the original ground surface or stream bed with stone material as specified for riprap.

Upon approval of the depth to which the cutting edge has been driven, the excavation shall be finished to provide a uniform bedding for placement of the concrete seal against undisturbed rock.

The Contractor shall have available a competent diver or divers to assist in removing any obstructions under the cutting edges of any caisson, and to assist in the removal of follower cofferdams. The cost of this work shall be considered incidental to the contract.

The caissons are to be sunk to the founding elevations as shown on the plans. Regardless of the elevation at which the caisson is founded, the top elevation of the distribution cap shall be as shown on the plans.

As preparation for sealing, the Contractor shall remove all material below the sloping sides of the exterior cutting edge and below the high interior cutting edges to provide the minimum thickness of seal as shown on the plans. He shall provide spud jets, with right angle arms of sufficient length to reach beyond the center of interior cutting edges and beyond the mid-point of all cross wall intersections, and such other devices as will be needed to remove all the material under the areas inaccessible to the dredge buckets.

Prior to placing the seal concrete, all clay, silt, boulders, or foreign materials shall be removed from beneath the interior walls and interior of the dredging chambers and the surfaces in contact with the seal concrete shall be carefully washed and cleaned by means of high pressure jets so designed as to reach all parts of the cutting edges and interior surfaces. As a final cleaning operation, after a rest period sufficient to settle all suspended materials, the Contractor shall carefully remove from the dredging chamber all sludge, clay cuttings, and disturbed founding materials. He shall devise means for removing this material by air lift methods. The Contractor shall furnish such labor, diver inspection, sounding equipment, right angle pipe feelers and other equipment including imaging and profiling sonar as required to enable the Engineer to examine the condition of these surfaces and to check final cleaning out of the working chamber. The caissons shall not be sealed until conditions in the caissons are approved by the Engineer.

Final acceptance of the founding level of the caisson by the Engineer will be based on the requirement that a minimum of ninety percent of the bottom area shall be clean of all loose soil and foreign materials as to permit inspection of the condition of the bearing surface by the sonar equipment. No localized area of the bottom surface not clean shall exceed one percent of the total bottom area.

2.3.2 Seal Construction. The Contractor shall be responsible for providing competent seals adequate to permit successful cofferdam dewatering. High quality concrete is imperative and the method shall recognize the necessity of placing the concrete so that it will displace the surrounding water. At no time shall the fresh concrete, during and after placement, be permitted to be mixed with the surrounding water.

Any seal concrete additional to that shown on the plans and any additional costs due to caisson design shall be at no additional cost to the Department and shall be included in the unit contract price bid for the foundations.

The Contractor shall have available or provide modern and dependable mixing plants of sufficient capacity and sufficient backup system and equipment to ensure the continuous placing of tremie concrete from beginning to completion without any interruption.

Concrete shall be deposited by tremies as hereinafter specified. Concrete deposited under water shall be carefully placed in compact mass in its final position in such a manner and by means of a sufficient number of tremies to produce a continuous complete homogeneous concrete monolith of the full foundation area and of the thickness required by the plans. If placement of tremie

concrete is interrupted due to equipment breakdown or other reasons, and placement can proceed before initial setting time of the concrete has expired, the tremie shall be removed, resealed, and restarted adjacent to the tremie concrete in place. If interruption is greater than the initial setting time of the concrete, the point of stopping shall be considered a construction joint. Finished elevation at the top of sound concrete shall not vary more than 6 inches from plan grade.

Pumping to dewater the sealed caisson shall not commence until the concrete seal has sufficiently set to withstand the hydrostatic pressure, but in no case shall dewatering begin less than 48 hours after the seal concrete has been placed.

After cofferdam is dewatered and prior to further concrete placement, all contaminated concrete, laitance and other deleterious material accumulated on the seal top surface shall be removed in area that will contact additional pier concrete.

The caisson dredge well covers shall be installed after completing the tremie seal and prior to placing the distribution cap concrete.

2.3.3 Use of Explosives. Explosives may be used in the loosening of existing materials to be dredged or otherwise removed only after written permission from the Engineer and in accord with procedures hereinafter specified. All applications for permission must contain specific details of the size of charge and how it is to be placed. The Contractor shall engage the services of a qualified person who has had at least five years experience in the use of explosives for this type of work. Consideration will not be given to a request for use of explosives unless the plan has been prepared under the direction of such a person.

Blasting operations must be carefully controlled to eliminate the possibility of damage to the caisson or surrounding facilities. The Contractor shall provide a positive means to endure that blasting operations do not damage the caisson. Explosives shall not be placed within 6 feet of the inside face of the exterior cutting edge.

The Contractor shall submit a complete safety plan to the Engineer prior to any blasting. A positive system to detect and measure the probability of lightning or massive electrical discharges shall be used. Blasting shall be used only as necessary to loosen materials and reduce it to sizes required for removal.

The Contractor shall furnish to the Engineer prior to each blast a legible plan of all holes and information signed by the Contractor's authorized representative, showing the pattern and depth of drilling, type of explosives used, loading pattern, sequence of time of firing, and total amount in pounds of explosives for each individual detonation. The drilling and blasting plan is for record purposes, and will not absolve the Contractor of his responsibility for using proper drilling and blasting procedures.

The primary consideration in blasting is to conduct the work in such a manner that other property shall be undisturbed. It is the responsibility of the Contractor to conduct his operations in such a manner. Open blasting is defined as explosive charges not confined in a drill hole. Open blasting will not be permitted.

Permission by the Engineer to use explosives shall in no way relieve the Contractor of complete responsibility for damage to new construction or other property which may result from such use. Any such damage shall be repaired by the Contractor entirely at his expense.

2.3.4 Potential Impacts to Fish from Blasting. If blasting is the method selected for loosening of materials prior to the establishment of caissons or other enclosures (e.g. cofferdams), potential impacts to fishes are anticipated. Therefore, the Contractor will be required to adhere to the following protocol to avoid or reduce impacts to fish and/or the aquatic environment.

(1) The contractor shall take every precaution to avoid damage.

(2) The contractor shall use the minimum charge necessary to accomplish the work so as to reduce the risk of impact to the aquatic environment.

(3) The contractor shall use millisecond delays between detonation of smaller, successive charges that, when combined, produce the desired total charge. This effectively reduces the total weight of explosive being detonated at a given time and reduces the potential for fish mortality.

(4) After drilling and charges are set, the contractor shall backfill the drill hole above the charge with angular rock or allow the drill hole to collapse over the charge before detonation.

(5) The contractor shall mitigate blast impacts to fish by detonating small "repelling charges" prior to detonating the main shot to frighten fish from the area above the underwater blast site. Initial repelling charges are required for all blasts.

The Engineer will monitor, in coordination with interested state and federal fish and wildlife agencies, a number of initial blasts to determine the magnitude of the fish mortality, if any. The contractor shall inform the Engineer a minimum of 15 days prior to initiation of blasting. The Engineer will then notify the interested state and federal fish and wildlife agencies. This will enable those agencies to have representatives present during blasting operations if they so desire. If an unacceptable mortality level is observed, the Engineer will hold the contractor responsible for compensation to Missouri and/or Illinois conservation agencies according to the standards specified in the American Fisheries Society Special Publication Number 30 (2003), entitled *Investigation and Monetary Values of Fish and Freshwater Mussel Kills*. Any reparations for fish kills shall be made by the contractor entirely at his expense.

2.3.5 Sonar Inspection. The Contractor shall furnish all personnel and equipment necessary to conduct the underwater sonar inspection and shall operate the sonar and supporting equipment, under the direction of the Engineer and in such manner as to obtain optimum results from the equipment, in viewing the bottom surfaces of the excavations for dredged caissons.

2.3.5.1 Technical Representative. A qualified technical representative of the sonar service contractor shall be present on the work site at all times to set-up the equipment; operate the sonar, computer and software; provide technical assistance in remedying or repairing any malfunction of the equipment; and to consult with the Engineer and the Contractor. Electronic records of the entire sonar inspection are to be furnished to the Engineer upon completion of the work. The technical representative shall remain at the work site for as long as his or her presence is needed, as determined by the Engineer, but not less than such time as needed to complete the

inspection of the entire caisson excavation, and shall be available on short notice at any time during caisson work on the project.

2.3.5.2 Equipment. A list of the proposed equipment to be furnished by the Contractor for sonar inspection shall be submitted to the Engineer for review and approval. Such gear shall include:

Digital Scanning Sonar
Monitor
Recording Device (CD or DVD)

The Contractor shall develop a method for sonar handling and orientation at the required angles and depths and submit it to the Engineer for approval. Such method shall include provisions to accurately determine the depth and orientation during the under-water sonar inspection as well as later viewing of the files. Other methods and equipment for controlling the sonar will be considered subject to the approval of the Engineer upon achievement of a satisfactory sonar record.

The Contractor shall also furnish all necessary supplies, accessories, fuel, barge, etc., necessary for operation of the sonar equipment, including cable, power supply and all incidentals.

2.3.5.3 Drawings. The Contractor shall submit to the Engineer for approval, layout drawings showing the relative position of all components of the sonar system. The information submitted shall include a written description of the operating procedure in step-by-step sequence and shall state the source of power.

2.3.5.4 Sonar Inspection. Underwater sonar inspection of the excavations will normally be made only after dredging is complete to the plan elevation of the founding material. It is essential that the excavation be cleaned of all loose fragments, sediment and turbidity prior to its inspection.

The sonar shall be lowered slowly to scan the excavation inside the caissons below the sides of the dredge wells. The sonar shall be positioned in each dredge well so that the optimum clarity of detail and complete coverage of the excavation can be obtained. The sonar is to be lowered in all dredge wells. The sonar is to be scanned at sufficient elevation stops per dredge well for complete coverage. The top of the founding surface shall be scanned completely so that all areas of the founding surface can be observed. Unless otherwise directed by the Engineer, all scanning of the excavation shall be recorded on CD or DVD.

2.3.5.5 Record of Inspections. Where required by the Engineer, the real-time image shall be displayed on the monitor by the Contractor for study and observation. All sonar scanning is to be recorded with notes of depth and location on CD or DVD and properly labeled as to caisson number along with project and Contractor identification. CD's and/or DVD's shall be furnished to and become the property of the Engineer upon completion of the work.

2.3.6 Final Diver Inspection. The Contractor shall furnish competent diver or divers to perform the final inspection of the caisson and the entire founding surface as directed by the Engineer. Subsequent to the final cleaning and sonar inspection, the Contractor shall coordinate and report the results of the divers' observations to the Engineer. Divers shall have communications with the surface and underwater cameras. The entire dive video and voice are to be recorded on DVD. The divers shall cover the entire founding area of the caisson. If remedial measures are necessary after the initial dive inspection, the divers shall reinspect the area at no additional cost to the Owner.

The Contractor shall also furnish all necessary equipment and supplies associated with the final dive inspection.

3.0 Alternative Foundation.

The contractor may construct an alternative foundation as shown on the plans. The alternative foundation consists of the construction of drilled shafts and rock sockets, pile cap and seal below Elevation 396.5 in accordance with the plans and specifications.

4.0 Method of Measurement.

Foundations will be measured as a lump sum quantity per each foundation complete in place regardless of the alternative selected by the Contractor. For dredged caisson foundations, the subshaft and distribution cap shall be considered as part of the caisson.

5.0 Basis of Payment.

Dredged Caisson Foundations, complete in place and accepted, will be paid at the contract lump sum price for Foundation - Pier 11 and Foundation - Pier 12 included in the Estimated Quantities – Caisson Foundation table shown on the plans. The Alternative Foundations, complete in place and accepted, will be paid at the contract unit price for items included in the Estimated Quantities – Alternative Foundation table shown on the plans.

This payment shall be full compensation for all temporary and permanent materials including structural steel, reinforcing steel, concrete (including seal concrete), falsework, docks, scour protection, cofferdams and/or follower cofferdams; all means of construction, all excavation, sinking and inspection including sonar and diver inspection, and excavation disposal; and all labor, plant, tools, equipment, and incidentals necessary to satisfactorily construct the foundations. The dredged caisson includes all cutting edge steel, reinforcing steel, concrete (including seal concrete and distribution cap), and dredging wells below Elevation 396.5 at Piers 11 and 12. The distribution cap is defined as that portion of the foundation between Elevations 380.5 and 396.5. The subshaft shall be considered as part of the caisson. The alternative foundation includes all concrete and reinforcing steel below Elevation 396.5 including drilled shafts and rock sockets, casing, seal and pile cap.

No separate payment will be made for constructing the caissons below the founding elevations due to the Contractor's operations.

C. LOCK-UP DEVICES

1.0 Description.

The Contractor shall design, develop and test a seismic restraint system that will effectively lock the bridge in place in the case of a fast acting shock loading as would occur during an earthquake. The restraint system shall react to all fast acting loads, but shall allow slow movements such as thermal movement, creep, and shrinkage to occur without transmitting horizontal forces. The design loads are shown on the plans. The lock-up devices shall be specifically designed and constructed so that the design horizontal shock load is transmitted through the entire structure

with a minimum degree of elastic deformation within the system and remains as a composite unit under a load not to exceed 1.3 times the design load.

The lock-up device shall function without requirement of any special mechanism or component other than a piston, a cylinder, connecting rods, and pins. It shall contain no valves, springs, balls, ports, compensating devices, bypass channels, pressure limiters, or any other mechanical devices that could malfunction. The lock-up device shall be guaranteed to perform as intended at any time during the anticipated bridge service life of 75 years.

The lock-up device shall be designed to require a minimum amount of maintenance, and any such maintenance shall be specified and presented in the form of a separate attachment to the shop drawings.

2.0 Materials.

The medium inside the lock-up device by which the designed horizontal forces are transmitted shall consist of a silicone putty or fluid which is effectively incompressible when a sudden impact is presented by the piston. The manufacturer shall demonstrate five years of experience with this type of device and material.

The silicone compound shall be formulated such that while exhibiting the characteristics of a rigid body when under the influence of a sudden load, it can react as a semi-solid fluid upon the application of a very gradual load.

The properties of the compound shall be such that temperature does not effect the performance over the range of -20°F to 120°F.

The piston and pin(s) shall be constructed of stainless steel and the cylinder of alloy steel unless otherwise recommended by the manufacturer and approved by the Engineer. Exposed steel surfaces not of stainless steel shall be painted with coating System H in accordance with the requirements of Sec 1081.

3.0 Construction Requirements.

3.1 Testing. The lock-up device shall be tested using one unit selected at random from the lot. The lock-up device may be used in the structure if the testing results are satisfactory. The testing shall include the following:

a. Translation Test at Low Velocity ($V \leq 0.0007$ in/sec)

   The testing equipment shall be capable of testing the unit over the entire range of movement of the lock-up device. The maximum reaction (either in compression or tension) shall not exceed 10 percent of the normal design force.

b. Proof Load Test at High Velocity ($V \geq 0.50$ in/sec)

   The horizontal load shall be applied at a sufficient rate to simulate a shock load. The lock-up device shall be tested in both compression and tension. The maximum reaction shall not be lower than the maximum horizontal design force. There shall be no visible signs of deformation or distress of the unit.

A complete test report, including all results, shall be submitted to the Engineer within one week of the completion of the testing.

3.2 Design. Prior to any testing, the Contractor or his supplier shall submit to the Engineer, for approval, detail drawings covering all details of the proposed design. Aside from shop drawings the Contractor shall submit detailed calculations of the proposed design and proposed testing procedure. The details and calculations shall be prepared under the direction of a licensed professional engineer or structural engineer and signed and sealed in accordance with the requirements of the jurisdiction where the work is to be performed. The name and address of the contact person responsible and the location of the testing venue shall also be provided.

The Engineer shall be given access at all times to inspect all aspects of the fabrication and testing.

The Contractor shall be responsible for the design and installation of additional concrete and reinforcing steel in the lock-up device pedestal, and/or increases in connection plates and brackets, reinforcement plates, or weld metal, as necessary to accommodate the lock-up device proposed for use and its positioning on the structure. The Contractor shall coordinate all structural steel fabrication and erection and all concrete construction as necessary to provide a satisfactory installation of the lock-up devices.

4.0 Method of Measurement.

Lock-Up Devices, complete and accepted, will be measured as a unit quantity per each. Final measurement will be made on the basis of the contract quantity. Additional measurement will not be made except for authorized changes during construction.

5.0 Basis of Payment.

Lock-Up Devices will be paid at the contract unit price bid per each, which price shall be full compensation for design, fabrication, testing, and installation of the lock-up devices, as shown on the drawings and approved by the Engineer, including any additional reinforcing steel, prestressing steel, bolts, and concrete necessary to support the device and any increase in connection plate size, bracket modifications, reinforcement plates, and weld metal necessary to transfer load from the superstructure to the lock-up device.

D. WATER TRANSPORTATION FOR ENGINEER

1.0 Description.

This item shall consist of providing water transportation for the Engineer. During the course of ordinary activities required for the construction and/or inspection of the bridge, the Contractor shall provide, at the Engineer's request, suitable transportation for the Engineer and his designated personnel and equipment for access to portions of the work accessible only by water. The boat shall be equipped with life jackets, two-way radio, and other safety guards as prescribed by the Coast Guard and/or the Engineer. The boat shall be serviced and maintained by the Contractor during the entire duration of the contract, unless otherwise directed by the Engineer. The boat will be operated by a person employed by the Contractor.

2.0 Boat Docks.

Access to the boat shall be provided at a convenient location within the project right-of-way (or other approved location) accessible to the Engineer and his designated personnel. The access point shall have sufficient parking available for the Engineer and his personnel to safely park three vehicles at any time construction activities are underway.

The Contractor shall be responsible for securing all required permits for boat docks. The Contractor shall remove the boat docks upon completion of the contract.

3.0 Method of Measurement.

No measurement will be made.

4.0 Basis of Payment.

The cost of furnishing all equipment, materials, and labor and performing all work required for providing Water Transportation for Engineer, will not be paid for separately and all costs therefor shall be included in the contract price bid for other items of the work.

E. TERMINAL RAILROAD ASSOCIATION OF ST. LOUIS REQUIREMENTS FOR WORK IN MISSOURI

To Report an Emergency on property of the Terminal Railroad Association (hereinafter "TRRA"), call: (618) 451-8478.

1.0 Authority of Railroad Engineer and MHTC's Representative.

1.1 TRRA's authorized representative, herein called "Railroad Engineer", shall have final authority in all matters affecting the safe maintenance and operation of railroad traffic including the adequacy of the foundations and structures supporting TRRA's tracks. The Railroad Engineer for this Project is identified below, with current contact information:

Mr. C. R. McQueen, Jr.
Director Engineering Services & Administration
Terminal Railroad Association of St. Louis
1000 St. Louis Union Station, Suite 200
St. Louis, Missouri 63103
Office: (314)-539-4724
Fax: (314) 621-3673

1.2 The MHTC's authorized representative, herein called "Engineer", shall have authority over all other matters as prescribed herein and in the Project specifications.

2.0 Contractor's Indemnity Obligations to Railroad.

2.1 The term "Contractor" as used in these special provisions (the "Railroad Requirements") means the MHTC's contractor for the construction of the proposed grade separation structure (the "Project"), and includes any and all subcontractors. The Contractor shall indemnify, defend and hold TRRA harmless from and against any and all loss, damage, claims, demands, causes

of action, costs and expenses of any nature arising out of injury to or death of any person, or out of damage to or destruction of any property, including, without limitation, damage to fiber optic, communication and other cable lines and systems, where this injury, death, damage or destruction results from any cause arising out of work performed by the Contractor pursuant to the agreement between TRRA and MHTC for this Project, and shall also release TRRA from, and shall waive any claims for, injury or damage to equipment or other property, which may result from the construction, maintenance and operation of TRRA tracks, wire lines, fiber optic cable, pipe lines and other facilities on TRRA's right of way by the Contractor. The Contractor's liability will not be affected if any damage or claim was occasioned by or contributed to by the negligence of TRRA, TRRA's agents, servants, employees or otherwise, except to the extent that any damage or claim has been proximately caused by the intentional misconduct or sole or gross negligence of TRRA, or any of TRRA's officers, employees, agents, subcontractors, successors or assigns. The Contractor's indemnity shall include loss of profits or revenue arising from damage or destruction to fiber optic, communication and other cable lines and systems.

2.2 In addition to the indemnity obligations contained in the preceding paragraph, the Contractor shall indemnify, defend and hold TRRA harmless TRRA from any claims, expenses, costs, actions, demands, losses, fines, penalties, and fees, arising from, related to or connected, in whole or in part, with the removal of the Contractor's agents, servants, employees or invitees from TRRA's property for safety reasons.

2.3 The Contractor shall also indemnify, defend and hold TRRA harmless with reference to all fines or penalties imposed or assessed by federal, state and local governmental agencies against TRRA as the proximate result of contractor's work under this contract, including these Railroad Requirements.

3.0 Notice of Starting Work. The Contractor shall not commence any work on TRRA's right of way until the Contractor has complied with the following conditions:

3.1 At least thirty (30) days before beginning any work upon TRRA's right of way, the Contractor shall furnish to TRRA and MHTC a schedule for all work required to complete the portion of the Project within TRRA's right of way, and shall arrange for a job site meeting between the Contractor, the Engineer, and Railroad Engineer. TRRA may withhold providing any flaggers until the Contractor has conducted the job site meeting and scheduled the Contractor's work.

3.2 At least thirty (30) days before the Contractor proposes to begin work on TRRA's right of way, the Contractor shall give to Railroad Engineer a written notice of intent to begin work on TRRA's right of way.

3.3 The Contractor shall obtain written or electronic authorization from TRRA to begin work on TRRA's right of way. TRRA shall not unreasonably withhold this authorization.

3.4 The Contractor shall obtain the insurance coverage required in Section 14.0 of these Railroad Requirements. Contractor shall submit written evidence of such coverage to TRRA prior to commencing any work.

3.5 Safety Orientation: The Contractor shall ensure that Contractor's superintendent has obtained certification of completion of the BNSF Railway safety orientation course available on the Internet at www.contractororientation.com (Certification currently costs $11). The

Contractor shall certify that each of Contractor's employees, subcontractors or invitees who will be working TRRA's right of way have received the same safety orientation through sessions conducted by the Contractor or through the Internet before any work shall be done on the TRRA's right of way.

3.6 TRRA's written authorization to proceed with the work, with a copy to the Engineer, will include the names, addresses and telephone numbers of TRRA's representatives who are to be notified as hereinafter required. Where more than one representative is designated, the area of responsibility of each representative shall be specified.

4.0 Interference with Railroad Operations.

4.1 The Contractor shall arrange and conduct all work so that there shall be no interference with TRRA's operations, including train, signal, telephone and telegraphic services; or damage to TRRA's property; poles, wires and other facilities of tenants, licensees, easement grantees and invitees on TRRA's right of way. Whenever work may affect the operations or safety of trains, the Contractor shall first submit the method of doing this work to Railroad Engineer for approval, but such approval shall not relieve the Contractor from liability. The Contractor shall defer any of its work that requires flagging service or inspection service until the flagging service required by TRRA is available at the job site.

4.2 Whenever the Contractor's work within TRRA's right of way makes an impediment to TRRA's operations unavoidable, such as use of runaround tracks or necessity for reduced speed, the Contractor shall schedule and conduct these operations so that the impediment is reduced to the absolute minimum.

4.3 If conditions arising from, or in connection with the work require immediate and unusual provisions to protect TRRA's operations and property, the Contractor shall make such provisions. If in the judgment of Railroad Engineer, or the Engineer if Railroad Engineer is absent, such provision is insufficient, Railroad Engineer or Engineer may require or provide such provisions as deem necessary. In any event, such provisions shall be at the Contractor's expense and without cost to TRRA or MHTC.

4.4 The Contractor shall be responsible for any damage to TRRA as a result of work on the Project, which shall include but not be limited to interference with the normal movement of trains caused exclusively by the work performed by the Contractor. The Contractor shall be responsible for damages for TRRA's train delays that are caused exclusively by the Contractor. TRRA agrees not to perform any act that unnecessarily causes any train delay. The damages for train delays per freight hour will be billed at an average rate per hour as determined from TRRA's records. TRRA shall provide these records upon request, to MHTC or MHTC's contractor.

5.0 Track Clearances.

5.1 The minimum track clearances to be maintained by the Contractor during construction are shown on the Project plans. However, before undertaking any work within TRRA's right of way, or before placing any obstruction over any track, the Contractor shall:

(a) Notify Railroad Engineer at least seventy-two (72) hours in advance of the work.

(b) Receive assurance from Railroad Engineer that arrangements have been made for flagging service as may be necessary.

(c) Receive permission from Railroad Engineer to proceed with the work.

(d) Ascertain that the Engineer has received copies of notice to TRRA and of TRRA's response.

5.2 The Contractor shall fully comply with any horizontal and vertical clearance requirements imposed by Missouri state statutes and regulations and Federal statutes and regulations regarding the placement of structures or equipment near or over TRRA tracks.

6.0 Construction Procedures.

6.1 General. Construction work on TRRA's property shall be:

(a) Subject to TRRA's inspection and review; and

(b) In accordance with these Railroad Requirements.

6.2 Excavation. The subgrade of an operated track shall be maintained with the berm edge at least twelve feet (12') from centerline of track and not more than twenty-six inches (26") below top of the rail. The Contractor will not be required to make existing sections meet this specification if substandard, in which case the existing section will be maintained. The Contractor shall cease all work and notify TRRA immediately before continuing excavation in the work area if obstructions are encountered which do not appear on the drawings. If the obstruction is a utility and the owner of the utility can be identified, then the Contractor shall also notify the owner immediately. If there is any doubt about the location of underground cables or lines of any kind, no work shall be performed until the exact location has been determined. Additionally, all excavations shall be conducted in compliance with applicable Occupational Safety and Health Act regulations and, regardless of depth, shall be shored where there is any danger to tracks, structures or personnel. Any excavations, holes or trenches on TRRA's property shall be covered, guarded and/or protected when not being worked on. When leaving work site areas at night and over weekends, the areas shall be secured and left in a condition that will ensure that TRRA's employees and other personnel who may be working or passing through the area are protected from all hazards. All excavations shall be back filled as soon as possible.

6.3 Excavation for Structure. The Contractor shall be required to take special precaution and care in connection with excavating, shoring pits and in driving piles for footings adjacent to tracks to provide adequate lateral support for the tracks and the loads which the tracks carry, without disturbance of track alignment and surface, and to avoid obstructing track clearances with working equipment, tools or other material. The procedure for doing such work, including need of and plans for shoring, shall be approved by TRRA's Railroad Engineer before work is performed, but such approval shall not relieve the Contractor from liability. Before submission of plans to Railroad Engineer for approval, the Engineer will first review such plans in accordance with the Missouri Standard Specifications for Highway Construction, hereinafter called "Standard Specifications". The responsibility for the design and construction of the shoring rests solely with the Contractor. The temporary shoring along TRRA tracks shall be designed for the Cooper E80 loading. The design shall insure that the shoring is braced or substantially secured

to prevent movement. The Contractor shall submit plans for the temporary shoring that shall be signed, sealed, and stamped in accordance with the laws relating to Architects and Professional Engineers, Chapter 327, RSMo. and then submitted for review by the Engineer.

6.4 Demolition of Existing Structures. The Contractor shall be required to take special precaution and care in connection with demolition of existing structures. The procedure for doing such work, including need of and plans for temporary falsework, shall first be approved by Railroad Engineer before work is performed, but such approval shall not relieve the Contractor from liability. Before submission of plans to Railroad Engineer for approval, the Engineer will first review such plans.

6.5 Falsework. The Contractor shall take special precaution and care to prevent any material from falling on TRRA's right of way. The Railroad Engineer shall first approve all procedures for preventing material from falling on TRRA's right of way, including need of and plans for temporary falsework, but such approval shall not relieve the Contractor from liability. Before submission of plans to Railroad Engineer for approval, the Engineer will first review such plans.

6.6 Blasting.

6.6.1 The Contractor shall obtain advance approval of Railroad Engineer and the Engineer for use of explosives on or adjacent to TRRA's property, which approval shall be in Railroad Engineer's and Engineer's sole discretion. If permission for use of explosives is granted, the Contractor shall be required to comply with the following:

(a) Blasting shall be done with light charges under the direct supervision of a responsible officer or employee of the Contractor.

(b) Electric detonating fuses shall not be used because of the possibility of premature explosions resulting from operation of two-way train radios.

(c) No blasting shall be done without the presence of Railroad Engineer. At least seventy-two (72) hours advance notice to the person designated in TRRA's notice of authorization to proceed as mentioned in Section 3.2 of these Railroad Requirements, the contactor shall be required to arrange for the presence of Railroad Engineer and such flagging as TRRA may require.

(d) The Contractor shall have at the job site adequate equipment, labor and materials and allow sufficient time to clean up debris resulting from the blasting without delay to trains, as well as correcting, at Contractor's expense, any track misalignment or other damage to TRRA's property resulting from the blasting as directed by Railroad Engineer. If Contractor's actions result in delay of trains, the Contractor shall bear the entire cost thereof.

6.6.2 Railroad Engineer will:

(a) Determine the approximate location of trains and advise the Contractor the approximate amount of time available for the blasting operation and clean-up.

(b) Have the authority to order discontinuance of blasting if blasting is too hazardous or is not in accordance with this special provision.

6.7 Maintenance of Railroad Facilities. The Contractor shall be required to maintain all ditches and drainage structures free of silt or other obstructions that may result from Contractor's operations. The Contractor shall promptly repair eroded areas within TRRA's right of way and repair any other damage to TRRA's property, tenants, licensees, easement grantees and invitees. All such maintenance and repair of damages due to the Contractor's operations shall be done at the Contractor's expense.

6.8 Storage of Materials.

6.8.1 The Contractor shall not store or stockpile construction materials or equipment closer than twenty-five feet (25') to the centerline of the nearest TRRA track or on TRRA's property not covered by construction easement, contractor's permit, lease or agreement. Additionally, the Contractor shall not store or leave materials or equipment within 250 feet of the edge of any highway/rail at-grade crossings. Further, both sides of a main track shall remain unobstructed for a distance of ten feet (10') from the exterior edge of the track at all times to allow for stopped train inspection.

6.9 Cleanup. Upon completion of the work, the Contractor shall remove from within the limits of TRRA's right of way, all machinery, equipment, surplus materials, falsework, rubbish or temporary buildings of the Contractor, and leave said right of way in a neat condition satisfactory to Railroad Engineer.

6.10 Buried Cable and Other Buried Facilities.

6.10.1 The Contractor acknowledges that fiber optic, communication and other cable lines and systems, collectively the "Lines", owned by various telecommunications companies may be buried on TRRA's property or right of way. The locations of the buried Lines, pipelines or utility facilities have been included on the plans based on information from the telecommunications companies, pipeline operators, or utilities. The Contractor shall be responsible for contacting Railroad Engineer, the telecommunications companies, pipeline operators and utilities and notifying them of any work that may damage the buried Lines, pipelines, utility facilities and/or interfere with their service. The Contractor shall verify the location of all buried Lines, pipelines and utility facilities shown on the plans or marked in the field in order to establish their exact locations prior to or while doing work on TRRA's property or right of way. The Contractor shall also use all reasonable methods when working on TRRA's property or right of way to determine if any other buried Lines, pipelines or utility facilities exist on TRRA's property or right of way.

6.10.2 Failure to mark or identify the buried Lines, pipelines or utility facilities will be sufficient cause for Railroad Engineer to stop construction at no cost to MHTC or TRRA until these items are completed. The Contractor shall be responsible for the rearrangement of any buried facilities, Lines, pipelines or utility facilities determined to interfere with the construction. The Contractor shall cooperate fully with any telecommunications companies, pipeline operators and utility facility owners in performing such rearrangements.

7.0 Damages. TRRA will not assume liability for any damages to the Contractor, Contractor's work, employees, servants, equipment and materials caused by TRRA traffic, except to the extent that any damage or claim has been proximately caused by TRRA's intentional misconduct or sole or gross negligence. Any cost incurred by TRRA for repairing damages to TRRA's property or to property of TRRA's tenants, licensees, easement grantees and invitees

caused by or resulting from the Contractor's operations shall be paid directly to TRRA by the Contractor.

8.0 Flagging Services.

8.1 When TRRA Requires Flagging. TRRA shall have sole authority to determine when flagging is necessary to protect TRRA's operations from the Contractor's activities relating to this Project. Whenever TRRA reasonably determines that flagging is needed, TRRA shall provide all necessary flagging services in accordance with these Railroad Requirements and the Agreement between MHTC and TRRA. The Contractor shall be responsible for arranging flagging services with TRRA, as required by TRRA, to accomplish the highway improvement. TRRA shall not unreasonably withhold or delay providing any flagging service that is needed pursuant to these Railroad Requirements.

8.1.1 Without limitation, during the construction of this Project TRRA may require flagging services in each of the following circumstances :

(a) Any work over any active track of TRRA.

(b) Any work within twenty-five feet (25') of TRRA's track.

(c) Transporting material or equipment over any active track, or any other operations involving the crossing of TRRA's tracks, except at a public highway-rail crossing.

(d) Any operations involving power lines or TRRA's signal and communication lines, underground cables, fuel or oil facilities or pipelines, which may foreseeably result in fire or damage to any of such facilities, or endanger TRRA's operations, or endanger the public in the transaction of TRRA business.

(e) Any work which has a reasonable probability of accidental hazard to TRRA's traffic.

(f) At any other times when, in the reasonable discretion of the Railroad Engineer, conditions warrant the provision of flagging services.

8.1.2 However, if the Contractor works upon TRRA's right of way within distances that violate instructions given by Railroad Engineer, or performs work upon TRRA's right of way that has not been scheduled with Railroad Engineer, then TRRA may reasonably require one (1) or more flaggers to be assigned full time until the Contractor has completed all its work upon TRRA's right of way relating to this Project.

8.2 Scheduling and Notification of Flagging.

8.2.1 Not less than thirty (30) days before beginning work upon TRRA's right of way pursuant to this Project, the Contractor shall give Railroad Engineer advance written notice of the Contractor's intent to begin work within TRRA's right of way in accordance with these Railroad Requirements. These notices shall include sufficient details of the proposed work to enable the Railroad Engineer to determine if the TRRA will require flagging. If the TRRA requires flagging, the Contractor shall not perform any work until the flagger or flaggers are present at the job site. Arrangements for flagging shall be confirmed not less than three (3) business days in advance of the need for flagging services. If any notices required to be given by this paragraph are in

writing, the Contractor shall furnish the Engineer a copy; if notice is given verbally, the Contractor shall confirm that notice in writing with copy to the Engineer. TRRA may take up to thirty (30) days to provide flagging for this Project in response to the Contractors first request. After flagging begins, TRRA usually assigns the flagger to work at the Project site on a continual basis until no longer needed and cannot provide flagging on a spot basis. If flagging becomes temporarily unnecessary and TRRA suspends flagging services, then TRRA may take up to thirty (30) days after the Contractor's request to resume flagging services for this Project. Due to TRRA labor agreements, TRRA may require the Contractor to give ten (10) working days notice before TRRA discontinues flagging services and ends the Contractor's responsibility for payment. The Contractor should address notification for flagging to:

Mr. C. R. McQueen, Jr.
Director Engineering Services & Administration
Terminal Railroad Association of St. Louis
1000 St. Louis Union Station, Suite 200
St. Louis, Missouri 63103
Office: (314)-539-4724
Fax: (314) 621-3673

8.2.2 The TRRA flagger assigned to the Project shall notify the Engineer upon arrival at the job site on the first day, or as soon thereafter as possible, that flagging services have begun, and on the last day that flagger performs such services for each separate period that TRRA provides flagging services. The Engineer will document such notification in the Project records.

8.2.3 If, after TRRA assigns a flagger to the Project site, emergencies arise which require TRRA to reassign the flagger elsewhere, then the Contractor shall delay work on TRRA's right of way until a flagger is again available. The Contractor, not TRRA, shall bear any additional costs resulting from this delay. TRRA shall resume flagging for this Project as soon as possible after the emergency has ended.

8.2.4 The Contractor shall provide a temporary structure to provide shelter from weather conditions for the person(s) providing flagging protection service on behalf of TRRA as described herein. The structure shall be provided in an area immediately accessible to TRRA's main track and the construction site, and be equipped with telephone service, lighting and desk.

8.2.5 Upon request of TRRA, and at Contractor's expense, Contractor shall provide not more than two (2) two-way radios for the use by TRRA's personnel engaged in the provision of flagging protection service as contemplated in this Contract.

8.2.6 Notwithstanding anything contained herein to the contrary, TRRA's providing of flagging protection services hereunder (or the performance of any other act by TRRA) shall not relieve, alter or otherwise modify MHTC's or Contractor's continuing obligations to discharge their duties associated with the Project, and by providing such flagging protective services, TRRA has not assumed any liability associated with Contractor's, or their subcontractors' actions or omissions in connection with the Project.

8.3 Payment for Flagging Services.

8.3.1 MHTC will pay TRRA directly for the cost of flagging services associated with the Project by deducting the amount from the normal Contractor payments.

8.3.2 TRRA shall submit progress invoice to the Engineer during the time flagging services are required. A final invoice shall be submitted to the Engineer within 180 days of completion of the Project. This is defined as the point in time at which MHTC and TRRA both accept the Project and the Contractor is relieved of contractual obligation. TRRA may, at its option, obtain payment directly from the Contractor.

8.3.3 If a dispute between TRRA, MHTC and the Contractor arises concerning the cost of flagging service, the full amount of TRRA's invoice will be deducted from the Contractor's payment request. However, MHTC will send only ninety-five percent (95%) of the amount requested to TRRA. MHTC will make a corrected payment once a settlement is reached between TRRA, MHTC and the Contractor.

8.3.4 Flaggers are generally classified as switchmen foremen.

8.3.5 The basic rate of pay for each flagger will be the TRRA's prevailing hourly rate in effect at the time the TRRA provides the flagging services. The current basic hourly rate of pay for an 8-hour day, Monday through Friday, is $29.28.

8.3.6 The TRRA shall charge one and one-half times the basic rate if overtime is necessary or requested, and two and one-half times the basic rate applies if the TRRA provides flagging services on a holiday recognized by the TRRA. If the flagger is on overtime duty and the Contractor requires the flagger to work without taking a meal, then the TRRA may charge for a second meal period at the current basic hourly rate of pay for an 8-hour day, Monday through Friday (currently $29.28).

8.3.7 In addition to the above basic hourly rate, the TRRA may charge for its related costs (additives) at the TRRA's normal additive rate (currently 82.24% = $24.08 per hour) in effect at the time it provides the flagging services.

8.3.8 Headquarters of employees to be used as flaggers shall be located at 1201 McKinley Street, Venice, Illinois 62090.

8.3.9 The Contractor may furnish travel expenses, such as taxies, meals and accommodations for flaggers. Otherwise, the TRRA will charge an additional amount of $28.01 per hour (or at the TRRA's normal rate in effect at the time it provides the flagging services) for transporting the flaggers to/from job site via TRRA vehicle.

8.3.10 The Contractor shall reimburse the TRRA for the full 8-hour day for each day when the TRRA provides any flagging services. The Contractor shall also reimburse the TRRA for providing flagging services on any day when the TRRA assigns the flagman to work on this project, and must pay the flagman (even though the Contractor may not be working on that day), if the TRRA cannot reasonably reassign the flagman to perform other work.

8.4 Flagging Complaints TRRA and the Contractor shall resolve promptly any complaints about flagging. If the Contractor questions the need for a flagman it should telephone the Railroad Engineer, and TRRA's Manager of Public Projects. The Contractor shall confirm all telephone or oral complaints in writing within five (5) working days, with copies to the Railroad Engineer and MHTC's Engineer.

9.0 Haul Across Railroads.

9.1 Where the plans show or imply that the Contractor or its suppliers must haul materials of any nature across TRRA's tracks, unless the plans clearly show that MHTC has included arrangements for the haul in the agreement with TRRA, the Contractor shall be required to make all necessary arrangements with TRRA regarding means of transporting such materials across TRRA's tracks. The Contractor shall bear all costs incidental to these crossings, including flagging, whether services are performed by Contractor's own forces or by TRRA's personnel.

9.2 The Contractor shall not establish any crossing for transporting materials or equipment across the tracks of TRRA unless specific authority for the installation, maintenance, necessary watching and flagging thereof and removal, all at the expense of the Contractor, is first obtained from the Railroad Engineer.

10.0 Work for the Contractor's Benefit. All temporary or permanent changes in wire lines or other facilities which are considered necessary to the Project are shown on the plans, and are included in the agreement between MHTC and TRRA, or will be covered by appropriate revisions to those documents, which shall be initiated and approved by MHTC and/or TRRA. If the Contractor desires any changes in addition to the above, then the Contractor shall make separate arrangements with TRRA to accomplish those changes at the Contractor's expense.

11.0 Cooperation and Delays. The Contractor shall cooperate with TRRA in scheduling any staged construction involving work by TRRA or its tenants, licensees, easement grantees and invitees. The Contractor shall ascertain in advance, from TRRA, the lead-time required for assembling crews and materials, and include sufficient time for that in its work scheduling. The Contractor may not assert any charge or claim against MHTC or TRRA resulting from any hindrance or delay the Contractor experiences because of railway traffic relating to any construction work by TRRA, or any other delay that is reasonable or necessary to protect the safety of railway traffic, or any other delay resulting from any person's compliance with these Railroad Requirements.

12.0 Trainman's Walkways. The Contractor shall maintain an unobstructed continuous space suitable for trainman's use in walking along trains, which shall extend to a line not less than twelve feet (12') from centerline of track, along the outer side of each exterior track of multiple operated track and on each side of single operated track. Before the close of each workday, the Contractor shall remove all temporary impediments to walkways and track drainage encroachments or obstructions allowed during work hours while Railway's protective service is provided. Beside any excavation near the walkway, the Contractor shall install a handrail with a minimum horizontal clearance of twelve feet (12') from centerline of track.

13.0 Railroad Percentage of Contractor's Total Project Bid. The amount of work to be performed upon, over or under TRRA's right of way is estimated to be 1.6 percent of the Contractor's total bid for the Project.

14.0 Insurance.

14.1 In addition to any other forms of insurance or bonds required under the terms of the contract and specifications, the Contractor shall carry the following insurance:

14.1.1 Commercial General Liability. Commercial General Liability Insurance having a combined single limit of not less than $5,000,000 per occurrence and $10,000,000 in the aggregate for all loss or liability, including attorneys' fees, arising out of bodily injury liability and property damage liability during the policy period. Said policy shall include "explosion, collapse, and underground hazard" ("XCU") coverage, shall be endorsed to name TRRA as an additional insured, and shall include a severability of interests provision and a waiver of subrogation.

14.1.2 Railroad Protective Liability. Railroad Protective Liability Insurance having a combined single limit of not less than $5,000,000.00 each occurrence and $10,000,000.00 in the aggregate applying separately to each annual period. Said policy shall provide coverage for all loss, damage or expense arising from bodily injury and property damage liability, and physical damage to property attributed to acts or omissions at the job site. The standards for the Railroad Protective Liability Insurance are as follows:

(a) The insurer shall be rated A- or better by A.M. Best Company, Inc.

(b) The policy shall be written using one of the following combinations of Insurance Services Office ("ISO") Railroad Protective Liability Insurance Form Numbers:

1) CG 00 35 01 96 and CG 28 31 10 93

2) CG 00 35 07 98 and CG 28 31 07 98.

(c) The named Insured shall be identified as the Terminal Railroad Association of St. Louis.

14.2 Evidence of Insurance. The Declarations shall include the description of operations matching the project description in this Contract and shall include the appropriate MHTC project and contract identification numbers. The job number and project location shall appear on the Declarations and shall include the appropriate highway designation:

I-70 (MRB), City of St. Louis
Construct bridge over TRRA
MoDOT Job No. J6I0984B

14.3 The name and address of the Contractor shall appear on the Declarations. The name and address of the MHTC shall be identified on the Declarations as the "Involved Governmental Authority or Other Contracting Party".

14.4 Other endorsements/forms that will be accepted are:

(a) Broad Form Nuclear Exclusion – Form IL 00 21.

(b) thirty (30) -day Advance Notice of Non-renewal or cancellation.

(c) Required State Cancellation Endorsement.

(d) Quick Reference or Index Form CL/IL 240.

14.5 Endorsements/forms that will NOT be acceptable are:

(a) Any Pollution Exclusion Endorsement except CG 28 31.

(b) Any Punitive or Exemplary Damages Exclusion.

(c) Known injury or Damage Exclusion form CG 00 59.

(d) Any Common Policy Conditions form.

(e) Any other endorsement/form not specifically authorized above.

14.6 If any part of the work is sublet, similar insurance, and evidence thereof as specified above, shall be provided by or on behalf of the subcontractor to cover the subcontractor's operations on TRRA's Property.

14.7 Prior to entry on TRRA's Property, the original TRRA Protective Liability Insurance Policy shall be submitted by the prime Contractor to the MHTC at the address below for review and transmittal to the TRRA. In addition, certificates of insurance evidencing the Contractor's and any subcontractor's Commercial General Liability Insurance shall be issued to the TRRA and the MHTC at the addresses below, and forwarded to the MHTC for review and transmittal to the TRRA. The certificates of insurance shall state that the insurance coverage will not be suspended, voided, canceled, or reduced in coverage or limits without thirty (30) days advanced written notice to TRRA and the MHTC. No work will be permitted on the TRRA's Property until the TRRA has reviewed and approved the evidence of insurance required herein.

TRRA
Mr. C. R. McQueen, Jr., Director
Engineering Services & Administration
Terminal TRRA Assoc. of St. Louis
1000 St. Louis Union Station, Suite 200
St. Louis, MO 63103

MHTC
Mr. David Ahlvers
State Construction and Materials Engineer
MoDOT
P.O. Box 270
Jefferson City, MO 65102

15.0 Guidelines for Personnel on Railroad's Right of Way.

15.1 The Contractor's personnel shall wear hard hats, and appropriate eye and hearing protection shall be used. Working in shorts shall be prohibited. Shirts shall cover shoulders, back **and abdomen. Working in tennis or** jogging shoes, sandals, boots with high heels, cowboy and other slip-on type boots shall be prohibited. Hard-sole, lace-up footwear, zippered boots or boots cinched up with straps which fit snugly about the ankle shall be adequate. Safety boots are strongly recommended.

15.2 The Contractor's personnel shall not be allowed within twenty-five feet (25') of the centerline of TRRA's track without specific authorization from the flagger.

15.3 All persons working near TRRA's track while any train is passing shall look out for dragging bands or chains and protruding or shifted cargo.

15.4 The Contractor's personnel shall not cross TRRA's track without specific authorization from the flagger.

15.5 All welders and cutting torches working within twenty-five feet (25') of TRRA's track shall stop when any train is passing.

15.6 The Contractor shall not cross or touch any rail of TRRA's track with any steel tape or chain without permission from the flagger.

16.0 Guidelines for Equipment on Railroad's Right of Way.

16.1 The Contractor shall not allow any crane or boom equipment to set up to work or park within boom distance plus fifteen feet (15') from centerline of track without specific permission from the Railroad Engineer and flagger.

16.2 The Contractor shall not allow crane or boom equipment to foul track or to lift a load over the track without flag protection and track time.

16.3 All crane or boom equipment operators shall stay with their machines whenever crane or boom equipment is pointed toward TRRA's track.

16.4 All operators of cranes and boom equipment under load shall stop work while train is passing upon TRRA's track, including pile driving.

16.5 The Contractor shall secure all swinging loads to prevent movement while any train is passing upon TRRA's track.

16.6 The Contractor shall not allow any load to be suspended above a moving train.

16.7 The Contractor shall not allow any equipment within 25 feet of centerline of track without specific authorization of the flagger.

16.8 The Contractor shall not allow any tractors or any other equipment to touch the TRRA's ballast line without specific permission from Railroad Engineer and flagger.

16.9 The Contractor shall not allow any equipment or load movement within twenty-five feet (25') from, or anywhere above, a standing train or railroad equipment without specific authorization of the flagger.

16.10 All operating equipment within twenty-five feet (25') of TRRA's track shall halt operations when a train is passing. The flagger may halt all of the Contractor's other operating equipment if the flagger views the operation to be dangerous to the passing train.

16.11 The Contractor's equipment, loads and cables shall be prohibited from touching rails.

16.12 While clearing and grubbing, the Contractor shall remove no vegetation from TRRA embankment with heavy equipment without specific permission from the Railroad Engineer and flagger.

16.13 The Contractor shall not park or store any equipment or materials on the TRRA's Property unless the Railroad Engineer has granted specific authorization therefor.

16.14 The Contractor shall effectively immobilize all unattended equipment that is left parked on the TRRA's Property, so that unauthorized persons cannot move it.

16.15 The Contractor shall turn all cranes and boom equipment away from TRRA's track after each workday or whenever unattended by an operator.

17.0 Legal Compliance and Hazardous Materials Reporting. Contractor shall comply with all applicable federal, state and local governmental laws and regulations—including the Resource Conservation and Recovery Act, the Clean Water Act, the Oil Pollution Act, the Hazardous Materials Transportation Act, the Comprehensive Environmental Response, Compensation and Liability Act, and other environmental, health and safety laws and regulations to the extent these requirements are applicable to the Contractor's work performed under this contract. Notwithstanding the preceding sentence, the Contractor will not be liable for pre-existing hazardous materials or hazardous substances discovered on TRRA's property or right of way so long as the Contractor's work, acts or omissions did not cause them to be there. If the Contractor discovers any hazardous waste, hazardous substance, petroleum or other deleterious material, including any non-containerized commodity or material, on or adjacent to TRRA's property, in or near any surface water, swamp, wetlands or waterways, while performing any work under this special provision, the Contractor shall immediately:

(a) Notify TRRA of such discovery, by telephoning (618) 451-8478.

(b) Take safeguards necessary to protect employees, subcontractors, agents and/or third parties.

(c) Exercise due care with respect to the release, including the taking of any appropriate measure to minimize the impact of the release.

18.0 Personal Injury Reporting. TRRA must report certain injuries as a part of compliance with Federal TRRA Administration ("FRA") reporting requirements. The Contractor immediately shall report any personal injury to any employee of the Contractor, subcontractor or contractor's invitees while on TRRA's property, by phone, mail or preferably in person, to the Railroad Engineer. The Contractor shall complete the Non-Employee Personal Injury Data Collection Form and send it by Fax to Railroad Engineer no later than the close of shift on the date of the injury.

19.0 Failure to Comply. If the Contractor violates or fails to comply with any of the requirements of these Railroad Requirements, the TRRA may act as authorized in paragraphs (a) and (b) of this section, until the Contractor has remedied the situation to the satisfaction of the Railroad Engineer and the Engineer.

(a) The Railroad Engineer may require the Contractor to vacate TRRA's property.

(b) The Engineer may withhold all monies due to the Contractor until the Contractor has remedied the situation to the satisfaction of the Railroad Engineer and the Engineer.

20.0 Payment for Cost of Compliance. MHTC shall not separately pay for any extra cost the Contractor or TRRA incurs on account of compliance with these Railroad Requirements. The Contractor and TRRA shall include all such cost in the contract unit price for other items included in the contract. TRRA will not pay the Contractor for any work it performs to comply with these Railroad Requirements.

F. TERMINAL RAILROAD ASSOCIATION OF ST. LOUIS REQUIREMENTS FOR WORK IN ILLINOIS

To Report an Emergency on property of the Terminal Railroad Association (hereinafter "TRRA"), call: (618) 451-8478.

1.0 Authority of Railroad Engineer and Commission's Representative.

1.1 TRRA's authorized representative, herein called "Railroad Engineer", shall have final authority in all matters affecting the safe maintenance and operation of railroad traffic including the adequacy of the foundations and structures supporting TRRA's tracks. The Railroad Engineer for this Project is identified below, with current contact information:

Mr. C. R. McQueen, Jr.
Director Engineering Services & Administration
Terminal Railroad Association of St. Louis
1000 St. Louis Union Station, Suite 200
St. Louis, Missouri 63103
Office: (314)-539-4724
Fax: (314) 621-3673

1.2 MHTC's authorized representative, herein called "Engineer", shall have authority over all other matters as prescribed herein and in the Project specifications.

2.0 Contractor's Obligations to Comply with Railroad Job Special Provisions and to Indemnify Railroad.

2.1 The term "Contractor", as used in these Railroad Job Special Provisions, means MHTC's contractor for the construction or, if applicable, for the maintenance or repair of the proposed grade separation structure (the "Project") and its engineers, design professionals, other consultants and other agents retained in connection with the Project, and includes any and all subcontractors.

2.2 TRRA and MHTC have agreed that MHTC's Contractor shall comply with these Railroad Job Special Provisions whenever applicable in accordance with subsection 2.3, or shall comply with a later amended version of these Railroad Job Special Provisions whenever applicable in accordance with subsections 2.3 or 2.4 of these Railroad Job Special Provisions, with reference to all work performed or to be performed by the Contractor upon TRRA's property, as a condition to the Contractor's right of access to TRRA's property which is described in the Permanent Easement dated October 7,2009, and if applicable, the Temporary Easement dated October 7, 2009, between The Wiggins Ferry Company, TRRA, and the State of Illinois, Department of Transportation (hereinafter called "TRRA's property"). If the Contractor is in compliance with the applicable Railroad Job Special Provisions, then TRRA shall not demand or

require the Contractor to enter into a Right of Entry Agreement, or to comply with any other requirements before allowing the Contractor to enter upon TRRA's property and providing flagging services in accordance with these Railroad Job Special Provisions. However, if at any time the Contractor is not in compliance with any applicable requirement within the Railroad Job Special Provisions, then TRRA may refuse to allow the Contractor access to work upon or over TRRA's property, and TRRA may withhold the provision of flagging services for the Contractor, until the Contractor has fully complied with all applicable requirements within the Railroad Job Special Provisions; except that TRRA shall not deny access to or withhold flagging services from the Contractor as provided in this subsection until TRRA has notified the Contractor and MHTC, in writing, of the specific requirements of the applicable Railroad Job Special Provisions with which the Contractor is not in compliance. The Contractor shall bear the costs of any delays in its work resulting from TRRA's denial of access or withholding of flagging services by reason of the Contractor's noncompliance with any applicable requirement within the Railroad Job Special Provisions, and all costs incurred to bring the Contractor into full compliance with the applicable Railroad Job Special Provisions.

2.3 If MHTC executes this Agreement with the Contractor within forty-two (42) months after the effective date of the Grade Separation Construction and Maintenance Agreement executed on September 10, 2009, by and between IDOT, MHTC, the Terminal Railroad Association of St. Louis, and The Wiggins Ferry Company concerning this Project (hereinafter referred to as the "Four-Party Agreement"), then the Contractor shall comply with this subsection notwithstanding any provision in subsection 2.4 of these Railroad Job Special Provisions to the contrary. The Contractor shall abide by the present version of these Railroad Job Special Provisions for all work pursuant to this Agreement that the Contractor performs over or upon TRRA's property within four (4) years after the effective date of the Four-Party Agreement. The Contractor shall expressly incorporate the present version of the Railroad Job Special Provisions into every subcontract made pursuant to this Agreement. However, if the Contractor performs any work pursuant to this Agreement more than four (4) years after the effective date of the Four-Party Agreement, then notwithstanding any provision in these Railroad Job Special Provisions to the contrary, the Contractor shall abide by the latest amended version of the Railroad Job Special Provisions that is approved by TRRA, IDOT and MHTC and in force when the Contractor performs that work upon or over TRRA's property.

2.4 If MHTC executes this Agreement with the Contractor more than forty-two (42) months after the effective date of the Four-Party Agreement, then the Contractor shall comply with this subsection notwithstanding any provision in subsection 2.3 of these Railroad Job Special Provisions to the contrary. The Contractor shall abide by the latest amended version of the Railroad Job Special Provisions that is approved by TRRA, IDOT and MHTC and in force on the effective date of this Agreement, for all work pursuant to this Agreement that the Contractor performs over or upon TRRA's property within three (3) years after the effective date of this Agreement. The Contractor shall expressly incorporate the same version of the Railroad Job Special Provisions into every subcontract made pursuant to this Agreement. However, if the Contractor performs any work pursuant to this Agreement more than three (3) years after the effective date of this Agreement, then notwithstanding any provision in these Railroad Job Special Provisions to the contrary, the Contractor shall abide by the latest amended version of the Railroad Job Special Provisions that is approved by TRRA, IDOT and MHTC and in force when the Contractor performs that work upon or over TRRA's property.

2.5 The Contractor shall indemnify, defend and hold TRRA harmless from and against any and all loss, damage, claims, demands, causes of action, costs and expenses of any nature arising

out of injury to or death of any person, or out of damage to or destruction of any property, including, without limitation, damage to fiber optic, communication and other cable lines and systems, where this injury, death, damage or destruction results from any cause arising out of work performed by the Contractor pursuant to the agreement between TRRA and MHTC for this Project, and shall also release TRRA from, and shall waive any claims for, injury or damage to equipment or other property, which may result from the construction, maintenance and operation of TRRA tracks, wire lines, fiber optic cable, pipe lines and other facilities on TRRA's property by the Contractor. The Contractor's liability will not be affected if any damage or claim was occasioned by or contributed to by the negligence of TRRA, TRRA's agents, servants, employees or otherwise, except to the extent that any damage or claim has been proximately caused by the intentional misconduct or sole or gross negligence of TRRA, or any of TRRA's officers, employees, agents, subcontractors, successors or assigns. The Contractor's indemnity shall include loss of profits or revenue arising from damage or destruction to fiber optic, communication and other cable lines and systems.

2.6 In addition to the indemnity obligations contained in the preceding paragraph, the Contractor shall indemnify, defend and hold TRRA harmless from any claims, expenses, costs, actions, demands, losses, fines, penalties, and fees, arising from, related to or connected, in whole or in part, with the removal of the Contractor's agents, servants, employees or invitees from TRRA's property for safety reasons, and from any loss or liability proximately resulting from the Contractor's noncompliance with the applicable requirements of any these Railroad Job Special Provisions.

2.7 **The Contractor shall also indemnify, defend and hold TRRA harmless with reference to all fines or penalties imposed or assessed by federal, state and local governmental agencies against TRRA as the proximate result of Contractor's work under this contract, including these Railroad Job Special Provisions.**

3.0 Notice of Starting Work. The Contractor shall not commence any work on TRRA's property until the Contractor has complied with the following conditions:

3.1 At least thirty (30) days before beginning any work upon or over TRRA's property, the Contractor shall furnish to TRRA and MHTC a schedule for all work required to complete the portion of the Project within TRRA's property, and shall arrange for a job site meeting between the Contractor, the Engineer, and Railroad Engineer. TRRA may withhold providing any flagger until the Contractor has conducted the job site meeting and scheduled the Contractor's work.

3.2 At least thirty (30) days before the Contractor proposes to begin work on TRRA's property, the Contractor shall give to Railroad Engineer a written notice of intent to begin work on TRRA's property.

3.3 The Contractor shall obtain written or electronic authorization from TRRA to begin work on TRRA's property, including an outline of specific conditions with which the Contractor shall comply. TRRA shall not unreasonably withhold this authorization.

3.4 The Contractor shall obtain the insurance coverage required in Section 14.0 of these Railroad Job Special Provisions. Contractor shall submit written evidence of such coverage to TRRA prior to commencing any work.

3.5 Safety Orientation: The Contractor shall ensure that Contractor's superintendent has obtained certification of completion of the BNSF Railway safety orientation course available on the Internet at www.contractororientation.com (Certification currently costs $11). The Contractor shall certify that each of Contractor's employees, subcontractors or invitees who will be working TRRA's property have received the same safety orientation through sessions conducted by the Contractor or through the Internet before any work shall be done on the TRRA's property.

3.6 TRRA's written authorization to proceed with the work, with a copy to the Engineer, will include the names, addresses and telephone numbers of TRRA's representatives who are to be notified as hereinafter required. Where more than one representative is designated, the area of responsibility of each representative shall be specified.

4.0 Interference with Railroad Operations.

4.1 The Contractor shall arrange and conduct all work so that there shall be no interference with TRRA's operations, including train, signal, telephone and telegraphic services; or damage to TRRA's property; poles, wires and other facilities of tenants, licensees, easement grantees and invitees on TRRA's property. Whenever work may affect the operations or safety of trains, the Contractor shall first submit the method of doing this work to Railroad Engineer for approval, but such approval shall not relieve the Contractor from liability. The Contractor shall defer any of its work that requires flagging service or inspection service until the flagging service required by TRRA is available at the job site.

4.2 Whenever the Contractor's work within TRRA's property makes an impediment to TRRA's operations unavoidable, such as use of runaround tracks or necessity for reduced speed, the Contractor shall schedule and conduct these operations so that the impediment is reduced to the absolute minimum.

4.3 If conditions arising from, or in connection with the work require immediate and unusual provisions to protect TRRA's operations and property, the Contractor shall make such provisions. If in the judgment of Railroad Engineer, or the Engineer if Railroad Engineer is absent, such provision is insufficient, Railroad Engineer or Engineer may require or provide such provisions as deem necessary. In any event, such provisions shall be at the Contractor's expense and without cost to TRRA, MHTC or IDOT.

4.4 The Contractor shall be responsible for any damage to TRRA as a result of the Contractor's work on the Project, which shall include but not be limited to interference with the normal movement of trains caused exclusively by the work performed by the Contractor. The Contractor shall be responsible for damages for TRRA's train delays that are caused exclusively by the Contractor. TRRA agrees not to perform any act to unnecessarily cause any train delay. The damages for train delays per freight hour will be billed at an average rate per hour as determined from TRRA's records. TRRA shall provide these records, upon request, to MHTC or its Contractor.

5.0 Track Clearances.

5.1 The minimum track clearances to be maintained by the Contractor during construction are shown on the Project plans. However, before undertaking any work within TRRA's property, or before placing any obstruction over any track, the Contractor shall:

(a) Notify Railroad Engineer at least seventy-two (72) hours in advance of the work.

(b) Receive assurance from Railroad Engineer that arrangements have been made for flagging service as may be necessary.

(c) Receive permission from Railroad Engineer to proceed with the work.

(d) Ascertain that the Engineer has received copies of notice to TRRA and of TRRA's response.

5.2 The Contractor shall fully comply with any horizontal and vertical clearance requirements imposed by Illinois state statutes and regulations and Federal statutes and regulations regarding the placement of structures or equipment near or over railroad tracks.

6.0 Construction Procedures.

6.1 General. Construction work on TRRA's property shall be:

(a) Subject to TRRA's inspection and review; and

(b) In accordance with these Railroad Job Special Provisions.

6.2 Excavation. The subgrade of an operated track shall be maintained with the berm edge at least twelve feet (12') from centerline of track and not more than twenty-six inches (26") below top of the rail. The Contractor will not be required to make existing sections meet this specification if substandard, in which case the existing section will be maintained. The Contractor shall cease all work and notify TRRA immediately before continuing excavation in the work area if obstructions are encountered which do not appear on the drawings. If the obstruction is a utility and the owner of the utility can be identified, then the Contractor shall also notify the owner immediately. If there is any doubt about the location of underground cables or lines of any kind, no work shall be performed until the exact location has been determined. Additionally, all excavations shall be conducted in compliance with applicable Occupational Safety and Health Act regulations and, regardless of depth, shall be shored where there is any danger to tracks, structures or personnel. Any excavations, holes or trenches on TRRA's property shall be covered, guarded and/or protected when not being worked on. When leaving work site areas at night and over weekends, the areas shall be secured and left in a condition that will ensure that TRRA's employees and other personnel who may be working or passing through the area are protected from all hazards. All excavations shall be back filled as soon as possible.

6.3 Excavation for Structure. The Contractor shall be required to take special precaution and care in connection with excavating, shoring pits and in driving piles for footings adjacent to tracks to provide adequate lateral support for the tracks and the loads which the tracks carry, without disturbance of track alignment and surface, and to avoid obstructing track clearances with working equipment, tools or other material. The procedure for doing such work, including need of and plans for shoring, shall be approved by Railroad Engineer before work is performed, but such approval shall not relieve the Contractor from liability. Before submission of plans to Railroad Engineer for approval, the Engineer will first review such plans in accordance with the Missouri Standard Specifications for Highway Construction, hereinafter called "Standard Specifications". The responsibility for the design and construction of the shoring rests

solely with the Contractor. The temporary shoring along TRRA tracks shall be designed for the Cooper E80 loading. The design shall insure that the shoring is braced or substantially secured to prevent movement. The Contractor shall submit plans for the temporary shoring that shall be signed, sealed, and stamped in accordance with the laws relating to Architects and Professional Engineers, Chapter 327, RSMo. and then submitted for review by the Engineer.

6.4 Demolition of Existing Structures. The Contractor shall be required to take special precaution and care in connection with demolition of existing structures. The procedure for doing such work, including need of and plans for temporary falsework, shall first be approved by Railroad Engineer before work is performed, but such approval shall not relieve the Contractor from liability. Before submission of plans to Railroad Engineer for approval, the Engineer will first review such plans.

6.5 Falsework. The Contractor shall take special precaution and care to prevent any material from falling on TRRA's property. The Railroad Engineer shall first approve all procedures for preventing material from falling on TRRA's property, including need of and plans for temporary falsework, but such approval shall not relieve the Contractor from liability. Before submission of plans to Railroad Engineer for approval, the Engineer will first review such plans.

6.6 Blasting.

6.6.1 The Contractor shall obtain advance approval of Railroad Engineer and the Engineer for use of explosives on or adjacent to TRRA's property, which approval shall be in Railroad Engineer's and Engineer's sole discretion. If permission for use of explosives is granted, the Contractor shall be required to comply with the following:

(a) Blasting shall be done with light charges under the direct supervision of a responsible officer or employee of the Contractor.

(b) Electric detonating fuses shall not be used because of the possibility of premature explosions resulting from operation of two-way train radios.

(c) No blasting shall be done without the presence of Railroad Engineer. At least seventy-two (72) hours advance notice to the person designated in TRRA's notice of authorization to proceed as mentioned in Section 3.2 of these Railroad Job Special Provisions, the contactor shall be required to arrange for the presence of Railroad Engineer and such flagging as TRRA may require.

(d) The Contractor shall have at the job site adequate equipment, labor and materials and allow sufficient time to clean up debris resulting from the blasting without delay to trains, as well as correcting, at Contractor's expense, any track misalignment or other damage to TRRA's property resulting from the blasting as directed by Railroad Engineer. If Contractor's blasting or related activities exclusively cause any delay of trains, the Contractor shall bear the entire cost thereof.

6.6.2 Railroad Engineer will:

(a) Determine the approximate location of trains and advise the Contractor the approximate amount of time available for the blasting operation and clean-up.

(b) Have the authority to order discontinuance of blasting if blasting is too hazardous or is not in accordance with this special provision.

6.7 Maintenance of Railroad Facilities. The Contractor shall be required to maintain all ditches and drainage structures free of silt or other obstructions that may result from Contractor's operations. The Contractor shall promptly repair eroded areas within TRRA's property and repair any other damage to TRRA's property, tenants, licensees, easement grantees and invitees. All such maintenance and repair of damages due to the Contractor's operations shall be done at the Contractor's expense.

6.8 Storage of Materials.

6.8.1 The Contractor shall not store or stockpile construction materials or equipment closer than twenty-five feet (25') to the centerline of the nearest railroad track or on TRRA's property not covered by construction easement, Contractor's permit, lease or agreement. Additionally, the Contractor shall not store or leave materials or equipment within 250 feet of the edge of any highway/rail at-grade crossings. Further, both sides of a main track shall remain unobstructed for a distance of ten feet (10') from the exterior edge of the track at all times to allow for stopped train inspection.

6.9 Cleanup. Upon completion of the work, the Contractor shall remove from within the limits of TRRA's property, all machinery, equipment, surplus materials, falsework, rubbish or temporary buildings of the Contractor, and leave said property in a neat condition satisfactory to Railroad Engineer.

6.10 Buried Cable and Other Buried Facilities.

6.10.1 The Contractor acknowledges that fiber optic, communication and other cable lines and systems, collectively the "Lines", owned by various telecommunications companies may be buried on TRRA's property or right of way. The locations of the buried Lines, pipelines or utility facilities have been included on the plans based on information from the telecommunications companies, pipeline operators, or utilities. The Contractor shall be responsible for contacting Railroad Engineer, the telecommunications companies, pipeline operators and utilities and notifying them of any work that may damage the buried Lines, pipelines, utility facilities and/or interfere with their service. The Contractor shall verify the location of all buried Lines, pipelines and utility facilities shown on the plans or marked in the field in order to establish their exact locations prior to or while doing work on TRRA's property or right of way. The Contractor shall also use all reasonable methods when working on TRRA's property or right of way to determine if any other buried Lines, pipelines or utility facilities exist on TRRA's property or right of way.

6.10.2 Failure to mark or identify the buried Lines, pipelines or utility facilities will be sufficient cause for Railroad Engineer to stop construction at no cost to MHTC or TRRA until these items are completed. The Contractor shall be responsible for the rearrangement of any buried facilities, Lines, pipelines or utility facilities determined to interfere with the construction. The Contractor shall cooperate fully with any telecommunications companies, pipeline operators and utility facility owners in performing such rearrangements.

7.0 Damages. Railroad will not assume liability for any damages to the Contractor, Contractor's work, employees, servants, equipment and materials caused by railroad traffic, except to the extent that any damage or claim has been proximately caused by TRRA's intentional

misconduct or sole or gross negligence. Any cost incurred by TRRA for repairing damages to TRRA's property or to property of TRRA's tenants, licensees, easement grantees and invitees caused by or resulting from the Contractor's operations shall be paid directly to TRRA by the Contractor.

8.0 Flagging Services.

8.1 When Railroad Requires Flagging. TRRA shall have sole authority to determine when flagging is necessary to protect TRRA's operations from the Contractor's activities relating to this Project. Whenever TRRA reasonably determines that flagging is needed, TRRA shall provide all necessary flagging services in accordance with these Railroad Job Special Provisions and the Agreement between MHTC and TRRA. The Contractor shall be responsible for arranging flagging services with TRRA, as required by TRRA, to accomplish the highway improvement. TRRA shall not unreasonably withhold or delay providing any flagging service that is needed pursuant to these Railroad Job Special Provisions.

8.1.1 Without limitation, TRRA may require flagging services in each of the following circumstances :

(a) any work (including the removal of existing structures or the construction of the new bridge) over any active track of TRRA.

(b) any work on the structures of the new bridge in close proximity with TRRA's tracks.

(c) transporting material or equipment over any active track, or any other operations involving the crossing of TRRA's tracks.

(d) any operations involving close proximity with power lines or TRRA's signal and communication lines, underground cables, fuel or oil facilities or pipelines, which might result in fire or damage to any of such facilities, or endanger TRRA's operations, or endanger the public in the transaction of TRRA business.

(e) any work which potentially impacts or violates operating clearances or which has a reasonable probability of accidental hazard to TRRA's traffic.

(f) at any other times when, in the opinion and discretion of TRRA, conditions warrant the provisions of flagging services, or otherwise upon the request of MHTC or anyone acting through or on behalf of MHTC.

8.1.2 However, if the Contractor works upon TRRA's property within distances that violate instructions given by Railroad Engineer, or performs work upon TRRA's property that has not been scheduled with Railroad Engineer, then TRRA may reasonably require one (1) or more flagmen to be assigned full time until the Contractor has completed all its work upon TRRA's property relating to this Project.

8.2 Scheduling and Notification of Flagging.

8.2.1 Not less than thirty (30) days before beginning work upon TRRA's property pursuant to this Project, the Contractor shall give Railroad Engineer advance written notice of the Contractor's intent to begin work within TRRA's property in accordance with these Railroad Job

Special Provisions. These notices shall include sufficient details of the proposed work to enable the Railroad Engineer to determine if the TRRA will require flagging. If the TRRA requires flagging, the Contractor shall not perform any work until the flagman or flagmen are present at the job site. Arrangements for flagging shall be confirmed not less than three (3) business days in advance of the need for flagging services. If any notices required to be given by this paragraph are in writing, the Contractor shall furnish the Engineer a copy; if notice is given verbally, the Contractor shall confirm that notice in writing with copy to the Engineer. TRRA may take up to thirty (30) days to provide flagging for this Project in response to the Contractors first request. After flagging begins, TRRA usually assigns the flagman to work at the Project site on a continual basis until no longer needed and cannot provide flagging on a spot basis. If flagging becomes temporarily unnecessary and TRRA suspends flagging services, then TRRA may take up to thirty (30) days after the Contractor's request to resume flagging services for this Project. Due to TRRA labor agreements, TRRA may require the Contractor to give ten (10) working days notice before TRRA discontinues flagging services and ends the Contractor's responsibility for payment. The Contractor should address notification for flagging to:

Mr. C. R. McQueen, Jr.
Director Engineering Services & Administration
Terminal Railroad Association of St. Louis
1000 St. Louis Union Station, Suite 200
St. Louis, Missouri 63103
Office: (314)-539-4724
Fax: (314) 621-3673

8.2.2 The TRRA flagman assigned to the Project shall notify the Engineer upon arrival at the job site on the first day, or as soon thereafter as possible, that flagging services have begun, and on the last day that flagman performs such services for each separate period that TRRA provides flagging services. The Engineer will document such notification in the Project records.

8.2.3 If, after the TRRA assigns a flagman to the Project site, an emergency arises that requires TRRA to reassign the flagman elsewhere, then the Contractor shall delay work on TRRA's property until a flagman is again available. The Contractor, not TRRA, shall bear any additional costs resulting from this delay. TRRA shall resume flagging for this Project as soon as possible after the emergency has ended. As used in these Railroad Job Special Provisions, the word "emergency" means an unforeseen event or combination of circumstances, or the actual results thereof, which call for immediate action by TRRA to render urgently needed assistance or relief, and which TRRA could not have foreseen or avoided in the exercise of ordinary care.

8.2.4 The Contractor shall provide a temporary structure to provide shelter from weather conditions for the person(s) providing flagging protection service on behalf of TRRA as described herein. The structure shall be provided in an area immediately accessible to TRRA's main track and the construction site, and be equipped with telephone service, lighting and desk.

8.2.5 Upon request of TRRA, and at Contractor's expense, Contractor shall provide two-way radios for the use by TRRA's personnel engaged in the provision of flagging protection service as contemplated in this Contract.

8.2.6 Notwithstanding anything contained herein to the contrary, TRRA's providing of flagging protection services hereunder (or the performance of any other act by TRRA) shall not relieve, alter or otherwise modify MHTC's or Contractor's continuing obligations to discharge their duties

associated with the Project, and by providing such flagging protective services, TRRA has not assumed any liability associated with MHTC's, Contractor's, their contractors' or subcontractors' actions or omissions in connection with the Project.

8.3 Payment for Flagging Services.

8.3.1 MHTC will pay TRRA directly for the cost of flagging services associated with the Project by deducting the amount from the normal Contractor payments.

8.3.2 TRRA shall submit progress invoices to the Engineer during the time flagging services are required. A final invoice shall be submitted to the Engineer within 180 days of completion of the Project. This is defined as the point in time at which MHTC and TRRA both accept the Project and the Contractor is relieved of contractual obligation. TRRA may, at its option, obtain payment directly from the Contractor.

8.3.3 If a dispute between TRRA, MHTC and the Contractor arises concerning the cost of flagging service, the full amount of TRRA's invoice will be deducted from the Contractor's payment request. However, MHTC will send only ninety-five percent (95%) of the amount requested to TRRA. MHTC will make a corrected payment once a settlement is reached between TRRA, MHTC and the Contractor.

8.3.4 Flagmen are generally classified as switchmen foremen.

8.3.5 The basic rate of pay for each flagman will be the TRRA's prevailing hourly rate in effect at the time the TRRA provides the flagging services. The current basic hourly rate of pay for an 8-hour day, Monday through Friday, is $29.28.

8.3.6 The TRRA shall charge one and one-half times the basic rate if overtime is necessary or requested, and two and one-half times the basic rate applies if the TRRA provides flagging services on a holiday recognized by the TRRA. If the flagman is on overtime duty and the Contractor requires the flagman to work without taking a meal, then the TRRA may charge for a second meal period at the current basic hourly rate of pay for an 8-hour day, Monday through Friday (currently $29.28).

8.3.7 In addition to the above basic hourly rate, the TRRA may charge for its related costs (additives) at the TRRA's normal additive rate (currently 82.24% = $24.08 per hour) in effect at the time it provides the flagging services.

8.3.8 Headquarters of employees to be used as flagmen shall be located at 1201 McKinley Street, Venice, Illinois 62090.

8.3.9 The Contractor may furnish travel expenses, such as taxies, meals and accommodations for flagmen. Otherwise, the TRRA will charge an additional amount of $25.00 per hour (or at the TRRA's normal rate in effect at the time it provides the flagging services) for transporting the flagmen to/from job site via TRRA vehicle or contract carrier.

8.3.10 MHTC shall reimburse TRRA for the full 8-hour day for each day when the TRRA provides any flagging services. MHTC shall also reimburse TRRA for providing flagging services on any day when the TRRA assigns the flagman to work on this project, and must pay

the flagman (even though the Contractor may not be working on that day), if the TRRA cannot reasonably reassign the flagman to perform other work.

8.4 Flagging Complaints. TRRA and the Contractor shall resolve promptly any complaints about flagging. If the Contractor questions the need for a flagman it should telephone the Railroad Engineer, and TRRA's Manager of Public Projects. The Contractor shall confirm all telephone or oral complaints in writing within five (5) working days, with copies to the Railroad Engineer and MHTC's Engineer.

9.0 Haul Across Railroads.

9.1 Where the plans show or imply that the Contractor or its suppliers must haul materials of any nature across TRRA's tracks, unless the plans clearly show that MHTC has included arrangements for the haul in the agreement with TRRA, the Contractor shall be required to make all necessary arrangements with TRRA regarding means of transporting such materials across TRRA's tracks. The Contractor shall bear all costs incidental to these crossings, including flagging, whether services are performed by Contractor's own forces or by TRRA's personnel.

9.2 Except for the maintenance and access roadways being constructed in accordance with the separate right of way easements to be acquired by IDOT, the Contractor shall not establish any crossing for transporting materials or equipment across the tracks of TRRA unless specific authority for the installation, maintenance, necessary watching and flagging thereof and removal, all at the expense of the Contractor, is first obtained from the Railroad Engineer.

10.0 Work for the Contractor's Benefit. All temporary or permanent changes in wire lines or other facilities which are considered necessary to the Project are shown on the plans, and are included in the agreement between MHTC and TRRA, or will be covered by appropriate revisions to those documents, which shall be initiated and approved by MHTC and/or TRRA. If the Contractor desires any changes in addition to the above, then the Contractor shall make separate arrangements with TRRA to accomplish those changes at the Contractor's expense.

11.0 Cooperation and Delays. The Contractor shall cooperate with TRRA in scheduling any staged construction involving work by TRRA or its tenants, licensees, easement grantees and invitees. TRRA shall cooperate with MHTC's Contractor in scheduling the Contractor's work upon or over TRRA's property. The Contractor shall ascertain in advance, from TRRA, the lead-time required for assembling crews and materials, and include sufficient time for that in its work scheduling. The Contractor may not assert any charge or claim against MHTC or TRRA resulting from any hindrance or delay the Contractor experiences because of railway traffic relating to any construction work by TRRA, or any other delay that is reasonable or necessary to protect the safety of railway traffic, or any other delay resulting from any person's compliance with these Railroad Job Special Provisions.

12.0 Trainman's Walkways. The Contractor shall maintain an unobstructed continuous space suitable for trainman's use in walking along trains, which shall extend to a line not less than twelve feet (12') from centerline of track, along the outer side of each exterior track of multiple operated track and on each side of single operated track. Before the close of each workday, the Contractor shall remove all temporary impediments to walkways and track drainage encroachments or obstructions allowed during work hours while Railway's protective service is

provided. Beside any excavation near the walkway, the Contractor shall install a handrail with a minimum horizontal clearance of twelve feet (12') from centerline of track.

13.0 Railroad Percentage of Contractor's Total Project Bid. The amount of work to be performed upon, over or under TRRA's right of way is estimated to be 6.6% percent of the Contractor's total bid for the Project.

14.0 Insurance.

14.1 In addition to any other forms of insurance or bonds required under the terms of the contract and specifications, the Contractor shall carry the following insurance:

14.1.1 Commercial General Liability. Commercial General Liability Insurance having a combined single limit of not less than $5,000,000 per occurrence and $10,000,000 in the aggregate for all loss or liability, including attorneys' fees, arising out of bodily injury liability and property damage liability during the policy period. Said policy shall include "explosion, collapse, and underground hazard" ("XCU") coverage, shall be endorsed to name TRRA as an additional insured, and shall include a severability of interests provision and a waiver of subrogation.

14.1.2 Railroad Protective Liability. Railroad Protective Liability Insurance having a combined single limit of not less than Five Million Dollars ($ 5,000,000.00) for each occurrence and Ten Million Dollars ($ 10,000,000.00) in the aggregate applying separately to each annual period. Said policy shall provide coverage for all loss, damage or expense arising from bodily injury and property damage liability, and physical damage to property attributed to acts or omissions at the job site. The standards for the Railroad Protective Liability Insurance are as follows:

(a) The insurer shall be rated A- or better by A.M. Best Company, Inc.

(b) The policy shall be written using one of the following combinations of Insurance Services Office ("ISO") Railroad Protective Liability Insurance Form Numbers:

1) CG 00 35 01 96 and CG 28 31 10 93

2) CG 00 35 07 98 and CG 28 31 07 98.

(c) The named Insured shall be identified as the Terminal Railroad Association of St. Louis.

14.2 Evidence of Insurance. The Declarations shall include the description of operations matching the project description in this Contract and shall include the appropriate MHTC project and contract identification numbers. The job number and project location shall appear on the Declarations and shall include the appropriate highway designation:

Route I-70 over Mississippi River
Construct bridge over TRRA
MoDOT Job No. J6I0984

14.3 The name and address of the Contractor shall appear on the Declarations. The name and address of the MHTC shall be identified on the Declarations as the "Involved Governmental Authority or Other Contracting Party".

14.4 Other endorsements/forms that will be accepted are:

(a) Broad Form Nuclear Exclusion – Form IL 00 21.

(b) thirty (30)-day Advance Notice of Non-renewal or cancellation.

(c) Required State Cancellation Endorsement.

(d) Quick Reference or Index Form CL/IL 240.

14.5 Endorsements/forms that will NOT be acceptable are:

(a) Any Pollution Exclusion Endorsement except CG 28 31.

(b) Any Punitive or Exemplary Damages Exclusion.

(c) Known injury or Damage Exclusion form CG 00 59.

(d) Any Common Policy Conditions form.

(e) Any other endorsement/form not specifically authorized above.

14.6 If any part of the work is sublet, similar insurance, and evidence thereof as specified above, shall be provided by or on behalf of the subcontractor to cover the subcontractor's operations on TRRA's property.

14.7 Prior to entry on TRRA's property, the original Railroad Protective Liability Insurance Policy shall be submitted by the prime Contractor to the MHTC at the address below for review and transmittal to the TRRA. In addition, certificates of insurance evidencing the Contractor's and any subcontractor's Commercial General Liability Insurance shall be issued to the TRRA and the MHTC at the addresses below, and forwarded to the MHTC for review and transmittal to the TRRA. The certificates of insurance shall state that the insurance coverage will not be suspended, voided, canceled, or reduced in coverage or limits without thirty (30) days advanced written notice to TRRA and the MHTC. No work will be permitted on the TRRA's property until the TRRA has reviewed and approved the evidence of insurance required herein.

TRRA
Mr. C. R. McQueen, Jr., Director
Engineering Services & Administration
Terminal Railroad Assoc. of St. Louis
1000 St. Louis Union Station, Suite 200
St. Louis, MO 63103

MHTC
Gregory J. Horn, P.E.
Mississippi River Bridge Project Director
Missouri Department of Transportation
707 N. Second Street, Suite 300
St. Louis, MO 63102

15.0 Guidelines for Personnel on TRRA's property.

15.1 The Contractor's personnel shall wear hard hats, and appropriate eye and hearing protection shall be used. Working in shorts shall be prohibited. Shirts shall cover shoulders, back and abdomen. Working in tennis or jogging shoes, sandals, boots with high heels, cowboy and other slip-on type boots shall be prohibited. Hard-sole, lace-up footwear, zippered boots or boots cinched up with straps which fit snugly about the ankle shall be adequate. Safety boots are strongly recommended.

15.2 The Contractor's personnel shall not be allowed within twenty-five feet (25') of the centerline of TRRA's track without specific authorization from the flagman.

15.3 All persons working near TRRA's track while any train is passing shall look out for dragging bands or chains and protruding or shifted cargo.

15.4 The Contractor's personnel shall not cross TRRA's track without specific authorization from the flagman.

15.5 All welders and cutting torches working within twenty-five feet (25') of TRRA's track shall stop when any train is passing.

15.6 The Contractor shall not cross or touch any rail of TRRA's track with any steel tape or chain without permission from the flagman.

16.0 Guidelines for Equipment on TRRA's property.

16.1 The Contractor shall not allow any crane or boom equipment to set up to work or park within boom distance plus twelve feet (12') from centerline of track without specific permission from the Railroad Engineer and flagman.

16.2 The Contractor shall not allow crane or boom equipment to foul track or to lift a load over the track without flag protection and track time.

16.3 All crane or boom equipment operators shall stay with their machines whenever crane or boom equipment is pointed toward TRRA's track.

16.4 All operators of cranes and boom equipment under load shall stop work while train is passing upon TRRA's track, including pile driving.

16.5 The Contractor shall secure all swinging loads to prevent movement while any train is passing upon TRRA's track.

16.6 The Contractor shall not allow any load to be suspended above a moving train.

16.7 The Contractor shall not allow any equipment within 25 feet of centerline of track without specific authorization of the flagman.

16.8 The Contractor shall not allow any tractors or any other equipment to touch the TRRA's ballast line without specific permission from Railroad Engineer and flagman.

16.9 The Contractor shall not allow any equipment or load movement within twenty-five feet (25') from, or anywhere above, a standing train or TRRA equipment without specific authorization of the flagman.

16.10 All operating equipment within twenty-five feet (25') of TRRA's track shall halt operations when a train is passing. The flagman may halt all of the Contractor's other operating equipment if the flagman views the operation to be dangerous to the passing train.

16.11 The Contractor's equipment, loads and cables shall be prohibited from touching rails.

16.12 While clearing and grubbing, the Contractor shall remove no vegetation from TRRA embankment with heavy equipment without specific permission from the Railroad Engineer and flagman.

16.13 The Contractor shall not park or store any equipment or materials on the TRRA's property unless the Railroad Engineer has granted specific authorization therefor.

16.14 The Contractor shall effectively immobilize all unattended equipment that is left parked on the TRRA's property, so that unauthorized persons cannot move it.

16.15 The Contractor shall turn all cranes and boom equipment away from TRRA's track after each workday or whenever unattended by an operator.

17.0 Legal Compliance and Hazardous Materials Reporting. Contractor shall comply with all applicable federal, state and local governmental laws and regulations—including the Resource Conservation and Recovery Act, the Clean Water Act, the Oil Pollution Act, the Hazardous Materials Transportation Act, the Comprehensive Environmental Response, Compensation and Liability Act, and other environmental, health and safety laws and regulations to the extent these requirements are applicable to the Contractor's work performed under this contract. Notwithstanding the preceding sentence, the Contractor will not be liable for pre-existing hazardous materials or hazardous substances discovered on TRRA's property or right of way so long as the Contractor's work, acts or omissions did not cause them to be there. If the Contractor discovers any hazardous waste, hazardous substance, petroleum or other deleterious material, including any non-containerized commodity or material, on or adjacent to TRRA's property, in or near any surface water, swamp, wetlands or waterways, while performing any work under this special provision, the Contractor shall immediately:

(a) Notify TRRA of such discovery, by telephoning (618) 451-8478.

(b) Take safeguards necessary to protect employees, subcontractors, agents and/or third parties.

(c) Exercise due care with respect to the release, including the taking of any appropriate measure to minimize the impact of the release.

18.0 Personal Injury Reporting. TRRA must report certain injuries as a part of compliance with Federal Railroad Administration ("FRA") reporting requirements. The Contractor immediately shall report any personal injury to any employee of the Contractor, subcontractor or Contractor's invitees while on TRRA's property, by phone, mail or preferably in person, to the Railroad Engineer. The Contractor shall complete the Non-Employee Personal Injury Data Collection

Form and send it by Fax to Railroad Engineer no later than the close of shift on the date of the injury.

19.0 Failure to Comply. If the Contractor violates or fails to comply with any of the requirements of these Railroad Job Special Provisions, the TRRA may act as authorized in paragraphs (a) and (b) of this section, until the Contractor has remedied the situation to the satisfaction of the Railroad Engineer and the Engineer.

(a) The Railroad Engineer may require the Contractor to vacate TRRA's property.

(b) The Engineer may withhold all monies due to the Contractor until the Contractor has remedied the situation to the satisfaction of the Railroad Engineer and the Engineer.

20.0 Payment for Cost of Compliance. MHTC shall not separately pay for any extra cost the Contractor or TRRA incurs on account of compliance with these Railroad Job Special Provisions. The Contractor and TRRA shall include all such cost in the contract unit price for other items included in the contract. TRRA will not pay the Contractor for any work it performs to comply with these Railroad Job Special Provisions.

G. RIGHT-OF-WAY AND ACCESS TO SITE OF WORK

1.0 Description.

The Contractor shall acquaint himself with the right-of-way limits and available work and storage space at the site and with the conditions at the site. Any ground required by the Contractor for working and storage space or his overall operation shall be provided by the Contractor at his own expense.

The Contractor shall comply with the requirements of federal, state and local agencies having jurisdiction and with all permit requirements, during the prosecution of the work. The Contractor shall coordinate the construction of temporary haul roads, access points, berms, boat docks, material storage areas and any other incidental or temporary construction with such agencies prior to beginning construction of temporary works.

2.0 Method of Measurement.

No direct measurement will be made.

3.0 Basis of Payment.

No separate payment will be made for compliance with this Special Provision. All costs incurred by the Contractor in complying with the above requirements shall be considered as incidental to other items of work in this contract.

H. BRIDGE WORK IN NAVIGABLE WATERS

1.0 Description.

The construction of a bridge over the navigable waters of the Mississippi River has been authorized through a permit issued by the U.S. Coast Guard. This permit has been reproduced and attached to the Contract Documents. The Contractor shall assume all obligations and comply with all requirements and provisions of this permit as it applies to this contract.

The Contractor's particular attention is invited to the various requirements established by the Corps of Engineers, the U.S. Coast Guard, and others relative to construction work in and over a navigable stream which are applicable to this contract and which may not be covered by the above permit. Such matters of approval include, but are not necessarily limited to dredging, construction schedules, plans for cofferdams, temporary causeways, work bridges, erection equipment, falsework bents, anchorage of barges and construction equipment, temporary restriction of channel, lighting during construction, removal of temporary construction, and/or other temporary structures that will be placed in the water to facilitate the construction of the bridge. All construction operations in or over the river shall conform to the requirements or directions of the U.S. Army Corps of Engineers, U.S. Coast Guard and/or other authority having jurisdiction. All work in navigable waters shall be so conducted that free navigation of the waterway will not be unreasonably interfered with and that the existing navigable depths will not be impaired. The Contractor shall communicate with the appropriate agency or agencies and procure, at its own expense, all required permits. Copies of all permits, authorizations, directions or orders issued to the Contractor by the Corps of Engineers, Coast Guard, or other constituted authority during the progress of the work shall be filed with the Engineer for information and record.

The Contractor shall notify the U.S. Coast Guard no less than 30 days in advance of commencement of work in the river so that navigation interests may be notified of the presence of construction equipment and the Contractor also shall notify the same authority of any events that may affect navigation and when work in the river is complete. The Contractor shall keep the Engineer and the U.S. Coast Guard continually informed in writing of the progress of the work which affects navigation so that temporary navigation lights can be prescribed on remaining obstructions.

Should the Contractor, during the progress of work lose, throw overboard, sink or misplace any material, machinery, plant, or appliance which in the opinion of the Engineer may be dangerous or obstructive to navigation, the Contractor shall immediately recover and remove the same with dispatch. The Contractor shall give immediate notice, with the description and location of such obstruction to the Engineer, Corps of Engineers and U.S. Coast Guard; and when required, the Contractor shall mark or buoy such obstructions until the same are removed.

Temporary navigation lights and other navigation signals or facilities that may be required by governmental authority on all temporary construction or vessels and on all partially or wholly finished permanent construction, shall be provided and maintained in accordance with the requirements of the U.S. Coast Guard District, 1222 Spruce Street, St. Louis, Missouri 63103. The Contractor shall submit to the Engineer and the U.S. Coast Guard for approval, prior to commencement of the work within the waterway, such information and documents as are customarily required by the said authority. Temporary lights, signals or facilities when so ordered, shall be provided and maintained throughout the life of the contract.

All costs incurred by the Contractor in complying with the above requirements shall be considered as included in and completely covered by the unit prices bid for the various items of work in this contract.

2.0 Method of Measurement.

No direct measurement will be made.

3.0 Basis of Payment.

No separate payment will be made for compliance with this Special Provision. All costs incurred by the Contractor in complying with the above requirements shall be considered as incidental to other items of work in this contract.

I. INSPECTION TRAVELER

1.0 Description.

This work shall include designing, furnishing, and installing one self-propelled inspection traveler consisting of a traveler platform suspended from the bridge superstructure by end truck assemblies supported by runways or crane rails attached to the bridge. The traveler shall carry its own power supply generator. All work shall be performed in accordance with the requirements of Sec 712 and the following.

2.0 Materials.

1 REVISED

The inspection traveler platform shall be constructed of galvanized structural steel with a yield strength no less than 36 ksi. Inspection traveler rails shall be constructed of weathering steel and attached to the bridge with ASTM A-325 Type 3 bolts.

3.0 Construction Requirements.

3.1 Design.

The Contractor shall design the hydraulic system for the extension boom, runway system and supports, mechanical and electrical drive mechanism, control system, and power supply system for the inspection traveler. Design of the system shall be performed under the direction of a licensed professional engineer or structural engineer with experience in design of similar mechanical systems and signed and sealed in accordance with the requirements of the jurisdiction where the work is to be performed. Design methods and allowable stresses shall be in accordance with AASHTO *Standard Specifications for Highway Bridges* or AASHTO *LRFD Bridge Design Specifications*.

The live loads to be used for the design are shown on the plans.

The width of the traveler shall be such that in its extended position an inspector will have access to the full underside of the bridge deck and to the exterior faces of the steel edge girders and stay cable connections. In its retracted position, the traveler shall be of a width to permit passage between the tower legs as shown on the plans.

The inspection traveler rails shall be no greater than 14-inches in depth.

The drive mechanism shall be equipped with an anti-skewing device designed to maintain proper alignment of the inspection traveler during operation. Truck assemblies shall be driven along the runway system by variable speed electric motors. Truck assemblies shall be equipped with automatic braking system which shall prevent runaway operation when operating the inspection traveler downhill. Brake and motor on each truck assembly shall operate independently such that one truck may be manually slowed to correct skew of the traveler.

Operation of the inspection traveler drive system shall be by a hand held control with sufficient length of cable to operate the traveler from any position on the traveler platform. The control system shall provide for automatic operation of truck assemblies as well as independent manual operation of each truck assembly in case of abnormal or excessive skew. The hand-held control and cable shall be detachable for storage in a secure location.

3.2 Shop Drawings.

The Contractor shall provide complete design calculations and integrated shop drawings for the inspection traveler platform, runway system and supports, end truck assemblies, and control system. Shop drawings shall include one line drawings for the power system, electric motors, and the control system.

3.3 Fabrication and Installation.

Inspection travelers shall be fabricated and installed in accordance with the applicable requirements of Sec 1080, the Special Provisions and the written instructions of the system manufacturer. Field welding to attach the traveler support system to the bridge superstructure will not be permitted. Holes for attachment bolts shall be shown on the structural steel shop drawings for the floorbeams.

After installation the inspection traveler shall be operated to demonstrate the full range of movement and satisfactory operation of the traveler system. A representative of the operating and control system manufacturer shall be available during installation and testing of the traveler system. Such representative shall provide a minimum of eight hours of training of Department personnel in the operation and maintenance of the inspection traveler.

1 REVISED

The contractor may use the inspection traveler for construction of the bridge. The contractor shall return the traveler in "as new condition" and provide the original manufacturer's warranty to the owner when the bridge is complete.

3.4 Operation and Maintenance Manuals.

The Contractor shall prepare and furnish six copies of operation and maintenance manuals to the Engineer. Manuals shall include a complete set of operating instructions, recommended periodic inspection and maintenance schedules, points of lubrication, parts lists, and trouble shooting information. Operation and maintenance manuals shall be furnished in three-ring binders and on CD or DVD in the then-current Adobe Portable Document Format.

4. Method of Measurement.

Inspection traveler, complete and accepted, will be measured as a lump sum unit.

5.0 Basis of Payment.

Inspection traveler, complete in place and accepted, will be paid for at the contract lump sum price, which price shall be full compensation for all materials, tools, labor, engineering and incidentals to complete the work.

J. HLMR BEARINGS

1.0 Description.

This item shall include furnishing and installing complete-in-place factory produced rotational guided expansion bearings and rotational fixed floating bearings in accordance with details shown on the plans and this special provision. The term HLMR (High-Load Multi-Rotational) bearing shall be considered interchangeable with POT or Disc bearing.

2.0 Materials.

Material requirements, tolerances, finishes and other details for these bearings are prescribed on the plans and in this special provision.

2.1 General.

2.1.1 Standard manufactured HLMR bearings meeting all contract requirements for materials, movement and loads shall be utilized. The bearing shall be capable of resisting a lateral load as shown on the plans. Masonry plates shall be designed for a maximum service load of 1000 psi (6.9 MPa).

2.1.2 A center bar guide system may be used in lieu of an exterior guide bar system to meet plan requirements, provided the guide and keyway have mating surfaces of stainless steel and PTFE. For either system, provisions shall be made to accommodate the total transverse movements as shown on the plans before the guides are engaged. The fixed bearing shall also provide for the total transverse movements as shown on the plans. For both expansion and fixed bearings, the transverse movement indicated on the plans is due to thermal effects and no additional movement beyond what is specified on the plans shall be allowed. Provisions shall be made for the transverse guidance mechanism to allow equal movements, one-half of total movement, due to thermal expansion and contraction at 60°F (16°C). The guidance mechanism shall be adjusted appropriately for temperatures different than 60°F (16°C).

2.1.3 Any modifications required to meet the height of bearings shown on bridge plans will be the responsibility of the contractor. Cost of any modification required shall be borne by the contractor.

2.2 Polytetrafluoroethylene (PTFE) Requirements.

PTFE sliding surfaces for expansion bearings are designed to translate or rotate by sliding of a self-lubricating PTFE surface across a smooth hard mating surface of stainless steel. The unfilled or filled PTFE sliding surfaces shall have 3/64-inch (1.0 mm) minimum thickness and 3/32-inch (2.0 mm) maximum thickness.

Maximum Coefficient of Friction (PTFE to stainless steel as furnished)	
At 75% of Capacity	0.03
At 25% of Capacity	0.05

2.2.1 The PTFE sliding surface shall be bonded under factory controlled conditions to a rigid back-up material capable of resisting any bending stresses to which the sliding surfaces may be subjected. Alternatively, PTFE material of twice the thickness specified above may be recessed for half its thickness in the back-up material.

2.2.2 The mating stainless steel surface to the PTFE shall be an accurate flat surface as required by the design and shall have a minimum Brinell hardness of 125 and a surface finish of less than 20 micro inches (0.508 µm) rms. The mating surfaces shall completely cover PTFE surface in all operating positions of the bearing. Stainless steel used as a mating surface shall be seal welded around its entire perimeter.

2.3 PTFE Resin.

The virgin PTFE resin, filled or unfilled PTFE sheets, back-up materials and all other parts of the fixed or expansion bearings shall have the friction, mechanical and physical properties prescribed in this specification, or as shown on the bridge plans. PTFE resin shall be virgin material in accordance with ASTM D 4895. Specific gravity shall be 2.13 to 2.19. Melting point shall be ±623°F (±327°C).

2.4 Filler Material.

Filler material when used, shall be milled glass fibers, carbon or other approved inert filler materials.

2.5 Adhesive Material.

Adhesive material shall be an epoxy resin in accordance with Federal Specification MMA-A-134.

2.6 Unfilled PTFE Sheet.

Finished unfilled PTFE sheet shall be made from virgin PTFE resin and in accordance with the following requirements.

Properties	Value	Test Method
Tensile Strength, psi (MPa) min.	2800 (19.3)	ASTM D 4895
Elongation, percent, min.	200	ASTM D 4895

2.7 Filled PTFE Sheet.

Filled PTFE sheet shall be made from virgin PTFE resin uniformly blended with inert filler material. Finished filled PTFE sheets containing glass fiber or carbon shall be in accordance with the following requirements.

Mechanical Requirements			
Properties	15% Glass Fibers	25% Carbon	Test Method
Tensile Strength, psi (MPa) min.	2000 (13.8)	1300 (9.0)	ASTM D 4895
Elongation, percent, min.	150	75	ASTM D 4895

Physical Requirements			
Properties	15% Glass Fibers	25% Carbon	Test Method
Specific Gravity, min.	2.20	2.10	ASTM D 792
Melting Point, °F (°C)	81 ±18 (27 ±10)	621 ±18 (327 ±10)	ASTM D 4895

2.8 Surface Treatment.

Where PTFE sheets are to be epoxy bonded, one side of the PTFE sheet shall be factory treated by an approved manufacturer by the sodium ammonia or sodium napthalene process.

2.9 Stainless Steel Mating Surface.

Stainless steel mating surfaces, when used, shall be 16-gage minimum thickness and in accordance with ASTM A 240 Type 304 with a surface finish of less than 20 micro inches (0.500 µm) rms. Stainless steel mating surfaces shall be polished or rolled as necessary to meet the friction requirements of this specification.

2.10 Structural Carbon Steel.

Base plates, sole plates, guide bars, and other bridge bearing components shall be constructed of structural steel in accordance with ASTM A 709 Grade 50 and shop coated a prime coat of the coating system as specified on the bridge plans to provide a minimum dry film thickness of 5 mils (125 µm) in accordance with Sec 1081.

2.11 Elastomeric Components.

The neoprene elastomer shall be 50 Durometer in accordance with Sec 1038 and dimensions as shown on the bridge plans.

2.12 Guiding Arrangements.

Guiding arrangements shall have PTFE to stainless steel sliding surfaces.

2.13 Fabrication.

2.13.1 Shop drawings shall be prepared in accordance with Sec 1080.

2.13.2 Fabrication of all parts of the bearing shall be in strict accordance with the approved shop drawings. The clearance between guide bar and bearing of all guided bearings shall be maintained in strict compliance with the bridge plans.

2.13.3 During the welding procedure of the stainless steel plates to the top plate and guide bars the surface of the stainless steel plates shall be protected from weld splatter.

2.13.4 The bonding of the PTFE sheets shall be performed at the factory of the bearing manufacturer of the expansion bearing under controlled conditions and in accordance with the written instructions of the manufacturer of the approved adhesive system. After completion of the bonding operation, the PTFE surface shall be smooth and free from bubbles. Filled PTFE surfaces shall then be polished.

2.14 Testing and Acceptance.

Each manufactured lot of bearing assemblies shall be accompanied by a manufacturer's certificate stating that the steel, neoprene elastomer and PTFE material are in accordance with this specification and shall show the actual test results for the materials used in the manufacturing of the bearings. Acceptance of bearing assemblies will be based on satisfactory manufacturer's certification, acceptable test results and inspection at the time of installation.

2.14.1 The manufacturer shall furnish facilities for the test and inspection of the completed bearings, representative samples at the plant or at an independent test facility.

2.14.2 A random sample from the production lot of bearings shall be tested. As soon as all bearings have been manufactured for a given project, notification shall be given to the engineer.

2.14.3 The test method and equipment shall be approved by the engineer and include the following requirements.

a. The test shall be arranged so that the coefficient of friction of the first movement of the manufactured bearing can be determined.

b. The bearing surface shall be cleaned prior to testing, upon instructions of the bearing manufacturer.

c. The test shall be conducted at maximum working stress for the PTFE working surface with the test load applied continuously for 12 hours prior to measuring friction.

d. The first movement static and dynamic coefficient of friction of the test bearing shall be determined at a sliding speed or less than one inch (25 mm) per minute and shall not exceed the coefficient of friction for design.

e. The bearing specimen shall then be subjected to 100 movements of at least one inch (25 mm) of relative movement and if the test facility permits, the full design movement at a speed of less than one foot (305 mm) per minute. Following this test, the static and kinetic coefficient of friction shall be determined again and shall not exceed the values measured in requirement (d). The bearing or specimen shall show no sign of bond failure or other defects.

f. A proof load test shall be performed on a sample selected at random from the production lot, by applying load equal to 150 percent of the design capacity of the bearing for a period of one hour. The test bearing shall show no sign of failure or other defects while under load or subsequently upon disassembly and inspection.

2.14.4 Bearings represented by the test specimen passing the above requirements will be approved for use in the structure subject to on-site inspection for visible defects.

2.15 Packaging.

The bearings shall be packaged and crated in such a manner that they will be protected from dust and moisture, and not become damaged while being handled, transported or stored. The contractor shall replace any bearing damaged during handling, transporting or storing at no expense to the Commission.

3.0 Construction Requirements.

The bridge bearings are not designed to accept bending stresses and shall be fully supported over the entire area of the bottom and upper surfaces at all times when under load.

3.1 The bearing base plate shall be set to line and grade. The contractor shall locate the bearings at the proper elevation and orient them in the proper direction. The engineer will approve the location and orientation of the bearing. The upper part of the bearing shall be located relative to the base of the bearing according to the engineer's recommendations for the temperature at the time of erection.

3.2 If for any reason the bearings are disassembled, extreme care shall be used to insure that the rubber pads and piston rings are properly seated in the recess with the piston ring gaps 180 degrees apart.

3.3 It is necessary to exercise care in aligning both the base and upper part of the guided expansion bearing parallel to the axis of the structure, otherwise a wedging action will occur and unsought horizontal forces will result.

3.4 The contractor shall align all bearings on any one pier exactly to the direction as shown on the plans.

3.5 The contractor shall avoid scratching, gouging or otherwise marking the PTFE or mating stainless steel surfaces of the bearings during handling or erection. The contractor shall use whatever means are necessary to protect the bearings from dirt, grout or other foreign materials during the construction of other elements of the structure.

4.0 Method of Measurement.

Measurement will be made per each. The HLMR bearing, complete in place, shall include the steel sole plate, masonry plate, HLMR bearing, pad, anchor bolts, heavy hexagon nuts and washers, coating and any incidental material needed to complete the work.

5.0 Basis of Payment.

Payment for the above described work, including all material, equipment, labor, and any other incidental work necessary to complete this item, will be considered completely covered by the contract unit price for "POT Bearing".

K. MASS CONCRETE

1.0 Description.

1.1 Definition.

Mass Concrete is defined as any large volume of cast-in-place concrete with dimensions large enough to require that measures be taken to cope with the generation of heat and attendant volume changes to minimize cracking."

1.2 Determination of Mass Concrete. When the minimum dimension of the concrete exceeds four feet and has a volume of concrete to surface area ratio when measured in feet, greater than 1.0, then provisions for the placement of mass concrete shall apply. The surface area for this ratio shall include the summation of all the surface areas of the concrete component being considered, including the full underside (bottom) surface of footings and caps, the interior, exterior, and construction joint surfaces of box sections, etc.

2.0 Construction Requirements.

Measures must be taken to cope with the generation of heat and attendant volume change to minimize cracking of mass concrete. When placing mass concrete, the Contractor shall assure that the temperature differential between any point in the interior of the concrete element greater than 12 inches from the surface and the surface of the concrete element does not exceed 40°F immediately following placing of any lift during the heat dissipation period for a minimum of 24 hours after placement. The Contractor shall maintain records of the temperature differential and shall immediately apply corrective measures when the temperature differential nears 35°F so as to limit it to the 40°F maximum. This may be accomplished through a combination of the following:

a. Use of Type II or Type IV cement.

b. Selection of concrete ingredients to minimize the heat generated by hydration of the cement.

c. Cooling component materials to reduce the temperature of the concrete while in its plastic state.

d. Insulating the forms and the surface of the concrete to prevent heat loss.

e. Controlling the rate of placing the concrete.

f. Placement of concrete at times of day when the ambient temperature is lowest or highest.

g. Providing supplemental heat at the surface of the concrete to prevent heat loss.

h. Other acceptable methods which may be developed by the Contractor.

Prior to placing any concrete covered by this Special Provision, the Contractor shall submit to the Engineer a detailed plan covering how these temperature differentials will be determined and how the restrictions are to be achieved.

No concrete covered by this special provision shall be placed until the Contractor's temperature differential plan is reviewed and approved by the Engineer.

The Contractor shall install within the concrete placed in each mass concrete pour and in the surrounding environment of the concrete, temperature sensing devices of a type approved by and at locations as designated by the Engineer. These devices shall be accurate to within plus or minus 2°F within the temperature range of 32°F to 212°F. The temperature shall be recorded automatically by an approved strip-chart recorder furnished by the Contractor or other acceptable means approved by the Engineer. The sensing system shall contain as a minimum two independent sets of sensing devices in order to assure readings if one of the systems fail. The Engineer may approve manual observation and recording of temperatures at 6-hour intervals where conditions warrant.

3.0 Method of Measurement.

No direct measurement will be made.

4.0 Basis of Payment.

No separate payment will be made for compliance with this Special Provision. The cost of furnishing all equipment, materials, and labor and performing all work required for placement and curing of mass concrete, as prescribed above and as shown on the plans, will not be paid for separately and all costs therefor shall be included in the contract price bid for other items of the work.

L. MODULAR EXPANSION JOINT SYSTEM

1.0 Description.

This work shall consist of furnishing materials, services, labor, tools, equipment, and incidentals necessary to design, fabricate, inspect, test and install the expansion joint system as specified.

1.1 General. The modular expansion joint system shall consist of multiple strip seal joints that shall allow the longitudinal and differential non-parallel movements as shown on the plans. The configuration of the expansion joint system shall consist of neoprene strip seals mechanically held in place by steel edge and separation beams. Each separation beam shall be supported by independent multiple support bars, which are welded to the separation beams. The multiple support bars shall be suspended over the joint opening by sliding elastomeric bearings. Scissor type modular expansion joint systems will not be permitted. An equidistant control system shall be incorporated that develops its maximum compressive force when the joint is at its maximum opening. The expansion joint system shall not incorporate any bolted connections between the separation beams and support bars. The final completed expansion joint system shall be continuous across the full width of the roadway and continue into the traffic barriers as shown on the plans.

1.2 Qualified Manufacturers. The qualified manufacturer shall have a minimum of 5 years experience in designing and fabricating modular expansion joint systems and be certified as a minimum under the AISC certification program for "Simple Bridges". The following manufacturers are known suppliers of modular expansion joint systems:

D.S. Brown
300 East Cherry Street
North Baltimore, OH 45872
Telephone (419) 257-3561
www.dsbrown.com

D.S. TechStar, Inc.
1219 West Main Cross Street
Findlay, OH 45840
Telephone: (419) 424 0888
www.techstar-inc.com

Watson-Bowman & Acme Corp
95 Pineview Drive
Amherst, NY 14120
Phone (716) 691-7566
www.wbacorp.com

2.0 Design Requirements.

2.1 Truck and Impact Loading. The modular expansion joint system shall be designed in accordance with the latest edition of AASHTO LRFD Bridge Design Specifications except that the LRFD truck loading shall be HS-20 Modified (HS-25) and impact being 100 percent. The modular expansion joint system shall be designed for the maximum number of lanes between the barrier curbs and the lane width shall be considered as 10 feet (3.05 m). The modular expansion joint system shall be designed such that the joint system is designed to support a wheel load being 12 inches (300 mm) from the roadway face of the curb. The modular expansion joint system shall be designed for the staged traffic loading as shown on plans.

2.2 Field Splices. The design and fabrication of the modular expansion joint system shall be one continuous unit without field splices except as required by stage construction requirements as shown on the plans. If the site and/or stage construction requirements require the need for field splices, the splices shall be located in areas outside the main traffic lanes or as shown on the plans and consist of a welded separation beam splice in which the weld is a full penetration weld. The contractor shall complete the field splices in accordance with the details and procedures included in the shop drawings.

2.3 Movement. The modular expansion joint system shall be designed to provide the minimum total movement as noted on the plans and to accommodate all expected longitudinal movements (i.e. thermal, creep, shrinkage, elastic shortening, etc.) as well as vertical and horizontal rotations. This design shall incorporate strip seal glands with a maximum movement range of 3.15 inches (80 mm) per seal.

2.4 Fatigue. The modular expansion joint system shall be tested and designed following the guidelines provided in the National Cooperative Highway Research Program (NCHRP), Report 402 "Fatigue Design of Modular Bridge Expansion Joints" as well as the provisions included in Chapter 14, "Joints and Bearings", of the latest edition of AASHTO LRFD Bridge Design Specifications.

2.5 Water Tightness. After the modular expansion joint system has been completely installed, the joint shall be flooded for a minimum of one hour to a minimum depth of 3 inches (75 mm). Testing shall be done in stages with traffic flow maintained in accordance with the traffic control plans. If the engineer observes leakage, the expansion joint system shall be repaired at the contractor's expense. The repair procedure shall be as recommended by the manufacturer and approved by the engineer.

2.6 Corrosion Protection. All steel surfaces, except as noted, shall be hot dip galvanized in accordance with AASHTO M 111 (ASTM A 123).

2.7 Anchorage of Expansion System. The modular expansion joint system anchorage shall be designed by the manufacturer and included in the design computations and shown in the shop drawings.

3.0 Material.

All material shall be in accordance with Division 1000, Material Details, and specifically as follows.

3.1 Structural Steel. Structural Steel shall be in accordance with AASHTO M 270, Grade 50 (345) (ASTM A 709, Grade 50 (345)). All shop-welded connections that splice the horizontal separation beams and edge beams shall be full penetration welds. All separation beams to support bar welded connections shall be full penetration welds in accordance with NCHRP Report 402 requirements. Aluminum components will not be permitted. All fabrication of structural steel shall be in accordance with Sec 712 and 1080.

3.2 Stainless Steel. The stainless steel shall be in accordance with Sec 1038.4.2.

3.3 Sliding Bearings. The sliding bearings shall be fabricated as steel reinforced elastomeric pads with polytetraflourethylene (PTFE) in accordance with Sec 1038 and as required by the manufacturer. The bearings shall be designed so that they are removable and replaceable.

3.4 Strip Seals and Lubricant Adhesive.

Strip seals and lubricant adhesive shall be in accordance with Sec 717 and 1073. The strip seals shall not protrude above the top of the joint.

3.5 Submittals.

3.5.1 Design Computations and Shop Drawings. The contractor shall submit, for the engineer's review, the design computations and shop drawings shall be prepared under the direction of a licensed professional engineer or structural engineer and signed and sealed in accordance with the requirements of the jurisdiction where the work is to be performed. The design computations shall include fatigue design and a strength design for all structural elements and connections. Shop drawings shall be prepared for the modular expansion joint system in accordance with Sec 1080. The shop drawings shall also include the following:

(a) Plans, elevation, and section of the joint system for each movement rating and roadway width showing dimensions and tolerances.

(b) All ASTM, AASHTO or other material designations.

(c) Method of installation, including but not limited to sequence, setting relative to temperature, anchorage during setting and installation at curbs.

(d) Corrosion protection system.

(e) Details of temporary support for shipping and handling.

3.5.2 Maintenance Manual. The manufacturer shall submit to the engineer a written maintenance manual and part replacement plan at the time of the shop drawing submission. Included in the submission shall be list of parts to be inspected, acceptable wear tolerances and the method of part replacement. The manufacturer shall conduct a pre-installation meeting to train MoDOT's construction inspectors and maintenance personnel on the installation and maintenance of the modular expansion joint system.

3.5.3 Certificates of Compliance. The manufacturer shall provide certification of the manufacturer's experience, including a list of projects, and certificate of compliance with the AISC certification program, in accordance with Section 1.2 of this job special provision, to be submitted to the engineer.

4.0 Construction Requirements.

The expansion joint system shall be stored at the job site in accordance with the manufacturer's written recommendations. Damage to the joint system during shipping or handling will be cause for rejection of the joint system. Any damage to the corrosion protection system shall be repaired to the satisfaction of the engineer at the contractor's expense. The support boxes shall rest on cast-in-place concrete or grout pads installed into a preformed block out. Concrete shall be forced under and around support boxes, anchorage systems and supporting hardware. Proper consolidation shall be achieved by localized internal vibration. Installation of the modular expansion joint system shall be as recommended by the manufacturer. The contractor shall obtain the services of a qualified technical representative, approved by the manufacturer of the expansion joint system and acceptable to the engineer, to assist during the installation. The installation shall not occur without the qualified technical representative being present. The qualified technical representative shall have 3 years of experience working on installation of modular expansion joint systems on bridges. This experience shall also include modular joints that had field splices for staged construction.

5.0 Method of Measurement.

Final measurement will not be made except for authorized changes during construction, or where appreciable errors are found in the contract quantity. Where required, the modular expansion joint system will be measured to the nearest linear foot (0.5 m), based on measurement from the roadway face of curb to roadway face of curb along the centerline of the joint. Portions of the joint that extend past the roadway face of curbs will not be measured for payment. The revision or correction will be computed and added to or deducted from the contract quantity.

6.0 Basis of Payment.

Modular expansion joint system, including all material, coating, equipment, labor, fabrication, installation, technical assistance and any other incidental work necessary to complete this work, will be paid for at the contract unit price for "Modular Expansion Joint System".

M. ERECTION OF CABLE STAYED SPANS

1.0 Description.

1.1 General.

The erection of the structure and the field workmanship shall be in accordance with the best practice and shall conform to the Standard Specifications and Special Provisions.

A schematic erection sequence is shown on the plans and specified herein. This schematic erection sequence shall not be considered complete. Utilization of this sequence as presented is not mandatory. Certain sequences relative to post-tensioning the deck slab panels, stud shear connector welding and panel grouting to obtain composite action are required as stipulated on the plans and specified herein. The Contractor shall prepare a complete step by step erection method based on the erection sequence chosen. The Contractor shall define and analyze the loads to be supported during erection and shall submit complete detailed shop and erection drawings of Contractor's elected erection sequence, including all design calculations, to the Engineer for review.

No work shall be performed on Piers 11 and 12 above elevation 464.50 until the Contractor's erection sequence is totally reviewed and approved by the Engineer. Approval of the Contractor's erection sequence and plans shall not relieve the Contractor from his responsibility for performing the work required by the Contract Documents.

The erection equipment and loads shown in the Plans have been assumed in order to permit analysis of the structure for the effects thereof. If the Contractor elects to use the construction sequence shown in the Plans, he shall ascertain for himself the practicality thereof and shall assume complete responsibility for the detailed design of the erection equipment.

Modifications of the structure for erection purposes will be permitted with the approval of the Engineer, provided it is demonstrated that the details will have no adverse effect on the completed structure. Any additional materials required shall be provided at no additional cost. Completed details and stress computations will be required for all revisions to the contract drawings. The Contractor shall present, for the Engineer's approval all proposed modifications to details shown on the contract drawings. All details and stress computations submitted by the Contractor shall be prepared under the direction of a licensed professional engineer or structural engineer and signed and sealed in accordance with the requirements of the jurisdiction where the work is to be performed. The engineer shall be experienced in cable-stayed bridge design and construction.

The safe erection of the bridge is the sole responsibility of the Contractor. Neither the Contractor's use of an erection procedure similar to that shown on the plans, nor the review of the Contractor's erection plans and procedures by the Engineer will relieve the Contractor of this responsibility.

1.2 Assumptions.

Several assumptions, described hereinafter, have been made concerning the erection process in order to design the structure. Deviations from these assumptions may require reanalysis or redesign. The Engineer will be the sole judge in determining the amount and extent of reanalysis or redesign to be performed by the Contractor when any deviation from the design shown on the plans is prepared by the Contractor. Design assumptions are as follows:

a) The age of the concrete precast deck units at erection has been assumed to be 90 days. The piers are constructed in their entirety and any tower post-tensioning installed, stressed and grouted prior to stressing cables.

b) Temporary support bents are assumed in the side spans as shown on the plans during construction to stabilize the bridge under extreme wind and maximum out-of-balance load combinations. The suggested erection sequence indicates one possible arrangement of such temporary bents. It is the Contractor's responsibility to assure himself if and when temporary falsework bents are required during some of the loading conditions resulting during the various construction stages. The Contractor's attention is directed to the general notes and final wind study report for additional information.

c) Towers are designed assuming that individual stay cables at each tower leg are stressed one at a time and that like cables on opposite tower legs of the same tower are stressed concurrently.

d) Erection of the superstructure steel and precast deck units follows the sequence shown in the plans.

e) Temporary tensile stress in the concrete roadway slab will be allowed during erection and shall not exceed $0.095\sqrt{f'_c}$ (ksi).

f) All stay cables are installed, partially stressed, locked, receive additional stress due to the load from the precast slab panels, and are restressed to control unbalanced forces, tower moments, edge girder stresses, and deflections. The floor system has been designed assuming equal final stay forces for like stay cables relative to the centerline of bridge. During erection, the use of a system of jacking that maintains a maximum interim unbalanced cable force of five percent about the centerline of bridge while cables are being stressed has been assumed. The construction sequence requires different forces in the side span than in the main span to control unbalanced erection loads. The edge girders have been designed for these differing cable forces.

1.3 Contractor's Responsibility.

All designs and detailing work (shop and working drawings), and erection sequence stress calculations shall be prepared under the direction of a licensed professional engineer or structural engineer and signed and sealed in accordance with the requirements of the jurisdiction where the work is to be performed.

The Contractor is referred to the Design Specifications and Loads on the plans. When preparing erection design stress calculations for shop and erection drawings, erection stresses shall be

computed for the Erection Load Combinations in accordance with Article 3.4.2 of AASHTO *LRFD Bridge Design Specifications*.

The following shall be performed by the Contractor and will be subject to the Engineer's approval:

a) Complete detailed erection sequence drawings are required. Erection stresses in permanent and temporary members and pier and falsework reactions shall be determined for each stage. Moments, shears, axial loads and other forces shall be computed and tabulated for the towers and the superstructure at a sufficient number of points to demonstrate that the load demand will not exceed the capacity and allowable stresses for erection and service conditions. The Contractor shall include as part of the step-by-step erection procedure complete details of its stay cable fabrication, erection and stressing monitoring. Details of contemplated elevations, cable lengths, adjustments and shims required shall be shown for each erection stage. Final cable adjustment shall be performed after all other dead loads are in place.

b) The Contractor shall prepare and submit detailed shop and erection drawings to the Engineer in accordance with the requirements outlined in these Special Provisions. All submittals by the Contractor shall be submitted sufficiently in advance of the start of construction to allow the Engineer a 90-calendar day initial review period. The review period shall begin on the day the submittal is received by the Engineer. All submittals not approved and requiring re-submittal shall be subject to the above review time period, with the review time beginning anew for each such re-submittal.

c) Prior to his analyses, the Contractor shall meet with the Engineer to discuss the proposed erection procedure, erection design criteria, and structure capabilities to support the proposed erection scheme. The Engineer will review the preliminary erection procedure proposal for general compliance with the contract requirements.

d) The Contractor shall develop and submit to the Engineer a complete description and stress calculations of the proposed process and sequence of erection including positions and weights of equipment at each position and weights of equipment at each stage in sufficient details to allow review of the effects of the erection procedure on the structure.

e) The Contractor shall submit to the Engineer the detailed design of all erection equipment, falsework, temporary bracing and other items as required for erection.

f) The Contractor's sequence of construction shall ensure the intermediate static and dynamic stability of the structure for the various stages of the construction. A series of wind tunnel model tests have been conducted on the prototype structure. A report of the test results will be made available to the contractor upon request. The accuracy of the information in this report is not guaranteed and it is not to be considered as part of the plans governing construction of the project. Contractor shall make its own determinations and evaluations of the information as made available in this report.

g) Based on the Contractor's construction equipment and procedures, the Contractor shall compute and prepare tables of anticipated cable tensions in each cable at corresponding stages of erection including, but not limited to the stages of deck panel placement and after full dead load including overlay, concrete parapets, curbs

and sidewalks, is imposed. The tables of anticipated cable tensions and computations shall be submitted to the Engineer for review. All computations submitted by the Contractor shall be prepared under the direction of a licensed professional engineer or structural engineer and signed and sealed in accordance with the requirements of the jurisdiction where the work is to be performed. The engineer shall be experienced in the design and construction of cable-stayed bridges. Such computations shall be submitted in a neat organized manner which is easy to follow.

h) If cable forces exceed the design forces as shown in the plans, the Contractor shall investigate adequacy of all cable components and anchorages. Cost for all and any additional material required shall be borne by the Contractor.

3.0 Construction Requirements.

3.1 Erection Sequence.

The proposed erection sequence shall be subject to the following approval procedure:

a) The Engineer will review the preliminary erection procedure proposal for general compliance with the erection requirements outlined elsewhere in these Special Provisions.

b) The Contractor shall develop and submit to the Engineer a complete description of the proposed procedure and sequence of erection, including positions and weights of equipment and stored materials at each stage. This submittal shall be of sufficient detail to permit review of the erection procedure on the structure as required above.

c) The Engineer will review the Contractor's calculations for structural stresses and camber requirements to accommodate the proposed procedure.

d) After the Engineer reviews the process and sequence of erection, the Contractor shall submit to the Engineer for review, detailed design of all falsework, temporary stay cables, temporary anchorages, and other items as required.

3.2 Geometric Control Plan.

The following shall be performed by the Contractor and will be subject to the Engineer's approval.

a) The Contractor shall be responsible for geometric control of construction so that the completed structure will conform to the lines, grades, and dimensions and cable stresses shown on the plans. A geometric control plan shall provide the regular monitoring of the superstructure deflections beginning with the addition of the first cantilever field sections and concluding with the last cantilever field section. The plan shall include the adjusting procedure to be utilized should the ends of the cantilever on either side of the tower, as erected, deviate from the predicted alignment. Final vertical geometry of the superstructure shall be set such that at 10 years after completion, final theoretical vertical geometry is achieved when considering the affects of creep. Erection of the bridge shall be governed by geometry control.

b) The Contractor shall furnish competent engineering and surveying personnel and equipment to establish and verify elevations and alignment of the structure and cable stays at every stage of construction. Stay cables shall be installed with sufficient shims or other adjustment devices to permit at least 3 inches of detensioning without releasing stay anchorage component devices. The reference target for detensioning capability shall be the as-engineered state at the end of construction. The Contractor shall be responsible to determine the need for the amount of shimming which may be required in the erection stages. The Engineer shall review each such use of shims.

c) The Contractor shall check the elevations and alignment of the structure, at every stage of the construction. All surveying shall be performed at a time that will minimize the influence of temperature. Surveying shall be provided to an accuracy of 0.01 foot. The Contractor shall maintain a record of all surveys, check readings, adjustments, and corrections and shall file such data with the Engineer daily.

d) The structure shall have a geometric configuration at 60°F normal temperature in general conformance with the dimensions shown on the plans for the dead load condition. Final adjustments shall be made to obtain the dead load cable stress and deck elevations within the following tolerances:

(1) Absolute tolerance in deck elevation at centerline of bridge shall be +4 inches to -2 inches provided that deck elevation at other major working point stations (cable attachment points) shall follow, within a tolerance of ±1/2 inch, a smooth parabolic curve passing through the final deck elevation at the centerline of bridge.

(2) Cables shall be adjusted for the dead load condition such that each individual cable shall not exceed values at ±5% of the cable dead load computed from approved working drawings. It is possible that one individual cable may have to be adjusted to lesser tolerances to prevent stress in other cables from exceeding the ±5% tolerance.

(3) The cable cross sections and geometric lengths shown on the plans are for the convenience of the Contractor only. Final fabrication lengths shall be calculated by the Contractor after erection loads and methods are known and detailed erection stress calculations have been completed. The tolerance in the fabricated length of the cable in the unstressed condition, shall be as follows:

Length Between Bearing Faces (feet)	Permissible Tolerance (inches)
200	Plus 1, minus 0
400	Plus 1 1/2, minus 0
Over 400	Plus 2, minus 0

Intermediate values may be interpolated. Differences between the actual and planned fabricated length shall be compensated for by shims at the top anchorage.

4) The elevations shown are final elevations to be achieved and do not include the effects of elastic shortening or settlement of soils during the construction period. The Contractor shall consider these effects in his analysis and in his construction plan.

3.3 Stability.

The intermediate static and dynamic stability, including wind stability, of the structure for the various stages of the construction shall be ensured by the Contractor. To fulfill this requirement, the Contractor may have to construct temporary support bents as shown on the plans to stabilize the bridge in the side spans. Temporary cable ties may be required to provide damping of wake galloping in the stay cables until dampers can be installed as shown on the plans. A series of wind tunnel tests have been conducted on a section model and aeroelastic model of the prototype structure. A report of the test results will be made available to the contractor upon request. The accuracy of the information is not guaranteed and it is not to be construed as part of the plans governing construction of the project. Contractors shall make their own determinations and evaluations of information made available in this report.

3.4 Permits.

The Contractor shall obtain required permits for the construction period, and comply with the requirements of said permits from the U.S. Coast Guard, U.S. Corps of Engineers, and other agencies having relevant jurisdiction in connection with the river traffic (including obstructions and vertical clearances) and from the FAA in connection with air navigation and obstruction markings and lighting.

3.5 Deflection.

The Contractor shall monitor the deflections in the permanent structure caused by the erection process, and report the values to the Engineer for evaluation. The procedures are to be listed in the geometric control plan above. The Engineer will be the sole judge of the erection process degree of compliance with the requirements specified herein.

At some intermediate stage of superstructure erection which the Engineer will designate depending on the approved sequence and method of erection, the tension in each cable shall be checked with a full head lift off to ensure that it is within the anticipated range. Any cable requiring adjustment at this stage shall be properly jacked and shimmed.

3.6 Side Span Closure.

The Contractor shall bring the steel edge girders and tie-down units into vertical alignment with the tie-down units. For vertical alignment the Contractor may use a system of jacks to enlarge the gap to the required dimension or use counterweighting to reduce the gap to the required dimension. The method chosen by the Contractor shall be included in erection scheme submittal to the Engineer.

3.7 Main Span Closure.

At the time of closing the steel edge girders, the Contractor shall bring the cantilevers into vertical, horizontal and rotational alignment by jacking, counterweighting or adjusting selected cables. This shall be included in the Contractor's erection scheme submittal to the Engineer.

Prior to placing the cast-in-place closure slab at the center of the main span, all precast concrete deck slab panels previously installed shall be fully post-tensioned and made composite with the steel floorbeams.

Once the midspan closure slab reaches 6000 psi, the cables, where required, shall be adjusted to produce any profile grade adjustments which may be necessary.

After adjustment of the cables, the wearing surface and barrier system shall be installed.

3.8 Restressing Stay Cables.

Upon completion of placing the wearing surface and barrier system, the cables may be restressed as required to maintain vertical geometry tolerances as specified herein.

4.0 Method of Measurement.

No separate measurement will be made for Erection of Cable Stayed Spans.

5.0 Basis of Payment.

No separate payment will be made for Erection of Cable Stayed Spans. The cost of furnishing all equipment, materials, and labor and performing all work required for erecting the cable stayed spans, as prescribed above and as shown on the plans, will not be paid for separately and all costs therefor shall be included in the contract price bid for other items of the work.

N. MECHANICAL BAR SPLICES

1.0 Description.

This work consists of furnishing all labor and materials and performing all work required to install bar splices on the reinforcement bars.

2.0 Materials.

Bar splices may be made by means of an approved mechanical device or coupler. Mechanical splices shall develop in tension at least 125 percent of the specified yield strength of the bar. All splices shall be staggered in adjacent bars not less than 24 inches unless otherwise approved or directed by the Engineer. Mechanical couplers may be used only where shown on the plans or if the space between the coupler and adjacent couplers or bars is not less than 1 1/2 times the large aggregate size in the concrete mix.

Mechanical bar splice connections to be used with epoxy coated reinforcing steel bars shall also be epoxy coated the same as the bars.

Acceptance of mechanical bar splices of approved design will be based upon qualification tests performed prior to making splices to be used in the work and upon job control tests made during the progress of the work. Such tests shall consist of the fabrication and testing by the contractor of sample splices. Acceptable sample splices shall conform to the splicing requirements specified in this Special Provision.

Each splice coupler shall be marked with the heat treatment log number.

Mechanical bar splicing procedures shall be in accordance with the manufacturer's written instructions, subject to the Engineer's approval, except as modified in this Special Provision. Mechanical bar splices shall be made using manufacturer's standard equipment, jigs, clamps, and other required accessories.

Unless otherwise shown on the plans, splice couplers shall have a clear cover of not less than that specified for reinforcement measured from the surface of the concrete to the outside of the couplers. Stirrups, ties, and other reinforcement shall be placed as necessary to provide planned clear coverage to reinforcement.

Ends of reinforcing bars to be spliced shall be cut nominally square. Bar end preparations for use with mechanical splicing devices shall be in strict accordance with the splice manufacturer's written recommendations, subject to the Engineer's approval.

The Contractor shall furnish the following information for each shipment of mechanical splice material:

1. The type or series identification of the splice material and the heat treatment lot number.

2. The bar grade and size number to be spliced by the material.

3. A copy of the manufacturer's catalog giving complete data of the splice material and procedures.

4. A manufacturer's certification, based on test results, attesting to the fact that the splicing system and materials used in accordance with the manufacturer's procedures will develop not less than 125 percent of the specified yield strength of the unspliced reinforcing bar.

5. A manufacturer's certification, based on test results, attesting to the fact that the splice material conforms in all respects to the details and materials of a specific approved design.

Field welded splices of reinforcing bars are not permitted.

3.0 Testing.

The Contractor shall furnish certified copies of the test reports by an independent testing laboratory on bars spliced by the method selected by the Contractor. A minimum of two tension tests will be made on each size bar to be spliced. The mechanical splice shall develop in tension not less than 125% of the specified yield strength of the bars connected.

4.0 Method of Measurement.

Mechanical bar splice connections will be measured per each.

5.0 Basis of Payment.

Costs of furnishing and installing the mechanical bar splice connections shall be paid for at the contract unit price for Mechanical Bar Splice.

O. PARTIAL PAYMENT FOR PLATE STEEL

1.0 Delete Sec 109.7.2.2.4.

P. SELF-CONSOLIDATING CONCRETE FOR DRILLED SHAFTS (June 2009)

Amend Sec 701 to include the following:

701.3.1.1 Self-consolidating Concrete. In lieu of using Class B-2 concrete, the contractor may use Self-consolidating Concrete (SCC) to construct the drilled shafts. Self-consolidating Concrete is a specially designed concrete that enables the concrete to flow under the influence of its own weight and does not require mechanical vibration for consolidation. All material, proportioning, mixing and transporting of concrete shall be in accordance with Sec 501, except as specified herein.

701.3.1.2 Aggregate. Fine and coarse aggregate shall be in accordance with Sec 1005, except that the requirements for gradation will not apply.

701.3.1.2.1 Gradation. The contractor shall submit the target gradation and allowable gradation range of each fraction of each aggregate source used in the mix design. During production, the contractor shall be within the allowable gradation range for each aggregate that was submitted.

701.3.1.2.2 Maximum Size. For SCC mixes, 100 percent of each fraction shall pass the ¾-inch sieve.

701.3.1.3 Admixture. All chemical admixtures shall be in accordance with Sec 1054, except as noted herein:

701.3.1.3.1 High Range Water Reducer. The polycarboxylate based high range water reducer shall be in accordance with AASHTO M 194, Type F or G. The high range water reducing admixture shall be added only after the concrete has reached the job site to reduce the potential for flash setting.

701.3.1.3.2 Viscosity Modifier. The viscosity-modifying admixture shall be evaluated according to the test methods and mix design proportions referenced in AASHTO M 194.

701.3.1.3.3 Combination. The self-consolidating admixture system shall consist of either a polycarboxylate based high range water-reducing admixture or a polycarboxylate based high range water reducer combined with a separate viscosity-modifying admixture.

701.3.1.4 Concrete Mix Design. At least 45 days prior to using SCC, the contractor shall submit a mix design for approval to Construction and Materials. The SCC mix shall be designed by absolute volume methods or an optimized mix design method such as Shilstone or other recognized optimization method.

701.3.1.4.1 Required Information. The mix design shall contain the following information:

(a) Source, type and specific gravity of Portland cement

(b) Source, type (class, grade, etc.) and specific gravity of supplementary materials, if used

(c) Source, name, type and amount of admixture

(d) Source, type (formation, etc.), ledge number if applicable, and gradation of the aggregate

(e) Specific gravity and absorption of each fraction in accordance with AASHTO T 85 for coarse aggregate and AASHTO T 84 for fine aggregate, including raw data

(f) Unit weight of each fraction in accordance with AASHTO T 19

(h) The design air content and target slump flow

(i) Batch weights of Portland cement and supplemental cementitious materials

(j) Batch weights of coarse, intermediate and fine aggregates

(k) Batch weight of water

701.3.1.4.2 Water Amount. The water per cementitious materials ratio shall meet the following requirements:

V. Water/Cementitious Materials Ratio	
Minimum	**Maximum**
0.32	0.45

701.3.1.4.3 Percent Fine Aggregate. The percent fine aggregate by absolute volume should range from 35 to 50 percent.

701.3.1.4.4 Minimum Cementitious Amount. The total amount of cementitious materials shall not be below 650 pounds per cubic yard.

701.3.1.4.5 Slump Flow. The slump flow test shall be performed in accordance with ASTM C 1611. The slump flow shall meet the following requirements:

Slump Flow (inches)

W. Minimum	X. Maximum
22	30

The visual stability index rating shall be a maximum of 1.

701.3.1.4.6 Passing Ability. Passing ability of SCC shall be determined in accordance with ASTM C 1621 and shall not exceed 2 inches. The visual stability index rating shall be a maximum of 1.

701.3.1.4.7 Air Content. The minimum air content, when placed in the work, shall 5.0 percent. Test shall be performed in accordance with AASHTO T 152.

701.3.1.4.8 Compressive Strength. Concrete shall have a 28-day minimum compressive strength of 4000 psi (28 MPa). Test shall be performed in accordance with AASHTO T 22.

701.3.1.5 Additional Information. The contractor shall submit a Batching Sequence Plan outlining how the SCC mix will be batched and mixed. The Batching Sequence Plan shall be submitted to the Engineer for approval.

701.3.1.6 Trial Batch A trial batch shall be done prior to SCC being used to ensure the mix is in accordance with this special provision. The SCC mix design shall not be used until all of the specified criteria have been met. The trial batch shall be at least 3 cubic yards. The Engineer shall be present during the trial batch.. The SCC mix shall be tested for air content, slump flow, visual stability index, passing ability and compressive strength.

701.3.1.7 Production. SCC mix shall not be used until the concrete mix, the Batching Sequence Plan and the trial batch have been approved. The SCC mix shall not vary from the mix design submitted for approval. Any changes in material sources, aggregate gradations, or material content shall require a new SCC mix be resubmitted for approval. Changes to the water content and chemical admixture dosages will be allowed to handle changes in environmental conditions.

701.3.1.7.1 Forms. SCC mixes generate higher fluid pressures than conventional concrete mixes. Forms shall be mortar-tight and capable of supporting the additional pressure.

701.3.1.7.2 Reinforcement. Reinforcement and other critical components shall be tightly secured in the form to prevent these items from shifting during concrete placement.

701.3.1.8 Quality Control. The quality of freshly mixed SCC may fluctuate at the beginning of daily production, the contractor shall conduct air test, slump flow, visual stability index, and passing ability for every truck until consistent and compliant results are obtained. Subsequently, all testing shall be conducted in accordance with MoDOT specifications.

701.3.1.8.1 Slump Flow Requirement. The slump flow shall be within +/- 2 inches of the target slump flow designated by the contractor and shall not exceed 30 inches.

Q. STAY CABLES

1.0 Description.

This work shall consist of furnishing, testing and installing stay cables in accordance with the details shown on the plans and the "Recommendations for Stay Cable Design, Testing and Installation," 5th Edition by the Post Tensioning Institute (PTI). All material sampling, testing, installation and certification recommendations shall be undertaken except as modified herein.

2.0 Materials.

2.1 Cable stays shall be comprised of individually sheathed strands with corrosion inhibiting coating in accordance with PTI 3.3.

2.2 Pipe sheathing shall be co-extruded HDPE pipe meeting the requirements of PTI 3.5.3. The exterior color shall be white. The surface of the cable shall be treated in such a way that rain/wind induced vibrations are suppressed while keeping the maximum drag coefficient below 0.7. The contractor shall design and submit a suitable surface texture for approval.

2.3 Cable stays shall not be grouted in the final condition.

2.4 Strand Replacement.

The stay cable system shall be configured such that any individual strand may be removed and replaced at any time during the service life of the stay. This shall include the ability to replace all strands in a stay one at a time.

2.5 Stay cable damping devices.

Passive damping devices (dampers) shall be designed and fabricated by the contractor to provide no less that 1 percent of critical damping for all cables. Dampers shall be fixed to the guide pipe of the deck anchorage and shall not necessitate additional support connected to the deck. Dampers shall be confined inside a cylindrical rigid protective housing against mechanical damage and acts of vandalism.

The performance of any damper shall be assessed by calculation submitted to the engineer for approval. The calculation shall consider all losses occurring in the damping device, including but not limited to:

Effect of cable sag
Flexibility of the damper support
Inherent losses of the damper due to the flexibility of its components, play in connections, temperature effects, etc.

The contractor shall demonstrate by calculation the damper's performance for cable loading at the service limit state conditions, including but not limited to effects of temperature variation, wind loading on the cable, variation in service stresses, etc.

The contractor shall estimate the reaction force of the damper onto the cable connection under extreme dynamic loading (amplitude L/1500, 3rd mode of vibration) and submit the result to the engineer for approval.

The contractor shall submit for the proposed damper at least one report of a full scale cable test assessing the inherent losses to be considered for its performance estimation. Such a full scale test shall consist of a suitably sized cable equipped with a damper of same build and similar size. The cable shall be subjected to an external initial excitation and its free response shall be recorded. The test report shall include damping curves plotting the measured additional damping ratio against the amplitude of cable vibration for the first three modes as well as their comparison with theoretical calculations.

In order to ensure a stationary behavior of the cable under continuous excitation, the maximum of the damping curve for amplitudes smaller than L/1500 shall exceed the required damping ratio by a suitable safety factor to be submitted to the engineer for approval.

The damper performance shall be validated on site by measurement after installation on at least two dampers on cables of representative size. Such measurements shall consist of recording the free response of the damped cable under initial excitation of the first mode of vibration. They shall be made under favorable climatic conditions (no rain, benign wind speed) in order to prevent uncontrolled excitation of higher modes and be submitted to the engineer for approval.

If the damper provides tuning facilities which can be adjusted on site, the maximum achievable additional damping ratio shall be independent of such site settings or otherwise their effect shall be demonstrated during the full scale test specified above.

The design life of the damper shall be minimum 50 years. Components which are expected to wear may be replaced within the design life. The design life of wear components shall be indicated by the contractor on the shop drawings. Wear component replacement shall be achievable without excessive traffic disturbance. The contractor shall submit a replacement procedure for the wear components for approval. Any protective cover shall be easily removable for inspection of the dampers and its main damping elements. No fluid leakage on the roadway, the sidewalk or into the environment is acceptable throughout the design life of the damper during normal operation and maintenance.

Neither the damper, nor the stay cable anchorage shall be harmed by excessive cable displacement induced by extreme loading as specified by the engineer. The contractor shall design and fabricate a mechanical stop for extreme cable movements to achieve this. The dampers and/or the stops shall further be designed to prevent damage to the damper by excessive dynamic loading that may occur under these extreme loading effects.

3.0 Stay Cable Testing:

Testing shall be performed in accordance with PTI. Fatigue testing of stay specimens shall be tested to no fewer than 2,000,000 cycles. Stay cable components may be tested to fewer cycles with the appropriate increase in stress range.

4.0 Method of Measurement.

The accepted Stay Cables, complete in place will be measured as one unit. Partial payment will be made based on the percentage of work completed as determined by the Engineer.

Stay cable testing shall not be measured separately for payment but shall be paid at the contract lump sum price for Stay Cable Testing.

5.0 Basis of Payment:.

The accepted Stay Cables will be paid for at the contract lump sum price of the Stay Cables complete in place. This shall be full compensation for furnishing, fabricating, transporting and installing stay cables and damping devices and for all materials, labor, tools and equipment necessary to complete the work as required by the specifications and plans.

Testing of Stay Cables will be paid for at the contract lump sum price for the Stay Cable Testing.

R. INSPECTION ACCESS

1.0 Description.

This item consists of furnishing and installing all steel access doors, ladders, grating, grating supports, and catwalks as shown on the plans and specified herein.

2.0 Materials.

2.1 Access doors, access, door frames, ladders, catwalks, and grating support materials shall conform to the requirements of Sec 712 for ASTM A 36, ASTM A 709 Grade 36 or Grade 50 material as indicated in the plans.

2.2 Grating materials shall meet the following requirements:

1. The grating shall be an open bearing bar welded steel grating with sizes in accordance with the plans.
2. The surfaces shall be serrated for slip resistance.
3. The crossbars shall be connected to the bearing bars by arc welding.

2.3 All access doors, door frames, ladders, catwalks, grating supports, and sections of grating shall be hot-dipped galvanized in accordance with ASTM A 123 after fabrication. Bolts, nuts, and washers shall be galvanized in accordance with ASTM A 153. Damaged coatings shall be repaired in accordance with Sec 1081.

3.0 Measurement.

No direct measurement will be made.

4.0 Basis of Payment.

Roof scuttles, grab bars, ladders and cages, platforms and catwalks, grating and grating supports, handrails, access doors, access door frames, inspection traveler access at Pier 10, and all other miscellaneous steel and connecting hardware for inspection access including the gravity ventilators will be paid for at the contract lump sum price for Inspection Access.

S. DRAINAGE SYSTEM (ON STRUCTURE)

1.0 Description.

1.1 The work under this item consists of furnishing, fabricating and installing the drainage items necessary to complete the entire drainage system as shown on the design plans.

1.2 Detailed shop drawings of the drainage system shall be prepared and submitted to the engineer. Shop drawings shall be in accordance with Sec 1080. Catalog data may be furnished for components that are standard manufactured items in lieu of detailed drawings providing governing dimensions are given.

2.0 Materials.

2.1 Scupper outlets and grates shall be equivalent to Neenah R-3921-V1. Castings shall be gray iron in accordance with AASHTO M105, Class 35B. A fabricated outlet and grate of similar size and in accordance with the requirements for ASTM A 709 Grade 36 (250) steel may be submitted for approval. Castings shall be coated a prime coat of the coating system as specified on the bridge plans to provide a minimum dry film thickness of 5 mils (127 µm) or may be galvanized in accordance with ASTM A 385. Steel outlets and grates shall be coated as described above or galvanized in accordance with ASTM A 123.

2.2 Reinforced fiberglass pipe, collection basins and fittings shall be a Reinforced Thermosetting Resin Pipe (RTRP) system in accordance with the requirements of ASTM D 2996. The RTRP system shall have a minimum short time rupture strength hoop tensile stress of 30,000 psi (207 MPa). The RTRP system shall be pigmented resin throughout the wall. The color of the RTRP system shall be concrete gray or as specified on the bridge plans. The RTRP system shall not be coated with paint, gel-coat or any other exterior coating.

2.3 The contractor shall furnish a manufacturer's certification to the engineer for each lot furnished, certifying that the materials supplied is in accordance with all requirements specified. The certification shall include results of all required tests. Acceptance of the material will be based on the manufacturer's certification and upon results of such tests as may be performed by the engineer. The certification shall show the quantity and lot number it represents.

3.0 Construction Requirements.

3.1 All connections shown on the plans to facilitate future removal for maintenance cleanout or flushing shall be made with a threaded gasket coupler system, bolted gasket flange system or a female to male threaded PVC plug. Adhesive bonded joints will be permitted for runs of pipe between such connections.

3.2 Runs of pipe shall be supported at a spacing of not greater than the lesser of those as recommended by the manufacturer of the pipe or as shown on the bridge plans. Supports that have point contact or narrow supporting areas shall be avoided. Standard sling, clamp, clevis hangers and shoe supports designed for use with steel pipe may be used. Minimum hanger thickness shall be 3/16 inch (5 mm) with the minimum strap width for the pipe sizes shown in the table below. Straps shall have 120 degree minimum contact with the pipe. Pipe supported on a surface with less than 120 degrees of contact shall have a split fiberglass pipe protective sleeve bonded in place with adhesive. All new steel, hangers and miscellaneous hardware for drainage system shall be ASTM A 709 Grade 36 (250) steel except as noted on the bridge plans. All new steel, hangers and miscellaneous hardware for drainage system shall be galvanized in accordance with ASTM A 153 except as noted on the bridge plans.

Pipe Sizes inches (mm)	Minimum Strap Width inches (mm)
3 (76.2)	1.25 (32)
4 (101.6)	1.25 (32)
6 (152.4)	1.50 (38)
8 (203.2)	1.75 (45)
10 (254.0)	1.75 (45)
12 (304.8)	2.00 (51)
14 (355.6)	2.00 (51)

3.3 The RTRP system shall be handled and installed in accordance with guidelines and procedures as recommended by the manufacturer.

4.0 Method of Measurement.

No measurement will be made.

5.0 Basis of Payment.

Payment for the above described work, including all scuppers, grates, reinforced fiberglass pipe, collection basins, fittings, collars, hangers, supports and all other material, equipment, labor and any other incidental work necessary, will be considered completely covered under the contract lump sum price for "Drainage System (On Structure)."

T. PRECAST PRESTRESSED CONCRETE SLAB PANELS

1.0 Description.

This work shall consist of the construction and placement of precast, prestressed concrete slab with closure joint concrete and steel reinforcement in accordance with applicable portions of the Standard Specifications, these Special Provisions and in conformity with lines, grades, thicknesses, and typical cross sections shown on the bridge plans.

The work associated with precast, prestressed concrete slab panels shall consist of the following:

a) Casting of the precast elements, including mild steel reinforcement, post-tensioning ducts and all embedded structural items.

b) Handling and erection.

c) Placing the cast-in-place portions of the concrete slab including reinforcement, post-tensioning ducts, and all embedded structural items. This item includes the cast-in-place portion of the concrete deck directly above the concrete counterweights, closure pours between precast panels and overhangs.

d) Furnishing, installing, stressing and grouting post-tensioning steel.

2.0 Shop Drawings

The Contractor shall submit to the Engineer for review, all details, calculations, information and applicable drawings of the methods, materials, equipment, and procedures proposed for use in constructing and erecting the precast, prestressed concrete slab panels at proper grade and alignment in the finished structure. Included shall be calculations and details showing locations and number of lifting points and methods and equipment for handling the precast slab panels. Temporary tensile stress (at service load levels) in the concrete roadway slab will be allowed during erection and shall not exceed $0.095\sqrt{f'c}$ (ksi). A 20 percent impact factor shall be used in these computations and the slab reinforcing steel shall be neglected.

3.0 Construction Requirements

3.1 Precast Panels.

Precast slab panels shall be furnished in accordance with the applicable requirements of Sec 1029 and the following:

Concrete for the precast slab units shall conform to all requirements for Class A1 (6,000 psi) concrete.

Ducts for slab panel post-tensioning steel shall be corrugated polyethylene or polypropylene. The duct shall have a minimum thickness of 0.08 inches and shall have a white coating on the outside or shall be of white material with ultraviolet stabilizers added. Polyethylene duct shall be fabricated from resins meeting or exceeding the requirements of ASTM D 3350 with a cell classification of 345464A. Polypropylene duct shall be fabricated from resins meeting or exceeding the requirements of ASTM D 4101 with cell classification range of PP0340B14541 to PP0340B67884. Use resin containing antioxidants with a minimum Oxygen Induction Time (OIT) according to ASTM D 3895 of not less than 20 minutes. The OIT tests shall be performed on samples taken from the finished product.

3.1.1 Preparation of Panel:

Promptly after the concrete has been placed and vibrated, it shall be struck off to the proper profile. The area to be textured shall then be floated a minimum amount to close the surface. The surface shall be checked longitudinally with a 10 foot straight edge, and the surface shall not deviate from a straight line by more than 3/16 inch in ten feet. After any irregularities are corrected, the surface shall be finished in accordance with the selected wearing surface.

Latex Modified Concrete Wearing Surface: The top surface of the slab panels shall receive a grooved finish to facilitate bond with the latex modified concrete wearing surface. The scoring shall be transverse to the centerline of the bridge. The grooves shall be approximately 3/16 inch wide, be on 3/4 inch centers and be approximately 1/8 inch in depth.

Alternative Asphalt Wearing Surface: The top surface of the slab panels shall have a smooth, fine-textured finish in accordance with Sec 703.3.5.8.

Precast panels shall not be erected until they have reached the age of 90 days.

3.1.2 Bedding Material.

Bedding material for all precast panels shall be HDPE blocks. Material shall compress not more than 50% of its original thickness under load of 350 psi. The number and location of HDPE blocks shall be shown on the shop drawings.

3.2 Cast-in-Place Closures.

The cast-in-place portions of the concrete slab shall be constructed in accordance with Sec 703 and these Special Provisions.

The cast-in-place portions of the concrete slab shall be constructed of Class A1 (6,000 psi) concrete.

Conventional forming shall be used for the overhang of the edge girder. Conventional overhang forming may be supported using hardware that is designed to hook over the inside of the top flange. The hook may be made from a smooth, round steel rod or from a flat steel bar. The dimensions of the hook rod or bar shall be such that the bottom of the hook will fit snug against the flange without shims. The total hook assembly shall be galvanized in accordance with ASTM A123. The hardware at the overhang support end shall meet the requirements of Standard Specification 703.3.2. Support pads for the slab panels shall be notched to provide mortar tight fit around the hook.

4.0 Method of Measurement.

The area of the Precast Prestressed Concrete Slab Panels will be measured and computed to the nearest square yard. This area will be measured transversely out to out of entire slab and longitudinally from end to end of the entire slab. No deductions shall be made for blockouts at the stay pipes or other openings shown on the plans. No separate measurement or payment will be made for cast-in-place slab concrete placed as part of the deck system.

Final measurement will not be made except for authorized changes during construction, or where appreciable errors are found in the contract quantity. The revision or corrections will be computed and added to or deducted from the contract quantity.

5.0 Basis of Payment.

The amount of completed and accepted work, measured as provided above, will be paid for at the contract unit price per square yard for Precast Prestressed Concrete Slab Panels, which price will include full compensation for furnishing and placing all forms, all surface preparation required,

furnishing and placing all concrete and reinforcing steel for the precast, prestressed concrete slab panels and cast-in-place concrete for closure joints, overhangs, and slab concrete over the concrete counterweights, for furnishing and placement of all post-tensioned epoxy coated bar steel, ducts, stressing and grouting, all labor, equipment, tools, and incidentals necessary to complete the work.

U. WEARING SURFACE

1.0 Description.

This work shall consist of furnishing and installing bridge deck wearing surface comprised of either latex modified concrete or asphalt.

1.1 Profile Grade.

The final bridge deck profile shown in the plans is two inches above the precast prestressed concrete slab based on a 2-inch latex modified concrete overlay. No adjustments to any elevations in the plans are required for substituting the asphalt wearing surface for the latex modified concrete. If used, the asphalt wearing surface will be placed as specified below with a thickness transition, 40 feet in length, between the back of the expansion joint device and the full thickness at each end of the cable-stayed unit.

2.0 Materials.

2.1 Latex Modified Concrete

Latex modified concrete shall be in accordance with Sec 505.20.

2.2 Asphalt Wearing Surface

2.2.1 Elastomeric Materials.

The waterproofing membrane system shall consist of a 120-mil, two coat, methyl-methacrylate (MMA) based, cold liquid spray applied, seamless elastomeric waterproofing membrane system. The system shall also include a MMA primer/sealer as well as a tack coat. All materials shall be Volatile Organic Compound (VOC) compliant.

Materials shall be the "Eliminator Two Coat" System as manufactured by Stirling Lloyd Products, Inc., or an approved equal.

Stirling Lloyd Products, Inc.,
152 Rockwell Road, Bld A
Newington, CT 06611
Phone: (860) 666-5008
Fax: (860) 666-5106

2.2.2 Primer.

The primer/sealer shall be 100 percent solvent free reactive methyl-methacrylate-based, two-component resin capable of full cure in 40 minutes at 68°F.

All components shall be measured and mixed in accordance with the manufacturer's recommendations.

The MMA primer/sealer shall consist of one coat with an overall coverage rate of 125 square feet per gallon. The primer shall be applied using a roller or by a single component spray system approved for use by the manufacturer. If required by site conditions, brush application will be allowed. Porous concrete may require a second coat of primer should the first coat be absorbed.

2.2.3 Membrane.

The waterproofing membrane shall consist of a two-coat, color-coded methyl-methacrylate. Spray applied coats shall have a wet film thickness of 60 mils per coat to achieve an overall coverage rate of 1.5 square yards per gallon.

The membrane shall be comprised of two liquid components and a hardener powder which is to be added in accordance with the manufacturer's recommendations.

The metal and concrete substrates shall be coated in a methodical manner. Checks for wet film thickness shall be carried out typically once every ten square yards.

2.2.4 Tack Coat

The tack coat shall be fully compatible with the liquid membrane.

2.2.5 Asphalt Wearing Surface.

The asphalt wearing surface shall consist of two 1.25-inch lifts of SP095BSM PG76-22 in accordance with Sec 403.

3.0 Submittals.

Product Data submitted for approval shall consist of the latest edition of manufacturer's literature with performance data, installations and procedures. The submitted list of installations shall include a minimum of five long-span highway bridges completed with the proposed membrane system during the last five years and shall include owner contact names and phone numbers.

A 12-inch square sample of the proposed membrane with color, texture and thickness representative of overall appearance shall be included with the submittal for approval by the Engineer.

4.0 Installation.

The waterproofing membrane shall be installed per the manufacturer's written instructions and the following:

Concrete shall have cured a minimum of 14 days.

Surfaces shall be free of oil, grease, curing compounds, loose particles, moss, algae, growth, laitance, friable matter, dirt and bituminous products.

The concrete substrate shall be sounded and all spalls repaired prior to placement of the prime coat.

The waterproofing membrane shall be applied to the entire deck surface longitudinally from end to end of expansion joints and transversely from gutterline to gutterline. It shall also extend 2 inches up the face of median barriers and barrier curbs.

4.1 Technical Representative.

A technical representative of the manufacturer of the waterproofing membrane system shall be present prior to and during placing of the membrane. The technical representative shall provide the engineer with written recommendations supplementing these specifications. The technical representative shall review the Contractor's proposed procedures and equipment for all phases of the work and shall advise the engineer of any deficiencies concerning the procedures and equipment. Work shall not begin until approval is granted by the Engineer.

It shall be the Contractor's responsibility to notify the manufacturer's technical representative sufficiently in advance of work. The expense of having the manufacturer's technical representative present shall be the Contractor's responsibility and no direct payment will be made for this expense.

4.2 Precast Prestressed Concrete Slab Panels.

The surface profile of the Precast Prestressed Concrete Slab Panels shall have a smooth, fine-textured finish in accordance with Sec 703.3.5.8.

4.3 Repairs.

If an area is left untreated or the membrane becomes damaged, a patch repair shall be carried out to restore the integrity of the system. The damaged area shall be repaired in accordance with the manufacturer's written instructions.

Where the membrane is to be joined to existing cured material, the new application shall overlap the existing one by at least 4 inches.

5.0 Inspection.

Prior to priming of the surface, the Engineer and the Contractor shall inspect and approve the prepared substrate.

Random tests for adequate tensile bond strength shall be conducted on the substrate by the Contractor at the job site using an Elcometer Adhesion Tester Model 106 or similar at a minimum frequency of one test per six square yards. Smaller areas shall receive a minimum of three tests.

Adequate surface preparation will be indicated by tensile bond strengths of primer to the substrate greater than or equal to 100 psi with failure in the concrete.

Should the tensile bond strengths be lower than the minimum specified, the Engineer may request additional substrate preparation.

Cracks and joints shall be treated in accordance with the manufacturer's recommendations as approved or directed by the Engineer.

6.0 Waterproofing Membrane Field Quality Control.

The following tests and observations shall be conducted by the Contractor or manufacturer's representative and recorded on a form to be submitted to the Engineer:

Temperature: Air, substrate temperatures and dew point.

Adhesion Tests: Adhesion tests shall be checked per Subsection 907-817.03.6.4.

Membrane Thickness: Wet film thickness shall be checked every nine square meters using a gauge pin or standard comb type thickness gauge.

Coverage Rates: Rates for all layers shall be monitored by checking quantity of material used against the area covered. All areas to be waterproofed shall be clearly marked prior to the application of each material placed to verify quantities used against square footage. All drums and pails of materials shall be consecutively numbered to help verify usage rates during application.

7.0 Wearing Surface.

Prior to placing the asphalt wearing surface, the Engineer and Contractor shall jointly review the areas to which the completed system has been installed. Any irregularities or other items that do not meet the requirements as specified herein and the approval of the Engineer shall be addressed at this time.

8.0 Method of Measurement.

The Wearing Surface, whether latex modified concrete or asphalt, will be measured and computed to the nearest square yard. This area will be measured longitudinally from centerline to centerline of expansion joints and transversely from gutterline to gutterline. No measurement will be made for the width of the median barrier.

Final measurement will not be made except for authorized changes during construction, or where appreciable errors are found in the contract quantity. The revision or correction will be computed and added to or deducted from the contract quantity.

9.0 Basis of Payment.

The Wearing Surface shall be paid for at the contract unit price, of the alternate selected, as shown on the plans per square yard, which price shall include all material, testing, equipment, labor, and any other incidental work necessary to complete the work.

V. COOPERATION BETWEEN CONTRACTORS AND SEQUENCE OF WORK

1.0 Description.

This contract is one of several projects essential to the overall improvements along Relocated I-70. Each of the contracts depends on certain portions of the work to be completed by others in order to complete the program on schedule.

The following table indicates all such items of the work which have specific completion dates. It is essential that the Contractor responsible for the work complete these items on or before the date indicated so that subsequent contracts may plan and execute their work accordingly.

1 REVISED

	Must Complete Work	Completion Date	To Allow Work: Main Span: Main Span Superstructure	Anchor Pier 13	Pier 10 Modular Joint & Barrier Slider Plates	MO Appr Overhead Sign Truss	MO Appr Striping	MO Appr Electrical	MO Appr Misc. Signing	Pier 13 Modular Joint & Barrier Slider Plates	IL Appr Shiping	IL Appr Electrical	IL Appr DMS Sign & Hookup @ Pier 19 WB	IL Appr Misc. Signing	Conduit and Power to DMS @ Pier 19 EB	Other: MO Appr Girders	IL Appr Girders	IL Appr Pier 14	IL Connector Girders	IL Connector - Pier 23 Modular Joint & Barrier Slider Plates	IL Connector DMS Boards @ Pier 19 EB	MO Interchange Roadway Fill	Relocate Overhead Power Lines over Pier 14
Main Span (J6I0984)	Anchor Pier 10	Jan. 1, 2011														X							
	Anchor Pier 13	Dec. 1, 2011															X						
	Conduit and Power to DMS @ Pier 19 EB	July 1, 2013																			X		
MO Appr (J6I0984B)	MSE Wall & Fill	Nov. 1, 2011																				X	
	Pier 6	Nov. 1, 2011				X																	
	Deck & Barriers	Nov. 1, 2011			X		X	X	X														
IL Appr (J6I0984C)	Access Road #1	Dec. 1, 2010		X																			
	Pier 14	Feb. 1, 2011																					X
	Pier 23	Feb. 1, 2011																	X				
	Deck & Barriers from Pier 13 to Pier 22 EB/WB	May 1, 2013								X	X	X	X	X	X								
Ameren Power	Relocate Overhead Power Lines over Pier 14	Mar. 1, 2011**	X															X					

** Line can be de-energized during setting of girders

1 REVISED

	Must Complete Work	Completion Date	To Allow Work: Main Span: Main Span Superstructure	Anchor Pier 13	Pier 10 Modular Joint & Barrier Slider Plates	MO Appr Overhead Sign Truss	MO Appr Striping	MO Appr Electrical	MO Appr Misc. Signing	Pier 13 Modular Joint & Barrier Slider Plates	IL Appr Striping	IL Appr Electrical	IL Appr DMS Sign & Hookup @ Pier 19 WB	IL Appr Misc. Signing	Conduit and Power to DMS @ Pier 19 EB	Other: MO Appr Girders	IL Appr Girders	IL Connector Girders	IL Connector DMS Board @ Pier 19 EB	MO Interchange Roadway Fill	Relocate Overhead Power Lines over Pier 14
Main Span (J6I0984)	Anchor Pier 10	Jan. 1, 2011														X					
	Anchor Pier 13	Dec. 1, 2011															X				
	Conduit and Power to DMS @ Pier 19 EB	July 1, 2013																	X		
MO Appr (J6I0984B)	MSE Wall & Fill	Nov. 1, 2011																		X	
	Pier 6	Nov. 1, 2011				X															
	Deck & Barriers	Nov. 1, 2011			X		X	X	X												
IL Appr (J6I0984C)	Access Road #1	Dec. 1, 2010		X																	
	Pier 14	Feb. 1, 2011																			X
	Pier 23	Feb. 1, 2011																X			
	Deck & Barriers from Pier 13 to Pier 23 EB/WB	May 1, 2013								X	X	X	X	X	X						
Ameren Power	Relocate Overhead Power Lines over Pier 14	Mar. 1, 2011**	X																		

** Line can be de-energized during setting of girders

2.0 Shared Access.

When necessary for proper prosecution of work, each contractor shall permit the other access through the overlapping construction areas and the use of any access or haul roads constructed by others.

3.0 Basis of Payment.

All expenses incurred by the contractor by reason of compliance with these requirements shall be considered as included in and completely covered by the contract unit prices for the various items included in the contract.

W. PROTECTIVE COATINGS FOR EXPOSED CONCRETE SURFACES

1.0 Description.

Piers 10 and 13 shall be protected with Protective Coating – Concrete Bents and Piers (Epoxy) in accordance with Sec 711. Piers 11 and 12 shall be coated with Texcote XL-70 Bridge Cote or approved equal applied in accordance with this Special Provision.

2.0 Materials.

Material for Piers 11 and 12 shall be Texcote XL-70 Bridge Cote or approved equal, designed specifically for coating concrete and must be suitable for application on damp, uncured concrete and/or cured concrete. Only one coating material shall be used on this structure. It shall be delivered to the job site in sealed containers bearing the manufacturer's original labels. The brand, color, and type shall be clearly marked on each container. A copy of the manufacturer's printed instructions shall be made available. The coating material shall be stored in airtight, upright containers. The containers shall be stored in a dry location where the temperature is above 40°F and less than 100°F.

The masonry coating shall have a shelf life of not less than 12 months. After application, the coating shall be dry to the touch within 48 hours and shall achieve a final cure within 2 to 3 weeks under ideal conditions.

The color of the applied masonry coating shall be white. Color samples shall be submitted to the engineer for approval.

2.1 Material Tests And Certification.

Before material is the manufacturer shall certify that the product furnished is in accordance with the same formula as that previously subject to the tests specified below and approved. Copies of the current tests reports shall be attached to certification. All testing shall be performed by a qualified commercial testing laboratory acceptable to the Engineer. The applied finish coating shall be subjected to and shall satisfy the requirements of the tests listed below, prior to use on a structure.

(a) Freeze-Thaw Tests. The applied finish coating shall be subjected to freeze-thaw cycle tests as follows:

1. Three concrete specimens, not less than 4 inches by 6 inches by 6 inches, of the mix design for the structure shall be cast and cured. Fourteen days moist curing with a drying period at room temperature, 60° to 80°F, for 24 hours will be required before the specimens are coated with the applied finish. Caution shall be taken that there be no excessive oil on specimen forms. The finish coating shall be applied to the sides of specimens at a spreading rate of 50±10 square feet per gallon. Brush application will be permitted. Cementitious coatings shall be cured at room temperature and 30 percent relative humidity for 24 hours, at room temperature and 90 percent relative humidity for 48 hours, and at room temperature and 50 percent relative humidity for 4 days for a total curing time of 7 days. Other coatings shall be cured at room temperature for 48 hours after the completion of curing.

2. The specimens shall be immersed in water at room temperature for 3 hours, then removed.

3. The specimens shall be placed in cold storage at -15°F for 1 hour, then removed.

4. The specimens shall be thawed at room temperature for one hour.

5. Steps 3 and 4 shall be repeated for a total of 250 cycles. At the end of 250 cycles, the specimens shall show no visible defects.

(b) Accelerated Weathering. The applied finish coating shall be subjected to 7,500 hour exposure test in a Twin-Carbon-Arc- Weatherometer, ASTM G 23, Type D, at an operating temperature of 145°F. The test shall be made at 20-minute cycles consisting of 17 minutes of light and 3 minutes of water spray plus light. At the end of the exposure test, the exposed samples shall show no chipping, flaking, or peeling. The panels for this test shall be prepared by applying the coating at a spreading rate of 50±10 square feet per gallon to both sides and edges of panels cut from asbestos cement shingles in accordance with Federal Specification SS-S-346, Type I. Curing time shall be in accordance with (a).

(c) Fungus Growth Resistance. The applied finish coating to be used shall pass a fungus resistance test in accordance with Federal Specification TT-P-29g. Fungus growth shall not be indicated after a minimum incubation period of 21 days.

(d) Abrasion Resistance. The applied finish coating to be used shall pass the 2,000 litre sand abrasion test in accordance with Method 6191 Abrasion Resistance—Falling Sand, Federal Test Method Standard 141a, ASTM D968-81. The specimens for this test shall be prepared by applying the coating to a cleaned steel panel at a spreading rate of 50±10 square feet per gallon. The specimens shall be cured at room temperature for 21 days.

(e) Impact Resistance. The coating shall be applied to a concrete panel prepared according to Federal Text Method Standard 141a, Method 2051, at a spreading rate of 50±10 square feet per gallon, and allowed to cure for 21 days at room temperature. The test shall then be run using the Gardner Mandrel Impact Tester in accordance with ASTM D 2794 using a 1/2-inch indenter with an impact load of 6 inch-pounds. The coating shall show no chipping under this impact load.

(f) Salt-Spray Resistance Test. A concrete specimen shall be coated at the rate of one gallon per 50 square feet ±10 percent and cured for 21 days at room temperature. The coated specimen shall be exposed to a 5 percent salt solution in accordance with ASTM B 117 for 2,500 hours where the atmospheric temperature is maintained at 90°±2°F. At the end of 2500 hours of exposure, the coating shall show no ill effects, loss of adhesion, or deterioration.

(g) Flexibility Test. A sheet metal specimen shall be coated with the applied finish coating at a rate of one gallon per 45 square feet ± 10 percent and allowed to cure for 48 hours at room temperature. The coated specimen shall be bent 180 degrees over a one inch round mandrel. After bending, the coating shall show no breaking.

In addition to the certification and test reports required above, a service record shall be supplied showing that the finish coating material has a satisfactory service record on concrete surfaces for a period of not less than 5 years prior to the date of submission of the service record. The finish coating shall also have shown satisfactory service characteristics without peeling, chipping, flaking, and non-uniform change in texture or color. A specific structure for the specific product shall be named for the service record.

In addition to the above requirements, the manufacturer shall submit, for each batch of material used, the following product analysis data:

(a) Weight per gallon.
(b) Viscosity in Kreb units.
(c) Weight percent pigment.
(d) Weight percent vehicle solids.
(e) Infrared spectra of vehicle solution.

3.0 Construction Requirements.

The application, including equipment used, shall be in accordance with the manufacturer's printed recommendations. The material shall be applied by qualified personnel experienced in the work.

The material shall be thoroughly mixed in its original container. If skins have formed, they shall be removed prior to mixing the material. The material shall not be thinned. The masonry coating may be applied over damp, but not wet surface. It shall be applied at a uniform film thickness at a rate of 50±10 square feet per gallon. The application rate shall be sufficient to produce a uniform color and texture. The material shall be applied only when the ambient temperature is between 40°F and rising, and 100°F. It shall not be applied over frozen surfaces or if rain is imminent. Should rain occur on a freshly applied surface, re-coating may be necessary based on the damage, if any.

Every attempt should be made to schedule the application of the masonry coating as one of the final finishing operations to minimize construction-generated dust. To prevent lap marks, a wet edge shall be maintained at all times. Stopping and starting in mid-sections shall be avoided. Every attempt shall be made to start or end at natural breaks in the surface such as at a panel edge, corner or joint. When applying the coating with a roller, the material shall be applied in vertical strokes initially, cross rolled for even film and appearance, then finished with vertical strikes.

The coating shall be applied to all exposed surfaces of Piers 11 and 12 above Elevation 396.5.

3.1 Finished Product.

The coating material in the finished state shall be capable of accommodating the thermal and elastic expansion ranges of the substrate without cracking.

The texture of the completed finish coat shall be generally similar to that of rubbed concrete. The completed finished coating shall be tightly bonded to the structure and present a uniform appearance and texture. If necessary, additional coats shall be applied to produce the desired surface texture and uniformity.

Coatings shall be entirely removed from the structure upon their failure to positively adhere without chipping, flaking or peeling, or attaining the desired surface appearance. The finish coating shall be reapplied after proper surface preparation until the desired finish product is achieved. The average thickness of the completed finish coating shall not exceed 1/8 inch.

4.0 Method of Measurement.

No direct measurement will be made.

5.0 Basis of Payment.

Protective Coatings for Exposed Concrete Surfaces will be paid for in accordance with Sec 711. Protective Coatings for Exposed Concrete Surfaces at Piers 11 and 12 will be paid for at the contract lump sum price for Protective Coating – Towers (Non-Epoxy). The costs of surface preparation, furnishing and applying the materials, labor, equipment and incidentals necessary shall be included in the cost of this work.

X. NAVIGATION VERTICAL CLEARANCE GAUGES

1.0 Description.

This work consists of furnishing all equipment, materials, and labor for performing all work required for painting the vertical clearance onto the upstream and downstream ends of Piers 11 and 12, in accordance with the plans, specifications, and these special provisions.

2.0 Materials.

Paint shall be either a vinyl resin type or chlorinated natural rubber-base type paint. Paint shall be guaranteed by the manufacturer to be suitable for use on masonry under severe exposure or submerged in water conditions. All paint shall be from the same manufacturer and shall be compatible in all respects with the use intended. The material for the first coat shall be either of the following:

(1) An undercoater adaptable for use, as a primer, under the succeeding coats, providing such undercoater shall be tinted with material to be used for the second coat.

(2) The same material as used for the second coat, providing paint manufacturer recommends the same to be self-priming.

The second coat (white) and the gauge markings (black) shall have a glossy finish. All materials the Contractor proposes to use shall meet the approval of the Engineer.

3.0 Construction Requirements.

The background areas shall receive two coats of white paint, as hereinafter provided, after which gauge numbers and markings shall be painted on in two coats of black. Each coat shall be thoroughly dry before the succeeding coat is applied with a minimum of twenty-four hours drying time per coat. The limits of background areas and the layout of gauge numbers and markings shall be as shown on the Plans.

Unless otherwise permitted by the Engineer, concrete forms shall have been removed at least 60 days prior to the application of any paint or undercoater to the concrete to be painted.

Surfaces to be painted shall be prepared by removing all dirt, oil, or other foreign substances; and prior to application of the first coat, such surfaces shall be etched with approximately 10 percent solution of muriatic acid in water, flushed down with clear water and allowed to dry.

The surfaces to be painted shall be thoroughly dry before applications. The paint application shall be generous, but its dry thickness shall not exceed 2 mils per coat. The first coat shall be worked well into the pores of the concrete.

Paint shall not be applied when the temperature is below 40°F, or below the temperature recommended by the paint manufacturer, whichever is greater. Also, the paint shall be preferably applied when the temperature has reached the maximum expected temperature of the day. Painting shall not be commenced unless it can be reasonably expected that the clearance gauge can be completed with all paint coats plus at least seven days time before any portion of the gauge may become submerged.

4.0 Method of Measurement.

No separate measurement will be made for Navigation Vertical Clearance Gauges.

5.0 Basis of Payment.

No separate payment will be made for Navigation Vertical Clearance Gauges. The cost of furnishing all equipment, materials, and labor and performing all work required for painting the clearance gauges, as prescribed above and as shown on the plans, will not be paid for separately and all costs therefor shall be included in the contract price bid for other items of the work.

3 REVISED Y. TELEVISION CAMERA INSPECTION

~~Replace Sec 701.6.4 with the following:~~

~~**701.6.4 Television Camera Inspection.** Television camera inspection of each shaft, including the rock socket, will be measured for payment, per each.~~

~~Replace Sec 701.7.5 with the following:~~

~~**701.7.5 Television Camera Inspection.** Payment for one complete television camera inspection of each shaft, including the rock socket, will be paid for at the contract unit price for television camera inspection, per each. Any additional television inspections required by the engineer due to extending the rock socket to a greater depth, or when supplementary inspections are required by the engineer and no defects are found, will be paid for at the contract unit price for television camera inspection, per each. Payment will not be made for television camera inspections that reveal defects due to the contractor's operation. Payment for television camera inspection will be considered full compensation for moving in equipment, flushing turbid water from the shaft, conducting the actual scanning as specified, furnishing video tape, removing equipment, and all tools, labor and any incidentals necessary to complete the work. The number of television camera inspections may vary from the estimated quantities, but the contract unit price shall prevail regardless of the variation.~~

2 REVISED

Z. SHEAR CONNECTOR STUDS 11/12/09

Delete Sec 1080.3.4 and substitute the following:

1080.3.4 Shear Connector Studs. Shear connector studs may be attached to the beams or girders either in the fabricating shop or in the field. All applicable requirements of the Occupational Safety and Health Administration (OSHA) shall be met. If the shear connector studs are to be attached in the field, the contractor shall notify the engineer no less than one week before the contractor begins welding shear connectors to the beams or girders so the engineer may inspect for approval the proposed welding procedure and equipment. Only welding procedures, equipment and operators meeting the requirements of Sec's 1080.3.3.4, 1080.3.3.5 and 712 shall be used. Areas to which shear connectors are to be attached shall be cleaned of all foreign material, such as oil, grease or paint by a suitable method. Where a shop coat of inorganic zinc primer has been applied, removal shall be limited to the minimum area necessary to apply the studs. After completion of the welding operations, the primed area shall be touched up with a suitable inorganic zinc primer or epoxy mastic paint (non-aluminum).

U.S. Department of Homeland Security
United States Coast Guard

BRIDGE PERMIT

(15-09-8) OCT 14 2009

WHEREAS by Title V of an act of Congress approved August 2, 1946, entitled "General Bridge Act of 1946," as amended (33 U.S.C. 525-533), the consent of Congress was granted for the construction, maintenance and operation of bridges and approaches thereto over the navigable waters of the United States;

AND WHEREAS the Secretary of Homeland Security has delegated the authority of Section 502(b) of that act to the Commandant, U. S. Coast Guard by Department of Homeland Security Delegation Number: 0170.1;

AND WHEREAS before construction is commenced, the Commandant must approve the location and plans of any such bridge and may impose any specific conditions relating to the construction, maintenance and operation of the structure deemed necessary in the interest of public navigation, such conditions to have the force of law;

AND WHEREAS the - **STATE OF MISSOURI** - has submitted for approval the location and plans indicating a design-build concept of a bridge to be constructed across the Upper Mississippi River between St. Louis, Missouri and East St. Louis, Illinois;

NOW THEREFORE, This is to certify that the location and plans revised April 2009 are hereby approved by the Commandant, subject to the following conditions:

1. No deviation from the approved plans may be made either before or after completion of the structure unless the modification of said plans has previously been submitted to and received the approval of the Commandant.

2. The construction of falsework, pilings, cofferdams or other obstructions, if required, and the scheme for constructing the bridge shall be in accordance with plans submitted to and approved by the Commander, Eighth Coast Guard District, prior to construction of the bridge. All work shall be so conducted that the free navigation of the waterway is not unreasonably interfered with and the present navigable depths are not impaired. Timely notice of any and all events that may affect navigation shall be given to the District Commander during construction of the bridge. The channel or channels through the structure shall be promptly cleared of all obstructions placed therein or caused by the construction of the bridge to the satisfaction of the District Commander,

when in the judgment of the District Commander the construction work has reached a point where such action should be taken, but in no case later than 90 days after the bridge has been opened to traffic.

3. Issuance of this permit does not relieve the permittee of the obligation or responsibility for compliance with the provisions of any other law or regulation as may be under the jurisdiction of any federal, state or local authority having cognizance of any aspect of the location, construction or maintenance of said bridge.

4. Prior to commencement of construction, the permittee shall submit to the District Commander for approval, plans showing the final design chosen for the construction of the bridge. The final design chosen shall, at a minimum, provide the navigational clearances as shown on the approved plan sheet 3 (of 5) revised April 2009. Failure by the permittee to adhere to any part of this condition renders this permit null and void.

5. A bridge fendering system shall be installed and maintained in good condition by and at the expense of the owner of the bridge when so required by the District Commander. Said installation and maintenance shall be for the safety of navigation and be in accordance with plans submitted to and approved by the District Commander prior to its construction.

6. Clearance gauges shall be installed and maintained in a good and legible condition by and at the expense of the owner of the bridge when so required by the District Commander. The type of gauges and the locations in which they are to be installed will be submitted to the District Commander for approval.

7. When the proposed bridge is no longer used for transportation purposes, it shall be removed in its entirety or to an elevation deemed appropriate by the District Commander and the waterway cleared to the satisfaction of the District Commander. Such removal and clearance shall be completed by and at the expense of the owner of the bridge upon due notice from the District Commander.

8. The approval hereby granted shall cease and be null and void unless construction of the bridge is commenced within five years and completed within eight years after the date of this permit.

For

HALA ELGAALY, P.E.
Administrator, Bridge Program
U. S. Coast Guard
By direction of the Commandant



VICINITY MAP

0 1 2 3 4 5
SCALE IN MILES

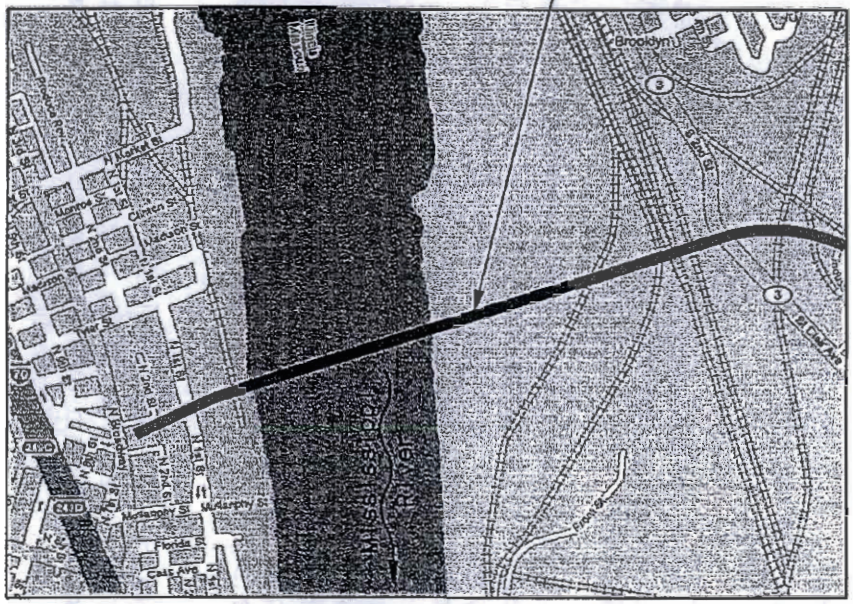

LOCATION MAP

0 0.25 0.50 0.75 1.0
SCALE IN MILES

APPROVED
OCT 14 2009
P(15-09-8)
U.S.
COAST GUARD

Notes:
There are no wildlife or waterfowl refuges, recreation areas or public parks in the vicinity of the proposed bridge.
Elevations shown on these plans are based on NAVD 88.

PROPOSED I-70 MISSISSIPPI RIVER BRIDGE
INTERSTATE 70 OVER UPPER MISSISSIPPI RIVER, MILE 181.2
AT ST. LOUIS, MISSOURI (ST. LOUIS CITY)
AND EAST ST. LOUIS, ILLINOIS (ST. CLAIR COUNTY)
APPLICATION BY
MISSOURI DEPARTMENT OF TRANSPORTATION

SHEET 1 OF 5, REVISION 1 APRIL 2009

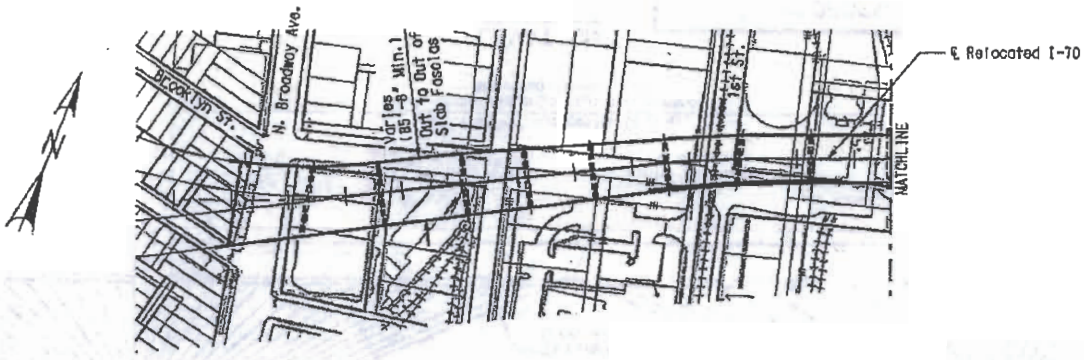

PLAN

0 100 200 300 600
SCALE IN FEET

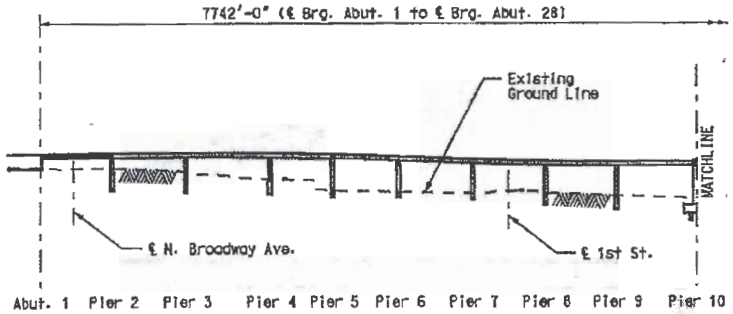

ELEVATION

APPROVED
OCT 14 2009
PLS-09-83
U.S.
COAST GUARD

PROPOSED I-70 MISSISSIPPI RIVER BRIDGE
INTERSTATE 70 OVER UPPER MISSISSIPPI RIVER, MILE 181.2
AT ST. LOUIS, MISSOURI (ST. LOUIS CITY)
AND EAST ST. LOUIS, ILLINOIS (ST. CLAIR COUNTY)
APPLICATION BY
MISSOURI DEPARTMENT OF TRANSPORTATION

SHEET 2 OF 5, REVISION 1 APRIL 2009

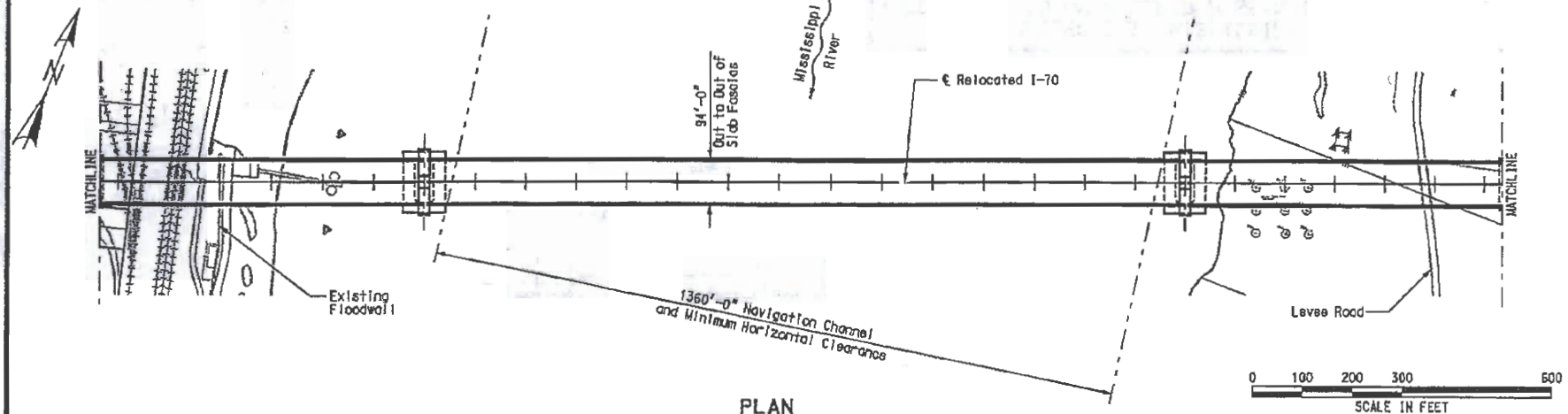

PLAN

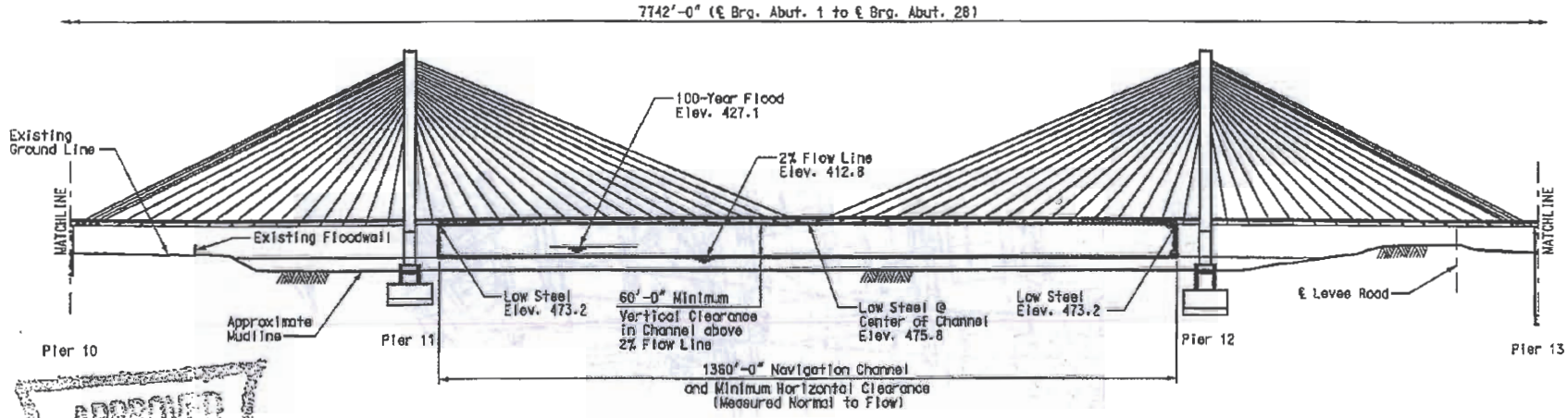

ELEVATION

APPROVED
OCT 14 2009
PLS-09-81
U.S.
COAST GUARD

PROPOSED I-70 MISSISSIPPI RIVER BRIDGE
INTERSTATE 70 OVER UPPER MISSISSIPPI RIVER, MILE 181.2
AT ST. LOUIS, MISSOURI (ST. LOUIS CITY)
AND EAST ST. LOUIS, ILLINOIS (ST. CLAIR COUNTY)
APPLICATION BY
MISSOURI DEPARTMENT OF TRANSPORTATION

SHEET 3 OF 5, REVISION 1 APRIL 2009

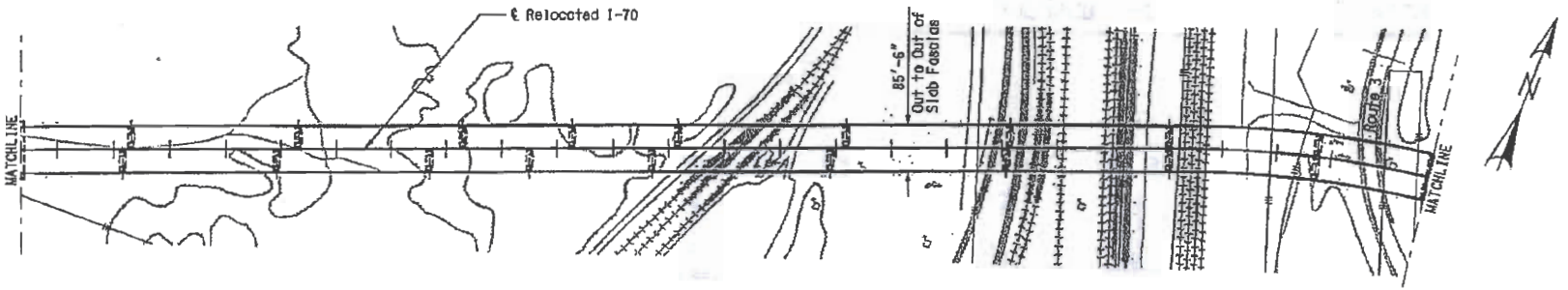

PLAN

0 100 200 300 600
SCALE IN FEET

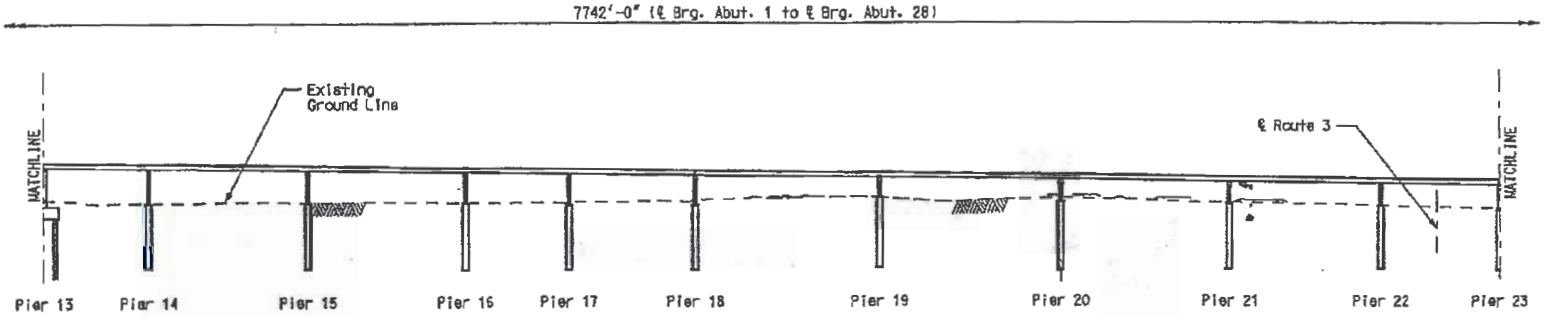

ELEVATION



PROPOSED I-70 MISSISSIPPI RIVER BRIDGE
INTERSTATE 70 OVER UPPER MISSISSIPPI RIVER, MILE 181.2
AT ST. LOUIS, MISSOURI (ST. LOUIS CITY)
AND EAST ST. LOUIS, ILLINOIS (ST. CLAIR COUNTY)
APPLICATION BY
MISSOURI DEPARTMENT OF TRANSPORTATION

SHEET 4 OF 5, REVISION 1 APRIL 2009

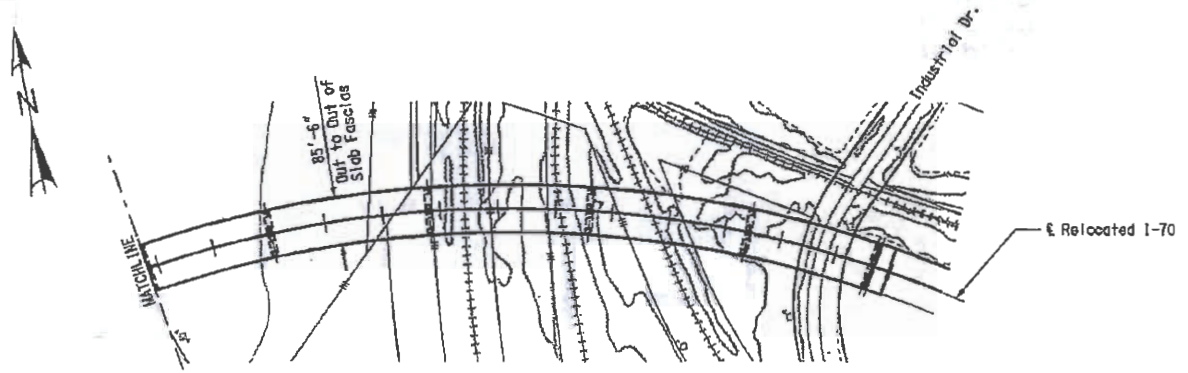

PLAN

0 100 200 300 600
SCALE IN FEET

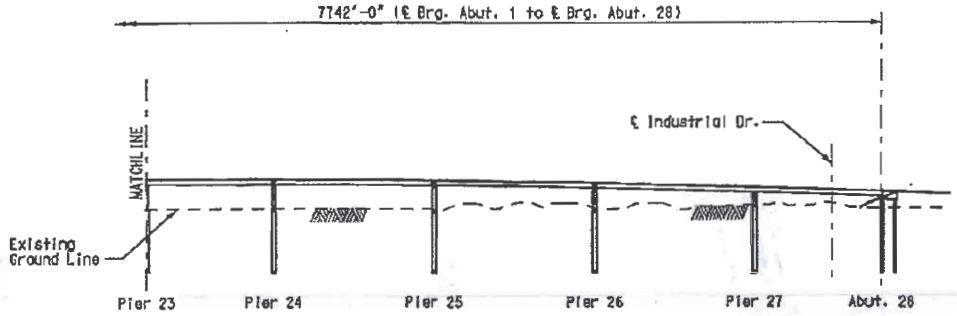

ELEVATION

APPROVED
OCT 14 2009
(C15-09-8)
U.S.
COAST GUARD

PROPOSED I-70 MISSISSIPPI RIVER BRIDGE
INTERSTATE 70 OVER UPPER MISSISSIPPI RIVER, MILE 181.2
AT ST. LOUIS, MISSOURI (ST. LOUIS CITY)
AND EAST ST. LOUIS, ILLINOIS (ST. CLAIR COUNTY)
APPLICATION BY
MISSOURI DEPARTMENT OF TRANSPORTATION

SHEET 5 OF 5, REVISION 1 APRIL 2009

3 REVISED **AA. Drilled Shafts: Section 701, Drilled Shafts, of the Standard Specifications shall be replaced by the following Special Provision**

1.0 Description. This work shall consist of constructing cast-in-place reinforced concrete drilled shafts and rock sockets, as required, to serve as a structural foundation. This work shall provide reinforced concrete shafts cast in cylindrically excavated holes extending sufficiently into soil or sound rock to adequately support the structure and all externally applied loads for which the shaft was designed. The drilled shaft foundation, including the rock socket, where required, shall be constructed in accordance with these specifications, as shown on the plans and in accordance with other specifications included in the contract documents. When directed by the engineer, corrections made by the contractor will be noncompensable and any effect on time of performance nonexcusable.

2.0 Preconstruction Submittals. At least 30 days prior to drilled shaft construction, the contractor shall submit to the engineer for review an installation plan for the construction of drilled shafts. The installation plan shall be of sufficient detail to outline the contractor's intended overall construction sequence and methods of excavation for the drilled shafts, including use of slurry, placement of reinforcing steel, details of concrete delivery to the site, an emergency construction joint method, placement of concrete in a continuous pour, including operational procedures for tremie or pump, and methods to prevent and handle delays in concrete batching and delivery to the site. The installation plan shall include details of casings to be used, if applicable, including calculations showing the ability of the casing to withstand anticipated hydraulic and earth pressures, and to withstand stresses due to installation without undue deformation. These details shall include methods for casing handling, splicing, straightening and out-of-round correction. Calculations included in the installation plan shall be signed and sealed by a registered professional engineer licensed to practice in the State of Missouri.

3.0 Material. All material shall be in accordance with the Missouri Standard Specifications for Highway Construction, Division 1000, Material Details, and specifically as follows:

Item	Section
Reinforcing Steel for Concrete	1036
Concrete Admixtures	1054
Concrete Curing Material	1055
Mortars and Grout	1066
Water	1070

3.1 Concrete. Drilled shafts shall be constructed of Class B-2 concrete, and all material, proportioning, mixing and transporting of concrete shall be in accordance with Sec 501, except as specified herein. An air entrainment admixture shall be used. A high range water-reducing admixture may be used to increase the slump to a maximum of 10 inches (250 mm). If used, the water-reducing admixture shall be added only after the concrete has reached the job site to reduce the potential for flash setting. The concrete mix for drilled shafts shall be dense, homogeneous, fluid and resistant to segregation, and shall consolidate under self-weight. The concrete mix shall have a set time that ensures that fluidity is maintained throughout the shaft concrete placement and removal of temporary casing, if used. A concrete retarder in accordance with AASHTO M 194, Type B, may be incorporated into the mix to retard set approximately twelve hours. ~~Concrete for drilled shafts shall have a 28-day minimum compressive strength of 4000 psi (28 MPa).~~ Portland cement shall be Type I or Type II. The maximum water per cement ratio of a concrete mix to be placed under water shall be 0.45.

A REVISED

3.2 Casing. Welded or seamless steel permanent casings shall be in accordance with ASTM A 252, Grade 2, unless otherwise specified. The contractor shall furnish two copies of certification from the fabricator detailing the designated specification with which the furnished casings comply.

3.2.1 Shop Drawings. Shop drawings for permanent steel casings shall be prepared in accordance with Sec 1080 and shall be submitted to the engineer prior to installation of the casings.

3.2.2 Condition of Casings. Casings shall be smooth, clean and watertight. For out-of-round tolerance of steel casings before and after installation, the departure of any point on the periphery of the casing from a true circle shall not exceed one inch (25 mm), measured radially.

3.2.3 Extent of Casing Length. Permanent casings, if required, shall be continuous wherever possible or practical. The permanent casing shall terminate at the specified elevation, and the concrete shall be trimmed to within tolerances specified in JSP Sec 4.16 prior to acceptance of the completed drilled shaft. Permanent casings shall be extended into rock, as needed, in an effort to provide a positive seal and to stabilize the shaft excavation against collapse, excessive deformation, or flow of water. If a positive hydraulic seal can not be achieved, careful inspection of the tip cleanliness shall be required to ensure the casing is not allowing overburden soils to enter the rock socket. Casings meeting all specified requirements shall be installed from the work platform to the elevations shown on the plans. Where drilled shafts are located in open water areas, casings shall be extended from at least 18 inches (450 mm) above the water elevation and unless otherwise specified in the contract documents, to the specified bottom of casing elevation to protect the shaft concrete from water action during placement and curing of concrete.

3.2.4 Use of Teeth or Cutting Edge. The casing may be fabricated with teeth or a cutting edge to facilitate insertion into the rock.

3.2.5 Splices. Splicing of permanent casings is not desirable and will only be permitted when approved by the engineer. If splices are required, the welding process shall be in accordance

with the requirements specified herein. The contractor shall be fully responsible for the adequacy of welds during driving.

3.2.6 Welding. Shop welding of casings shall be performed by a fully-automated welding process to develop the full capacity of the shell. All welding shall be in accordance with Sec 1080, except that shop welding of casings will not require radiographic inspection. Inspection will be of a visual nature. If evidence indicating poor welding is found, the engineer may require radiographing. Field-welded splices of sections of the steel casings shall be made by shielded metal-arc welding procedures performed by a MoDOT-certified field welder using properly dried low-hydrogen E7018 electrodes that have been protected from the elements to maintain the dry condition. The welds shall be full penetration, watertight and of x-ray quality in accordance with Sec 1080.

3.3 Slurry. Drilling slurry will be defined as mineral slurry, polymer slurry, natural slurry formed during the drilling process, water or other fluids used to maintain stability of the drilled shaft excavation to aid in the drilling process or to maintain the quality of the rock socket. In addition, the terms mineral slurry and polymer slurry, as used herein, will be defined as the final mixed composite of all additives, including manufactured mineral or polymer slurry additives required to produce the acceptable drilling slurry.

3.3.1 Slurry Usage. Drilling slurry shall be used if detailed in the approved installation plan, if in accordance with the contract documents or if approved in writing by the engineer. Drilling slurry may be used at the contractor's option if the slurry is not in accordance with the contract documents; however, any slurry shall be approved by the engineer prior to use. Drilling slurry, when used, will be noncompensable and effect on time of performance due to the use of the slurry will be nonexcusable.

3.3.2 General Properties. The material used to make the slurry shall not be detrimental to the concrete or surrounding ground strata. Mineral slurries shall have both a mineral grain size that remains in suspension and sufficient viscosity and gel characteristics to transport excavated material to a suitable screening system. Polymer slurries shall have sufficient viscosity and gel characteristics to transport excavated material to suitable screening systems or settling tanks. The percentage and specific gravity of the material used to make the slurry shall be sufficient to maintain the stability of the excavation and to allow proper concrete placement. If approved by the engineer, the contractor may use water and on-site soils as a drilling slurry. In that case, the range of acceptable values for density, viscosity and pH, as shown in the following table for bentonite slurry, shall be met, except that maximum density (unit weight) shall not exceed 70 pounds/cubic foot (1120 kg/m^3). When water is used as the drilling fluid to construct rock sockets in limestone, dolomite, sandstone or other formations that are not erodible, the requirements for slurry testing will not apply.

3.3.3 Preparation. Prior to introduction into the shaft excavation, the manufactured mineral or polymer slurry admixture shall be pre-mixed thoroughly with clean, fresh water and for adequate time in accordance with the slurry admixture manufacturer's recommendations allotted for hydration. Water used for mixing shall be in accordance with Sec 1070. Slurry tanks of

adequate capacity will be required for slurry mixing, circulation, storage and treatment. No excavated slurry pits will be allowed in lieu of slurry tanks without written approval from the engineer. Adequate desanding equipment will be required as necessary to control slurry properties during the drilled shaft excavation in accordance with the values provided in the table below. Desanding will not be required for signposts or lighting mast foundations unless specified in the contract documents.

3.3.4 Control Tests. Control tests using a suitable apparatus shall be performed by the contractor on the slurry to determine density, viscosity, sand content and pH of freshly mixed slurry, recycled slurry and slurry in the excavation. Tests of slurry samples from within one foot (0.3 m) of the bottom and at mid-height of the shaft shall be conducted in each shaft excavation during the excavation process to establish a consistent working pattern. A minimum of four sets of tests shall be conducted during the first eight hours of slurry use on the project. When the results show consistent behavior, the testing frequency may be decreased to one set every four hours of slurry use, or as otherwise approved by the engineer. Reports of all tests, signed by an authorized representative of the contractor, shall be furnished to the engineer on completion of each drilled shaft. An acceptance range of values for the physical properties will be as shown in the table below.

3.3.5 Sampling. When slurry samples are found to be unacceptable, the contractor shall bring the slurry in the shaft excavation to within specification requirements. Concrete shall not be poured until resampling and testing results produce acceptable values. Prior to placing shaft concrete, the contractor shall take slurry samples from within one foot (0.3 m) of the bottom and at mid-height of the shaft. Any heavily contaminated slurry that has accumulated at the bottom of the shaft shall be removed. Disposal of all slurry shall be done in areas approved by the engineer. The contractor shall perform final shaft bottom cleaning after suspended solids have settled from the slurry mix.

Range of Acceptable Values for Mineral and Polymer Slurries in Fresh Water Without Additives					
Property	Bentonite	Emulsified Polymer	Dry Polymer	Units	Test Method
Density (Unit Weight)					
At Introduction	63.5 - 66.8 (1017-1070)	< 63 (1009)	< 63 (1009)	lb/ft^3 (kg/m^3)	Density Balance
Prior to Concreting	63.5 - 70.5 (1017-1129)	< 63 (1009)	< 63 (1009)		
Marsh Funnel Viscosity					
At Introduction	32 – 60 (34 – 63)	33 – 43[b] (35 – 45)[b]	50 – 80[b] (53 – 85)[b]	sec/qt (sec/liter)	Marsh Funnel
Prior to Concreting	32 – 60 (34 – 63)	33 – 43[b] (35 – 45)[b]	50 – 80[b] (53 – 85)[b]		
pH					
At Introduction	8 – 10	8 – 11	7 – 11	--	pH Paper or pH Meter
Prior to Concreting	8 – 10	8 – 11	7 – 11	--	
Sand Content					
At Introduction	< 4	< 1	< 1	Percent by Volume	API Sand Content Kit
Prior to Concreting	< 10	< 1	< 1		
Maximum Contact Time[a]	4	72	72	Hours	

[a]Without agitation and sidewall cleaning.

[b]Higher viscosities may be required to maintain excavation stability in loose or gravelly sand deposits.

4.0 Construction.

4.1 Protection of Existing Structures. All precautions shall be taken to prevent damage to existing structures and utilities. These measures shall include, but are not limited to, monitoring and controlling the vibrations from the driving of casing or drilling of the shaft, and selecting construction methods and procedures that shall prevent excessive caving of the shaft excavation.

4.2 Technique/Test Shafts. ~~When required by the contract documents,~~ The contractor shall demonstrate the adequacy of methods and equipment used during construction of the first drilled shaft, which shall be an out of position technique/test shaft. ~~The non-production test shaft shall suffice as the technique shaft.~~ This technique/test shaft shall be drilled in the position as directed by the engineer and drilled to the ~~maximum~~ depth shown on Exhibit 1 of the Load Test Special Provision. ~~for any production shaft shown on the plans.~~ If at any time the contractor is unable to demonstrate, to the satisfaction of the engineer, the adequacy of methods or equipment and alterations required, an additional technique/test shaft(s) may be required. Technique/test

A REVISED
A REVISED
A REVISED
A REVISED

shafts shall be cut off 3 feet (0.9 m) below groundline, buried or otherwise disposed of as specified in the contract documents or as directed by the engineer. Once approval has been given to construct production shafts, no changes will be permitted in the methods of equipment used to construct the shaft without approval from the engineer. Failure at any time to demonstrate to the engineer the adequacy of methods or equipment will be cause for the engineer to require appropriate alterations in equipment or method by the contractor to eliminate unsatisfactory results.

4.3 Construction Sequence. Excavation to footing elevation shall be completed before shaft construction begins, unless otherwise authorized by the engineer. Any disturbance to the footing area caused by shaft installation shall be repaired by the contractor prior to pouring the footing. When drilled shafts are to be installed in conjunction with embankment placement, the contractor shall construct drilled shafts after placement of fills. Drilled shafts constructed prior to the completion of fills shall not be capped until the fills have been placed as near to final grade as possible, leaving only the necessary work room for construction of the caps.

4.4 General Equipment and Methods. The contractor shall perform excavations through whatever material is encountered to the dimensions and elevations shown on the plans. The contractor's methods and equipment shall be suitable for the intended purpose and for whatever material is encountered.

4.4.1 General Equipment. The contractor shall provide equipment capable of constructing shafts to a depth equal to the deepest shaft tip elevation shown on the plans plus 15 feet (4.6 m), or as otherwise specified in the contract documents. When a rock socket is identified on the plans at a shaft location, the definition of "shaft tip elevation", for the purposes of this subsection, shall be taken to refer to the bottom of the rock socket.

4.4.2 General Methods. Excavations required for shafts and rock sockets shall be completed in a continuous operation. The contractor shall be responsible for ensuring the stability of the shaft excavation and the surrounding soil. When obstructions, either expected or unexpected, are encountered, the contractor shall notify the engineer promptly. Either the dry method, wet method, temporary casing method, permanent casing method if specified, or combinations, as necessary, shall be used to produce sound, durable concrete drilled shafts free of defects. The permanent casing method shall be used only when required by the contract documents. Blasting excavation methods will not be permitted. When a rock socket is required, the engineer will be the sole judge as to what constitutes the top of sound rock. The engineer may order in writing additional depths of rock socket below the top of sound rock as considered necessary to improve the foundation. If the top surface of the sound rock is found to be inclined across the width of the shaft, the contractor shall immediately notify the engineer. The contractor shall use an airlift, or other method approved by the engineer, to clean the bottom of the shaft excavation.

4.4.2.1 Dry Construction Method. The dry construction method shall be used only at sites where the groundwater table and site conditions, generally stiff to hard clays or rock above the water table, are suitable to permit construction of the shaft in a relatively dry excavation and where the sides and bottom of the shaft remain stable without any caving, sloughing or swelling

and allow visual inspection prior to concrete placement. The dry method shall consist of drilling the shaft excavation, removing accumulated seepage water and loose material from the excavation and placing the shaft concrete in a relatively dry excavation. The dry construction method shall be used only when shaft excavations, as demonstrated in a technique shaft or first production shaft, have 12 inches (300 mm) per hour or less of seepage.

4.4.2.2 Wet Construction Method. The wet construction method shall be used at sites where a dry excavation cannot be maintained for placement of the shaft concrete. This method shall consist of drilling the shaft excavation below the water table, keeping the shaft filled with water, natural slurry formed during the drilling process, mineral slurry or polymer slurry to contain seepage and groundwater movement, and to maintain stability of the hole perimeter until excavation to the final depth and placement of the reinforcing cage and concrete has been completed. This procedure will require placing the shaft concrete with either a tremie or concrete pump beginning at the shaft bottom, and displacing the water or slurry as concrete is placed. Temporary partial depth casings near the ground surface shall be provided to aid shaft alignment and position and to prevent sloughing of the top of the shaft excavation. Where drilled shafts are located in open water areas, shafts shall be constructed by the wet method using casings extending from above the water elevation to the plan casing tip elevation to protect the shaft concrete from water action during placement and curing. The casing shall be installed in a manner that prevents soil or other debris from entering the cleaned rock socket and also prevents concrete from exiting the shaft.

4.4.2.3 Temporary Casing Construction Method. The temporary casing construction method shall be used at all sites where the stability of the excavated hole or the effects of groundwater cannot be controlled by other means. In this method, the hole shall be advanced through caving material by the wet method in accordance with Sec 4.4.2.2. When a formation is reached that is nearly impervious, a casing shall be placed in the hole and sealed. Drilling may proceed by the dry method to the projected depth. The placement of concrete shall proceed by the dry or wet method, except that the casing shall be withdrawn after the concrete is placed. In the event seepage conditions prevent use of the dry method, excavation shall be completed by the wet method. Before and during casing withdrawal, a 5-foot (1.5 m) minimum head of fresh concrete above the bottom of the casing shall be maintained at such a level that fluid trapped behind the casing is displaced upward out of the shaft excavation without mixing with or displacing the shaft concrete. Casing extraction shall be at a slow, uniform rate with the pull in line with the axis of the shaft. Temporary casings shall be removed while the concrete is still workable and the slump of the concrete is between 4 and 8 inches (100 and 200 mm). Vibratory hammers shall not be used for casing installation or removal within 50 feet (15.2 m) of other shafts that have been completed less than 24 hours earlier. The reinforcing cage shall not be damaged or displaced when withdrawing the temporary casing.

4.4.2.4 Permanent Casing Construction Method. The permanent casing construction method shall be used only when required by the contract documents or authorized by the engineer. The casing shall be continuous between top and bottom elevations shown on the plans. Vibratory

hammers shall not be used for casing installation within 50 feet (15.2 m) of shafts that have been completed less than 24 hours earlier.

4.5 Slurry.

4.5.1 Time Limitations. When bentonite slurry is used, the contractor shall adjust construction operations such that the maximum time that slurry is in contact with the bottom 5 feet (1.5 m) of the shaft, the time from the end of drilling to the beginning of concrete placement, does not exceed four hours without agitation. If the four-hour limit is exceeded, the bottom 5 feet (1.5 m) of the shaft shall be overreamed prior to performing other operations in the shaft. For rock sockets constructed in shale using polymer slurry, concrete placement shall begin within 72 hours of starting the rock socket excavation to avoid degradation of the shaft sidewall. Before concrete placement begins, foundation inspection, when required, cleaning operations and reinforcing steel placement shall be completed and approved by the engineer. These operations will be included in the 72-hour time limit. If concrete placement is not begun within the time limit, the contractor shall take corrective measures to the satisfaction of the engineer.

4.5.2 Level of Slurry. During construction, the level of slurry shall be maintained at a height sufficient to prevent caving of the excavation. If the engineer determines that the slurry construction method is failing to produce the desired final results, the contractor shall discontinue operations and propose an alternate method for approval from the engineer. Correction for a failed slurry construction method will be noncompensable and any effect on time of performance nonexcusable.

4.5.3 Slurry Manufacturer's Representative. When manufactured mineral or polymer slurry additives are to be incorporated into the drilling slurry mix, the contractor shall provide the technical assistance of a representative of the mineral or polymer slurry additive manufacturer at the site prior to introduction of the slurry into the first shaft where slurry use will be required, and during drilling and completion of a minimum of one shaft to adjust the slurry mix to the specific site conditions.

4.5.4 Drilling Fluids for Rock Socket Excavation. For rock sockets excavated in limestone, dolomite, sandstone or other formations that are not erodible and cannot be constructed in the dry, only water shall be used as the drilling fluid, except that when other slurry types are used in drilling through overburden, that slurry shall be removed and replaced with fresh clean water prior to rock socket excavation. For rock sockets excavated in geomaterial that may be eroded by drilling water, such as shales, a polymer slurry will be required prior to beginning rock socket drilling through completion of concreting the rock socket.

4.6 Cleaning of Shaft or Casing Sidewalls. Cleaning of the shaft or casing sidewalls shall occur by a method approved by the engineer as necessary to remove the depth of softening or to remove excessive slurry cake buildup.

4.7 General Excavation Considerations. The plans will indicate the top of shaft elevations and the estimated bottom of shaft elevations between which the drilled shaft shall be constructed. Drilled shafts may be extended deeper when the engineer determines that the foundation material encountered while drilling the shaft excavation is unsuitable or is not the same as anticipated in

the design of the drilled shaft. Drilled shafts may be shortened when the engineer determines the material encountered is better than that anticipated, or based on the results of load tests.

4.7.1 Time Restrictions. The integrity of the drilled shaft excavation shall be maintained by the placing of reinforcement and concrete in a timely manner following completion of the excavation. No two adjacent shafts shall be excavated at the same time, and shafts shall not be constructed within 24 hours of the completion of an adjacent shaft if the center-to-center spacing is less than 3 shaft diameters.

4.7.2 Disposal of Excavated Material. Excavated material removed from the shaft and any drilling fluids used shall be disposed of in accordance with the contract documents, as directed by the engineer, and in compliance with federal and state laws.

4.7.3 Worker Entry Into Shaft Excavation. The contractor shall not allow workers to enter the shaft excavation for any reason, unless both a suitable casing has been installed and adequate safety equipment and procedures have been provided to workers entering the excavation.

4.8 Unexpected Obstructions. Subsurface obstructions at drilled shaft locations shall be removed by the contractor. The contractor shall employ special procedures or tools when the hole cannot be advanced using conventional equipment. Blasting will not be permitted. Except as provided in this section, all cost and time effects, direct, indirect and cumulative of subsurface obstruction of whatever nature, will be conclusively deemed fully compensated under the pay items in accordance with the contract. Encountering unexpected obstructions will be considered inherent risks in the nature of this work, both as to type and extent as is variability in material encountered in the work as to effort required to drill through or excavate the material. In the event the contractor encounters at the site of a drilled shaft location a subsurface or latent physical condition that differs materially from that indicated in the contract documents, the contractor shall strictly follow the procedure provided for a differing site condition set forth in Sec 104. Any adjustment to the contract amount or time will only be those expressly permitted by the contract documents and only to the extent expressly provided in the contract documents. No contract adjustment will be determined, as to entitlement or amount on any basis other than under the contract as a differing site condition. Specifically, but not by way of limitation, the contractor agrees that the contractor will not be entitled to any contract adjustment arising from encountering an unexpected obstruction on the basis that, with respect to the obstruction, the Commission made: (1) a positive representation; (2) of a material fact; (3) which was false or incorrect; (4) as to which positive representation of material fact the contractor lacked knowledge that the representation was false or incorrect; (5) upon which positive representation of material fact the contractor asserts that the contractor relied; and (6) was damaged as a direct result of the positive representation of material fact.

4.9 Lost Tools. Drilling tools lost in the excavation will not be considered obstructions and shall be promptly removed by the contractor. All work required to remove lost tools or to perform associated corrective work, including but not limited to repair of hole degradation due to removal operations, will be noncompensable and any effect on time of performance nonexcusable.

4.10 Excavation Inspection.

4.10.1 Inspection Equipment. The technique/test shaft(s) and all production shafts at each pier shall be inspected by the Shaft Inspection Device (SID) in conjunction with traditional weighted tape measurements. The SID inspections will verify the clean-out methods are sufficient to produce an acceptable base. The contractor shall maintain at the job at all times, all equipment suitable for use in the shaft inspection. A REVISED

4.10.2 Removal of Excess Sediment and Water. Final shaft depth shall be measured with approved methods after final cleaning by airlift, hydraulic dredge pump, or other method approved by the engineer. Unless otherwise stated in the contract documents, a minimum of 50 percent of the base of each shaft shall have less than 1/2 inch (13 mm) of sediment at the time of concrete placement. The maximum depth of sediment or any debris at any place on the base of the shaft shall not exceed 1 1/2 inches (38 mm). For dry excavations, the maximum depth of water shall not exceed 3 inches (75 mm) prior to concrete pour. Shaft cleanliness will be verified by the engineer for wet or dry shafts.

4.10.3 Television Camera Inspection. The primary means of inspecting a shaft excavation, steel casing and the rock socket shall be by television camera lowered into the shaft. The contractor shall furnish all equipment necessary to conduct the camera inspection. The contractor shall operate the camera and supporting equipment under the direction of the engineer in such a manner as to obtain optimum results from the equipment. The television camera and lighting equipment shall be capable of operating in dry or submerged conditions encountered during the inspection. The excavated shaft shall have the engineer's approval prior to proceeding with construction.

4.10.3.1 Equipment. Methods and equipment for controlling the camera will be subject to approval from the engineer and achievement of a satisfactory video record.

4.10.3.2 Drawings. The contractor shall submit layout drawings to the engineer showing the relative position of all components of the television inspection system, including type and size of barge or other work area. The information submitted shall include a written description of the operating procedure in a step-by-step sequence and shall state the source of power.

4.10.3.3 Shaft Inspection. Inspection of a shaft by television camera shall be performed for the technique/test shaft(s) and all production shafts. ~~as directed by the engineer.~~ The excavated shaft, including the rock socket when applicable, shall be thoroughly cleaned of all loose fragments, sediment and turbidity prior to inspection. The camera shall be operated such that optimum clarity of detail can be obtained and all surface areas of the shaft, including the rock socket and the rock socket's base, can be observed. All scanning of the rock surfaces shall be recorded on videotape or DVD. After completion of the inspection of a rock socket, the engineer will direct whether or not drilling of the shaft shall be continued to a greater depth. All tapes or DVD shall be stored in proper containers with dust-tight closures and shall be properly labeled as to shaft number along with project and contractor identification. Tapes or DVD shall be furnished to and shall become the property of the engineer upon completion of the work. A REVISED

4.10.4 SID Inspection. Drilled shafts that develop load-carrying capacity in end bearing or a

combination of end bearing and side friction shall be inspected by the SID inspection device after television camera inspection. For shaft and/or socket excavation, after television camera inspection, the method of inspection of the bottom will be by video SID lowered to the base of the shaft. When SID inspection is directed by the engineer, the contractor shall furnish all equipment necessary to conduct the camera inspection. The contractor shall operate the camera and supporting equipment under the direction of the engineer is such a manner as to obtain optimum results from the equipment. The equipment shall be capable of operating in submerged conditions encountered during the inspection. The equipment should include feeler gauges housed within the bell to estimate the amount of sediment at the base of the shaft to within a ¼-inch. The device should also be equipped with water jets to flush away any sediment that may exist and expose the shaft base. Inspection should be conducted at five (5) locations within the shaft; four (4) equally spaced around the perimeter and one (1) at the center. The excavated shaft shall be thoroughly cleaned of all loose sediment to the extent possible prior to inspection. The SID shall be operated such that optimum clarity of detail can be obtained and the drilled shaft base can be observed. All scanning of SID shall be recorded on videotape or DVD. After completion of the SID inspection, the engineer will direct whether or not additional clean-out is necessary. All SID recordings shall be stored in proper containers with dust-tight closures and shall be properly labeled as to shaft number along with project and contractor identification. SID recordings shall be furnished to and shall become the property of the engineer upon completion of the work. The excavated shaft shall have the engineer's approval prior to proceeding with construction.

A REVISED

4.11 Foundation Inspection. Minimum NX size cores will be required for drilled shafts with rock sockets, where NX refers to the nominal diameter of rock core, and the NX core barrel has a 2 1/8-inch (54 mm) inside diameter. The contractor may be directed to extend the rock socket to a lower elevation, resulting from the engineer's evaluation of the foundation inspection cores.

4.11.1 Inspection for End Bearing Design. For drilled shafts that develop load-carrying capacity in end bearing at the base of the rock socket, the contractor shall drill one NX size core for each rock socket to a depth of 10 feet (3 m) below the bottom of the rock socket upon completion of the rock socket to the elevation shown on the plans, or as directed by the engineer. These rock cores will be used to determine the quality of founding material directly below the rock socket. When a casing method is used, foundation inspection holes may be drilled prior to rock socket excavation, if approved by the engineer. Foundation inspection holes may be drilled prior to shaft excavation if the contractor can establish, to the satisfaction of the engineer, that the method used shall place the NX size core directly below the tip of the rock socket.

4.11.2 Inspection for Side Friction Design or a Combination of Side Friction and End Bearing. For drilled shafts that develop load-carrying capacity through side friction only or that utilize a combination of side friction and end bearing within the rock socket, the contractor shall drill one NX size core for each rock socket at a location directed by the engineer, from the top of plan rock socket to a depth of 10 feet (3 m) below the bottom of the rock socket as shown on the plans or as directed by the engineer. These rock cores will be used to determine the quality of material of the rock socket sidewalls and below the bottom of rock socket. Foundation

inspection holes for rock sockets designed to provide side friction or a combination of side friction and end bearing shall be drilled prior to rock socket excavation.

4.11.3 Log of Excavated Material. The contractor shall maintain a log of excavated material for each foundation inspection hole, tied to surveyed elevations, and such logs shall be delivered to the engineer within 24 hours of completion of the boring. The log shall include the following:

(a) The amount of NX cored per run and the amount recovered. All core loss shall be noted and explained. Clay layers shall be noted and located on the log by depth.

(b) The Rock Quality Designation (RQD) for the NX core. The bedding thickness and degree of weathering shall also be noted.

(c) For drilled shaft rock sockets that develop load-carrying capacity through side friction, or a combnation of side friction and end bearing, one unconfined compression test per 5 feet (1.5 m) of NX core, unless otherwise specified by the contract documents or directed by the engineer, shall be run on samples of NX core from the rock socket. The results of these tests shall be delivered to the engineer. Any effect on time of performance resulting from delays in delivery of the above test results to the engineer will be nonexcusable.

4.11.4 Storage and Labeling of Rock Cores. Rock cores shall be stored in structurally sound core boxes and shall be protected from the elements. The core boxes shall be properly labeled to indicate location, depth, beginning elevation, contractor and date, and shall be delivered to the engineer.

4.11.5 Acoustic Televiewer (ATV). Drilled shafts that develop load-carrying capacity in end bearing or a combination of end bearing and side friction shall have the foundation inspection core hole viewed and recorded by ATV. The ATV shall cover the portion of the core hole from the bottom of the rock socket to the bottom of the core hole. Equipment and method of recording will be subject to approval from the engineer and achievement of a satisfactory video and/or detailed depth log record tied to surveyed elevations. The ATV records shall be furnished to the engineer along with the core hole log information.

4.12 Reinforcing Steel Cage Fabrication and Placement. The reinforcing steel cage, consisting of the longitudinal bars, ties, spirals, cage stiffener bars, spacers, centering devices, and other necessary appurtenances, shall be completely assembled as a unit, and shall be placed immediately after the shaft excavation is inspected and accepted, and just prior to shaft concrete placement. Temporary internal cage stiffeners shall be removed as the cage is placed in the shaft such that interference with the placement of concrete does not occur.

4.12.1 Reinforcing Ties, Splices and Clearances. All reinforcing steel in the shaft shall be double-wire tied and supported such that the steel remains within the allowable tolerances specified herein during placement of concrete or casing removal. With approval from the engineer, mechanical bar splices meeting the requirements specified in the contract documents may be used. Mechanical bar splices shall be staggered such that no more than 50 percent of the splices are within a 2-lap splice distance. Welding of reinforcing steel will not be permitted.

The reinforcing steel cage shall have sufficient rigidity to prevent racking or permanent deformations during delivery or installation.

Concrete Cover			
Shaft Diameter	**Uncased**	**Casing Remains**	**Casing Withdrawn**
2'-0" or less (600 mm or less)	3" (75 mm)	3" (75 mm)	4" (100 mm)
3'-0" (900 mm)	3" (75 mm)	3" (75 mm)	4" (100 mm)
4'-0" (1200 mm)	4" (100 mm)	4" (100 mm)	4" (100 mm)
5'-0" or larger (1500 mm or larger)	6" (150 mm)	6" (150 mm)	6" (150 mm)

4.12.2 Spacers. Rolling spacers for reinforcing steel shall be used to minimize disturbance of the shaft sidewalls and to facilitate removal of the casing during concrete placement. Concrete spacers or other approved non-corrosive spacing devices shall be used at sufficient intervals, near the bottom and along the shaft at intervals not exceeding 5 feet (1.5 m), to ensure concentric location of the cage within the shaft excavation. When the vertical steel is greater than one inch (25 mm) in diameter, the maximum spacing may be increased to 10 feet (3.0 m). As a minimum, a set of spacers shall be provided within 2 feet (0.6 m) of both the top and bottom of the shaft. In addition, one set of spacers shall be provided at both 2 feet (0.6 m) above and below each change in shaft diameter. Non-corrosive spacers shall be provided at a minimum of one spacer per 30 inches (750 mm) of circumference of cage with a minimum of three at each level to maintain the required reinforcement clearances. The spacers shall be of adequate dimension to maintain the specified clearance between the outside of the reinforcing cage and the side of the excavated hole or casing.

4.12.3 Bottom Supports. Approved non-corrosive bottom supports shall be provided for the reinforcing cage to ensure that the reinforcing is the correct distance above the bottom of shaft. The bottom supports shall not be used to support the weight of the cage. In the event that the shaft has been excavated below the anticipated tip elevation, the reinforcing cage shall be extended at the lower tip end by lap lengths for No. 11 bars or smaller or by use of mechanical connectors. Splices of adjacent bars will not need to be staggered in this situation and all of the

reinforcing bars may be spliced at a given location. Reinforcement will not be required for the bottom 12 inches (300 mm).

4.12.4 Durability of Spacers. Concrete spacers and bottom supports shall be constructed of concrete equal in quality and durability to the concrete specified for the shaft. Spacers fabricated from reinforcing steel shall be epoxy coated.

4.12.5 Protection of Reinforcing Cage. The reinforcing cage bottom supports shall be positioned such that the reinforcing steel is not allowed to come into contact with the soil or rock and to ensure that the bottom of the cage is maintained at the proper distance above the base as identified in the contract documents or directed by the engineer.

4.12.6 Check of Tolerances for Placement of Reinforcing Cage. The elevation of the top of the reinforcing cage shall be checked before and after the concrete is placed. The reinforcing cage shall be maintained within the specified tolerances, and the contractor shall make corrections to those tolerances, as required, to the satisfaction of the engineer. No additional shafts shall be constructed until the contractor has modified the reinforcing cage support to obtain the required tolerances.

4.13 Concrete Placement.

4.13.1 General Considerations. Accumulations of water in casings and excess sediment at the base shall be removed as described herein before the concrete is placed. No concrete shall be placed until all casings, if used, within a 15-foot (4.6 m) radius have been installed. Within the 15-foot (4.6 m) radius, all driving or vibratory installation methods shall be discontinued until the concrete in the last shaft has set at least five days. Concrete placement shall begin as soon as possible after completion of the excavation, inspection and setting of the reinforcing cage, and shall proceed in a continuous operation from the bottom of the shaft to the plan construction joint or above as specified herein. An unplanned stoppage of work may require an emergency construction joint during the shaft construction.

4.13.1.1 Placement of Concrete in the Shaft. Concrete shall be placed for each shaft with the flow of concrete directed down the center of the shaft. Concrete shall be placed by free fall or through a tremie or concrete pump. The free fall placement method will only be permitted in dry holes when approved by the engineer. The maximum height of free fall placement shall be 80 feet (24.4 m). Concrete placed by free fall shall fall directly to the base without contacting either the reinforcing cage or hole sidewall. Drop chutes may be used to direct concrete to the base during free fall placement.

4.13.1.2 Extent of Concrete Placement. Concrete placement shall continue after the shaft is filled until good quality concrete, as determined by the engineer, is evident at the plan construction joint at the top of the shaft and until a minimum of 18 inches (450 mm) of concrete, measured vertically, has been expelled. Immediately after concrete placement has been completed, all contaminated concrete and deleterious material accumulated above the top of shaft shall be removed to within one foot (0.3 m) of plan top of shaft. Any concrete remaining above the top of shaft shall be carefully removed to the plan construction joint after curing and excess casing removal.

4.13.1.3 Time Limitations. The elapsed time from the beginning of concrete placement in the shaft to the completion of the placement shall not exceed twelve hours. All admixtures shall be adjusted for the conditions encountered on the job so the concrete remains in a workable plastic state throughout the twelve -hour placement limit. Prior to concrete placement, the contractor shall provide test results of both a trial mix and a slump loss test conducted by an approved testing laboratory using approved methods to demonstrate that the concrete meets the twelve-hour requirement. The contractor may request a longer placement time if a concrete mix is provided that will maintain a slump of 6 inches (150 mm) or greater over the longer placement time in the entire shaft as demonstrated by trial mix and slump loss tests. The trial mix and slump loss tests shall be conducted using concrete and ambient temperatures approved for site conditions.

4.13.1.4 Adequacy of Concrete Placement Method. Failure to demonstrate the adequacy of concrete placement methods or equipment during construction of any technique or production shafts will be cause for the engineer to require appropriate alterations in equipment or methods by the contractor to eliminate unsatisfactory results. Drilled shafts that are completed, but do not meet the concrete placement requirements, will be unacceptable. The contractor shall correct all unacceptable completed shafts to the satisfaction of the engineer at the contractor's expense.

4.13.2 Concrete Placement by Tremie. Tremies used to place concrete shall consist of a tube of sufficient length to discharge concrete at the shaft base elevation. The tremie shall have sufficient weight to rest on the shaft bottom before the start of concrete placement and to prevent curling of the tremie line during placement of the concrete. The tremie shall not contain aluminum parts that may come in contact with the concrete. A tremie shall consist of a watertight tube having an inside diameter of no less than 10 inches (250 mm) and fitted with a hopper at the top. The inside and outside surfaces of the tremie shall be clean and smooth to permit both flow of concrete and unimpeded withdrawal during concrete placement. The tremie wall thickness shall be adequate to prevent crimping or sharp bends that restrict concrete placement. Tremies used for depositing concrete in a dry drilled shaft excavation shall be supported such that the free fall of the concrete is less than 80 feet (24.4 m) at all times.

4.13.2.1 Adjustment of Concrete Free Fall or Rate of Concrete Flow. If the free fall concrete causes the shaft excavation to cave or slough, the contractor shall control the movement of concrete by reducing the free fall of the concrete or the rate of flow of concrete into the excavation. The contractor shall be responsible for proposing, developing, and after approval from the engineer, implementing corrective work.

4.13.2.2 Tremie Operation. Underwater placement of concrete shall not begin until the tremie is at the shaft base elevation. The discharge end of the tremie shall be constructed to permit the free radial flow of concrete during placement operations. The tremie discharge end shall remain immersed as deep as practical in the concrete, but shall be no less than 5 feet (1.5 m) at all times. The tremie shall be supported such as to permit free movement of the discharge end over the entire top surface of the work and to permit rapid lowering when necessary to retard or stop the flow of concrete. The discharge end shall be sealed closed at the start of work to prevent water from entering the tube before the tube is filled with concrete.

After placement has started, the level of the concrete in the tremie shall be maintained above the level of slurry or water in the borehole at all times to prevent water or slurry intrusion into the shaft concrete. If water enters the tube after placement is started, the tremie shall be withdrawn, the discharge end resealed, and the placement restarted. The flow of concrete shall be continuous until the work is completed.

4.13.2.3 Removal of Tremie Orifice From Concrete. If at any time during the concrete pour, when using the wet construction method, the tremie line orifice is removed from the fluid concrete column and discharges concrete above the rising concrete surface, the entire drilled shaft will be considered defective. In such a case, the contractor shall remove the reinforcing cage and concrete, complete any necessary sidewall cleaning or overreaming as directed by the engineer, and repour the shaft. Corrections made by the contractor will be noncompensable and any effect on time of performance nonexcusable.

4.13.3 Concrete Placement by Pump. Concrete pumps and lines may be used for concrete placement by either the wet or dry construction method. All pump lines shall have a minimum diameter of 5 inches (125 mm) and shall be constructed with watertight joints. Concrete placement shall not begin until the pump line discharge orifice is at the shaft base elevation. For the wet construction method, a plug or similar device shall be used to separate the concrete from the fluid in the hole until pumping begins. The plug shall either be removed from the excavation or shall be of a material that does not cause a defect in the shaft if the plug is not removed. The discharge orifice shall remain at least 5 feet (1.5 m) below the surface of the fluid concrete. If at any time during the concrete pour the pump line orifice is removed from the fluid concrete column and discharges concrete above the rising concrete level, the shaft will be considered defective. In such a case, the contractor shall remove the reinforcing cage and concrete, complete any necessary sidewall cleaning or overreaming as directed by the engineer, and repour the shaft. Corrections made by the contractor will be noncompensable and any effect on time of performance nonexcusable.

4.13.4 Drop Chutes. Drop chutes may be used to direct placement of free fall concrete down the center of the shaft excavations where the maximum depth of water does not exceed one inch (25 mm). The free fall method of placement shall not be used in wet excavations. Drop chutes shall be a smooth tube constructed either as a continuous one-piece unit or as removable sections. Aluminum drop chutes will not be permitted. Concrete may be placed through either a hopper at the top of the tube or side openings as the drop chute is retrieved during concrete placement. The drop chute shall be supported such that the free fall of the concrete measured from the bottom of the chute is less than 80 feet (24.4 m) at all times.

4.14 Construction Joints. Unless otherwise approved by the engineer, construction joints shall be made only where shown on the plans. All planned reinforcing steel shall extend uninterrupted through joints. Unless otherwise shown on the plans, horizontal joints may be constructed without keys. Surfaces of fresh concrete at horizontal construction joints shall be rough floated sufficiently to thoroughly consolidate the surface and to intentionally leave the surface in a roughened condition. Shear keys, if required, shall consist of formed depressions in the surface covering approximately one-third of the contact surface.

4.15 Concrete Protection and Curing. For at least 48 hours after shaft concrete has been placed, no construction operations that will cause soil movement adjacent to the shaft shall be conducted, except for movement of light construction equipment. Portions of drilled shafts exposed to a body of water shall be protected from the action of water by leaving the forms in place for at least seven days after concrete placement or until the shaft concrete reaches a minimum strength of 2500 psi (18 MPa). After placement, the temporarily exposed surfaces of the shaft concrete shall be cured to prevent loss of water by use of one or more of the approved methods. Curing shall be in accordance with Sec 502.

4.16 Construction Tolerances. During excavation of the shaft, the contractor shall make frequent checks on the plumbness, alignment and dimensions of the shaft. Any deviation exceeding the allowable construction tolerances specified herein shall be corrected with a procedure approved by the engineer. Drilled shaft excavations constructed in such a manner that the concrete shaft cannot be completed within the required tolerances will not be accepted. Correction methods shall be submitted by the contractor for the engineer's approval. Drilled shaft construction shall not begin until approval has been obtained. When a shaft excavation is completed with unacceptable tolerances, the contractor shall propose, develop and, after approval from the engineer, implement corrective work. Redesign drawings and computations submitted by the contractor shall be signed by a professional engineer registered to practice in the State of Missouri. The following construction tolerances will apply to drilled shafts unless stated otherwise in the contract documents:

(a) Temporary casing diameters shall provide a final shaft diameter as shown on the plans. When approved by the engineer, the contractor may provide a larger casing at the contractor's expense.

(b) Shafts shall be constructed such that the center of the top of the shaft is within 3 inches (75 mm) of plan position in the horizontal plane at the plan elevation for the top of the shaft.

(c) The vertical alignment of a vertical shaft excavation shall not vary from the plan alignment by more than 1/4 inch per foot (20 mm/m) of depth. The alignment of a battered shaft excavation shall not vary by more than 1/2 inch per foot (40 mm/m) of the distance along the axis of the shaft from the prescribed batter.

(d) After all the shaft concrete is placed, the top of the reinforcing steel cage shall be no more than 6 inches (150 mm) above and no more than 3 inches (75 mm) below plan position.

(e) The top elevation of the shaft shall be no more than one inch (25 mm) above or 3 inches (75 mm) below the plan top of shaft elevation.

(f) The bottom of the shaft excavation shall be normal to the axis of the shaft within a tolerance of 3/8 inch per foot (30 mm/m) of shaft diameter.

4.17 Integrity Testing. The completed shaft shall be subjected to the specified testing methods, such as concrete coring or sonic logging testing, to determine the extent of any defects that may be present. Work and material required for testing shall be furnished by the contractor and will

be paid for in accordance with the contract documents. If testing reveals voids or discontinuities in the concrete that, as determined by the engineer, indicate that the shaft is not structurally adequate, the shaft will be rejected. The contractor shall then repair, replace or supplement the defective shaft in a method approved by the engineer. The construction of additional drilled shafts shall be discontinued until the contractor demonstrates the adequacy of the shaft construction method to the satisfaction of the engineer. Any additional work required by the contractor as a result of shaft defects will be noncompensable and any effect on time of performance nonexcusable.

4.17.1 Concrete Coring. At locations where concrete coring is to be provided, as indicated in the contract documents or as directed by the engineer, the following will apply. Upon completion of placing concrete and after waiting a minimum of 48 hours, the top surface of concrete shall be cleaned of laitance and any unsound concrete, and then one core hole shall be drilled completely through the shaft concrete and the rock socket to approximately one foot (0.3 m) below the bottom of the rock socket of each shaft. Provisions for the inspection of the concrete surface shall be in accordance with the applicable requirements described herein. Core holes shall be drilled at locations specified by the engineer. The holes shall be drilled to recover NX size cores. The core samples recovered shall be labeled as to the location from which the samples were taken. The samples shall be delivered to the engineer for examination. If the cores indicate defective concrete in the shaft, which in the judgment of the engineer impairs the strength of the completed shaft, the contractor shall drill additional cores as directed by the engineer. If the concrete is found to be defective, the contractor shall submit to the engineer in writing a proposal for correction, and those corrective procedures shall be approved by the engineer before such corrective work is undertaken. The cored holes in non-defective concrete shall be filled with grout such that all voids are filled. All grout used for core holes shall be in accordance with Sec 1066. No direct payment will be made for grout and grouting.

4.17.2 Sonic Logging Testing. The contractor shall perform non-destructive integrity testing on completed drilled shafts and rock sockets using the crosshole sonic logging (CSL) method for concrete drilled shafts. The tests shall be conducted as indicated on the plans or other contract documents, or as directed by the engineer. Sonic logging measurements and data interpretation shall be performed by a CSL consultant with at least two years of experience in CSL drilled shaft testing. The contractor shall submit the testing organization experience record to the engineer, along with a written description of the testing procedures, operation manuals for the testing equipment, and samples of previous test results indicating both sound and defective concrete. The contractor shall inform the engineer of scheduled test dates at least seven days prior to CSL testing. The contractor shall provide reasonable access to the shaft top for performance of the sonic logging testing.

4.17.2.1 Installation of Pipes. The contractor shall furnish and install 2-inch (50 mm) nominal inside diameter steel pipes, ASTM A 53, Standard Weight, for use in sonic testing of each drilled shaft. Pipes shall be installed in each drilled shaft at the locations shown on the plans, as required by the testing agency or as directed by the engineer. The pipes shall be sufficiently regular and free from defects to permit the free and unobstructed passage of the probes. The pipe

shall be installed such that all internal joints are flush. Stiffening devices such as mandrels, tape or similar material to seal the joints shall not be used. Pipe shall be watertight with clean internal and external faces, the latter to ensure a good bond between the concrete and the pipes. The pipes shall be fitted with a screw-on watertight shoe and cap and shall be securely fixed to the interior of the reinforcement cage with a minimum cover of 3 inches (75 mm) from the shaft periphery. The pipes shall be as near to parallel as possible, equally spaced and vertical. Where several sections of pipe are required to reach the full length, joints shall be made watertight. The pipes shall be filled with water and plugged or capped before shaft concrete is poured. The upper end of the pipe shall not be left open after the pour. The pipes shall extend at least 3 feet (0.9 m) above the top of the concrete in the shaft to compensate for water displaced by insertion and removal of the transmitter, receiver, and cable. For shafts with a rock socket, the lower end of the pipes shall extend to the bottom of the rock socket. Care shall be taken during the drilled shaft concrete pour to not damage the pipes. If a tremie is used, the tremie shall not be permitted to rest on top of the pipes during the pour. After completion of the sonic logging and final acceptance of the drilled shaft, the contractor shall fill the access pipes with grout.

4.17.2.2 Sonic Logging Equipment. The sonic logging equipment furnished by the CSL consultant shall consist of all necessary supplies, support equipment and power to perform the sonic logging testing requirements as described herein.

4.17.2.3 Sonic Logging Test Procedure. The drilled shaft shall be tested between 2 and 40 days after concrete placement. The following procedures shall apply:

(a) Pipes shall be checked to ensure the pipes are free from blockages and are filled with water.

(b) Levels shall be taken on top of each pipe, each pipe shall be plumbed and the length shall be recorded.

(c) Testing shall be performed between each pair of adjacent pipes around the shaft perimeter and also in pairing combinations between each pipe with all other pipes in the shaft.

(d) All tests shall be carried out with the probes in the same horizontal plane unless the engineer directs that defects be further evaluated with the probes on different horizontal planes.

(e) The probes shall be raised simultaneously from the bottom of the pipes ensuring that all slack is taken out of the cables before the analyzer is switched on, and that the distance between transducers remains constant during the course of the test. The speed of ascent shall be less than 12 inches per second (300 mm/second). Measurements shall be taken at 3-inch (75 mm) intervals or less. Anomalies indicated by longer pulse first-arrival times (FAT) and significantly lower amplitude per energy signals shall be reported. If anomalies are detected, additional tests with two or more sources per receiver vertical offsets of greater than or equal to 20 inches (500 mm) shall be conducted between the same tubes unless the anomaly is within 20 inches (500 mm) of the bottom of the shaft.

(f) The contractor shall provide accurate measurements of probe depths on the logs.

4.17.2.4 Record of Testing. Preliminary results of the testing shall be provided on site prior to the CSL consultant leaving the site. A detailed CSL report and test data shall be submitted to the engineer within seven days. The CSL report shall be signed and sealed by a Professional Engineer. The CSL report shall include, but is not limited to, the following: project identification and dates of testing, a table and schematic showing shafts tested with accurate identification of tube coordinates and collar elevation, name of personnel that performed the tests and interpretation and those personnel's affiliation, equipment used, data logs, interpretation, analysis, and results. The data logs shall include XY plots of FAT, amplitude and velocity versus depth. CSL data shall be processed to provide easy to understand 2D cross-sections between tubes for all tube pair combinations. These plots shall be annotated by the CSL consultant as appropriate to delineate anomalous results. If offset surveys are performed as part of 3D tomography, data plots shall include 3D volumetric images for the entire shaft, color-coded, to indicate velocity variations along the shaft. Locations and geometry of anomalies or unconsolidated zones shall be identified in 3D color images with detailed discussion. The results for CSL and 3D surveys shall be based on the percentage decrease in velocity as correlated to the following Concrete Condition Rating Criteria (CCRC). The velocity datum of good concrete shall be established by averaging the velocities in the good concrete along the drilled shaft. Deviations from the velocity datum shall be used for determining the Concrete Condition Rating.

Concrete Condition Rating Criteria			
Concrete Condition Rating	**Rating Symbol**	**Velocity Reduction**	**Indicative Results**
Good	G	0 to 10%	Acceptable concrete
Questionable	Q	10% to 25%	Minor concrete contamination or intrusion. Questionable quality concrete.
Poor	P/D	> 25%	Defects exist, possible water slurry contamination, soil intrusion, and or poor quality concrete.
Water	W	V= 4760 to 5005 ft/sec (1,450 to 1525 m/s)	Water intrusion, or water filled gravel intrusion with few or no fines present.
No Signal	NS	No signal received	Soil intrusion or other severe defect absorbed the signal, tube debonding if near top.

4.17.2.5 Correction of Unacceptable Results. The contractor shall immediately inform the engineer of any suspected anomalies, honeycombing or poor concrete quality detected by testing.

The contractor and CSL consultant shall duly perform further tests as directed by the engineer to evaluate the extent of any detected anomalies. Core drilling, or other investigative methods as approved by the engineer, shall be performed to further investigate the anomaly. If a defect is confirmed, the contractor shall bear all costs involved with the shaft coring, grouting and remediation. Within 14 days of the completion of testing, the contractor shall provide a report signed and sealed by a Professional Engineer registered in the State of Missouri providing the results of the additional investigations and recommendations to accept or repair the shaft. The report shall also contain recommendations for modification of construction procedures to prevent defects for subsequent shaft installations. The dates of the completion of drilling, cleaning, steel placement and concrete pour shall also be provided. Construction above the top of shaft shall not be performed until the shaft has been accepted by the engineer.

5.0 Drilled Shaft Load Tests. All load tests, when required by the contract documents, shall be completed and submitted to the engineer for review and approval before construction of any production drilled shafts. The locations of load test shafts, the maximum loads to be applied, the test equipment to be furnished by the contractor, and the actual sequence of the load testing shall be as shown on the plans or as specified in the contract documents. After completion of testing, test shafts not used as production shafts in the permanent foundation shall be cut off at an elevation 3 feet (0.9 m) below the finished ground line or as directed by the engineer. The portion of shafts cut off shall be disposed of by the contractor, at the contractor's expense, in a manner approved by the engineer.

6.0 Method of Measurement.

6.1 Drilled Shaft. Accepted drilled shafts will be measured for payment to the nearest 0.10 linear foot (0.05 m) of length along the axis of each shaft complete-in-place. For shafts without a rock socket, measurement will be from the plan top of the shaft elevation to the bottom of the shaft. For shafts with a rock socket, measurement will be from the plan top of the shaft to the top of the rock socket. "Top of the rock socket" will be defined as the upper elevation at which sound rock occurs across the entire width of the shaft, as determined by the engineer. Reinforcing steel will be measured for payment in accordance with Sec 706. Test shafts serving also as technique shafts will be measured for payment per each load test performed.

6.2 Rock Socket. The accepted rock sockets, if required, will be measured for payment to the nearest 0.10 linear foot (0.05 m) of length along the axis of each rock socket in-place from the top of sound rock elevation, as determined by the engineer and in accordance with Sec 6.1, to the bottom of the rock socket as built. In the event that additional rock socket construction is directed by the engineer, the additional length will be measured to the nearest 0.10 linear foot (0.05 m). Reinforcing steel will be measured for payment in accordance with Sec 706.

~~**6.3 Technique Shafts.** Accepted technique shafts, if required, will be measured for payment to the nearest 0.10 linear foot (0.05 m) of length along the axis of each shaft in-place from the plan top of the shaft elevation to the bottom of the rock socket or shaft as built for each size of acceptable technique shaft drilled, including rock socket. Reinforcing steel will be measured for payment in accordance with Sec 706.~~ A REVISED

A REVISED **6.3 Television Camera Inspection.** One complete television camera inspection of each shaft, including the rock socket when applicable, will be measured for payment as television camera inspection, per each. Any additional television inspections required by the engineer due to extending the rock socket to a greater depth or when supplementary inspections are required by the engineer and no defects are found, will be measured for payment as television camera inspection, per each.

A REVISED **6.4 Foundation Inspection Holes.** Measurement for payment for foundation inspection holes will be to the nearest 0.10 linear foot (0.05 m) of length along the axis of each hole by the linear foot (m). For shafts designed in side friction, or a combination of side friction and end bearing, measurement will be from the top of the rock socket to the bottom of the foundation inspection hole. For shafts designed in end bearing, measurement will be from the bottom of the rock socket to the bottom of the foundation inspection hole. Shafts designed in end bearing or a combination of end bearing and side friction shall also have ATV testing in the inspection hole from the bottom of rock socket to bottom of inspection hole. No separate measurement will be made for ATV testing. If the engineer directs foundation inspection borings more than 10 feet (3.0 m) below the anticipated bottom of the rock socket elevation as shown on the plans, measurement for payment for that portion of the boring in excess of 10 feet (3.0 m) below anticipated bottom of the rock socket elevation as shown on the plans will be to the nearest 0.10 linear foot (0.05 m) of excess.

A REVISED **6.5 Concrete Coring.** Measurement for payment for concrete cores will be to the nearest 0.10 linear foot (0.05 m) of length along the axis of the shaft from the top of concrete to a point as determined by the engineer, and may extend the entire length of the shaft plus one foot (300 mm) below the bottom of the rock socket.

A REVISED **6.6 Sonic Logging Testing.** Sonic logging testing of drilled shafts, as required, will be measured for payment per each.

A REVISED **6.7 Drilled Shaft Load Tests.** Load tests will be measured for payment per each load test performed. This shall include all material, including, but not limited to the steel casing, reinforcing steel, spacers, concrete and sonic logging tubes required to construct the technique/test shaft. It shall also include, but not be limited to, all labor and equipment required to construct the technique/test shaft. This shall also include television camera inspection, SID inspection, foundation inspection holes and associated ATV testing, sonic logging testing and the load test.

B REVISED

B REVISED

A REVISED

A REVISED **6.8 SID Inspection.** One complete SID inspection of each shaft designed in end bearing or a combination of end bearing and side friction, will be measured for payment as SID inspection, per each. Any additional SID inspections required by the engineer to inspect the shaft bottom, except to reinspect when the bottom cleanliness is not satisfactory, will be measured for payment as SID inspection, per each.

7.0 Basis of Payment.

7.1 Drilled Shaft. Payment will be considered full compensation for all steel casing required, costs of drilling, excavation, slurry, cleaning, an acceptable method of inspection as required,

furnishing and placing concrete, grouting and incidental work and material required by the contract documents. Payment for any drilled shaft installed and accepted will be at the contract unit price per linear foot (m) for the diameter of the drilled shafts specified, irrespective of the character of the material actually encountered during excavation. No additional compensation will be made for concrete required to fill an oversized casing or for oversized excavation. If the method of construction requires that drilled shaft casing be seated into the sound rock such that the bottom of the casing is below the determined top of sound rock elevation, payment for excavation below the top of the sound rock layer (top of the rock socket) will be included in the payment for the rock socket. If sound rock is encountered within the excavation at which point a rock auger, core barrel or other rock-removing specialty tool must be used by the contractor before the top of the sound rock elevation to be used as "top of the rock socket" is confirmed by the engineer, that work will be paid for as rock socket excavation. Payment for reinforcing steel will be in accordance with Sec 706.

7.2 Rock Socket. Payment will be considered full compensation for drilling, excavation, slurry, cleaning, dewatering, an acceptable method of inspection as required, furnishing and placing concrete, and incidental work and material according to the contract documents. For payment purposes the length of any rock socket installed and accepted shall be paid for at the contract unit price per linear foot (m) for the diameter of the rock socket specified, irrespective of the character of the material actually encountered during excavation. In the event that the engineer orders additional rock socket construction, payment for the additional length will be at the rate of 150 percent of the contract unit price per linear foot (m) of rock socket up to a maximum additional length of 8 feet (2 m). Any work necessary to extend the length of the rock socket more than the additional 8 feet (2 m) will be paid for as changes in the work in accordance with Sec 104.3. Payment at the adjusted rate will be considered full compensation for the additional excavation into rock, all additional concrete, except reinforcing steel, including any and all splices, and all incidentals necessary to complete the work down to the elevation designated by the engineer. Reinforcing steel will be paid for in accordance with Sec 706.

A REVISED

~~**7.3 Technique Shafts.** Payment for technique shafts will be in accordance with the contract unit prices for the appropriate drilled shaft and rock socket diameters. Payment will be considered full compensation for any steel casing required, all costs of drilling, excavation, an acceptable method of inspection as required, furnishing and placing concrete, grouting and incidental work, and material necessary to satisfactorily construct the technique shafts according to the contract documents. Reinforcing steel will be paid for in accordance with Sec 706. Test shafts serving also as technique shafts will be paid at the contract unit price for drilled shaft load tests.~~

A REVISED

7.3 Unexpected Obstructions. Contract adjustment, in time or amount, resulting from encountering any obstructions in the work covered by Sec 701 will be made only if the obstruction constitutes a differing site condition, as defined by the contract. Contract adjustments will be determined only under the terms of the contract for adjustments in time or compensation due to encountering a differing site condition. Contract adjustments will be allowed only to the extent, in type and amount of contract adjustment, that such adjustment is

expressly allowed for or permitted by the contract documents, specifically: (1) Secs 109.4 through 109.4.3 for cost adjustment; (2) Sec 109.11 for any compensable delay to the work to deal with the obstruction, but not for any effect upon the unchanged work; and (3) Sec 108.14 to determine any adjustment in contract time.

A REVISED

7.4 Television Camera Inspection. Payment for one complete television camera inspection of each shaft, including the rock socket when applicable, will be made at the contract unit price per each for television camera inspection. Any additional television inspections required by the engineer due to extending the rock socket to a greater depth, or when supplementary inspections are required by the engineer and no defects are found, will be paid for at the contract unit price for television camera inspection, per each. Payment will not be made for television camera inspections that reveal defects due to the contractor's operation. Payment for television camera inspection will be considered full compensation for moving in equipment, flushing turbid water from the shaft, conducting the actual scanning as specified, furnishing video tape, removing equipment, and all tools, labor and any incidentals necessary to complete the work. The number of television camera inspections may vary from the estimated quantities, but the contract unit price shall prevail regardless of the variation.

A REVISED

7.5 Foundation Inspection Holes. Payment for foundation inspection holes will be at the contract unit price and will be considered full compensation for drilling or coring the holes, extracting and packaging the samples or cores, laboratory testing, delivering the samples or cores to the specified MoDOT location, ATV testing as required in the inspection hole, and for all other expenses necessary to complete the work. If the engineer directs foundation inspection borings more than 10 feet (3 m) below the anticipated bottom of rock socket elevation as shown on the plans, payment for that portion of the boring in excess of 10 feet (3 m) below the anticipated bottom of the rock socket elevation as shown on the plans will be at the rate of 150 percent of the contract price per linear foot (m) of excess. If, for shafts designed in end bearing, the foundation inspection hole is drilled prior to shaft construction or prior to rock socket excavation, coring of the rock above the bottom of the rock socket will be noncompensable.

A REVISED

7.6 Concrete Coring. Payment for concrete coring will be considered full compensation for all material, labor, tools, equipment, grouting and incidentals necessary to complete the work. The number of feet (m) of cored holes may vary from the estimated quantities, but the contract unit price shall prevail regardless of the variation.

A REVISED

7.7 Sonic Logging Testing. Payment for sonic logging testing of drilled shafts as required by the engineer will be made at the contract unit price per each for sonic logging testing. No payment will be made for supplementary sonic logging testing to evaluate defects. Payment for sonic logging testing will be considered full compensation for providing all equipment, access pipes, conducting the actual probing measurements as specified, furnishing reports, removing equipment, and all tools, labor and any incidentals necessary to complete the work. The number of sonic logging inspections may vary from the estimated quantities, but the contract unit price shall prevail regardless of the variation.

A REVISED **7.8 Drilled Shaft Load Tests.** Payment will be at the contract unit price and will be considered full compensation for all costs related to the installation of the technique/test shaft and the performance of the load tests as specified by the contract documents. Payment for Drilled Shaft Load Tests shall be full compensation for all material, including, but not limited to, the steel casing, reinforcing steel, spacers, concrete and sonic logging tubes required to construct the technique/test shaft. It shall also include, but not be limited to, all labor and equipment required to construct the technique/test shaft. This shall also include television camera inspection, SID inspection, foundation inspection holes and associated ATV testing, sonic logging testing and the load test.

B REVISED

B REVISED

A REVISED

A REVISED **7.9 Welding Inspection.** If evidence of poor welding is found, radiographing or other non-destructive testing of welds required by the engineer will be noncompensable and any effect on time of performance nonexcusable.

A REVISED **7.10 SID Inspection.** Payment for one complete SID inspection of each shaft as required by this specification or by the engineer, will be made at the contract unit price per each for SID inspection. Any additional SID inspection required by the engineer to inspect the shaft bottom, except to reinspect when the bottom cleanliness is not satisfactory, will be paid for at the contract unit price per each for SID inspection. The number of SID inspections may vary from the estimated quantities, but the contract unit price shall prevail regardless of the variation.

3 REVISED **BB. I-70 Mississippi River Bridge, Drilled Shaft Special Provision - Osterberg Cell (O-Cell) Load Testing**

1.0 Description. This work shall consist of furnishing all materials and labor necessary for conducting an Osterberg Cell (O-cell) Load Test and reporting the results. The Contractor will be required to supply material and labor as hereinafter specified and including prior to, during and after the load test. The drilled shaft used for the load test program will be instrumented by LOADTEST, Inc. (the Osterberg Cell supplier). The O-cell load test will be conducted by LOADTEST, Inc. with the Contractor providing auxiliary equipment and services as detailed herein and Exhibit 1 attached to this JSP.

2.0 Materials. The Contractor shall supply all materials required to install the O-cell, conduct the load test, and remove the load test apparatus as required. Materials supplied which do not become a part of the finished structure become the responsibility of the Contractor at the conclusion of the load test and shall be removed from the job site.

2.1 O-cell Assembly. The Contractor shall furnish one (1) or more O-cell assemblies as required for each load test, to be supplied by: LOADTEST, Inc., 2631-D NW 41st Street, Gainesville, FL 32606; Phone: (800) 368-1138 or (352) 378-3717; Fax: (352) 378-3934. The O-cell assemblies to be provided shall have a total capacity of at least 24,000 kips in each direction and shall be equipped with all necessary hydraulic lines, fittings, pressure source, pressure gage and telltale devices.

2.2 Instrumentation. Strain gauges of a suitable type to measure the load distribution within the test shaft shall be included with the O-Cell assembly provided by LOADTEST, Inc. The gauges shall have required wires and cables to collect data.

2.3 Other Materials. Other required materials include, but are not limited to the following:

2.3.1 Water. Fresh, clean, potable water from an approved source to be used as hydraulic fluid to pressurize the O-cell assembly.

2.3.2 Reference System. The Contractor will provide materials and equipment to establish a suitable reference system acceptable to LOADTEST, Inc. and the Engineer. The reference system can be either a fixed reference beam or independent survey equipment.

2.3.2.1 Reference Beam. If a reference beam is used, the Contractor shall provide materials sufficient to construct and shade a stable reference beam system for monitoring movements of the shaft during testing. The system shall be supported at a minimum distance of 3 shaft diameters from the center of the test shaft to minimize disturbance of the reference system. A tripod shall be provided to support an automated digital survey level used to monitor movement of the reference system during testing.

2.3.2.2 Survey Equipment. In lieu of a reference beam, two survey levels located in excess of three shaft diameters may be used to monitor the top of shaft displacement. In this case, two tripods and weather protection (Quikshade) shall be provided. The levels shall be placed on a stable platform or land surface.

2.3.3 Work Area. Materials sufficient to construct a protected work area (including provisions such as a tent or shed for protection from inclement weather for the load test equipment and personnel) of size and type required by the Engineer and LOADTEST, Inc. In the case of cold weather, the protected work area shall be maintained at a temperature above 40° F in order to insure proper operation of the load testing equipment.

2.3.4 Power. Stable electric power source, as required for lights, welding, instruments, etc.

2.3.5 Attachment of O-Cell. Materials such as angle or channel iron, steel bearing plates and/or other devices needed to attach O-cell assembly and instrumentation to the carrying frame, as required.

3.0 Equipment. The Contractor shall supply equipment required to install the O-cell assembly and instrumentation, conduct the load test, and remove the load test apparatus as required. Required equipment includes but is not limited to the items listed below.

3.1 Welding. Welding equipment, qualified welding personnel and labor, as required, to assemble the test equipment under the supervision of LOADTEST, Inc. personnel, attach instrumentation to the O-cell assembly, attach instrumentation onto the carrying frame, and prepare the work area.

3.2 Carrying Frame Construction. Equipment and labor to construct the carrying frame including any steel bearing plates required for the test shaft.

3.3 Handling O-Cell and Cage/Frame. Equipment and operators for handling the O-cell assembly, instrumentation and carrying frame during the installation of the O-cell assembly and during the conduct of the test, including but not limited to a crane or other lifting device, manual labor, and hand tools as required by LOADTEST, Inc. and the Engineer.

3.4 Work Area and Reference System. Equipment and labor sufficient to erect the protected work area and reference system, to be constructed to the requirements of the Engineer and LOADTEST, Inc.

3.5 Air Supply. .Air compressor (minimum 185 cfm, 125 psi) for pump operation during the load test.

4.0 PROCEDURE

4.1 Test Shaft Construction. The test shaft shall be constructed using the approved shaft installation techniques until the drilled shaft excavation has been completed. The shaft shall be constructed to the dimensions and elevations shown on ~~the plans~~ Exhibit 1 using the following sequence: A REVISED

(a) Drill the rock socket to full length with the appropriate diameter tools using water only; and

(b) Perform the final clean-out inspection

Inspection procedures on the test shaft should be consistent with those used for production shafts. Eight cross-hole sonic logging (CSL) access tubes should be installed in the test shaft near the perimeter. Testing should be conducted between all pairs of access tubes around the perimeter and across both diagonal pairs.

4.2 O-Cell Assembly. The O-cell, hydraulic supply lines and other instruments will be assembled and made ready for installation under the direction of LOADTEST, Inc. and the Engineer, in a suitable area, adjacent to the test shaft, to be provided by the Contractor. The O-cell assembly shall be welded to the carrying frame. The strain gauges shall be attached to the carrying frame at the locations/elevations shown on the drawings. The plane of the bottom plate(s) of the O-cell(s) shall be set at right angles to the long axis of the frame. The Contractor shall use an approved method to handle the test assembly so as not to damage the instrumentation during installation. The O-cell assembly must remain perpendicular to the long axis of the carrying frame throughout the installation process.

4.3 Installation of O-Cell in Shaft. When the test shaft excavation has been completed, inspected and accepted by the Engineer, the O-cell assembly and the carrying frame may be installed. The O-cell assembly and carrying frame will be lowered into the shaft and suspended

from the permanent casing above the bottom of the shaft excavation approximately 3 inches. A tremie or pump line will be used to place grout below the O-cell to provide a level base and reaction for the O-cell.

4.4 Concrete Placement. The first 5 yd^3 will be grout. After seating the O-cell, the remainder of the test shaft shall be concreted in a manner similar to that specified for production shafts. At least four (4) concrete test cylinders, in addition to those specified elsewhere, shall be made from the concrete used in the test shaft, to be tested at the direction of LOADTEST, Inc. At least one of these test cylinders shall be tested prior to the load test and at least two cylinders shall be tested on the day of the load test.

4.5 Adjacent Operations. During the load test, no adjacent drilled shaft casings may be vibrated into place in the foundation area near the load test. Drilling may not continue within a 100-foot radius of the test shaft. If test apparatus shows any interference due to construction activities outside of this perimeter, such activities shall cease immediately. Any piles needed to support a reference beam should be driven no sooner than 24 hours after concrete placement.

4.6 Removal of Test Equipment. After the completion of the load test, the Contractor shall remove any equipment, material, waste, etc. which are not to be a part of the finished structure.

5.0 Testing and Reporting

5.1 Personnel Qualifications. The load testing shall be performed by a qualified geotechnical engineer approved in advance by the Engineer. The geotechnical engineer performing the tests must have a demonstrated knowledge of load testing procedures, and have performed at least 10 O-cell load tests within the past two years.

5.2 Test Procedure. The load testing shall be performed in general compliance with *ASTM D 1143 Standard Test Method for Piles Under Static Axial Load* using the Quick Load Test Method for Individual Piles.

5.2.1 Load Increments. Initially the loads shall be applied in increments equaling 5 to 10% of the anticipated ultimate capacity of the test shaft. The magnitude of the load increments may be increased or decreased depending on the project requirements but should not be changed during the test.

5.2.2 Load Increments. Direct movement indicator measurements should be made of the following: O-cell expansion either directly or with telltales (minimum. of 3 indicators required), upward top-of-shaft displacement (minimum of 2 indicators required) and shaft compression above O-cell (minimum. of 2 indicators required).

5.2.3 End of Test. Loads shall be applied at the prescribed intervals until the ultimate capacity of the shaft is reached in either end bearing or side shear, until the maximum capacity or maximum stroke of the O-cell is reached, or unless otherwise directed by the Engineer.

5.2.4 Reading Intervals. At each load increment, or decrement movement indicators shall be read at 1, 2, 4 and 8-minute intervals while the load is held constant.

5.2.5 Unloading Cycles. During unloading cycles the load decrement shall be such that at least 4 data points are acquired for the load versus movement curve. Additional cycles of loading and unloading using similar procedures may be required by the Engineer following the completion of the initial test cycle.

5.2.6 Displacement Sensors. Displacement sensors used to measure O-cell expansion and top-of-shaft displacement should have a minimum travel of 4 inches and be capable of being read to the nearest 0.001 inch division. When O-cell expansion is measured directly, LVWDTs capable of measuring the full stroke of the O-cell will be used (typically 6 inches). Displacement sensors used to measure shaft compression should have a minimum travel of 1 inch and be capable of being read to the nearest 0.001 inch division.

5.3 Reporting An initial data report containing the load-movement curves and data tables will be provided to the Contractor by LOADTEST, Inc. within 5 working days of the completion of load testing, to allow evaluation of the test results. A final report on the load testing shall be submitted to the Contractor by LOADTEST, Inc. within 10 working days after completion of the load testing. Unless otherwise specified elsewhere in the contract, LOADTEST, Inc. will supply five (5) copies of the final report of each load test and will provide the report electronically in PDF format.

Missouri
Department
of Transportation

MoDOT

Pete K. Rahn, Director

105 West Capitol Avenue
P.O. Box 270
Jefferson City, MO 65102
(573) 751-2551
Fax (573) 751-6555
www.modot.org

TO: John Grana
Resident Engineer – MRB Project Office

CC/ATT: Dave Ahlvers–cm
Dean Franke-br
Kent Nelson-br

CC: Chad Daniel-br

FROM: Greg Sunde GS
Structural Liaison Engineer

DATE: June 3, 2010

SUBJECT: Construction Change
December 8, 2009 Letting
St. Louis City
Job J6I0984
Bridge No. A6500 (Main Spans over the Mississippi)

Attached is an entirely new set of plans reflecting MTA's ATC pertaining to foundation changes. Also shown in this new set is the addition of four deck drains and associated changes to four precast panels.

There were changes to 88 sheets. The changes associated with the ATC are marked as Revision 4, the changes associated with the additional deck drains are marked as Revision 5.

Also attached is a three page, sheet by sheet, description of the changes.

If you have any questions please contact me at 573-522-2560.

gs
attachment

REVISIONS TO BRIDGE A6500 (MAIN SPANS) - 5/17/10

SHEET	DESCRIPTION
BR2	Revised Index of Drawings to reflect ATC revisions.
BR3	Revised foundations of Piers 10 - 13.
BR4	Revised foundations of Piers 10 - 13.
BR6	Revised General Notes to reflect ATC revisions.
BR7	Revised General Notes to reflect ATC revisions.
BR8	Revised tables of Estimated Quantities for bridge and foundations at Piers 11 & 12 to reflect ATC revisions. Removed table of Estimated Quantities for caisson foundations.
BR9	Revised table of Estimated Incidental Quantities to reflect ATC revisions. Revised reinforcing steel quantity for Precast Prestressed Slab Panels, due to additional slab drains being placed in Span (10-11).
BR11	Removed details of foundation layout with caisson foundations.
BR12	Revised Foundation Layout, Drilled Shaft Data, and Rock Socket Data to reflect ATC revisions.
BR21	Removed details of rock blanket at caisson foundations. Revised Plan and Elevation views to reflect ATC revisions. Modified the profile of the rock blanket.
BR22	Revised column reinforcing at Pier 10 to reflect ATC revisions.
BR23	Revised drilled shaft and rocket sock details, Substructure Quantity Table, notes for table, and sheet notes for Pier 10 to reflect ATC revisions.
BR25	Revised foundations at Pier 11 to reflect ATC revisions.
BR26-BR38	Removed details of caisson foundation, including details of the cutting edge, caisson, subshaft, and distribution cap for Pier 11.
BR39-BR41	Revised foundation at Pier 11 to reflect ATC revisions.
BR42	Revised foundations at Pier 12 to reflect ATC revisions.
BR43-BR55	Removed details of caisson foundation, including details of the cutting edge,

	caisson, subshaft, and distribution cap for Pier 12.
BR56-BR58	Revised foundation at Pier 12 to reflect ATC revisions.
BR59	Revised foundation and references to the foundation due to ATC revisions.
BR60-BR61	Revised key to reflect ATC revisions.
BR62	Revised spacings of vertical reinforcing in pier shaft to reflect ATC revisions.
BR67-BR72	Revised key to reflect ATC revisions.
BR96	Revised column reinforcing at Pier 13 to reflect ATC revisions.
BR97	Revised drilled shaft and rocket sock details, Substructure Quantity Table, notes for table, and sheet notes for Pier 13 to reflect ATC revisions.
R111-BR116	Revised key to reflect ATC revisions.
BR144	Revised Precast Slab Panel Layout, due to additional slab drains being placed in Span (10-11).
BR153	Added additional panels to Precast Panel Data table, due to additional slab drains being placed in Span (10-11).
BR163	Revised Slab Drain with Grate Layout, due to additional slab drains being placed in Span (10-11).
BR165	Revised Slab Drainage Details to show additional slab drains being placed in Span (10-11).
BR177	Revised foundations at Piers 11 & 12 in plan view to reflect ATC revisions.
BR179	Removed details of Suggested Erection Sequence for Piers 11 & 12 with with caisson foundations to reflect ATC revisions.
R181-BR183	Revised foundations of piers to reflect ATC revisions.
BR184	Revised Bill of Reinforcing Steel for Pier 10, and added additional bar shape to Bar Bending Diagram to reflect ATC revisions.
BR188	Revised Bill of Reinforcing Steel for Pier 13 to reflect ATC revisions.
BR189	Removed Bill of Reinforcing Steel for Foundation - Pier 11 to reflect ATC revisions.
BR190	Revised Bill of Reinforcing Steel for latest Pier 11, and removed Bill of

	Reinforcing Steel for Foundation - Pier 12 to reflect ATC revisions.
BR191	Removed Bill of Reinforcing Steel for Foundation - Pier 12, and revised Bill of Reinforcing Steel for latest Pier 12 to reflect ATC revisions.
BR196	Added Bill of Reinforcing Steel for new panel types and moved other panels to next sheet, due to additional slab drains being placed in Span (10-11).
R197-BR201	Added Bill of Reinforcing Steel for panels moved from previous sheet and moved other panels to next sheet.
BR202	Added Bill of Reinforcing Steel for panels moved from previous sheet, moved portion of Bill of Reinforcing Steel for Cast-In-Place Slab to next sheet, and moved Bill of Reinforcing Steel for Median Barrier Curb to next sheet.
BR203	Added portion of Bill of Reinforcing Steel for Cast-In-Place Slab moved from previous sheet, added Bill of Reinforcing for Median Barrier Curb moved from previous sheet, and revised Totals for Bill of Reinforcing to reflect ATC revisions and additional slab drains being placed in Span (10-11).
BR204	Removed details of As-Built Drilled Shaft Data with caisson foundations.
BR205	Revised Part Plan and As-Built Drilled Shaft Data table to reflect ATC revisions.

MISSOURI HIGHWAYS AND TRANSPORTATION COMMISSION

SEC/SUR 2 TWP 2N RGE 10W

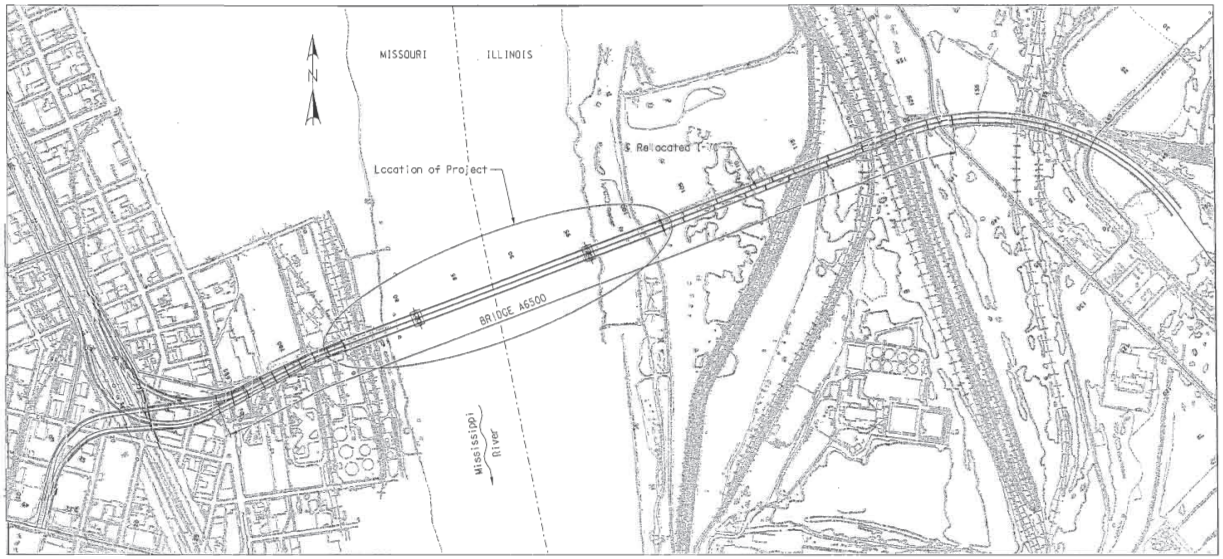

I-70 MISSISSIPPI RIVER BRIDGE
MAIN SPANS

Designed JUL 2009
Detailed JUL 2009
Checked JUL 2009

Note: This drawing is not to scale. Follow dimensions.

Sheet No. 1 of 205

STD. 706.35

STATE OF MISSOURI
STEVEN T. HAUGUE
NUMBER 6-2009
REGISTERED PROFESSIONAL ENGINEER
8/20/09

DATE 8/20/09

ROUTE	STATE
I-70	MO/IL
DISTRICT	SHEET NO.
6	BR1

COUNTY
ST. LOUIS CITY - MO
ST. CLAIR - IL

JOB NO.
J6I0984

CONTRACT ID.

PROJECT NO.

BRIDGE NO.
A6500

DATE	DESCRIPTION

MISSOURI HIGHWAYS AND TRANSPORTATION COMMISSION

MoDOT
105 WEST CAPITOL
JEFFERSON CITY, MO 65102
1-888-ASK-MODOT (1-888-275-6636)

HNTB
715 KIRK DRIVE
KANSAS CITY, MO 64105-1310
TELEPHONE (816) 472-1201
CERTIFICATE OF AUTHORITY
NO. 001270

LICENSED STRUCTURAL ENGINEER
STEVEN T. HAUGUE
09-005611
KANSAS CITY, MISSOURI
STATE OF ILLINOIS

Signature
8-20-2009
Date

REV.

\\kcow00\jobs\46440\Bridges\Plans\CdtoMoDOTA6500\J6I0984\A6500-dgn\ZPLOT_B_A6500_001-205_J6I0984_001.dgn 18-AUG-2009 14:17

INDEX OF DRAWINGS

BR1 Title Sheet
BR2 Index of Sheets
BR3 Overall Mississippi River Bridge Layout
BR4 General Plan & Elevation
BR5 Typical Section
BR6 General Notes
BR7 General Notes
BR8 Estimated Quantities
BR9 Estimated Quantities
BR10 River Stage Hydrograph
BR11 Foundation Layout → Blank Sheet Foundation Layout (4)
BR12 Alternative Foundation Layout
BR13 Boring Data
BR14 Boring Data
BR15 Boring Data
BR16 Boring Data
BR17 Boring Data
BR18 Boring Data
BR19 Boring Data
BR20 Boring Data
BR21 Limits of Rock Blanket
BR22 Pier 10
BR23 Pier 10
BR24 Pier 10
BR25 Pier 11 - Dimensions
BR26 Pier 11 - Foundation Dimensions → Blank Sheet
BR27 Pier 11 - Cutting Edge → Blank Sheet
BR28 Pier 11 - Cutting Edge → Blank Sheet
BR29 Pier 11 - Cutting Edge → Blank Sheet
BR30 Pier 11 - Caisson → Blank Sheet
BR31 Pier 11 - Caisson → Blank Sheet
BR32 Pier 11 - Caisson → Blank Sheet
BR33 Pier 11 - Caisson → Blank Sheet
BR34 Pier 11 - Subshaft → Blank Sheet
BR35 Pier 11 - Subshaft → Blank Sheet
BR36 Pier 11 - Distribution Cap → Blank Sheet
BR37 Pier 11 - Distribution Cap → Blank Sheet
BR38 Pier 11 - Distribution Cap → Blank Sheet
BR39 Pier 11 - Alternative Foundation → Pier 11 - Foundation
BR40 Pier 11 - Alternative Foundation → Pier 11 - Foundation
BR41 Pier 11 - Alternative Foundation → Pier 11 - Foundation
BR42 Pier 12 - Dimensions → Pier 12 - Dimensions (4)
BR43 Pier 12 - Foundation Dimensions → Blank Sheet
BR44 Pier 12 - Cutting Edge → Blank Sheet
BR45 Pier 12 - Cutting Edge → Blank Sheet
BR46 Pier 12 - Cutting Edge → Blank Sheet
BR47 Pier 12 - Caisson → Blank Sheet
BR48 Pier 12 - Caisson → Blank Sheet
BR49 Pier 12 - Caisson → Blank Sheet
BR50 Pier 12 - Caisson → Blank Sheet
BR51 Pier 12 - Subshaft → Blank Sheet
BR52 Pier 12 - Subshaft → Blank Sheet
BR53 Pier 12 - Distribution Cap → Blank Sheet
BR54 Pier 12 - Distribution Cap → Blank Sheet
BR55 Pier 12 - Distribution Cap → Blank Sheet
BR56 Pier 12 - Alternative Foundation → Pier 12 - Foundation
BR57 Pier 12 - Alternative Foundation → Pier 12 - Foundation
BR58 Pier 12 - Alternative Foundation → Pier 12 - Foundation
BR59 Piers 11 & 12 - Shaft
BR60 Piers 11 & 12 - Shaft
BR61 Piers 11 & 12 - Shaft
BR62 Piers 11 & 12 - Shaft
BR63 Piers 11 & 12 - Shaft
BR64 Piers 11 & 12 - Shaft
BR65 Piers 11 & 12 - Shaft
BR66 Piers 11 & 12 - Shaft
BR67 Piers 11 & 12 - Tower
BR68 Piers 11 & 12 - Tower
BR69 Piers 11 & 12 - Tower
BR70 Piers 11 & 12 - Tower
BR71 Piers 11 & 12 - Tower
BR72 Piers 11 & 12 - Tower
BR73 Piers 11 & 12 - Tower
BR74 Piers 11 & 12 - Tower
BR75 Piers 11 & 12 - Tower
BR76 Piers 11 & 12 - Tower
BR77 Piers 11 & 12 - Tower
BR78 Piers 11 & 12 - Tower
BR79 Piers 11 & 12 - Tower
BR80 Piers 11 & 12 - Tower
BR81 Piers 11 & 12 - Pedestal
BR82 Lateral Restrainer Bearing Details - Piers 11 & 12
BR83 Tower Access Opening Details - Piers 11 & 12
BR84 Tower Access Details - Piers 11 & 12
BR85 Tower Access Details - Piers 11 & 12
BR86 Tower Access Details - Piers 11 & 12
BR87 Ventilator and Obstruction Lighting Details
BR88 Tower Cable Anchorage Details - Piers 11 & 12
BR89 Tower Cable Anchorage Details - Piers 11 & 12
BR90 Tower Cable Anchorage Details - Piers 11 & 12
BR91 Tower Cable Anchorage Details - Piers 11 & 12
BR92 Tower Cable Anchorage Details - Piers 11 & 12
BR93 Tower Cable Anchorage Details - Piers 11 & 12
BR94 Tower Cable Anchorage Post-tensioning Details - Piers 11 & 12
BR95 Tower Cable Anchorage Post-tensioning Details - Piers 11 & 12
BR96 Pier 13
BR97 Pier 13
BR98 Pier 13
BR99 Inspection Traveler Access Details - Pier 10
BR100 Inspection Traveler Access Details - Pier 10
BR101 Inspection Traveler Access Details - Pier 10
BR102 Tie-Down Embed and Base Plate - Piers 10 & 13
BR103 Tie-Down Details - Piers 10 & 13
BR104 Details of Pot Bearing Pad Assembly - Piers 11 & 12
BR105 Details of Pot Bearing Pad Assembly - Piers 11 & 12
BR106 Lateral Restrainer Details - Piers 11 & 12
BR107 Longitudinal Lock-up Device Details - Piers 11 & 12
BR108 Longitudinal Lock-up Device Details - Piers 11 & 12
BR109 Framing Plan
BR110 Framing Plan
BR111 Edge Girder - Field Piece 1
BR112 Edge Girder - Field Piece 1
BR113 Edge Girder - Field Pieces 2-13 & 15-29
BR114 Edge Girder - Field Piece 14
BR115 Edge Girder - Field Piece 14
BR116 Edge Girder - Field Pieces 30 & 31
BR117 Floor Beam Elevation
BR118 Floor Beam Elevation
BR119 Floor Beam Elevation
BR120 Floor Beam Elevation
BR121 Floor Beam Elevation
BR122 Floor Beam Connection Details
BR123 Stay Cable Girder Anchorage Details
BR124 Stay Cable Girder Anchorage Details
BR125 Stay Cable Girder Anchorage Details
BR126 Stay Cable Girder Anchorage Details
BR127 Stay Cable Girder Anchorage Details
BR128 Stay Cable Girder Anchorage Details
BR129 Stay Cable Girder Anchorage Details
BR130 Stay Cable Girder Anchorage Details
BR131 Stay Cable Girder Anchorage Details
BR132 Miscellaneous Steel Details
BR133 Miscellaneous Steel Details
BR134 Miscellaneous Steel Details
BR135 Miscellaneous Steel Details
BR136 Field Splice Details
BR137 Cable Layout and Edge Girder Shortening
BR138 Cable Layout and Edge Girder Shortening
BR139 Stay Cable Geometry
BR140 Stay Cable Geometry
BR141 Stay Cable Schedule
BR142 Stay Cable Schedule
BR143 Stay Cable Anchorage Assembly
BR144 Precast Slab Panel Layout
BR145 Precast Slab Panel Layout
BR146 Precast Slab Panel Details
BR147 Precast Slab Panel Details
BR148 Precast Slab Panel Details
BR149 Precast Slab Panel Details
BR150 Precast Slab Panel Details
BR151 Misc. Precast Slab Panel Details
BR152 Misc. Precast Slab Panel Details
BR153 Misc. Precast Slab Panel Details
BR154 Cast-in-Place Slab Details
BR155 Cast-in-Place Slab Details
BR156 Cast-in-Place Slab Details
BR157 Cast-in-Place Slab Details
BR158 Cast-in-Place Slab Details
BR159 Counterweight Details
BR160 Counterweight Details
BR161 Counterweight Details
BR162 Counterweight Details
BR163 Slab Drain with Grate Layout
BR164 Slab Drain with Grate
BR165 Slab Drainage Details
BR166 Slab Drainage Details
BR167 Bridge Railing
BR168 Bridge Railing
BR169 Bridge Railing
BR170 Median Barrier Curb (Type C)
BR171 Optional Slip-Form Median Barrier Curb (Type C)
BR172 Expansion Joint Details - Piers 10 & 13
BR173 Expansion Joint Details - Piers 10 & 13
BR174 Expansion Joint Details - Piers 10 & 13
BR175 Expansion Joint Details - Piers 10 & 13
BR176 Expansion Joint Details - Piers 10 & 13 → Blank Sheet (4)
BR177 Navigation Clearance Gauge - Piers 11 & 12
BR178 Inspection Traveler Details
BR179 Suggested Erection Sequence - Piers 11 & 12
BR180 Suggested Erection Sequence - Typical Superstructure
BR181 Suggested Erection Sequence
BR182 Suggested Erection Sequence
BR183 Suggested Erection Sequence
BR184 Bar Bending Diagram
BR185 Bill of Reinforcing
BR186 Bill of Reinforcing
BR187 Bill of Reinforcing
BR188 Bill of Reinforcing
BR189 Bill of Reinforcing → Blank Sheet (4)
BR190 Bill of Reinforcing
BR191 Bill of Reinforcing
BR192 Bill of Reinforcing
BR193 Bill of Reinforcing
BR194 Bill of Reinforcing
BR195 Bill of Reinforcing
BR196 Bill of Reinforcing
BR197 Bill of Reinforcing
BR198 Bill of Reinforcing
BR199 Bill of Reinforcing
BR200 Bill of Reinforcing
BR201 Bill of Reinforcing
BR202 Bill of Reinforcing
BR203 Bill of Reinforcing
BR204 As-Built Drilled Shaft Data → Blank Sheet As-Built Drilled Shaft Data (4)
BR205 As-Built Drilled Shaft Data - Alternative Foundation

INDEX OF SHEETS

Detailed JUL 2009
Checked JUL 2009

Note: This drawing is not to scale. Follow dimensions.

STATE OF MISSOURI
HANS R. HUTTON
NUMBER E-20174
REGISTERED PROFESSIONAL ENGINEER
Hans R. Hutton

DATE 5/17/10
ROUTE I-70
STATE MO/IL
DISTRICT 6
SHEET NO. BR2
COUNTY ST. LOUIS CITY - MO ST. CLAIR - IL
JOB NO. J6I0984
CONTRACT ID.
PROJECT NO.
BRIDGE NO. A6500

DATE	DESCRIPTION
5-17-10	4 Revised per ATC

MISSOURI HIGHWAYS AND TRANSPORTATION COMMISSION
MoDOT
105 WEST CAPITOL
JEFFERSON CITY, MO 65102
1-888-ASK-MODOT (1-888-275-6636)

HNTB
715 KIRK DRIVE
KANSAS CITY, MO 64105-1310
TELEPHONE (816) 472-1201
CERTIFICATE OF AUTHORITY NO. 000270

LICENSED STRUCTURAL ENGINEER
HANS R. HUTTON
081-006707
STATE OF ILLINOIS
expires 11-30-2010
Hans R. Hutton
5-17-2010

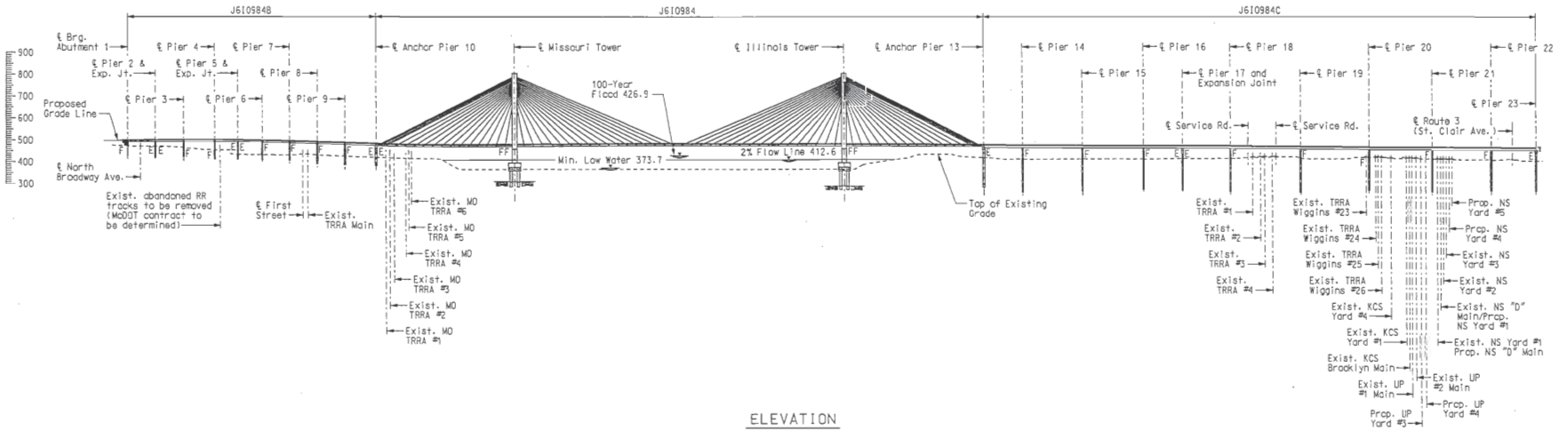

ELEVATION

4

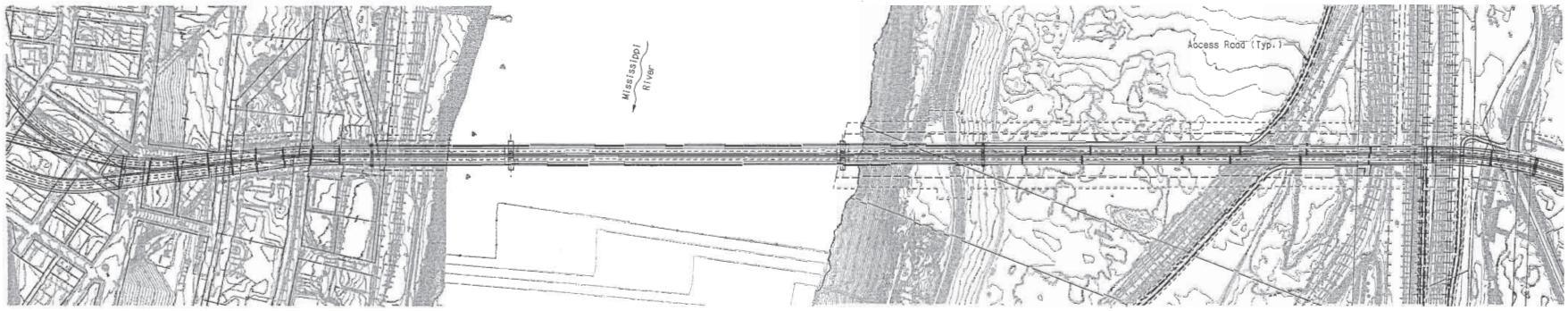

PLAN

4

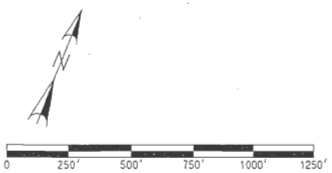

OVERALL MISSISSIPPI RIVER BRIDGE LAYOUT

Detailed JUL 2009
Checked JUL 2009

Note: This drawing is not to scale. Follow dimensions.

Sheet No. 3 of 205

\\kcow00\jobs\46440\Bridges\Plans\CdtoMoDOTA6500\J6I0984\A6500-dgn\ZPLOT_B_A6500_003-205_J6I09B4_003.dgn

17-MAY-2010 11:24

STATE OF MISSOURI
HANS R. HUTTON
NUMBER E-29174
REGISTERED PROFESSIONAL ENGINEER
Hans R. Hutton

DATE 5/17/10
ROUTE I-70
STATE MO/IL
DISTRICT 6
SHEET NO. BR3
COUNTY ST. LOUIS CITY - MO ST. CLAIR - IL
JOB NO. J6I0984
CONTRACT ID.
PROJECT NO.
BRIDGE NO. A6500

REV.	DESCRIPTION	DATE
1	Revised per A/C	5-17-10

MISSOURI HIGHWAYS AND TRANSPORTATION COMMISSION
105 WEST CAPITOL
JEFFERSON CITY, MO 65102
1-888-ASK-MODOT (1-888-275-6636)

HNTB
715 KIRK DRIVE
KANSAS CITY, MO 64105-1310
TELEPHONE (816) 472-1201
CERTIFICATE OF AUTHORITY NO. 001070

LICENSED STRUCTURAL ENGINEER
HANS R. HUTTON
081-006707
STATE OF ILLINOIS
Hans R. Hutton
5-17-2010

MISSOURI HIGHWAYS AND TRANSPORTATION COMMISSION

(635'-9" - 1500'-0" - 635'-9") CABLE-STAYED UNIT

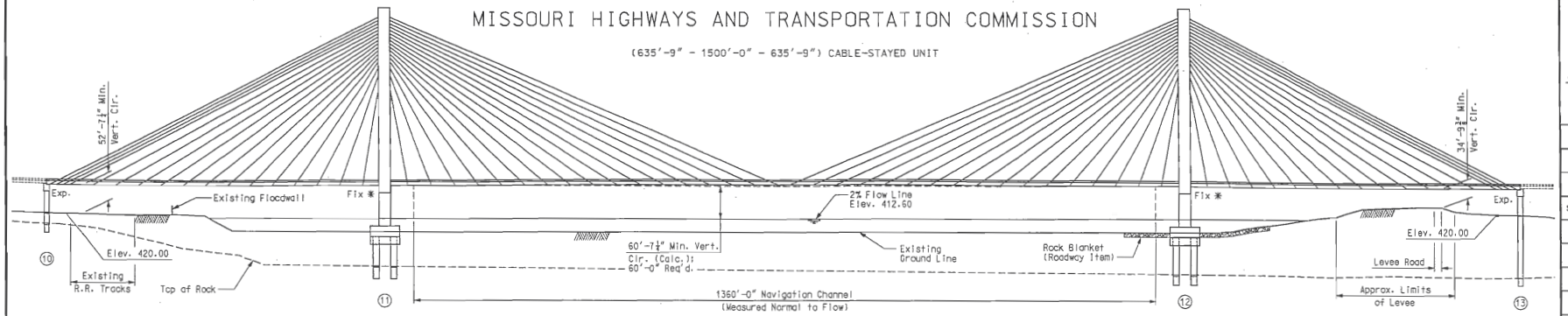

ELEVATION

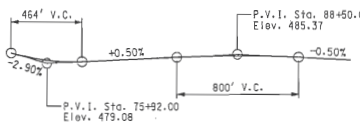

PROFILE GRADE - RELOCATED I-70

* Fixed for live-load, wind and seismic loads, and Expansion for thermal expansion and contraction and long-term creep effects.

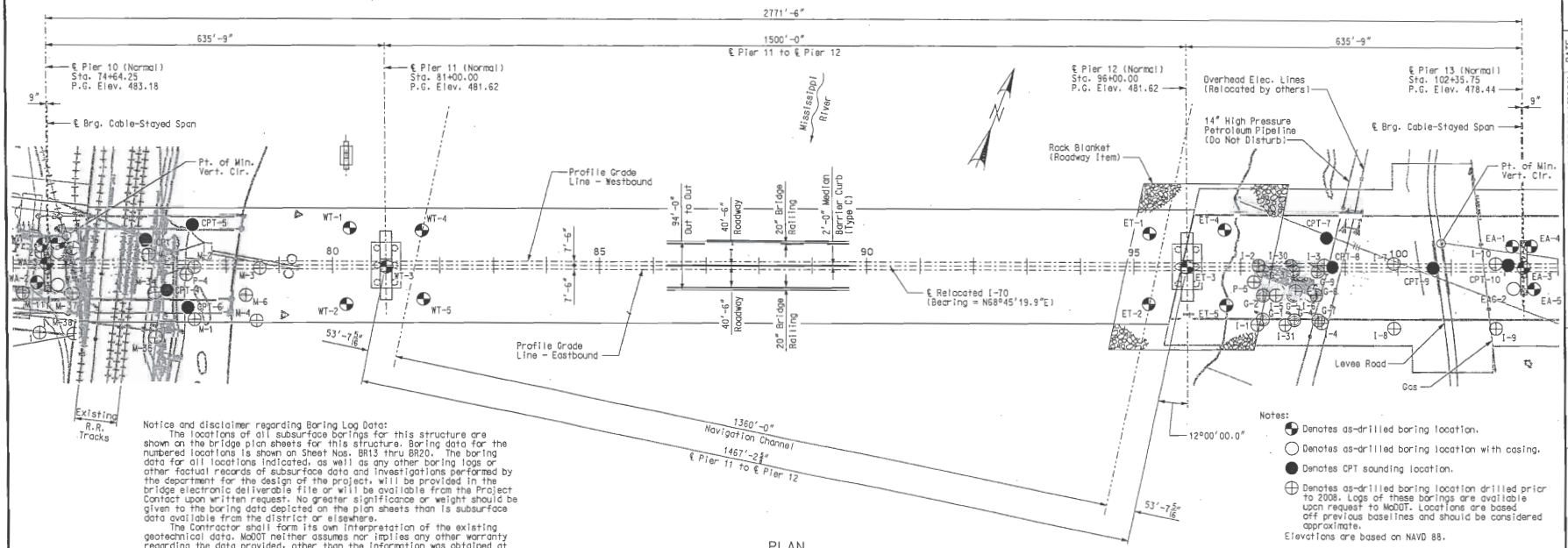

PLAN

Notice and disclaimer regarding Boring Log Data:

The locations of all subsurface borings for this structure are shown on the bridge plan sheets for this structure. Boring data for the numbered locations is shown on Sheet Nos. BR13 thru BR20. The boring data for all locations indicated, as well as any other boring logs or other factual records of subsurface data and investigations performed by the department for the design of the project, will be provided in the bridge electronic deliverable file or will be available from the Project Contact upon written request. No greater significance or weight should be given to the boring data depicted on the plan sheets than is subsurface data available from the district or elsewhere.

The Contractor shall form its own interpretation of the existing geotechnical data. MoDOT neither assumes nor implies any other warranty regarding the data provided, other than the information was obtained at locations and depths indicated and to the accuracy of the data at the time of testing.

Notes:

- Denotes as-drilled boring location.
- Denotes as-drilled boring location with casing.
- Denotes CPT sounding location.
- Denotes as-drilled boring location drilled prior to 2008. Logs of these borings are available upon request to MoDOT. Locations are based off previous baselines and should be considered approximate.

Elevations are based on NAVD 88.

GENERAL PLAN & ELEVATION

Detailed JUL 2009
Checked JUL 2009

Note: This drawing is not to scale. Follow dimensions.

STATE OF MISSOURI
HANS R. HUTTON
NUMBER E-29174
REGISTERED ENGINEER
Hans R. Hutton

DATE 5/17/10
ROUTE I-70
STATE MO/IL
DISTRICT 6
SHEET NO. BR4
COUNTY ST. LOUIS CITY - MO ST. CLAIR - IL
JOB NO. J6I0984
CONTRACT ID.
PROJECT NO.
BRIDGE NO. A6500

DESCRIPTION: 1 Revised per ATC
DATE: 5-17-10

MISSOURI HIGHWAYS AND TRANSPORTATION COMMISSION
105 WEST CAPITOL
JEFFERSON CITY, MO 65102
1-888-ASK-MODOT (1-888-275-6636)

HNTB
715 KIRK DRIVE
KANSAS CITY, MO 64105-1310
TELEPHONE (816) 472-1201
CERTIFICATE OF AUTHORITY NO. 001270

LICENSED STRUCTURAL ENGINEER
HANS R. HUTTON
081-006707
STATE OF ILLINOIS
expires 11-30-2010
Hans R. Hutton
5-17-2010

REV.

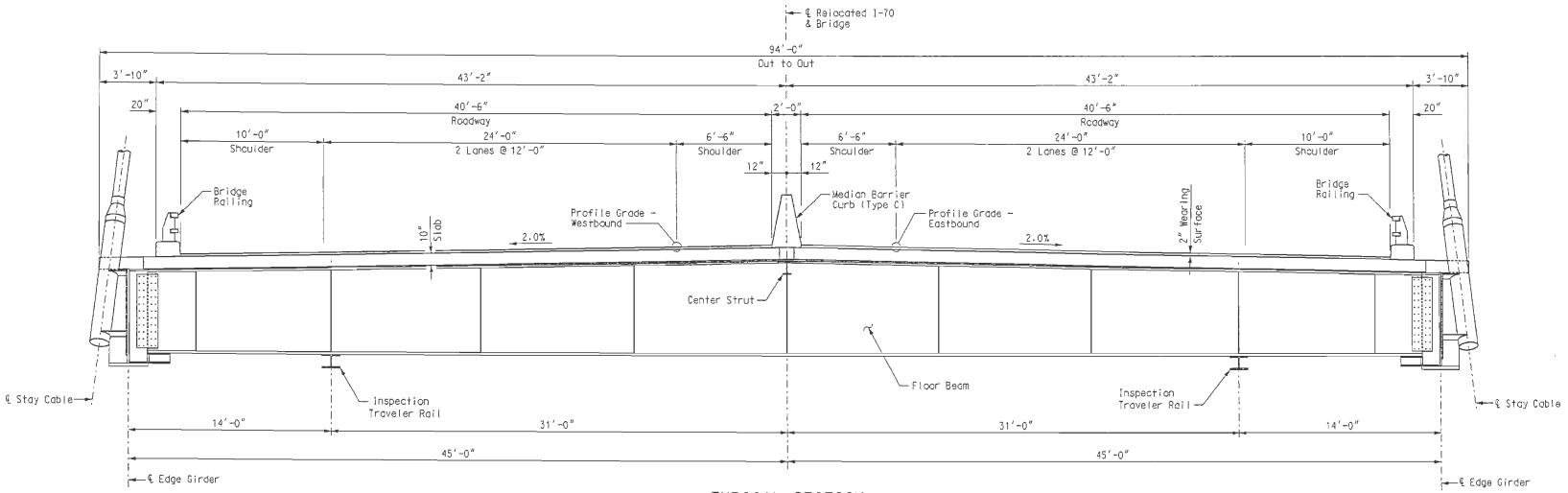

TYPICAL SECTION

TYPICAL SECTION

Detailed JUL 2009
Checked JUL 2009

Note: This drawing is not to scale. Follow dimensions.

Sheet No. 5 of 205

STATE OF MISSOURI
HANS R. HUTTON
NUMBER E-29174
REGISTERED PROFESSIONAL ENGINEER
Hans R. Hutton

DATE	
8/20/09	
ROUTE I-70	STATE MO/IL
DISTRICT 6	SHEET NO. BR5
COUNTY ST. LOUIS CITY - MO ST. CLAIR - IL	
JOB NO. J6I0984	
CONTRACT ID.	
PROJECT NO.	
BRIDGE NO. A6500	

DESCRIPTION

DATE

MISSOURI HIGHWAYS AND TRANSPORTATION COMMISSION

MoDOT

105 WEST CAPITOL
JEFFERSON CITY, MO 65102
1-888-ASK-MODOT (1-888-275-6636)

HNTB
715 KIRK DRIVE
KANSAS CITY, MO 64105-1310
TELEPHONE (816) 472-1201
CERTIFICATE OF AUTHORITY NO. 001270

LICENSED STRUCTURAL ENGINEER
HANS R. HUTTON
ORI-006707
STATE OF ILLINOIS
EXPIRES 11-30-2010
Hans R. Hutton
SIGNATURE
8-20-2009
DATE

REV.

\\kcow00\jobs\46440\Bridges\Plans\CdtoMoDOTA6500\J6I0984\A6500-dgn\ZPLOT_B_A6500_001-205_J6I0984_005.dgn

19-AUG-2009 06:57

GENERAL NOTES

4 Column Concrete (Piers 10 & 13), Class B-2 f'c = 4000 psi
Drilled Shaft & Rock Socket Concrete (Piers 10, 11, 12 & 13), Class B-2 f'c = 5000 psi
Footing Concrete (Piers 11 & 12), Class B-1 f'c = 6000 psi

DESIGN SPECIFICATIONS:
AASHTO LRFD Bridge Design Specifications, Fourth Edition with interim specifications through 2008.
Post-Tensioning Institute "Recommendations for Stay Cable Design, Testing and Installation", Fifth Edition, October 2007.
AASHTO/AWS D1.5M/D1.5:2008 Bridge Welding Code.
CEB-FIP Model Code for Concrete Structures
"Design of Bridge Deck Drainage", Publication No. FHWA-SA-92-010.
AASHTO "Guide Specifications for Design and Construction of Segmental Concrete Bridges", 1999, Including Interim specifications through 2003.
AASHTO "Guide Specifications - Thermal Effects in Concrete Bridge Superstructures", 1989.
AASHTO "Guide Specifications for Highway Bridge Fabrication with HPS70W Steel".

CONSTRUCTION SPECIFICATIONS:
Missouri Standard Specifications for Highway Construction, June 2009, with applicable supplemental specifications and special provisions.
Unless otherwise noted, references to Section (Sec.) and subsection numbers in the plans refer to the Missouri Standard Specifications for Highway Construction.
AASHTO LRFD Bridge Construction Specifications, Second Edition with interim specifications through 2008.

DATUM:
All elevations are in feet, based on the North American Vertical Datum (NAVD), 1988, except as noted.

DIMENSIONS:
Dimensions given on the plans are measured horizontally at 60° F, unless otherwise noted.

DESIGN LOADS:
Dead Load:

Reinforced Concrete	150 pcf
Prestressed Concrete	155 pcf
Wearing Surface	155 pcf
Counterweight Concrete	135 pcf
Seal Concrete	140 pcf
Structural Steel	490 pcf
Cable Wire	490 pcf
Polyethylene Pipe	60 pcf
Earth	125 pcf

A 2-inch latex modified concrete wearing surface shall be applied to the deck after completion of the structure (see Sec. 505.20). No allowance has been made for a future wearing surface on the cable supported spans. It has been assumed in the design that the wearing surface will be replaced in kind when required.

Live Load:
AASHTO HL-93
Dynamic Load Allowance in accordance with AASHTO LRFD Art. 3.6.2 and Post-Tensioning Institute "Recommendations for Stay Cable Design, Testing and Installation".
Design Speed = 60 mph

Wind Load:
Wind loads have been determined through wind tunnel testing. Testing included models of the structure in its completed configuration as well as various stages of construction. The wind tunnel test results are available for review from MoDOT upon request.

Seismic:
Site-specific acceleration time histories were developed considering the following:
Importance Category = "Critical Bridge"
Seismic Performance Zone = 3
Response Modification Factor - Typical = 1.0
Response Modification Factor - Superstructure to Substructure connection = 0.8
Damping Coefficient = 3%

The Geotechnical Earthquake Engineering report "Geotechnical Seismic Engineering New I-70 Mississippi River Bridge, St. Louis, Missouri to St. Clair County, Illinois", July 2009, provides the seismic design data. Copies of this report are provided in the bridge electronic deliverables or are available from MoDOT upon request.

Earthquake was not considered as a construction load.

Thermal Forces:
The design mean temperature is 60° F.

Thermal effects were considered due to the following:

Steel:	Concrete:
Temperature Rise = 60° F.	Temperature Rise = 50° F.
Temperature Fall = 90° F.	Temperature Fall = 70° F.

Thermal Gradient:
Between cables and bridge = ± 18° F.
Between east & west face of tower and between north & south side of bridge = ± 10° F.

Longitudinal Forces:
Computed in accordance with AASHTO LRFD Art. 3.6.4.

Earth Forces:
Earth pressure is computed in accordance with AASHTO LRFD Art. 3.11.

Stream Flow and Scour:
Forces and scour due to stream current are based on the 100-year flood flow applied at a skew angle of 12° for the channel crossing with a velocity in accordance with the Hydrologic/Hydraulic and Scour Report, September 2002.

Vessel Allision:
Vessel allision forces are in accordance with the Vessel Allision Report. Copies of the Vessel Allision Report are available from MoDOT upon request.

Creep and Shrinkage:
Strains are calculated in accordance with CEB-FIP Model Code for Concrete Structures at 70% average relative humidity.

DESIGN LOADS (CONT'D.):
Concrete Seals:
Seals have been designed for a maximum water surface elevation of 416.0.

Settlement:
Differential settlement between bents is considered in accordance with the Geotechnical Engineering Report.

DESIGN METHODS:
All bridge components were designed in accordance with AASHTO LRFD Method.

LIMIT STATES COMBINATIONS:
Limit states shall be in accordance with AASHTO Article 3.4, Table 3.4.1-1, except as follows:
Shrinkage and creep of concrete are treated as dead load for extreme events.
The effects of stay cable force adjustments are treated as dead load. The factor, γ_{EQ} for live load in combination with seismic loads for Extreme Event 1 loading is = 0.0.
Load modifiers relating to ductility (η_D), redundancy (η_R), and operational importance (η_I) are to be applied as follows:

$\eta_D = 1.00$
$\eta_R = 1.00$
$\eta_I = 1.05$

MATERIALS AND DESIGN UNIT STRESSES:

Seal Concrete (Piers 11 & 12), Seal Concrete	f'c = 4000 psi
Drilled Shaft & Rock Socket Concrete (Piers 10, 11, 12 & 13), Class B-2	f'c = 4000 psi
Footing Concrete (Piers 11 & 12), Class B-1	f'c = 4000 psi
~~Caisson Concrete (Piers 11 & 12), Class B-2~~	~~f'c = 4000 psi~~
~~Distribution Cap Concrete (Piers 11 & 12), Class B-2~~	~~f'c = 4000 psi~~
Pier Shaft Concrete (Piers 11 & 12), Class A-1	f'c = 6000 psi
Tower Leg Concrete (Piers 11 & 12), Class A-1	f'c = 6000 psi
Deck Slab Concrete (Panels and Cast-In-Place), Class A-1	f'c = 6000 psi
Counterweight Concrete (Precast Panels), Class A-1	f'c = 6000 psi
Counterweight Concrete (Cast-in-Place), Class B	f'c = 3000 psi
Bridge Railing Curb and Light Pole Blister Concrete, Class B-1	f'c = 4000 psi
Median Barrier Curb Concrete, Class B-1	f'c = 4000 psi
Reinforcing Steel, ASTM A615, Grade 60	fy = 60,000 psi
Reinforcing Steel, ASTM A706, Grade 60	fy = 60,000 psi
Prestressing Bars, ASTM A722, Grade 150, Type II	fpu = 150,000 psi
Prestressing Strand for Stay Cables, ASTM 416, Grade 270, Low Relaxation	fpu = 270,000 psi
Prestressing Strand for P.T. Tendons, , ASTM 416, Grade 270, Low Relaxation	fpu = 270,000 psi
Structural Steel for Edge Girders, ASTM A709, Grade HPS70WF-2 (Including: Webs, Flanges, Floor Beam Connection Plates, Splice Plates, Stiffener Plates, Bearing Plates, Bearing Stiffeners, Jacking Stiffeners, Lateral Restrainer Connection Plates)	fy = 70,000 psi
Structural Steel for Floor Beams A, B & C, ASTM A709, Grade HPS70WT-2 (Including: Webs, Flanges, Connection Plates (Splice Plates) 3, Stiffener Plates, Lateral Restrainer)	fy = 70,000 psi
Structural Steel for Floor Beams D & E, ASTM A709, Grade HPS70WT-2 (Including: Webs, Flanges, Connection Plates (Splice Plates) 3, Stiffener Plates)	fy = 70,000 psi
Structural Steel for Floor Beams F, G, H & K, ASTM A709, Grade HPS50WT-2 (Including: Webs, Flanges, Connection Plates (Splice Plates) 3, Stiffener Plates)	fy = 50,000 psi
Structural Steel for Tower Cable Anchor Box, ASTM A709, Grade HPS50WT-2	fy = 50,000 psi
Structural Steel for Tower Cable Anchorage, ASTM A709, Grade HPS50WF-2 (Including: Cable Anchor Beam, Connection Plates)	fy = 50,000 psi
Structural Steel for Tower Cable Anchor Load PL, ASTM A709, Grade HPS50W	fy = 50,000 psi
Structural Steel for Cable Anchorage Pipe, API 5L x52 PSL2	fy = 52,000 psi
Structural Steel for Cable Girder Anchorage, ASTM A709, Grade HPS70WF-2 (Including: Anchorage Web Plate, Anchorage Stiffener Plate, Anchorage Base Plate, Anchorage Web Bracing Plate, Flange Connection Plate)	fy = 70,000 psi
Structural Steel for Top Flange Bracing, ASTM A709, Grade 50W (Including: W10x68, Gusset Plates)	fy = 50,000 psi
Structural Steel for Center Struts, ASTM A709, Grade 50W (Including: WT12x31, Flange Plates, Connection Plates)	fy = 50,000 psi
Structural Steel for Horizontal Diaphragm, ASTM A709, Grade 50W (Including: Diaphragm Plate, Connection Plates & Angles, Stiffener Plates & Angles)	fy = 50,000 psi
Structural Steel for Drilled Shaft Casing, ASTM A572, Grade 60	fy = 60,000 psi

MATERIALS AND DESIGN UNIT STRESSES (CONT'D):

Structural Steel for Counterweight, ASTM A709, Grade 50W (Including: Intermediate Struts, Intermediate Diaphragms, End Diaphragms)	fy = 50,000 psi
~~Structural Steel for Drilled Shaft Casing, ASTM A252, Grade 2~~	~~fy = 35,000 psi~~
~~Structural Steel for Cutting Edge Plate, ASTM A709, Grade 50~~	~~fy = 50,000 psi~~
4 ~~Structural Steel for Cutting Edge Angle Bracing, ASTM A709, Grade 36~~	~~fy = 36,000 psi~~
Structural Steel for Tie-Down Device, ASTM A709, Grade 50WT-2	fy = 50,000 psi

REINFORCING STEEL:
Epoxy coated reinforcing steel, including chairs and ties, shall be used at the following locations:
Deck slab
Median Barrier Curb
Bridge Railing Curb
Light Pole Blisters
Pier Cap at Piers 10 & 13.

Mechanical couplers shall develop not less than 125% of the yield strength of the bar. Epoxy coated couplers shall be used with epoxy coated bars.

Unless noted otherwise, the minimum clear cover to reinforcing bars shall be as follows:

~~Seal~~ Footings	3 in.
4 ~~Caissons (Including Subshafts)~~	~~4 in.~~
Drilled Shafts	6 in.
Rock Sockets	3 in.
Top of Deck Slab (Including Wearing Surface)	4 in.
Bottom of Deck Slab	1 in.
Tower Legs (Piers 11 & 12)	2 in.
Pier Shafts (Piers 11 & 12)	3 in.
Pier Columns (Piers 10 & 13)	6 in.
Pier Cap (Piers 10 & 13)	3 in.

STRUCTURAL STEEL:
The following members or member components shall be considered fracture critical members (FCM):
Edge Girder Web Plates
Edge Girder Flange Plates
Floor Beam Connection Plates welded to Edge Girder
Stiffeners welded to Edge Girder
Bearing Plates and other Connection Plates welded to Edge Girder
Splice Plates
Tower Cable Anchor Beam & Connection Plates
Cable Girder Anchorage Web Plate
Cable Girder Anchorage Stiffener Plate
Cable Girder Anchorage Base Plate
Cable Girder Anchorage Web Bracing Plate
Cable Girder Anchorage Flange Connection Plate

Bolted connections shall be made with 1" diameter, ASTM A325, Type 3 bolts unless noted otherwise. Bolts shall be installed with a nut and washer compatible with the corresponding bolt as specified in the bolt specification.
Welded shop flange and web splices may be permitted when detailed on the shop drawings and approved by the Engineer. No additional payment will be made for optional shop splices added for the convenience of the Contractor or material availability. Welded shop splices shall conform to the details shown in these plans.
Holes for bolts shall be $\frac{1}{8}$" larger in diameter than the associated bolt unless noted otherwise.
Edge Girder field splices and floor beam to edge girder connections shall be prepared with a Class B finish on all contact surfaces.
Field Pieces shall be shop assembled in accordance with AASHTO LRFD Bridge Construction Specifications, Article 11.5.3.1. The progressive assembly shall include entire floor beams, center struts and traveler rails.
Welding shall be in conformance with AWS D1.5 except as modified by the MoDOT Standard Specifications or by the AASHTO "Guide Specifications for Highway Bridge Fabrication with HPS70W Steel".
Weld metal shall be matching, unless otherwise noted.

STRUCTURAL STEEL PROTECTIVE COATING:
Protective Coating: System H in accordance with Section 1081.
Portions of the structural steel embedded in or in contact with the concrete, including but not limited to the top flange of girders, shall be coated with not less than 2.0 mils of the prime coat for System H.
Prime Coat: The prime coat shall be applied in the fabrication shop. The cost of the prime coat will be considered completely covered by the contract unit price for Fabricated Structural Low Alloy Steel (Plate Girder) A709, Grade HPS50W, or Fabricated Structural Low Alloy Steel (Plate Girder) A709, Grade HPS70W.
The surfaces of all structural steel located under expansion joints shall be coated with complete System H within a distance of 1-1/2 times the girder depth, but not less than 10 feet, from the centerline of all deck joints. Within this limit, items to be coated shall include all surfaces of beams, girders, floor beams, diaphragms, stiffeners bearings, struts and miscellaneous structural steel items.
Field Coat: The color of the field coat shall be Brown (Federal Standard #30045). The cost of the intermediate and finish field coats will be considered completely covered by the contract unit price for Fabricated Structural Low Alloy Steel (Plate Girder) A709, Grade HPS50W, or Fabricated Structural Low Alloy Steel (Plate Girder) A709, Grade HPS70W. At the option of the contractor, the intermediate and finish field coats may be applied in the shop. The contractor shall exercise extreme care during all phases of loading, hauling, handling, erection and pouring of the slab to minimize damage and shall be fully responsible for all repairs and cleaning of the coating systems as required by the Engineer.

Field pieces shall be shop assembled in accordance with AASHTO LRFD Bridge Construction Specifications, Article 11.5.3.1. The Contractor shall submit a description of their proposed shop assembly to the Engineer for review and approval. At a minimum, shop assembly shall include the progressive assembly of contiguous edge girder segments (not full width, not including floor beams or center struts). In addition, each field piece shall be shop assembled full width, including both edge girders, floor beams and center strut (not including the traveler rail).

3 GENERAL NOTES

Detailed JUL 2009
Checked JUL 2009

Note: This drawing is not to scale. Follow dimensions.

Sheet No. 6 of 205

\\kcow00\jobs\46440\Bridges\Plans\CdtoMoDOTA6500\J6I0984\A6500-dgn\ZPLOT_B_A6500_006-205_J6I0984_006.dgn

18-MAY-2010 14:15

HANS R. HUTTON NUMBER E-29174 REGISTERED PROFESSIONAL ENGINEER STATE OF MISSOURI
Hans R. Hutton
DATE 5/17/10

ROUTE	STATE
I-70	MO/IL
DISTRICT	SHEET NO.
6	BR6

COUNTY
ST. LOUIS CITY - MO
ST. CLAIR - IL
JOB NO.
J6I0984
CONTRACT ID.
PROJECT NO.
BRIDGE NO.
A6500

REV.	DESCRIPTION	DATE
1	Revised notes	11-25-09
2	Revised per ATC	5-17-10

MISSOURI HIGHWAYS AND TRANSPORTATION COMMISSION
MoDOT
105 WEST CAPITOL
JEFFERSON CITY, MO 65102
1-888-ASK-MODOT (1-888-275-6636)

HNTB
715 KIRK DRIVE
KANSAS CITY, MO 64105-1310
TELEPHONE (816) 472-1201
CERTIFICATE OF AUTHORITY NO. 001270

LICENSED STRUCTURAL ENGINEER
HANS R. HUTTON
081-006707
STATE OF ILLINOIS
Hans R. Hutton
5-17-2010

GENERAL NOTES (CONT'D.)

CONCRETE PROTECTIVE COATINGS:
Temporary coating for concrete bents and piers (weathering steel) shall be applied on all concrete surfaces above the ground line or low water elevation on all abutments and intermediate piers in accordance with Sec 711.
Protective coating for concrete at Piers 10 & 13 (Epoxy) shall be applied as shown on the bridge plans and in accordance with Sec 711. Piers 11 and 12 shall be coated with Texcote XL-70 Bridge Cote, or approved equal, in accordance with Special Provision "Protective Coatings for Exposed Concrete Surfaces"

JOINT FILLER:
All joint filler shall be in accordance with Sec 1057 for preformed sponge rubber expansion and partition joint filler, except as noted.
Joint filler for precast tower top shall be silicone joint sealant in accordance with Sec 717.40.

MISCELLANEOUS:
"Sec" refers to the sections in the standard and supplemental specifications unless specified otherwise.

FOUNDATIONS:
~~Two foundation options have been presented in the Plans. The Contractor has the option of selecting either option to bid and construct. Should the Contractor select the caisson option, then the Contractor shall construct caisson foundations for both Piers 11 & 12. Should the Contractor select the waterline footing option, then the Contractor shall construct waterline footing foundations for both Piers 11 & 12.~~ 4

NX size cores will be required for the drilled shafts in accordance with Sec 701.4.11.2.
~~Concrete coring shall be required in accordance with Sec 701.4.17.1 for 1 of the 8 drilled shafts (and rock sockets) in the anchor piers and 1 of the drilled shafts (and rock sockets) in each of the waterline footings.~~
~~Drilled shafts and dredged caisson excavation shall be made as near as practicable to the dimensions shown on the plans.~~
~~Top of footings and dredged caissons shall be no higher than the elevation shown on the plans.~~
Seals at Piers 11 & 12 have been designed for a maximum water surface elevation of 416.00 feet.

ALLOWABLE STRESSES:
Structural Steel:
Per AASHTO LRFD Bridge Design Specifications

Reinforced Concrete:
Per AASHTO LRFD Bridge Design Specifications

Prestressed Concrete:
Per AASHTO LRFD Bridge Design Specifications and as follows

Minimum Concrete Strength:
Prior to stressing post-tensioning in deck panels: f'ci = 4500 psi
Prior to stressing post-tensioning in tower legs: f'ci = 6000 psi
Prior to final adjustment of stay cables: f'c = 6000 psi

Stay Cables:
In accordance with the Post-Tensioning Institute "Recommendations for Stay Cable Design, Testing and Installation", October 2007.

Foundation Elements:
In accordance with the geotechnical report and load test results. 4

STAY CABLE REPLACEMENT AND INSTALLATION:
The design is capable of withstanding the loss of any single stay cable without structural instability with four lanes of traffic centered in traffic lanes with multiple lane reduction factors.

The design is capable of withstanding the replacement of any individual stay cable while maintaining two lanes of traffic on the far lanes and shoulder of the deck.

Contractor-provided stay cable details must allow all individual stay cables to be removed by detensioning at the live end anchorage.

Provision shall be made for the adjustment of any individual cable during construction.

The following special design group loadings are used for the two stay cable conditions:
Stay Cable Exchange:
1.2DC + 1.4DW + 1.5(LL** + IM) + (cable exchange forces)
ϕ = 0.8 for this limit state
** Two lanes of live load on the far lanes and shoulder of the deck
Loss of One Stay Cable:
1.2DC + 1.4DW + 0.75(LL*** + IM) + (cable loss forces)
ϕ = 0.9 for this limit state
*** Four lanes of live load centered within the traffic lanes to maximize the reaction at the stay-cable under consideration.

CONSTRUCTION JOINTS:
Construction joints shall be prepared by roughening concrete surfaces to a minimum ¼ inch amplitude within 24 hours after placement, unless noted otherwise.

Concrete coring shall be required in accordance with Sec 701.4.17.1 for 1 of the 8 drilled shafts (and rock sockets) in the anchor piers and 1 of the drilled shafts (and rock sockets) in each of the tower footings.
Drilled shafts shall be made as near as practicable to the dimensions shown on the plans.
Top of footings shall be no higher than the elevation shown on the plans.
Drilled shafts and rock sockets shall be constructed in accordance with the Special Provisions.
Rock socket capacities shall be based on load tests as specified in the Special Provisions.

DEFINITION OF TERMS:
The following terms are used throughout the plans and specifications. The list of terms is not intended to be all inclusive, nor does it include terms in common use by MoDOT:

Pier - A generic reference to any complete substructure element, including its footing, caisson or drilled shaft foundation, pier shaft, pier cap and tower.

4 Pier Cap - The portion of the pier which supports the girders.

Pier Shaft - The portion of the pier above the footing or caisson distribution 4 and below the pier cap.

Cable Anchorage - The combination of all components required to resist the force in the stressed stay cable and transmit the force into the structure. A distinction may be made between the stressing (live) anchorage and the nonstressing (dead) anchorage. The stressing anchorage is located within the tower and the dead anchorage is located at the edge girder.

~~Caisson - The dredged foundation at Piers 11 & 12. The caisson is defined as the steel cutting edge and reinforcing frame, seal concrete, reinforcing steel and concrete which form the dredge wells. The subshaft shall be considered as part of the caisson for measurement and payment. The distribution cap is considered part of the caisson for measurement and payment.~~

4 Caisson Distribution Cap - For limits, see Sheet Nos. BR25 & BR42.

~~Caisson Subshaft - For limits, see Sheet Nos. BR25 & BR42.~~

Center Span - The portion of the cable stayed unit between Piers 11 & 12.

End Span - The portion of the cable stayed unit between Piers 10 & 11 and between Piers 12 & 13.

Field Piece - The portion of the superstructure defined as "Field Piece" shall include the edge girders, floor beams, center struts and traveler rails.

Girder Working Chord - See Sheet No. BR111 for definition.

Girder Working Curve - See Sheet No. BR111 for definition.

Longitudinal Lock-Up Device (LUD) - A generic reference to the support mechanism used to transfer longitudinal impact forces from the superstructure to the pier towers.

Pier Table - The portion of the superstructure defined as "Pier Table" during the erection sequence shall include Field Piece 14, longitudinal lock-up bracket, lateral restrainer and any temporary falsework required for stability.

Sheathing - High density polyethylene (HDPE) pipe which is used to form the exterior layers of the stay-cable corrosion protection system.

Stay-Cable - Each of the primary tension elements between the tower and the edge girder which support the superstructure. Principal components of the stay-cables are cable anchorages, prestressing strands and sheathing.

Tie-Down Unit - The entire steel fabrication including prestressing steel, embeds, bolts, plates, pins and bronze bars which are located at Piers 10 & 13 and serve as both a bearing and an uplift restraint.

SYMBOLS:

Abt.:	About
Brg.:	Bearing
CL.:	Centerline
Clr.:	Clear
CJP:	Complete Joint Penetration
Conn.:	Connection
Const.:	Construction
Dia.:	Diameter
E.F.:	Each face
Elev.:	Elevation
E.I.F.:	Each inside face
E.I.W.:	Each inner wall
E.O.F.:	Each outside face
E.O.W.:	Each outer wall
Eq.:	Equal
Exp.:	Expansion
F.F.:	Far face
F.I.F.:	Far inside face
F.S.:	Far Side
F.O.F.:	Far outside face
F.S.:	Field Splice
Ft.:	Feet
F.W.:	Far wall
Galv.:	Galvanize
Gr.:	Grade
H.S.:	High strength
I.D.:	Inside diameter
Lb.:	Pound
LUD:	Lock-up Device
Max.:	Maximum
Min.:	Minimum
MoDOT:	Missouri Department of Transportation
N.F.:	Near face
N.I.F.:	Near inside face
N.O.F.:	Near outside face
No. or Nos.:	Number
N.S.:	Near Side
N.W.:	Near wall
O.D.:	Outside diameter
PL:	Plate
P.T.:	Post-tensioning
R.:	Radius

SYMBOLS:

Spa.:	Space
Sta.:	Station
Symm.:	Symmetric
Thru:	Through
Typ.:	Typical
U.N.O.:	Unless noted otherwise
&:	And

CONSTRUCTION:
Erection loads during construction, except wind loads, shall be in accordance with Division I, Section I.4 of AASHTO "Guide Specifications for Design and Construction of Segmental Concrete Bridges", 1999, including current interim specifications.

Wind loads in accordance with the wind tunnel test report shall be used. Design wind speed for structural design during construction stages shall have a return period of 20 years. The design speed shall be a 1-hour mean speed of 63 mph. The wind tunnel test report is available for review from MoDOT upon request.

Temperature effects shall be considered during construction.

Earthquake may be omitted as a construction load.

Construction loads shall be combined in accordance with AASHTO LRFD Art. 3.4.2 for load and resistance factor design. Reinforcing steel stresses at service load shall be limited to 30,000 psi to control flexural cracking of concrete.

The Contractor's attention is directed to the requirements of the U.S. Coast Guard permit, regarding minimum clearances for the bridge. The Contractor shall conform to the requirements of the U.S. Coast Guard, regarding clearances and encroachment on the navigation channel during construction.

Cofferdams were assumed in the Suggested Erection Sequence. Should cofferdams be used to construct the foundations, their cost shall be considered incidental to foundation bid items for Pier 11 and Pier 12.

Temporary falsework was assumed in the Suggested Erection Sequence. This is referred to as 'Temporary End Span Erection Support' in the Suggested Erection Sequence. Should temporary falsework be used to support the superstructure during erection, its cost shall be considered incidental to "Fabricated Structural Low Alloy Steel (Plate Girder) A709, Gr. HPS70W".

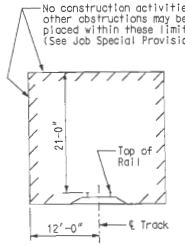

MINIMUM CONSTRUCTION CLEARANCES
(NORMAL TO RAILWAY)
(NOT TO SCALE)

GENERAL NOTES

Detailed JUL 2009
Checked JUL 2009

4 Note: This drawing is not to scale. Follow dimensions.

\\kcow00\jobs\46440\Bridges\Plans\CdtoMoDOTA6500\J6I0984\A6500-dgn\ZPLOT_B_A6500_007-205_J6I0984_007.dgn 17-MAY-2010 11:25

STATE OF MISSOURI HANS R. HUTTON NUMBER E-29174 REGISTERED PROFESSIONAL ENGINEER
Hans R. Hutton

DATE 5/17/10
ROUTE I-70 | STATE MO/IL
DISTRICT 6 | SHEET NO. BR7
COUNTY ST. LOUIS CITY - MO ST. CLAIR - IL
JOB NO. J6I0984
CONTRACT ID.
PROJECT NO.
BRIDGE NO. A6500

DATE	REV.	DESCRIPTION
5-17-10	1	Revised per ATC

MISSOURI HIGHWAYS AND TRANSPORTATION COMMISSION
105 WEST CAPITOL
JEFFERSON CITY, MO 65102
1-888-ASK-MODOT (1-888-275-6636)

HNTB
715 KIRK DRIVE
KANSAS CITY, MO 64105-1310
TELEPHONE (816) 472-1201
CERTIFICATE OF AUTHORITY NO. 001270

LICENSED STRUCTURAL ENGINEER HANS R. HUTTON 081-006707 STATE OF ILLINOIS
SIGNATURE Hans R. Hutton
5-17-2010

ESTIMATED QUANTITIES

ITEM		SUBSTR.	SUPERSTR.	TOTAL
Latex Modified Concrete Wearing Surface (Alternate A)	sq. yard	—	24,800	24,800
Asphalt Wearing Surface (Alternate B)	sq. yard	—	24,800	24,800
Drilled Shafts (10'-0" Dia.)	linear foot	564.0	—	564.0
Rock Sockets (9'-6" Dia.)	linear foot	224.0	—	224.0
Television Camera Inspection	each	8	—	8
SID Inspection	each	8	—	8
Foundation Inspection Holes	linear foot	304.0	—	304.0
Concrete Coring	linear foot	148.0	—	148.0
Sonic Logging Testing	each	8	—	8
Class B-1 Concrete (Substructure)	cu. yard	2165.1	—	2165.1
* Median Barrier Curb (Type C)	linear foot	—	2767	2767
Class A-1 Concrete	cu. yard	15,536.4	—	15,536.4
Counterweight Concrete	lump sum	—	—	1
Precast Prestressed Concrete Slab Panels	sq. yard	—	28,625	28,625
Reinforcing Steel (Bridges)	pound	5,546,610	—	5,546,610
Mechanical Bar Splice	each	6876	—	6876
Reinforcing Steel (Epoxy Coated)	pound	359,570	—	359,570
Protective Coating - Concrete Bents and Piers (Epoxy)	lump sum	—	—	1
Temporary Coating - Concrete Bents and Piers (Weathering Steel)	lump sum	—	—	1
Protective Coating - Towers (Non-Epoxy)	lump sum	—	—	1
Fabricated Structural Carbon Steel (Miscellaneous)	pound	2040	8740	10,780
Fabricated Structural Low Alloy Steel (Plate Girder) A709, Gr. HPS70W	pound	—	6,456,410	6,456,410
Fabricated Structural Low Alloy Steel (Plate Girder) A709, Gr. HPS50W	pound	—	8,246,730	8,246,730
Drainage System (On Structure)	lump sum	—	—	1
Post-Tensioning System at Towers	lump sum	—	—	1
Inspection Access	lump sum	—	—	1
Stay Cables	lump sum	—	—	1
Stay Cable Testing	lump sum	—	—	1
Tie-Downs	lump sum	—	—	1
Inspection Traveler	lump sum	—	—	1
Lock-Up Device	each	8	—	8
Fabricated Structural Low Alloy Steel (Tower Anchor Box) A709, Gr. HPS50W	pound	1,653,920	—	1,653,920
Bridge Railing	linear foot	—	5534	5534
POT Bearing	each	—	4	4
Modular Expansion Joint System	linear foot	—	172	172

Notes:
* Median Barrier Curb (Type C) shall be cast-in-place option or slip-form option.

4

ESTIMATED QUANTITIES - CAISSON FOUNDATION

ITEM		TOTAL
Foundation - Pier 11	lump sum	1
Foundation - Pier 12	lump sum	1

4

FOUNDATIONS AT PIERS 11 & 12

ESTIMATED QUANTITIES - ALTERNATIVE FOUNDATION

ITEM		Pier 11	Pier 12	TOTAL
Drilled Shafts (11'-6" Dia.)	linear foot	819.0	1029.0	1848.0
Rock Sockets (9'-6" Dia.) (11'-0")	linear foot	616.0	616.0	1232.0
Television Camera Inspection	each	14	14	28
SID Inspection	each			
Foundation Inspection Holes	linear foot	756.0	756.0	1512.0
Concrete Coring	linear foot	103.5	118.5	222.0
Sonic Logging Testing	each	14	14	28
Drilled Shaft Load Test	each			
Seal Concrete	cu. yard	4040.4	4040.4	8080.8
Class B-1 Concrete (Substructure)	cu. yard	6222.2	6222.2	12,444.4
Reinforcing Steel (Bridges)	pound	3,349,920	3,438,750	6,788,670
Mechanical Bar Splice	each	784	784	1568

351.0	441.0	792.0
132.0	99.0	231.0
6	6	12
6	6	12
192.0	159.0	351.0
81.5	91.0	172.5
6	6	12
1	—	1
2336.4	2336.4	4672.8
3585.2	3585.2	7170.4
1,876,960	1,912,690	3,789,650
1480	1480	2960

4 4 4

114.0 4
194.0 4
134.3 4
5,485,130 4
8176 4
359,300 4
6,849,270 3
7,853,870 3

ESTIMATED QUANTITIES

HANS R. HUTTON NUMBER E-29174 REGISTERED PROFESSIONAL ENGINEER
Hans R. Hutton

DATE 5/17/10
ROUTE I-70 | STATE MO/IL
DISTRICT 6 | SHEET NO. BR8
COUNTY ST. LOUIS CITY - MO ST. CLAIR - IL
JOB NO. J6I0984
CONTRACT ID.
PROJECT NO.
BRIDGE NO. A6500

DATE	DESCRIPTION
11-25-09	4 Revised Struct. Steel quantity
5-17-10	4 Revised per ATC

MISSOURI HIGHWAYS AND TRANSPORTATION COMMISSION
105 WEST CAPITOL
JEFFERSON CITY, MO 65102
1-888-ASK-MODOT (1-888-275-6636)

HNTB
715 KIRK DRIVE
KANSAS CITY, MO 64105-1310
TELEPHONE (816) 472-1201
CERTIFICATE OF AUTHORITY NO. 001270

LICENSED STRUCTURAL ENGINEER
HANS R. HUTTON
081-006707
STATE OF ILLINOIS
Hans R. Hutton
5-17-2010

REV.

Detailed JUL 2009
Checked JUL 2009

Note: This drawing is not to scale. Follow dimensions.

\\kcaw00\jobs\46440\Bridges\Plans\CdtoMoDOTA6500\J6I0984\A6500-dgn\ZPLOT_B_A6500_008-205_J6I0984_008.dgn

17-MAY-2010 11:25

ESTIMATED INCIDENTAL QUANTITIES

ITEM		SUBSTR.	SUPERSTR.	TOTAL
Foundation - Pier 11				
Class 2 Excavation	cu. yard	19,290	—	19,290
Seal Concrete	cu. yard	5066.7	—	5066.7
Class B-2 Concrete	cu. yard	10,737.9	—	10,737.9
Reinforcing Steel (Bridges)	pound	1,300,230	—	1,300,230
Fabricated Structural Carbon Steel (Miscellaneous)	pound	52,300	—	52,300
Fabricated Structural Low Alloy Steel (Plate Girder) A709, Gr. 50	pound	482,860	—	482,860
Foundation - Pier 12				
Class 2 Excavation	cu. yard	25,460	—	25,460
Seal Concrete	cu. yard	5066.7	—	5066.7
Class B-2 Concrete	cu. yard	12,852.0	—	12,852.0
Reinforcing Steel (Bridges)	pound	1,469,630	—	1,469,630
Fabricated Structural Carbon Steel (Miscellaneous)	pound	52,300	—	52,300
Fabricated Structural Low Alloy Steel (Plate Girder) A709, Gr. 50	pound	482,860	—	482,860
Post-Tensioning System at Towers				
Prestressing Bars	pound	64,700	—	64,700
Prestressing Strand	pound	81,480	—	81,480
Precast Prestressed Slab Panels				
Class A-1 Concrete	cu. yard	—	8190.0	8190.0
Reinforcing Steel (Epoxy Coated)	pound	—	2,421,780	2,421,780
Prestressing Bars	pound	—	928,900	928,900
Counterweight Concrete				
Class B Concrete (Miscellaneous)	cu. yard	—	1186.4	1186.4
Class A-1 Concrete	cu. yard	—	182.3	182.3
Reinforcing Steel	pound	—	22,530	22,530
Fabricated Structural Low Alloy Steel (Plate Girder) A709, Gr. 50W	pound	—	116,230	116,230
Inspection Access				
Fabricated Structural Carbon Steel (Miscellaneous)	pound	114,430	—	114,430
Fabricated Structural Low Alloy Steel (Plate Girder) A709, Gr. 50	pound	4870	—	4870
Stay Cables				
Stay Cable Strand	pound	—	2,513,030	2,513,030
Tie-Downs				
Fabricated Structural Low Alloy Steel (Plate Girder) A709, Gr. 50W	pound	—	126,820	126,820

4

2,422,460 5

ESTIMATED QUANTITIES

Detailed JUL 2009
Checked JUL 2009

Note: This drawing is not to scale. Follow dimensions.

\\kcow00\jobs\46440\Bridges\Plans\CdtoMoDOTA6500\J6I0984\A6500-dgn\ZPLOT_B_A6500_009-205_J6I0984_009.dgn 17-MAY-2010 14:05

STATE OF MISSOURI
HANS R. HUTTON
NUMBER E-29174
REGISTERED PROFESSIONAL ENGINEER
Hans R. Hutton

DATE 5/17/10
ROUTE I-70
STATE MO/IL
DISTRICT 6
SHEET NO. BR9
COUNTY ST. LOUIS CITY - MO ST. CLAIR - IL
JOB NO. J6I0984
CONTRACT ID.
PROJECT NO.
BRIDGE NO. A6500

REV.	DESCRIPTION	DATE
1	Revised per AIC	5-17-10
2	Revised for new 810b panels	5-17-10

MISSOURI HIGHWAYS AND TRANSPORTATION COMMISSION
105 WEST CAPITOL
JEFFERSON CITY, MO 65102
1-888-ASK-MODOT (1-888-275-6636)

HNTB
715 KIRK DRIVE
KANSAS CITY, MO 64105-1310
TELEPHONE (816) 472-1201
CERTIFICATE OF AUTHORITY NO. 001270

LICENSED STRUCTURAL ENGINEER
HANS R. HUTTON
081-006707
STATE OF ILLINOIS
expires 11-30-2010
Hans R. Hutton
signature
5-17-2010
date

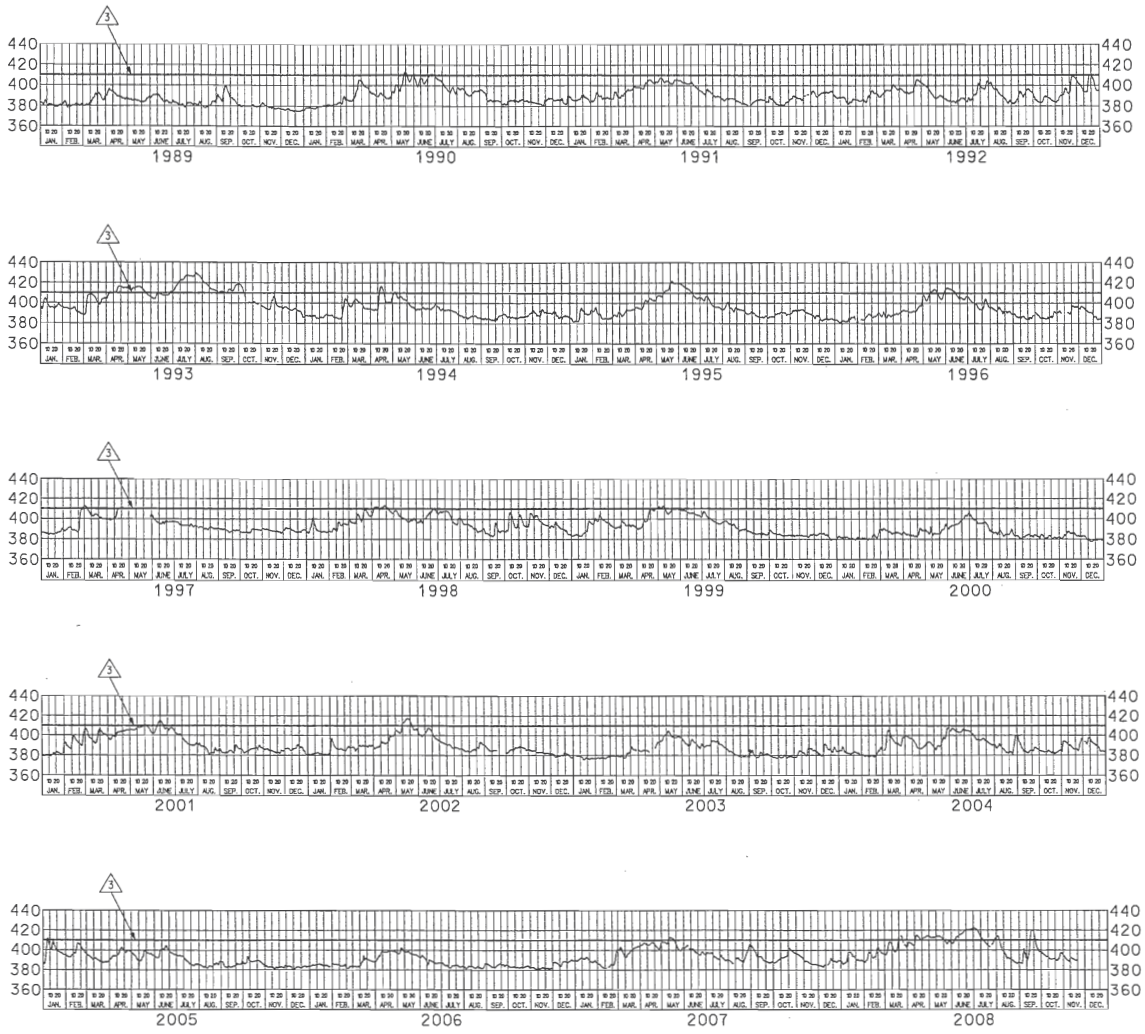

Notes:
Stage hydrograph values are from the St. Louis Gage, located at River Mile 179.6.

410.0 (3)
——— Represents Elevation 416.2 (See Special Provision "Potential Construction Delays Due To High Water").

ST. LOUIS GAGE
RIVER STAGE HYDROGRAPH

HANS R. HUTTON
NUMBER E-29174
REGISTERED PROFESSIONAL ENGINEER
STATE OF MISSOURI

DATE 11/25/09
ROUTE I-70
STATE MO/IL
DISTRICT 6
SHEET NO. BR10
COUNTY ST. LOUIS CITY - MO ST. CLAIR - IL
JOB NO. J6I0984
CONTRACT ID.
PROJECT NO.
BRIDGE NO. A6500

DATE	DESCRIPTION
11-25-09	(3) Revised Water Surface Elev.

MISSOURI HIGHWAYS AND TRANSPORTATION COMMISSION
105 WEST CAPITOL
JEFFERSON CITY, MO 65102
1-888-ASK-MODOT (1-888-275-6636)

HNTB
715 KIRK DRIVE
KANSAS CITY, MO 64105-1310
TELEPHONE (816) 472-1201
CERTIFICATE OF AUTHORITY NO. 001270

HANS R. HUTTON
081-008707
REGISTERED STRUCTURAL ENGINEER
STATE OF ILLINOIS
11-25-2009

REV.

Detailed JUL 2009
Checked JUL 2009

Note: This drawing is not to scale. Follow dimensions.

\\kcaw00\jobs\46440\Bridges\Plans\CdtoMoDOTA6500\J6I0984\A6500-dgn\ZPLOT_B_A6500_010-205_J6I0984_010.dgn

25-NOV-2009 11:49

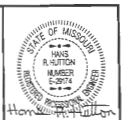

DATE
5/17/10

ROUTE	STATE
I-70	MO/IL
DISTRICT 6	SHEET NO. BR11

COUNTY
ST. LOUIS CITY - MO
ST. CLAIR - IL

JOB NO.
J6I0984

CONTRACT ID.

PROJECT NO.

BRIDGE NO.
A6500

DATE	DESCRIPTION
5-17-10	4 Revised per ATC

MISSOURI HIGHWAYS AND TRANSPORTATION COMMISSION
105 WEST CAPITOL
JEFFERSON CITY, MO 65102
1-888-ASK-MODOT (1-888-275-6636)

HNTB
715 KIRK DRIVE
KANSAS CITY, MO 64105-1310
TELEPHONE (816) 472-1201
CERTIFICATE OF AUTHORITY NO. 001270



5-17-2010
DATE

REV.

4 BLANK SHEET → ~~FOUNDATION LAYOUT~~

Detailed JUL 2009
Checked JUL 2009

Note: This drawing is not to scale. Follow dimensions.

\\kcow00\jobs\46440\Bridges\Plans\CatoMoDOTA6500\J6I0984\A6500-dgn\ZPLOT_B_A6500_011-205_J6I0984_011.dgn

17-MAY-2010 11:25

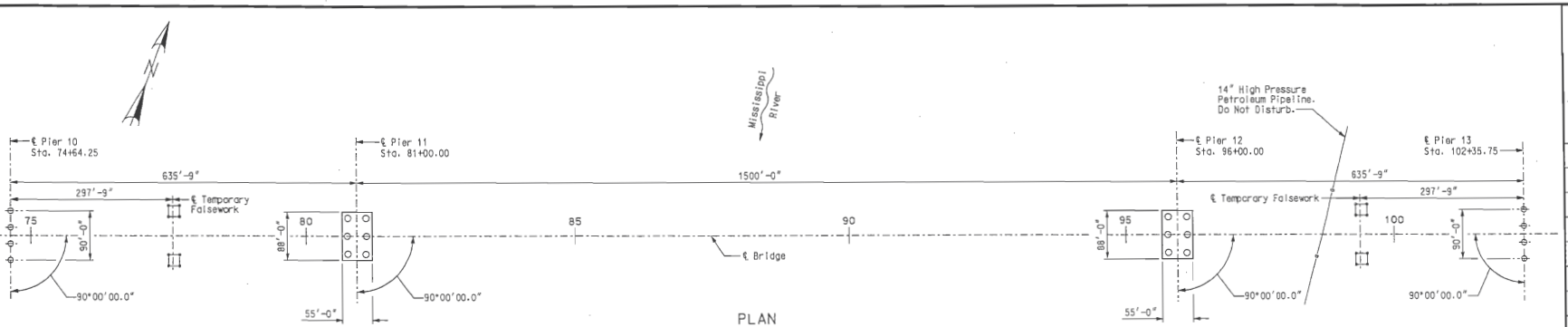

PLAN

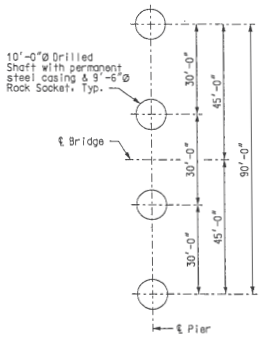

PIER 10

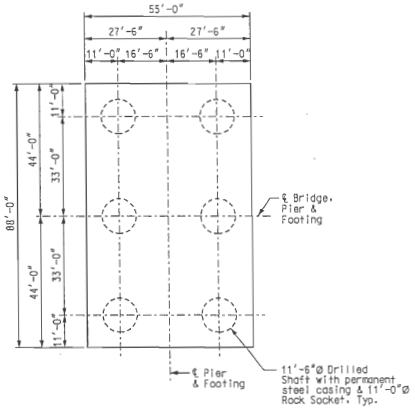

PIER 11

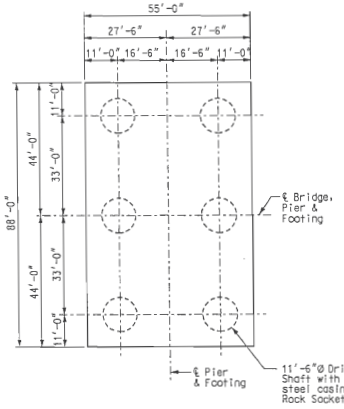

PIER 12

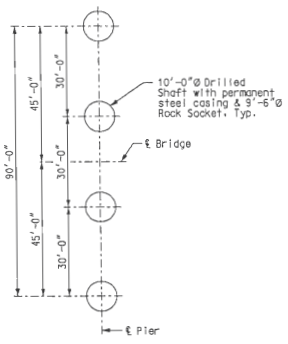

PIER 13

DRILLED SHAFT DATA

LOCATION	SHAFT DIAMETER (FEET)	NUMBER OF SHAFTS	TOP OF SHAFT ELEVATION (FEET)	ESTIMATED TOP OF ROCK SOCKET ELEVATION (FEET)	ESTIMATED LENGTH (FEET)
PIER 10	10.00	4	420.0	398.0	22.0
PIER 11	10.00	14	376.5	318.0	58.5
PIER 12	10.00	14	376.5	303.0	73.5
PIER 13	10.00	4	415.0	296.0	119.0

4 11.50 — 6 4

ROCK SOCKET DATA

LOCATION	ROCK SOCKET DIAMETER (FEET)	NUMBER OF ROCK SOCKETS	MINIMUM FACTORED ~~SIDE FRICTION~~ CAPACITY 4 (KIPS)	ESTIMATED TOP OF ROCK SOCKET ELEVATION (FEET)	ESTIMATED BOTTOM OF ROCK SOCKET ELEVATION (FEET)	*LENGTH (FEET)
PIER 10	9.50	4	8345	398.0	370.0	28.0
PIER 11	9.50	14	16395	318.0	274.0	44.0
PIER 12	9.50	14	16395	303.0	259.0	44.0
PIER 13	9.50	4	8345	296.0	268.0	28.0

4 11.00 — 4 6 — 33.800 4 — 32.300 4 — 383.75 — 296.0 4 — 286.5 — 281.75 4 — 4 14.25 — 22.0 — 16.5 4

* Actual length of the rock socket will be determined after the load test has been completed and the results evaluated.

Notes:
For Pier 10 details, see Sheet Nos. BR22 thru BR24.
For Pier 11 details, see Sheet Nos. BR25 thru BR41.
For Pier 12 details, see Sheet Nos. BR42 thru BR58.
For Pier 13 details, see Sheet Nos. BR96 thru BR98.
Temporary falsework was assumed in the Suggested Erection Sequence. See Sheet Nos. BR179 thru BR183 & Special Provision "Erection of Cable Stayed Spans" for additional information.

4 ALTERNATIVE FOUNDATION LAYOUT

Detailed JUL 2009
Checked JUL 2009

Note: This drawing is not to scale. Follow dimensions.

Sheet No. 12 of 205

\\kcow00\jobs\46440\Bridges\Plans\CdtoMoDOTA6500\J6I0984\A6500-dgn\ZPLOT_B_A6500_012-205_J6I0984_012.dgn

17-MAY-2010 11:25

STATE OF MISSOURI — HANS R. HUTTON — NUMBER E-29574 — REGISTERED PROFESSIONAL ENGINEER

DATE 5/17/10
ROUTE I-70 | STATE MO/IL
DISTRICT 6 | SHEET NO. BR12
COUNTY ST. LOUIS CITY - MO, ST. CLAIR - IL
JOB NO. J6I0984
CONTRACT ID.
PROJECT NO.
BRIDGE NO. A6500

DESCRIPTION	DATE
4 Revised per ATC	5-17-10

MISSOURI HIGHWAYS AND TRANSPORTATION COMMISSION
105 WEST CAPITOL
JEFFERSON CITY, MO 65102
1-888-ASK-MODOT (1-888-275-6636)

HNTB
715 KIRK DRIVE
KANSAS CITY, MO 64105-1310
TELEPHONE (816) 472-1201
CERTIFICATE OF AUTHORITY NO. 001270

LICENSED STRUCTURAL ENGINEER — HANS R. HUTTON — 081-006707 — STATE OF ILLINOIS
Hans R. Hutton
5-17-2010

REV.

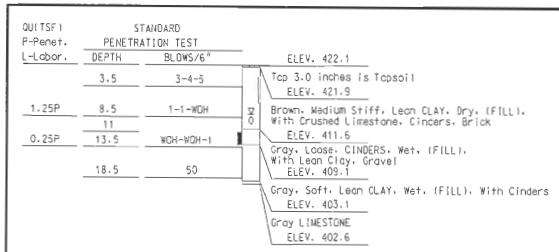

Boring Number WA-1
Pier 10

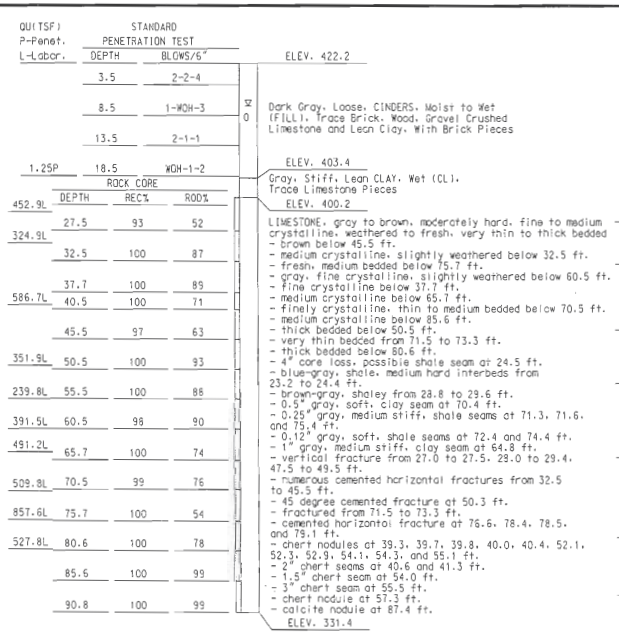

Boring Number WA-2
Pier 10

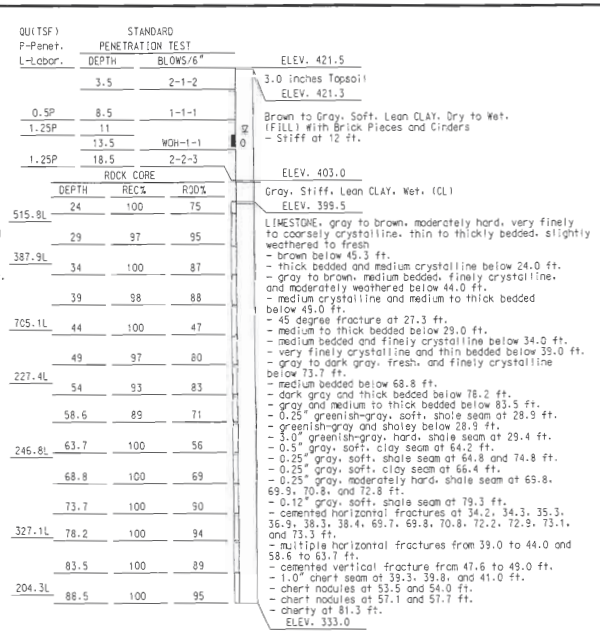

Boring Number WA-3
Pier 10

TYPICAL BORING

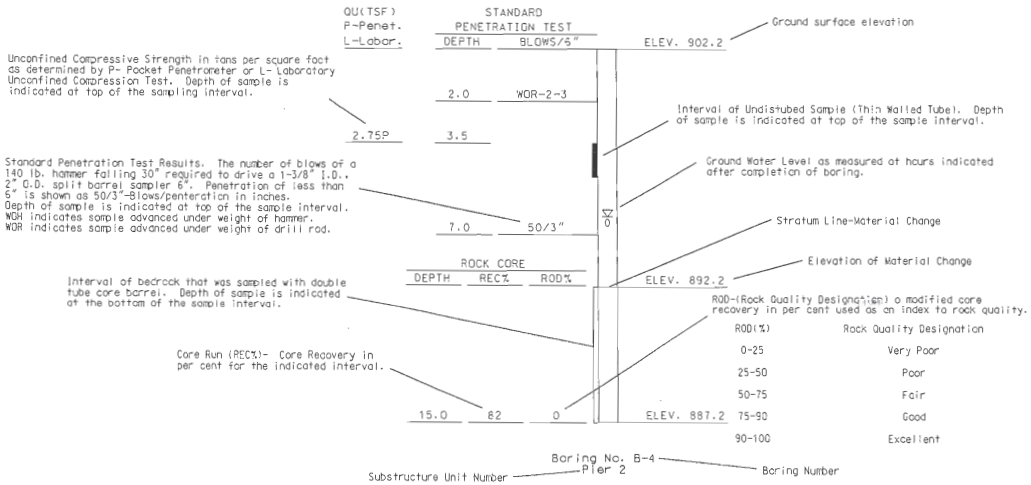

GENERAL NOTES:

The borings shown in these plans were drilled by Geotechnology, Inc., under the direction of HNTB Corporation, between September 8 and December 31, 2008.

For boring locations in plan, see Sheet No. BR4.

The ground water levels shown were recorded during time of drilling. Porosity of soil strata, weather conditions, seasonal changes, site topography, etc., may cause changes in the water levels reported.

The boring information shown on this drawing is abbreviated. A complete copy of boring logs and test results will be provided in the bridge electronic deliverable file or will be available from the Project Contact upon written request to the Commission.

For notice and disclaimer regarding boring log data, see Sheet No. BR4.

BORING DATA

Detailed JUL 2009
Checked JUL 2009

Note: This drawing is not to scale. Follow dimensions.

\\kcow00\jobs\46440\Bridges\Plans\CdtoMoDOTA6500\J610984\A6500-dgn\ZPLOT_B_A6500_001-205_J610984_013.dgn
19-AUG-2009 13:54

STATE OF MISSOURI
WAYNE ALAN BURKE
NUMBER 032-052632
REGISTERED PROFESSIONAL ENGINEER
Wayne Burke
DATE 8/20/09
ROUTE I-70
STATE MO/IL
DISTRICT 6
SHEET NO. BR13
COUNTY ST. LOUIS CITY - MO ST. CLAIR - IL
JOB NO. J610984
CONTRACT ID.
PROJECT NO.
BRIDGE NO. A6500
DESCRIPTION
DATE
MISSOURI HIGHWAYS AND TRANSPORTATION COMMISSION
105 WEST CAPITOL
JEFFERSON CITY, MO 65102
1-888-ASK-MODOT (1-888-275-6636)
HNTB
715 KIRK DRIVE
KANSAS CITY, MO 64105-1310
TELEPHONE (816) 472-1201
CERTIFICATE OF AUTHORITY NO. 001170
LICENSED PROFESSIONAL ENGINEER
WAYNE ALAN BURKE
NUMBER 032-052632
STATE OF ILLINOIS
8-20-2009
REV.

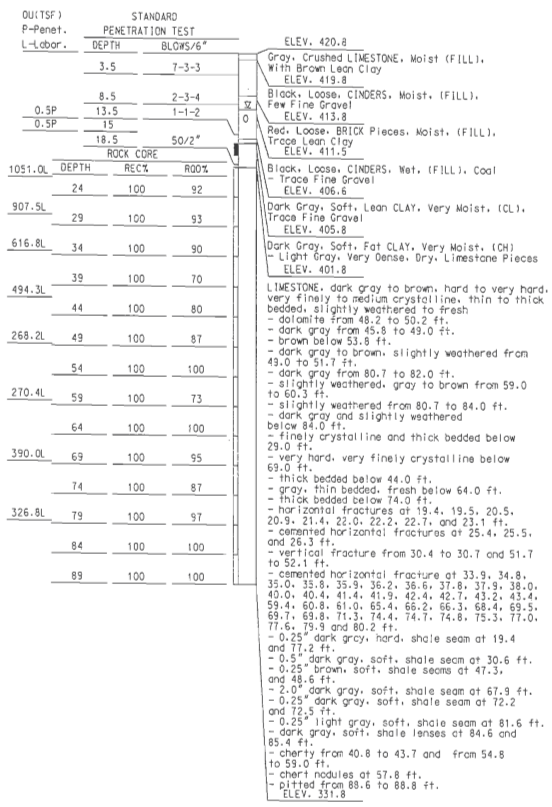

Boring Number WA-4
Pier 10

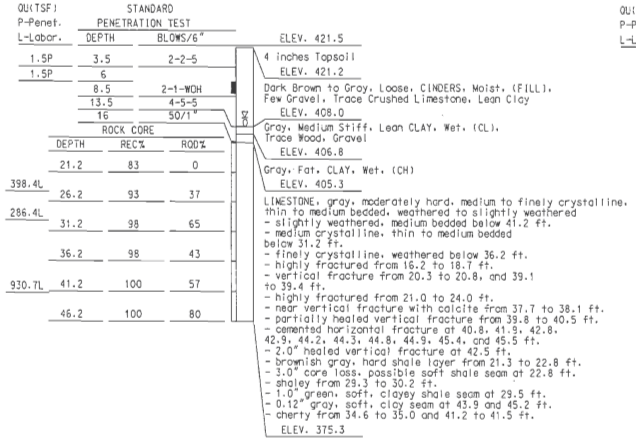

Boring Number WAC-5
Pier 10

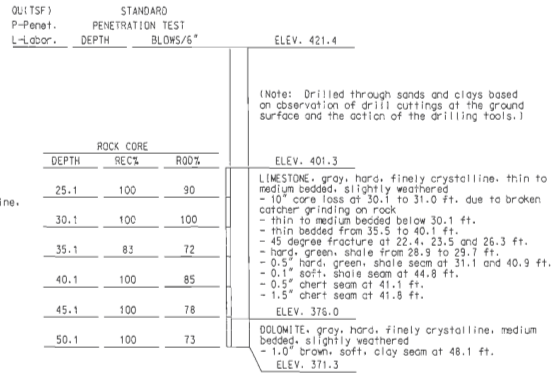

Boring Number WAC-6
Pier 10

NOTE:

For Typical Boring and General Notes, see Sheet No. BR13.

BORING DATA

Detailed JUL 2009
Checked JUL 2009

Note: This drawing is not to scale. Follow dimensions.

\\kcaw00\jobs\46440\Bridges\Plans\CdotoMoDOTA55C0\J6I0984\A6500-dgn\ZPLOT_B_A6500_001-205_J6I0984_014.dgn

19-AUG-2009 13:54

STATE OF MISSOURI
WAYNE ALAN DURYEE
NUMBER E-18730
REGISTERED PROFESSIONAL ENGINEER
8-20-09

DATE 8/20/09
ROUTE I-70
STATE MO/IL
DISTRICT 6
SHEET NO. BR14
COUNTY ST. LOUIS CITY - MO ST. CLAIR - IL
JOB NO. J6I0984
CONTRACT ID.
PROJECT NO.
BRIDGE NO. A6500

DESCRIPTION	DATE

MISSOURI HIGHWAYS AND TRANSPORTATION COMMISSION
105 WEST CAPITOL
JEFFERSON CITY, MO 65102
1-888-ASK-MODOT (1-888-275-6636)

HNTB
715 KIRK DRIVE
KANSAS CITY, MO 64105-1310
816.472.1201 FAX 816.472.7010
CERTIFICATE OF AUTHORITY NO. 001270

LICENSED PROFESSIONAL ENGINEER
WAYNE ALAN DURYEE
062-052632
STATE OF ILLINOIS
8-20-2009

REV.

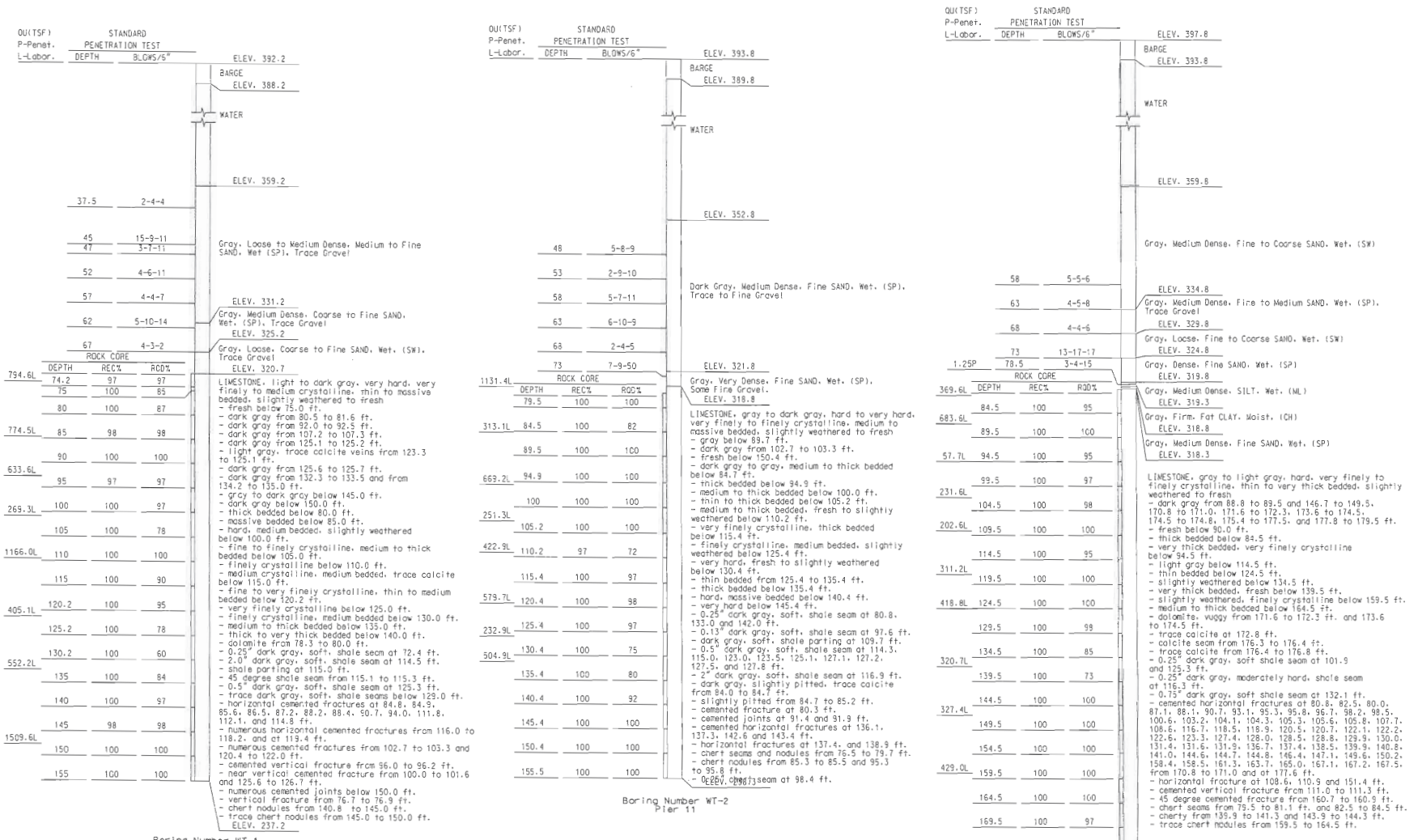

NOTE:

For Typical Boring and General Notes, see Sheet No. BR13.

BORING DATA

Detailed JUL 2009
Checked JUL 2009

Note: This drawing is not to scale. Follow dimensions.

Sheet No. 15 of 205

\\kcaw00\jobs\46440\Bridges\Plans\CdotoMoDOTA6500\J6I0984\A6500-dgn\ZPLOT_B_A6500_001-205_J6I0984_015.dgn

19-AUG-2009 13:54

STATE OF MISSOURI
WAYNE ALAN DURRE
NUMBER E-26130
REGISTERED PROFESSIONAL ENGINEER
DATE 8/20/09

ROUTE	STATE
I-70	MO/IL
DISTRICT	SHEET NO.
6	BR15

COUNTY
ST. LOUIS CITY - MO
ST. CLAIR - IL

JOB NO. J6I0984
CONTRACT ID.
PROJECT NO.
BRIDGE NO. A6500

REV.	DESCRIPTION	DATE

MISSOURI HIGHWAYS AND TRANSPORTATION COMMISSION
105 WEST CAPITOL
JEFFERSON CITY, MO 65102
1-888-ASK-MODOT (1-888-275-6636)

HNTB
715 KIRK DRIVE
KANSAS CITY, MO 64105-1310
TELEPHONE (816) 472-1201
CERTIFICATE OF AUTHORITY NO. 001270

STATE OF ILLINOIS
WAYNE ALAN DURRE
062-055932
LICENSED PROFESSIONAL ENGINEER
8-20-2009
DATE

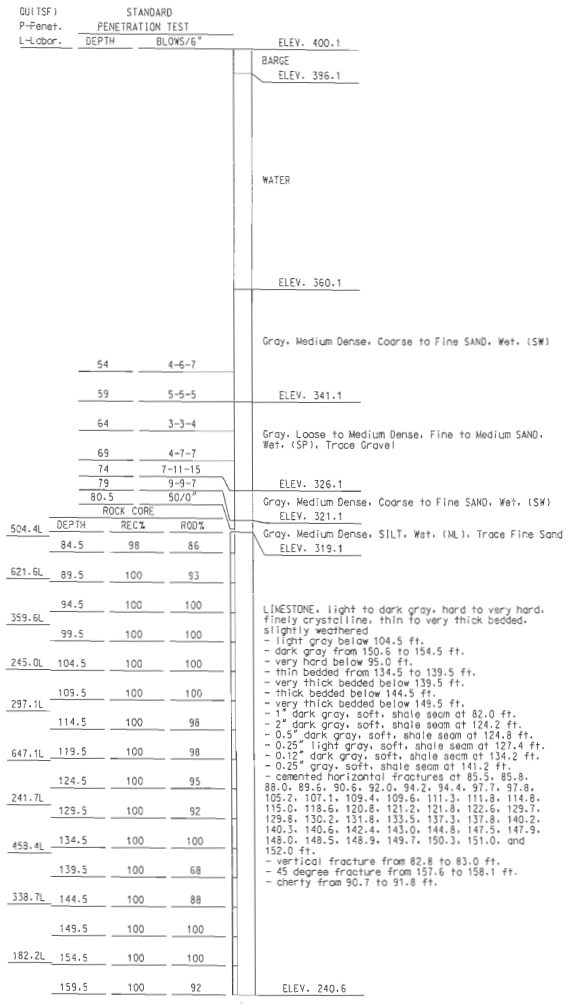

Boring Number WT-4
Pier 11

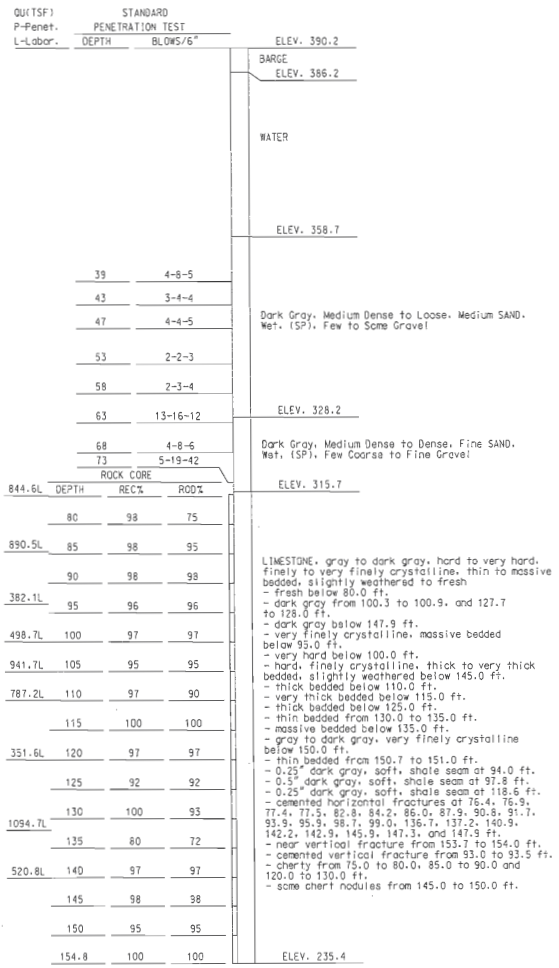

Boring Number WT-5
Pier 11

NOTE:

For Typical Boring and General Notes, see Sheet No. BR13.

BORING DATA

STATE OF MISSOURI
WAYNE ALAN DURYEE
NUMBER E-40780
REGISTERED PROFESSIONAL ENGINEER
DATE 8/20/09
ROUTE I-70
STATE MO/IL
DISTRICT 6
SHEET NO. BR16
COUNTY ST. LOUIS CITY - MO ST. CLAIR - IL
JOB NO. J6I0984
CONTRACT ID.
PROJECT NO.
BRIDGE NO. A6500
DESCRIPTION
DATE
MISSOURI HIGHWAYS AND TRANSPORTATION COMMISSION
105 WEST CAPITOL
JEFFERSON CITY, MO 65102
1-888-ASK-MODOT (1-888-275-6636)
HNTB
715 KIRK DRIVE
KANSAS CITY, MO 64105-1310
TELEPHONE (816) 472-1201
CERTIFICATE OF AUTHORITY NO. 001070
STATE OF ILLINOIS
WAYNE ALAN DURYEE
062-058930
LICENSED PROFESSIONAL ENGINEER
8-20-2009

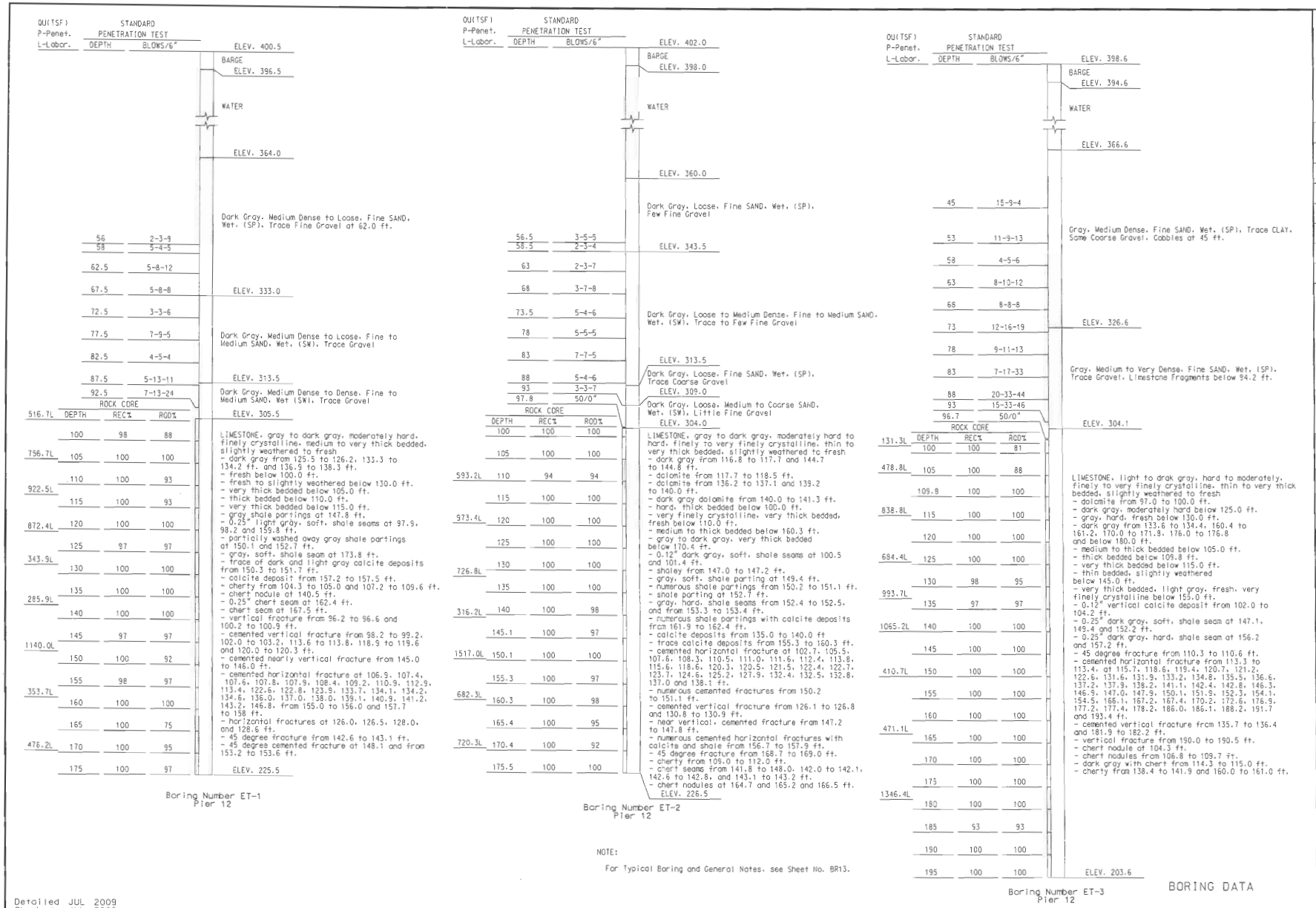

Detailed JUL 2009
Checked JUL 2009

Note: This drawing is not to scale. Follow dimensions.

\\kcew00\jobs\46440\Bridges\Plans\CdotMoDOTA6500\J6I0984\A6500-dgn\ZPLOT_B_A6500_001-205_J6I0984_017.dgn

19-AUG-2009 13:55

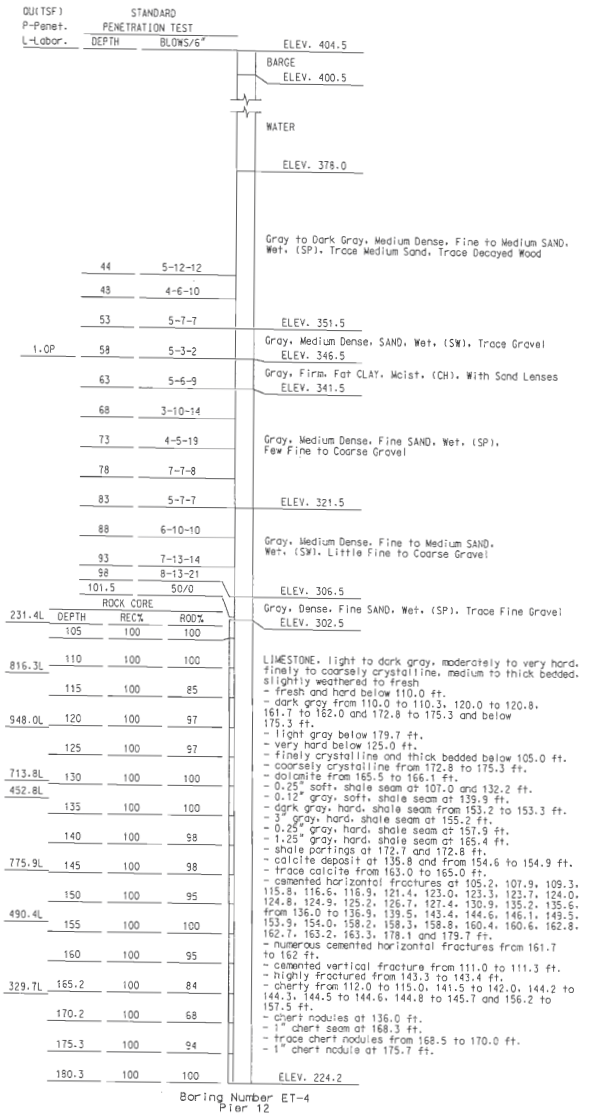

Boring Number ET-4
Pier 12

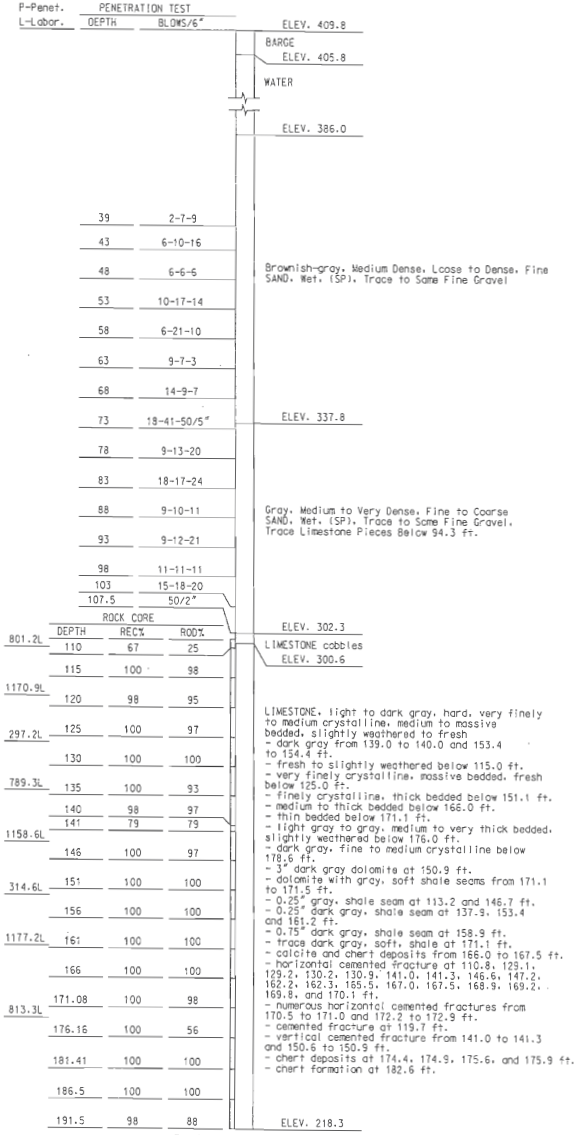

Boring Number ET-5
Pier 12

NOTE:

For Typical Boring and General Notes, see Sheet No. BR13.

BORING DATA

Detailed JUL 2009
Checked JUL 2009

Note: This drawing is not to scale. Follow dimensions.

STATE OF MISSOURI
WAYNE ALAN DURYEE
NUMBER E-18780
REGISTERED PROFESSIONAL ENGINEER
8/20/09

HNTB
715 KIRK DRIVE
KANSAS CITY, MO 64105-1310
(816) 472-1201
CERTIFICATE OF AUTHORITY NO. 001170

REGISTERED PROFESSIONAL ENGINEER
WAYNE ALAN DURYEE
062-052632
STATE OF ILLINOIS
9-20-2009

DATE 8/20/09
ROUTE I-70
STATE MO/IL
DISTRICT 6
SHEET NO. BR18
COUNTY ST. LOUIS CITY - MO, ST. CLAIR - IL
JOB NO. J6I0984
CONTRACT ID.
PROJECT NO.
BRIDGE NO. A6500

DESCRIPTION	DATE

MISSOURI HIGHWAYS AND TRANSPORTATION COMMISSION
105 WEST CAPITOL
JEFFERSON CITY, MO 65102
1-888-ASK-MODOT (1-888-275-6636)

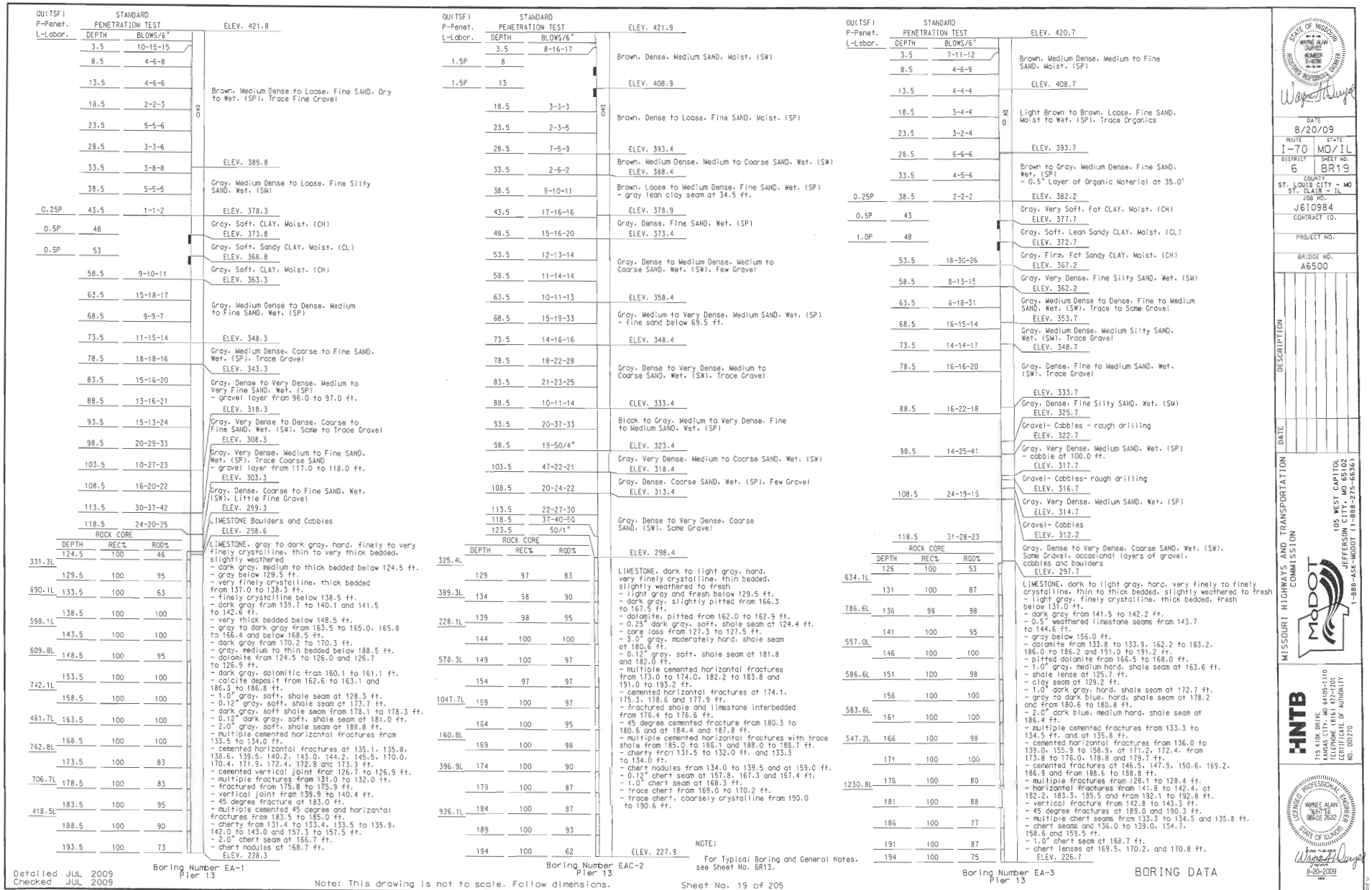
Boring Number EA-1
Pier 13
ELEV. 421.8
Brown, Medium Dense to Loose, Fine SAND, Dry to Wet, (SP), Trace Fine Gravel
ELEV. 389.8
Gray, Medium Dense to Loose, Fine Silty SAND, Wet, (SW)
ELEV. 378.3
Gray, Soft, CLAY, Moist, (CH)
ELEV. 373.8
Gray, Soft, Sandy CLAY, Moist, (CL)
ELEV. 368.8
Grey, Soft, CLAY, Moist, (CH)
ELEV. 363.3
Gray, Medium Dense to Dense, Medium to Fine SAND, Wet, (SP)
ELEV. 348.3
Gray, Medium Dense, Coarse to Fine SAND, Wet, (SP), Trace Gravel
ELEV. 343.3
Gray, Dense to Very Dense, Medium to Very Fine SAND, Wet, (SP)
- gravel layer from 96.0 to 97.0 ft.
ELEV. 318.3
Gray, Very Dense to Dense, Coarse to Fine SAND, Wet, (SW), Some to Trace Gravel
ELEV. 308.3
Gray, Very Dense, Medium to Fine SAND, Wet, (SP), Trace Coarse SAND
- gravel layer from 117.0 to 118.0 ft.
ELEV. 303.3
Gray, Dense, Coarse to Fine SAND, Wet, (SW), Little Fine Gravel
ELEV. 299.3
LIMESTONE Boulders and Cobbles
ELEV. 298.6
LIMESTONE, gray to dark gray, hard, finely to very finely crystalline, thin to very thick bedded, slightly weathered
- dark gray, medium to thick bedded below 124.5 ft.
- gray below 129.5 ft.
- very finely crystalline, thick bedded from 137.0 to 138.1 ft.
- finely crystalline below 138.5 ft.
- dark gray from 139.7 to 140.1 and 141.5 to 142.6 ft.
- very thick bedded below 148.5 ft.
- gray to dark gray from 163.5 to 165.0, 165.8 to 166.4 and below 168.5 ft.
- dark gray from 170.2 to 170.3 ft.
- gray, medium to thin bedded below 188.5 ft.
- dolomite from 124.5 to 126.0 and 126.7 to 126.9 ft.
- dark gray, dolomitic from 160.1 to 161.1 ft.
- calcite deposit from 162.6 to 163.1 and 186.3 to 186.8 ft.
- 1.0" gray, soft, shale seam at 128.3 ft.
- 0.12" gray, soft, shale seam at 173.7 ft.
- dark gray, soft shale seam from 178.1 to 178.3 ft.
- 0.12" dark gray, soft, shale seam at 181.0 ft.
- 2.0" gray, soft, shale seam at 188.8 ft.
- multiple cemented horizontal fractures from 133.5 to 134.0 ft.
- cemented horizontal fractures at 135.1, 135.8, 138.5, 139.5, 140.2, 143.0, 144.2, 145.5, 170.0, 170.4, 171.9, 172.4, 172.9 and 173.3 ft.
- cemented vertical joint from 126.7 to 126.9 ft.
- multiple fractures from 131.0 to 132.0 ft.
- fractured from 175.8 to 175.9 ft.
- vertical joint from 139.9 to 140.4 ft.
- 45 degree fracture at 183.0 ft.
- multiple cemented 45 degree and horizontal fractures from 183.5 to 185.0 ft.
- cherty from 131.4 to 133.4, 133.5 to 135.9, 142.0 to 143.0 and 157.3 to 157.5 ft.
- 2.0" chert seam at 166.7 ft.
- chert nodules at 168.7 ft.
ELEV. 228.3
Boring Number EAC-2
Pier 13
ELEV. 421.9
Brown, Dense, Medium SAND, Moist, (SW)
ELEV. 408.9
Brown, Dense to Loose, Fine SAND, Moist, (SP)
ELEV. 393.4
Brown, Medium Dense, Medium to Coarse SAND, Wet, (SW)
ELEV. 388.4
Brown, Loose to Medium Dense, Fine SAND, Wet, (SP)
- gray lean clay seam at 34.5 ft.
ELEV. 378.9
Gray, Dense, Fine SAND, Wet, (SP)
ELEV. 373.4
Gray, Dense to Medium Dense, Medium to Coarse SAND, Wet, (SW), Few Gravel
ELEV. 358.4
Gray, Medium to Very Dense, Medium SAND, Wet, (SP)
- fine sand below 69.5 ft.
ELEV. 348.4
Gray, Dense to Very Dense, Medium to Coarse SAND, Wet, (SW), Trace Gravel
ELEV. 333.4
Black to Gray, Medium to Very Dense, Fine to Medium SAND, Wet, (SP)
ELEV. 323.4
Gray, Very Dense, Medium to Coarse SAND, Wet, (SW)
ELEV. 318.4
Gray, Dense, Coarse SAND, Wet, (SP), Few Gravel
ELEV. 313.4
Gray, Dense to Very Dense, Coarse SAND, (SW), Some Gravel
ELEV. 298.4
LIMESTONE, dark to light gray, hard, very finely crystalline, thin bedded, slightly weathered to fresh
- light gray and fresh below 129.5 ft.
- dark gray, slightly pitted from 166.3 to 167.5 ft.
- dolomite, pitted from 162.0 to 162.9 ft.
- 0.25" dark gray, soft, shale seam at 124.4 ft.
- core loss from 127.3 to 127.5 ft.
- 3.0" gray, moderately hard, shale seam at 180.6 ft.
- 0.12" gray, soft, shale seam at 181.8 and 182.0 ft.
- multiple cemented horizontal fractures from 173.0 to 174.0, 182.2 to 183.8 and 191.0 to 193.2 ft.
- cemented horizontal fractures at 174.1, 175.3, 178.6 and 177.9 ft.
- fractured shale and limestone interbedded from 176.4 to 176.6 ft.
- 45 degree cemented fracture from 180.3 to 180.6 and at 184.4 and 187.8 ft.
- multiple cemented horizontal fractures with trace shale from 185.0 to 186.1 and 188.0 to 188.7 ft.
- cherty from 131.5 to 132.0 ft. and 133.3 to 134.0 ft.
- chert nodules from 134.0 to 139.5 and at 159.0 ft.
- 0.12" chert seam at 157.8, 167.3 and 167.4 ft.
- 1.0" chert seam at 168.3 ft.
- trace chert from 169.0 to 170.2 ft.
- trace chert, coarsely crystalline from 190.0 to 190.6 ft.
ELEV. 227.9
NOTE:
For Typical Boring and General Notes, see Sheet No. BR13.
Boring Number EA-3
Pier 13
ELEV. 420.7
Brown, Medium Dense, Medium to Fine SAND, Moist, (SP)
ELEV. 408.7
Light Brown to Brown, Loose, Fine SAND, Moist to Wet, (SP), Trace Organics
ELEV. 393.7
Brown to Gray, Medium Dense, Fine SAND, Wet, (SP)
- 0.5" Layer of Organic Material at 35.0'
ELEV. 382.2
Gray, Very Soft, Fat CLAY, Moist, (CH)
ELEV. 377.7
Gray, Soft, Lean Sandy CLAY, Moist, (CL)
ELEV. 372.7
Gray, Firm, Fat Sandy CLAY, Moist, (CH)
ELEV. 367.2
Gray, Very Dense, Fine Silty SAND, Wet, (SW)
ELEV. 362.2
Gray, Medium Dense to Dense, Fine to Medium SAND, Wet, (SW), Trace to Some Gravel
ELEV. 353.7
Gray, Medium Dense, Medium Silty SAND, Wet, (SW), Trace Gravel
ELEV. 348.7
Gray, Dense, Fine to Medium SAND, Wet, (SW), Trace Gravel
ELEV. 333.7
Gray, Dense, Fine Silty SAND, Wet, (SW)
ELEV. 325.7
Gravel- Cobbles - rough drilling
ELEV. 322.7
Gray, Very Dense, Medium SAND, Wet, (SP)
- cobble at 100.0 ft.
ELEV. 317.7
Gravel- Cobbles- rough drilling
ELEV. 316.7
Gray, Very Dense, Medium SAND, Wet, (SP)
ELEV. 314.7
Gravel- Cobbles
ELEV. 312.2
Gray, Dense to Very Dense, Coarse SAND, Wet, (SW), Some Gravel, occasional layers of gravel, cobbles and boulders
ELEV. 297.7
LIMESTONE, dark to light gray, hard, very finely to finely crystalline, thin to thick bedded, slightly weathered to fresh
- light gray, finely crystalline, thick bedded, fresh below 131.0 ft.
- dark gray from 141.5 to 142.2 ft.
- 0.5" weathered limestone seams from 143.7 to 144.6 ft.
- gray below 156.0 ft.
- dolomite from 133.8 to 133.9, 162.2 to 163.2, 186.0 to 186.2 and 191.0 to 191.2 ft.
- pitted dolomite from 166.5 to 168.0 ft.
- 1.0" gray, medium hard, shale seam at 163.6 ft.
- shale lense at 125.7 ft.
- clay seam at 129.2 ft.
- 1.0" dark gray, hard, shale seam at 172.7 ft.
- gray to dark blue, hard, shale seam at 178.2 and from 180.6 to 180.8 ft.
- 2.0" dark blue, medium hard, shale seam at 186.4 ft.
- multiple cemented fractures from 133.3 to 134.5 ft. and at 135.8 ft.
- cemented horizontal fractures from 136.0 to 139.0, 155.9 to 158.9, at 171.2, 172.4, from 173.8 to 176.0, 178.8 and 179.7 ft.
- cemented fractures at 146.5, 147.9, 150.6, 169.2, 186.9 and from 188.6 to 188.8 ft.
- multiple fractures from 128.1 to 128.4 ft.
- horizontal fractures from 141.8 to 142.4, at 182.2, 183.3, 185.5 and from 192.1 to 192.8 ft.
- vertical fracture from 142.8 to 143.3 ft.
- 45 degree fractures at 189.0 and 190.3 ft.
- multiple chert seams from 133.3 to 134.5 and 135.8 ft.
- chert seams and 136.0 to 139.0, 154.7, 158.6 and 159.5 ft.
- 1.0" chert seam at 168.7 ft.
- chert lenses at 169.5, 170.2, and 170.8 ft.
ELEV. 226.7
BORING DATA
Detailed JUL 2009
Checked JUL 2009
Note: This drawing is not to scale. Follow dimensions.
Sheet No. 19 of 205
MISSOURI HIGHWAYS AND TRANSPORTATION COMMISSION
105 WEST CAPITOL
JEFFERSON CITY, MO 65102
1-888-ASK-MODOT (1-888-275-6636)
HNTB
715 KIRK DRIVE
KANSAS CITY, MO 64105-2310
TELEPHONE 816.472.1201
CERTIFICATE OF AUTHORITY NO. 001270
WAYNE ALAN QUIRES
NUMBER E-6570
LICENSED PROFESSIONAL ENGINEER
STATE OF MISSOURI
8-20-2009
WAYNE ALAN QUIRES
062-025352
LICENSED PROFESSIONAL ENGINEER
STATE OF ILLINOIS
8-20-2009
DATE
8/20/09
ROUTE I-70
STATE MO/IL
DISTRICT 6
SHEET NO. BR19
COUNTY ST. LOUIS CITY - MO ST. CLAIR - IL
JOB NO. J6I0984
CONTRACT ID.
PROJECT NO.
BRIDGE NO. A6500
DESCRIPTION
DATE
\\kcaw00\jobs\46440\Bridges\Plans\CdotMoDOTA6500\J6I0984\A6500-dgn\ZPLOT_B_A6500_001-205_J6I0984_019.dgn
19-AUG-2009 13:55

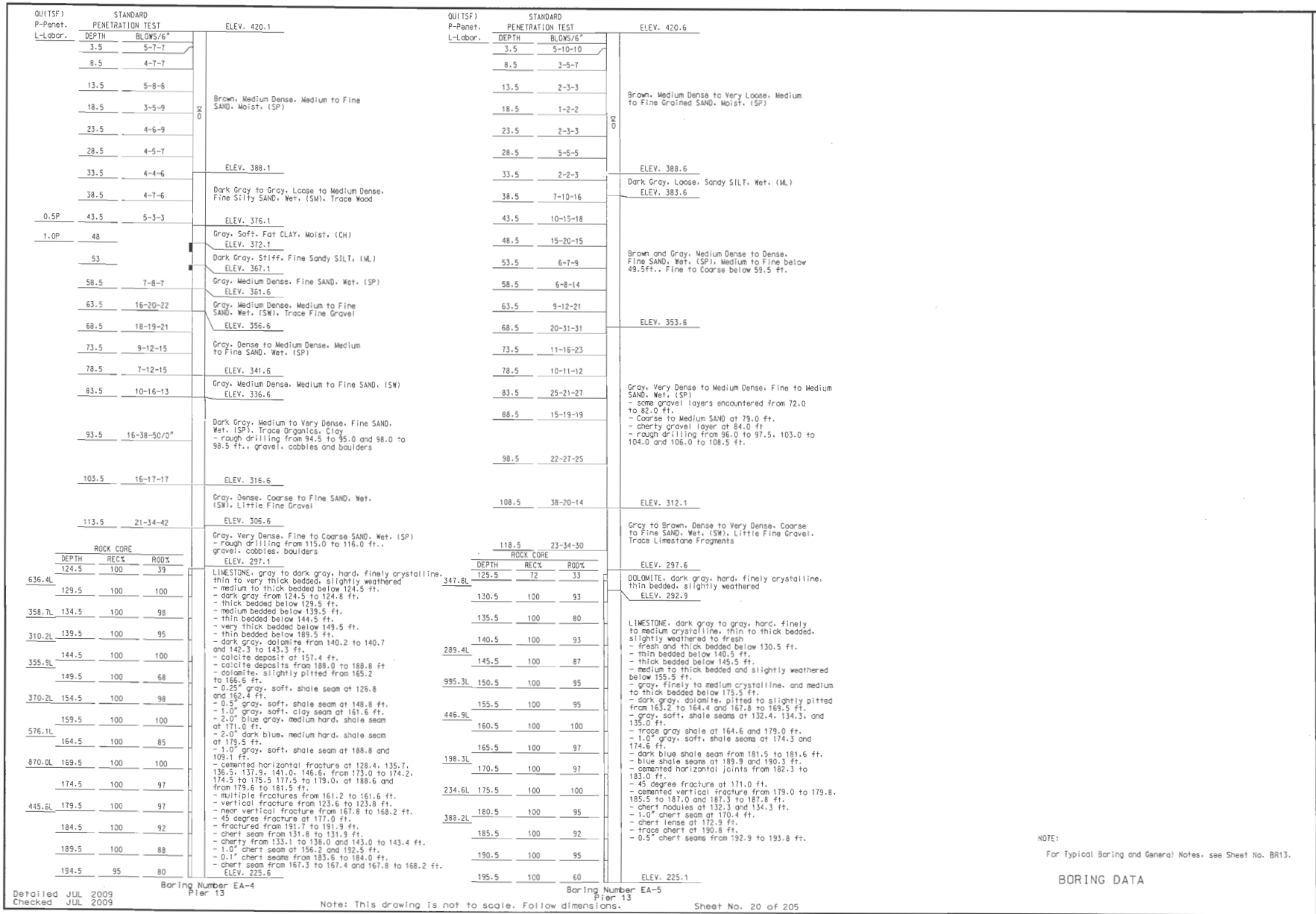
QU(TSF) P-Penet. L-Labor.
STANDARD PENETRATION TEST
DEPTH BLOWS/6"
ELEV. 420.1
3.5 5-7-7
8.5 4-7-7
13.5 5-8-6
18.5 3-5-9
23.5 4-6-9
28.5 4-5-7
33.5 4-4-6
ELEV. 388.1
38.5 4-7-6
Brown, Medium Dense, Medium to Fine SAND, Moist, (SP)
Dark Gray to Gray, Loose to Medium Dense, Fine Silty SAND, Wet, (SM), Trace Wood
0.5P 43.5 5-3-3
ELEV. 376.1
1.0P 48
Gray, Soft, Fat CLAY, Moist, (CH)
ELEV. 372.1
53
Dark Gray, Stiff, Fine Sandy SILT, (ML)
ELEV. 367.1
58.5 7-8-7
Gray, Medium Dense, Fine SAND, Wet, (SP)
ELEV. 361.6
63.5 16-20-22
Gray, Medium Dense, Medium to Fine SAND, Wet, (SW), Trace Fine Gravel
ELEV. 356.6
68.5 18-19-21
Gray, Dense to Medium Dense, Medium to Fine SAND, Wet, (SP)
73.5 9-12-15
ELEV. 341.6
78.5 7-12-15
Gray, Medium Dense, Medium to Fine SAND, (SW)
ELEV. 336.6
83.5 10-16-13
Dark Grey, Medium to Very Dense, Fine SAND, Wet, (SP), Trace Organics, Clay
- rough drilling from 94.5 to 95.0 and 98.0 to 98.5 ft., gravel, cobbles and boulders
93.5 16-38-50/0"
103.5 16-17-17
ELEV. 316.6
Gray, Dense, Coarse to Fine SAND, Wet, (SW), Little Fine Gravel
113.5 21-34-42
ELEV. 305.6
Gray, Very Dense, Fine to Coarse SAND, Wet, (SP)
- rough drilling from 115.0 to 116.0 ft., gravel, cobbles, boulders
ELEV. 297.1
ROCK CORE
DEPTH REC% ROD%
124.5 100 39
636.4L
129.5 100 100
358.7L 134.5 100 98
310.2L 139.5 100 95
144.5 100 100
355.9L
149.5 100 68
370.2L 154.5 100 98
159.5 100 100
576.1L
164.5 100 85
870.0L 169.5 100 100
174.5 100 97
445.6L 179.5 100 97
184.5 100 92
189.5 100 88
194.5 95 80
LIMESTONE, gray to dark gray, hard, finely crystalline, thin to very thick bedded, slightly weathered
- medium to thick bedded below 124.5 ft.
- dark gray from 124.5 to 124.8 ft.
- thick bedded below 129.5 ft.
- medium bedded below 139.5 ft.
- thin bedded below 144.5 ft.
- very thick bedded below 149.5 ft.
- thin bedded below 189.5 ft.
- dark gray, dolomite from 140.2 to 140.7 and 142.3 to 143.3 ft.
- calcite deposit at 157.4 ft.
- calcite deposits from 188.0 to 188.8 ft
- dolomite, slightly pitted from 165.2 to 166.6 ft.
- 0.25" gray, soft, shale seam at 126.8 and 162.4 ft.
- 0.5" gray, soft, shale seam at 148.8 ft.
- 1.0" gray, soft, clay seam at 161.6 ft.
- 2.0" blue gray, medium hard, shale seam at 171.0 ft.
- 2.0" dark blue, medium hard, shale seam at 179.5 ft.
- 1.0" gray, soft, shale seam at 188.8 and 189.1 ft.
- cemented horizontal fracture at 128.4, 135.7, 136.5, 137.9, 141.0, 146.6, from 173.0 to 174.2, 174.5 to 175.5 177.5 to 179.0, at 188.6 and from 179.6 to 181.5 ft.
- multiple fractures from 161.2 to 161.6 ft.
- vertical fracture from 123.6 to 123.8 ft.
- near vertical fracture from 167.8 to 168.2 ft.
- 45 degree fracture at 177.0 ft.
- fractured from 191.7 to 191.9 ft.
- chert seam from 131.8 to 131.9 ft.
- cherty from 133.1 to 138.0 and 143.0 to 143.4 ft.
- 1.0" chert seam at 156.2 and 192.5 ft.
- 0.1" chert seams from 183.6 to 184.0 ft.
- chert seam from 167.3 to 167.4 and 167.8 to 168.2 ft.
ELEV. 225.6
Boring Number EA-4
Pier 13
QU(TSF) P-Penet. L-Labor.
STANDARD PENETRATION TEST
DEPTH BLOWS/6"
ELEV. 420.6
3.5 5-10-10
8.5 3-5-7
13.5 2-3-3
18.5 1-2-2
23.5 2-3-3
28.5 5-5-5
33.5 2-2-3
ELEV. 388.6
Brown, Medium Dense to Very Loose, Medium to Fine Grained SAND, Moist, (SP)
Dark Gray, Loose, Sandy SILT, Wet, (ML)
38.5 7-10-16
ELEV. 383.6
43.5 10-15-18
48.5 15-20-15
53.5 6-7-9
Brown and Gray, Medium Dense to Dense, Fine SAND, Wet, (SP), Medium to Fine below 49.5ft., Fine to Coarse below 59.5 ft.
58.5 6-8-14
63.5 9-12-21
68.5 20-31-31
ELEV. 353.6
73.5 11-16-23
78.5 10-11-12
83.5 25-21-27
Gray, Very Dense to Medium Dense, Fine to Medium SAND, Wet, (SP)
- some gravel layers encountered from 72.0 to 82.0 ft.
- Coarse to Medium SAND at 79.0 ft.
- cherty gravel layer at 84.0 ft
- rough drilling from 96.0 to 97.5, 103.0 to 104.0 and 106.0 to 108.5 ft.
88.5 15-19-19
98.5 22-27-25
108.5 38-20-14
ELEV. 312.1
Grey to Brown, Dense to Very Dense, Coarse to Fine SAND, Wet, (SW), Little Fine Gravel, Trace Limestone Fragments
118.5 23-34-30
ELEV. 297.6
ROCK CORE
DEPTH REC% ROD%
125.5 72 33
347.8L
130.5 100 93
135.5 100 80
140.5 100 93
289.4L
145.5 100 87
995.3L 150.5 100 95
155.5 100 95
446.9L
160.5 100 100
165.5 100 97
198.3L
170.5 100 97
234.6L 175.5 100 100
180.5 100 95
388.2L
185.5 100 92
190.5 100 95
195.5 100 60
ELEV. 225.1
DOLOMITE, dark gray, hard, finely crystaline, thin bedded, slightly weathered
ELEV. 292.9
LIMESTONE, dark gray to gray, hard, finely to medium crystalline, thin to thick bedded, slightly weathered to fresh
- fresh and thick bedded below 130.5 ft.
- thin bedded below 140.5 ft.
- thick bedded below 145.5 ft.
- medium to thick bedded and slightly weathered below 155.5 ft.
- gray, finely to medium crystalline, and medium to thick bedded below 175.5 ft.
- dark gray, dolomite, pitted to slightly pitted from 163.2 to 164.4 and 167.8 to 169.5 ft.
- gray, soft, shale seams at 132.4, 134.3, and 135.0 ft.
- trace gray shale at 164.6 and 179.0 ft.
- 1.0" gray, soft, shale seams at 174.3 and 174.6 ft.
- dark blue shale seam from 181.5 to 181.6 ft.
- blue shale seams at 189.9 and 190.3 ft.
- cemented horizontal joints from 182.3 to 183.0 ft.
- 45 degree fracture at 171.0 ft.
- cemented vertical fracture from 179.0 to 179.8, 185.5 to 187.0 and 187.3 to 187.8 ft.
- chert nodules at 132.3 and 134.3 ft.
- 1.0" chert seam at 170.4 ft.
- chert lense at 172.9 ft.
- trace chert at 190.8 ft.
- 0.5" chert seams from 192.9 to 193.8 ft.
Boring Number EA-5
Pier 13
NOTE:
For Typical Boring and General Notes, see Sheet No. BR13.
BORING DATA
Detailed JUL 2009
Checked JUL 2009
Note: This drawing is not to scale. Follow dimensions.
Sheet No. 20 of 205
STATE OF MISSOURI
WAYNE ALAN DURFEE
NUMBER E-8760
REGISTERED PROFESSIONAL ENGINEER
DATE 8/20/09
ROUTE I-70
STATE MO/IL
DISTRICT 6
SHEET NO. BR20
COUNTY ST. LOUIS CITY - MO ST. CLAIR - IL
JOB NO. J6I0984
CONTRACT ID.
PROJECT NO.
BRIDGE NO. A6500
DESCRIPTION
DATE
MISSOURI HIGHWAYS AND TRANSPORTATION COMMISSION
105 WEST CAPITOL
JEFFERSON CITY, MO 65102
(1-888-ASK-MODOT (1-888-275-6636))
MoDOT
HNTB
715 KIRK DRIVE
KANSAS CITY, MO 64105-1310
TELEPHONE (816) 472-1201
CERTIFICATE OF AUTHORITY NO. 001270
STATE OF ILLINOIS
WAYNE ALAN DURFEE
062-052632
6-20-2009
REV.
\\kcow00\jobs\46440\Bridges\Plans\CdtoMoDOTA6500\J6I0984\A6500-dgn\ZPLOT_B_A6500_001-205_J6I0984_020.dgn
19-AUG-2009 13:55

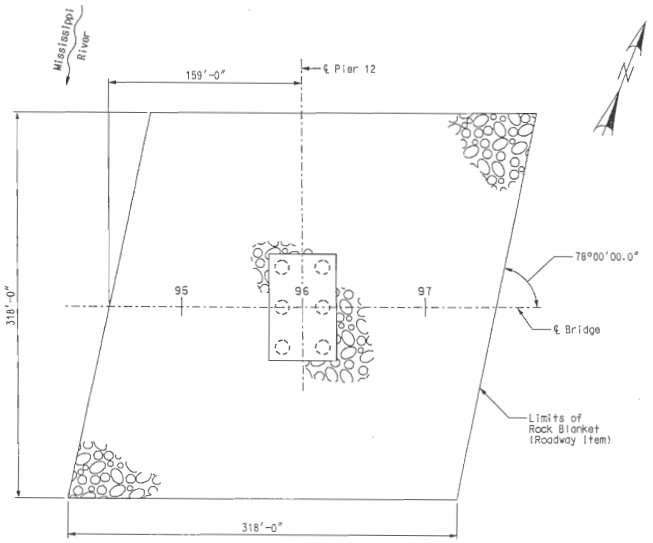

PLAN AT PIER 12 ~~ALTERNATIVE~~ FOUNDATION

4

Notes:
For gradation and placement requirements, see Roadway Special Provisions.

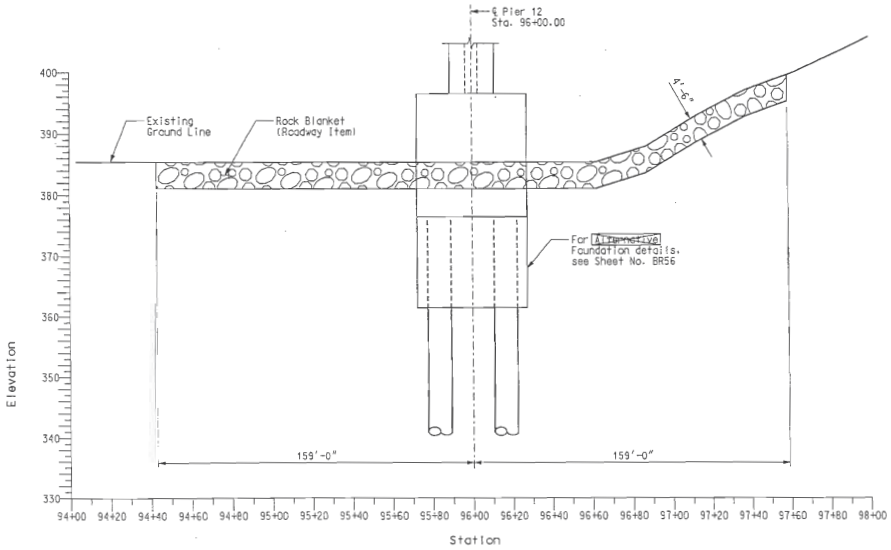

ELEVATION AT PIER 12 ~~ALTERNATIVE~~ FOUNDATION

4

LIMITS OF ROCK BLANKET

Detailed JUL 2009
Checked JUL 2009

Note: This drawing is not to scale. Follow dimensions.

Sheet No. 21 of 205

\\kcow00\jobs\48440\Bridges\Plans\CdotMoDOTA6500\J6I0984\A6500-dgn\ZPLOT_B_A6500_021-205_J6I0984_021.dgn

17-MAY-2010 11:25

STATE OF MISSOURI
HANS R. HUTTON
NUMBER E-28174
REGISTERED PROFESSIONAL ENGINEER
5-17-2010

DATE
5/17/10

ROUTE	STATE
I-70	MO/IL
DISTRICT	SHEET NO.
6	BR21

COUNTY
ST. LOUIS CITY - MO
ST. CLAIR - IL

JOB NO.
J6I0984

CONTRACT ID.

PROJECT NO.

BRIDGE NO.
A6500

DESCRIPTION	DATE
1 Revised per ATC	5-17-10

MISSOURI HIGHWAYS AND TRANSPORTATION COMMISSION
105 WEST CAPITOL
JEFFERSON CITY, MO 65102
1-888-ASK-MODOT (1-888-275-6636)

HNTB
115 KIRK DRIVE
KANSAS CITY, MO 64105-1310
TELEPHONE (816) 472-1201
CERTIFICATE OF AUTHORITY NO. 001270

LICENSED STRUCTURAL ENGINEER
HANS R. HUTTON
081-006707
STATE OF ILLINOIS
EXPIRES 11-30-2010
5-17-2010

REV.

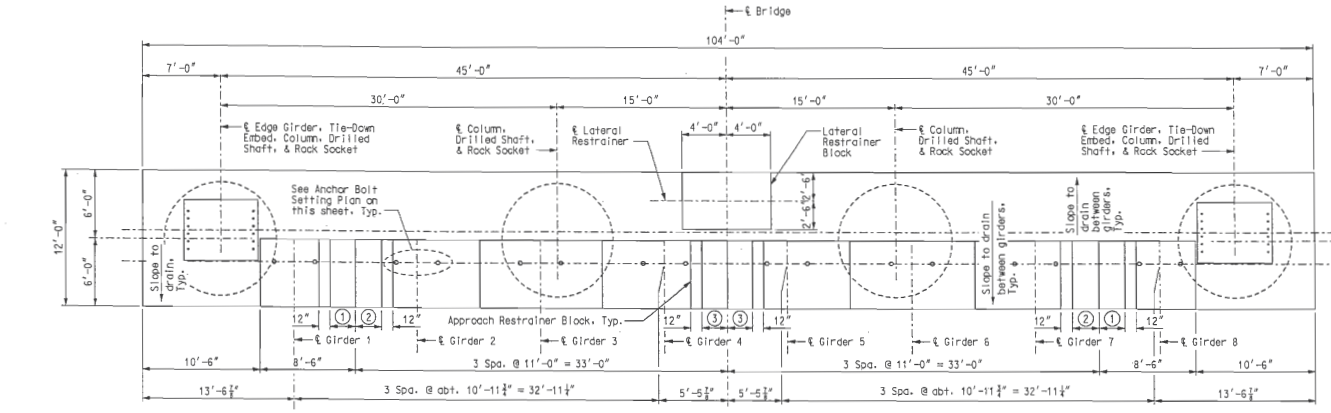

PLAN

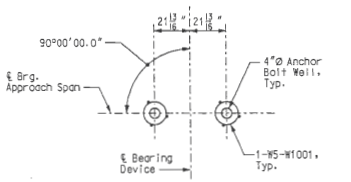

ANCHOR BOLT WELL SETTING PLAN

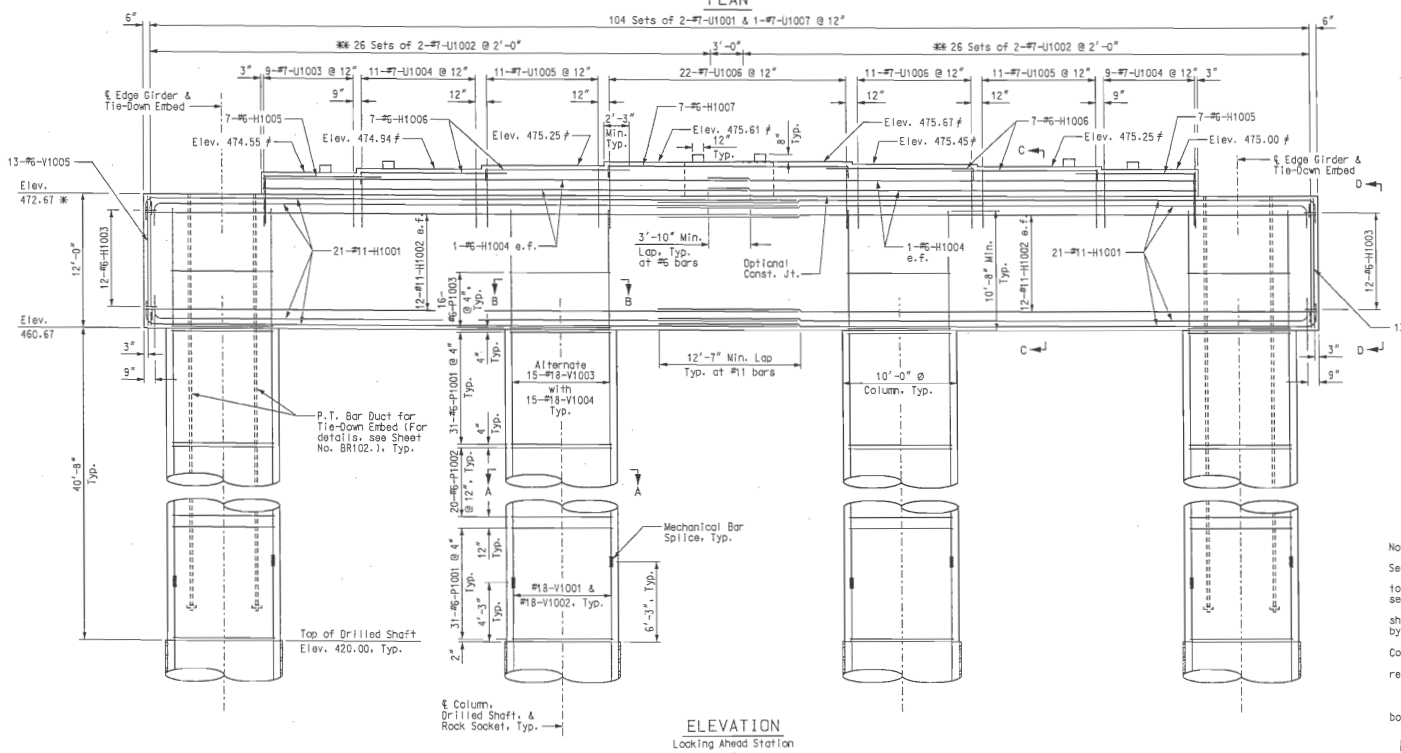

ELEVATION
Looking Ahead Station
4

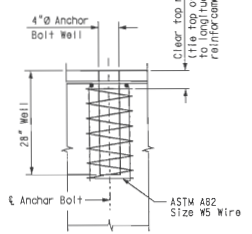

ANCHOR BOLT WELL DETAIL

Notes:
For details of Drilled Shaft, Rock Socket, Sections A-A thru C-C, & View D-D, see Sheet No. BR23.
All reinforcing bars in the capbeam shall be spaced to clear tie-down embed. For details of tie-down embed, see Sheet No. BR102.
All reinforcing bars in the top of the capbeam shall be spaced to clear anchor bolt wells for bearings by at least 1".
Seal top and all faces of capbeam with Protective Coating in accordance with Sec. 711.3.2.
For details of lateral restrainer block and approach restrainer block, see Sheet No. BR24.
✻ Elevation taken at ℄ Pier.
≠ Elevation taken at ℄ Brg. Approach Span.
✻✻ Space to clear Column Reinforcing and anchor bolt wells.

PIER 10

Detailed JUL 2009
Checked JUL 2009

Note: This drawing is not to scale. Follow dimensions.

\\kcow00\Jobs\46440\Bridges\Plans\CdtoMoDOTA6500\J6I0984\A6500-dgn\ZPLOT_B_A6500_022-205_J6I0984_022.dgn
17-MAY-2010 11:25

STATE OF MISSOURI
HANS R. HUTTON
NUMBER E-29174
REGISTERED PROFESSIONAL ENGINEER
Hans R. Hutton
DATE 5/17/10

ROUTE	STATE
I-70	MO/IL
DISTRICT	SHEET NO.
6	BR22

COUNTY
ST. LOUIS CITY - MO
ST. CLAIR - IL
JOB NO.
J6I0984
CONTRACT ID.
PROJECT NO.
BRIDGE NO.
A6500

DATE	DESCRIPTION
5-17-10	Revised per ATC

MISSOURI HIGHWAYS AND TRANSPORTATION COMMISSION
105 WEST CAPITOL
JEFFERSON CITY, MO 65102
1-888-ASK-MODOT (1-888-275-6636)
HNTB
715 KIRK DRIVE
KANSAS CITY, MO 64105-1310
TELEPHONE (816) 472-1201
CERTIFICATE OF AUTHORITY NO. 001270
LICENSED STRUCTURAL ENGINEER
HANS R. HUTTON
081-006707
STATE OF ILLINOIS
expires 11-30-2010
signature
5-17-2010
date

REV.

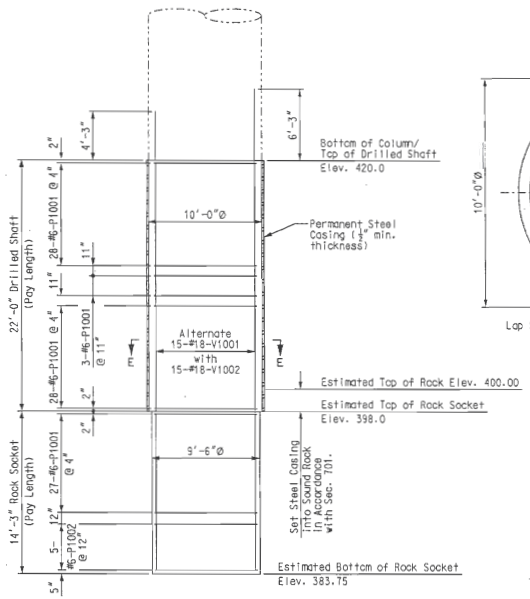

DRILLED SHAFT AND ROCK SOCKET ELEVATION

4

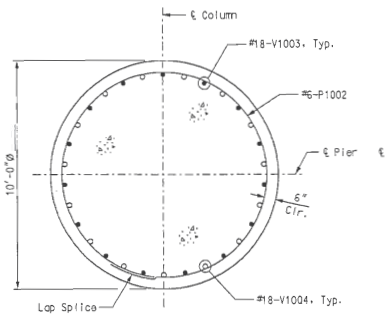

SECTION A-A

4

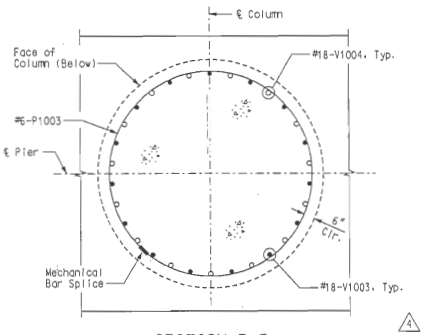

SECTION B-B

(Capbeam reinforcing not shown for clarity.)

4

4

SUBSTRUCTURE QUANTITY TABLE FOR PIER 10		
ITEM		QUANTITY
Drilled Shafts (10 ft. 0 in. Dia.)	linear foot	88.0
Rock Sockets (9 ft. 6 in. Dia.)	linear foot	57.0
Television Camera Inspection	each	4
SID Inspection	each	4
Foundation Inspection Holes	linear foot	97.0
Sonic Logging Testing	each	4
Class B-1 Concrete (Substructure)	cu. yard	1080.1
Reinforcing Steel (Bridges)	pound	104,360
Mechanical Bar Splice	each	776
Reinforcing Steel (Epoxy Coated)	pound	180,200
Fabricated Structural Carbon Steel (Miscellaneous)	pound	1020

Notes:
The Substructure Quantities are included in the Estimated Quantities table on Sheet No. BR8.
An additional 4 feet has been added to #18-V1001, #18-V1002 and #6-P1002 bar lengths for possible change in rock socket depth. This excess length shall be cut-off if not required.

4

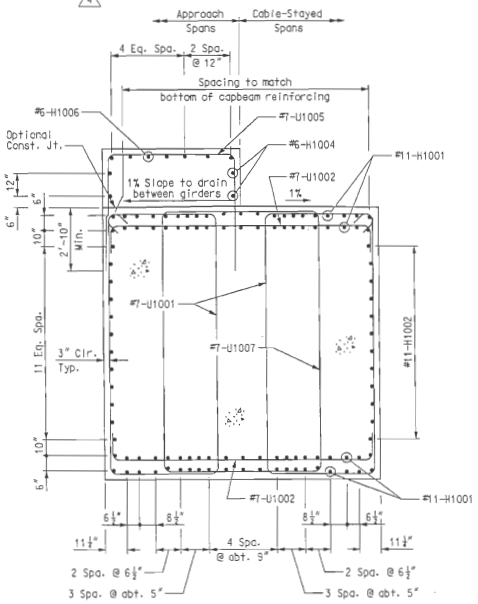

SECTION C-C

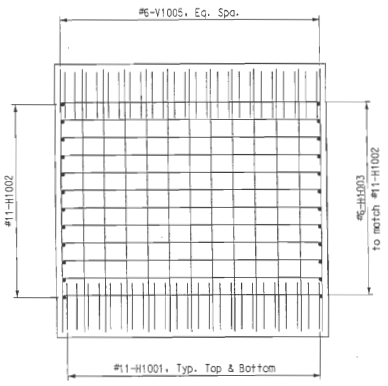

VIEW D-D

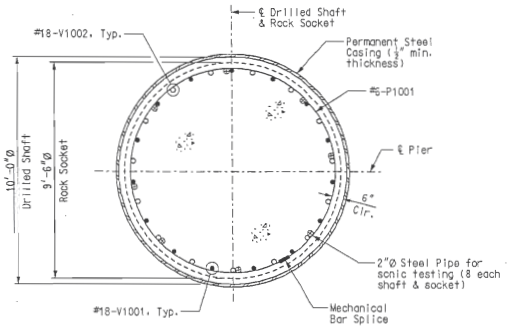

SECTION E-E

4

Notes:
For location of Sections A-A thru C-C, & View D-D, see Sheet No. BR22.
The contract unit price for "Drilled Shafts (10 ft. 0 in.)" and "Rock Sockets (9 ft. 6 in.)" shall be full compensation for construction of the drilled shafts and rock sockets including Class B2 Concrete within the pay limit shown. The contract unit price does not include reinforcing steel.
All reinforcement in drilled shafts and rock sockets are included in Substructure Quantities.
Concrete coring shall be performed in accordance with Missouri Standard Specifications for Highway Construction, Sec 701 and General Notes.
Sonic logging testing shall be performed on all drilled shafts and rock sockets.

4

Rotate alternate hoops 180-degrees so that splices in adjacent bars are staggered.
The length of the rock socket shown on this sheet is an estimate. The actual length will be determined by load test.

PIER 10

STATE OF MISSOURI
HANS R. HUTTON
NUMBER E-28174
REGISTERED PROFESSIONAL ENGINEER
Hans R. Hutton

DATE
5/17/10

ROUTE	STATE
I-70	MO/IL
DISTRICT 6	SHEET NO. BR23

COUNTY
ST. LOUIS CITY - MO
ST. CLAIR - IL

JOB NO.
J6I0984

CONTRACT ID.

PROJECT NO.

BRIDGE NO.
A6500

DESCRIPTION	DATE
4 Revised per ATC	5-17-10

MISSOURI HIGHWAYS AND TRANSPORTATION COMMISSION
105 WEST CAPITOL
JEFFERSON CITY, MO 65102
1-888-ASK-MODOT (1-888-275-6636)

HNTB
715 KIRK DRIVE
KANSAS CITY, MO 64105-1310
TELEPHONE (816) 472-1201
CERTIFICATE OF AUTHORITY NO. 001170

LICENSED STRUCTURAL ENGINEER
HANS R. HUTTON
081-006707
STATE OF ILLINOIS
Hans R. Hutton
5-17-2010

Detailed JUL 2009
Checked JUL 2009

Note: This drawing is not to scale. Follow dimensions.

\\kcow00\jobs\46440\Bridges\Plans\CdtoMoDOTA6500\J6I0984\A6500-dgn\ZPLOT_B_A6500_023-205_J6I0984_023.dgn

17-MAY-2010 11:26

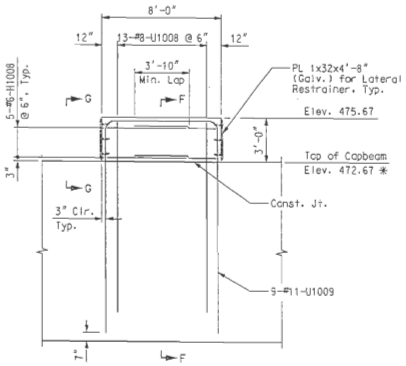

ELEVATION – LATERAL RESTRAINER BLOCK

(Capbeam reinforcing not shown for clarity.)

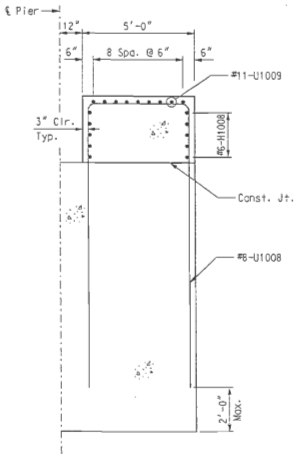

SECTION F-F

(Capbeam reinforcing not shown for clarity.)

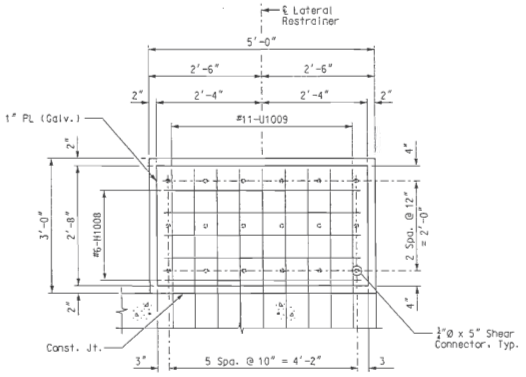

SECTION G-G

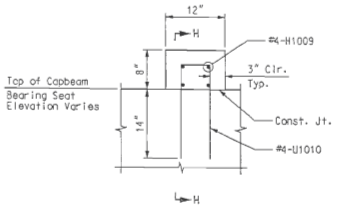

ELEVATION – APPROACH RESTRAINER BLOCK

(Capbeam reinforcing not shown for clarity.)

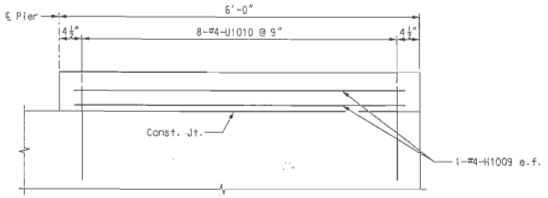

SECTION H-H

(Capbeam reinforcing not shown for clarity.)

Notes:

For reinforcing in capbeam, see Sheet Nos. BR22 & BR23.

For details of Lateral Restrainer, see Sheet No. BR17.

The cost of all labor and materials required to install the 1" galvanized plate shall be included in the pay item "Fabricated Structural Carbon Steel (Misc.)".

Galvanized plate for Lateral Restrainer shall be galvanized in accordance with ASTM A123 after fabrication.

* Elevation taken at ℄ Pier.

PIER 10

STATE OF MISSOURI
HANS R. HUTTON
NUMBER E-25974
REGISTERED PROFESSIONAL ENGINEER

DATE
8/20/09

ROUTE	STATE
I-70	MO/IL

DISTRICT	SHEET NO.
6	BR24

COUNTY
ST. LOUIS CITY - MO
ST. CLAIR - IL

JOB NO.
J6I0984

CONTRACT ID.

PROJECT NO.

BRIDGE NO.
A6500

DESCRIPTION	DATE

MISSOURI HIGHWAYS AND TRANSPORTATION COMMISSION

105 WEST CAPITOL
JEFFERSON CITY, MO 65102
1-888-ASK-MODOT (1-888-275-6636)

HNTB
715 KIRK DRIVE
KANSAS CITY, MO 64105-1310
TELEPHONE 816-472-1201
CERTIFICATE OF AUTHORITY
NO. 001270

LICENSED STRUCTURAL ENGINEER
HANS R. HUTTON
081-006707
STATE OF ILLINOIS
expires 11-30-2010
8-20-2009
DATE

REV.

Detailed JUL 2009
Checked JUL 2009

Note: This drawing is not to scale. Follow dimensions.

\\kcow00\jobs\46440\Bridges\Plans\CatoMoDOTA6500\J6I0984\A6500-dgn\ZPLOT_B_A6500_001-205_J6I0984_024.dgn

19-AUG-2009 07:00

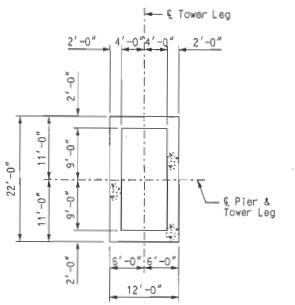

SECTION A-A

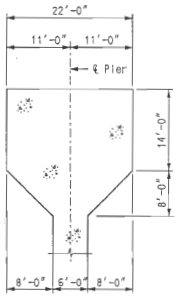

SECTION B-B

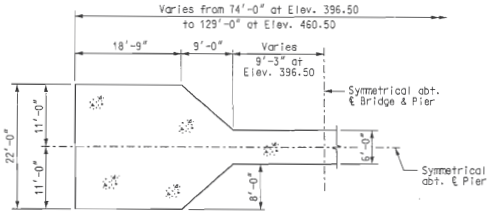

SECTION C-C

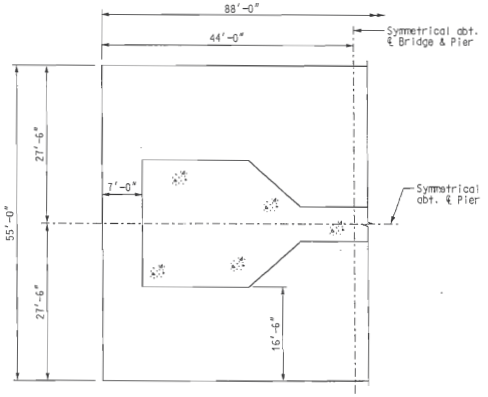

SECTION D-D

4

SUBSTRUCTURE QUANTITY TABLE FOR PIER 11		
ITEM		QUANTITY
Class A-1 Concrete	cu. yard	7768.2
Reinforcing Steel (Bridges)	pound	2,547,700
Mechanical Bar Splice	each	3198
Lock-up Device	each	4
Fabricated Structural Low Alloy Steel (Tower Anchor Box) A709 Gr. 50W	pound	826,960

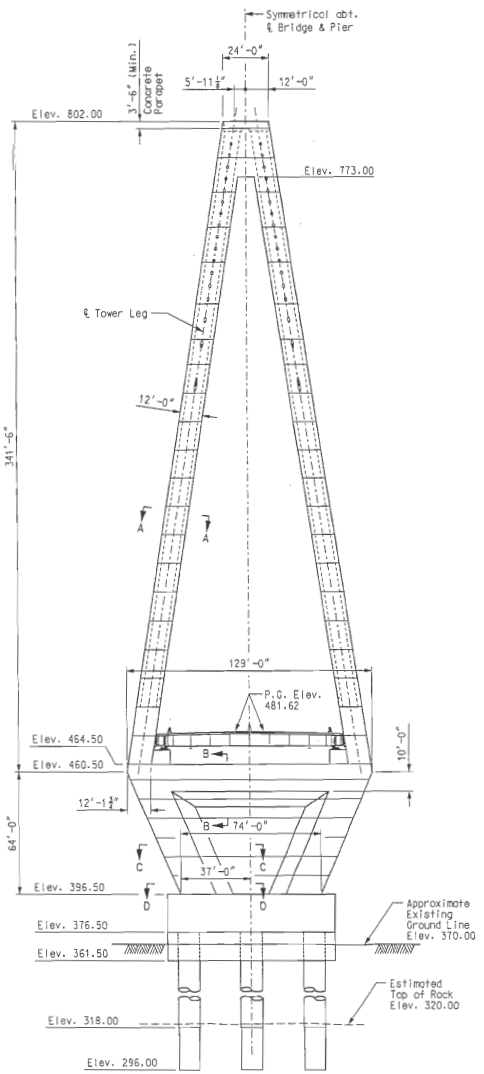

FRONT ELEVATION

4

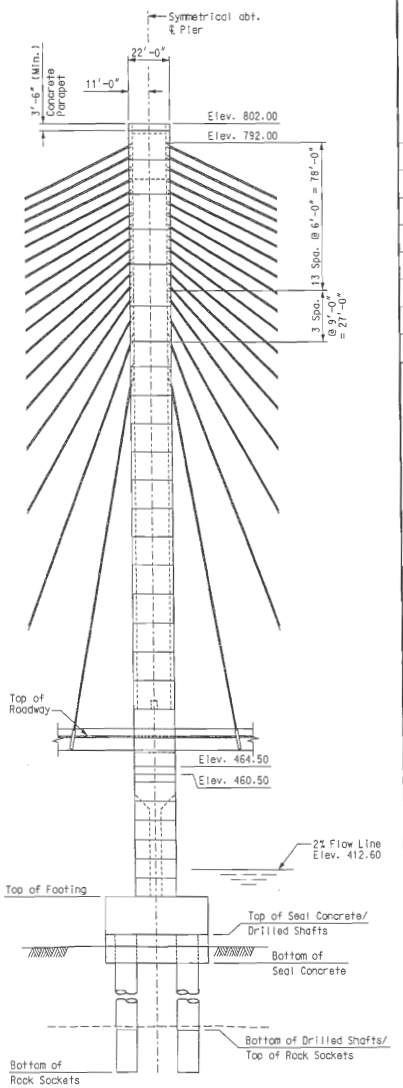

SIDE ELEVATION

4

4 Notes:
For Foundation Layout, see Sheet Nos. BR11 & BR12.
For Alternative Foundation details, see Sheet Nos. BR39 thru BR41.
The Substructure Quantities listed in the table on this sheet pertain to the portion of the pier above the top of the distribution cap. These quantities are included in the Estimated Quantities table on Sheet No. BR8.

No.
footing. These

PIER 11 - DIMENSIONS

Detailed JUL 2009
Checked JUL 2009

Note: This drawing is not to scale. Follow dimensions.

Sheet No. 25 of 205

\\kcow00\jobs\46440\Bridges\Plans\CdtoMoDOTA6500\J6I0984\A6500-dgn\ZPLOT_B_A6500_025-205_J6I0984_025.dgn

17-MAY-2010 11:26

STATE OF MISSOURI
HANS R. HUTTON
NUMBER E-29174
REGISTERED PROFESSIONAL ENGINEER
Hans R. Hutton

DATE
5/17/10

ROUTE	STATE
I-70	MO/IL
DISTRICT	SHEET NO.
6	BR25

COUNTY
ST. LOUIS CITY - MO
ST. CLAIR - IL

JOB NO.
J6I0984

CONTRACT ID.

PROJECT NO.

BRIDGE NO.
A6500

DESCRIPTION	DATE
4 Revised per ATC	5-17-10

MISSOURI HIGHWAYS AND TRANSPORTATION COMMISSION
105 WEST CAPITOL
JEFFERSON CITY, MO 65102
1-888-ASK-MODOT (1-888-275-6636)

HNTB
715 KIRK DRIVE
KANSAS CITY, MO 64105-1310
TELEPHONE (816) 472-1201
CERTIFICATE OF AUTHORITY
NO. 001270

LICENSED STRUCTURAL ENGINEER
HANS R. HUTTON
081-006707
STATE OF ILLINOIS
Hans R. Hutton
5-17-2010

REV.

STATE OF MISSOURI
HANS R. HUTTON
NUMBER E-26574
REGISTERED PROFESSIONAL ENGINEER

Hans R. Hutton

DATE
5/17/10

ROUTE	STATE
I-70	MO/IL
DISTRICT	SHEET NO.
6	BR26

COUNTY
ST. LOUIS CITY - MO
ST. CLAIR - IL

JOB NO.
J6I0984

CONTRACT ID.

PROJECT NO.

BRIDGE NO.
A6500

DESCRIPTION	DATE
1 Revised per ATC	5-17-10

MISSOURI HIGHWAYS AND TRANSPORTATION COMMISSION

MoDOT

105 WEST CAPITOL
JEFFERSON CITY, MO 65102
1-888-ASK-MODOT (1-888-275-6636)

HNTB
715 KIRK DRIVE
KANSAS CITY, MO 64105-1310
TELEPHONE (816) 472-1201
CERTIFICATE OF AUTHORITY
NO. 001270

LICENSED STRUCTURAL ENGINEER
HANS R. HUTTON
081-006707
STATE OF ILLINOIS

Hans R. Hutton
5-17-2010

REV.

1 BLANK SHEET → PIER 11 – ~~FOUNDATION~~ DIMENSIONS

Detailed JUL 2009
Checked JUL 2009

Note: This drawing is not to scale. Follow dimensions.

\\kcow00\jobs\46440\Bridges\Plans\CdtoMoDOTA6500\J6I0984\A6500-dgn\ZPLOT_B_A6500_026-205_J6I0984_026.dgn

17-MAY-2010 11:26

4 BLANK SHEET → ~~PIER 11 – CUTTING EDGE~~

Detailed JUL 2009
Checked JUL 2009

Note: This drawing is not to scale. Follow dimensions.

Sheet No. 27 of 205

\\kcow00\jobs\46440\Bridges\Plans\CdtoMoDOTA6500\J610984\A6500-dgn\ZPLOT_B_A6500_027-205_J610984_027.dgn

17-MAY-2010 11:26

STATE OF MISSOURI
HANS R. HUTTON
NUMBER E-29174
REGISTERED PROFESSIONAL ENGINEER
Hans R. Hutton

DATE: 5/17/10
ROUTE: I-70 | STATE: MO/IL
DISTRICT: 6 | SHEET NO.: BR27
COUNTY: ST. LOUIS CITY – MO, ST. CLAIR – IL
JOB NO.: J610984
CONTRACT ID.:
PROJECT NO.:
BRIDGE NO.: A6500

DESCRIPTION	DATE
4 Revised per ATC	5-17-10

MISSOURI HIGHWAYS AND TRANSPORTATION COMMISSION
MoDOT
105 WEST CAPITOL
JEFFERSON CITY, MO 65102
1-888-ASK-MODOT (1-888-275-6636)

HNTB
715 KIRK DRIVE
KANSAS CITY, MO 64105-1310
TELEPHONE (816) 472-1201
CERTIFICATE OF AUTHORITY NO. 000270

REGISTERED STRUCTURAL ENGINEER
HANS R. HUTTON
081-006707
STATE OF ILLINOIS
Hans R. Hutton
5-17-2010

REV.

4 BLANK SHEET → PIER 11 ~~- CUTTING EDGE~~

Detailed JUL 2009
Checked JUL 2009

Note: This drawing is not to scale. Follow dimensions.

Sheet No. 28 of 205

\\kcow00\jobs\46440\Bridges\Plans\CdtoMoDOTA6500\J6I0984\A6500-dgn\ZPLOT_B_A6500_028-205_J6I0984_028.dgn

17-MAY-2010 11:26

STATE OF MISSOURI
HANS R. HUTTON
NUMBER E-29174
PROFESSIONAL ENGINEER

Hans R. Hutton

DATE
5/17/10

ROUTE	STATE
I-70	MO/IL
DISTRICT	SHEET NO.
6	BR28

COUNTY
ST. LOUIS CITY - MO
ST. CLAIR - IL

JOB NO.
J6I0984

CONTRACT ID.

PROJECT NO.

BRIDGE NO.
A6500

DATE	DESCRIPTION
5-17-10	4 Revised per A1C

MISSOURI HIGHWAYS AND TRANSPORTATION COMMISSION

MoDOT

105 WEST CAPITOL
JEFFERSON CITY, MO 65102
1-888-ASK-MODOT (1-888-275-6636)

HNTB

715 KIRK DRIVE
KANSAS CITY, MO 64105-1310
TELEPHONE (816) 472-1201
CERTIFICATE OF AUTHORITY
NO. 001270

LICENSED STRUCTURAL ENGINEER
HANS R. HUTTON
081-006707
STATE OF ILLINOIS

Hans R. Hutton

5-17-2010

REV.

4 BLANK SHEET → PIER 11 ~~CUTTING EDGE~~

Detailed JUL 2009
Checked JUL 2009

Note: This drawing is not to scale. Follow dimensions.

Sheet No. 29 of 205

STATE OF MISSOURI
HANS R. HUTTON
NUMBER E-29974
REGISTERED ENGINEER

Hans R. Hutton

DATE
5/17/10

ROUTE	STATE
I-70	MO/IL
DISTRICT	SHEET NO.
6	BR29

COUNTY
ST. LOUIS CITY - MO
ST. CLAIR - IL

JOB NO.
J610984

CONTRACT ID.

PROJECT NO.

BRIDGE NO.
A6500

DATE	DESCRIPTION
5-17-10	4 Revised per ATC

MISSOURI HIGHWAYS AND TRANSPORTATION COMMISSION

MoDOT

105 WEST CAPITOL
JEFFERSON CITY, MO 65102
1-888-ASK-MODOT (1-888-275-6636)

HNTB

715 KIRK DRIVE
KANSAS CITY, MO 64105-1310
TELEPHONE (816) 472-1201
CERTIFICATE OF AUTHORITY
NO. 001270

LICENSED STRUCTURAL ENGINEER
HANS R. HUTTON
081-006707
STATE OF ILLINOIS

Hans R. Hutton
signature
5-17-2010
date

REV.

\\kcow00\jobs\46440\Bridges\Plans\CdtoMcDOTA6500\J610984\A6500-dgn\ZPLOT_B_A6500_029-205_J610984_029.dgn

17-MAY-2010 11:26

4 BLANK SHEET → ~~PIER 11 CAISSION~~

Detailed JUL 2009
Checked JUL 2009

Note: This drawing is not to scale. Follow dimensions.

Sheet No. 30 of 205

\\kcow00\jobs\46440\Bridges\Plans\CdtoMoDOTA6500\J6I0984\A6500-dgn\ZPLOT_B_A6500_030-205_J6I0984_030.dgn

17-MAY-2010 11:26

STATE OF MISSOURI
HANS R. HUTTON
NUMBER E-29174
REGISTERED PROFESSIONAL ENGINEER
Hans R. Hutton

DATE
5/17/10

ROUTE	STATE
I-70	MO/IL
DISTRICT	SHEET NO.
6	BR30

COUNTY
ST. LOUIS CITY - MO
ST. CLAIR - IL

JOB NO.
J6I0984

CONTRACT ID.

PROJECT NO.

BRIDGE NO.
A6500

DESCRIPTION	DATE
4 Revised per ATC	5-17-10

MISSOURI HIGHWAYS AND TRANSPORTATION COMMISSION

MoDOT

105 WEST CAPITOL
JEFFERSON CITY, MO 65102
1-888-ASK-MODOT (1-888-275-6636)

HNTB
715 KIRK DRIVE
KANSAS CITY, MO 64105-1310
TELEPHONE (816) 472-1201
CERTIFICATE OF AUTHORITY
NO. 001270

LICENSED STRUCTURAL ENGINEER
HANS R. HUTTON
081-006707
STATE OF ILLINOIS
Hans R. Hutton
5-17-2010

REV.

4 BLANK SHEET → PIER 11 CAISSION

Detailed JUL 2009
Checked JUL 2009

Note: This drawing is not to scale. Follow dimensions.

Sheet No. 31 of 205

\\kcow00\jobs\46440\Bridges\Plans\CdtoMoDOTA6500\J6I0984\A6500-dgn\ZPLOT_B_A6500_031-205_J6I0984_031.dgn

17-MAY-2010 11:26

STATE OF MISSOURI
HANS R. HUTTON
NUMBER E-29174
REGISTERED PROFESSIONAL ENGINEER

Hans R. Hutton

DATE
5/17/10

ROUTE	STATE
I-70	MO/IL
DISTRICT	SHEET NO.
6	BR31

COUNTY
ST. LOUIS CITY - MO
ST. CLAIR - IL

JOB NO.
J6I0984

CONTRACT ID.

PROJECT NO.

BRIDGE NO.
A6500

DESCRIPTION	DATE
4 Revised per ATC	5-17-10

MISSOURI HIGHWAYS AND TRANSPORTATION COMMISSION

MoDOT

105 WEST CAPITOL
JEFFERSON CITY, MO 65102
1-888-ASK-MODOT (1-888-275-6636)

HNTB

715 KIRK DRIVE
KANSAS CITY, MO 64105-1310
TELEPHONE (816) 472-1201
CERTIFICATE OF AUTHORITY
NO. 001270

LICENSED STRUCTURAL ENGINEER
HANS R. HUTTON
081-006707
STATE OF ILLINOIS

Hans R. Hutton
5-17-2010

REV.

⚠ BLANK SHEET → ~~PIER 11 CAISSION~~

STATE OF MISSOURI
HANS R. HUTTON
NUMBER E-29174
REGISTERED PROFESSIONAL ENGINEER
Hans R. Hutton

DATE 5/17/10

ROUTE	STATE
I-70	MO/IL

DISTRICT	SHEET NO.
6	BR32

COUNTY
ST. LOUIS CITY - MO
ST. CLAIR - IL

JOB NO.
J6I0984

CONTRACT ID.

PROJECT NO.

BRIDGE NO.
A6500

DESCRIPTION	DATE
⚠ Revised per ATC	5-17-10

MISSOURI HIGHWAYS AND TRANSPORTATION COMMISSION
MoDOT
105 WEST CAPITOL
JEFFERSON CITY, MO 65102
1-888-ASK-MODOT (1-888-275-6636)

HNTB
715 KIRK DRIVE
KANSAS CITY, MO 64105-1310
TELEPHONE (816) 472-1201
CERTIFICATE OF AUTHORITY
NO. 000170

LICENSED STRUCTURAL ENGINEER
HANS R. HUTTON
081-006707
STATE OF ILLINOIS
Hans R. Hutton
5-17-2010

REV.

Detailed JUL 2009
Checked JUL 2009

Note: This drawing is not to scale. Follow dimensions.

\\kcow00\jobs\46440\Bridges\Plans\CdtoMoDOTA6500\J6I0984\A6500-dgn\ZPLOT_B_A6500_032-205_J6I0984_032.dgn

17-MAY-2010 11:26



DATE
5/17/10

ROUTE	STATE
I-70	MO/IL

DISTRICT	SHEET NO.
6	BR33

COUNTY
ST. LOUIS CITY - MO
ST. CLAIR - IL

JOB NO.
J6I0984

CONTRACT ID.

PROJECT NO.

BRIDGE NO.
A6500

DATE	DESCRIPTION
5-17-10	4 Revised per ATC

MISSOURI HIGHWAYS AND TRANSPORTATION COMMISSION

MoDOT

105 WEST CAPITOL
JEFFERSON CITY, MO 65102
1-888-ASK-MODOT (1-888-275-6636)

HNTB

715 KIRK DRIVE
KANSAS CITY, MO 64105-1310
TELEPHONE (816) 472-1201
CERTIFICATE OF AUTHORITY
NO. 001270

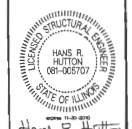

5-17-2010

4 BLANK SHEET → PIER 11 ~~CAISSION~~

Detailed JUL 2009
Checked JUL 2009

Note: This drawing is not to scale. Follow dimensions.

\\kcaw00\jobs\46440\Bridges\Plans\CdtoMoDOTA6500\J6I0984\A6500-dgn\ZPLOT_B_A6500_033-205_J6I0984_033.dgn

17-MAY-2010 11:27

REV.

4 BLANK SHEET → PIER 11 ~~SUBSHAFT~~

Detailed JUL 2009
Checked JUL 2009

Note: This drawing is not to scale. Follow dimensions.

Sheet No. 34 of 205

\\kcow00\jobs\46440\Bridges\Plans\CdtoMoDOTA6500\J6I0984\A6500-dgn\ZPLOT_B_A6500_034-205_J6I0984_034.dgn

17-MAY-2010 11:27

STATE OF MISSOURI
HANS R. HUTTON
NUMBER E-29174
REGISTERED PROFESSIONAL ENGINEER
Hans R. Hutton

DATE 5/17/10

ROUTE	STATE
I-70	MO/IL
DISTRICT	SHEET NO.
6	BR34

COUNTY
ST. LOUIS CITY - MO
ST. CLAIR - IL

JOB NO.
J6I0984

CONTRACT ID.

PROJECT NO.

BRIDGE NO.
A6500

REV.	DATE	DESCRIPTION
4	5-17-10	Revised per ATC

MISSOURI HIGHWAYS AND TRANSPORTATION COMMISSION

MoDOT

105 WEST CAPITOL
JEFFERSON CITY, MO 65102
1-888-ASK-MODOT (1-888-275-6636)

HNTB
715 KIRK DRIVE
KANSAS CITY, MO 64105-1310
TELEPHONE (816) 472-1201
CERTIFICATE OF AUTHORITY
NO. 001210

LICENSED STRUCTURAL ENGINEER
HANS R. HUTTON
081-006707
STATE OF ILLINOIS
renew 7-30-2010
SIGNATURE
Hans R. Hutton
5-17-2010
DATE



Hans R. Hutton

DATE 5/17/10

ROUTE	STATE
I-70	MO/IL
DISTRICT 6	SHEET NO. BR35

COUNTY ST. LOUIS CITY - MO ST. CLAIR - IL

JOB NO. J6I0984

CONTRACT ID.

PROJECT NO.

BRIDGE NO. A6500

DATE	DESCRIPTION
5-17-10	4 Revised per ATC

MISSOURI HIGHWAYS AND TRANSPORTATION COMMISSION

105 WEST CAPITOL
JEFFERSON CITY, MO 65102
1-888-ASK-MODOT (1-888-275-6636)

HNTB
715 KIRK DRIVE
KANSAS CITY, MO 64105-1310
TELEPHONE (816) 472-1201
CERTIFICATE OF AUTHORITY
NO. 001270

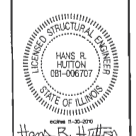

Hans R. Hutton

5-17-2010

REV.

4 BLANK SHEET → PIER 11 ~~SUBSHAFT~~

Detailed JUL 2009
Checked JUL 2009

Note: This drawing is not to scale. Follow dimensions.

\\kcow00\jobs\46440\Bridges\Plans\CdtoMo00TA6500\J6I0984\A6500-dgn\ZPLOT_B_A6500_035-205_J6I0984_035.dgn

17-MAY-2010 11:27

4 BLANK SHEET → PIER 11 ~~DISTRIBUTION~~ CAP

Detailed JUL 2009
Checked JUL 2009

Note: This drawing is not to scale. Follow dimensions.

Sheet No. 36 of 205

\\kcow00\jobs\46440\Bridges\Plans\CdtoMoDOTA6500\J6I0984\A6500-dgn\ZPLOT_B_A6500_036-205_J6I0984_036.dgn

17-MAY-2010 11:27

STATE OF MISSOURI
HANS R. HUTTON
NUMBER E-25174
REGISTERED PROFESSIONAL ENGINEER
Hans R. Hutton

DATE 5/17/10

ROUTE	STATE
I-70	MO/IL
DISTRICT 6	SHEET NO. BR36

COUNTY
ST. LOUIS CITY - MO
ST. CLAIR - IL

JOB NO.
J6I0984

CONTRACT ID.

PROJECT NO.

BRIDGE NO.
A6500

DESCRIPTION	DATE
4 Revised per ATC	5-17-10

MISSOURI HIGHWAYS AND TRANSPORTATION COMMISSION
105 WEST CAPITOL
JEFFERSON CITY, MO 65102
1-888-ASK-MODOT (1-888-275-6636)

HNTB
715 KIRK DRIVE
KANSAS CITY, MO 64105-1310
TELEPHONE (816) 472-1201
CERTIFICATE OF AUTHORITY
NO. 001070

LICENSED STRUCTURAL ENGINEER
HANS R. HUTTON
081-006707
STATE OF ILLINOIS
EXPIRES 11-30-2010
Hans R. Hutton
5-17-2010

REV.

STATE OF MISSOURI
HANS R HUTTON
NUMBER E-29174
REGISTERED PROFESSIONAL ENGINEER
Hans R. Hutton

DATE
5/17/10

ROUTE	STATE
I-70	MO/IL

DISTRICT	SHEET NO.
6	BR37

COUNTY
ST. LOUIS CITY - MO
ST. CLAIR - IL

JOB NO.
J6I0984

CONTRACT ID.

PROJECT NO.

BRIDGE NO.
A6500

DATE	DESCRIPTION
5-17-10	4 Revised per ATC

MISSOURI HIGHWAYS AND TRANSPORTATION COMMISSION
MoDOT
105 WEST CAPITOL
JEFFERSON CITY, MO 65102
1-888-ASK-MODOT (1-888-275-6636)

HNTB
715 KIRK DRIVE
KANSAS CITY, MO 64105-1310
TELEPHONE (816) 472-1201
CERTIFICATE OF AUTHORITY
NO. 001270

LICENSED STRUCTURAL ENGINEER
HANS R. HUTTON
081-006707
STATE OF ILLINOIS
Hans R. Hutton
5-17-2010

REV.

4 BLANK SHEET → PIER 11 - ~~DISTRIBUTION~~ CAP

Detailed JUL 2009
Checked JUL 2009

Note: This drawing is not to scale. Follow dimensions.

⚠ BLANK SHEET → ~~PIER 11 – DISTRIBUTION CAP~~

Detailed JUL 2009
Checked JUL 2009

Note: This drawing is not to scale. Follow dimensions.

\\kcow00\jobs\46440\Bridges\Plans\CdtoMoDOTA6500\J6I0984\A6500-dgn\ZPLOT_B_A6500_038-205_J6I0984_038.dgn

17-MAY-2010 11:27

STATE OF MISSOURI
HANS R. HUTTON
NUMBER E-29174
REGISTERED PROFESSIONAL ENGINEER
Hans R. Hutton

DATE
5/17/10

ROUTE	STATE
I-70	MO/IL
DISTRICT	SHEET NO.
6	BR38

COUNTY
ST. LOUIS CITY – MO
ST. CLAIR – IL

JOB NO.
J6I0984

CONTRACT ID.

PROJECT NO.

BRIDGE NO.
A6500

REV.	DATE	DESCRIPTION
1	5-17-10	Revised per ATC

MISSOURI HIGHWAYS AND TRANSPORTATION COMMISSION
MoDOT
105 WEST CAPITOL
JEFFERSON CITY, MO 65102
1-888-ASK-MODOT (1-888-275-6636)

HNTB
715 KIRK DRIVE
KANSAS CITY, MO 64105-1310
TELEPHONE (816) 472-1201
CERTIFICATE OF AUTHORITY
NO. 001270

LICENSED STRUCTURAL ENGINEER
HANS R. HUTTON
081-006707
STATE OF ILLINOIS
EXPIRES 11-30-2010
Hans R. Hutton
5-17-2010

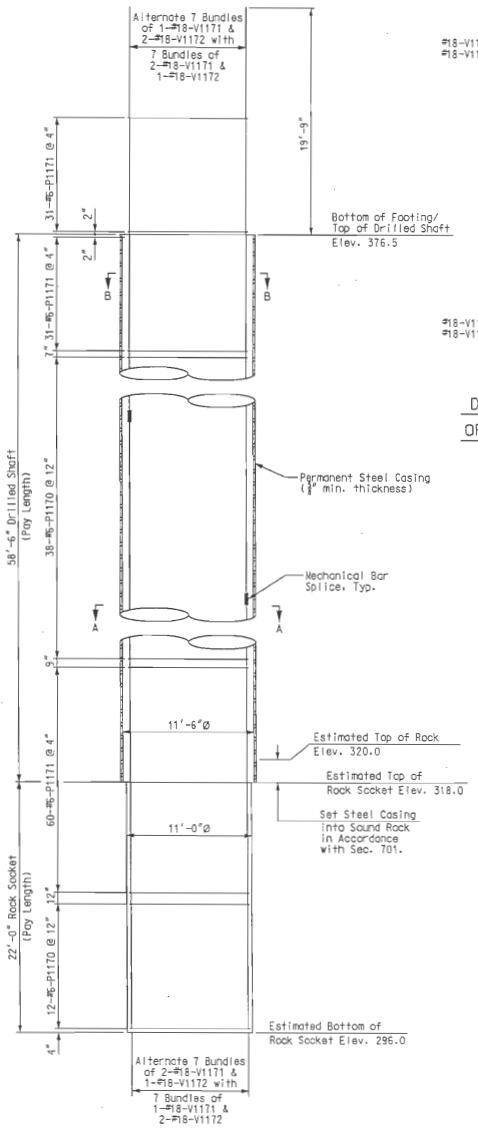

DRILLED SHAFT AND ROCK SOCKET ELEVATION

4

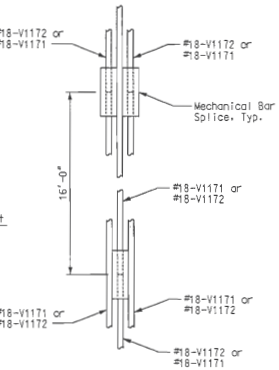

DETAIL OF COUPLING OF BUNDLED #18 BARS

4

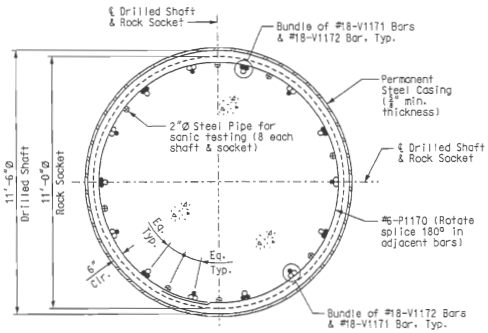

SECTION A-A

4

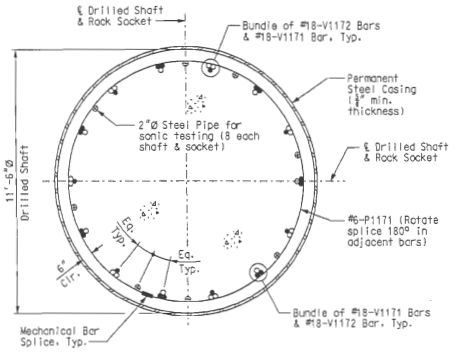

SECTION B-B

4

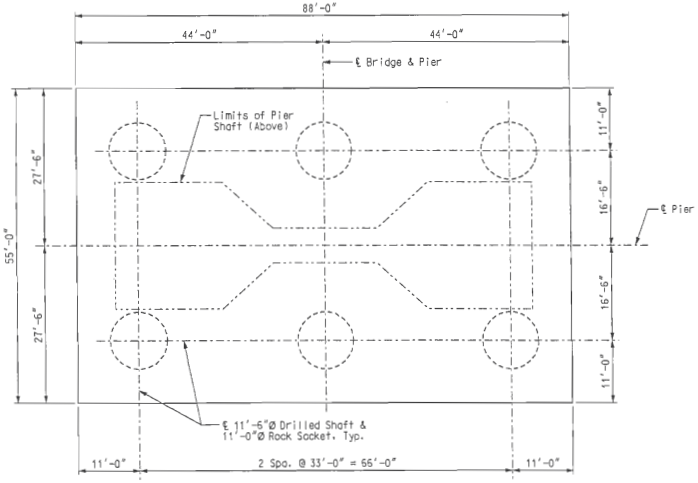

FOOTING PLAN

4

4

ESTIMATED QUANTITY TABLE FOR FOUNDATION - PIER 11

ITEM		QUANTITY
Drilled Shafts (11 ft. 6 in. Dia.)	linear foot	351.0
Rock Sockets (11 ft. 0 in. Dia.)	linear foot	132.0
Television Camera Inspection	each	6
SID Inspection	each	6
Foundation Inspection Holes	linear foot	192.0
Concrete Coring	linear foot	81.5
Sonic Logging Testing	each	6
Drilled Shaft Load Tests	each	1
Seal Concrete	cu. yard	2336.4
Class B-1 Concrete (Substructure)	cu. yard	3585.2
Reinforcing Steel (Bridges)	pound	1,876,960
Mechanical Bar Splice	each	1480

4

Notes:
The above quantities are included in the Estimated Quantities - Foundations at Piers 11 & 12 table on Sheet No. BR8.
An additional 4 feet has been added to #18-V1171, #18-V1172 and #6-P1170 bar lengths for possible change in rock socket depth. This excess length shall be cut-off if not required.

4

Notes:
For additional details of footing, see Sheets No. BR40 & BR41.
For Pier Shaft details, see Sheet Nos. BR59 thru BR66.
For Bill of Reinforcing, see Sheet Nos. BR184 thru BR203.
For Foundation Layout, see Sheet No. BR12.
The foundation shall be defined as those portions of the pier below the top of the footing. All costs associated with the construction of the foundation shall be paid for at the contract unit price. The cost of any cofferdams or temporary shoring shall be considered incidental to foundation bid items for Pier 11 and Pier 12.
Permanent steel casing shall be ASTM A572 Grade 60 material.
The minimum factored load capacity of each drilled shaft/rock socket shall be 33,800-kip.
The final length of the rock sockets shall be determined on the basis of the load test outlined in the Job Special Provisions.
The concrete in the drilled shafts and rock sockets shall have a minimum 28 day compressive strength f'c = 5000-psi.

4 PIER 11 - FOUNDATION

4

STATE OF MISSOURI HANS RICHARD HUTTON NUMBER PE-2007A REGISTERED PROFESSIONAL ENGINEER

DATE 5/17/10

ROUTE	STATE
I-70	MO/IL
DISTRICT 6	SHEET NO. BR39

COUNTY ST. LOUIS CITY - MO ST. CLAIR - IL

JOB NO. J6I0984

CONTRACT ID.

PROJECT NO.

BRIDGE NO. A6500

DATE	DESCRIPTION	REV.
5-17-10	4 Revised per ATC	

MISSOURI HIGHWAYS AND TRANSPORTATION COMMISSION
105 WEST CAPITOL
JEFFERSON CITY, MO 65102
1-888-ASK-MODOT (1-888-275-6636)

HNTB
715 KIRK DRIVE
KANSAS CITY, MO 64105-1310
TELEPHONE (816) 472-1201
CERTIFICATE OF AUTHORITY NO. 001270

STATE OF ILLINOIS REGISTERED STRUCTURAL ENGINEER HANS R. HUTTON 081-006707
5-17-2010

Detailed JUL 2009
Checked JUL 2009

Note: This drawing is not to scale. Follow dimensions.

Sheet No. 39 of 205

\\kcow00\jobs\46440\Bridges\Plans\CdtoMoDOTA6500\J6I0984\A6500-dgn\ZPLOT_B_A6500_039-205_J6I0984_039.dgn

17-MAY-2010 11:27

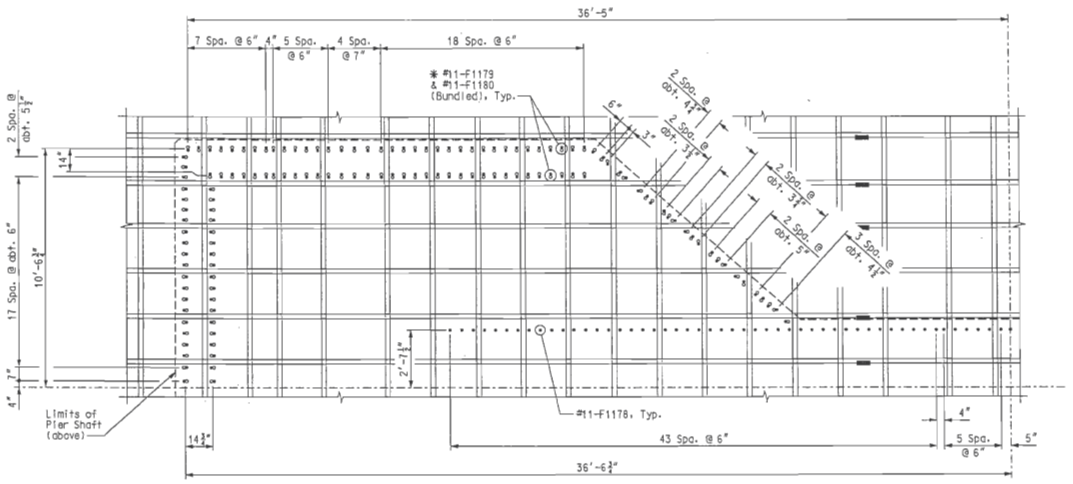

PARTIAL PLAN – PIER SHAFT REINFORCING

* See "Orientation of Bundled #11 Bars" on this sheet. (#11-F1177 Bars not shown for clarity)

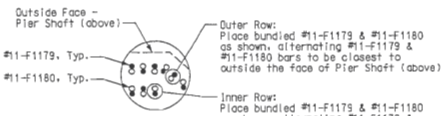

ORIENTATION OF BUNDLED #11 BARS

(VERTICAL)

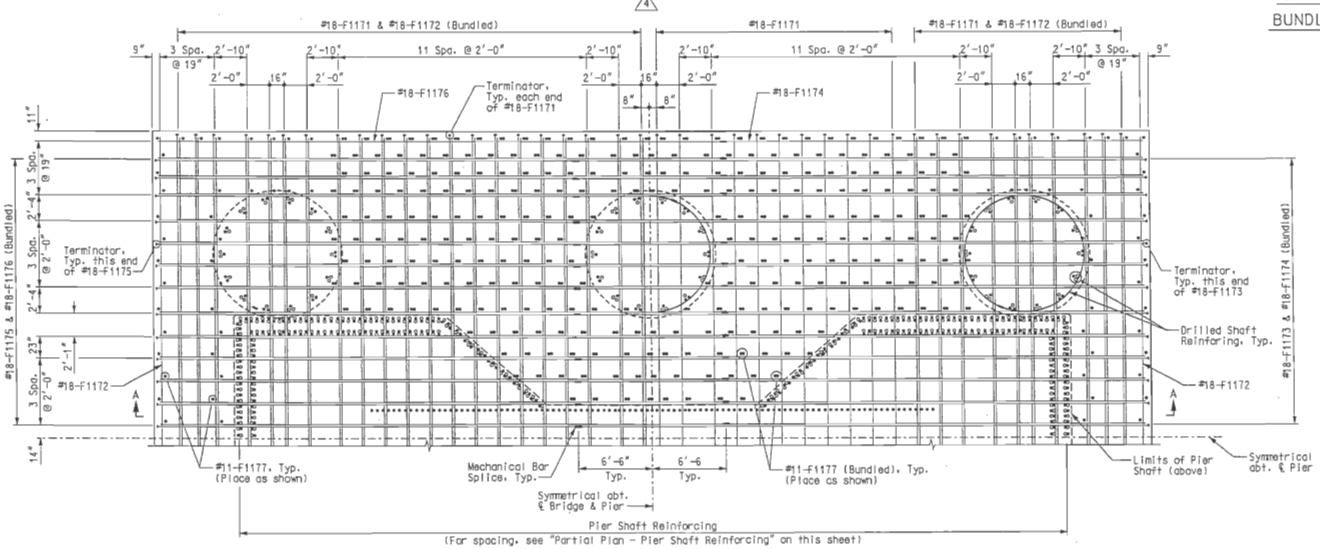

TOP REINFORCING MATS

BOTTOM REINFORCING MATS

PARTIAL PLAN – FOOTING

Notes:
For Section A–A, see Sheet No. BR41.
For Drilled Shaft reinforcing, see Sheet No. BR39.
The minimum cover on the reinforcing steel in the footing shall be 3".
Terminators shall be Lenton Terminator D6 Embedment Anchors.



PIER 11 – FOUNDATION

DESCRIPTION	DATE
Revised per ATC	5-17-10

DATE 5/17/10
ROUTE I-70 | STATE MO/IL
DISTRICT 6 | SHEET NO. BR40
COUNTY ST. LOUIS CITY – MO, ST. CLAIR – IL
JOB NO. J6I0984
CONTRACT ID.
PROJECT NO.
BRIDGE NO. A6500

MISSOURI HIGHWAYS AND TRANSPORTATION COMMISSION
105 WEST CAPITOL
JEFFERSON CITY, MO 65102
1-888-ASK-MODOT (1-888-275-6636)

HNTB
715 KING DRIVE
KANSAS CITY, MO 64105-1310
TELEPHONE (816) 472-1201
CERTIFICATE OF AUTHORITY NO. 001270

HANS R. HUTTON 081-006707 LICENSED STRUCTURAL ENGINEER STATE OF ILLINOIS
5-17-2010

Detailed JUL 2009
Checked JUL 2009

Note: This drawing is not to scale. Follow dimensions.

\\kcow00\jobs\46440\Bridges\Plans\CdotoMoDOTA6500\J6I0984\A6500-dgn\ZPLOT_B_A6500_040-205_J6I0984_040.dgn

17-MAY-2010 11:27

REV.

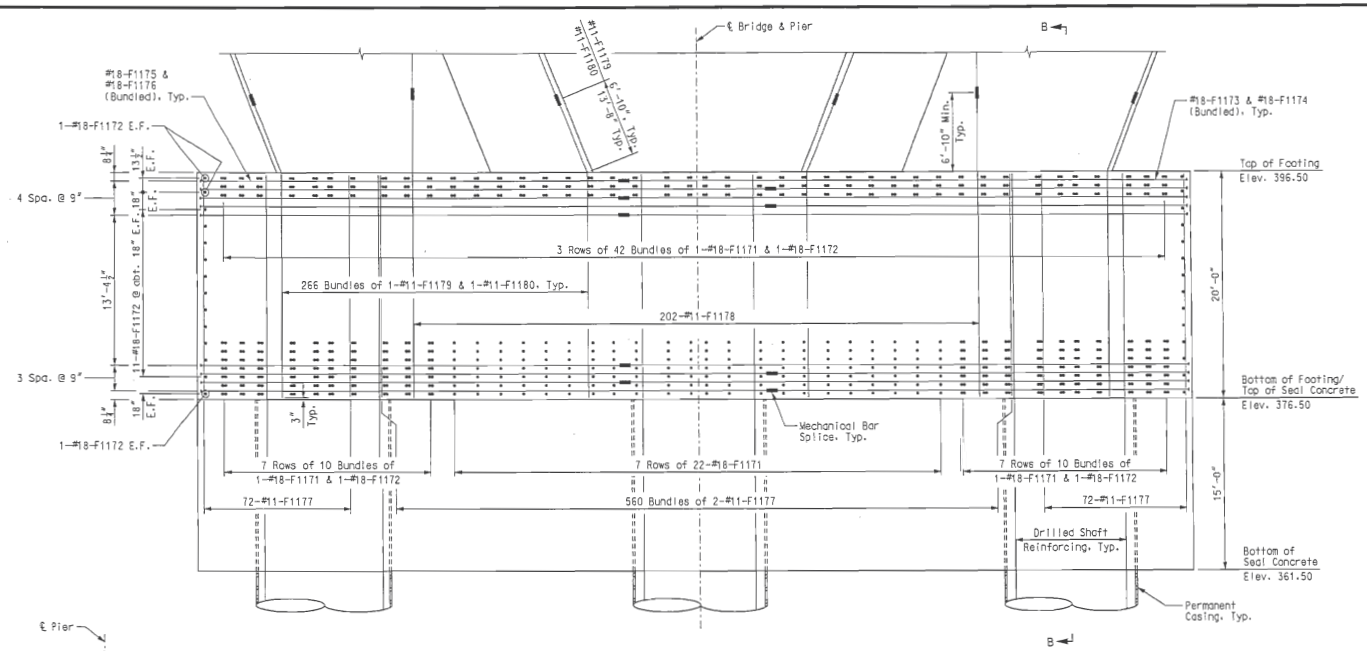

SECTION A-A

(For placement and spacing of reinforcing, see Sheet No. BR40.) 4

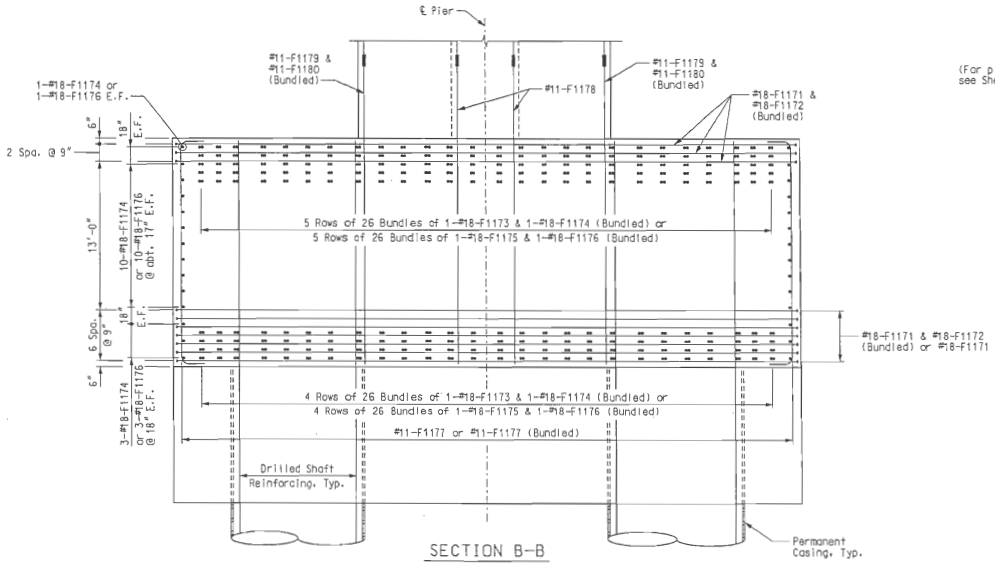

SECTION B-B

(For placement and spacing of reinforcing, see Sheet No. BR40.) 4

Notes:
For location of Section A-A, see Sheet No. BR40.
For Drilled Shaft reinforcing, see Sheet No. BR39.
The minimum cover on the reinforcing steel in the footing shall be 3".



4 PIER 11 - FOUNDATION

STATE OF MISSOURI
HANS R. HUTTON
NUMBER E-29174
REGISTERED PROFESSIONAL ENGINEER
Hans R. Hutton

DATE 5/17/10
ROUTE I-70 | STATE MO/IL
DISTRICT 6 | SHEET NO. BR41
COUNTY ST. LOUIS CITY - MO, ST. CLAIR - IL
JOB NO. J6I0984
CONTRACT ID.
PROJECT NO.
BRIDGE NO. A6500

DATE	DESCRIPTION
5-17-10	4 Revised per ATC

MISSOURI HIGHWAYS AND TRANSPORTATION COMMISSION
105 WEST CAPITOL
JEFFERSON CITY, MO 65102
1-888-ASK-MODOT (1-888-275-6636)

HNTB
715 KEM DRIVE
KANSAS CITY, MO 64105-1310
TELEPHONE (816) 472-1201
CERTIFICATE OF AUTHORITY NO. 001270

LICENSED STRUCTURAL ENGINEER
HANS R. HUTTON
081-006707
STATE OF ILLINOIS
expires 11-30-2010
Hans R. Hutton
5-17-2010

Detailed JUL 2009
Checked JUL 2009

Note: This drawing is not to scale. Follow dimensions.

\\kcaw00\jobs\45440\Bridges\Plans\CdtoMoDOTA6500\J6I0984\A6500-dgn\ZPLOT_B_A6500_041-205_J6I0984_041.dgn

17-MAY-2010 11:27

RFV.

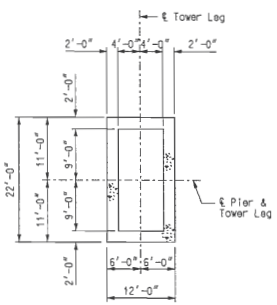

SECTION A–A

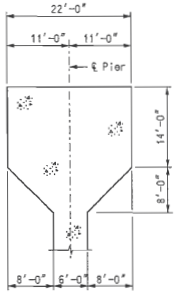

SECTION B–B

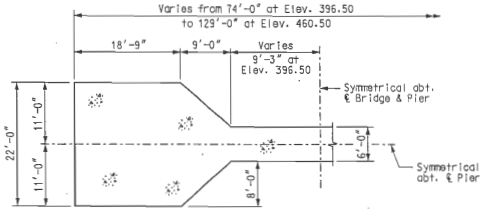

SECTION C–C

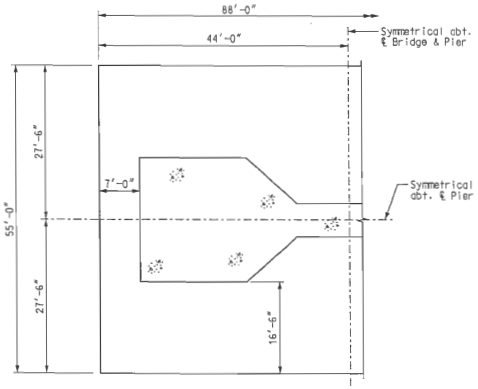

SECTION D–D

4

SUBSTRUCTURE QUANTITY TABLE FOR PIER 12		
ITEM		QUANTITY
Class A-1 Concrete	cu. yard	7768.2
Reinforcing Steel (Bridges)	pound	2,547,700
Mechanical Bar Splice	each	3198
Lock-up Device	each	4
Fabricated Structural Low Alloy Steel (Tower Anchor Box) A709 Gr. 50W	pound	826,960

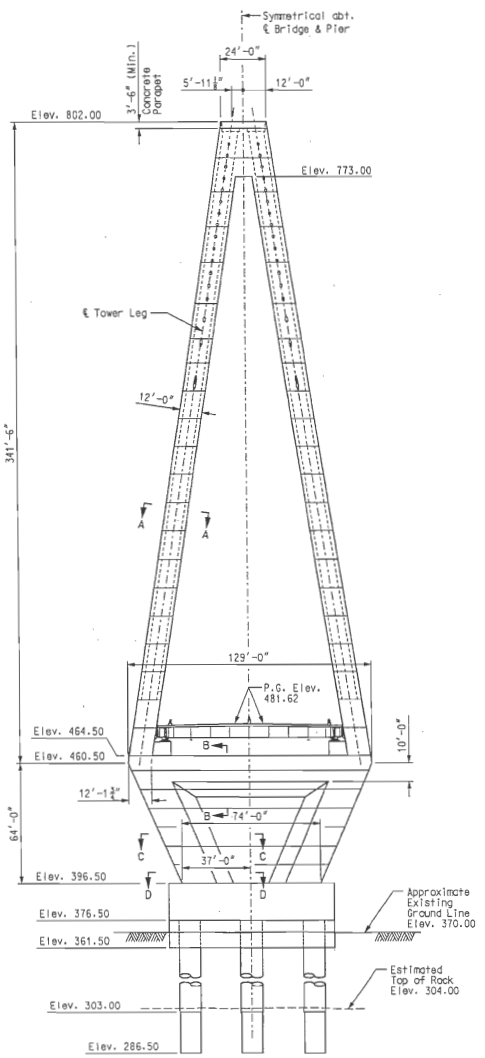

FRONT ELEVATION

4

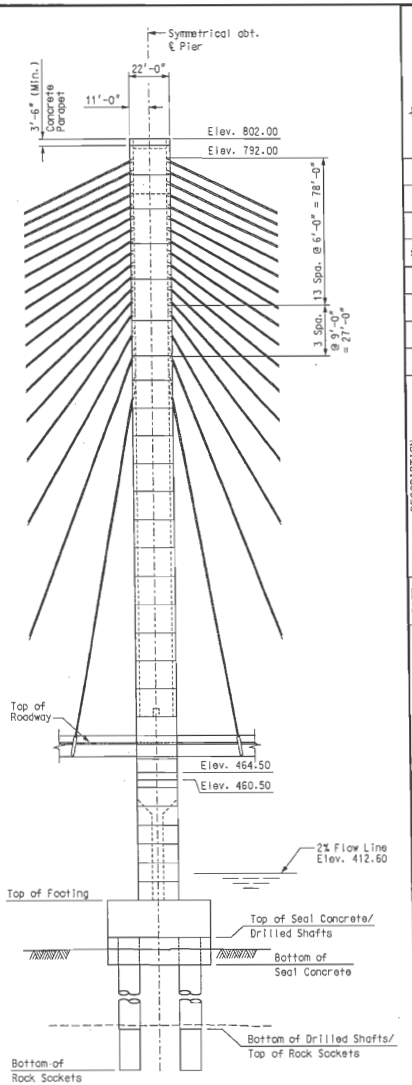

SIDE ELEVATION

4

4 Notes:
For Foundation Layout, see Sheet Nos. BR11 & BR12.
For Alternate Foundation details, see Sheet Nos. BR56 thru BR58.
The Substructure Quantities listed in the table on this sheet pertain to the portion of the pier above the top of the distribution cap. These quantities are included in the Estimated Quantities table on Sheet No. BR8.
footing. These

PIER 12 – DIMENSIONS

Detailed JUL 2009
Checked JUL 2009

Note: This drawing is not to scale. Follow dimensions.

Sheet No. 42 of 205

\\kcow00\jobs\46440\Bridges\Plans\CdtoMoDOTA6500\J6I0984\A6500-dgn\ZPLOT_B_A6500_042-205_J6I0984_042.dgn

17-MAY-2010 11:28

STATE OF MISSOURI
HANS R. HUTTON
NUMBER E-2974
REGISTERED PROFESSIONAL ENGINEER
Hans R. Hutton

DATE 5/17/10
ROUTE I-70
STATE MO/IL
DISTRICT 6
SHEET NO. BR42
COUNTY ST. LOUIS CITY – MO
ST. CLAIR – IL
JOB NO. J6I0984
CONTRACT ID.
PROJECT NO.
BRIDGE NO. A6500

DATE	DESCRIPTION
5-17-10	4 Revised per ATC

MISSOURI HIGHWAYS AND TRANSPORTATION COMMISSION
105 WEST CAPITOL
JEFFERSON CITY, MO 65102
1-888-ASK-MODOT (1-888-275-6636)

HNTB
716 NEW YORK
KANSAS CITY, MO 64105-1310
TELEPHONE (816) 472-1201
CERTIFICATE OF AUTHORITY NO. 001270

LICENSED STRUCTURAL ENGINEER
HANS R. HUTTON
081-006707
STATE OF ILLINOIS
Hans R. Hutton
5-17-2010

REV.

4 BLANK SHEET → PIER 12 – FOUNDATION DIMENSIONS

Detailed JUL 2009
Checked JUL 2009

Note: This drawing is not to scale. Follow dimensions.

Sheet No. 43 of 205

STATE OF MISSOURI
HANS R. HUTTON
NUMBER E-29174
REGISTERED ENGINEER
Hans R. Hutton

DATE
5/17/10

ROUTE	STATE
I-70	MO/IL

DISTRICT	SHEET NO.
6	BR43

COUNTY
ST. LOUIS CITY - MO
ST. CLAIR - IL

JOB NO.
J6I0984

CONTRACT ID.

PROJECT NO.

BRIDGE NO.
A6500

DATE	DESCRIPTION
5-17-10	4 Revised per ATC

MISSOURI HIGHWAYS AND TRANSPORTATION COMMISSION

MoDOT

105 WEST CAPITOL
JEFFERSON CITY, MO 65102
1-888-ASK-MODOT (1-888-275-6636)

HNTB
715 KIRK DRIVE
KANSAS CITY, MO 64105-1310
TELEPHONE (816) 472-1201
CERTIFICATE OF AUTHORITY
NO. 001270

LICENSED STRUCTURAL ENGINEER
HANS JR HUTTON
081-006707
STATE OF ILLINOIS
Hans R. Hutton
5-17-2010

REV.

STATE OF MISSOURI
HANS R. HUTTON
NUMBER E-29174
REGISTERED PROFESSIONAL ENGINEER

Hans R. Hutton

DATE
5/17/10

ROUTE	STATE
I-70	MO/IL
DISTRICT	SHEET NO.
6	BR44

COUNTY
ST. LOUIS CITY - MO
ST. CLAIR - IL

JOB NO.
J6I0984

CONTRACT ID.

PROJECT NO.

BRIDGE NO.
A6500

DATE	DESCRIPTION
5-17-10	4 Revised per ATC

MISSOURI HIGHWAYS AND TRANSPORTATION COMMISSION

MoDOT

105 WEST CAPITOL
JEFFERSON CITY, MO 65102
1-888-ASK-MODOT (1-888-275-6636)

HNTB

715 KIRK DRIVE
KANSAS CITY, MO 64105-1310
TELEPHONE (816) 472-1201
CERTIFICATE OF AUTHORITY
NO. 001270

LICENSED STRUCTURAL ENGINEER
HANS R. HUTTON
081-006707
STATE OF ILLINOIS

Hans R. Hutton

5-17-2010

REV.

4 BLANK SHEET → ~~PIER 12 - CUTTING EDGE~~

Detailed JUL 2009
Checked JUL 2009

Note: This drawing is not to scale. Follow dimensions.

\\kcow00\jobs\46440\Bridges\Plans\CdtoMoDOTA6500\J6I0984\A6500-dgn\ZPLOT_B_A6500_044-205_J6I0984_044.dgn

17-MAY-2010 11:28

STATE OF MISSOURI
HANS R. HUTTON
NUMBER E-29174
REGISTERED PROFESSIONAL ENGINEER

DATE
5/17/10

ROUTE	STATE
I-70	MO/IL

DISTRICT	SHEET NO.
6	BR45

COUNTY
ST. LOUIS CITY - MO
ST. CLAIR - IL

JOB NO.
J6I0984

CONTRACT ID.

PROJECT NO.

BRIDGE NO.
A6500

DESCRIPTION	DATE
4 Revised per ATC	5-17-10

MISSOURI HIGHWAYS AND TRANSPORTATION COMMISSION

MoDOT

105 WEST CAPITOL
JEFFERSON CITY, MO 65102
1-888-ASK-MODOT (1-888-275-6636)

HNTB
715 KIRK DRIVE
KANSAS CITY, MO 64105-1310
TELEPHONE (816) 472-1201
CERTIFICATE OF AUTHORITY
NO. 001270

LICENSED STRUCTURAL ENGINEER
HANS R. HUTTON
081-005707
STATE OF ILLINOIS
EXPIRES 11-30-2010
Hans R. Hutton
5-17-2010
DATE

REV.

4 BLANK SHEET → PIER 12 - CUTTING EDGE

Detailed JUL 2009
Checked JUL 2009

Note: This drawing is not to scale. Follow dimensions.

\\kcow00\jobs\46440\Bridges\Plans\CdtoMoDOTA6500\J6I0984\A6500-dgn\ZPLOT_B_A6500_045-205_J6I0984_045.dgn 17-MAY-2010 11:28

STATE OF MISSOURI
HANS R. HUTTON
NUMBER E-29714
REGISTERED PROFESSIONAL ENGINEER

Hans R. Hutton

DATE
5/17/10

ROUTE	STATE
I-70	MO/IL
DISTRICT	SHEET NO.
6	BR46

COUNTY
ST. LOUIS CITY - MO
ST. CLAIR - IL

JOB NO.
J6I0984

CONTRACT ID.

PROJECT NO.

BRIDGE NO.
A6500

DATE	DESCRIPTION
5-17-10	4 Revised per ATC

MISSOURI HIGHWAYS AND TRANSPORTATION COMMISSION
MoDOT
105 WEST CAPITOL
JEFFERSON CITY, MO 65102
1-888-ASK-MODOT (1-888-275-6636)

HNTB
715 KIRK DRIVE
KANSAS CITY, MO 64105-1310
TELEPHONE (816) 472-1201
CERTIFICATE OF AUTHORITY NO. 001270

PROFESSIONAL STRUCTURAL ENGINEER
HANS R. HUTTON
081-006707
STATE OF ILLINOIS

Hans R. Hutton

5-17-2010

REV.

4 BLANK SHEET → PIER 12 CAISSION

Detailed JUL 2009
Checked JUL 2009

Note: This drawing is not to scale. Follow dimensions.

\\kcow00\jobs\46440\Bridges\Plans\CdtoMoDOTA6500\J6I0984\A6500-dgn\ZPL0T_B_A6500_046-205_J6I0984_046.dgn

17-MAY-2010 11:28

STATE OF MISSOURI
HANS R. HUTTON
NUMBER E-29174
REGISTERED PROFESSIONAL ENGINEER

Hans R Hutton

DATE
5/17/10

ROUTE	STATE
I-70	MO/IL
DISTRICT	SHEET NO.
6	BR47

COUNTY
ST. LOUIS CITY - MO
ST. CLAIR - IL

JOB NO.
J6I0984

CONTRACT ID.

PROJECT NO.

BRIDGE NO.
A6500

DATE	DESCRIPTION
5-17-10	1 Revised per ATC

MISSOURI HIGHWAYS AND TRANSPORTATION COMMISSION

MoDOT

105 WEST CAPITOL
JEFFERSON CITY, MO 65102
1-888-ASK-MODOT (1-888-275-6636)

HNTB
715 KIRK DRIVE
KANSAS CITY, MO 64105-1310
TELEPHONE (816) 472-1201
CERTIFICATE OF AUTHORITY
NO. 001270

LICENSED STRUCTURAL ENGINEER
HANS R. HUTTON
081-006707
STATE OF ILLINOIS
MY RENEWAL 11-30-2010

Hans R Hutton
SIGNATURE

5-17-2010
DATE

1 BLANK SHEET → ~~PIER 12 CAISSION~~

Detailed JUL 2009
Checked JUL 2009

Note: This drawing is not to scale. Follow dimensions.

\\kcow00\jobs\46440\Bridges\Plans\CdtoMoDOTA6500\J6I0984\A6500-dgn\ZPLOT_B_A6500_047-205_J6I0984_047.dgn

17-MAY-2010 11:28

REV.

STATE OF MISSOURI
HANS R. HUTTON
NUMBER E-29174
REGISTERED PROFESSIONAL ENGINEER
Hans R. Hutton

DATE
5/17/10

ROUTE	STATE
I-70	MO/IL
DISTRICT	SHEET NO.
6	BR48

COUNTY
ST. LOUIS CITY - MO
ST. CLAIR - IL

JOB NO.
J6I0984

CONTRACT ID.

PROJECT NO.

BRIDGE NO.
A6500

DATE	DESCRIPTION
5-17-10	4 Revised per ATC

MISSOURI HIGHWAYS AND TRANSPORTATION COMMISSION

MoDOT

105 WEST CAPITOL
JEFFERSON CITY, MO 65102
1-888-ASK-MODOT (1-888-275-6636)

HNTB
715 KIRK DRIVE
KANSAS CITY, MO 64105-1310
TELEPHONE (816) 472-1201
CERTIFICATE OF AUTHORITY NO. 000270

LICENSED STRUCTURAL ENGINEER
HANS R. HUTTON
081-006707
STATE OF ILLINOIS
Hans R. Hutton
5-17-2010

4 BLANK SHEET → ~~PIER 12 CAISSION~~

Detailed JUL 2009
Checked JUL 2009

Note: This drawing is not to scale. Follow dimensions.

\\kcow00\jobs\46440\Bridges\Plans\CdtoMoDOTA6500\J6I0984\A6500-dgn\ZPLOT_B_A6500_048-205_J6I0984_048.dgn

17-MAY-2010 11:28

REV.



DATE
5/17/10

ROUTE	STATE
I-70	MO/IL
DISTRICT	SHEET NO.
6	BR49

COUNTY
ST. LOUIS CITY - MO
ST. CLAIR - IL

JOB NO.
J6I0984

CONTRACT ID.

PROJECT NO.

BRIDGE NO.
A6500

DESCRIPTION	DATE
4 Revised per ATC	5-17-10

MISSOURI HIGHWAYS AND TRANSPORTATION COMMISSION

MoDOT

105 WEST CAPITOL
JEFFERSON CITY, MO 65102
1-888-ASK-MODOT (1-888-275-6636)

HNTB
715 KIRK DRIVE
KANSAS CITY, MO 64105-1310
TELEPHONE (816) 472-1201
CERTIFICATE OF AUTHORITY
NO. 001170

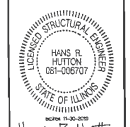

5-17-2010
DATE

REV.

4 BLANK SHEET → PIER 12 CAISSION

Detailed JUL 2009
Checked JUL 2009

Note: This drawing is not to scale. Follow dimensions.

\\kcow00\jobs\46440\Bridges\Plans\CdtoMoDOTA6500\J6I0984\A6500-dgn\ZPLOT_B_A6500_049-205_J6I0984_049.dgn

17-MAY-2010 11:28

4 BLANK SHEET → ~~PIER 12 CAISSION~~

Detailed JUL 2009
Checked JUL 2009

Note: This drawing is not to scale. Follow dimensions.

Sheet No. 50 of 205

\\kcow00\Jobs\46440\Bridges\Plans\CdtoMoDOTA6500\J6I0984\A6500-dgn\ZPLOT_B_A6500_050-205_J6I0984_050.dgn

17-MAY-2010 11:28

STATE OF MISSOURI
HANS R. HUTTON
NUMBER E-25974
LICENSED PROFESSIONAL ENGINEER

DATE
5/17/10

ROUTE	STATE
I-70	MO/IL
DISTRICT	SHEET NO.
6	BR50

COUNTY
ST. LOUIS CITY - MO
ST. CLAIR - IL

JOB NO.
J6I0984

CONTRACT ID.

PROJECT NO.

BRIDGE NO.
A6500

REV.	DATE	DESCRIPTION
4	5-17-10	Revised per ATC

MISSOURI HIGHWAYS AND TRANSPORTATION COMMISSION
MoDOT
105 WEST CAPITOL
JEFFERSON CITY, MO 65102
1-888-ASK-MODOT (1-888-275-6636)

HNTB
715 KING DRIVE
KANSAS CITY, MO 64105-1310
TELEPHONE (816) 472-1201
CERTIFICATE OF AUTHORITY
NO. 001270

LICENSED STRUCTURAL ENGINEER
HANS R. HUTTON
081-006707
STATE OF ILLINOIS

5-17-2010



STATE OF MISSOURI
HANS R. HUTTON
NUMBER E-29174
REGISTERED PROFESSIONAL ENGINEER
Hans R. Hutton

DATE 5/17/10	
ROUTE I-70	STATE MO/IL
DISTRICT 6	SHEET NO. BR51
COUNTY ST. LOUIS CITY - MO ST. CLAIR - IL	
JOB NO. J6I0984	
CONTRACT ID.	
PROJECT NO.	
BRIDGE NO. A6500	

DATE	DESCRIPTION
5-17-10	△ Revised per ATC

MISSOURI HIGHWAYS AND TRANSPORTATION COMMISSION

MoDOT

105 WEST CAPITOL
JEFFERSON CITY, MO 65102
1-888-ASK-MODOT (1-888-275-6636)

HNTB
715 KIRK DRIVE
KANSAS CITY, MO 64105-1310
TELEPHONE (816) 472-1201
CERTIFICATE OF AUTHORITY
NO. 001270

LICENSED STRUCTURAL ENGINEER
HANS R. HUTTON
081-006707
STATE OF ILLINOIS
Hans R. Hutton
5-17-2010



REV.

△4 BLANK SHEET → PIER 12 SUBSHAFT

Detailed JUL 2009
Checked JUL 2009

Note: This drawing is not to scale. Follow dimensions.

Sheet No. 51 of 205

\\kcow00\jobs\46440\Bridges\Plans\CdtoMoDOTA6500\J6I0984\A6500-dgn\ZPLOT_8_A6500_051-205_J6I0984_051.dgn

17-MAY-2010 11:28

4 BLANK SHEET → PIER 12 ~~SUBSHAFT~~

Detailed JUL 2009
Checked JUL 2009

Note: This drawing is not to scale. Follow dimensions.

Sheet No. 52 of 205

\\kcow00\jobs\46440\Bridges\Plans\CdtoMoDOTA6500\J6I0984\A6500-dgn\ZPLOT_B_A6500_052-205_J6I0984_052.dgn

17-MAY-2010 11:29

STATE OF MISSOURI
HANS R. HUTTON
NUMBER E-29174
REGISTERED PROFESSIONAL ENGINEER
Hans R. Hutton

DATE
5/17/10

ROUTE	STATE
I-70	MO/IL
DISTRICT	SHEET NO.
6	BR52

COUNTY
ST. LOUIS CITY - MO
ST. CLAIR - IL

JOB NO.
J6I0984

CONTRACT ID.

PROJECT NO.

BRIDGE NO.
A6500

DESCRIPTION	DATE
4 Revised per ATC	5-17-10

MISSOURI HIGHWAYS AND TRANSPORTATION COMMISSION
MoDOT
105 WEST CAPITOL
JEFFERSON CITY, MO 65102
1-888-ASK-MODOT (1-888-275-6636)

HNTB
715 KIRK DRIVE
KANSAS CITY, MO 64105-1310
TELEPHONE (816) 472-1201
CERTIFICATE OF AUTHORITY
NO. 001270

LICENSED STRUCTURAL ENGINEER
HANS R. HUTTON
081-006707
STATE OF ILLINOIS
EXPIRES 11-30-2010
Hans R. Hutton
signature
5-17-2010

REV.

4 BLANK SHEET → ~~PIER 12 – DISTRIBUTION CAP~~

Detailed JUL 2009
Checked JUL 2009

Note: This drawing is not to scale. Follow dimensions.

Sheet No. 53 of 205

\\kcow00\jobs\46440\Bridges\Plans\CdtoMoDOTA6500\J6I0984\A6500-dgn\ZPLOT_B_A6500_053-205_J6I0984_053.dgn

17-MAY-2010 11:29

REV.

STATE OF MISSOURI
HANS R. HUTTON
NUMBER E-29174
REGISTERED PROFESSIONAL ENGINEER
Hans R. Hutton

DATE
5/17/10

ROUTE	STATE
I-70	MO/IL
DISTRICT	SHEET NO.
6	BR53

COUNTY
ST. LOUIS CITY – MO
ST. CLAIR – IL

JOB NO.
J6I0984

CONTRACT ID.

PROJECT NO.

BRIDGE NO.
A6500

DESCRIPTION	DATE
4 Revised per ATC	5-17-10

MISSOURI HIGHWAYS AND TRANSPORTATION COMMISSION

MoDOT

105 WEST CAPITOL
JEFFERSON CITY, MO 65102
1-888-ASK-MODOT (1-888-275-6636)

HNTB

715 KIRK DRIVE
KANSAS CITY, MO 64105-1310
TELEPHONE (816) 472-1201
CERTIFICATE OF AUTHORITY
NO. 001270

LICENSED STRUCTURAL ENGINEER
HANS R. HUTTON
081-006707
STATE OF ILLINOIS
expires 11-30-2010
Hans R. Hutton
5-17-2010

4 BLANK SHEET → PIER 12 - ~~DISTRIBUTION~~ CAP

Detailed JUL 2009
Checked JUL 2009

Note: This drawing is not to scale. Follow dimensions.

Sheet No. 54 of 205

\\kcow00\jobs\46440\Bridges\Plans\CdtoMoDOTA6500\J6I0984\A6500-dgn\ZPLOT_B_A6500_054-205_J6I0984_054.dgn

17-MAY-2010 11:29

STATE OF MISSOURI
HANS R. HUTTON
NUMBER E-29174
REGISTERED PROFESSIONAL ENGINEER
Hans R. Hutton

DATE
5/17/10

ROUTE	STATE
I-70	MO/IL
DISTRICT	SHEET NO.
6	BR54

COUNTY
ST. LOUIS CITY - MO
ST. CLAIR - IL

JOB NO.
J6I0984

CONTRACT ID.

PROJECT NO.

BRIDGE NO.
A6500

DESCRIPTION	DATE
4 Revised per A/C	5-17-10

MISSOURI HIGHWAYS AND TRANSPORTATION COMMISSION

MoDOT

105 WEST CAPITOL
JEFFERSON CITY, MO 65102
1-888-ASK-MODOT (1-888-275-6636)

HNTB
715 KIRK DRIVE
KANSAS CITY, MO 64105-1310
TELEPHONE (816) 472-1201
CERTIFICATE OF AUTHORITY
NO. 001270

LICENSED STRUCTURAL ENGINEER
HANS P. HUTTON
081-006707
STATE OF ILLINOIS
Hans P. Hutton
5-17-2010

REV.

Detailed JUL 2009
Checked JUL 2009

Note: This drawing is not to scale. Follow dimensions.

Sheet No. 55 of 205

4 BLANK SHEET → PIER 12 - DISTRIBUTION CAP

STATE OF MISSOURI
HANS R. HUTTON
NUMBER E-29974
REGISTERED PROFESSIONAL ENGINEER
Hans R. Hutton



DATE	
5/17/10	
ROUTE	STATE
I-70	MO/IL
DISTRICT	SHEET NO.
6	BR55
COUNTY	
ST. LOUIS CITY - MO ST. CLAIR - IL	
JOB NO.	
J6I0984	
CONTRACT ID.	
PROJECT NO.	
BRIDGE NO.	
A6500	

DATE	DESCRIPTION
5-17-10	4 Revised per AIC

MISSOURI HIGHWAYS AND TRANSPORTATION COMMISSION

MoDOT

105 WEST CAPITOL
JEFFERSON CITY, MO 65102
1-888-ASK-MODOT (1-888-275-6636)

HNTB
715 KIRK DRIVE
KANSAS CITY, MO 64105-1310
TELEPHONE (816) 472-1201
CERTIFICATE OF AUTHORITY
NO. 001270



LICENSED STRUCTURAL ENGINEER
HANS R. HUTTON
081-006707
STATE OF ILLINOIS
Hans R. Hutton
5-17-2010

REV.

\\kcow00\jobs\46440\Bridges\Plans\CdtoMoDOTA6500\J6I0984\A6500-dgn\ZPLOT_B_A6500_055-205_J6I0984_055.dgn

17-MAY-2010 11:29

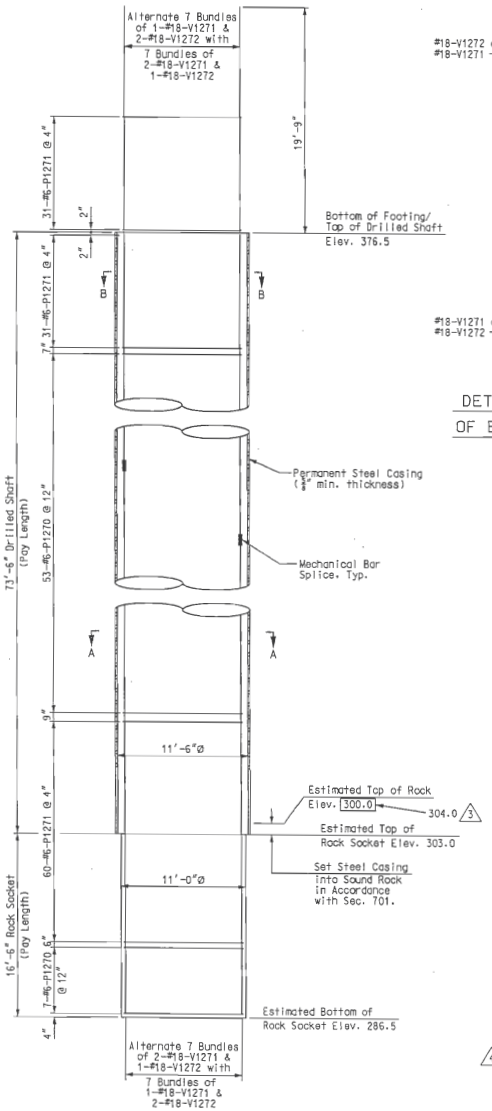

DRILLED SHAFT AND ROCK SOCKET ELEVATION

4

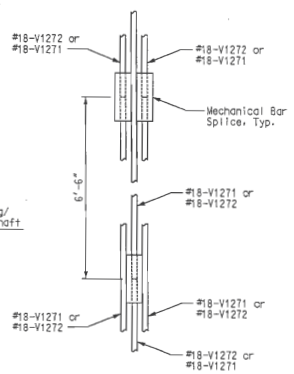

DETAIL OF COUPLING OF BUNDLED #18 BARS

4

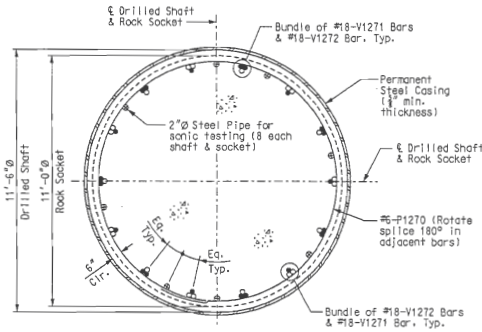

SECTION A-A

4

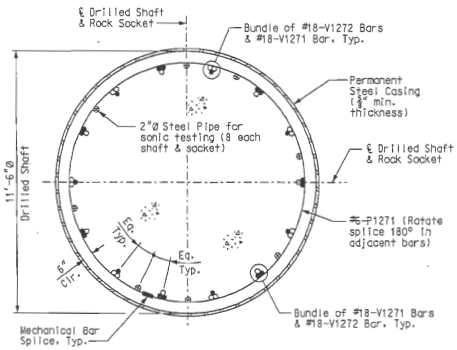

SECTION B-B

4

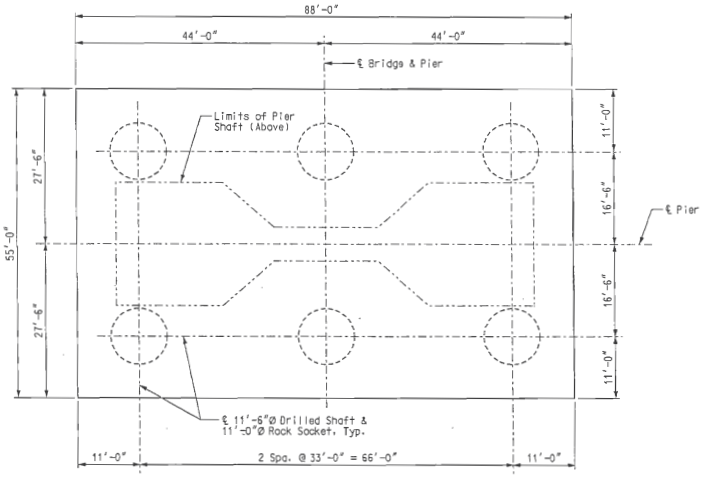

FOOTING PLAN

4

Notes:
For additional details of footing, see Sheet Nos. BR57 & BR58.
For Pier Shaft details, see Sheet Nos. BR59 thru BR66.
For Bill of Reinforcing, see Sheet Nos. BR184 thru BR203.
For Foundation Layout, see Sheet No. BR12.
The foundation shall be defined as those portions of the pier below the top of the footing. All costs associated with the construction of the foundation shall be paid for at the contract unit price. The cost of any cofferdams or temporary shoring shall be considered incidental to foundation bid items for Pier 11 and Pier 12.
Permanent steel casing shall be ASTM A572 Grade 60 material.
The minimum factored load capacity of each drilled shaft/rock socket shall be 32,300-kip.
The final length of the rock sockets shall be determined on the basis of the load test outlined in the Job Special Provisions.
The concrete in the drilled shafts and rock sockets shall have a minimum 28 day compressive strength f'c = 5000-psi.

4

ESTIMATED QUANTITY TABLE FOR FOUNDATION - PIER 12

4

ITEM		QUANTITY
Drilled Shafts (11 ft. 6 in. Dia.)	linear foot	441.0
Rock Sockets (11 ft. 0 in. Dia.)	linear foot	99.0
Television Camera Inspection	each	6
SIO Inspection	each	6
Foundation Inspection Holes	linear foot	159.0
Concrete Coring	linear foot	91.0
Sonic Logging Testing	each	6
Seal Concrete	cu. yard	2336.4
Class B-1 Concrete (Substructure)	cu. yard	3585.2
Reinforcing Steel (Bridges)	pound	1,912,690
Mechanical Bar Splice	each	1480

4

Notes:
The above quantities are included in the Estimated Quantities - Foundations at Piers 11 & 12 table on Sheet No. BR8.
An additional 4 feet has been added to #18-V1271, #18-V1272 and #6-P1270 bar lengths for possible charge in rock socket depth. This excess length shall be cut-off if not required.

4 PIER 12 - FOUNDATION

4



STATE OF MISSOURI
HANS R. HUTTON
NUMBER E-29174
REGISTERED PROFESSIONAL ENGINEER

DATE 5/17/10
ROUTE I-70 | STATE MO/IL
DISTRICT 6 | SHEET NO. BR56
COUNTY ST. LOUIS CITY - MO ST. CLAIR - IL
JOB NO. J6I0984
CONTRACT ID.
PROJECT NO.
BRIDGE NO. A6500

DESCRIPTION	DATE
4 Revised Top of Rock Elev.	11-25-09
4 Revised per ATC	5-17-10

MISSOURI HIGHWAYS AND TRANSPORTATION COMMISSION
105 WEST CAPITOL
JEFFERSON CITY, MO 65102
1-888-ASK-MODOT (1-888-275-6636)

HNTB
715 KIRK DRIVE
KANSAS CITY, MO 64105-1310
TELEPHONE (816) 472-1201
CERTIFICATE OF AUTHORITY NO. 001270

LICENSED STRUCTURAL ENGINEER
HANS R. HUTTON
081-006707
STATE OF ILLINOIS
11-30-2010
5-17-2010

REV.

Detailed JUL 2009
Checked JUL 2009

Note: This drawing is not to scale. Follow dimensions.

\\kcaw00\jobs\46440\Bridges\Plans\CdtoMoDOTA6500\J6I0984\A6500-dan\ZPLOT_B_A6500_056-205_J6I0984_056.dgn

17-MAY-2010 11:29

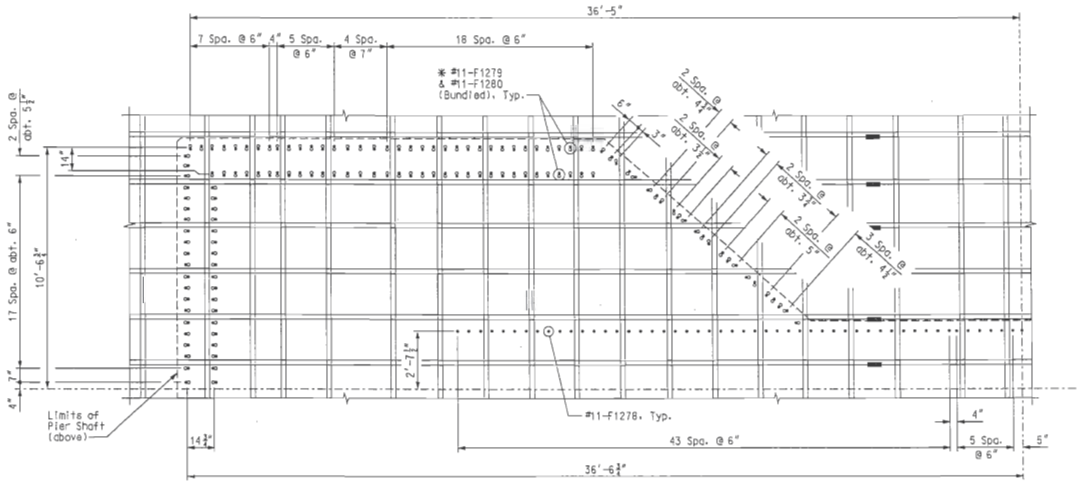

PARTIAL PLAN – PIER SHAFT REINFORCING

* See "Orientation of Bundled #11 Bars" on this sheet.
(#11-F1277 Bars not shown for clarity)

4

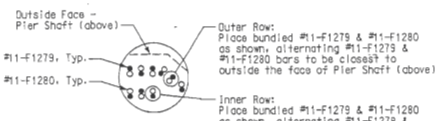

ORIENTATION OF BUNDLED #11 BARS
(VERTICAL)

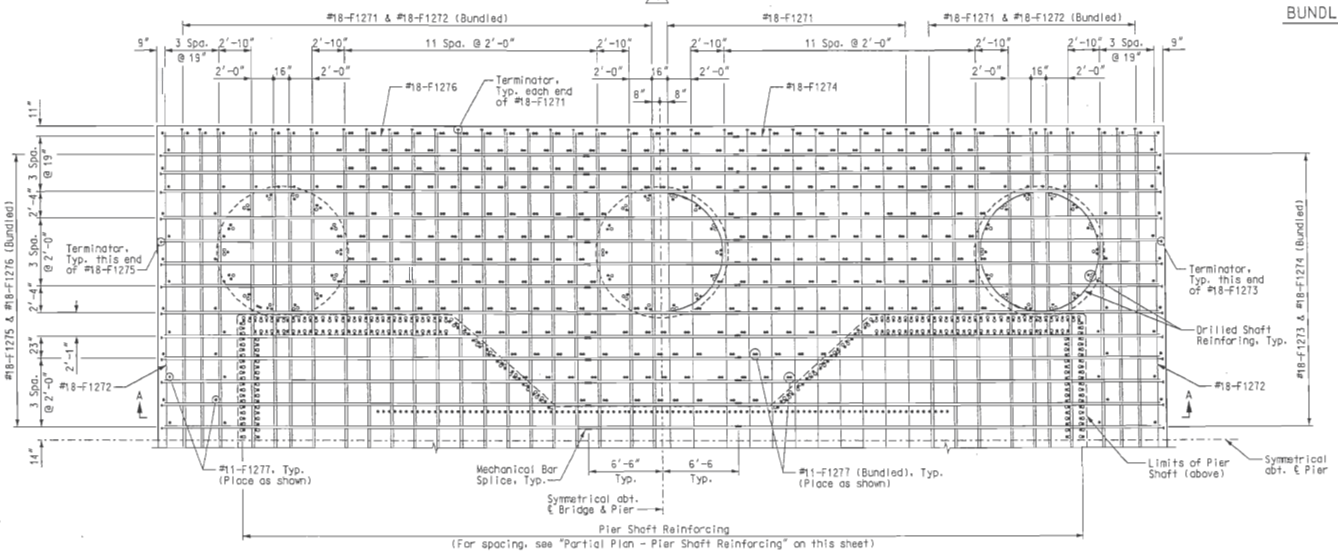

TOP REINFORCING MATS

BOTTOM REINFORCING MATS

PARTIAL PLAN – FOOTING

4

Notes:
For Section A-A, see Sheet No. BR58.
For Drilled Shaft reinforcing, see Sheet No. BR56.
The minimum cover on the reinforcing steel in the footing shall be 3".
Terminators shall be Lenton Terminator D6 Embedment Anchors.



4 PIER 12 – FOUNDATION

Detailed JUL 2009
Checked JUL 2009

Note: This drawing is not to scale. Follow dimensions.

Sheet No. 57 of 205

\\kcow00\jobs\46440\Bridges\Plans\CdtoMo0OTA6500\J6I0984\A6500-dgn\ZPLOT_B_A6500_057-205_J6I0984_057.dgn

17-MAY-2010 11:29

STATE OF MISSOURI
HANS R. HUTTON
NUMBER E-20174
REGISTERED ENGINEER
Hans R. Hutton

DATE: 5/17/10
ROUTE: I-70 | STATE: MO/IL
DISTRICT: 6 | SHEET NO.: BR57
COUNTY: ST. LOUIS CITY – MO, ST. CLAIR – IL
JOB NO.: J6I0984
CONTRACT ID.:
PROJECT NO.:
BRIDGE NO.: A6500

DESCRIPTION	DATE
1 Revised per ATC	5-17-10

MISSOURI HIGHWAYS AND TRANSPORTATION COMMISSION
105 WEST CAPITOL
JEFFERSON CITY, MO 65102
1-888-ASK-MODOT (1-888-275-6636)
MoDOT

HNTB
715 KIRK DRIVE
KANSAS CITY, MO 64105-1310
TELEPHONE (816) 472-1201
CERTIFICATE OF AUTHORITY NO. 001370

LICENSED STRUCTURAL ENGINEER
HANS R. HUTTON
081-006707
STATE OF ILLINOIS
expires 11-30-2010
Hans R. Hutton
5-17-2010

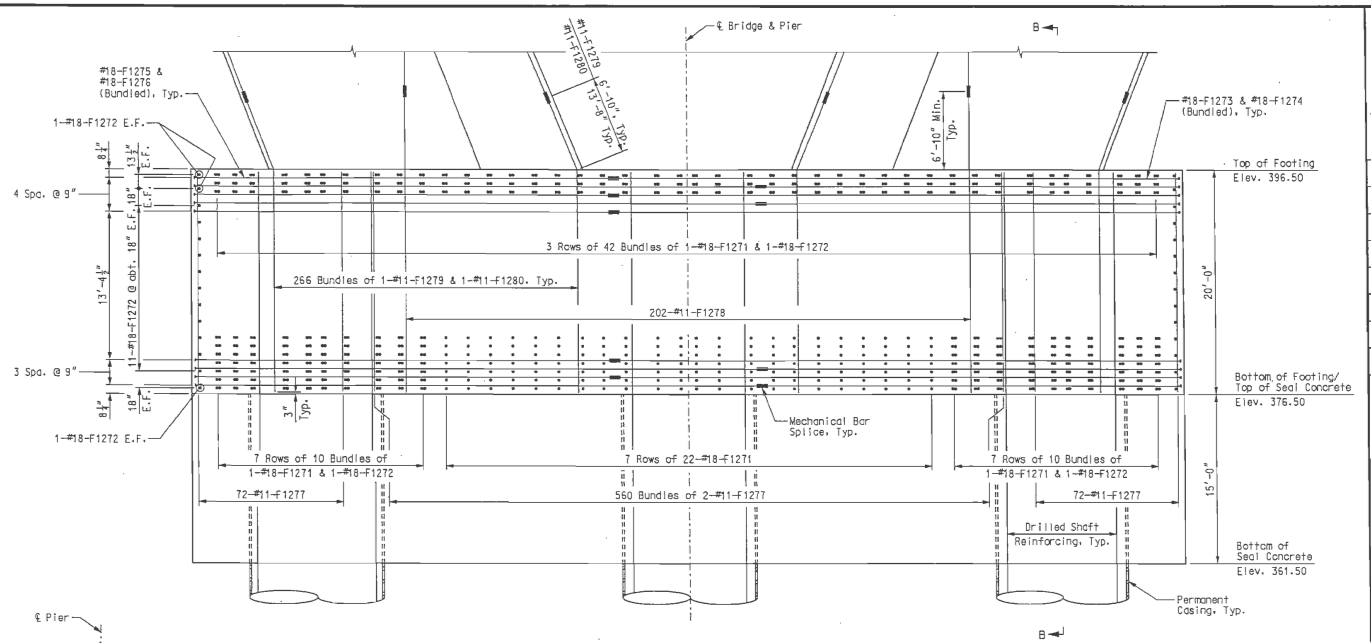

SECTION A-A

(For placement and spacing of reinforcing, see Sheet No. BR57.) 4

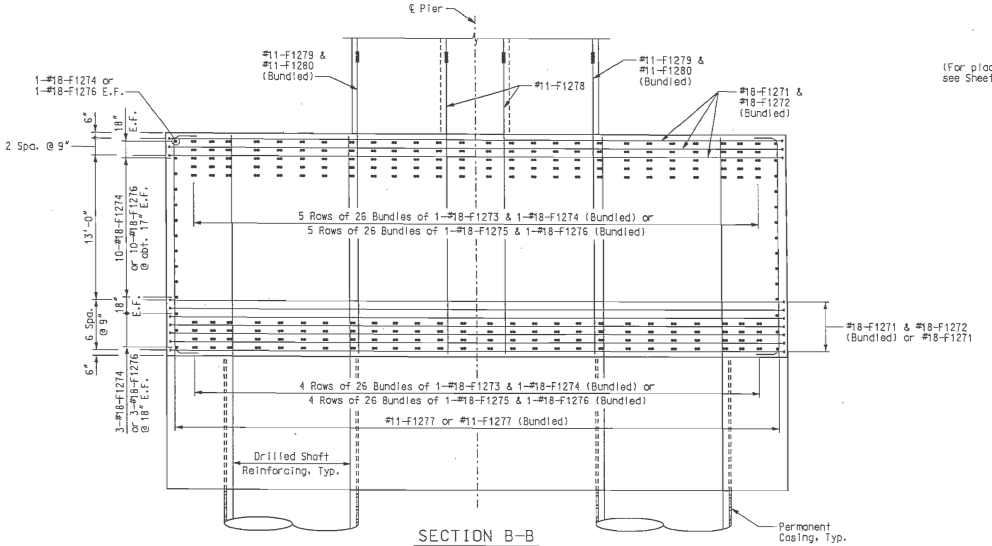

SECTION B-B

(For placement and spacing of reinforcing, see Sheet No. BR57.) 4

Notes:
For location of Section A-A, see Sheet No. BR57.
For Drilled Shaft reinforcing, see Sheet No. BR56.
The minimum cover on the reinforcing steel in the footing shall be 3".

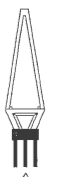

4 PIER 12 - FOUNDATION

Detailed JUL 2009
Checked JUL 2009

Note: This drawing is not to scale. Follow dimensions.

Sheet No. 58 of 205

\\kcow00\jobs\46440\Bridges\Plans\CdtaMoDOTA6500\J6I0984\A6500-dgn\ZPLOT_B_A6500_058-205_J6I0984_058.dgn

17-MAY-2010 11:29

STATE OF MISSOURI
HANS R. HUTTON
NUMBER E-29174
REGISTERED PROFESSIONAL ENGINEER
Hans R. Hutton

DATE 5/17/10
ROUTE I-70
STATE MO/IL
DISTRICT 6
SHEET NO. BR58
COUNTY ST. LOUIS CITY - MO ST. CLAIR - IL
JOB NO. J6I0984
CONTRACT ID.
PROJECT NO.
BRIDGE NO. A6500

DESCRIPTION	DATE
1 Revised per ATC	5-17-10

MISSOURI HIGHWAYS AND TRANSPORTATION COMMISSION
105 WEST CAPITOL
JEFFERSON CITY, MO 65102
1-888-ASK-MODOT (1-888-275-6636)

HNTB
715 KIRK DRIVE
KANSAS CITY, MO 64105-1310
TELEPHONE (816) 472-1201
CERTIFICATE OF AUTHORITY NO. 001270

LICENSED STRUCTURAL ENGINEER
HANS R. HUTTON
081-006707
STATE OF ILLINOIS
EXPIRES 11-30-2010
Hans R. Hutton
SIGNATURE
5-17-2010
DATE

REV.

TABLE OF REINFORCING

"A"	"B"	"C"	"D"	"E"	"F"	"G"	"H"	"J"
2–#7–P1103	2–#7–P1103	2–#7–P1103	2–#7–P1103	2–#7–P1103	2–#7–P1103	2–#7–P1103	2–#7–P1103	2–#7–P1103
4–#7–P1104	4–#7–P1104	4–#7–P1104	4–#7–P1104	4–#7–P1104	4–#7–P1104	4–#7–P1104	4–#7–P1104	4–#7–P1104
4–#7–P1105	4–#7–P1105	4–#7–P1105	4–#7–P1105	4–#7–P1105	4–#7–P1105	4–#7–P1105	4–#7–P1105	4–#7–P1105
54–#5–P1106	54–#5–P1106	54–#5–P1106	54–#5–P1106	54–#5–P1106	54–#5–P1106	46–#5–P1106	38–#5–P1106	30–#5–P1106
68–#5–P1107	68–#5–P1107	68–#5–P1107	68–#5–P1107	68–#5–P1107	68–#5–P1107	68–#5–P1107	68–#5–P1107	68–#5–P1107
29–#5–P1108	33–#5–P1108	37–#5–P1108	37–#5–P1108	47–#5–P1108	98–#5–P1144	102–#5–P1145	102–#5–P1146	102–#5–P1147
4–#5–P1109	4–#5–P1109	4–#5–P1109	4–#5–P1109	4–#5–P1109	4–#5–P1109	4–#5–P1109	4–#5–P1109	4–#5–P1109
4–#7–P1136	4–#7–P1136	4–#7–P1136	4–#7–P1136	4–#7–P1136	4–#7–P1136	4–#7–P1136	———	4–#7–P1136
8–#5–P1137	8–#5–P1137	8–#5–P1137	8–#5–P1137	8–#5–P1137	8–#5–P1137	8–#5–P1137	———	———
———	———	2–#7–P1138	2–#7–P1138	2–#7–P1138	2–#7–P1138	2–#7–P1138	2–#7–P1138	2–#7–P1138

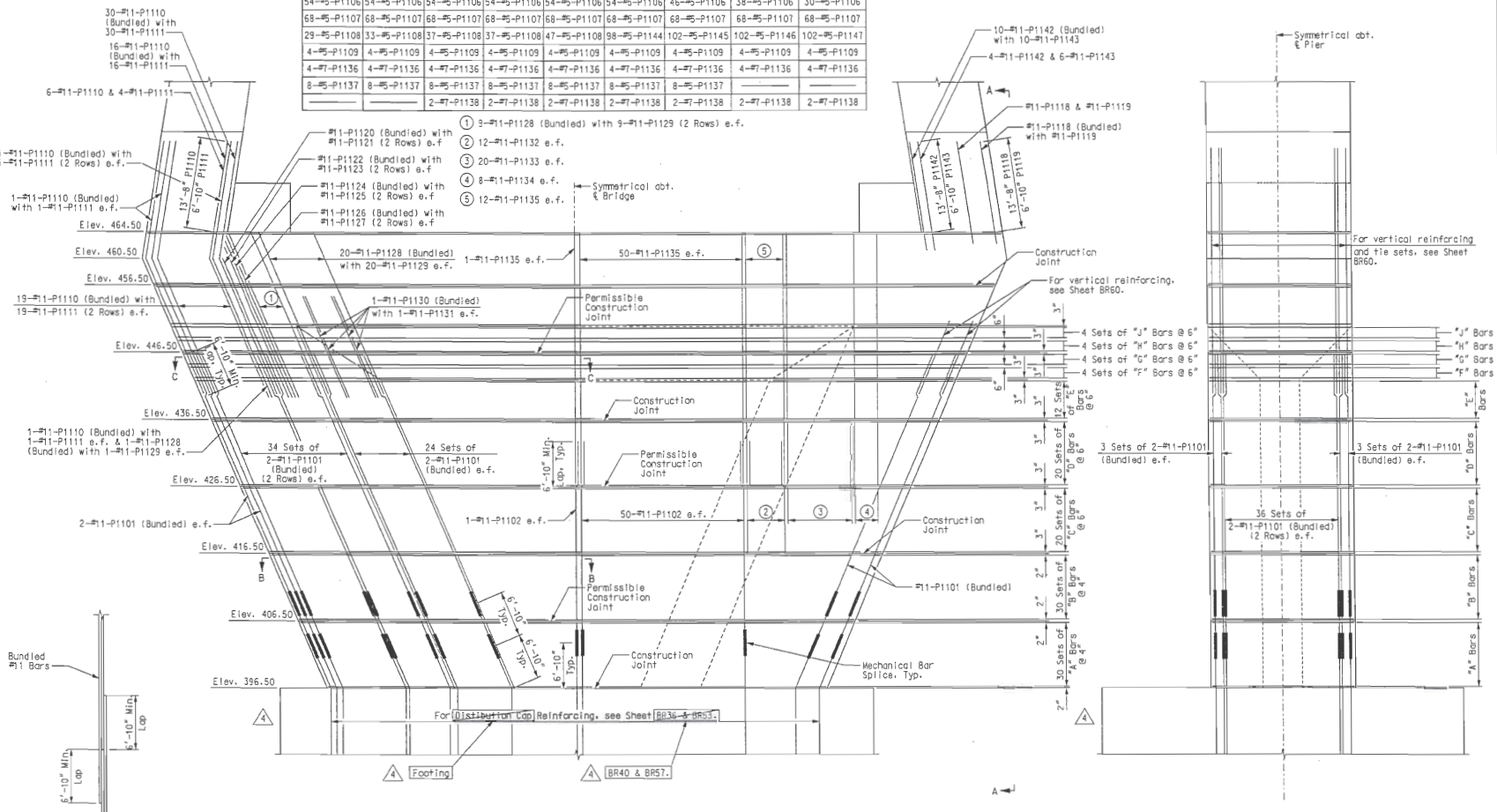

DETAIL OF LAP SPLICE AT BUNDLED #11 BARS

Notes:
Bar Marks shown are for Pier 11, using "P11" Series Bar Marks.
Pier 12 is similar, except use "P12" Series Bar Marks.
For Sections B-B, see Sheet No. BR62.
For Sections C-C, see Sheet No. BR63.
For Piers 11 & 12 dimensions, see Sheet Nos. BR25 and BR42.
For Piers 11 & 12 distribution cap, see Sheet Nos. BR36 and BR53. BR39 and BR56. 4
footing. 4

PIERS 11 & 12 – SHAFT

Detailed JUL 2009
Checked JUL 2009

Note: This drawing is not to scale. Follow dimensions.

Sheet No. 59 of 205

\\kcow00\jobs\46440\Bridges\Plans\CdtoMoDOTA6500\J6I0984\A6500-dgn\ZPLOT_B_A6500_059-205_J6I0984_059.dgn

17-MAY-2010 11:29

STATE OF MISSOURI
HANS R. HUTTON
NUMBER E-29174
REGISTERED PROFESSIONAL ENGINEER
Hans R Hutton

DATE 5/17/10
ROUTE I-70 | STATE MO/IL
DISTRICT 6 | SHEET NO. BR59
COUNTY ST. LOUIS CITY – MO ST. CLAIR – IL
JOB NO. J6I0984
CONTRACT ID.
PROJECT NO.
BRIDGE NO. A6500

REV.	DESCRIPTION	DATE
1	Revised per ATC	5-17-10

MISSOURI HIGHWAYS AND TRANSPORTATION COMMISSION
105 WEST CAPITOL
JEFFERSON CITY, MO 65102
1-888-ASK-MODOT (1-888-275-6636)

HNTB
715 KIRK DRIVE
KANSAS CITY, MO 64105-1310
TELEPHONE (816) 472-1201
CERTIFICATE OF AUTHORITY NO. 001270

LICENSED STRUCTURAL ENGINEER
HANS R. HUTTON
081-006707
STATE OF ILLINOIS
expires 11-30-2010
Hans R Hutton
signature
5-17-2010
date

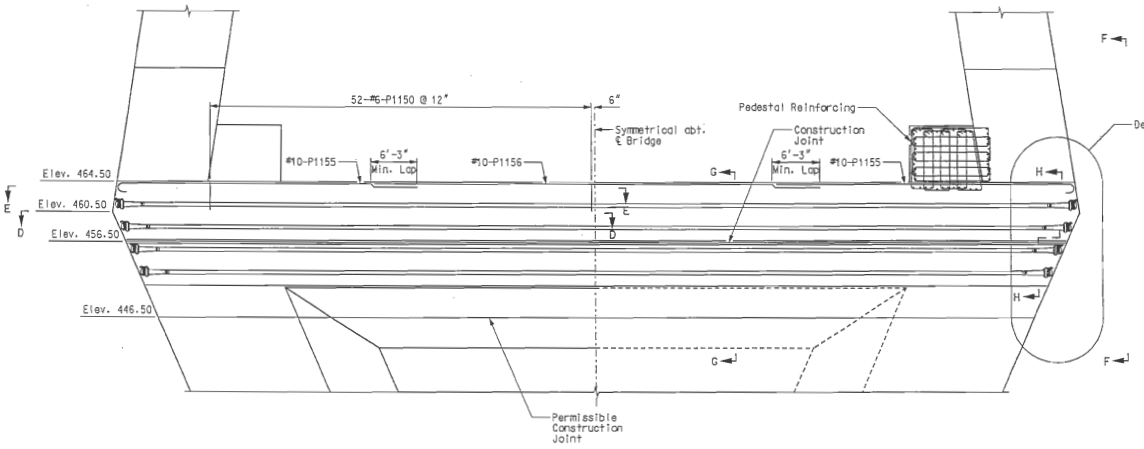

PART ELEVATION

PART SECTION

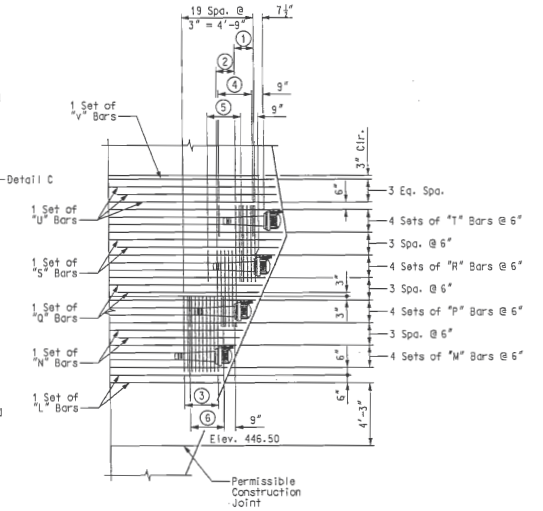

DETAIL C

① 6 Sets of 10-#5-P1139
② 6 Sets of 6-#5-P1139
③ 10 Sets of 2-#5-P1139
④ 10 Sets of 2-#5-P1140
⑤ 10 Sets of 2-#5-P1140
⑥ 10 Sets of 2-#5-P1141

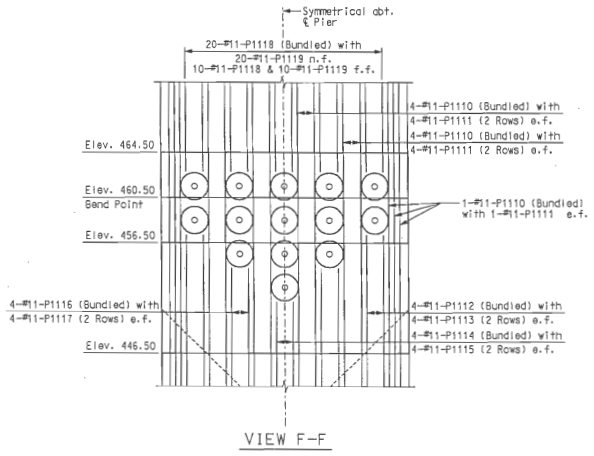

VIEW F-F

TABLE OF REINFORCING									
"L"	"M"	"N"	"P"	"Q"	"R"	"S"	"T"	"U"	"V"
2-#7-P1103		2-#7-P1103		2-#7-P1103		2-#7-P1103		2-#7-P1103	2-#7-P1103
26-#5-P1106		26-#5-P1106		26-#5-P1106		26-#5-P1106		26-#5-P1106	26-#5-P1106
178-#5-P1107	182-#5-P1107	182-#5-P1107	182-#5-P1107	188-#5-P1107	186-#5-P1107	184-#5-P1107	182-#5-P1107	178-#5-P1107	44-#5-P1107
4-#5-P1109	4-#5-P1109	4-#5-P1109	4-#5-P1109	4-#5-P1109	4-#5-P1109	4-#5-P1109	4-#5-P1109	4-#5-P1109	4-#5-P1109
4-#7-P1136	4-#7-P1136	4-#7-P1136	4-#7-P1136	4-#7-P1136	4-#7-P1136	4-#7-P1136	4-#7-P1136	4-#7-P1136	46-#10-P1155
2-#7-P1138	2-#7-P1138	2-#7-P1138	2-#7-P1138	2-#7-P1138	2-#7-P1138	2-#7-P1138	2-#7-P1138	2-#7-P1138	23-#10-P1156
	8-#5-P1148		8-#5-P1148		8-#5-P1148		8-#5-P1148		
	4-#7-P1149		4-#7-P1149		4-#7-P1149		4-#7-P1149		

Notes:
Bar Marks shown are for Pier 11, using "P11" Series Bar Marks.
Pier 12 is similar, except use "P12" Series Bar Marks.
For Section D-D, see Sheet No. BR64.
For Section E-E, see Sheet No. BR65.
For Sections G-G and H-H, see Sheet No. BR66.
For Piers 11 & 12 dimensions, see Sheet Nos. BR25 and BR42.
For Post-tensioning details, see Sheet No. BR61.
For Pedestal details, see Sheet No. BR81.
Space reinforcing to miss post-tensioning anchorages and tendons.

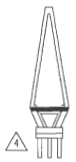

PIERS 11 & 12 - SHAFT

Detailed JUL 2009
Checked JUL 2009

Note: This drawing is not to scale. Follow dimensions.

Sheet No. 60 of 205

REV.

DESCRIPTION: Revised per AIC
DATE: 5-17-10

STATE OF MISSOURI
HANS R. HUTTON
NUMBER E-29174
PROFESSIONAL ENGINEER
Hans R. Hutton

DATE 5/17/10
ROUTE I-70
STATE MO/IL
DISTRICT 6
SHEET NO. BR60
COUNTY ST. LOUIS CITY - MO ST. CLAIR - IL
JOB NO. J6I0984
CONTRACT ID.
PROJECT NO.
BRIDGE NO. A6500

MISSOURI HIGHWAYS AND TRANSPORTATION COMMISSION
MoDOT
105 WEST CAPITOL
JEFFERSON CITY, MO 65102
1-888-ASK-MODOT (1-888-275-6636)

HNTB
715 KIRK DRIVE
KANSAS CITY, MO 64105-1310
TELEPHONE (816) 472-1201
CERTIFICATE OF AUTHORITY NO. 001270

LICENSED STRUCTURAL ENGINEER
HANS R. HUTTON
081-006707
STATE OF ILLINOIS
Hans R. Hutton
5-17-2010

\\kcow00\jobs\46440\Bridges\Plans\CdtoMoDOTA6500\J6I0984\A6500-dgn\ZPLOT_B_A6500_060-205_J6I0984_060.dgn

17-MAY-2010 11:29

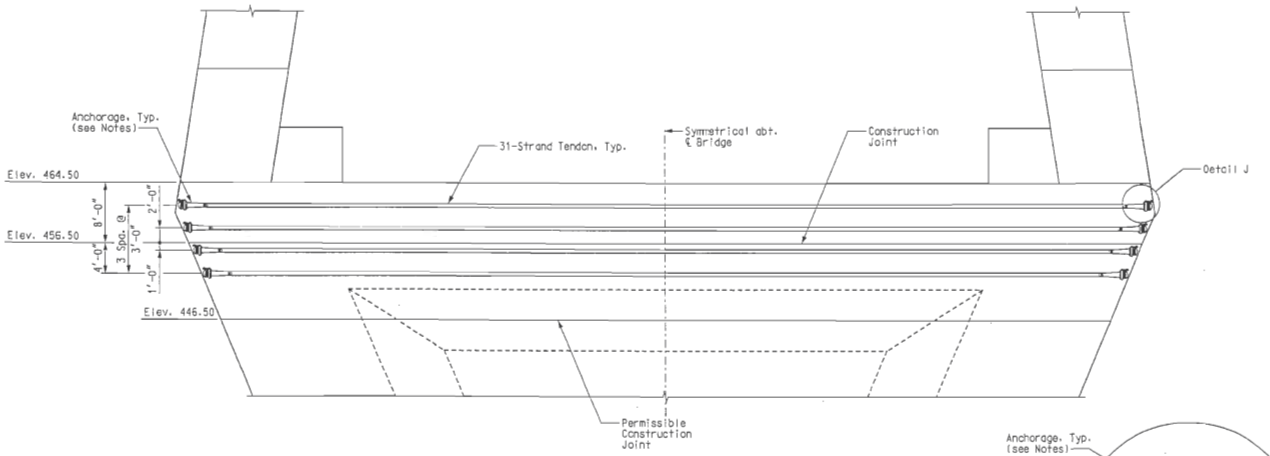

SECTION

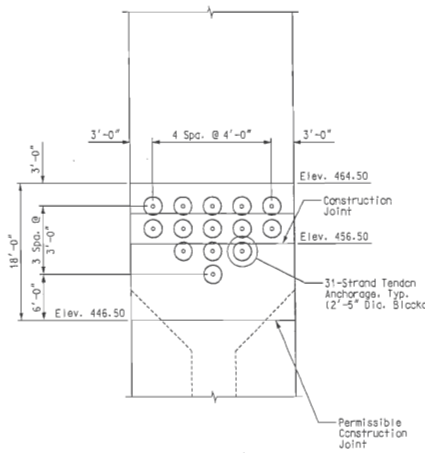

END VIEW

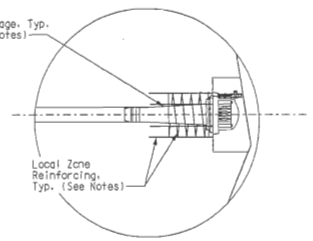

DETAIL J

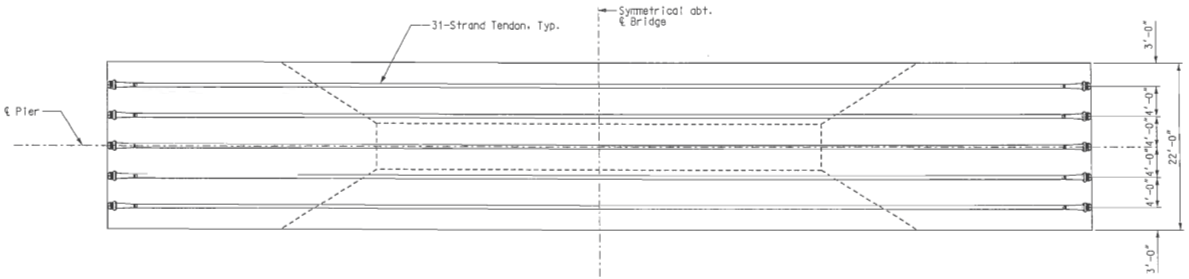

PLAN

Notes:
Tendons shall not be stressed until the Pier Cap concrete has attained a strength of f'ci = 4000 psi.
Jacking force shall be 1.361 kip/tendon.
Assumed friction loss coefficients are:
K = 0.0001/ft.
μ = .25.
Assumed anchor set is .375".
Tendons shall be stressed from one end only.
Alternate tendons shall be stressed from opposite ends of Pier Cap.
Anchorage recesses shall be grouted immediately upon completion of tendon grouting.
Ducts shall be corrugated polyethylene.
All tendons shall be 0.6" diameter strands. There shall be 31-strands per tendon.
The post-tensioning supplier is responsible for specifying and providing the required local zone reinforcing.
Prior to installation of post-tensioning tendons, the Contractor shall submit to the Engineer proof of acceptance for anchorage device tests performed per LRFD Construction Specifications 10.3.2 and 10.3.2.3.
Anchorage shall be VSL 6-31 Type ES or approved equal.
All costs associated with material, fabrication and installation of the post-tensioning systems shall be included in the pay item "Post-Tensioning System at Towers". This includes all strand, anchorages, duct, grout tubes, grout and local zone reinforcing.



PIERS 11 & 12 - SHAFT

STATE OF MISSOURI
HANS R. HUTTON
NUMBER E-29174
REGISTERED PROFESSIONAL ENGINEER
Hans R. Hutton

DATE
5/17/10

ROUTE	STATE
I-70	MO/IL
DISTRICT	SHEET NO.
6	BR61

COUNTY
ST. LOUIS CITY - MO
ST. CLAIR - IL

JOB NO.
J6I0984

CONTRACT ID.

PROJECT NO.

BRIDGE NO.
A6500

DESCRIPTION	DATE
1 Revised per ATC	5-17-10

MISSOURI HIGHWAYS AND TRANSPORTATION COMMISSION
MoDOT
105 WEST CAPITOL
JEFFERSON CITY, MO 65102
1-888-ASK-MODOT (1-888-275-6636)

HNTB
715 KIRK DRIVE
KANSAS CITY, MO 64105-1310
816.472.1201
CERTIFICATE OF AUTHORITY NO. 001270

LICENSED STRUCTURAL ENGINEER
HANS R. HUTTON
081-006707
STATE OF ILLINOIS
Hans R. Hutton
5-17-2010

REV.

Detailed JUL 2009
Checked JUL 2009

Note: This drawing is not to scale. Follow dimensions.

\\kcow00\jobs\46440\Bridges\Plans\CdtoMoDOTA6500\J6I0984\A6500-dgn\ZPLOT_B_A6500_061-205_J6I0984_061.dgn

17-MAY-2010 11:30

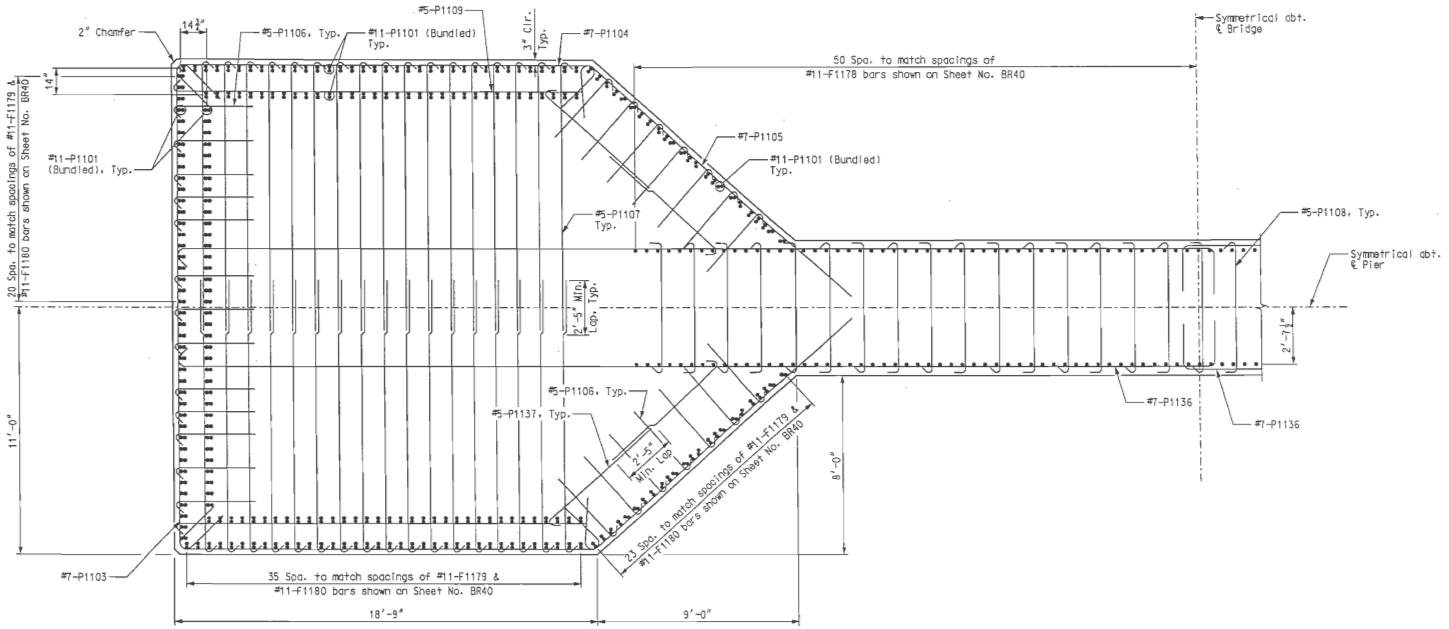

SECTION B-B

4

Notes:
Bar Marks shown are for Pier 11, using "P11" Series Bar Marks.
Pier 12 is similar, except use "P12" Series Bar Marks.
For Location of Section B-B, see Sheet No. BR59.

PIERS 11 & 12 - SHAFT

STATE OF MISSOURI
HANS R. HUTTON
NUMBER E-29174
REGISTERED PROFESSIONAL ENGINEER

DATE 5/17/10
ROUTE I-70 | STATE MO/IL
DISTRICT 6 | SHEET NO. BR62
COUNTY ST. LOUIS CITY - MO, ST. CLAIR - IL
JOB NO. J6I0984
CONTRACT ID.
PROJECT NO.
BRIDGE NO. A6500

DATE	DESCRIPTION
5-17-10	4 Revised per ATC

MISSOURI HIGHWAYS AND TRANSPORTATION COMMISSION
MoDOT
105 WEST CAPITOL
JEFFERSON CITY, MO 65102
1-888-ASK-MODOT (1-888-275-6636)

HNTB
715 KIRK DRIVE
KANSAS CITY, MO 64105-1310
TELEPHONE (816) 472-1201
CERTIFICATE OF AUTHORITY NO. 001070

LICENSED STRUCTURAL ENGINEER
HANS R. HUTTON
081-006707
STATE OF ILLINOIS
EXPIRES 11-30-2010
5-17-2010

REV.

Detailed JUL 2009
Checked JUL 2009

Note: This drawing is not to scale. Follow dimensions.

\\kcaw00\Jobs\46440\Bridges\Plans\CdtoMoDOTA6500\J6I0984\A6500-dgn\ZPLOT_B_A6500_062-205_J6I0984_062.dgn

17-MAY-2010 11:30

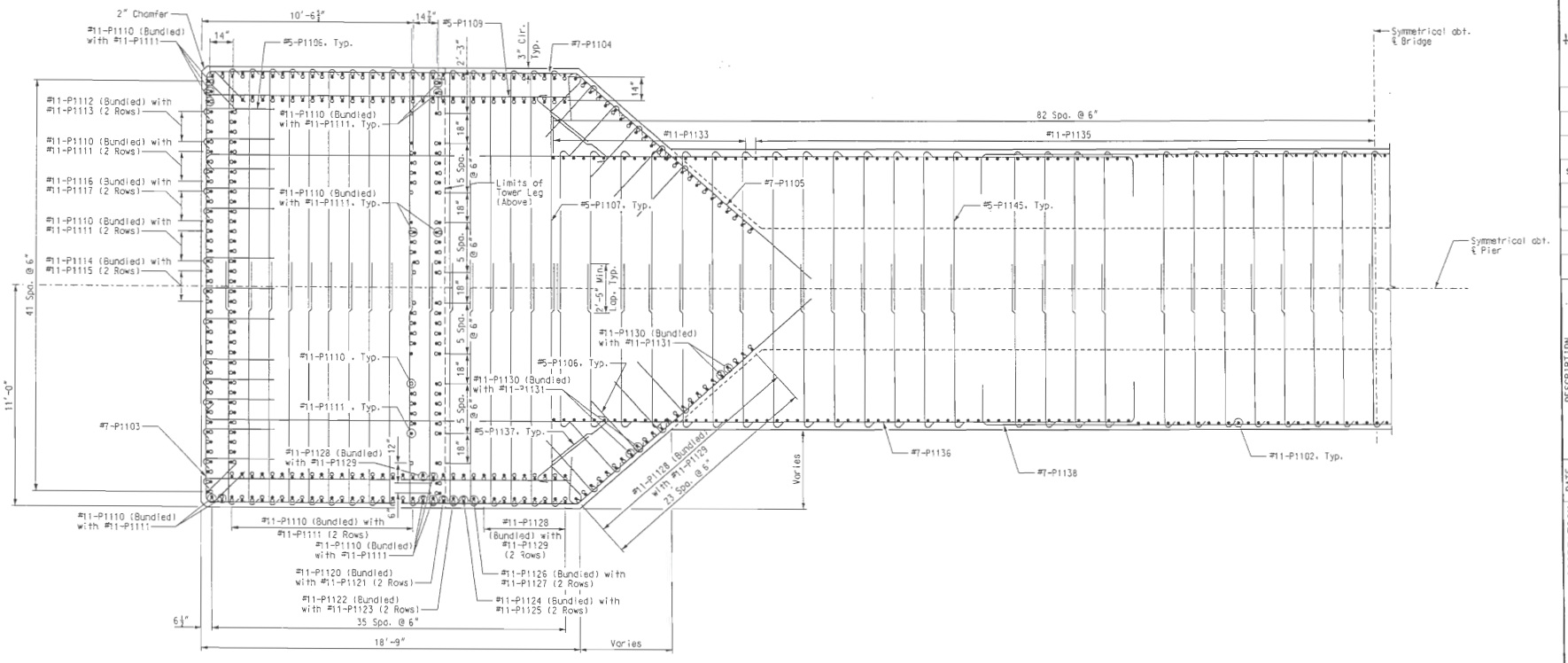

SECTION C-C

#11-P1101 not shown for clarity

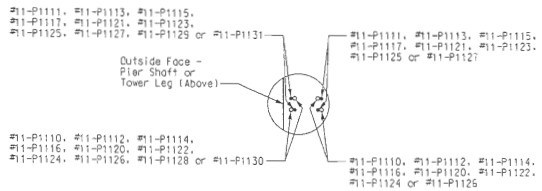

ORIENTATION OF BUNDLED #11 BARS (VERTICAL)

Notes:
Bar Marks shown are for Pier 11, using "P11" Series Bar Marks.
Pier 12 is similar, except use "P12" Series Bar Marks.
For Location of Section C-C, see Sheet No. BR59.

PIERS 11 & 12 - SHAFT

Detailed JUL 2009
Checked JUL 2009

Note: This drawing is not to scale. Follow dimensions.

STATE OF MISSOURI
HANS R. HUTTON
NUMBER E-2874
REGISTERED PROFESSIONAL ENGINEER
Hans R. Hutton

DATE	8/20/09
ROUTE	I-70
STATE	MO/IL
DISTRICT	6
SHEET NO.	BR63
COUNTY	ST. LOUIS CITY - MO ST. CLAIR - IL
JOB NO.	J6I0984
CONTRACT ID.	
PROJECT NO.	
BRIDGE NO.	A6500

DATE	DESCRIPTION

MISSOURI HIGHWAYS AND TRANSPORTATION COMMISSION
MoDOT
105 WEST CAPITOL
JEFFERSON CITY, MO 65102
1-888-ASK-MODOT (1-888-275-6636)

HNTB
715 KIRK DRIVE
KANSAS CITY, MO 64105-1310
TELEPHONE (816) 472-1201
CERTIFICATE OF AUTHORITY NO. 001270

LICENSED STRUCTURAL ENGINEER
HANS R. HUTTON
NO. 081-006707
STATE OF ILLINOIS
Hans R. Hutton
8-20-2009

REV.

\\kcow00\jobs\46440\Bridges\Plans\CdtoMoDOTA6500\J6I0984\A6500-dgn\ZPLOT_B_A6500_001-205_J6I0984_063.dgn

19-AUG-2009 07:05

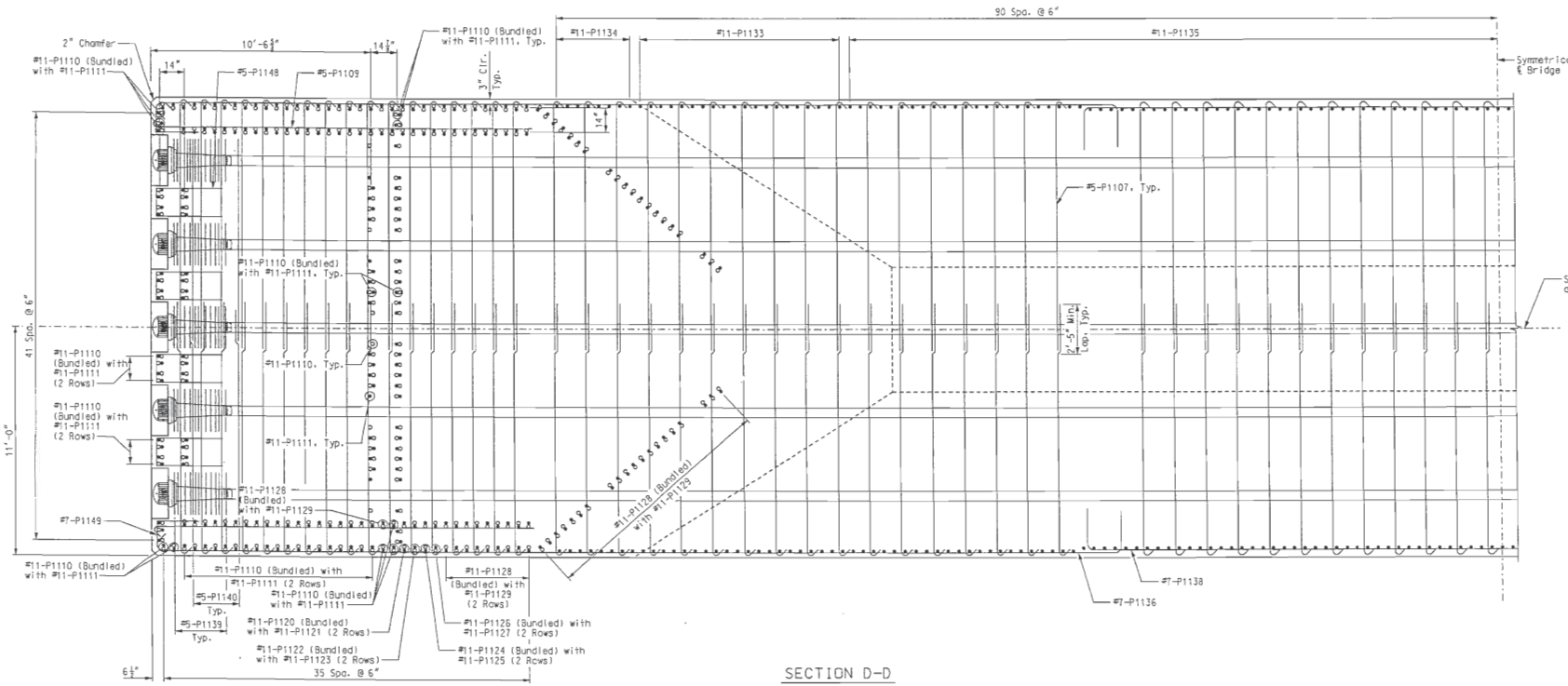

SECTION D-D

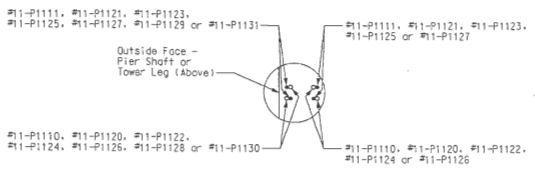

ORIENTATION OF BUNDLED #11 BARS (VERTICAL)

Notes:
Bar Marks shown are for Pier 11, using "P11" Series Bar Marks.
Pier 12 is similar, except use "P12" Series Bar Marks.
For Location of Section D-D, see Sheet No. BR60.

PIERS 11 & 12 - SHAFT

Detailed JUL 2009
Checked JUL 2009

Note: This drawing is not to scale. Follow dimensions.

\\kcow00\jobs\46440\Bridges\Plans\CdtoMoDOTA6500\J6I0984\A6500-dgn\ZPLOT_E_A6500_001-205_J6I0984_064.dgn

19-AUG-2009 07:06

REV.

STATE OF MISSOURI HANS R. HUTTON NUMBER E-29174 REGISTERED PROFESSIONAL ENGINEER
Hans R. Hutton

DATE 8/20/09
ROUTE I-70 | STATE MO/IL
DISTRICT 6 | SHEET NO. BR64
COUNTY ST. LOUIS CITY - MO ST. CLAIR - IL
JOB NO. J6I0984
CONTRACT ID.
PROJECT NO.
BRIDGE NO. A6500

DESCRIPTION | DATE

MISSOURI HIGHWAYS AND TRANSPORTATION COMMISSION
105 WEST CAPITOL
JEFFERSON CITY, MO 65102
1-888-ASK-MODOT (1-888-275-6636)
HNTB
715 KIRK DRIVE
KANSAS CITY, MO 64105-1310
TELEPHONE (816) 472-1201
CERTIFICATE OF AUTHORITY NO. 000170

LICENSED STRUCTURAL ENGINEER
HANS R. HUTTON 081-006707
STATE OF ILLINOIS
Hans R. Hutton
8-20-2009

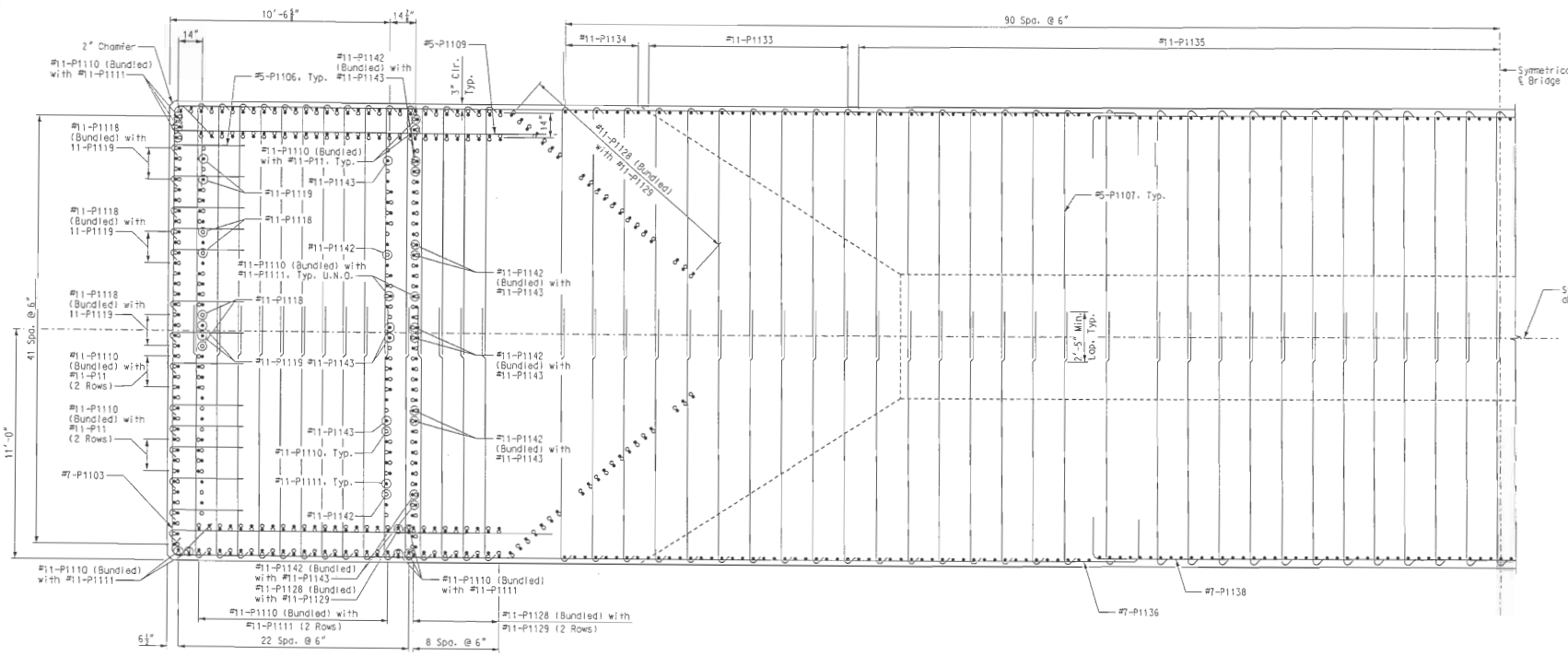

SECTION E-E

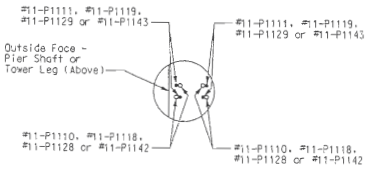

ORIENTATION OF
(Bundled) #11 BARS
(VERTICAL)

Notes:
Bar Marks shown are for Pier 11, using "P11" Series Bar Marks.
Pier 12 is similar, except use "P12" Series Bar Marks.
For Location of Section E-E, see Sheet No. BR60.

PIERS 11 & 12 – SHAFT

Detailed JUL 2009
Checked JUL 2009

Note: This drawing is not to scale. Follow dimensions.

Sheet No. 65 of 205

\\kcow00\jobs\46440\Bridges\Plans\CatoMoDOTA6500\J6I0984\A6500-dgn\ZPLOT_B_A6500_001-205_J6I0984_065.dgn

19-AUG-2009 07:06

STATE OF MISSOURI
HANS R. HUTTON
NUMBER 2003001234
REGISTERED PROFESSIONAL ENGINEER

DATE
8/20/09

ROUTE	STATE
I-70	MO/IL
DISTRICT	SHEET NO.
6	BR65

COUNTY
ST. LOUIS CITY - MO
ST. CLAIR - IL

JOB NO.
J6I0984

CONTRACT ID.

PROJECT NO.

BRIDGE NO.
A6500

DATE	DESCRIPTION	REV.

MISSOURI HIGHWAYS AND TRANSPORTATION COMMISSION
MoDOT
105 WEST CAPITOL
JEFFERSON CITY, MO 65102
1-888-ASK-MODOT (1-888-275-6636)

HNTB
715 KING DRIVE
KANSAS CITY, MO 64105-1310
TELEPHONE (816) 472-1201
CERTIFICATE OF AUTHORITY NO. 000270

LICENSED STRUCTURAL ENGINEER
HANS R. HUTTON
081-006707
STATE OF ILLINOIS

Hans R. Hutton
8-20-09
Date

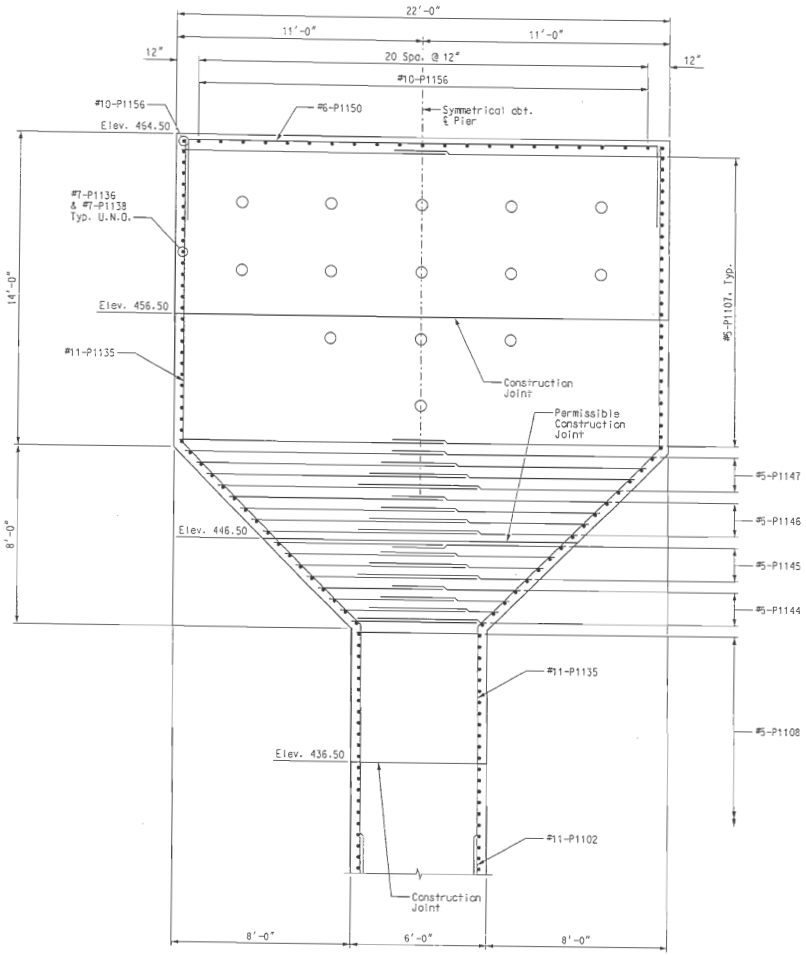

SECTION G-G

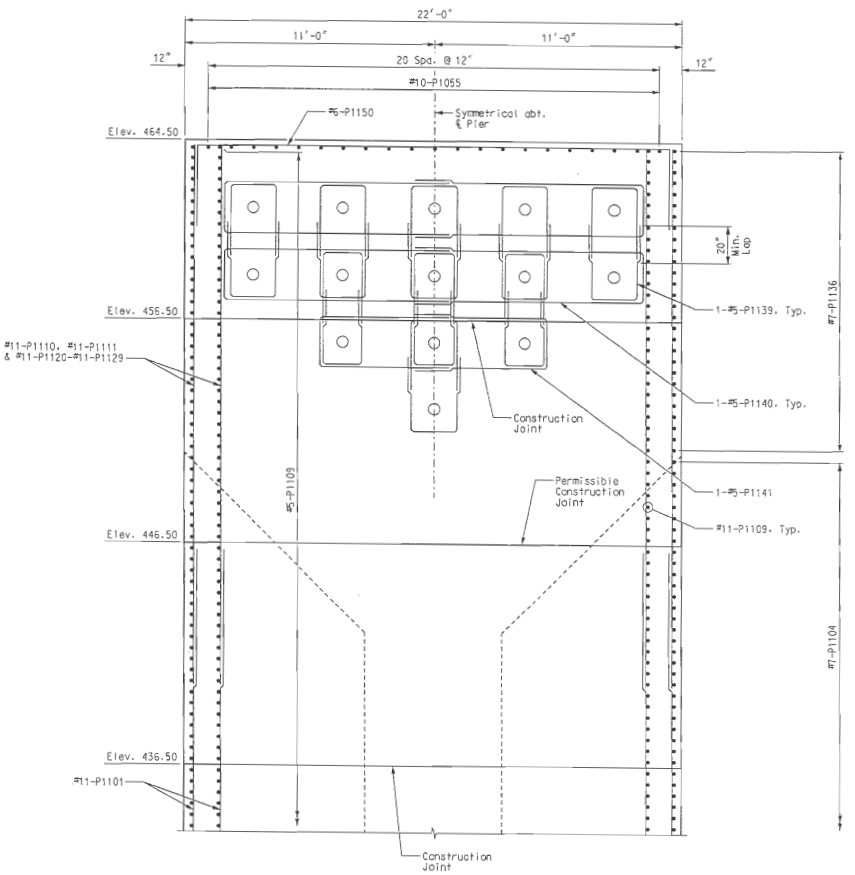

SECTION H-H

Notes:
Bar Marks shown are for Pier 11, using "P11" Series Bar Marks.
Pier 12 is similar, except use "P12" Series Bar Marks.
For Location of Sections G-G & H-H, see Sheet No. BR60.

PIERS 11 & 12 - SHAFT

Detailed JUL 2009
Checked JUL 2009

Note: This drawing is not to scale. Follow dimensions.

\\kcow00\jobs\48440\Bridges\Plans\CdtoMoDOTA6500\J6I0984\A6500-dgn\ZPLOT_B_A6500_001-205_J6I0984_066.dgn

19-AUG-2009 07:06

STATE OF MISSOURI
HANS R. HUTTON
NUMBER E-29174
PROFESSIONAL ENGINEER

Hans R. Hutton

DATE 8/20/09
ROUTE I-70
STATE MO/IL
DISTRICT 6
SHEET NO. BR66
COUNTY ST. LOUIS CITY - MO ST. CLAIR - IL
JOB NO. J6I0984
CONTRACT ID.
PROJECT NO.
BRIDGE NO. A6500

DESCRIPTION	DATE

MISSOURI HIGHWAYS AND TRANSPORTATION COMMISSION
105 WEST CAPITOL
JEFFERSON CITY, MO 65102
1-888-ASK-MODOT (1-888-275-6636)

HNTB
715 KIRK DRIVE
KANSAS CITY, MO 64105-1310
TELEPHONE (816) 472-1201
CERTIFICATE OF AUTHORITY NO. 001270

LICENSED STRUCTURAL ENGINEER
HANS R. HUTTON
081-005707
STATE OF ILLINOIS

Hans R. Hutton
8-20-2009

REV.

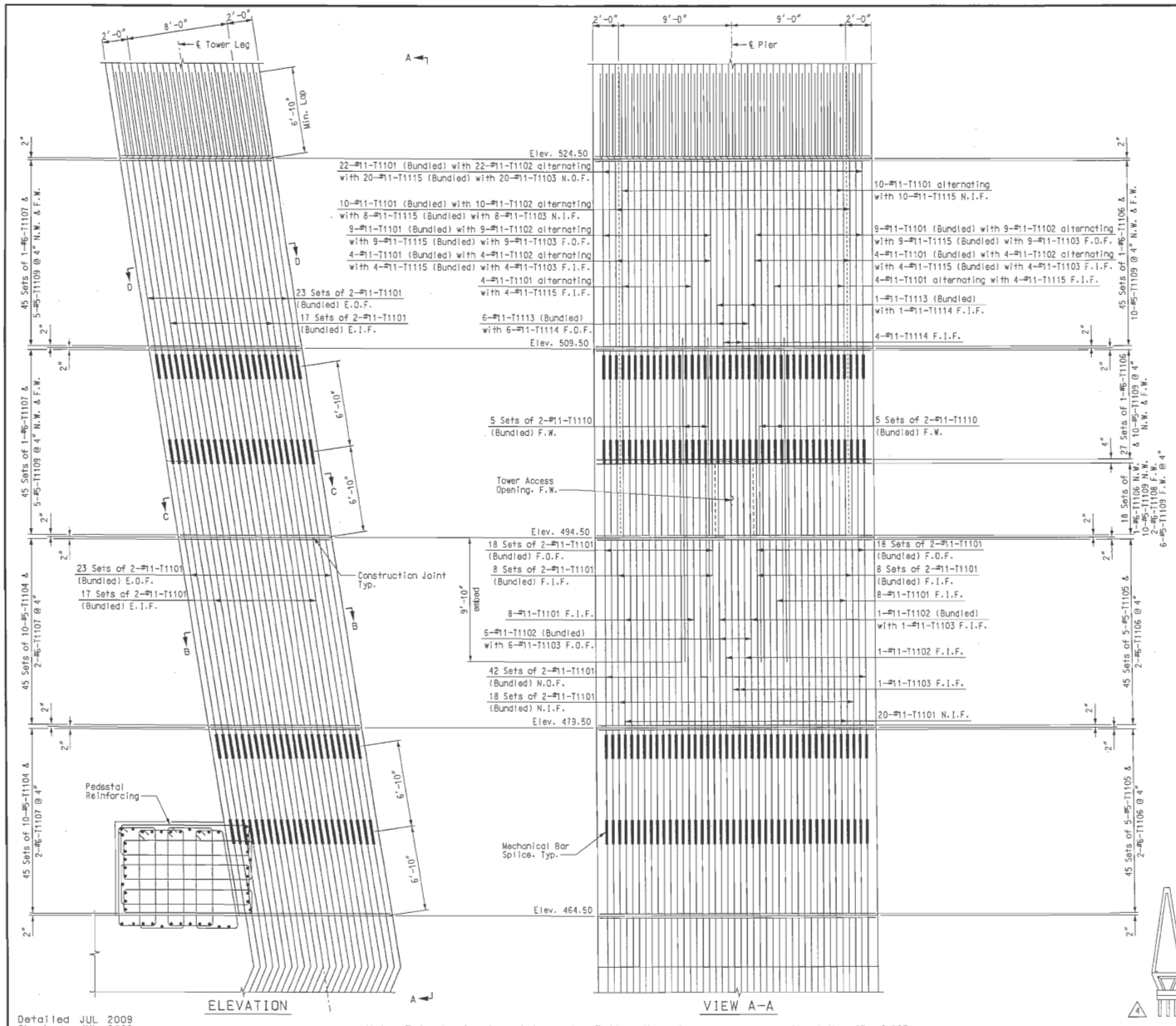

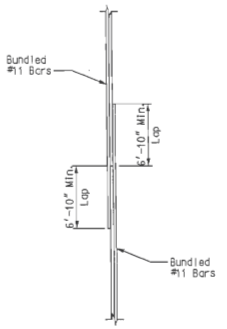

DETAIL OF LAP SPLICE
AT BUNDLED #11 BARS

Notes:
Bar Marks shown are for Pier 11, using "T11" Series Bar Marks.
Pier 12 is similar, except use "T12" Series Bar Marks.
For Sections B-B, C-C & D-D, see Sheet No. BR74.
For tower access opening details, see Sheet No. BR83.
For pedestal details, see Sheet No. BR81.
For lateral restrainer details, see Sheet No. BR105.
For details on the location and attachment of the aesthetic lighting system to the towers, see electrical plans.
See ITS Device Tower Installations for details on camera, detector and associated conduit stub-out.
Construction joint surfaces shall be intentionally roughened to a minimum amplitude of ¼" and a frequency no greater than 3".

PIERS 11 & 12 - TOWER

Detailed JUL 2009
Checked JUL 2009

Note: This drawing is not to scale. Follow dimensions.

Sheet No. 67 of 205

HANS R. HUTTON NUMBER E-28174 REGISTERED PROFESSIONAL ENGINEER
Hans R. Hutton

DATE 5/17/10
ROUTE I-70 | STATE MO/IL
DISTRICT 6 | SHEET NO. BR67
COUNTY ST. LOUIS CITY - MO ST. CLAIR - IL
JOB NO. J6I0984
CONTRACT ID.
PROJECT NO.
BRIDGE NO. A6500

DESCRIPTION	DATE
1 Revised per A/C	5-17-10

MISSOURI HIGHWAYS AND TRANSPORTATION COMMISSION
105 WEST CAPITOL
JEFFERSON CITY, MO 65102
1-888-ASK-MODOT (1-888-275-6636)

HNTB
715 KIRK DRIVE
KANSAS CITY, MO 64105-1310
TELEPHONE (816) 472-1201
CERTIFICATE OF AUTHORITY NO. 001270

HANS R. HUTTON 081-006707 REGISTERED STRUCTURAL ENGINEER STATE OF ILLINOIS
Hans R. Hutton
5-17-2010

REV:

\\kcow00\jobs\46440\Bridges\Plans\CdtoMoDOTA6500\J6I0984\A6500-dgn\ZPLOT_B_A6500_067-205_J6I0984_067.dgn

17-MAY-2010 11:30

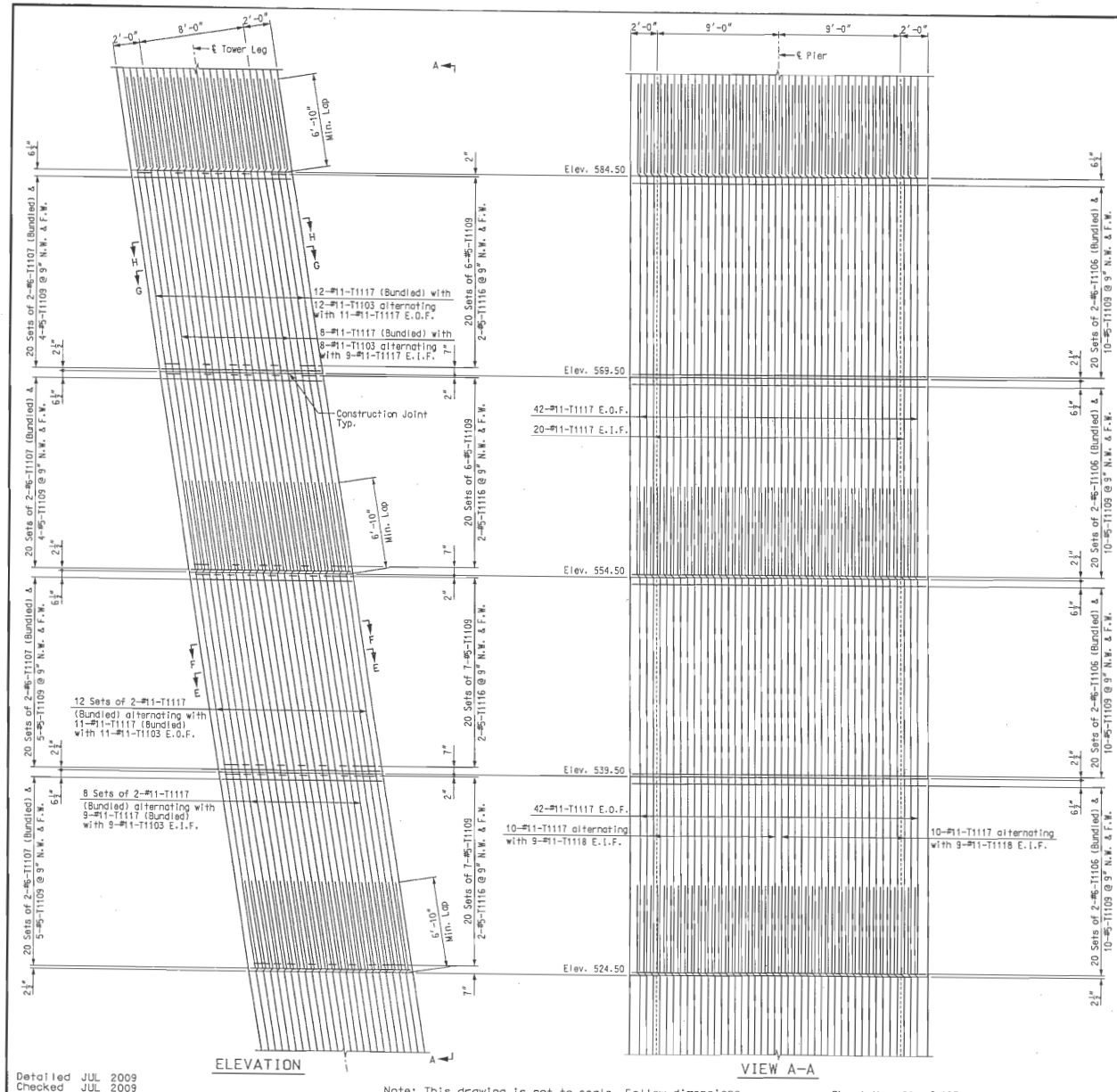

ELEVATION

VIEW A-A

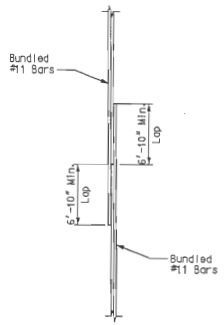

DETAIL OF LAP SPLICE AT BUNDLED #11 BARS

Notes:

Bar Marks shown are for Pier 11, using "T11" Series Bar Marks.

Pier 12 is similar, except use "T12" Series Bar Marks. For Sections E-E, F-F, G-G & H-H, see Sheet No. BR75.

For details on the location and attachment of the aesthetic lighting system to the towers, see electrical plans.

Construction joint surfaces shall be intentionally roughened to a minimum amplitude of ¼" and a frequency no greater than 3".



PIERS 11 & 12 - TOWER

Detailed JUL 2009
Checked JUL 2009

Note: This drawing is not to scale. Follow dimensions.

Sheet No. 68 of 205

\\kcgw00\Jobs\46440\Bridges\Plans\CdotMo00TA6500\J6I0984\A6500-dgn\ZPLOT_B_A6500_068-205_J6I0984_068.dgn 17-MAY-2010 11:30

STATE OF MISSOURI
HANS R. HUTTON
NUMBER E-25174
REGISTERED PROFESSIONAL ENGINEER
Hans R. Hutton

DATE 5/17/10

ROUTE	STATE
I-70	MO/IL
DISTRICT	SHEET NO.
6	BR68

COUNTY
ST. LOUIS CITY - MO
ST. CLAIR - IL

JOB NO.
J6I0984

CONTRACT ID.

PROJECT NO.

BRIDGE NO.
A6500

REV.	DATE	DESCRIPTION
1	5-17-10	Revised per ATC

MISSOURI HIGHWAYS AND TRANSPORTATION COMMISSION
105 WEST CAPITOL
JEFFERSON CITY, MO 65102
1-888-ASK-MODOT (1-888-275-6636)

HNTB
715 KIRK DRIVE
KANSAS CITY, MO 64105-1310
TELEPHONE (816) 472-1201
CERTIFICATE OF AUTHORITY NO. 001270

STATE OF ILLINOIS
HANS R. HUTTON
081-006707
LICENSED STRUCTURAL ENGINEER
EXPIRES 11-30-2010
Hans R. Hutton
5-17-2010

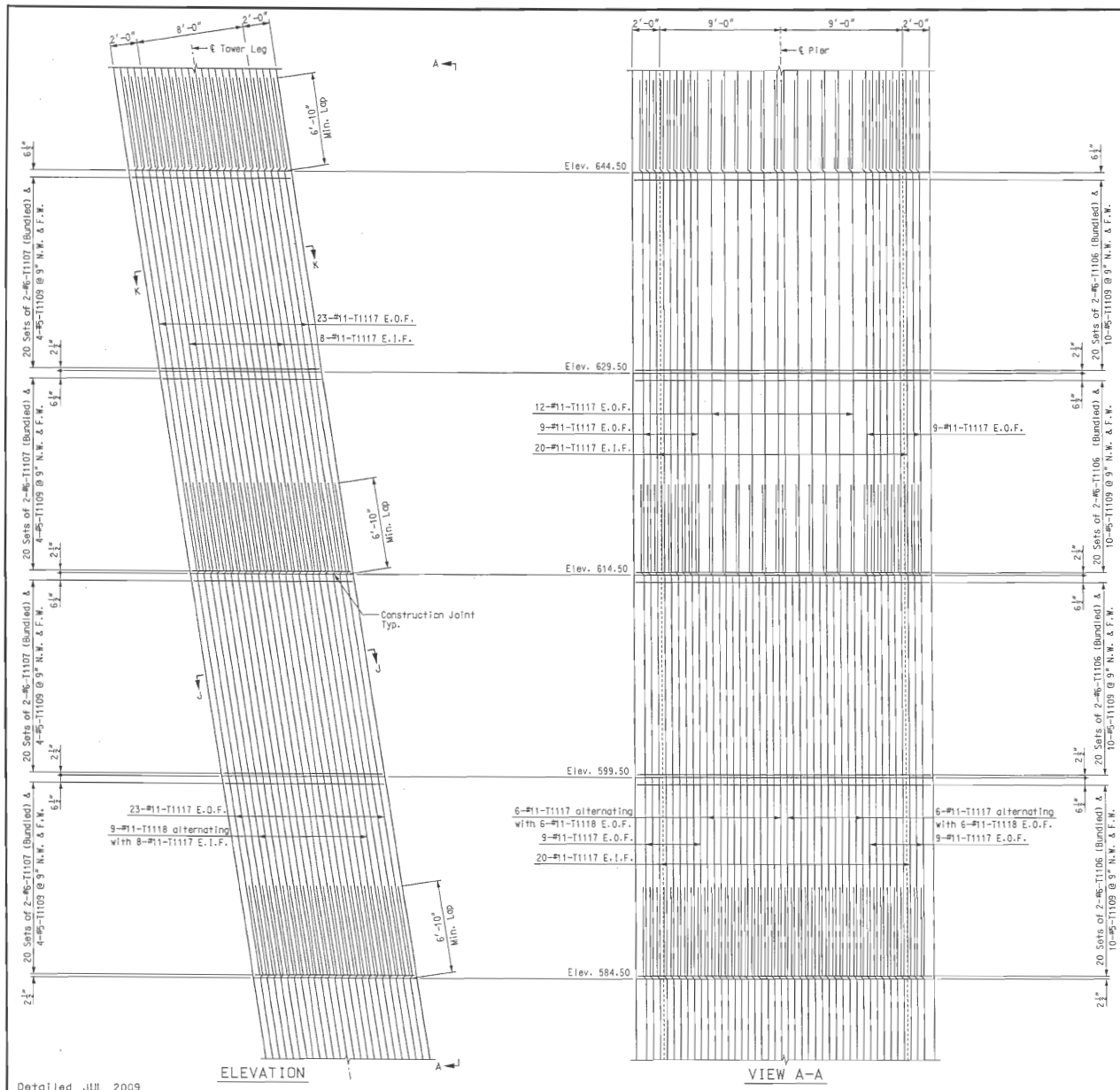

Notes:
Bar Marks shown are for Pier 11, using "T11" Series Bar Marks.
Pier 12 is similar, except use "T12" Series Bar Marks.
For Sections J-J & K-K, see Sheet No. BR76.
For details on the location and attachment of the aesthetic lighting system to the towers, see electrical plans.
Construction joint surfaces shall be intentionally roughened to a minimum amplitude of ¼" and a frequency no greater than 3".

4 PIERS 11 & 12 - TOWER

Detailed JUL 2009
Checked JUL 2009

Note: This drawing is not to scale. Follow dimensions.

Sheet No. 69 of 205

HANS R. HUTTON NUMBER E-29174 REGISTERED PROFESSIONAL ENGINEER STATE OF MISSOURI
Hans R. Hutton
DATE 5/17/10

ROUTE	STATE
I-70	MO/IL
DISTRICT	SHEET NO.
6	BR69

COUNTY
ST. LOUIS CITY - MO
ST. CLAIR - IL

JOB NO.
J6I0984

CONTRACT ID.

PROJECT NO.

BRIDGE NO.
A6500

DATE	DESCRIPTION
5-17-10	Revised per A/C

MISSOURI HIGHWAYS AND TRANSPORTATION COMMISSION
MoDOT
105 WEST CAPITOL
JEFFERSON CITY, MO 65102
1-888-ASK-MODOT (1-888-275-6636)

HNTB
715 KIRK DRIVE
KANSAS CITY, MO 64105-1310
TELEPHONE (816) 472-1201
CERTIFICATE OF AUTHORITY NO. 001170

LICENSED STRUCTURAL ENGINEER
HANS R. HUTTON 081-006707
STATE OF ILLINOIS
Hans R. Hutton
5-17-2010

REV.

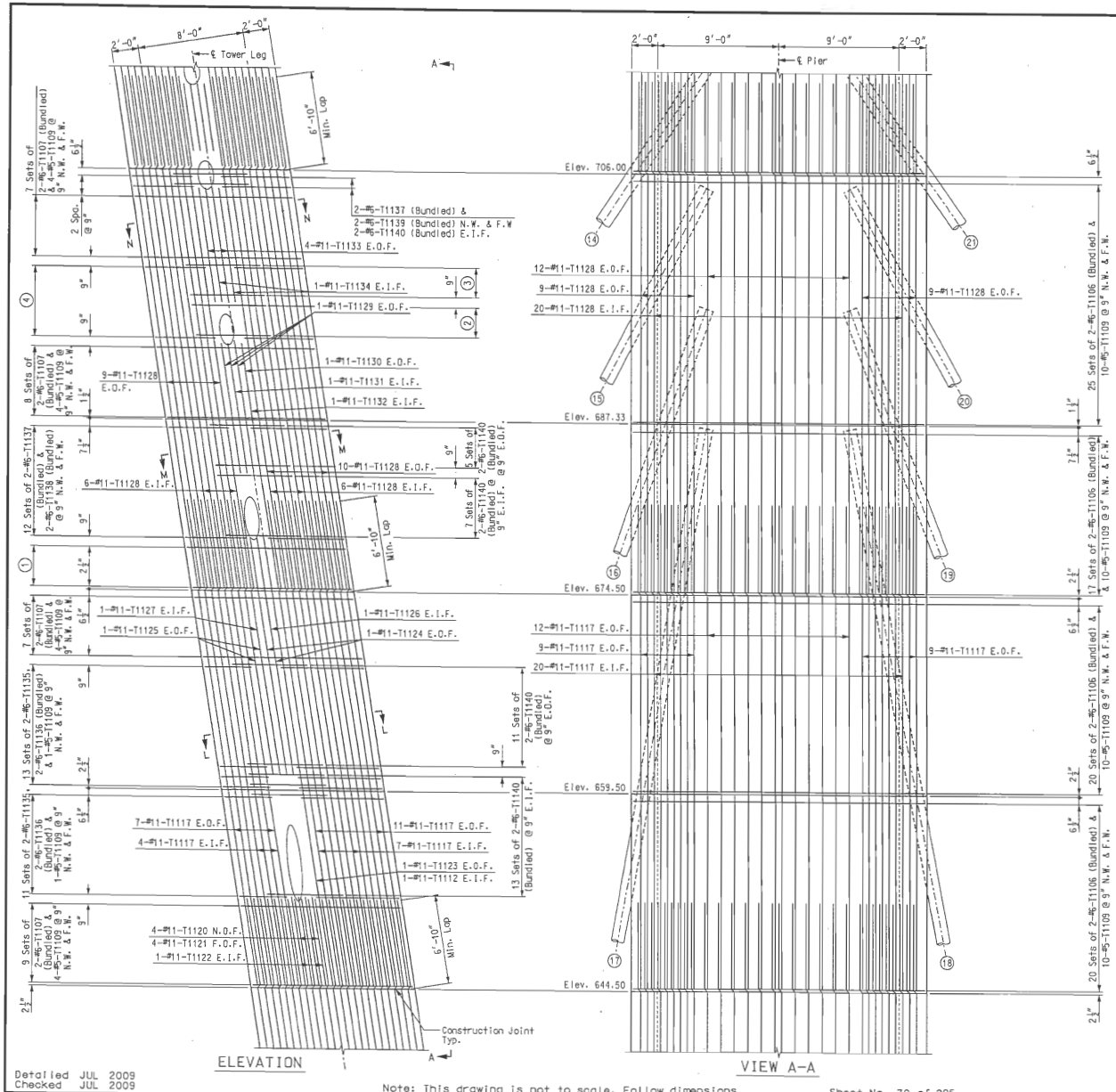

1. 5 Sets of 2-#6-T1107 (Bundled) & 4-#5-T1109 @ 9" N.W. & F.W.
2. 4 Sets of 2-#6-T1140 (Bundled) @ 9" E.I.F.
3. 4 Sets of 2-#6-T1140 (Bundled) @ 9" E.O.F.
4. 8 Sets of 2-#6-T1137 (Bundled) & 2-#6-T1139 (Bundled) @ 9" N.W. & F.W.

Notes:
Bar Marks shown are for Pier 11, using "T11" Series Bar Marks.
Pier 12 is similar, except use "T12" Series Bar Marks.
For Sections L-L, M-M & N-N, see Sheet BR77.
For details on the location and attachment of the aesthetic lighting system to the towers, see electrical plans.
Construction joint surfaces shall be intentionally roughened to a minimum amplitude of ¼" and a frequency no greater than 3".
(#) denotes Stay Cable Number.

PIERS 11 & 12 - TOWER

Detailed JUL 2009
Checked JUL 2009

Note: This drawing is not to scale. Follow dimensions.

Sheet No. 70 of 205

\\kcaw00\jobs\46440\Bridges\Plans\CdtoMoDOTA6500\J6I0984\A6500-dgn\ZPLOT_B_A6500_070-205_J6I0984_070.dgn

17-MAY-2010 11:30

STATE OF MISSOURI
HANS R. HUTTON
NUMBER E-29174
REGISTERED PROFESSIONAL ENGINEER
Hans R. Hutton

DATE 5/17/10
ROUTE I-70
STATE MO/IL
DISTRICT 6
SHEET NO. BR70
COUNTY ST. LOUIS CITY - MO ST. CLAIR - IL
JOB NO. J6I0984
CONTRACT ID.
PROJECT NO.
BRIDGE NO. A6500

REV.	DATE	DESCRIPTION
1	5-17-10	Revised per ATC

MISSOURI HIGHWAYS AND TRANSPORTATION COMMISSION
105 WEST CAPITOL
JEFFERSON CITY, MO 65102
1-888-ASK-MODOT (1-888-275-6636)

HNTB
715 KIRK DRIVE
KANSAS CITY, MO 64105-1310
TELEPHONE (816) 472-1201
CERTIFICATE OF AUTHORITY NO. 001270

PROFESSIONAL STRUCTURAL ENGINEER
HANS R. HUTTON
081-006707
STATE OF ILLINOIS
MY REN. 11-30-2010
Hans R. Hutton
5-17-2010

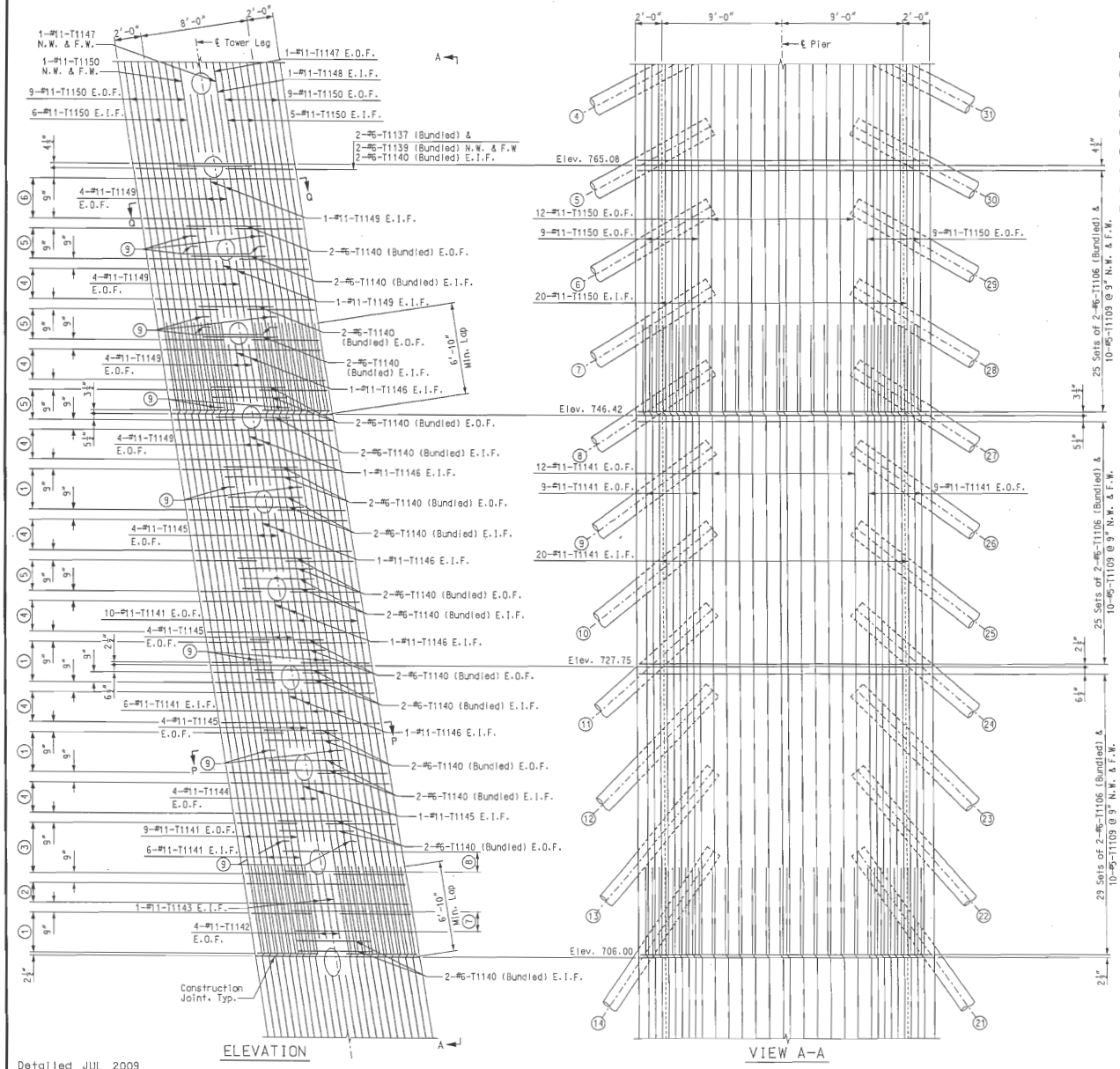

1. 5 Sets of 2-#6-T1137 (Bundled) & 2-#6-T1139 (Bundled) @ 9" N.W. & F.W.
2. 3 Sets of 2-#6-T1107 (Bundled) & 4-#5-T1109 @ 9" N.W. & F.W.
3. 6 Sets of 2-#6-T1137 (Bundled) & 2-#6-T1139 (Bundled) @ 9" N.W. & F.W.
4. 4 Sets of 2-#6-T1107 (Bundled) & 4-#5-T1109 @ 9" N.W. & F.W.
5. 4 Sets of 2-#6-T1137 (Bundled) & 2-#6-T1139 (Bundled) @ 9" N.W. & F.W.
6. 5 Sets of 2-#6-T1107 (Bundled) & 4-#5-T1109 @ 9" N.W. & F.W.
7. 3 Sets of 2-#6-T1140 (Bundled) @ 9" E.O.F.
8. 3 Sets of 2-#6-T1140 (Bundled) @ 9" E.I.F.
9. 1-#5-T1109 N.W. & F.W.

Notes:
Bar Marks shown are for Pier 11, using "T11" Series Bar Marks.
Pier 12 is similar, except use "T12" Series Bar Marks.
For Sections P-P & Q-Q, see Sheet BR78.
For details on the location and attachment of the aesthetic lighting system to the towers, see electrical plans.
Construction joint surfaces shall be intentionally roughened to a minimum amplitude of ¼" and a frequency no greater than 3".
(#) denotes Stay Cable Number.

4 PIERS 11 & 12 - TOWER

Detailed JUL 2009
Checked JUL 2009

Note: This drawing is not to scale. Follow dimensions.

Sheet No. 71 of 205

HANS R. HUTTON NUMBER E-29174 REGISTERED PROFESSIONAL ENGINEER STATE OF MISSOURI
Hans R. Hutton

DATE 5/17/10
ROUTE I-70 | STATE MO/IL
DISTRICT 6 | SHEET NO. BR71
COUNTY ST. LOUIS CITY - MO ST. CLAIR - IL
JOB NO. J6I0984
CONTRACT ID.
PROJECT NO.
BRIDGE NO. A6500

DATE	DESCRIPTION
5-17-10	1 Revised per ATC

MISSOURI HIGHWAYS AND TRANSPORTATION COMMISSION
MoDOT
105 WEST CAPITOL
JEFFERSON CITY, MO 65102
1-888-ASK-MODOT (1-888-275-6636)

HNTB
715 KIRK DRIVE
KANSAS CITY, MO 64105-1310
TELEPHONE (816) 472-1201
CERTIFICATE OF AUTHORITY NO. 001270

REGISTERED STRUCTURAL ENGINEER
HANS R. HUTTON 081-006707
STATE OF ILLINOIS
Hans R. Hutton
5-17-2010

REV.

\\kcow00\jobs\46440\Bridges\Plans\CdtoMoDOTA6500\J6I0984\A6500-dgn\ZPLOT_B_A6500_071-205_J6I0984_071.dgn 17-MAY-2010 11:30

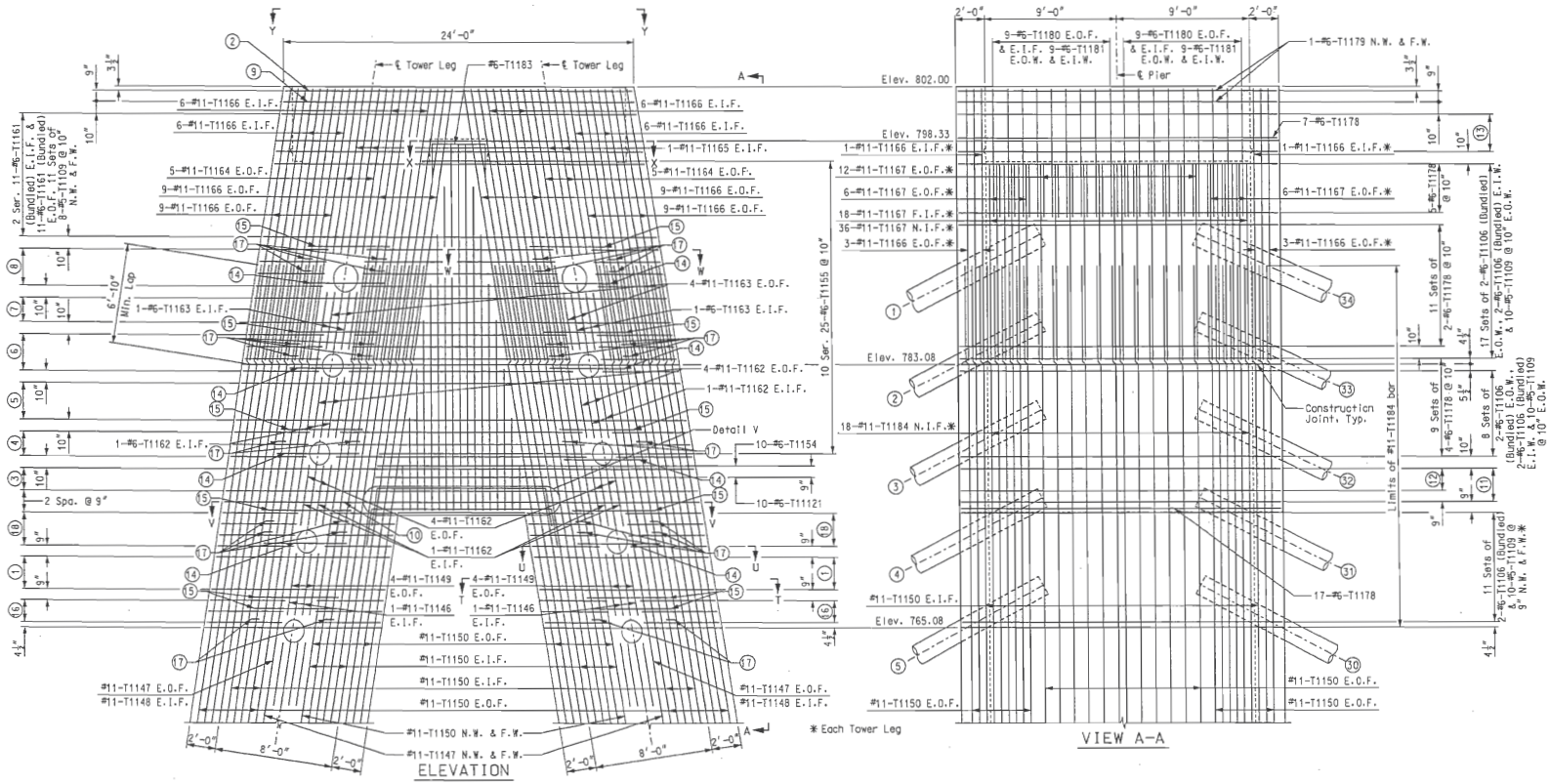

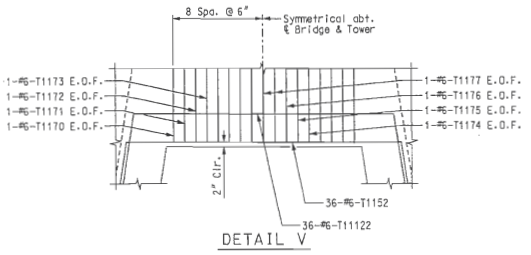

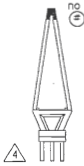

PIERS 11 & 12 - TOWER

(1) 4 Sets of 2-#6-T1107 (Bundled), 4-#5-T1109 & 1-#6-T1187 @ 9" N.W. & F.W.

(2) 1-#6-T1169 E.I.F. & 1-#6-T1169 E.O.F.

(3) 2 Ser. of 3-#6-T1153 (Bundled) E.I.F. & 3-#6-T1153 (Bundled) E.O.F. @ 9"
3 Sets of 8-#5-T1109 @ 9" N.W. & F.W.

(4) 2 Ser. of 3-#6-T1156 (Bundled) @ 10" N.W. & F.W.
3 Sets of 4-#6-T1139 (Bundled) @ 10" N.W. & F.W.

(5) 2 Ser. of 4-#6-T1157 (Bundled) E.I.F. & 4-#6-T1157 (Bundled) E.O.F. @ 10"
4 Sets of 8-#5-T1109 @ 10" N.W. & F.W.

(6) 2 Ser. of 4-#6-T1158 (Bundled) @ 10" N.W. & F.W.
4 Sets of 4-#6-T1139 (Bundled) @ 10" N.W. & F.W.

(7) 2 Ser. of 3-#6-T1159 (Bundled) E.I.F. & 3-#6-T1159 (Bundled) E.O.F. @ 10"
3 Sets of 8-#5-T1109 @ 10" N.W. & F.W.

(8) 2 Ser. of 4-#6-T1160 (Bundled) @ 10" N.W. & F.W.
4 Sets of 4-#6-T1137 (Bundled) @ 10" N.W. & F.W.

(9) 1-#6-T1168 E.I.F. & 1-#6-T1168 E.O.F.
8-#5-T1109 N.W. & F.W.

(10) 2-#6-T1151 (Bundled) E.I.F., 2-#6-T1151 (Bundled) E.O.F. & 8-#5-T1109 N.W. & F.W.

(11) 4 Sets of 2-#6-T1106 (Bundled) E.O.W., 2-#6-T1106 (Bundled) E.I.W. & 10-#5-T1109 @ 9" E.O.W.

(12) 3 Sets of 4-#6-T1178 @ 9"

(13) 4 Sets of 2-#6-T1179 @ 10" N.W. & F.W.

(14) 2-#6-T1140 (Bundled) E.I.F.

(15) 2-#6-T1140 (Bundled) E.O.F.

(16) 3 Sets of 2-#6-T1137 (Bundled), 2-#6-T1139 (Bundled),
1-#6-T1185 & 1-#6-T1186 @ 9" N.W. & F.W.

(17) 1-#5-T1109 N.W. & F.W.

(18) 4 Sets of 2-#6-T1137 (Bundled), 2-#6-T1139 (Bundled),
1-#6-T1185 & 1-#6-T1186 @ 9" N.W. & F.W.

Notes:
Bar Marks shown are for Pier 11, using "T11" Series Bar Marks.
Pier 12 is similar, except use "T12" Series Bar Marks.
For Sections T-T, U-U, V-V & W-W, see Sheet BR79.
For Section X-X, see Sheet BR80.
For View Y-Y, see Sheet BR80.
For details on the location and attachment of the aesthetic lighting system to the towers, see electrical plans.
Construction joint surfaces shall be intentionally roughened to a minimum amplitude of ¼" and a frequency no greater than 3".
(#) denotes Stay Cable Number.

Detailed JUL 2009
Checked JUL 2009

Note: This drawing is not to scale. Follow dimensions.

Sheet No. 72 of 205

\\kcow00\jobs\45440\Bridges\Plans\CdtoMoDOT6500\J6I0984\A6500-dgn\ZPLOT_B_A6500_072-205_J6I0984_072.dgn

17-MAY-2010 11:30

STATE OF MISSOURI
HANS R. HUTTON
NUMBER E-25974
REGISTERED PROFESSIONAL ENGINEER
Hans R. Hutton

DATE: 5/17/10
ROUTE: I-70 | STATE: MO/IL
DISTRICT: 6 | SHEET NO.: BR72
COUNTY: ST. LOUIS CITY - MO, ST. CLAIR - IL
JOB NO.: J6I0984
CONTRACT ID.:
PROJECT NO.:
BRIDGE NO.: A6500

DATE	DESCRIPTION
5-17-10	Revised per ATC

MISSOURI HIGHWAYS AND TRANSPORTATION COMMISSION
105 WEST CAPITOL
JEFFERSON CITY, MO 65102
1-888-ASK-MODOT (1-888-275-6636)

HNTB
715 KING DRIVE
KANSAS CITY, MO 64105-1310
TELEPHONE (816) 472-1201
CERTIFICATE OF AUTHORITY NO. 001270

LICENSED STRUCTURAL ENGINEER
HANS R HUTTON
081-006707
STATE OF ILLINOIS
expires 11-30-2010
Hans R. Hutton
5-17-2010

REV.

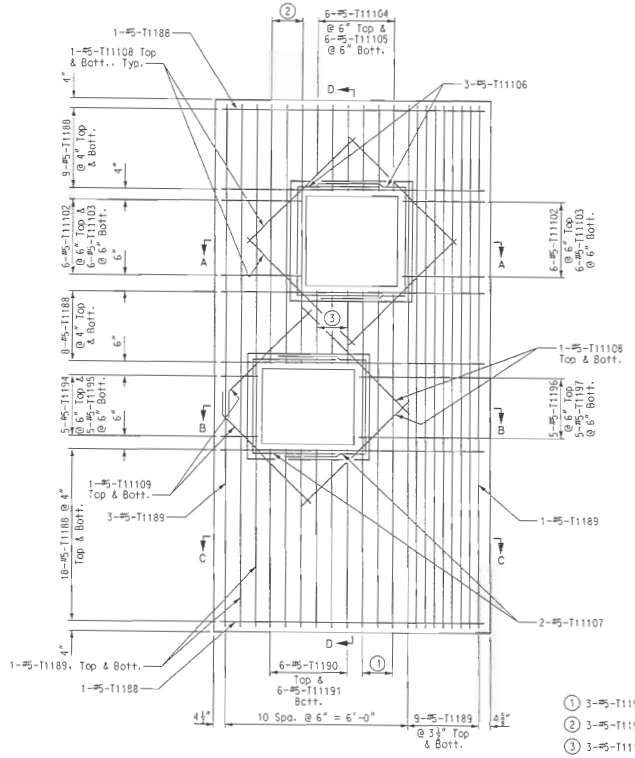

REINFORCING PLAN - PRECAST CAP

① 3-#5-T1192 Top & 3-#5-T1193 Bott.
② 3-#5-T1198 @ 6" Top & 3-#5-T1199 @ 6" Bott.
③ 3-#5-T11100 @ 6" Top & 3-#5-T11101 @ 6" Bott.

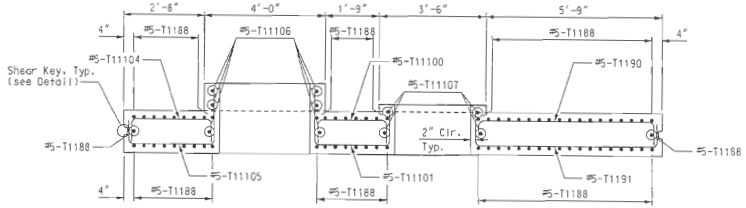

SECTION D-D
#5-T11108 not shown for clarity

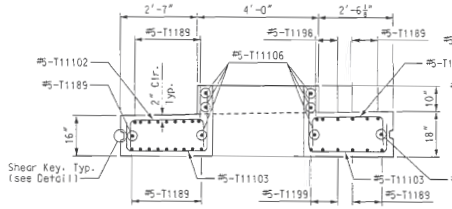

SECTION A-A
#5-T11108 not shown for clarity

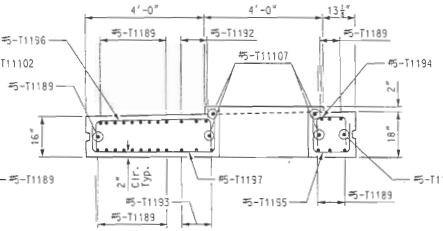

SECTION B-B
#5-T11108 & #5-T11109 not shown for clarity

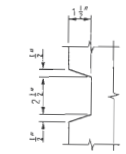

SHEAR KEY DETAIL

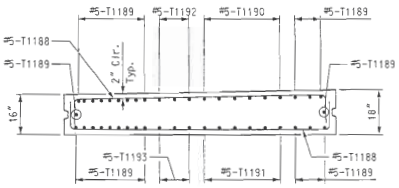

SECTION C-C

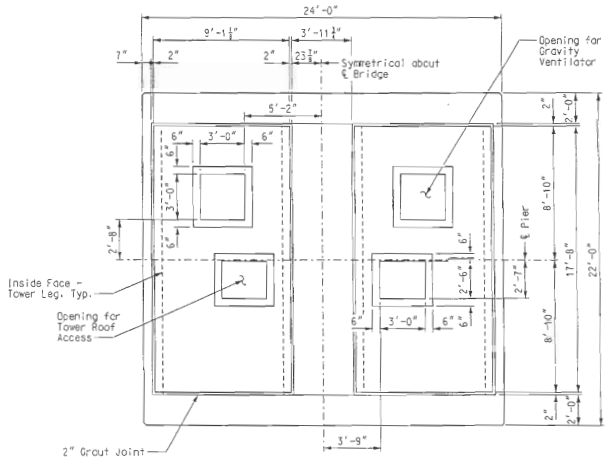

PLAN - PRECAST CAP

Notes:
Bar Marks shown are for Pier 11, using "T11" Series Bar Marks.
Pier 12 is similar, except use "T12" Series Bar Marks.
For additional roof access details, see Sheet No. BR85.
For additional gravity ventilator details, see Sheet No. BR87.
For tower details at precast cap, see Sheet No. BR80.

PIERS 11 & 12 - TOWER

Detailed JUL 2009
Checked JUL 2009

Note: This drawing is not to scale. Follow dimensions.

Sheet No. 73 of 205

\\kcow00\jobs\46440\Bridges\Plans\CdotoMoDOTA6500\J6I0984\A6500-dgn\ZPLOT_B_A6500_001-205_J6I0984_073.dgn

19-AUG-2009 07:07

STATE OF MISSOURI
HANS R. HUTTON
NUMBER E-26174
REGISTERED PROFESSIONAL ENGINEER
Hans R. Hutton

DATE 8/20/09
ROUTE I-70 | STATE MO/IL
DISTRICT 6 | SHEET NO. BR73
COUNTY ST. LOUIS CITY - MO ST. CLAIR - IL
JOB NO. J6I0984
CONTRACT ID.
PROJECT NO.
BRIDGE NO. A6500

DESCRIPTION	DATE

MISSOURI HIGHWAYS AND TRANSPORTATION COMMISSION
MoDOT
105 WEST CAPITOL
JEFFERSON CITY, MO 65102
1-888-ASK-MODOT (1-888-275-6636)

HNTB
715 KIRK DRIVE
KANSAS CITY, MO 64105-1310
816.472.1201 FAX 816.472.1201
CERTIFICATE OF AUTHORITY NO. 000270

LICENSED STRUCTURAL ENGINEER
HANS R. HUTTON
081-006707
STATE OF ILLINOIS
AGENCY
Hans R. Hutton
8-20-2009

REV.

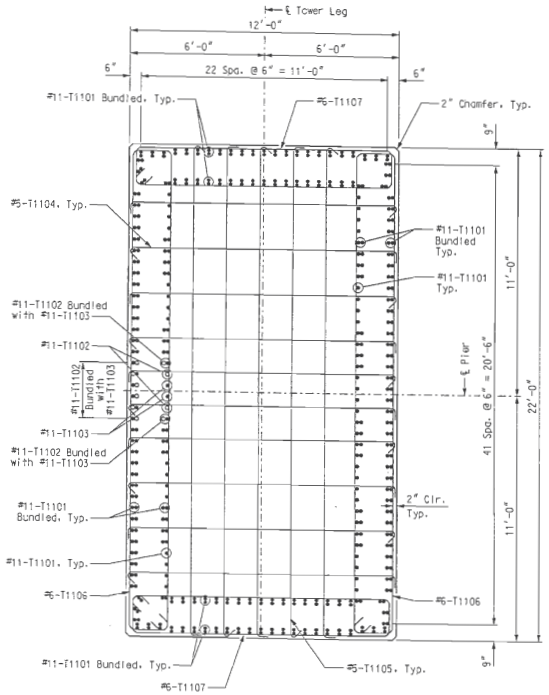

SECTION B-B

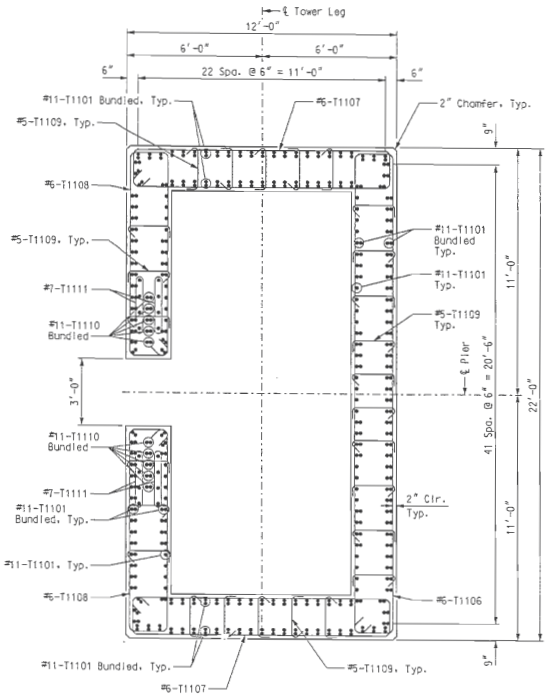

SECTION C-C

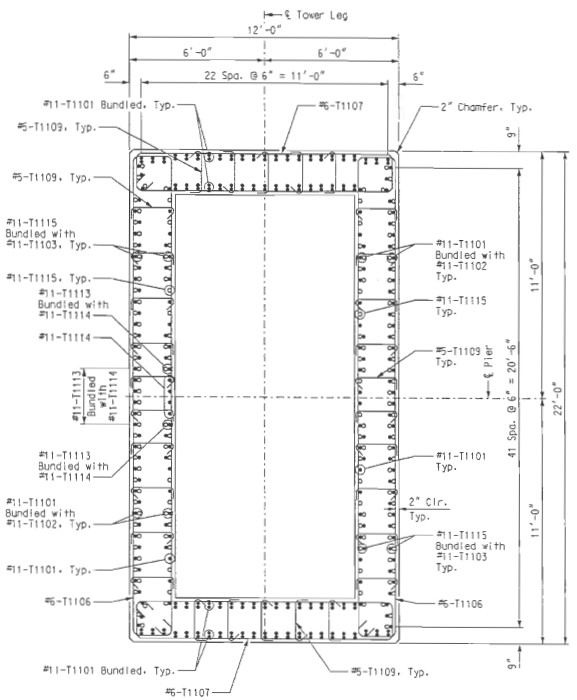

SECTION D-D

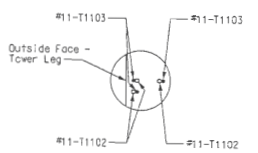

ORIENTATION OF BUNDLED #11 BARS (VERTICAL) SECTION B-B

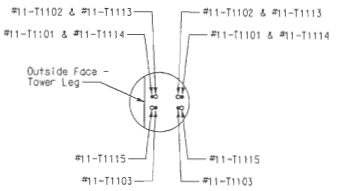

ORIENTATION OF BUNDLED #11 BARS (VERTICAL) SECTION D-D

Notes:
Bar Marks shown are for Pier 11, using "T11" Series Bar Marks.
Pier 12 is similar, except use "T12" Series Bar Marks.
For Location of Sections B-B, C-C & D-D, see Sheet No. BR67.
For tower access opening details, see Sheet No. BR83.

PIERS 11 & 12 - TOWER

Detailed JUL 2009
Checked JUL 2009

Note: This drawing is not to scale. Follow dimensions.

STATE OF MISSOURI HANS R. HUTTON NUMBER E-29174 REGISTERED PROFESSIONAL ENGINEER
Hans R. Hutton

DATE	DESCRIPTION
8/20/09	
ROUTE I-70	STATE MO/IL
DISTRICT 6	SHEET NO. BR74
COUNTY ST. LOUIS CITY - MO ST. CLAIR - IL	
JOB NO. J6I0984	
CONTRACT ID.	
PROJECT NO.	
BRIDGE NO. A6500	

MISSOURI HIGHWAYS AND TRANSPORTATION COMMISSION
MoDOT
105 WEST CAPITOL
JEFFERSON CITY, MO 65102
1-888-ASK-MODOT (1-888-275-6636)

HNTB
715 KIRK DRIVE
KANSAS CITY, MO 64105-1310
TELEPHONE (816) 472-1201
CERTIFICATE OF AUTHORITY NO. 001270

LICENSED STRUCTURAL ENGINEER HANS R. HUTTON 081-006707 STATE OF ILLINOIS
expires 11-30-2010
Hans R. Hutton
signature
8-20-2009
date

REV.

\\kcow00\jobs\46440\Bridges\Plans\CdtaMoDOTA6500\J6I0984\A6500-dgn\ZPLOT_B_A6500_001-205_J6I0984_074.dgn
19-AUG-2009 07:07

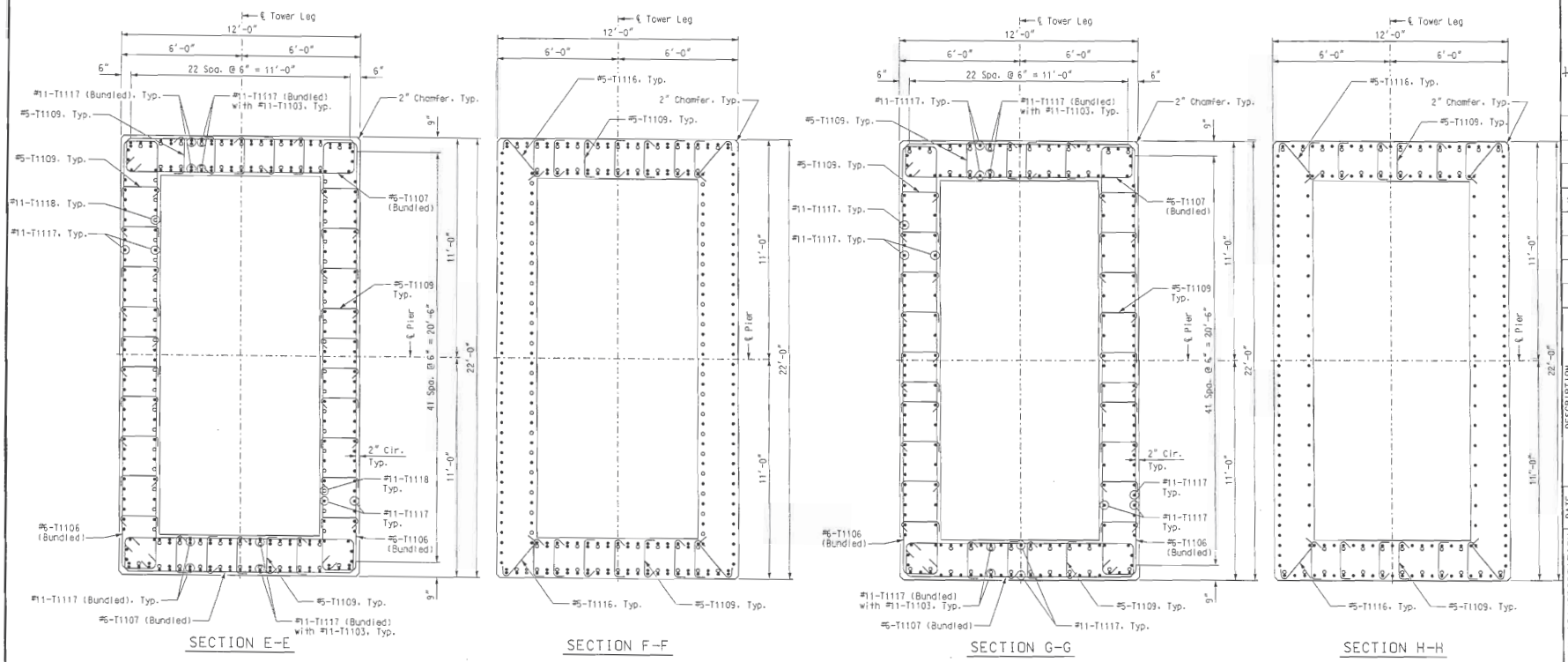

SECTION E-E

SECTION F-F

SECTION G-G

SECTION H-H

Notes:
Bar Marks shown are for Pier 11, using "T11" Series Bar Marks.
Pier 12 is similar, except use "T12" Series Bar Marks.
For Location of Sections E-E, F-F, G-G & H-H, see Sheet No. BR68.

PIERS 11 & 12 - TOWER

Detailed JUL 2009
Checked JUL 2009

Note: This drawing is not to scale. Follow dimensions.

Sheet No. 75 of 205

STATE OF MISSOURI
HANS R. HUTTON
NUMBER E-2974
REGISTERED PROFESSIONAL ENGINEER
Hans R. Hutton

DATE	8/20/09
ROUTE	I-70
STATE	MO/IL
DISTRICT	6
SHEET NO.	BR75
COUNTY	ST. LOUIS CITY - MO ST. CLAIR - IL
JOB NO.	J6I0984
CONTRACT ID.	
PROJECT NO.	
BRIDGE NO.	A6500

DATE	DESCRIPTION

MISSOURI HIGHWAYS AND TRANSPORTATION COMMISSION

MoDOT

105 WEST CAPITOL
JEFFERSON CITY, MO 65102
1-888-ASK-MODOT (1-888-275-6636)

HNTB
115 KING DRIVE
KANSAS CITY, MO 64105-1310
TELEPHONE (816) 472-1201
CERTIFICATE OF AUTHORITY
NO. 00270

LICENSED STRUCTURAL ENGINEER
HANS R. HUTTON
081-006707
STATE OF ILLINOIS
Hans R. Hutton
8-20-2009

REV.

\\kcow00\jobs\46440\Bridges\Plans\CdtoMoDOTA6500\J6I0984\A6500-dgn\ZPLOT_B_A6500_001-205_J6I0984_075.dgn

19-AUG-2009 07:07

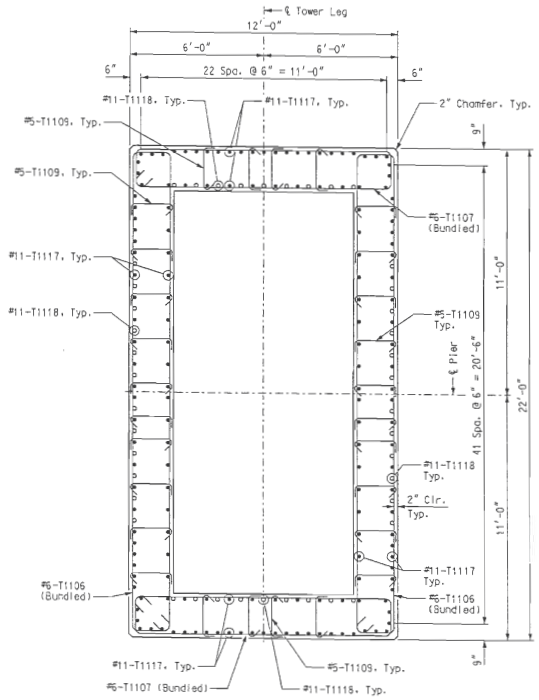

SECTION J-J

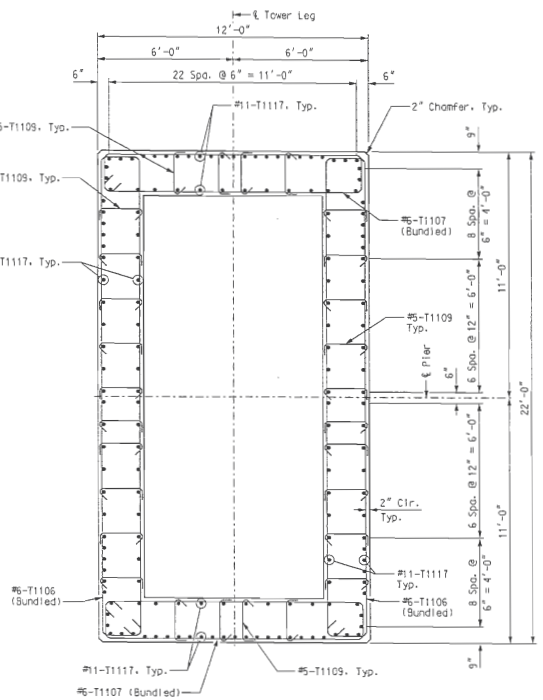

SECTION K-K

Notes:
Bar Marks shown are for Pier 11, using "T11" Series Bar Marks.
Pier 12 is similar, except use "T12" Series Bar Marks.
For Location of Sections J-J & K-K, see Sheet No. BR69.

PIERS 11 & 12 - TOWER

STATE OF MISSOURI
HANS R. HUTTON
NUMBER E-20174
REGISTERED PROFESSIONAL ENGINEER
Hans R. Hutton

DATE 8/20/09
ROUTE I-70
STATE MO/IL
DISTRICT 6
SHEET NO. BR76
COUNTY ST. LOUIS CITY - MO ST. CLAIR - IL
JOB NO. J6I0984
CONTRACT ID.
PROJECT NO.
BRIDGE NO. A6500

DESCRIPTION	DATE

MISSOURI HIGHWAYS AND TRANSPORTATION COMMISSION
105 WEST CAPITOL
JEFFERSON CITY, MO 65102
1-888-ASK-MODOT (1-888-275-6636)

HNTB
715 KIRK DRIVE
KANSAS CITY, MO 64105-1310
TELEPHONE (816) 472-1201
CERTIFICATE OF AUTHORITY NO. 001270

LICENSED STRUCTURAL ENGINEER
HANS R. HUTTON
081-008707
STATE OF ILLINOIS
Hans R. Hutton
8-20-2009

Detailed JUL 2009
Checked JUL 2009

Note: This drawing is not to scale. Follow dimensions.

\\kcow00\jobs\48440\Bridges\Plans\CdotoMoDOTA6500\J6I0984\A6500-dgn\ZPLOT_B_A6500_001-205_J6I0984_076.dgn

19-AUG-2009 07:07

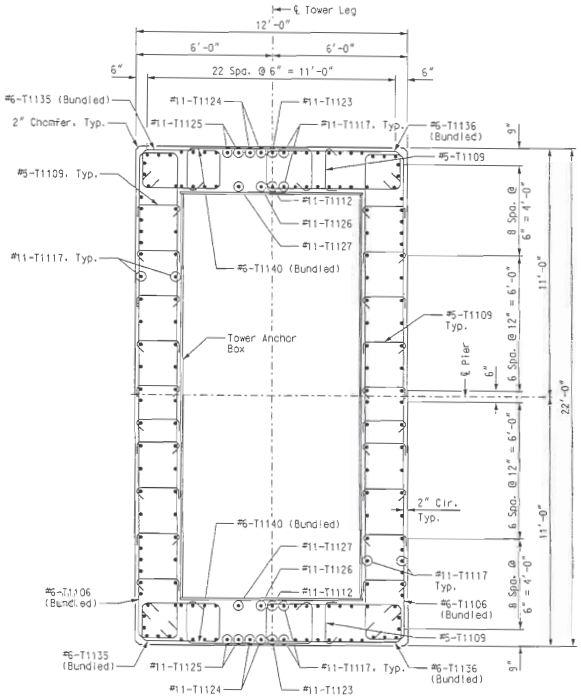

SECTION L-L

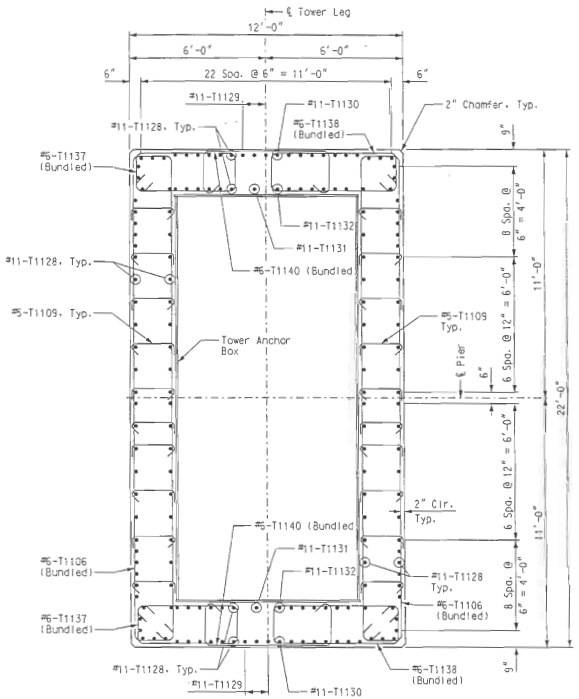

SECTION M-M

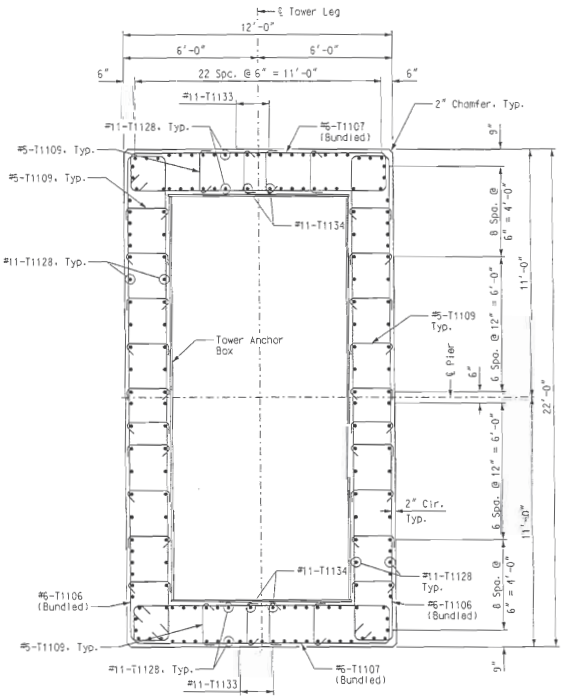

SECTION N-N

Notes:
Bar Marks shown are for Pier 11, using "T11" Series Bar Marks.
Pier 12 is similar, except use "T12" Series Bar Marks.
For Location of Sections L-L, M-M & N-N, see Sheet No. BR70.
For Tower Anchor Box details, see Sheet Nos. BR88 thru BR93.

PIERS 11 & 12 - TOWER

Detailed JUL 2009
Checked JUL 2009

Note: This drawing is not to scale. Follow dimensions.

Sheet No. 77 of 205

STATE OF MISSOURI
HANS R. HUTTON
NUMBER E-39974
REGISTERED PROFESSIONAL ENGINEER
Hans R. Hutton

DATE	
8/20/09	
ROUTE	STATE
I-70	MO/IL
DISTRICT	SHEET NO.
6	BR77
COUNTY	
ST. LOUIS CITY - MO ST. CLAIR - IL	
JOB NO.	
J6I0984	
CONTRACT ID.	
PROJECT NO.	
BRIDGE NO.	
A6500	

DATE	DESCRIPTION

MISSOURI HIGHWAYS AND TRANSPORTATION COMMISSION

MoDOT
105 WEST CAPITOL
JEFFERSON CITY, MO 65102
1-888-ASK-MODOT (1-888-275-6636)

HNTB
715 KIRK DRIVE
KANSAS CITY, MO 64105-1310
TELEPHONE (816) 472-1201
CERTIFICATE OF AUTHORITY NO. 001270

LICENSED STRUCTURAL ENGINEER
HANS R. HUTTON
NUMBER 6-39974
STATE OF ILLINOIS
Hans R. Hutton
8-20-2009

REV.

\\kcow00\jobs\46440\Bridges\Plans\CdtoMoDOTA6500\J6I0984\A6500-dgn\ZPLOT_B_A6500_001-205_J6I0984_077.dgn

19-AUG-2009 07:07

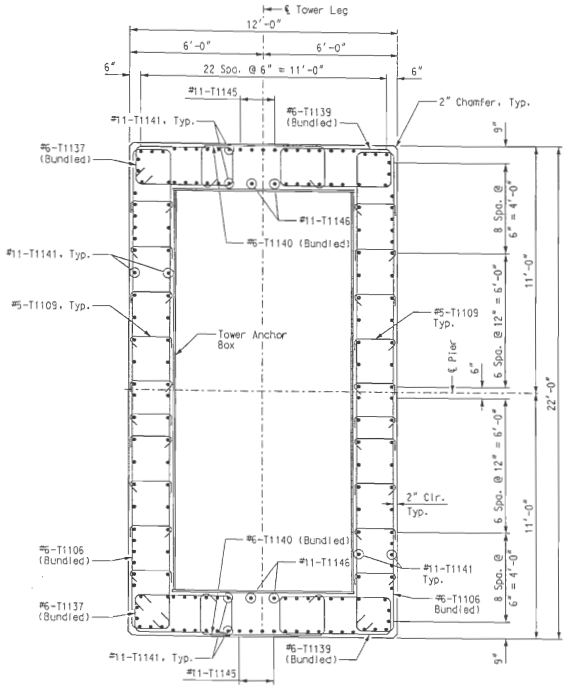

SECTION P-P

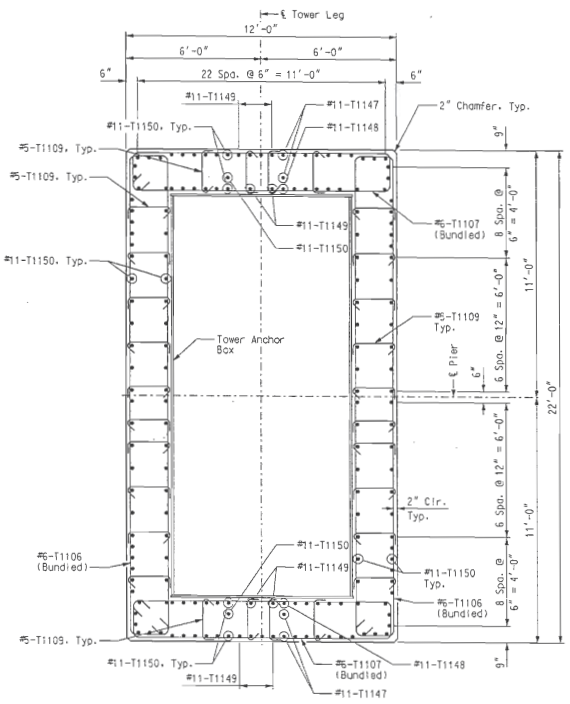

SECTION Q-Q

Notes:
Bar Marks shown are for Pier 11, using "T11" Series Bar Marks.
Pier 12 is similar, except use "T12" Series Bar Marks.
For Location of Sections P-P & Q-Q, see Sheet No. BR71.
For Tower Anchor Box details, see Sheet Nos. BR88 thru BR93.

PIERS 11 & 12 - TOWER

STATE OF MISSOURI
HANS R. HUTTON
NUMBER E-29174
REGISTERED PROFESSIONAL ENGINEER
Hans R. Hutton

DATE 8/20/09
ROUTE I-70
STATE MO/IL
DISTRICT 6
SHEET NO. BR78
COUNTY ST. LOUIS CITY - MO ST. CLAIR - IL
JOB NO. J6I0984
CONTRACT ID.
PROJECT NO.
BRIDGE NO. A6500

DESCRIPTION	DATE

MISSOURI HIGHWAYS AND TRANSPORTATION COMMISSION
105 WEST CAPITOL
JEFFERSON CITY, MO 65102
1-888-ASK-MODOT (1-888-275-6636)

HNTB
715 KIRK DRIVE
KANSAS CITY, MO 64105-1310
TELEPHONE (816) 472-1201
CERTIFICATE OF AUTHORITY NO. 000770

LICENSED STRUCTURAL ENGINEER
HANS R. HUTTON
081-006707
STATE OF ILLINOIS
RENEW 11-30-2010
Hans R. Hutton
8-20-2009

REV.

Detailed JUL 2009
Checked JUL 2009

Note: This drawing is not to scale. Follow dimensions.

\\kcaw00\jobs\46440\Bridges\Plans\CdotMo00TA6500\J6I0984\A6500-dgn\ZPLOT_B_A6500_001-205_J6I0984_078.dgn

19-AUG-2009 07:08

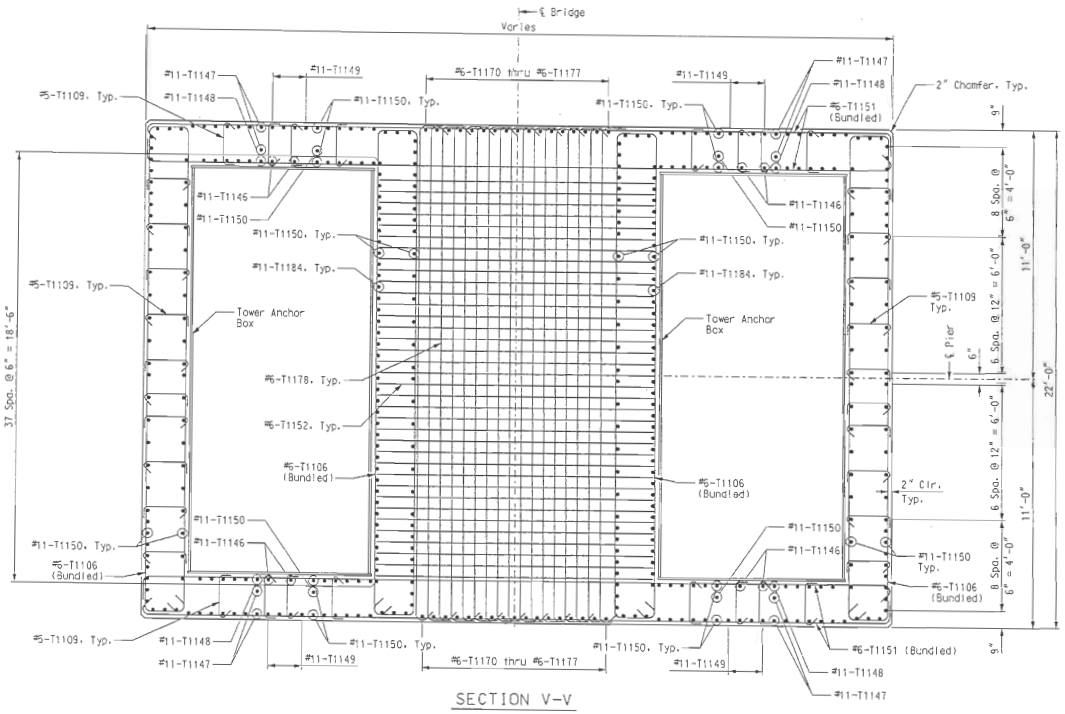

SECTION V-V

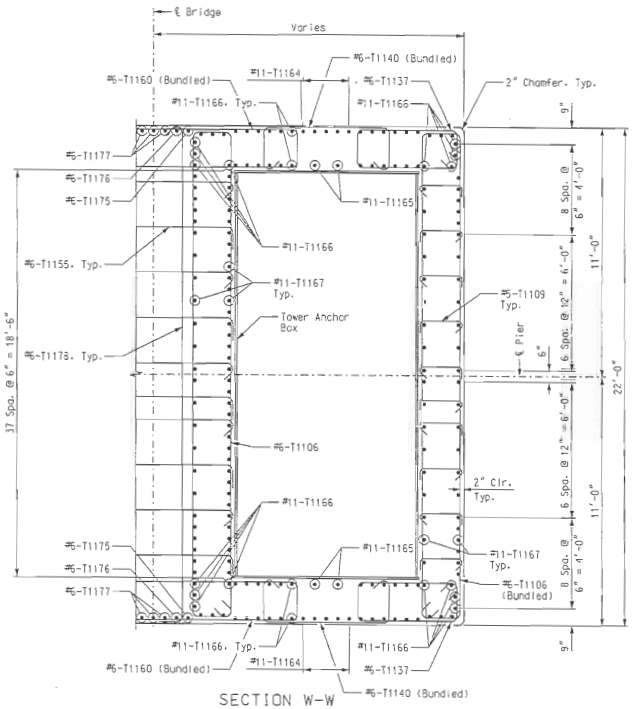

SECTION W-W

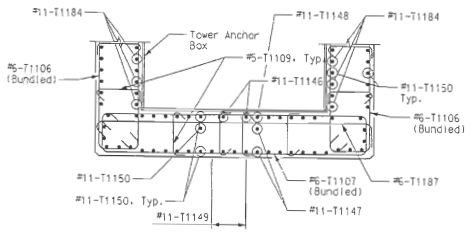

SECTION T-T

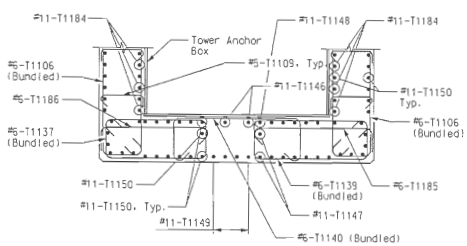

SECTION U-U

Notes:
Bar Marks shown are for Pier 11, using "T11" Series Bar Marks.
Pier 12 is similar, except use "T12" Series Bar Marks.
For Location of Sections V-V & W-W, see Sheet No. BR72.
For Tower Anchor Box details, see Sheet No. BR88 thru BR93.

PIERS 11 & 12 - TOWER

Detailed JUL 2009
Checked JUL 2009

Note: This drawing is not to scale. Follow dimensions.

Sheet No. 79 of 205

STATE OF MISSOURI
HANS R. HUTTON
NUMBER E-29174
REGISTERED PROFESSIONAL ENGINEER
Hans R. Hutton

DATE	8/20/09
ROUTE	I-70
STATE	MO/IL
DISTRICT	6
SHEET NO.	BR79
COUNTY	ST. LOUIS CITY - MO ST. CLAIR - IL
JOB NO.	J6I0984
CONTRACT ID.	
PROJECT NO.	
BRIDGE NO.	A6500

DESCRIPTION

DATE

MISSOURI HIGHWAYS AND TRANSPORTATION COMMISSION

MoDOT
105 WEST CAPITOL
JEFFERSON CITY, MO 65102
1-888-ASK-MODOT (1-888-275-6636)

HNTB
715 KIRK DRIVE
KANSAS CITY, MO 64105-1310
TELEPHONE (816) 472-1201
CERTIFICATE OF AUTHORITY
NO. 001270

LICENSED STRUCTURAL ENGINEER
HANS R. HUTTON
STATE OF ILLINOIS
Hans R. Hutton
8-20-2009

REV.

\\kcow00\jobs\46440\Bridges\Plans\CatoMoDOTA6500\J6I0984\A6500-dgn\ZPLOT_B_A6500_001-205_J6I0984_079.dgn

19-AUG-2009 07:08

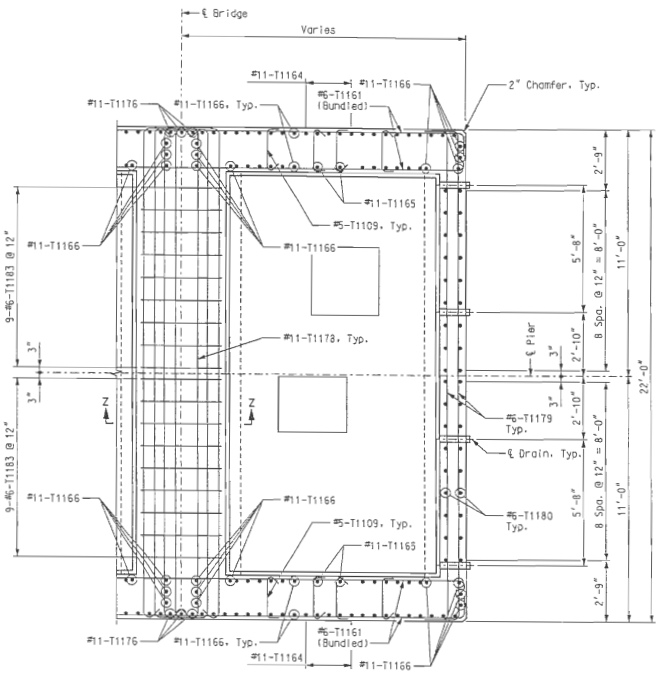

SECTION X-X

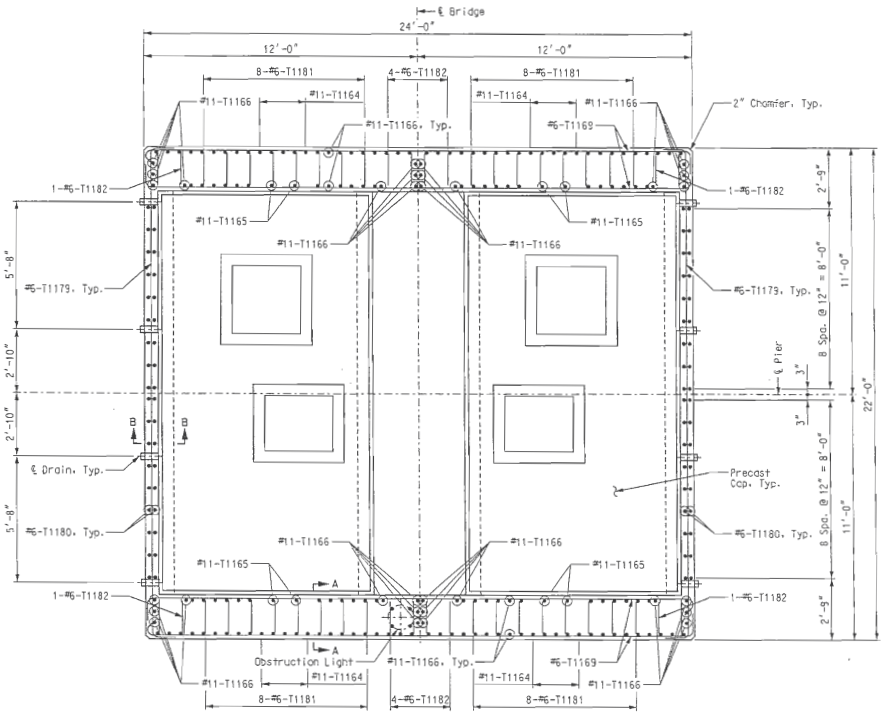

VIEW Y-Y

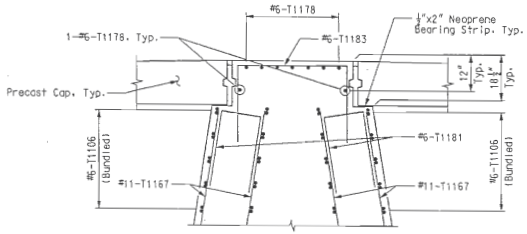

SECTION Z-Z

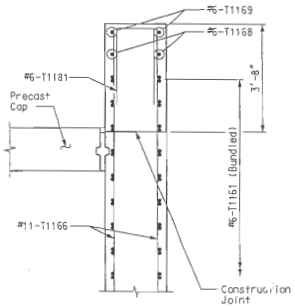

SECTION A-A

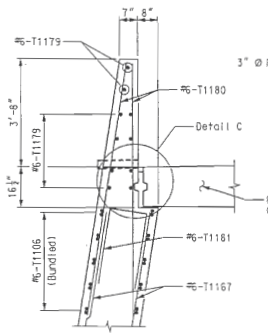

SECTION B-B

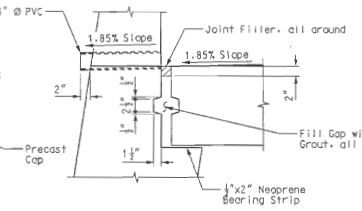

DETAIL C

Notes:
Bar Marks shown are for Pier 11, using "T11" Series Bar Marks. Pier 12 is similar, except use "T12" Series Bar Marks.
For Location of Section X-X, see Sheet No. BR72.
For Location of View Y-Y, see Sheet No. BR72.
For Precast Cap Details, see Sheet No. BR73.
For Obstruction Light location and mounting details, see Sheet BR87.

PIERS 11 & 12 - TOWER

Detailed JUL 2009
Checked JUL 2009

Note: This drawing is not to scale. Follow dimensions.

\\kcow00\jobs\45440\Bridges\Plans\CdtoMoDOTA6500\J6I0984\A6500-dgn\ZPLOT_B_A6500_001-205_J6I0984_080.dgn

19-AUG-2009 07:08

STATE OF MISSOURI
HANS R. HUTTON
NUMBER E-29174
REGISTERED PROFESSIONAL ENGINEER

DATE 8/20/09
ROUTE I-70
STATE MO/IL
DISTRICT 6
SHEET NO. BR80
COUNTY ST. LOUIS CITY - MO ST. CLAIR - IL
JOB NO. J6I0984
CONTRACT ID.
PROJECT NO.
BRIDGE NO. A6500

DESCRIPTION | DATE

MISSOURI HIGHWAYS AND TRANSPORTATION COMMISSION
105 WEST CAPITOL
JEFFERSON CITY, MO 65102
1-888-ASK-MODOT (1-888-275-6636)

HNTB
715 KIRK DRIVE
KANSAS CITY, MO 64105-1310
TELEPHONE (816) 472-1201
CERTIFICATE OF AUTHORITY NO. 001270

LICENSED STRUCTURAL ENGINEER
HANS R. HUTTON
081-006707
STATE OF ILLINOIS
8-20-2009

REV.

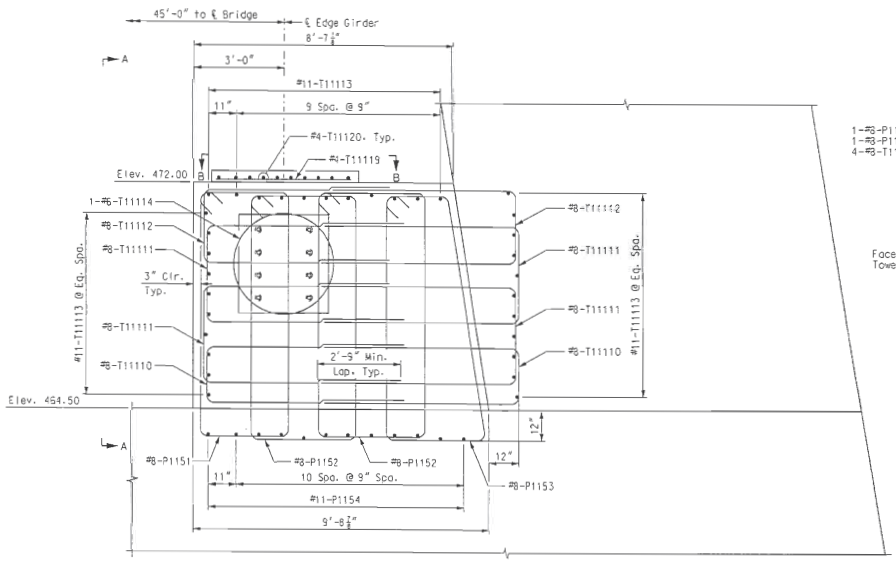

ELEVATION

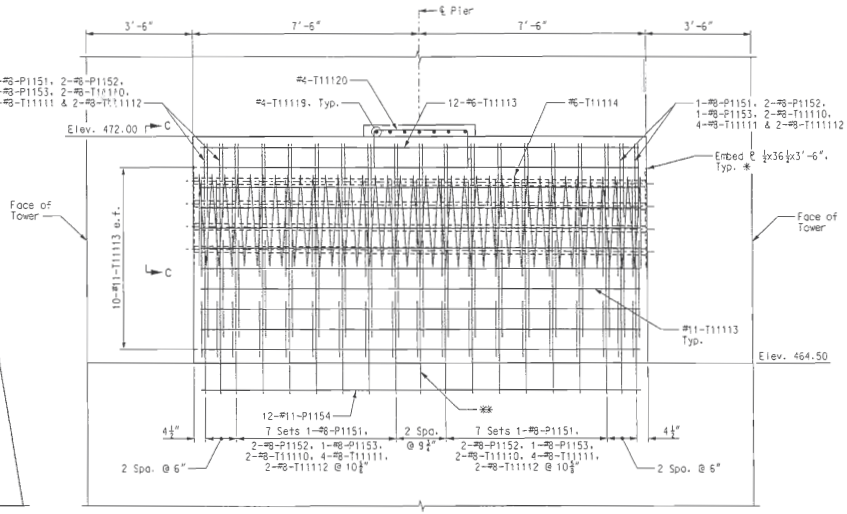

VIEW A-A

* Embed PL and Mounting PL for Longitudinal Lock-up Device are to be fabricated together to assure uniform contact area. For details of Mounting PL, see Sheet Nos. BR107 & BR108.

** 1-#8-P1151, 2-#8-P1152, 1-#8-P1153, 2-#8-T11110, 4-#8-T11111 & 2-#8-T11112

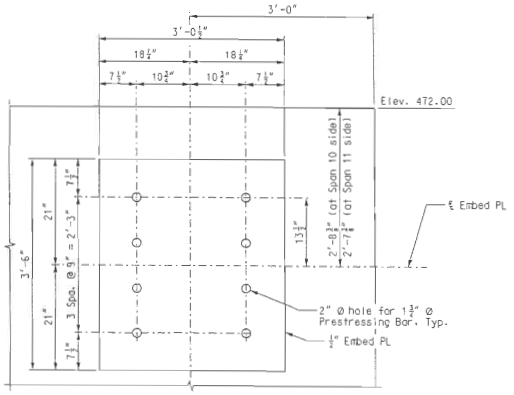

VIEW C-C

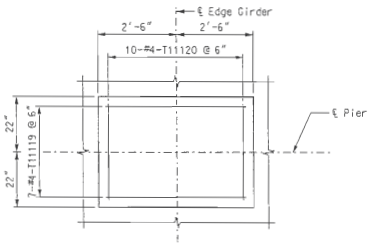

VIEW B-B

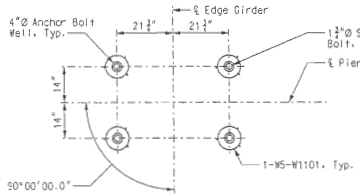

ANCHOR BOLT SETTING PLAN

PIERS 11 & 12

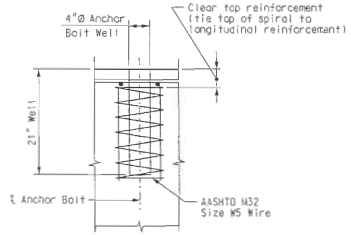

ANCHOR BOLT WELL DETAIL

Notes:

Bar Marks shown are for Pier 11, using "P11", "T11" & "W11" Series Bar Marks. Pier 12 is similar, except use "P12", "T12" & "W12" Series Bar Marks.

The embed plates shall be composed of A709, Gr. 50W steel and included in the pay item, "Fabricated Structural Low Alloy Steel (Plate Girder) A709, Gr. HPS50W".

Provisions for grouting of 2½" galvanized duct for 1½" prestressing bar shall be provided to Engineer for review prior to commencing grouting operations. No grouting shall be permitted until all prestressing bars have been stressed.

After installation of Mounting ℄ and Lock-up Device, the 1½" prestressing bars shall be stressed to 275 kips each.

For Details of Pot Bearings, see Sheets BR104 and BR105.

All reinforcing bars in the top of pedestal shall be spaced to clear anchor bolt wells for bearings by at least 3".

Prestressing Bars shall 1½" diameter, A722, Gr. 150, Type II.

PIERS 11 & 12 - PEDESTAL

STATE OF MISSOURI
HANS R. HUTTON
NUMBER 2005
REGISTERED PROFESSIONAL ENGINEER
Hans R. Hutton

DATE: 8/20/09
ROUTE: I-70 | STATE: MO/IL
DISTRICT: 6 | SHEET NO.: BR81
COUNTY: ST. LOUIS CITY - MO, ST. CLAIR - IL
JOB NO.: J6I0984
CONTRACT ID.:
PROJECT NO.:
BRIDGE NO.: A6500

REV.	DESCRIPTION	DATE

MISSOURI HIGHWAYS AND TRANSPORTATION COMMISSION
105 WEST CAPITOL
JEFFERSON CITY, MO 65102
1-888-ASK-MODOT (1-888-275-6636)

HNTB
715 KIRK DRIVE
KANSAS CITY, MO 64105-1310
TELEPHONE (816) 472-1201
CERTIFICATE OF AUTHORITY NO. 001270

LICENSED STRUCTURAL ENGINEER
EDMUND R. HUTTON
081-009787
STATE OF ILLINOIS
Hans R. Hutton
8-20-2009

Detailed JUL 2009
Checked JUL 2009

Note: This drawing is not to scale. Follow dimensions.

\\kccw00\Jobs\46440\Bridges\Plans\CdtoMoDOTA6500\J6I0984\A6500-dgn\ZPLOT_B_A6500_001-205_J6I0984_081.dgn

19-AUG-2009 07:08

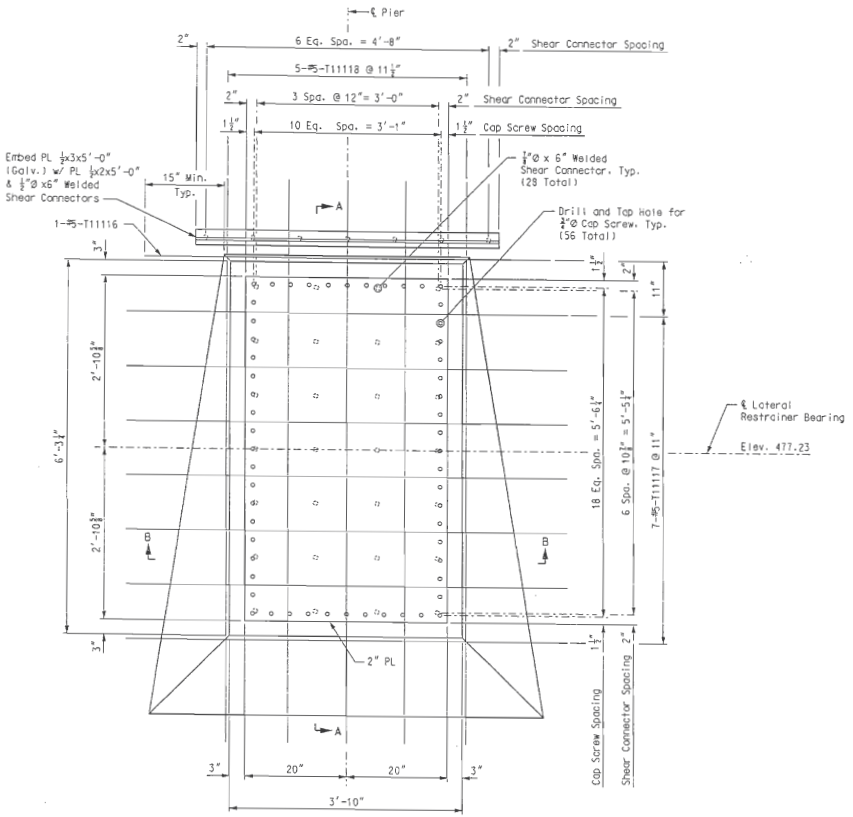

ELEVATION

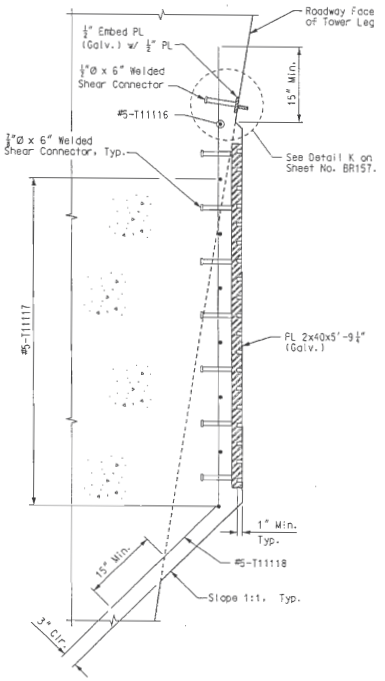

SECTION A-A

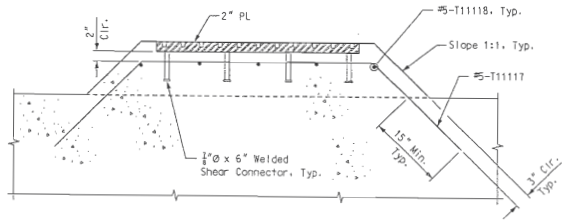

SECTION B-B

Notes:
Bar Marks shown are for Pier 11, using "T11" Series Bar Marks.
Pier 12 is similar, except use "T12" Series Bar Marks.
For Lateral Restrainer Details, see Sheet No. BR106.
For details of tower leg at lateral restrainer bearing, see Sheet No. BR67.
All galvanized embeds shall be galvanized in accordance with ASTM A123 after fabrication.

LATERAL RESTRAINER BEARING DETAILS - PIERS 11 & 12

Detailed JUL 2009
Checked JUL 2009

Note: This drawing is not to scale. Follow dimensions.

Sheet No. 82 of 205

STATE OF MISSOURI
HANS R. HUTTON
NUMBER E-29174
REGISTERED PROFESSIONAL ENGINEER
Hans R. Hutton

DATE 8/20/09
ROUTE I-70
STATE MO/IL
DISTRICT 6
SHEET NO. BR82
COUNTY ST. LOUIS CITY - MO ST. CLAIR - IL
JOB NO. J6I0984
CONTRACT ID.
PROJECT NO.
BRIDGE NO. A6500

DESCRIPTION | DATE

MISSOURI HIGHWAYS AND TRANSPORTATION COMMISSION
MoDOT
105 WEST CAPITOL
JEFFERSON CITY, MO 65102
1-888-ASK-MODOT (1-888-275-6636)

HNTB
715 KIRK DRIVE
KANSAS CITY, MO 64105-1310
TELEPHONE (816) 472-1201
CERTIFICATE OF AUTHORITY NO. 001270

STATE OF ILLINOIS
HANS R. HUTTON
081-006707
LICENSED STRUCTURAL ENGINEER
Hans R. Hutton
8-20-2009

\\kcow00\jobs\46440\Bridges\Plans\CdtoMoDOTA6500\J6I0984\A6500-dgn\ZPLOT_B_A6500_001-205_J6I0984_082.dgn
19-AUG-2009 07:08

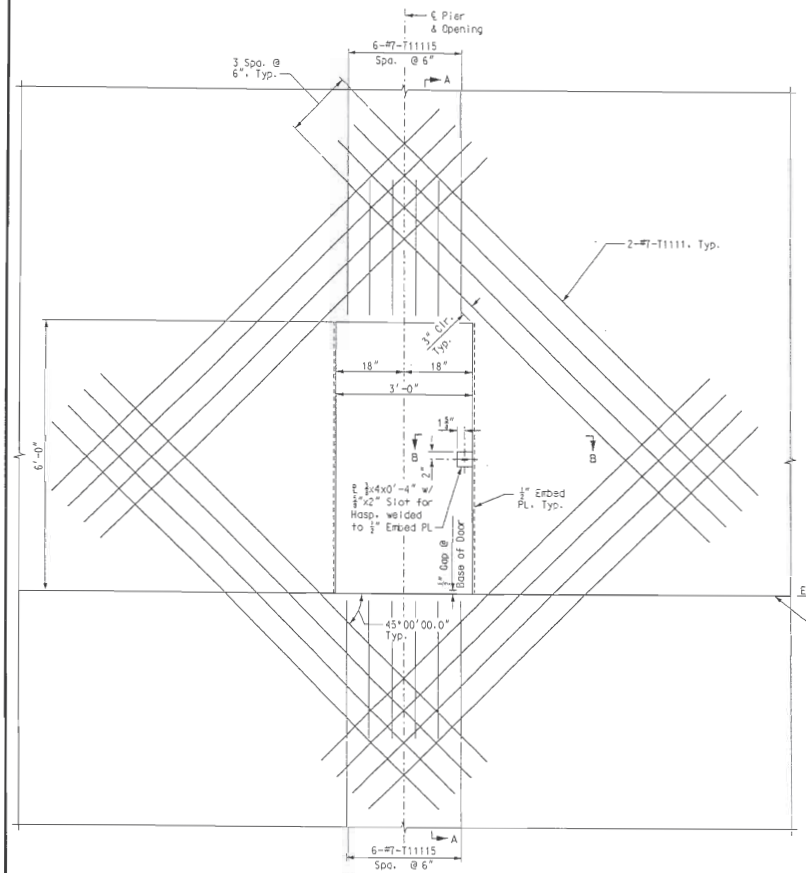

TOWER ACCESS OPENING REINFORCING LAYOUT

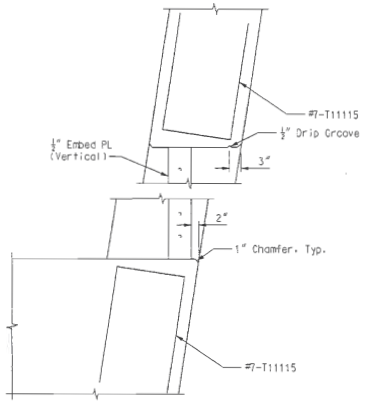

SECTION A-A

(Vertical bars and Horiz. stirrups and ties in tower leg not shown for clarity.)

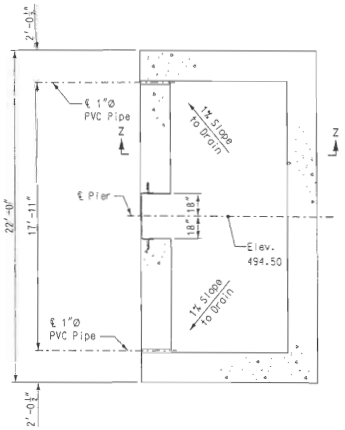

PLAN - ENTRANCE DETAIL

(Vertical bars and tie bars not shown for clarity.)

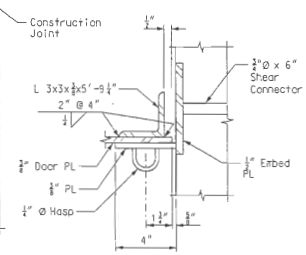

DETAIL F

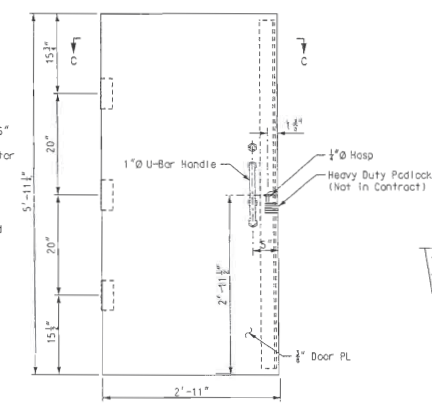

TOWER ACCESS DOOR DETAIL

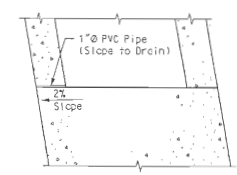

SECTION Z-Z

(Vertical bars and tie bars not shown for clarity.)

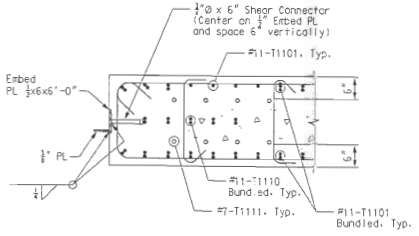

SECTION B-B

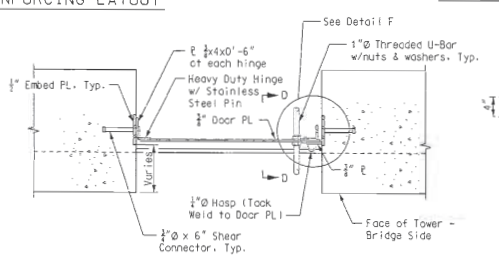

SECTION C-C

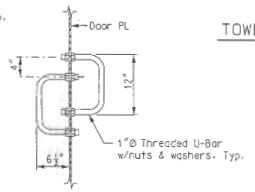

SECTION D-D

Notes:

Bar Marks shown are for Pier 11, using "T11" Series Bar Marks.

Pier 12 is similar, except use "T12" Series Bar Marks.

All steel used for the tower access door shall meet the requirements of ASTM A709, Grade 36 and shall be galvanized per ASTM A123 after fabrication.

All material and labor necessary for fabrication and installation of tower access door, door frame and additional hardware shall be included in pay item "Inspection Access".

TOWER ACCESS OPENING DETAILS - PIERS 11 & 12

Detailed JUL 2009
Checked JUL 2009

Note: This drawing is not to scale. Follow dimensions.

Sheet No. 83 of 205

STATE OF MISSOURI
Hans R. Hutton

DATE	
8/20/09	
ROUTE	STATE
I-70	MO/IL
DISTRICT	SHEET NO.
6	BR83
COUNTY	
ST. LOUIS CITY - MO ST. CLAIR - IL	
JOB NO.	
J6I0984	
CONTRACT ID.	
PROJECT NO.	
BRIDGE NO.	
A6500	

DATE	DESCRIPTION

MISSOURI HIGHWAYS AND TRANSPORTATION COMMISSION

MoDOT

105 WEST CAPITOL
JEFFERSON CITY, MO 65102
1-888-ASK-MODOT (1-888-275-6636)

HNTB

115 KIRK DRIVE
KANSAS CITY, MO 64105-1310
TELEPHONE (816) 472-1201
CERTIFICATE OF AUTHORITY NO. 001270

LICENSED STRUCTURAL ENGINEER
HANS R. HUTTON
NO. 001270
STATE OF ILLINOIS

Hans R. Hutton
8-20-2009

REV.

\\kcow00\jobs\46440\Bridges\Plans\CatoMoDOTA6500\J6I0984\A6500-dgn\EPLOT_B_A6500_001-205_J6I0984_083.dgn

19-AUG-2009 07:08

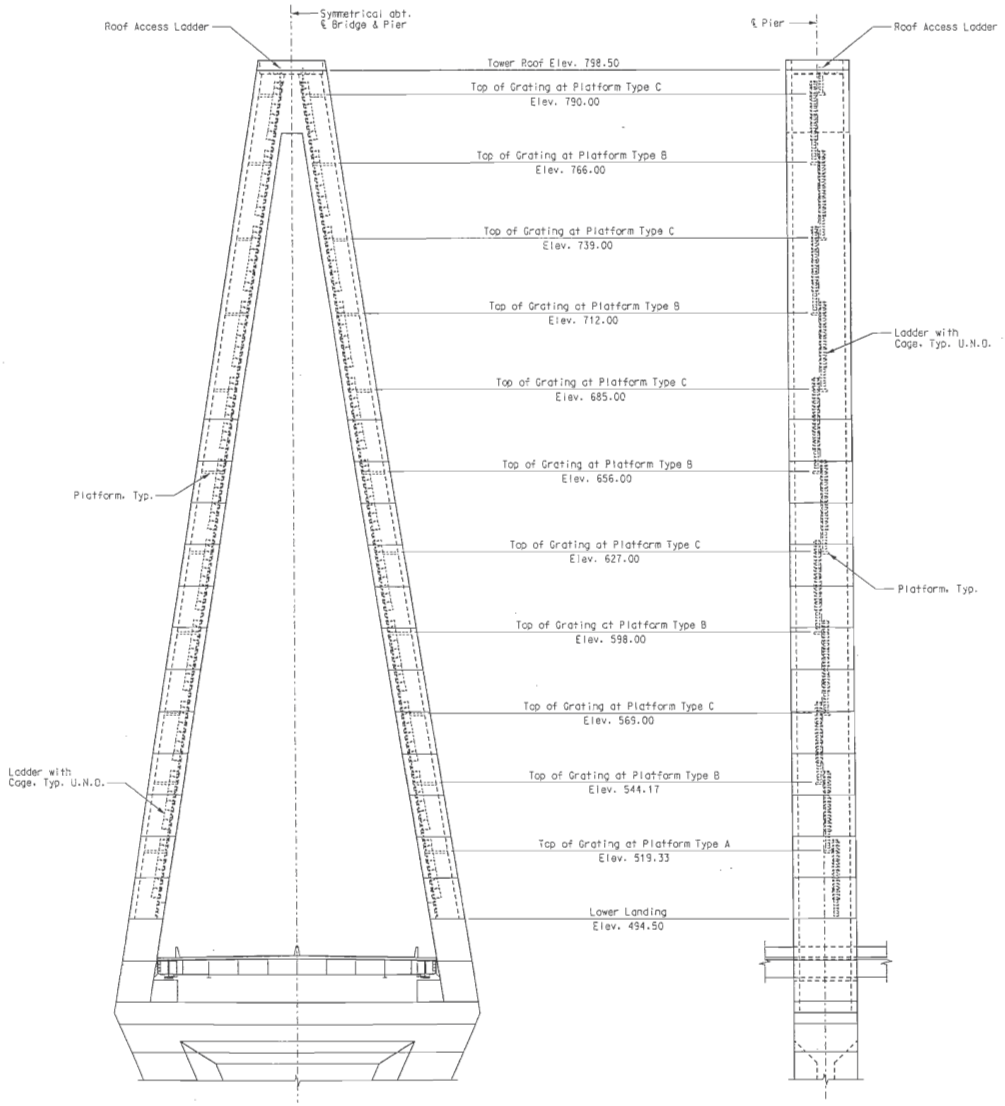

FRONT ELEVATION
(Cables not shown for clarity.)

SIDE ELEVATION
(Cables not shown for clarity.)

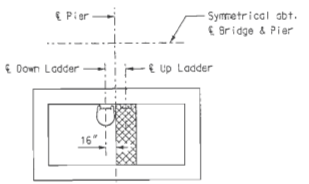

PLATFORM TYPE C

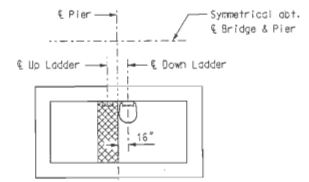

PLATFORM TYPE B

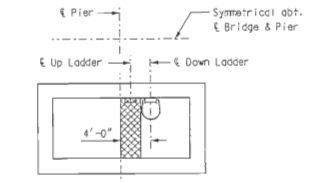

PLATFORM TYPE A

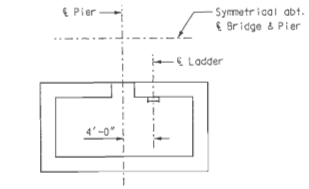

LOWER LANDING

SCHEMATIC PLANS
(South Tower Leg shown at Piers 11 & 12)

Notes:
For details of ladders and cages, see Sheet No. BR85.
For details of platforms, see Sheet No. BR86.

TOWER ACCESS DETAILS - PIERS 11 & 12

Detailed JUL 2009
Checked JUL 2009

Note: This drawing is not to scale. Follow dimensions.

Sheet No. 84 of 205

\\kcaw00\jobs\48440\Bridges\Plans\CdtoMoDOTA6500\J6I0984\A6500-dgn\ZPLOT_B_A6500_001-205_J6I0984_084.dgn

19-AUG-2009 07:08

STATE OF MISSOURI
HANS R. HUTTON
NUMBER E-29174
REGISTERED PROFESSIONAL ENGINEER
Hans R. Hutton

DATE
8/20/09

ROUTE	STATE
I-70	MO/IL
DISTRICT	SHEET NO.
6	BR84

COUNTY
ST. LOUIS CITY - MO
ST. CLAIR - IL

JOB NO.
J6I0984

CONTRACT ID.

PROJECT NO.

BRIDGE NO.
A6500

REV.	DESCRIPTION	DATE

MISSOURI HIGHWAYS AND TRANSPORTATION COMMISSION
105 WEST CAPITOL
JEFFERSON CITY, MO 65102
1-888-ASK-MODOT (1-888-275-6636)

HNTB
715 KIRK DRIVE
KANSAS CITY, MO 64105-1310
TELEPHONE (816) 472-1201
CERTIFICATE OF AUTHORITY NO. 001270

LICENSED STRUCTURAL ENGINEER
HANS R. HUTTON
081-006707
STATE OF ILLINOIS
EXPIRES 11-30-2010
Hans R. Hutton
8-20-2009

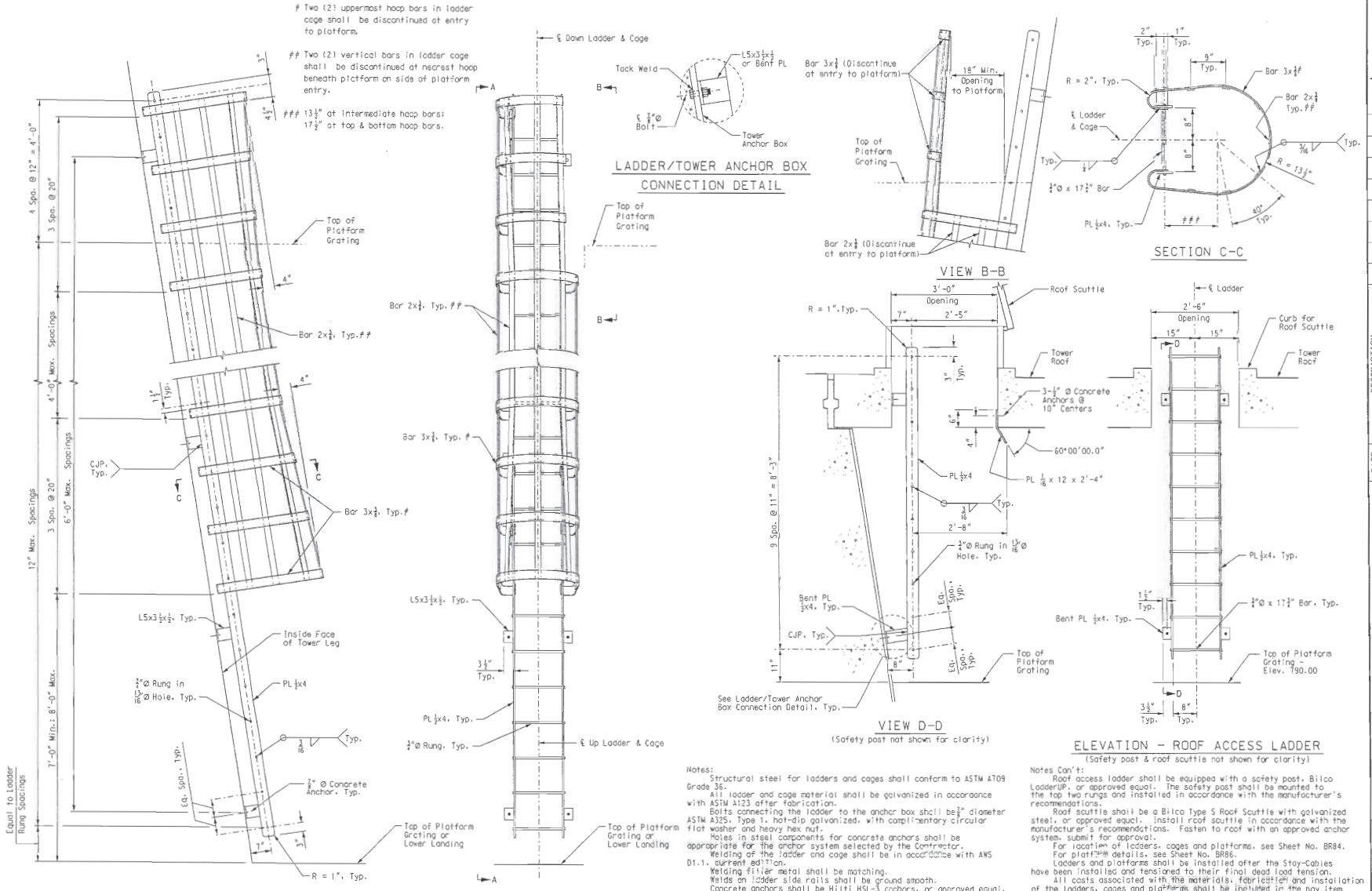

Notes:
Structural steel for ladders and cages shall conform to ASTM A709 Grade 36.
All ladder and cage material shall be galvanized in accordance with ASTM A123 after fabrication.
Bolts connecting the ladder to the anchor box shall be ¾" diameter ASTM A325, Type 1, hot-dip galvanized, with complimentary circular flat washer and heavy hex nut.
Holes in steel components for concrete anchors shall be appropriate for the anchor system selected by the Contractor.
Welding of the ladder and cage shall be in accordance with AWS D1.1, current edition.
Welding filler metal shall be matching.
Welds on ladder side rails shall be ground smooth.
Concrete anchors shall be Hilti HSL-3 anchors, or approved equal. Install anchors in accordance with manufacturer's recommendations.

Notes Con't:
Roof access ladder shall be equipped with a safety post, Bilco LadderUP, or approved equal. The safety post shall be mounted to the top two rungs and installed in accordance with the manufacturer's recommendations.
Roof scuttle shall be a Bilco Type S Roof Scuttle with galvanized steel, or approved equal. Install roof scuttle in accordance with the manufacturer's recommendations. Fasten to roof with an approved anchor system, submit for approval.
For location of ladders, cages and platforms, see Sheet No. BR84.
For platform details, see Sheet No. BR86.
Ladders and platforms shall be installed after the Stay-Cables have been installed and tensioned to their final dead load tension.
All costs associated with the materials, fabrication and installation of the ladders, cages and platforms shall be included in the pay item "Inspection Access". This shall include all hardware including bolts, anchors, safety post, roof scuttle and gravity ventilator.

TOWER ACCESS DETAILS - PIERS 11 & 12

Detailed JUL 2009
Checked JUL 2009

Note: This drawing is not to scale. Follow dimensions.

Sheet No. 85 of 205

\\kcow00\jobs\46440\Bridges\Plans\CdotoMoDOTA6500\J6I0984\A6500-dgn\ZPLOT_B_A6500_001-205_J6I0984_085.dgn

19-AUG-2009 07:08

STATE OF MISSOURI
JAMES R. HUTTON NUMBER E-24078
REGISTERED PROFESSIONAL ENGINEER
James R. Hutton

DATE	DESCRIPTION	REV.

DATE 8/20/09
ROUTE I-70 | STATE MO/IL
DISTRICT 6 | SHEET NO. BR85
COUNTY ST. LOUIS CITY - MO ST. CLAIR - IL
JOB NO. J6I0984
CONTRACT ID.
PROJECT NO.
BRIDGE NO. A6500

MISSOURI HIGHWAYS AND TRANSPORTATION COMMISSION
105 WEST CAPITOL
JEFFERSON CITY, MO 65102
1-888-ASK-MODOT (1-888-275-6636)

HNTB
715 KIRK DRIVE
KANSAS CITY, MO 64105-1310
TELEPHONE (816) 472-1201
CERTIFICATE OF AUTHORITY NO. 001270

LICENSED STRUCTURAL ENGINEER
HANS B. HUTTON
E-24078
STATE OF ILLINOIS
Hans B. Hutton
8-21-2009

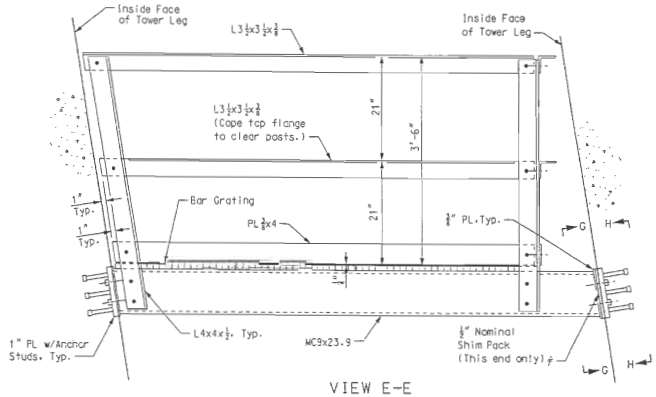

VIEW E-E

(View shown below Tower Anchor Box. For connection of platform to tower anchor box, see detail on this sheet.)

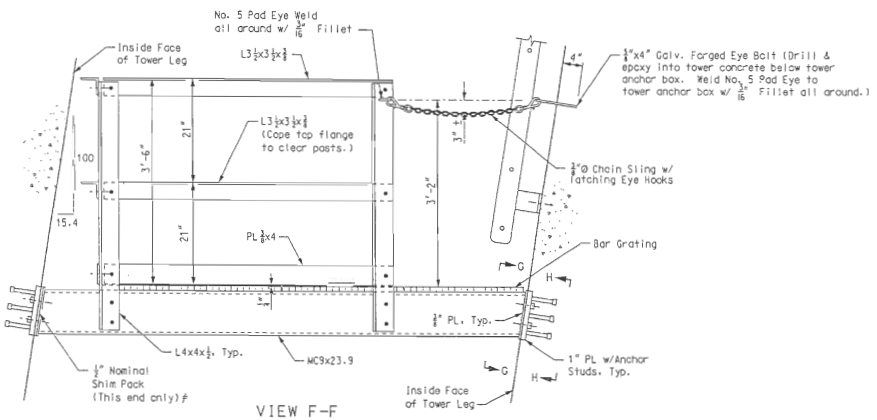

VIEW F-F

(View shown below Tower Anchor Box. For connection of platform to tower anchor box, see detail on this sheet.)

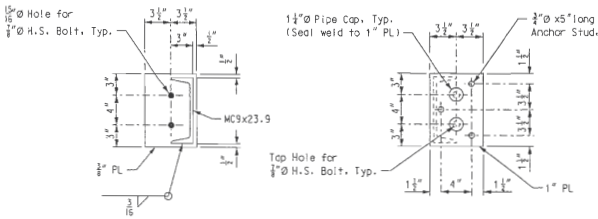

VIEW G-G

VIEW H-H

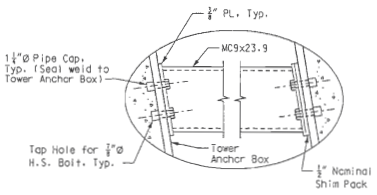

PLATFORM/TOWER ANCHOR BOX CONNECTION DETAIL

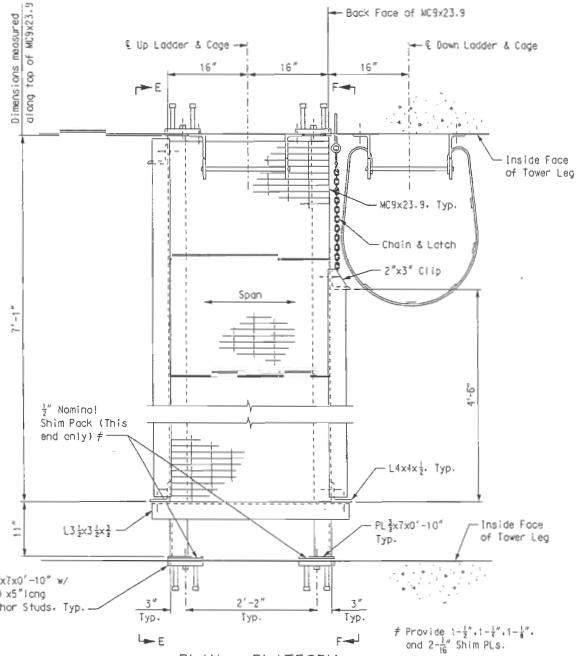

PLAN - PLATFORM

(Plan shown below Tower Anchor Box. For connection of platform to tower anchor box, see detail on this sheet.)

Notes:

Structural steel for platforms, posts and handrail shall conform to ASTM A709 Grade 36.

All platform, posts and handrail material shall be galvanized in accordance with ASTM A123 after fabrication.

Bolts connecting the handrail, post and platform shall be ¾" diameter; bolts connecting the platforms to the 1" embedded plate and anchor box shall be ⅞" diameter. All bolts shall be ASTM A325, Type 1, hot-dip galvanized, with complimentary circular flat washer and heavy hex nut.

Holes in steel components for A325 bolts shall be 1/16" larger in diameter than the associated bolt.

Holes in steel components for concrete anchors shall be appropriate for the anchor system selected by the Contractor.

Grating shall be IKG Borden, Weldforged, Type WB, galvanized, serrated, Size 4 (1"x3/16"bars) with saddle clip fasteners, or approved equal. There shall be three grating panels per platform. Grating panels shall be of similar width. There shall be a minimum of 6 grating fasteners per panel. Install in accordance with manufacturer's recommendations. Field drill holes in platform to accommodate grating fasteners.

Welding shall be in accordance with AWS D1.1, current edition.

Welding filler metal shall be matching.

⅜" Chain sling with latching eye hooks shall be Crosby Spectrum 8 with two S-325 Eye Hooks, or approved equal.

No. 5 Pad Eye shall be Crosby S-264, stock no. 1090820, or approved equal.

¾"x4" Galvanized Forged Eye Bolt shall be Crosby G-291 stock no. 1043472, or approved equal.

Epoxy anchor compound shall be Epcon G5 Epoxy or approved equal. Install in accordance with manufacturer's recommendations.

For locations of ladders, cages and platforms, see Sheet. No. BR84.

For ladder details, see Sheet No. BR85.

Ladders and platforms shall be installed after the Stay-Cables have been installed and tensioned to their final dead load tension.

All costs associated with the materials, fabrication and installation of the ladders, cages and platforms shall be included in the pay item "Inspection Access". This shall include all hardware including bolts, anchors, safety post, roof scuttle and gravity ventilator.

TOWER ACCESS DETAILS - PIERS 11 & 12

STATE OF MISSOURI
HANS R. HUTTON
NUMBER E-2974
REGISTERED ENGINEER
Hans R. Hutton

DATE 8/20/09
ROUTE I-70
STATE MO/IL
DISTRICT 6
SHEET NO. BR86
COUNTY ST. LOUIS CITY - MO ST. CLAIR - IL
JOB NO. J6I0984
CONTRACT ID.
PROJECT NO.
BRIDGE NO. A6500

REV.	DESCRIPTION	DATE

MISSOURI HIGHWAYS AND TRANSPORTATION COMMISSION
MoDOT
105 WEST CAPITOL
JEFFERSON CITY, MO 65102
1-888-ASK-MODOT (1-888-275-6636)

HNTB
715 KIRK DRIVE
KANSAS CITY, MO 64105-1310
TELEPHONE (816) 472-1201
CERTIFICATE OF AUTHORITY NO. 001270

LICENSED STRUCTURAL ENGINEER
HANS R. HUTTON
081-006707
STATE OF ILLINOIS
Hans R. Hutton
8-20-2009

Detailed JUL 2009
Checked JUL 2009

Note: This drawing is not to scale. Follow dimensions.

\\kcow00\jobs\46440\Bridges\Plans\CdtoMoDOTA6500\J6I0984\A6500-dgn\ZPLOT_B_A6500_001-205_J6I0984_086.dgn

19-AUG-2009 07:09

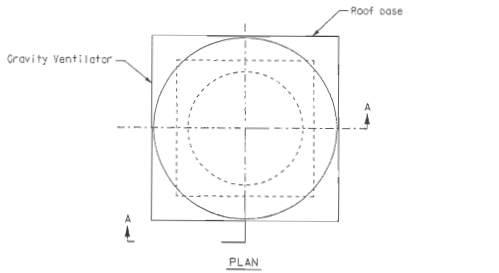

GRAVITY VENTILATOR

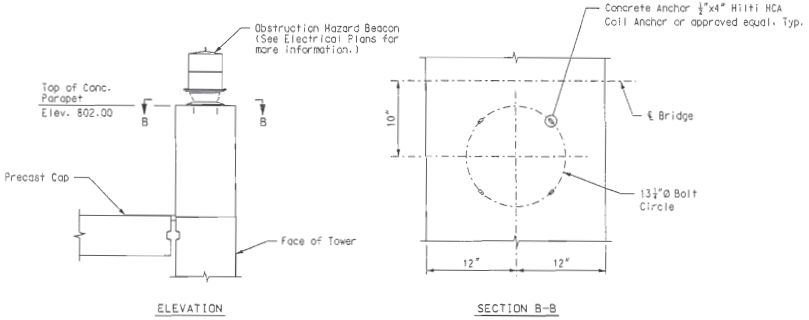

OBSTRUCTION LIGHTING MOUNTING DETAILS

Notes:

For layout and details of precast cap, see Sheet, No. BR73.

Gravity ventilator shall be Romlair Model RS-30, galvanized steel, or approved equal.

Gravity ventilator shall be mounted on a Roof Base, Romlair Model B-30, galvanized steel, or approved equal. Roof Base shall be modified to fit concrete curb.

Fasten ventilator to base with #8, zinc plated, pan head Tek screws, or equal, on about 8" centers.

VENTILATOR AND OBSTRUCTION LIGHTING DETAILS – PIERS 11 & 12

DATE 8/20/09
ROUTE I-70 | STATE MO/IL
DISTRICT 6 | SHEET NO. BR87
COUNTY ST. LOUIS CITY - MO, ST. CLAIR - IL
JOB NO. J6I0984
CONTRACT ID.
PROJECT NO.
BRIDGE NO. A6500

DESCRIPTION | DATE

MISSOURI HIGHWAYS AND TRANSPORTATION COMMISSION
105 WEST CAPITOL
JEFFERSON CITY, MO 65102
1-888-ASK-MODOT (1-888-275-6636)

HNTB
715 KIRK DRIVE
KANSAS CITY, MO 64105-1310
TELEPHONE 816 472-1201
CERTIFICATE OF AUTHORITY NO. 001270

LICENSED STRUCTURAL ENGINEER
STATE OF ILLINOIS
08-01-07
8-20-09

REV.

Detailed JUL 2009
Checked JUL 2009

Note: This drawing is not to scale. Follow dimensions.

Sheet No. 87 of 205

\\kcow00\jobs\46440\Bridges\Plans\CdtoMoDOTA6500\J6I0984\A6500-dgn\ZPLOT_B_A6500_001-205_J6I0984_087.dgn

19-AUG-2009 07:09

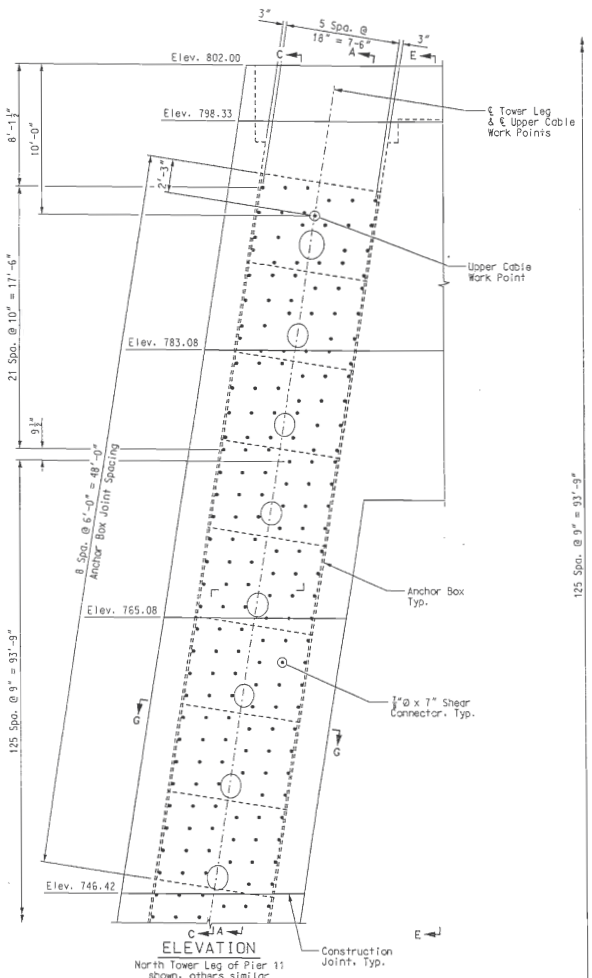

ELEVATION

North Tower Leg of Pier 11 shown, others similar

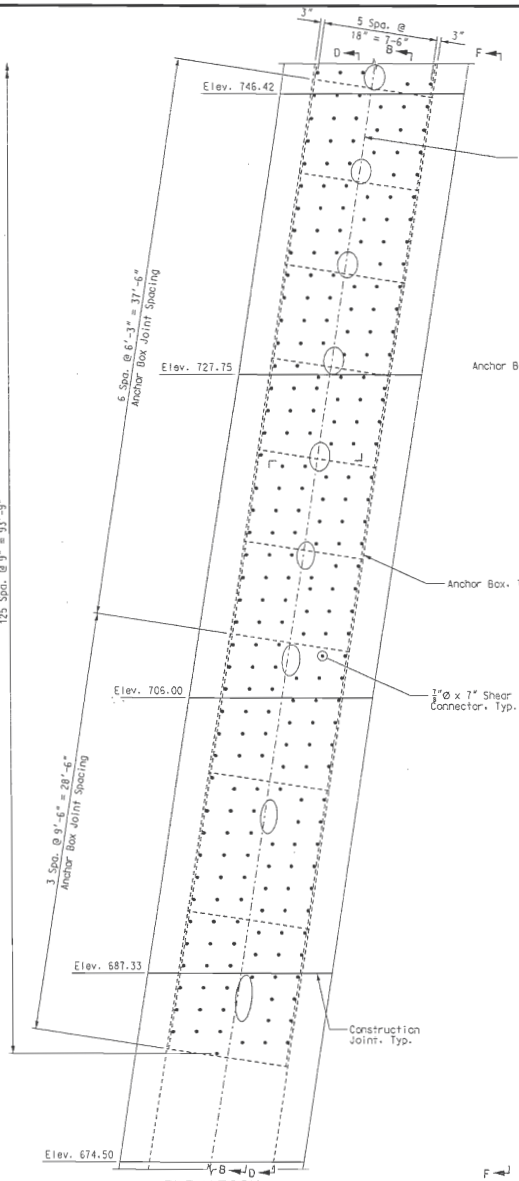

ELEVATION

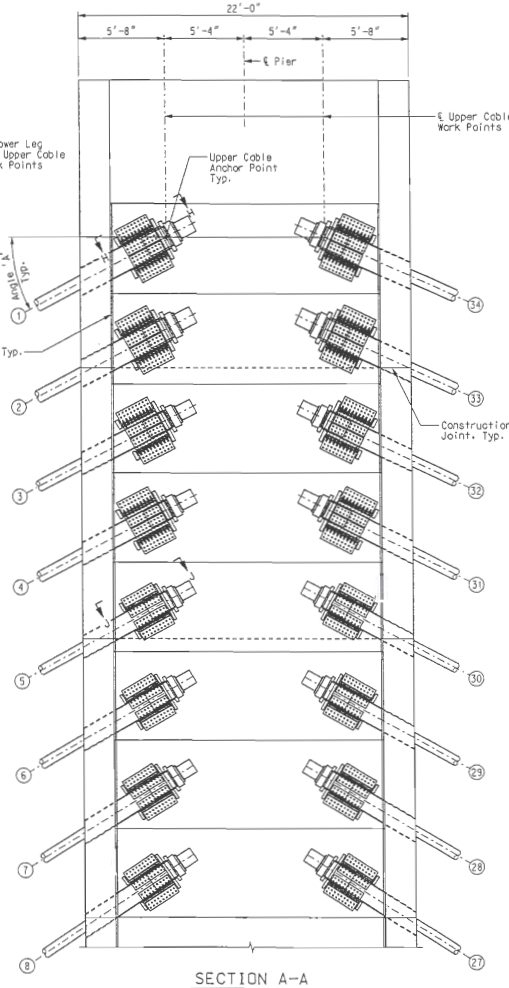

SECTION A–A

Shear Studs and Tower Access Details not shown for clarity

Notes:
Pier 11 shown, Pier 12 is similar.
For Sections B-B, C-C & D-D, see Sheet BR89.
For Sections E-E & F-F, see Sheet BR90.
For View H-H, see Sheet BR91.
For View J-J, see Sheet BR92.
(=) denotes Stay Cable Number.
For additional notes, see Sheet BR89.
For Angle 'A', see Sheet Nos. BR91 thru BR93.

TOWER CABLE ANCHORAGE DETAILS – PIERS 11 & 12

STATE OF MISSOURI
HANS R. HUTTON
NUMBER E-29174
REGISTERED PROFESSIONAL ENGINEER
Hans R. Hutton

DATE
8/20/09

ROUTE	STATE
I-70	MO/IL
DISTRICT	SHEET NO.
6	BR88

COUNTY
ST. LOUIS CITY – MO
ST. CLAIR – IL

JOB NO.
J6I0984

CONTRACT ID.

PROJECT NO.

BRIDGE NO.
A6500

DATE	DESCRIPTION

MISSOURI HIGHWAYS AND TRANSPORTATION COMMISSION
MoDOT
105 WEST CAPITOL
JEFFERSON CITY, MO 65102
1-888-ASK-MODOT (1-888-275-6636)

HNTB
715 KIRK DRIVE
KANSAS CITY, MO 64105-1310
TELEPHONE (816) 472-1201
CERTIFICATE OF AUTHORITY NO. 001270

LICENSED STRUCTURAL ENGINEER
HANS R. HUTTON
081-006707
STATE OF ILLINOIS
Hans R. Hutton
8-20-2009

REV.

Detailed JUL 2009
Checked JUL 2009

Note: This drawing is not to scale. Follow dimensions.

\\kcow00\jobs\46440\Bridges\Plans\CdtoMoDOTA6500\J6I0984\A6500-dgn\ZPLOT_B_A6500_001-205_J6I0984_088.dgn

19-AUG-2009 07:09

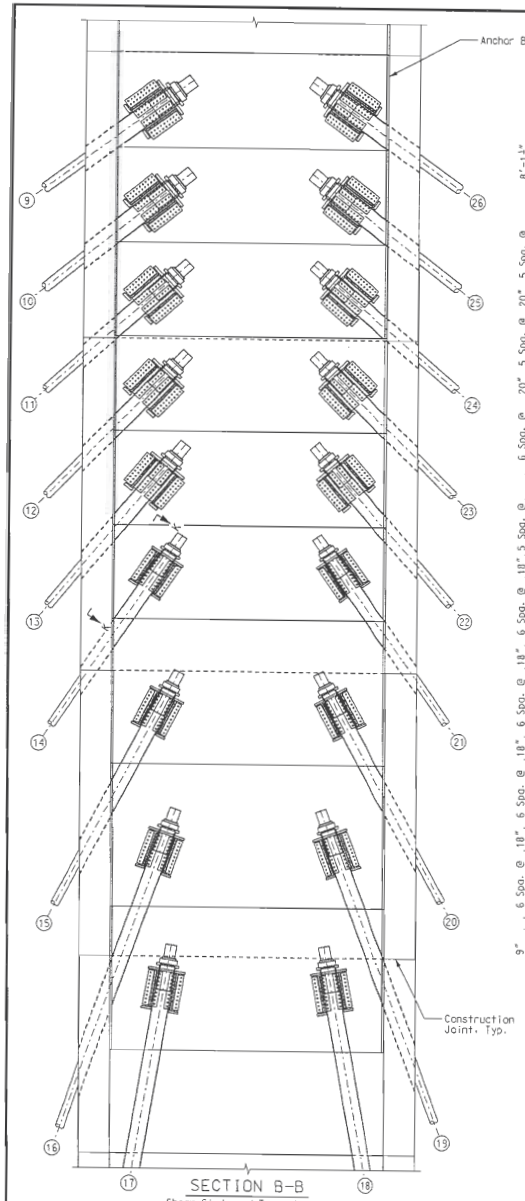

SECTION B-B
Shear Studs and Tower Access Details not shown for clarity

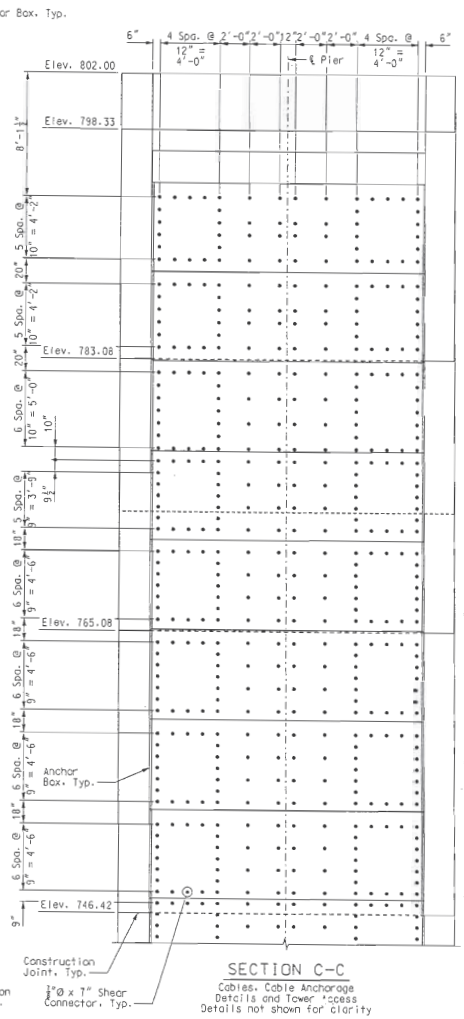

SECTION C-C
Cables, Cable Anchorage Details and Tower Access Details not shown for clarity

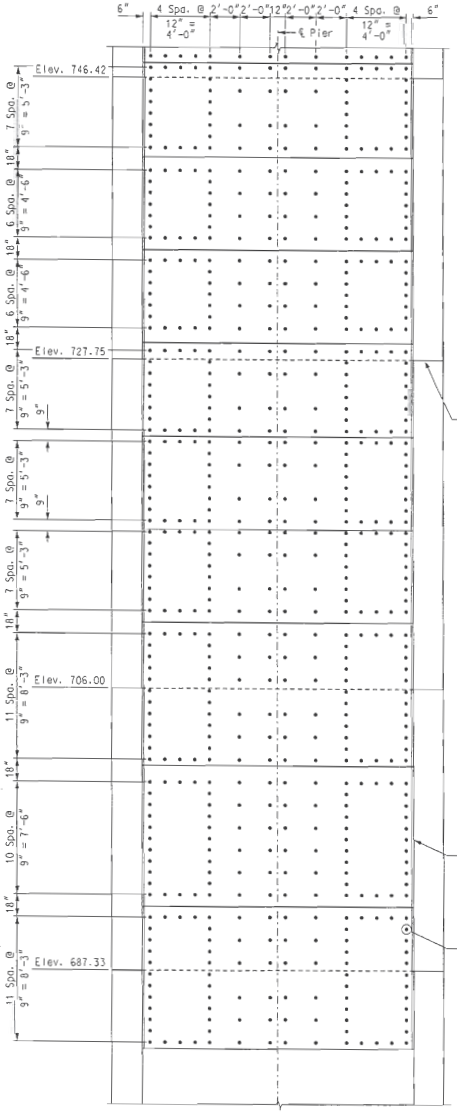

SECTION D-D
Cables, Cable Anchorage Details and Tower Access Details not shown for clarity

Notes:
For locations of Sections B-B, C-C & D-D, see Sheet BR88.
For View K-K, see Sheet BR93.
(#) denotes Stay Cable Number.
For Cable Layout, see Sheet Nos. BR137 & BR138.
For Stay Cable Geometry, see Sheet Nos. BR139 & BR140.
For Stay Cable Schedule, see Sheet Nos. BR141 & BR142.
For Stay Cable Anchorage Assembly, see Sheet BR143.

TOWER CABLE ANCHORAGE DETAILS - PIERS 11 & 12

Detailed JUL 2009
Checked JUL 2009

Note: This drawing is not to scale. Follow dimensions.

\\kccow00\jobs\48440\Bridges\Plans\CdotsMoDOTA6500\J6I0984\A6500-dgn\ZPLOT_B_A6500_001-205_J6I0984_089.dgn

19-AUG-2009 07:09

STATE OF MISSOURI
HANS R. HUTTON
NUMBER E-26274
REGISTERED ENGINEER
Hans R. Hutton

DATE 8/20/09
ROUTE I-70 | STATE MO/IL
DISTRICT 6 | SHEET NO. BR89
COUNTY ST. LOUIS CITY - MO, ST. CLAIR - IL
JOB NO. J6I0984
CONTRACT ID.
PROJECT NO.
BRIDGE NO. A6500

DATE	DESCRIPTION

MISSOURI HIGHWAYS AND TRANSPORTATION COMMISSION
105 WEST CAPITOL
JEFFERSON CITY, MO 65102
1-888-ASK-MODOT (1-888-275-6636)

HNTB
715 KIRK DRIVE
KANSAS CITY, MO 64105-1310
TELEPHONE (816) 472-1201
CERTIFICATE OF AUTHORITY NO. 001270

LICENSED STRUCTURAL ENGINEER
HANS R. HUTTON
062-067107
STATE OF ILLINOIS
Hans R. Hutton
8-20-2009

REV.

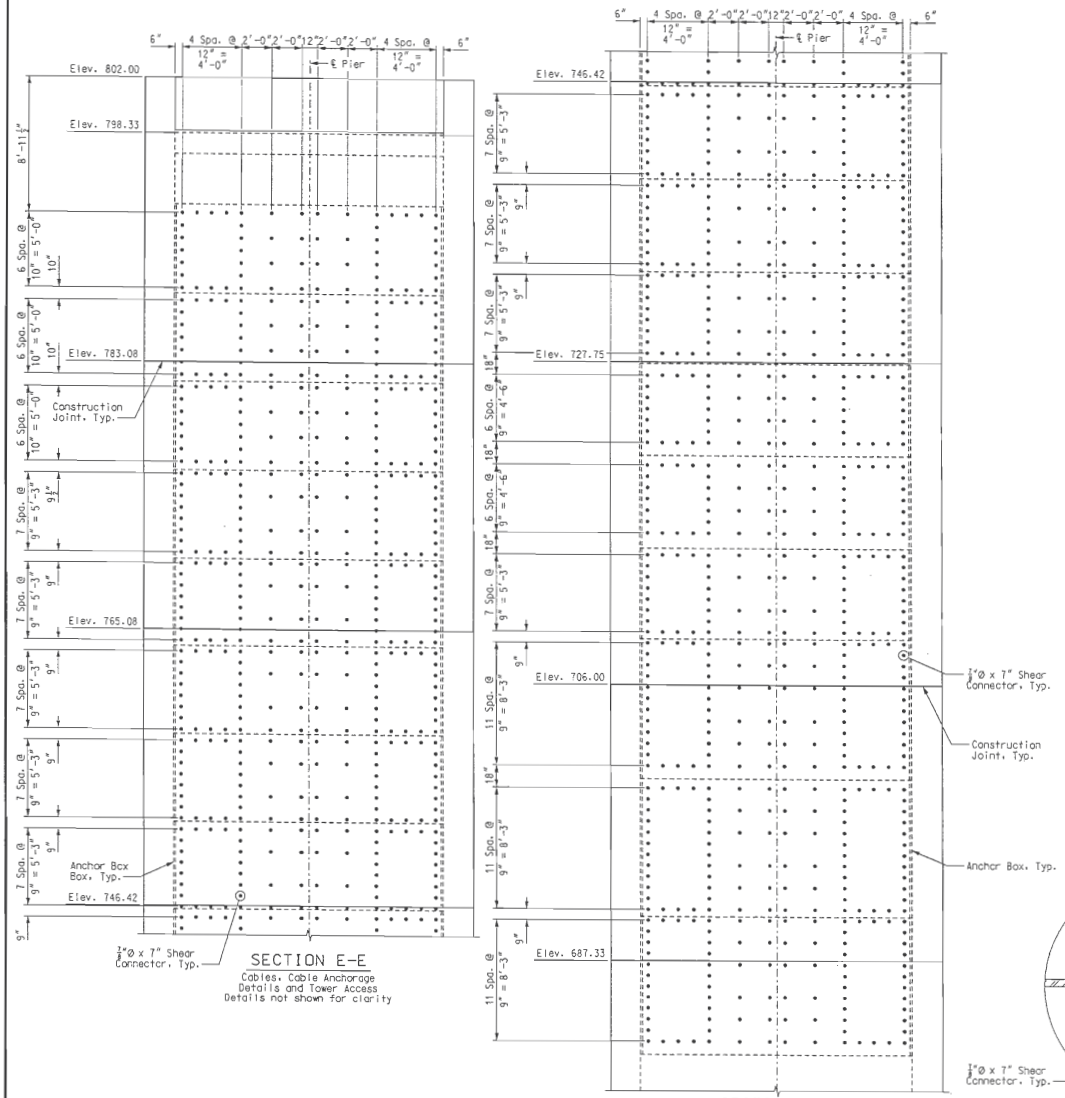

SECTION E-E
Cables, Cable Anchorage Details and Tower Access Details not shown for clarity

SECTION F-F
Cables, Cable Anchorage Details and Tower Access Details not shown for clarity

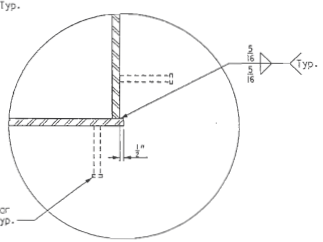

DETAIL Z

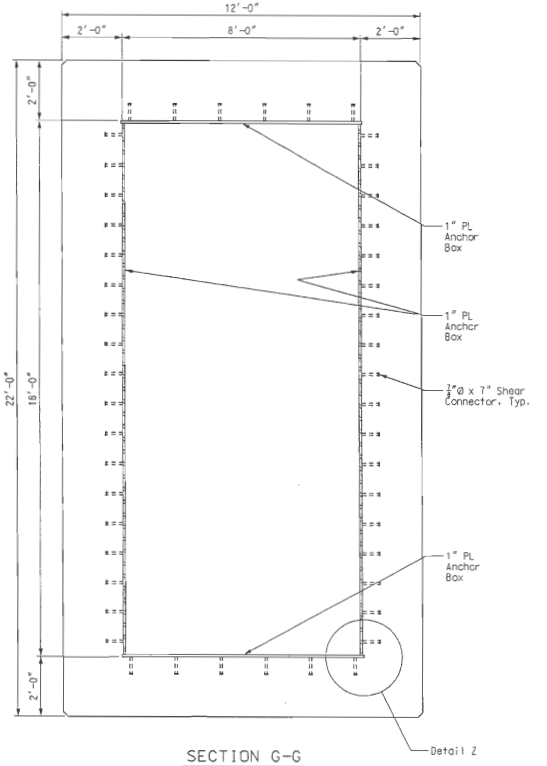

SECTION G-G
Cables, Cable Anchorage Details and Tower Access Details not shown for clarity

Notes:
For locations of Sections E-E & F-F, see Sheet BR89.
For location of Section G-G, see Sheet BR88.
The Anchor Box (1" Plate) shall be composed of A709 Gr. HPS50WT-2 material.
Upon approval of the Engineer, the Contractor may modify the Anchor Box to facilitate lifting, transportation, handling and positioning.
The Anchor Box was not designed to function as a concrete form. The Contractor shall be responsible to adequately brace the Anchor Box to resist the pressure from the fluid concrete. Locked in stress in the Anchor Box due to the fluid concrete pressure and concrete placement shall not exceed 5 ksi.
Shear connectors may be relocated up to 3" from the plan location in order to avoid interference and conflicts with reinforcing steel or other components.
The Contractor is warned that the area surrounding the Anchor Box is congested and care should be taken in placing the reinforcing steel and shear connectors. It may be advisable to install the shear connectors after placement of rebar to reduce potential conflicts.
All costs associated with the materials, fabrication and installation of the Tower Anchorage System shall be included in the pay item "Fabricated Structural Low Alloy Steel (Tower Anchor Box) A709, Gr. HPS50W".
This shall include the Anchor Boxes, Shear Connectors, Cable Anchor Beams, Connection Plates, Load Plates and all fasteners.

TOWER CABLE ANCHORAGE DETAILS – PIERS 11 & 12

STATE OF MISSOURI
HANS R. HUTTON
NUMBER E-25974
REGISTERED PROFESSIONAL ENGINEER
Hans R. Hutton

DATE 8/20/09
ROUTE I-70
STATE MO/IL
DISTRICT 6
SHEET NO. BR90
COUNTY ST. LOUIS CITY – MO ST. CLAIR – IL
JOB NO. J6I0984
CONTRACT ID.
PROJECT NO.
BRIDGE NO. A6500

REV.	DESCRIPTION	DATE

MISSOURI HIGHWAYS AND TRANSPORTATION COMMISSION
105 WEST CAPITOL
JEFFERSON CITY, MO 65102
1-888-ASK-MODOT (1-888-275-6636)

HNTB
715 KIRK DRIVE
KANSAS CITY, MO 64105-1310
TELEPHONE (816) 472-1201
CERTIFICATE OF AUTHORITY NO. 001270

STATE OF ILLINOIS
HANS R. HUTTON
081-006707
REGISTERED STRUCTURAL ENGINEER
Hans R. Hutton
8-20-2009

Detailed JUL 2009
Checked JUL 2009

Note: This drawing is not to scale. Follow dimensions.

\\kcow00\jobs\46440\Bridges\Plans\CdtoMoDOTA6500\J6I0984\A6500-dgn\ZPLOT_B_A6500_001-205_J6I0984_090.dgn

19-AUG-2009 07:09

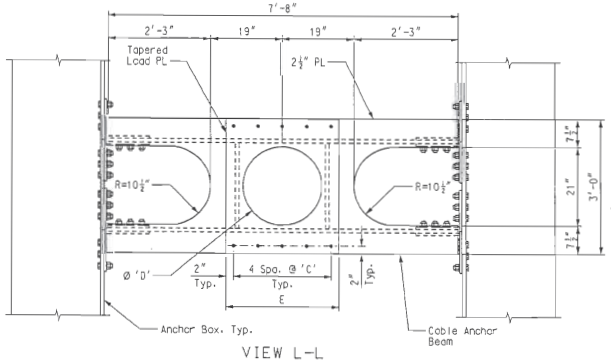

VIEW L-L

Cable & Shear Studs not shown for clarity

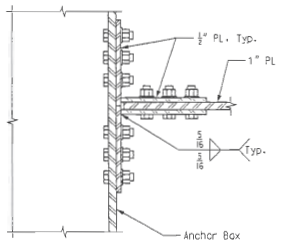

SECTION Q-Q

TABLE OF DIMENSIONS						
	CABLE	ANGLE 'A'	ANGLE 'B'	SPACING 'C'	DIA. 'D'	WIDTH 'E'
PIER 11	1	28°07'18.1"	0°52'58.0"	6½"	21"	2'-6"
	2	28°07'48.2"	0°53'38.5"	6½"	21"	2'-6"
	3	27°59'49.3"	0°52'56.3"	5¾"	17½"	2'-3"
	4	27°59'59.0"	0°53'36.5"	5¾"	17½"	2'-3"
	31	27°17'34.6"	0°52'14.9"	5¾"	17½"	2'-3"
	32	26°09'18.0"	0°49'25.2"	5¾"	17½"	2'-3"
	33	25°22'27.6"	0°49'09.2"	6½"	21"	2'-6"
	34	24°29'43.4"	0°47'08.3"	6½"	21"	2'-6"
PIER 12	CABLE	ANGLE 'A'	ANGLE 'B'	SPACING 'C'	DIA. 'D'	WIDTH 'E'
	1	28°24'41.9"	0°55'50.5"	6½"	21"	2'-6"
	2	28°24'05.7"	0°56'19.9"	6½"	21"	2'-6"
	3	28°15'02.4"	0°55'27.1"	5¾"	17½"	2'-3"
	4	28°17'33.4"	0°56'30.5"	5¾"	17½"	2'-3"
	31	27°17'29.6"	0°52'14.1"	5¾"	17½"	2'-3"
	32	26°11'02.2"	0°49'42.2"	5¾"	17½"	2'-3"
	33	25°23'09.4"	0°49'16.0"	6½"	21"	2'-6"
	34	24°32'22.2"	0°47'34.0"	6½"	21"	2'-6"

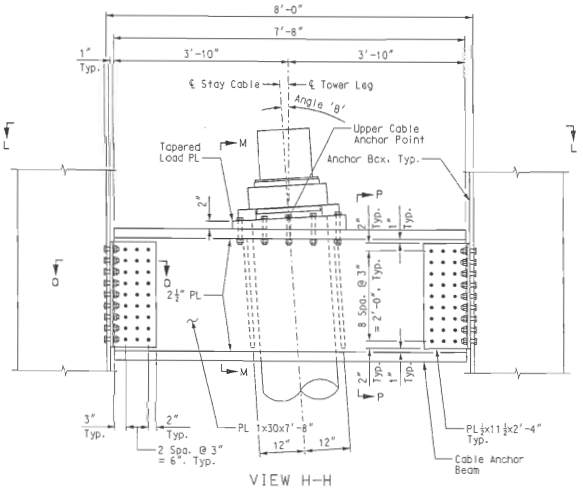

VIEW H-H

Cable 1 shown. Cables 2, 3, 4, 31, 32, 33 & 34 similar. Shear Studs not shown for clarity

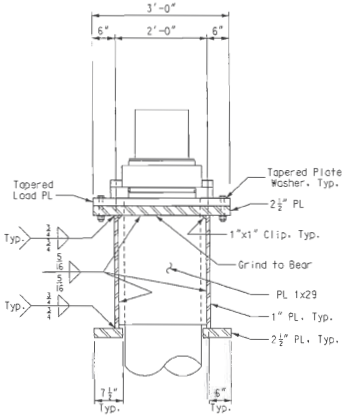

SECTION M-M

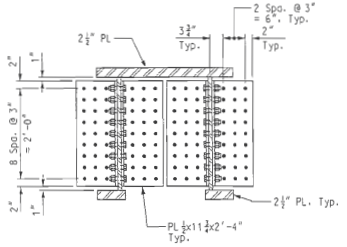

SECTION P-P

Notes:

For location of View H-H, see Sheet BR88.

The Cable Anchor Beams and Connection Plates shall be composed of A709 Gr. HPS50W-2 material.

The Cable Anchor Beams and Connection Plates shall be treated as Fracture Critical.

Bolts shall be 1" diameter ASTM A325, Type 3 with complimentary circular flat washer and heavy hex nut.

Tapered plate washers shall be made from A709, Gr. 50W material.

The contact surfaces of the Load Plate (top and bottom) and top flange of the Cable Anchor Beam shall be in accordance with Section 1080.3.3.13 of the MoDOT Standard Specifications for Highway Construction. These surfaces shall be flat and in full contact with each other and the Cable Anchor Plate. The surface roughness of these surfaces shall not exceed 250 micro-inches.

The dimensions associated with the Tower Cable Anchorage System as shown in these Plans are based on the VSL SSI 2000 Stay Cable System. Should another Stay Cable System be furnished, the Contractor is responsible for revising the Tower Cable Anchorage System to suit the furnished Stay Cable System. The revised Tower Cable Anchorage System is subject to review and approval by the Engineer.

All costs associated with the materials, fabrication and installation of the Tower Anchorage System shall be included in the pay item "Fabricated Structural Low Alloy Steel (Tower Anchor Box) A709, Gr. HPS50W". This shall include the Anchor Boxes, Shear Connectors, Cable Anchor Beams, Connection Plates, Load Plates and all fasteners.

For location of Angle 'A', see Sheet No. BR88.

TOWER CABLE ANCHORAGE DETAILS - PIERS 11 & 12

STATE OF MISSOURI
HANS R. HUTTON
NUMBER E-29174
REGISTERED PROFESSIONAL ENGINEER
Hans R. Hutton

DATE
10/19/09

ROUTE	STATE
I-70	MO/IL
DISTRICT	SHEET NO.
6	BR91

COUNTY
ST. LOUIS CITY - MO
ST. CLAIR - IL

JOB NO.
J6I0984

CONTRACT ID.

PROJECT NO.

BRIDGE NO.
A6500

DESCRIPTION	DATE

MISSOURI HIGHWAYS AND TRANSPORTATION COMMISSION
105 WEST CAPITOL
JEFFERSON CITY, MO 65102
1-888-ASK-MODOT (1-888-275-6636)

HNTB
715 KIRK DRIVE
KANSAS CITY, MO 64105-1310
TELEPHONE (816) 472-1201
CERTIFICATE OF AUTHORITY NO. 001710

LICENSED STRUCTURAL ENGINEER
HANS R. HUTTON
E-29174
STATE OF ILLINOIS
Hans R. Hutton
10-19-2009

REV.

Detailed JUL 2009
Checked JUL 2009

Note: This drawing is not to scale. Follow dimensions.

\\kcaw00\jobs\46440\Bridges\Plans\CetraMoDOTA6500\J6I0984\A6500-dgn\ZPLOT_B_A6500_091-205_J6I0984_091.dgn

19-OCT-2009 09:49

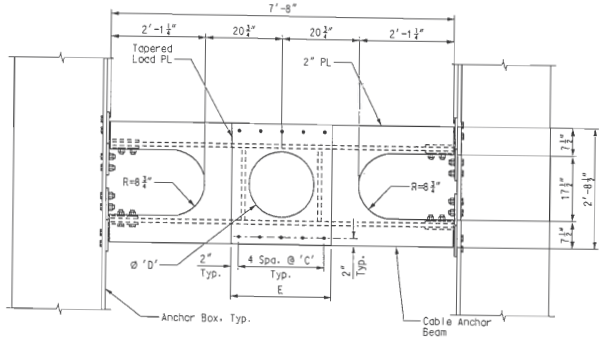

VIEW R-R

Cable & Shear Studs not shown for clarity

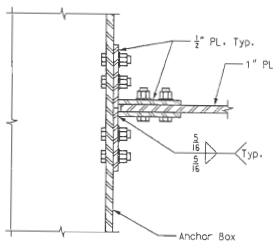

SECTION U-U

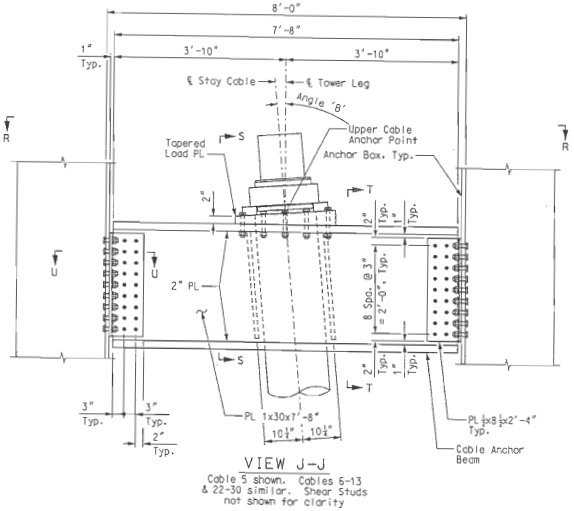

VIEW J-J

Cable 5 shown. Cables 6-13 & 22-30 similar. Shear Studs not shown for clarity

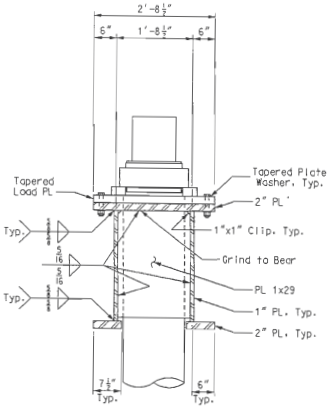

SECTION S-S

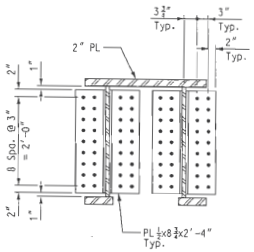

SECTION T-T

TABLE OF DIMENSIONS						
PIER 11	CABLE	ANGLE 'A'	ANGLE 'B'	SPACING 'C'	DIA. 'D'	WIDTH 'E'
	5	29°18'59.2"	0°56'54.9"	5¾"	17½"	2'-3"
	6	30°51'56.0"	1°01'09.9"	5¾"	17½"	2'-3"
	7	32°35'01.3"	1°05'25.7"	5¾"	17½"	2'-3"
	8	34°31'26.0"	1°09'50.4"	5¾"	17½"	2'-3"
	9	36°42'44.1"	1°14'07.7"	5¼"	17"	2'-1"
	10	39°18'36.7"	1°19'15.1"	5¼"	17"	2'-1"
	11	42°25'24.4"	1°25'23.6"	4¾"	15"	1'-11"
	12	46°13'41.6"	1°33'13.0"	4¾"	15"	1'-11"
	13	50°47'49.8"	1°41'48.3"	4¾"	15"	1'-11"
	22	49°39'43.7"	1°36'59.8"	4¾"	15"	1'-11"
	23	45°05'27.8"	1°28'37.1"	4¾"	15"	1'-11"
	24	41°16'24.1"	1°20'39.8"	4¾"	15"	1'-11"
	25	38°12'04.6"	1°14'51.8"	5¼"	17"	2'-1"
	26	35°33'51.1"	1°09'10.6"	5¼"	17"	2'-1"
	27	33°27'05.2"	1°05'30.2"	5¾"	17½"	2'-3"
	28	31°33'03.5"	1°01'19.3"	5¾"	17½"	2'-3"
	29	29°54'27.7"	0°57'38.5"	5¾"	17½"	2'-3"
	30	28°27'56.5"	0°54'17.6"	5¾"	17½"	2'-3"
PIER 12	CABLE	ANGLE 'A'	ANGLE 'B'	SPACING 'C'	DIA. 'D'	WIDTH 'E'
	5	29°33'47.9"	0°59'22.6"	5¾"	17½"	2'-3"
	6	31°01'27.4"	1°02'45.7"	5¾"	17½"	2'-3"
	7	32°43'27.9"	1°06'51.5"	5¾"	17½"	2'-3"
	8	34°38'55.6"	1°11'07.6"	5¾"	17½"	2'-3"
	9	36°45'24.1"	1°14'35.6"	5¼"	17"	2'-1"
	10	39°21'59.5"	1°19'51.4"	5¼"	17"	2'-1"
	11	42°26'08.2"	1°25'31.7"	4¾"	15"	1'-11"
	12	46°13'57.1"	1°33'16.0"	4¾"	15"	1'-11"
	13	50°47'51.1"	1°41'48.6"	4¾"	15"	1'-11"
	22	49°40'48.3"	1°37'13.0"	4¾"	15"	1'-11"
	23	45°05'05.6"	1°28'32.9"	4¾"	15"	1'-11"
	24	41°15'57.7"	1°20'34.9"	4¾"	15"	1'-11"
	25	38°11'42.5"	1°14'47.9"	5¼"	17"	2'-1"
	26	35°33'46.0"	1°09'09.7"	5¼"	17"	2'-1"
	27	33°28'32.3"	1°05'45.1"	5¼"	17½"	2'-3"
	28	31°32'37.6"	1°01'14.9"	5¼"	17½"	2'-3"
	29	29°53'32.8"	0°57'29.3"	5¼"	17½"	2'-3"
	30	28°27'04.2"	0°54'09.0"	5¼"	17½"	2'-3"

Notes:
For Location of View J-J, see Sheet BR88.
For additional notes, see Sheet No. BR91.

TOWER CABLE ANCHORAGE DETAILS - PIERS 11 & 12

Detailed JUL 2009
Checked JUL 2009

Note: This drawing is not to scale. Follow dimensions.

Sheet No. 92 of 205

\\kcow00\jobs\46440\Bridges\Plans\CdtoMoDOTA6500\J6I0984\A6500-dgn\ZPLOT_B_A6500_092-205_J6I0984_092.dgn

19-OCT-2009 09:49

STATE OF MISSOURI
HANS R. HUTTON
NUMBER E-29574
REGISTERED PROFESSIONAL ENGINEER
Hans R. Hutton

DATE 10/19/09

ROUTE	STATE
I-70	MO/IL
DISTRICT	SHEET NO.
6	BR92

COUNTY
ST. LOUIS CITY - MO
ST. CLAIR - IL

JOB NO.
J6I0984

CONTRACT NO.

PROJECT NO.

BRIDGE NO.
A6500

REV.	DESCRIPTION	DATE

MISSOURI HIGHWAYS AND TRANSPORTATION COMMISSION
105 WEST CAPITOL
JEFFERSON CITY, MO 65102
1-888-ASK-MODOT (1-888-275-6636)

HNTB
715 KIRK DRIVE
KANSAS CITY, MO 64105-1310
TELEPHONE 816 347-2300
CERTIFICATE OF AUTHORITY NO. 001270

STATE OF ILLINOIS
HANS R. HUTTON
081-006707
LICENSED STRUCTURAL ENGINEER
Hans R. Hutton
10-19-2009

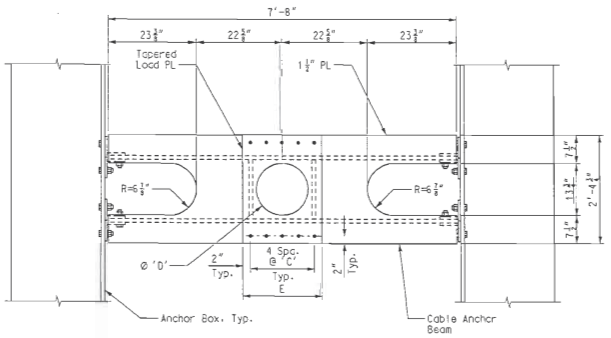

VIEW V-V

Cable & Shear Studs not shown for clarity

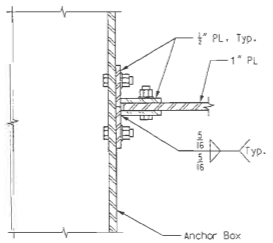

SECTION Y-Y

	CABLE	ANGLE 'A'	ANGLE 'B'	SPACING 'C'	DIA. 'D'	WIDTH 'E'
PIER 11	14	56°17'32.3"	1°50'35.3"	4½"	13¾"	1'-9"
	15	62°43'21.6"	2°01'35.1"	4½"	13¾"	1'-9"
	16	70°42'18.7"	2°13'55.4"	4½"	13¾"	1'-9"
	17	80°18'44.3"	2°24'23.7"	4½"	13¾"	1'-9"
	18	79°58'46.3"	2°23'49.2"	4¼"	13¾"	1'-9"
	19	70°03'03.9"	2°11'34.1"	4½"	13¾"	1'-9"
	20	61°54'05.9"	1°59'09.4"	4½"	13¾"	1'-9"
	21	55°18'05.2"	1°46'59.4"	4½"	13¾"	1'-9"
PIER 12	CABLE	ANGLE 'A'	ANGLE 'B'	SPACING 'C'	DIA. 'D'	WIDTH 'E'
	14	56°17'33.3"	1°50'35.5"	4½"	13¾"	1'-9"
	15	62°43'28.2"	2°01'36.9"	4½"	13¾"	1'-9"
	16	70°42'08.5"	2°13'51.9"	4½"	13¾"	1'-9"
	17	80°18'46.8"	2°24'25.4"	4½"	13¾"	1'-9"
	18	79°58'42.0"	2°23'46.4"	4¼"	13¾"	1'-9"
	19	70°03'00.4"	2°11'32.9"	4½"	13¾"	1'-9"
	20	61°53'32.6"	1°59'00.7"	4½"	13¾"	1'-9"
	21	55°18'52.8"	1°47'10.1"	4½"	13¾"	1'-9"

TABLE OF DIMENSIONS

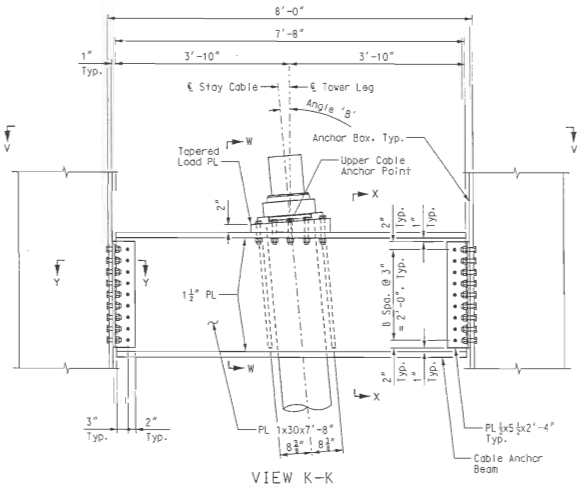

VIEW K-K

Cable 14 shown. Cables 15-17 & 18-21 similar. Shear Studs not shown for clarity

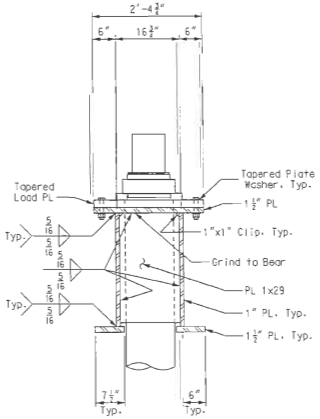

SECTION W-W

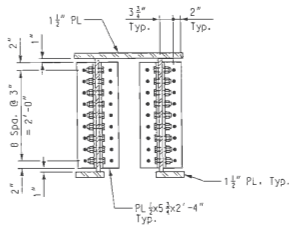

SECTION X-X

Notes:
For Location of View K-K, see Sheet BR89.
For additional notes, see Sheet No. BR91.

TOWER CABLE ANCHORAGE DETAILS - PIERS 11 & 12

DATE 10/19/09
ROUTE I-70 | STATE MO/IL
DISTRICT 6 | SHEET NO. BR93
COUNTY ST. LOUIS CITY - MO ST. CLAIR - IL
JOB NO. J6I0984
CONTRACT ID.
PROJECT NO.
BRIDGE NO. A6500

DESCRIPTION | DATE

MISSOURI HIGHWAYS AND TRANSPORTATION COMMISSION
105 WEST CAPITOL
JEFFERSON CITY, MO 65102
1-888-ASK-MODOT (1-888-275-6636)

HNTB
715 KIRK DRIVE
KANSAS CITY, MO 64105-1310
TELEPHONE (816) 472-1201
CERTIFICATE OF AUTHORITY NO. 001270

10-19-2009

Detailed JUL 2009
Checked JUL 2009

Note: This drawing is not to scale. Follow dimensions.

\\kcaw00\jobs\46440\Bridges\Plans\CdotoMoDOTA6500\J6I0984\A6500-dgn\ZPLOT_B_A6500_093-205_J6I0984_093.dgn

19-OCT-2009 09:50

REV.

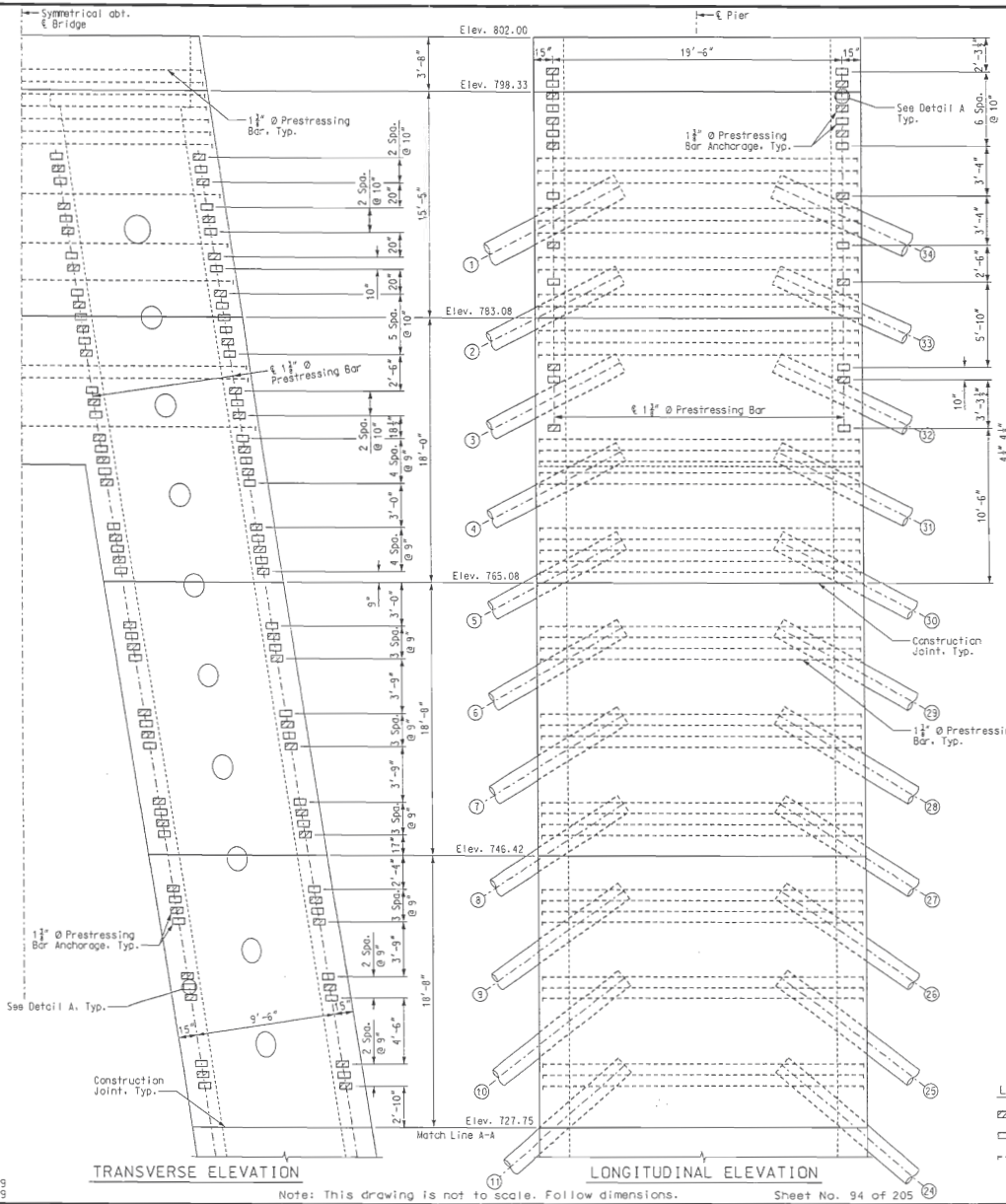

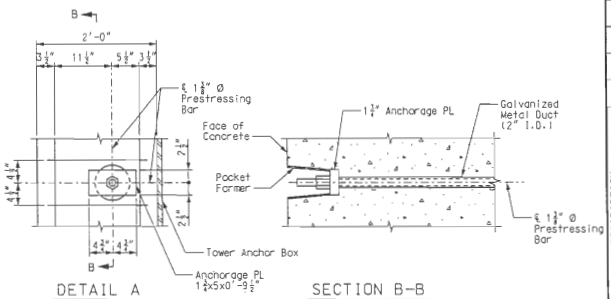

TYPICAL POST-TENSIONING ANCHORAGE DETAIL

Notes:
(F) denotes Stay Cable Number.
Tower concrete at the prestressing bars shall have a minimum compressive strength of 6000 psi prior to stressing bars.
Jacking stress in the 1¾" prestressing bars shall be 108 ksi.
Anchorage plates shall be ASTM A709 Gr. 36 steel.
Effective stress in prestressing bars shall be 96-ksi.
Assumed friction loss coefficient is: 0.3
Assumed wobble coefficient is:
k = 0.0002/ft.
Assumed anchor set is 1/8".
Ducts shall be grouted within 7 days of installing prestressing bars in duct.
All prestressing bars in the towers shall be stressed and grouted prior to installing stay cables.
Ducts for prestressing bars shall be grouted following the jacking of the bars. Vent and grout tubes shall be provided as required to achieve grout distribution throughout the length of each duct.
After bar stressing and duct grouting operations are complete, the blockouts for the prestressing bars shall be filled with non-shrink grout. Grout shall have minimum compressive strength of 4000 psi.
The pay item, "Post-Tensioning System at Towers" shall include the prestressing bars, ducts, grout, grout tubes, pocket formers, anchor plates, installing and stressing the prestressing bars, and grouting the ducts and blockouts.
For details of the Tower Anchor Box, see Sheet Nos. BR88 thru BR92.

LEGEND
Stressing End
Dead End
Presstessing Bar

TOWER CABLE ANCHORAGE
POST-TENSIONING
DETAILS – PIERS 11 & 12

Detailed JUL 2009
Checked JUL 2009

Note: This drawing is not to scale. Follow dimensions.

Sheet No. 94 of 205

\\kcow00\jobs\46440\Bridges\Plans\CdtaMa00TA6500\J610984\A6500-dgn\ZPLOT_B_A6500_001-205_J610984_094.dgn

19-AUG-2009 07:10

REV.

STATE OF MISSOURI
HANS R. HUTTON
NUMBER E-29174
REGISTERED PROFESSIONAL ENGINEER
Hans R. Hutton

DATE 8/20/09
ROUTE I-70
STATE MO/IL
DISTRICT 6
SHEET NO. BR94
COUNTY ST. LOUIS CITY - MO ST. CLAIR - IL
JOB NO. J610984
CONTRACT ID.
PROJECT NO.
BRIDGE NO. A6500

DESCRIPTION	DATE

MISSOURI HIGHWAYS AND TRANSPORTATION COMMISSION
105 WEST CAPITOL
JEFFERSON CITY, MO 65102
1-888-ASK-MODOT (1-888-275-6636)

HNTB
715 KIRK DRIVE
KANSAS CITY, MO 64105-1310
TELEPHONE (816) 472-1201
CERTIFICATE OF AUTHORITY NO. 001270

LICENSED STRUCTURAL ENGINEER
HANS R. HUTTON
081-006707
STATE OF ILLINOIS
Hans R. Hutton
8-20-2009

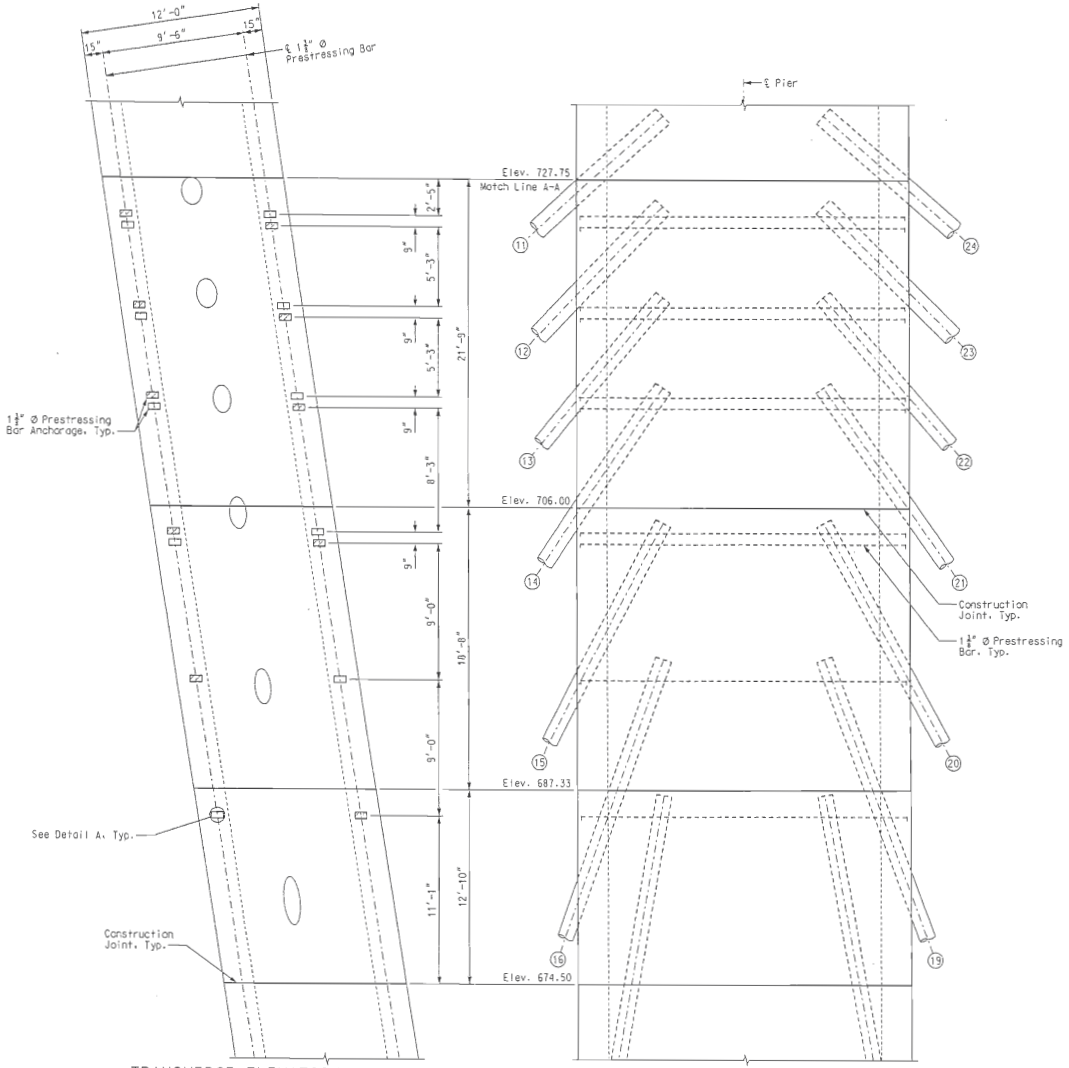

TRANSVERSE ELEVATION

LONGITUDINAL ELEVATION

Notes:
(#) denotes Stay Cable Number.
For Tower Cable Anchorage Post-Tensioning notes, see Sheet No. BR94.
For Typical Post-Tensioning Anchorage Detail, see Sheet No. BR94.
For Detail A, see Sheet No. BR94.

LEGEND

- Stressing End
- Dead End
- Presstessing Bar

TOWER CABLE ANCHORAGE POST-TENSIONING DETAILS - PIERS 11 & 12

Detailed JUL 2009
Checked JUL 2009

Note: This drawing is not to scale. Follow dimensions.

Sheet No. 95 of 205

\\kcow00\jobs\46440\Bridges\Plans\CdotMoDOTA6500\J6I0984\A6500-dgn\ZPLOT_B_A6500_001-205_J6I0984_095.dgn

19-AUG-2009 07:10

STATE OF MISSOURI
HANS R. NUTTON
NUMBER E-24974
REGISTERED PROFESSIONAL ENGINEER
Hans R. Nutton

DATE: 8/20/09
ROUTE: I-70 | STATE: MO/IL
DISTRICT: 6 | SHEET NO.: BR95
COUNTY: ST. LOUIS CITY - MO, ST. CLAIR - IL
JOB NO.: J6I0984
CONTRACT ID.:
PROJECT NO.:
BRIDGE NO.: A6500

NO.	DESCRIPTION	DATE

MISSOURI HIGHWAYS AND TRANSPORTATION COMMISSION
105 WEST CAPITOL
JEFFERSON CITY, MO 65102
1-888-ASK-MODOT (1-888-275-6636)

HNTB
715 KIRK DRIVE
KANSAS CITY, MO 64105-1310
TELEPHONE (816) 347-1370
CERTIFICATE OF AUTHORITY NO. 001270

LICENSED STRUCTURAL ENGINEER
HANS R. NUTTON
062-060707
STATE OF ILLINOIS
8-20-2009

REV.

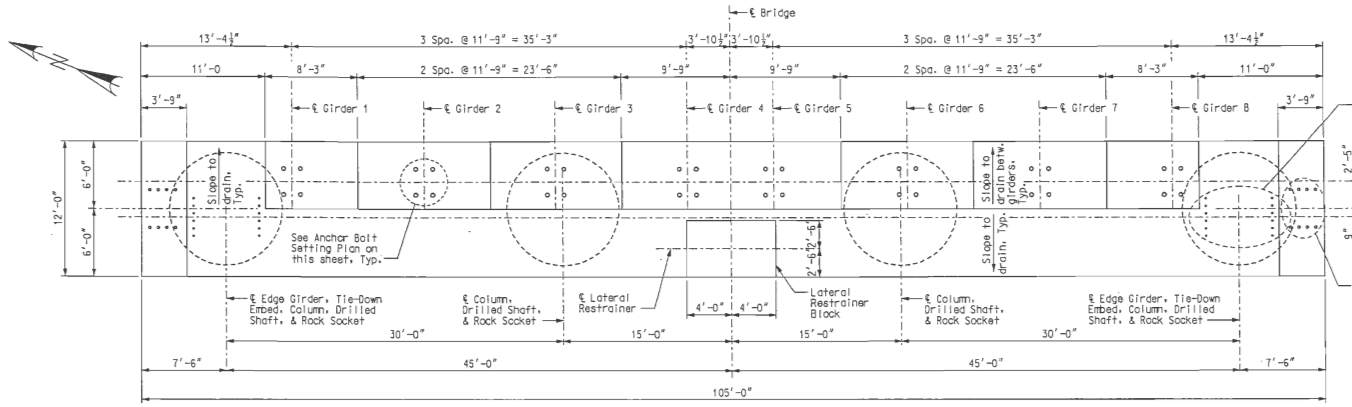

PLAN

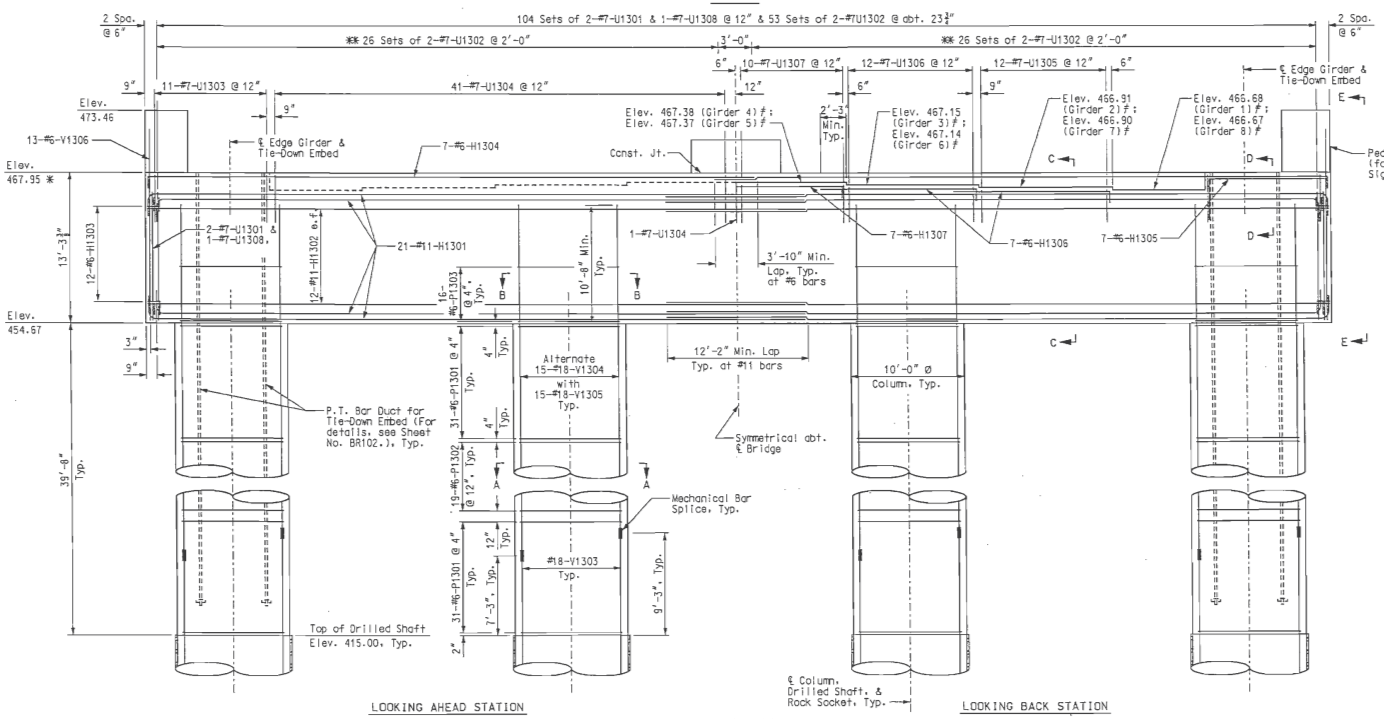

ELEVATION

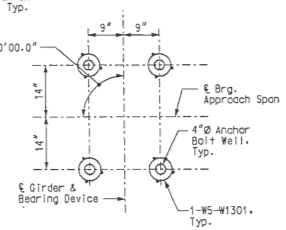

ANCHOR BOLT WELL SETTING PLAN

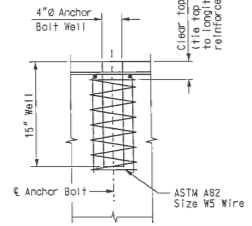

ANCHOR BOLT WELL DETAIL

Notes:
For details of Drilled Shaft, Rock Socket, Sections A-A thru D-D, & View E-E, see Sheet No. BR97.
All reinforcing bars in the capbeam shall be spaced to clear tie-down embed. For details of tie-down embed, see Sheet No. BR102.
All reinforcing bars in the top of the capbeam shall be spaced to clear anchor bolt wells for bearings by at least ½″.
Seal top and all faces of capbeam with Protective Coating in accordance with Sec. 711.3.2.
For details of lateral restrainer block and pedestals, see Sheet No. BR98.
✻ Elevation taken at ℄ Pier.
℉ Elevation taken at ℄ Brg. Approach Span.
✻✻ Space to clear column reinforcing and anchor bolt wells.

PIER 13

STATE OF MISSOURI
HANS R. HUTTON
NUMBER E-29174
REGISTERED PROFESSIONAL ENGINEER
Hans R. Hutton

DATE 5/17/10
ROUTE I-70 | STATE MO/IL
DISTRICT 6 | SHEET NO. BR96
COUNTY ST. LOUIS CITY - MO ST. CLAIR - IL
JOB NO. J6I0984
CONTRACT ID.
PROJECT NO.
BRIDGE NO. A6500

DATE	DESCRIPTION
5-17-10	⚠1 Revised per AIC

MISSOURI HIGHWAYS AND TRANSPORTATION COMMISSION
105 WEST CAPITOL
JEFFERSON CITY, MO 65102
1-888-ASK-MODOT (1-888-275-6636)

HNTB
715 KIRK DRIVE
KANSAS CITY, MO 64105-1310
TELEPHONE (816) 472-1201
CERTIFICATE OF AUTHORITY NO. 001270

LICENSED STRUCTURAL ENGINEER
HANS R. HUTTON
081-006707
STATE OF ILLINOIS
expires 11-30-2010
Hans R. Hutton
signature
5-17-2010
date

REV.

Detailed JUL 2009
Checked JUL 2009

Note: This drawing is not to scale. Follow dimensions.

\\kcaw00\jobs\46440\Bridges\Plans\CdtaMoDOTA6500\J6I0984\A6500-dgn\ZPL0T_B_A6500_096-205_J6I0984_096.dgn

17-MAY-2010 11:30

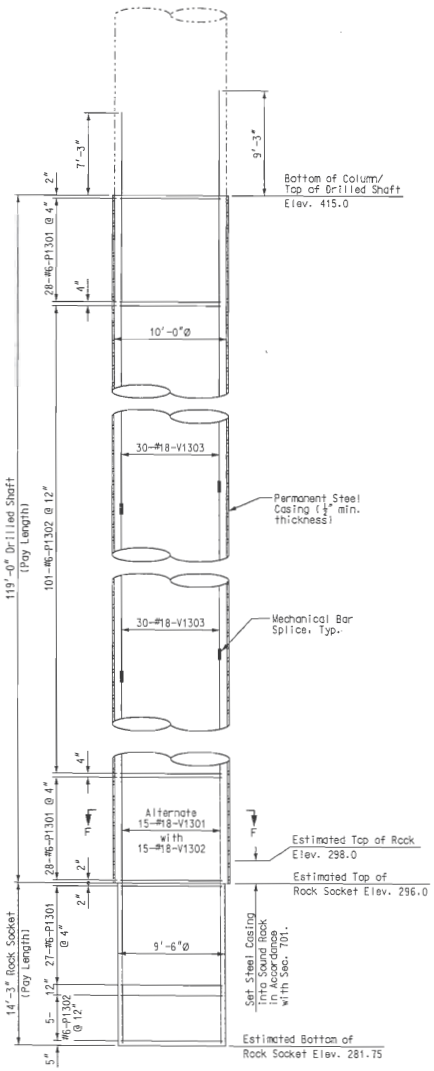

DRILLED SHAFT AND ROCK SOCKET ELEVATION

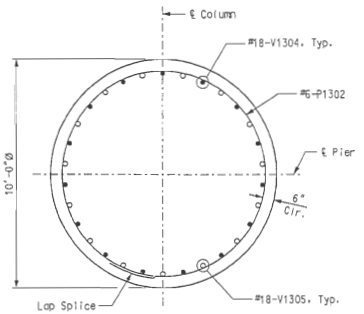

SECTION A-A

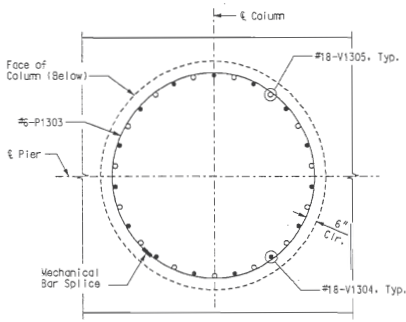

SECTION B-B

(Capbeam reinforcing not shown for clarity.)

SUBSTRUCTURE QUANTITY TABLE FOR PIER 13		
ITEM		QUANTITY
Drilled Shafts (10 ft. 0 in. Dia.)	linear foot	476.0
Rock Sockets (9 ft. 6 in. Dia.)	linear foot	57.0
Television Camera Inspection	each	4
SID Inspection	each	4
Foundation Inspection Holes	linear foot	97.0
Concrete Coring	linear foot	134.3
Sonic Logging Testing	each	4
Class B-1 Concrete (Substructure)	cu. yard	1085.0
Reinforcing Steel (Bridges)	pound	285,370
Mechanical Bar Splice	each	1004
Reinforcing Steel (Epoxy Coated)	pound	179,100
Fabricated Structural Carbon Steel (Miscellaneous)	pound	1020

Notes:
The Substructure Quantities are included in the Estimated Quantities table on Sheet No. BR8.
An additional 4 feet has been added to #18-V1301, #18-V1302 & #6-P1302 bar lengths for possible change in rock socket depth. This excess length shall be cut-off if not required.

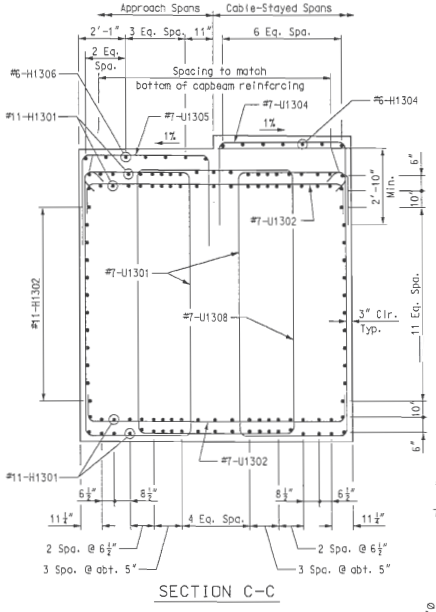

SECTION C-C

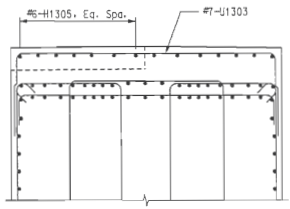

SECTION D-D

(Detail and dimensions are similar to Section C-C, except as noted.)

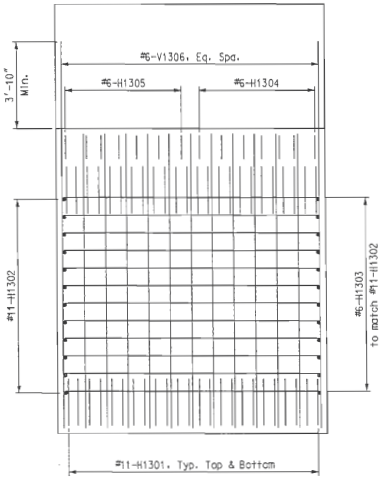

VIEW E-E

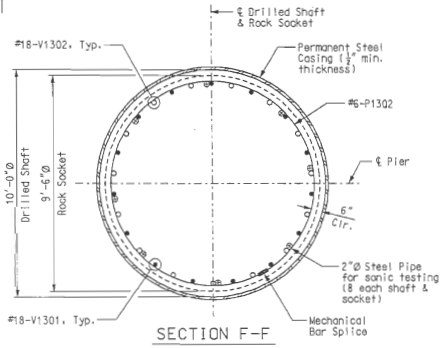

SECTION F-F

Notes:
For location of Sections A-A thru C-C, & View D-D, see Sheet No. BR96.
The contract unit price for "Drilled Shafts (10 ft. 0 in.)" and "Rock Sockets (9 ft. 6 in.)" shall be full compensation for construction of the drilled shafts and rock sockets including Class B2 Concrete within the pay limit shown. The contract unit price does not include reinforcing steel.
All reinforcement in drilled shafts and rock sockets are included in Substructure Quantities.
Concrete coring shall be performed in accordance with Missouri Standard Specifications for Highway Construction, Sec 701 and General Notes.
Sonic logging testing shall be performed on all drilled shafts and rock sockets.
Rotate alternate hoops 180-degrees so that splices in adjacent bars are staggered.
The length of the rock socket shown on this sheet is an estimate. The actual length will be determined by load test.

PIER 13

HANS R. HUTTON NUMBER E-29514 REGISTERED PROFESSIONAL ENGINEER STATE OF MISSOURI

DATE: 5/17/10
ROUTE: I-70 | STATE: MO/IL
DISTRICT: 6 | SHEET NO.: BR97
COUNTY: ST. LOUIS CITY - MO, ST. CLAIR - IL
JOB NO.: J6I0984
CONTRACT ID.:
PROJECT NO.:
BRIDGE NO.: A6500

DATE	DESCRIPTION
5-17-10	4 Revised per ATC

MISSOURI HIGHWAYS AND TRANSPORTATION COMMISSION
105 WEST CAPITOL
JEFFERSON CITY, MO 65102
1-888-ASK-MODOT (1-888-275-6636)

HNTB
715 KIRK DRIVE
KANSAS CITY, MO 64105-1310
TELEPHONE (816) 472-1201
CERTIFICATE OF AUTHORITY NO. 001170

LICENSED STRUCTURAL ENGINEER
HANS R. HUTTON
081-006707
STATE OF ILLINOIS
5-17-2010

Detailed JUL 2009
Checked JUL 2009

Note: This drawing is not to scale. Follow dimensions.

\\kcow00\jobs\46440\Bridges\Plans\CdtoMoDOTA6500\J6I0984\A6500-dgn\ZPLOT_B_A6500_097-205_J6I0984_097.dgn

17-MAY-2010 11:31

REV

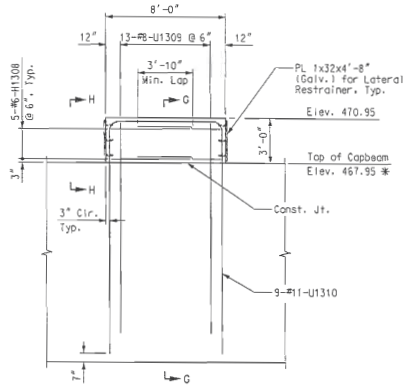

ELEVATION – LATERAL RESTRAINER BLOCK

(Capbeam reinforcing not shown for clarity.)

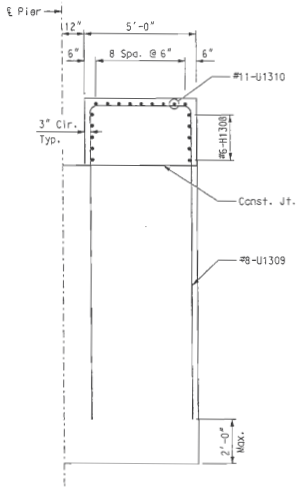

SECTION G-G

(Capbeam reinforcing not shown for clarity.)

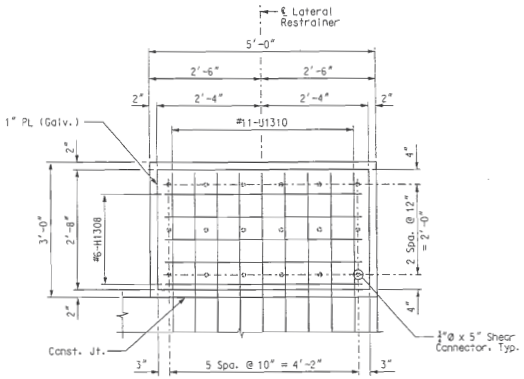

SECTION H-H

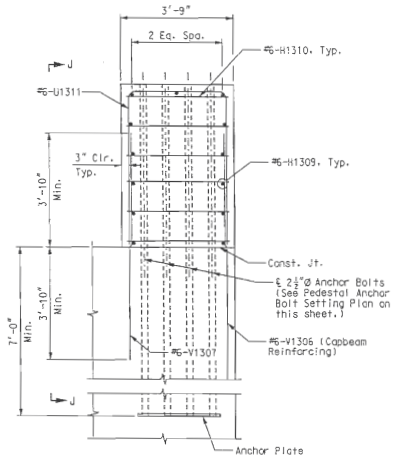

ELEVATION – PEDESTAL

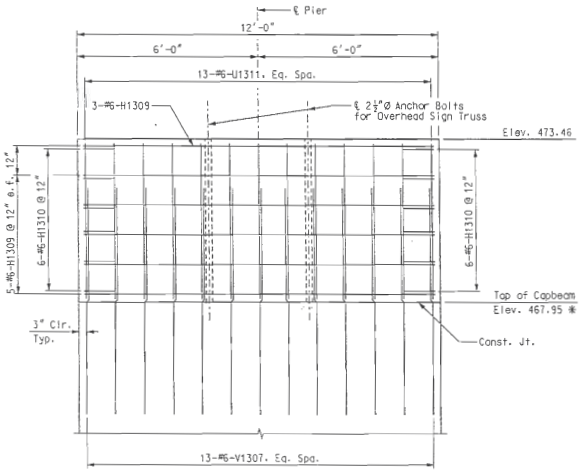

SECTION J-J

(Capbeam reinforcing not shown for clarity.)

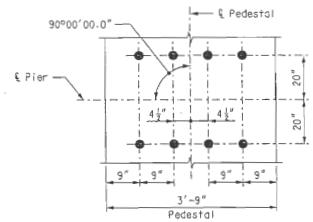

PEDESTAL ANCHOR BOLT SETTING PLAN

Notes:

For reinforcing in capbeam, see Sheet Nos. BR96 & BR97.
For details of Lateral Restrainer, see Sheet No. BR117.
For details of Overhead Sign Truss, see Signing Plans.
The cost of all labor and materials required to install the 1" galvanized plate shall be included in the pay item "Fabricated Structural Carbon Steel (Misc.)".
* Elevation taken at ℄ Pier.
Galvanized plate for Lateral Restrainer shall be galvanized in accordance with ASTM A123 after fabrication.

PIER 13

STATE OF MISSOURI
HANS R. HUTTON
NUMBER E-29174
REGISTERED ENGINEER
Hans R. Hutton

DATE: 8/20/09
ROUTE: I-70 | STATE: MO/IL
DISTRICT: 6 | SHEET NO.: BR98
COUNTY: ST. LOUIS CITY - MO, ST. CLAIR - IL
JOB NO.: J6I0984
CONTRACT ID.:
PROJECT NO.:
BRIDGE NO.: A6500

DATE	DESCRIPTION

MISSOURI HIGHWAYS AND TRANSPORTATION COMMISSION
105 WEST CAPITOL
JEFFERSON CITY, MO 65102
1-888-ASK-MODOT (1-888-275-6636)

HNTB
715 KIRK DRIVE
KANSAS CITY, MO 64105-1310
TELEPHONE (816) 472-1201
CERTIFICATE OF AUTHORITY NO. 00170

LICENSED STRUCTURAL ENGINEER
HANS R. HUTTON
061-006707
STATE OF ILLINOIS
Hans R. Hutton
8-20-2009

REV.

Detailed JUL 2009
Checked JUL 2009

Note: This drawing is not to scale. Follow dimensions.

\\kcow00\jobs\48440\Bridges\Plans\CdtoMoDOTA6500\J6I0984\A6500-dgn\ZPLOT_B_A6500_001-205_J6I0984_098.dgn

19-AUG-2009 07:10

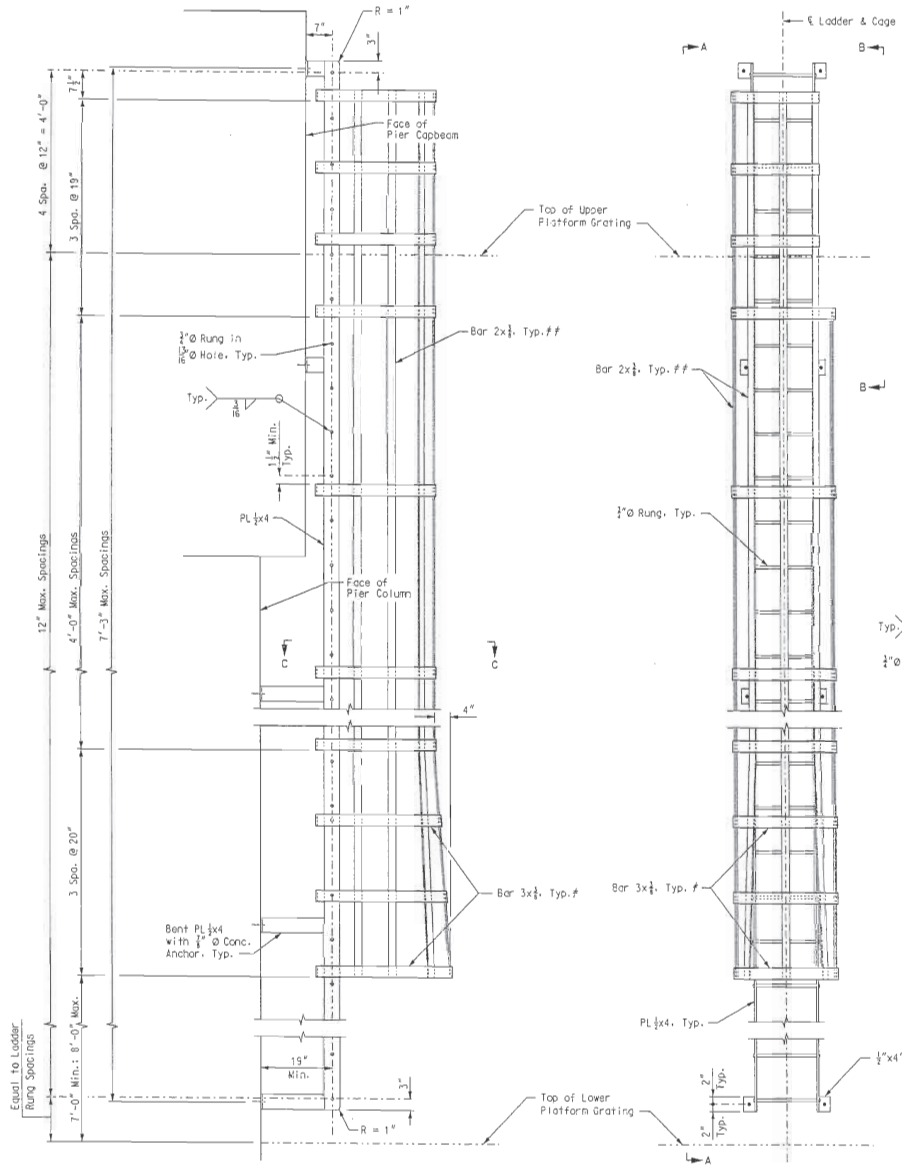

VIEW A-A

ELEVATION - LADDER AND CAGE

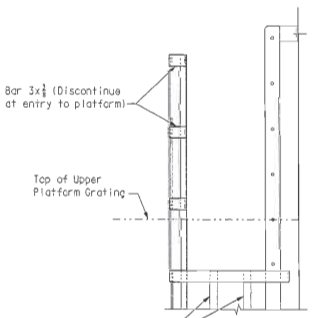

VIEW B-B

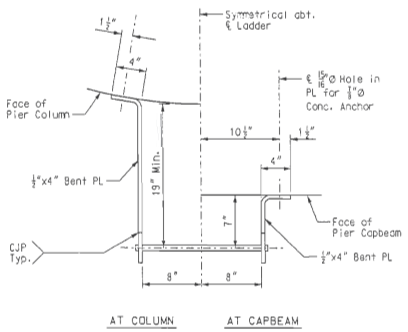

BENT PL DETAIL

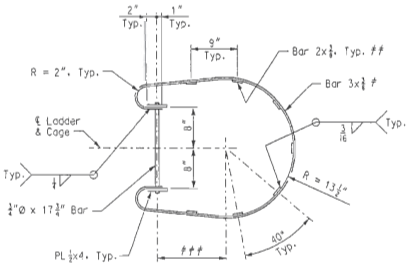

SECTION C-C

\# Two (2) uppermost hoop bars in ladder cage shall be discontinued at entry to platform.

\## Two (2) vertical bars in ladder cage shall be discontinued at nearest hoop beneath platform on side of platform entry.

\### 13½" at top & intermediate hoop bars; 17½" at bottom hoop bars.

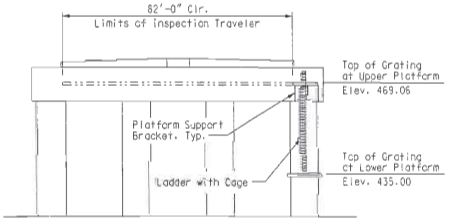

ELEVATION - INSPECTION TRAVELER ACCESS

(Looking Downstation at Pier 10)

Note:

Structural steel for ladders and cages shall conform to ASTM A709 Grade 36.

All ladder and cage material shall be galvanized in accordance with ASTM A123 after fabrication.

Holes in steel components for concrete anchors shall be appropriate for the anchor system selected by the Contractor.

Welding of the ladder and cage shall be in accordance with AWS D1.1, current edition.

Welding filler metal shall be matching.

Welds on ladder side rails shall be ground smooth.

Concrete anchors shall be Hilti HSL-3 anchors, or approved equal. Install anchors in accordance with manufacturer's recommendations.

For platform details, see Sheet Nos. BR100 and BR101.

Upper platform elevation based off assumed distance of 6.5' between bottom of floor beam and top of inspection traveler walkway. This elevation will need to be changed should the distance between the bottom of floor beam and top of inspection traveler walkway change, see Sheet No. BR178 for inspection traveler details.

INSPECTION TRAVELER ACCESS - PIER 10

STATE OF MISSOURI
HANS R. HUTTON
NUMBER E-29174
REGISTERED PROFESSIONAL ENGINEER
Hans R. Hutton

DATE
8/20/09

ROUTE	STATE
I-70	MO/IL
DISTRICT	SHEET NO.
6	BR99

COUNTY
ST. LOUIS CITY - MO
ST. CLAIR - IL

JOB NO.
J6I0984

CONTRACT ID.

PROJECT NO.

BRIDGE NO.
A6500

DESCRIPTION	DATE

MISSOURI HIGHWAYS AND TRANSPORTATION COMMISSION
105 WEST CAPITOL
JEFFERSON CITY, MO 65102
1-888-ASK-MODOT (1-888-275-6636)

HNTB
715 KIRK DRIVE
KANSAS CITY, MO 64105-1310
TELEPHONE: (816) 472-1201
CERTIFICATE OF AUTHORITY NO. 001270

LICENSED STRUCTURAL ENGINEER
HANS R. HUTTON
081-006707
STATE OF ILLINOIS
expires 11-30-2010
Hans R. Hutton
signature
8-20-2009
date

REV.

Detailed JUL 2009
Checked JUL 2009

Note: This drawing is not to scale. Follow dimensions.

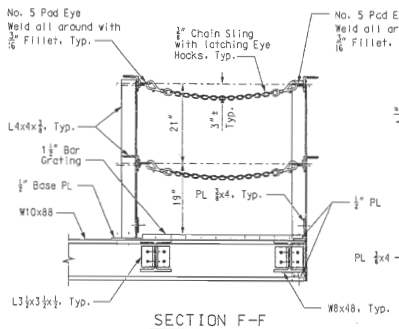

SECTION F-F

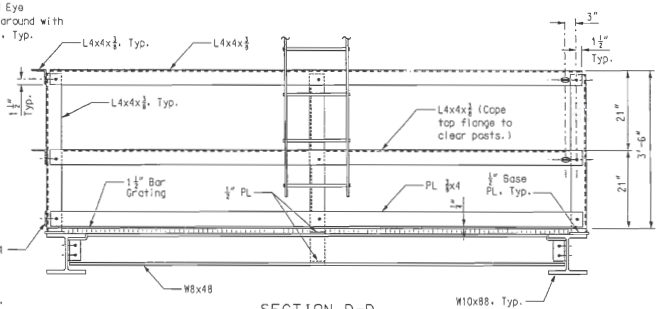

SECTION D-D

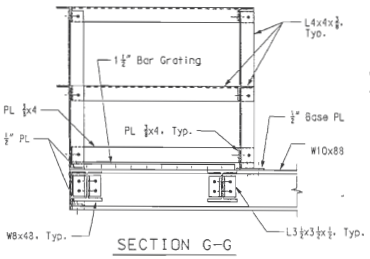

SECTION G-G

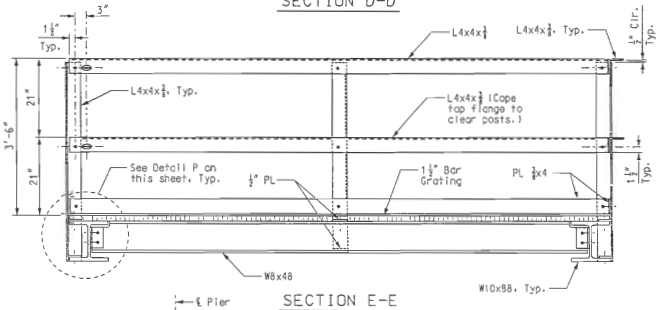

SECTION E-E

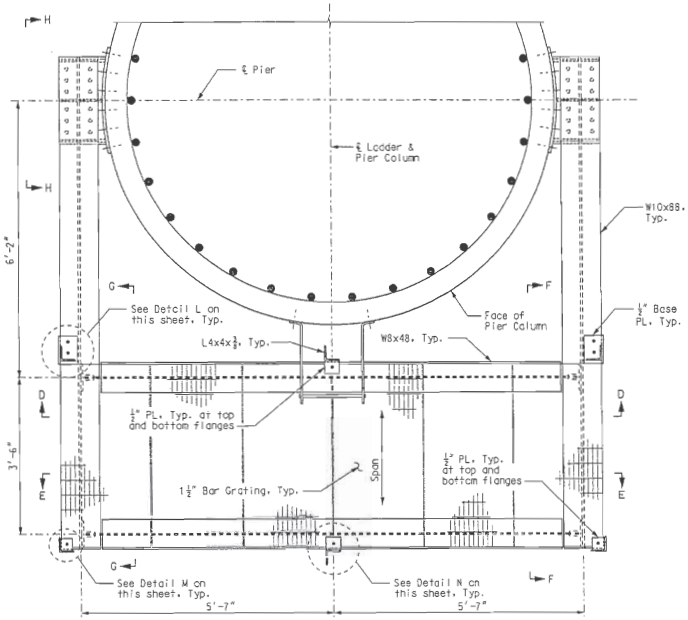

PLAN - LOWER PLATFORM

(Handrail not shown for clarity.)

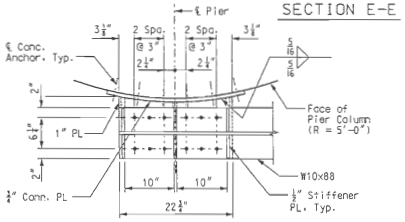

SECTION J-J

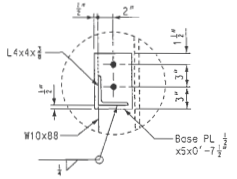

DETAIL L

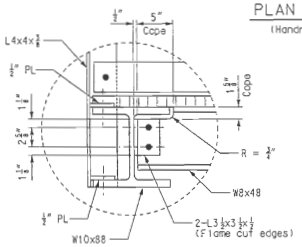

DETAIL P

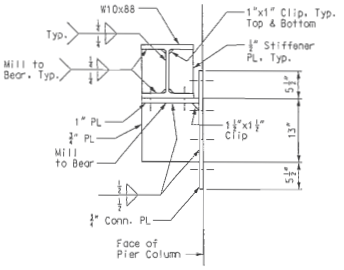

SECTION K-K

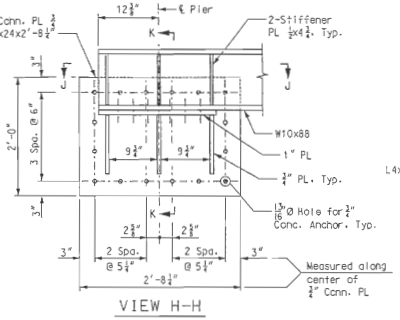

VIEW H-H

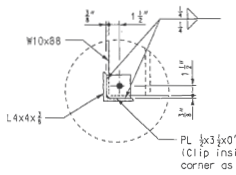

DETAIL M

(Detail shown at top flange of W10x88; detail at bottom flange is similar.)

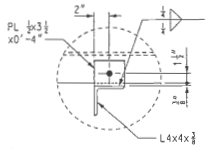

DETAIL N

(Detail shown at top flange of W10x88; detail at bottom flange is similar.)

Notes:

Structural steel for handrail shall conform to ASTM A709 Grade 36.

Structural steel for platform shall confirm to ASTM A709 Grade 50.

Holes in steel components for concrete anchors shall be appropriate for the anchor system selected by the Contractor.

All welding shall be in accordance with AWS D1.1, current edition.

Welding filler metal shall be matching.

Concrete anchors shall be Hilti HSL-3, length shall be per manufacturer's specification. Install anchors in accordance with manufacturer's recommendations.

Bolts connecting the platform members shall be 3/4" diameter ASTM A325, Type 1, hot-dip galvanized, with complimentary circular flat washer and heavy hex nut.

All handrail and platform material shall be galvanized in accordance with ASTM A123 after fabrication.

Grating shall be IKG Borden, Weldforged, Type WB, galvanized, Serrated Size 7(1 1/2"x3/16" bars) with saddle clip fasteners, or approved equal. There shall be six grating panels per platform. Grating panels shall be of similar width. There shall be a minimum of six grating fasteners per panel. Install in accordance with manufacturer's recommendations.

Field drill holes in platform to accommodate grating fasteners.

3/4" Chain Sling with latching eye hooks shall be Crosby Spectrum 8 with two S-325 Eye Hooks, or approved equal.

No. 5 Pcd Eye shall be Crosby S-264, stock no. 1090820, or approved equal.

Epoxy anchor compound shall be Epcon C5 Epoxy or approved equal. Install in accordance with manufacturer's recommendations.

For location of platform and details of ladder, see Sheet No. BR39.

All costs associated with material, fabrication and installation of the Inspection Traveler Access system shall be included in the pay item, "Inspection Access".

INSPECTION TRAVELER ACCESS - PIER 10

STATE OF MISSOURI
HANS R. HUTTON
NUMBER E-20714
REGISTERED PROFESSIONAL ENGINEER
Hans R. Hutton

DATE: 8/20/09
ROUTE: I-70 | STATE: MO/IL
DISTRICT: 6 | SHEET NO.: BR100
COUNTY: ST. LOUIS CITY - MO, ST. CLAIR - IL
JOB NO.: J6I0984
CONTRACT ID.:
PROJECT NO.:
BRIDGE NO.: A6500

REV.	DESCRIPTION	DATE

MISSOURI HIGHWAYS AND TRANSPORTATION COMMISSION
105 WEST CAPITOL
JEFFERSON CITY, MO 65102
1-888-ASK-MODOT (1-888-275-6636)

HNTB
715 KIRK DRIVE
KANSAS CITY, MO 64105-1310
816.472.1201
CERTIFICATE OF AUTHORITY NO. 001270

HANS R. HUTTON
081-006707
LICENSED STRUCTURAL ENGINEER
STATE OF ILLINOIS
Hans R. Hutton
8-20-2009

Detailed JUL 2009
Checked JUL 2009

Note: This drawing is not to scale. Follow dimensions.

\\kcaw00\jobs\46440\Bridges\Plans\CdtoMoDOTA6500\J6I0984\A6500-dgn\ZPLOT_B_A6500_001-205_J6I0984_100.dgn

19-AUG-2009 07:11

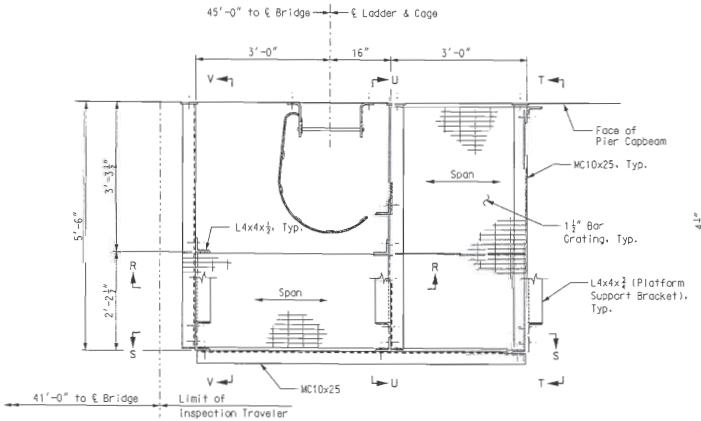

PLAN - UPPER PLATFORM

(Handrail not shown for clarity.)

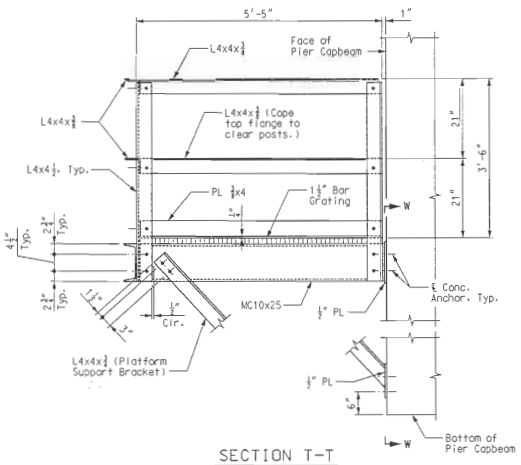

SECTION T-T

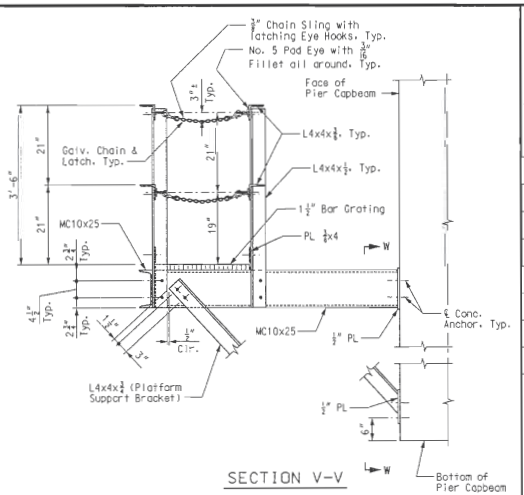

SECTION V-V

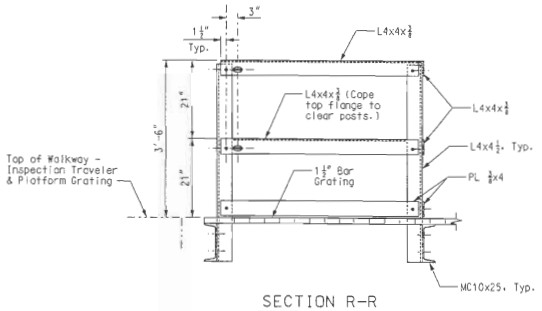

SECTION R-R

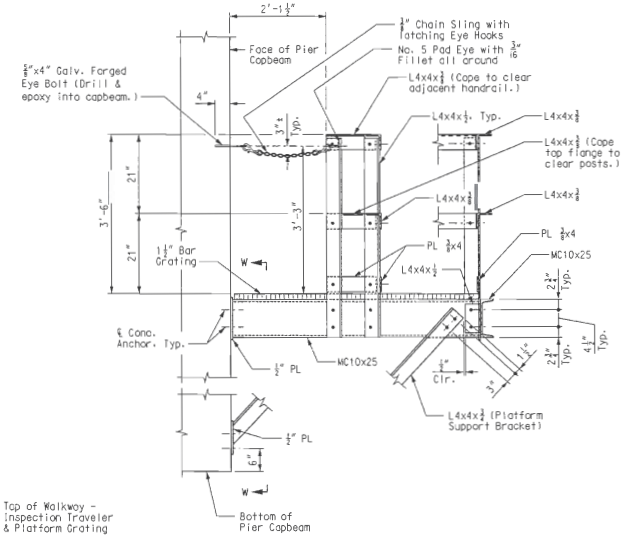

SECTION U-U

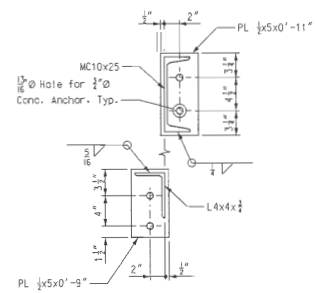

SECTION W-W

(Section shown at interior platform support bracket; section at exterior platform support bracket is similar.)

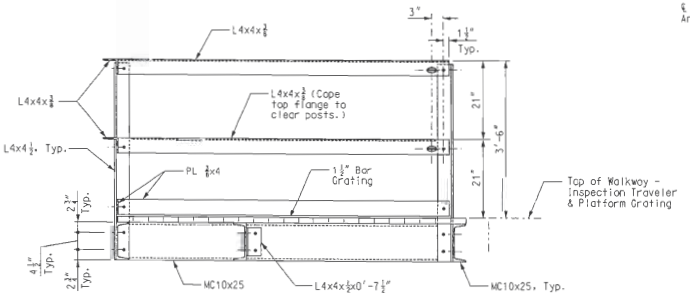

SECTION S-S

Notes:
For notes, see Sheet No. BR100.

INSPECTION TRAVELER ACCESS - PIER 10

Detailed JUL 2009
Checked JUL 2009

Note: This drawing is not to scale. Follow dimensions.

Sheet No. 101 of 205

STATE OF MISSOURI HANS R. HUTTON NUMBER E-20174 REGISTERED PROFESSIONAL ENGINEER
Hans R. Hutton

DATE	DESCRIPTION
8/20/09	
ROUTE I-70	STATE MO/IL
DISTRICT 6	SHEET NO. BR101
COUNTY ST. LOUIS CITY - MO ST. CLAIR - IL	
JOB NO. J610984	
CONTRACT ID.	
PROJECT NO.	
BRIDGE NO. A6500	

MISSOURI HIGHWAYS AND TRANSPORTATION COMMISSION
MoDOT
105 WEST CAPITOL
JEFFERSON CITY, MO 65102
1-888-ASK-MODOT (1-888-275-6636)

HNTB
715 KIRK DRIVE
KANSAS CITY, MO 64105-1310
TELEPHONE (816) 472-1201
CERTIFICATE OF AUTHORITY NO. 001270

LICENSED STRUCTURAL ENGINEER HANS R. HUTTON 061-006707 STATE OF ILLINOIS
Hans R. Hutton
8-20-2009

\\kcow00\jobs\46440\Bridges\Plans\CdtoMoDOTA6500\J610984\A6500-dgn\ZPLOT_B_A6500_001-205_J610984_101.dgn

19-AUG-2009 07:11

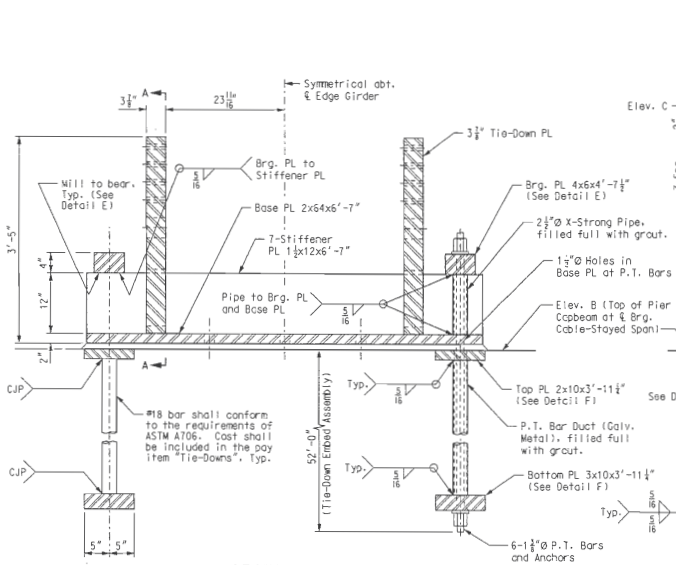

SECTION B-B

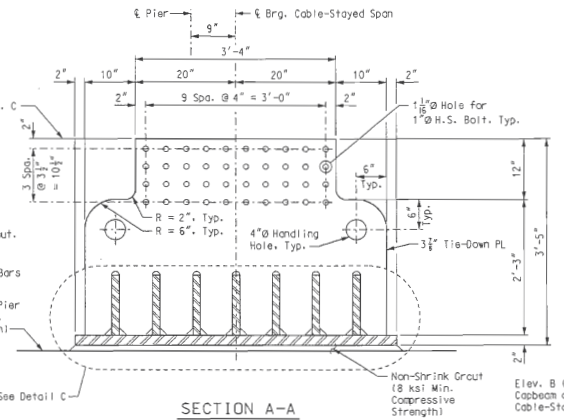

SECTION A-A

Note: 4" Brg. PL and post-tensioning bars beyond not shown for clarity.

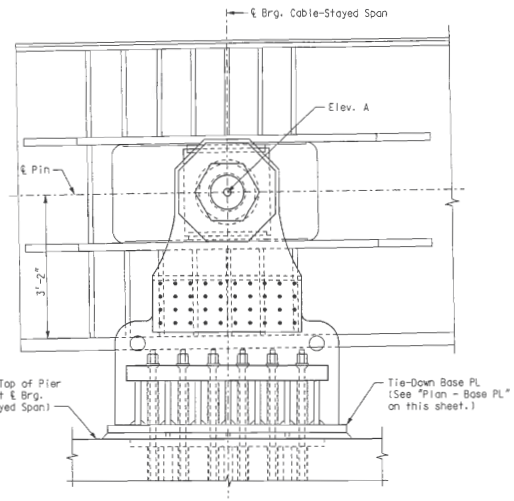

TIE-DOWN ELEVATION

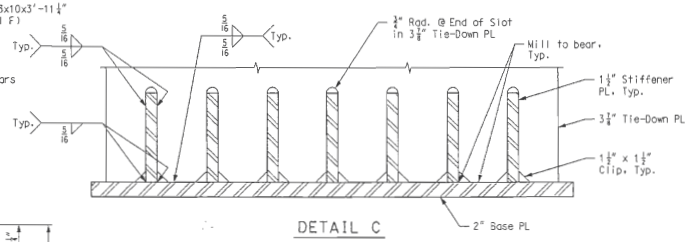

DETAIL C

TABLE OF ELEVATIONS			
LOCATION	ELEV. A	ELEV. B	ELEV. C
PIER 10	478.02	472.67	476.15
PIER 13	473.30	467.95	471.43

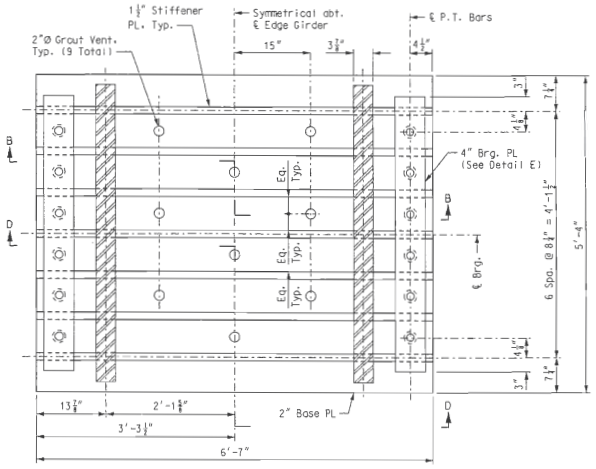

PLAN - BASE PL

Note: P.T. bar nut not shown for clarity.

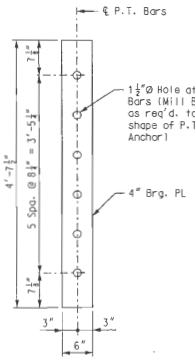

DETAIL E

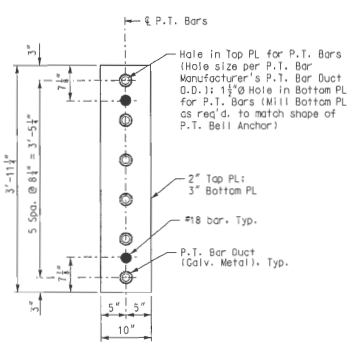

DETAIL F

Notes:

For Pier 10 and Pier 13 details, see Sheet Nos. BR22 & BR96.

For Section D-D, see Sheet No. BR103.

All structural steel used for the fabrication of the tie-down shall meet the requirements of ASTM A709, Grade 50W unless noted otherwise.

For Edge Girder End Detail, see Sheet No. BR112.

Post-tensioning bars shall not be stressed until all permanent counterweight has been installed. See Sheet Nos. BR179 thru BR183 for Suggested Erection Sequence.

Tie-down embed assemblies shall be set to the correct elevation with the P.T. bars and anchors installed "snug-tight". Remove top anchor nuts prior to installing tie-down base PL. Re-install top anchor nuts and stress bars after non-shrink grout has set.

The cost for materials, fabrication and installation of the Tie-Down system, including pins, tie-down, base plate, paint and post-tensioning bars shall be included in the pay item "Tie-Downs".

Base plate assembly shall be stress relieved per AWS D1.5-2002.

Locking stress for post-tensioning bars shall be 105 ksi.

Structural steel used in the fabrication of the tie-down device shall be painted in accordance with the Section 1080.4.4 of the Missouri Standard Specifications for Highway Construction.

TIE-DOWN EMBED AND BASE PLATE - PIERS 10 & 13

Detailed JUL 2009
Checked JUL 2009

Note: This drawing is not to scale. Follow dimensions.

\\kcow00\jobs\46440\Bridges\Plans\CdtoMoDOT\A6500\J6I0984\A6500-dgn\ZPLOT_B_A6500_001-205_J6I0984_102.dgn

19-AUG-2009 07:11

STATE OF MISSOURI
HANS R. HUTTON
NUMBER E-28174
REGISTERED ENGINEER
8-20-2009

DATE: 8/20/09
ROUTE: I-70 | STATE: MO/IL
DISTRICT: 6 | SHEET NO.: BR102
COUNTY: ST. LOUIS CITY - MO, ST. CLAIR - IL
JOB NO.: J6I0984
CONTRACT ID.:
PROJECT NO.:
BRIDGE NO.: A6500

REV.	DESCRIPTION	DATE

MISSOURI HIGHWAYS AND TRANSPORTATION COMMISSION
105 WEST CAPITOL
JEFFERSON CITY, MO 65101
1-888-ASK-MODOT (1-888-275-6636)
HNTB
715 KIRK DRIVE
KANSAS CITY, MO 64105-1310
TELEPHONE (816) 472-1201
CERTIFICATE OF AUTHORITY NO. 001270

LICENSED STRUCTURAL ENGINEER
HANS R. HUTTON
081-006707
STATE OF ILLINOIS
8-20-2009

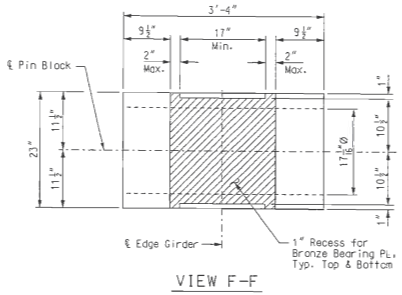

VIEW F-F

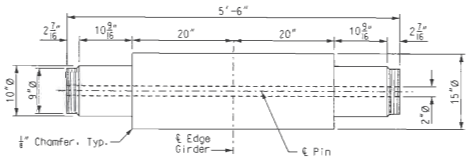

PIN DETAIL

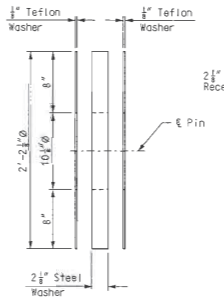

WASHER PACK DETAIL

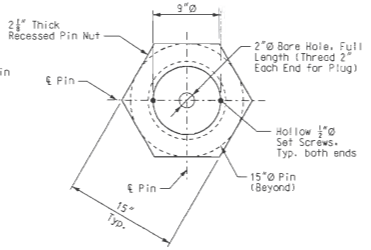

PIN NUT DETAIL

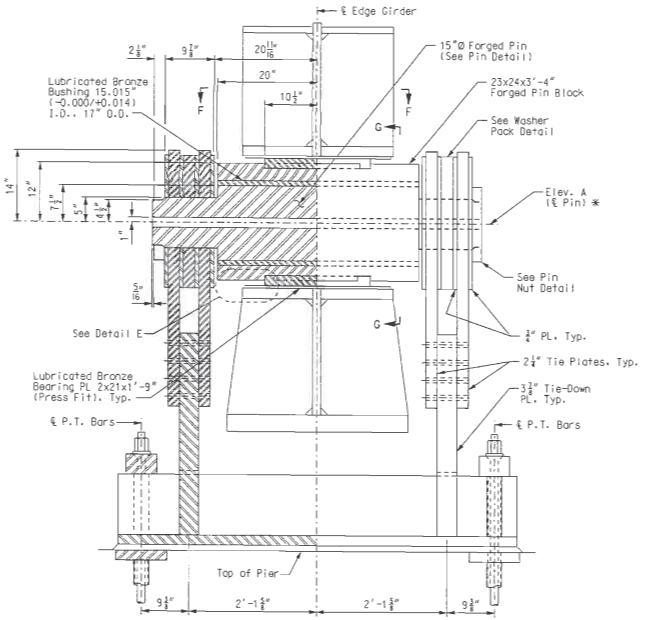

SECTION D-D

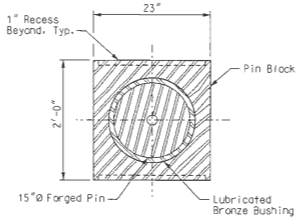

SECTION G-G

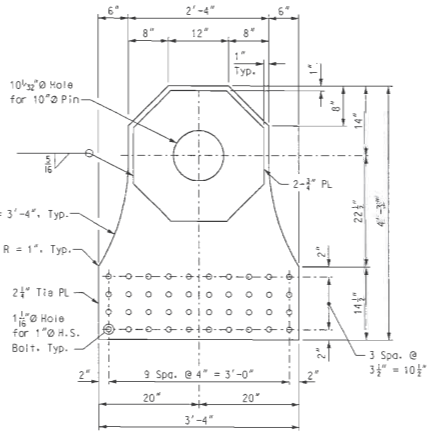

TIE PLATE DETAIL

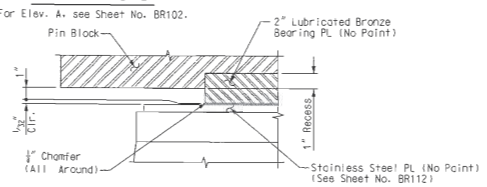

DETAIL E

* For Elev. A, see Sheet No. BR102.

Notes:

All steel for the tie-down unit shall meet the requirements of ASTM A709, Grade 50W unless noted otherwise.

The bolts to connect the tie plates to the tie-down plates shall be 1"Ø and meet the requirements of ASTM A325, Type 3.

The steel forging for the pin and pin block shall meet the requirements of ASTM A668, Class G.

The bronze bushing and bearing plate shall be self-lubricating and meet the requirements of ASTM B22 Alloy C86300. The lubricant used for the bushing shall be per the manufacturer's recommendation. The lubricated surface of the bronze plate shall face the stainless steel plate.

The contact surfaces between the bronze bushing, pin and pin block shall be in accordance with Section 1080.3.3.13 of the Missouri Standard Specifications for Highway Construction and shall be finished with 125 micro-inch surface roughness.

Teflon used in the washer pack shall meet the requirements of ASTM D3294 Type II, Grade 1, Class A.

For location of Section D-D and tie-down embed details, see Sheet No. BR102.

The tie-down details, tie-down embeds, and tie-down base plates as shown on the plans are considered the tie-down and make up one unit. There are four units required for the project, two at Pier 10 and two at Pier 13. The cost of the materials, fabrication, machining, painting, and installation of the tie-down shall be included in the pay item "Tie-Downs". The tie-down shall be paid for as a lump sum.

For Edge Girder details, see Sheet Nos. BR111 & BR112.

The 2"Ø hole through the pin axis shall be bored after the forging has cooled below the critical range, under conditions to prevent injury by too rapid cooling, and before being annealed.

Install 2"Ø threaded plug at the ends of the pin.

TIE-DOWN DETAILS - PIERS 10 & 13

Detailed JUL 2009
Checked JUL 2009

Note: This drawing is not to scale. Follow dimensions.

Sheet No. 103 of 205

\\kcow00\jobs\46440\Bridges\Plans\CdtoMoDOTA6500\J6I0984\A6500-dgn\ZPLOT_B_A6500_001-205_J6I0984_103.dgn

19-AUG-2009 07:11

STATE OF MISSOURI
HANS R. HUTTON
NUMBER E-29974
REGISTERED PROFESSIONAL ENGINEER
Hans R. Hutton

DATE 8/20/09
ROUTE I-70
STATE MO/IL
DISTRICT 6
SHEET NO. BR103
COUNTY ST. LOUIS CITY - MO ST. CLAIR - IL
JOB NO. J6I0984
CONTRACT ID.
PROJECT NO.
BRIDGE NO. A6500

REV.	DESCRIPTION	DATE

MISSOURI HIGHWAYS AND TRANSPORTATION COMMISSION
105 WEST CAPITOL
JEFFERSON CITY, MO 65102
1-888-ASK-MODOT (1-888-275-6636)

HNTB
715 KIRK DRIVE
KANSAS CITY, MO 64105-1310
TELEPHONE (816) 472-1201
CERTIFICATE OF AUTHORITY NO. 001270

HANS R. HUTTON
081-006707
LICENSED STRUCTURAL ENGINEER
STATE OF ILLINOIS
Hans R. Hutton
8-20-2009

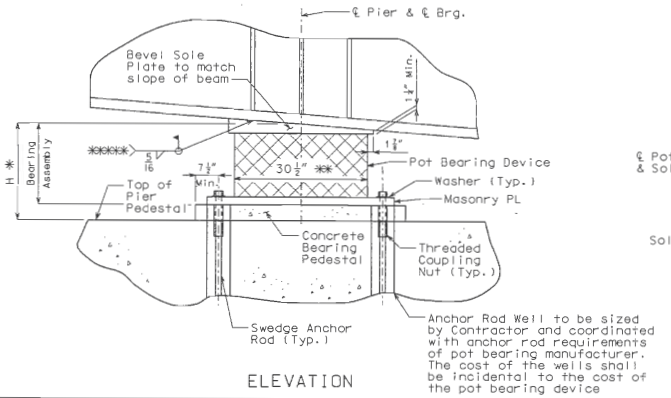

ELEVATION

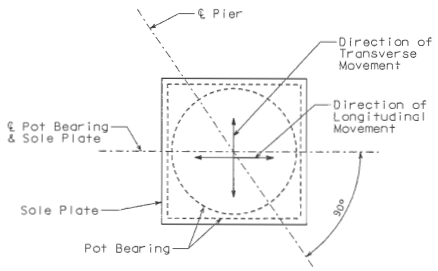

POT BEARING PLAN

BEARING DATA TABLE

Location	Pier 11			
Fix/Exp.	Expansion			
Quan. Req'd.	2			
Design load (kip)	Service limit state	Vertical	max.	1250
			perm.	190
			min.	0
		Transverse	0	
		Longitudinal	125	
	Strength limit state	Vertical	1720	
		Transverse	0	
		Longitudinal	172	
Translation	Service limit state	Transverse	1"	
		Longitudinal	20"	
	Strength limit state	Transverse	1"	
		Longitudinal	22"	
Rotation (rad.)	Service limit state	Transverse	0	
		Longitudinal	0.02	
** One Way Longit. Movement	11"			
**** (G) Guide Clearance	N/A			
Masonry Plate	Lm 34.5"			
	Wm 50"			
	Tm 1.5"			
Auxilliary Plate	La N/A			
	Wa N/A			
	Ta N/A			
Sole Plate	Ls 49.5"			
	Ws 33"			
	T1 1.25"			
	T2 1.5"			
Bearing H	12.125"			
Anchor Rods	d 1.75" Ø			
	Rods / Brg. 4			
Weld Size	W1 5/16			
	W2			

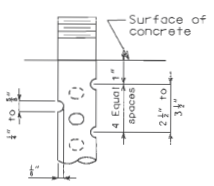

DETAIL OF 3/4"Ø THRU 2 1/2"Ø ANCHOR RODS

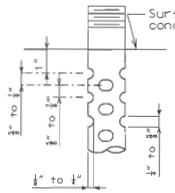

OPTIONAL DETAIL OF 1 3/8"Ø THRU 2 1/2"Ø ANCHOR RODS

SWEDGE ANCHOR ROD DETAILS

Notes:

T2 is upstation of T1.

*** One Way Longitudinal Movement is the maximum one way movement (expansion or contraction) of the superstructure when bearings are set at 60 degrees F plus 1" tolerance.

**** On wide structures and on curved structures provisions shall be made for limited lateral movement.

Indicates parts designed by the manufacturer.

NOTES:

The bearing design shall conform to the provisions of the latest edition of AASHTO.

The contractor, in coordination with the bearing manufacturer, shall be responsible for sizing the sole plate and masonry plate and determining the size, number, and location of anchor rods based on the load and movement capacities, indicated in the Bearing Data.

The contractor shall submit calculations sealed by a Professional Engineer, licensed in the state of Missouri, indicating conformance with design load and material criteria in the contract documents.

* Maximum vertical dimension of the complete bearing. If the actual bearing dimension differs, adjustments shall be made in the thickness of the sole plate, masonry plate and concrete pad as needed by the contractor at no additional cost to the owner. Contractor shall submit proposed method of adjustment to Engineer for approval.

** Estimated horizontal dimension of the pot bearing device. If the actual dimension differs, adjust the size of the sole plate and masonry plate as needed by the contractor at no additional cost to the owner.

***** The temperature of the steel adjacent to the elastomeric should be kept below 250°F.

The dimension "H" in the Bearing Data Table represents the difference in elevation between the bottom of the girder and the top of the concrete pier, and it is used by the designer to establish the thickness of the concrete pedestal by subtracting the height of the selected bearing assembly. If concrete bearing pedestal thickness is ≥ 4" the contractor shall reinforce the pedestal at no additional cost to the owner.

The bearings shall be manufactured pot bearings, designed for the load and movement capacities indicated in the Bearing Data Table.

All expansion Bearings shall have maximum friction coefficient of 3%.

Steel for pot bearings shall be ASTM A709 Grade 50 and shall be galvanized. Steel for sole plate and masonry plates shall be ASTM A709 Grade 50.

Anchor rods shall conform to ASTM F1554 Grade 55. The anchor rods shall be the swedge-type and shall have a minimum diameter of 1 3/4-inches and extend a minimum of 18-inches into the concrete. Swedging shall be 1-inch less than the extension into the concrete.

Anchor rods shall be installed using a hardened steel washer at each exposed location.

Washers shall conform to ASTM F463.

Certified mill test reports, conforming to the requirements of the specifications, for the metals of the pot bearing device, sole plate, masonry plate and anchor rods shall be submitted.

The masonry plate shall be prepared per the specifications and shop-coated with one coat of inorganic zinc primer (5 mils minimum).

The sole plate shall be prepared per the specifications and shop-coated with two coats of inorganic zinc primer (5 mils minimum).

The bearing device, sole plate and masonry plate shall be assembled in the shop and the bearing assembly shall be field welded to the bottom flange of the steel cap beam. The welds shall be designed for the load capacities indicated in the Bearing Data Table.

After installation of the bearings, any uncoated or damaged surfaces of the masonry and sole plates shall be prepared in accordance with the specifications and field-coated with inorganic zinc primer (5 mils minimum)

After installation of the bearings and field-applied prime coats, the surfaces of the masonry and sole plates shall be field-coated with System G intermediate and finish coat.

All bearings shall be marked prior to shipping. The marks shall include the bearing location on the bridge and a direction arrow that points up-station. All marks shall be permanent and be visible after the bearing is installed.

The pot bearing device, sole plate, masonry plate, anchor rods, washers, anchor rod wells and any other appurtenances included in the fabrication and installation of the pot bearing device shall be incidental to the pay item "Pot Bearings".

Whenever jacking of the Superstructure is needed to reset the bearings, the contractor shall submit a jacking sequence for approval.

DETAILS OF POT BEARING PAD ASSEMBLY – PIERS 11 & 12

STATE OF MISSOURI
HANS R. HUTTON
NUMBER E-29174
REGISTERED ENGINEER
Hans R. Hutton

DATE 8/20/09

ROUTE	STATE
I-70	MO/IL
DISTRICT 6	SHEET NO. BR104

COUNTY ST. LOUIS CITY – MO ST. CLAIR – IL

JOB NO. J6I0984

CONTRACT ID.

PROJECT NO.

BRIDGE NO. A6500

DESCRIPTION | DATE

MISSOURI HIGHWAYS AND TRANSPORTATION COMMISSION
105 WEST CAPITOL
JEFFERSON CITY, MO 65102
1-888-ASK-MODOT (1-888-275-6636)

HNTB
715 KIRK DRIVE
KANSAS CITY, MO 64105-1310
TELEPHONE (816) 472-1201
CERTIFICATE OF AUTHORITY NO. 001270

STATE OF ILLINOIS
LICENSED STRUCTURAL ENGINEER
HANS R. HUTTON
081-006707
Hans R. Hutton
8-20-2009

Detailed JUL 2009
Checked JUL 2009

Note: This drawing is not to scale. Follow dimensions.

Sheet No. 104 of 205

\\kcow00\jobs\46440\Bridges\Plans\CatoMoDOTA8500\J6I0984\A6500-dgn\ZPLOT_B_A6500_001-205_J6I0984_104.dgn

19-AUG-2009 07:11

REV.

BEARING DATA TABLE

Location	Pier 12			
Fix/Exp.	Expansion			
Quan. Req'd.	2			
Design load (Kip)	Service limit state	Vertical	max.	1250
			perm.	190
			min.	0
		Transverse		0
		Longitudinal		125
	Strength limit state	Vertical		1720
		Transverse		0
		Longitudinal		172
Translation	Service limit state	Transverse		1"
		Longitudinal		20"
	Strength limit state	Transverse		1"
		Longitudinal		22"
Rotation (rad.)	Service limit state	Transverse		0
		Longitudinal		0.02
*** One Way Longit. Movement	11"			
**** (G) Guide Clearance	N/A			
Masonry Plate	Lm 34.5"			
	Wm 50"			
	Tm 1.5"			
Auxilliary Plate	La N/A			
	Wa N/A			
	Ta N/A			
Sole Plate	Ls 49.5"			
	Ws 39"			
	T1 1.5"			
	T2 1.25"			
Bearing H	12.125"			
Anchor Rods	d 1.75" ø			
	Rods / Brg. 4			
Weld Size	W1 $\frac{5}{16}$			
	W2			

Note:
For details and notes, see Sheet No. BR104.

DETAILS OF POT BEARING PAD ASSEMBLY - PIERS 11 & 12

Detailed JUL 2009
Checked JUL 2009

Note: This drawing is not to scale. Follow dimensions.

Sheet No. 105 of 205

\\kcow00\jobs\46440\Bridges\Plans\CdtoMoDOTA6500\J6I0984\A6500-dgn\ZPLOT_B_A6500_001-205_J6I0984_105.dgn

19-AUG-2009 07:12

STATE OF MISSOURI
HANS R. HUTTON
NUMBER E-25174
REGISTERED PROFESSIONAL ENGINEER
Hans R. Hutton

DATE 8/20/09
ROUTE I-70
STATE MO/IL
DISTRICT 6
SHEET NO. BR105
COUNTY ST. LOUIS CITY - MO ST. CLAIR - IL
JOB NO. J6I0984
CONTRACT ID.
PROJECT NO.
BRIDGE NO. A6500

DATE	DESCRIPTION

MISSOURI HIGHWAYS AND TRANSPORTATION COMMISSION
105 WEST CAPITOL
JEFFERSON CITY, MO 65102
1-888-ASK-MODOT (1-888-275-6636)

HNTB
715 KIRK DRIVE
KANSAS CITY, MO 64105-1310
TELEPHONE (816) 472-1201
CERTIFICATE OF AUTHORITY NO. 001270

LICENSED STRUCTURAL ENGINEER
HANS R. HUTTON
081-006707
STATE OF ILLINOIS
Hans R. Hutton
8-20-2009

REV.

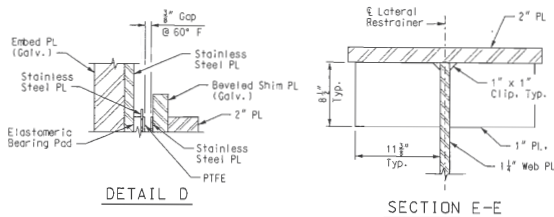

DETAIL D

SECTION E-E

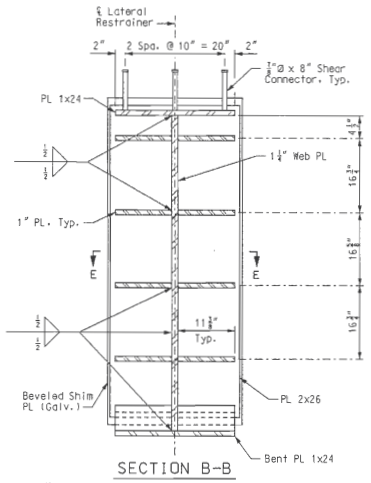

SECTION B-B

Note:
℄ Lateral Restrainer & Embed Plate to match at 60° F

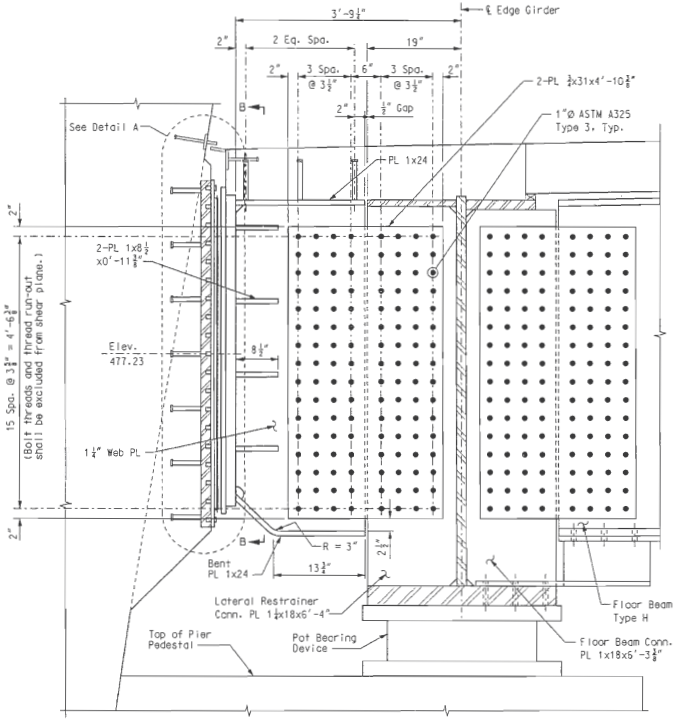

ELEVATION

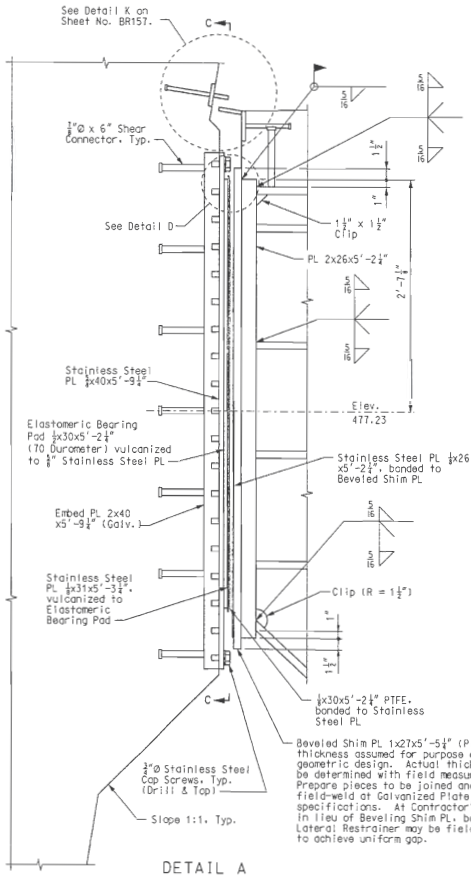

DETAIL A

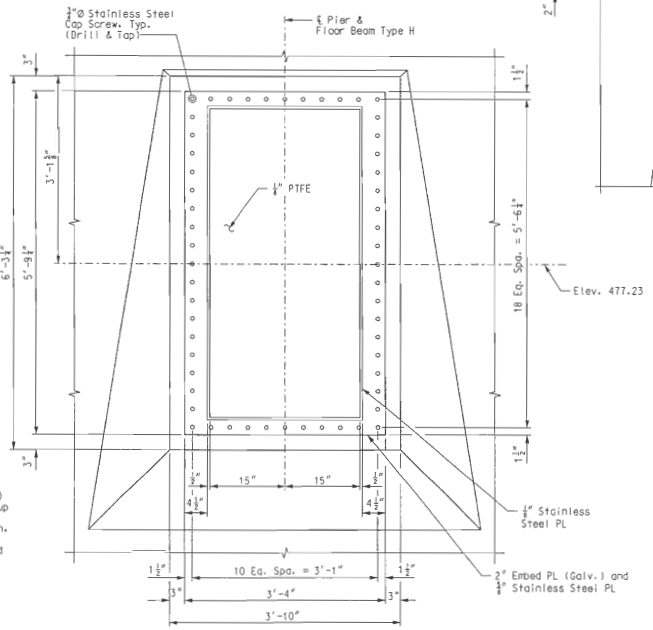

VIEW C-C

Notes:
For additional details of embed plate, see Sheet No. BR82.
The cost of materials, fabrication, machining and installation of lateral restrainers, shall be included in the pay item "Fabricated Structural Low Alloy Steel (Plate Girder) A709, Gr. HPS50W".
Stainless steel plates shall conform to the requirements of ASTM A240, Type 304.
Stainless steel cap screws shall conform to the requirements of ASTM F593, Group 1.
For Floor Beam Type H details, see Sheet Nos. BR121 and BR122.
For details of Edge Girder - Field Piece 14, see Sheet Nos. BR114 and BR115.
Embed plates shall be ASTM A709, Grade 36.
Beveled shim plates shall be ASTM A709, Grade 36.
Embed and bevel shim plates shall be hot-dip galvanized according to ASTM 123
Structural steel for lateral restrainer shall be ASTM A709 Grade 50W.

LATERAL RESTRAINER DETAILS - PIERS 11 & 12

Detailed JUL 2009
Checked JUL 2009

Note: This drawing is not to scale. Follow dimensions.

Sheet No. 106 of 205

STATE OF MISSOURI
HANS R. HUTTON NUMBER E-24674 REGISTERED PROFESSIONAL ENGINEER
Hans R Hutton
DATE 8/20/09
ROUTE I-70 STATE MO/IL
DISTRICT 6 SHEET NO. BR106
COUNTY ST. LOUIS CITY - MO ST. CLAIR - IL
JOB NO. J610984
CONTRACT ID.
PROJECT NO.
BRIDGE NO. A6500
DESCRIPTION
DATE
MISSOURI HIGHWAYS AND TRANSPORTATION COMMISSION
105 WEST CAPITOL
JEFFERSON CITY, MO 65102
1-888-ASK-MODOT (1-888-275-6636)
HNTB
715 KIRK DRIVE
KANSAS CITY, MO 64105-1310
TELEPHONE (816) 472-1201
CERTIFICATE OF AUTHORITY NO. 001270
LICENSED STRUCTURAL ENGINEER
HANS R. HUTTON 081-006707
STATE OF ILLINOIS
Hans R Hutton
8-20-2009
REV.

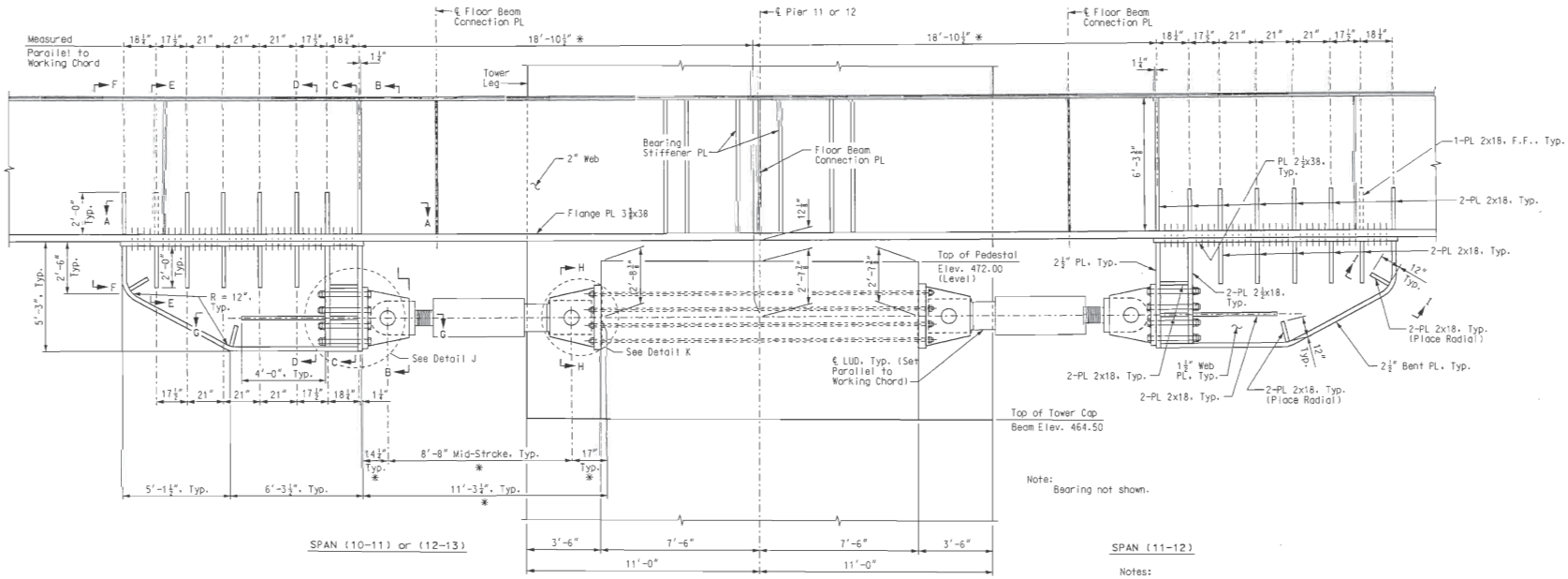

ELEVATION

(View taken from ℄ Bridge)
* See Notes with Details J & K.

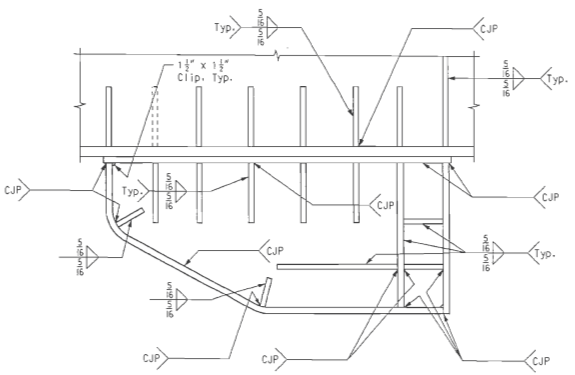

LOCK-UP DEVICE BRACKET WELD DETAIL

(Bolt centerlines not shown for clarity.)

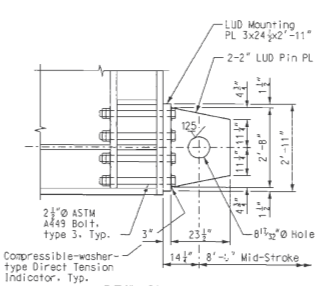

DETAIL J

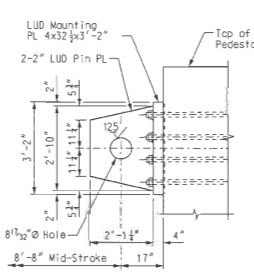

DETAIL K

Notes:
All dimensions shown in Details J & K are for information only. LUD manufacturer shall finalize these dimensions based on the detailing of their device. The Contractor is responsible for coordinating any revisions required due to deviation from dimensions shown.

Notes:

LUD denotes Lock-Up Device.

For Sections A-A thru I-I, see Sheet No. BR108.

Each LUD shall be capable of transmitting a longitudinal force of 1,550 Kips LRFD Strength I Limit State and shall provide for a longitudinal movement of 9" from the design temperature neutral position (18" total movement).

LUDs shall be supplied with pins cabable of transferring the intended loads.

The Contractor shall provide 2-LUDS per edge girder per tower bent (8 LUD'S total).

The centerline of force of the LUD shall be parallel to the working chord.

Longitudinal is considered parallel to centerline of bridge for this application.

Structural steel for the LUD bracket shall be ASTM A709 Gr. 50W.

See Special Provisions for payment of LUD's.

All costs associated with material, fabrication and installation of the LUDs shall be included in the pay item, "Lock-Up Device". This shall include the LUDs, prestressing bars, bolts and hardware.

All costs associated with material, fabrication and installation of mounting plates and pin plates shall be included in the pay item, "Fabricated Structural Low Alloy Steel (Plate Girder) A709, Gr. HPS50W.

Lock-up device bracket shall be stress-relieved per AWS D1.5 current edition.

Jacking stress for post-tensioning bars shall be 105 ksi.

Suitable nuts and washers shall be supplied with the A449 bolts. Bolts shall be pretensioned to 150 kips tension.

Compressible-washer-type direct tension indicators shall be installed to prove the bolt tension. The direct tension indicators (DTI's) shall be supplied in accordance with ASTM F959 except for the compressive strength which is non-standard. The DTI's shall be corrosion resistant similar to the Type 3 bolts. The DTI supplier shall provide inspection and acceptance criteria to install the bolts to the pretension specified. At a minimum, inspection and acceptance shall be accomplished through the use of feeler gauges to measure the compressed gaps in the installed DTI's.

The DTI supplier shall provide a test report for establishing the inspection and acceptance criteria. At a minimum, the DTI supplier shall test an additional 5 DTI's under hardened flat washers: similar to those that will be used in production, at a load of 150 kips in order to determine the inspection and acceptance criteria.

Three additional DTI's from the same lot and hardened washers shall be supplied to the state for testing.

All DTI's, including those used for testing, shall be supplied from the same lot.

For Bearing Details, see Sheet No. BR104.

For Pedestal Details, see Sheet No. BR81.

Provide hex nut and washer at each end of post-tensioning bars.

Provide 2¾"Ø galvanized ducts for post-tensioning bars. Provisions for grouting to be supplied by Contractor and approved by the Engineer.

Post-tensioning bars shall be 1¼"Ø ASTM A722 Grade 150, Type II.

LONGITUDINAL LOCK-UP DEVICE DETAILS - PIERS 11 & 12

STATE OF MISSOURI — HANS R. HUTTON — NUMBER E-25174 — REGISTERED PROFESSIONAL ENGINEER

Hans R. Hutton

DATE: 10/19/09
ROUTE: I-70 | STATE: MO/IL
DISTRICT: 6 | SHEET NO.: BR107
COUNTY: ST. LOUIS CITY - MO, ST. CLAIR - IL
JOB NO.: J6I0984
CONTRACT ID.:
PROJECT NO.:
BRIDGE NO.: A6500

REV.	DESCRIPTION	DATE

MISSOURI HIGHWAYS AND TRANSPORTATION COMMISSION
105 WEST CAPITOL
JEFFERSON CITY, MO 65102
1-800-ASK-MODOT (1-800-275-6636)

HNTB
715 KIRK DRIVE
KANSAS CITY, MO 64105-1310
TELEPHONE (816) 472-1201
CERTIFICATE OF AUTHORITY NO. 001270

LICENSED STRUCTURAL ENGINEER — HANS R. HUTTON 061-006707 — STATE OF ILLINOIS
Hans R. Hutton
10-19-2009

Detailed JUL 2009
Checked JUL 2009

Note: This drawing is not to scale. Follow dimensions.

\\kcow00\jobs\46440\Bridges\Plans\CdtcMoDOTA6500\J6I0984\A6500-dgn\ZPLOT_B_A6500_107-205_J6I0984_107.dgn

19-OCT-2009 09:50

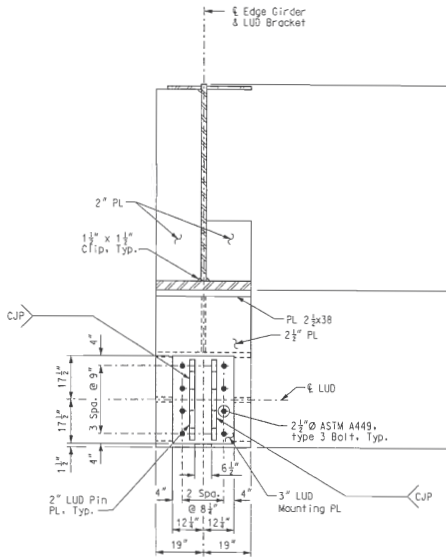

SECTION B-B

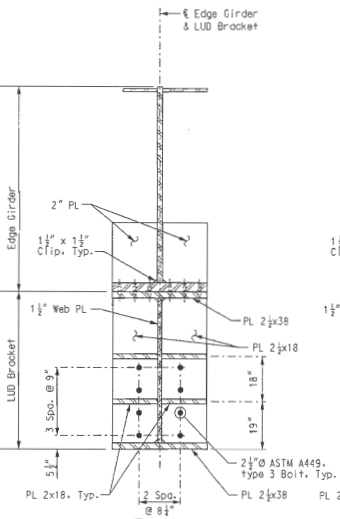

SECTION C-C

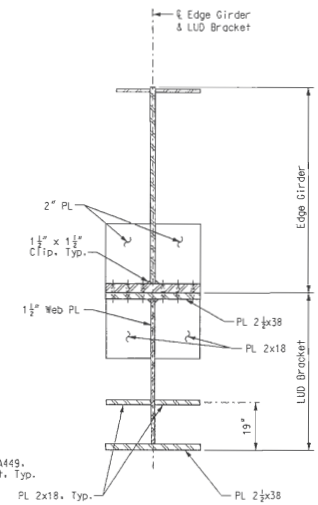

SECTION D-D

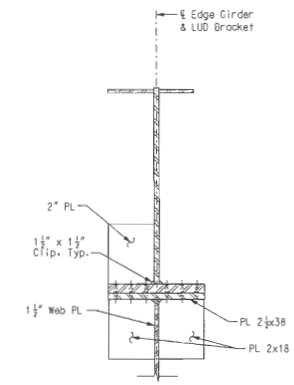

SECTION E-E

(Floor beam connection plate not shown for clarity)

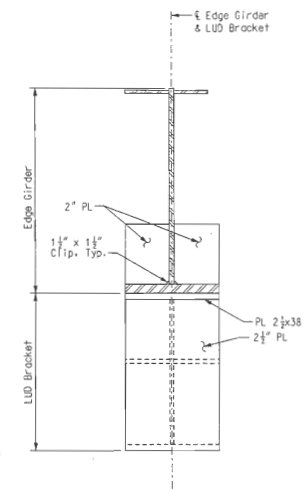

SECTION F-F

Notes:
All dimensions shown for LUD mounting plates and LUD pin plates in Sections B-B & G-G are for information only. LUD manufacturer shall finalize these dimensions based on the detailing of their device. The Contractor is responsible for coordinating any revisions required due to deviation from dimensions shown.

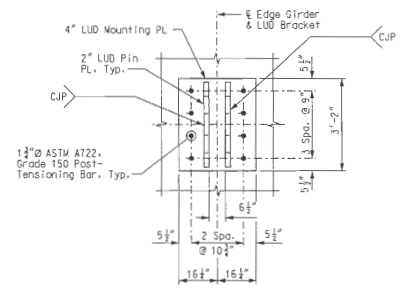

SECTION H-H

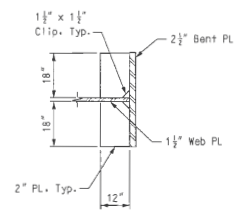

SECTION I-I

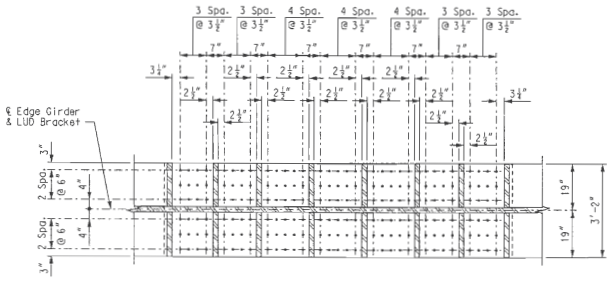

SECTION A-A

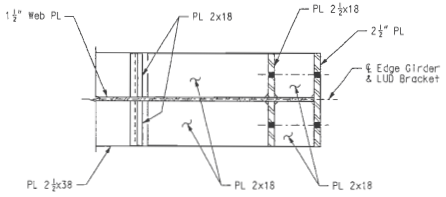

SECTION G-G

Note:
Components of Detail J and the LUD not shown.

Notes:
LUD denotes Lock-Up Device.
For location of Sections A-A thru I-I, see Sheet No. BR107.
Structural steel for bracket and connection plates shall conform to ASTM A709 Grade 50W.
All welding shall be in accordance with AWS D1.5, Current Edition.
Welding filler metal shall be matching.
Bolts connecting the bracket to the edge girder members shall be 1" diameter ASTM A325, Type 3, with complimentary circular flat washer and heavy hex nut.

LONGITUDINAL LOCK-UP DEVICE
DETAILS - PIERS 11 & 12

Detailed JUL 2009
Checked JUL 2009

Note: This drawing is not to scale. Follow dimensions.

Sheet No. 108 of 205

STATE OF MISSOURI
HANS R. HUTTON
NUMBER E-29174
REGISTERED PROFESSIONAL ENGINEER
Hans R. Hutton

DATE	8/20/09
ROUTE	I-70
STATE	MO/IL
DISTRICT	6
SHEET NO.	BR108
COUNTY	ST. LOUIS CITY - MO ST. CLAIR - IL
JOB NO.	J6I0984
CONTRACT ID.	
PROJECT NO.	
BRIDGE NO.	A6500

DATE	DESCRIPTION

MISSOURI HIGHWAYS AND TRANSPORTATION COMMISSION
MoDOT
105 WEST CAPITOL
JEFFERSON CITY, MO 65102
1-888-ASK-MODOT (1-888-275-6636)

HNTB
715 KIRK DRIVE
KANSAS CITY, MO 64105-1310
TELEPHONE (816) 472-1201
CERTIFICATE OF AUTHORITY NO. 001270

LICENSED STRUCTURAL ENGINEER
HANS R. HUTTON
081-006707
STATE OF ILLINOIS
Hans R. Hutton
8-20-2009

REV.

\\kcow00\jobs\46440\Bridges\Plans\CdtoMoDOTA6500\J6I0984\A6500-dgn\ZPLOT_B_A6500_001-205_J6I0984_108.dgn 19-AUG-2009 07:12

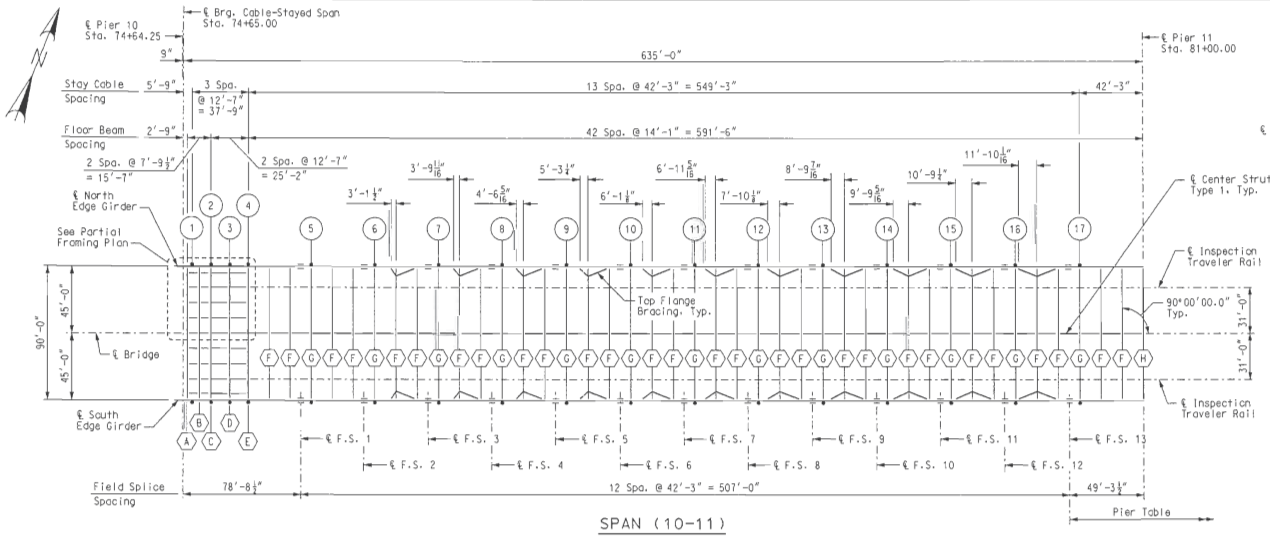

SPAN (10-11)

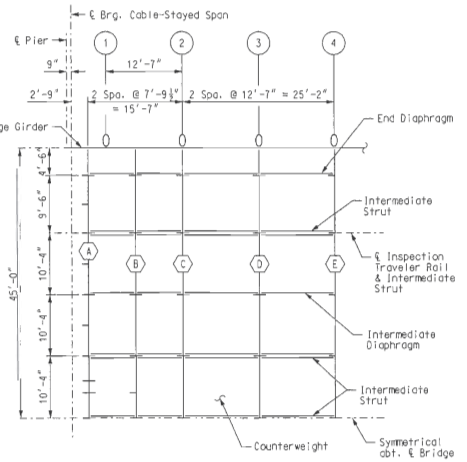

PARTIAL FRAMING PLAN

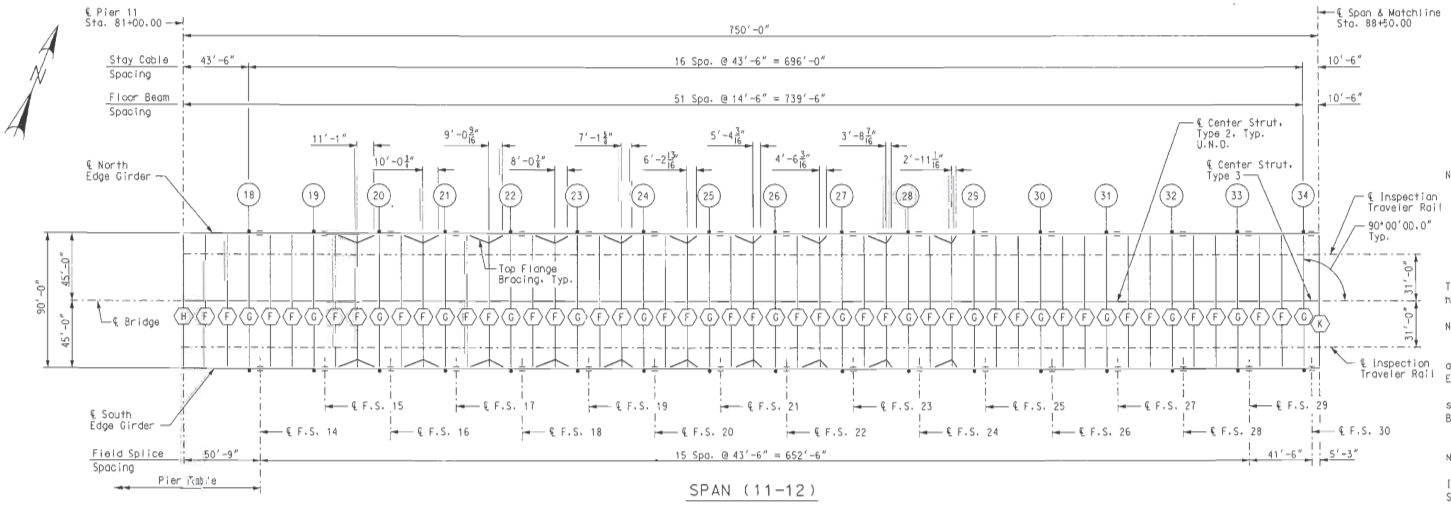

SPAN (11-12)

Notes:

(#) Denotes Stay Cable.

(#) Denotes Floor Beam Type.

LUD Denotes Lock-Up Device.

The location of the Stay Cables, Field Splices, Top Flange Bracing, and Floor Beams are measured horizontally.

For Top Flange Bracing details, see Sheet No. BR132.

For Center Strut details, see Sheet No. BR133.

For Edge Girder Elevations, including the location and size of stiffeners and connection plates, see Edge Girder Elevations, Sheet Nos. BR111 thru BR116.

For Floor Beam details, including location and size of stiffeners and connection plates, see Floor Beam Elevations, Sheet Nos. BR117 thru BR122.

For Field Splice details, see Sheet No. BR136.

For Inspection Traveler details, see Sheet No. BR178.

For Intermediate Strut, End Diaphragm, Intermediate Diaphragm and Counterweight details, see Sheet Nos. BR159 thru BR162.

FRAMING PLAN

Detailed JUL 2009
Checked JUL 2009

Note: This drawing is not to scale. Follow dimensions.

Sheet No. 109 of 205

\\kcow00\jobs\46440\Bridges\Plans\Cdd\MoDOT\A6500\J610984\A6500-dgn\ZPLOT_B_A6500_001-205_J610984_109.dgn

19-AUG-2009 07:12

HANS R. HUTTON NUMBER E-9914 REGISTERED ENGINEER STATE OF MISSOURI

Hans R. Hutton

8/20/09

ROUTE	STATE
I-70	MO/IL
DISTRICT	SHEET NO.
6	BR109

COUNTY: ST. LOUIS CITY - MO, ST. CLAIR - IL

JOB NO. J610984

CONTRACT ID.

PROJECT NO.

BRIDGE NO. A6500

DATE	DESCRIPTION

MISSOURI HIGHWAYS AND TRANSPORTATION COMMISSION

105 WEST CAPITOL
JEFFERSON CITY, MO 65102
1-888-ASK-MODOT (1-888-275-6636)

HNTB

715 KIRK DRIVE
KANSAS CITY, MO 64105-1310
TELEPHONE (816) 472-1201
CERTIFICATE OF AUTHORITY NO. 001270

LICENSED STRUCTURAL ENGINEER
HANS R. HUTTON
081-006707
STATE OF ILLINOIS

Hans R. Hutton

8-20-2009

REV.

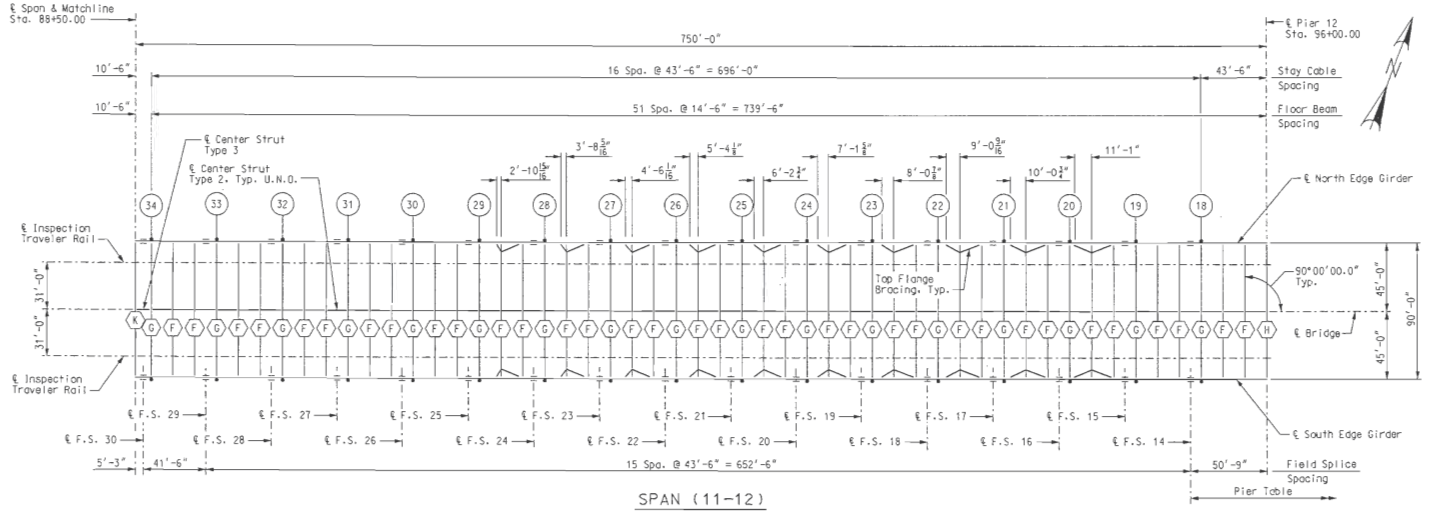

SPAN (11-12)

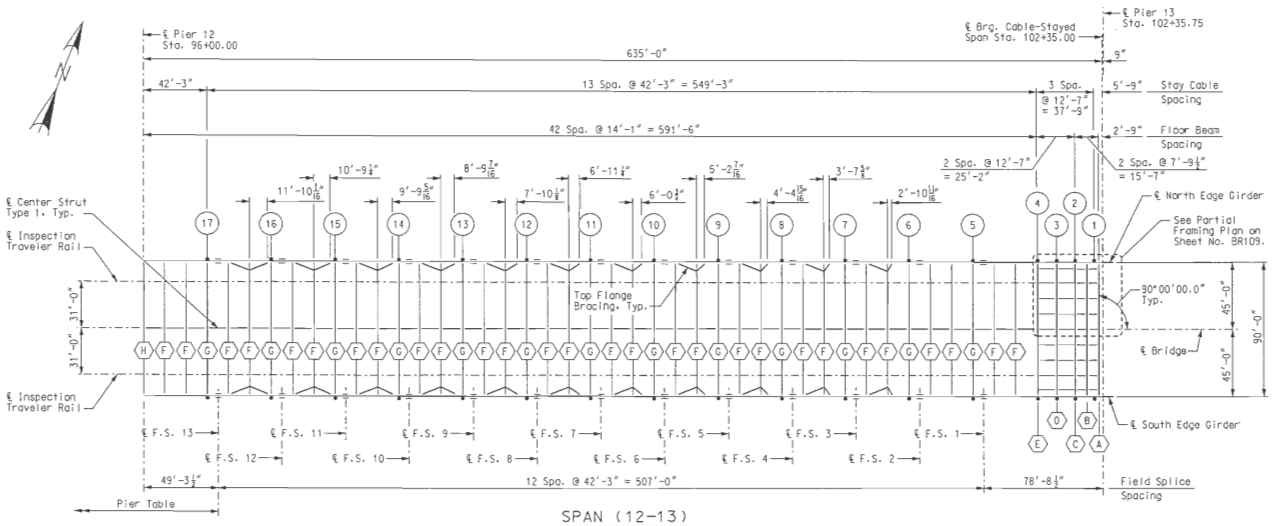

SPAN (12-13)

Notes:

(#) Denotes Stay Cable.

(#) Denotes Floor Beam Type.

LUD Denotes Lock-Up Device.

See notes on Sheet No. BR109.

FRAMING PLAN

STATE OF MISSOURI HANS R. HUTTON NUMBER E-29174 REGISTERED ENGINEER

DATE 8/20/09

ROUTE	STATE
I-70	MO/IL
DISTRICT	SHEET NO.
6	BR110

COUNTY: ST. LOUIS CITY - MO, ST. CLAIR - IL

JOB NO. J6I0984

CONTRACT ID.

PROJECT NO.

BRIDGE NO. A6500

DATE	DESCRIPTION

MISSOURI HIGHWAYS AND TRANSPORTATION COMMISSION
105 WEST CAPITOL
JEFFERSON CITY, MO 65102
1-888-ASK-MODOT (1-888-275-6636)

HNTB
715 KIRK DRIVE
KANSAS CITY, MO 64105-1310
TELEPHONE (816) 472-1201
CERTIFICATE OF AUTHORITY NO. 000170

LICENSED STRUCTURAL ENGINEER HANS R. HUTTON 081-006707 STATE OF ILLINOIS
expires 11-30-2010
8-20-2009

REV.

Detailed JUL 2009
Checked JUL 2009

Note: This drawing is not to scale. Follow dimensions.

\\kcow00\jobs\46440\Bridges\Plans\CdtoMoDOTA6500\J6I0984\A6500-dgn\ZPLOT_B_A6500_001-205_J6I0984_110.dgn

19-AUG-2009 07:12

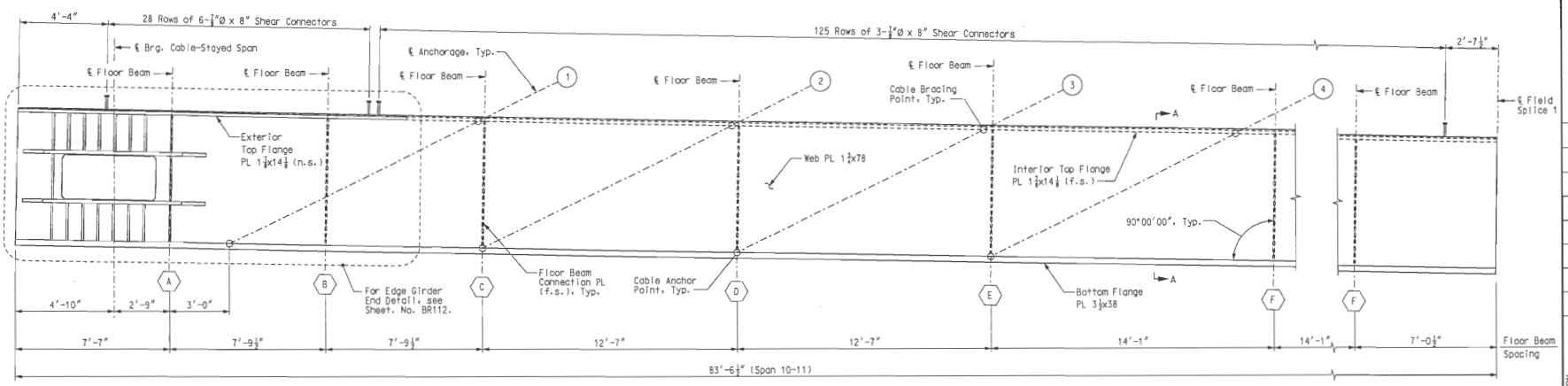

ELEVATION

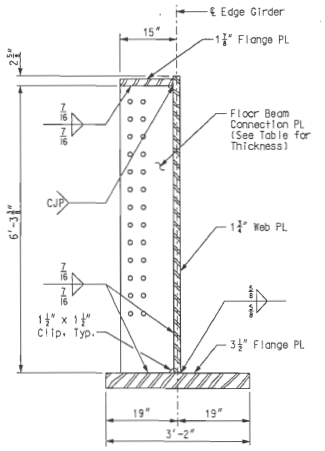

SECTION A-A

FLOOR BEAM CONNECTION PLATE	
FLOOR BEAM TYPE	PLATE THICKNESS
A	*
B	½"
C	⅝"
D	¾"
E	⅞"
F	1"

* See Section B-B on Sheet No. BR112.

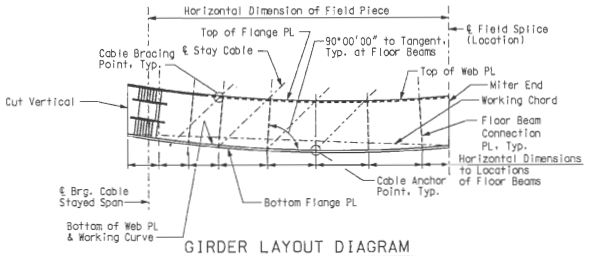

GIRDER LAYOUT DIAGRAM

For Field Piece 1

Notes:

(#) Denotes Stay Cable.

(#) Denotes Floor Beam Type.

For Cable Geometry, see Sheet Nos. BR139 & BR140.
For Stay Cable Girder Anchorage details, see Sheet Nos. BR123 thru BR131.
For Shear Connector notes and details, see Sheet No. BR135.
For Field Splice details, see Sheet No. BR136.
For Floor Beam details, see Sheet Nos. BR117 thru BR121.
For details of floor beam connections, see Sheet No. BR122.
For miscellaneous steel details, see Sheet Nos. BR132 thru BR134.
For Suggested Erection Sequence, see Sheet Nos. BR179 thru BR183.

All longitudinal dimensions are given along the horizontal and taken to the bottom of the web, unless otherwise noted. All vertical dimensions are given perpendicular to Working Chord for all field pieces except Field Piece 1 where they are perpendicular to the local tangent of the working curve, unless otherwise noted.

All dimensions are to the theoretical stressed locations of stay cable, floor beams, and edge girder. The girder shall be fabricated as necessary to produce a structure at the beginning of service conforming to these dimensions.

Web shall be plumb after all dead loads are applied at 60°F.

Edge girders shall be cambered as indicated on Sheet Nos. BR137 & BR138.

Floor beam connection plates shall be placed perpendicular to Working Chord for all field pieces except Field Piece 1 where they are perpendicular to the local tangent of the working curve unless otherwise noted.

Floor beam connection plates shall be placed on the inside of the girder only.

Bearing stiffeners shall be placed on the inside and outside of the girder.

Stay cable girder anchorage and field splice plates not shown for clarity.

Two of each Field Piece 1 thru 30 are required as shown and two are required opposite hand. One of Field Piece 31 is required as shown and one is required opposite hand. Refer to Framing Plan on Sheet Nos. BR108 & BR110.

Structural steel for edge girder flanges and web shall conform to ASTM A709 Grade HPS70WF-2.

All bolts shall be ASTM A325, Type 3 bolts, unless otherwise noted.

Floor Beam Connection Plates shall conform to ASTM A709 Grade HPS70WF-2.

The web plate depth, as shown, is the nominal depth of the web plate and is measured normal to the Working Chord for all pieces except Field Piece 1 where it is measured perpendicular to the local tangent of the working curve.

All costs associated with material, fabrication and erection of the edge girders shall be included in the pay item, "Fabricated Structural Low Alloy Steel (Plate Girder) A709, Gr. HPS70W".

For "Edge Girder Bracket Assembly" that supports slab drain, see Sheet No. BR164.

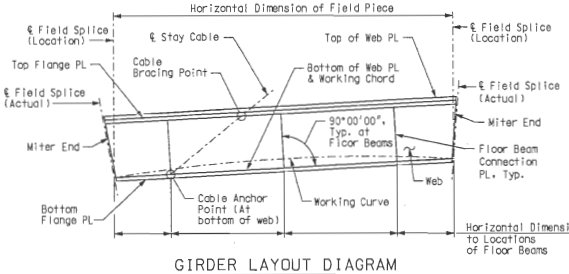

GIRDER LAYOUT DIAGRAM

Except for Field Piece 1

Girder Layout Diagram Notes:

The Cable Bracing Point is the point along the actual cable (catenary angle) which matches the elevation and station of a point on the bottom of the edge girder top flange. The Cable Anchor Point is the point along the actual cable (catenary angle) which matches the elevation and station of a point on the top of the edge girder bottom flange. For additional details see Sheet No. BR123.

Field Piece 1: The Working Curve is parallel to the Profile Grade and coincides with the bottom of the web. The Working Chord forms a straight line between the intersection of the Working Curve and the CL Brg. Cable-Stayed Span on one end and the intersection of the Working Curve and the CL Field Splice on the opposite end.

Except Field Piece 1: The Working Curve is parallel to the Profile Grade and intersects the Working Chord at the CL Field Splice. The Working Chord is a straight line along the bottom of the web.

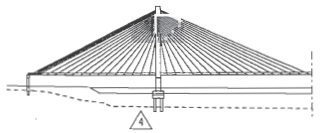

EDGE GIRDER - FIELD PIECE 1

STATE OF MISSOURI
HANS R. HUTTON
NUMBER E-29174
REGISTERED PROFESSIONAL ENGINEER
Hans R. Hutton

DATE 5/17/10

ROUTE	STATE
I-70	MO/IL
DISTRICT	SHEET NO.
6	BR111

COUNTY
ST. LOUIS CITY - MO
ST. CLAIR - IL

JOB NO.
J6I0984

CONTRACT ID.

PROJECT NO.

BRIDGE NO.
A6500

REV.	DESCRIPTION	DATE
A	Revised per ATC	5-17-10

MISSOURI HIGHWAYS AND TRANSPORTATION COMMISSION
105 WEST CAPITOL
JEFFERSON CITY, MO 65102
1-888-ASK-MODOT (1-888-275-6636)

HNTB
715 KIRK DRIVE
KANSAS CITY, MO 64105-1310
(816) 472-1201
CERTIFICATE OF AUTHORITY NO. 001270

LICENSED STRUCTURAL ENGINEER
HANS R. HUTTON
081-006707
STATE OF ILLINOIS
EXPIRES 11-30-2010
Hans R. Hutton
5-17-2010

Detailed JUL 2009
Checked JUL 2009

Note: This drawing is not to scale. Follow dimensions.

\\kcow00\jobs\46440\Bridges\Plans\CdtoMoDOTA6500\J6I0984\A6500-dgn\ZPL0T_B_A6500_111-205_J6I0984_111.dgn

17-MAY-2010 11:31

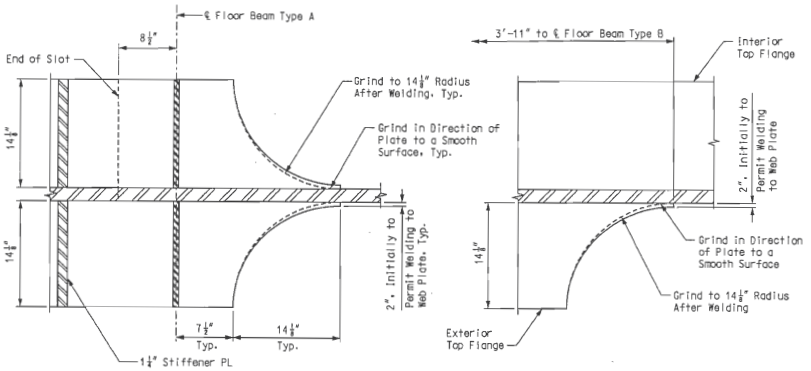

SECTION D-D

VIEW E-E

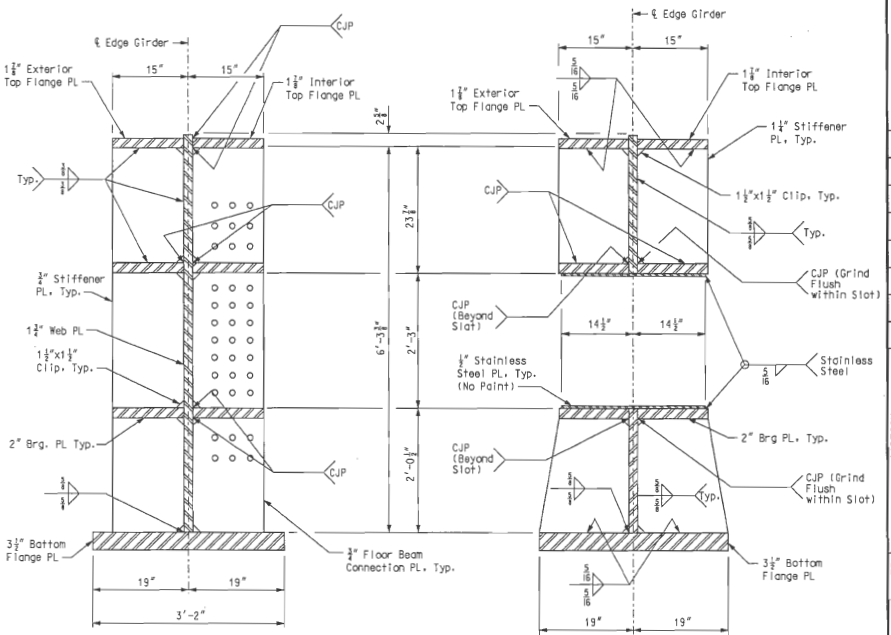

SECTION B-B

SECTION C-C

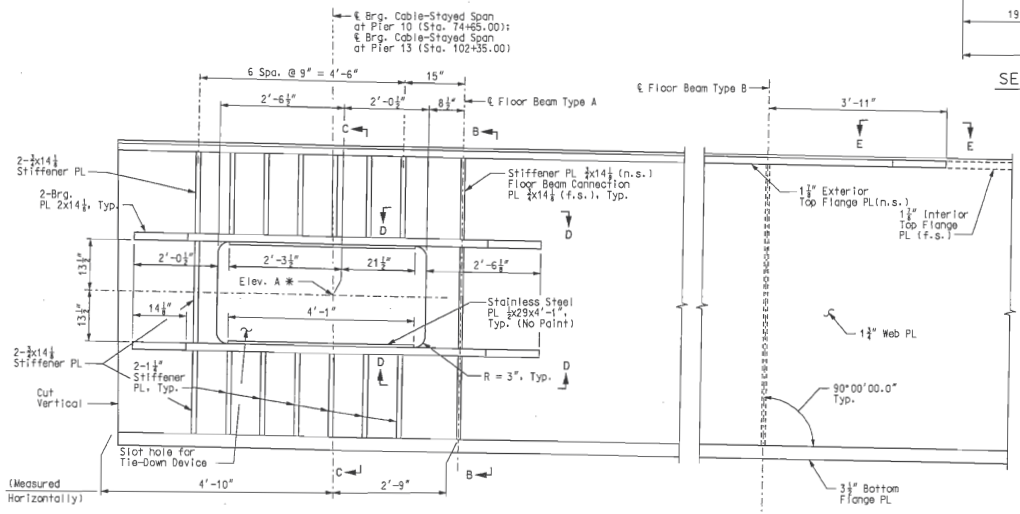

EDGE GIRDER END DETAIL

Notes:
Dimensions shown on this detail are measured parallel to and perpendicular to the Working Curve, unless otherwise noted.
* For Elev. A, see Sheet No. BR102.

Edge Girder End Detail Notes:
All floor beam connection plates shall be placed perpendicular to the local tangent of the Working Curve.
The bearing plates shall be placed parallel to the Working Curve. The plates shall be true and parallel. The contact surfaces between the bearing plates and the stainless steel shall be in accordance with Section 1080.3.3.13 of the MoDOT Standard Specifications for Highway Construction. These surfaces shall be in full contact with each other and the surface roughness of these surfaces shall not exceed 125 micro-inches.
The horizontal edges of the web opening shall be parallel to the Working Curve and the vertical edges of the web opening shall be perpendicular to the local tangent of the Working Curve.
The stainless steel shall meet the requirements of ASTM A240, Type 304. The contact surfaces between the bronze bearing plates of the tie-down and the stainless steel shall be finished to a mirror finish. The cost of the stainless steel, fabrication, finishing, installation, etc. shall be incidental to the contract unit price for Fabricated Structural Low Alloy Steel (Plate Girder) A709, Grade HPS70W.
For tie-down details, see Sheet Nos. BR102 & BR103.
For additional notes, see Sheet No. BR111.
Structural steel for bearing plates and stiffeners at Edge Girder End Detail shall conform to ASTM A709 Grade HPS70WF-2.
For "Edge Girder Bracket Assembly" that supports slab drain, see sheet BR164.

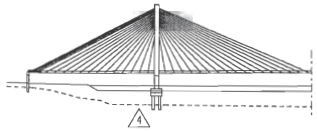

EDGE GIRDER - FIELD PIECE 1

Detailed JUL 2009
Checked JUL 2009

Note: This drawing is not to scale. Follow dimensions.

Sheet No. 112 of 205

\\kcow00\jobs\46440\Bridges\Plans\CdtoMoDOTA6500\J6I0984\A6500-dgn\ZPLOT_B_A6500_112-205_J6I0984_112.dgn

17-MAY-2010 11:31

STATE OF MISSOURI
HANS R. HUTTON
NUMBER E-29174
REGISTERED ENGINEER
Hans R. Hutton

DATE 5/17/10
ROUTE I-70
STATE MO/IL
DISTRICT 6
SHEET NO. BR112
COUNTY ST. LOUIS CITY - MO ST. CLAIR - IL
JOB NO. J6I0984
CONTRACT ID.
PROJECT NO.
BRIDGE NO. A6500

REV.	DATE	DESCRIPTION
1	5-17-10	Revised per AIC

MISSOURI HIGHWAYS AND TRANSPORTATION COMMISSION
105 WEST CAPITOL
JEFFERSON CITY, MO 65102
1-888-ASK-MODOT (1-888-275-6636)

HNTB
715 KIRK DRIVE
KANSAS CITY, MO 64105-1310
TELEPHONE (816) 472-1201
CERTIFICATE OF AUTHORITY NO. 000270

LICENSED STRUCTURAL ENGINEER
HANS R. HUTTON
081-006707
STATE OF ILLINOIS
expires 11-30-2010
Hans R. Hutton
5-17-2010

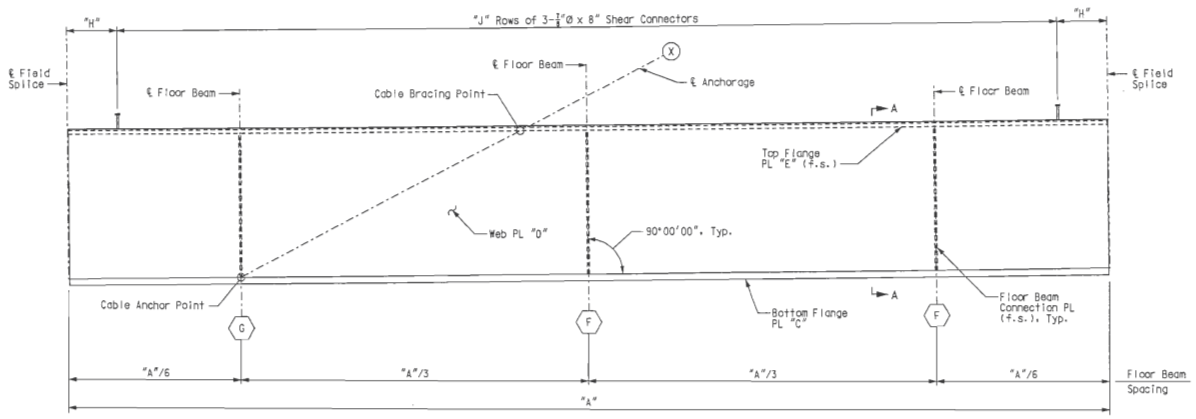

ELEVATION

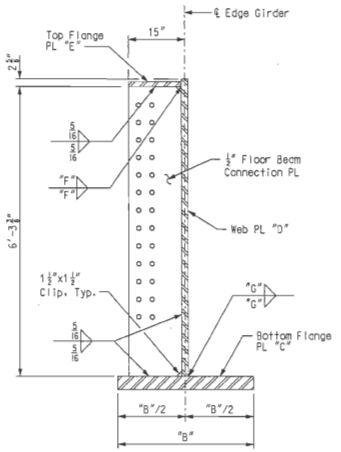

SECTION A-A

FIELD PIECE DATA

FIELD PIECE	STAY CABLE (X)	"A"	"B"	BOTTOM FLANGE PL "C"	WEB PL "D"	TOP FLANGE PL "E"	"F"	"G"	"H"	"J"
2	5	42'-3"	3'-2"	3 ½x38	1 ½x78	1 ⅞x14 ½			2'-7 ½"	65
3	6	42'-3"	3'-2"	3 ½x38	1 ½x78	1 ⅞x14 ½			2'-7 ½"	67
4	7	42'-3"	2'-10"	3x34	1 ½x78	1 ⅞x14 ½			2'-7 ½"	67
5	8	42'-3"	2'-10"	3x34	1 ½x78	1 ⅞x14 ½			2'-7 ½"	65
6	9	42'-3"	2'-8"	2 ½x32	1 ½x78	1 ⅞x14 ½			2'-7 ½"	67
7	10	42'-3"	2'-8"	2 ½x32	1 ½x78	1 ⅞x14 ½			2'-7 ½"	67
8	11	42'-3"	2'-8"	2 ½x32	1 ½x78	1 ⅞x14 ½			2'-7 ½"	65
9	12	42'-3"	2'-8"	2 ½x32	1 ½x78	1 ⅞x14 ½			2'-7 ½"	67
10	13	42'-3"	2'-8"	2 ½x32	1 ½x78	1 ⅞x14 ½			2'-7 ½"	65
11	14	42'-3"	2'-8"	2 ½x32	1 ½x78	1 ⅞x14 ½			2'-7 ½"	63
12	15	42'-3"	2'-8"	3x32	1 ½x78	1 ⅞x14 ½			2'-7 ½"	63
13	16	42'-3"	2'-10"	3 ½x34	1 ½x78	1 ⅞x14 ½			2'-7 ½"	65
15	19	43'-6"	3'-0"	3 ½x36	2x78	1 ½x14			2'-10"	75
16	20	43'-6"	2'-10"	3 ½x34	1 ½x78	1 ⅞x14 ½			2'-10"	67
17	21	43'-6"	2'-8"	3x32	1 ½x78	1 ⅞x14 ½			2'-10"	67
18	22	43'-6"	2'-8"	2 ½x32	1 ½x78	1 ⅞x14 ½			2'-10"	69
19	23	43'-6"	2'-8"	2 ½x32	1 ½x78	1 ⅞x14 ½			2'-10"	69
20	24	43'-6"	2'-8"	2 ½x32	1 ½x78	1 ⅞x14 ½			2'-10"	69
21	25	43'-6"	2'-8"	2 ½x32	1 ½x78	1 ⅞x14 ½			2'-10"	71
22	26	43'-6"	2'-8"	2 ½x32	1 ½x78	1 ⅞x14 ½			2'-10"	71
23	27	43'-6"	2'-8"	2 ½x32	1 ½x78	1 ⅞x14 ½			2'-10"	73
24	28	43'-6"	2'-8"	2 ½x32	1 ½x78	1 ⅞x14 ½			2'-10"	71
25	29	43'-6"	2'-8"	2 ½x32	1 ½x78	1 ⅞x14 ½			2'-10"	71
26	30	43'-6"	2'-10"	2 ½x34	1 ½x78	1 ⅞x14 ½			2'-10"	69
27	31	43'-6"	2'-10"	2 ½x34	1 ½x78	1 ⅞x14 ½			2'-10"	67
28	32	43'-6"	2'-10"	2 ½x34	1 ½x78	1 ⅞x14 ½			2'-10"	67
29	33	43'-6"	2'-10"	2 ½x34	1 ½x78	1 ⅞x14 ½			2'-10"	67

Notes:

(F) Denotes Floor Beam Type.

For additional notes and details, see Sheet No. BR111.

(X) Denotes Stay Cable.

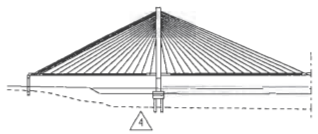

EDGE GIRDER - FIELD PIECES 2-13 & 15-29

STATE OF MISSOURI
HANS R. HUTTON
NUMBER E-29174
REGISTERED PROFESSIONAL ENGINEER
Hans R. Hutton

DATE 5/17/10

ROUTE	STATE
I-70	MO/IL
DISTRICT	SHEET NO.
6	BR113

COUNTY
ST. LOUIS CITY - MO
ST. CLAIR - IL

JOB NO.
J6I0984

CONTRACT ID.

PROJECT NO.

BRIDGE NO.
A6500

DATE	REV.	DESCRIPTION
5-17-10	1	Revised per ATC

MISSOURI HIGHWAYS AND TRANSPORTATION COMMISSION
105 WEST CAPITOL
JEFFERSON CITY, MO 65102
1-888-ASK-MODOT (1-888-275-6636)

HNTB
715 KIRK DRIVE
KANSAS CITY, MO 64105-1310
TELEPHONE (816) 472-1201
CERTIFICATE OF AUTHORITY NO. 001270

LICENSED STRUCTURAL ENGINEER
HANS R. HUTTON
081-006707
STATE OF ILLINOIS
Hans R. Hutton
5-17-2010

Detailed JUL 2009
Checked JUL 2009

Note: This drawing is not to scale. Follow dimensions.

\\kcow00\jobs\46440\Bridges\Plans\CdtoMoDOTA6500\J6I0984\A6500-dgn\ZPLOT_B_A6500_113-205_J6I0984_113.dgn

17-MAY-2010 11:31

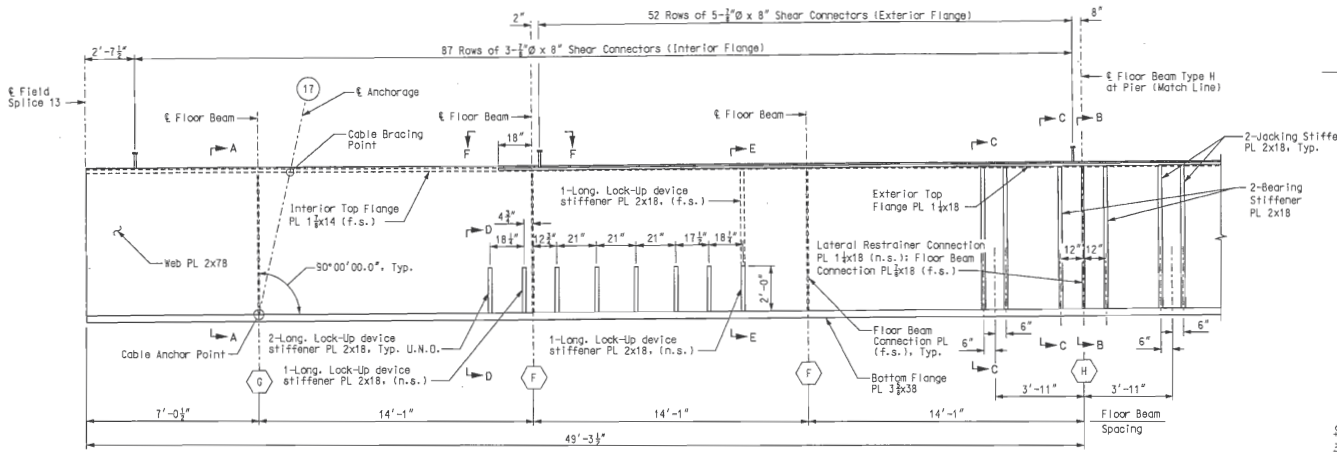

ELEVATION

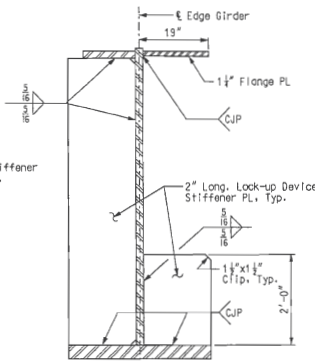

SECTION E-E

(Dimensions and details are identical to Section A-A, unless otherwise noted.)

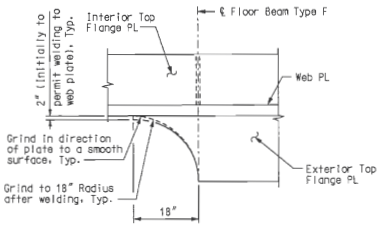

VIEW F-F

(Shear Connectors not shown for clarity)

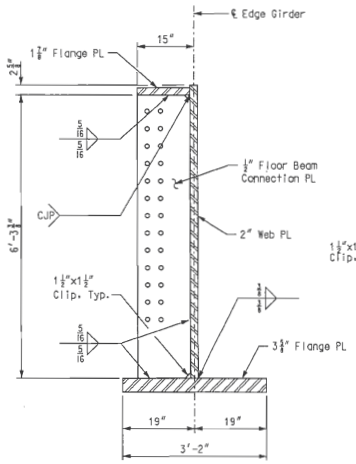

SECTION A-A

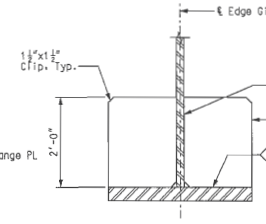

SECTION D-D

(Dimensions and details are identical to Section A-A, unless otherwise noted.)

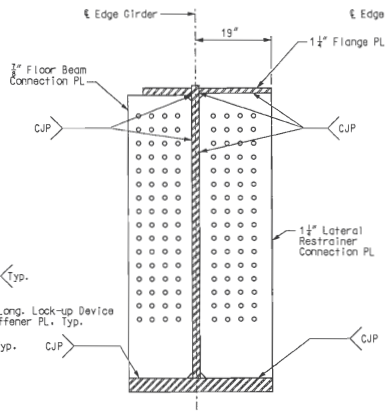

SECTION B-B

(Dimensions and details are identical to Section A-A, unless otherwise noted.)

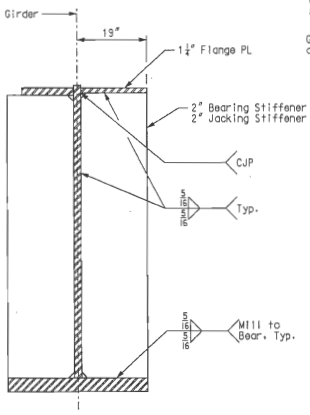

SECTION C-C

(Dimensions and details are identical to Section A-A, unless otherwise noted.)

Notes:

(17) Denotes Stay Cable.

(F) Denotes Floor Beam Type.

For additional notes and details, see Sheet No. BR111.
Longitudinal lock-up device not shown for clarity. For details see Sheet Nos. BR107 & BR108.
Bearing and Jacking stiffeners in Field Piece 14 shall be ASTM A709 Grade HPS70WF-2.

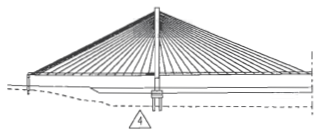

EDGE GIRDER - FIELD PIECE 14

Detailed JUL 2009
Checked JUL 2009

Note: This drawing is not to scale. Follow dimensions.

Sheet No. 114 of 205

\\kcow00\jobs\46440\Bridges\Plans\CdtoMoDOTA6500\J6I0984\A6500-dgn\ZPLOT_B_A6500_114-205_J6I0984_114.dgn

17-MAY-2010 11:32

STATE OF MISSOURI
HANS R. HUTTON
NUMBER E-29174
REGISTERED PROFESSIONAL ENGINEER
Hans R. Hutton

DATE
5/17/10

ROUTE	STATE
I-70	MO/IL
DISTRICT	SHEET NO.
6	BR114

COUNTY
ST. LOUIS CITY - MO
ST. CLAIR - IL

JOB NO.
J6I0984

CONTRACT ID.

PROJECT NO.

BRIDGE NO.
A6500

REV.	DATE	DESCRIPTION
A	5-17-10	Revised per ATC

MISSOURI HIGHWAYS AND TRANSPORTATION COMMISSION
105 WEST CAPITOL
JEFFERSON CITY, MO 65102
1-888-ASK-MODOT (1-888-275-6636)

HNTB
715 KIRK DRIVE
KANSAS CITY, MO 64105-1310
TELEPHONE (816) 472-1201
CERTIFICATE OF AUTHORITY NO. 001170

LICENSED STRUCTURAL ENGINEER
HANS R. HUTTON
081-006707
STATE OF ILLINOIS
Hans R Hutton
5-17-2010

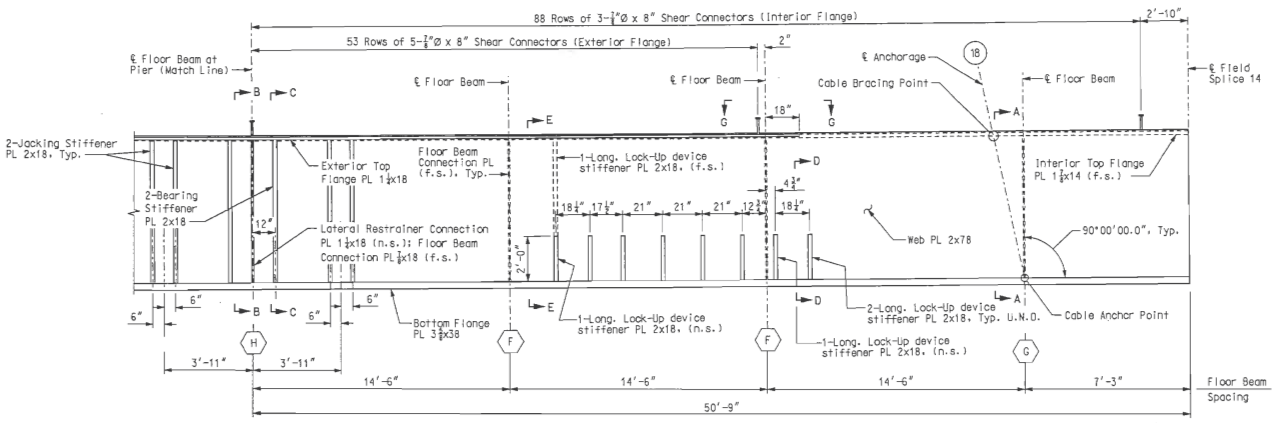

ELEVATION

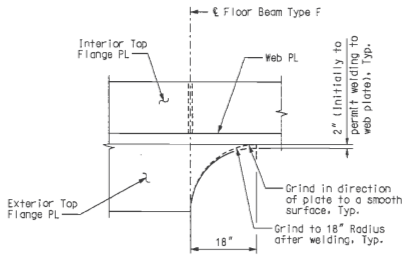

VIEW G-G

(Shear Connectors not shown for clarity)

Notes:

(18) Denotes Stay Cable.

(F) Denotes Floor Beam Type.

For Sections A-A thru E-E, see Sheet No. BR114.
For additional notes and details, see Sheet Nos. BR111 & BR114.

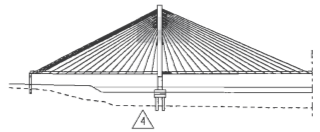

EDGE GIRDER - FIELD PIECE 14

STATE OF MISSOURI
HANS R. HUTTON
NUMBER E-29174
REGISTERED PROFESSIONAL ENGINEER
Hans R. Hutton

DATE 5/17/10
ROUTE I-70 | STATE MO/IL
DISTRICT 6 | SHEET NO. BR115
COUNTY ST. LOUIS CITY - MO ST. CLAIR - IL
JOB NO. J6I0984
CONTRACT ID.
PROJECT NO.
BRIDGE NO. A6500

REV.	DESCRIPTION	DATE
1	Revised per AIC	5-17-10

MISSOURI HIGHWAYS AND TRANSPORTATION COMMISSION
MoDOT
105 WEST CAPITOL
JEFFERSON CITY, MO 65102
1-888-ASK-MODOT (1-888-275-6636)

HNTB
715 KIRK DRIVE
KANSAS CITY, MO 64105-1310
TELEPHONE (816) 472-1201
CERTIFICATE OF AUTHORITY NO. 001270

LICENSED STRUCTURAL ENGINEER
HANS R. HUTTON
081-006707
STATE OF ILLINOIS
My license renewal date is 11-30-2010
Hans R Hutton
5-17-2010

Detailed JUL 2009
Checked JUL 2009

Note: This drawing is not to scale. Follow dimensions.

\\kcow00\jobs\46440\Bridges\Plans\CdtoMoDOTA6500\J6I0984\A6500-dgn\ZPLOT_B_A6500_115-205_J6I0984_115.dgn

17-MAY-2010 11:32

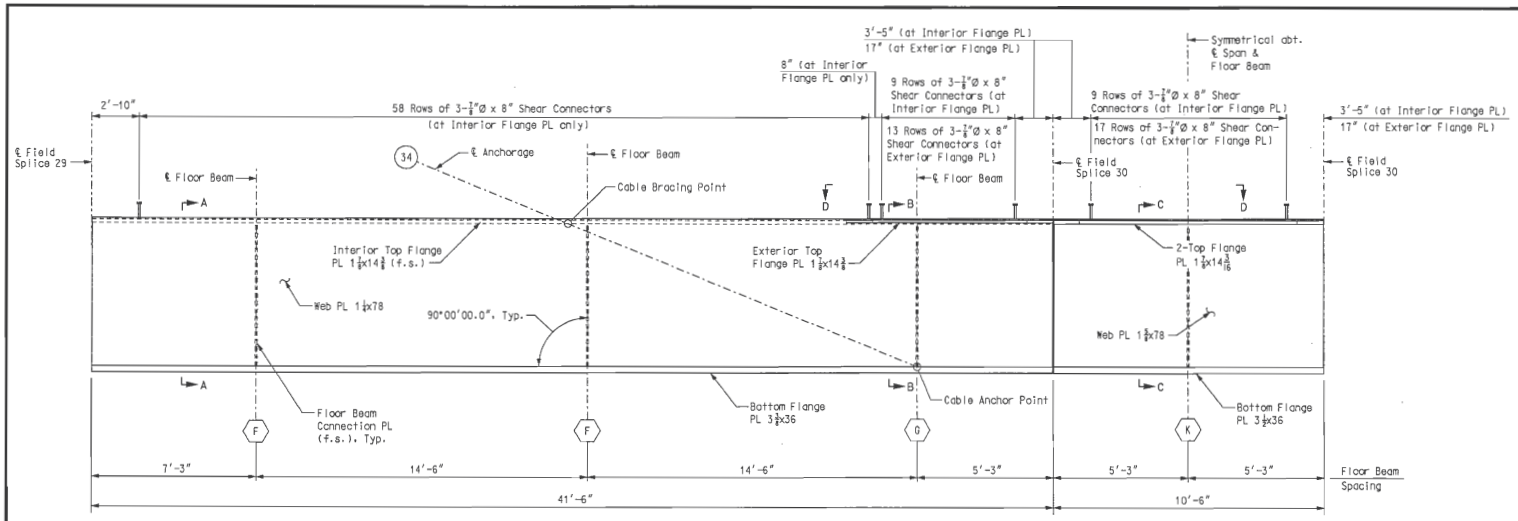

ELEVATION

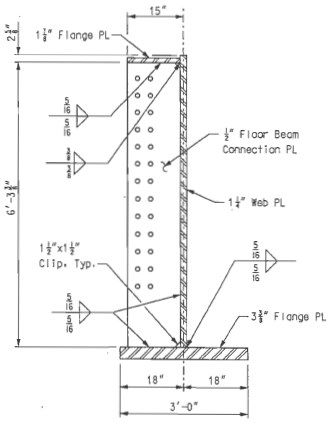

SECTION A-A

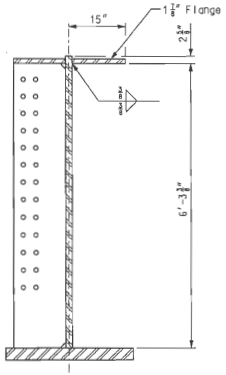

SECTION B-B

(Dimensions and details are identical to Section A-A , unless otherwise noted.)

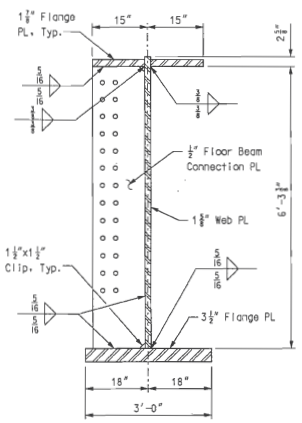

SECTION C-C

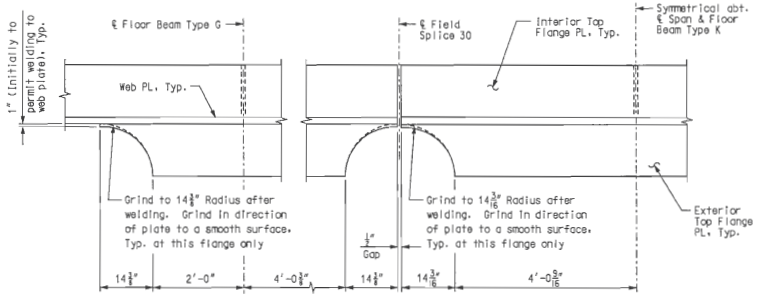

VIEW D-D

Notes:

(34) Denotes Stay Cable.

(F) Denotes Floor Beam Type.

For additional notes and details, see Sheet Nos. BR111.

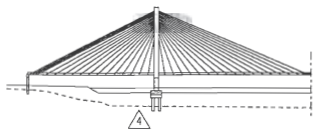

EDGE GIRDER - FIELD PIECES 30 & 31

Detailed JUL 2009
Checked JUL 2009

Note: This drawing is not to scale. Follow dimensions.

Sheet No. 116 of 205

\\kcow00\jobs\46440\Bridges\Plans\CdtoMoDOTA6500\J6I0984\A6500-dgn\ZPLOT_B_A6500_116-205_J6I0984_116.dgn

17-MAY-2010 11:32

STATE OF MISSOURI
HANS R. HUTTON
NUMBER E-25174
REGISTERED PROFESSIONAL ENGINEER
Hans R. Hutton

DATE 5/17/10
ROUTE I-70
STATE MO/IL
DISTRICT 6
SHEET NO. BR116
COUNTY ST. LOUIS CITY - MO ST. CLAIR - IL
JOB NO. J6I0984
CONTRACT ID.
PROJECT NO.
BRIDGE NO. A6500

DATE	DESCRIPTION
5-17-10	⚠ Revised per ATC

MISSOURI HIGHWAYS AND TRANSPORTATION COMMISSION
105 WEST CAPITOL
JEFFERSON CITY, MO 65102
1-888-ASK-MODOT (1-888-275-6636)

HNTB
715 KIRK DRIVE
KANSAS CITY, MO 64105-1310
TELEPHONE: (816) 472-1201
CERTIFICATE OF AUTHORITY NO. 001270

LICENSED STRUCTURAL ENGINEER
HANS R. HUTTON
081-006707
STATE OF ILLINOIS
Hans R. Hutton
5-17-2010
DATE

REV.

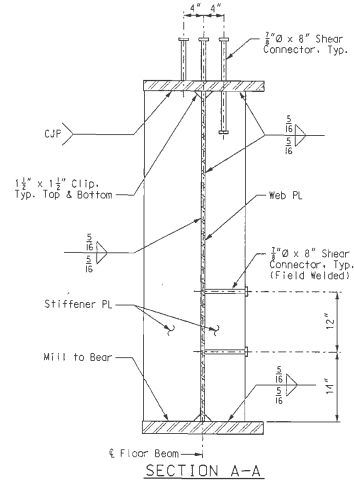

SECTION A-A

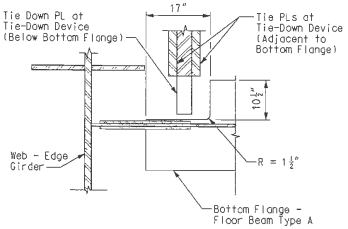

PLAN - COPE IN BOTTOM FLANGE

(Edge Girder Bottom Flange and Horizontal Diaphragm not shown for clarity)

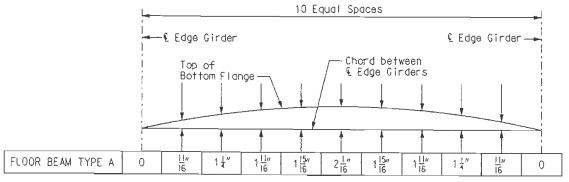

CAMBER DIAGRAM

Camber Notes:

The floor beams shall be fabricated for total dead load as indicated on the camber diagram. Ends of the floor beam shall be fabricated such that, under total dead load, the web of the edge girder is vertical.

"Total Dead Load" ordinates represent the amount of deflection due to all structural steel, precast concrete slab panels, cast-in-place slab concrete, counterweight concrete, barriers and wearing surface.

Ordinates are in inches and are at tenth points of the floor beam span.

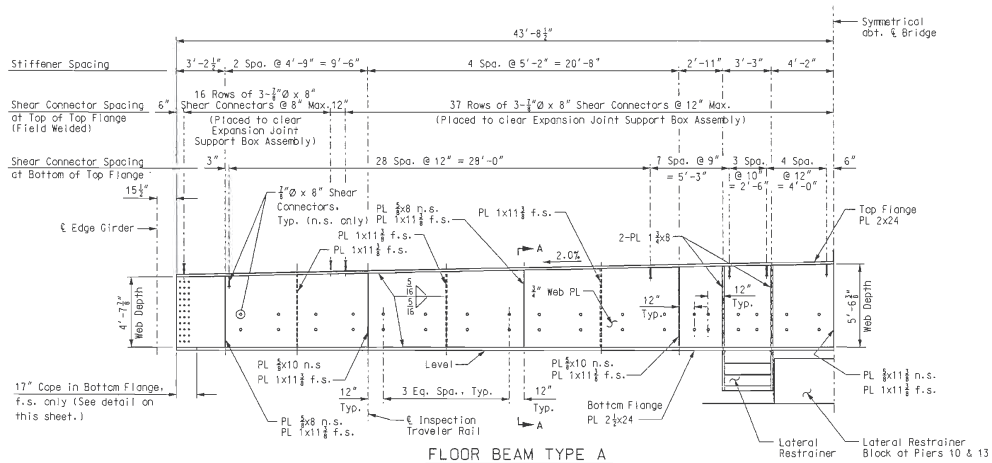

FLOOR BEAM TYPE A

Looking from ℄ Pier 11 or 12

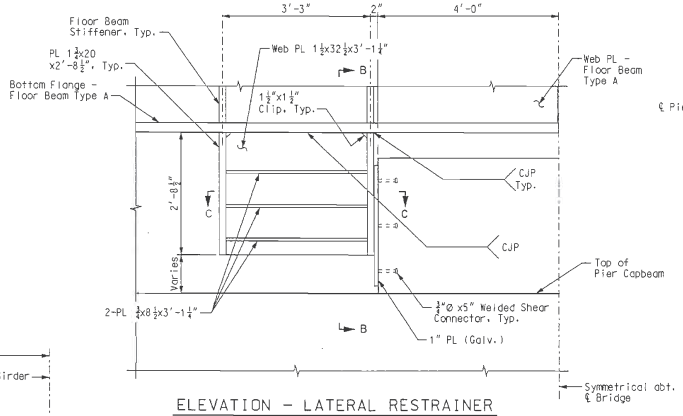

ELEVATION - LATERAL RESTRAINER

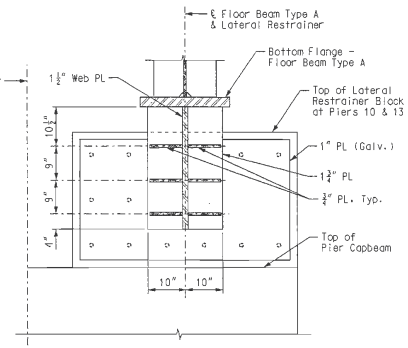

SECTION B-B

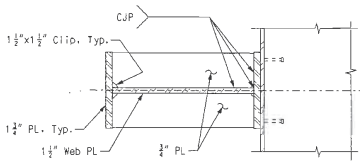

SECTION C-C

Notes:

All floor beam plates and connection plates for Floor Beam Type A shall conform to ASTM A709, Grade HPS70W T-2.

All floor beam connection plates shall have a Class B contact surface preparation.

Shear connectors shown attached to the web plate are to be installed after placement of the precast counterweight panels.

Web depth for Floor Beam Type A selected for an assumed modular expansion joint depth of 20 1/2 ". The Contractor shall make the required modifications if actual modular expansion joint depth varies from assumed dimension.

For details of Lateral Restrainer Block and 1" PL (Galv.), see Sheet Nos. BR24 & BR98.

For locations of floor beams, see Sheet Nos. BR109 & BR110.

For details of floor beam end connections, see Sheet No. BR122.

For Stiffener and Connection Plate Weld Detail, see Sheet No. BR118.

For Inspection Traveler, see Sheet No. BR178.

For Expansion Joint details, see Sheet Nos. BR172 thru BR176.

For Floor Beam Support Bracket detail for slab drain, see Sheet No. BR165.

All costs associated with materials, fabrication and erection of Floor Beams A, B, C, D & E shall be included in the pay item. "Fabricated Structural Low Alloy Steel (Plate Girder) A709, Gr. HPS70W".

FLOOR BEAM ELEVATION

STATE OF MISSOURI
HANS R. HUTTON
NUMBER E-26574
REGISTERED ENGINEER
Hans R. Hutton

DATE 8/20/09

ROUTE	STATE
I-70	MO/IL
DISTRICT	SHEET NO.
6	BR117

COUNTY
ST. LOUIS CITY - MO
ST. CLAIR - IL

JOB NO.
J6I0984

CONTRACT ID.

PROJECT NO.

BRIDGE NO.
A6500

DESCRIPTION	DATE

MISSOURI HIGHWAYS AND TRANSPORTATION COMMISSION
105 WEST CAPITOL
JEFFERSON CITY, MO 65102
1-888-ASK-MODOT (1-888-275-6636)

HNTB
715 KIRK DRIVE
KANSAS CITY, MO 64105-1310
TELEPHONE (816) 472-1201
CERTIFICATE OF AUTHORITY NO. 001270

LICENSED STRUCTURAL ENGINEER
HANS R. HUTTON
081-006707
STATE OF ILLINOIS
Hans R. Hutton
8-20-2009

REV.

Detailed JUL 2009
Checked JUL 2009

Note: This drawing is not to scale. Follow dimensions.

\\kcow00\jobs\46440\Bridges\Plans\CdtoMoDOTA6500\J6I0984\A6500-dgn\ZPLOT_B_A6500_001-205_J6I0984_117.dgn

19-AUG-2009 07:13

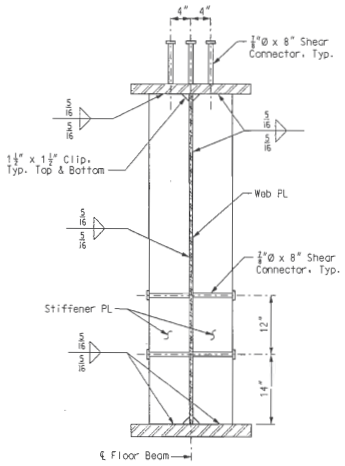

SECTION D-D

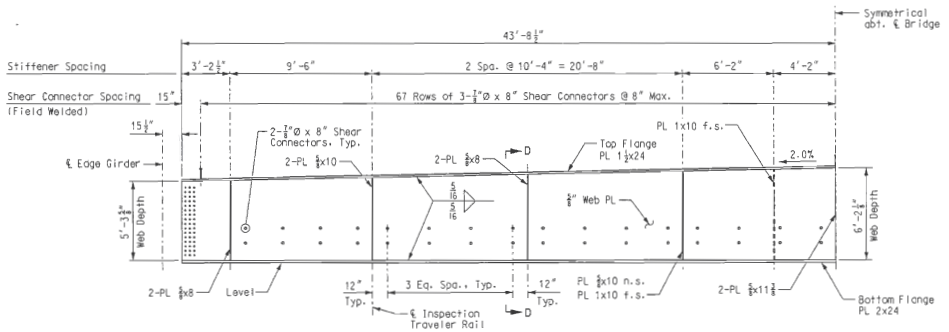

FLOOR BEAM TYPE B

Looking from ℄ Pier 11 or 12

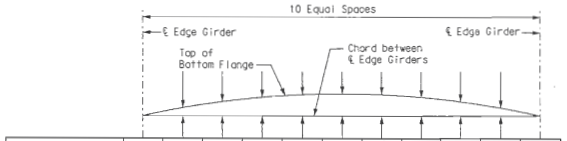

FLOOR BEAM TYPE B	0	1 1/8"	2 1/8"	2 7/8"	3 5/16"	3 1/2"	3 5/16"	2 7/8"	2 1/8"	1 1/8"	0
FLOOR BEAM TYPE C	0	1 5/16"	2 7/16"	3 1/4"	3 13/16"	4"	3 13/16"	3 1/4"	2 7/16"	1 5/16"	0

CAMBER DIAGRAM

Camber Notes:
The floor beams shall be fabricated for total dead load as indicated on the camber diagram. Ends of the floor beam shall be fabricated such that, under total dead load, the web of the edge girder is vertical.
"Total Dead Load" ordinates represent the amount of deflection due to all structural steel, precast concrete slab panels, cast-in-place slab concrete, counterweight concrete, barriers and wearing surface.
Ordinates are in inches and are at tenth points of the floor beam span.

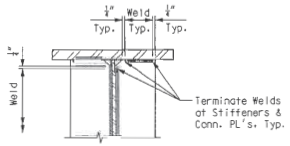

STIFFENER & CONNECTION PLATE WELD DETAIL

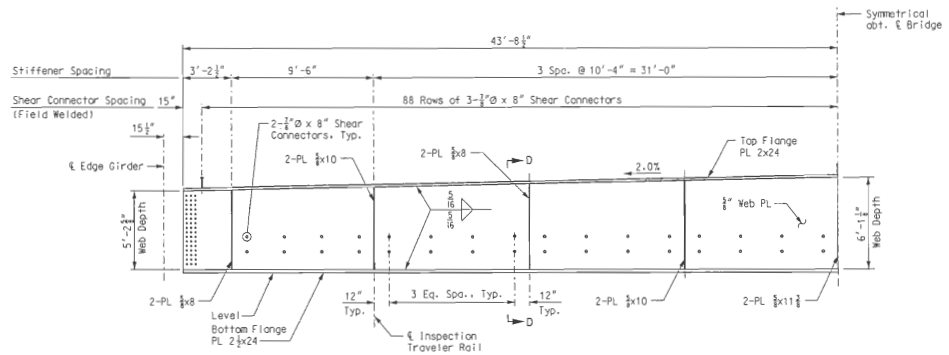

FLOOR BEAM TYPE C

Looking from ℄ Pier 11 or 12

Notes:
All floor beam plates and connection plates for Floor Beam Types B and C shall conform to ASTM A709 Grade, HPS70W T-2.
For additional notes and details, see Sheet No. BR117.

FLOOR BEAM ELEVATION

STATE OF MISSOURI
HANS R. HUTTON
NUMBER E-29174
REGISTERED PROFESSIONAL ENGINEER
Hans R. Hutton

DATE
8/20/09

ROUTE	STATE
I-70	MO/IL
DISTRICT	SHEET NO.
6	BR118

COUNTY
ST. LOUIS CITY - MO
ST. CLAIR - IL

JOB NO.
J6I0984

CONTRACT ID.

PROJECT NO.

BRIDGE NO.
A6500

DATE	DESCRIPTION

MISSOURI HIGHWAYS AND TRANSPORTATION COMMISSION
MoDOT
105 WEST CAPITOL
JEFFERSON CITY, MO 65102
1-888-ASK-MODOT (1-888-275-6636)

HNTB
715 KIRK DRIVE
KANSAS CITY, MO 64105-1310
TELEPHONE (816) 472-1201
CERTIFICATE OF AUTHORITY NO. 001270

LICENSED STRUCTURAL ENGINEER
HANS R. HUTTON
081-006707
STATE OF ILLINOIS
expires 11-30-2010
Hans R. Hutton
signature
8-20-2009
date

REV:

Detailed JUL 2009
Checked JUL 2009

Note: This drawing is not to scale. Follow dimensions.

\\kcow00\jobs\46440\Bridges\Plans\CdtoMoDOTA6500\J6I0984\A6500-dgn\ZPLOT_B_A6500_001-205_J6I0984_118.dgn

19-AUG-2009 07:14

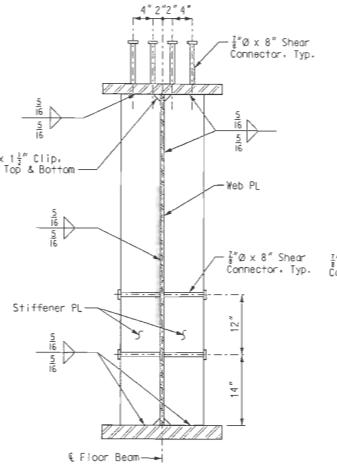

SECTION E-E

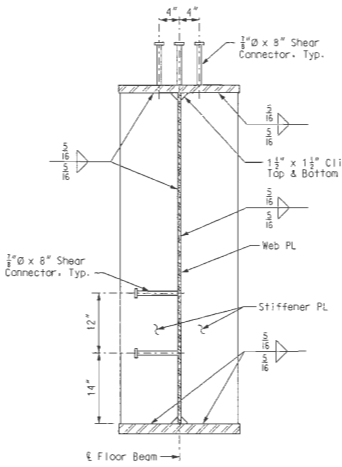

SECTION F-F

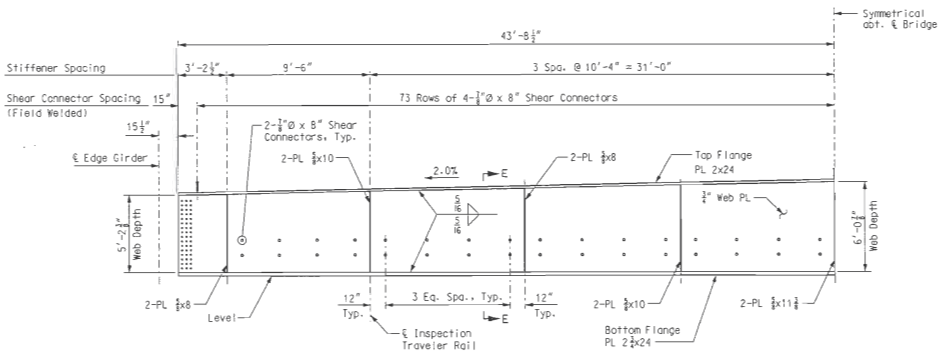

FLOOR BEAM TYPE D

Looking from ℄ Pier 11 or 12

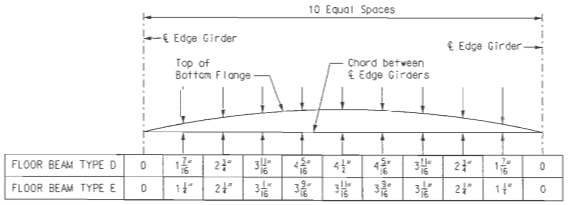

FLOOR BEAM TYPE D	0	1 7/16"	2 1/4"	3 11/16"	4 5/16"	4 1/2"	4 5/16"	3 11/16"	2 1/4"	1 7/16"	0
FLOOR BEAM TYPE E	0	1 1/4"	2 1/4"	3 1/2"	3 3/8"	3 1/16"	3 3/8"	3 1/16"	2 1/4"	1 1/4"	0

CAMBER DIAGRAM

Camber Notes:
The floor beams shall be fabricated for total dead load as indicated on the camber diagram. Ends of the floor beam shall be fabricated such that, under total dead load, the web of the edge girder is vertical.
"Total Dead Load" ordinates represent the amount of deflection due to all structural steel, precast concrete slab panels, cast-in-place slab concrete, counterweight concrete, barriers and wearing surface.
Ordinates are in inches and are at tenth points of the floor beam span.

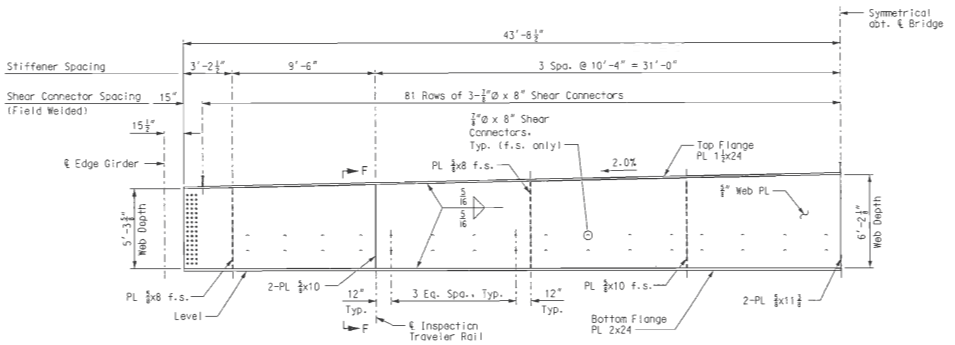

FLOOR BEAM TYPE E

Looking from ℄ Pier 11 or 12

Notes:
All floor beam plates and connection plates for Floor Beam Types D and E shall conform to ASTM A709, Grade HPS70W T-2.
For additional notes and details, see Sheet No. BR117.

FLOOR BEAM ELEVATION

STATE OF MISSOURI
HANS R. HUTTON
NUMBER E-24174
REGISTERED PROFESSIONAL ENGINEER
Hans R. Hutton

DATE 8/20/09

ROUTE	STATE
I-70	MO/IL
DISTRICT	SHEET NO.
6	BR119

COUNTY: ST. LOUIS CITY - MO, ST. CLAIR - IL
JOB NO. J6I0984
CONTRACT ID.
PROJECT NO.
BRIDGE NO. A6500

DESCRIPTION	DATE

MISSOURI HIGHWAYS AND TRANSPORTATION COMMISSION
105 WEST CAPITOL
JEFFERSON CITY, MO 65102
1-888-ASK-MODOT (1-888-275-6636)

HNTB
715 KIRK DRIVE
KANSAS CITY, MO 64105-1310
TELEPHONE (816) 472-1201
CERTIFICATE OF AUTHORITY NO. 001270

LICENSED STRUCTURAL ENGINEER
HANS R HUTTON
081-006707
STATE OF ILLINOIS
MY COMMISSION EXPIRES 11-30-2010
Hans R. Hutton
8-20-2009

REV.

Detailed JUL 2009
Checked JUL 2009

Note: This drawing is not to scale. Follow dimensions.

\\kcow00\jobs\46440\Bridges\Plans\CdotteDOTA6500\J6I0984\A6500-dgn\ZPLOT_B_A6500_001-205_J6I0984_119.dgn

19-AUG-2009 07:14

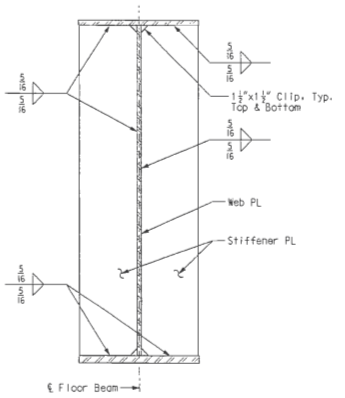

SECTION G-G

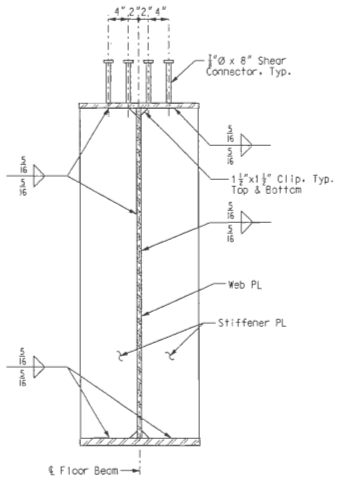

SECTION H-H

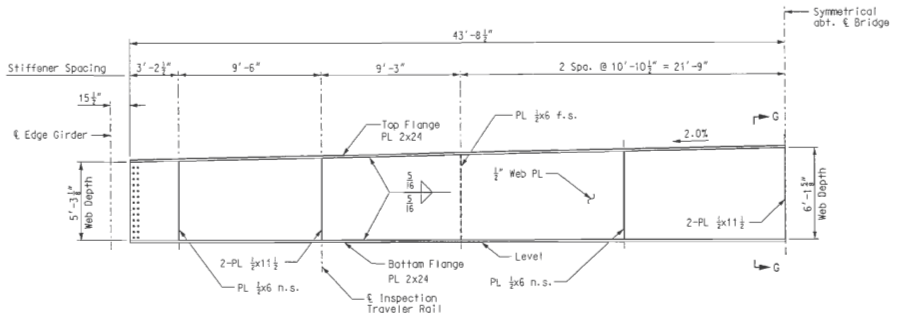

FLOOR BEAM TYPE F

Looking from ℄ Pier 11 or 12

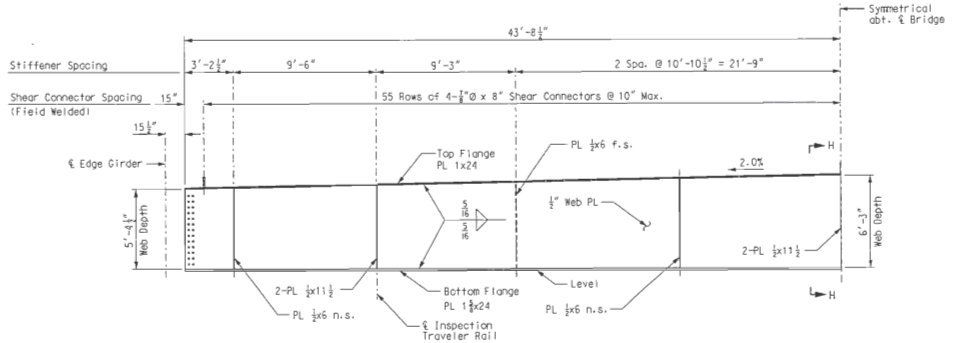

FLOOR BEAM TYPES G & K

Looking from ℄ Pier 11 or 12

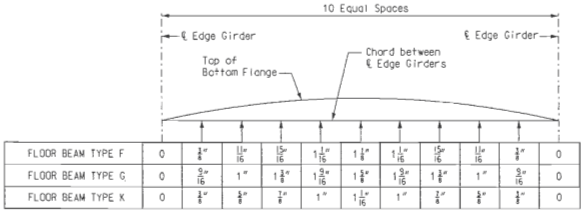

FLOOR BEAM TYPE F	0	¾"	11/16"	15/16"	1 1/16"	1 1/8"	1 1/16"	15/16"	11/16"	¾"	0
FLOOR BEAM TYPE G	0	9/16"	1"	1 3/16"	1 5/16"	1 3/8"	1 5/16"	1 3/16"	1"	9/16"	0
FLOOR BEAM TYPE K	0	¾"	⅞"	1"	1 1/16"	1"	⅞"	¾"	¾"	0

CAMBER DIAGRAM

Camber Notes:

The floor beams shall be fabricated for total dead load as indicated on the camber diagram. Ends of the floor beam shall be fabricated such that, under total dead load, the web of the edge girder is vertical.

"Total Dead Load" ordinates represent the amount of deflection due to all structural steel, precast concrete slab panels, cast-in-place slab concrete, barriers and wearing surface.

Ordinates are in inches and are at tenth points of the floor beam span.

Notes:

All floor beam plates and connection plates for Floor Beam Types F, G and K shall conform to ASTM A709, Grade HPS50W T-2.

For additional notes and details, see Sheet No. BR117.

All costs associated with materials, fabrication and erection of Floor Beams F, G, H & K shall be included in the pay item, "Fabricated Structural Low Alloy Steel (Plate Girder) A709, Gr. HPS50W".

FLOOR BEAM ELEVATION

STATE OF MISSOURI
HANS R. HUTTON
NUMBER E-29174
REGISTERED ENGINEER
Hans R. Hutton

DATE
8/20/09

ROUTE	STATE
I-70	MO/IL
DISTRICT	SHEET NO.
6	BR120

COUNTY
ST. LOUIS CITY - MO
ST. CLAIR - IL

JOB NO.
J6I0984

CONTRACT ID.

PROJECT NO.

BRIDGE NO.
A6500

REV.	DESCRIPTION	DATE

MISSOURI HIGHWAYS AND TRANSPORTATION COMMISSION
MoDOT
105 WEST CAPITOL
JEFFERSON CITY, MO 65102
1-888-ASK-MODOT (1-888-275-6636)

HNTB
715 KIRK DRIVE
KANSAS CITY, MO 64105-1310
TELEPHONE (816) 472-1201
CERTIFICATE OF AUTHORITY NO. 001270

LICENSED STRUCTURAL ENGINEER
HANS R. HUTTON
081-006707
STATE OF ILLINOIS
expires 11-30-2010
Hans R. Hutton
SIGNATURE
8-20-2009
DATE

Detailed JUL 2009
Checked JUL 2009

Note: This drawing is not to scale. Follow dimensions.

\\kcow00\jobs\46440\Bridges\Plans\CdtoMoDOTA6500\J6I0984\A6500-dgn\ZPLOT_B_A6500_001-205_J6I0984_120.dgn

19-AUG-2009 07:14

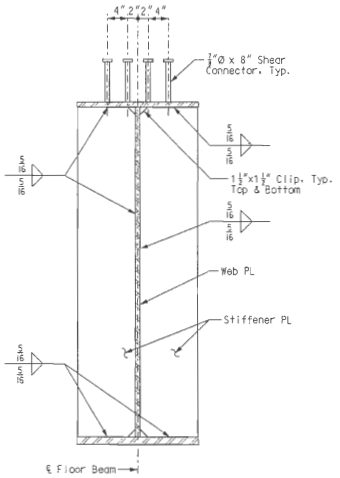

SECTION J-J

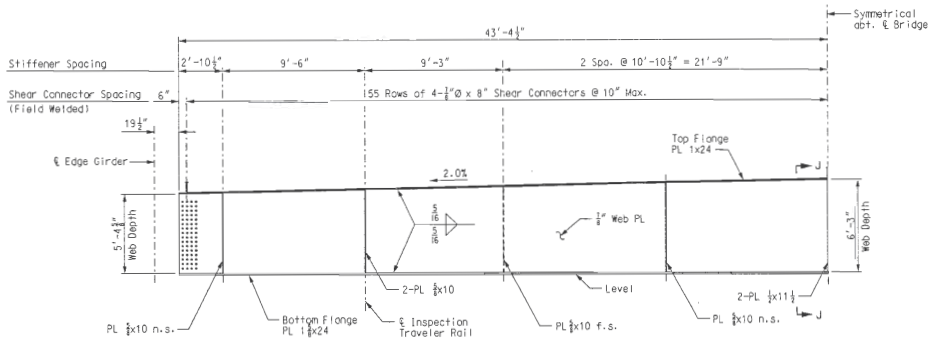

FLOOR BEAM TYPE H

Looking from ℄ Pier 11 or 12

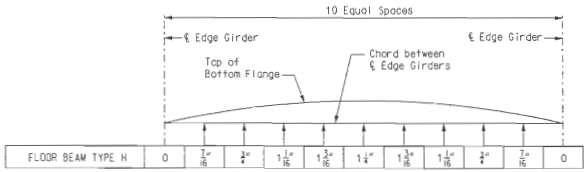

CAMBER DIAGRAM

Camber Notes:

The floor beams shall be fabricated for total dead load as indicated on the camber diagram. Ends of the floor beam shall be fabricated such that, under total dead load, the web of the edge girder is vertical.

"Total Dead Load" ordinates represent the amount of deflection due to all structural steel, precast concrete slab panels, cast-in-place slab concrete, barriers and wearing surface.

Ordinates are in inches and are at tenth points of the floor beam span.

Notes:

All floor beam plates and connection plates for Floor Beam Type H shall conform to ASTM A709, Grade HPS50W T-2.

For additional notes and details, see Sheet No. BR117.

FLOOR BEAM ELEVATION

STATE OF MISSOURI
HANS R. HUTTON
NUMBER E-25174
Hans R. Hutton

DATE 8/20/09

ROUTE	STATE
I-70	MO/IL
DISTRICT	SHEET NO.
6	BR121

COUNTY: ST. LOUIS CITY - MO, ST. CLAIR - IL

JOB NO. J6I0984

CONTRACT ID.

PROJECT NO.

BRIDGE NO. A6500

DESCRIPTION	DATE

MISSOURI HIGHWAYS AND TRANSPORTATION COMMISSION
105 WEST CAPITOL
JEFFERSON CITY, MO 65102
1-888-ASK-MODOT (1-888-275-6636)

HNTB
715 KIRK DRIVE
KANSAS CITY, MO 64105-1310
TELEPHONE (816) 472-1201
CERTIFICATE OF AUTHORITY NO. 000270

LICENSED STRUCTURAL ENGINEER
HANS R. HUTTON
081-006707
STATE OF ILLINOIS
Hans R. Hutton
8-20-2009

REV.

Detailed JUL 2009
Checked JUL 2009

Note: This drawing is not to scale. Follow dimensions.

\\kcow00\jobs\46440\Bridges\Plans\CdtoMoDOTA6500\J6I0984\A6500-dgn\ZPLOT_B_A6500_001-205_J6I0984_121.dgn

19-AUG-2009 07:14

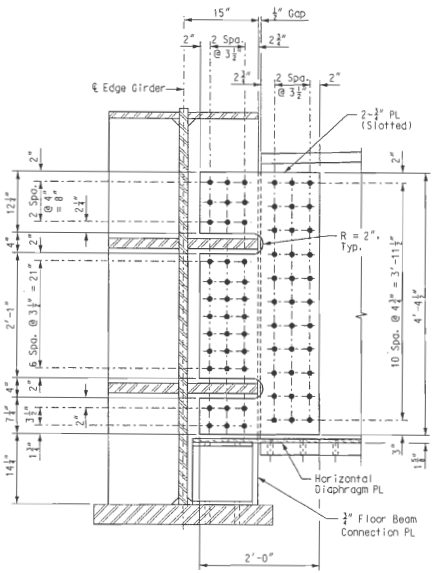

FLOOR BEAM TYPE A

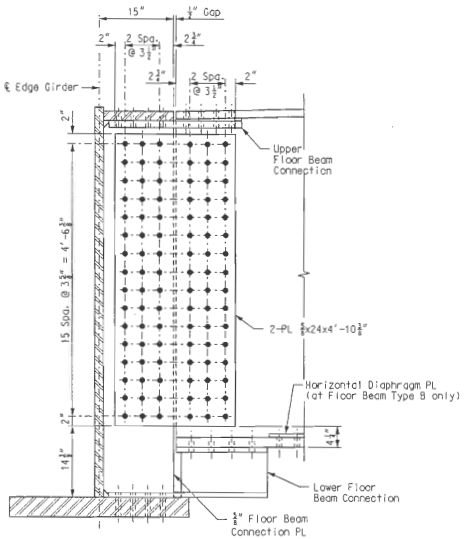

FLOOR BEAM TYPES B & E

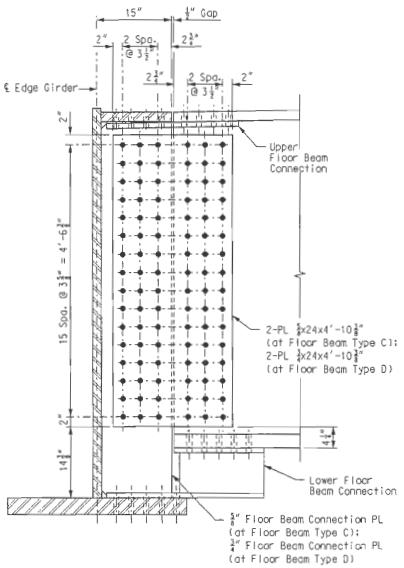

FLOOR BEAM TYPES C & D

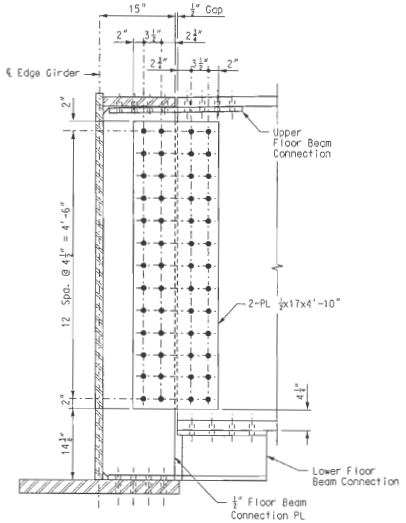

FLOOR BEAM TYPE F

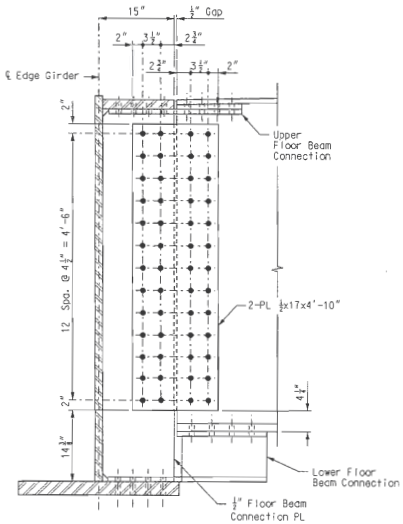

FLOOR BEAM TYPES G & K

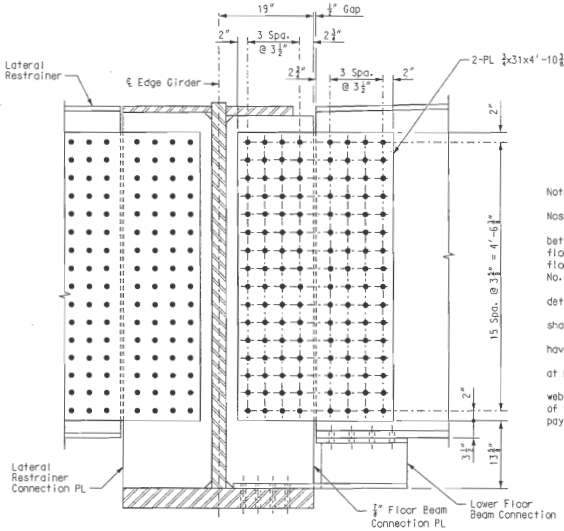

FLOOR BEAM TYPE H

Notes:

For floor beam details, see Sheet Nos. BR117 thru BR121.

For details of horizontal diaphragm between Floor Beam Types A & B, upper floor beam connection, and lower floor beam connections, see Sheet No. BR134.

Shear connectors and cable anchorage details not shown for clarity.

All bolts for floor beam end connections shall be 1"Ø ASTM A325, Type 3 bolts.

All Floor Beam connection plates shall have a Class B contact surface preparation.

For additional details of Lateral Restrainer at Floor Beam Type H, see Sheet No. BR106.

Plates connecting the floor beam flanges and webs to the edge girders shall be the same grade of steel as the floor beam and included in the same pay items as the floor beams.

FLOOR BEAM CONNECTION DETAILS

Detailed JUL 2009
Checked JUL 2009

Note: This drawing is not to scale. Follow dimensions.

\\kcow00\jobs\46440\Bridges\Plans\CdotoMoDOTA6500\J6I0984\A6500-dgn\ZPL0T_B_A6500_001-205_J6I0984_122.dgn

19-AUG-2009 07:14

STATE OF MISSOURI
HANS R. HUTTON
NUMBER E-29174
REGISTERED PROFESSIONAL ENGINEER
Hans R. Hutton

DATE
8/20/09

ROUTE	STATE
I-70	MO/IL
DISTRICT	SHEET NO.
6	BR122

COUNTY
ST. LOUIS CITY - MO
ST. CLAIR - IL

JOB NO.
J6I0984

CONTRACT ID.

PROJECT NO.

BRIDGE NO.
A6500

REV.	DESCRIPTION	DATE

MISSOURI HIGHWAYS AND TRANSPORTATION COMMISSION

MoDOT

105 WEST CAPITOL
JEFFERSON CITY, MO 65102
1-888-ASK-MODOT (1-888-275-6636)

HNTB

715 KIRK DRIVE
KANSAS CITY, MO 64105-1310
TELEPHONE (816) 472-1201
CERTIFICATE OF AUTHORITY NO. 000270

LICENSED STRUCTURAL ENGINEER
HANS R. HUTTON
081-006707
STATE OF ILLINOIS
expires 11-30-2010
Hans R. Hutton
signature
8-20-2009
date

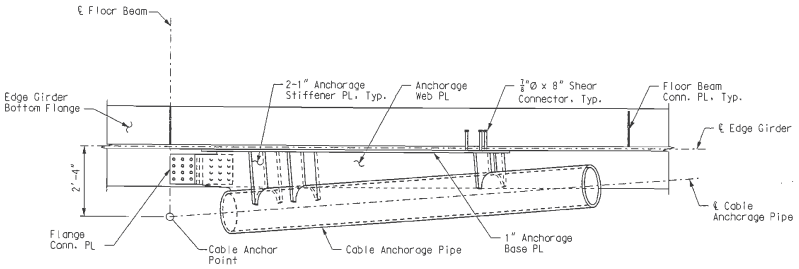

PLAN

(Anchorage for Cable Stay ⑧ shown, others similar. Floor Beam connection, stay cable, anchor, and bolts not shown for clarity.)

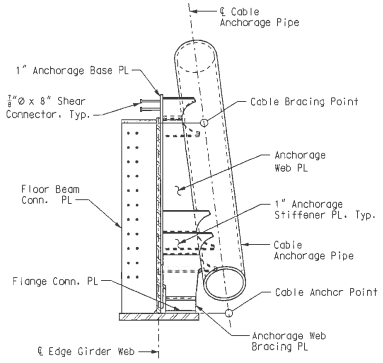

SECTION A-A

(Floor Beam connection not shown for clarity.)

GIRDER ANCHORAGE DATA				
STAY CABLE	CABLE ANCHORAGE PIPE OUTSIDE DIAMETER (INCHES)	CABLE ANCHORAGE PIPE WALL THICKNESS (INCHES)	ANCHORAGE WEB PL THICKNESS (INCHES)	ANCHORAGE WEB BRACING PL THICKNESS (INCHES)
1	20.000	1.500	2.375	1.875
2	20.000	1.500	2.250	1.750
3	18.000	1.375	2.250	1.750
4	18.000	1.375	2.250	1.750
5	16.000	1.218	2.250	1.750
6	16.000	1.218	2.250	1.750
7	16.000	1.218	2.250	1.750
8	16.000	1.218	2.250	1.750
9	16.000	1.218	1.875	1.375
10	16.000	1.218	1.875	1.375
11	14.000	1.250	1.875	1.375
12	14.000	1.250	1.750	-
13	14.000	1.250	1.750	-
14	12.000	1.000	1.750	-
15	12.000	1.000	1.750	-
16	12.000	1.000	1.500	-
17	12.000	1.000	1.500	-
18	12.000	1.000	1.500	-
19	12.000	1.000	1.500	-
20	12.000	1.000	1.750	-
21	12.000	1.000	1.750	-
22	14.000	1.250	1.875	-
23	14.000	1.250	1.875	-
24	14.000	1.250	1.875	1.375
25	16.000	1.218	1.875	1.375
26	16.000	1.218	1.875	1.375
27	16.000	1.218	1.875	1.375
28	16.000	1.218	2.250	1.750
29	16.000	1.218	2.250	1.750
30	16.000	1.218	2.250	1.750
31	18.000	1.375	2.250	1.750
32	18.000	1.375	2.250	1.750
33	20.000	1.500	2.250	1.750
34	20.000	1.500	2.375	1.875

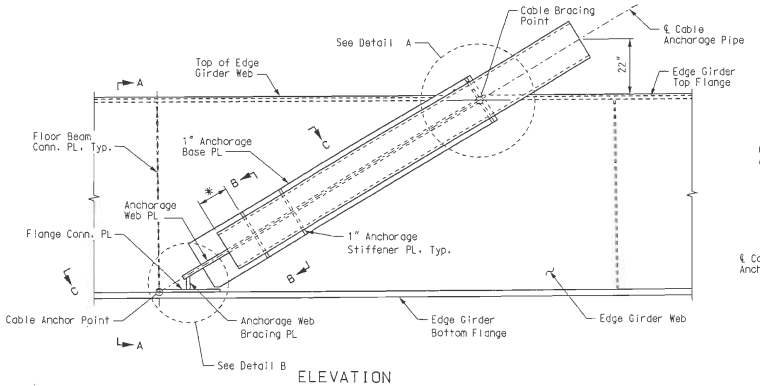

ELEVATION

(Anchorage for Cable Stay ⑧ shown, others similar. Stay cable, anchor, and bolts not shown for clarity.)
* 18" at Stay Cable 1; 12" at Stay Cables 2-34.

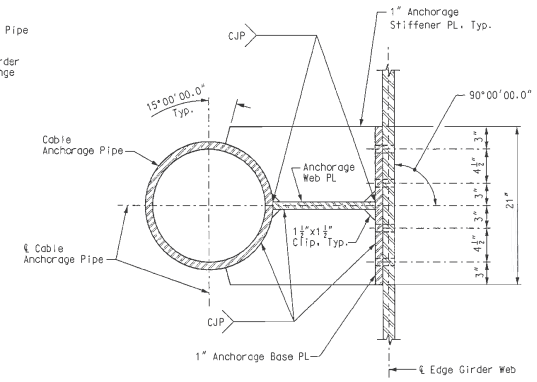

SECTION B-B

Notes:
For locations of bolts at anchorage base plate and edge girder web, see Sheet Nos. BR125 thru BR131.
All fasteners shall be 1"Ø, ASTM A325 Type 3.
For Details A & B and Section C-C, see Sheet No. BR124.
For geometry of cable anchor point and cable bracing point, see Sheet No. BR139 & BR140.
The cable anchorage pipe diameter and length shown on this sheet may be modified, with the approval of the Engineer, to contain the cable anchor hardware for the cable system proposed by the Contractor.
For Lower Floor Beam Connection details, see Sheet No. BR134.
Structural steel for Anchorage Web PL, Anchorage Stiffener PL, Anchorage Base PL, Anchorage Web Bracing PL and Flange Connection PL shall conform to ASTM A709 Grade HPS70W-2.
Structural steel for Cable Anchorage Pipe shall conform to API 5L x52 PSL2.
Structural steel for the Stay Cable Girder Anchorages shall be included in the pay item "Fabricated Structural Low Alloy Steel (Plate Girder) A709, Gr. HPS70W".
The stay cable girder anchorages shall be coated with paint system 'H', in accordance with Sec. 1081. This shall include the anchorage base plates, anchorage web plates, cable anchorage pipe, anchorage web bracing plates, flange connection plates, fasteners and anchorage stiffeners. The color of the field coat shall be Brown (Federal Std. #30045).

STAY CABLE GIRDER ANCHORAGE DETAILS

STATE OF MISSOURI HANS R. HUTTON NUMBER E-29174 REGISTERED PROFESSIONAL ENGINEER
Hans R. Hutton

DATE 10/19/09
ROUTE I-70 | STATE MO/IL
DISTRICT 6 | SHEET NO. BR123
COUNTY ST. LOUIS CITY - MO ST. CLAIR - IL
JOB NO. J6I0984
CONTRACT ID.
PROJECT NO.
BRIDGE NO. A6500

DESCRIPTION	DATE

MISSOURI HIGHWAYS AND TRANSPORTATION COMMISSION
105 WEST CAPITOL
JEFFERSON CITY, MO 65102
1-888-ASK-MODOT (1-888-275-6636)

HNTB
715 KIRK DRIVE
KANSAS CITY, MO 64105-1310
TELEPHONE (816) 472-1201
CERTIFICATE OF AUTHORITY NO. 001270

STATE OF ILLINOIS HANS R. HUTTON 081-006707 PROFESSIONAL ENGINEER
Hans R. Hutton
10-19-2009

REV.

Detailed JUL 2009
Checked JUL 2009

Note: This drawing is not to scale. Follow dimensions.

\\kcow00\jobs\46440\Bridges\Plans\CdotoMoDOTA6500\J6I0984\A6500-dgn\ZPL0T_B_A6500_123-205_J6I0984_123.dgn

19-OCT-2009 09:50

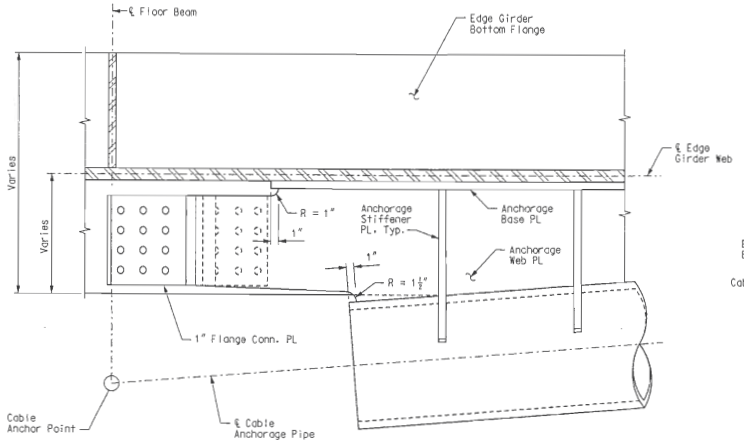

AT STAY CABLES 1-11 AND 24-34

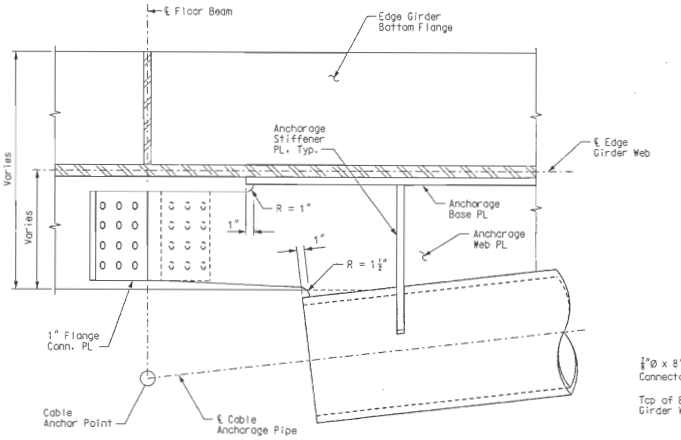

AT STAY CABLES 12-23

SECTION C-C

(Lower Floor Beam Connection not shown for clarity)

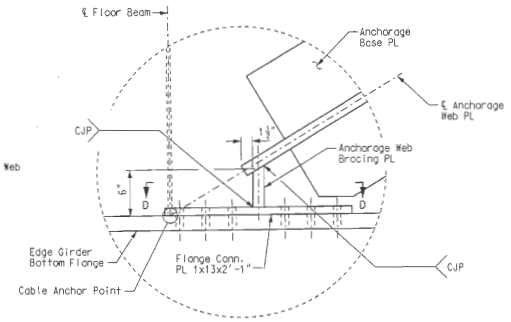

AT STAY CABLES 1-11 AND 24-34

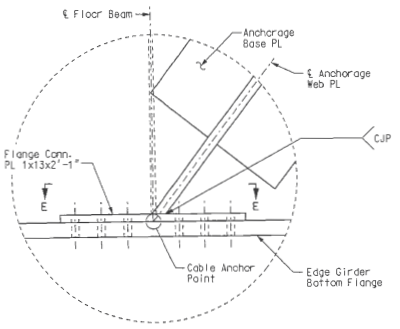

AT STAY CABLES 12-23

DETAIL B

(Cable Anchorage Pipe and bolts not shown for clarity.)

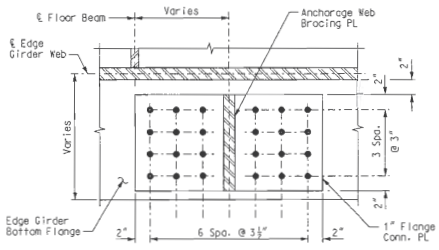

SECTION D-D

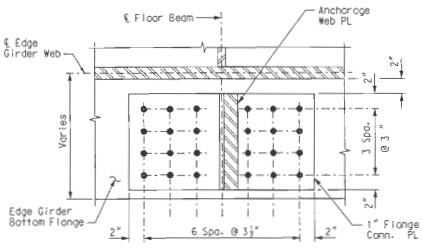

SECTION E-E

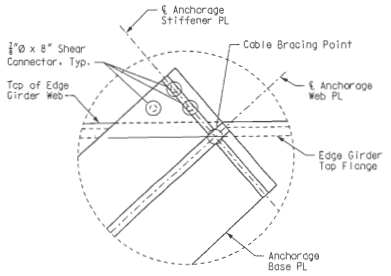

DETAIL A

(Cable Anchorage Pipe and bolts not shown for clarity.)

Notes:

For location of Details A, B, and Section C-C, see Sheet No. BR123.

For additional notes and details, see Sheet No. BR123.

STAY CABLE GIRDER ANCHORAGE DETAILS

STATE OF MISSOURI
HANS R. HUTTON
NUMBER E-29174
REGISTERED PROFESSIONAL ENGINEER
Hans R. Hutton

DATE	8/20/09
ROUTE	I-70
STATE	MO/IL
DISTRICT	6
SHEET NO.	BR124
COUNTY	ST. LOUIS CITY - MO ST. CLAIR - IL
JOB NO.	J6I0984
CONTRACT ID.	
PROJECT NO.	
BRIDGE NO.	A6500

DESCRIPTION | DATE

MISSOURI HIGHWAYS AND TRANSPORTATION COMMISSION
105 WEST CAPITOL
JEFFERSON CITY, MO 65102
1-888-ASK-MODOT (1-888-275-6636)

HNTB
715 KIRK DRIVE
KANSAS CITY, MO 64105-1310
TELEPHONE (816) 472-1201
CERTIFICATE OF AUTHORITY NO. 001270

LICENSED STRUCTURAL ENGINEER
HANS R. HUTTON
081-006707
STATE OF ILLINOIS
Hans R. Hutton
8-20-2009

REV.

Detailed JUL 2009
Checked JUL 2009

Note: This drawing is not to scale. Follow dimensions.

\\kcaw00\jobs\46440\Bridges\Plans\CdtoMoDOTA6500\J6I0984\A6500-dgn\ZPLOT_B_A6500_001-205_J6I0984_124.dgn

19-AUG-2009 07:15

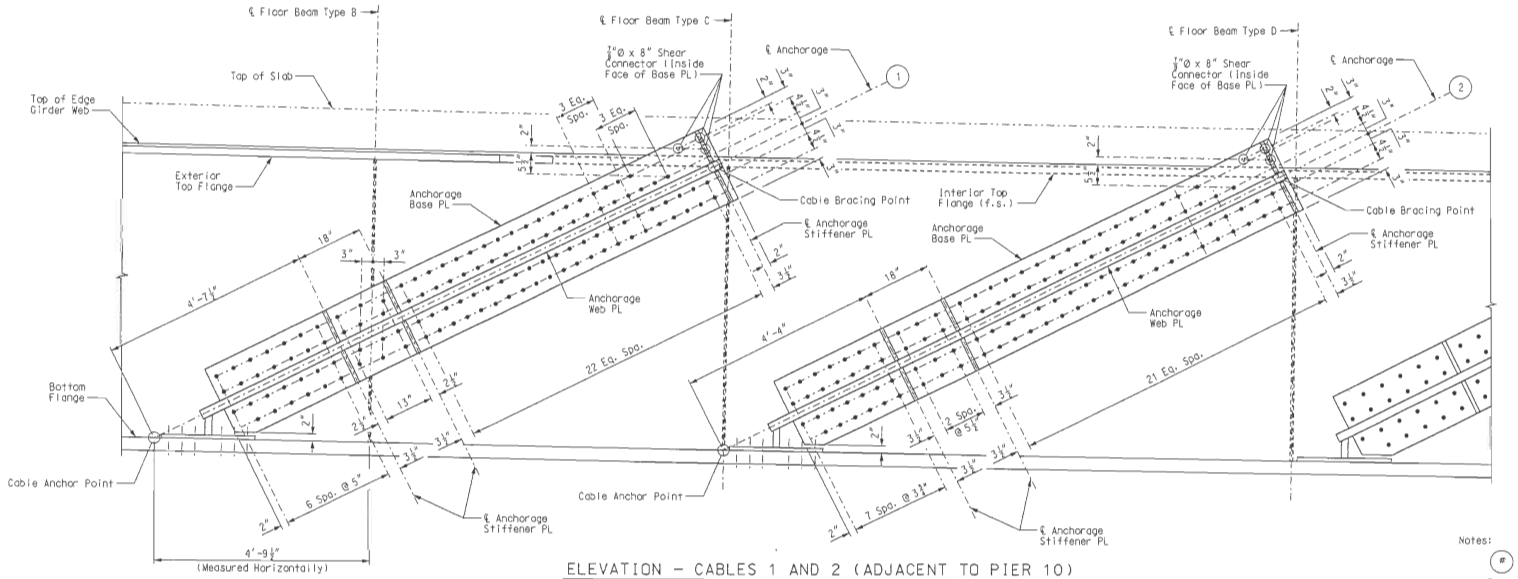

ELEVATION – CABLES 1 AND 2 (ADJACENT TO PIER 10)

(Cable Anchorage Pipe not shown for clarity.)

Notes:

(#) Denotes Stay Cable.

For additional notes and details, see Sheet Nos. BR123 & BR124.

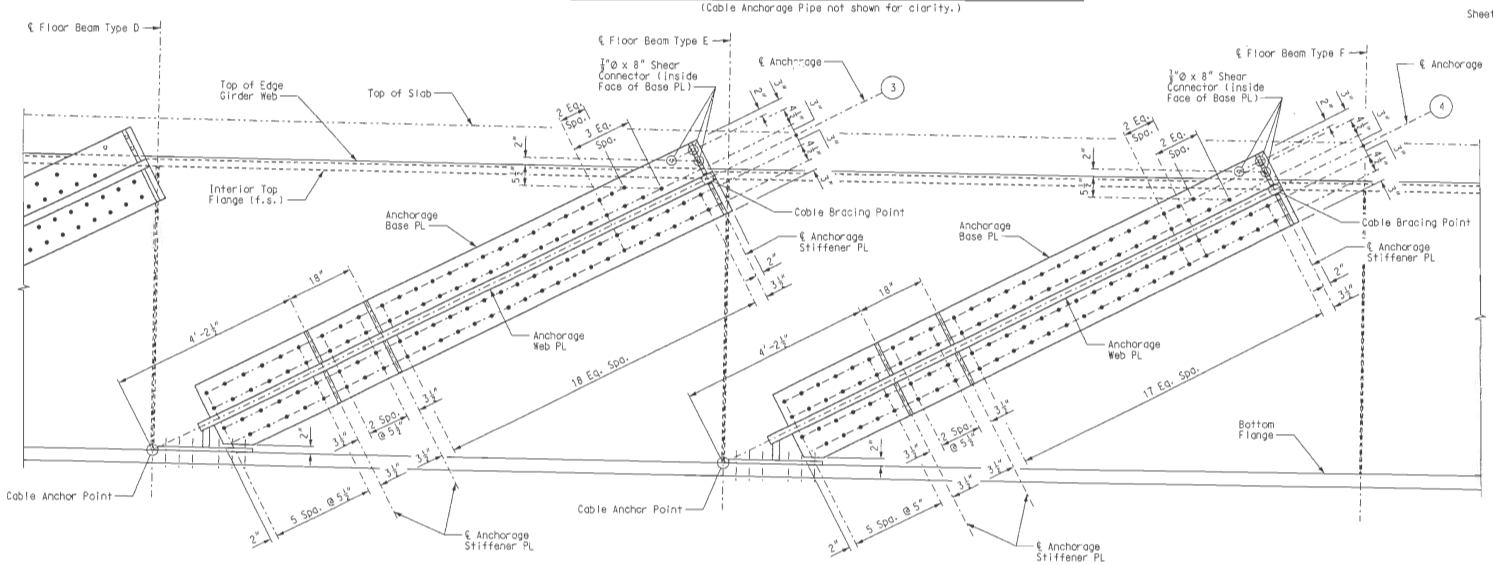

ELEVATION – CABLES 3 AND 4 (ADJACENT TO PIER 10)

(Cable Anchorage Pipe not shown for clarity.)

STAY CABLE GIRDER ANCHORAGE DETAILS

Detailed JUL 2009
Checked JUL 2009

Note: This drawing is not to scale. Follow dimensions.

Sheet No. 125 of 205

\\kcow00\jobs\46440\Bridges\Plans\CdtoMoDOTA6500\J6I0984\A6500-dgn\ZPLOT_B_A6500_001-205_J6I0984_125.dgn

19-AUG-2009 07:15

STATE OF MISSOURI — HANS R. HUTTON — NUMBER E-29174 — REGISTERED PROFESSIONAL ENGINEER

DATE: 8/20/09

ROUTE	STATE
I-70	MO/IL

DISTRICT	SHEET NO.
6	BR125

COUNTY: ST. LOUIS CITY - MO; ST. CLAIR - IL

JOB NO.: J6I0984

CONTRACT ID.:

PROJECT NO.:

BRIDGE NO.: A6500

DESCRIPTION	DATE

MISSOURI HIGHWAYS AND TRANSPORTATION COMMISSION

105 WEST CAPITOL
JEFFERSON CITY, MO 65101
1-888-ASK-MODOT (1-888-275-6636)

HNTB
715 KIRK DRIVE
KANSAS CITY, MO 64105-1310
TELEPHONE (816) 472-1201
CERTIFICATE OF AUTHORITY NO. 001270

STATE OF ILLINOIS — LICENSED STRUCTURAL ENGINEER — HANS R. HUTTON 081-006707 — EXPIRES 11-30-2010

8-20-2009

REV.

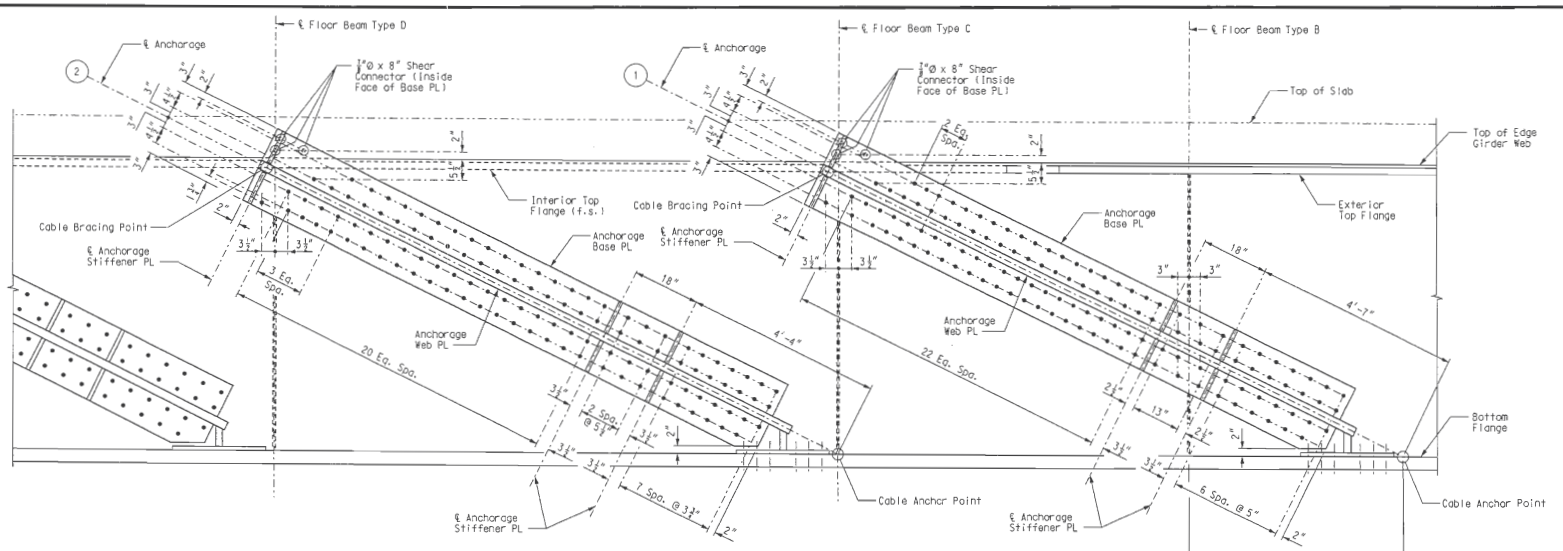

ELEVATION - CABLES 1 AND 2 (ADJACENT TO PIER 13)

(Cable Anchorage Pipe not shown for clarity.)

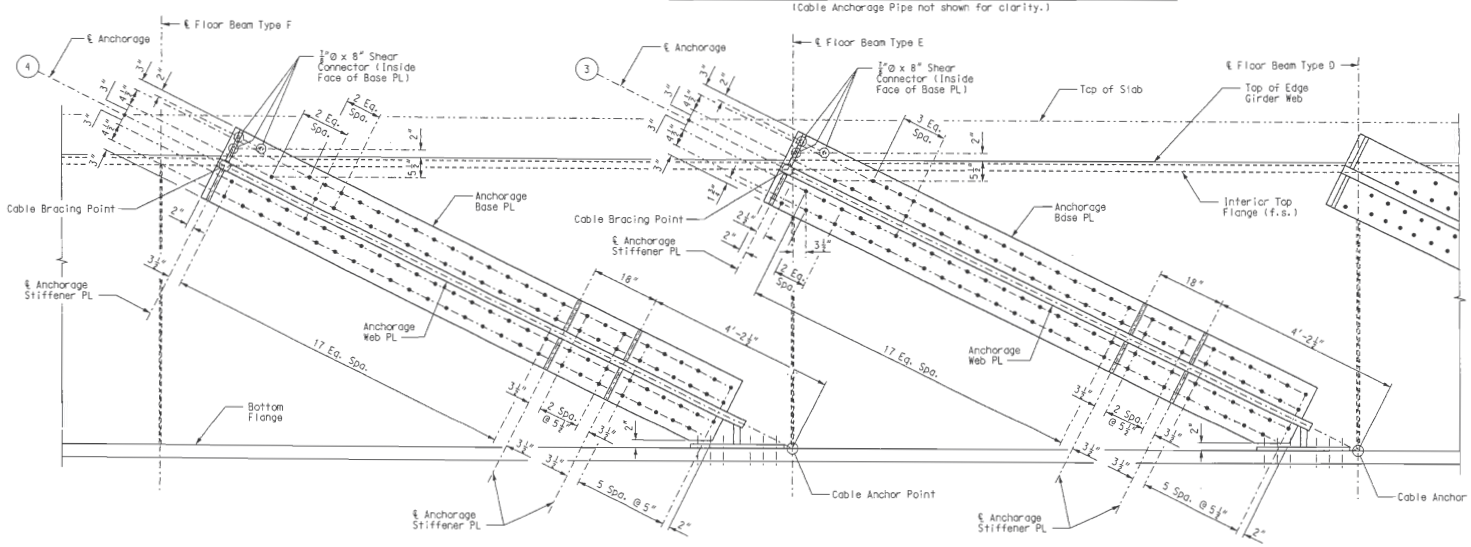

ELEVATION - CABLES 3 AND 4 (ADJACENT TO PIER 13)

(Cable Anchorage Pipe not shown for clarity.)

Notes:

(#) Denotes Stay Cable.

For additional notes and details, see Sheet Nos. BR123 & BR124.

STAY CABLE GIRDER ANCHORAGE DETAILS

STATE OF MISSOURI HANS R. HUTTON NUMBER E-28174 REGISTERED ENGINEER

DATE 8/20/09

ROUTE I-70 | STATE MO/IL

DISTRICT 6 | SHEET NO. BR126

COUNTY ST. LOUIS CITY - MO ST. CLAIR - IL

JOB NO. J6I0984

CONTRACT ID.

PROJECT NO.

BRIDGE NO. A6500

DESCRIPTION | DATE

MISSOURI HIGHWAYS AND TRANSPORTATION COMMISSION

MoDOT 105 WEST CAPITOL JEFFERSON CITY, MO 65102 1-888-ASK-MODOT (1-888-275-6636)

HNTB 715 KIRK DRIVE KANSAS CITY, MO 64105-1310 TELEPHONE (816) 472-1201 CERTIFICATE OF AUTHORITY NO. 001270

LICENSED STRUCTURAL ENGINEER HANS R. HUTTON 081-006707 STATE OF ILLINOIS

8-20-2009

REV.

Detailed JUL 2009
Checked JUL 2009

Note: This drawing is not to scale. Follow dimensions.

Sheet No. 126 of 205

\\kcow00\iobs\46440\Bridges\Plans\CdfoMoDOTA65C0\J6I0984\A6500-dgn\ZPLOT_B_A6500_001-205_J6I0984_126.dgn

19-AUG-2009 07:15

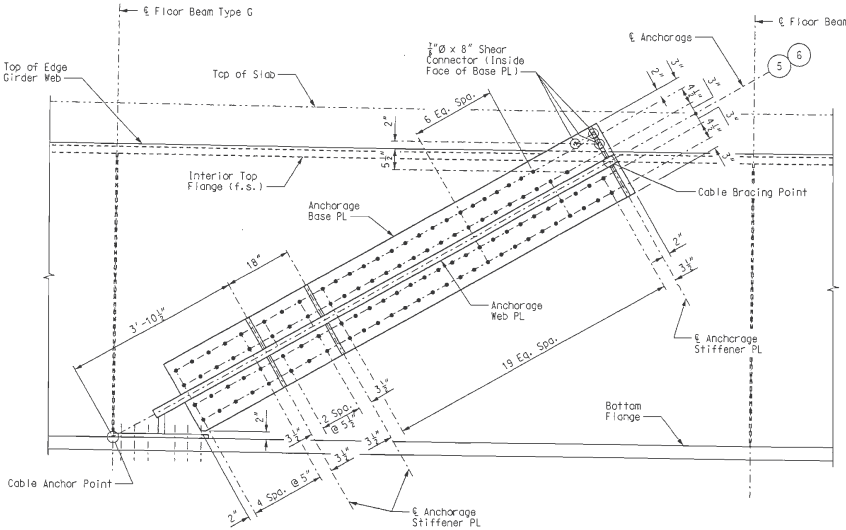

ELEVATION – CABLES 5 AND 6

(Cable Anchorage Pipe not shown for clarity.)

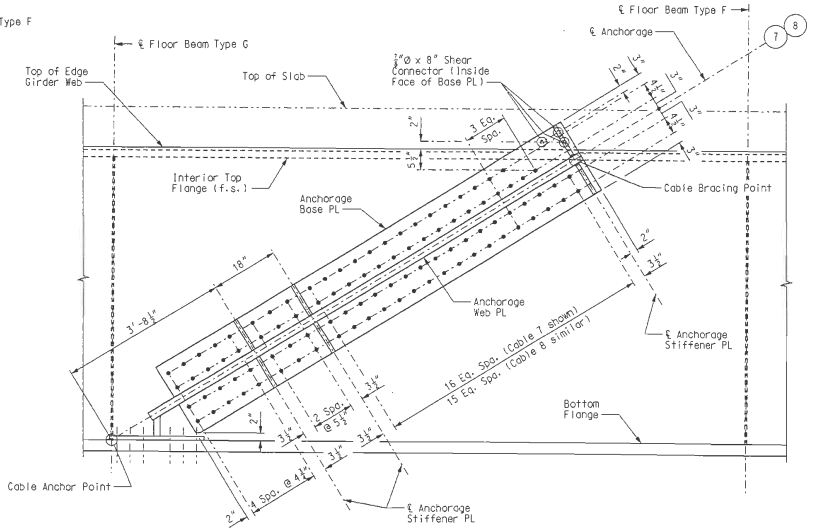

ELEVATION – CABLES 7 AND 8

(Cable Anchorage Pipe not shown for clarity.)

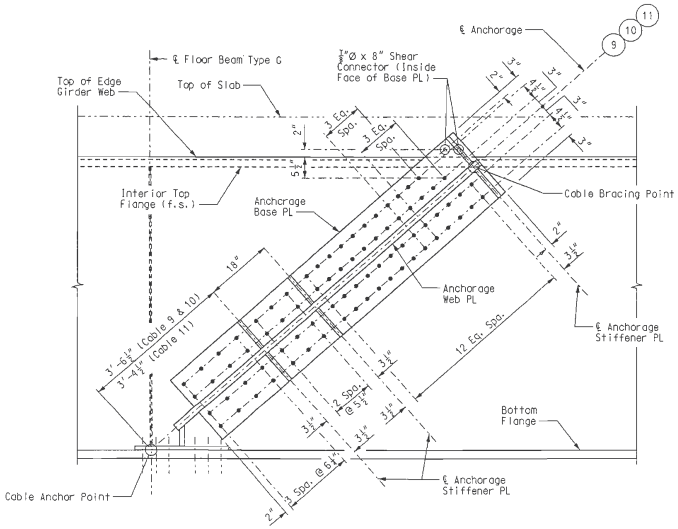

ELEVATION – CABLES 9, 10, AND 11

(Cable Anchorage Pipe not shown for clarity.)

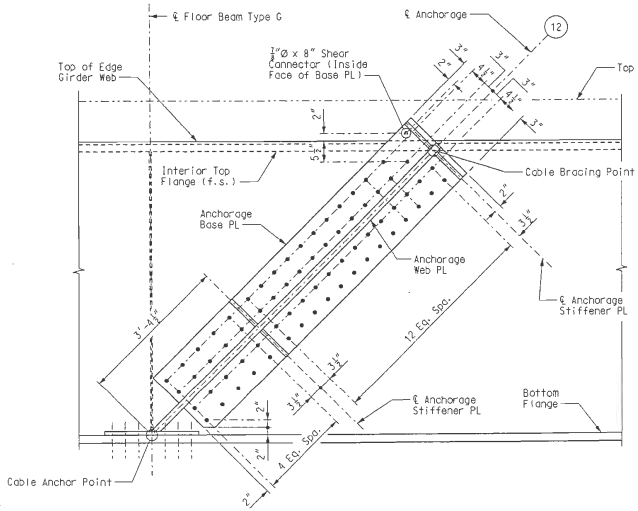

ELEVATION – CABLE 12

(Cable Anchorage Pipe not shown for clarity.)

Notes:

(#) Denotes Stay Cable.

For additional notes and details, see Sheet Nos. BR123 & BR124.

STAY CABLE GIRDER ANCHORAGE DETAILS

Detailed JUL 2009
Checked JUL 2009

Note: This drawing is not to scale. Follow dimensions.

Sheet No. 127 of 205

\\kcow00\jobs\46440\Bridges\Plans\CdotoMoDOTA6500\J6I0984\A6500-dgn\ZPLOT_B_A6500_001-205_J6I0984_I27.dgn

19-AUG-2009 07:15

HANS R. HUTTON NUMBER E-20174 REGISTERED PROFESSIONAL ENGINEER

DATE 8/20/09

ROUTE I-70 | STATE MO/IL

DISTRICT 6 | SHEET NO. BR127

COUNTY ST. LOUIS CITY - MO ST. CLAIR - IL

JOB NO. J6I0984

CONTRACT ID.

PROJECT NO.

BRIDGE NO. A6500

DESCRIPTION | DATE

REV.

MISSOURI HIGHWAYS AND TRANSPORTATION COMMISSION

105 WEST CAPITOL
P.O. BOX 270
JEFFERSON CITY, MO 65102
1-888-ASK-MODOT (1-888-275-6636)

HNTB
715 KING DRIVE
KANSAS CITY, MO 64105-4310
TELEPHONE (816) 472-1201
CERTIFICATE OF AUTHORITY NO. 001270

LICENSED STRUCTURAL ENGINEER
HANS R. HUTTON
081-006707
STATE OF ILLINOIS

8-20-2009

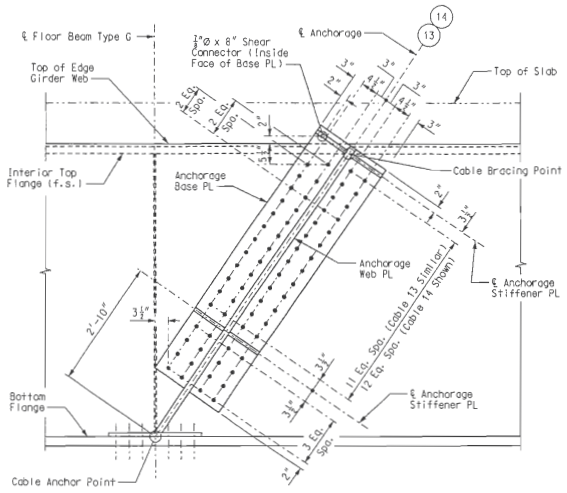

ELEVATION – CABLES 13 AND 14

(Cable Anchorage Pipe not shown for clarity.)

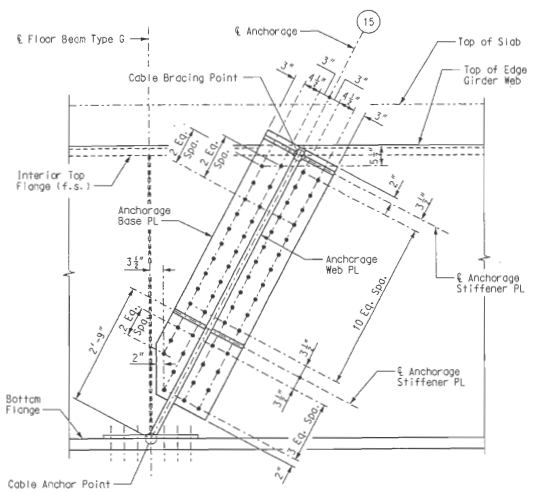

ELEVATION – CABLE 15

(Cable Anchorage Pipe not shown for clarity.)

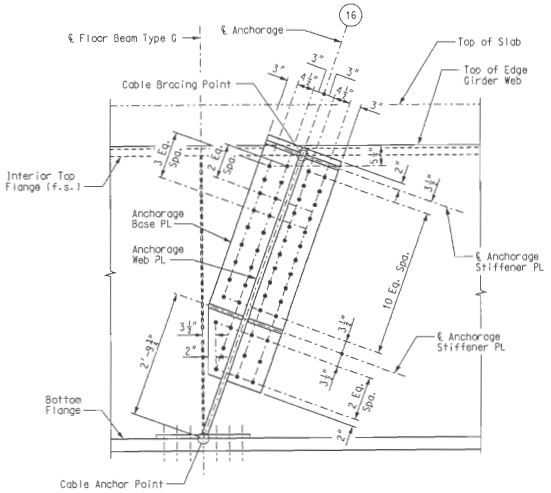

ELEVATION – CABLE 16

(Cable Anchorage Pipe not shown for clarity.)

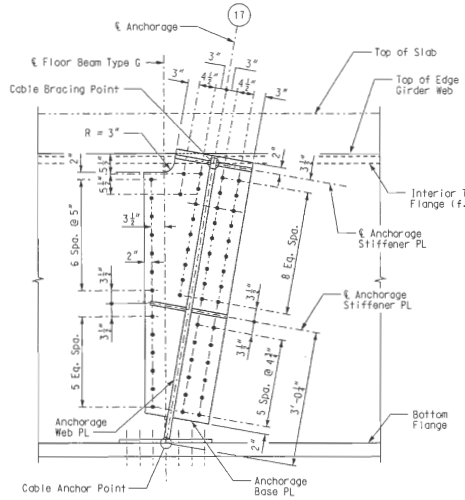

ELEVATION – CABLE 17

(Cable Anchorage Pipe not shown for clarity.)

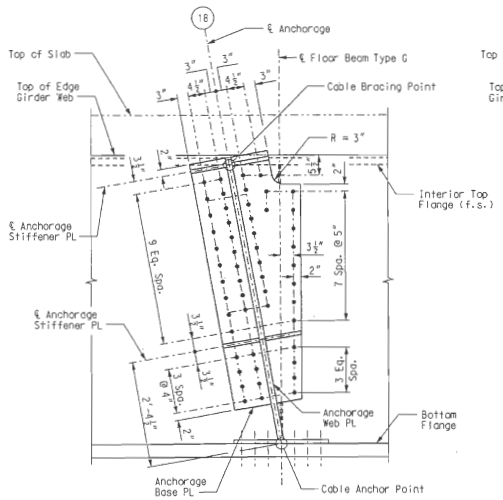

ELEVATION – CABLE 18

(Cable Anchorage Pipe not shown for clarity.)

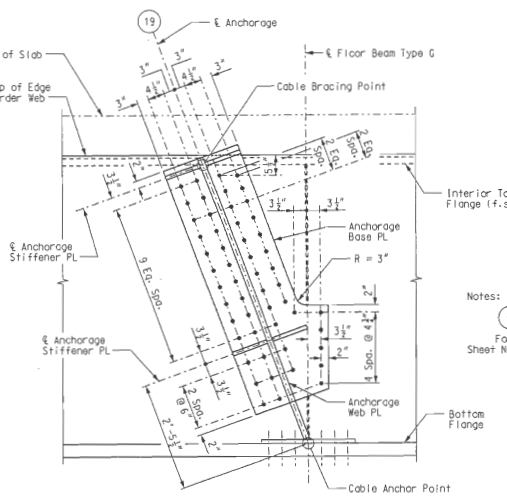

ELEVATION – CABLE 19

(Cable Anchorage Pipe not shown for clarity.)

Notes:

(#) Denotes Stay Cable.

For additional notes and details, see Sheet Nos. BR123 & BR124.

STAY CABLE GIRDER ANCHORAGE DETAILS

Detailed JUL 2009
Checked JUL 2009

Note: This drawing is not to scale. Follow dimensions.

Sheet No. 128 of 205

\\kcow00\jobs\48440\Bridges\Plans\CdotoMoDOTA6500\J6I0984\A6500-dgn\ZPLOT_B_A6500_001-205_J6I0984_128.dgn

19-AUG-2009 07:15

STATE OF MISSOURI
HANS R. HUTTON
NUMBER E-26174
REGISTERED PROFESSIONAL ENGINEER
Hans R. Hutton

DATE
8/20/09

ROUTE	STATE
I-70	MO/IL
DISTRICT	SHEET NO.
6	BR128

COUNTY
ST. LOUIS CITY - MO
ST. CLAIR - IL

JOB NO.
J6I0984

CONTRACT ID.

PROJECT NO.

BRIDGE NO.
A6500

REV.	DESCRIPTION	DATE

MISSOURI HIGHWAYS AND TRANSPORTATION COMMISSION
105 WEST CAPITOL
JEFFERSON CITY, MO 65102
1-888-ASK-MODOT (1-888-275-6636)

HNTB
715 KIRK DRIVE
KANSAS CITY, MO 64105-1310
TELEPHONE (816) 472-1201
CERTIFICATE OF AUTHORITY NO. 001170

LICENSED STRUCTURAL ENGINEER
HANS R. HUTTON
081-006707
STATE OF ILLINOIS
Hans R. Hutton
8-20-2009

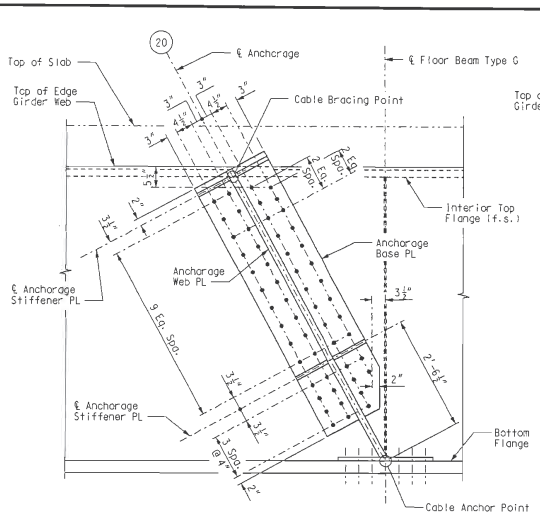

ELEVATION – CABLE 20
(Cable Anchorage Pipe not shown for clarity.)

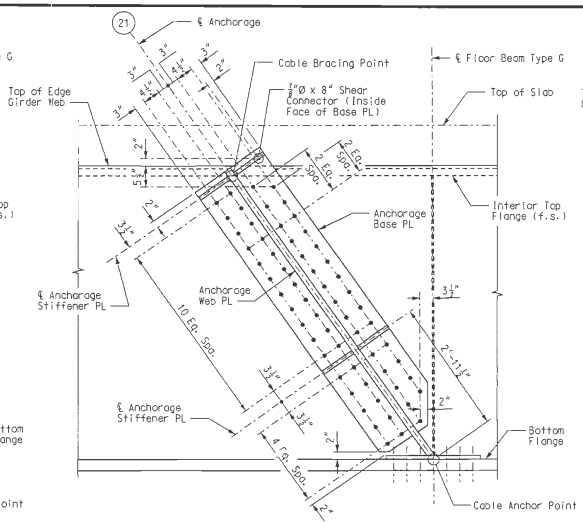

ELEVATION – CABLE 21
(Cable Anchorage Pipe not shown for clarity.)

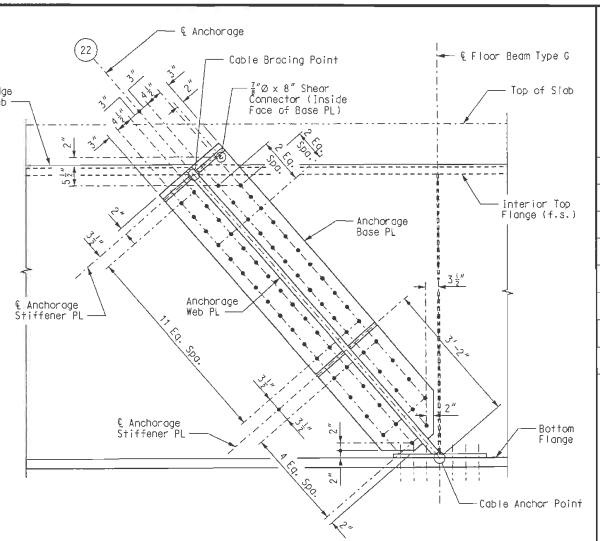

ELEVATION – CABLE 22
(Cable Anchorage Pipe not shown for clarity.)

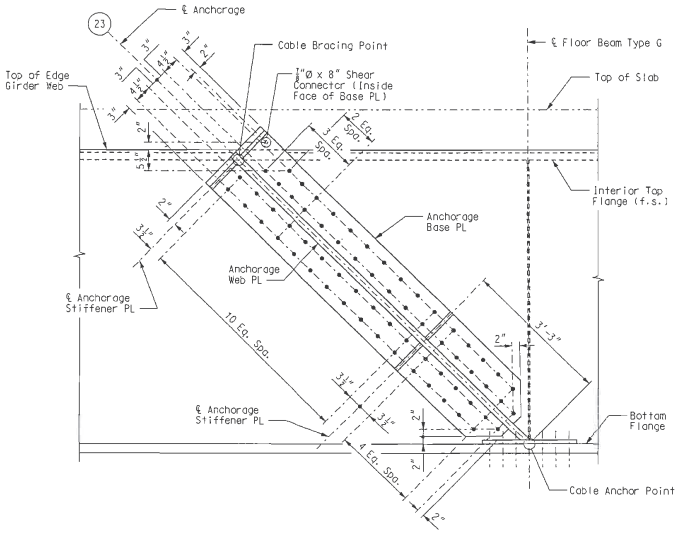

ELEVATION – CABLE 23
(Cable Anchorage Pipe not shown for clarity.)

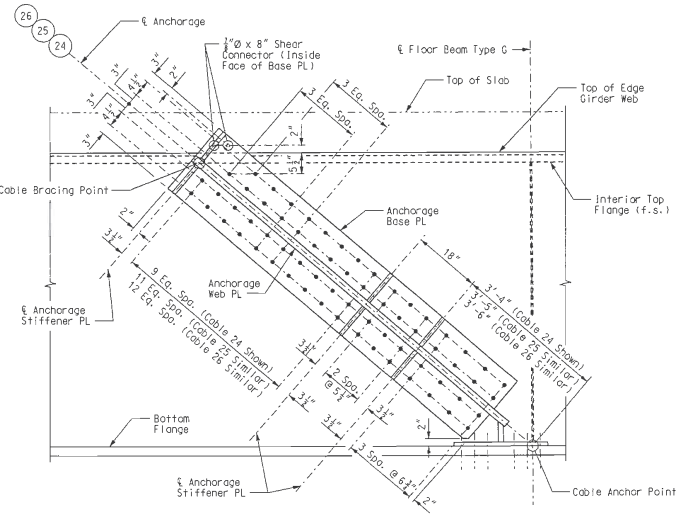

ELEVATION – CABLES 24, 25, AND 26
(Cable Anchorage Pipe not shown for clarity.)

Notes:

(#) Denotes Stay Cable.

For additional notes and details, see Sheet Nos. BR123 & BR124.

STAY CABLE GIRDER ANCHORAGE DETAILS

Detailed JUL 2009
Checked JUL 2009

Note: This drawing is not to scale. Follow dimensions.

\\kcow00\jobs\46440\Bridges\Plans\CdtoMoDOT A6500\J6I0984\A6500-dgn\ZPLOT_B_A6500_001-205_J6I0984_129.dgn

19-AUG-2009 07:15

STATE OF MISSOURI
HANS R. HUTTON
NUMBER E-29174
REGISTERED PROFESSIONAL ENGINEER
Hans R. Hutton

DATE
8/20/09

ROUTE	STATE
I-70	MO/IL
DISTRICT	SHEET NO.
6	BR129

COUNTY
ST. LOUIS CITY - MO
ST. CLAIR - IL

JOB NO.
J6I0984

CONTRACT ID.

PROJECT NO.

BRIDGE NO.
A6500

DESCRIPTION	DATE

MISSOURI HIGHWAYS AND TRANSPORTATION COMMISSION
105 WEST CAPITOL
JEFFERSON CITY, MO 65102
1-888-ASK-MODOT (1-888-275-6636)

HNTB
715 KIRK DRIVE
KANSAS CITY, MO 64105-1310
TELEPHONE (816) 472-1201
CERTIFICATE OF AUTHORITY NO. 001270

STATE OF ILLINOIS
HANS R. HUTTON
081-006707
LICENSED STRUCTURAL ENGINEER
Hans R. Hutton
Signature
8-20-2009
Date

REV.

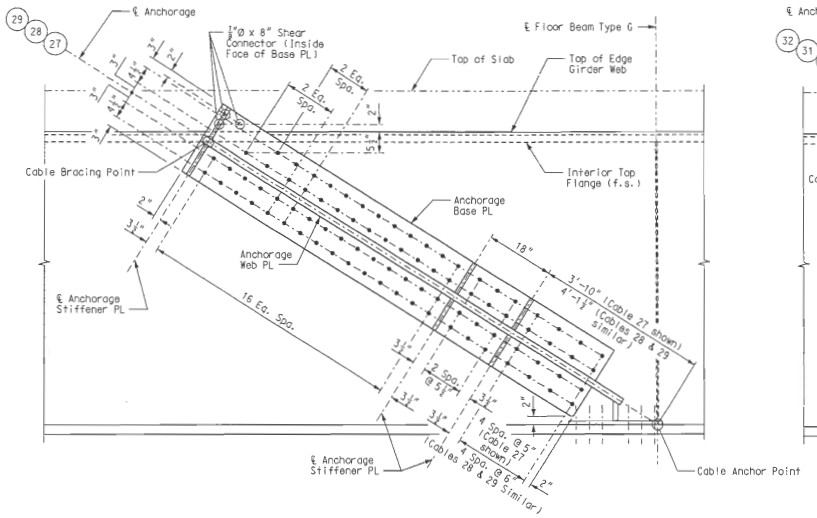

ELEVATION – CABLES 27, 28, AND 29

(Cable Anchorage Pipe not shown for clarity.)

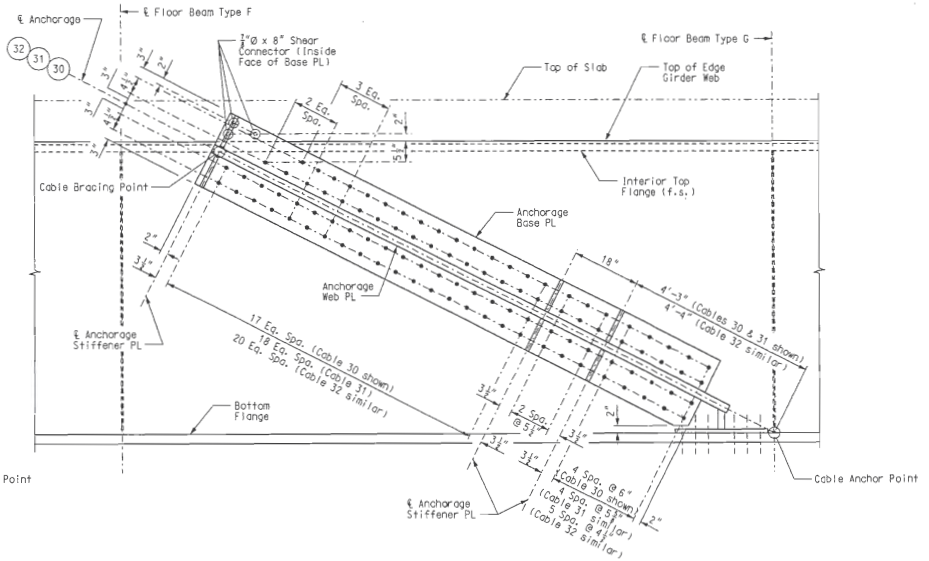

ELEVATION – CABLES 30, 31, AND 32

(Cable Anchorage Pipe not shown for clarity.)

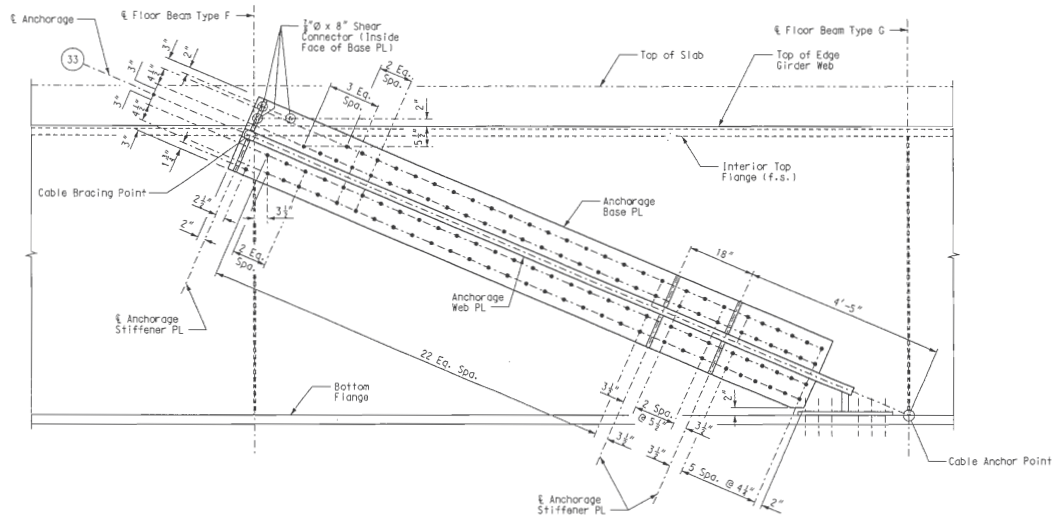

ELEVATION – CABLE 33

(Cable Anchorage Pipe not shown for clarity.)

Notes:

(#) Denotes Stay Cable.

For additional notes and details, see Sheet Nos. BR123 & BR124.

STAY CABLE GIRDER ANCHORAGE DETAILS

Detailed JUL 2009
Checked JUL 2009

Note: This drawing is not to scale. Follow dimensions.

Sheet No. 130 of 205

\\kcow00\jobs\46440\Bridges\Plans\CdtoMoDOTA6500\J6I0984\A6500-dgn\ZPLOT_B_A6500_001-205_J6I0984_130.dgn

19-AUG-2009 07:15

STATE OF MISSOURI
HANS R. HUTTON
NUMBER E-29174
REGISTERED PROFESSIONAL ENGINEER

DATE
8/20/09

ROUTE	STATE
I-70	MO/IL
DISTRICT	SHEET NO.
6	BR130

COUNTY
ST. LOUIS CITY – MO
ST. CLAIR – IL

JOB NO.
J6I0984

CONTRACT ID.

PROJECT NO.

BRIDGE NO.
A6500

NO.	DESCRIPTION	DATE

MISSOURI HIGHWAYS AND TRANSPORTATION COMMISSION
MoDOT
105 WEST CAPITOL
JEFFERSON CITY, MO 65102
1-888-ASK-MODOT (1-888-275-6636)

HNTB
715 KIRK DRIVE
KANSAS CITY, MO 64105-1310
TELEPHONE (816) 472-1201
CERTIFICATE OF AUTHORITY NO. 001270

LICENSED STRUCTURAL ENGINEER
HANS R. HUTTON
081-006707
STATE OF ILLINOIS

8-20-2009
DATE

REV.

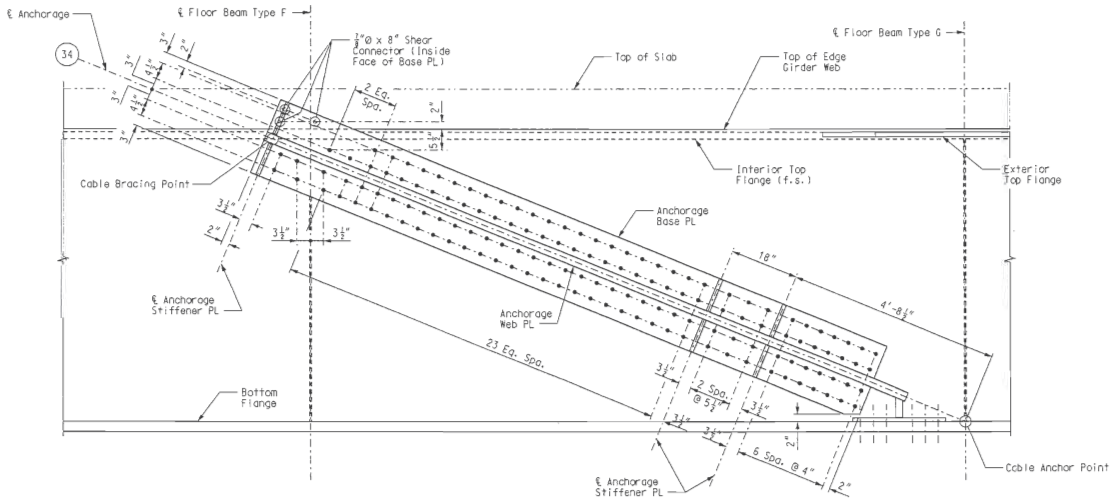

ELEVATION – CABLE 34

(Cable Anchorage Pipe not shown for clarity.)

Notes:

(34) Denotes Stay Cable.

For additional notes and details, see Sheet Nos. BR123 & BR124.

STAY CABLE GIRDER ANCHORAGE DETAILS

Detailed JUL 2009
Checked JUL 2009

Note: This drawing is not to scale. Follow dimensions.

\\kcaw00\jobs\46440\Bridges\Plans\CdtoMoDOTA6500\J6I0984\A6500-dgn\ZPLOT_B_A6500_001-205_J6I0984_131.dgn

19-AUG-2009 07:16

STATE OF MISSOURI — HANS RUDOLF HUTTON — NUMBER E-29114 — REGISTERED PROFESSIONAL ENGINEER

DATE 8/20/09

ROUTE	STATE
I-70	MO/IL
DISTRICT	SHEET NO.
6	BR131

COUNTY: ST. LOUIS CITY - MO, ST. CLAIR - IL

JOB NO. J6I0984

CONTRACT ID.

PROJECT NO.

BRIDGE NO. A6500

DESCRIPTION	DATE

MISSOURI HIGHWAYS AND TRANSPORTATION COMMISSION
105 WEST CAPITOL
JEFFERSON CITY, MO 65102
1-888-ASK-MODOT (1-888-275-6636)

HNTB
715 KIRK DRIVE
KANSAS CITY, MO 64105-1310
TELEPHONE (816) 472-1201
CERTIFICATE OF AUTHORITY NO. 001270

ISSUED STRUCTURAL ENGINEER — HANS R. HUTTON — 062-026607 — STATE OF ILLINOIS — expires 11-30-2010

Hans R. Hutton
8-20-2009

REV.

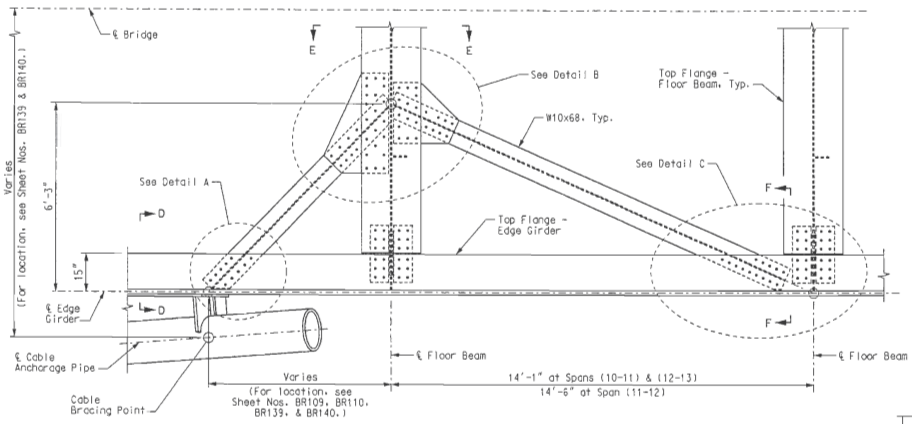

PLAN - TOP FLANGE BRACING

(Plan shown for Stay Cables 9 thru 16 & 20 thru 26; Plan at Stay Cables 6 thru 8 & 27 thru 29 is similar.)

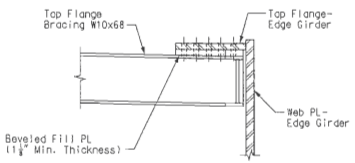

SECTION D-D

(Cable Anchorage Details not shown for clarity.)

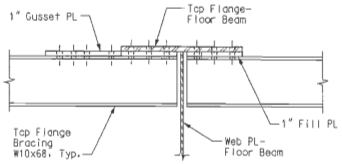

AT STAY CABLES 6 THRU 8 & 27 THRU 29

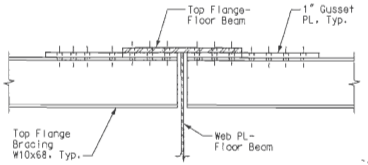

AT STAY CABLES 9 THRU 16 & 20 THRU 26

SECTION E-E

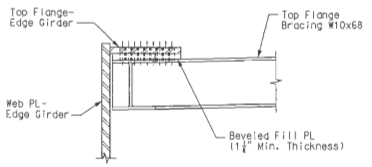

SECTION F-F

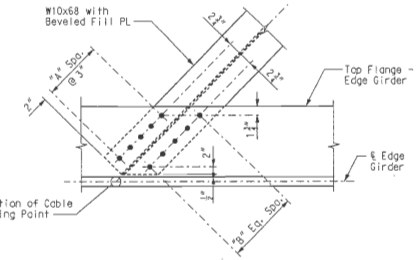

DETAIL A

STAY CABLE	"A"	"B"
6, 7, 28, & 29	3	3
8-11 & 24-27	4	4
12, 13, 22, & 23	5	5
14-16, 20, & 21	6	6

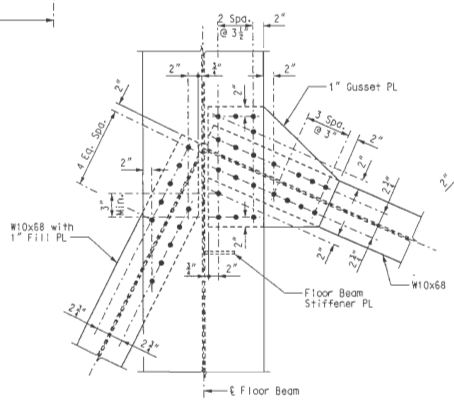

AT STAY CABLES 6 THRU 8 & 27 THRU 29

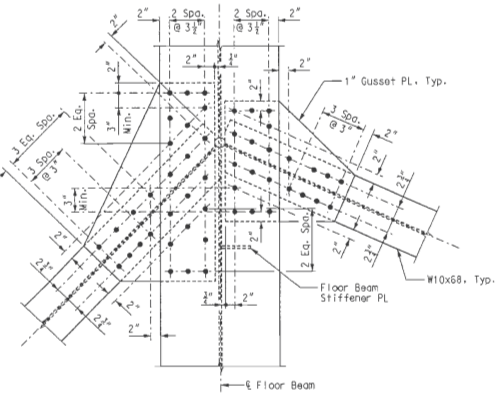

AT STAY CABLES 9 THRU 16 & 20 THRU 26

DETAIL B

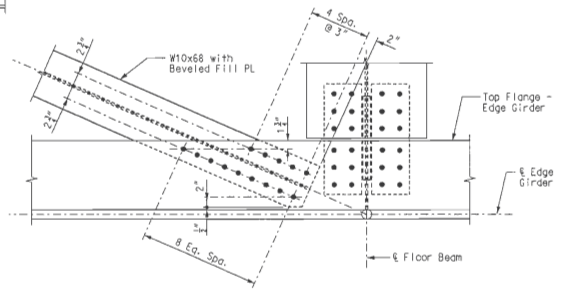

DETAIL C

Notes:
For locations of top flange bracing, see Sheet Nos. BR109 & BR110.
All connections at top flange bracing shall be 1"Ø H.S. Bolts, ASTM A325, Type 3.
Bolt pitch at top flange bracing connections shall not exceed 7".
Structural steel for top flange bracing shall conform to ASTM A709 Grade 50W and shall be included in the pay item "Fabricated Structural Low Alloy Steel (Plate Girder) A709, Gr. HPS50W".

MISCELLANEOUS STEEL DETAILS

Detailed JUL 2009
Checked JUL 2009

Note: This drawing is not to scale. Follow dimensions.

\\kcow00\jobs\46440\Bridges\Plans\CdtoMoDOTA6500\J6I0984\A6500-dgn\ZPLOT_B_A6500_001-205_J6I0984_132.dgn

19-AUG-2009 07:16

STATE OF MISSOURI HANS R. HUTTON NUMBER E-29174 REGISTERED PROFESSIONAL ENGINEER
Hans R. Hutton

DATE 8/20/09
ROUTE I-70 | STATE MO/IL
DISTRICT 6 | SHEET NO. BR132
COUNTY ST. LOUIS CITY - MO, ST. CLAIR - IL
JOB NO. J6I0984
CONTRACT ID.
PROJECT NO.
BRIDGE NO. A6500

NO.	DESCRIPTION	DATE

MISSOURI HIGHWAYS AND TRANSPORTATION COMMISSION
105 WEST CAPITOL
JEFFERSON CITY, MO 65102
1-888-ASK-MODOT (1-888-275-6636)

HNTB
715 KIRK DRIVE
KANSAS CITY, MO 64105-1310
TELEPHONE (816) 472-1201
CERTIFICATE OF AUTHORITY NO. 000170

LICENSED STRUCTURAL ENGINEER
HANS R. HUTTON 031-006707
STATE OF ILLINOIS
RENEW 11-30-2009
Hans R. Hutton
8-20-2009
DATE

REV.

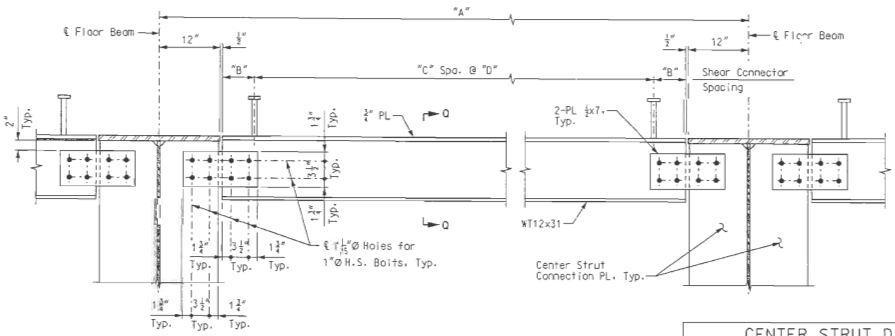

CENTER STRUT TYPES 1, 2, & 3

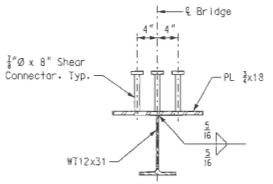

SECTION Q-Q

CENTER STRUT DATA				
TYPE	"A"	"B"	"C"	"D"
1	14'-1"	3"	12	11½"
2	14'-6"	2½"	12	12"
3	10'-6"	5½"	10	9"

Notes:
For locations of center struts, see Sheet Nos. BR109 & BR110.

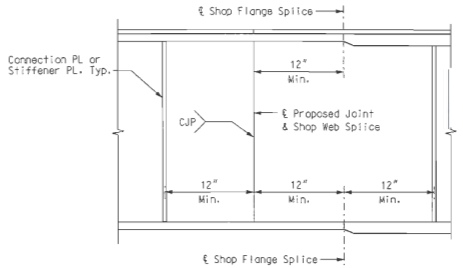

WELDED SHOP WEB SPLICE

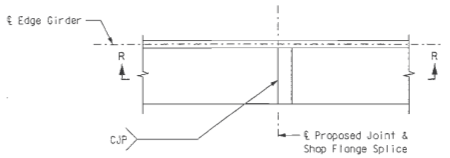

PLAN - TOP FLANGE

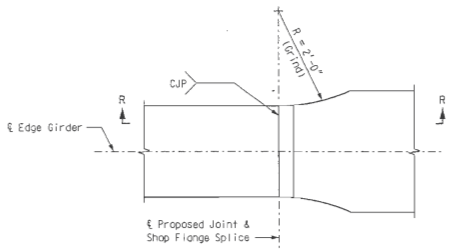

PLAN - BOTTOM FLANGE

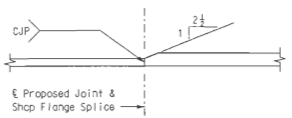

SECTION R-R

WELDED SHOP FLANGE SPLICE

Note:
Welded shop web and flange splices may be permitted when detailed on the shop drawings and approved by the engineer. No additional payment will be made for optional welded shop web and flange splices.

MISCELLANEOUS STEEL DETAILS

Detailed JUL 2009
Checked JUL 2009

Note: This drawing is not to scale. Follow dimensions.

\\kcow00\jobs\46440\Bridges\Plans\CdtoMoDOTA6500\J6I0984\A6500-dgn\ZPLOT_B_A6500_001-205_J6I0984_133.dgn

19-AUG-2009 07:16

STATE OF MISSOURI
HANS R. HUTTON
NUMBER E-26214
REGISTERED PROFESSIONAL ENGINEER
Hans R. Hutton

DATE	DESCRIPTION
8/20/09	
ROUTE I-70	STATE MO/IL
DISTRICT 6	SHEET NO. BR133
COUNTY ST. LOUIS CITY - MO ST. CLAIR - IL	
JOB NO. J6I0984	
CONTRACT ID.	
PROJECT NO.	
BRIDGE NO. A6500	

MISSOURI HIGHWAYS AND TRANSPORTATION COMMISSION
MoDOT
105 WEST CAPITOL
JEFFERSON CITY, MO 65102
1-888-ASK-MODOT (1-888-275-6636)

HNTB
715 KIRK DRIVE
KANSAS CITY, MO 64105-1310
TELEPHONE (816) 472-1201
CERTIFICATE OF AUTHORITY NO. 001270

LICENSED STRUCTURAL ENGINEER
HANS R. HUTTON
081-006707
STATE OF ILLINOIS
EXPIRES 11-30-2010
Hans R. Hutton
Signature
8-20-2009
DATE

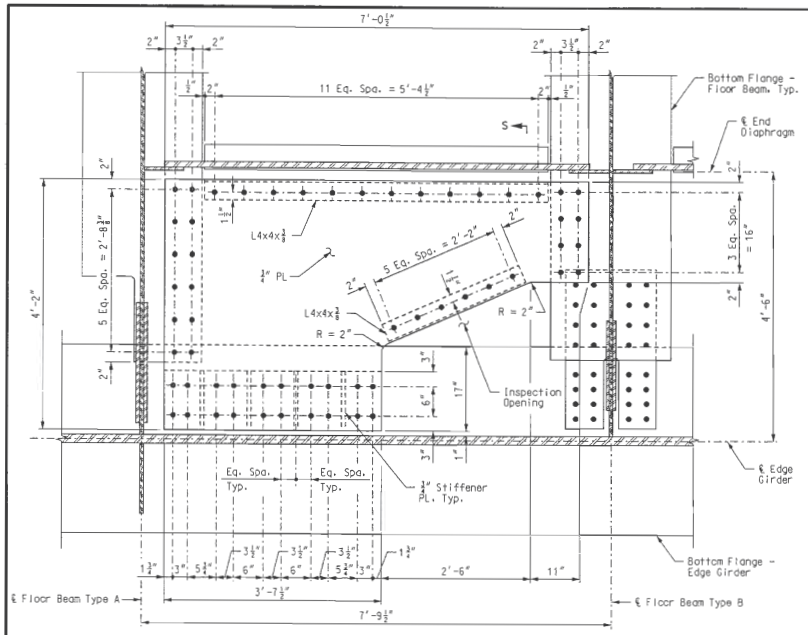

PLAN

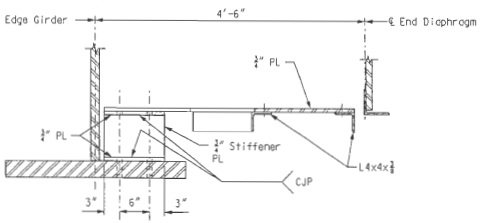

SECTION S-S

HORIZONTAL DIAPHRAGM AT FLOOR BEAM TYPES A & B

(Precast Counterweight Panels and Stay Cable Anchorage not shown for clarity.)

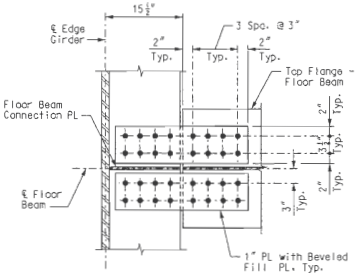

SECTION W-W

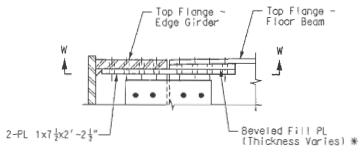

ELEVATION - FLOOR BEAM TYPES B, E, G & K

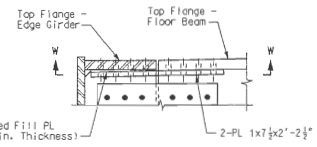

ELEVATION - FLOOR BEAM TYPES C, D & F

UPPER FLOOR BEAM CONNECTION

* Min. at Floor Beam Types B & E;
Min. at Floor Beam Types G & K

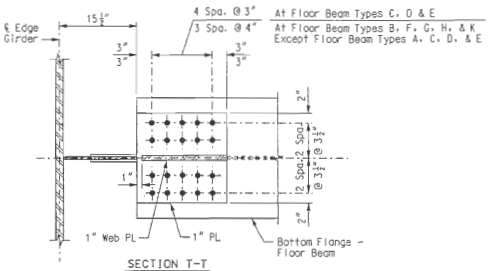

SECTION T-T

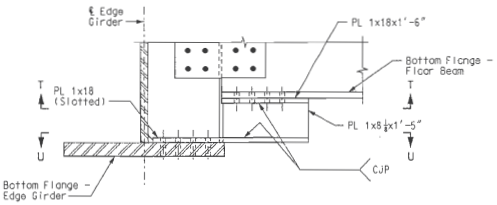

ELEVATION

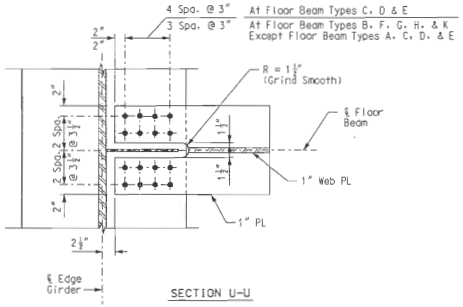

SECTION U-U

LOWER FLOOR BEAM CONNECTION

Notes:
All bolts shown for Horizontal Diaphragm, Lower Floor Beam End Connection, and Upper Floor Beam End Connection shall be 1"Ø ASTM A325, Type 3 Bolts.

MISCELLANEOUS STEEL DETAILS

STATE OF MISSOURI
HANS R. HUTTON
NUMBER E-25674
REGISTERED ENGINEER
Hans R. Hutton

DATE 8/20/09
ROUTE I-70
STATE MO/IL
DISTRICT 6
SHEET NO. BR134
COUNTY ST. LOUIS CITY - MO ST. CLAIR - IL
JOB NO. J6I0984
CONTRACT ID.
PROJECT NO.
BRIDGE NO. A6500

DESCRIPTION	DATE

MISSOURI HIGHWAYS AND TRANSPORTATION COMMISSION
105 WEST CAPITOL
JEFFERSON CITY, MO 65102
1-888-ASK-MODOT (1-888-275-6636)

HNTB
715 KIRK DRIVE
KANSAS CITY, MO 64105-1310
TELEPHONE (816) 472-1201
CERTIFICATE OF AUTHORITY NO. 001270

LICENSED STRUCTURAL ENGINEER
HANS R. HUTTON
081-006707
STATE OF ILLINOIS
Hans R. Hutton
8-20-2009

REV.

Detailed JUL 2009
Checked JUL 2009

Note: This drawing is not to scale. Follow dimensions.

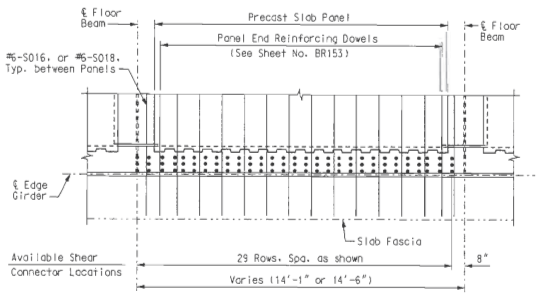

TYPICAL SHEAR CONNECTOR PLACEMENT BETWEEN FLOOR BEAMS

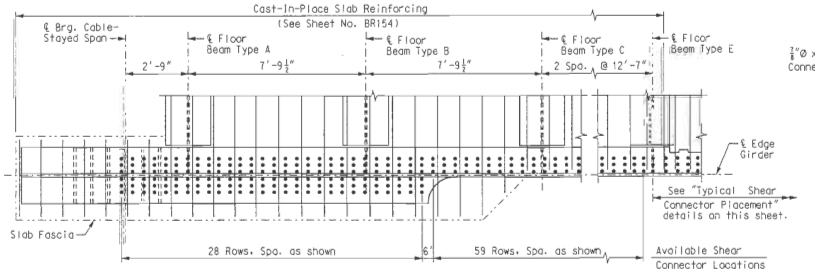

SHEAR CONNECTOR PLACEMENT AT FIELD PIECE 1 (COUNTERWEIGHT)

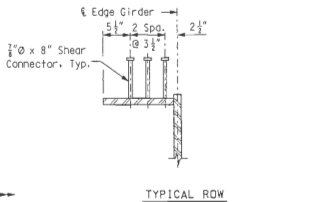

TYPICAL ROW

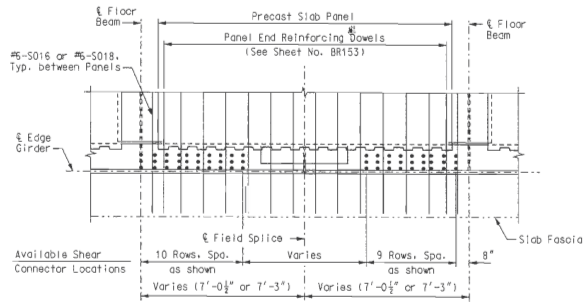

TYPICAL SHEAR CONNECTOR PLACEMENT AT FIELD SPLICES

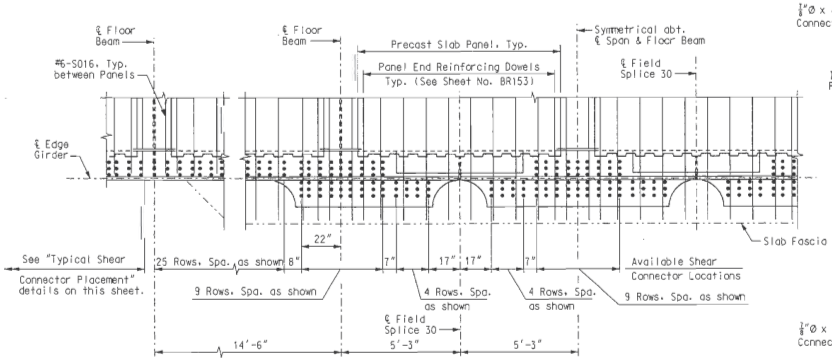

SHEAR CONNECTOR PLACEMENT AT FIELD PIECE 30

SHEAR CONNECTOR PLACEMENT AT FIELD PIECE 31

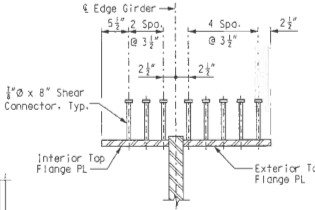

ROW AT EXTERIOR TOP FLANGE OF FIELD PIECE 14

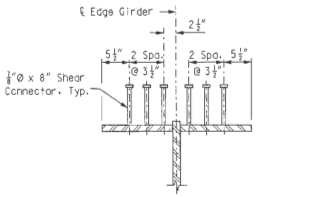

ROW AT EXTERIOR TOP FLANGE OF FIELD PIECE 1, 30, or 31

SHEAR CONNECTOR DETAILS

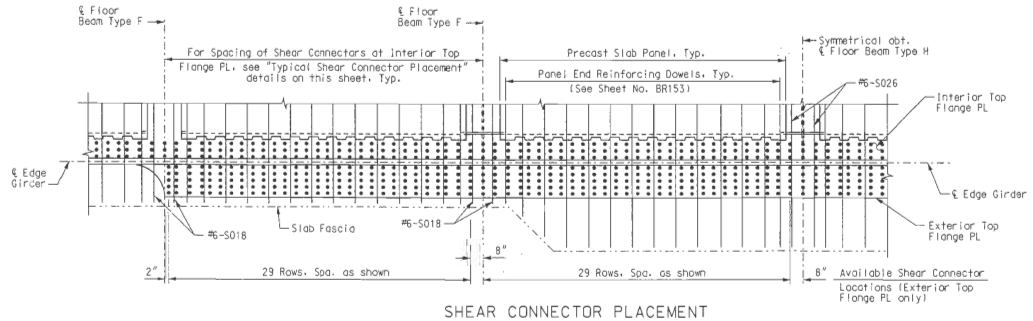

SHEAR CONNECTOR PLACEMENT AT FIELD PIECE 14

(Lateral Restrainer and Stiffeners not shown for clarity.)

Notes:
Shear connectors shall be spaced not closer than 5½" on center in any longitudinal direction.
Shear connectors shall be unpainted.
Shear connectors shall be field-welded.
For Field Piece details and number of required shear connectors, see Sheet Nos. BR111 thru BR116.
For Floor Beam details, see Sheet Nos. BR117 thru BR122.
For Field Splice details, see Sheet No. BR136.

MISCELLANEOUS STEEL DETAILS

Detailed JUL 2009
Checked JUL 2009

Note: This drawing is not to scale. Follow dimensions.

Sheet No. 135 of 205

\\kcaw00\jobs\46440\Bridges\Plans\CdotoMoDOTA6500\J6I0984\A6500-dgn\ZPLOT_B_A6500_001-205_J6I0984_135.dgn

19-AUG-2009 07:16

STATE OF MISSOURI
HANS R. HUTTON
NUMBER E-29174
REGISTERED ENGINEER
8-20-2009

DATE 8/20/09
ROUTE I-70
STATE MO/IL
DISTRICT 6
SHEET NO. BR135
COUNTY ST. LOUIS CITY - MO ST. CLAIR - IL
JOB NO. J6I0984
CONTRACT ID.
PROJECT NO.
BRIDGE NO. A6500

REV.	DESCRIPTION	DATE

MISSOURI HIGHWAYS AND TRANSPORTATION COMMISSION
105 WEST CAPITOL
JEFFERSON CITY, MO 65102
1-888-ASK-MODOT (1-888-275-6636)

HNTB
715 KIRK DRIVE
KANSAS CITY, MO 64105-1310
816.483.1600 FAX 816.472.1201
CERTIFICATE OF AUTHORITY NO. 001270

LICENSED STRUCTURAL ENGINEER
HANS R. HUTTON
081-006707
STATE OF ILLINOIS
8-20-2009

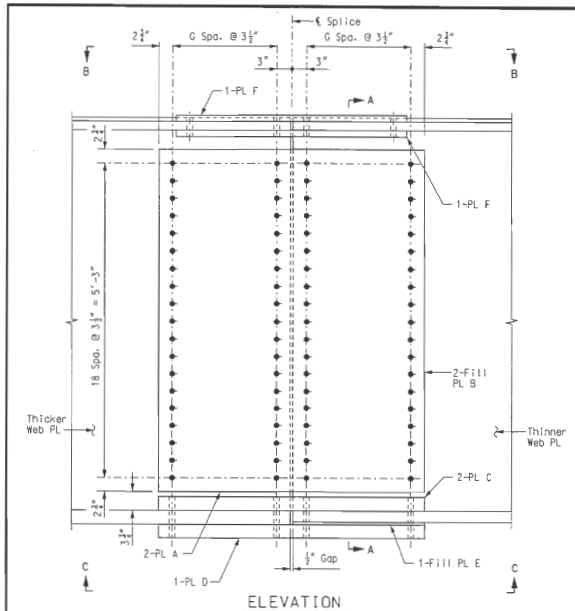

ELEVATION

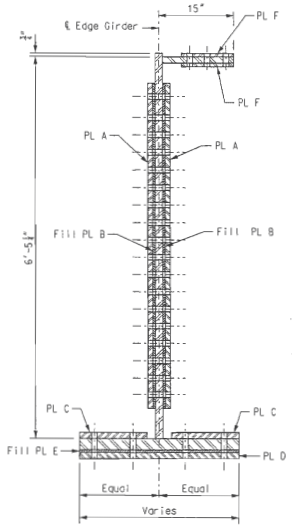

SECTION A-A

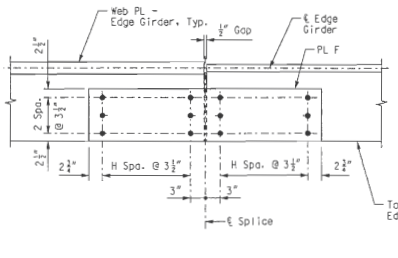

VIEW B-B

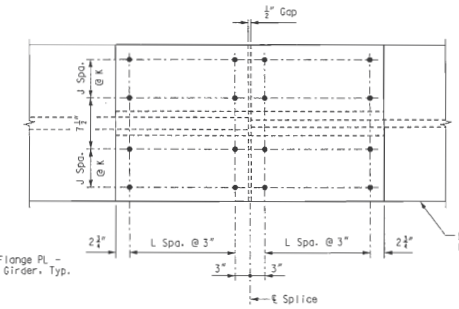

VIEW C-C

FIELD SPLICE DATA

LOCATION	PL A	PL B	PL C	PL D	PL E	PL F	G	H	J	K	L
F.S. 1	1¼x60½x5'-8½"	⅜x30x5'-8½"	2¾x17x11'-5½"	2⅝x38x11'-5½"	———	1¼x12x4'-5½"	7	6	3	4"	21
F.S. 2	1⅛x53½x5'-8½"	———	2¾x17x10'-11½"	2½x38x10'-11½"	———	1¼x12x4'-5½"	6	6	3	4"	20
F.S. 3	⅞x46½x5'-8½"	1/16x23x5'-8½"	2¾x15x10'-11½"	2⅝x34x10'-11½"	½x34x5'-5½"	1¼x12x4'-5½"	5	6	3	3½"	20
F.S. 4	⅞x46½x5'-8½"	———	2⅝x15x7'-5½"	2¼x34x7'-5½"	———	1¼x12x4'-5½"	5	6	3	3½"	13
F.S. 5	⅞x46½x5'-8½"	———	2⅝x14x7'-5½"	2¼x32x7'-5½"	½x32x3'-8½"	1¼x12x4'-5½"	5	6	3	3½"	13
F.S. 6	1x53½x5'-8½"	———	1¾x14x5'-5½"	1⅝x32x5'-5½"	———	1¼x12x4'-5½"	6	6	3	3½"	9
F.S. 7	⅞x46½x5'-8½"	———	1¾x14x5'-5½"	1⅝x32x5'-5½"	———	1¼x12x4'-5½"	5	6	3	3½"	9
F.S. 8	⅞x46½x5'-8½"	———	1¾x14x5'-5½"	1⅝x32x5'-5½"	½x32x2'-8½"	1¼x12x4'-5½"	5	6	3	3½"	9
F.S. 9	⅞x46½x5'-8½"	———	1¾x14x5'-5½"	1⅝x32x5'-5½"	———	1¼x12x4'-5½"	5	6	3	3½"	9
F.S. 10	⅞x46½x5'-8½"	———	2x14x5'-11½"	1⅝x32x5'-11½"	½x32x2'-11½"	1¼x12x4'-5½"	5	6	3	3½"	10
F.S. 11	1x53½x5'-8½"	———	2⅝x14x6'-11½"	2⅛x32x6'-11½"	½x32x3'-5½"	1¼x12x4'-5½"	6	6	3	3½"	12
F.S. 12	1x53½x5'-8½"	⅛x26½x5'-8½"	2⅝x14x7'-11½"	2⅛x32x7'-11½"	½x32x3'-11½"	1¼x12x4'-5½"	6	6	3	3½"	14
F.S. 13	1¼x60½x5'-8½"	1/16x30x5'-8½"	3x15x10'-11½"	2⅝x34x10'-11½"	½x34x5'-5½"	1¼x12x4'-5½"	7	6	3	3½"	20
F.S. 14	1¼x53½x5'-8½"	———	2⅝x16x10'-11½"	2⅝x36x10'-11½"	½x36x5'-5½"	1¼x12x4'-5½"	6	6	3	3½"	20
F.S. 15	1x53½x5'-8½"	⅛x26½x5'-8½"	2⅝x15x9'-11½"	2⅛x34x9'-11½"	½x34x4'-11½"	1¼x12x4'-5½"	6	6	3	3½"	18
F.S. 16	⅞x46½x5'-8½"	1/16x23x5'-8½"	2¾x14x7'-5½"	2¼x32x7'-5½"	½x32x3'-8½"	1¼x12x4'-5½"	5	6	3	3½"	13
F.S. 17	⅞x46½x5'-8½"	———	2½x14x6'-11½"	2¼x32x6'-11½"	½x32x3'-5½"	1¼x12x4'-5½"	5	6	3	3½"	12
F.S. 18	⅞x46½x5'-8½"	———	2½x14x5'-11½"	2x32x5'-11½"	———	1¼x12x4'-5½"	5	6	3	3½"	10
F.S. 19	⅞x46½x5'-8½"	———	2½x14x5'-5½"	2x32x5'-5½"	———	1¼x12x4'-5½"	5	6	3	3½"	9
F.S. 20	⅞x46½x5'-8½"	———	2x14x5'-5½"	1⅝x32x5'-5½"	———	1¼x12x4'-5½"	5	6	3	3½"	9
F.S. 21	⅞x46½x5'-8½"	———	2x14x5'-5½"	1⅝x32x5'-5½"	———	1¼x12x4'-5½"	5	6	3	3½"	9
F.S. 22	⅞x46½x5'-8½"	———	2x14x5'-5½"	1⅝x32x5'-5½"	———	1¼x12x4'-5½"	5	6	3	3½"	9
F.S. 23	⅞x46½x5'-8½"	———	2x14x5'-5½"	1⅝x32x5'-5½"	———	1¼x12x4'-5½"	5	6	3	3½"	9
F.S. 24	⅞x46½x5'-8½"	———	2x14x5'-5½"	1⅝x32x5'-5½"	———	1¼x12x4'-5½"	5	6	3	3½"	9
F.S. 25	⅞x46½x5'-8½"	———	2x14x5'-5½"	1⅝x32x5'-5½"	———	1¼x12x4'-5½"	5	6	3	3½"	9
F.S. 26	⅞x46½x5'-8½"	1/16x23x5'-8½"	2x15x7'-5½"	1¼x34x7'-5½"	———	1¼x12x4'-5½"	5	6	3	3½"	13
F.S. 27	1x53½x5'-8½"	———	2x15x6'-5½"	1¼x34x6'-5½"	———	1¼x12x4'-5½"	6	6	3	3½"	11
F.S. 28	1x53½x5'-8½"	⅛x26½x5'-8½"	2¼x15x6'-11½"	2x34x6'-11½"	½x34x3'-5½"	1¼x12x4'-5½"	6	6	3	3½"	12
F.S. 29	⅞x46½x5'-8½"	1/16x23x5'-8½"	2⅜x15x7'-5½"	2¼x34x7'-5½"	½x34x3'-8½"	1¼x12x4'-5½"	5	6	3	3½"	13
F.S. 30	1x53½x5'-8½"	3/16x26½x5'-8½"	2¼x16x7'-5½"	2x36x7'-5½"	½x36x3'-8½"	1¼x12x5'-7½"	6	8	3	3¾"	13

Notes:
All Fasteners shall be 1"@ ASTM A325, Type 3 bolts.
Minimum installation bolt tension required for slip resistance shall be 51.0 kips per bolt.
All splice plates shall meet the requirements of ASTM A709, Grade HPS70WF-2.
Bolt threads and thread run-out shall be excluded from the shear plane.
All splice plates shall have a Class B contact surface preparation.
All splice plates shall be considered fracture critical members.
Bedding material supporting precast prestressed slab panels shall be modified at top flange splice locations to maintain a constant dimension from top of edge girder top flange to bottom of panels. See Sheet No. BR151 for details.
Place top flange splice bolts such that the bolt heads are above the top flange and the nuts are below the top flange.

FIELD SPLICE DETAILS

Detailed JUL 2009
Checked JUL 2009

Note: This drawing is not to scale. Follow dimensions.

Sheet No. 136 of 205

\\kcow00\jobs\46440\Bridges\Plans\CdtaMoDOTA6500\J610984\A6500-dgn\ZPLOT_B_A6500_001-205_J610984_136.dgn

19-AUG-2009 07:16

STATE OF MISSOURI
HANS R. HUTTON
NUMBER E-25174
REGISTERED ENGINEER
Hans R. Hutton

DATE 8/20/09
ROUTE I-70
STATE MO/IL
DISTRICT 6
SHEET NO. BR136
COUNTY ST. LOUIS CITY - MO ST. CLAIR - IL
JOB NO. J610984
CONTRACT ID.
PROJECT NO.
BRIDGE NO. A6500

DESCRIPTION	DATE

MISSOURI HIGHWAYS AND TRANSPORTATION COMMISSION
105 WEST CAPITOL
JEFFERSON CITY, MO 65102
1-888-ASK-MODOT (1-888-275-6636)

HNTB
715 KIRK DRIVE
KANSAS CITY, MO 64105-1310
TELEPHONE (816) 472-1201
CERTIFICATE OF AUTHORITY NO. 001070

LICENSED STRUCTURAL ENGINEER
HANS R. HUTTON
081-006707
STATE OF ILLINOIS
expires 1-30-2010
Hans R. Hutton
Signature
8-20-2009
Date

REV.

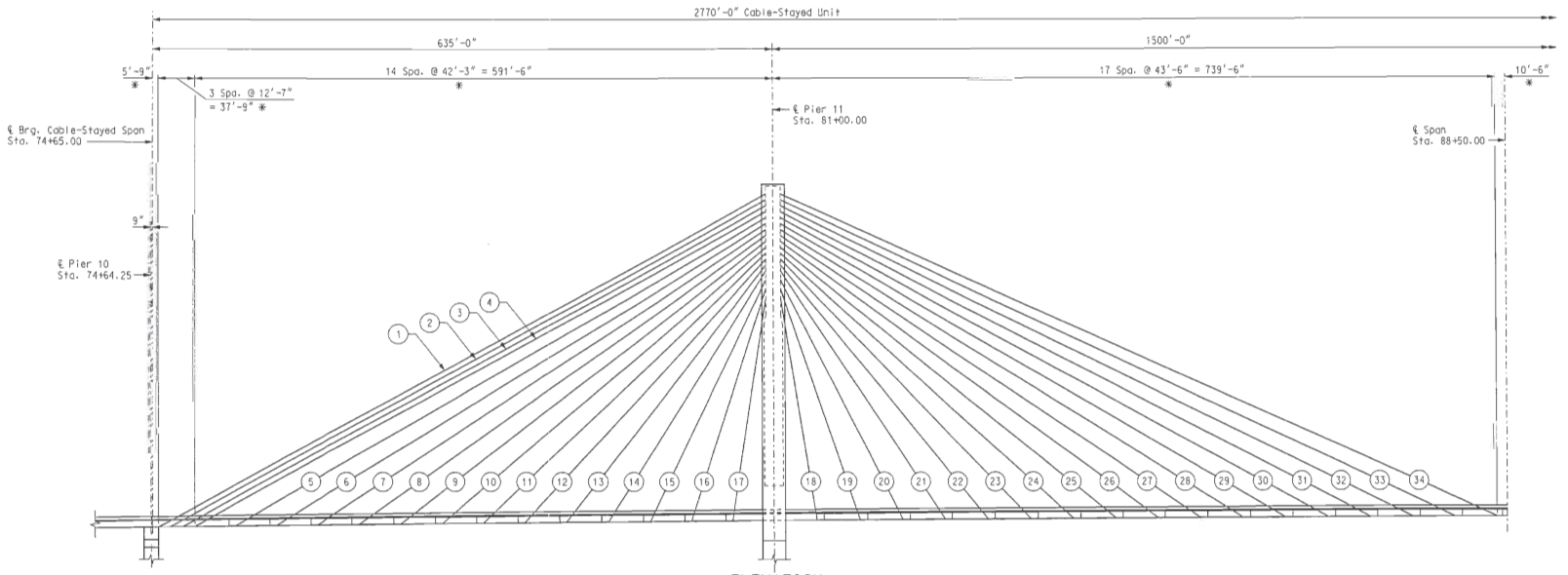

ELEVATION

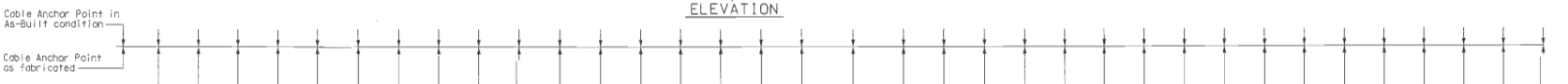

STAY CABLE	℄ BRG.	1	2	3	4	5	6	7	8	9	10	11	12	13	14	15	16	17	℄ PIER 11	18	19	20	21	22	23	24	25	26	27	28	29	30	31	32	33	34
WEB CAMBER	0	0	0	0	0	0	0	0	0	0	0	0	0	0	0	0	0	0	0	0	0	0	0	0	0	0	0	0	0	0	0	0	0	0	0	0

CAMBER DIAGRAM FOR EDGE GIRDER WEB (IN.)

ACCUMULATED EDGE GIRDER SHORTENING (IN.)

STAY CABLE	℄ BRG.	1	2	3	4	5	6	7	8	9	10	11	12	13	14	15	16	17	℄ PIER 11	18	19	20	21	22	23	24	25	26	27	28	29	30	31	32	33	34
SHORTENING	3.58	3.58	3.54	3.48	3.40	3.19	3.02	2.83	2.63	2.41	2.16	1.91	1.62	1.34	1.08	0.83	0.58	0.28	0.00	0.26	0.53	0.82	1.09	1.38	1.64	1.92	2.18	2.45	2.69	2.92	3.13	3.32	3.48	3.62	3.77	3.92

Notes:

(#) Denotes Stay Cable Number

* Dimensions measured horizontally from Cable Anchor Points at bottom of edge girder web.

Edge Girder Shortening, as shown in the table, is provided as information only and is the accumulated shortening of the girder due to dead loads and built-in erection forces from the Suggested Erection Sequence shown on Sheet Nos. BR179 thru BR183. Girder Shortening is measured horizontally from the centerline of bearing stiffener at Pier 11. Positive shortening indicates that the length of the girder decreases under load. The steel fabricator shall adjust the length for elastic shortening of the girders based on the Contractor's approved erection sequence so that the structure is at theoretical line and grade under full dead load.

Edge Girder Shortening is measured at the Cable Anchor Point. See Sheet No. BR111 for details.

Camber requirements for the edge girder webs, as shown in the table, are provided as information only and result from the construction steps in the Suggested Erection Sequence shown on Sheet Nos. BR179 thru BR183. The steel fabricator shall camber the girders as required per the Contractor's approved erection sequence.

CABLE LAYOUT AND EDGE GIRDER SHORTENING

Detailed JUL 2009
Checked JUL 2009

Note: This drawing is not to scale. Follow dimensions.

\\kcow00\jobs\46440\Bridges\Plans\CdtaMoDOTA6500\J6I0984\A6500-dgn\ZPLOT_B_A6500_001-205_J6I0984_137.dgn

19-AUG-2009 07:16

STATE OF MISSOURI
HANS R. HUTTON
NUMBER 2006014274
DATE 8/20/09
ROUTE I-70
STATE MO/IL
DISTRICT 6
SHEET NO. BR137
COUNTY ST. LOUIS CITY - MO, ST. CLAIR - IL
JOB NO. J6I0984
CONTRACT ID.
PROJECT NO.
BRIDGE NO. A6500

DESCRIPTION	DATE

MISSOURI HIGHWAYS AND TRANSPORTATION COMMISSION
105 WEST CAPITOL
JEFFERSON CITY, MO 65102
1-888-ASK-MODOT (1-888-275-6636)

HNTB
715 KIRK DRIVE
KANSAS CITY, MO 64105-1310
TELEPHONE (816) 472-1201
CERTIFICATE OF AUTHORITY NO. 001270

STATE OF ILLINOIS
HANS R. HUTTON
062-057077
PROFESSIONAL ENGINEER
STRUCTURAL
8-20-2009

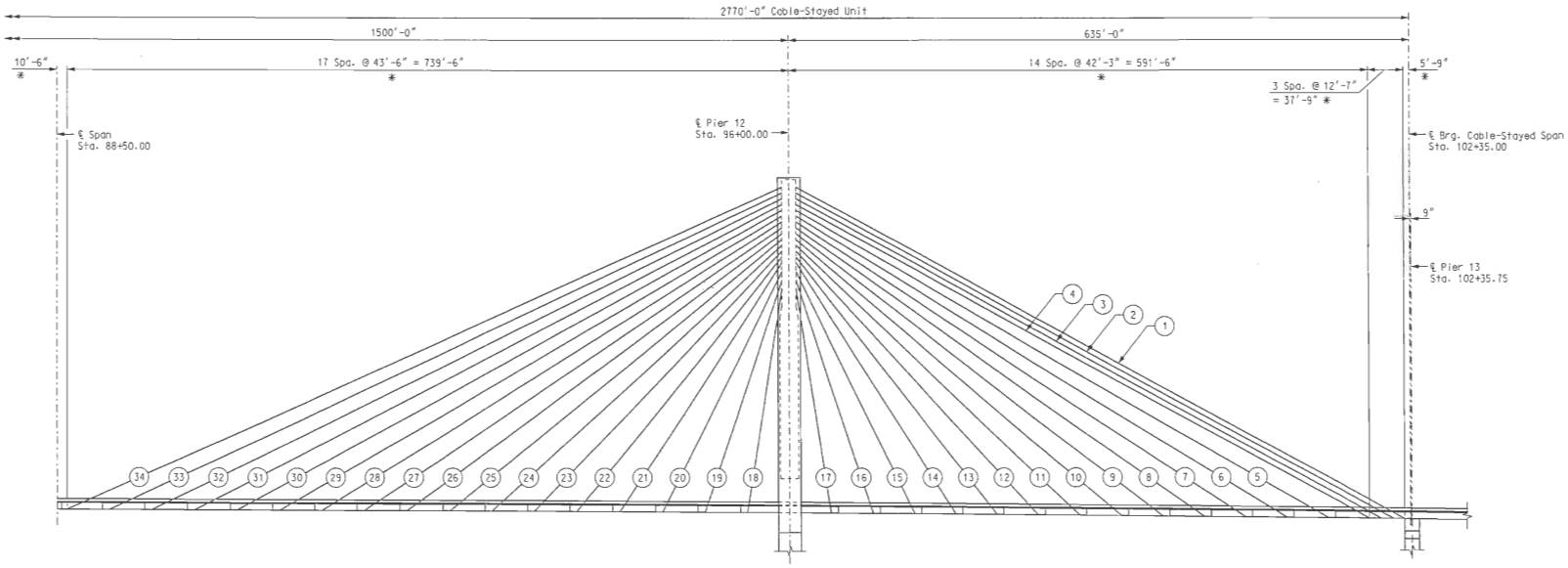

ELEVATION



34	33	32	31	30	29	28	27	26	25	24	23	22	21	20	19	18	℄ PIER 12	17	16	15	14	13	12	11	10	9	8	7	6	5	4	3	2	1	℄ BRG.	STAY CABLE
0	0	0	0	0	0	0	0	0	0	0	0	0	0	0	0	0	0	0	0	0	0	0	0	0	0	0	0	0	0	0	0	0	0	0	0	WEB CAMBER

CAMBER DIAGRAM FOR EDGE GIRDER WEB (IN.)

ACCUMULATED EDGE GIRDER SHORTENING (IN.)																																				
34	33	32	31	30	29	28	27	26	25	24	23	22	21	20	19	18	℄ PIER 12	17	16	15	14	13	12	11	10	9	8	7	6	5	4	3	2	1	℄ BRG.	STAY CABLE
3.23	3.10	2.99	2.88	2.76	2.62	2.45	2.27	2.08	1.85	1.62	1.39	1.18	0.94	0.70	0.47	0.23	0.00	0.25	0.50	0.73	0.94	1.15	1.38	1.61	1.82	2.02	2.20	2.35	2.50	2.64	2.80	2.86	2.92	2.94	2.94	SHORTENING

Notes:

(#) Denotes Stay Cable Number

* Dimensions measured horizontally from Cable Anchor Points at bottom of edge girder web.

For additional notes and details, see Sheet No. BR137.

CABLE LAYOUT AND EDGE GIRDER SHORTENING

Detailed JUL 2009
Checked JUL 2009

Note: This drawing is not to scale. Follow dimensions.

Sheet No. 138 of 205

\\kcow00\jobs\46440\Bridges\Plans\CdtoMoDOTA6500\J6I0984\A6500-dgn\ZPLOT_B_A6500_001-205_J6I0984_138.dgn

19-AUG-2009 07:17

STATE OF MISSOURI
HANS R. HUTTON
NUMBER E-25974
REGISTERED ENGINEER
8-20-2009

DATE 8/20/09

ROUTE	STATE
I-70	MO/IL
DISTRICT	SHEET NO.
6	BR138

COUNTY: ST. LOUIS CITY - MO; ST. CLAIR - IL

JOB NO. J6I0984

CONTRACT ID.

PROJECT NO.

BRIDGE NO. A6500

DESCRIPTION	DATE

MISSOURI HIGHWAYS AND TRANSPORTATION COMMISSION
105 WEST CAPITOL
JEFFERSON CITY, MO 65102
1-888-ASK-MODOT (1-888-275-6636)

HNTB
715 KIRK DRIVE
KANSAS CITY, MO 64105-1310
TELEPHONE (816) 472-1201
CERTIFICATE OF AUTHORITY NO. 001270

LICENSED STRUCTURAL ENGINEER
HANS R. HUTTON
081-006707
STATE OF ILLINOIS
EXPIRES 11-30-2010
8-20-2009

REV.

CABLE DATA

STAY CABLE	CABLE ANCHOR POINT (AT EDGE GIRDER) STATION AT PIER 11 (FEET)	TRANS. OFFSET (FEET)	ELEVATION (FEET)	CABLE BRACING POINT STATION AT PIER 11 (FEET)	TRANS. OFFSET (FEET)	ELEVATION (FEET)	CABLE ANCHOR POINT (AT TOWER) STATION AT PIER 11 (FEET)	TRANS. OFFSET (FEET)	ELEVATION (FEET)	LONG. DISTANCE BETWEEN ANCHOR POINTS (FEET)	VERT. DISTANCE BETWEEN ANCHOR POINTS (FEET)	TRANS. DISTANCE BETWEEN ANCHOR POINTS (FEET)	LOWER CABLE ANGLE TO VERT. PLANE (ANGLE A) (DEGREES)	THEORETICAL CABLE ANGLE TO HORIZ. (ANGLE B) (DEGREES)	LOWER CATENARY ANGLE TO HORIZ. (ANGLE C) (DEGREES)	PROJECTED LOWER CATENARY ANGLE TO HORIZ. (ANGLE D) (DEGREES)	PROJECTED LOWER CATENARY ANGLE TO LOCAL TANGENT (ANGLE E) (DEGREES)	UPPER CATENARY ANGLE TO HORIZ. (ANGLE F) (DEGREES)	MIDPOINT SAG (FEET)	THEORETICAL CABLE LENGTH (STRAIGHT LINE) (FEET)	THEORETICAL CABLE LENGTH (CATENARY) (FEET)
1	74+70.75	47.33	474.73	74+83.13	46.54	480.76	80+94.67	7.47	792.00	623.92	317.27	39.87	3°39'21.8"	26°54'24.0"	25°53'35.5"	25°56'20.7"	26°49'45.5"	27°54'08.2"	3.446	701.086	701.142
2	74+83.33	47.33	474.47	74+95.69	46.55	480.51	80+94.67	8.39	786.00	611.33	311.53	38.94	3°38'42.1"	26°57'20.5"	25°58'58.3"	26°01'42.8"	26°55'07.7"	27°54'43.4"	3.245	687.236	687.288
3	74+95.92	47.33	474.23	75+08.17	46.56	480.28	80+94.67	9.31	780.00	598.75	305.77	38.02	3°38'00.6"	27°00'21.1"	26°13'18.4"	26°16'03.0"	27°09'27.8"	27°46'45.1"	2.568	673.382	673.415
4	75+08.50	47.33	474.00	75+20.73	46.56	480.06	80+94.67	10.23	774.00	586.17	300.00	37.10	3°37'17.4"	27°03'26.1"	26°19'17.9"	26°22'01.8"	27°15'26.7"	27°47'00.0"	2.362	659.523	659.551
5	75+50.75	47.33	473.31	75+62.38	46.56	479.42	80+94.67	11.16	768.00	543.92	294.69	36.18	3°48'18.9"	28°23'45.4"	27°41'32.8"	27°44'40.3"	28°32'45.9"	29°05'24.8"	2.148	619.677	619.703
6	75+93.00	47.33	472.74	76+04.01	46.56	478.90	80+94.67	12.08	762.00	501.67	289.26	35.25	4°01'11.4"	29°54'25.0"	29°10'29.9"	29°14'06.3"	29°51'33.4"	30°37'41.9"	2.122	580.160	580.188
7	76+35.25	47.33	472.30	76+45.58	46.56	478.50	80+94.67	13.00	756.00	459.42	283.70	34.33	4°16'25.5"	31°37'30.5"	30°54'23.4"	30°58'36.7"	31°25'25.3"	32°19'58.3"	1.977	541.045	541.071
8	76+77.50	47.33	471.99	76+87.10	46.56	478.23	80+94.67	13.92	750.00	417.17	278.01	33.41	4°34'44.0"	33°35'45.3"	32°55'31.1"	33°00'32.1"	33°16'42.1"	34°15'22.7"	1.751	502.428	502.451
9	77+19.75	47.33	471.81	77+28.56	46.57	478.08	80+94.67	14.85	744.00	374.92	272.19	32.49	4°57'08.7"	35°52'39.0"	35°19'26.4"	35°25'30.6"	35°31'02.1"	36°25'24.1"	1.375	464.439	464.456
10	77+62.00	47.33	471.77	77+69.99	46.57	478.06	80+94.67	15.77	738.00	332.67	266.23	31.56	5°25'12.9"	38°32'42.0"	38°05'22.1"	38°12'51.1"	38°07'44.0"	38°59'41.4"	1.079	427.251	427.263
11	78+04.25	47.33	471.85	78+11.39	46.58	478.16	80+94.67	16.69	732.00	290.42	260.15	30.64	6°01'23.2"	41°41'44.6"	41°18'45.7"	41°28'12.1"	41°13'09.1"	42°04'27.3"	0.870	391.099	391.109
12	78+46.50	47.33	472.04	78+52.75	46.58	478.35	80+94.67	17.61	726.00	248.17	253.96	29.72	6°49'44.8"	45°27'25.4"	45°04'27.5"	45°16'41.8"	44°59'30.4"	45°50'04.9"	0.843	356.323	356.333
13	78+88.75	47.33	472.25	78+94.06	46.59	478.56	80+94.67	18.54	720.00	205.92	247.75	28.80	7°57'40.4"	49°59'42.9"	49°38'40.5"	49°55'05.5"	49°37'54.2"	50°20'27.1"	0.764	323.436	323.447
14	79+31.00	47.33	472.46	79+35.31	46.60	478.77	80+94.67	19.46	714.00	163.67	241.54	27.88	9°39'56.5"	55°29'48.6"	55°15'01.9"	55°37'59.6"	55°20'48.2"	55°44'24.3"	0.553	293.094	293.103
15	79+73.25	47.33	472.67	79+76.56	46.61	478.97	80+94.67	20.84	705.00	121.42	232.33	26.49	12°18'30.0"	61°51'26.2"	61°41'14.1"	62°14'24.0"	61°57'12.6"	62°01'31.5"	0.412	263.476	263.483
16	80+15.50	47.33	472.88	80+17.75	46.62	479.18	80+94.67	22.23	696.00	79.17	223.12	25.11	17°35'47.7"	69°34'57.1"	69°26'45.0"	70°19'56.0"	70°02'44.7"	69°43'03.0"	0.404	238.072	238.087
17	80+57.75	47.33	473.10	80+58.84	46.63	479.38	80+94.67	23.61	687.00	36.92	213.90	23.72	32°43'35.6"	78°24'23.3"	78°21'04.2"	80°09'39.2"	79°52'27.9"	78°27'40.5"	0.261	218.359	218.379
18	81+43.50	47.33	473.52	81+42.37	46.63	479.80	81+05.33	23.61	687.00	38.17	213.48	23.72	31°51'53.8"	78°06'43.1"	78°02'43.7"	79°48'21.9"	80°05'33.2"	78°10'40.0"	0.306	218.154	218.181
19	81+87.00	47.33	473.74	81+84.68	46.62	480.01	81+05.33	22.23	696.00	81.67	222.26	25.11	17°05'23.1"	68°58'20.7"	68°51'22.2"	69°42'43.7"	69°59'55.0"	69°05'14.7"	0.335	238.114	238.124
20	82+30.50	47.33	473.96	82+27.08	46.61	480.22	81+05.33	20.84	705.00	125.17	231.04	26.49	11°57'01.2"	61°01'27.3"	60°49'27.2"	61°21'19.8"	61°38'31.1"	61°13'18.4"	0.473	264.099	264.108
21	82+74.00	47.33	474.18	82+69.56	46.60	480.44	81+05.33	19.46	714.00	168.67	239.82	27.88	9°23'03.6"	54°31'02.1"	54°16'11.9"	54°38'06.5"	54°55'17.8"	54°45'41.6"	0.544	294.517	294.525
22	83+17.50	47.33	474.39	83+12.04	46.59	480.65	81+05.33	18.54	720.00	212.17	245.61	28.80	7°43'46.5"	48°55'08.0"	48°37'11.0"	48°52'44.3"	49°09'55.6"	49°12'52.2"	0.643	325.831	325.839
23	83+61.00	47.33	474.61	83+54.56	46.58	480.86	81+05.33	17.61	726.00	255.67	251.39	29.72	6°37'50.2"	44°19'27.2"	43°56'17.8"	44°07'49.6"	44°25'00.9"	44°42'18.5"	0.841	359.784	359.794
24	84+04.50	47.33	474.83	83+97.13	46.58	481.07	81+05.33	16.69	732.00	299.17	257.17	30.64	5°50'53.5"	40°32'07.0"	40°08'06.7"	40°16'57.4"	40°34'08.7"	40°55'50.4"	0.904	395.697	395.707
25	84+48.00	47.33	475.05	84+39.72	46.57	481.29	81+05.33	15.77	738.00	342.67	262.95	31.56	5°15'46.7"	37°23'05.1"	36°52'14.0"	36°59'12.5"	37°16'23.0"	37°53'31.1"	1.215	433.083	433.098
26	84+91.50	47.33	475.25	84+82.35	46.56	481.49	81+05.33	14.85	744.00	386.17	268.75	32.49	4°48'31.8"	34°44'26.8"	34°11'39.4"	34°17'17.7"	34°33'19.4"	35°16'48.5"	1.360	471.599	471.614
27	85+35.00	47.33	475.44	85+24.97	46.55	481.68	81+05.33	13.92	750.00	429.67	274.56	33.41	4°26'46.4"	32°30'03.4"	31°48'08.9"	31°52'47.5"	32°06'57.0"	33°11'19.5"	1.832	510.995	511.019
28	85+78.50	47.33	475.60	85+67.65	46.55	481.84	81+05.33	13.00	756.00	473.17	280.40	34.33	4°09'00.0"	30°35'08.2"	29°51'20.0"	29°55'14.0"	30°07'31.4"	31°18'17.3"	2.024	551.083	551.110
29	86+22.00	47.33	475.73	86+10.37	46.54	481.98	81+05.33	12.08	762.00	516.67	286.27	35.25	3°54'12.6"	28°55'59.1"	28°10'48.5"	28°14'08.1"	28°24'33.3"	29°40'30.9"	2.205	591.724	591.753
30	86+65.50	47.33	475.84	86+53.12	46.53	482.09	81+05.33	11.16	768.00	560.17	292.16	36.18	3°41'42.6"	27°29'44.1"	26°44'09.8"	26°47'02.4"	26°55'35.5"	28°14'41.1"	2.348	632.812	632.842
31	87+09.00	47.33	475.93	86+95.84	46.52	482.19	81+05.33	10.23	774.00	603.67	298.07	37.10	3°31'00.4"	26°14'08.2"	25°22'33.6"	25°25'04.2"	25°31'45.1"	27°04'57.7"	2.799	674.266	674.305
32	87+52.50	47.33	476.00	87+38.64	46.52	482.26	81+05.33	9.31	780.00	647.17	304.00	38.02	3°21'44.3"	25°07'24.9"	24°16'57.7"	24°19'10.9"	24°23'59.7"	25°57'11.1"	2.882	716.023	716.061
33	87+96.00	47.33	476.04	87+81.31	46.50	482.31	81+05.33	8.39	786.00	690.67	309.96	38.94	3°13'38.2"	24°08'09.5"	23°04'22.1"	23°06'20.2"	23°09'16.8"	25°10'54.3"	3.822	758.033	758.095
34	88+39.50	47.33	476.06	88+24.13	46.50	482.33	81+05.33	7.47	792.00	734.17	315.94	39.87	3°06'29.5"	23°15'13.4"	22°10'51.7"	22°12'37.9"	22°13'44.9"	24°18'34.0"	4.045	800.257	800.322

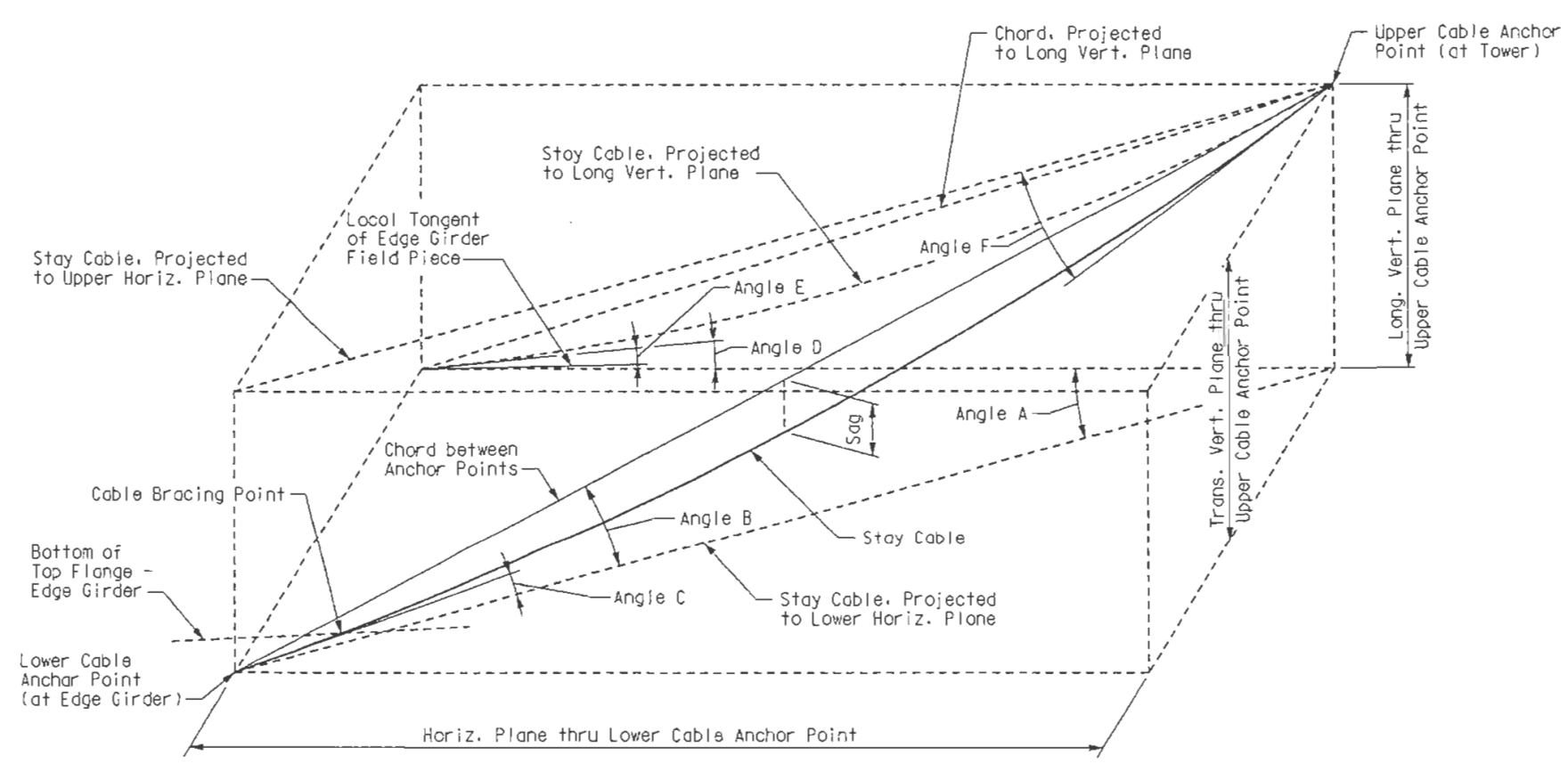

CABLE DATA DIAGRAM

Notes:

The theoretical cable length shown is calculated between cable anchor points. The Contractor shall determine the required length of cable based upon the stay cable anchorage hardware provided and the distance between the anchorage points.

Cable geometry and lengths are based on theoretical cable anchor points shown above. Final cable geometry shall account for the axial shortening in the deck system due to dead loads and final erection forces at beginning of service life.

Computed sag is based upon the mass of the cable and the initial dead load force in the cable upon completion of the structure, as calculated per the Suggested Erection Sequence shown on Sheet Nos. BR179 thru BR183.

For locations of cable anchor points and cable bracing points, see Sheet Nos. BR92, BR93, BR111 thru BR116, BR123, and BR124.

Cable data shown on this sheet only apply to cables anchored at Pier 11 on the right side plane of cables when looking upstation. To obtain the cable data for the cables laying on the left side plane of cables multiply the transverse offset values with -1.0.

STAY CABLE GEOMETRY

Detailed JUL 2009
Checked JUL 2009

Note: This drawing is not to scale. Follow dimensions.

\\kcow00\jobs\46440\Bridges\Plans\CdtoMoDOTA6500\J6I0984\A6500-dgn\ZPLOT_B_A6500_001-205_J6I0984_139.dgn

19-AUG-2009 07:17

STATE OF MISSOURI HANS R. HUTTON NUMBER E-29174 REGISTERED PROFESSIONAL ENGINEER
Hans R. Hutton

DATE 8/20/09
ROUTE I-70 | STATE MO/IL
DISTRICT 6 | SHEET NO. BR139
COUNTY ST. LOUIS CITY - MO ST. CLAIR - IL
JOB NO. J6I0984
CONTRACT ID.
PROJECT NO.
BRIDGE NO. A6500

DESCRIPTION
DATE

MISSOURI HIGHWAYS AND TRANSPORTATION COMMISSION
105 WEST CAPITOL JEFFERSON CITY, MO 65102 1-888-ASK-MODOT (1-888-275-6636)

HNTB
715 KIRK DRIVE
KANSAS CITY, MO 64105-1310
TELEPHONE (816) 472-1201
CERTIFICATE OF AUTHORITY NO. 001270

LICENSED STRUCTURAL ENGINEER HANS R. HUTTON 081-[illegible]/07 STATE OF ILLINOIS
expires 11-30-2010
Hans R. Hutton
signature
8-20-2009
date

REV.

CABLE DATA

STAY CABLE	CABLE ANCHOR POINT (AT EDGE GIRDER) STATION AT PIER 12 (FEET)	TRANS. OFFSET (FEET)	ELEVATION (FEET)	CABLE BRACING POINT STATION AT PIER 12 (FEET)	TRANS. OFFSET (FEET)	ELEVATION (FEET)	CABLE ANCHOR POINT (AT TOWER) STATION AT PIER 12 (FEET)	TRANS. OFFSET (FEET)	ELEVATION (FEET)	LONG. DISTANCE BETWEEN ANCHOR POINTS (FEET)	VERT. DISTANCE BETWEEN ANCHOR POINTS (FEET)	TRANS. DISTANCE BETWEEN ANCHOR POINTS (FEET)	LOWER CABLE ANGLE TO VERT. PLANE (ANGLE A) (DEGREES)	THEORETICAL CABLE ANGLE TO HORIZ. (ANGLE B) (DEGREES)	LOWER CATENARY ANGLE TO HORIZ. (ANGLE C) (DEGREES)	PROJECTED LOWER CATENARY ANGLE TO HORIZ. (ANGLE D) (DEGREES)	PROJECTED LOWER CATENARY ANGLE TO LOCAL TANGENT (ANGLE E) (DEGREES)	UPPER CATENARY ANGLE TO HORIZ. (ANGLE F) (DEGREES)	MIDPOINT SAG (FEET)	THEORETICAL CABLE LENGTH (STRAIGHT LINE) (FEET)	THEORETICAL CABLE LENGTH (CATENARY) (FEET)
1	102+29.25	47.33	470.16	102+16.42	46.51	476.51	96+05.33	7.47	792.00	623.92	321.84	39.87	3°39'21.8"	27°14'19.6"	26°15'57.5"	26°18'44.3"	26°01'33.0"	28°11'41.6"	3.328	703.166	703.219
2	102+16.67	47.33	470.22	102+03.88	46.52	476.57	96+05.33	8.39	786.00	611.33	315.78	38.94	3°38'42.1"	27°16'14.5"	26°20'24.2"	26°23'10.3"	26°05'59.0"	28°11'09.8"	3.123	689.173	689.221
3	102+04.08	47.33	470.29	101+91.42	46.53	476.63	96+05.33	9.31	780.00	598.75	309.71	38.02	3°38'00.6"	27°18'14.2"	26°33'46.8"	26°36'32.9"	26°19'21.6"	28°02'06.5"	2.440	675.181	675.211
4	101+91.50	47.33	470.35	101+78.85	46.53	476.69	96+05.33	10.23	774.00	586.17	303.65	37.10	3°37'17.4"	27°20'19.0"	26°35'17.9"	26°38'03.0"	26°20'51.7"	28°04'44.0"	2.421	661.189	661.219
5	101+49.25	47.33	470.56	101+37.29	46.54	476.90	96+05.33	11.16	768.00	543.92	297.44	36.18	3°48'18.9"	28°37'07.2"	27°53'16.6"	27°56'25.0"	27°39'13.6"	29°20'21.7"	2.240	620.987	621.015
6	101+07.00	47.33	470.77	100+95.76	46.54	477.11	96+05.33	12.08	762.00	501.67	291.23	35.25	4°01'11.4"	30°04'29.2"	29°21'02.0"	29°24'39.2"	29°07'27.9"	30°47'18.7"	2.107	581.142	581.169
7	100+64.75	47.33	470.98	100+54.24	46.55	477.32	96+05.33	13.00	756.00	459.42	285.02	34.33	4°16'25.5"	31°44'36.6"	31°00'01.2"	31°04'14.9"	30°47'03.6"	32°28'29.8"	2.049	541.735	541.764
8	100+22.50	47.33	471.19	100+12.76	46.55	477.52	96+05.33	13.92	750.00	417.17	278.81	33.41	4°34'44.0"	33°40'17.1"	32°56'54.4"	33°01'55.5"	32°44'44.2"	34°22'56.8"	1.890	502.869	502.896
9	99+80.25	47.33	471.41	99+71.37	46.56	477.73	96+05.33	14.85	744.00	374.92	272.59	32.49	4°57'08.7"	35°55'05.5"	35°21'37.3"	35°27'41.6"	35°10'30.3"	36°28'05.8"	1.387	464.678	464.695
10	99+38.00	47.33	471.62	99+29.96	46.57	477.94	96+05.33	15.77	738.00	332.67	266.38	31.56	5°25'12.9"	38°33'38.6"	38°03'46.2"	38°11'15.2"	37°54'03.9"	39°03'06.5"	1.179	427.345	427.359
11	98+95.75	47.33	471.83	98+88.60	46.58	478.15	96+05.33	16.69	732.00	290.42	260.17	30.64	6°01'23.2"	41°41'53.3"	41°18'17.8"	41°27'44.1"	41°10'32.8"	42°05'11.7"	0.893	391.114	391.124
12	98+53.50	47.33	472.04	98+47.25	46.58	478.35	96+05.33	17.61	726.00	248.17	253.96	29.72	6°49'44.8"	45°27'25.4"	45°04'11.3"	45°16'25.6"	44°59'14.3"	45°50'20.6"	0.853	356.323	356.334
13	98+11.25	47.33	472.25	98+05.94	46.59	478.56	96+05.33	18.54	720.00	205.92	247.75	28.80	7°57'40.4"	49°59'42.9"	49°38'39.2"	49°55'04.1"	49°37'52.8"	50°20'28.5"	0.765	323.436	323.447
14	97+69.00	47.33	472.46	97+64.69	46.60	478.77	96+05.33	19.46	714.00	163.67	241.54	27.88	9°39'56.5"	55°29'48.6"	55°15'00.9"	55°37'58.5"	55°20'47.2"	55°44'25.4"	0.553	293.094	293.103
15	97+26.75	47.33	472.67	97+23.43	46.61	478.97	96+05.33	20.84	705.00	121.42	232.33	26.49	12°18'30.0"	61°51'26.2"	61°41'07.2"	62°14'17.1"	61°57'05.8"	62°01'38.3"	0.417	263.476	263.484
16	96+84.50	47.33	472.88	96+82.25	46.62	479.18	96+05.33	22.23	696.00	79.17	223.12	25.11	17°35'47.7"	69°34'57.1"	69°26'56.0"	70°20'06.6"	70°02'55.3"	69°42'52.3"	0.395	238.072	238.086
17	96+42.25	47.33	473.10	96+41.16	46.63	479.38	96+05.33	23.61	687.00	36.92	213.90	23.72	32°43'35.6"	78°24'23.3"	78°21'01.2"	80°09'36.6"	79°52'25.3"	78°27'43.5"	0.265	218.359	218.380
18	95+56.50	47.33	473.52	95+57.63	46.63	479.80	95+94.67	23.61	687.00	38.17	213.48	23.72	31°51'53.8"	78°06'43.1"	78°02'49.0"	79°48'26.4"	80°05'37.7"	78°10'34.8"	0.299	218.154	218.180
19	95+13.00	47.33	473.74	95+15.32	46.62	480.01	95+94.67	22.23	696.00	81.67	222.26	25.11	17°05'23.1"	68°58'20.7"	68°51'25.9"	69°42'47.3"	69°59'58.6"	69°05'11.1"	0.332	238.114	238.124
20	94+69.50	47.33	473.96	94+72.92	46.61	480.22	95+94.67	20.84	705.00	125.17	231.04	26.49	11°57'01.2"	61°01'27.3"	60°50'02.3"	61°21'54.4"	61°39'05.7"	61°12'44.3"	0.450	264.099	264.107
21	94+26.00	47.33	474.18	94+30.44	46.60	480.44	95+94.67	19.46	714.00	168.67	239.82	27.88	9°23'03.6"	54°31'02.1"	54°15'22.2"	54°37'17.0"	54°54'28.3"	54°46'30.1"	0.574	294.517	294.526
22	93+82.50	47.33	474.39	93+87.96	46.59	480.65	95+94.67	18.54	720.00	212.17	245.61	28.80	7°43'46.5"	48°55'08.0"	48°36'03.7"	48°51'37.1"	49°08'48.4"	49°13'57.9"	0.683	325.831	325.840
23	93+39.00	47.33	474.61	93+45.44	46.58	480.86	95+94.67	17.61	726.00	255.67	251.39	29.72	6°37'50.2"	44°19'27.2"	43°56'40.8"	44°08'12.6"	44°25'23.9"	44°41'56.1"	0.828	359.784	359.794
24	92+95.50	47.33	474.83	93+02.87	46.58	481.07	95+94.67	16.69	732.00	299.17	257.17	30.64	5°50'53.5"	40°32'07.0"	40°08'34.1"	40°17'24.8"	40°34'36.1"	40°55'23.6"	0.886	395.697	395.706
25	92+52.00	47.33	475.05	92+60.29	46.57	481.29	95+94.67	15.77	738.00	342.67	262.95	31.56	5°15'46.7"	37°23'05.1"	36°52'36.9"	36°59'35.5"	37°16'46.0"	37°53'08.8"	1.200	433.083	433.097
26	92+08.50	47.33	475.25	92+17.66	46.56	481.50	95+94.67	14.85	744.00	386.17	268.75	32.49	4°48'31.8"	34°44'26.8"	34°11'44.7"	34°17'23.0"	34°33'24.8"	35°16'43.3"	1.356	471.599	471.614
27	91+65.00	47.33	475.44	91+75.05	46.55	481.68	95+94.67	13.92	750.00	429.67	274.56	33.41	4°26'46.4"	32°30'03.4"	31°46'38.0"	31°51'16.5"	32°05'26.1"	33°12'47.5"	1.898	510.995	511.021
28	91+21.50	47.33	475.60	91+32.35	46.55	481.84	95+94.67	13.00	756.00	473.17	280.40	34.33	4°09'00.0"	30°35'08.2"	29°51'47.0"	29°55'41.0"	30°07'58.4"	31°17'51.1"	2.003	551.083	551.109
29	90+78.00	47.33	475.73	90+89.64	46.54	481.98	95+94.67	12.08	762.00	516.67	286.27	35.25	3°54'12.6"	28°55'59.1"	28°11'45.5"	28°15'05.2"	28°15'05.2"	29°39'35.5"	2.159	591.724	591.752
30	90+34.50	47.33	475.84	90+46.89	46.53	482.10	95+94.67	11.16	768.00	560.17	292.16	36.18	3°41'42.6"	27°29'44.1"	26°45'04.1"	26°47'56.7"	26°56'29.8"	28°13'48.3"	2.302	632.812	632.841
31	89+91.00	47.33	475.93	90+04.18	46.52	482.19	95+94.67	10.23	774.00	603.67	298.07	37.10	3°31'00.4"	26°14'08.2"	25°22'38.7"	25°25'09.4"	25°31'50.3"	27°04'52.7"	2.794	674.266	674.305
32	89+47.50	47.33	476.00	89+61.39	46.52	482.27	95+94.67	9.31	780.00	647.17	304.00	38.02	3°21'44.3"	25°07'24.9"	24°15'09.6"	24°17'22.7"	24°22'11.5"	25°58'56.3"	2.984	716.023	716.063
33	89+04.00	47.33	476.04	89+18.72	46.50	482.31	95+94.67	8.39	786.00	690.67	309.96	38.94	3°13'38.2"	24°08'09.5"	23°03'38.4"	23°05'36.5"	23°08'33.1"	25°11'36.5"	3.865	758.033	758.096
34	88+60.50	47.33	476.06	88+75.92	46.50	482.34	95+94.67	7.47	792.00	734.17	315.94	39.87	3°06'29.5"	23°15'13.4"	22°08'06.1"	22°09'52.1"	22°10'59.2"	24°21'14.3"	4.217	800.257	800.327

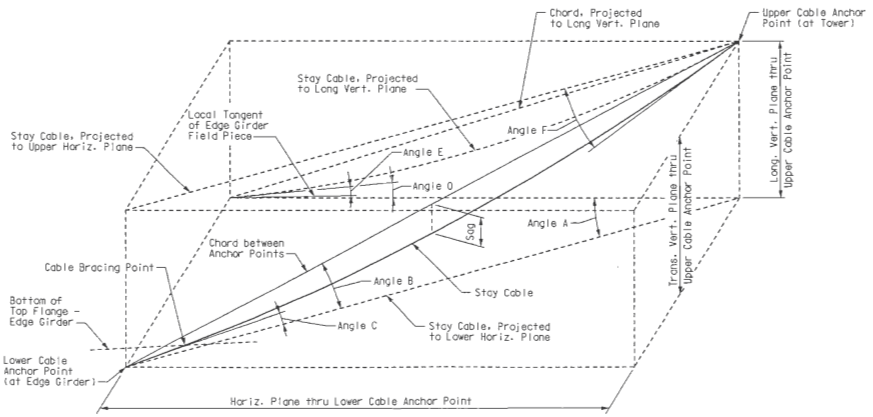

CABLE DATA DIAGRAM

Notes:

The theoretical cable length shown is calculated between cable anchor points. The Contractor shall determine the required length of cable based upon the stay cable anchorage hardware provided and the distance between the anchorage points.

Cable geometry and lengths are based on theoretical cable anchor points shown above. Final cable geometry shall account for the axial shortening in the deck system due to dead loads and final erection forces at beginning of service life.

Computed sag is based upon the mass of the cable and the initial dead load force in the cable upon completion of the structure, as calculated per the Suggested Erection Sequence shown on Sheet Nos. BR179 thru BR183.

For locations of cable anchor points and cable bracing points, see Sheet Nos. BR92, BR93, BR111 thru BR116, BR123, and BR124.

Cable data shown on this sheet only apply to cables anchored at Pier 12 on the right side plane of cables when looking upstation. To obtain the cable data for the cables laying on the left side plane of cables multiply the transverse offset values with -1.0.

STAY CABLE GEOMETRY

Detailed JUL 2009
Checked JUL 2009

Note: This drawing is not to scale. Follow dimensions.

Sheet No. 140 of 205

\\kcow00\jobs\46440\Bridges\Plans\CdtoMoDOTA6500\J6I0984\A6500-dgn\ZPLOT_B_A6500_001-205_J6I0984_140.dgn

19-AUG-2009 07:17

HANS R. HUTTON NUMBER E-2974 REGISTERED ENGINEER STATE OF MISSOURI
Hans R. Hutton

DATE 8/20/09
ROUTE I-70 | STATE MO/IL
DISTRICT 6 | SHEET NO. BR140
COUNTY ST. LOUIS CITY - MO, ST. CLAIR - IL
JOB NO. J6I0984
CONTRACT ID.
PROJECT NO.
BRIDGE NO. A6500

REV.	DESCRIPTION	DATE

MISSOURI HIGHWAYS AND TRANSPORTATION COMMISSION
MoDOT
105 WEST CAPITOL
JEFFERSON CITY, MO 65102
1-888-ASK-MODOT (1-888-275-6636)

HNTB
715 KIRK DRIVE
KANSAS CITY, MO 64105-1310
TELEPHONE (816) 472-1201
CERTIFICATE OF AUTHORITY NO. 001270

LICENSED STRUCTURAL ENGINEER
HANS R HUTTON 081-006707
STATE OF ILLINOIS
Hans R. Hutton
8-20-2009

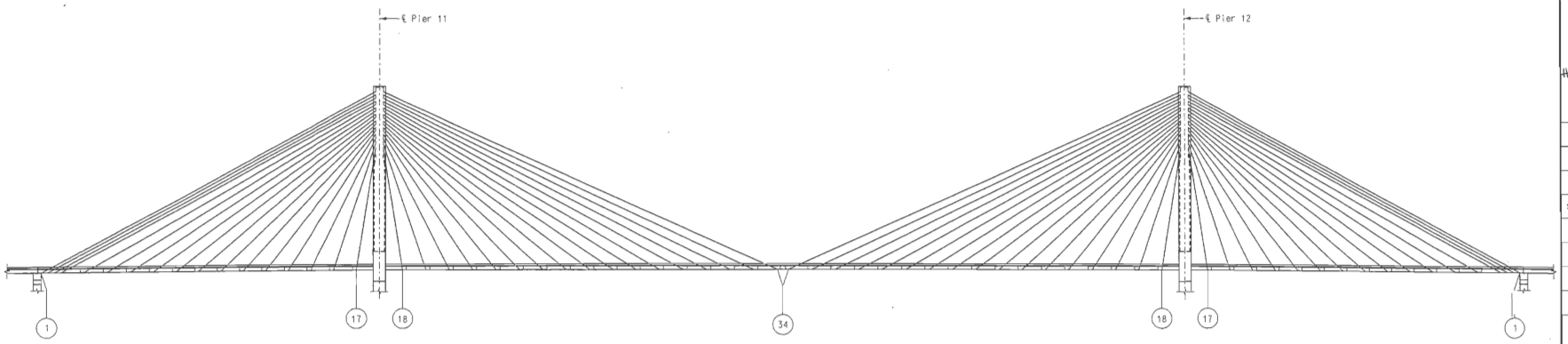

ELEVATION

STAY CABLE SCHEDULE

STAY CABLE	CABLE DATA			CABLE FORCES																
							THERMAL LOAD		LIVE LOAD+IMPACT		DESIGN LOAD (STRENGTH I)					DESIGN LOAD (STRENGTH III)				
	NUMBER OF 0.6" DIAMETER, 7 WIRE STRANDS	STEEL AREA (SQ. IN.)	PE PIPE DIAMETER (IN.)	INITIAL DEAD LOAD * (KIPS)	LONG TERM LOSSES (KIPS)	FINAL DEAD LOAD * (KIPS)	MAXIMUM (KIPS)	MINIMUM (KIPS)	MAXIMUM (KIPS)	MINIMUM (KIPS)	CABLE FORCE MAXIMUM (KIPS)	CABLE STRESS MAXIMUM (KSI)	CABLE FORCE MINIMUM (KIPS)	CABLE STRESS MINIMUM (KSI)	STRESS RANGE (KSI)	CABLE FORCE MAXIMUM (KIPS)	CABLE STRESS MAXIMUM (KSI)	CABLE FORCE MINIMUM (KIPS)	CABLE STRESS MINIMUM (KSI)	STRESS RANGE (KSI)
1	73	15.84	9.84	1123	20	1143	19	-28	405	-241	2397	151	366	23	128	1861	117	629	40	78
2	73	15.84	9.84	1146	31	1176	18	-26	334	-185	2285	144	512	32	112	1847	117	702	44	72
3	61	13.24	8.86	1123	49	1172	17	-25	278	-143	2157	163	588	44	119	1793	135	726	55	81
4	61	13.24	8.86	1149	19	1167	16	-24	240	-114	2055	155	671	51	105	1738	131	773	58	73
5	55	11.94	8.86	1000	41	1040	9	-13	191	-51	1763	148	709	59	88	1484	124	744	62	62
6	55	11.94	8.86	921	23	943	4	-6	195	-20	1622	136	722	61	75	1353	113	688	58	56
7	55	11.94	8.86	831	37	868	1	-1	200	-5	1526	128	689	58	70	1270	106	599	50	56
8	55	11.94	8.86	777	69	846	2	-1	234	-28	1563	131	593	50	81	1265	106	528	44	62
9	43	9.33	7.87	731	14	746	3	-2	246	-39	1461	157	531	57	100	1143	122	483	52	71
10	43	9.33	7.87	728	72	800	3	-2	241	-38	1517	163	531	57	106	1201	129	491	53	76
11	37	8.03	7.09	670	21	691	2	-2	217	-28	1327	165	503	63	103	1030	128	468	58	70
12	37	8.03	7.09	583	7	590	1	-1	181	-16	1125	140	454	57	84	862	107	426	53	54
13	37	8.03	7.09	535	-2	534	1	-1	168	-12	1029	128	421	52	76	784	98	404	50	47
14	31	6.73	7.09	522	-6	515	1	-1	160	-16	997	148	396	59	89	757	112	401	60	53
15	31	6.73	7.09	560	-10	549	2	-1	153	-28	1041	155	397	59	96	801	119	428	64	55
16	31	6.73	7.09	471	-24	446	5	-2	110	-33	850	126	306	45	81	674	100	356	53	47
17	31	6.73	7.09	605	-39	566	15	-7	69	-36	950	141	389	58	83	838	125	443	66	59
18	31	6.73	7.09	523	-44	479	13	-6	67	-42	842	125	319	47	78	735	109	381	57	53
19	31	6.73	7.09	569	-31	538	11	-6	135	-48	1023	152	354	53	99	800	119	422	63	56
20	31	6.73	7.09	496	9	505	5	-3	144	-31	965	143	340	51	93	729	108	386	57	51
21	31	6.73	7.09	507	21	529	1	-1	167	-24	1027	153	369	55	98	754	112	388	58	54
22	37	8.03	7.09	608	35	643	0	0	190	-19	1215	151	468	58	93	921	115	458	57	58
23	37	8.03	7.09	602	11	613	0	0	171	-13	1135	141	478	59	82	888	111	447	56	55
24	37	8.03	7.09	678	16	694	0	-1	204	-15	1306	163	536	67	96	1029	128	481	60	68
25	43	9.33	7.87	726	14	739	0	0	213	-16	1386	149	571	61	87	1107	119	503	54	65
26	43	9.33	7.87	769	9	778	0	0	239	-20	1489	160	598	64	96	1183	127	520	56	71
27	55	11.94	8.86	799	31	830	0	0	243	-21	1567	131	621	52	79	1273	107	549	46	61
28	55	11.94	8.86	871	17	888	1	0	250	-19	1657	139	686	57	81	1342	112	614	51	61
29	55	11.94	8.86	922	27	948	1	-1	245	-13	1724	144	744	62	82	1419	119	658	55	64
30	55	11.94	8.86	990	25	1015	1	-1	254	-10	1828	153	807	68	86	1504	126	703	59	67
31	61	13.24	8.86	1033	2	1035	1	-1	262	-22	1883	142	806	61	81	1563	118	704	53	65
32	61	13.24	8.86	1093	35	1128	0	-1	301	-50	2107	159	772	58	101	1742	132	694	52	79
33	73	15.84	9.84	1170	8	1179	1	-2	330	-93	2258	143	716	45	97	1848	117	710	45	72
34	73	15.84	9.84	1196	46	1241	3	-4	365	-149	2438	154	581	37	117	1957	124	685	43	80

Notes:

(#) Denotes Stay Cable Number

Negative forces indicate a reduction in tension in the cable.
* Initial dead load at beginning of service life. Final dead load after long term creep and shrinkage losses.

STAY CABLE SCHEDULE

Detailed JUL 2009
Checked JUL 2009

Note: This drawing is not to scale. Follow dimensions.

\\kcow00\jobs\46440\Bridges\Plans\CdtoMoDOTA6500\J6I0984\A6500-dgn\ZPLOT_B_A6500_001-205_J6I0984_141.dgn

19-AUG-2009 07:17

STATE OF MISSOURI
HANS R. HUTTON
NUMBER E-9974
REGISTERED PROFESSIONAL ENGINEER
Hans R. Hutton

DATE 8/20/09
ROUTE I-70
STATE MO/IL
DISTRICT 6
SHEET NO. BR141
COUNTY ST. LOUIS CITY - MO ST. CLAIR - IL
JOB NO. J6I0984
CONTRACT ID.
PROJECT NO.
BRIDGE NO. A6500

DESCRIPTION	DATE

MISSOURI HIGHWAYS AND TRANSPORTATION COMMISSION
MoDOT
105 WEST CAPITOL
JEFFERSON CITY, MO 65102
1-888-ASK-MODOT (1-888-275-6636)

HNTB
715 KEW DRIVE
KANSAS CITY, MO 64105-1310
TELEPHONE (816) 472-1201
CERTIFICATE OF AUTHORITY NO. 001270

LICENSED STRUCTURAL ENGINEER
HANS R. HUTTON
081-006707
STATE OF ILLINOIS
Hans R. Hutton
8-20-2009

REV.

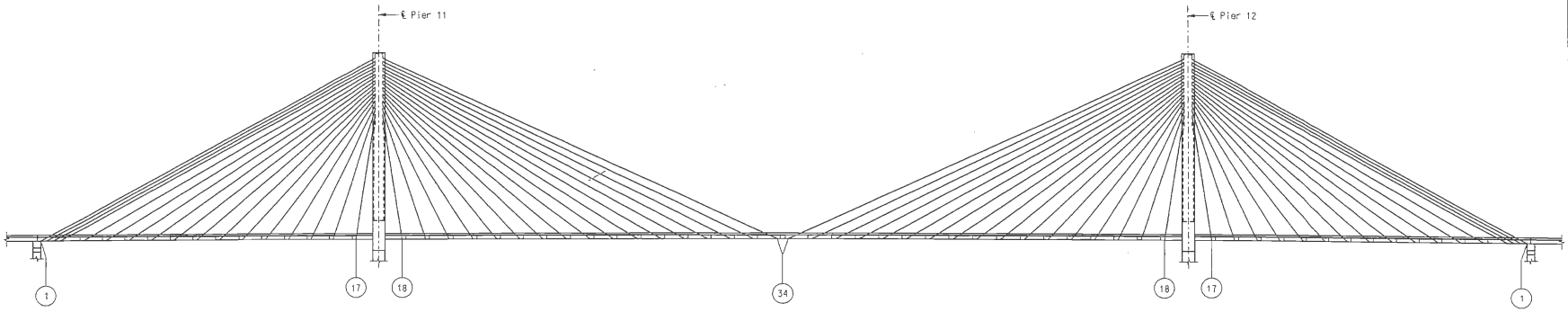

ELEVATION

STAY CABLE SCHEDULE

STAY CABLE	CABLE FORCES																									
	DESIGN LOAD (STRENGTH IV)					DESIGN LOAD (STRENGTH V)					DESIGN LOAD (SERVICE I)					DESIGN LOAD (SERVICE II)					DESIGN LOAD (FATIGUE)				
	CABLE FORCE MAXIMUM (KIPS)	CABLE STRESS MAXIMUM (KSI)	CABLE FORCE MINIMUM (KIPS)	CABLE STRESS MINIMUM (KSI)	STRESS RANGE (KSI)	CABLE FORCE MAXIMUM (KIPS)	CABLE STRESS MAXIMUM (KSI)	CABLE FORCE MINIMUM (KIPS)	CABLE STRESS MINIMUM (KSI)	STRESS RANGE (KSI)	CABLE FORCE MAXIMUM (KIPS)	CABLE STRESS MAXIMUM (KSI)	CABLE FORCE MINIMUM (KIPS)	CABLE STRESS MINIMUM (KSI)	STRESS RANGE (KSI)	CABLE FORCE MAXIMUM (KIPS)	CABLE STRESS MAXIMUM (KSI)	CABLE FORCE MINIMUM (KIPS)	CABLE STRESS MINIMUM (KSI)	STRESS RANGE (KSI)	CABLE FORCE MAXIMUM (KIPS)	CABLE STRESS MAXIMUM (KSI)	CABLE FORCE MINIMUM (KIPS)	CABLE STRESS MINIMUM (KSI)	STRESS RANGE (KSI)
1	1858	117	919	58	59	2287	144	415	26	118	1718	108	702	44	64	1715	108	775	49	59	13	1	-10	-1	1
2	1901	120	943	60	60	2195	139	546	34	104	1653	104	809	51	53	1648	104	874	55	49	11	1	-8	0	1
3	1886	142	926	70	72	2082	157	612	46	111	1570	119	850	64	54	1566	118	907	69	50	9	1	-6	0	1
4	1859	140	944	71	69	1990	150	688	52	98	1503	114	913	69	45	1500	113	965	73	40	7	1	-5	0	1
5	1648	138	835	70	68	1704	143	713	60	83	1281	107	891	75	33	1298	109	920	77	32	10	1	-2	0	1
6	1493	125	772	65	60	1566	131	710	60	72	1169	98	867	73	25	1199	100	889	75	26	15	1	-1	0	1
7	1372	115	698	58	57	1474	124	662	55	68	1094	92	804	67	24	1129	95	824	69	26	17	1	0	0	1
8	1337	112	650	54	58	1503	126	571	48	78	1114	93	718	60	33	1150	96	739	62	34	19	2	-1	0	2
9	1180	126	611	65	61	1397	150	513	55	95	1033	111	657	70	40	1069	115	678	73	42	20	2	-1	0	2
10	1265	136	608	65	70	1453	156	515	55	101	1076	115	657	70	45	1113	119	676	72	47	19	2	-1	0	2
11	1092	136	560	70	66	1266	158	490	61	97	936	117	617	77	40	973	121	632	79	42	18	2	-1	0	2
12	933	116	487	61	56	1069	133	444	55	78	790	98	550	68	30	825	103	561	70	33	16	2	-1	0	2
13	847	105	445	55	50	977	122	414	52	70	721	90	509	63	26	755	94	516	64	30	16	2	-1	0	2
14	826	123	429	64	59	945	140	395	59	82	700	104	486	72	32	733	109	490	73	36	15	2	-1	0	2
15	895	133	454	67	66	989	147	403	60	87	738	110	498	74	36	768	114	501	74	40	15	2	-2	0	2
16	764	114	374	56	58	812	121	316	47	74	614	91	393	58	33	632	94	396	59	35	11	2	-2	0	2
17	978	145	463	69	77	926	138	400	59	78	716	106	481	72	35	720	107	489	73	34	6	1	-3	0	1
18	852	127	407	60	66	820	122	331	49	73	635	94	407	60	34	637	95	414	62	33	6	1	-2	0	1
19	913	136	453	67	68	974	145	367	55	90	740	110	462	69	41	763	113	465	69	44	12	2	-3	0	2
20	826	123	405	60	63	914	136	349	52	84	684	102	436	65	37	714	106	436	65	41	13	2	-2	0	2
21	847	126	418	62	64	967	144	371	55	89	716	106	464	69	37	755	112	466	69	43	15	2	-1	0	2
22	1020	127	506	63	64	1151	143	463	58	86	850	106	574	71	34	894	111	580	72	39	17	2	-1	0	2
23	969	121	504	63	58	1082	135	467	58	77	800	100	574	72	28	836	104	584	73	31	15	2	-1	0	2
24	1097	137	567	71	66	1249	156	518	65	91	922	115	642	80	35	959	119	658	82	37	18	2	-1	0	2
25	1168	125	607	65	60	1329	142	550	59	84	982	105	683	73	32	1017	109	704	75	33	18	2	-1	0	2
26	1228	132	641	69	63	1426	153	573	61	92	1053	113	717	77	36	1088	117	743	80	37	19	2	-1	0	2
27	1312	110	667	56	54	1509	126	597	50	76	1115	93	746	63	31	1146	96	772	65	31	19	2	-1	0	2
28	1403	118	728	61	57	1594	134	663	56	78	1179	99	821	69	30	1213	102	846	71	31	20	2	-1	0	2
29	1499	126	771	65	61	1663	139	717	60	79	1231	103	881	74	29	1268	106	905	76	30	19	2	-1	0	2
30	1604	134	828	69	65	1763	148	775	65	83	1306	109	950	80	30	1345	113	977	82	31	20	2	-1	0	2
31	1635	124	864	65	58	1820	137	774	58	79	1350	102	962	73	29	1375	104	1003	76	28	19	1	-1	0	2
32	1788	135	907	69	67	2036	154	743	56	98	1513	114	956	72	42	1523	115	1019	77	38	20	2	-2	0	2
33	1871	118	965	61	57	2177	137	703	44	93	1627	103	943	60	43	1614	102	1029	65	37	20	1	-3	0	1
34	1971	124	975	62	63	2340	148	594	37	110	1760	111	855	54	57	1725	109	965	61	48	20	1	-5	0	2

Notes:

(#) Denotes Stay Cable Number

Negative forces indicate a reduction in tension in the cable.

STAY CABLE SCHEDULE

Detailed JUL 2009
Checked JUL 2009

Note: This drawing is not to scale. Follow dimensions.

Sheet No. 142 of 205

\\kcow00\jobs\46440\Bridges\Plans\CdtoMoDOTA6500\J610984\A6500-dgn\ZPLOT_B_A6500_001-205_J610984_142.dgn

19-AUG-2009 07:17

STATE OF MISSOURI
HANS R. HUTTON
NUMBER E-29174
REGISTERED PROFESSIONAL ENGINEER
Hans R. Hutton

DATE 8/20/09
ROUTE I-70
STATE MO/IL
DISTRICT 6
SHEET NO. BR142
COUNTY ST. LOUIS CITY - MO ST. CLAIR - IL
JOB NO. J610984
CONTRACT ID.
PROJECT NO.
BRIDGE NO. A6500

DESCRIPTION | DATE | REV.

MISSOURI HIGHWAYS AND TRANSPORTATION COMMISSION
105 WEST CAPITOL
JEFFERSON CITY, MO 65102
1-888-ASK-MODOT (1-888-275-6636)

HNTB
715 KIRK DRIVE
KANSAS CITY, MO 64105-1310
TELEPHONE (816) 472-1201
CERTIFICATE OF AUTHORITY NO. 000270

LICENSED STRUCTURAL ENGINEER
HANS R. HUTTON
081-006707
STATE OF ILLINOIS
EXPIRES 11-30-2010
Hans R. Hutton
8-20-2009

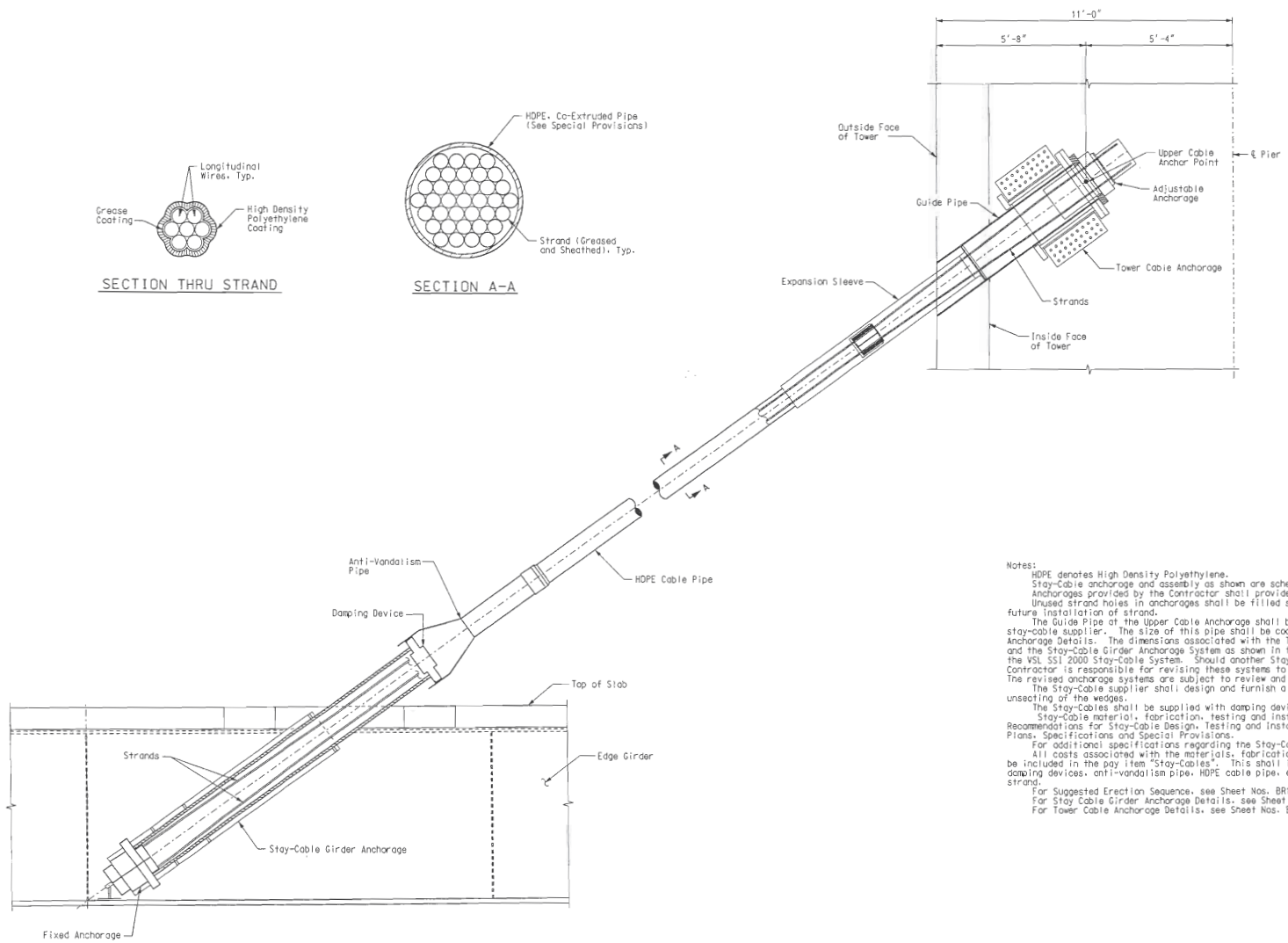

Notes:

HDPE denotes High Density Polyethylene.

Stay-Cable anchorage and assembly as shown are schematic.

Anchorages provided by the Contractor shall provide for future cable replacement.

Unused strand holes in anchorages shall be filled so to seal the anchorage but yet allow future installation of strand.

The Guide Pipe at the Upper Cable Anchorage shall be sized and supplied by the stay-cable supplier. The size of this pipe shall be coordinated with the Tower Cable Anchorage Details. The dimensions associated with the Tower Cable Anchorage System and the Stay-Cable Girder Anchorage System as shown in these Plans are based on the the VSL SSI 2000 Stay-Cable System. Should another Stay-Cable System be furnished, the Contractor is responsible for revising these systems to suit the furnished Stay-Cable System. The revised anchorage systems are subject to review and approval by the Engineer.

The Stay-Cable supplier shall design and furnish a positive restraint system to prevent unseating of the wedges.

The Stay-Cables shall be supplied with damping devices that provide 1% of critical damping.

Stay-Cable material, fabrication, testing and installation shall be in accordance with PTI Recommendations for Stay-Cable Design, Testing and Installation, 5th Edition as well as the Plans, Specifications and Special Provisions.

For additional specifications regarding the Stay-Cables, See Special Provision "Stay-Cables".

All costs associated with the materials, fabrication and installation of the Stay-Cables shall be included in the pay item "Stay-Cables". This shall include the fixed and adjustable anchorages, damping devices, anti-vandalism pipe, HDPE cable pipe, expansion sleeve, upper guide pipes and strand.

For Suggested Erection Sequence, see Sheet Nos. BR179 thru BR183.

For Stay Cable Girder Anchorage Details, see Sheet Nos. BR123 thru BR131.

For Tower Cable Anchorage Details, see Sheet Nos. BR88 thru BR93.

STAY CABLE ANCHORAGE ASSEMBLY

Detailed JUL 2009
Checked JUL 2009

Note: This drawing is not to scale. Follow dimensions.

STATE OF MISSOURI
HANS R. HUTTON
NUMBER 8-20-09
REGISTERED PROFESSIONAL ENGINEER
Hans R. Hutton

DATE	8/20/09
ROUTE	I-70
STATE	MO/IL
DISTRICT	6
SHEET NO.	BR143
COUNTY	ST. LOUIS CITY - MO ST. CLAIR - IL
JOB NO.	J6I0984
CONTRACT ID.	
PROJECT NO.	
BRIDGE NO.	A6500

DATE	DESCRIPTION

MISSOURI HIGHWAYS AND TRANSPORTATION COMMISSION

MoDOT

105 WEST CAPITOL
JEFFERSON CITY, MO 65102
1-888-ASK-MODOT (1-888-275-6636)

HNTB
715 KIRK DRIVE
KANSAS CITY, MO 64105-1310
TELEPHONE (816) 472-1201
CERTIFICATE OF AUTHORITY
NO. 001270

LICENSED STRUCTURAL ENGINEER
HANS R. HUTTON
081-006707
STATE OF ILLINOIS
expires 11-30-2010
Hans R. Hutton
signature
8-20-2009
date

REV.

\\kcow00\jobs\46440\Bridges\Plans\CdtoMoDOTA6500\J6I0984\A6500-dgn\ZPLOT_B_A6500_001-205_J6I0984_143.dgn

19-AUG-2009 07:17

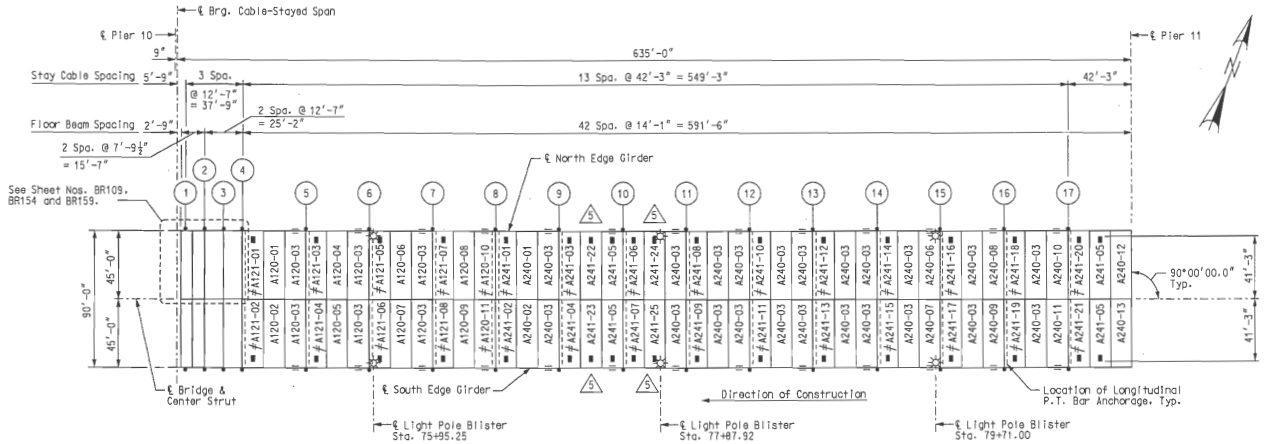

SPAN (10-11)

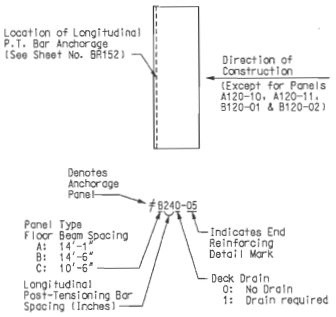

PRECAST PANEL LEGEND

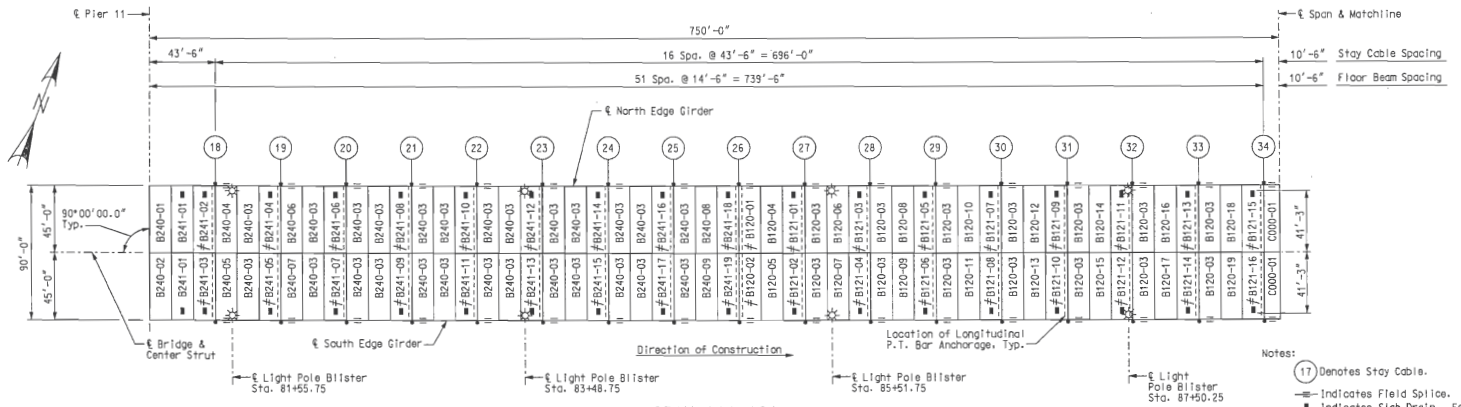

SPAN (11-12)

Notes:

(17) Denotes Stay Cable.

■ Indicates Field Splice.

■ Indicates Slab Drain. For locations and details, see Sheet Nos. BR163 & BR164.

☼ Indicates location of Light Pole Blister. For details, see Sheet No. BR168.

For Precast Slab Panel details, see Sheet Nos. BR146 thru BR150.

For Cast-in-Place Slab detail at edge of slab at Pier 11, see Sheet No. BR157.

For Cast-in-Place Slab and reinforcing at floor beams, see Sheet Nos. BR154 thru BR158.

For End Reinforcing Detail, see Sheet No. BR153.

For Post-tensioning Bar Anchorage Details, see Sheet No. BR152.

For Framing Plan, see Sheet No. BR109.

All costs associated with materials, fabrication and installation of the deck shall be included in the pay item "Precast Prestressed Slab Panels". This shall include the concrete and reinforcing steel in the precast and cast-in-place concrete and the post-tensioning system, including grouting and stressing.

PRECAST SLAB PANEL LAYOUT

STATE OF MISSOURI HANS R. HUTTON NUMBER E-28174 REGISTERED PROFESSIONAL ENGINEER

DATE 5/17/10

ROUTE	STATE
I-70	MO/IL
DISTRICT 6	SHEET NO. BR144

COUNTY ST. LOUIS CITY - MO ST. CLAIR - IL

JOB NO. J6I0984

CONTRACT ID.

PROJECT NO.

BRIDGE NO. A6500

REV.	DESCRIPTION	DATE
1	Added slab drains	5-17-10

MISSOURI HIGHWAYS AND TRANSPORTATION COMMISSION
105 WEST CAPITOL
JEFFERSON CITY, MO 65102
1-888-ASK-MODOT (1-888-275-6636)

HNTB
715 KIRK DRIVE
KANSAS CITY, MO 64105-1310
TELEPHONE (816) 472-1201
CERTIFICATE OF AUTHORITY NO. 001270

LICENSED STRUCTURAL ENGINEER HANS R. HUTTON 081-006707 STATE OF ILLINOIS

5-17-2010

Detailed JUL 2009
Checked JUL 2009

Note: This drawing is not to scale. Follow dimensions.

\\kcow00\jobs\48440\Bridges\Plans\CdtoMoDOTA6500\J6I0984\A6500-dgn\ZPLOT_B_A6500_144-205_J6I0984_144.dgn

17-MAY-2010 11:32

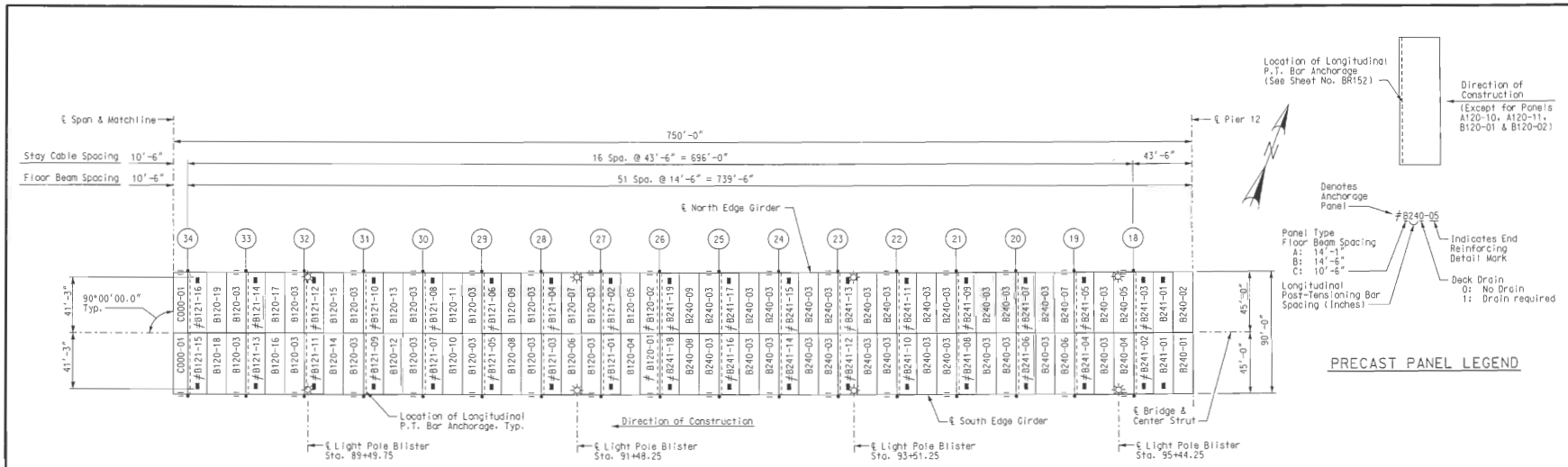

SPAN (11-12)

PRECAST PANEL LEGEND

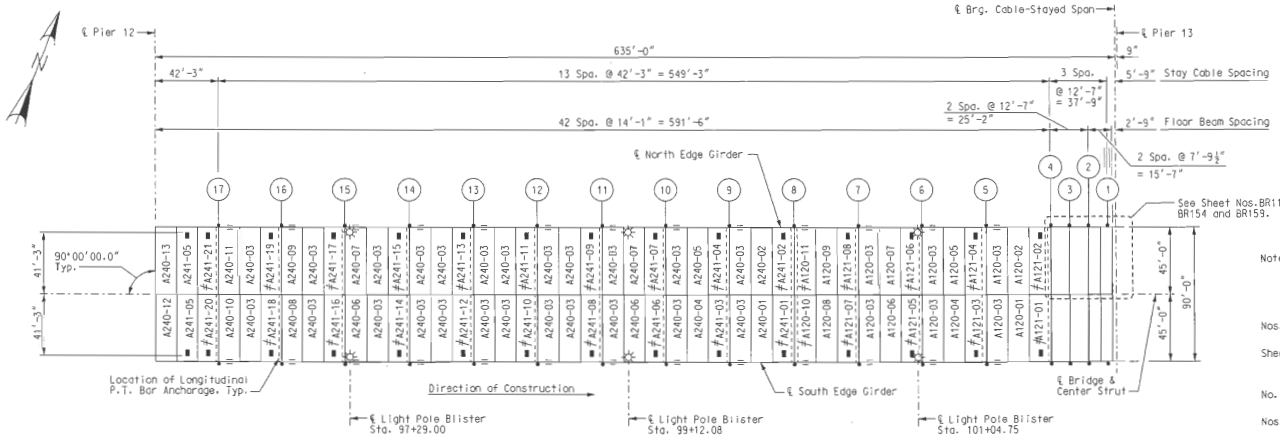

SPAN (12-13)

Notes:

(17) Denotes Stay Cable.

—#— Indicates Field Splice.

■ Indicates Slab Drain. For locations and details, see Sheet Nos. BR163 & BR164.

☼ Indicates location of Light Pole Blister. For details, see Sheet No. BR168.

For Precast Slab Panel details, see Sheet Nos. BR146 thru BR150.

For Cast-in-Place Slab detail at edge of slab at Pier 12, see Sheet No. BR157.

For Cast-in-Place Slab and reinforcing at floor beams, see Sheet Nos. BR154 thru BR158.

For End Reinforcing Detail, see Sheet No. BR153.

For Post-tensioning Bar Anchorage Details, see Sheet No. BR152.

For Framing Plan, see Sheet No. BR110.

All costs associated with materials, fabrication and installation of the deck shall be included in the pay item "Precast Prestressed Slab Panels". This shall include the concrete and reinforcing steel in the precast and cast-in-place concrete and the post-tensioning system, including grouting and stressing.

PRECAST SLAB PANEL LAYOUT

STATE OF MISSOURI
HANS R. HUTTON
NUMBER E-20174
REGISTERED ENGINEER
Hans R. Hutton

DATE
8/20/09

ROUTE	STATE
I-70	MO/IL
DISTRICT	SHEET NO.
6	BR145

COUNTY
ST. LOUIS CITY - MO
ST. CLAIR - IL

JOB NO.
J6I0984

CONTRACT ID.

PROJECT NO.

BRIDGE NO.
A6500

DATE	DESCRIPTION

MISSOURI HIGHWAYS AND TRANSPORTATION COMMISSION
105 WEST CAPITOL
JEFFERSON CITY, MO 65102
1-888-ASK-MODOT (1-888-275-6636)

HNTB
715 KIRK DRIVE
KANSAS CITY, MO 64105-1310
TELEPHONE (816) 472-1201
CERTIFICATE OF AUTHORITY NO. 001270

REGISTERED STRUCTURAL ENGINEER
HANS R. HUTTON
081-006707
STATE OF ILLINOIS
sign date 11-30-2010
Hans R. Hutton
8-20-2009
date

REV.

Detailed JUL 2009
Checked JUL 2009

Note: This drawing is not to scale. Follow dimensions.

\\kcow00\jobs\46440\Bridges\Plans\CdtoMoDOTA6500\J6I0984\A6500-dgn\ZPLOT_B_A6500_001-205_J6I0984_145.dgn

19-AUG-2009 07:18

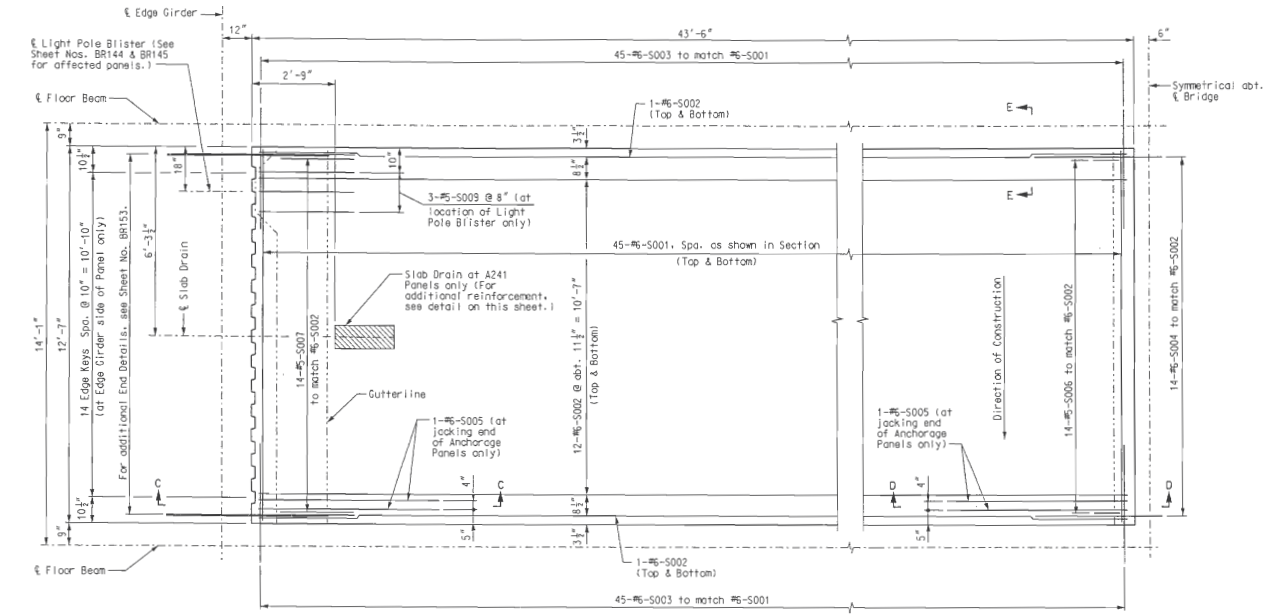

PRECAST SLAB PANEL A240 AND A241

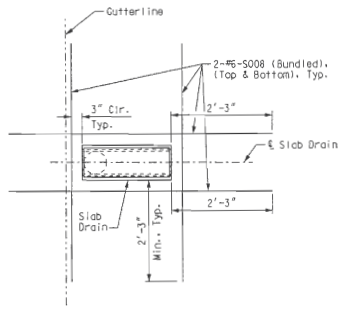

ADDITIONAL REINFORCEMENT AT SLAB DRAIN

Note:
Standard slab reinforcing steel shall be field cut, as required to clear slab drain. Repairs to epoxy coating shall be in accordance with Missouri Standard Specification No. 710.3.3.

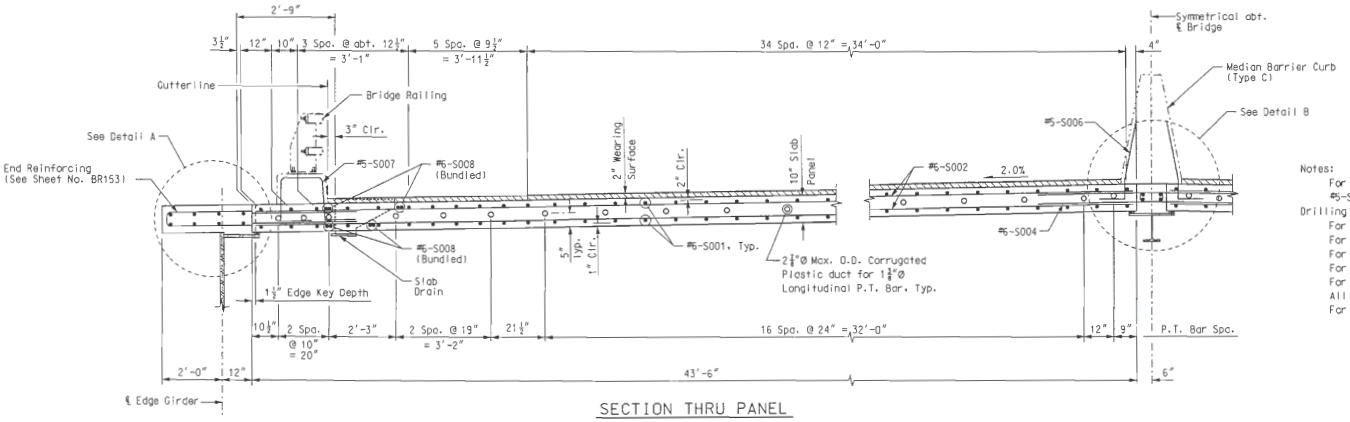

SECTION THRU PANEL

Notes:
For location of Precast Slab Panels, see Sheet Nos. BR144 & BR145.
#5-S006, #5-S007, and #5-S009 bars shall be cast into the panels. Drilling of bars into the panel will not be permitted.
For Details A, B, & Sections C-C thru E-E, see Sheet No. BR151.
For Edge Key Detail, see Sheet No. BR151.
For Bridge Railing Details, see Sheet Nos. BR167 thru BR169.
For Median Barrier Curb (Type C) Details, see Sheet No. BR170.
For Slab Drain Details, see Sheet Nos. BR163 thru BR166.
All reinforcing steel shall be epoxy coated.
For P.T. Bar Anchorage Details, see Sheet No. BR152.

PRECAST SLAB PANEL DETAILS

HANS R. HUTTON NUMBER E-29174 REGISTERED ENGINEER STATE OF MISSOURI
Hans R Hutton

DATE 8/20/09
ROUTE I-70 | STATE MO/IL
DISTRICT 6 | SHEET NO. BR146
COUNTY ST. LOUIS CITY - MO ST. CLAIR - IL
JOB NO. J6I0984
CONTRACT ID.
PROJECT NO.
BRIDGE NO. A6500

DATE	DESCRIPTION

MISSOURI HIGHWAYS AND TRANSPORTATION COMMISSION
105 WEST CAPITOL
JEFFERSON CITY, MO 65102
1-888-ASK-MODOT (1-888-275-6636)

HNTB
715 KIRK DRIVE
KANSAS CITY, MO 64105-1310
TELEPHONE (816) 472-1201
CERTIFICATE OF AUTHORITY NO. 001270

LICENSED STRUCTURAL ENGINEER
HANS R. HUTTON 081-006707
STATE OF ILLINOIS
Hans R Hutton
8-20-2009

REV.

Detailed JUL 2009
Checked JUL 2009

Note: This drawing is not to scale. Follow dimensions.

\\kcow00\jobs\46440\Bridges\Plans\CdtoMoDOTA6500\J6I0984\A6500-dgn\ZPLOT_B_A6500_001-205_J6I0984_146.dgn

19-AUG-2009 07:18

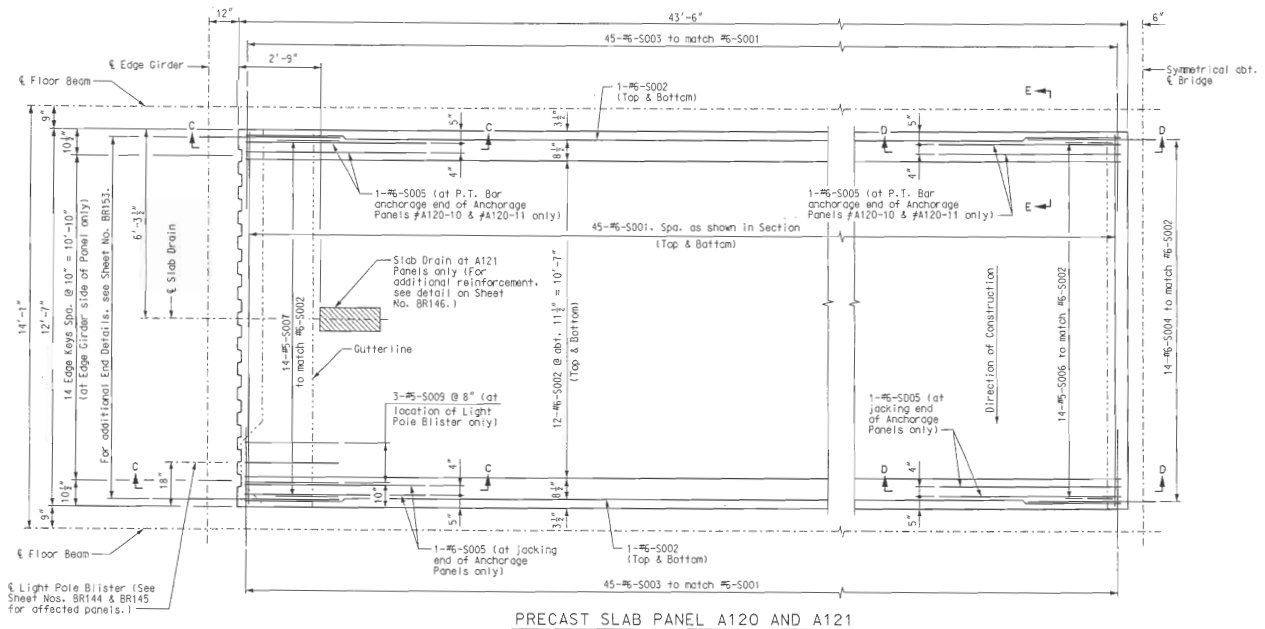

PRECAST SLAB PANEL A120 AND A121

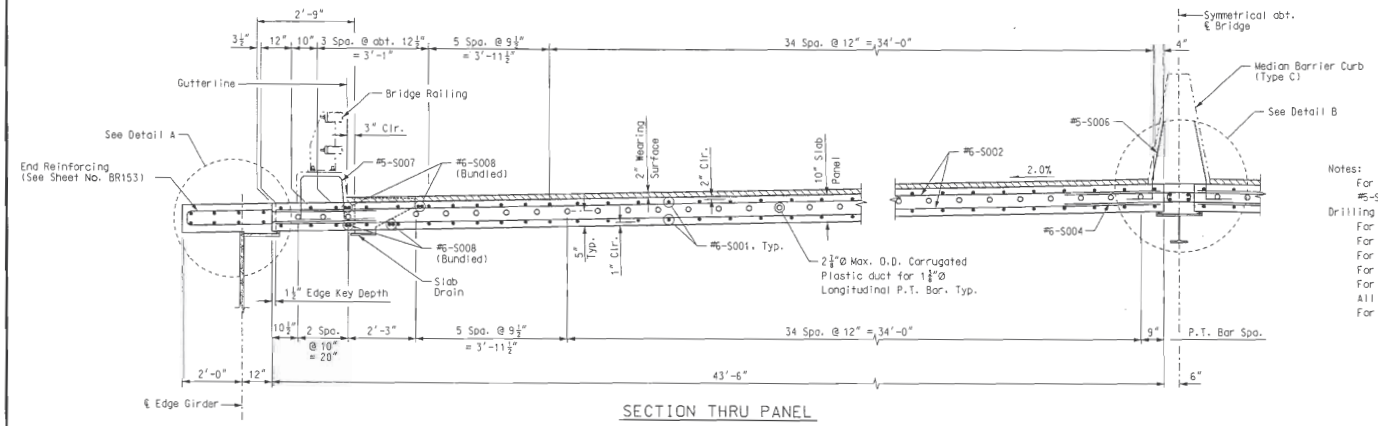

SECTION THRU PANEL

Notes:

For location of Precast Slab Panels, see Sheet Nos. BR144 & BR145.
#5-S006, #5-S007, and #5-S009 bars shall be cast into the panels.
Drilling of bars into the panel will not be permitted.
For Details A, B, & Sections C-C thru E-E, see Sheet No. BR151.
For Edge Key Detail, see Sheet No. BR151.
For Bridge Railing Details, see Sheet Nos. BR167 thru BR169.
For Median Barrier Curb (Type C) Details, see Sheet No. BR170.
For Slab Drain Details, see Sheet Nos. BR163 thru BR166.
All reinforcing steel shall be epoxy coated.
For P.T. Bar Anchorage Details, see Sheet No. BR152.

PRECAST SLAB PANEL DETAILS

Detailed JUL 2009
Checked JUL 2009

Note: This drawing is not to scale. Follow dimensions.

Sheet No. 147 of 205

STATE OF MISSOURI
HANS R. HUTTON
NUMBER E-2874
REGISTERED PROFESSIONAL ENGINEER
Hans R. Hutton

DATE	
8/20/09	
ROUTE I-70	STATE MO/IL
DISTRICT 6	SHEET NO. BR147
COUNTY ST. LOUIS CITY - MO ST. CLAIR - IL	
JOB NO. J6I0984	
CONTRACT ID.	
PROJECT NO.	
BRIDGE NO. A6500	

DATE	DESCRIPTION

MISSOURI HIGHWAYS AND TRANSPORTATION COMMISSION
MoDOT
105 WEST CAPITOL
JEFFERSON CITY, MO 65102
1-888-ASK-MODOT (1-888-275-6636)

HNTB
715 KIRK DRIVE
KANSAS CITY, MO 64105-1310
TELEPHONE (816) 472-1201
CERTIFICATE OF AUTHORITY NO. 001270

LICENSED STRUCTURAL ENGINEER
HANS R. HUTTON
081-006707
STATE OF ILLINOIS
Hans R. Hutton
8-20-2009

REV.

\\kcow00\jobs\46440\Bridges\Plans\CdtoMoDOTA6500\J6I0984\A6500-dgn\ZPLOT_B_A6500_001-205_J6I0984_147.dgn

19-AUG-2009 07:18

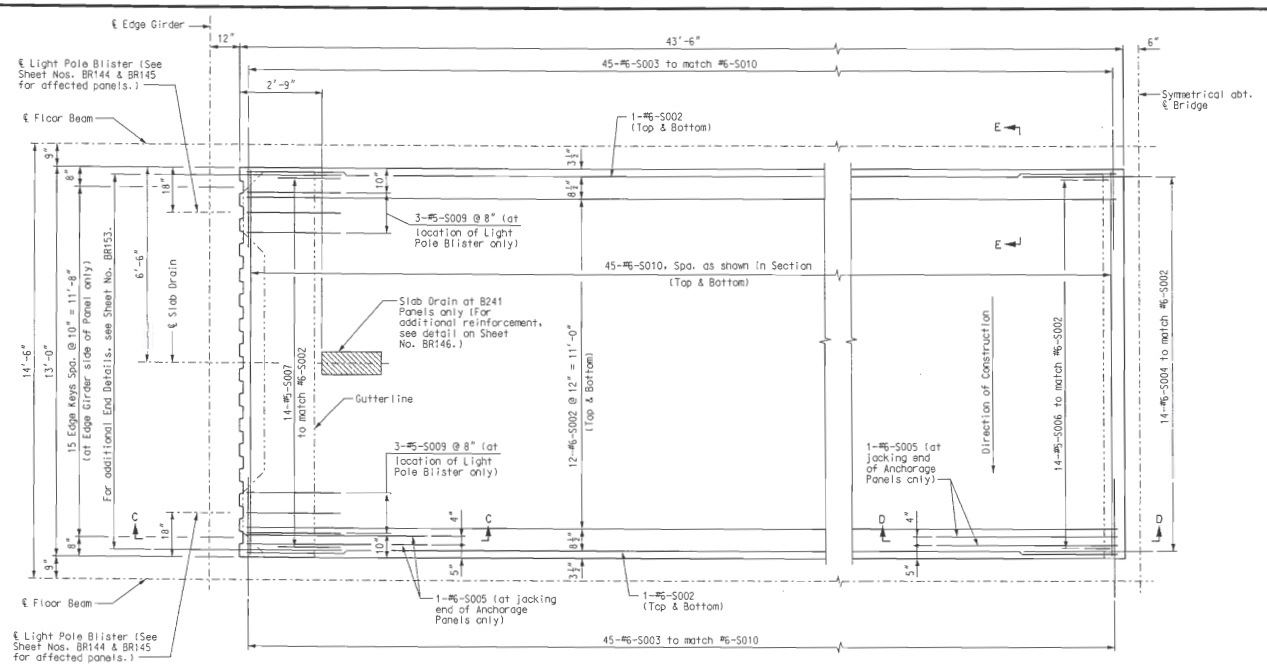

PRECAST SLAB PANEL B240 AND B241

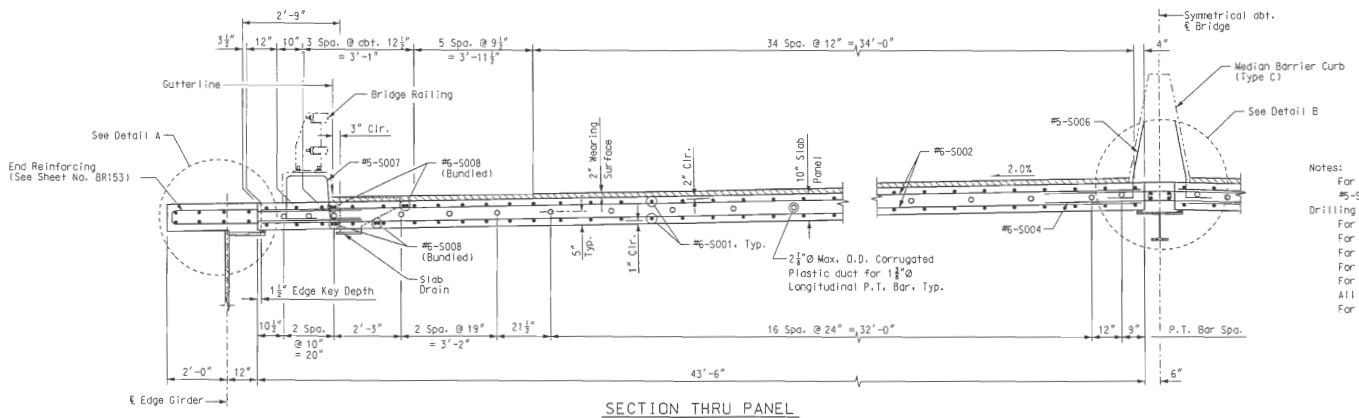

SECTION THRU PANEL

Notes:
For location of Precast Slab Panels, see Sheet Nos. BR144 & BR145.
#5-S006, #5-S007, and #5-S009 bars shall be cast into the panels. Drilling of bars into the panel will not be permitted.
For Details A, B, & Sections C-C thru E-E, see Sheet No. BR151.
For Edge Key Detail, see Sheet No. BR151.
For Bridge Railing Details, see Sheet Nos. BR167 thru BR169.
For Median Barrier Curb (Type C) Details, see Sheet No. BR170.
For Slab Drain Details, see Sheet Nos. BR163 thru BR166.
All reinforcing steel shall be epoxy coated.
For P.T. Bar Anchorage Details, see Sheet No. BR152.

PRECAST SLAB PANEL DETAILS

STATE OF MISSOURI — HANS R. HUTTON — NUMBER E-29174 — REGISTERED ENGINEER
Hans R Hutton

DATE: 8/20/09
ROUTE: I-70 | STATE: MO/IL
DISTRICT: 6 | SHEET NO.: BR148
COUNTY: ST. LOUIS CITY - MO, ST. CLAIR - IL
JOB NO.: J6I0984
CONTRACT ID.:
PROJECT NO.:
BRIDGE NO.: A6500

REV.	DATE	DESCRIPTION

MISSOURI HIGHWAYS AND TRANSPORTATION COMMISSION
MoDOT
105 WEST CAPITOL
JEFFERSON CITY, MO 65102
1-888-ASK-MODOT (1-888-275-6636)

HNTB
715 KIRK DRIVE
KANSAS CITY, MO 64105-1310
TELEPHONE (816) 472-1201
CERTIFICATE OF AUTHORITY NO. 001270

LICENSED STRUCTURAL ENGINEER
HANS R. HUTTON
081-006707
STATE OF ILLINOIS
expires 11-30-2010
Hans R Hutton
8-20-2009

Detailed JUL 2009
Checked JUL 2009

Note: This drawing is not to scale. Follow dimensions.

\\kcaw00\jobs\46440\Bridges\Plans\CdotoMoDOTA6500\J6I0984\A6500-dgn\ZPLOT_B_A6500_001-205_J6I0984_148.dgn

19-AUG-2009 07:18

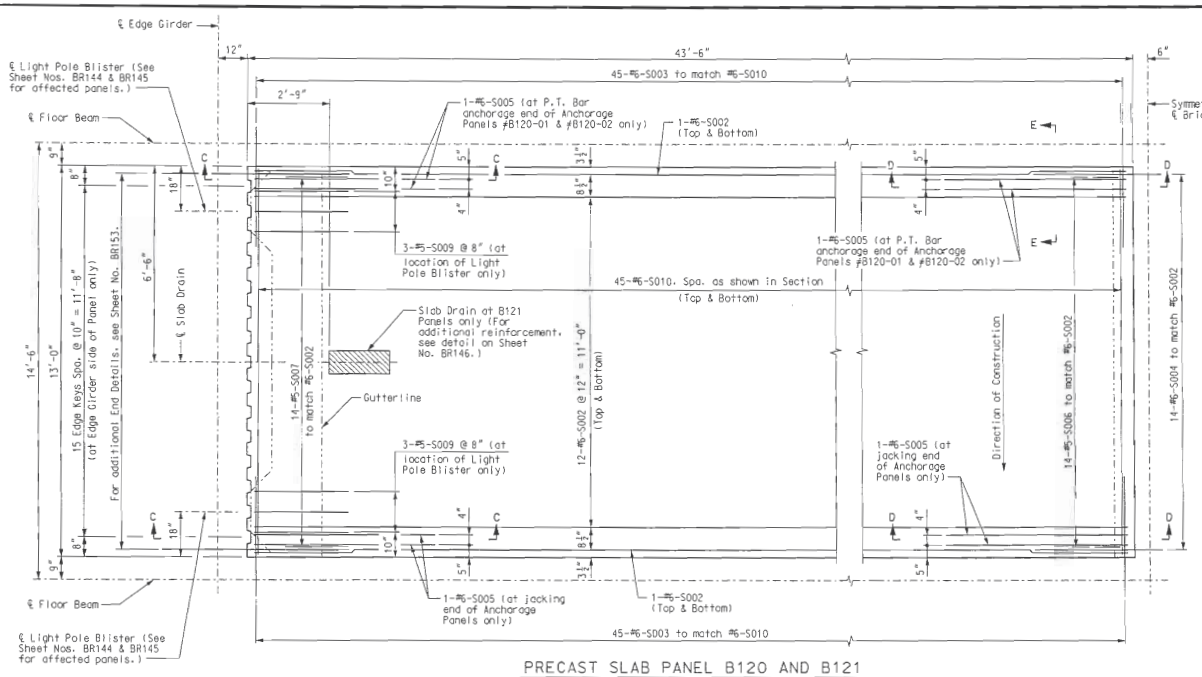

PRECAST SLAB PANEL B120 AND B121

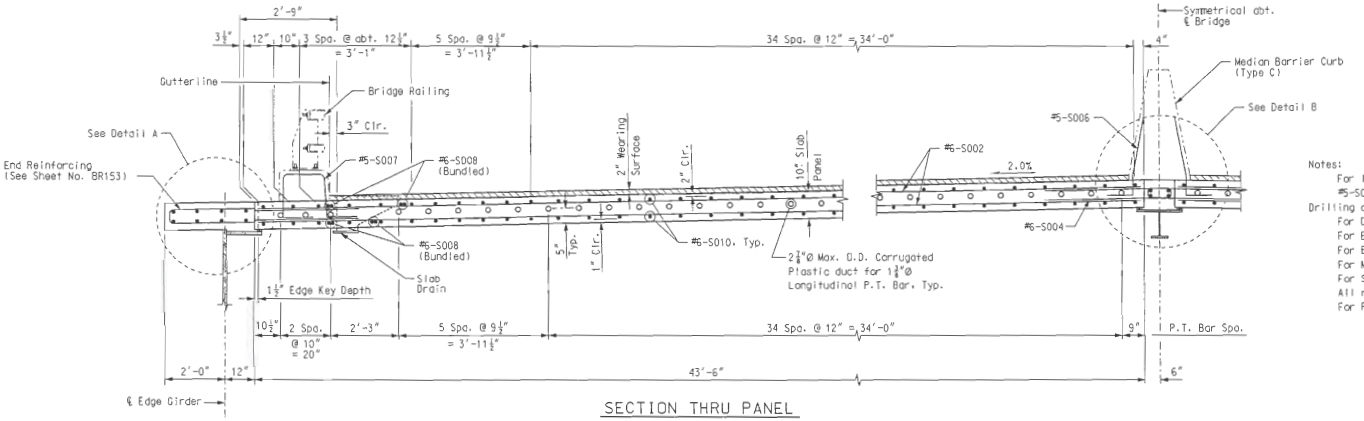

SECTION THRU PANEL

Notes:
For location of Precast Slab Panels, see Sheet Nos. BR144 & BR145.
#5-S006, #5-S007, and #5-S009 bars shall be cast into the panels. Drilling of bars into the panel will not be permitted.
For Details A, B, & Sections C-C thru E-E, see Sheet No. BR151.
For Edge Key Detail, see Sheet No. BR151.
For Bridge Railing Details, see Sheet Nos. BR167 thru BR169.
For Median Barrier Curb (Type C) Details, see Sheet No. BR170.
For Slab Drain Details, see Sheet Nos. BR163 thru BR166.
All reinforcing steel shall be epoxy coated.
For P.T. Bar Anchorage Details, see Sheet No. BR152.

PRECAST SLAB PANEL DETAILS

Detailed JUL 2009
Checked JUL 2009

Note: This drawing is not to scale. Follow dimensions.

\\kcow00\jobs\46440\Bridges\Plans\CdtoMoDOTA6500\J6I0984\A6500-dgn\ZPLOT_B_A6500_001-205_J6I0984_149.dgn

19-AUG-2009 07:18

STATE OF MISSOURI
HANS R. HUTTON
NUMBER E-2974
PROFESSIONAL ENGINEER
Hans R Hutton

DATE 8/20/09
ROUTE I-70
STATE MO/IL
DISTRICT 6
SHEET NO. BR149
COUNTY ST. LOUIS CITY - MO ST. CLAIR - IL
JOB NO. J6I0984
CONTRACT ID.
PROJECT NO.
BRIDGE NO. A6500

DESCRIPTION | DATE

MISSOURI HIGHWAYS AND TRANSPORTATION COMMISSION
105 WEST CAPITOL
JEFFERSON CITY, MO 65102
1-888-ASK-MODOT (1-888-275-6636)

HNTB
715 KIRK DRIVE
KANSAS CITY, MO 64105-1310
TELEPHONE (816) 472-1201
CERTIFICATE OF AUTHORITY NO. 001270

LICENSED STRUCTURAL ENGINEER
HANS R. HUTTON
NO. E-2974
STATE OF MISSOURI
Hans R Hutton
8-20-09

REV.

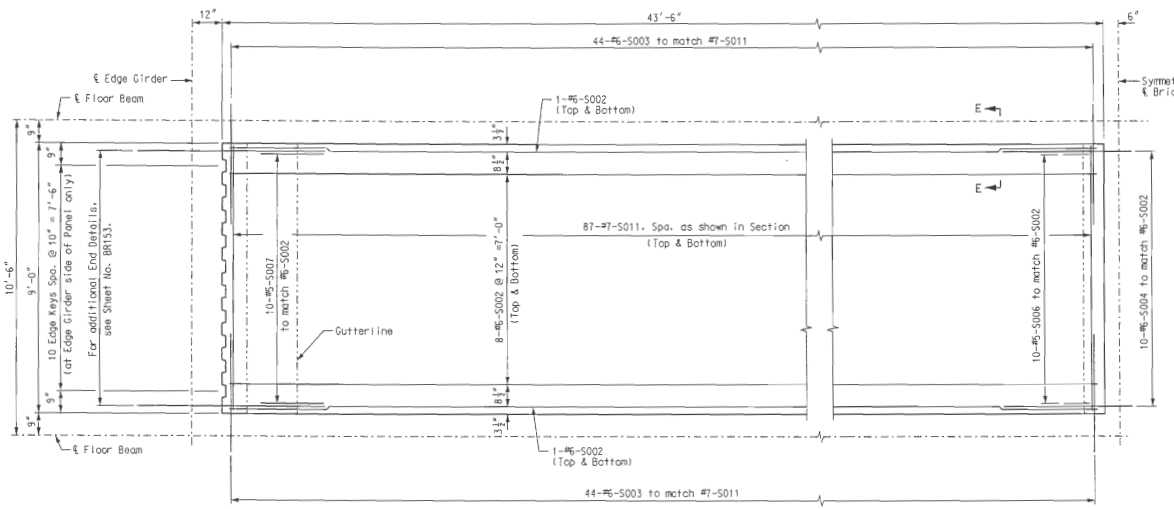

PRECAST SLAB PANEL C000

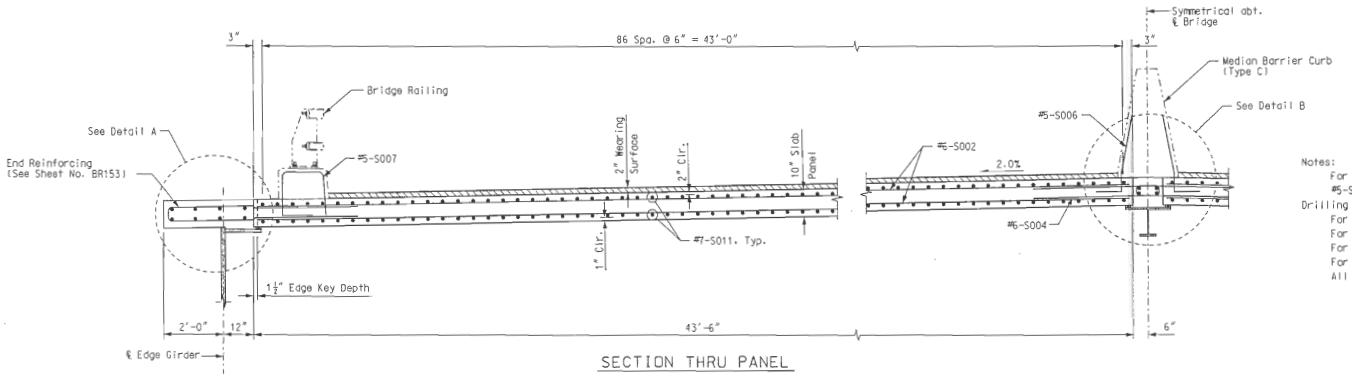

SECTION THRU PANEL

Notes:
For location of Precast Slab Panels, see Sheet Nos. BR144 & BR145.
#5-S006 and #5-S007 bars shall be cast into the panels.
Drilling of bars into the panel will not be permitted.
For Details A, B, & Section E-E, see Sheet No. BR151.
For Edge Key Detail, see Sheet No. BR151.
For Bridge Railing Details, see Sheet Nos. BR167 thru BR169.
For Median Barrier Curb (Type C) Details, see Sheet No. BR170.
All reinforcing steel shall be epoxy coated.

PRECAST SLAB PANEL DETAILS

STATE OF MISSOURI
HANS R. HUTTON
NUMBER E-29174
Hans R. Hutton
DATE 8/20/09

ROUTE	STATE
I-70	MO/IL
DISTRICT	SHEET NO.
6	BR150

COUNTY
ST. LOUIS CITY - MO
ST. CLAIR - IL
JOB NO.
J6I0984
CONTRACT ID.
PROJECT NO.
BRIDGE NO.
A6500

DATE	DESCRIPTION

MISSOURI HIGHWAYS AND TRANSPORTATION COMMISSION
105 WEST CAPITOL
JEFFERSON CITY, MO 65102
1-888-ASK-MODOT (1-888-275-6636)

HNTB
715 KIRK DRIVE
KANSAS CITY, MO 64105-1310
TELEPHONE (816) 472-1201
CERTIFICATE OF AUTHORITY NO. 001270

LICENSED STRUCTURAL ENGINEER
HANS R. HUTTON
081-006707
STATE OF ILLINOIS
Hans R. Hutton
8-20-2009

REV.

Detailed JUL 2009
Checked JUL 2009

Note: This drawing is not to scale. Follow dimensions.

\\kcow00\jobs\46440\Bridges\Plans\CdtoMoDOTA6500\J6I0984\A6500-dgn\ZPL0T_B_A6500_001-205_J6I0984_150.dgn

19-AUG-2009 07:18

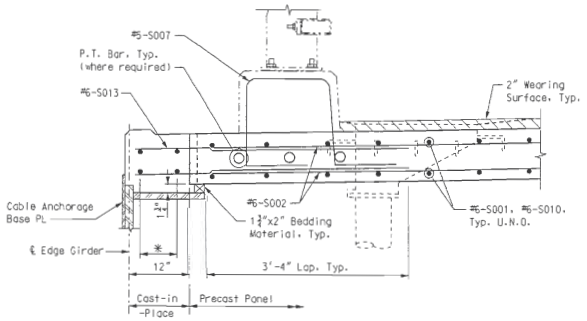

AT CABLE ANCHORAGE

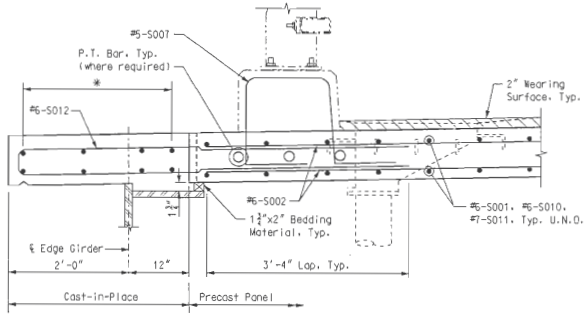

BETWEEN CABLES

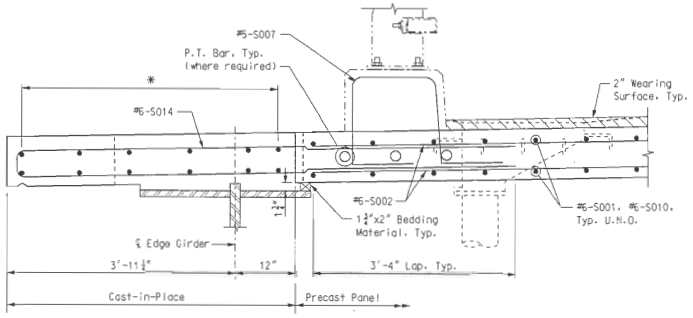

AT PIER TABLE

DETAIL A

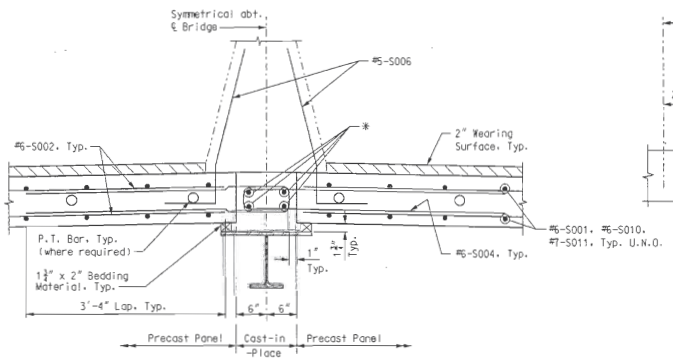

DETAIL B

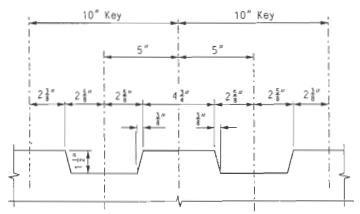

EDGE KEY DETAIL

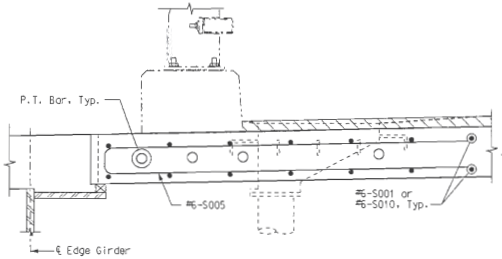

SECTION C-C

(For additional information, see Detail A on this sheet.)

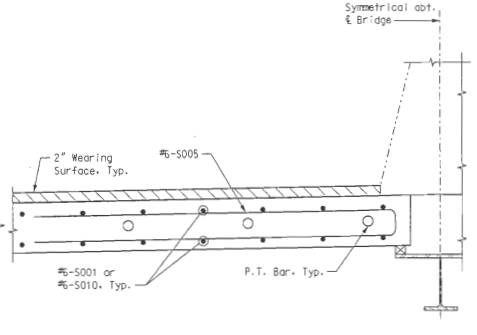

SECTION D-D

(For additional information, see Detail B on this sheet.)

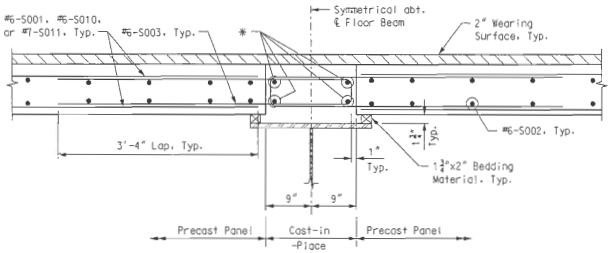

SECTION E-E

Notes:

* For reinforcing in cast-in-place portions of slab, see Sheet Nos. BR154 thru BR158.

For location of Details A, B, & Sections C-C thru E-E, see Sheet Nos. BR146 thru BR150.

For Drainage Details, see Sheet Nos. BR163 thru BR166.

For P.T. Bar Anchorage Details, see Sheet No. BR152.

Continuous bedding material shall satisfy the requirements of ASTM D 1751 with the following additional requirement: A 1½" thick test specimen shall not compress more than ⅛" when subjected to a uniform compressive stress equal to 350 psi. Sampling and testing methods shall conform to ASTM D 1751.

Bedding material shall be positively bonded to the top of the structural steel flanges with a non-corrosive bonding agent approved by the bedding material manufacturer prior to the placement of the panels. The cost shall be included in the pay item, "Precast Prestressed Slab Panels".

All galvanized embeds shall be galvanized in accordance with ASTM A123 after fabrication.

Contractor shall submit shop drawings of the precast panel to the Engineer for approval.

The Contractor shall devise a scheme for lifting the precast panels and shall submit the scheme to the Engineer for review. For concrete that has attained a minimum compressive strength of 4000 psi: Allowable Tension = 190 psi; Allowable Compression = 2400 psi.

Insert for the lifting devices shall be provided by the Contractor and approved by the Engineer. Insert shall provide an approximate factor of safety of 3. All inserts shall be galvanized. The cost shall be included in the pay item "Precast Prestressed Slab Panels".

MISC. PRECAST SLAB PANEL DETAILS

STATE OF MISSOURI
HANS R. HUTTON
NUMBER E-2014
REGISTERED PROFESSIONAL ENGINEER
Hans R. Hutton

DATE
8/20/09

ROUTE	STATE
I-70	MO/IL
DISTRICT	SHEET NO.
6	BR151

COUNTY
ST. LOUIS CITY - MO
ST. CLAIR - IL

JOB NO.
J6I0984

CONTRACT ID.

PROJECT NO.

BRIDGE NO.
A6500

REV.	DESCRIPTION	DATE

MISSOURI HIGHWAYS AND TRANSPORTATION COMMISSION
MoDOT
105 WEST CAPITOL
JEFFERSON CITY, MO 65102
1-888-ASK-MODOT (1-888-275-6636)

HNTB
715 KIRK DRIVE
KANSAS CITY, MO 64105-1310
TELEPHONE (816) 472-1201
CERTIFICATE OF AUTHORITY NO. 001270

LICENSED STRUCTURAL ENGINEER
HANS R. HUTTON
081-006707
STATE OF ILLINOIS
Hans R. Hutton
8-20-2009

Detailed JUL 2009
Checked JUL 2009

Note: This drawing is not to scale. Follow dimensions.

\\kcow00\jobs\46440\Bridges\Plans\CdtoMoDOTA6500\J6I0984\A6500-dgn\ZPLOT_B_A6500_001-205_J6I0984_151.dgn

19-AUG-2009 07:19

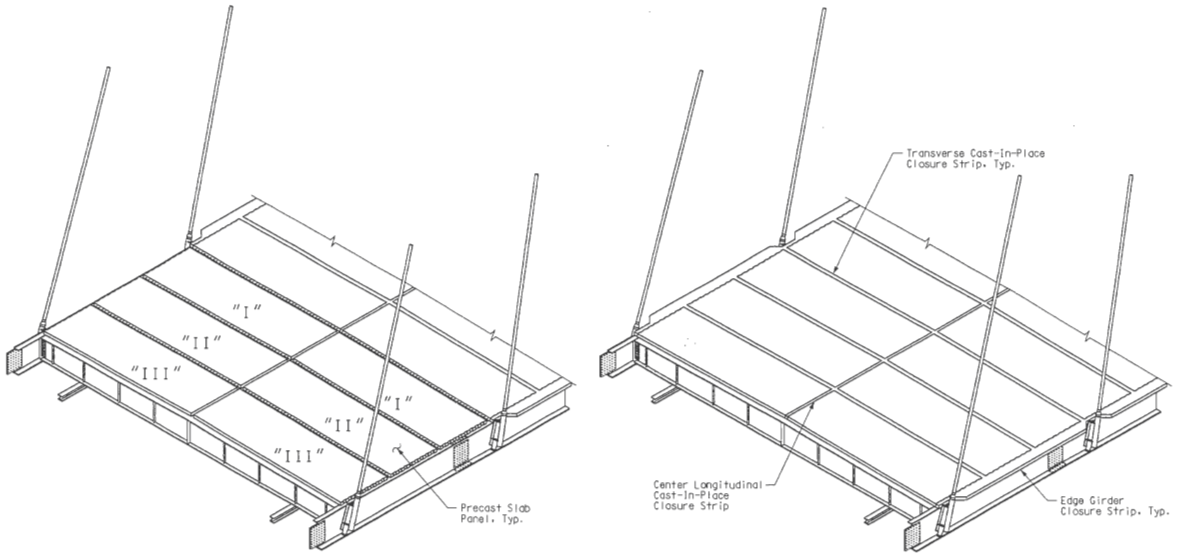

PRECAST PANEL ERECTION SEQUENCE

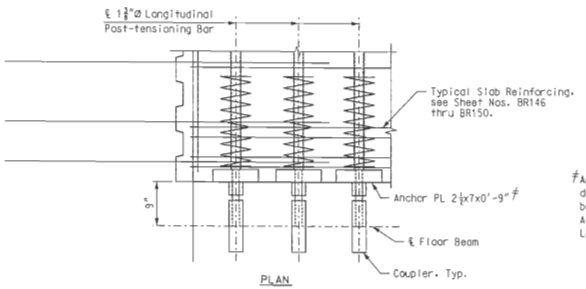

PLAN

#Anchor plate dimensions shown are minimum for anchorage devices that are not tested. Alternative anchor plates may be used provided they pass the Special Anchorage Device Acceptance Test, detailed in Article 10.3.2.3 of "AASHTO LRFD Bridge Construction Specifications".

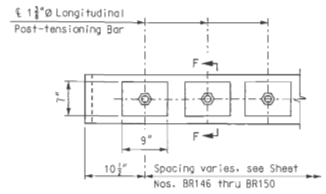

ELEVATION

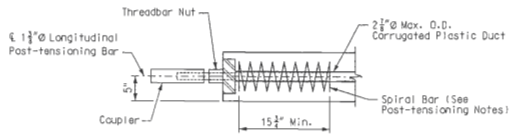

SECTION F-F

LONGITUDINAL P.T. BAR ANCHORAGE DETAILS

(Grout tube is not shown for clarity)

Post-tensioning Notes:

Spiral tie at each post-tensioned bar shall conform to AASHTO M32 and shall be 6"Ø spirals of W5.5 smooth wire with a minimum of 9 turns and a pitch equal to 1¾". Cost for the spiral bars shall be included in the price-bid for "Precast Prestressed Slab Panels".

Threaded post-tensioning bars shall conform to the requirements of AASHTO M275, Grade 150, Type II.

Post-tensioning bar, spiral tie, anchor plate, threadbar nut and coupler shall be epoxy coated.

Jacking stress for longitudinal post-tensioning bars shall be 105 ksi.

Post-tensioning bar for the effective prestress at the beginning of service (creep and shrinkage of the concrete and relaxation of steel not included) shall be 100.7 ksi.

Assumed friction loss coefficient is:
k=0.0002/ft.

Assumed anchor set is $\frac{1}{16}$".

Fabrication lengths for post-tensioning bars shall consider effects of elastic elongation during stressing.

Adequate embedment of P.T. bars into coupler shall be provided to adequately develop the strength of the bar.

Ducts for post-tensioning bars shall be grouted following jacking of all bars within a set of precast slab panels (Panels "I", "II", & "III" at each side of ℄ Bridge). Vent and grout tubes shall be provided as required to achieve adequate grout distributon throughout the length of each duct.

Notes:

For Precast Slab Panel Suggested Erection Sequence, see Sheet No. BR180.

Costs associated with the materials, fabrication and installation of the precast panels shall be included in the pay item, "Precast Prestressed Slab Panels". This shall include the post-tensioning bar, anchor plate, threadbar nut, coupler and duct.

MISC. PRECAST SLAB PANEL DETAILS

Detailed JUL 2009
Checked JUL 2009

Note: This drawing is not to scale. Follow dimensions.

\\kcaw00\jobs\46440\Bridges\Plans\CdtoMoDOTA6500\J6I0984\A6500-dan\ZPLOT_B_A6500_001-205_J6I0984_152.dan

19-AUG-2009 07:19

STATE OF MISSOURI
HANS R. HUTTON
NUMBER E-26174
REGISTERED ENGINEER
Hans R. Hutton

DATE 8/20/09
ROUTE I-70
STATE MO/IL
DISTRICT 6
SHEET NO. BR152
COUNTY ST. LOUIS CITY - MO ST. CLAIR - IL
JOB NO. J6I0984
CONTRACT ID.
PROJECT NO.
BRIDGE NO. A6500

REV.	DESCRIPTION	DATE

MISSOURI HIGHWAYS AND TRANSPORTATION COMMISSION
105 WEST CAPITOL
JEFFERSON CITY, MO 65102
1-888-ASK-MODOT (1-888-275-6636)

HNTB
715 KIRK DRIVE
KANSAS CITY, MO 64105-1310
TELEPHONE 816-472-1201
CERTIFICATE OF AUTHORITY NO. 001270

LICENSED STRUCTURAL ENGINEER
HANS R. HUTTON
081-006707
STATE OF ILLINOIS
EXPIRES 11-30-2010
Hans R. Hutton
8-20-2009

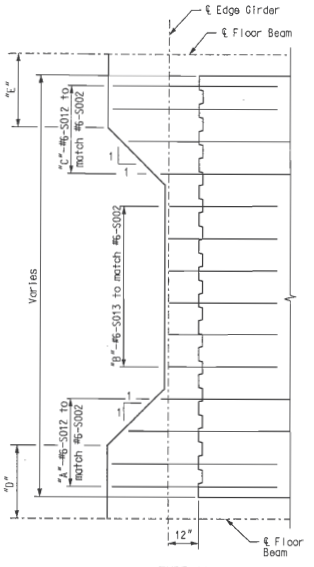

TYPE 1A

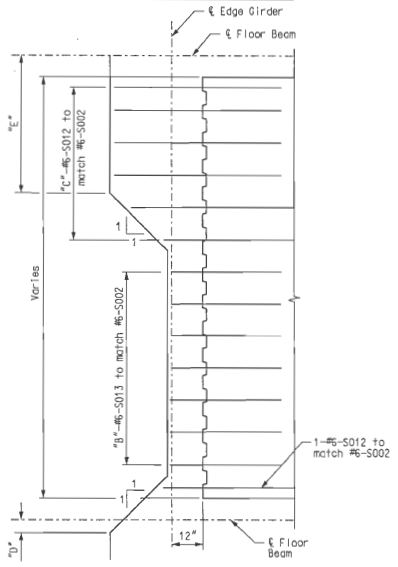

TYPE 1B

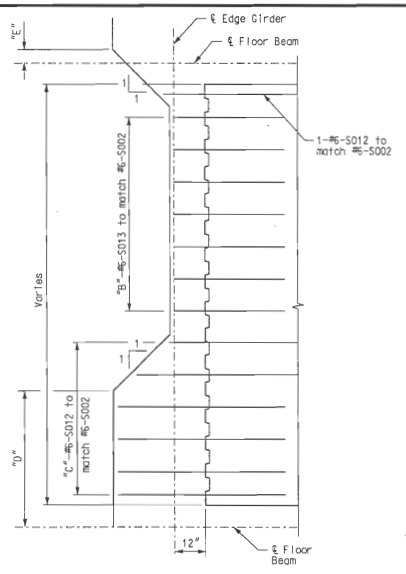

TYPE 1C

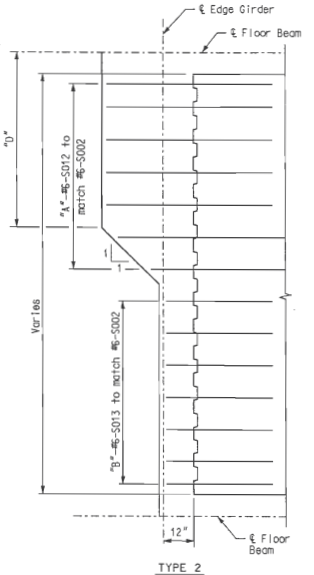

TYPE 2

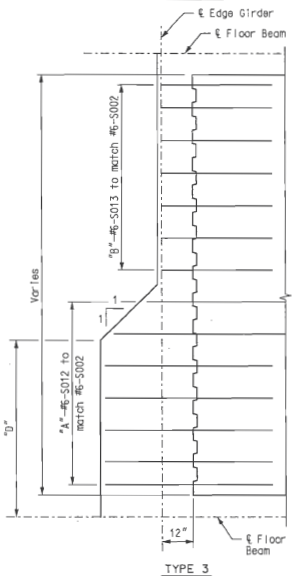

TYPE 3

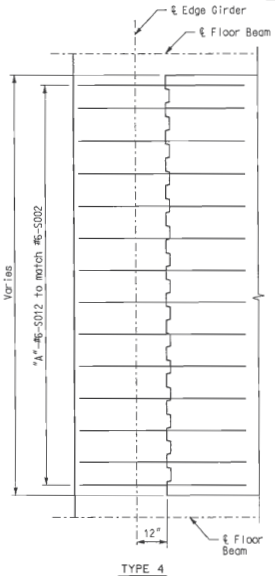

TYPE 4

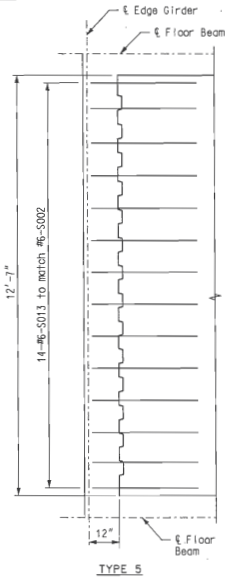

TYPE 5

END REINFORCING DETAIL

PRECAST PANEL DATA						
PANEL	TYPE	"A"	"B"	"C"	"D"	"E"
A120-01	2	12	2	—	9'-7"	—
A120-02	3	12	2	—	9'-7"	—
A120-03	4	14	—	—	—	—
A120-04	2	12	2	—	9'-8"	—
A120-05	3	12	2	—	9'-8"	—
A120-06	2	13	1	—	10'-7"	—
A120-07	3	13	1	—	10'-7"	—
A120-08	2	14	0	—	11'-7"	—
A120-09	3	14	0	—	11'-7"	—
≠A120-10	4	14	—	—	—	—
≠A120-11	4	14	—	—	—	—
≠A121-01	5	—	—	—	—	—
≠A121-02	5	—	—	—	—	—
≠A121-03	3	10	4	—	7'-7"	—
≠A121-04	2	10	4	—	7'-7"	—
≠A121-05	3	9	5	—	7'-0"	—
≠A121-06	2	9	5	—	7'-0"	—
≠A121-07	3	8	6	—	6'-4"	—
≠A121-08	2	8	6	—	6'-4"	—
A240-01	2	14	0	—	12'-7"	—
A240-02	3	14	0	—	12'-7"	—
A240-03	4	14	—	—	—	—
A240-04	2	14	0	—	13'-10"	—
A240-05	3	14	0	—	13'-10"	—
A240-06	4	14	—	—	—	—
A240-07	4	14	—	—	—	—
A240-08	3	14	0	—	13'-0"	—
A240-09	2	14	0	—	13'-0"	—
A240-10	3	14	0	—	11'-10"	—
A240-11	2	14	0	—	11'-10"	—
A240-12	✱	—	—	—	—	—
A240-13	✱	—	—	—	—	—
≠A241-01	1C	—	5	8	5'-9"	18"
≠A241-02	1B	—	5	8	18"	5'-9"
≠A241-03	1C	—	6	7	5'-0"	3"
≠A241-04	1B	—	6	7	3"	5'-0"
A241-05	4	14	—	—	—	—
≠A241-06	1A	6	6	2	4'-3"	8"
≠A241-07	1A	2	6	6	8"	4'-3"
≠A241-08	1A	5	6	3	3'-7"	21"
≠A241-09	1A	3	6	5	21"	3'-7"
≠A241-10	1A	5	4	5	2'-9"	2'-11"
≠A241-11	1A	5	4	5	2'-11"	2'-9"
≠A241-12	1A	4	4	6	22"	4'-2"
≠A241-13	1A	6	4	4	4'-2"	22"
≠A241-14	1A	2	5	7	11"	5'-5"
≠A241-15	1A	7	5	2	5'-5"	11"
≠A241-16	1A	2	4	8	0"	6'-7"
≠A241-17	1A	8	4	2	6'-7"	0"
≠A241-18	1B	—	3	10	13"	7'-11"
≠A241-19	1C	—	3	10	7'-11"	13"
≠A241-20	2	11	3	—	9'-4"	—
≠A241-21	3	11	3	—	9'-4"	—
A241-22	2	14	0	—	13'-10"	—
A241-23	3	14	0	—	13'-10"	—
A241-24	4	14	—	—	—	—
A241-25	4	14	—	—	—	—

5

✱ For End Reinforcing Detail at Pier Table, see Sheet No. BR157.

PRECAST PANEL DATA						
PANEL	TYPE	"A"	"B"	"C"	"D"	"E"
≠B120-01	4	14	—	—	—	—
≠B120-02	4	14	—	—	—	—
B120-03	4	14	—	—	—	—
B120-04	3	14	0	—	13'-1"	—
B120-05	2	14	0	—	13'-1"	—
B120-06	3	14	0	—	12'-0"	—
B120-07	2	14	0	—	12'-0"	—
B120-08	3	13	1	—	11'-0"	—
B120-09	2	13	1	—	11'-0"	—
B120-10	3	12	2	—	10'-0"	—
B120-11	2	12	2	—	10'-0"	—
B120-12	3	11	3	—	9'-0"	—
B120-13	2	11	3	—	9'-0"	—
B120-14	3	10	4	—	8'-1"	—
B120-15	2	10	4	—	8'-1"	—
B120-16	3	9	5	—	7'-1"	—
B120-17	2	9	5	—	7'-1"	—
B120-18	3	8	6	—	6'-1"	—
B120-19	2	8	6	—	6'-1"	—
≠B121-01	1B	—	5	8	17"	6'-2"
≠B121-02	1C	—	5	8	6'-2"	17"
≠B121-03	2	9	5	—	6'-11"	—
≠B121-04	3	9	5	—	6'-11"	—
≠B121-05	2	10	4	—	7'-7"	—
≠B121-06	3	10	4	—	7'-7"	—
≠B121-07	2	10	4	—	8'-4"	—
≠B121-08	3	10	4	—	8'-4"	—
≠B121-09	2	11	3	—	9'-0"	—
≠B121-10	3	11	3	—	9'-0"	—
≠B121-11	2	11	3	—	9'-8"	—
≠B121-12	3	11	3	—	9'-8"	—
≠B121-13	2	12	2	—	10'-4"	—
≠B121-14	3	12	2	—	10'-4"	—
≠B121-15	2	13	1	—	11'-0"	—
≠B121-16	3	13	1	—	11'-0"	—
B240-01	✱	—	—	—	—	—
B240-02	✱	—	—	—	—	—
B240-03	4	14	—	—	—	—
B240-04	2	14	0	—	12'-3"	—
B240-05	3	14	0	—	12'-3"	—
B240-06	2	14	0	—	13'-5"	—
B240-07	3	14	0	—	13'-5"	—
B240-08	3	14	0	—	14'-2"	—
B240-09	2	14	0	—	14'-2"	—
B241-01	4	14	—	—	—	—
≠B241-02	3	12	2	—	9'-9"	—
≠B241-03	2	12	2	—	9'-9"	—
≠B241-04	1C	—	3	10	8'-4"	13"
≠B241-05	1B	—	3	10	13"	8'-4"
≠B241-06	1A	2	3	9	7'-0"	0"
≠B241-07	1A	9	3	2	0"	7'-0"
≠B241-08	1A	7	5	2	5'-8"	11"
≠B241-09	1A	2	5	7	11"	5'-8"
≠B241-10	1A	6	4	4	4'-4"	23"
≠B241-11	1A	4	4	6	23"	4'-4"
≠B241-12	1A	5	5	4	3'-2"	2'-9"
≠B241-13	1A	4	5	5	2'-9"	3'-2"
≠B241-14	1A	4	5	5	2'-0"	3'-8"
≠B241-15	1A	5	5	4	3'-8"	2'-0"
≠B241-16	1A	2	6	6	10"	4'-6"
≠B241-17	1A	6	6	2	4'-6"	10"
≠B241-18	1B	—	6	7	4"	5'-4"
≠B241-19	1C	—	6	7	5'-4"	4"
C000-01	4	10	—	—	—	—

Notes:

Contractor shall coordinate the placement of all reinforcing bars in the precast slab panels with the placement of all shear connectors shown on Sheet Nos. BR111 thru BR121 and BR133.

For additional shear connector placement information, see Sheet No. BR135.

Exposed cut ends and areas of damaged epoxy coating shall be repaired before visible oxidation of the surface occurs. Patching material, compatible with the coating and inert in concrete, shall be applied as recommended by the manufacturer. The material shall be epoxy and must be suitable for application in the field.

MISC. PRECAST SLAB PANEL DETAILS

HANS R. HUTTON — NUMBER E-29174 — REGISTERED PROFESSIONAL ENGINEER — STATE OF MISSOURI

DATE: 5/17/10

ROUTE	STATE
I-70	MO/IL
DISTRICT	SHEET NO.
6	BR153

COUNTY: ST. LOUIS CITY - MO, ST. CLAIR - IL

JOB NO.: J6I0984

CONTRACT ID.:

PROJECT NO.:

BRIDGE NO.: A6500

DESCRIPTION	DATE
⚠ Added panel marks	5-17-10

MISSOURI HIGHWAYS AND TRANSPORTATION COMMISSION

105 WEST CAPITOL
JEFFERSON CITY, MO 65102
1-888-ASK-MODOT (1-888-275-6636)

HNTB
715 KIRK DRIVE
KANSAS CITY, MO 64105-1310
TEL: 816-472-1201
CERTIFICATE OF AUTHORITY NO. 001270

HANS R. HUTTON — 081-006707 — REGISTERED STRUCTURAL ENGINEER — STATE OF ILLINOIS

5-17-2010

REV.

Detailed JUL 2009
Checked JUL 2009

Note: This drawing is not to scale. Follow dimensions.

\\kcow00\jobs\46440\Bridges\Plans\CdtoMoDOTA6500\J6I0984\A6500-dgn\ZPLOT_B_A6500_153-205_J6I0984_153.dgn

17-MAY-2010 11:32

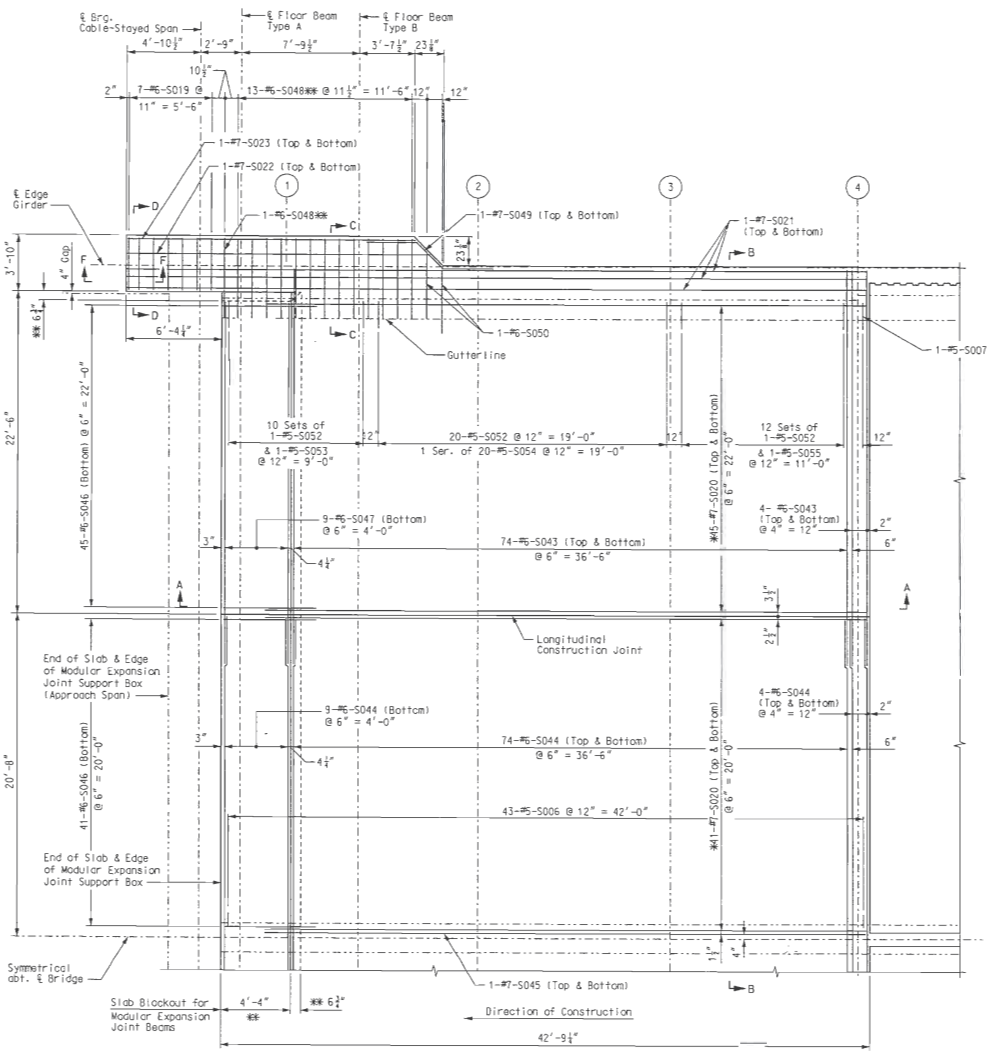

PARTIAL PLAN

(Pier 10 shown, Pier 13 similar)

Notes:

(3) Denotes Stay Cable.

For location of cable anchorage cutouts, see Sheet No. BR153.
For Sections A-A thru D-D and Section F-F, see Sheet No. BR155.

* Field cut to fit. #7-S020 bars shall be field cut to clear modular expansion joint hardware.

** Dimensions dependent upon modular expansion joint selection. Reinforcing lengths and spacing shall be adjusted as required.

CAST-IN-PLACE SLAB DETAILS

STATE OF MISSOURI
HANS R. HUTTON
NUMBER E-29174
PROFESSIONAL ENGINEER
Hans R. Hutton

DATE
8/20/09

ROUTE	STATE
I-70	MO/IL
DISTRICT	SHEET NO.
6	BR154

COUNTY
ST. LOUIS CITY - MO
ST. CLAIR - IL

JOB NO.
J6I0984

CONTRACT ID.

PROJECT NO.

BRIDGE NO.
A6500

DESCRIPTION	DATE

MISSOURI HIGHWAYS AND TRANSPORTATION COMMISSION
105 WEST CAPITOL
JEFFERSON CITY, MO 65102
1-888-ASK-MODOT (1-888-275-6636)

HNTB
715 KIRK DRIVE
KANSAS CITY, MO 64105-1310
TELEPHONE (816) 472-1201
CERTIFICATE OF AUTHORITY NO. 000270

LICENSED STRUCTURAL ENGINEER
HANS R. HUTTON
081-006707
STATE OF ILLINOIS
EXPIRES 11-30-2010
Hans R. Hutton
8-20-2009

REV.

Detailed JUL 2009
Checked JUL 2009

Note: This drawing is not to scale. Follow dimensions.

\\kcow00\jobs\46440\Bridges\Plans\CdtoMoDOTA6500\J6I0984\A6500-dan\ZPLOT_B_A6500_001-205_J6I0984_154.dan

19-AUG-2009 07:19

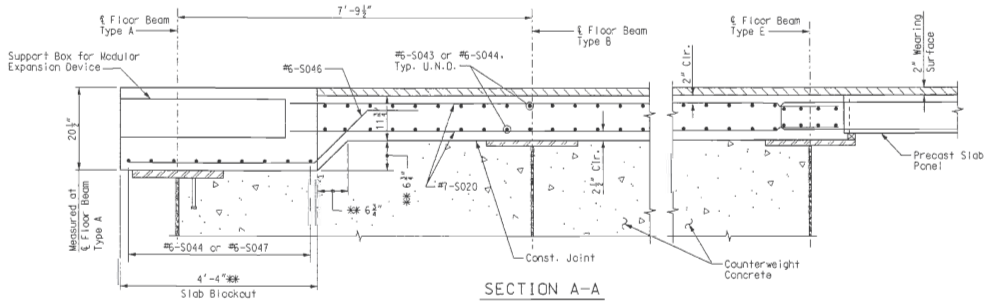

SECTION A-A

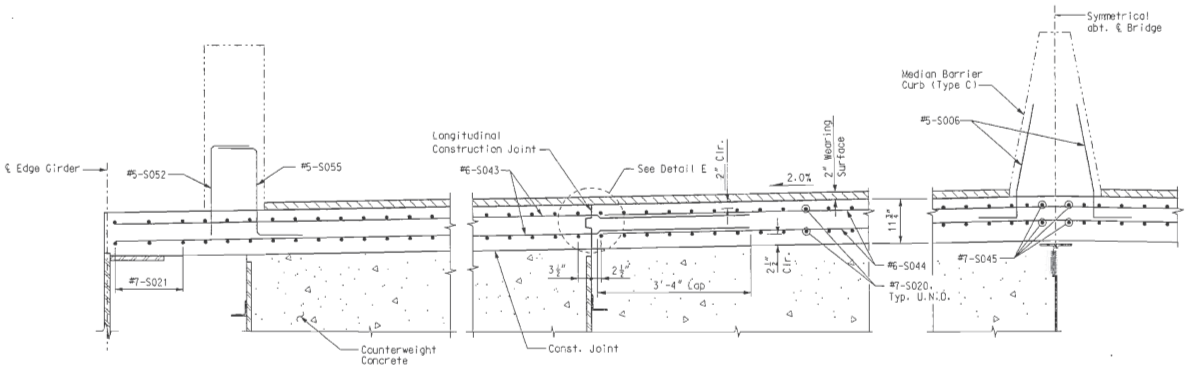

SECTION B-B

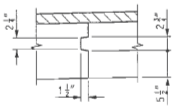

DETAIL E

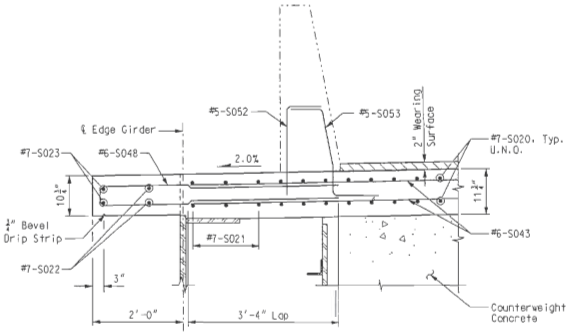

SECTION C-C

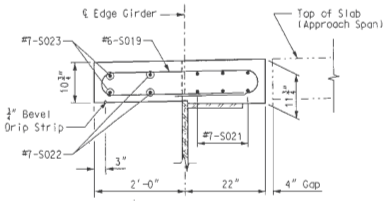

SECTION D-D

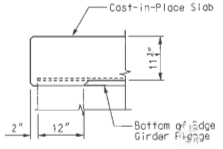

SECTION F-F

Notes:
For locations of Sections A-A thru D-D and Section F-F, see Sheet No. BR154.
** Dimensions dependent upon modular expansion joint selection. Reinforcing lengths and spacing shall be adjusted as required.

CAST-IN-PLACE SLAB DETAILS

STATE OF MISSOURI
HANS R. HUTTON
NUMBER E-29174
REGISTERED ENGINEER
Hans R. Hutton

DATE 8/20/09
ROUTE I-70 | STATE MO/IL
DISTRICT 6 | SHEET NO. BR155
COUNTY ST. LOUIS CITY + MO ST. CLAIR - IL
JOB NO. J6I0984
CONTRACT ID.
PROJECT NO.
BRIDGE NO. A6500

DESCRIPTION	DATE

MISSOURI HIGHWAYS AND TRANSPORTATION COMMISSION
105 WEST CAPITOL
JEFFERSON CITY, MO 65102
1-888-ASK-MODOT (1-888-275-6636)

HNTB
715 KIRK DRIVE
KANSAS CITY, MO 64105-1310
TELEPHONE (816) 472-1201
CERTIFICATE OF AUTHORITY NO. 001270

LICENSED STRUCTURAL ENGINEER
HANS R. HUTTON
081-016707
STATE OF ILLINOIS
expires 11-30-2010
Hans R. Hutton
8-20-2009
DATE

REV.

Detailed JUL 2009
Checked JUL 2009

Note: This drawing is not to scale. Follow dimensions.

\\kcow00\jobs\46440\Bridges\Plans\CdotoMoDOTA6500\J6I0984\A6500-dgn\ZPLOT_B_A6500_001-205_J6I0984_155.dgn

19-AUG-2009 07:19

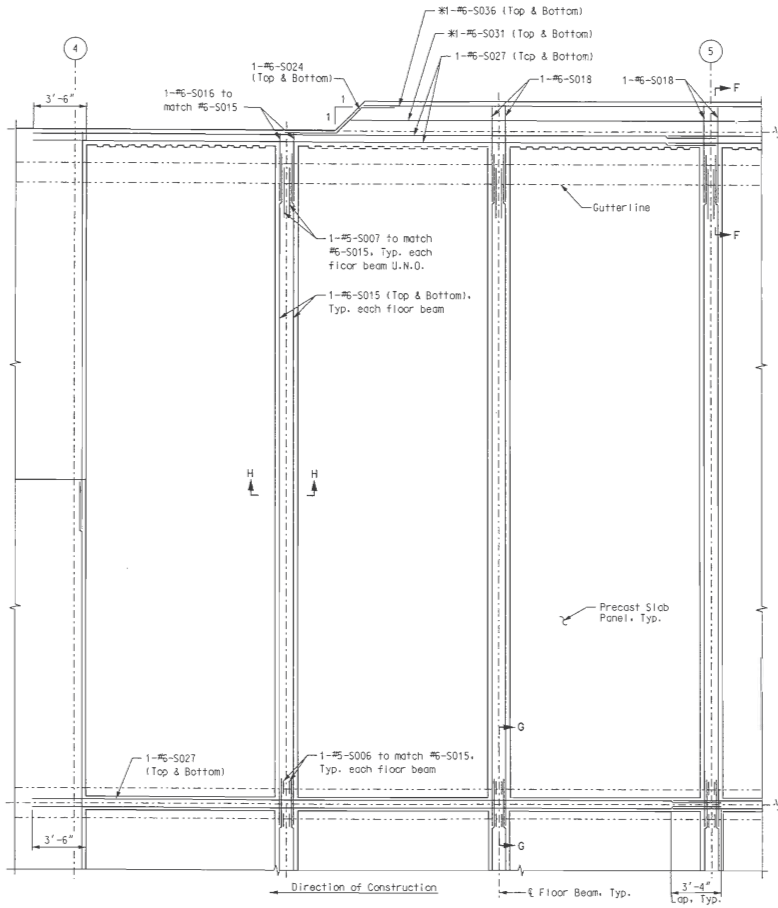

PARTIAL PLAN

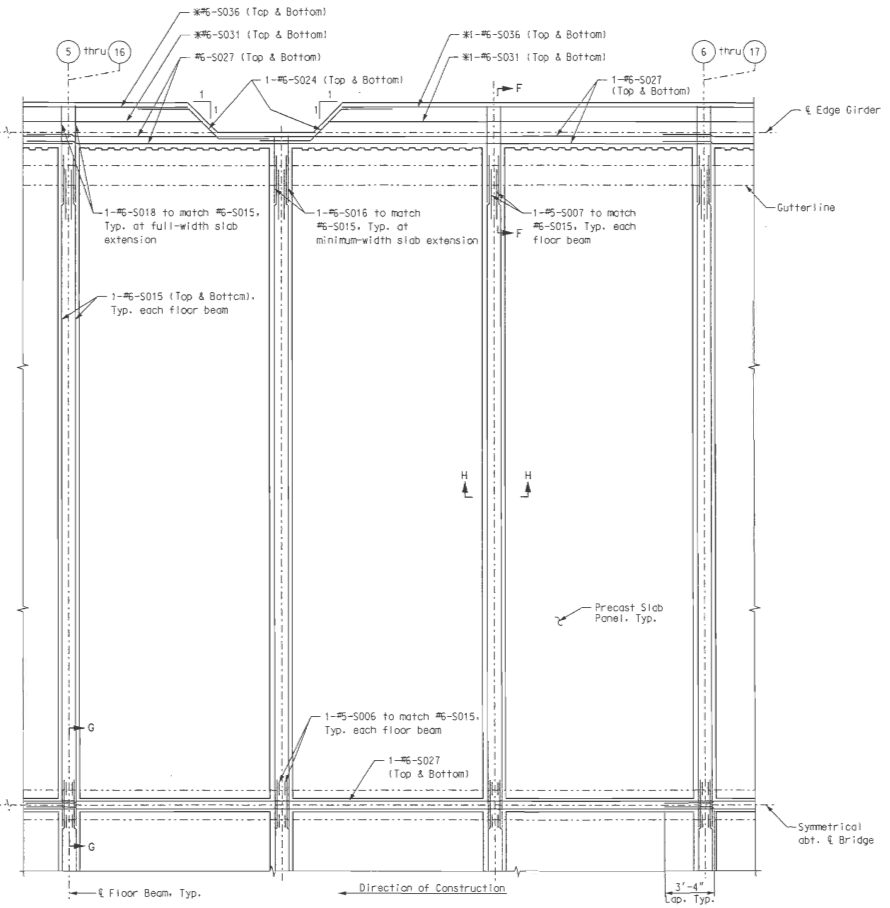

PARTIAL PLAN

Notes:

(5) Denotes Stay Cable.

* Field cut to fit.
For location and spacing of end reinforcing in Precast Slab Panels, see Sheet No. BR153.
For Sections F-F thru H-H see Sheet No. BR158.
For location of cable anchorage cutouts, see Sheet No. BR153.

CAST-IN-PLACE SLAB DETAILS

STATE OF MISSOURI
HANS R. HUTTON
NUMBER E-29174
REGISTERED PROFESSIONAL ENGINEER
Hans R. Hutton

DATE 8/20/09
ROUTE I-70
STATE MO/IL
DISTRICT 6
SHEET NO. BR156
COUNTY ST. LOUIS CITY - MO ST. CLAIR - IL
JOB NO. J6I0984
CONTRACT ID.
PROJECT NO.
BRIDGE NO. A6500

DATE	DESCRIPTION

MISSOURI HIGHWAYS AND TRANSPORTATION COMMISSION
105 WEST CAPITOL
JEFFERSON CITY, MO 65102
1-888-ASK-MODOT (1-888-275-6636)

HNTB
715 KIRK DRIVE
KANSAS CITY, MO 64105-1310
TELEPHONE (816) 472-1201
CERTIFICATE OF AUTHORITY NO. 001270

LICENSED STRUCTURAL ENGINEER
HANS R. HUTTON
081-006707
STATE OF ILLINOIS
Hans R. Hutton
8-20-2009

REV.

Detailed JUL 2009
Checked JUL 2009

Note: This drawing is not to scale. Follow dimensions.

\\kcow00\jobs\46440\Bridges\Plans\CdtoMoDOTA6500\J6I0984\A6500-dgn\ZPLOT_B_A6500_001-205_J6I0984_156.dgn

19-AUG-2009 07:19

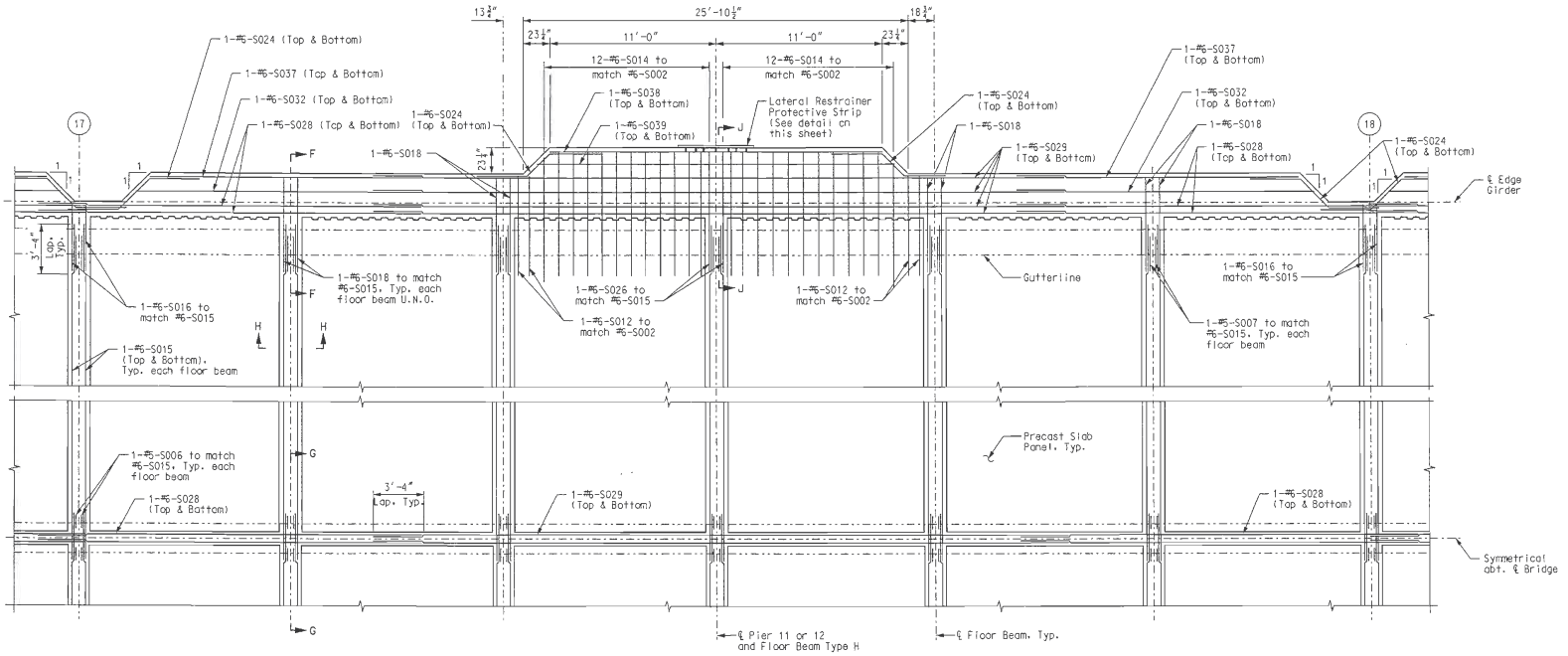

PARTIAL PLAN

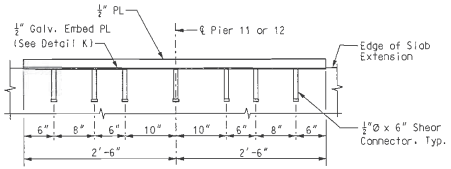

PLAN - LATERAL RESTRAINER PROTECTIVE STRIP

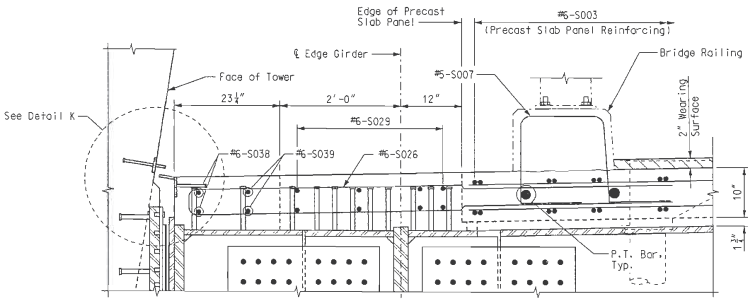

SECTION J-J

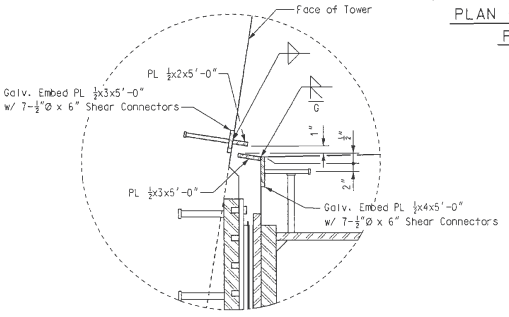

DETAIL K

Notes:

(17) Denotes Stay Cable.

For location of cable anchorage cutouts, see Sheet No. BR153.

For location and spacing of additional end reinforcing in Precast Slab Panels, see Sheet No. BR153.

For Sections F-F thru H-H, see Sheet No. BR158.

Bars #6-S012 and #6-S014 are included in the pay item "Precast Prestressed Slab Panels". See Detail A on Sheet No. BR151.

All costs associated with the materials, fabrication and installation of the galvanized embed plates and shear studs shall be included in the pay item "Fabricated Structural Carbon Steel (Miscellaneous)".

CAST-IN-PLACE SLAB DETAILS

STATE OF MISSOURI HANS R. HUTTON NUMBER E-29174 REGISTERED PROFESSIONAL ENGINEER
Hans R. Hutton

DATE 8/20/09
ROUTE I-70 | STATE MO/IL
DISTRICT 6 | SHEET NO. BR157
COUNTY ST. LOUIS CITY - MO ST. CLAIR - IL
JOB NO. J6I0984
CONTRACT ID.
PROJECT NO.
BRIDGE NO. A6500

DATE	DESCRIPTION

MISSOURI HIGHWAYS AND TRANSPORTATION COMMISSION
105 WEST CAPITOL
JEFFERSON CITY, MO 65102
1-888-ASK-MODOT (1-888-275-6636)

HNTB
715 KIRK DRIVE
KANSAS CITY, MO 64105-1310
TELEPHONE (816) 472-1201
CERTIFICATE OF AUTHORITY NO. 001270

LICENSED STRUCTURAL ENGINEER
HANS R. HUTTON
081-006707
STATE OF ILLINOIS
Hans R. Hutton
8-20-2009

REV.

Detailed JUL 2009
Checked JUL 2009

Note: This drawing is not to scale. Follow dimensions.

\\kcow00\jobs\46440\Bridges\Plans\CdtoMoDOTA6500\J6I0984\A6500-dgn\ZPLOT_8_A6500_001-205_J6I0984_157.dgn

19-AUG-2009 07:20

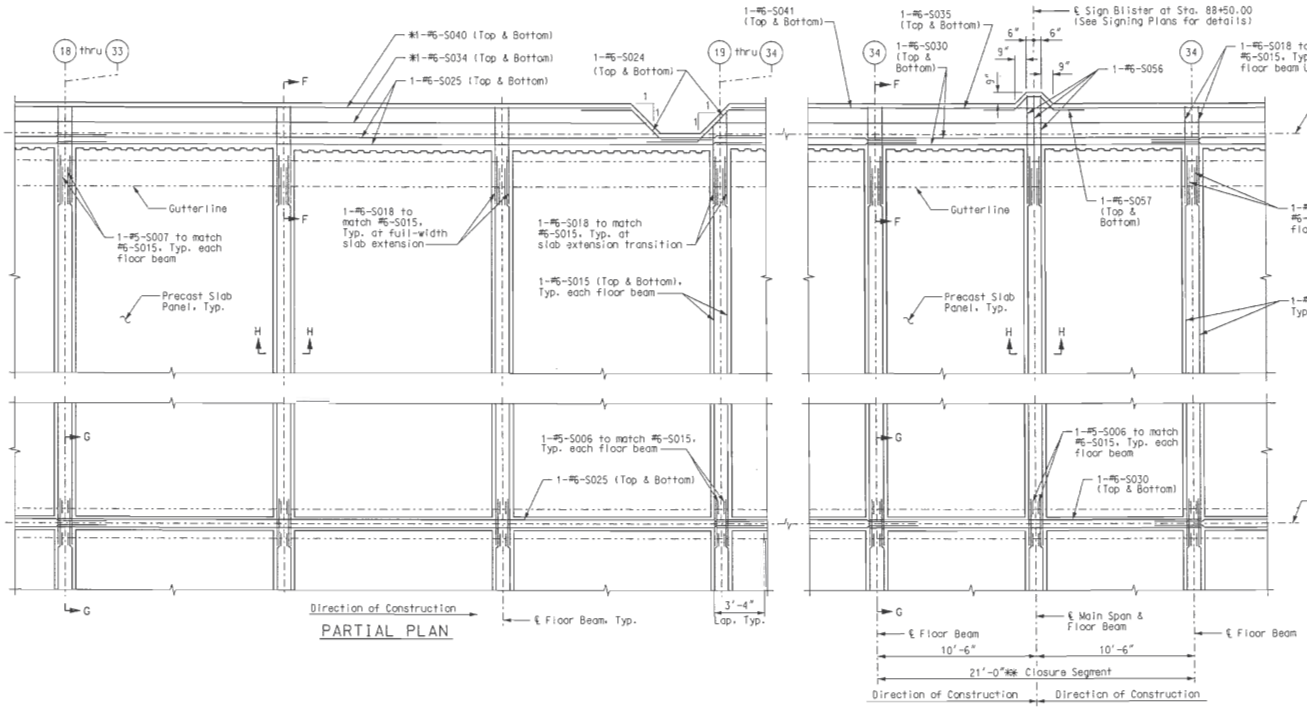

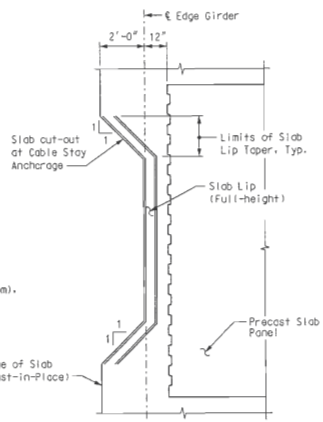

LIP DETAIL - PLAN VIEW

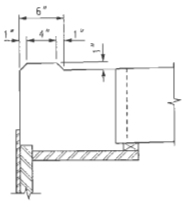

LIP DETAIL - SECTION

Note:
Taper slab lip from full height to zero height within specified limits. See Lip Detail - Plan View.

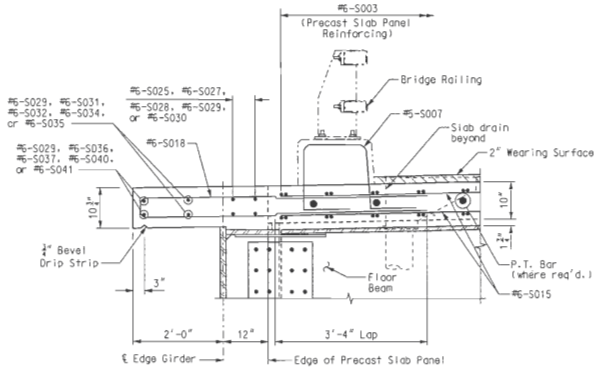

SECTION F-F

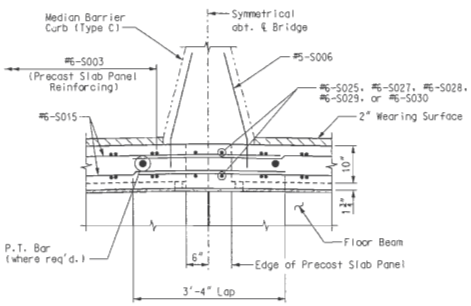

SECTION G-G

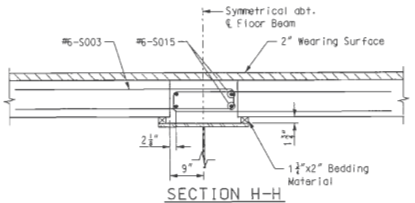

SECTION H-H

(Some Precast Slab Panel reinforcing not shown for clarity)

Notes:

(34) Denotes Stay Cable.

* Field cut to fit.

** Field verify dimension at time of closure. Notify the Engineer if dimension shown varies from actual dimension by more than 2".

For additional locations of Sections F-F thru H-H, see Sheet Nos. BR156 & BR157.

For location and spacing of end reinforcing in Precast Slab Panels and cable anchorage cutouts, see Sheet No. BR153.

CAST-IN-PLACE SLAB DETAILS

STATE OF MISSOURI HANS R. HUTTON NUMBER E-28174 REGISTERED ENGINEER
Hans R. Hutton

DATE 8/20/09
ROUTE I-70 STATE MO/IL
DISTRICT 6 SHEET NO. BR158
COUNTY ST. LOUIS CITY - MO ST. CLAIR - IL
JOB NO. J6I0984
CONTRACT ID.
PROJECT NO.
BRIDGE NO. A6500

DESCRIPTION | DATE

MISSOURI HIGHWAYS AND TRANSPORTATION COMMISSION
105 WEST CAPITOL
JEFFERSON CITY, MO 65102
1-888-ASK-MODOT (1-888-275-6636)

HNTB
715 KIRK DRIVE
KANSAS CITY, MO 64105-1310
TELEPHONE (816) 472-1201
CERTIFICATE OF AUTHORITY NO. 00170

LICENSED STRUCTURAL ENGINEER
HANS R. HUTTON 081-006707
STATE OF ILLINOIS
Hans R. Hutton
8-20-2009

REV.

Detailed JUL 2009
Checked JUL 2009

Note: This drawing is not to scale. Follow dimensions.

\\kcow00\jobs\46440\Bridges\Plans\CdtoMoDOTA6500\J6I0984\A6500-dan\ZPLOT_B_A6500_001-205_J6I0984_158.dgn

19-AUG-2009 07:20

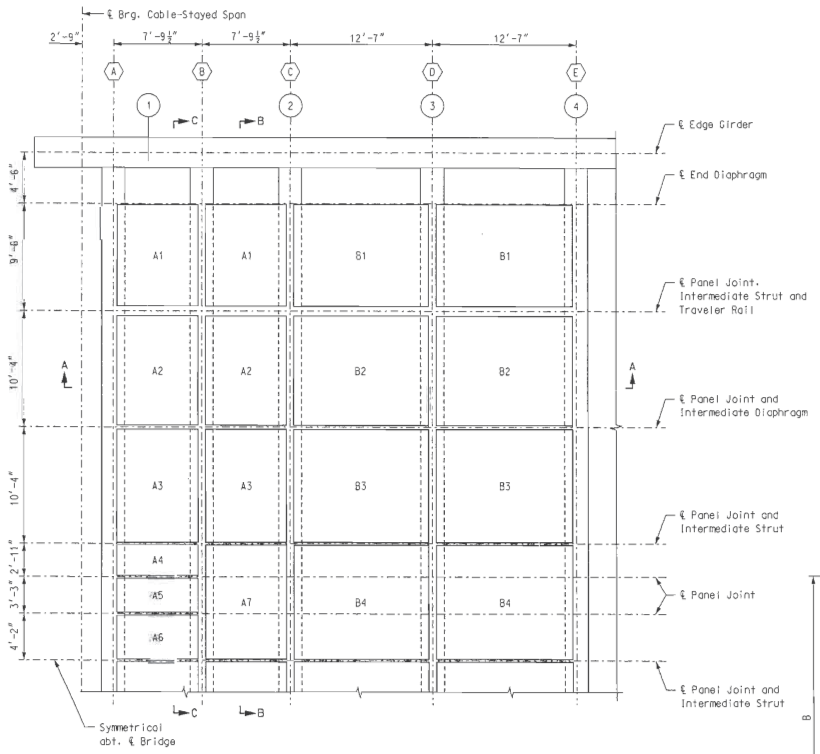

PLAN - PRECAST COUNTERWEIGHT PANEL

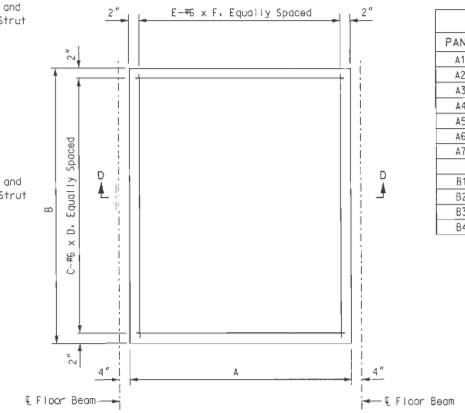

PLAN - PANEL REINFORCEMENT

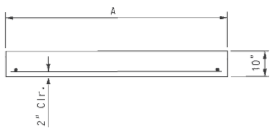

SECTION D-D

COUNTERWEIGHT - SUGGESTED ERECTION SEQUENCE

Erect Field Piece, including steel attachments and details. See Sheet Nos. BR181 thru BR183 for details.

Place precast counterweight panels, bedding material, and seal plates, see Sheet No. BR160 for Counterweight Plan. Install Shear Connectors to web of Floor Beams

Cast counterweight in successive lifts in accordance with Sheet No. BR160 and Sheet Nos. BR181 thru BR183. The counterweight concrete shall obtain a minimum compressive strength of 2000 psi prior to placing additional lifts of concrete.

The erection sequence shown is not represented as being the complete step-by-step procedure and is included for information only. The Contractor shall determine the complete erection sequence and equipment required for erection of the bridge.

Whether the Contractor proposes an alternate sequence or one similar to that shown on this drawing, the Contractor shall prepare a detailed erection sequence, including calculations and detailed drawings, to be submitted to the Engineer for review as part of the shop drawings.

The Contractor shall be responsible for the erection sequence in its entirety. The Contractor's bid shall be based solely upon the erection sequence proposed by the Contractor.

PRECAST PANEL DATA

PANEL	A	B	C	D	E	F
A1	7'-1 1/2"	9'-0"	14	6'-9 1/2"	8	8'-8"
A2	7'-1 1/2"	9'-9"	15	6'-9 1/2"	8	9'-5"
A3	7'-1 1/2"	10'-0 1/2"	15	6'-9 1/2"	8	9'-8 1/2"
A4	7'-1 1/2"	2'-8"	5	6'-9 1/2"	8	2'-4"
A5	7'-1 1/2"	3'-0"	5	6'-9 1/2"	8	2'-8"
A6	7'-1 1/2"	3'-11"	6	6'-9 1/2"	8	3'-7"
A7	7'-1 1/2"	10'-1"	15	6'-9 1/2"	8	9'-9"
B1	11'-11"	9'-0"	14	11'-7"	13	8'-8"
B2	11'-11"	9'-9"	15	11'-7"	13	9'-5"
B3	11'-11"	10'-0 1/2"	15	11'-7"	13	9'-8 1/2"
B4	11'-11"	10'-1"	15	11'-7"	13	9'-9"

Notes:

(#) Denotes Stay Cable.

(#) Denotes Floor Beam Type.

For Sections A-A thru C-C, see Sheet No. BR160.

All cast-in-place concrete placed above the top flanges of the edge girders and floor beams shall be included in the pay item "Precast Prestressed Slab Panels".

All cast-in-place counterweight concrete, (below the top of the floor beam top flange) precast counterweight panels, Intermediate Struts, Intermediate Diaphragms, End Diaphragms, Seal Plates, associated fasteners, and bedding materials shall be included in the pay item "Counterweight Concrete". This shall include all labor, materials and incidentals required for the fabrication and installation of these items.

The concrete for the cast-in-place counterweight shall be Class B. The unit weight of the counterweight concrete shall be 135-pcf.

The concrete for the precast counterweight panels shall be Class A-1. Lifting devices may be added to the panels, lifting devices are the responsibility of the Contractor and shall be incidental to the cost of "Counterweight Concrete".

Steel for the Intermediate Struts, Intermediate Diaphragms, and End Diaphragms shall be ASTM A709, Grade 50W. Steel for the Seal Plates shall be ASTM A709, Grade 50, galvanized.

Bolts connecting struts and diaphragms to the floor beams shall be 1" diameter, A325, Type 3.

COUNTERWEIGHT DETAILS

HANS R. HUTTON
NUMBER E-39774
REGISTERED PROFESSIONAL ENGINEER
STATE OF MISSOURI
Hans R. Hutton

DATE 8/20/09
ROUTE I-70 | STATE MO/IL
DISTRICT 6 | SHEET NO. BR159
COUNTY ST. LOUIS CITY - MO, ST. CLAIR - IL
JOB NO. J6I0984
CONTRACT ID.
PROJECT NO.
BRIDGE NO. A6500

DESCRIPTION | DATE | REV.

MISSOURI HIGHWAYS AND TRANSPORTATION COMMISSION
105 WEST CAPITOL
JEFFERSON CITY, MO 65102
1-888-ASK-MODOT (1-888-275-6636)

HNTB
715 KIRK DRIVE
KANSAS CITY, MO 64105-1310
TELEPHONE (816) 472-1201
CERTIFICATE OF AUTHORITY NO. 001270

HANS R. HUTTON
062-012707
PROFESSIONAL STRUCTURAL ENGINEER
STATE OF ILLINOIS
Hans R. Hutton
8-20-2009

Detailed JUL 2009
Checked JUL 2009

Note: This drawing is not to scale. Follow dimensions.

\\kcow00\jobs\46440\Bridges\Plans\CotcMoDOTA6500\J6I0984\A6500-dgn\ZPLOT_B_A6500_001-205_J6I0984_159.dgn 19-AUG-2009 07:20

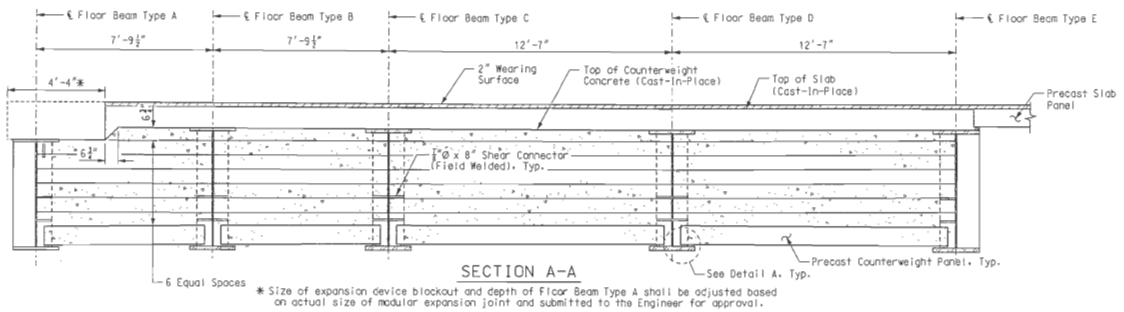

SECTION A-A

* Size of expansion device blockout and depth of Floor Beam Type A shall be adjusted based on actual size of modular expansion joint and submitted to the Engineer for approval.

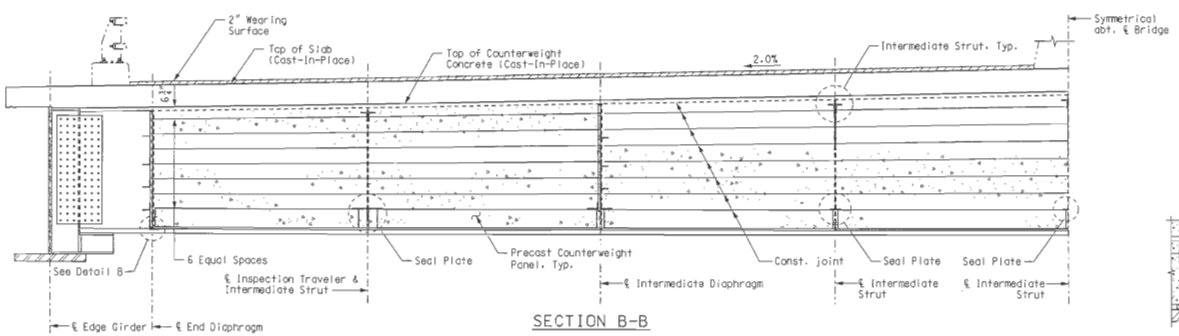

SECTION B-B

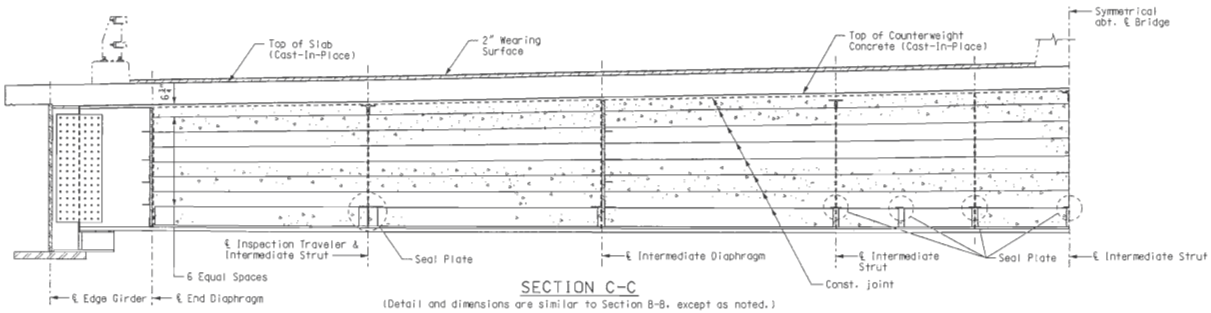

SECTION C-C

(Detail and dimensions are similar to Section B-B, except as noted.)

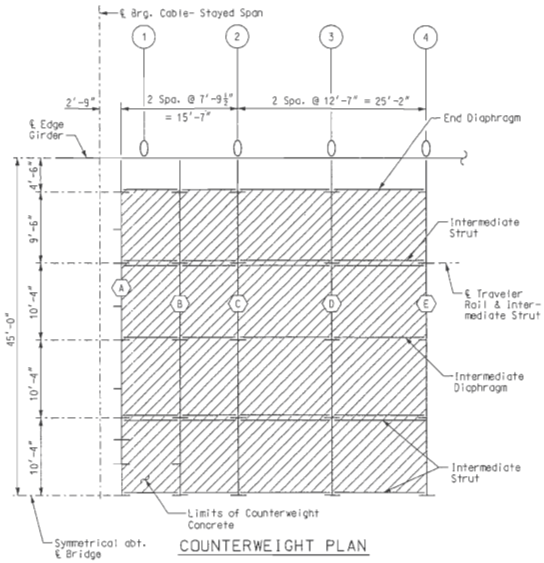

COUNTERWEIGHT PLAN

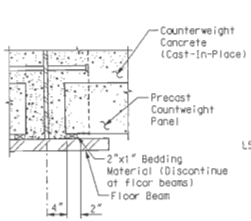

DETAIL A

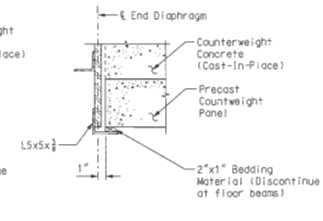

DETAIL B

Notes:

(#) Denotes Stay Cable.

(#) Denotes Floor Beam Type.

Shear connectors shown attached to the web shall be installed after placement of the precast panels.

For Floor Beam details, see Sheet Nos. BR117 thru BR122.

For location of Sections A-A, B-B, and C-C and additional notes, see Sheet No. BR159.

For details of cast-in-place slab, see Sheet No. BR154.

COUNTERWEIGHT DETAILS

STATE OF MISSOURI
HANS R. HUTTON
NUMBER E-29174
REGISTERED PROFESSIONAL ENGINEER
Hans R. Hutton

DATE 8/20/09

ROUTE	STATE
I-70	MO/IL
DISTRICT 6	SHEET NO. BR160

COUNTY ST. LOUIS CITY - MO ST. CLAIR - IL

JOB NO. J6I0984

CONTRACT ID.

PROJECT NO.

BRIDGE NO. A6500

DESCRIPTION	DATE

MISSOURI HIGHWAYS AND TRANSPORTATION COMMISSION

105 WEST CAPITOL
JEFFERSON CITY, MO 65102
1-888-ASK-MODOT (1-888-275-6636)

HNTB
715 KIRK DRIVE
KANSAS CITY, MO 64105-4310
TELEPHONE 816 472-1201
CERTIFICATE OF AUTHORITY NO. 001270

STATE OF ILLINOIS
LICENSED STRUCTURAL ENGINEER
HANS R. HUTTON
081-005707
Hans R. Hutton
8-20-2009

REV.

Detailed JUL 2009
Checked JUL 2009

Note: This drawing is not to scale. Follow dimensions.

\\kcow00\jobs\46440\Bridges\Plans\CdtoMoDOTA6500\J6I0984\A6500-dgn\ZPLOT_B_A6500_001-205_J6I0984_160.dgn

19-AUG-2009 07:20

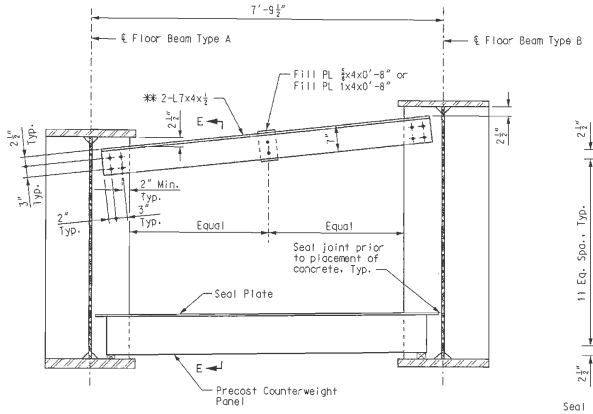

INTERMEDIATE STRUT DETAIL
FLOOR BEAM TYPES A AND B

**Install after placement of precast counterweight panels and prior to placement of counterweight concrete.

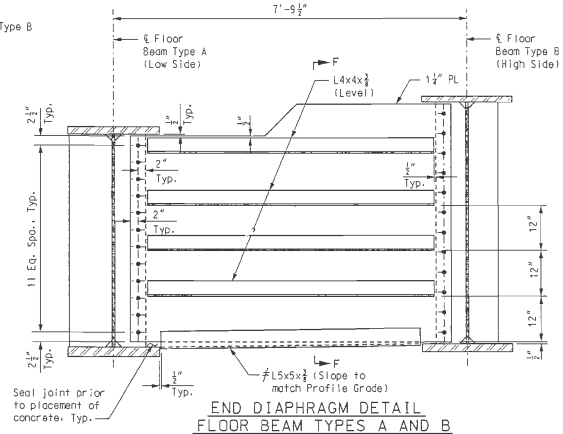

END DIAPHRAGM DETAIL
FLOOR BEAM TYPES A AND B

(Looking away from ℄ Edge Girder. Precast Panel not shown for clarity)

≠Align top of horizontal leg with top of bottom flange of floor beam.

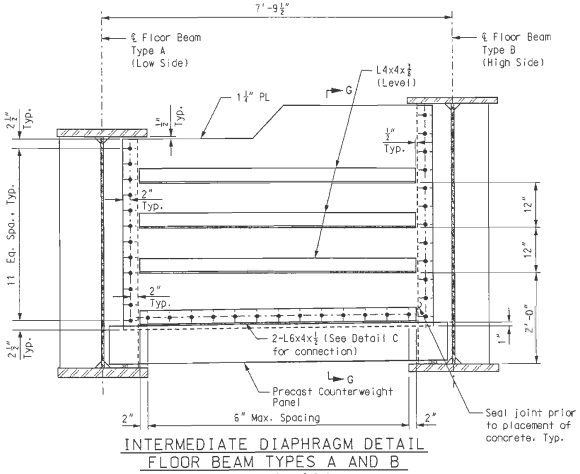

INTERMEDIATE DIAPHRAGM DETAIL
FLOOR BEAM TYPES A AND B

(Looking away from ℄ Bridge)

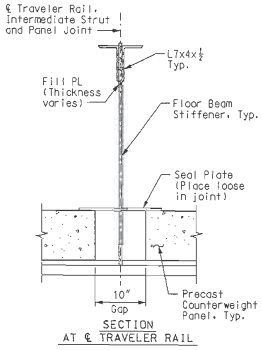

SECTION AT ℄ TRAVELER RAIL

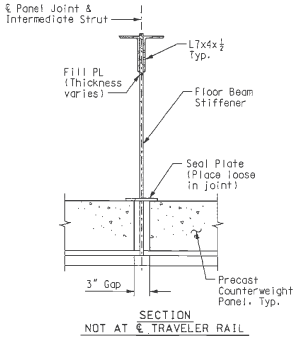

SECTION NOT AT ℄ TRAVELER RAIL

SECTION E-E

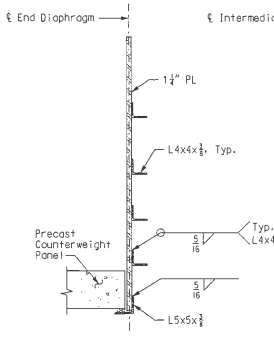

SECTION F-F

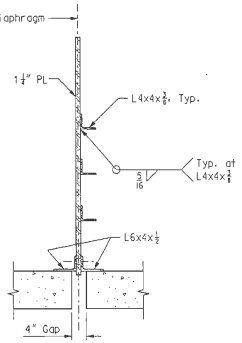

SECTION G-G

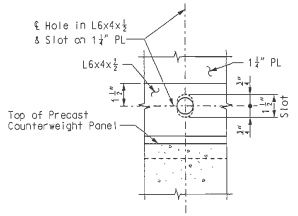

DETAIL C

Field-bolt L6x4x½ angles to 1¼" PL following placement of precast counterweight concrete panels. 6" leg of L6x4x½ shall be flush with top of precast counterweight concrete panels.

Notes:

For Precast Counterweight Panel Plan, see Sheet No. BR159.

For location of Intermediate Strut and End Diaphragm, see Partial Framing Plan on Sheet No. BR109.

For Intermediate Strut Detail, End Diaphragm Detail, Intermediate Diaphragm Detail at Floor Beam Types B thru E, and Seal Plate Detail, see Sheet No. BR162.

Intermediate Strut, Intermediate Diaphragm and End Diaphragm at Floor Beam Types A and B shall be fabricated to account for actual depth of Floor Beam Type A and to eliminate interference with expansion joint blockout. See Sheet No. BR172 for Expansion Joint Details.

For additional notes, see Sheet Nos. BR159 and BR160.

COUNTERWEIGHT DETAILS

STATE OF MISSOURI
HANS R. HUTTON
NUMBER E-26574
REGISTERED PROFESSIONAL ENGINEER
Hans R. Hutton

DATE: 8/20/09
ROUTE: I-70 | STATE: MO/IL
DISTRICT: 6 | SHEET NO.: BR161
COUNTY: ST. LOUIS CITY - MO, ST. CLAIR - IL
JOB NO.: J6I0984
CONTRACT ID.:
PROJECT NO.:
BRIDGE NO.: A6500

REV.	DESCRIPTION	DATE

MISSOURI HIGHWAYS AND TRANSPORTATION COMMISSION
105 WEST CAPITOL
JEFFERSON CITY, MO 65102
1-888-ASK-MODOT (1-888-275-6636)

HNTB
715 KIRK DRIVE
KANSAS CITY, MO 64105-1310
TELEPHONE (816) 472-1201
CERTIFICATE OF AUTHORITY NO. 001270

LICENSED STRUCTURAL ENGINEER
HANS R. HUTTON
081-006707
STATE OF ILLINOIS
Hans R. Hutton
8-20-2009

Detailed JUL 2009
Checked JUL 2009

Note: This drawing is not to scale. Follow dimensions.

\\kcow00\jobs\46440\Bridges\Plans\CdtoMoDOTA6500\J6I0984\A6500-dgn\ZPLOT_B_A6500_001-205_J6I0984_161.dgn

19-AUG-2009 07:20

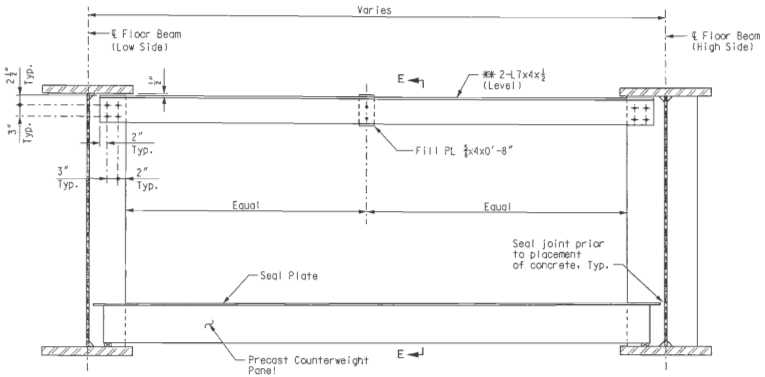

INTERMEDIATE STRUT DETAIL - FLOOR BEAM TYPES B THRU E

** Install after placement of precast counterweight panels and prior to placement of counterweight concrete.

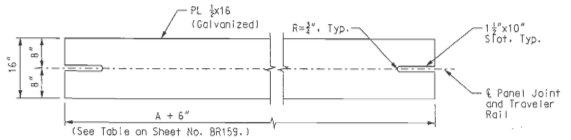

AT JOINT ALONG ℄ INSPECTION TRAVELER

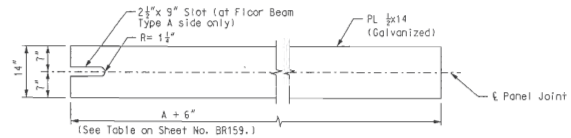

AT JOINT BETWEEN PANELS A4 & A5

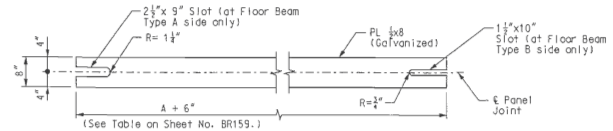

AT JOINT BETWEEN PANELS A5 & A6

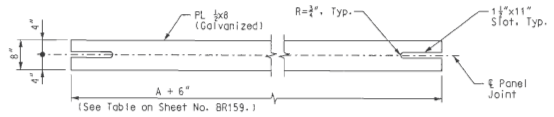

AT ALL OTHER PANEL JOINTS

SEAL PLATE DETAILS

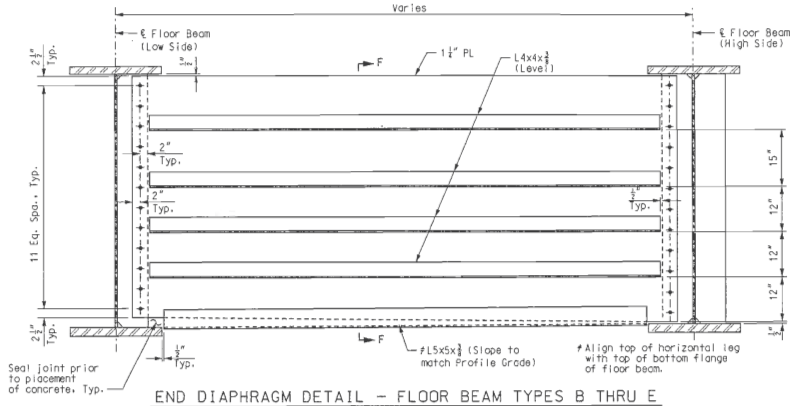

END DIAPHRAGM DETAIL - FLOOR BEAM TYPES B THRU E

(Looking away from ℄ Edge Girder. Precast Panel not shown for clarity)

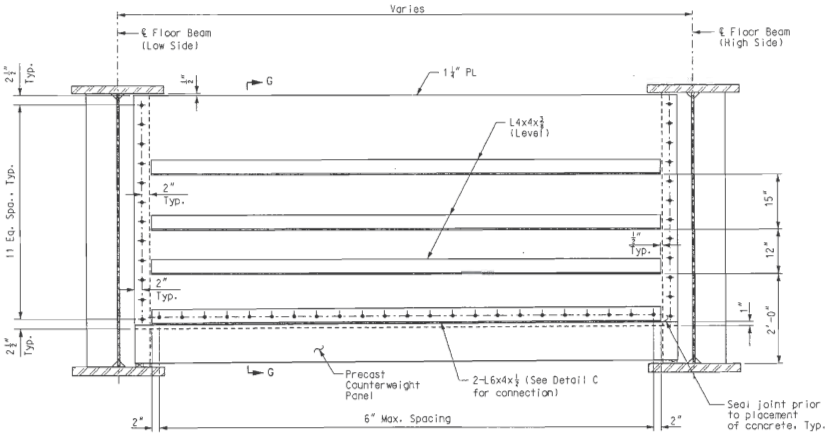

INTERMEDIATE DIAPHRAGM DETAIL - FLOOR BEAM TYPES B THRU E

(Looking away from ℄ Bridge)

Notes:
For Sections E-E thru G-G, Detail C, additional notes & details, see Sheet No. BR161.
For additional notes, see Sheet Nos. BR159 and BR160.

COUNTERWEIGHT DETAILS

STATE OF MISSOURI
HANS R. HUTTON
NUMBER E-29174
REGISTERED PROFESSIONAL ENGINEER
Hans R. Hutton

DATE 8/20/09
ROUTE I-70 | STATE MO/IL
DISTRICT 6 | SHEET NO. BR162
COUNTY ST. LOUIS CITY - MO, ST. CLAIR - IL
JOB NO. J6I0984
CONTRACT ID.
PROJECT NO.
BRIDGE NO. A6500

DESCRIPTION | DATE

MISSOURI HIGHWAYS AND TRANSPORTATION COMMISSION
105 WEST CAPITOL
JEFFERSON CITY, MO 65102
1-888-ASK-MODOT (1-888-275-6636)

HNTB
715 KIRK DRIVE
KANSAS CITY, MO 64105-1310
TELEPHONE (816) 472-1201
CERTIFICATE OF AUTHORITY NO. 001270

LICENSED STRUCTURAL ENGINEER
HANS R. HUTTON
081-006707
STATE OF ILLINOIS
expires 11-30-2010
Hans R. Hutton
8-20-2009

REV.

Detailed JUL 2009
Checked JUL 2009

Note: This drawing is not to scale. Follow dimensions.

\\kcaw00\jobs\46440\Bridges\Plans\CdotaMoDOTA6500\J6I0984\A6500-dgn\ZPLOT_B_A6500_001-205_J6I0984_162.dgn

19-AUG-2009 07:20

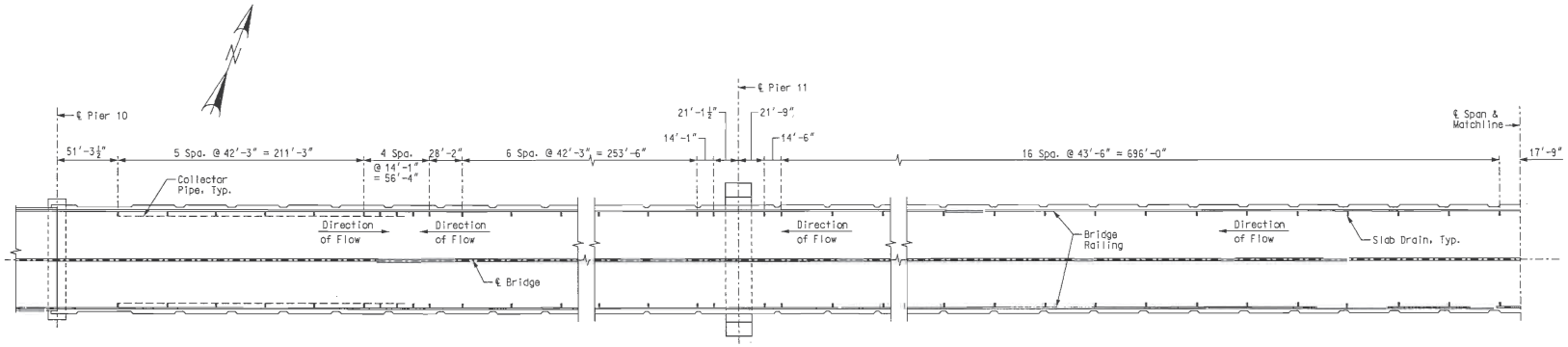

SPAN (10-11)

5

SPAN (11-12)

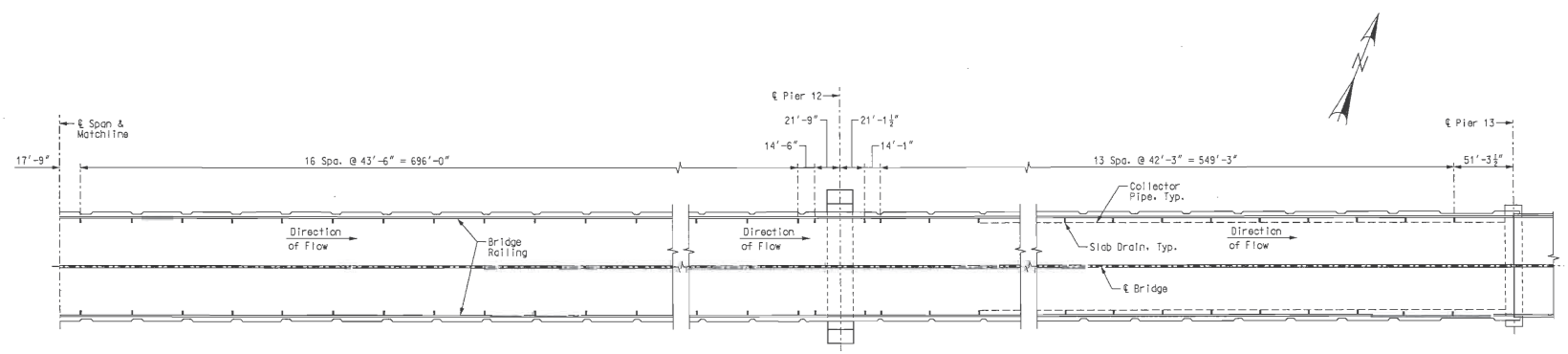

SPAN (11-12)

SPAN (12-13)

Notes:

For Slab Drain details, see Sheet No. BR164.

For additional details of drainage and collector pipe, see Sheet Nos. BR165 & BR166.

All costs associated with materials, fabrication and installation of the drainage system shall be included in the pay item, "Drainage System (on Structure)". This includes the scuppers, downspouts, bracket assemblies, collector pipe system, support brackets, drain pan, pier piping system and splash block.

SLAB DRAIN WITH GRATE LAYOUT

Detailed JUL 2009
Checked JUL 2009

Note: This drawing is not to scale. Follow dimensions.

STATE OF MISSOURI
HANS R. HUTTON
NUMBER E-29174
REGISTERED PROFESSIONAL ENGINEER
Hans R. Hutton

DATE	
5/17/10	
ROUTE	STATE
I-70	MO/IL
DISTRICT	SHEET NO.
6	BR163
COUNTY	
ST. LOUIS CITY - MO ST. CLAIR - IL	
JOB NO.	
J6I0984	
CONTRACT ID.	
PROJECT NO.	
BRIDGE NO.	
A6500	

DATE	DESCRIPTION
5-17-10	5 Added slab drains

MISSOURI HIGHWAYS AND TRANSPORTATION COMMISSION

MoDOT

105 WEST CAPITOL
JEFFERSON CITY, MO 65102
1-888-ASK-MODOT (1-888-275-6636)

HNTB

715 KIRK DRIVE
KANSAS CITY, MO 64105-1310
TELEPHONE (816) 472-1201
CERTIFICATE OF AUTHORITY
NO. 001270

LICENSED STRUCTURAL ENGINEER
HANS R. HUTTON
081-006707
STATE OF ILLINOIS
EXPIRES 11-30-2010
Hans R. Hutton
SIGNATURE
5-17-2010
DATE

REV.

\\kcow00\jobs\46440\Bridges\Plans\CdtoMoDOTA6500\J6I0984\A6500-dgn\ZPLOT_B_A6500_163-205_J6I0984_163.dgn

17-MAY-2010 11:32

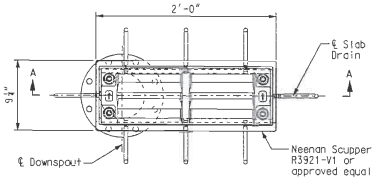

PLAN - SLAB DRAIN

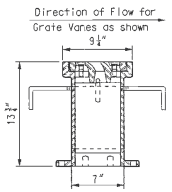

SECTION B-B

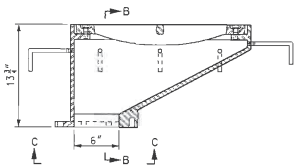

SECTION A-A

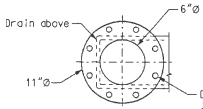

Drill & tap (8) holes for ¾"-10 UNC bolts on a 9½"Ø bolt circle (2 blind holes are 1¼" deep, remaining 6 are thru holes)

VIEW C-C

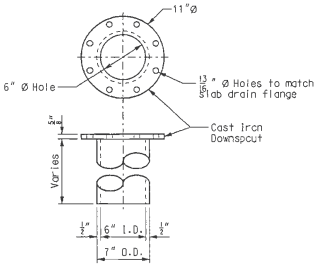

DOWNSPOUT

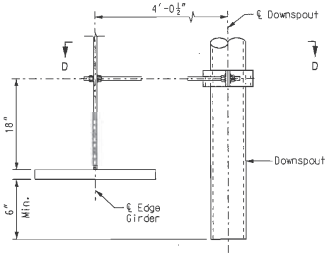

AT ALL OTHERS

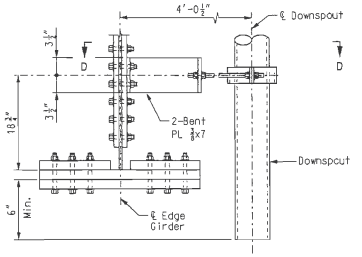

AT STA. 77+54.96

ELEVATION - EDGE GIRDER BRACKET ASSEMBLY

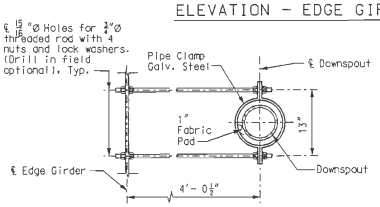

AT ALL OTHERS

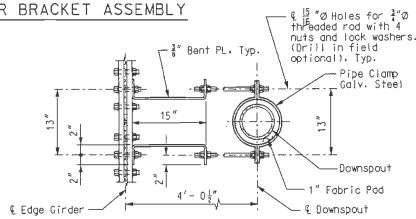

AT STA. 77+54.96

SECTION D-D

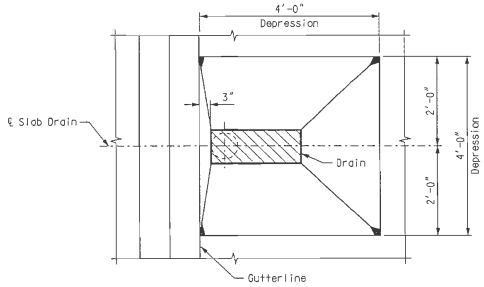

PLAN - DEPRESSION AT SLAB DRAIN

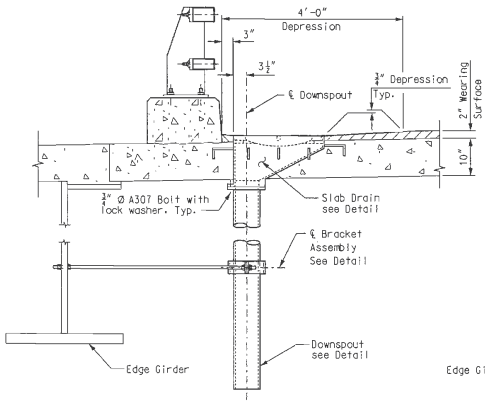

WITHOUT COLLECTOR PIPE

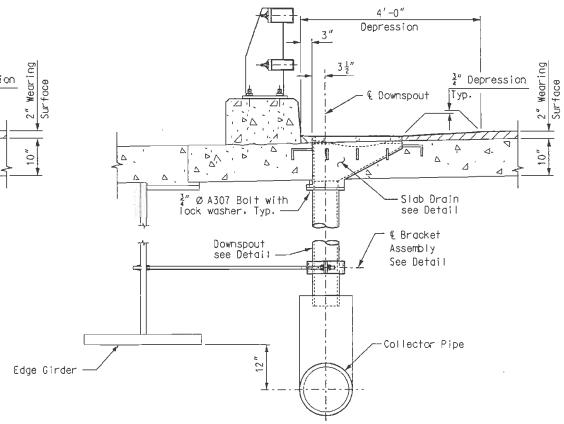

WITH COLLECTOR PIPE

ELEVATION - SLAB DRAIN AND DOWNSPOUT

Notes:
All cast iron parts shall be gray iron conforming to the requirements of AASHTO M105, Class 35B.
Bolts and threaded rods shall conform to the requirements of ASTM A307, heavy hex, hot-dip galvanized.
Nuts shall conform to the requirements of ASTM A563, heavy hex, hot-dip galvanized.
Lock washers shall be spring steel, hot-dip galvanized.
For the layout of the slab drains, see Sheet No. BR163.
For the location of the slab drains in the precast panels, see Sheet Nos. BR144 thru BR149.
For additional notes, see Sheet No. BR165.

SLAB DRAIN WITH GRATE

STATE OF MISSOURI
HANS R. HUTTON
NUMBER E-25174
REGISTERED PROFESSIONAL ENGINEER
Hans R. Hutton

DATE 8/20/09

ROUTE	STATE
I-70	MO/IL
DISTRICT 6	SHEET NO. BR164

COUNTY
ST. LOUIS CITY - MO
ST. CLAIR - IL

JOB NO.
J6I0984

CONTRACT ID.

PROJECT NO.

BRIDGE NO.
A6500

DESCRIPTION	DATE

MISSOURI HIGHWAYS AND TRANSPORTATION COMMISSION
105 WEST CAPITOL
JEFFERSON CITY, MO 65102
1-888-ASK-MODOT (1-888-275-6636)

HNTB
715 KIRK DRIVE
KANSAS CITY, MO 64105-1310
TELEPHONE (816) 472-1201
CERTIFICATE OF AUTHORITY NO. 001270

STATE OF ILLINOIS
HANS R. HUTTON
081-006707
LICENSED STRUCTURAL ENGINEER
Hans R. Hutton
8-20-2009

REV.

Detailed JUL 2009
Checked JUL 2009

Note: This drawing is not to scale. Follow dimensions.

Sheet No. 164 of 205

\\kcow00\jobs\46440\Bridges\Plans\CdotoMoDOTA6500\J6I0984\A6500-dgn\ZPLOT_B_A6500_001-205_J6I0984_164.dgn

19-AUG-2009 07:21

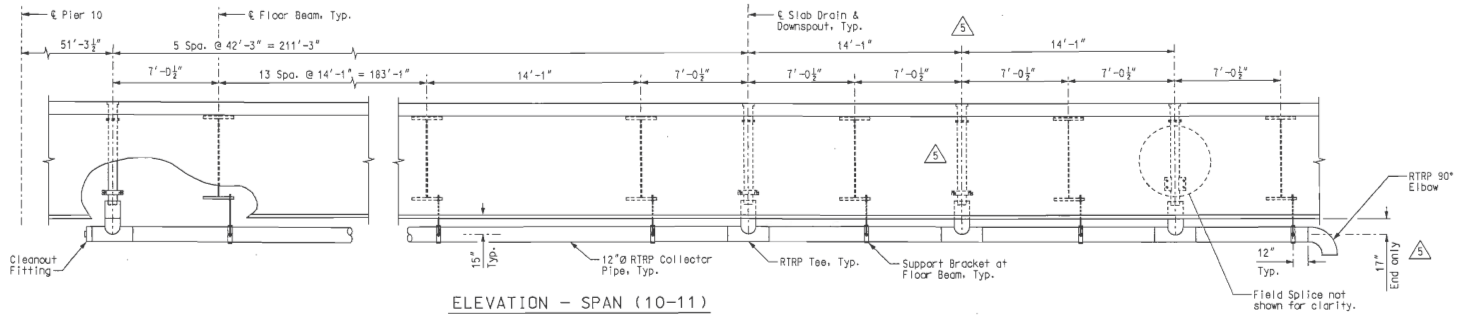

ELEVATION – SPAN (10–11)

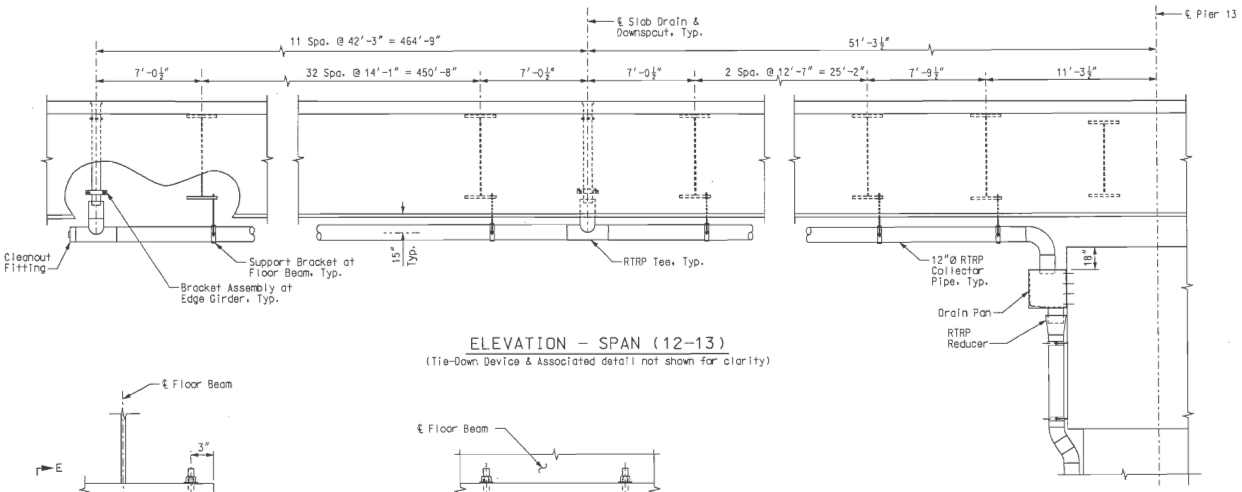

ELEVATION – SPAN (12–13)

(Tie-Down Device & Associated detail not shown for clarity)

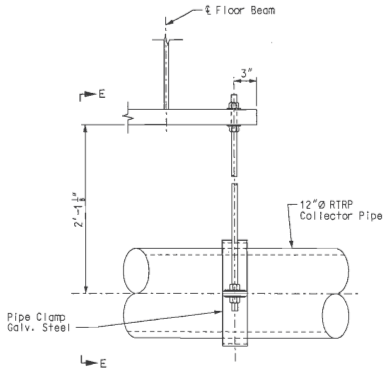

ELEVATION
FLOOR BEAM SUPPORT BRACKET

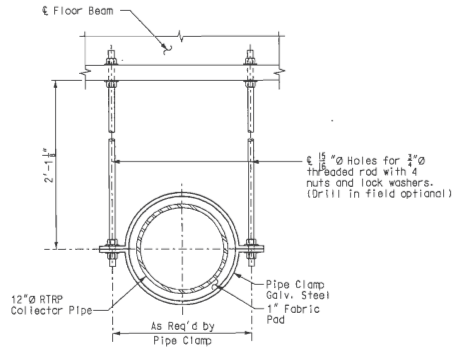

SECTION E–E

Notes:

For additional specifications, see Special Provision "Drainage System".
Concrete in splash block shall be Class B.
Welded wire fabric in splash block shall conform to ASTM A497.
Bolts and threaded rods shall conform to the requirements of ASTM A307, heavy hex, hot-dip galvanized.
Nuts shall conform to the requirements of ASTM A563, heavy hex, hot-dip galvanized.
Lock washers shall be spring steel, hot-dip galvanized.
Steel for drain pan shall be ASTM A709, Grade 36, galvanized.
Welding shall be in conformance with AWS D1.1, current edition.
Steel pipe attached to drain pan shall be in conformance with ASTM A53, galvanized.
Epoxy anchor compound shall be Epcon G5 Epoxy or approved equal. Install in accordance with manufacturer's recommendations.
All costs associated with the materials, fabrication and installation of the drainage system, including slab drains, downspouts, pipe clamps, fabric pads, brackets, collector pipe and fittings, drain pans, splash blocks and associated hardware and fasteners shall be included in the pay item "Drainage System (On Structure)".
For the layout of the slab drains, see Sheet No. BR163.
For the location of the slab drains in the precast panels, see Sheet Nos. BR144 thru BR149.
For additional notes, see Sheet No. BR164.

SLAB DRAINAGE DETAILS

HANS R. HUTTON NUMBER E-29174 REGISTERED PROFESSIONAL ENGINEER
Hans R. Hutton

DATE 5/17/10
ROUTE I-70 | STATE MO/IL
DISTRICT 6 | SHEET NO. BR165
COUNTY ST. LOUIS CITY – MO, ST. CLAIR – IL
JOB NO. J6I0984
CONTRACT ID.
PROJECT NO.
BRIDGE NO. A6500

DATE	DESCRIPTION
5-17-10	Added slab drain & dimension

MISSOURI HIGHWAYS AND TRANSPORTATION COMMISSION
105 WEST CAPITOL
JEFFERSON CITY, MO 65102
1-888-ASK-MODOT (1-888-275-6636)

HNTB
715 KIRK DRIVE
KANSAS CITY, MO 64105-1310
TELEPHONE (816) 472-1201
CERTIFICATE OF AUTHORITY NO. 001270

LICENSED STRUCTURAL ENGINEER
HANS R. HUTTON 081-006707
STATE OF ILLINOIS
Hans R. Hutton
5-17-2010

REV.

Detailed JUL 2009
Checked JUL 2009

Note: This drawing is not to scale. Follow dimensions.

\\kcow00\jobs\46440\Bridges\Plans\CdtoMoDOTA6500\J6I0984\A6500-dgn\ZPLOT_8_A6500_165-205_J6I0984_165.dgn

17-MAY-2010 11:32

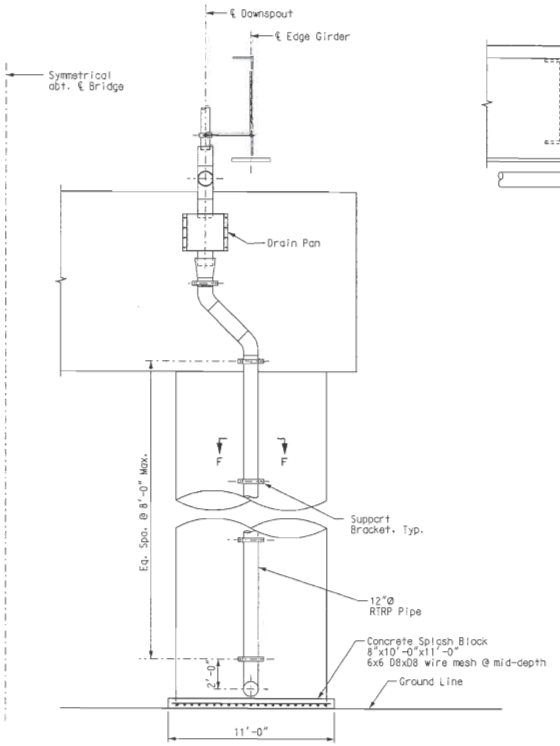

ELEVATION

(Deck, Floor Beam & Tie-Down Device not shown for clarity)

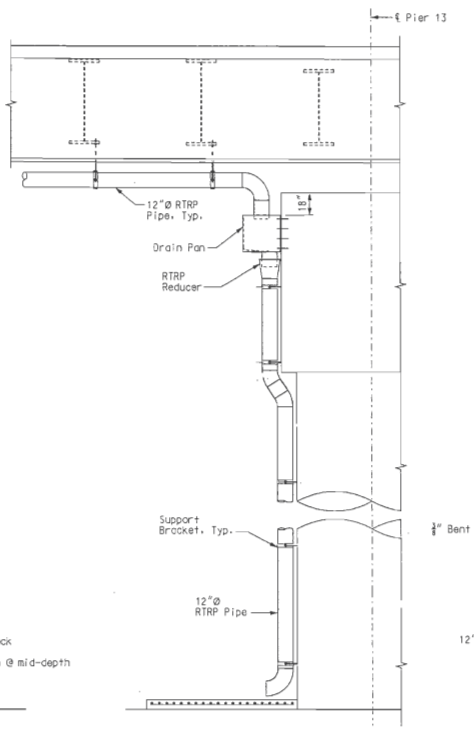

END VIEW

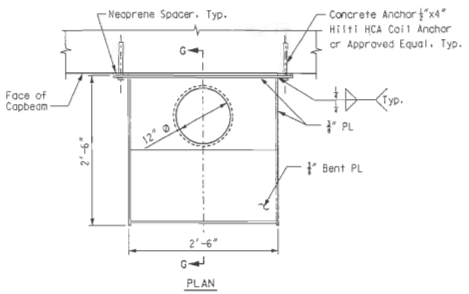

PLAN

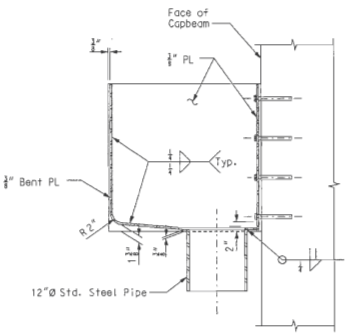

SECTION G-G

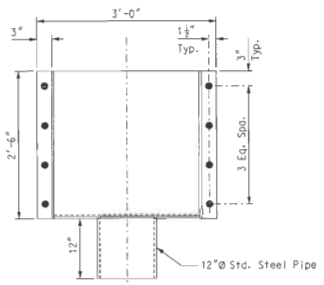

ELEVATION

DRAIN PAN DETAILS

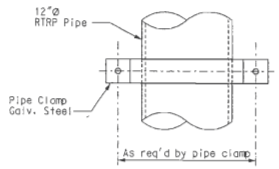

ELEVATION

PIER SUPPORT BRACKET

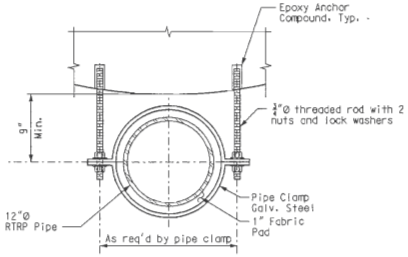

SECTION F-F

Notes:
For slab drainage notes, see Sheet No. BR165.

SLAB DRAINAGE DETAILS

STATE OF MISSOURI
HANS R. HUTTON
NUMBER E-29974
REGISTERED PROFESSIONAL ENGINEER
Hans R. Hutton

DATE
8/20/09

ROUTE	STATE
I-70	MO/IL
DISTRICT	SHEET NO.
6	BR166

COUNTY
ST. LOUIS CITY - MO
ST. CLAIR - IL

JOB NO.
J6I0984

CONTRACT ID.

PROJECT NO.

BRIDGE NO.
A6500

NO.	DESCRIPTION	DATE

MISSOURI HIGHWAYS AND TRANSPORTATION COMMISSION
105 WEST CAPITOL
JEFFERSON CITY, MO 65102
1-888-ASK-MODOT (1-888-275-6636)

HNTB
715 KIRK DRIVE
KANSAS CITY, MO 64105-1310
TELEPHONE (816) 472-1201
CERTIFICATE OF AUTHORITY
NO. 001270

LICENSED STRUCTURAL ENGINEER
HANS R. HUTTON
081-006707
STATE OF ILLINOIS
Expires 11-30-2010
Hans R. Hutton
Signature
8-20-2009
Date

REV.

Detailed JUL 2009
Checked JUL 2009

Note: This drawing is not to scale. Follow dimensions.

\\kcow00\jobs\46440\Bridges\Plans\CdtoMoDOTA6500\J6I0984\A6500-dgn\ZPLOT_B_A6500_001-205_J6I0984_166.dgn

19-AUG-2009 07:21

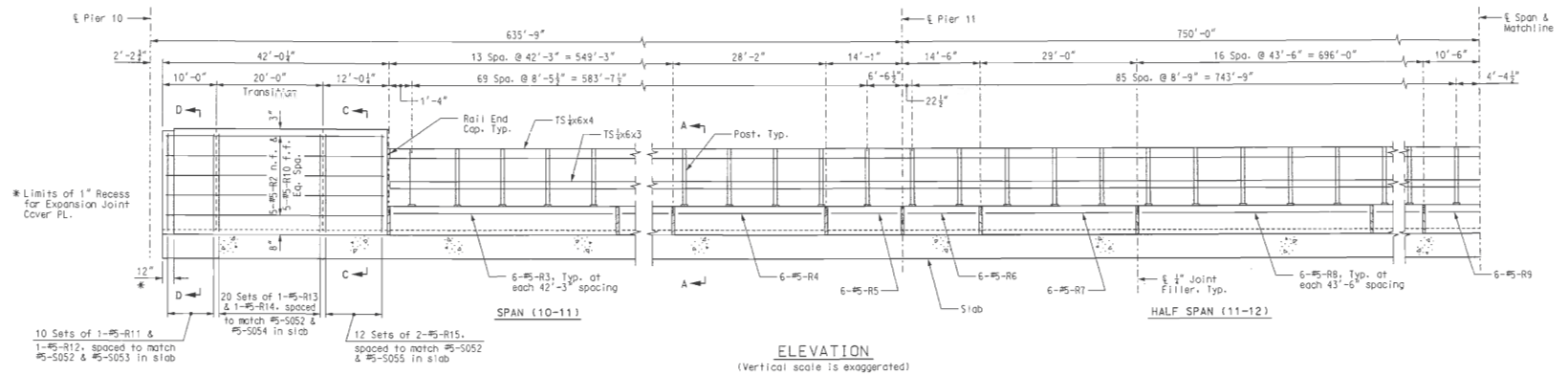

ELEVATION
(Vertical scale is exaggerated)

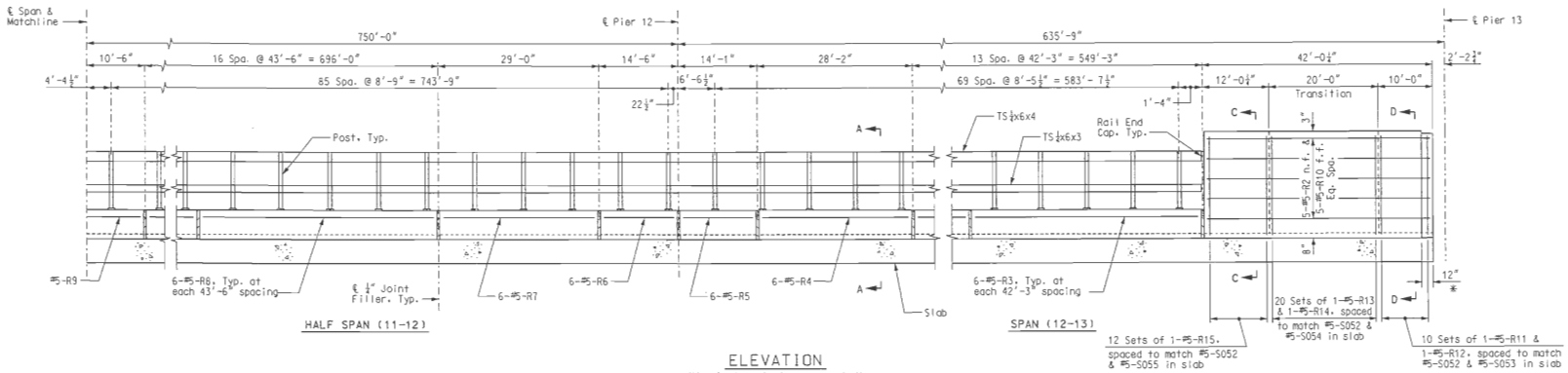

ELEVATION
(Vertical scale is exaggerated)

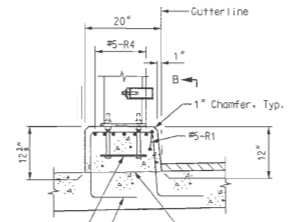

SECTION A-A
(Shown near ℄ Post)

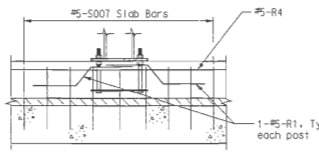

SECTION B-B

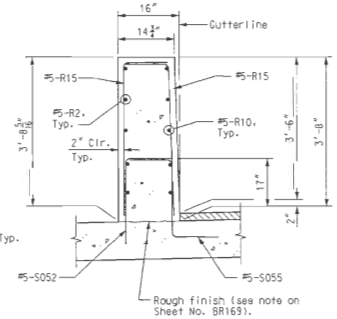

SECTION C-C

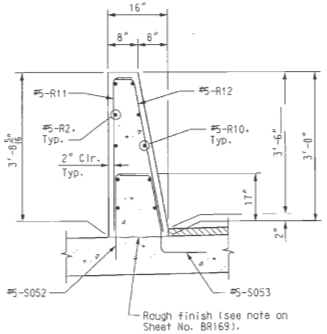

SECTION D-D

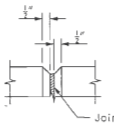

FILLED JOINT DETAIL

Notes:
For spacing and details of #5-S007 & #5-S052 thru #5-S055 bars, see Sheet Nos. BR144 thru BR158.
For additonal notes, see Sheet No. BR169.

BRIDGE RAILING

STATE OF MISSOURI
HANS R. HUTTON
NUMBER E-23974
REGISTERED ENGINEER
Hans R. Hutton

DATE
8/20/09

ROUTE	STATE
I-70	MO/IL
DISTRICT	SHEET NO.
6	BR167

COUNTY
ST. LOUIS CITY - MO
ST. CLAIR - IL

JOB NO.
J6I0984

CONTRACT ID.

PROJECT NO.

BRIDGE NO.
A6500

NO.	DESCRIPTION	DATE

MISSOURI HIGHWAYS AND TRANSPORTATION COMMISSION
105 WEST CAPITOL
JEFFERSON CITY, MO 65101
1-888-ASK-MODOT (1-888-275-6636)

HNTB
715 KIRK DRIVE
KANSAS CITY, MO 64105-1310
TELEPHONE (816) 472-1201
CERTIFICATE OF AUTHORITY NO. 001270

STATE OF ILLINOIS
REGISTERED STRUCTURAL ENGINEER
HANS R. HUTTON
081-006707
Hans R. Hutton
8-20-2009
DATE

REV.

Detailed JUL 2009
Checked JUL 2009

Note: This drawing is not to scale. Follow dimensions.

\\kcow00\jobs\46440\Bridges\Plans\CatoMoDOTA6500\J6I0984\A6500-dgn\ZPLOT_B_A6500_001-205_J6I0984_167.dgn

19-AUG-2009 07:21

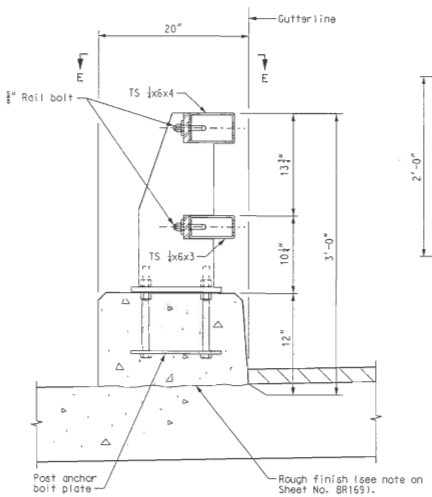

SECTION THRU RAIL
(Shown near ℄ Post)

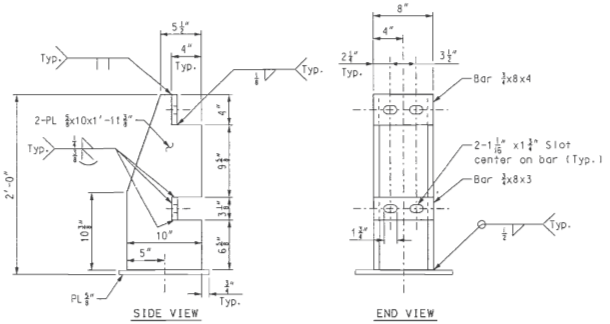

POST DETAILS

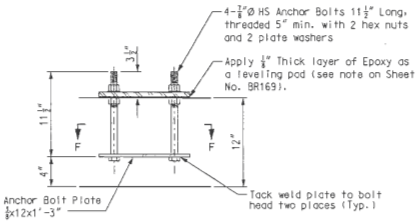

POST ANCHOR BOLT DETAILS

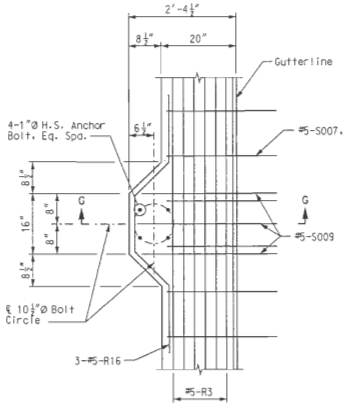

LIGHT POLE BLISTER LOCATIONS	
STATION	STATION
75+95.25	89+49.75
77+87.92	91+48.25
79+71.00	93+51.25
81+55.75	95+44.25
83+48.75	97+29.00
85+51.75	99+12.08
87+50.25	101+04.75

Notes:
Provide one Light Blister on each Bridge Rail at the Stations shown in table. (28 total)

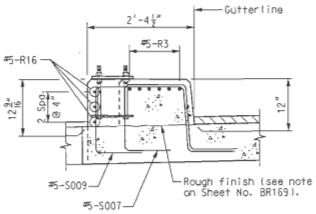

LIGHT POLE BLISTER DETAILS

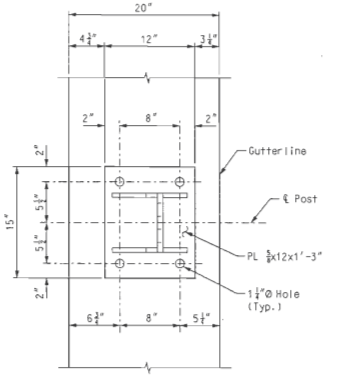

VIEW E-E

(Anchor bolts, Rails, and Rail bolts not shown for clarity.)

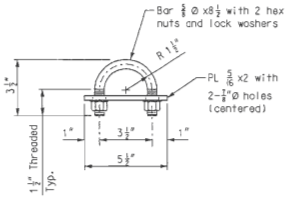

RAIL BOLT DETAIL

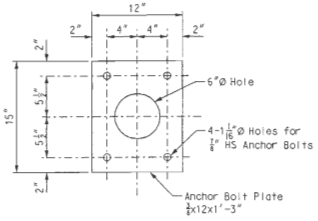

SECTION F-F

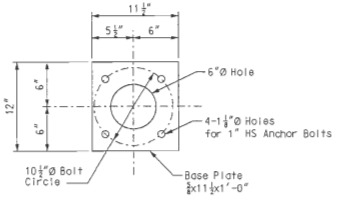

VIEW H-H

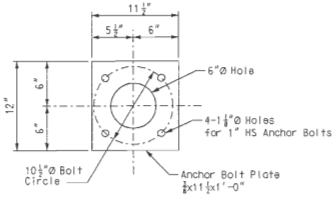

SECTION J-J

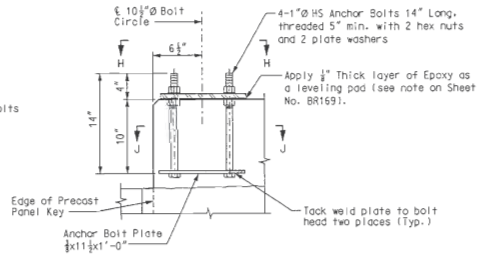

LIGHT POLE ANCHOR BOLT DETAILS

Notes:
For additional details and notes, see Sheet Nos. BR167 and BR169.

BRIDGE RAILING

(Anchor bolts, Rails, and Rail bolts not shown for clarity.)

STATE OF MISSOURI
HANS R. HUTTON
NUMBER E-29174
REGISTERED ENGINEER
Hans R. Hutton

DATE
8/20/09

ROUTE	STATE
I-70	MO/IL
DISTRICT	SHEET NO.
6	BR168

COUNTY
ST. LOUIS CITY - MO
ST. CLAIR - IL

JOB NO.
J6I0984

CONTRACT ID.

PROJECT NO.

BRIDGE NO.
A6500

DESCRIPTION	DATE

MISSOURI HIGHWAYS AND TRANSPORTATION COMMISSION
105 WEST CAPITOL
JEFFERSON CITY, MO 65102
1-888-ASK-MODOT (1-888-275-6636)

HNTB
715 KIRK DRIVE
KANSAS CITY, MO 64105-1310
TELEPHONE 816.472.1201
CERTIFICATE OF AUTHORITY NO. 001270

STATE OF ILLINOIS
HANS R. HUTTON
081-006707
LICENSED STRUCTURAL ENGINEER
Hans R. Hutton
8-20-2009
DATE

REV.

Detailed JUL 2009
Checked JUL 2009

Note: This drawing is not to scale. Follow dimensions.

\\kcow00\jobs\46440\Bridges\Plans\CdotoMoDOTA6500\J6I0984\A6500-dgn\ZPLOT_B_A6500_001-205_J6I0984_168.dgn

19-AUG-2009 07:21

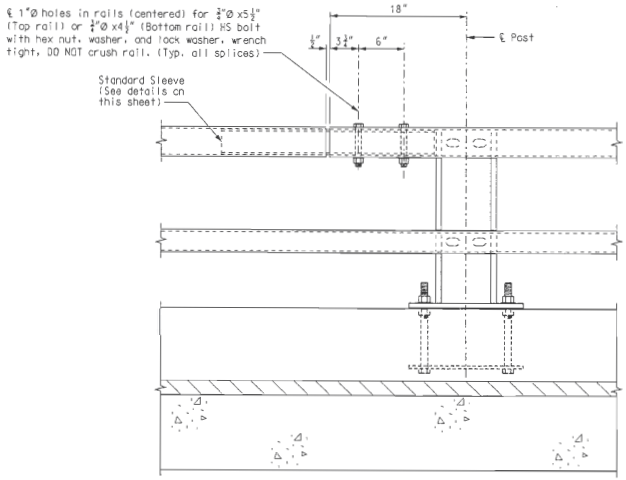

STANDARD SPLICE
(Top or bottom rail)

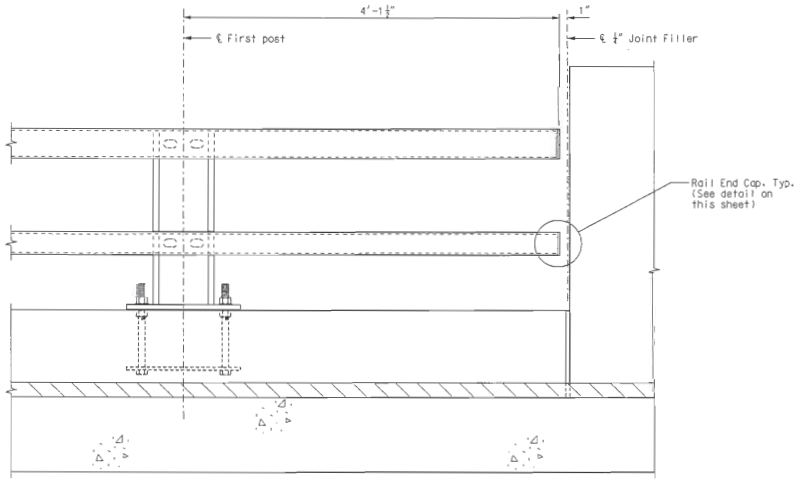

ELEVATION
(Showing end of railing)

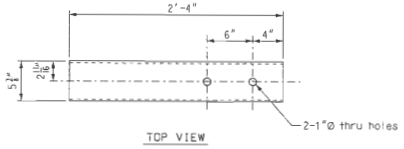

TOP VIEW

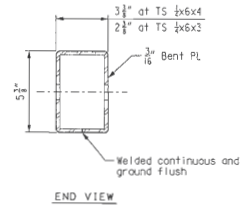

END VIEW

STANDARD SLEEVE DETAILS

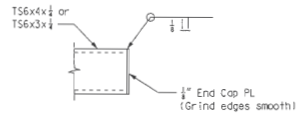

RAIL END CAP DETAIL

Notes:

Bridge rail structural tubing shall conform to ASTM A500 or ASTM A501, Grade A or B. If ASTM A500 Structural tubing is used, railing shall be tested in accordance with ASTM E436 after galvanizing.

Posts, plates and all other structural steel shall conform to ASTM A709, Grade 36.

High strength anchor bolts shall conform to ASTM A449.

Bolts shall conform to ASTM A325.

Nuts shall conform to ASTM A563 of appropriate grade and finish to match the anchor bolts and bolts.

Washers shall be in accordance with ASTM F436.

All railing structural steel, with the exception of the Anchor Bolt Plate, shall be galvanized in accordance with ASTM A153. Grind all edges smooth before galvanizing.

Anchor Bolt Plate shall be unpainted and non-galvanized.

Vent holes in the railing tubes shall be on the underside of the rail members and shown on the fabrication drawings.

Posts shall be set plumb transversely and perpendicular to the longitudinal grade.

At post locations, field drill two 1 1/16" diameter holes in the rails to receive rail bolts. See post details for hole spacing.

Rails shall be continuous across a minimum of two posts. Only one rail (top or bottom) shall splice in any one span between posts.

The surface of the superstructure beneath the railing curb shall be rough finished with a minimum amplitude of ¼".

Epoxy leveling pad shall be Sikadur 32, Hi-Mod or equivalent. Epoxy shall be placed within the neat lines of the base plate and the anchor bolts tightened while the epoxy is still workable. Any excess epoxy squeeze shall be immediately removed.

All costs associated with the materials, fabrication and installation of the bridge railing shall be included in the pay item "Bridge Railing". This shall include the concrete curb, reinforcing steel, post anchor bolt plate, anchor bolts, base plate, posts, railing and associated hardware.

BRIDGE RAILING

STATE OF MISSOURI
HANS R. HUTTON
NUMBER 15254
REGISTERED PROFESSIONAL ENGINEER
Hans R. Hutton

DATE 8/20/09
ROUTE I-70
STATE MO/IL
DISTRICT 6
SHEET NO. BR169
COUNTY ST. LOUIS CITY - MO ST. CLAIR - IL
JOB NO. J6I0984
CONTRACT ID.
PROJECT NO.
BRIDGE NO. A6500

REV.	DESCRIPTION	DATE

MISSOURI HIGHWAYS AND TRANSPORTATION COMMISSION
105 WEST CAPITOL
JEFFERSON CITY, MO 65102
1-888-ASK-MODOT (1-888-275-6636)

HNTB
715 KIRK DRIVE
KANSAS CITY, MO 64105-1310
TELEPHONE (816) 472-1201
CERTIFICATE OF AUTHORITY NO. 000170

LICENSED STRUCTURAL ENGINEER
HANS R. HUTTON
081-006707
STATE OF ILLINOIS
EXPIRES 11-30-2010
Hans R. Hutton
8-20-2009

Detailed JUL 2009
Checked JUL 2009

Note: This drawing is not to scale. Follow dimensions.

\\kccw00\jobs\46440\Bridges\Plans\CdtoMoDOTA6500\J6I0984\A6500-dgn\ZPLOT_B_A6500_001-205_J6I0984_169.dgn

19-AUG-2009 07:21

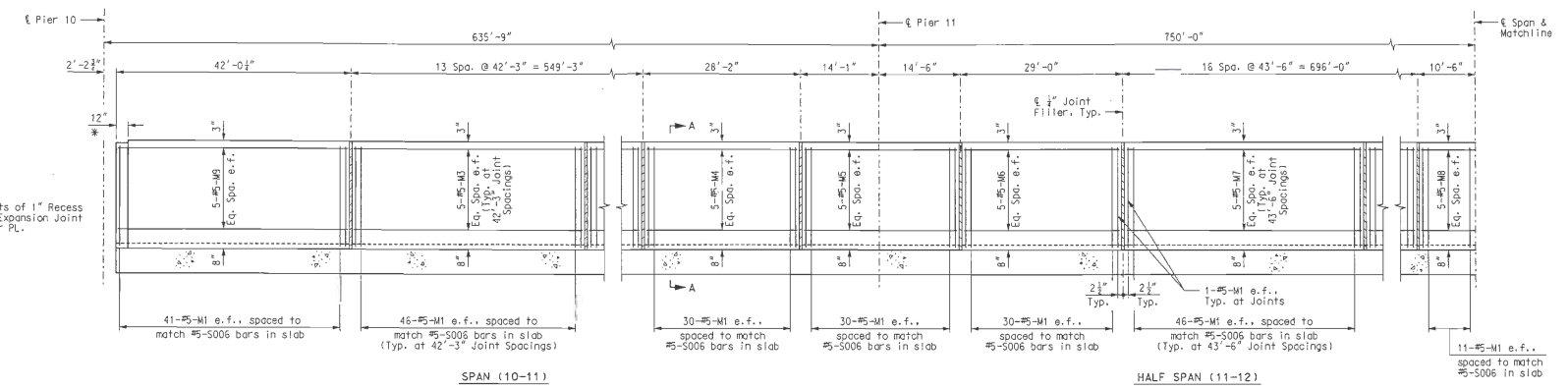

ELEVATION

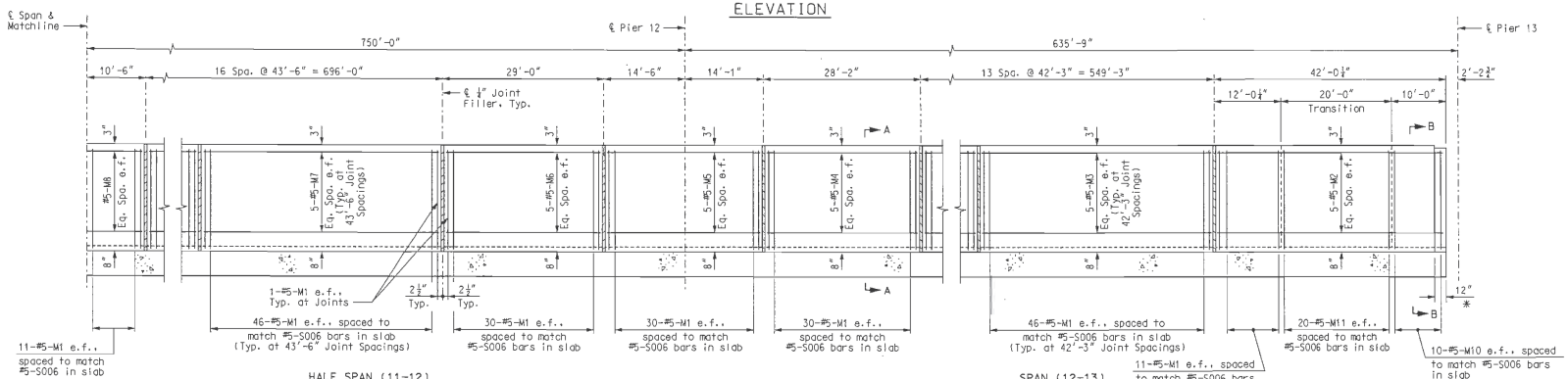

ELEVATION

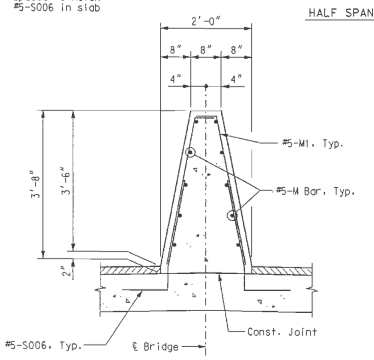

SECTION A-A

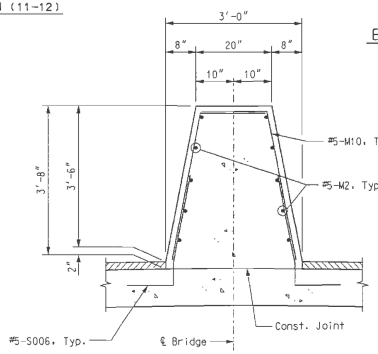

SECTION B-B

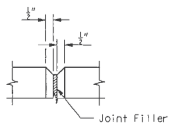

FILLED JOINT DETAIL

Notes:

e.f. denotes each face.

For spacing and details of #5-S006 bars, see Precast Slab Panel Details and Cast-In-Place Slab Details.

Top of Median Barrier Curb (Type C) shall be built parallel to grade with median barrier curb joints built normal to grade.

All exposed edges of Median Barrier Curb (Type C) shall have either a ½" radius or a ½" bevel, unless otherwise noted.

Payment for all concrete and reinforcement, complete-in-place, will be considered completely covered by the contract unit price for "Median Barrier Curb (Type C)" per linear foot.

Concrete in the Median Barrier Curb (Type C) shall be Class B-1.

Measurement of Median Barrier Curb (Type C) is to the nearest linear foot, measured from end of slab at Pier 10 to end of slab at Pier 13.

The curb shall be cured by application of Type 1-D or Type 2 Liquid Membrane-Forming Compound in accordance with Sec 1055. Surface sealing for concrete in accordance with Sec 703 is not required. Application of linseed oil at the Contractor's expense is permitted.

Concrete traffic barrier delineators shall be placed on top of the Median Barrier Curb (Type C) as shown on Missouri Standard Plans 617.10 and in accordance with Section 617. Concrete traffic delineators will be considered completely covered by the contract unit price for "Median Barrier Curb (Type C)".

MEDIAN BARRIER CURB (TYPE C)

STATE OF MISSOURI
HANS R. HUTTON
NUMBER E-28174
REGISTERED PROFESSIONAL ENGINEER
Hans R. Hutton

DATE 8/20/09
ROUTE I-70
STATE MO/IL
DISTRICT 6
SHEET NO. BR170
COUNTY ST. LOUIS CITY - MO, ST. CLAIR - IL
JOB NO. J6I0984
CONTRACT ID.
PROJECT NO.
BRIDGE NO. A6500

DESCRIPTION | DATE

MISSOURI HIGHWAYS AND TRANSPORTATION COMMISSION
105 WEST CAPITOL
JEFFERSON CITY, MO 65102
1-888-ASK-MODOT (1-888-275-6636)

HNTB
715 KIRK DRIVE
KANSAS CITY, MO 64105-1310
(816) 472-1201
CERTIFICATE OF AUTHORITY NO. 001270

LICENSED STRUCTURAL ENGINEER
HANS R. HUTTON
081-006707
STATE OF ILLINOIS
Hans R. Hutton
8-20-2009

REV.

Detailed JUL 2009
Checked JUL 2009

Note: This drawing is not to scale. Follow dimensions.

\\kcow00\jobs\46440\Bridges\Plans\CdtoMo00TA6500\J6I0984\A6500-dgn\ZPLOT_B_A6500_001-205_J6I0984_170.dgn 19-AUG-2009 07:22

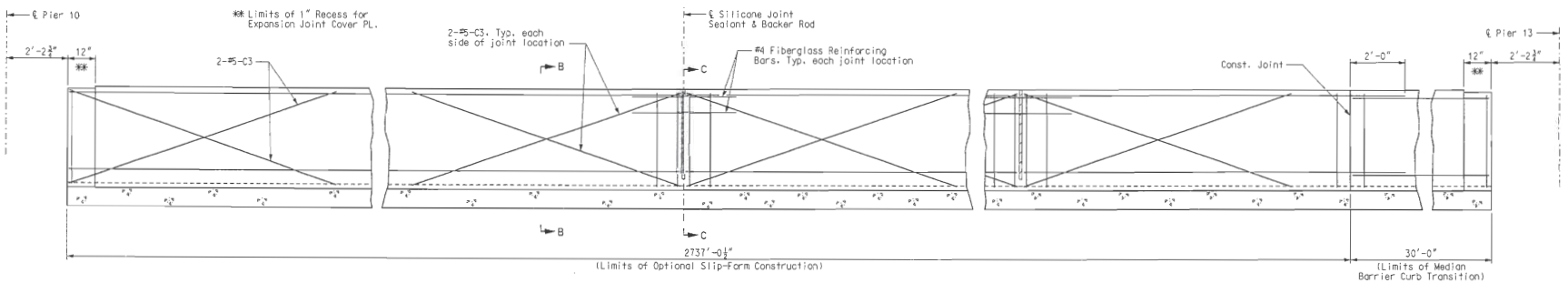

ELEVATION

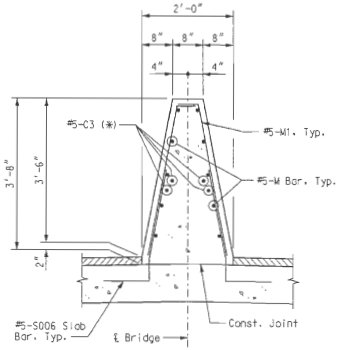

SECTION B-B

(*) Each side of joint location.

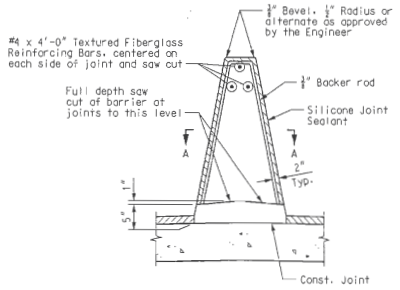

SECTION C-C

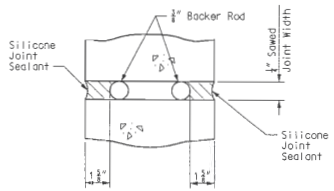

SECTION A-A

Notes:

Top of Median Barrier Curb (Type C) shall be built parallel to grade with median barrier curb joints built normal to grade.

Payment for all concrete and reinforcement, complete-in-place, will be considered completely covered by the contract unit price for "Median Barrier Curb (Type C)" per linear foot.

Concrete in the Median Barrier Curb (Type C) shall be Class B-1.

Measurement of Median Barrier Curb (Type C) is to the nearest linear foot, measured along the gutterline from end of slab at Pier 10 to end of slab at Pier 13.

The curb shall be cured by application of Type 1-D or Type 2 Liquid Membrane-Forming Compound in accordance with Section 1055. Surface sealing for concrete in accordance with Section 703 is not required. Application of linseed oil at the Contractor's expense is permitted.

Joint sealant and backer rods shall be used on all slip-form barrier curbs instead of joint filler and shall be in accordance with Section 717 for silicone joint sealant for saw cut and formed joints.

C Bars (Slip-form option only) shall be used in addition to cast-in-place conventional forming reinforcement for Median Barrier Curb (Type C).

For Slip-Form option, all sides of the Median Barrier Curb (Type C) shall have a vertically broomed finish and the curb top shall have a transversely broomed finish.

Cost of silicone joint sealant and backer rods, complete-in-place, will be considered completely covered by the contract unit price for "Median Barrier Curb (Type C)".

Concrete traffic barrier delineators shall be placed on top of the Median Barrier Curb (Type C) as shown on Missouri Standard Plans 617.10 and in accordance with Section 617. Concrete traffic barrier delineators will be considered completely covered by the contract unit price for "Median Barrier Curb (Type C)".

OPTIONAL SLIP-FORM MEDIAN BARRIER CURB (TYPE C)

Detailed JUL 2009
Checked JUL 2009

Note: This drawing is not to scale. Follow dimensions.

\\kcow00\jobs\46440\Bridges\Plans\CdtoMoDOTA6500\J6I0984\A6500-dgn\ZPLOT_B_A6500_001-205_J6I0984_171.dgn

19-AUG-2009 07:22

STATE OF MISSOURI
HANS R. HUTTON
NUMBER E-28174
REGISTERED PROFESSIONAL ENGINEER
Hans R. Hutton

DATE 8/20/09
ROUTE I-70
STATE MO/IL
DISTRICT 6
SHEET NO. BR171
COUNTY ST. LOUIS CITY - MO ST. CLAIR - IL
JOB NO. J6I0984
CONTRACT ID.
PROJECT NO.
BRIDGE NO. A6500

REV.	DESCRIPTION	DATE

MISSOURI HIGHWAYS AND TRANSPORTATION COMMISSION
105 WEST CAPITOL
JEFFERSON CITY, MO 65102
1-888-ASK-MODOT (1-888-275-6636)

HNTB
715 KIRK DRIVE
KANSAS CITY, MO 64105-1310
TELEPHONE (816) 472-1201
CERTIFICATE OF AUTHORITY NO. 001270

LICENSED STRUCTURAL ENGINEER
HANS R. HUTTON
085-013707
STATE OF ILLINOIS
Hans R. Hutton
8-20-2009
DATE

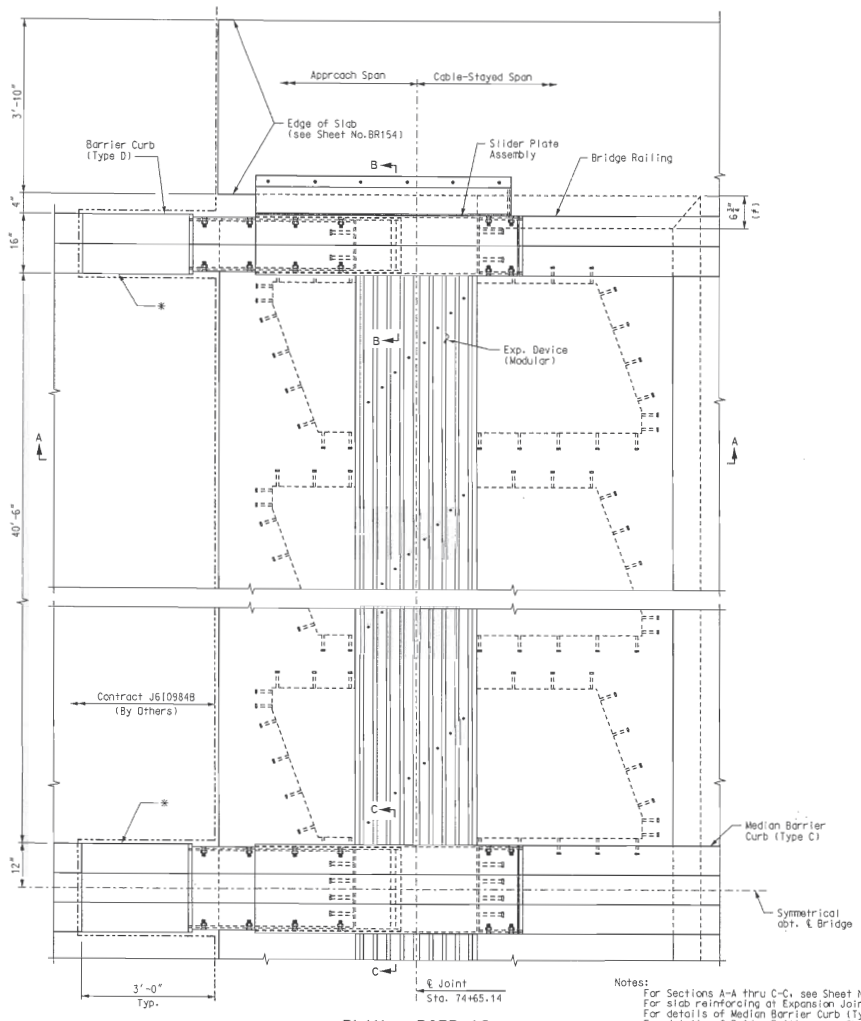

PLAN – PIER 10

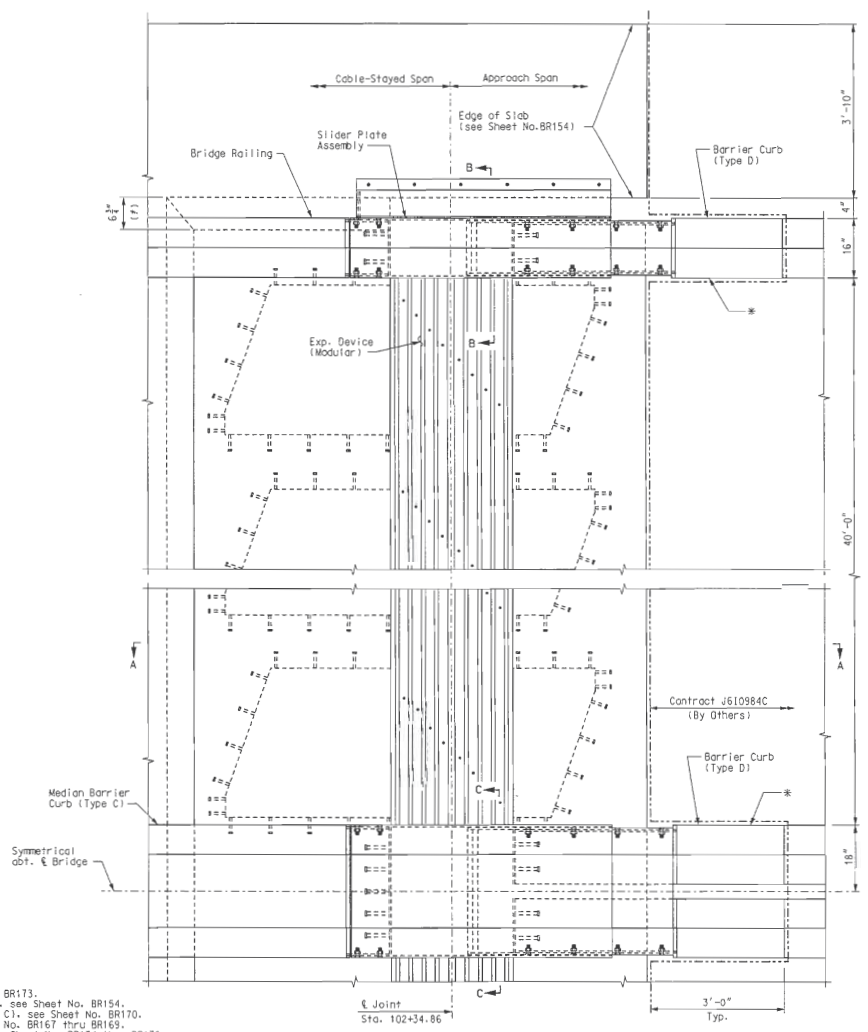

PLAN – PIER 13

Notes:
For Sections A-A thru C-C, see Sheet No. BR173.
For slab reinforcing at Expansion Joints, see Sheet No. BR154.
For details of Median Barrier Curb (Type C), see Sheet No. BR170.
For details of Bridge Railing, see Sheet No. BR167 thru BR169.
For details of Slider Plate Assembly, see Sheet No. BR174 thru BR176.
Design movements for modular expansion device are 9.75 inches for closing and 18.6 inches for opening (LRFD Service I).
The cost of materials, fabrication, and installation of Expansion Joint, including the slider plate assemblies, shall be included in the pay item "Modular Expansion Joint System".
* Reinforcing steel for barrier curb & median barrier curb in this region will be supplied & installed by others. Concrete & slider plate assembly will be supplied and installed by this contract.
# Dimensions are based on the D.S. Brown Steelflex D-720 Joint System. Contractor is responsible for all modifications should the joint supplied have different dimensions. All modifications shall be at no additional cost. Modifications shall be submitted to the Engineer for review and approval.
Plan dimensions are based on installation at 60°F. The expansion gap and other dimensions shall be increased or decreased 1½" for each 10° fall or rise in temperature at installation.

EXPANSION JOINT DETAILS – PIERS 10 & 13

Detailed JUL 2009
Checked JUL 2009

Note: This drawing is not to scale. Follow dimensions.

Sheet No. 172 of 205

\\kcow00\jobs\46440\Bridges\Plans\CdtoMoDOTA6500\J6I0984\A6500-dgn\ZPLOT_B_A6500_001-205_J6I0984_172.dgn

19-AUG-2009 07:22

STATE OF MISSOURI
HANS R. HUTTON
NUMBER E-2974
REGISTERED PROFESSIONAL ENGINEER

DATE
8/20/09

ROUTE	STATE
I-70	MO/IL
DISTRICT	SHEET NO.
6	BR172

COUNTY
ST. LOUIS CITY - MO
ST. CLAIR - IL

JOB NO.
J6I0984

CONTRACT ID.

PROJECT NO.

BRIDGE NO.
A6500

DESCRIPTION	DATE

MISSOURI HIGHWAYS AND TRANSPORTATION COMMISSION
105 WEST CAPITOL
JEFFERSON CITY, MO 65102
1-888-ASK-MODOT (1-888-275-6636)

HNTB
715 KIRK DRIVE
KANSAS CITY, MO 64105-1310
TELEPHONE (816) 472-1201
CERTIFICATE OF AUTHORITY
NO. 000170

LICENSED STRUCTURAL ENGINEER
HANS R. HUTTON
081-006707
STATE OF ILLINOIS
EXPIRES 11-30-2010

8-20-2009

REV.

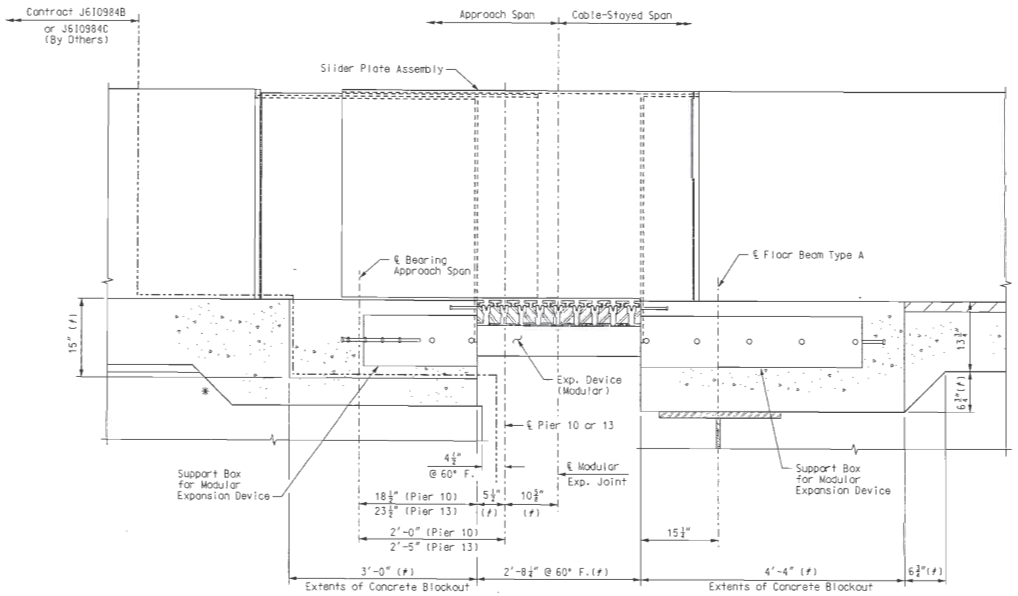

SECTION A-A

* Approach slab details shown for Pier 13, details at Pier 10 are similar.

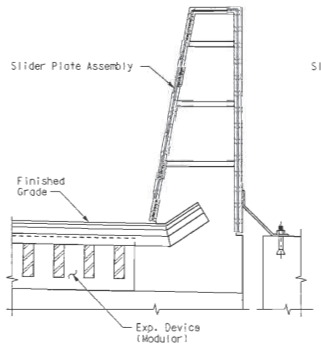

SECTION B-B

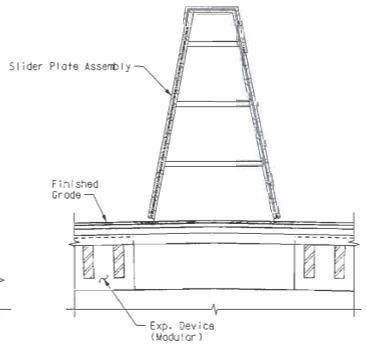

SECTION C-C

Notes:
For additional notes and locations of Sections A-A thru C-C, see Sheet No. BR172.

EXPANSION JOINT DETAILS - PIERS 10 & 13

Detailed JUL 2009
Checked JUL 2009

Note: This drawing is not to scale. Follow dimensions.

Sheet No. 173 of 205

\\kcow00\jobs\46440\Bridges\Plans\CdtoMoDOTA6500\J6I0984\A6500-dgn\ZPLOT_B_A6500_001-205_J6I0984_173.dgn

19-AUG-2009 07:22

STATE OF MISSOURI
HANS R. HUTTON
NUMBER E-29174
PROFESSIONAL ENGINEER
Hans R. Hutton

DATE
8/20/09

ROUTE	STATE
I-70	MO/IL
DISTRICT	SHEET NO.
6	BR173

COUNTY
ST. LOUIS CITY - MO
ST. CLAIR - IL

JOB NO.
J6I0984

CONTRACT ID.

PROJECT NO.

BRIDGE NO.
A6500

DESCRIPTION	DATE

MISSOURI HIGHWAYS AND TRANSPORTATION COMMISSION
105 WEST CAPITOL
JEFFERSON CITY, MO 65102
1-888-ASK-MODOT (1-888-275-6636)

HNTB
715 KIRK DRIVE
KANSAS CITY, MO 64105-1310
TELEPHONE 816.472.1201
CERTIFICATE OF AUTHORITY NO. 001270

LICENSED STRUCTURAL ENGINEER
HANS R. HUTTON
081-006707
STATE OF ILLINOIS
Hans R. Hutton
8-20-2009
DATE

REV.

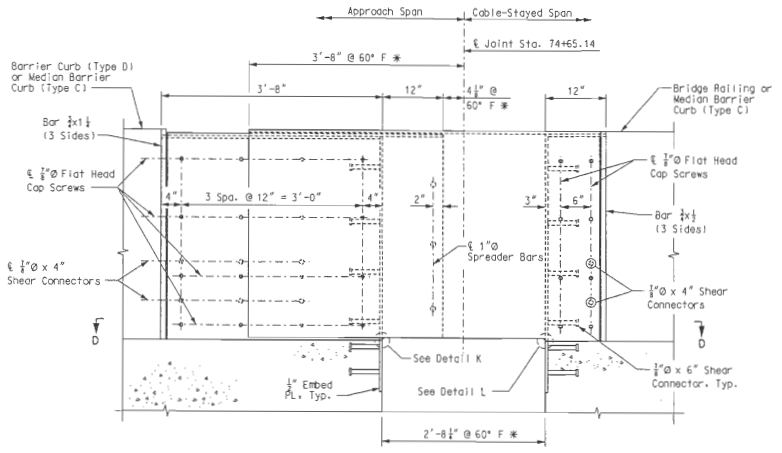

ELEVATION – COVER PLATES AT PIER 10

(Elevation shown at Bridge Railing; Median Barrier Curb (Type C) similar.)

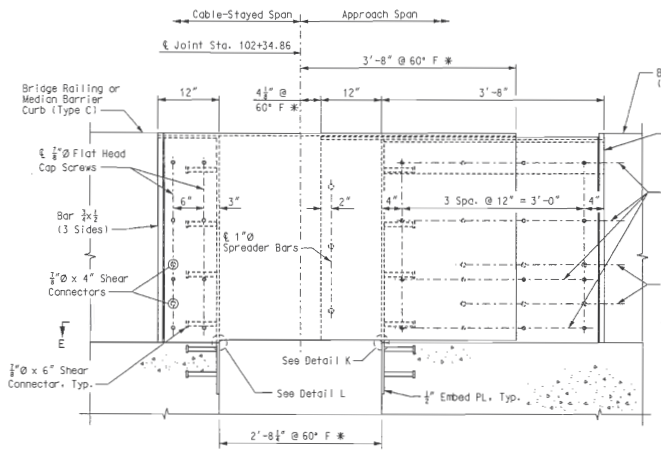

ELEVATION – COVER PLATES AT PIER 13

(Elevation shown at Bridge Railing; Median Barrier Curb (Type C) similar.)

Notes:

For Sections F-F thru J-J and Details K thru P, see Sheet No. BR175.

For Sections R-R thru W-W, see Sheet No. BR176.

Contractor shall furnish all components of Expansion Joint shown on this sheet.

✱ Gap dimension @ 60°F is dependant upon modular expansion joint selection. Contractor is responsible for coordinating any revisions required due to deviations from dimensions shown.

All plates shall be ASTM A709 Grade 50 material and shall be hot-dip galvanized after fabrication in accordance with ASTM A123.

All cap screws shall be ⅞"Ø x3" flat countersunk head cap screw ASTM F835-04 and shall be hot-dip galvanized in accordance with ASTM A153.

Anchor studs, washers and nuts shall conform to the requirements of ASTM A307 and shall be galvanized in accordance to ASTM A153.

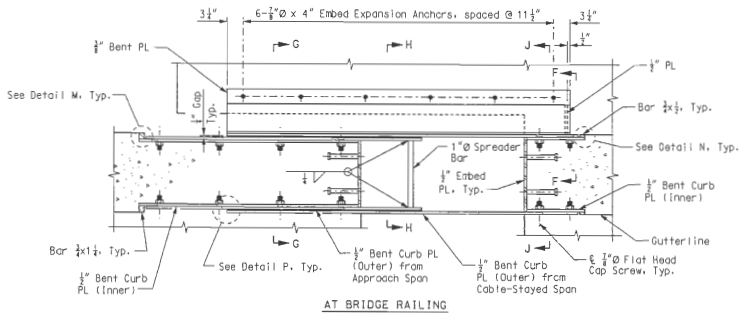

AT BRIDGE RAILING

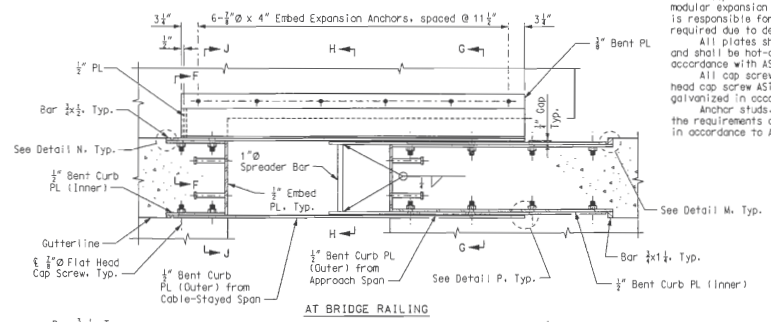

AT BRIDGE RAILING

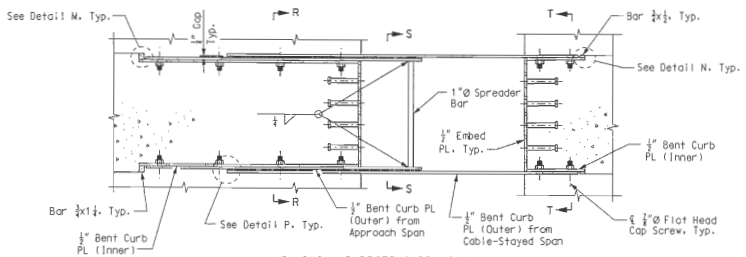

AT MEDIAN BARRIER CURB (TYPE C)

SECTION D-D

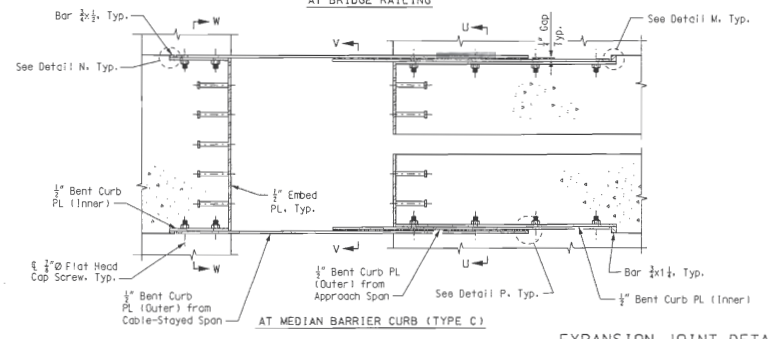

AT MEDIAN BARRIER CURB (TYPE C)

SECTION E-E

EXPANSION JOINT DETAILS – PIERS 10 & 13

Detailed JUL 2009
Checked JUL 2009

Note: This drawing is not to scale. Follow dimensions.

Sheet No. 174 of 205

\\kcow00\jobs\46440\Bridges\Plans\CdotoMoDOTA6500\J6I0984\A6500-dgn\ZPLOT_B_A6500_001-205_J6I0984_174.dgn

19-AUG-2009 07:22

STATE OF MISSOURI
HANS R. HUTTON
NUMBER E-25974
REGISTERED PROFESSIONAL ENGINEER

DATE
8/20/09

ROUTE	STATE
I-70	MO/IL
DISTRICT	SHEET NO.
6	BR174

COUNTY
ST. LOUIS CITY - MO
ST. CLAIR - IL

JOB NO.
J6I0984

CONTRACT ID.

PROJECT NO.

BRIDGE NO.
A6500

DESCRIPTION	DATE

MISSOURI HIGHWAYS AND TRANSPORTATION COMMISSION

105 WEST CAPITOL
JEFFERSON CITY, MO 65102
1-888-ASK-MODOT (1-888-275-6636)

HNTB
715 KIRK DRIVE
KANSAS CITY, MO 64105-1310
TELEPHONE (816) 472-1201
CERTIFICATE OF AUTHORITY NO. 001270

LICENSED STRUCTURAL ENGINEER
HANS R. HUTTON
081-006707
STATE OF ILLINOIS

8-20-2009

REV.

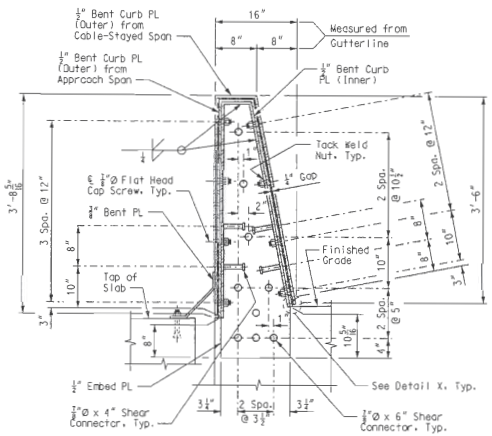

SECTION G-G

(Section shown at Pier 10: Pier 13 is opposite-hand.)

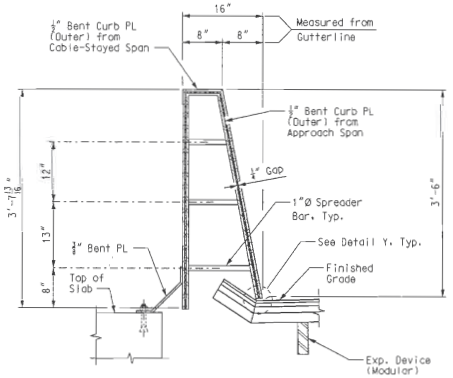

SECTION H-H

(Section shown at Pier 10: Pier 13 is opposite-hand.)

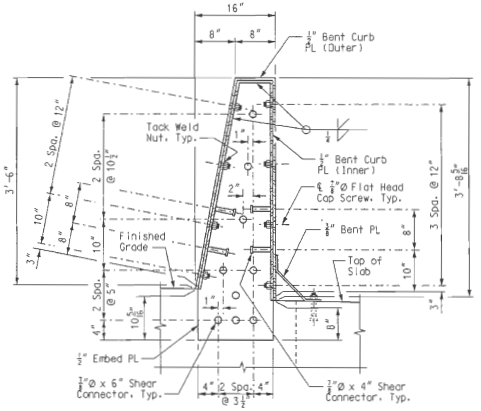

SECTION J-J

(Section shown at Pier 10: Pier 13 is opposite-hand.)

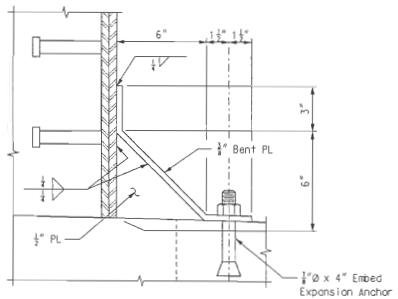

SECTION F-F

(Section shown at Pier 10: Pier 13 is opposite-hand.)

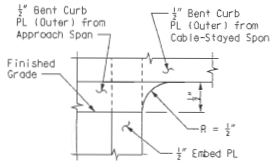

DETAIL K

(Section shown at Pier 10: Pier 13 is opposite-hand.)

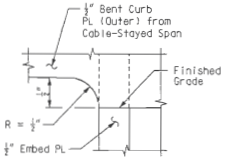

DETAIL L

(Section shown at Pier 10: Pier 13 is opposite-hand.)

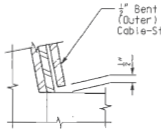

DETAIL X

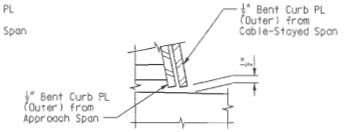

DETAIL Y

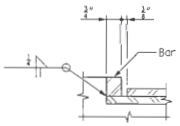

DETAIL M

(Section shown at Pier 10: Pier 13 is opposite-hand.)

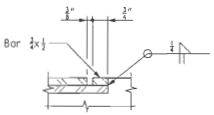

DETAIL N

(Section shown at Pier 10: Pier 13 is opposite-hand.)

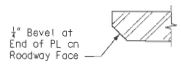

DETAIL P

(Section shown at Pier 10: Pier 13 is opposite-hand.)

Notes:
For location of Sections F-F thru J-J and Details K thru P, see Sheet No. BR174.
For additional notes, see Sheet Nos. BR172 & BR174.

EXPANSION JOINT DETAILS - PIERS 10 & 13

Detailed JUL 2009
Checked JUL 2009

Note: This drawing is not to scale. Follow dimensions.

Sheet No. 175 of 205

\\kcow00\jobs\46440\Bridges\Plans\CdotoMoDOTA6500\J6I0984\A6500-dgn\ZPLOT_B_A6500_001-205_J6I0984_175.dgn

19-AUG-2009 07:22

STATE OF MISSOURI
HANS R. HUTTON
NUMBER E-9974
REGISTERED PROFESSIONAL ENGINEER
8-20-09

DATE: 8/20/09
ROUTE: I-70
STATE: MO/IL
DISTRICT: 6
SHEET NO.: BR175
COUNTY: ST. LOUIS CITY - MO, ST. CLAIR - IL
JOB NO.: J6I0984
CONTRACT ID.:
PROJECT NO.:
BRIDGE NO.: A6500

DESCRIPTION | DATE

MISSOURI HIGHWAYS AND TRANSPORTATION COMMISSION
105 WEST CAPITOL
JEFFERSON CITY, MO 65102
1-888-ASK-MODOT (1-888-275-6636)

HNTB
715 KIRK DRIVE
KANSAS CITY, MO 64105-1310
TELEPHONE (816) 472-1201
CERTIFICATE OF AUTHORITY NO. 000270

LICENSED STRUCTURAL ENGINEER
HANS R. HUTTON
081-006707
STATE OF ILLINOIS
8-20-2009

REV.

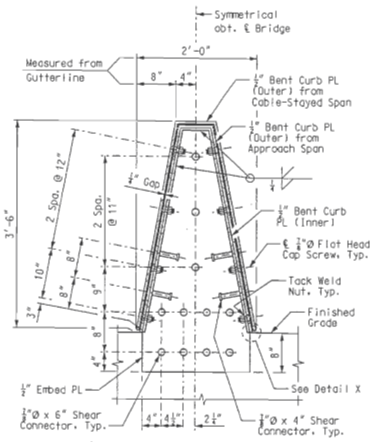

SECTION R-R

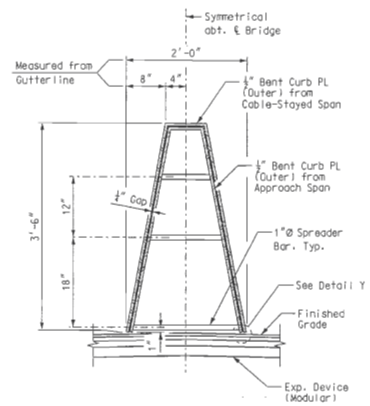

SECTION S-S

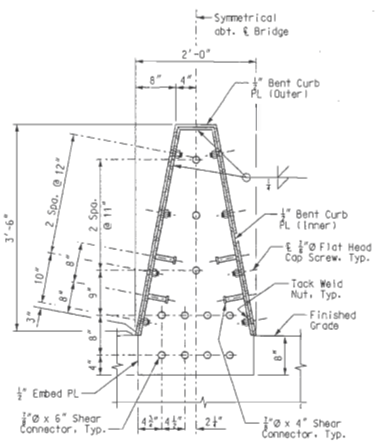

SECTION T-T

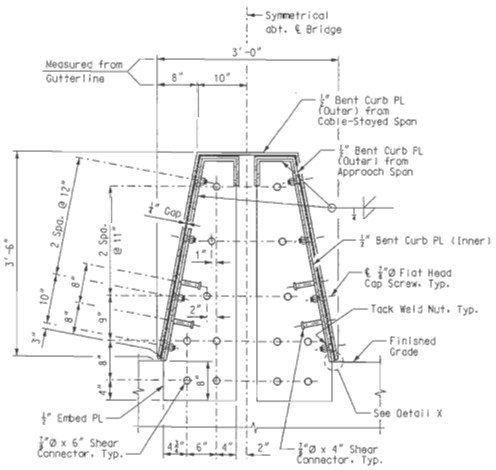

SECTION U-U

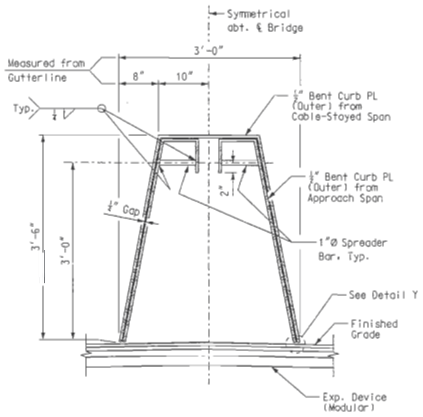

SECTION V-V

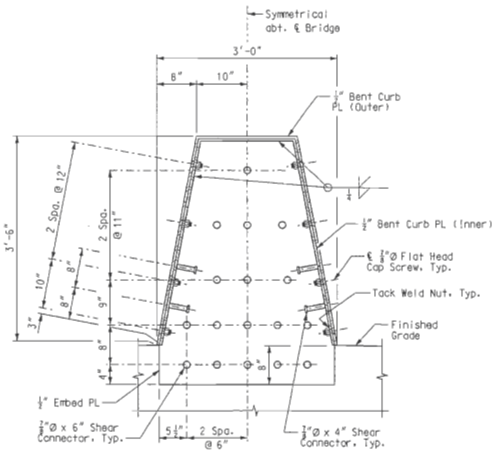

SECTION W-W

Notes:
For location of Sections R-R thru W-W, see Sheet No. BR174.
For Details X & Y, see Sheet No. BR175.
For additional notes, see Sheet Nos. BR172 & BR174.

EXPANSION JOINT DETAILS - PIERS 10 & 13

Detailed JUL 2009
Checked JUL 2009

Note: This drawing is not to scale. Follow dimensions.

Sheet No. 176 of 205

\\kcow00\jobs\46440\Bridges\Plans\CdtoMoDOTA6500\J6I0984\A6500-dgn\ZPLOT_B_A6500_001-205_J6I0984_176.dgn

19-AUG-2009 07:22

STATE OF MISSOURI
HANS R. HUTTON
NUMBER E-29174
REGISTERED PROFESSIONAL ENGINEER
Hans R. Hutton

DATE
8/20/09

ROUTE	STATE
I-70	MO/IL
DISTRICT	SHEET NO.
6	BR176

COUNTY
ST. LOUIS CITY - MO
ST. CLAIR - IL

JOB NO.
J6I0984

CONTRACT ID.

PROJECT NO.

BRIDGE NO.
A6500

DESCRIPTION	DATE

MISSOURI HIGHWAYS AND TRANSPORTATION COMMISSION
105 WEST CAPITOL
JEFFERSON CITY, MO 65102
1-888-ASK-MODOT (1-888-275-6636)

HNTB
715 KIRK DRIVE
KANSAS CITY, MO 64105-1310
TELEPHONE (816) 472-1201
CERTIFICATE OF AUTHORITY NO. 001270

LICENSED STRUCTURAL ENGINEER
HANS R. HUTTON
081-006707
STATE OF ILLINOIS
expires 11-30-2010
Hans R. Hutton
8-20-2009

REV.

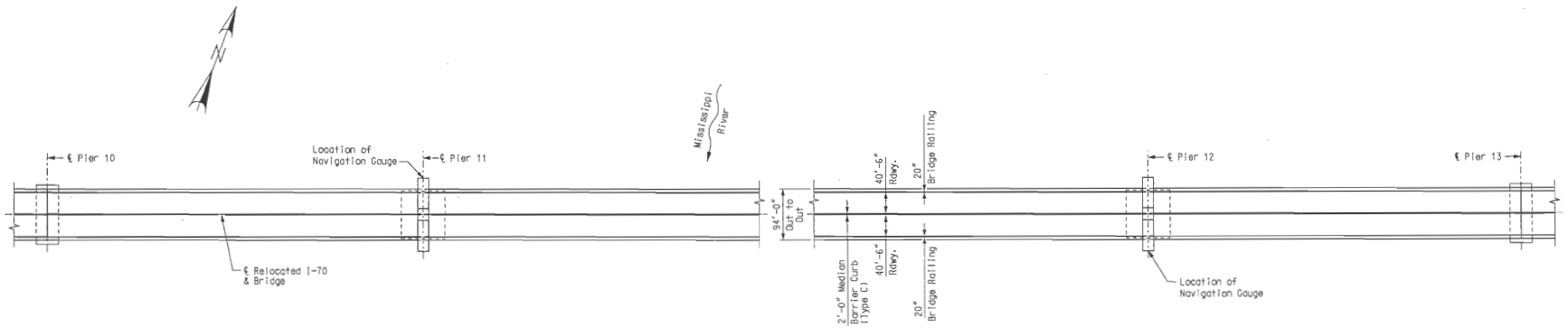

PLAN

4

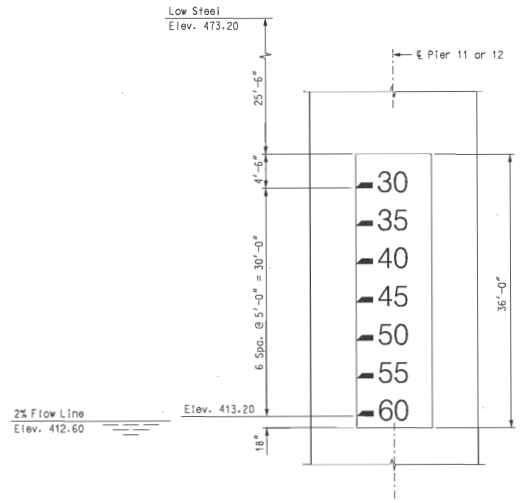

NAVIGATION GAUGE
(Dimensions shown are vertical)

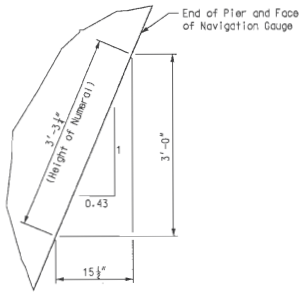

SCHEMATIC VIEW OF PAINTED NUMERAL

Notes:

The navigation gauge shall be painted on the upstream side of Pier 11 and the downstream side of Pier 12, using black numerals and footmarks on a white background.

Numerals shall conform to those in "Standard Alphabets for Highway Signs", U.S. Department of Transportation, Federal Highway Administration, with a height of 36" (measured vertically).

The length of the footmarks must be no less than the width fo a single numeral used (except numerals 1 and 4), and the thickness must be the same as the width of stroke of the numeral. The footmarks should extend to the nearest margin of the white background.

The minimum width of white background must not be less than three times the width of a single numeral (except numerals 1 and 4) plus the width of each additional numeral (when multiple numerals are used), plus numeral spacing.

Paint shall be of good quality, resistant to chalking or bleeding.

The cost of the clearance gauge shall be incidental to the cost of the Piers.

NAVIGATION CLEARANCE GAUGE – PIERS 11 & 12

STATE OF MISSOURI
HANS R. HUTTON
NUMBER E-29174
REGISTERED ENGINEER
Hans R. Hutton

DATE 5/17/10
ROUTE I-70
STATE MO/IL
DISTRICT 6
SHEET NO. BR177
COUNTY ST. LOUIS CITY - MO ST. CLAIR - IL
JOB NO. J6I0984
CONTRACT ID.
PROJECT NO.
BRIDGE NO. A6500

REV.	DATE	DESCRIPTION
1	5-17-10	Revised per ATC

MISSOURI HIGHWAYS AND TRANSPORTATION COMMISSION
MoDOT
105 WEST CAPITOL
JEFFERSON CITY, MO 65102
1-888-ASK-MODOT (1-888-275-6636)

HNTB
715 KIRK DRIVE
KANSAS CITY, MO 64105-1310
(816) 472-1201
CERTIFICATE OF AUTHORITY NO. 001270

LICENSED STRUCTURAL ENGINEER
HANS R. HUTTON
081-006702
STATE OF ILLINOIS
Hans R. Hutton
5-17-2010

Detailed JUL 2009
Checked JUL 2009

Note: This drawing is not to scale. Follow dimensions.

\\kcow00\jobs\46440\Bridges\Plans\CdotoMoDOTA6500\J6I0984\A6500-dgn\ZPLOT_B_A6500_177-205_J6I0984_177.dgn

17-MAY-2010 11:32

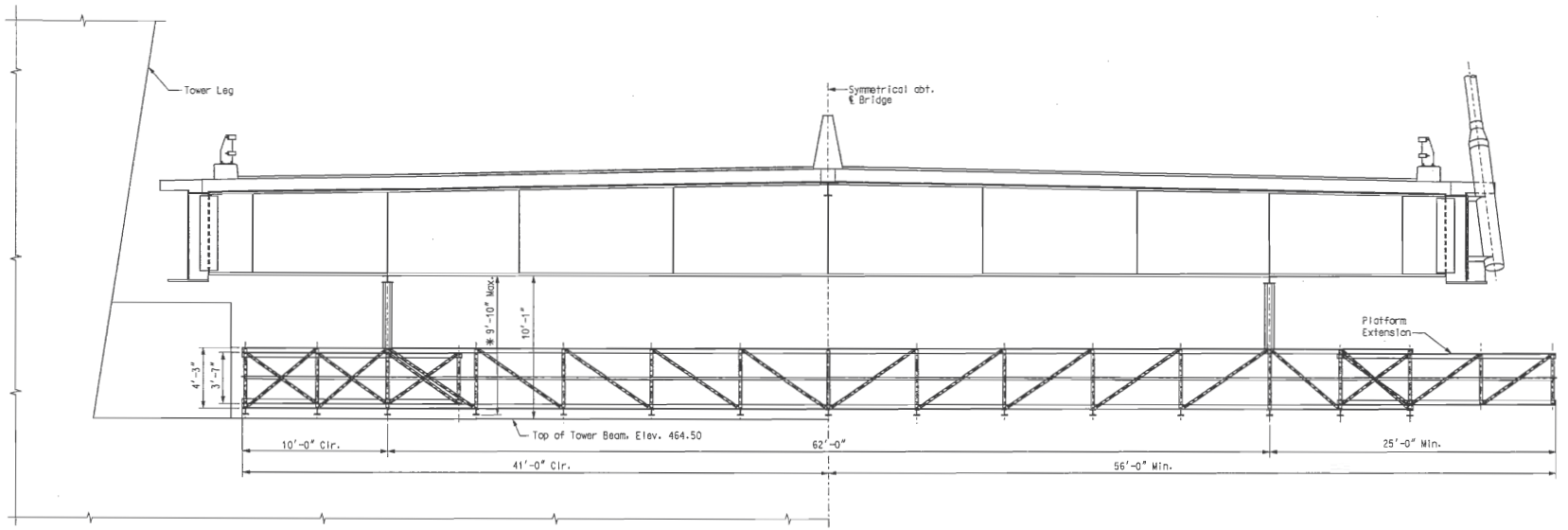

HALF-SECTION
(Traveler Collapsed)
(Lateral Restrainer and Bearing Not Shown)

HALF-SECTION
(Traveler Extended)

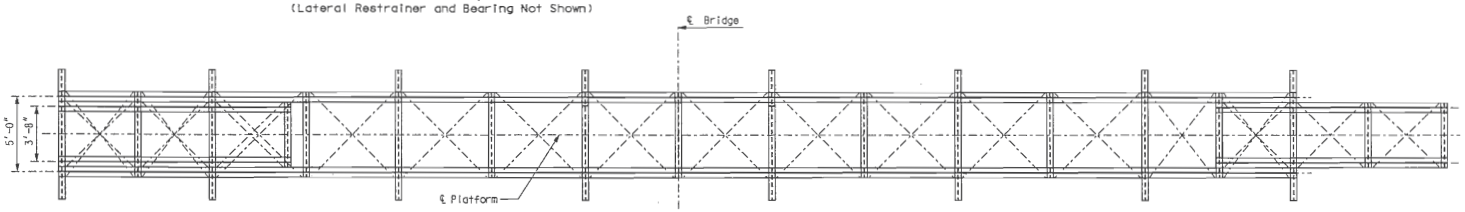

* Inspection Traveler Support System shall be of sufficient height to provide approximately 6'-0" minimum between the walkway and the bottom of the floor beam. A distance of 6'-6" between the walkway and the bottom of the floor beam has been assumed to set the elevation of the access platform. Should this distance be different than 6'-6", the access platform should be adjusted accordingly. See Sheet Nos. BR99 thru BR101 for Inspection Traveler Access Details.

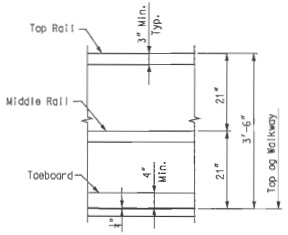

RAILING DIAGRAM

Notes:

The inspection traveler platform shown on this sheet is schematic in nature. The platform and rails, platform suspension system, access, propulsion and power systems are to be developed by the traveler manufacturer. See Special Provision "Inspection Traveler".

The structural system for the traveler shall be galvanized steel with yield strength no less than 36 ksi.

3 Traveler rails that are bolted to the bottom of the floor beams shall be made from uncoated A709, Gr. 50W steel. Bolts connecting the traveler rail to the floor beam shall be A325, type 3.

Walkways shall consist of non-skid galvanized steel floor grating planks, similar to eight-diamond safety grating. The walkway shall be no less than 36" wide. The walkway shall be equipped with railing in accordance with the Railing Diagram shown on this sheet.

In addition to dead load and any permanent equipment loading, the traveler shall be designed for a minimum uniform live load of 50 psf plus two concentrated loads of 200 pounds positioned to produce the maximum stress.

The traveler shall be designed for a wind speed of 30 mph during operation and 70 mph while parked.

The Contractor shall provide a method for emergency egress when the traveler is at any position along the span.

The total dead load of the traveler shall not exceed 40 kips.

INSPECTION TRAVELER DETAILS

STATE OF MISSOURI
HANS R. HUTTON
NUMBER E-29074
REGISTERED PROFESSIONAL ENGINEER
Hans R. Hutton

DATE 11/25/09
ROUTE I-70 | STATE MO/IL
DISTRICT 6 | SHEET NO. BR178
COUNTY ST. LOUIS CITY - MO ST. CLAIR - IL
JOB NO. J6I0984
CONTRACT ID.
PROJECT NO.
BRIDGE NO. A6500

DATE	DESCRIPTION
11-25-09	3 Revised traveler rail

MISSOURI HIGHWAYS AND TRANSPORTATION COMMISSION
MoDOT
105 WEST CAPITOL
JEFFERSON CITY, MO 65102
1-888-ASK-MODOT (1-888-275-6636)

HNTB
715 KIRK DRIVE
KANSAS CITY, MO 64105-1310
TELEPHONE (816) 472-1201
CERTIFICATE OF AUTHORITY NO. 001370

LICENSED STRUCTURAL ENGINEER
HANS R. HUTTON
081-006707
STATE OF ILLINOIS
expires 11-30-2010
Hans R. Hutton
11-25-2009

REV.

Detailed JUL 2009
Checked JUL 2009

Note: This drawing is not to scale. Follow dimensions.

\\kcow00\jobs\46440\Bridges\Plans\CdtoMoDOTA6500\J6I0984\A6500-dgn\ZPLOT_B_A6500_178-205_J6I0984_178.dgn

25-NOV-2009 11:49

STATE OF MISSOURI
HANS R. HUTTON
NUMBER E-29174
REGISTERED PROFESSIONAL ENGINEER
Hans R. Hutton



DATE	
5/17/10	
ROUTE	STATE
I-70	MO/IL
DISTRICT	SHEET NO.
6	BR179
COUNTY	
ST. LOUIS CITY - MO ST. CLAIR - IL	
JOB NO.	
J6I0984	
CONTRACT ID.	
PROJECT NO.	
BRIDGE NO.	
A6500	

DATE	DESCRIPTION
5-17-10	△1 Revised per ATC

MISSOURI HIGHWAYS AND TRANSPORTATION COMMISSION

MoDOT

105 WEST CAPITOL
JEFFERSON CITY, MO 65102
1-888-ASK-MODOT (1-888-275-6636)

HNTB

715 KIRK DRIVE
KANSAS CITY, MO 64105-1310
TELEPHONE (816) 472-1201
CERTIFICATE OF AUTHORITY
NO. 001270



LICENSED STRUCTURAL ENGINEER
HANS R. HUTTON
081-006707
STATE OF ILLINOIS

Hans R. Hutton
5-17-2010

△1 BLANK SHEET → SUGGESTED ERECTION SEQUENCE - PIERS 11 & 12

Detailed JUL 2009
Checked JUL 2009

Note: This drawing is not to scale. Follow dimensions.

\\kcow00\jobs\46440\Bridges\Plans\CdtcMoDOTA6500\J6I0984\A6500-dgn\ZPLOT_B_A6500_179-205_J6I0984_179.dgn

17-MAY-2010 11:32

REV.

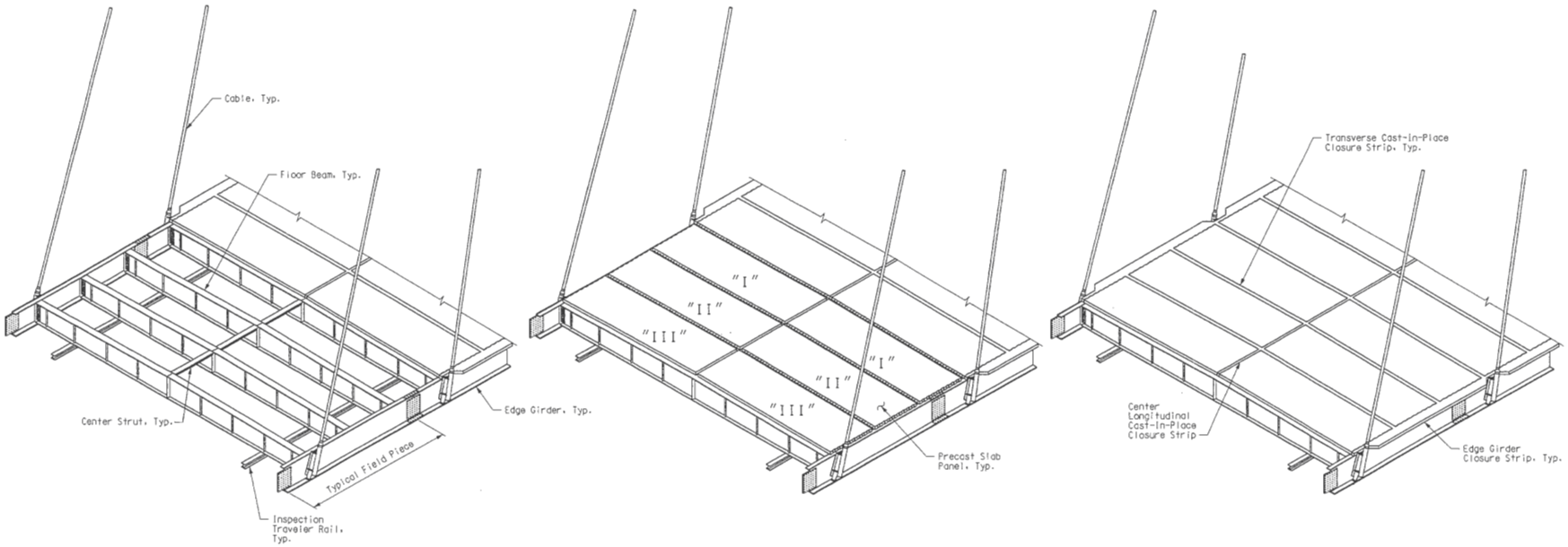

TYPICAL SUPERSTRUCTURE ERECTION SEQUENCE (T.S.E.S.) BEYOND PIER TABLE

1. Pre-assemble steel "Field Piece" (edge girders, floor beams, center struts and traveler rail).
2. Lift "Field Piece" in place with erection derrick, install and tighten all bolts in edge girder field splice, connect center strut between field sections, release erection derrick, install and partially stress cables.
3. Place precast slab panels "I", followed by slab panels "II" and "III" in that order.
4. Place longitudinal post-tensioning bars, couplers, floor beam shear connectors, center strut shear connectors and joint reinforcing at center longitudinal and transverse closure strips.
5. Place the transverse cast-in-place closure strips between all precast slab panels.
   Note: The portion of the transverse cast-in-place closure strips over the edge girder is not placed at this time.
6. After concrete closure strips have reached a minimum of 4500 psi, stress the longitudinal post-tensioning bars.
   Note: Jacking is to be approximately symmetric about the centerline of bridge with no more than 3 post-tensioning bars stressed unbalanced about the centerline of the bridge (typical per field section).
   After all bars are stressed to the required force/stress, the longitudinal ducts shall be grouted.
7. Install shear connectors and joint reinforcing along the edge girders, place cast-in-place concrete over the edge girders and center longitudinal closure strip.
   Note: Do not stress stay cables again until cast-in-place concrete over the edge girder has reached a minimum of 4500 psi.

PIER TABLE ERECTION SEQUENCE

Note:
The pier table shall be defined as Field Piece 14 and any temporary falsework required for stability.

1. Install temporary vertical bearings at towers.
2. Erect temporary falsework, edge girders, floor beams, center struts, traveler rails, temporary longitudinal restraint and temporary lateral restraint.
   Note: Longitudinal positioning of the Pier Table shall be offset 4.0' towards the west for Pier 11 and 3.8' towards the east for Pier 12.
3. Place precast slab panels on steel starting at bays nearest tower centerline.
   Note: At no time shall there be more than one precast slab panel out of balance about the centerline of the bent.
4. Place longitudinal post-tensioning bars, couplers, shear connectors and joint reinforcing at all closure strips including those along the edge girders.
5. Place concrete at all cast-in-place closure strips, including those over the edge girders.
6. After cast-in-place concrete has reached a minimum of 4500 psi, stress the longitudinal post-tensioning bars.
   Note: Jacking is to be approximately symmetric about the centerline of bridge with no more than 3 post-tensioning bars stressed unbalanced about the centerline of the bridge. After all bars are stressed to the required force, the longitudinal ducts shall be grouted.

The erection sequence shown is not represented as being the complete step-by-step procedure and is included for information only. The Contractor shall determine the complete erection sequence and equipment required for erection of the bridge.

Whether the Contractor proposes an alternate sequence or one similar to that shown on this drawing, the Contractor shall prepare a detailed erection sequence, including calculations and detailed drawings, to be submitted to the Engineer for review as part of the shop drawings. See Special Provision "Erection of Cable-Stayed Spans" for additional information.

The Contractor shall be responsible for the erection sequence in its entirety. The Contractor's bid shall be based solely upon the erection sequence proposed by the Contractor.

SUGGESTED ERECTION SEQUENCE - TYPICAL SUPERSTRUCTURE

Detailed JUL 2009
Checked JUL 2009

Note: This drawing is not to scale. Follow dimensions.

STATE OF MISSOURI
HANS R. HUTTON
NUMBER E-29714
REGISTERED PROFESSIONAL ENGINEER
Hans R. Hutton

DATE 8/20/09

ROUTE	STATE
I-70	MO/IL
DISTRICT	SHEET NO.
6	BR180

COUNTY
ST. LOUIS CITY - MO
ST. CLAIR - IL

JOB NO.
J6I0984

CONTRACT ID.

PROJECT NO.

BRIDGE NO.
A6500

DESCRIPTION	DATE

MISSOURI HIGHWAYS AND TRANSPORTATION COMMISSION
MoDOT
105 WEST CAPITOL
JEFFERSON CITY, MO 65102
1-888-ASK-MODOT (1-888-275-6636)

HNTB
715 KIRK DRIVE
KANSAS CITY, MO 64105-1310
TELEPHONE (816) 472-1201
CERTIFICATE OF AUTHORITY NO: 001270

LICENSED STRUCTURAL ENGINEER
HANS R. HUTTON
081-006707
STATE OF ILLINOIS
REGISTERED
Hans R. Hutton
8-20-2009

REV.

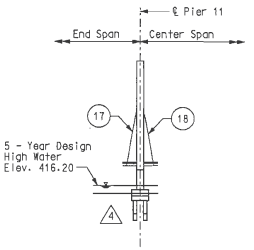

ELEVATION

STAGE 1

1. Erect pier table per Pier Table Erection Sequence on Sheet No. BR180. See note regarding Pier Table offset on Sheet No. BR180.
2. Install Stay Cables 17 and 18, stress to lift steel from falsework.
3. Remove falsework.

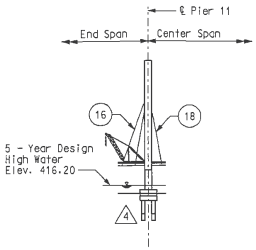

ELEVATION

STAGE 2

1. Construct end span derrick and erect structural steel for Field Piece 13 per T.S.E.S. in end span.
2. Install Stay Cables 16 and stress to initial load.
3. Place precast slab panels on Field Piece 13 and complete T.S.E.S.
4. Stress Stay Cables 16 to camber deck to intermediate erection profile.
5. Move end span derrick forward onto Field Piece 13.

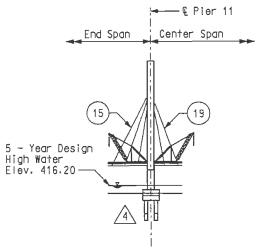

ELEVATION

STAGE 3

1. Construct center span derrick and erect structural steel for Field Piece 15 per T.S.E.S. in center span.
2. Install Stay Cables 19 and stress to initial load.
3. Place precast slab panels on Field Piece 15 per T.S.E.S..
4. Erect structural steel for Field Piece 12 per T.S.E.S. in end span.
5. Complete T.S.E.S. for Field Piece 15.
6. Install Stay Cables 15 and stress to initial load.
7. Stress Stay Cables 19 to camber deck to intermediate erection profile.
8. Place precast slab panels on Field Piece 12 per T.S.E.S..
9. Move center span derrick forward onto Field Piece 15.

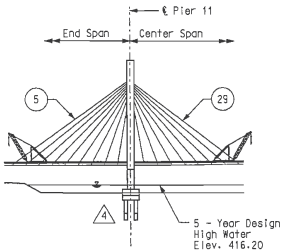

ELEVATION

STAGES 4 THRU 13

1. Erect structural steel for Field Piece 16 per T.S.E.S. in center span.
2. Install Stay Cables 20 and stress to initial load.
3. Place precast slab panels on Field Piece 16 per T.S.E.S..
4. Complete T.S.E.S. for Field Piece 12.
5. Stress Stay Cables 15 to camber deck to intermediate erection profile.
6. Move end span derrick forward onto Field Piece 12.
7. Erect structural steel for Field Piece 11 per T.S.E.S. in end span.
8. Complete T.S.E.S. for Field Piece 16.
9. Install Stay Cables 14 and stress to initial load.
10. Stress Stay Cables 20 to camber deck to intermediate erection profile.
11. Place precast slab panels on Field Piece 11 per T.S.E.S..
12. Move center span derrick forward onto Field Piece 16.
13. Repeat Steps 1 thru 12 (above) for erection between Stay Cables 5 thru 15 and 20 thru 29.

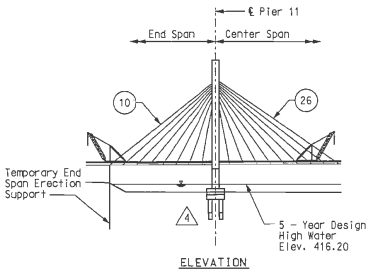

ELEVATION

TEMPORARY END SPAN ERECTION SUPPORT

Construct temporary end span erection support and all related connections to provide support for the end span. This support should only be engaged during periods of inactivity or for wind speeds over 30mph.

Stations of centerline for Temporary End Span Erection Supports are Sta. 77+62.00 and Sta. 99+38.00.

Temporary End Span Erection Support is intended to provide vertical and lateral restraint for the superstructure during periods of high wind during erection as specified.

Temporary End Span Erection Support shall allow for longitudinal movement.

Maximum anticipated vertical reactions due to unfactored wind loads at each support are 1305 kips downward and 320 kips upward (uplift).

Maximum anticipated lateral reaction due to unfactored wind loads at each support is 25 kips.

Assumed lateral stiffness of Temporary End Span Erection Support is 9.5 kips/inch.

Temporary End span Erection Support is assumed to be vertically rigid.

ERECTION SEQUENCE NOTES

The following sequence is presented for the west half structure and is viewed from the South looking North. The same sequence can be followed for east half structure viewed from the North looking South.

The following assumptions were used to develop the erection sequence presented:

1. Lifting of the steel field piece and precast slab panels beyond the pier table is facilitated by one stiffleg derrick crane on travelers at each end of the cantilever construction. The assumed total dead load for each stiffleg derrick crane and respective traveler system is 216 tons.
   Note: The maximum crane reactions are assumed to be distributed directly to the edge girders thru four point loads. 48 tons at each front reaction and 60 tons at each rear reaction.
2. For general erection loads, see "Construction" notes on Sheet No. BR7.
3. The definition of "Field Piece" used throughout this erection sequence is assumed to include two edge girder pieces, three floorbeams, center struts and traveler rails pre-assembled prior to lifting in place (except Field Pieces 1, 14, and 31).
4. The Contractor shall concurrently stress the cables on each side of the centerline of the bridge. At no time shall the cable forces be more than 5% unbalanced about the centerline of the bridge.

REACTIONS DURING ERECTION – PIERS 10 AND 13

Maximum anticipated vertical reaction at each elevated temporary edge girder support during erection is approximately 140 kips (downward).

Maximum anticipated vertical reaction at each tie-down device during erection is approximately 240 kips (downward).

Minimum anticipated vertical reaction at each tie-down device during erection is approximately 90 kips (uplift).

Note: The reported values are unfactored, are due to dead load/erection loads only, and are dependent upon the assumed erection sequence.

REACTIONS DURING ERECTION – PIERS 11 AND 12

Maximum anticipated vertical reaction at each temporary vertical bearing during erection is approximately 1185 kips.

Maximum anticipated longitudinal reaction at each temporary longitudinal restraint during erection is approximately 600 kips.
Note: The reported values are unfactored, are due to dead load/erection loads only, and are dependent upon the assumed erection sequence.

The erection sequence shown is not represented as being the complete step-by-step procedure and is included for information only. The Contractor shall determine the complete erection sequence and equipment required for erection of the bridge.

Whether the Contractor proposes an alternate sequence or one similar to that shown on this drawing, the Contractor shall prepare a detailed erection sequence, including calculations and detailed drawings, to be submitted to the Engineer for review as part of the shop drawings. See Special Provision "Erection of Cable-Stayed Spans" for additional information.

The Contractor shall be responsible for the erection sequence in its entirety. The Contractor's bid shall be based solely upon the erection sequence proposed by the Contractor.

Notes:

(#) Denotes Stay Cable.

For steel framing plan, see Sheet Nos. BR109 & BR110.
For precast slab panel layout, see Sheet Nos. BR144 & BR145.
For stay cable schedule, see Sheet Nos. BR141 & BR142.
For Typical Superstructure Erection Sequence (T.S.E.S.), see Sheet No. BR180.

SUGGESTED ERECTION SEQUENCE

STATE OF MISSOURI
HANS R. HUTTON
NUMBER E-29174
REGISTERED PROFESSIONAL ENGINEER
Hans R. Hutton

DATE 5/17/10
ROUTE I-70 | STATE MO/IL
DISTRICT 6 | SHEET NO. BR181
COUNTY ST. LOUIS CITY - MO, ST. CLAIR - IL
JOB NO. J6I0984
CONTRACT ID.
PROJECT NO.
BRIDGE NO. A6500

DATE	DESCRIPTION
5-17-10	1 Revised per ATC

MISSOURI HIGHWAYS AND TRANSPORTATION COMMISSION
105 WEST CAPITOL
JEFFERSON CITY, MO 65102
1-888-ASK-MODOT (1-888-275-6636)

HNTB
115 KIRK DRIVE
KANSAS CITY, MO 64105-1310
TELEPHONE (816) 472-1201
CERTIFICATE OF AUTHORITY NO. 001270

STATE OF ILLINOIS
LICENSED STRUCTURAL ENGINEER
HANS R. HUTTON
081-005707
EXPIRES 11-30-2010
Hans R. Hutton
5-17-2010

REV.

Detailed JUL 2009
Checked JUL 2009

Note: This drawing is not to scale. Follow dimensions.

\\kcow00\jobs\46440\Bridges\Plans\CdtoMoDOTA6500\J6I0984\A6500-dgn\ZPLOT_B_A6500_181-205_J6I0984_181.dgn

17-MAY-2010 11:32

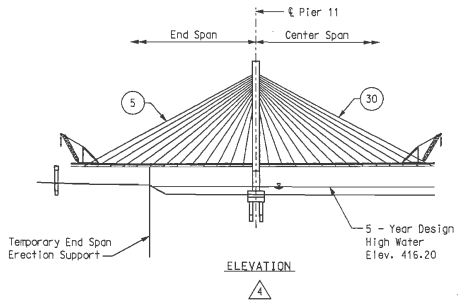

STAGE 14

1. Erect structural steel for Field Piece 26 per T.S.E.S. in center span.
2. Install Stay Cables 30 and stress to initial load.
3. Place precast slab panels on Field Piece 26 per T.S.E.S..
4. Complete T.S.E.S. for Field Piece 2.
5. Complete T.S.E.S. for Field Piece 26.
6. Move end span derrick forward onto Field Piece 2.
7. Stress Stay Cables 30 to camber deck to intermediate erection profile.
8. Move center span derrick forward onto Field Piece 26.

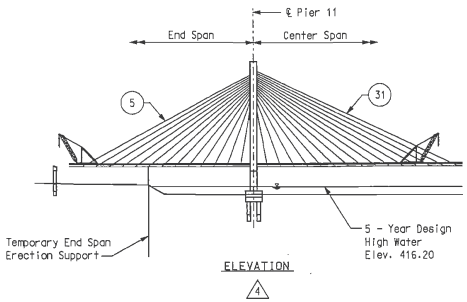

STAGE 15

1. Erect structural steel for Field Piece 27 per T.S.E.S. in center span.
2. Install Stay Cables 31 and stress to initial load.
3. Stress Stay Cables 5 to camber deck to intermediate erection profile.
4. Install Elevated temporary edge girder support at anchor pier (See Sheet No. BR181 for anticipated reactions.). Prepare to receive Field Piece 1.

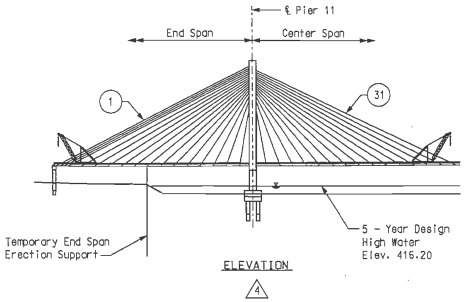

STAGE 16

1. Erect structural steel for Field Piece 1 per T.S.E.S. in end span with free end located on the elevated temporary support at anchor pier.
2. Install Stay Cables 4 and stress to initial load.
3. Remove Elevated Temporary Edge Girder Support at anchor Pier and all related connections to the superstructure.
4. Install Stay Cables 3,2, & 1 and stress to intial load.
5. Place precast slab panels on Field Piece 27 and complete T.S.E.S.
6. Place precast slab panels on Field Piece 1 and complete T.S.E.S. between Stay Cables 4 and 5 only.
7. Stress Stay Cables 31 to camber deck to intermediate erection profile.
8. Move center span derrick forward onto Field Piece 27.

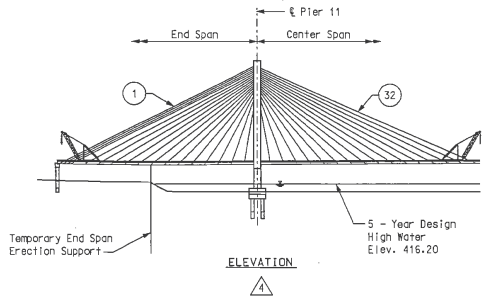

STAGE 17

1. Erect structural steel for Field Piece 28 per T.S.E.S. in center span.
2. Install Stay Cables 32 and stress to initial load.
3. Stress Stay Cables 3 to camber deck to intermediate erection profile.
4. Add precast counterweight panels to Field Piece 1 which represents the first of eight counterweight segments.
5. Place precast slab panels on Field Piece 28 per T.S.E.S..
6. Add second segment of counterweight to Field Piece 1.
7. Complete T.S.E.S. for Field Piece 28.
8. Stress Stay Cables 32 to camber deck to intermediate erection profile.
9. Move center span derrick forward onto Field Piece 28.

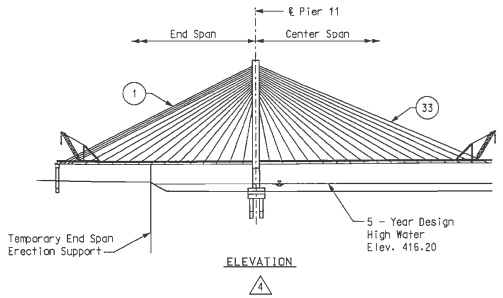

STAGE 18

1. Erect structural steel for Field Piece 29 per T.S.E.S. in center span.
2. Install Stay Cables 33 and stress to initial load.
3. Stress Stay Cables 4 to camber deck to intermediate erection profile.
4. Stress Stay Cables 2 to camber deck to intermediate erection profile.
5. Add third segment of counterweight to Field Piece 1.
6. Place precast slab panels on Field Piece 29 per T.S.E.S.
7. Add fourth segment of counterweight to Field Piece 1.
8. Complete T.S.E.S. for Field Piece 29.
9. Stress Stay Cables 33 to camber deck to intermediate erection profile.
10. Stress Stay Cables 1 to camber deck to intermediate erection profile.
11. Move center span derrick forward onto Field Piece 29.

The erection sequence shown is not represented as being the complete step-by-step procedure and is included for information only. The Contractor shall determine the complete erection sequence and equipment required for erection of the bridge.

Whether the Contractor proposes an alternate sequence or one similar to that shown on this drawing, the Contractor shall prepare a detailed erection sequence, including calculations and detailed drawings, to be submitted to the Engineer for review as part of the shop drawings. See Special Provision "Erection of Cable-Stayed Spans" for additional information.

The Contractor shall be responsible for the erection sequence in its entirety. The Contractor's bid shall be based solely upon the erection sequence proposed by the Contractor.

Notes:

(#) Denotes Stay Cable

For additional notes and details, see Sheet No. BR181.

SUGGESTED ERECTION SEQUENCE

STATE OF MISSOURI
HANS R HUTTON
NUMBER E-29174
REGISTERED PROFESSIONAL ENGINEER
Hans R Hutton

DATE 5/17/10
ROUTE I-70 | STATE MO/IL
DISTRICT 6 | SHEET NO. BR182
COUNTY ST. LOUIS CITY - MO, ST. CLAIR - IL
JOB NO. J6I0984
CONTRACT ID.
PROJECT NO.
BRIDGE NO. A6500

DATE	REV.	DESCRIPTION
5-17-10	1	Revised per ATC

MISSOURI HIGHWAYS AND TRANSPORTATION COMMISSION
MoDOT
105 WEST CAPITOL
JEFFERSON CITY, MO 65102
1-888-ASK-MODOT (1-888-275-6636)

HNTB
715 KIRK DRIVE
KANSAS CITY, MO 64105-1310
TELEPHONE (816) 472-1201
CERTIFICATE OF AUTHORITY NO. 001270

LICENSED STRUCTURAL ENGINEER
HANS R. HUTTON
081-005707
STATE OF ILLINOIS
expires 11-30-2010
Hans R. Hutton
5-17-2010
DATE

Detailed JUL 2009
Checked JUL 2009

Note: This drawing is not to scale. Follow dimensions.

\\kcow00\jobs\46440\Bridges\Plans\CdtoMoDOTA6500\J6I0984\A6500-dgn\ZPLOT_B_A6500_182-205_J6I0984_182.dgn

17-MAY-2010 11:33

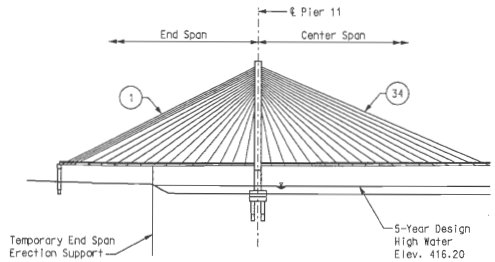

ELEVATION

STAGE 19 ⚠4

1. Erect structural steel for Field Piece 30 per T.S.E.S. in center span.
2. Install Stay Cables 34 and stress to initial load.
3. Add fifth segment of counterweight to Field Piece 1.
4. Place precast slab panels on Field Piece 30 per T.S.E.S.
5. Add sixth segment of counterweight to Field Piece 1.
6. Complete T.S.E.S. for Field Piece 30.
7. Add seventh segment of counterweight to Field Piece 1.
8. Install Tie-Down Device at Anchor Pier (see Sheet No. BR181 for anticipated reactions).
9. Remove temporary longitudinal restrainers at tower. Anticipated longitudinal movement of cantilever end due to release of longitudinal restrainers is approximately 24.0" at west half of cantilever and approximately 23.0" at east half cantilever. Direction of anticipated movement of both east and west sides is toward ℄ Mainspan.
10. Reinstall temporary longitudinal restrainers at tower.
11. Uninstall Tie-Down Device at Anchor Pier.
12. Add eighth/final segment of counterweight to Field Piece 1.
13. Remove end span and center span derricks from the bridge.
14. Stress Stay Cables 34 to camber deck to intermediate erection profile.
15. Install Tie-Down Device at Anchor Pier (see Sheet No. BR181 for anticipated reactions).
16. Remove temporary longitudinal restrainers at tower. Anticipated longitudinal movement of cantilever end due to release of longitudinal restrainers is approximately 21.4" at west half of cantilever and approximately 21.8" at east half cantilever. Direction of anticipated movement of both east and west sides is toward ℄ Mainspan.

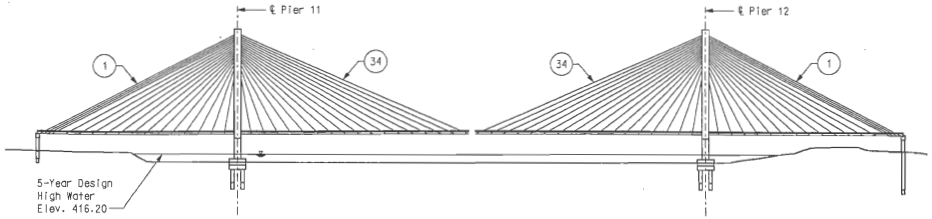

ELEVATION

STAGE 20 THRU 38 ⚠4

1. Repeat Stages 1 thru 19 for construction of east half of bridge.

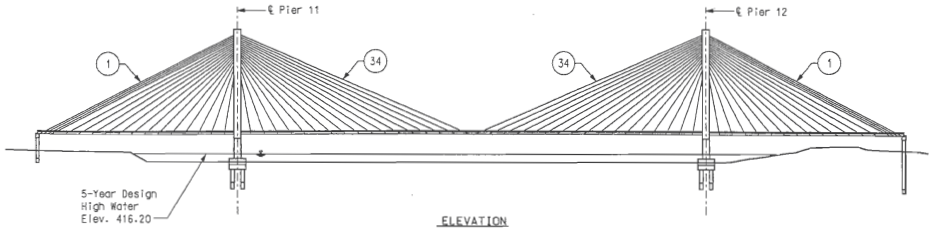

ELEVATION ⚠4

STAGE 39

1. Stress Cables 34 to camber both cantilevers to profile grade elevation.
2. Install closure piece (Field Piece 31) and connect edge girder field splices at east and west cantilevers.
3. Place precast slab panels on Field Piece 31. Place shear connectors, joint reinforcing at closure strips, and longitudinal and transverse cast-in-place closure strips between precast slab panels.
4. Place cast-in-place concrete over edge girders.
5. Install permanent longitudinal lock-up device and transverse restrainers at towers.
6. Construct barrier curbs, median barrier curb, and wearing surface.
7. Make final stay cable adjustments as required and shim bearings at pylon.
8. Install cable ties.

The erection sequence shown is not represented as being the complete step-by-step procedure and is included for information only. The Contractor shall determine the complete erection sequence and equipment required for erection of the bridge.

Whether the Contractor proposes an alternate sequence or one similar to that shown on this drawing, the Contractor shall prepare a detailed erection sequence, including calculations and detailed drawings, to be submitted to the Engineer for review as part of the shop drawings. See Special Provision "Erection of Cable-Stayed Spans" for additional information.

The Contractor shall be responsible for the erection sequence in its entirety. The Contractor's bid shall be based solely upon the erection sequence proposed by the Contractor.

Notes:

(#) Denotes Stay Cable

For additional notes and details, see Sheet No. BR181.

SUGGESTED ERECTION SEQUENCE

STATE OF MISSOURI
HANS R. HUTTON
NUMBER E-26114
PROFESSIONAL ENGINEER

DATE 5/17/10

ROUTE	STATE
I-70	MO/IL
DISTRICT	SHEET NO.
6	BR183

COUNTY
ST. LOUIS CITY - MO
ST. CLAIR - IL

JOB NO.
J6I0984

CONTRACT ID.

PROJECT NO.

BRIDGE NO.
A6500

DESCRIPTION	DATE
⚠1 Revised per ATC	5-17-10

MISSOURI HIGHWAYS AND TRANSPORTATION COMMISSION
105 WEST CAPITOL
JEFFERSON CITY, MO 65102
1-888-ASK-MODOT (1-888-275-6636)

HNTB
715 KIRK DRIVE
KANSAS CITY, MO 64105-1310
TELEPHONE (816) 472-1201
CERTIFICATE OF AUTHORITY NO. 001070

DIRECT STRUCTURAL ENGINEER
HANS R. HUTTON
081-006707
STATE OF ILLINOIS
5-17-2010

Detailed JUL 2009
Checked JUL 2009

Note: This drawing is not to scale. Follow dimensions.

\\kcow00\iobs\46440\Bridges\Plans\CdtoMoDOTA6500\J6I0984\A6500-dan\ZPLOT_B_A6500_183-205_J6I0984_183.dan

17-MAY-2010 11:33

REV.

BILL OF REINFORCING STEEL ⚠4

NO. REQ'D.	MARK NO. SIZE	MARK NO. MARK	LOCATION	EPOXY (E)	SHAPE NO.	STIRRUP (S)	SUBSTR. (X)	VARIES (V)	NO. EACH	DIMENSIONS B FT.	B IN.	C FT.	C IN.	D FT.	D IN.	E FT.	E IN.	F FT.	F IN.	H FT.	H IN.	K FT.	K IN.	NOMINAL LENGTH FT.	NOMINAL LENGTH IN.	ACTUAL LENGTH FT.	ACTUAL LENGTH IN.	WEIGHT LBS.
			SUBSTRUCTURE																									
			PIER 10																									
168	11	H1001	Beam	E	19		X			2′	-0″	58′	-1″											60′	-1″	59′	-9″	53,332
48	11	H1002	Beam	E	20		X			58′	-1″													58′	-1″	58′	-1″	14,813
24	6	H1003	Beam	E	5		X			11′	-4″	12″		12″										13′	-4″	13′	-1″	472
8	6	H1004	Beam	E	20		X			43′	-2″													43′	-2″	43′	-2″	519
14	6	H1005	Beam	E	19		X			3′	-10″	10′	-6″											14′	-4″	14′	-3″	300
28	6	H1006	Beam	E	19		X			12″		13′	-0″											14′	-0″	13′	-11″	585
7	6	H1007	Beam	E	5		X			21′	-6″	12″		12″										23′	-6″	23′	-3″	244
10	6	H1008	Beam	E	5		X			4′	-4″	5′	-7″	5′	-7″									15′	-6″	15′	-3″	229
26	4	H1009	Beam	E	20		X			5′	-6″													5′	-6″	5′	-6″	96
592	6	P1001	Drilled Shaft		16		X			9′	-0″													28′	-4″	28′	-4″	25,194
116	6	P1002	Drilled Shaft		16		X			9′	-0″	2′	-2″											30′	-6″	30′	-6″	5,314
64	6	P1003	Beam	E	16		X			9′	-0″													28′	-4″	28′	-4″	2,724
208	7	U1001	Beam	E	53	S	X			4′	-8″	11′	-6″											33′	-10″	33′	-4″	14,172
104	7	U1002	Beam	E	5		X			11′	-6″	14″		14″										13′	-10″	13′	-6″	2,870
9	7	U1003	Beam	E	5		X			5′	-6″	4′	-6″	4′	-6″									14′	-6″	14′	-2″	261
20	7	U1004	Beam	E	5		X			5′	-6″	5′	-0″	5′	-0″									15′	-6″	15′	-2″	620
22	7	U1005	Beam	E	5		X			5′	-6″	5′	-3″	5′	-3″									16′	-0″	15′	-8″	704
33	7	U1006	Beam	E	5		X			5′	-6″	5′	-8″	5′	-8″									16′	-10″	16′	-6″	1,113
104	7	U1007	Beam	E	53	S	X			6′	-10″	11′	-6″											38′	-2″	37′	-8″	8,007
15	8	U1008	Beam	E	5		X			4′	-6″	12′	-8″	12′	-8″									29′	-10″	29′	-5″	1,178
11	11	U1009	Beam	E	5		X			7′	-6″	14′	-2″	14′	-2″									35′	-10″	35′	-2″	2,055
48	4	U1010	Beam	E	5		X			6″		19″		19″										3′	-8″	3′	-6″	112
60	18	V1001	Drilled Shaft		20		X			44′	-3″													44′	-3″	44′	-3″	36,108
60	18	V1002	Drilled Shaft		20		X			46′	-3″													46′	-3″	46′	-3″	37,740
60	18	V1003	Column	E	20		X			47′	-1″													47′	-1″	47′	-1″	38,420
60	18	V1004	Column	E	20		X			45′	-1″													45′	-1″	45′	-1″	36,788
28	6	V1005	Beam	E	20		X			11′	-6″													11′	-6″	11′	-6″	484
18	W5	W1001	Beam	E	22		X			2′	-1″	9	1/8″											33′	-2″	33′	-2″	100

Note:
Two additional W5W1001, #4-H1009, #6-V1005, #8-U1008 and #11-U1009 are included in Bill of Reinforcing Steel for testing.

SHAPE 2

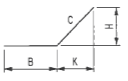

SHAPE 3



SHAPE 4

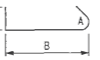

SHAPE 5



SHAPE 7



SHAPE 13

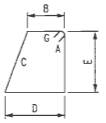

SHAPE 15

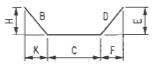

SHAPE 16

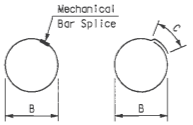

SHAPE 17



SHAPE 19

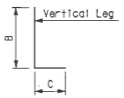

SHAPE 20



SHAPE 22

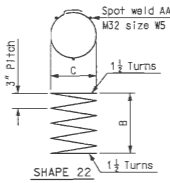

SHAPE 23

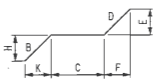

SHAPE 27

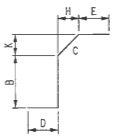

SHAPE 35

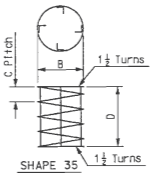

SHAPE 39

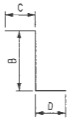

SHAPE 45



SHAPE 47

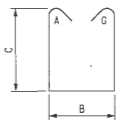

SHAPE 53

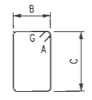

SHAPE 54

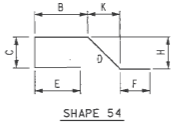

SHAPE 65

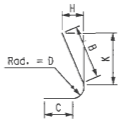

SHAPE 75

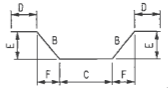

SHAPE 88

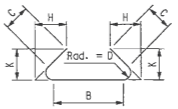

SHAPE 89

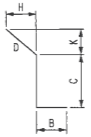

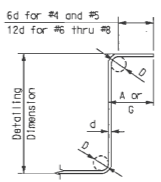

90° STIRRUP

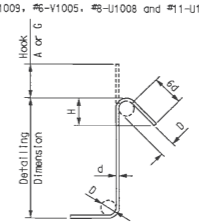

135° STIRRUP

STIRRUP HOOK DIMENSIONS

BAR SIZE	D (IN.)	GRADES 40 - 50 - 60 KSI 90° HOOK HOOK A OR G	135° HOOK HOOK A OR G	135° HOOK APPROX. H
#4	2″	4½″	4½″	3″
#5	2½″	6″	5⅝″	3½″
#6	4½″	12″	8″	4½″
#7	5½″	14″	9″	5½″
#8	6″	16″	10½″	6″

Note:
Unless otherwise noted, diameter "D" is the same for all bends and hooks on a bar.

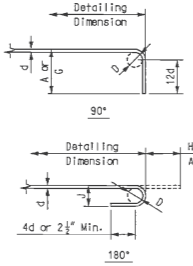

END HOOK DIMENSIONS

BAR SIZE	D (IN.)	ALL GRADES 180° HOOKS HOOK A OR G	180° HOOKS J	90° HOOKS HOOK A OR G
#3	2½″	5″	3″	6″
#4	3″	6″	4″	8″
#5	3¾″	7″	5″	10″
#6	4½″	8″	6″	12″
#7	5½″	10″	7″	14″
#8	6″	11″	8″	16″
#9	9½″	15″	11¼″	19″
#10	10¾″	17″	13¼″	22″
#11	12″	19″	14¼″	2′-0″
#14	18¼″	2′-3″	21¼″	2′-7″

Notes:
All standard hooks and bends other than 180 degree are to be bent with the same procedure as for 90 degree standard hooks.

Hooks and bends shall be in accordance with the procedures as shown on this sheet.

E = Epoxy coated reinforcement.
S = Stirrup.
X = Bar is included in substructure quantities.
V = Bar dimensions vary in equal increments between dimensions shown on this line and the following line.
No. Each = Number of bars of each length.

Nominal lengths are based on out to out dimensions shown in bending diagrams and are listed for fabricators use. (Nearest inch)

Actual lengths are measured along centerline bar to the nearest inch.

Payweights are based on actual lengths.

Reinforcing Steel (Grade 60) fy = 60,000 psi.

BAR BENDING DIAGRAM

Detailed JUL 2009
Checked JUL 2009

Note: This drawing is not to scale. Follow dimensions.

Sheet No. 184 of 205

STATE OF MISSOURI
HANS R. HUTTON
NUMBER E-29174
REGISTERED PROFESSIONAL ENGINEER
Hans R. Hutton

DATE
5/17/10
ROUTE I-70
STATE MO/IL
DISTRICT 6
SHEET NO. BR184
COUNTY ST. LOUIS CITY - MO ST. CLAIR - IL
JOB NO. J6I0984
CONTRACT ID.
PROJECT NO.
BRIDGE NO. A6500

DATE	DESCRIPTION
5-17-10	⚠4 Revised per A/C

MISSOURI HIGHWAYS AND TRANSPORTATION COMMISSION
MoDOT
105 WEST CAPITOL
JEFFERSON CITY, MO 65102
1-888-ASK-MODOT (1-888-275-6636)

HNTB
715 KIRK DRIVE
KANSAS CITY, MO 64105-1310
TELEPHONE (816) 472-1201
CERTIFICATE OF AUTHORITY NO. 001270

LICENSED STRUCTURAL ENGINEER
HANS R. HUTTON
081-005707
STATE OF ILLINOIS
Hans R. Hutton
5-17-2010

REV.

BILL OF REINFORCING STEEL

NO. REQ'D.	MARK NO. SIZE	MARK NO. MARK	LOCATION	EPOXY (E)	SHAPE NO.	STIRRUP (S)	SUBSTR. (X)	VARIES (V)	NO. EACH	DIMENSIONS B FT.	B IN.	C FT.	C IN.	D FT.	D IN.	E FT.	E IN.	F FT.	F IN.	H FT.	H IN.	K FT.	K IN.	NOMINAL LENGTH FT.	NOMINAL LENGTH IN.	ACTUAL LENGTH FT.	ACTUAL LENGTH IN.	WEIGHT LBS.
			PIER 11																									
1064	11P1101		Vertical		20		X			40′	-8″													40′	-8″	40′	-8″	229.890
202	11P1102		Vertical		20		X			30′	-0″													30′	-0″	30′	-0″	32.197
280	7P1103		Horizontal		88		X			20′	-11″	2′	-0″	3″						23″		23″		26′	-2″	26′	-2″	14.976
512	7P1104		Horizontal		88		X			18′	-0″	2′	-0″	3″						23″		23″		23′	-3″	23′	-3″	24.332
512	7P1105		Horizontal		65		X			15′	-4″	2′	-0″	3″						10′	-10 1/2″	10′	-10 1/2″	16′	-11″	16′	-11″	17.704
7032	5P1106		Horizontal		3	S	X			3′	-6″													4′	-0″	4′	-0″	29.338
13674	5P1107		Horizontal		3	S	X			12′	-0″													12′	-6″	12′	-6″	178.275
3904	5P1108		Horizontal		4	S	X			5′	-6″	6″												6′	-6″	6′	-5″	26.128
624	5P1109		Horizontal		3	S	X			18′	-0″													18′	-6″	18′	-6″	12.040
352	11P1110		Vertical		2		X			22′	-2″	17′	-9″							9′	-4 1/2″	15′	-0 1/2″	39′	-11″	39′	-11″	74.651
348	11P1111		Vertical		2		X			29′	-0″	10′	-11″							5′	-9 1/2″	9′	-3 1/2″	39′	-11″	39′	-11″	73.803
32	11P1112		Vertical		20		X			18′	-6″													18′	-6″	18′	-6″	3.145
32	11P1113		Vertical		20		X			25′	-4″													25′	-4″	25′	-4″	4.307
16	11P1114		Vertical		20		X			12′	-0″													12′	-0″	12′	-0″	1.020
16	11P1115		Vertical		20		X			18′	-10″													18′	-10″	18′	-10″	1.601
32	11P1116		Vertical		20		X			15′	-3″													15′	-3″	15′	-3″	2.593
32	11P1117		Vertical		20		X			22′	-1″													22′	-1″	22′	-1″	3.755
60	11P1118		Vertical		20		X			15′	-4″													15′	-4″	15′	-4″	4.888
60	11P1119		Vertical		20		X			8′	-6″													8′	-6″	8′	-6″	2.710
8	11P1120		Vertical		20		X			22′	-8″													22′	-8″	22′	-8″	963
8	11P1121		Vertical		20		X			29′	-6″													29′	-6″	29′	-6″	1.254
8	11P1122		Vertical		20		X			23′	-7″													23′	-7″	23′	-7″	1.002
8	11P1123		Vertical		20		X			30′	-5″													30′	-5″	30′	-5″	1.293
8	11P1124		Vertical		20		X			24′	-6″													24′	-6″	24′	-6″	1.041
8	11P1125		Vertical		20		X			31′	-4″													31′	-4″	31′	-4″	1.332
8	11P1126		Vertical		20		X			25′	-6″													25′	-6″	25′	-6″	1.084
8	11P1127		Vertical		20		X			32′	-4″													32′	-4″	32′	-4″	1.374
156	11P1128		Vertical		20		X			26′	-3″													26′	-3″	26′	-3″	21.757
156	11P1129		Vertical		20		X			33′	-1″													33′	-1″	33′	-1″	27.420
16	11P1130		Vertical		20		X			16′	-0″													16′	-0″	16′	-0″	1.360
16	11P1131		Vertical		20		X			22′	-10″													22′	-10″	22′	-10″	1.941
48	11P1132		Vertical		20		X			16′	-10″													16′	-10″	16′	-10″	4.293
80	11P1133		Vertical		20		X			27′	-9″													27′	-9″	27′	-9″	11.795
32	11P1134		Vertical		20		X			13′	-9″													13′	-9″	13′	-9″	2.338
250	11P1135		Vertical		23		X			13′	-7″	11′	-4″	16′	-2″	11′	-5 1/8″	11′	-5 1/8″	9′	-7 1/4″	9′	-7 1/4″	41′	-1″	41′	-1″	54.569
620	7P1136		Horizontal		4	S	X			46′	-1″	2′	-0″											48′	-10″	48′	-8″	61.674
960	5P1137		Horizontal		3	S	X			6′	-8″													7′	-2″	7′	-2″	7.176
190	7P1138		Horizontal		5		X			39′	-7″	2′	-0″	2′	-0″									43′	-7″	43′	-3″	16.797
232	5P1139		Vertical		5		X			2′	-0″	3′	-2″	3′	-2″									8′	-4″	8′	-1″	1.956
80	5P1140		Horizontal		5		X			2′	-0″	9′	-10″	9′	-10″									21′	-8″	21′	-5″	1.787
40	5P1141		Horizontal		5		X			2′	-0″	5′	-10″	5′	-10″									13′	-8″	13′	-5″	560
28	11P1142		Vertical		20		X			16′	-4″													16′	-4″	16′	-4″	2.430
32	11P1143		Vertical		20		X			9′	-6″													9′	-6″	9′	-6″	1.615
392	5P1144		Horizontal		3	S	X			5′	-8″													6′	-2″	6′	-2″	2.521
408	5P1145		Horizontal		3	S	X			7′	-8″													8′	-2″	8′	-2″	3.475
408	5P1146		Horizontal		3	S	X			9′	-8″													10′	-2″	10′	-2″	4.326
408	5P1147		Horizontal		3	S	X			11′	-8″													12′	-2″	12′	-2″	5.177
128	5P1148		Horizontal		5		X			16″		3′	-2″	3′	-2″									7′	-8″	7′	-5″	990
64	7P1149		Horizontal		4	S	X			17″		2′	-0″											4′	-2″	4′	-0″	523
104	6P1150		Horizontal		5		X			21′	-4″	3′	-7″	3′	-7″									28′	-6″	28′	-3″	4.413
38	8P1151		Vertical		53	S	X			2′	-11″	8′	-3″											24′	-1″	23′	-6″	2.384
75	8P1152		Vertical		53	S	X			3′	-6″	8′	-3″											25′	-3″	24′	-8″	5.005
38	8P1153		Vertical		13	S	X			2′	-0″	8′	-4″	3′	-3″	8′	-3″							23′	-7″	23′	-0″	2.334
24	11P1154		Horizontal		20		X			14′	-6″													14′	-6″	14′	-6″	1.849
46	10P1155		Horizontal		17		X			40′	-1″													41′	-6″	41′	-6″	8.214
23	10P1156		Horizontal		20		X			60′	-0″													60′	-0″	60′	-0″	5.938

BILL OF REINFORCING STEEL

NO. REQ'D.	MARK NO. SIZE	MARK NO. MARK	LOCATION	EPOXY (E)	SHAPE NO.	STIRRUP (S)	SUBSTR. (X)	VARIES (V)	NO. EACH	DIMENSIONS B FT.	B IN.	C FT.	C IN.	D FT.	D IN.	E FT.	E IN.	F FT.	F IN.	H FT.	H IN.	K FT.	K IN.	NOMINAL LENGTH FT.	NOMINAL LENGTH IN.	ACTUAL LENGTH FT.	ACTUAL LENGTH IN.	WEIGHT LBS.
			PIER 11—CONT'D																									
1312	11T1101		Vertical		20		X			30′	-4″													30′	-4″	30′	-4″	211.443
136	11T1102		Vertical		20		X			16′	-6″													16′	-6″	16′	-6″	11.922
288	11T1103		Vertical		20		X			23′	-4″													23′	-4″	23′	-4″	35.703
1800	5T1104		Horizontal		4	S	X			11′	-9″	6″												12′	-9″	12′	-8″	23.780
900	5T1105		Horizontal		4	S	X			21′	-8″	6″												22′	-8″	22′	-7″	21.199
3572	6T1106		Horizontal		53	S	X			20″		21′	-8″											48′	-0″	47′	-7″	255.291
2624	6T1107		Horizontal		53	S	X			20″		11′	-9″											28′	-2″	27′	-9″	109.370
72	6T1108		Horizontal		53	S	X			20″		9′	-2″											23′	-0″	22′	-7″	2.442
25732	5T1109		Horizontal		4	S	X			20″		6″												2′	-8″	2′	-7″	69.333
40	11T1110		Vertical		20		X			25′	-8″													25′	-8″	25′	-8″	5.455
64	7T1111		Vertical		20		X			12′	-0″													12′	-0″	12′	-0″	1.570
4	11T1112		Vertical		20		X			38′	-7″													38′	-7″	38′	-7″	820
16	11T1113		Vertical		20		X			23′	-11″													23′	-11″	23′	-11″	2.033
24	11T1114		Vertical		20		X			30′	-11″													30′	-11″	30′	-11″	3.942
144	11T1115		Vertical		20		X			23′	-6″													23′	-6″	23′	-6″	17.979
640	5T1116		Horizontal		4	S	X			2′	-2″	6″												3′	-2″	3′	-1″	2.058
1860	11T1117		Vertical		20		X			37′	-3″													37′	-3″	37′	-3″	368.111
156	11T1118		Vertical		20		X			30′	-2″													30′	-2″	30′	-2″	25.003
8	11T1120		Vertical		20		X			7′	-0″													7′	-0″	7′	-0″	298
8	11T1121		Vertical		20		X			8′	-3″													8′	-3″	8′	-3″	351
8	11T1122		Vertical		20		X			15′	-8″													15′	-8″	15′	-8″	666
4	11T1123		Vertical		20		X			34′	-5″													34′	-6″	34′	-5″	731
8	11T1124		Vertical		20		X			18′	-7″													18′	-7″	18′	-7″	790
8	11T1125		Vertical		20		X			20′	-10″													20′	-10″	20′	-10″	886
4	11T1126		Vertical		20		X			14′	-4″													14′	-4″	14′	-4″	305
4	11T1127		Vertical		20		X			12′	-6″													12′	-6″	12′	-6″	266
324	11T1128		Vertical		20		X			38′	-9″													38′	-9″	38′	-9″	66.705
12	11T1129		Vertical		20		X			10′	-2″													10′	-2″	10′	-2″	648
4	11T1130		Vertical		20		X			18′	-9″													18′	-9″	18′	-9″	398
4	11T1131		Vertical		20		X			8′	-11″													8′	-11″	8′	-11″	189
4	11T1132		Vertical		20		X			21′	-7″													21′	-7″	21′	-7″	459
16	11T1133		Vertical		20		X			8′	-6″													8′	-6″	8′	-6″	723
8	11T1134		Vertical		20		X			7′	-10″													7′	-10″	7′	-10″	333
192	6T1135		Horizontal		53	S	X			20″		3′	-6″											11′	-8″	11′	-3″	3.244
192	6T1136		Horizontal		53	S	X			20″		6′	-1″											16′	-10″	16′	-5″	4.734
608	6T1137		Horizontal		53	S	X			20″		4′	-6″											13′	-8″	13′	-3″	12.100
96	6T1138		Horizontal		53	S	X			20″		5′	-7″											15′	-10″	15′	-5″	2.223
536	6T1139		Horizontal		53	S	X			20″		5′	-1″											14′	-10″	14′	-5″	11.606
720	6T1140		Horizontal		47	S	X			5′	-7″	20″												10′	-3″	10′	-0″	10.814
324	11T1141		Vertical		20		X			47′	-9″													47′	-9″	47′	-9″	82.197
16	11T1142		Vertical		20		X			4′	-11″													4′	-11″	4′	-11″	418
8	11T1143		Vertical		20		X			4′	-6″													4′	-6″	4′	-6″	191
16	11T1144		Vertical		20		X			4′	-7″													4′	-7″	4′	-7″	390
56	11T1145		Vertical		20		X			4′	-4″													4′	-4″	4′	-4″	1.289
48	11T1146		Vertical		20		X			4′	-2″													4′	-2″	4′	-2″	1.063
8	11T1147		Vertical		20		X			42′	-1″													42′	-1″	42′	-1″	1.789
4	11T1148		Vertical		20		X			42′	-10″													42′	-10″	42′	-10″	910
96	11T1149		Vertical		20		X			4′	-3″													4′	-3″	4′	-3″	2.168
316	11T1150		Vertical		20		X			44′	-0″													44′	-0″	44′	-0″	73.872
8	6T1151		Horizontal		4	S	X			32′	-4″	12″												34′	-0″	33′	-11″	408
36	6T1152		Horizontal		15		X			2′	-7″	12′	-2″	2′	-7″	2′	-6 1/2″	4 1/2″		2′	-6 1/2″	4 1/2″		17′	-4″	17′	-4″	937
24	6T1153		Horizontal		4	S	X	V	8	31′	-8″	12″												33′	-4″	33′	-3″	1.206
			Increment = 2 1/2″							32′	-1″	12″												33′	-9″	33′	-8″	
10	6T1154		Horizontal		4	S	X			11′	-5″	12″												13′	-1″	13′	-0″	195
250	6T1155		Horizontal		4	S	X	V	10	5′	-0″	12″												6′	-8″	6′	-7″	3.630
			Increment = 3 1/2″							11′	-2″	12″												12′	-10″	12′	-9″	
12	6T1156		Horizontal		53	S	X	V	4	20″		18′	-7″											37′	-10″	37′	-5″	683
			Increment = 6″							20″		17′	-1″											38′	-10″	38′	-5″	
32	6T1157		Horizontal		4	S	X	V	8	29′	-10″	12″												31′	-6″	31′	-5″	1.528
			Increment = 3″							30′	-7″	12″												32′	-3″	32′	-2″	
16	6T1158		Horizontal		53	S	X	V	4	20″		14′	-6″											33′	-8″	33′	-3″	817
			Increment = 6″							20″		15′	-3″											35′	-2″	34′	-9″	
24	6T1159		Horizontal		4	S	X	V	8	28′	-1″	12″												29′	-9″	29′	-8″	1.077
			Increment = 2 1/2″							28′	-6 1/2″	12″												30′	-3″	30′	-1″	
16	6T1160		Horizontal		53	S	X	V	4	20″		12′	-9″											30′	-2″	29′	-9″	733
			Increment = 6″							20″		13′	-6″											31′	-8″	31′	-3″	

Notes:
For Bar Bending Diagram, see Sheet No. BR184.

BILL OF REINFORCING STEEL

Detailed JUL 2009
Checked JUL 2009

Note: This drawing is not to scale. Follow dimensions.

Sheet No. 185 of 205

\\kcow00\jobs\46440\Bridges\Plans\CdtoMoDOTA6500\J6I0984\A6500-dgn\ZPLOT_B_A6500_185-205_J6I0984_185.dgn

18-SEP-2009 10:31

STATE OF MISSOURI — HANS R. HUTTON — NUMBER E-2974 — REGISTERED PROFESSIONAL ENGINEER

DATE 9/18/09

ROUTE	STATE
I-70	MO/IL
DISTRICT	SHEET NO.
6	BR185

COUNTY: ST. LOUIS CITY — MO, ST. CLAIR — IL

JOB NO. J6I0984

CONTRACT ID.

PROJECT NO.

BRIDGE NO. A6500

REV.	DESCRIPTION	DATE

MISSOURI HIGHWAYS AND TRANSPORTATION COMMISSION
105 WEST CAPITOL
JEFFERSON CITY, MO 65102
1-888-ASK-MODOT (1-888-275-6636)

HNTB
715 KIRK DRIVE
KANSAS CITY, MO 64105-1310
TELEPHONE (816) 472-1201
CERTIFICATE OF AUTHORITY NO. 001270

LICENSED STRUCTURAL ENGINEER — HANS R HUTTON 061-006707 — STATE OF ILLINOIS — EXPIRES 11-30-2010

Hans R. Hutton — signature — 9-18-2009 — date

BILL OF REINFORCING STEEL

NO. REQ'D.	MARK NO. SIZE	MARK NO. MARK	LOCATION	EPOXY (E)	SHAPE NO.	STIRRUP (S)	SUBSTR. (X)	VARIES (V)	NO. EACH	DIMENSIONS B FT.	B IN.	C FT.	C IN.	D FT.	D IN.	E FT.	E IN.	F FT.	F IN.	H FT.	H IN.	K FT.	K IN.	NOMINAL LENGTH FT.	NOMINAL LENGTH IN.	ACTUAL LENGTH FT.	ACTUAL LENGTH IN.	WEIGHT LBS.
			PIER 11-CONT'D																									
88	6	T1161	Horizontal		4	S	X	V	8	24′	2″	12″												25′	10″	25′	9″	3.574
			Increment = 3⅛″							26′	9″	12″												28′	5″	28′	4″	
48	11	T1162	Vertical		20		X			4′	1″													4′	1″	4′	1″	1.041
24	11	T1163	Vertical		20		X			3′	11″													3′	11″	3′	11″	499
20	11	T1164	Vertical		20		X			11′	3″													11′	3″	11′	3″	1.195
8	11	T1165	Vertical		20		X			10′	7″													10′	7″	10′	7″	450
152	11	T1166	Vertical		20		X			18′	11″													18′	11″	18′	11″	15.277
204	11	T1167	Vertical		20		X			13′	10″													13′	10″	13′	10″	14.993
4	6	T1168	Horizontal		4	S	X			23′	11″	12″												25′	7″	25′	6″	153
4	6	T1169	Horizontal		4	S	X			23′	9″	12″												25′	5″	25′	4″	152
4	6	T1170	Vertical		20		X			2′	11″													2′	11″	2′	11″	18
4	6	T1171	Vertical		20		X			6′	3″													6′	3″	6′	3″	38
4	6	T1172	Vertical		20		X			9′	7″													9′	7″	9′	7″	58
4	6	T1173	Vertical		20		X			12′	11″													12′	11″	12′	11″	78
4	6	T1174	Vertical		20		X			15′	5″													15′	5″	15′	5″	93
4	6	T1175	Vertical		20		X			18′	9″													18′	9″	18′	9″	113
4	6	T1176	Vertical		20		X			22′	1″													22′	1″	22′	1″	133
6	6	T1177	Vertical		20		X			25′	2″													25′	2″	25′	2″	227
101	6	T1178	Horizontal		4	S	X			21′	8″	12″												23′	4″	23′	3″	3.527
20	6	T1179	Horizontal		5		X			21′	8″	12″		12″										23′	8″	23′	5″	703
72	6	T1180	Vertical		20		X			8′	8″													8′	8″	8′	8″	937
104	6	T1181	Vertical		5		X			18″		2′	7″	2′	7″									6′	8″	6′	5″	1.002
12	6	T1182	Vertical		5		X			18″		2′	7″	6′	1″									10′	2″	9′	11″	179
18	6	T1183	Vertical		5		X			3′	7″	2′	7″	2′	7″									8′	9″	8′	6″	230
36	11	T1184	Vertical		20		X			25′	1″													25′	1″	25′	1″	4.798
28	6	T1185	Horizontal		4	S	X			5′	1″	12″												6′	9″	6′	8″	280
28	6	T1186	Horizontal		4	S	X			4′	6″	12″												6′	2″	6′	1″	256
16	6	T1187	Horizontal		4	S	X			11′	9″	12″												13′	5″	13′	4″	320
72	5	T1188	Top & Bottom		5		X			8′	8″	11″		11″										10′	6″	10′	3″	770
26	5	T1189	Top & Bottom		5		X			17′	4″	11″		11″										19′	2″	18′	11″	513
6	5	T1190	Top		5		X			5′	11″	11″		11″										7′	9″	7′	6″	47
6	5	T1191	Bottom		5		X			5′	11″	15″		11″										8′	1″	7′	10″	49
3	5	T1192	Top		5		X			11′	2″	11″		11″										13′	0″	12′	9″	40
3	5	T1193	Bottom		5		X			11′	2″	23″		11″										14′	0″	13′	9″	43
5	5	T1194	Top		5		X			15″		11″		11″										3′	1″	2′	10″	15
5	5	T1195	Bottom		5		X			15″		16″		11″										3′	6″	3′	3″	17
5	5	T1196	Top		5		X			4′	1″	11″		11″										5′	11″	5′	8″	30
5	5	T1197	Bottom		5		X			4′	1″	16″		11″										6′	4″	6′	1″	32
3	5	T1198	Top		5		X			8′	7″	11″		11″										10′	5″	10′	2″	32
3	5	T1199	Bottom		5		X			8′	7″	15″		11″										10′	9″	10′	6″	33
3	5	T11100	Top		5		X			2′	5″	11″		11″										4′	3″	4′	0″	13
3	5	T11101	Bottom		5		X			2′	5″	23″		15″										5′	7″	5′	4″	17
12	5	T11102	Top		5		X			2′	8″	11″		11″										4′	6″	4′	3″	53
12	5	T11103	Bottom		5		X			2′	8″	16″		11″										4′	11″	4′	8″	58
6	5	T11104	Top		5		X			2′	10″	11″		11″										4′	8″	4′	5″	28
6	5	T11105	Bottom		5		X			2′	10″	23″		11″										5′	8″	5′	5″	34
6	5	T11106	Horizontal		5		X			3′	7″	2′	10″	2′	10″									9′	3″	9′	0″	56
4	5	T11107	Horizontal		5		X			3′	1″	2′	10″	2′	10″									8′	9″	8′	6″	35
12	5	T11108	Horizontal		20		X			5′	0″													5′	0″	5′	0″	63
4	5	T11109	Horizontal		2		X			4′	0″	9″								6⅛″		6⅛″		4′	9″	4′	9″	20
76	8	T11110	Vertical		5		X			22″		6′	8″	6′	8″									15′	2″	14′	9″	2.933
152	8	T11111	Vertical		5		X			3′	2″	6′	8″	6′	8″									16′	6″	16′	1″	6.527
76	8	T11112	Vertical		5		X			2′	5″	6′	8″	6′	8″									15′	9″	15′	4″	3.111
64	11	T11113	Horizontal		20		X			14′	6″													14′	6″	14′	6″	4.930
2	6	T11114	Spiral		35		X			3′	6″	5″		14′	7″									405′	9″	405′	9″	1.219
24	7	T11115	Vertical		5		X			18″		3′	0″	3′	0″									7′	6″	7′	2″	352
2	5	T11116	Trans. Brg.		20		X			6′	7″													6′	7″	6′	7″	14
14	5	T11117	Trans. Brg.		15		X			2′	5″	3′	10″	2′	5″	20½″		20½″		20½″		20½″		8′	8″	8′	8″	127
10	5	T11118	Trans. Brg.		2		X			7′	8″	2′	6″							21½″		21½″		10′	2″	10′	2″	106
14	4	T11119	Horizontal		20		X			4′	6″													4′	6″	4′	6″	42
20	4	T11120	Horizontal		5		X			3′	2″	14″		14″										5′	6″	5′	4″	71
10	6	T11121	Horizontal		4	S	X			11′	8″	12″												13′	4″	13′	3″	139
36	6	T11122	Horizontal		15		X			2′	7″	11′	9″	2′	7″	2′	6⅜″	4¼″		2′	6⅜″	4¼″		16′	11″	16′	11″	915
8	W5	T1101	Spiral		22		X			18″		9⅛″												26′	1″	26′	1″	35

BILL OF REINFORCING STEEL

NO. REQ'D.	MARK NO. SIZE	MARK NO. MARK	LOCATION	EPOXY (E)	SHAPE NO.	STIRRUP (S)	SUBSTR. (X)	VARIES (V)	NO. EACH	DIMENSIONS B FT.	B IN.	C FT.	C IN.	D FT.	D IN.	E FT.	E IN.	F FT.	F IN.	H FT.	H IN.	K FT.	K IN.	NOMINAL LENGTH FT.	NOMINAL LENGTH IN.	ACTUAL LENGTH FT.	ACTUAL LENGTH IN.	WEIGHT LBS.
			PIER 12																									
1064	11	P1201	Vertical		20		X			40′	8″													40′	8″	40′	8″	229.890
202	11	P1202	Vertical		20		X			30′	0″													30′	0″	30′	0″	32.197
280	7	P1203	Horizontal		88		X			20′	11″	2′	0″	3″						23″		23″		26′	2″	26′	2″	14.976
512	7	P1204	Horizontal		88		X			18′	0″	2′	0″	3″						23″		23″		23′	3″	23′	3″	24.332
512	7	P1205	Horizontal		65		X			15′	4″	2′	0″	3″						10′	10½″	10′	10½″	16′	11″	16′	11″	17.704
7032	5	P1206	Horizontal		3	S	X			3′	6″													4′	0″	4′	0″	29.338
13674	5	P1207	Horizontal		3	S	X			12′	0″													12′	6″	12′	6″	178.275
3904	5	P1208	Horizontal		4	S	X			5′	6″	6″												6′	6″	6′	5″	26.128
624	5	P1209	Horizontal		3	S	X			18′	0″													18′	6″	18′	6″	12.040
352	11	P1210	Vertical		2		X			22′	2″	17′	9″							9′	4½″	15′	0⅜″	39′	11″	39′	11″	74.651
348	11	P1211	Vertical		2		X			29′	0″	10′	11″							5′	9⅜″	9′	3⅛″	39′	11″	39′	11″	73.803
32	11	P1212	Vertical		20		X			18′	6″													18′	6″	18′	6″	3.145
32	11	P1213	Vertical		20		X			25′	4″													25′	4″	25′	4″	4.307
16	11	P1214	Vertical		20		X			12′	0″													12′	0″	12′	0″	1.020
16	11	P1215	Vertical		20		X			18′	10″													18′	10″	18′	10″	1.601
32	11	P1216	Vertical		20		X			15′	3″													15′	3″	15′	3″	2.593
32	11	P1217	Vertical		20		X			22′	1″													22′	1″	22′	1″	3.755
60	11	P1218	Vertical		20		X			15′	4″													15′	4″	15′	4″	4.888
60	11	P1219	Vertical		20		X			8′	6″													8′	6″	8′	6″	2.710
8	11	P1220	Vertical		20		X			22′	8″													22′	8″	22′	8″	963
8	11	P1221	Vertical		20		X			29′	6″													29′	6″	29′	6″	1.254
8	11	P1222	Vertical		20		X			23′	7″													23′	7″	23′	7″	1.002
8	11	P1223	Vertical		20		X			30′	5″													30′	5″	30′	5″	1.293
8	11	P1224	Vertical		20		X			24′	6″													24′	6″	24′	6″	1.041
8	11	P1225	Vertical		20		X			31′	4″													31′	4″	31′	4″	1.332
8	11	P1226	Vertical		20		X			25′	6″													25′	6″	25′	6″	1.084
8	11	P1227	Vertical		20		X			32′	4″													32′	4″	32′	4″	1.374
156	11	P1228	Vertical		20		X			26′	3″													26′	3″	26′	3″	21.757
156	11	P1229	Vertical		20		X			33′	1″													33′	1″	33′	1″	27.420
16	11	P1230	Vertical		20		X			16′	0″													16′	0″	16′	0″	1.360
16	11	P1231	Vertical		20		X			22′	10″													22′	10″	22′	10″	1.941
48	11	P1232	Vertical		20		X			16′	10″													16′	10″	16′	10″	4.293
80	11	P1233	Vertical		20		X			27′	9″													27′	9″	27′	9″	11.795
32	11	P1234	Vertical		20		X			13′	9″													13′	9″	13′	9″	2.338
250	11	P1235	Vertical		23		X			13′	7″	11′	4″	16′	2″	11′	5⅛″	11′	5⅛″	9′	7⅞″	9′	7⅞″	41′	1″	41′	1″	54.569
620	7	P1236	Horizontal		4	S	X			46′	1″	2′	0″											48′	10″	48′	8″	61.674
960	5	P1237	Horizontal		3	S	X			6′	8″													7′	2″	7′	2″	7.176
190	7	P1238	Horizontal		5		X			39′	7″	2′	0″	2′	0″									43′	7″	43′	3″	16.797
232	5	P1239	Vertical		5		X			2′	0″	3′	2″	3′	2″									8′	4″	8′	1″	1.956
80	5	P1240	Horizontal		5		X			2′	0″	9′	10″	9′	10″									21′	8″	21′	5″	1.787
40	5	P1241	Horizontal		5		X			2′	0″	5′	10″	5′	10″									13′	8″	13′	5″	560
28	11	P1242	Vertical		20		X			16′	4″													16′	4″	16′	4″	2.430
32	11	P1243	Vertical		20		X			9′	6″													9′	6″	9′	6″	1.615
392	5	P1244	Horizontal		3	S	X			5′	8″													6′	2″	6′	2″	2.521
408	5	P1245	Horizontal		3	S	X			7′	8″													8′	2″	8′	2″	3.475
408	5	P1246	Horizontal		3	S	X			9′	8″													10′	2″	10′	2″	4.326
408	5	P1247	Horizontal		3	S	X			11′	8″													12′	2″	12′	2″	5.177
128	5	P1248	Horizontal		5		X			16″		3′	2″	3′	2″									7′	8″	7′	5″	990
64	7	P1249	Horizontal		4	S	X			17″		2′	0″											4′	2″	4′	0″	523
104	6	P1250	Vertical		5		X			21′	4″	3′	7″	3′	7″									28′	6″	28′	3″	4.413
38	8	P1251	Vertical		53	S	X			2′	11″	8′	3″											24′	1″	23′	6″	2.384
76	8	P1252	Vertical		53	S	X			3′	6″	8′	3″											25′	3″	24′	8″	5.005
38	8	P1253	Vertical		13	S	X			2′	0″	8′	4″	3′	3″	8′	3″							23′	7″	23′	0″	2.334
24	11	P1254	Horizontal		20		X			14′	6″													14′	6″	14′	6″	1.849
46	10	P1255	Horizontal		17		X			40′	1″													41′	6″	41′	6″	8.214
23	10	P1256	Horizontal		20		X			60′	0″													60′	0″	60′	0″	5.938

Notes:
For Bar Bending Diagram, see Sheet No. BR184.

BILL OF REINFORCING STEEL

Detailed JUL 2009
Checked JUL 2009

Note: This drawing is not to scale. Follow dimensions.

Sheet No. 186 of 205

\\kcow00\jobs\46440\Bridges\Plans\CdtoMoDOT A6500\J6I0984\A6500-dgn\ZPLOT_B_A6500_001-205_J6I0984_186.dgn

19-AUG-2009 07:24

STATE OF MISSOURI
HANS R. HUTTON
NUMBER E-29174
REGISTERED ENGINEER
Hans R. Hutton

DATE 8/20/09
ROUTE I-70 STATE MO/IL
DISTRICT 6 SHEET NO. BR186
COUNTY ST. LOUIS CITY - MO ST. CLAIR - IL
JOB NO. J6I0984
CONTRACT ID.
PROJECT NO.
BRIDGE NO. A6500

NO.	DESCRIPTION	DATE

MISSOURI HIGHWAYS AND TRANSPORTATION COMMISSION
105 WEST CAPITOL
JEFFERSON CITY, MO 65102
1-888-ASK-MODOT (1-888-275-6636)

HNTB
715 KIRK DRIVE
KANSAS CITY, MO 64105-1310
TELEPHONE (816) 472-1201
CERTIFICATE OF AUTHORITY NO. 001270

LICENSED STRUCTURAL ENGINEER
HANS R. HUTTON
081-006707
STATE OF ILLINOIS
expires 11-30-2010
Hans R. Hutton
8-20-2009
date

REV.

BILL OF REINFORCING STEEL

NO. REQ'D.	MARK NO. SIZE	MARK NO. MARK	LOCATION	EPOXY (E)	SHAPE NO.	STIRRUP (S)	SUBSTR. (X)	VARIES (V)	NO. EACH	DIMENSIONS B FT.	B IN.	C FT.	C IN.	D FT.	D IN.	E FT.	E IN.	F FT.	F IN.	H FT.	H IN.	K FT.	K IN.	NOMINAL LENGTH FT.	NOMINAL LENGTH IN.	ACTUAL LENGTH FT.	ACTUAL LENGTH IN.	WEIGHT LBS.
			PIER 12-CONT'D																									
1312	11	T1201	Vertical		20		X			30′	-4″													30′	-4″	30′	-4″	211,443
136	11	T1202	Vertical		20		X			16′	-6″													16′	-6″	16′	-6″	11,922
288	11	T1203	Vertical		20		X			23′	-4″													23′	-4″	23′	-4″	35,703
1800	5	T1204	Horizontal		4	S	X			11′	-9″	6″												12′	-9″	12′	-8″	23,780
900	5	T1205	Horizontal		4	S	X			21′	-8″	6″												22′	-8″	22′	-7″	21,199
3572	6	T1206	Horizontal		53	S	X			20″		21′	-8″											48′	-0″	47′	-7″	255,291
2624	6	T1207	Horizontal		53	S	X			20″		11′	-9″											28′	-2″	27′	-9″	109,370
72	6	T1208	Horizontal		53	S	X			20″		9′	-2″											23′	-0″	22′	-7″	2,442
25732	5	T1209	Horizontal		4	S	X			20″		6″												2′	-8″	2′	-7″	69,333
40	11	T1210	Vertical		20		X			25′	-8″													25′	-8″	25′	-8″	5,455
4	11	T1212	Vertical		20		X			38′	-7″													38′	-7″	38′	-7″	820
16	11	T1213	Vertical		20		X			23′	-11″													23′	-11″	23′	-11″	2,033
24	11	T1214	Vertical		20		X			30′	-11″													30′	-11″	30′	-11″	3,942
144	11	T1215	Vertical		20		X			23′	-6″													23′	-6″	23′	-6″	17,979
1860	11	T1217	Vertical		20		X			37′	-3″													37′	-3″	37′	-3″	368,111
156	11	T1218	Vertical		20		X			30′	-2″													30′	-2″	30′	-2″	25,003
8	11	T1220	Vertical		20		X			7′	-0″													7′	-0″	7′	-0″	298
64	7	T1121	Vertical		20		X			12′	-0″													12′	-0″	12′	-0″	1,570
8	11	T1221	Vertical		20		X			8′	-3″													8′	-3″	8′	-3″	351
8	11	T1222	Vertical		20		X			15′	-8″													15′	-8″	15′	-8″	666
4	11	T1223	Vertical		20		X			34′	-5″													34′	-5″	34′	-5″	731
8	11	T1224	Vertical		20		X			18′	-7″													18′	-7″	18′	-7″	790
8	11	T1225	Vertical		20		X			20′	-10″													20′	-10″	20′	-10″	886
640	5	T1126	Horizontal		4	S	X			2′	-2″	6″												3′	-2″	3′	-1″	2,058
4	11	T1226	Vertical		20		X			14′	-4″													14′	-4″	14′	-4″	305
4	11	T1227	Vertical		20		X			12′	-6″													12′	-6″	12′	-6″	266
324	11	T1228	Vertical		20		X			38′	-9″													38′	-9″	38′	-9″	66,705
12	11	T1229	Vertical		20		X			10′	-2″													10′	-2″	10′	-2″	648
4	11	T1230	Vertical		20		X			18′	-9″													18′	-9″	18′	-9″	398
4	11	T1231	Vertical		20		X			8′	-11″													8′	-11″	8′	-11″	189
4	11	T1232	Vertical		20		X			21′	-7″													21′	-7″	21′	-7″	459
16	11	T1233	Vertical		20		X			8′	-6″													8′	-6″	8′	-6″	723
8	11	T1234	Vertical		20		X			7′	-10″													7′	-10″	7′	-10″	333
192	6	T1235	Horizontal		53	S	X			20″		3′	-6″											11′	-8″	11′	-3″	3,244
192	6	T1236	Horizontal		53	S	X			20″		6′	-1″											16′	-10″	16′	-5″	4,734
608	6	T1237	Horizontal		53	S	X			20″		4′	-6″											13′	-8″	13′	-3″	12,100
96	6	T1238	Horizontal		53	S	X			20″		5′	-7″											15′	-10″	15′	-5″	2,223
536	6	T1239	Horizontal		53	S	X			20″		5′	-1″											14′	-10″	14′	-5″	11,606
720	6	T1240	Horizontal		47	S	X			5′	-7″	20″												10′	-3″	10′	-0″	10,814
324	11	T1241	Vertical		20		X			47′	-9″													47′	-9″	47′	-9″	82,197
16	11	T1242	Vertical		20		X			4′	-11″													4′	-11″	4′	-11″	418
8	11	T1243	Vertical		20		X			4′	-6″													4′	-6″	4′	-6″	191
16	11	T1244	Vertical		20		X			4′	-7″													4′	-7″	4′	-7″	390
56	11	T1245	Vertical		20		X			4′	-4″													4′	-4″	4′	-4″	1,289
48	11	T1246	Vertical		20		X			4′	-2″													4′	-2″	4′	-2″	1,063
8	11	T1247	Vertical		20		X			42′	-1″													42′	-1″	42′	-1″	1,789
4	11	T1248	Vertical		20		X			42′	-10″													42′	-10″	42′	-10″	910
96	11	T1249	Vertical		20		X			4′	-3″													4′	-3″	4′	-3″	2,168
316	11	T1250	Vertical		20		X			44′	-0″													44′	-0″	44′	-0″	73,872
8	6	T1251	Horizontal		4	S	X			32′	-4″	12″												34′	-0″	33′	-11″	408
36	6	T1252	Horizontal		15		X			2′	-7″	12′	-2″	2′	-7″	2′	-6 3/8″	4 3/4″		2′	-6 3/8″	4 3/4″		17′	-4″	17′	-4″	937
24	6	T1253	Horizontal		4	S	X	V	8	31′	-8″	12″												33′	-4″	33′	-3″	1,206
			Increment = 2 1/2″							32′	-1″	12″												33′	-9″	33′	-8″	
10	6	T1254	Horizontal		4	S	X			11′	-5″	12″												13′	-1″	13′	-0″	195
250	6	T1255	Horizontal		4	S	X	V	10	5′	-0″	12″												6′	-8″	6′	-7″	3,630
			Increment = 3 1/8″							11′	-2″	12″												12′	-10″	12′	-9″	
12	6	T1256	Horizontal		53	S	X	V	4	20″		16′	-7″											37′	-10″	37′	-5″	683
			Increment = 6″							20″		17′	-1″											38′	-10″	38′	-5″	
32	6	T1257	Horizontal		4	S	X	V	8	29′	-10″	12″												31′	-6″	31′	-5″	1,528
			Increment = 3″							30′	-7″	12″												32′	-3″	32′	-2″	
16	6	T1258	Horizontal		53	S	X	V	4	20″		14′	-6″											33′	-8″	33′	-3″	817
			Increment = 6″							20″		15′	-3″											35′	-2″	34′	-9″	
24	6	T1259	Horizontal		4	S	X	V	8	28′	-1″	12″												29′	-9″	29′	-8″	1,077
			Increment = 2 1/2″							28′	-6 3/4″	12″												30′	-3″	30′	-1″	
16	6	T1260	Horizontal		53	S	X	V	4	20″		12′	-9″											30′	-2″	29′	-9″	733
			Increment = 6″							20″		13′	-6″											31′	-8″	31′	-3″	

BILL OF REINFORCING STEEL

NO. REQ'D.	MARK NO. SIZE	MARK NO. MARK	LOCATION	EPOXY (E)	SHAPE NO.	STIRRUP (S)	SUBSTR. (X)	VARIES (V)	NO. EACH	DIMENSIONS B FT.	B IN.	C FT.	C IN.	D FT.	D IN.	E FT.	E IN.	F FT.	F IN.	H FT.	H IN.	K FT.	K IN.	NOMINAL LENGTH FT.	NOMINAL LENGTH IN.	ACTUAL LENGTH FT.	ACTUAL LENGTH IN.	WEIGHT LBS.
			PIER 12-CONT'D																									
88	6	T1261	Horizontal		4	S	X	V	8	24′	-2″	12″												25′	-10″	25′	-9″	3,574
			Increment = 3 1/2″							26′	-9″	12″												28′	-5″	28′	-4″	
48	11	T1262	Vertical		20		X			4′	-1″													4′	-1″	4′	-1″	1,041
24	11	T1263	Vertical		20		X			3′	-11″													3′	-11″	3′	-11″	499
20	11	T1264	Vertical		20		X			11′	-3″													11′	-3″	11′	-3″	1,195
8	11	T1265	Vertical		20		X			10′	-7″													10′	-7″	10′	-7″	450
152	11	T1266	Vertical		20		X			18′	-11″													18′	-11″	18′	-11″	15,277
204	11	T1267	Vertical		20		X			13′	-10″													13′	-10″	13′	-10″	14,993
4	6	T1268	Horizontal		4	S	X			23′	-11″	12″												25′	-7″	25′	-6″	153
4	6	T1269	Horizontal		4	S	X			23′	-9″	12″												25′	-5″	25′	-4″	152
4	6	T1270	Vertical		20		X			2′	-11″													2′	-11″	2′	-11″	18
4	6	T1271	Vertical		20		X			6′	-3″													6′	-3″	6′	-3″	38
4	6	T1272	Vertical		20		X			9′	-7″													9′	-7″	9′	-7″	58
4	6	T1273	Vertical		20		X			12′	-11″													12′	-11″	12′	-11″	78
4	6	T1274	Vertical		20		X			15′	-5″													15′	-5″	15′	-5″	93
4	6	T1275	Vertical		20		X			18′	-9″													18′	-9″	18′	-9″	113
4	6	T1276	Vertical		20		X			22′	-1″													22′	-1″	22′	-1″	133
6	6	T1277	Vertical		20		X			25′	-2″													25′	-2″	25′	-2″	227
101	6	T1278	Horizontal		4	S	X			21′	-8″	12″												23′	-4″	23′	-3″	3,527
20	6	T1279	Horizontal		5		X			21′	-8″	12″		12″										23′	-8″	23′	-5″	703
72	6	T1280	Vertical		20		X			8′	-8″													8′	-8″	8′	-8″	937
104	6	T1281	Vertical		5		X			18″		2′	-7″	2′	-7″									6′	-8″	6′	-5″	1,002
12	6	T1282	Vertical		5		X			18″		2′	-7″	6′	-1″									10′	-2″	9′	-11″	179
18	6	T1283	Vertical		5		X			3′	-7″	2′	-7″	2′	-7″									8′	-9″	8′	-6″	230
36	11	T1284	Vertical		20		X			25′	-1″													25′	-1″	25′	-1″	4,798
28	6	T1285	Horizontal		4	S	X			5′	-1″	12″												6′	-9″	6′	-8″	280
28	6	T1286	Horizontal		4	S	X			4′	-6″	12″												6′	-2″	6′	-1″	256
16	6	T1287	Horizontal		4	S	X			11′	-9″	12″												13′	-5″	13′	-4″	320
72	5	T1288	Top & Bottom		5		X			8′	-8″	11″		11″										10′	-6″	10′	-3″	770
26	5	T1289	Top & Bottom		5		X			17′	-4″	11″		11″										19′	-2″	18′	-11″	513
6	5	T1290	Top		5		X			5′	-11″	11″		11″										7′	-3″	7′	-6″	47
6	5	T1291	Bottom		5		X			5′	-11″	15″		11″										8′	-1″	7′	-10″	49
3	5	T1292	Top		5		X			11′	-2″	11″		11″										13′	-0″	12′	-9″	40
3	5	T1293	Bottom		5		X			11′	-2″	23″		11″										14′	-0″	13′	-9″	43
5	5	T1294	Top		5		X			15″		11″		11″										3′	-1″	2′	-10″	15
5	5	T1295	Bottom		5		X			15″		16″		11″										3′	-6″	3′	-3″	17
5	5	T1296	Top		5		X			4′	-1″	11″		11″										5′	-11″	5′	-8″	30
5	5	T1297	Bottom		5		X			4′	-1″	16″		11″										6′	-4″	6′	-1″	32
3	5	T1298	Top		5		X			8′	-7″	11″		11″										10′	-5″	10′	-2″	32
3	5	T1299	Bottom		5		X			8′	-7″	15″		11″										10′	-9″	10′	-6″	33
3	5	T12100	Top		5		X			2′	-5″	11″		11″										4′	-3″	4′	-0″	13
3	5	T12101	Bottom		5		X			2′	-5″	23″		15″										5′	-7″	5′	-4″	17
12	5	T12102	Top		5		X			2′	-8″	11″		11″										4′	-6″	4′	-3″	53
12	5	T12103	Bottom		5		X			2′	-8″	16″		11″										4′	-11″	4′	-8″	58
6	5	T12104	Top		5		X			2′	-10″	11″		11″										4′	-8″	4′	-5″	28
6	5	T12105	Bottom		5		X			2′	-10″	23″		11″										5′	-8″	5′	-5″	34
6	5	T12106	Horizontal		5		X			3′	-7″	2′	-10″	2′	-10″									9′	-3″	9′	-0″	56
4	5	T12107	Horizontal		5		X			3′	-1″	2′	-10″	2′	-10″									8′	-9″	8′	-6″	35
12	5	T12108	Horizontal		20		X			5′	-0″													5′	-0″	5′	-0″	63
4	5	T12109	Horizontal		2		X			4′	-0″	9″								6 3/4″		6 3/4″		4′	-9″	4′	-9″	20
76	8	T12110	Vertical		5		X			22″		6′	-8″	6′	-8″									15′	-2″	14′	-9″	2,993
152	8	T12111	Vertical		5		X			3′	-2″	6′	-8″	6′	-8″									16′	-6″	16′	-1″	6,527
76	8	T12112	Vertical		5		X			2′	-5″	6′	-8″	6′	-8″									15′	-9″	15′	-4″	3,111
64	11	T12113	Horizontal		20		X			14′	-6″													14′	-6″	14′	-6″	4,930
2	6	T12114	Spiral		35		X			3′	-6″			5″		14′	-7″							405′	-9″	405′	-9″	1,219
24	7	T12115	Vertical		5		X			18″		3′	-0″	3′	-0″									7′	-6″	7′	-2″	352
2	5	T12116	Trans. Brg.		20		X			6′	-7″													6′	-7″	6′	-7″	14
14	5	T12117	Trans. Brg.		15		X			2′	-5″	3′	-10″	2′	-5″		20 1/2″		20 1/2″		20 1/2″		20 1/2″	8′	-8″	8′	-8″	127
10	5	T12118	Trans. Brg.		2		X			7′	-8″	2′	-6″								21 1/4″		21 1/4″	10′	-2″	10′	-2″	106
14	4	T12119	Horizontal		20		X			4′	-6″													4′	-6″	4′	-6″	42
20	4	T12120	Horizontal		5		X			3′	-2″	14″		14″										5′	-6″	5′	-4″	71
10	6	T12121	Horizontal		4	S	X			11′	-8″	12″												13′	-4″	13′	-3″	199
36	6	T12122	Horizontal		15		X			2′	-7″	11′	-9″	2′	-7″	2′	-6 3/8″	4 3/4″		2′	-6 3/8″	4 3/4″		16′	-11″	16′	-11″	915
8	WSW	1201	Spiral		22		X			18″		9 1/4″												26′	-1″	26′	-1″	35

Notes:
For Bar Bending Diagram, see Sheet No. BR184.

BILL OF REINFORCING STEEL

Detailed JUL 2009
Checked JUL 2009

Note: This drawing is not to scale. Follow dimensions.

Sheet No. 187 of 205

\\kcow00\jobs\46440\Bridges\Plans\CdtoMoDOTA6500\J6I0984\A6500-dgn\ZPLOT_B_A6500_187-205_J6I0984_187.dgn 18-SEP-2009 10:31

STATE OF MISSOURI
HANS R. HUTTON
NUMBER 2004
REGISTERED ENGINEER
Hans R. Hutton

DATE: 9/18/09
ROUTE: I-70
STATE: MO/IL
DISTRICT: 6
SHEET NO.: BR187
COUNTY: ST. LOUIS CITY - MO, ST. CLAIR - IL
JOB NO.: J6I0984
CONTRACT ID.:
PROJECT NO.:
BRIDGE NO.: A6500

NO.	DESCRIPTION	DATE
REV.		

MISSOURI HIGHWAYS AND TRANSPORTATION COMMISSION
105 WEST CAPITOL
JEFFERSON CITY, MO 65102
1-888-ASK-MODOT (1-888-275-6636)

HNTB
715 KIRK DRIVE
KANSAS CITY, MO 64105-1310
TELEPHONE 816.472.1201
CERTIFICATE OF AUTHORITY NO. 001270

STATE OF ILLINOIS
LICENSED STRUCTURAL ENGINEER
HANS R. HUTTON
081-006707
EXPIRES 11-30-2010

Hans R. Hutton
SIGNATURE
9-18-2009
DATE

BILL OF REINFORCING STEEL ⚠4

NO. REQ'D.	MARK NO. SIZE	MARK NO. MARK	LOCATION	EPOXY (E)	SHAPE NO.	STIRRUP (S)	SUBSTR. (X)	VARIES (V)	NO. EACH	DIMENSIONS B FT.	B IN.	C FT.	C IN.	D FT.	D IN.	E FT.	E IN.	F FT.	F IN.	H FT.	H IN.	K FT.	K IN.	NOMINAL LENGTH FT.	NOMINAL LENGTH IN.	ACTUAL LENGTH FT.	ACTUAL LENGTH IN.	WEIGHT LBS.
			PIER 13																									
168	11	H1301	Beam	E	19		X			2′	-0″	58′	-4″											60′	-4″	60′	-0″	53,555
48	11	H1302	Beam	E	20		X			58′	-4″													58′	-4″	58′	-4″	14,876
24	6	H1303	Beam	E	5		X			11′	-4″	12″		12″										13′	-4″	13′	-1″	472
14	6	H1304	Beam	E	19		X			12″		54′	-8″											55′	-8″	55′	-7″	1,169
14	6	H1305	Beam	E	5		X			10′	-6″	12″		2′	-8″									14′	-2″	13′	-11″	293
28	6	H1306	Beam	E	19		X			12″		13′	-9″											14′	-9″	14′	-8″	617
7	6	H1307	Beam	E	5		X			19′	-0″	12″		12″										21′	-0″	20′	-9″	218
10	6	H1308	Beam	E	5		X			4′	-4″	5′	-7″	5′	-7″									15′	-6″	15′	-3″	229
26	6	H1309	Beam	E	20		X			11′	-6″													11′	-6″	11′	-6″	449
24	6	H1310	Beam	E	5		X			3′	-1″	12″		12″										5′	-1″	4′	-10″	174
580	6	P1301	Drilled Shaft		16		X			9′	-0″													28′	-4″	28′	-4″	24,683
516	6	P1302	Drilled Shaft		16		X			9′	-0″	2′	-2″											30′	-6″	30′	-6″	23,638
64	6	P1303	Beam	E	16		X			9′	-0″													28′	-4″	28′	-4″	2,724
212	7	U1301	Beam	E	53	S	X			4′	-8″	11′	-6″											33′	-10″	33′	-4″	14,444
104	7	U1302	Beam	E	5		X			11′	-6″	14″		14″										13′	-10″	13′	-6″	2,870
22	7	U1303	Beam	E	5		X			11′	-6″	3′	-9″	3′	-9″									19′	-0″	18′	-8″	839
83	7	U1304	Beam	E	5		X			5′	-6″	3′	-9″	3′	-9″									13′	-0″	12′	-8″	2,149
24	7	U1305	Beam	E	5		X			5′	-6″	2′	-10″	2′	-10″									11′	-2″	10′	-10″	531
24	7	U1306	Beam	E	5		X			5′	-6″	3′	-1″	3′	-1″									11′	-8″	11′	-4″	556
20	7	U1307	Beam	E	5		X			5′	-6″	3′	-4″	3′	-4″									12′	-2″	11′	-10″	484
106	7	U1308	Beam	E	53	S	X			6′	-10″	11′	-6″											38′	-2″	37′	-8″	8,161
13	8	U1309	Beam	E	5		X			4′	-6″	13′	-11″	13′	-11″									32′	-4″	31′	-11″	1,108
9	11	U1310	Beam	E	5		X			7′	-6″	15′	-4″	15′	-4″									38′	-2″	37′	-6″	1,793
26	6	U1311	Beam	E	5		X			3′	-3″	5′	-3″	5′	-3″									13′	-9″	13′	-6″	527
60	18	V1301	Drilled Shaft		20		X			44′	-3″													44′	-3″	44′	-3″	36,108
60	18	V1302	Drilled Shaft		20		X			46′	-3″													46′	-3″	46′	-3″	37,740
240	18	V1303	Drilled Shaft		20		X			50′	-0″													50′	-0″	50′	-0″	163,200
60	18	V1304	Column	E	20		X			43′	-1″													43′	-1″	43′	-1″	35,156
62	18	V1305	Column	E	20		X			41′	-1″													41′	-1″	41′	-1″	34,641
26	6	V1306	Beam	E	20		X			16′	-10″													16′	-10″	16′	-10″	657
26	6	V1307	Beam	E	20		X			7′	-8″													7′	-8″	7′	-8″	299
32	W5	W1301	Beam	E	22		X			12″		9 3/4″												19′	-9″	19′	-9″	106

BILL OF REINFORCING STEEL

NO. REQ'D.	MARK NO. SIZE	MARK NO. MARK	LOCATION	EPOXY (E)	SHAPE NO.	STIRRUP (S)	SUBSTR. (X)	VARIES (V)	NO. EACH	DIMENSIONS B FT.	B IN.	C FT.	C IN.	D FT.	D IN.	E FT.	E IN.	F FT.	F IN.	H FT.	H IN.	K FT.	K IN.	NOMINAL LENGTH FT.	NOMINAL LENGTH IN.	ACTUAL LENGTH FT.	ACTUAL LENGTH IN.	WEIGHT LBS.

Notes:
For Bar Bending Diagram, see Sheet No. BR184.
Two additional #18-V1305 are included in Bill of Reinforcing Steel for testing.

BILL OF REINFORCING STEEL

Detailed JUL 2009
Checked JUL 2009

Note: This drawing is not to scale. Follow dimensions.

\\kcow00\jobs\46440\Bridges\Plans\CdtoMoDOT A6500\J6I0984\A6500-dgn\ZPLOT_B_A6500_188-205_J6I0984_188.dgn

18-MAY-2010 13:41

STATE OF MISSOURI
HANS R. HUTTON
NUMBER E-29174
REGISTERED ENGINEER
Hans R. Hutton

DATE 5/17/10
ROUTE I-70
STATE MO/IL
DISTRICT 6
SHEET NO. BR188
COUNTY ST. LOUIS CITY - MO ST. CLAIR - IL
JOB NO. J6I0984
CONTRACT ID.
PROJECT NO.
BRIDGE NO. A6500

DATE	DESCRIPTION
5-17-10	⚠4 Revised per A1C

MISSOURI HIGHWAYS AND TRANSPORTATION COMMISSION
105 WEST CAPITOL
JEFFERSON CITY, MO 65102
1-888-ASK-MODOT (1-888-275-6636)

HNTB
715 KIRK DRIVE
KANSAS CITY, MO 64105-1310
TELEPHONE (816) 472-1201
CERTIFICATE OF AUTHORITY NO. 001270

LICENSED STRUCTURAL ENGINEER
HANS R. HUTTON
081-006707
STATE OF ILLINOIS
expires 11-30-2010
Hans R. Hutton
5-17-2010
DATE

REV.

4 BLANK SHEET → ~~BILL OF REINFORCING STEEL~~

Detailed JUL 2009
Checked JUL 2009

Note: This drawing is not to scale. Follow dimensions.

Sheet No. 189 of 205

\\kcow00\jobs\46440\Bridges\Plans\CdtoMoDOTA6500\J6I0984\A6500-dgn\ZPLOT_B_A6500_189-205_J6I0984_189.dgn

18-MAY-2010 13:42

STATE OF MISSOURI
HANS R. HUTTON
NUMBER E-29174
REGISTERED PROFESSIONAL ENGINEER
Hans R Hutton

DATE
5/17/10

ROUTE	STATE
I-70	MO/IL

DISTRICT	SHEET NO.
6	BR189

COUNTY
ST. LOUIS CITY - MO
ST. CLAIR - IL

JOB NO.
J6I0984

CONTRACT ID.

PROJECT NO.

BRIDGE NO.
A6500

DATE	DESCRIPTION
5-17-10	4 Revised per ATC

MISSOURI HIGHWAYS AND TRANSPORTATION COMMISSION
MoDOT
105 WEST CAPITOL
JEFFERSON CITY, MO 65102
1-888-ASK-MODOT (1-888-275-6636)

HNTB
715 KIRK DRIVE
KANSAS CITY, MO 64105-1310
TELEPHONE (816) 472-1201
CERTIFICATE OF AUTHORITY
NO. 001270

LICENSED STRUCTURAL ENGINEER
HANS R. HUTTON
081-006707
STATE OF ILLINOIS
Hans R Hutton
5-17-2010

REV.

BILL OF REINFORCING STEEL ⚠4

NO. REQ'D.	MARK NO. SIZE	MARK NO. MARK	LOCATION	EPOXY (E)	SHAPE NO.	STIRRUP (S)	SUBSTR. (X)	VARIES (V)	NO. EACH	DIMENSIONS B FT.	B IN.	C FT.	C IN.	D FT.	D IN.	E FT.	E IN.	F FT.	F IN.	H FT.	H IN.	K FT.	K IN.	NOMINAL LENGTH FT.	NOMINAL LENGTH IN.	ACTUAL LENGTH FT.	ACTUAL LENGTH IN.	WEIGHT LBS.
			FOUNDATION – PIER 11 ~~(ALTERNATIVE)~~																									
420	18F1171		Footing		20		X			54′	6″													54′	6″	54′	6″	311,304
294	18F1172		Footing		20		X			54′	0″													54′	0″	54′	0″	215,914
234	18F1173		Footing		20		X			50′	3″													50′	3″	50′	3″	159,916
262	18F1174		Footing		20		X			37′	0″													37′	0″	37′	0″	131,838
234	18F1175		Footing		20		X			37′	3″													37′	3″	37′	3″	118,544
262	18F1176		Footing		20		X			50′	0″													50′	0″	50′	0″	178,160
1264	11F1177		Footing		5	S	X			19′	6″	2′	0″	2′	0″									23′	6″	22′	10″	153,340
202	11F1178		Footing		20		X			26′	7″													26′	7″	26′	7″	28,530
532	11F1179		Footing		2		X			19′	9″	6′	10″							2′	8 1/2″	6′	3 3/4″	26′	7″	26′	7″	75,138
532	11F1180		Footing		2		X			19′	9″	13′	8″							5′	4 1/2″	12′	6 3/4″	33′	5″	33′	5″	94,453
324	6P1170		Drilled Shaft		16		X			10′	6″	2′	2″											35′	2″	35′	2″	17,114
732	6P1171		Drilled Shaft		16		X			10′	6″													33′	0″	33′	0″	36,282
252	18V1171		Drilled Shaft		20		X			60′	0″													60′	0″	60′	0″	205,632
252	18V1172		Drilled Shaft		20		X			44′	0″													44′	0″	44′	0″	150,797

~~BILL OF REINFORCING STEEL~~ ⚠4

NO. REQ'D.	MARK NO. SIZE	MARK NO. MARK	LOCATION	EPOXY (E)	SHAPE NO.	STIRRUP (S)	SUBSTR. (X)	VARIES (V)	NO. EACH	DIMENSIONS B FT.	B IN.	C FT.	C IN.	D FT.	D IN.	E FT.	E IN.	F FT.	F IN.	H FT.	H IN.	K FT.	K IN.	NOMINAL LENGTH FT.	NOMINAL LENGTH IN.	ACTUAL LENGTH FT.	ACTUAL LENGTH IN.	WEIGHT LBS.
			FOUNDATION – PIER 12																									
220	9F1201		Vert.		19		X			46′	0″	19″												47′	7″	47′	4″	35,405
220	9F1202		Vert.		20		X			41′	3″													41′	3″	41′	3″	30,855
292	8F1203		Vert.		20		X			45′	3″													45′	3″	45′	3″	35,279
464	7F1204		Horiz.		53	S	X			2′	2″	15′	8″											37′	3″	36′	8″	34,775
464	7F1205		Horiz.		53	S	X			2′	2″	21′	3″											48′	4″	47′	10″	45,366
464	7F1206		Horiz.		53	S	X			2′	2″	15′	7″											37′	0″	36′	6″	34,617
464	7F1207		Horiz.		53	S	X			2′	9″	7′	1″											21′	2″	20′	8″	19,600
518	7F1208		Horiz.		4	S	X			38′	4″	14″												40′	3″	40′	1″	42,440
260	7F1209		Horiz.		4	S	X			41′	4″	14″												43′	3″	43′	1″	22,896
4304	5F1210		Horiz.		4	S	X			2′	2″	6″												3′	2″	3′	1″	13,841
552	5F1211		Horiz.		4	S	X			2′	9″	6″												3′	9″	3′	8″	2,111
58	11F1212		Horiz.		19		X			2′	0″	38′	9″											40′	9″	40′	5″	12,455
58	11F1213		Horiz.		19		X			2′	0″	48′	6″											50′	6″	50′	2″	15,459
20	11F1214		Horiz.		19		X	V	4	2′	0″	34′	5″											36′	5″	36′	1″	4,051
			Increment = 12 1/4″							2′	0″	38′	6″											40′	6″	40′	2″	
20	11F1215		Horiz.		19		X	V	4	2′	0″	44′	2″											46′	2″	45′	10″	5,087
			Increment = 12 1/4″							2′	0″	48′	3″											50′	3″	49′	11″	
58	11F1216		Horiz.		19		X			2′	0″	38′	2″											40′	2″	39′	10″	12,275
58	11F1217		Horiz.		19		X			2′	0″	47′	11″											49′	11″	49′	7″	15,279
20	11F1218		Horiz.		19		X	V	4	2′	0″	34′	3″											36′	3″	35′	11″	4,025
			Increment = 11 1/4″							2′	0″	38′	2″											40′	2″	39′	10″	
20	11F1219		Horiz.		19		X	V	4	2′	0″	44′	0″											46′	0″	45′	8″	5,061
			Increment = 11 1/4″							2′	0″	47′	11″											49′	11″	49′	7″	
138	11F1220		Horiz.		5		X			37′	5″	2′	0″	2′	0″									41′	5″	40′	9″	29,878
20	11F1221		Horiz.		5		X	V	4	28′	0″	2′	0″	2′	0″									32′	0″	31′	4″	3,803
			Increment = 26 3/4″							36′	11″	2′	0″	2′	0″									40′	11″	40′	3″	
138	11F1222		Horiz.		5		X			36′	4″	2′	0″	2′	0″									40′	4″	39′	8″	29,083
20	11F1223		Horiz.		5		X	V	4	27′	4″	2′	0″	2′	0″									31′	4″	30′	8″	3,737
			Increment = 27″							36′	4″	2′	0″	2′	0″									40′	4″	39′	8″	
58	11F1224		Horiz.		19		X			2′	0″	37′	6″											39′	6″	39′	2″	12,069
58	11F1225		Horiz.		19		X			2′	0″	47′	2″											49′	2″	48′	10″	15,048
8	11F1226		Horiz.		19		X	V	4	2′	0″	36′	2″											38′	2″	37′	10″	1,631
			Increment = 13″							2′	0″	37′	3″											39′	3″	38′	11″	
8	11F1227		Horiz.		19		X	V	4	2′	0″	34′	2″											36′	2″	35′	10″	1,546
			Increment = 13″							2′	0″	35′	3″											37′	3″	36′	11″	
8	11F1228		Horiz.		19		X	V	4	2′	0″	43′	10″											45′	10″	45′	6″	1,955
			Increment = 12″							2′	0″	44′	10″											46′	10″	46′	6″	
4	11F1229		Horiz.		19		X			2′	0″	33′	2″											35′	2″	34′	10″	740
8	11F1230		Horiz.		19		X	V	4	2′	0″	45′	11″											47′	11″	47′	7″	2,044
			Increment = 12″							2′	0″	46′	11″											48′	11″	48′	7″	
4	11F1231		Horiz.		19		X			2′	0″	42′	10″											44′	10″	44′	6″	946
138	11F1232		Horiz.		5		X			35′	5″	2′	0″	2′	0″									39′	5″	38′	9″	28,411
8	11F1233		Horiz.		5		X	V	4	32′	11″	2′	0″	2′	0″									36′	11″	36′	3″	1,583
			Increment = 24″							34′	11″	2′	0″	2′	0″									38′	11″	38′	3″	
12	11F1234		Horiz.		5		X	V	4	26′	9″	2′	0″	2′	0″									30′	9″	30′	1″	2,048
			Increment = 24 1/2″							30′	10″	2′	0″	2′	0″									34′	10″	34′	2″	
208	7F1235		Horiz.		4	S	X			22′	2″	14″												24′	1″	23′	11″	10,168
58	9F1237		Horiz.		19		X			6′	0″	42′	0″											48′	0″	47′	9″	9,416
58	9F1238		Horiz.		19		X			19″		41′	6″											43′	1″	42′	10″	8,447
8	9F1239		Horiz.		19		X	V	4	6′	0″	37′	8″											43′	8″	43′	5″	1,195
			Increment = 12″							6′	0″	38′	8″											44′	8″	44′	5″	
8	9F1240		Horiz.		19		X	V	4	19″		36′	9″											38′	4″	38′	1″	1,049
			Increment = 12″							19″		37′	9″											39′	4″	39′	1″	
10	9F1241		Horiz.		5		X	V	2	30′	8″	6′	0″	6′	0″									42′	8″	42′	2″	1,530
			Increment = 17″							36′	4″	6′	0″	6′	0″									48′	4″	47′	10″	
10	9F1242		Horiz.		5		X	V	2	29′	8″	19″		19″										32′	10″	32′	4″	1,196
			Increment = 17″							35′	4″	19″		19″										38′	6″	38′	0″	
12	9F1243		Horiz.		19		X	V	4	6′	0″	39′	0″											45′	0″	44′	9″	1,867
			Increment = 12″							6′	0″	41′	0″											47′	0″	46′	9″	
202	11F1244		Vert.		20		X			22′	8″													22′	8″	22′	8″	24,326
532	11F1245		Vert.		2		X			15′	10″	6′	10″							2′	8 1/2″	6′	3 3/4″	22′	8″	22′	8″	64,068
532	11F1246		Vert.		2		X			15′	10″	13′	8″							5′	4 1/2″	12′	6 3/4″	29′	6″	29′	6″	83,382
69	9F1247		Horiz.		5		X			36′	9″	19″		19″										39′	11″	39′	5″	9,247
69	9F1248		Horiz.		5		X			37′	9″	6′	0″	6′	0″									49′	9″	49′	3″	11,554
12	9F1249		Horiz.		19		X	V	4	19″		38′	3″											39′	10″	39′	7″	1,856
			Increment = 12″							19″		40′	3″											41′	10″	41′	7″	

Notes:
For Bar Bending Diagram, see Sheet No. BR184.

BILL OF REINFORCING STEEL

Detailed JUL 2009
Checked JUL 2009

Note: This drawing is not to scale. Follow dimensions.

Sheet No. 190 of 205

STATE OF MISSOURI — HANS R. HUTTON — NUMBER E-29174 — REGISTERED PROFESSIONAL ENGINEER
Hans R. Hutton

DATE 5/17/10
ROUTE I-70 | STATE MO/IL
DISTRICT 6 | SHEET NO. BR190
COUNTY ST. LOUIS CITY – MO ST. CLAIR – IL
JOB NO. J6I0984
CONTRACT ID.
PROJECT NO.
BRIDGE NO. A6500

REV.	DESCRIPTION	DATE
⚠1	Revised per ATC	5-17-10

MISSOURI HIGHWAYS AND TRANSPORTATION COMMISSION
105 WEST CAPITOL
JEFFERSON CITY, MO 65102
1-888-ASK-MODOT (1-888-275-6636)

HNTB
715 KIRK DRIVE
KANSAS CITY, MO 64105-1310
TELEPHONE (816) 472-1201
CERTIFICATE OF AUTHORITY NO. 001270

LICENSED STRUCTURAL ENGINEER — HANS R. HUTTON 081-006707 — STATE OF ILLINOIS
Hans R. Hutton
5-17-2010

\\kcow00\jobs\46440\Bridges\Plans\CdtoMoDOTA6500\J6I0984\A6500-dgn\ZPLOT_B_A6500_190-205_J6I0984_190.dgn

18-MAY-2010 13:42

~~BILL OF REINFORCING STEEL~~ ⚠4

NO. REQ'D.	MARK NO. SIZE	MARK NO. MARK	LOCATION	EPOXY (E)	SHAPE NO.	STIRRUP (S)	SUBSTR. (X)	VARIES (V)	NO. EACH	DIMENSIONS B FT.	B IN.	C FT.	C IN.	D FT.	D IN.	E FT.	E IN.	F FT.	F IN.	H FT.	H IN.	K FT.	K IN.	NOMINAL LENGTH FT.	NOMINAL LENGTH IN.	ACTUAL LENGTH FT.	ACTUAL LENGTH IN.	WEIGHT LBS.
			FOUNDATION – PIER 12–CONT'D																									
376	9K	1201	Vert.		23		X			6′-0″		16″		4′-4″		3′-0 3/4″		3′-0 3/4″		4′-2 1/2″		4′-2 1/2″		11′-8″		11′-8″		14,915
936	8K	1202	Vert.		23		X			3′-5″		2′-2″		7′-6″		5′-3 1/2″		5′-3 1/2″		2′-5″		2′-5″		13′-1″		13′-1″		32,697
204	8K	1203	Vert.		23		X			3′-5″		17″		13′-9″		9′-8 1/2″		9′-8 1/2″		2′-5″		2′-5″		18′-7″		18′-7″		10,122
408	9K	1204	Vert.		20		X			13′-9″														13′-9″		13′-9″		19,074
408	11K	1205	Vert.		20		X			43′-3″														43′-3″		43′-3″		93,753
440	8K	1206	Vert.		20		X			27′-6″														27′-6″		27′-6″		32,307
132	8K	1207	Vert.		23		X			3′-5″		17″		7′-6″		5′-3 1/2″		5′-3 1/2″		2′-5″		2′-5″		12′-4″		12′-4″		4,347
200	9K	1208	Vert.		20		X			31′-6″														31′-6″		31′-6″		21,420
176	9K	1209	Vert.		20		X			33′-6″														33′-6″		33′-6″		20,046
224	8K	1210	Vert.		20		X			29′-6″														29′-6″		29′-6″		17,643
32	8K	1211	Vert.		20		X			17′-8″														17′-8″		17′-8″		1,509
292	8K	1212	Vert.		20		X			34′-3″														34′-3″		34′-3″		26,703
40	7K	1213	Horiz.		53	S	X			2′-9″		7′-1″												21′-2″		20′-8″		1,690
896	8K	1214	Vert.		23		X			3′-5″		2′-2″		18″		12 3/4″		12 3/4″		2′-5″		2′-5″		7′-1″		7′-1″		16,946
220	9K	1215	Vert.		23		X			4′-4″		4′-9″		4′-4″		23 1/4″		3′-10 1/2″		23 1/4″		3′-10 1/2″		13′-5″		13′-5″		10,036
1024	7K	1216	Horiz.		53	S	X			4′-0″		22′-3″												54′-0″		53′-6″		111,978
256	7K	1217	Horiz.		53	S	X			4′-0″		21′-6″												52′-6″		52′-0″		27,210
1000	7K	1218	Horiz.		20		X			42′-10″														42′-10″		42′-10″		87,551
600	7K	1219	Horiz.		20		X			34′-7″														34′-7″		34′-7″		42,413
300	7K	1220	Horiz.		20		X			60′-0″														60′-0″		60′-0″		36,792
12	7K	1221	Horiz.		4	S	X			35′-1″		14″												37′-10″		37′-8″		924
6	7K	1222	Horiz.		4	S	X			58′-3″		14″												60′-2″		60′-0″		736
12	7K	1223	Horiz.		4	S	X			44′-0″		14″												45′-11″		45′-9″		1,122
120	7K	1224	Horiz.		4	S	X			7′-0″		14″												8′-11″		8′-9″		2,146
72	7K	1225	Horiz.		4	S	X			11′-0″		14″												12′-11″		12′-9″		1,876
24	7K	1226	Horiz.		4	S	X			10′-0″		14″												11′-11″		11′-9″		576
24	7K	1227	Horiz.		4	S	X			50′-0″		14″												51′-11″		51′-9″		2,539
24	7K	1228	Horiz.		4	S	X			47′-0″		14″												48′-11″		48′-9″		2,391
96	7K	1229	Horiz.		7		X			11′-3″		18′-0″												32′-8″		32′-8″		6,410
32	7K	1230	Horiz.		7		X			10′-6″		16′-6″												30′-4″		30′-4″		1,984
196	8K	1231	Vert.		20		X			39′-2″														39′-2″		39′-2″		20,497
128	7K	1232	Cover		20		X			6′-3″														6′-3″		6′-3″		1,635
128	7K	1233	Cover		20		X			9′-7″														9′-7″		9′-7″		2,507
128	7K	1234	Cover		20		X			11′-8″														11′-8″		11′-8″		3,052
128	7K	1235	Cover		20		X			13′-1″														13′-1″		13′-1″		3,423
128	7K	1236	Cover		20		X			14′-2″														14′-2″		14′-2″		3,706
128	7K	1237	Cover		20		X			14′-10″														14′-10″		14′-10″		3,881
160	7K	1238	Cover		20		X			15′-3″														15′-3″		15′-3″		4,987
128	7K	1239	Cover		20		X			4′-7″														4′-7″		4′-7″		1,199
128	7K	1240	Cover		20		X			8′-7″														8′-7″		8′-7″		2,246
128	7K	1241	Cover		20		X			10′-10″														10′-10″		10′-10″		2,834
128	7K	1242	Cover		20		X			12′-5″														12′-5″		12′-5″		3,249
128	7K	1243	Cover		20		X			13′-6″														13′-6″		13′-6″		3,532
128	7K	1244	Cover		20		X			14′-3″														14′-3″		14′-3″		3,728
160	7K	1245	Cover		20		X			14′-8″														14′-8″		14′-8″		4,797

BILL OF REINFORCING STEEL ⚠4

NO. REQ'D.	MARK NO. SIZE	MARK NO. MARK	LOCATION	EPOXY (E)	SHAPE NO.	STIRRUP (S)	SUBSTR. (X)	VARIES (V)	NO. EACH	DIMENSIONS B FT.	B IN.	C FT.	C IN.	D FT.	D IN.	E FT.	E IN.	F FT.	F IN.	H FT.	H IN.	K FT.	K IN.	NOMINAL LENGTH FT.	NOMINAL LENGTH IN.	ACTUAL LENGTH FT.	ACTUAL LENGTH IN.	WEIGHT LBS.
			FOUNDATION – PIER 12 ~~(ALTERNATIVE)~~																									
420	18F	1271	Footing		20		X			54′-6″														54′-6″		54′-6″		311,304
294	18F	1272	Footing		20		X			54′-0″														54′-0″		54′-0″		215,914
234	18F	1273	Footing		20		X			50′-3″														50′-3″		50′-3″		159,916
262	18F	1274	Footing		20		X			37′-0″														37′-0″		37′-0″		131,838
234	18F	1275	Footing		20		X			37′-3″														37′-3″		37′-3″		118,544
262	18F	1276	Footing		20		X			50′-0″														50′-0″		50′-0″		178,160
1264	11F	1277	Footing		5	S	X			19′-6″		2′-0″		2′-0″										23′-6″		22′-10″		153,340
202	11F	1278	Footing		20		X			26′-7″														26′-7″		26′-7″		28,530
532	11F	1279	Footing		2		X			19′-9″		6′-10″								2′-8 1/4″		6′-3 1/2″		26′-7″		26′-7″		75,138
532	11F	1280	Footing		2		X			19′-9″		13′-8″								5′-4 1/4″		12′-6 1/2″		33′-5″		33′-5″		94,453
384	6P	1270	Drilled Shaft		16		X			10′-6″		2′-2″												35′-2″		35′-2″		20,283
732	6P	1271	Drilled Shaft		16		X			10′-6″														33′-0″		33′-0″		36,282
252	18V	1271	Drilled Shaft		20		X			60′-0″														60′-0″		60′-0″		205,632
252	18V	1272	Drilled Shaft		20		X			53′-6″														53′-6″		53′-6″		183,355

Notes:
For Bar Bending Diagram, see Sheet No. BR184.

BILL OF REINFORCING STEEL

Detailed JUL 2009
Checked JUL 2009

Note: This drawing is not to scale. Follow dimensions.

Sheet No. 191 of 205

HANS R. HUTTON NUMBER E-29174 REGISTERED PROFESSIONAL ENGINEER
Hans R. Hutton

DATE 5/17/10

ROUTE	STATE
I-70	MO/IL
DISTRICT	SHEET NO.
6	BR191

COUNTY
ST. LOUIS CITY – MO
ST. CLAIR – IL

JOB NO.
J6I0984

CONTRACT ID.

PROJECT NO.

BRIDGE NO.
A6500

REV.	DESCRIPTION	DATE
⚠1	Revised per ATC	5-17-10

MISSOURI HIGHWAYS AND TRANSPORTATION COMMISSION
105 WEST CAPITOL
JEFFERSON CITY, MO 65102
1-888-ASK-MODOT (1-888-275-6636)

HNTB
715 KIRK DRIVE
KANSAS CITY, MO 64105-1310
CERTIFICATE OF AUTHORITY NO. 001270

LICENSED STRUCTURAL ENGINEER
HANS R. HUTTON
081-006707
STATE OF ILLINOIS
Hans R. Hutton
5-17-2010

BILL OF REINFORCING STEEL

NO. REQ'D.	MARK NO. SIZE	MARK NO. MARK	LOCATION	EPOXY (E)	SHAPE NO.	STIRRUP (S)	SUBSTR. (X)	VARIES (V)	NO. EACH	DIMENSIONS B FT.	B IN.	C FT.	C IN.	D FT.	D IN.	E FT.	E IN.	F FT.	F IN.	H FT.	H IN.	K FT.	K IN.	NOMINAL LENGTH FT.	NOMINAL LENGTH IN.	ACTUAL LENGTH FT.	ACTUAL LENGTH IN.	WEIGHT LBS.
			SUPERSTRUCTURE																									
			PANEL A120-01 (PER PANEL)																									
90	6S001		Slab Panel	E	20					12′	-3″													12′	-3″	12′	-3″	1,656
28	6S002		Slab Panel	E	20					43′	-1″													43′	-1″	43′	-1″	1,812
90	6S003		Slab Panel	E	5					7″		4′	-11″	4′	-11″									10′	-5″	10′	-2″	1,374
14	6S004		Slab Panel	E	5					6″		4′	-5″	4′	-5″									9′	-4″	9′	-1″	191
14	5S006		Slab Panel	E	89					10″		10″		2′	-5″					5 3/8″		2′	-4 1/2″	4′	-1″	4′	-0″	58
14	5S007		Slab Panel	E	54					16″		18″		18″		10″		10″		18″		1 1/2″		6′	-0″	5′	-8″	83
12	6S012		Slab Panel	E	5					6″		6′	-5″	6′	-5″									13′	-4″	13′	-1″	236
2	6S013		Slab Panel	E	5					6″		4′	-5″	4′	-5″									9′	-4″	9′	-1″	27
			PANEL A120-02 (PER PANEL)																									
90	6S001		Slab Panel	E	20					12′	-3″													12′	-3″	12′	-3″	1,656
28	6S002		Slab Panel	E	20					43′	-1″													43′	-1″	43′	-1″	1,812
90	6S003		Slab Panel	E	5					7″		4′	-11″	4′	-11″									10′	-5″	10′	-2″	1,374
14	6S004		Slab Panel	E	5					6″		4′	-5″	4′	-5″									9′	-4″	9′	-1″	191
14	5S006		Slab Panel	E	89					10″		10″		2′	-5″					5 3/8″		2′	-4 1/2″	4′	-1″	4′	-0″	58
14	5S007		Slab Panel	E	54					16″		18″		18″		10″		10″		18″		1 1/2″		6′	-0″	5′	-8″	83
12	6S012		Slab Panel	E	5					6″		6′	-5″	6′	-5″									13′	-4″	13′	-1″	236
2	6S013		Slab Panel	E	5					6″		4′	-5″	4′	-5″									9′	-4″	9′	-1″	27
			PANEL A120-03 (PER PANEL)																									
90	6S001		Slab Panel	E	20					12′	-3″													12′	-3″	12′	-3″	1,656
28	6S002		Slab Panel	E	20					43′	-1″													43′	-1″	43′	-1″	1,812
90	6S003		Slab Panel	E	5					7″		4′	-11″	4′	-11″									10′	-5″	10′	-2″	1,374
14	6S004		Slab Panel	E	5					6″		4′	-5″	4′	-5″									9′	-4″	9′	-1″	191
14	5S006		Slab Panel	E	89					10″		10″		2′	-5″					5 3/8″		2′	-4 1/2″	4′	-1″	4′	-0″	58
14	5S007		Slab Panel	E	54					16″		18″		18″		10″		10″		18″		1 1/2″		6′	-0″	5′	-8″	83
14	6S012		Slab Panel	E	5					6″		6′	-5″	6′	-5″									13′	-4″	13′	-1″	275
			PANEL A120-04 (PER PANEL)																									
90	6S001		Slab Panel	E	20					12′	-3″													12′	-3″	12′	-3″	1,656
28	6S002		Slab Panel	E	20					43′	-1″													43′	-1″	43′	-1″	1,812
90	6S003		Slab Panel	E	5					7″		4′	-11″	4′	-11″									10′	-5″	10′	-2″	1,374
14	6S004		Slab Panel	E	5					6″		4′	-5″	4′	-5″									9′	-4″	9′	-1″	191
14	5S006		Slab Panel	E	89					10″		10″		2′	-5″					5 3/8″		2′	-4 1/2″	4′	-1″	4′	-0″	58
14	5S007		Slab Panel	E	54					16″		18″		18″		10″		10″		18″		1 1/2″		6′	-0″	5′	-8″	83
12	6S012		Slab Panel	E	5					6″		6′	-5″	6′	-5″									13′	-4″	13′	-1″	236
2	6S013		Slab Panel	E	5					6″		4′	-5″	4′	-5″									9′	-4″	9′	-1″	27
			PANEL A120-05 (PER PANEL)																									
90	6S001		Slab Panel	E	20					12′	-3″													12′	-3″	12′	-3″	1,656
28	6S002		Slab Panel	E	20					43′	-1″													43′	-1″	43′	-1″	1,812
90	6S003		Slab Panel	E	5					7″		4′	-11″	4′	-11″									10′	-5″	10′	-2″	1,374
14	6S004		Slab Panel	E	5					6″		4′	-5″	4′	-5″									9′	-4″	9′	-1″	191
14	5S006		Slab Panel	E	89					10″		10″		2′	-5″					5 3/8″		2′	-4 1/2″	4′	-1″	4′	-0″	58
14	5S007		Slab Panel	E	54					16″		18″		18″		10″		10″		18″		1 1/2″		6′	-0″	5′	-8″	83
12	6S012		Slab Panel	E	5					6″		6′	-5″	6′	-5″									13′	-4″	13′	-1″	236
2	6S013		Slab Panel	E	5					6″		4′	-5″	4′	-5″									9′	-4″	9′	-1″	27
			PANEL A120-06 (PER PANEL)																									
90	6S001		Slab Panel	E	20					12′	-3″													12′	-3″	12′	-3″	1,656
28	6S002		Slab Panel	E	20					43′	-1″													43′	-1″	43′	-1″	1,812
90	6S003		Slab Panel	E	5					7″		4′	-11″	4′	-11″									10′	-5″	10′	-2″	1,374
14	6S004		Slab Panel	E	5					6″		4′	-5″	4′	-5″									9′	-4″	9′	-1″	191
14	5S006		Slab Panel	E	89					10″		10″		2′	-5″					5 3/8″		2′	-4 1/2″	4′	-1″	4′	-0″	58
14	5S007		Slab Panel	E	54					16″		18″		18″		10″		10″		18″		1 1/2″		6′	-0″	5′	-8″	83
13	6S012		Slab Panel	E	5					6″		6′	-5″	6′	-5″									13′	-4″	13′	-1″	255
1	6S013		Slab Panel	E	5					6″		4′	-5″	4′	-5″									9′	-4″	9′	-1″	14

BILL OF REINFORCING STEEL

NO. REQ'D.	MARK NO. SIZE	MARK NO. MARK	LOCATION	EPOXY (E)	SHAPE NO.	STIRRUP (S)	SUBSTR. (X)	VARIES (V)	NO. EACH	DIMENSIONS B FT.	B IN.	C FT.	C IN.	D FT.	D IN.	E FT.	E IN.	F FT.	F IN.	H FT.	H IN.	K FT.	K IN.	NOMINAL LENGTH FT.	NOMINAL LENGTH IN.	ACTUAL LENGTH FT.	ACTUAL LENGTH IN.	WEIGHT LBS.
			PANEL A120-07 (PER PANEL)																									
90	6S001		Slab Panel	E	20					12′	-3″													12′	-3″	12′	-3″	1,656
28	6S002		Slab Panel	E	20					43′	-1″													43′	-1″	43′	-1″	1,812
90	6S003		Slab Panel	E	5					7″		4′	-11″	4′	-11″									10′	-5″	10′	-2″	1,374
14	6S004		Slab Panel	E	5					6″		4′	-5″	4′	-5″									9′	-4″	9′	-1″	191
14	5S006		Slab Panel	E	89					10″		10″		2′	-5″							5 3/8″		2′	-4 1/2″	4′	-1″	4′	-0″	58
14	5S007		Slab Panel	E	54					16″		18″		18″		10″		10″				18″		1 1/2″		6′	-0″	5′	-8″	83
13	6S012		Slab Panel	E	5					6″		6′	-5″	6′	-5″											13′	-4″	13′	-1″	255
1	6S013		Slab Panel	E	5					6″		4′	-5″	4′	-5″											9′	-4″	9′	-1″	14
			PANEL A120-08 (PER PANEL)																									
90	6S001		Slab Panel	E	20					12′	-3″													12′	-3″	12′	-3″	1,656
28	6S002		Slab Panel	E	20					43′	-1″													43′	-1″	43′	-1″	1,812
90	6S003		Slab Panel	E	5					7″		4′	-11″	4′	-11″									10′	-5″	10′	-2″	1,374
14	6S004		Slab Panel	E	5					6″		4′	-5″	4′	-5″									9′	-4″	9′	-1″	191
14	5S006		Slab Panel	E	89					10″		10″		2′	-5″							5 3/8″		2′	-4 1/2″	4′	-1″	4′	-0″	58
14	5S007		Slab Panel	E	54					16″		18″		18″		10″		10″				18″		1 1/2″		6′	-0″	5′	-8″	83
14	6S012		Slab Panel	E	5					6″		6′	-5″	6′	-5″											13′	-4″	13′	-1″	275
			PANEL A120-09 (PER PANEL)																									
90	6S001		Slab Panel	E	20					12′	-3″													12′	-3″	12′	-3″	1,656
28	6S002		Slab Panel	E	20					43′	-1″													43′	-1″	43′	-1″	1,812
90	6S003		Slab Panel	E	5					7″		4′	-11″	4′	-11″									10′	-5″	10′	-2″	1,374
14	6S004		Slab Panel	E	5					6″		4′	-5″	4′	-5″									9′	-4″	9′	-1″	191
14	5S006		Slab Panel	E	89					10″		10″		2′	-5″							5 3/8″		2′	-4 1/2″	4′	-1″	4′	-0″	58
14	5S007		Slab Panel	E	54					16″		18″		18″		10″		10″				18″		1 1/2″		6′	-0″	5′	-8″	83
14	6S012		Slab Panel	E	5					6″		6′	-5″	6′	-5″											13′	-4″	13′	-1″	275
			PANEL A120-10 (PER PANEL)																									
90	6S001		Slab Panel	E	20					12′	-3″													12′	-3″	12′	-3″	1,656
28	6S002		Slab Panel	E	20					43′	-1″													43′	-1″	43′	-1″	1,812
90	6S003		Slab Panel	E	5					7″		4′	-11″	4′	-11″									10′	-5″	10′	-2″	1,374
14	6S004		Slab Panel	E	5					6″		4′	-5″	4′	-5″									9′	-4″	9′	-1″	191
4	6S005		Slab Panel	E	5					6″		6′	-8″	6′	-8″									13′	-10″	13′	-7″	82
14	5S006		Slab Panel	E	89					10″		10″		2′	-5″							5 3/8″		2′	-4 1/2″	4′	-1″	4′	-0″	58
14	5S007		Slab Panel	E	54					16″		18″		18″		10″		10″				18″		1 1/2″		6′	-0″	5′	-8″	83
14	6S012		Slab Panel	E	5					6″		6′	-5″	6′	-5″											13′	-4″	13′	-1″	275
			PANEL A120-11 (PER PANEL)																									
90	6S001		Slab Panel	E	20					12′	-3″													12′	-3″	12′	-3″	1,656
28	6S002		Slab Panel	E	20					43′	-1″													43′	-1″	43′	-1″	1,812
90	6S003		Slab Panel	E	5					7″		4′	-11″	4′	-11″									10′	-5″	10′	-2″	1,374
14	6S004		Slab Panel	E	5					6″		4′	-5″	4′	-5″									9′	-4″	9′	-1″	191
4	6S005		Slab Panel	E	5					6″		6′	-8″	6′	-8″									13′	-10″	13′	-7″	82
14	5S006		Slab Panel	E	89					10″		10″		2′	-5″							5 3/8″		2′	-4 1/2″	4′	-1″	4′	-0″	58
14	5S007		Slab Panel	E	54					16″		18″		18″		10″		10″				18″		1 1/2″		6′	-0″	5′	-8″	83
14	6S012		Slab Panel	E	5					6″		6′	-5″	6′	-5″											13′	-4″	13′	-1″	275
			PANEL A121-01 (PER PANEL)																									
90	6S001		Slab Panel	E	20					12′	-3″													12′	-3″	12′	-3″	1,656
28	6S002		Slab Panel	E	20					43′	-1″													43′	-1″	43′	-1″	1,812
90	6S003		Slab Panel	E	5					7″		4′	-11″	4′	-11″									10′	-5″	10′	-2″	1,374
14	6S004		Slab Panel	E	5					6″		4′	-5″	4′	-5″									9′	-4″	9′	-1″	191
4	6S005		Slab Panel	E	5					6″		6′	-8″	6′	-8″									13′	-10″	13′	-7″	82
14	5S006		Slab Panel	E	89					10″		10″		2′	-5″							5 3/8″		2′	-4 1/2″	4′	-1″	4′	-0″	58
14	5S007		Slab Panel	E	54					16″		18″		18″		10″		10″				18″		1 1/2″		6′	-0″	5′	-8″	83
16	6S008		Slab Panel	E	20					7′	-0″															7′	-0″	7′	-0″	168
14	6S013		Slab Panel	E	5					6″		4′	-5″	4′	-5″											9′	-4″	9′	-1″	191

Notes:
For Bar Bending Diagram, see Sheet No. BR184.

BILL OF REINFORCING STEEL

Detailed JUL 2009
Checked JUL 2009

Note: This drawing is not to scale. Follow dimensions.

Sheet No. 192 of 205

\\kcow00\jobs\46440\Bridges\Plans\CdtoMo007A6500\J6I0984\A6500-dgn\ZPLOT_B_A6500_001-205_J6I0984_192.dgn

19-AUG-2009 07:59

STATE OF MISSOURI
HANS R. HUTTON
NUMBER E-25174
REGISTERED ENGINEER
Hans R. Hutton

DATE 8/20/09
ROUTE I-70
STATE MO/IL
DISTRICT 6
SHEET NO. BR192
COUNTY ST. LOUIS CITY - MO, ST. CLAIR - IL
JOB NO. J6I0984
CONTRACT ID.
PROJECT NO.
BRIDGE NO. A6500

NO.	DESCRIPTION	DATE

MISSOURI HIGHWAYS AND TRANSPORTATION COMMISSION
MoDOT
105 WEST CAPITOL
JEFFERSON CITY, MO 65102
1-888-ASK-MODOT (1-888-275-6636)

HNTB
715 KIRK DRIVE
KANSAS CITY, MO 64105-1310
TELEPHONE (816) 472-1201
CERTIFICATE OF AUTHORITY NO. 001270

LICENSED STRUCTURAL ENGINEER
HANS R. HUTTON
081-006707
STATE OF ILLINOIS
Hans R. Hutton
8-20-2009

REV.

BILL OF REINFORCING STEEL

NO. REQ'D.	MARK NO. (SIZE MARK)	LOCATION	EPOXY (E)	SHAPE NO.	STIRRUP (S)	SUBSTR. (X)	VARIES (V)	NO. EACH	B (FT. IN.)	C (FT. IN.)	D (FT. IN.)	E (FT. IN.)	F (FT. IN.)	H (FT. IN.)	K (FT. IN.)	NOMINAL LENGTH (FT. IN.)	ACTUAL LENGTH (FT. IN.)	WEIGHT (LBS.)
		PANEL A121-02 (PER PANEL)																
90	6S001	Slab Panel	E	20					12'-3"							12'-3"	12'-3"	1,656
28	6S002	Slab Panel	E	20					43'-1"							43'-1"	43'-1"	1,812
90	6S003	Slab Panel	E	5					7"	4'-11"	4'-11"					10'-5"	10'-2"	1,374
14	6S004	Slab Panel	E	5					6"	4'-5"	4'-5"					9'-4"	9'-1"	191
4	6S005	Slab Panel	E	5					6"	6'-8"	6'-8"					13'-10"	13'-7"	82
14	5S006	Slab Panel	E	89					10"	10"	2'-5"			5⅜"	2'-4½"	4'-1"	4'-0"	58
14	5S007	Slab Panel	E	54					16"	18"	18"	10"	10"	18"	1½"	6'-0"	5'-8"	83
16	6S008	Slab Panel	E	20					7'-0"							7'-0"	7'-0"	168
14	6S013	Slab Panel	E	5					6"	4'-5"	4'-5"					9'-4"	9'-1"	191
		PANEL A121-03 (PER PANEL)																
90	6S001	Slab Panel	E	20					12'-3"							12'-3"	12'-3"	1,656
28	6S002	Slab Panel	E	20					43'-1"							43'-1"	43'-1"	1,812
90	6S003	Slab Panel	E	5					7"	4'-11"	4'-11"					10'-5"	10'-2"	1,374
14	6S004	Slab Panel	E	5					6"	4'-5"	4'-5"					9'-4"	9'-1"	191
4	6S005	Slab Panel	E	5					6"	6'-8"	6'-8"					13'-10"	13'-7"	82
14	5S006	Slab Panel	E	89					10"	10"	2'-5"			5⅜"	2'-4½"	4'-1"	4'-0"	58
14	5S007	Slab Panel	E	54					16"	18"	18"	10"	10"	18"	1½"	6'-0"	5'-8"	83
16	6S008	Slab Panel	E	20					7'-0"							7'-0"	7'-0"	168
10	6S012	Slab Panel	E	5					6"	6'-5"	6'-5"					13'-4"	13'-1"	197
4	6S013	Slab Panel	E	5					6"	4'-5"	4'-5"					9'-4"	9'-1"	55
		PANEL A121-04 (PER PANEL)																
90	6S001	Slab Panel	E	20					12'-3"							12'-3"	12'-3"	1,656
28	6S002	Slab Panel	E	20					43'-1"							43'-1"	43'-1"	1,812
90	6S003	Slab Panel	E	5					7"	4'-11"	4'-11"					10'-5"	10'-2"	1,374
14	6S004	Slab Panel	E	5					6"	4'-5"	4'-5"					9'-4"	9'-1"	191
4	6S005	Slab Panel	E	5					6"	6'-8"	6'-8"					13'-10"	13'-7"	82
14	5S006	Slab Panel	E	89					10"	10"	2'-5"			5⅜"	2'-4½"	4'-1"	4'-0"	58
14	5S007	Slab Panel	E	54					16"	18"	18"	10"	10"	18"	1½"	6'-0"	5'-8"	83
16	6S008	Slab Panel	E	20					7'-0"							7'-0"	7'-0"	168
10	6S012	Slab Panel	E	5					6"	6'-5"	6'-5"					13'-4"	13'-1"	197
4	6S013	Slab Panel	E	5					6"	4'-5"	4'-5"					9'-4"	9'-1"	55
		PANEL A121-05 (PER PANEL)																
90	6S001	Slab Panel	E	20					12'-3"							12'-3"	12'-3"	1,656
28	6S002	Slab Panel	E	20					43'-1"							43'-1"	43'-1"	1,812
90	6S003	Slab Panel	E	5					7"	4'-11"	4'-11"					10'-5"	10'-2"	1,374
14	6S004	Slab Panel	E	5					6"	4'-5"	4'-5"					9'-4"	9'-1"	191
4	6S005	Slab Panel	E	5					6"	6'-8"	6'-8"					13'-10"	13'-7"	82
14	5S006	Slab Panel	E	89					10"	10"	2'-5"			5⅜"	2'-4½"	4'-1"	4'-0"	58
14	5S007	Slab Panel	E	54					16"	18"	18"	10"	10"	18"	1½"	6'-0"	5'-8"	83
16	6S008	Slab Panel	E	20					7'-0"							7'-0"	7'-0"	168
3	5S009	Slab Panel	E	54					2'-1"	18"	18"	10"	10"	18"	1½"	6'-9"	6'-5"	20
9	6S012	Slab Panel	E	5					6"	6'-5"	6'-5"					13'-4"	13'-1"	177
5	6S013	Slab Panel	E	5					6"	4'-5"	4'-5"					9'-4"	9'-1"	68
		PANEL A121-06 (PER PANEL)																
90	6S001	Slab Panel	E	20					12'-3"							12'-3"	12'-3"	1,656
28	6S002	Slab Panel	E	20					43'-1"							43'-1"	43'-1"	1,812
90	6S003	Slab Panel	E	5					7"	4'-11"	4'-11"					10'-5"	10'-2"	1,374
14	6S004	Slab Panel	E	5					6"	4'-5"	4'-5"					9'-4"	9'-1"	191
4	6S005	Slab Panel	E	5					6"	6'-8"	6'-8"					13'-10"	13'-7"	82
14	5S006	Slab Panel	E	89					10"	10"	2'-5"			5⅜"	2'-4½"	4'-1"	4'-0"	58
14	5S007	Slab Panel	E	54					16"	18"	18"	10"	10"	18"	1½"	6'-0"	5'-8"	83
16	6S008	Slab Panel	E	20					7'-0"							7'-0"	7'-0"	168
3	5S009	Slab Panel	E	54					2'-1"	18"	18"	10"	10"	18"	1½"	6'-9"	6'-5"	20
9	6S012	Slab Panel	E	5					6"	6'-5"	6'-5"					13'-4"	13'-1"	177
5	6S013	Slab Panel	E	5					6"	4'-5"	4'-5"					9'-4"	9'-1"	68

BILL OF REINFORCING STEEL

NO. REQ'D.	MARK NO. (SIZE MARK)	LOCATION	EPOXY (E)	SHAPE NO.	STIRRUP (S)	SUBSTR. (X)	VARIES (V)	NO. EACH	B (FT. IN.)	C (FT. IN.)	D (FT. IN.)	E (FT. IN.)	F (FT. IN.)	H (FT. IN.)	K (FT. IN.)	NOMINAL LENGTH (FT. IN.)	ACTUAL LENGTH (FT. IN.)	WEIGHT (LBS.)
		PANEL A121-07 (PER PANEL)																
90	6S001	Slab Panel	E	20					12'-3"							12'-3"	12'-3"	1,656
28	6S002	Slab Panel	E	20					43'-1"							43'-1"	43'-1"	1,812
90	6S003	Slab Panel	E	5					7"	4'-11"	4'-11"					10'-5"	10'-2"	1,374
14	6S004	Slab Panel	E	5					6"	4'-5"	4'-5"					9'-4"	9'-1"	191
4	6S005	Slab Panel	E	5					6"	6'-8"	6'-8"					13'-10"	13'-7"	82
14	5S006	Slab Panel	E	89					10"	10"	2'-5"			5⅜"	2'-4½"	4'-1"	4'-0"	58
14	5S007	Slab Panel	E	54					16"	18"	18"	10"	10"	18"	1½"	6'-0"	5'-8"	83
16	6S008	Slab Panel	E	20					7'-0"							7'-0"	7'-0"	168
8	6S012	Slab Panel	E	5					6"	6'-5"	6'-5"					13'-4"	13'-1"	157
6	6S013	Slab Panel	E	5					6"	4'-5"	4'-5"					9'-4"	9'-1"	82
		PANEL A121-08 (PER PANEL)																
90	6S001	Slab Panel	E	20					12'-3"							12'-3"	12'-3"	1,656
28	6S002	Slab Panel	E	20					43'-1"							43'-1"	43'-1"	1,812
90	6S003	Slab Panel	E	5					7"	4'-11"	4'-11"					10'-5"	10'-2"	1,374
14	6S004	Slab Panel	E	5					6"	4'-5"	4'-5"					9'-4"	9'-1"	191
4	6S005	Slab Panel	E	5					6"	6'-8"	6'-8"					13'-10"	13'-7"	82
14	5S006	Slab Panel	E	89					10"	10"	2'-5"			5⅜"	2'-4½"	4'-1"	4'-0"	58
14	5S007	Slab Panel	E	54					16"	18"	18"	10"	10"	18"	1½"	6'-0"	5'-8"	83
16	6S008	Slab Panel	E	20					7'-0"							7'-0"	7'-0"	168
8	6S012	Slab Panel	E	5					6"	6'-5"	6'-5"					13'-4"	13'-1"	157
6	6S013	Slab Panel	E	5					6"	4'-5"	4'-5"					9'-4"	9'-1"	82
		PANEL A240-01 (PER PANEL)																
90	6S001	Slab Panel	E	20					12'-3"							12'-3"	12'-3"	1,656
28	6S002	Slab Panel	E	20					43'-1"							43'-1"	43'-1"	1,812
90	6S003	Slab Panel	E	5					7"	4'-11"	4'-11"					10'-5"	10'-2"	1,374
14	6S004	Slab Panel	E	5					6"	4'-5"	4'-5"					9'-4"	9'-1"	191
14	5S006	Slab Panel	E	89					10"	10"	2'-5"			5⅜"	2'-4½"	4'-1"	4'-0"	58
14	5S007	Slab Panel	E	54					16"	18"	18"	10"	10"	18"	1½"	6'-0"	5'-8"	83
14	6S012	Slab Panel	E	5					6"	6'-5"	6'-5"					13'-4"	13'-1"	275
		PANEL A240-02 (PER PANEL)																
90	6S001	Slab Panel	E	20					12'-3"							12'-3"	12'-3"	1,656
28	6S002	Slab Panel	E	20					43'-1"							43'-1"	43'-1"	1,812
90	6S003	Slab Panel	E	5					7"	4'-11"	4'-11"					10'-5"	10'-2"	1,374
14	6S004	Slab Panel	E	5					6"	4'-5"	4'-5"					9'-4"	9'-1"	191
14	5S006	Slab Panel	E	89					10"	10"	2'-5"			5⅜"	2'-4½"	4'-1"	4'-0"	58
14	5S007	Slab Panel	E	54					16"	18"	18"	10"	10"	18"	1½"	6'-0"	5'-8"	83
14	6S012	Slab Panel	E	5					6"	6'-5"	6'-5"					13'-4"	13'-1"	275
		PANEL A240-03 (PER PANEL)																
90	6S001	Slab Panel	E	20					12'-3"							12'-3"	12'-3"	1,656
28	6S002	Slab Panel	E	20					43'-1"							43'-1"	43'-1"	1,812
90	6S003	Slab Panel	E	5					7"	4'-11"	4'-11"					10'-5"	10'-2"	1,374
14	6S004	Slab Panel	E	5					6"	4'-5"	4'-5"					9'-4"	9'-1"	191
14	5S006	Slab Panel	E	89					10"	10"	2'-5"			5⅜"	2'-4½"	4'-1"	4'-0"	58
14	5S007	Slab Panel	E	54					16"	18"	18"	10"	10"	18"	1½"	6'-0"	5'-8"	83
14	6S012	Slab Panel	E	5					6"	6'-5"	6'-5"					13'-4"	13'-1"	275
		PANEL A240-04 (PER PANEL)																
90	6S001	Slab Panel	E	20					12'-3"							12'-3"	12'-3"	1,656
28	6S002	Slab Panel	E	20					43'-1"							43'-1"	43'-1"	1,812
90	6S003	Slab Panel	E	5					7"	4'-11"	4'-11"					10'-5"	10'-2"	1,374
14	6S004	Slab Panel	E	5					6"	4'-5"	4'-5"					9'-4"	9'-1"	191
14	5S006	Slab Panel	E	89					10"	10"	2'-5"			5⅜"	2'-4½"	4'-1"	4'-0"	58
14	5S007	Slab Panel	E	54					16"	18"	18"	10"	10"	18"	1½"	6'-0"	5'-8"	83
14	6S012	Slab Panel	E	5					6"	6'-5"	6'-5"					13'-4"	13'-1"	275

Notes:
For Bar Bending Diagram, see Sheet No. BR184.

BILL OF REINFORCING STEEL

Detailed JUL 2009
Checked JUL 2009

Note: This drawing is not to scale. Follow dimensions.

STATE OF MISSOURI
HANS R. HUTTON
NUMBER E-29174
REGISTERED PROFESSIONAL ENGINEER
Hans R. Hutton

DATE 8/20/09
ROUTE I-70 | STATE MO/IL
DISTRICT 6 | SHEET NO. BR193
COUNTY ST. LOUIS CITY - MO ST. CLAIR - IL
JOB NO. J6I0984
CONTRACT ID.
PROJECT NO.
BRIDGE NO. A6500

DESCRIPTION
DATE

MISSOURI HIGHWAYS AND TRANSPORTATION COMMISSION
105 WEST CAPITOL
JEFFERSON CITY, MO 65102
1-888-ASK-MODOT (1-888-275-6636)

HNTB
715 KIRK DRIVE
KANSAS CITY, MO 64105-1310
TELEPHONE (816) 472-1201
CERTIFICATE OF AUTHORITY
NO. 001270

LICENSED STRUCTURAL ENGINEER
HANS R. HUTTON
081-006707
STATE OF ILLINOIS
expires 11-30-2010
Hans R. Hutton
signature
8-20-2009
date

REV.

\\kcow00\jobs\46440\Bridges\Plans\CdtoMoDOTA65C0\J6I0984\A6500-dgn\ZPLOT_B_A6500_001-205_J6I0984_193.dgn
19-AUG-2009 07:59

BILL OF REINFORCING STEEL

NO. REQ'D.	MARK NO. SIZE	MARK NO. MARK	LOCATION	EPOXY (E)	SHAPE NO.	STIRRUP (S)	SUBSTR. (X)	VARIES (V)	NO. EACH	DIMENSIONS B FT.	B IN.	C FT.	C IN.	D FT.	D IN.	E FT.	E IN.	F FT.	F IN.	H FT.	H IN.	K FT.	K IN.	NOMINAL LENGTH FT.	NOMINAL LENGTH IN.	ACTUAL LENGTH FT.	ACTUAL LENGTH IN.	WEIGHT LBS.
			PANEL A240-05 (PER PANEL)																									
90	6S001	Slab Panel		E	20					12′	-3″													12′	-3″	12′	-3″	1,656
28	6S002	Slab Panel		E	20					43′	-1″													43′	-1″	43′	-1″	1,812
90	6S003	Slab Panel		E	5					7″		4′	-11″	4′	-11″									10′	-5″	10′	-2″	1,374
14	6S004	Slab Panel		E	5					6″		4′	-5″	4′	-5″									9′	-4″	9′	-1″	191
14	5S006	Slab Panel		E	89					10″		10″		2′	-5″					5 3/8″		2′	-4 1/2″	4′	-1″	4′	-0″	58
14	5S007	Slab Panel		E	54					16″		18″		18″		10″		10″		18″		1 1/2″		6′	-0″	5′	-8″	83
14	6S012	Slab Panel		E	5					6″		6′	-5″	6′	-5″									13′	-4″	13′	-1″	275
			PANEL A240-06 (PER PANEL)																									
90	6S001	Slab Panel		E	20					12′	-3″													12′	-3″	12′	-3″	1,656
28	6S002	Slab Panel		E	20					43′	-1″													43′	-1″	43′	-1″	1,812
90	6S003	Slab Panel		E	5					7″		4′	-11″	4′	-11″									10′	-5″	10′	-2″	1,374
14	6S004	Slab Panel		E	5					6″		4′	-5″	4′	-5″									9′	-4″	9′	-1″	191
14	5S006	Slab Panel		E	89					10″		10″		2′	-5″					5 3/8″		2′	-4 1/2″	4′	-1″	4′	-0″	58
14	5S007	Slab Panel		E	54					16″		18″		18″		10″		10″		18″		1 1/2″		6′	-0″	5′	-8″	83
3	5S009	Slab Panel		E	54					2′	-1″	18″		18″		10″		10″		18″		1 1/2″		6′	-9″	6′	-5″	20
14	6S012	Slab Panel		E	5					6″		6′	-5″	6′	-5″									13′	-4″	13′	-1″	275
			PANEL A240-07 (PER PANEL)																									
90	6S001	Slab Panel		E	20					12′	-3″													12′	-3″	12′	-3″	1,656
28	6S002	Slab Panel		E	20					43′	-1″													43′	-1″	43′	-1″	1,812
90	6S003	Slab Panel		E	5					7″		4′	-11″	4′	-11″									10′	-5″	10′	-2″	1,374
14	6S004	Slab Panel		E	5					6″		4′	-5″	4′	-5″									9′	-4″	9′	-1″	191
14	5S006	Slab Panel		E	89					10″		10″		2′	-5″					5 3/8″		2′	-4 1/2″	4′	-1″	4′	-0″	58
14	5S007	Slab Panel		E	54					16″		18″		18″		10″		10″		18″		1 1/2″		6′	-0″	5′	-8″	83
3	5S009	Slab Panel		E	54					2′	-1″	18″		18″		10″		10″		18″		1 1/2″		6′	-9″	6′	-5″	20
14	6S012	Slab Panel		E	5					6″		6′	-5″	6′	-5″									13′	-4″	13′	-1″	275
			PANEL A240-08 (PER PANEL)																									
90	6S001	Slab Panel		E	20					12′	-3″													12′	-3″	12′	-3″	1,656
28	6S002	Slab Panel		E	20					43′	-1″													43′	-1″	43′	-1″	1,812
90	6S003	Slab Panel		E	5					7″		4′	-11″	4′	-11″									10′	-5″	10′	-2″	1,374
14	6S004	Slab Panel		E	5					6″		4′	-5″	4′	-5″									9′	-4″	9′	-1″	191
14	5S006	Slab Panel		E	89					10″		10″		2′	-5″					5 3/8″		2′	-4 1/2″	4′	-1″	4′	-0″	58
14	5S007	Slab Panel		E	54					16″		18″		18″		10″		10″		18″		1 1/2″		6′	-0″	5′	-8″	83
14	6S012	Slab Panel		E	5					6″		6′	-5″	6′	-5″									13′	-4″	13′	-1″	275
			PANEL A240-09 (PER PANEL)																									
90	6S001	Slab Panel		E	20					12′	-3″													12′	-3″	12′	-3″	1,656
28	6S002	Slab Panel		E	20					43′	-1″													43′	-1″	43′	-1″	1,812
90	6S003	Slab Panel		E	5					7″		4′	-11″	4′	-11″									10′	-5″	10′	-2″	1,374
14	6S004	Slab Panel		E	5					6″		4′	-5″	4′	-5″									9′	-4″	9′	-1″	191
14	5S006	Slab Panel		E	89					10″		10″		2′	-5″					5 3/8″		2′	-4 1/2″	4′	-1″	4′	-0″	58
14	5S007	Slab Panel		E	54					16″		18″		18″		10″		10″		18″		1 1/2″		6′	-0″	5′	-8″	83
14	6S012	Slab Panel		E	5					6″		6′	-5″	6′	-5″									13′	-4″	13′	-1″	275
			PANEL A240-10 (PER PANEL)																									
90	6S001	Slab Panel		E	20					12′	-3″													12′	-3″	12′	-3″	1,656
28	6S002	Slab Panel		E	20					43′	-1″													43′	-1″	43′	-1″	1,812
90	6S003	Slab Panel		E	5					7″		4′	-11″	4′	-11″									10′	-5″	10′	-2″	1,374
14	6S004	Slab Panel		E	5					6″		4′	-5″	4′	-5″									9′	-4″	9′	-1″	191
14	5S006	Slab Panel		E	89					10″		10″		2′	-5″					5 3/8″		2′	-4 1/2″	4′	-1″	4′	-0″	58
14	5S007	Slab Panel		E	54					16″		18″		18″		10″		10″		18″		1 1/2″		6′	-0″	5′	-8″	83
14	6S012	Slab Panel		E	5					6″		6′	-5″	6′	-5″									13′	-4″	13′	-1″	275
			PANEL A240-11 (PER PANEL)																									
90	6S001	Slab Panel		E	20					12′	-3″													12′	-3″	12′	-3″	1,656
28	6S002	Slab Panel		E	20					43′	-1″													43′	-1″	43′	-1″	1,812
90	6S003	Slab Panel		E	5					7″		4′	-11″	4′	-11″									10′	-5″	10′	-2″	1,374
14	6S004	Slab Panel		E	5					6″		4′	-5″	4′	-5″									9′	-4″	9′	-1″	191
14	5S006	Slab Panel		E	89					10″		10″		2′	-5″					5 3/8″		2′	-4 1/2″	4′	-1″	4′	-0″	58
14	5S007	Slab Panel		E	54					16″		18″		18″		10″		10″		18″		1 1/2″		6′	-0″	5′	-8″	83
14	6S012	Slab Panel		E	5					6″		6′	-5″	6′	-5″									13′	-4″	13′	-1″	275

BILL OF REINFORCING STEEL

NO. REQ'D.	MARK NO. SIZE	MARK NO. MARK	LOCATION	EPOXY (E)	SHAPE NO.	STIRRUP (S)	SUBSTR. (X)	VARIES (V)	NO. EACH	DIMENSIONS B FT.	B IN.	C FT.	C IN.	D FT.	D IN.	E FT.	E IN.	F FT.	F IN.	H FT.	H IN.	K FT.	K IN.	NOMINAL LENGTH FT.	NOMINAL LENGTH IN.	ACTUAL LENGTH FT.	ACTUAL LENGTH IN.	WEIGHT LBS.
			PANEL A240-12 (PER PANEL)																									
90	6S001	Slab Panel		E	20					12′	-3″													12′	-3″	12′	-3″	1,656
28	6S002	Slab Panel		E	20					43′	-1″													43′	-1″	43′	-1″	1,812
90	6S003	Slab Panel		E	5					7″		4′	-11″	4′	-11″									10′	-5″	10′	-2″	1,374
14	6S004	Slab Panel		E	5					6″		4′	-5″	4′	-5″									9′	-4″	9′	-1″	191
14	5S006	Slab Panel		E	89					10″		10″		2′	-5″					5 3/8″		2′	-4 1/2″	4′	-1″	4′	-0″	58
14	5S007	Slab Panel		E	54					16″		18″		18″		10″		10″		18″		1 1/2″		6′	-0″	5′	-8″	83
2	6S012	Slab Panel		E	5					6″		6′	-5″	6′	-5″									13′	-4″	13′	-1″	39
12	6S014	Slab Panel		E	5					6″		8′	-4″	8′	-4″									17′	-2″	16′	-11″	305
			PANEL A240-13 (PER PANEL)																									
90	6S001	Slab Panel		E	20					12′	-3″													12′	-3″	12′	-3″	1,656
28	6S002	Slab Panel		E	20					43′	-1″													43′	-1″	43′	-1″	1,812
90	6S003	Slab Panel		E	5					7″		4′	-11″	4′	-11″									10′	-5″	10′	-2″	1,374
14	6S004	Slab Panel		E	5					6″		4′	-5″	4′	-5″									9′	-4″	9′	-1″	191
14	5S006	Slab Panel		E	89					10″		10″		2′	-5″					5 3/8″		2′	-4 1/2″	4′	-1″	4′	-0″	58
14	5S007	Slab Panel		E	54					16″		18″		18″		10″		10″		18″		1 1/2″		6′	-0″	5′	-8″	83
2	6S012	Slab Panel		E	5					6″		6′	-5″	6′	-5″									13′	-4″	13′	-1″	39
12	6S014	Slab Panel		E	5					6″		8′	-4″	8′	-4″									17′	-2″	16′	-11″	305
			PANEL A241-01 (PER PANEL)																									
90	6S001	Slab Panel		E	20					12′	-3″													12′	-3″	12′	-3″	1,656
28	6S002	Slab Panel		E	20					43′	-1″													43′	-1″	43′	-1″	1,812
90	6S003	Slab Panel		E	5					7″		4′	-11″	4′	-11″									10′	-5″	10′	-2″	1,374
14	6S004	Slab Panel		E	5					6″		4′	-5″	4′	-5″									9′	-4″	9′	-1″	191
4	6S005	Slab Panel		E	5					6″		6′	-8″	6′	-8″									13′	-10″	13′	-7″	82
14	5S006	Slab Panel		E	89					10″		10″		2′	-5″					5 3/8″		2′	-4 1/2″	4′	-1″	4′	-0″	58
14	5S007	Slab Panel		E	54					16″		18″		18″		10″		10″		18″		1 1/2″		6′	-0″	5′	-8″	83
16	6S008	Slab Panel		E	20					7′	-0″													7′	-0″	7′	-0″	168
9	6S012	Slab Panel		E	5					6″		6′	-5″	6′	-5″									13′	-4″	13′	-1″	177
5	6S013	Slab Panel		E	5					6″		4′	-5″	4′	-5″									9′	-4″	9′	-1″	68
			PANEL A241-02 (PER PANEL)																									
90	6S001	Slab Panel		E	20					12′	-3″													12′	-3″	12′	-3″	1,656
28	6S002	Slab Panel		E	20					43′	-1″													43′	-1″	43′	-1″	1,812
90	6S003	Slab Panel		E	5					7″		4′	-11″	4′	-11″									10′	-5″	10′	-2″	1,374
14	6S004	Slab Panel		E	5					6″		4′	-5″	4′	-5″									9′	-4″	9′	-1″	191
4	6S005	Slab Panel		E	5					6″		6′	-8″	6′	-8″									13′	-10″	13′	-7″	82
14	5S006	Slab Panel		E	89					10″		10″		2′	-5″					5 3/8″		2′	-4 1/2″	4′	-1″	4′	-0″	58
14	5S007	Slab Panel		E	54					16″		18″		18″		10″		10″		18″		1 1/2″		6′	-0″	5′	-8″	83
16	6S008	Slab Panel		E	20					7′	-0″													7′	-0″	7′	-0″	168
9	6S012	Slab Panel		E	5					6″		6′	-5″	6′	-5″									13′	-4″	13′	-1″	177
5	6S013	Slab Panel		E	5					6″		4′	-5″	4′	-5″									9′	-4″	9′	-1″	68
			PANEL A241-03 (PER PANEL)																									
90	6S001	Slab Panel		E	20					12′	-3″													12′	-3″	12′	-3″	1,656
28	6S002	Slab Panel		E	20					43′	-1″													43′	-1″	43′	-1″	1,812
90	6S003	Slab Panel		E	5					7″		4′	-11″	4′	-11″									10′	-5″	10′	-2″	1,374
14	6S004	Slab Panel		E	5					6″		4′	-5″	4′	-5″									9′	-4″	9′	-1″	191
4	6S005	Slab Panel		E	5					6″		6′	-8″	6′	-8″									13′	-10″	13′	-7″	82
14	5S006	Slab Panel		E	89					10″		10″		2′	-5″					5 3/8″		2′	-4 1/2″	4′	-1″	4′	-0″	58
14	5S007	Slab Panel		E	54					16″		18″		18″		10″		10″		18″		1 1/2″		6′	-0″	5′	-8″	83
16	6S008	Slab Panel		E	20					7′	-0″													7′	-0″	7′	-0″	168
8	6S012	Slab Panel		E	5					6″		6′	-5″	6′	-5″									13′	-4″	13′	-1″	157
6	6S013	Slab Panel		E	5					6″		4′	-5″	4′	-5″									9′	-4″	9′	-1″	82
			PANEL A241-04 (PER PANEL)																									
90	6S001	Slab Panel		E	20					12′	-3″													12′	-3″	12′	-3″	1,656
28	6S002	Slab Panel		E	20					43′	-1″													43′	-1″	43′	-1″	1,812
90	6S003	Slab Panel		E	5					7″		4′	-11″	4′	-11″									10′	-5″	10′	-2″	1,374
14	6S004	Slab Panel		E	5					6″		4′	-5″	4′	-5″									9′	-4″	9′	-1″	191
4	6S005	Slab Panel		E	5					6″		6′	-8″	6′	-8″									13′	-10″	13′	-7″	82
14	5S006	Slab Panel		E	89					10″		10″		2′	-5″					5 3/8″		2′	-4 1/2″	4′	-1″	4′	-0″	58
14	5S007	Slab Panel		E	54					16″		18″		18″		10″		10″		18″		1 1/2″		6′	-0″	5′	-8″	83
16	6S008	Slab Panel		E	20					7′	-0″													7′	-0″	7′	-0″	168
8	6S012	Slab Panel		E	5					6″		6′	-5″	6′	-5″									13′	-4″	13′	-1″	157
6	6S013	Slab Panel		E	5					6″		4′	-5″	4′	-5″									9′	-4″	9′	-1″	82

Notes:
For Bar Bending Diagram, see Sheet No. BR184.

BILL OF REINFORCING STEEL

Detailed JUL 2009
Checked JUL 2009

Note: This drawing is not to scale. Follow dimensions.

Sheet No. 194 of 205

\\kcow00\jobs\46440\Bridges\Plans\CdtoMoDOTA6500\J6I0984\A6500-dan\ZPLOT_B_A6500_001-205_J6I0984_194.dan

19-AUG-2009 07:59

STATE OF MISSOURI
HANS R. HUTTON
NUMBER E-29174
REGISTERED ENGINEER
Hans R. Hutton

DATE 8/20/09
ROUTE I-70
STATE MO/IL
DISTRICT 6
SHEET NO. BR194
COUNTY ST. LOUIS CITY - MO ST. CLAIR - IL
JOB NO. J6I0984
CONTRACT ID.
PROJECT NO.
BRIDGE NO. A6500

REV.	DESCRIPTION	DATE

MISSOURI HIGHWAYS AND TRANSPORTATION COMMISSION
MoDOT
105 WEST CAPITOL
JEFFERSON CITY, MO 65102
1-888-ASK-MODOT (1-888-275-6636)

HNTB
715 KIRK DRIVE
KANSAS CITY, MO 64105-1310
TELEPHONE (816) 472-1201
CERTIFICATE OF AUTHORITY NO. 001270

STATE OF ILLINOIS
LICENSED STRUCTURAL ENGINEER
HANS R. HUTTON
081-006707
EXPIRES 11-30-2010
Hans R. Hutton
8-20-2009

BILL OF REINFORCING STEEL

NO. REQ'D.	MARK NO. SIZE	MARK NO. MARK	LOCATION	EPOXY (E)	SHAPE NO.	STIRRUP (S)	SUBSTR. (X)	VARIES (V)	NO. EACH	DIMENSIONS B FT.	B IN.	C FT.	C IN.	D FT.	D IN.	E FT.	E IN.	F FT.	F IN.	H FT.	H IN.	K FT.	K IN.	NOMINAL LENGTH FT.	NOMINAL LENGTH IN.	ACTUAL LENGTH FT.	ACTUAL LENGTH IN.	WEIGHT LBS.
			PANEL A241-05 (PER PANEL)																									
90	6S001	Slab Panel		E	20					12′-3″														12′-3″		12′-3″		1,656
28	6S002	Slab Panel		E	20					43′-1″														43′-1″		43′-1″		1,812
90	6S003	Slab Panel		E	5					7″		4′-11″		4′-11″										10′-5″		10′-2″		1,374
14	6S004	Slab Panel		E	5					6″		4′-5″		4′-5″										9′-4″		9′-1″		191
14	5S006	Slab Panel		E	89					10″		10″		2′-5″						5 3/8″		2′-4 1/2″		4′-1″		4′-0″		58
14	5S007	Slab Panel		E	54					16″		18″		18″		10″		10″		18″		1 1/2″		6′-0″		5′-8″		83
16	6S008	Slab Panel		E	20					7′-0″														7′-0″		7′-0″		168
14	6S012	Slab Panel		E	5					6″		6′-5″		6′-5″										13′-4″		13′-1″		275
			PANEL A241-06 (PER PANEL)																									
90	6S001	Slab Panel		E	20					12′-3″														12′-3″		12′-3″		1,656
28	6S002	Slab Panel		E	20					43′-1″														43′-1″		43′-1″		1,812
90	6S003	Slab Panel		E	5					7″		4′-11″		4′-11″										10′-5″		10′-2″		1,374
14	6S004	Slab Panel		E	5					6″		4′-5″		4′-5″										9′-4″		9′-1″		191
4	6S005	Slab Panel		E	5					6″		6′-8″		6′-8″										13′-10″		13′-7″		82
14	5S006	Slab Panel		E	89					10″		10″		2′-5″						5 3/8″		2′-4 1/2″		4′-1″		4′-0″		58
14	5S007	Slab Panel		E	54					16″		18″		18″		10″		10″		18″		1 1/2″		6′-0″		5′-8″		83
16	6S008	Slab Panel		E	20					7′-0″														7′-0″		7′-0″		168
8	6S012	Slab Panel		E	5					6″		6′-5″		6′-5″										13′-4″		13′-1″		157
6	6S013	Slab Panel		E	5					6″		4′-5″		4′-5″										9′-4″		9′-1″		82
			PANEL A241-07 (PER PANEL)																									
90	6S001	Slab Panel		E	20					12′-3″														12′-3″		12′-3″		1,656
28	6S002	Slab Panel		E	20					43′-1″														43′-1″		43′-1″		1,812
90	6S003	Slab Panel		E	5					7″		4′-11″		4′-11″										10′-5″		10′-2″		1,374
14	6S004	Slab Panel		E	5					6″		4′-5″		4′-5″										9′-4″		9′-1″		191
4	6S005	Slab Panel		E	5					6″		6′-8″		6′-8″										13′-10″		13′-7″		82
14	5S006	Slab Panel		E	89					10″		10″		2′-5″						5 3/8″		2′-4 1/2″		4′-1″		4′-0″		58
14	5S007	Slab Panel		E	54					16″		18″		18″		10″		10″		18″		1 1/2″		6′-0″		5′-8″		83
16	6S008	Slab Panel		E	20					7′-0″														7′-0″		7′-0″		168
8	6S012	Slab Panel		E	5					6″		6′-5″		6′-5″										13′-4″		13′-1″		157
6	6S013	Slab Panel		E	5					6″		4′-5″		4′-5″										9′-4″		9′-1″		82
			PANEL A241-08 (PER PANEL)																									
90	6S001	Slab Panel		E	20					12′-3″														12′-3″		12′-3″		1,656
28	6S002	Slab Panel		E	20					43′-1″														43′-1″		43′-1″		1,812
90	6S003	Slab Panel		E	5					7″		4′-11″		4′-11″										10′-5″		10′-2″		1,374
14	6S004	Slab Panel		E	5					6″		4′-5″		4′-5″										9′-4″		9′-1″		191
4	6S005	Slab Panel		E	5					6″		6′-8″		6′-8″										13′-10″		13′-7″		82
14	5S006	Slab Panel		E	89					10″		10″		2′-5″						5 3/8″		2′-4 1/2″		4′-1″		4′-0″		58
14	5S007	Slab Panel		E	54					16″		18″		18″		10″		10″		18″		1 1/2″		6′-0″		5′-8″		83
16	6S008	Slab Panel		E	20					7′-0″														7′-0″		7′-0″		168
8	6S012	Slab Panel		E	5					6″		6′-5″		6′-5″										13′-4″		13′-1″		157
6	6S013	Slab Panel		E	5					6″		4′-5″		4′-5″										9′-4″		9′-1″		82
			PANEL A241-09 (PER PANEL)																									
90	6S001	Slab Panel		E	20					12′-3″														12′-3″		12′-3″		1,656
28	6S002	Slab Panel		E	20					43′-1″														43′-1″		43′-1″		1,812
90	6S003	Slab Panel		E	5					7″		4′-11″		4′-11″										10′-5″		10′-2″		1,374
14	6S004	Slab Panel		E	5					6″		4′-5″		4′-5″										9′-4″		9′-1″		191
4	6S005	Slab Panel		E	5					6″		6′-8″		6′-8″										13′-10″		13′-7″		82
14	5S006	Slab Panel		E	89					10″		10″		2′-5″						5 3/8″		2′-4 1/2″		4′-1″		4′-0″		58
14	5S007	Slab Panel		E	54					16″		18″		18″		10″		10″		18″		1 1/2″		6′-0″		5′-8″		83
16	6S008	Slab Panel		E	20					7′-0″														7′-0″		7′-0″		168
8	6S012	Slab Panel		E	5					6″		6′-5″		6′-5″										13′-4″		13′-1″		157
6	6S013	Slab Panel		E	5					6″		4′-5″		4′-5″										9′-4″		9′-1″		82

BILL OF REINFORCING STEEL

NO. REQ'D.	MARK NO. SIZE	MARK NO. MARK	LOCATION	EPOXY (E)	SHAPE NO.	STIRRUP (S)	SUBSTR. (X)	VARIES (V)	NO. EACH	DIMENSIONS B FT.	B IN.	C FT.	C IN.	D FT.	D IN.	E FT.	E IN.	F FT.	F IN.	H FT.	H IN.	K FT.	K IN.	NOMINAL LENGTH FT.	NOMINAL LENGTH IN.	ACTUAL LENGTH FT.	ACTUAL LENGTH IN.	WEIGHT LBS.
			PANEL A241-10 (PER PANEL)																									
90	6S001	Slab Panel		E	20					12′-3″														12′-3″		12′-3″		1,656
28	6S002	Slab Panel		E	20					43′-1″														43′-1″		43′-1″		1,812
90	6S003	Slab Panel		E	5					7″		4′-11″		4′-11″										10′-5″		10′-2″		1,374
14	6S004	Slab Panel		E	5					6″		4′-5″		4′-5″										9′-4″		9′-1″		191
4	6S005	Slab Panel		E	5					6″		6′-8″		6′-8″										13′-10″		13′-7″		82
14	5S006	Slab Panel		E	89					10″		10″		2′-5″						5 3/8″		2′-4 1/2″		4′-1″		4′-0″		58
14	5S007	Slab Panel		E	54					16″		18″		18″		10″		10″		18″		1 1/2″		6′-0″		5′-8″		83
16	6S008	Slab Panel		E	20					7′-0″														7′-0″		7′-0″		168
10	6S012	Slab Panel		E	5					6″		6′-5″		6′-5″										13′-4″		13′-1″		197
4	6S013	Slab Panel		E	5					6″		4′-5″		4′-5″										9′-4″		9′-1″		55
			PANEL A241-11 (PER PANEL)																									
90	6S001	Slab Panel		E	20					12′-3″														12′-3″		12′-3″		1,656
28	6S002	Slab Panel		E	20					43′-1″														43′-1″		43′-1″		1,812
90	6S003	Slab Panel		E	5					7″		4′-11″		4′-11″										10′-5″		10′-2″		1,374
14	6S004	Slab Panel		E	5					6″		4′-5″		4′-5″										9′-4″		9′-1″		191
4	6S005	Slab Panel		E	5					6″		6′-8″		6′-8″										13′-10″		13′-7″		82
14	5S006	Slab Panel		E	89					10″		10″		2′-5″						5 3/8″		2′-4 1/2″		4′-1″		4′-0″		58
14	5S007	Slab Panel		E	54					16″		18″		18″		10″		10″		18″		1 1/2″		6′-0″		5′-8″		83
16	6S008	Slab Panel		E	20					7′-0″														7′-0″		7′-0″		168
10	6S012	Slab Panel		E	5					6″		6′-5″		6′-5″										13′-4″		13′-1″		197
4	6S013	Slab Panel		E	5					6″		4′-5″		4′-5″										9′-4″		9′-1″		55
			PANEL A241-12 (PER PANEL)																									
90	6S001	Slab Panel		E	20					12′-3″														12′-3″		12′-3″		1,656
28	6S002	Slab Panel		E	20					43′-1″														43′-1″		43′-1″		1,812
90	6S003	Slab Panel		E	5					7″		4′-11″		4′-11″										10′-5″		10′-2″		1,374
14	6S004	Slab Panel		E	5					6″		4′-5″		4′-5″										9′-4″		9′-1″		191
4	6S005	Slab Panel		E	5					6″		6′-8″		6′-8″										13′-10″		13′-7″		82
14	5S006	Slab Panel		E	89					10″		10″		2′-5″						5 3/8″		2′-4 1/2″		4′-1″		4′-0″		58
14	5S007	Slab Panel		E	54					16″		18″		18″		10″		10″		18″		1 1/2″		6′-0″		5′-8″		83
16	6S008	Slab Panel		E	20					7′-0″														7′-0″		7′-0″		168
10	6S012	Slab Panel		E	5					6″		6′-5″		6′-5″										13′-4″		13′-1″		197
4	6S013	Slab Panel		E	5					6″		4′-5″		4′-5″										9′-4″		9′-1″		55
			PANEL A241-13 (PER PANEL)																									
90	6S001	Slab Panel		E	20					12′-3″														12′-3″		12′-3″		1,656
28	6S002	Slab Panel		E	20					43′-1″														43′-1″		43′-1″		1,812
90	6S003	Slab Panel		E	5					7″		4′-11″		4′-11″										10′-5″		10′-2″		1,374
14	6S004	Slab Panel		E	5					6″		4′-5″		4′-5″										9′-4″		9′-1″		191
4	6S005	Slab Panel		E	5					6″		6′-8″		6′-8″										13′-10″		13′-7″		82
14	5S006	Slab Panel		E	89					10″		10″		2′-5″						5 3/8″		2′-4 1/2″		4′-1″		4′-0″		58
14	5S007	Slab Panel		E	54					16″		18″		18″		10″		10″		18″		1 1/2″		6′-0″		5′-8″		83
16	6S008	Slab Panel		E	20					7′-0″														7′-0″		7′-0″		168
9	6S012	Slab Panel		E	5					6″		6′-5″		6′-5″										13′-4″		13′-1″		177
5	6S013	Slab Panel		E	5					6″		4′-5″		4′-5″										9′-4″		9′-1″		68
			PANEL A241-14 (PER PANEL)																									
90	6S001	Slab Panel		E	20					12′-3″														12′-3″		12′-3″		1,656
28	6S002	Slab Panel		E	20					43′-1″														43′-1″		43′-1″		1,812
90	6S003	Slab Panel		E	5					7″		4′-11″		4′-11″										10′-5″		10′-2″		1,374
14	6S004	Slab Panel		E	5					6″		4′-5″		4′-5″										9′-4″		9′-1″		191
4	6S005	Slab Panel		E	5					6″		6′-8″		6′-8″										13′-10″		13′-7″		82
14	5S006	Slab Panel		E	89					10″		10″		2′-5″						5 3/8″		2′-4 1/2″		4′-1″		4′-0″		58
14	5S007	Slab Panel		E	54					16″		18″		18″		10″		10″		18″		1 1/2″		6′-0″		5′-8″		83
16	6S008	Slab Panel		E	20					7′-0″														7′-0″		7′-0″		168
9	6S012	Slab Panel		E	5					6″		6′-5″		6′-5″										13′-4″		13′-1″		177
5	6S013	Slab Panel		E	5					6″		4′-5″		4′-5″										9′-4″		9′-1″		68

Notes:
For Bar Bending Diagram, see Sheet No. BR184.

BILL OF REINFORCING STEEL

Detailed JUL 2009
Checked JUL 2009

Note: This drawing is not to scale. Follow dimensions.

Sheet No. 195 of 205

\\kccw00\jobs\46440\Bridges\Plans\CdtoMoDOTA6500\J6I0984\A6500-dgn\ZPLOT_B_A6500_001-205_J6I0984_195.dgn

19-AUG-2009 07:59

STATE OF MISSOURI
HANS R. HUTTON
NUMBER E-28174
REGISTERED ENGINEER
Hans R. Hutton

DATE 8/20/09
ROUTE I-70 | STATE MO/IL
DISTRICT 6 | SHEET NO. BR195
COUNTY ST. LOUIS CITY - MO, ST. CLAIR - IL
JOB NO. J6I0984
CONTRACT ID.
PROJECT NO.
BRIDGE NO. A6500

REV.	DESCRIPTION	DATE

MISSOURI HIGHWAYS AND TRANSPORTATION COMMISSION
MoDOT
105 WEST CAPITOL
JEFFERSON CITY, MO 65102
1-888-ASK-MODOT (1-888-275-6636)

HNTB
715 KEW DRIVE
KANSAS CITY, MO 64105-1310
TELEPHONE (816) 472-1201
CERTIFICATE OF AUTHORITY NO. 001270

REGISTERED STRUCTURAL ENGINEER
HANS R. HUTTON
081-006707
STATE OF ILLINOIS
EXPIRES 11-30-2010
Hans R. Hutton
SIGNATURE
8-20-2009
DATE

BILL OF REINFORCING STEEL

NO. REQ'D.	MARK NO. SIZE	MARK NO. MARK	LOCATION	EPOXY (E)	SHAPE NO.	STIRRUP (S)	SUBSTR. (X)	VARIES (V)	NO. EACH	DIMENSIONS B FT. IN.	C FT. IN.	D FT. IN.	E FT. IN.	F FT. IN.	H FT. IN.	K FT. IN.	NOMINAL LENGTH FT. IN.	ACTUAL LENGTH FT. IN.	WEIGHT LBS.
			PANEL A241-15 (PER PANEL)																
90	6S001		Slab Panel	E	20					12′-3″							12′-3″	12′-3″	1,656
28	6S002		Slab Panel	E	20					43′-1″							43′-1″	43′-1″	1,812
90	6S003		Slab Panel	E	5					7″	4′-11″	4′-11″					10′-5″	10′-2″	1,374
14	6S004		Slab Panel	E	5					6″	4′-5″	4′-5″					9′-4″	9′-1″	191
4	6S005		Slab Panel	E	5					6″	6′-8″	6′-8″					13′-10″	13′-7″	82
14	5S006		Slab Panel	E	89					10″	10″	2′-5″			5 3/8″	2′-4 1/2″	4′-1″	4′-0″	58
14	5S007		Slab Panel	E	54					16″	18″	18″	10″	10″	18″	1 1/2″	6′-0″	5′-8″	83
16	6S008		Slab Panel	E	20					7′-0″							7′-0″	7′-0″	168
9	6S012		Slab Panel	E	5					6″	6′-5″	6′-5″					13′-4″	13′-1″	177
5	6S013		Slab Panel	E	5					6″	4′-5″	4′-5″					9′-4″	9′-1″	68
			PANEL A241-16 (PER PANEL)																
90	6S001		Slab Panel	E	20					12′-3″							12′-3″	12′-3″	1,656
28	6S002		Slab Panel	E	20					43′-1″							43′-1″	43′-1″	1,812
90	6S003		Slab Panel	E	5					7″	4′-11″	4′-11″					10′-5″	10′-2″	1,374
14	6S004		Slab Panel	E	5					6″	4′-5″	4′-5″					9′-4″	9′-1″	191
4	6S005		Slab Panel	E	5					6″	6′-8″	6′-8″					13′-10″	13′-7″	82
14	5S006		Slab Panel	E	89					10″	10″	2′-5″			5 3/8″	2′-4 1/2″	4′-1″	4′-0″	58
14	5S007		Slab Panel	E	54					16″	18″	18″	10″	10″	18″	1 1/2″	6′-0″	5′-8″	83
16	6S008		Slab Panel	E	20					7′-0″							7′-0″	7′-0″	168
10	6S012		Slab Panel	E	5					6″	6′-5″	6′-5″					13′-4″	13′-1″	197
4	6S013		Slab Panel	E	5					6″	4′-5″	4′-5″					9′-4″	9′-1″	55
			PANEL A241-17 (PER PANEL)																
90	6S001		Slab Panel	E	20					12′-3″							12′-3″	12′-3″	1,656
28	6S002		Slab Panel	E	20					43′-1″							43′-1″	43′-1″	1,812
90	6S003		Slab Panel	E	5					7″	4′-11″	4′-11″					10′-5″	10′-2″	1,374
14	6S004		Slab Panel	E	5					6″	4′-5″	4′-5″					9′-4″	9′-1″	191
4	6S005		Slab Panel	E	5					6″	6′-8″	6′-8″					13′-10″	13′-7″	82
14	5S006		Slab Panel	E	89					10″	10″	2′-5″			5 3/8″	2′-4 1/2″	4′-1″	4′-0″	58
14	5S007		Slab Panel	E	54					16″	18″	18″	10″	10″	18″	1 1/2″	6′-0″	5′-8″	83
16	6S008		Slab Panel	E	20					7′-0″							7′-0″	7′-0″	168
10	6S012		Slab Panel	E	5					6″	6′-5″	6′-5″					13′-4″	13′-1″	197
4	6S013		Slab Panel	E	5					6″	4′-5″	4′-5″					9′-4″	9′-1″	55
			PANEL A241-18 (PER PANEL)																
90	6S001		Slab Panel	E	20					12′-3″							12′-3″	12′-3″	1,656
28	6S002		Slab Panel	E	20					43′-1″							43′-1″	43′-1″	1,812
90	6S003		Slab Panel	E	5					7″	4′-11″	4′-11″					10′-5″	10′-2″	1,374
14	6S004		Slab Panel	E	5					6″	4′-5″	4′-5″					9′-4″	9′-1″	191
4	6S005		Slab Panel	E	5					6″	6′-8″	6′-8″					13′-10″	13′-7″	82
14	5S006		Slab Panel	E	89					10″	10″	2′-5″			5 3/8″	2′-4 1/2″	4′-1″	4′-0″	58
14	5S007		Slab Panel	E	54					16″	18″	18″	10″	10″	18″	1 1/2″	6′-0″	5′-8″	83
16	6S008		Slab Panel	E	20					7′-0″							7′-0″	7′-0″	168
11	6S012		Slab Panel	E	5					6″	6′-5″	6′-5″					13′-4″	13′-1″	216
3	6S013		Slab Panel	E	5					6″	4′-5″	4′-5″					9′-4″	9′-1″	41
			PANEL A241-19 (PER PANEL)																
90	6S001		Slab Panel	E	20					12′-3″							12′-3″	12′-3″	1,656
28	6S002		Slab Panel	E	20					43′-1″							43′-1″	43′-1″	1,812
90	6S003		Slab Panel	E	5					7″	4′-11″	4′-11″					10′-5″	10′-2″	1,374
14	6S004		Slab Panel	E	5					6″	4′-5″	4′-5″					9′-4″	9′-1″	191
4	6S005		Slab Panel	E	5					6″	6′-8″	6′-8″					13′-10″	13′-7″	82
14	5S006		Slab Panel	E	89					10″	10″	2′-5″			5 3/8″	2′-4 1/2″	4′-1″	4′-0″	58
14	5S007		Slab Panel	E	54					16″	18″	18″	10″	10″	18″	1 1/2″	6′-0″	5′-8″	83
16	6S008		Slab Panel	E	20					7′-0″							7′-0″	7′-0″	168
11	6S012		Slab Panel	E	5					6″	6′-5″	6′-5″					13′-4″	13′-1″	216
3	6S013		Slab Panel	E	5					6″	4′-5″	4′-5″					9′-4″	9′-1″	41

BILL OF REINFORCING STEEL (5)

NO. REQ'D.	MARK NO. SIZE	MARK NO. MARK	LOCATION	EPOXY (E)	SHAPE NO.	STIRRUP (S)	SUBSTR. (X)	VARIES (V)	NO. EACH	DIMENSIONS B FT. IN.	C FT. IN.	D FT. IN.	E FT. IN.	F FT. IN.	H FT. IN.	K FT. IN.	NOMINAL LENGTH FT. IN.	ACTUAL LENGTH FT. IN.	WEIGHT LBS.
			PANEL A241-20 (PER PANEL)																
90	6S001		Slab Panel	E	20					12′-3″							12′-3″	12′-3″	1,656
28	6S002		Slab Panel	E	20					43′-1″							43′-1″	43′-1″	1,812
90	6S003		Slab Panel	E	5					7″	4′-11″	4′-11″					10′-5″	10′-2″	1,374
14	6S004		Slab Panel	E	5					6″	4′-5″	4′-5″					9′-4″	9′-1″	191
4	6S005		Slab Panel	E	5					6″	6′-8″	6′-8″					13′-10″	13′-7″	82
14	5S006		Slab Panel	E	89					10″	10″	2′-5″			5 3/8″	2′-4 1/2″	4′-1″	4′-0″	58
14	5S007		Slab Panel	E	54					16″	18″	18″	10″	10″	18″	1 1/2″	6′-0″	5′-8″	83
16	6S008		Slab Panel	E	20					7′-0″							7′-0″	7′-0″	168
11	6S012		Slab Panel	E	5					6″	6′-5″	6′-5″					13′-4″	13′-1″	216
3	6S013		Slab Panel	E	5					6″	4′-5″	4′-5″					9′-4″	9′-1″	41
			PANEL A241-21 (PER PANEL)																
90	6S001		Slab Panel	E	20					12′-3″							12′-3″	12′-3″	1,656
28	6S002		Slab Panel	E	20					43′-1″							43′-1″	43′-1″	1,812
90	6S003		Slab Panel	E	5					7″	4′-11″	4′-11″					10′-5″	10′-2″	1,374
14	6S004		Slab Panel	E	5					6″	4′-5″	4′-5″					9′-4″	9′-1″	191
4	6S005		Slab Panel	E	5					6″	6′-8″	6′-8″					13′-10″	13′-7″	82
14	5S006		Slab Panel	E	89					10″	10″	2′-5″			5 3/8″	2′-4 1/2″	4′-1″	4′-0″	58
14	5S007		Slab Panel	E	54					16″	18″	18″	10″	10″	18″	1 1/2″	6′-0″	5′-8″	83
16	6S008		Slab Panel	E	20					7′-0″							7′-0″	7′-0″	168
11	6S012		Slab Panel	E	5					6″	6′-5″	6′-5″					13′-4″	13′-1″	216
3	6S013		Slab Panel	E	5					6″	4′-5″	4′-5″					9′-4″	9′-1″	41
			PANEL A241-22 (PER PANEL)																
90	6S001		Slab Panel	E	20					12′-3″							12′-3″	12′-3″	1,656
28	6S002		Slab Panel	E	20					43′-1″							43′-1″	43′-1″	1,812
90	6S003		Slab Panel	E	5					7″	4′-11″	4′-11″					10′-5″	10′-2″	1,374
14	6S004		Slab Panel	E	5					6″	4′-5″	4′-5″					9′-4″	9′-1″	191
14	5S006		Slab Panel	E	89					10″	10″	2′-5″			5 3/8″	2′-4 1/2″	4′-1″	4′-0″	58
14	5S007		Slab Panel	E	54					16″	18″	18″	10″	10″	18″	1 1/2″	6′-0″	5′-8″	83
16	6S008		Slab Panel	E	20					7′-0″							7′-0″	7′-0″	168
14	6S012		Slab Panel	E	5					6″	6′-5″	6′-5″					13′-4″	13′-1″	275
			PANEL A241-23 (PER PANEL)																
90	6S001		Slab Panel	E	20					12′-3″							12′-3″	12′-3″	1,656
28	6S002		Slab Panel	E	20					43′-1″							43′-1″	43′-1″	1,812
90	6S003		Slab Panel	E	5					7″	4′-11″	4′-11″					10′-5″	10′-2″	1,374
14	6S004		Slab Panel	E	5					6″	4′-5″	4′-5″					9′-4″	9′-1″	191
14	5S006		Slab Panel	E	89					10″	10″	2′-5″			5 3/8″	2′-4 1/2″	4′-1″	4′-0″	58
14	5S007		Slab Panel	E	54					16″	18″	18″	10″	10″	18″	1 1/2″	6′-0″	5′-8″	83
16	6S008		Slab Panel	E	20					7′-0″							7′-0″	7′-0″	168
14	6S012		Slab Panel	E	5					6″	6′-5″	6′-5″					13′-4″	13′-1″	275
			PANEL A241-24 (PER PANEL)																
90	6S001		Slab Panel	E	20					12′-3″							12′-3″	12′-3″	1,656
28	6S002		Slab Panel	E	20					43′-1″							43′-1″	43′-1″	1,812
90	6S003		Slab Panel	E	5					7″	4′-11″	4′-11″					10′-5″	10′-2″	1,374
14	6S004		Slab Panel	E	5					6″	4′-5″	4′-5″					9′-4″	9′-1″	191
14	5S006		Slab Panel	E	89					10″	10″	2′-5″			5 3/8″	2′-4 1/2″	4′-1″	4′-0″	58
14	5S007		Slab Panel	E	54					16″	18″	18″	10″	10″	18″	1 1/2″	6′-0″	5′-8″	83
16	6S008		Slab Panel	E	20					7′-0″							7′-0″	7′-0″	168
3	5S009		Slab Panel	E	54					2′-1″	18″	18″	10″	10″	18″	1 1/2″	6′-9″	6′-5″	20
14	6S012		Slab Panel	E	5					6″	6′-5″	6′-5″					13′-4″	13′-1″	275
			PANEL A241-25 (PER PANEL)																
90	6S001		Slab Panel	E	20					12′-3″							12′-3″	12′-3″	1,656
28	6S002		Slab Panel	E	20					43′-1″							43′-1″	43′-1″	1,812
90	6S003		Slab Panel	E	5					7″	4′-11″	4′-11″					10′-5″	10′-2″	1,374
14	6S004		Slab Panel	E	5					6″	4′-5″	4′-5″					9′-4″	9′-1″	191
14	5S006		Slab Panel	E	89					10″	10″	2′-5″			5 3/8″	2′-4 1/2″	4′-1″	4′-0″	58
14	5S007		Slab Panel	E	54					16″	18″	18″	10″	10″	18″	1 1/2″	6′-0″	5′-8″	83
16	6S008		Slab Panel	E	20					7′-0″							7′-0″	7′-0″	168
3	5S009		Slab Panel	E	54					2′-1″	18″	18″	10″	10″	18″	1 1/2″	6′-9″	6′-5″	20
14	6S012		Slab Panel	E	5					6″	6′-5″	6′-5″					13′-4″	13′-1″	275

Notes:
For Bar Bending Diagram, see Sheet No. BR184.

BILL OF REINFORCING STEEL

Detailed JUL 2009
Checked JUL 2009

Note: This drawing is not to scale. Follow dimensions.

Sheet No. 196 of 205

STATE OF MISSOURI
HANS R. HUTTON
NUMBER E-29174
REGISTERED PROFESSIONAL ENGINEER
Hans R. Hutton

DATE 5/17/10
ROUTE I-70
STATE MO/IL
DISTRICT 6
SHEET NO. BR196
COUNTY ST. LOUIS CITY - MO, ST. CLAIR - IL
JOB NO. J6I0984
CONTRACT ID.
PROJECT NO.
BRIDGE NO. A6500

DATE	DESCRIPTION
5-17-10	(5) Added panel types

MISSOURI HIGHWAYS AND TRANSPORTATION COMMISSION
105 WEST CAPITOL
JEFFERSON CITY, MO 65102
1-888-ASK-MODOT (1-888-275-6636)

HNTB
715 KIRK DRIVE
KANSAS CITY, MO 64105-1310
TELEPHONE: (816) 472-1201
CERTIFICATE OF AUTHORITY NO. 001270

STATE OF ILLINOIS
LICENSED STRUCTURAL ENGINEER
HANS R. HUTTON
081-006707
Hans R. Hutton
5-17-2010

REV.

\\kcow00\jobs\46440\Bridges\Plans\CdtoMoDOTA6500\J6I0984\A6500-dgn\ZPLOT_B_A6500_196-205_J6I0984_196.dgn

18-MAY-2010 13:42

BILL OF REINFORCING STEEL (5)

NO. REQ'D.	MARK NO. SIZE	MARK NO. MARK	LOCATION	EPOXY (E)	SHAPE NO.	STIRRUP (S)	SUBSTR. (X)	VARIES (V)	NO. EACH	DIMENSIONS B FT.	B IN.	C FT.	C IN.	D FT.	D IN.	E FT.	E IN.	F FT.	F IN.	H FT.	H IN.	K FT.	K IN.	NOMINAL LENGTH FT.	NOMINAL LENGTH IN.	ACTUAL LENGTH FT.	ACTUAL LENGTH IN.	WEIGHT LBS.
			PANEL B120-01 (PER PANEL)																									
28	6S002		Slab Panel	E	20					43′-1″														43′-1″		43′-1″		1,812
90	6S003		Slab Panel	E	5					7″		4′-11″		4′-11″										10′-5″		10′-2″		1,374
14	6S004		Slab Panel	E	5					6″		4′-5″		4′-5″										9′-4″		9′-1″		191
4	6S005		Slab Panel	E	5					6″		6′-8″		6′-8″										13′-10″		13′-7″		82
14	5S006		Slab Panel	E	89					10″		10″		2′-5″								5 3/8″		2′-4 1/2″		4′-1″		4′-0″		58
14	5S007		Slab Panel	E	54					16″		18″		18″		10″		10″		18″		1 1/2″		6′-0″		5′-8″		83
90	6S010		Slab Panel	E	20					12′-8″														12′-8″		12′-8″		1,712
14	6S012		Slab Panel	E	5					6″		6′-5″		6′-5″										13′-4″		13′-1″		275
			PANEL B120-02 (PER PANEL)																									
28	6S002		Slab Panel	E	20					43′-1″														43′-1″		43′-1″		1,812
90	6S003		Slab Panel	E	5					7″		4′-11″		4′-11″										10′-5″		10′-2″		1,374
14	6S004		Slab Panel	E	5					6″		4′-5″		4′-5″										9′-4″		9′-1″		191
4	6S005		Slab Panel	E	5					6″		6′-8″		6′-8″										13′-10″		13′-7″		82
14	5S006		Slab Panel	E	89					10″		10″		2′-5″								5 3/8″		2′-4 1/2″		4′-1″		4′-0″		58
14	5S007		Slab Panel	E	54					16″		18″		18″		10″		10″		18″		1 1/2″		6′-0″		5′-8″		83
90	6S010		Slab Panel	E	20					12′-8″														12′-8″		12′-8″		1,712
14	6S012		Slab Panel	E	5					6″		6′-5″		6′-5″										13′-4″		13′-1″		275
			PANEL B120-03 (PER PANEL)																									
28	6S002		Slab Panel	E	20					43′-1″														43′-1″		43′-1″		1,812
90	6S003		Slab Panel	E	5					7″		4′-11″		4′-11″										10′-5″		10′-2″		1,374
14	6S004		Slab Panel	E	5					6″		4′-5″		4′-5″										9′-4″		9′-1″		191
4	6S005		Slab Panel	E	5					6″		6′-8″		6′-8″										13′-10″		13′-7″		82
14	5S006		Slab Panel	E	89					10″		10″		2′-5″								5 3/8″		2′-4 1/2″		4′-1″		4′-0″		58
14	5S007		Slab Panel	E	54					16″		18″		18″		10″		10″		18″		1 1/2″		6′-0″		5′-8″		83
90	6S010		Slab Panel	E	20					12′-8″														12′-8″		12′-8″		1,712
14	6S012		Slab Panel	E	5					6″		6′-5″		6′-5″										13′-4″		13′-1″		275
			PANEL B120-04 (PER PANEL)																									
28	6S002		Slab Panel	E	20					43′-1″														43′-1″		43′-1″		1,812
90	6S003		Slab Panel	E	5					7″		4′-11″		4′-11″										10′-5″		10′-2″		1,374
14	6S004		Slab Panel	E	5					6″		4′-5″		4′-5″										9′-4″		9′-1″		191
14	5S006		Slab Panel	E	89					10″		10″		2′-5″								5 3/8″		2′-4 1/2″		4′-1″		4′-0″		58
14	5S007		Slab Panel	E	54					16″		18″		18″		10″		10″		18″		1 1/2″		6′-0″		5′-8″		83
90	6S010		Slab Panel	E	20					12′-8″														12′-8″		12′-8″		1,712
14	6S012		Slab Panel	E	5					6″		6′-5″		6′-5″										13′-4″		13′-1″		275
			PANEL B120-05 (PER PANEL)																									
28	6S002		Slab Panel	E	20					43′-1″														43′-1″		43′-1″		1,812
90	6S003		Slab Panel	E	5					7″		4′-11″		4′-11″										10′-5″		10′-2″		1,374
14	6S004		Slab Panel	E	5					6″		4′-5″		4′-5″										9′-4″		9′-1″		191
14	5S006		Slab Panel	E	89					10″		10″		2′-5″								5 3/8″		2′-4 1/2″		4′-1″		4′-0″		58
14	5S007		Slab Panel	E	54					16″		18″		18″		10″		10″		18″		1 1/2″		6′-0″		5′-8″		83
90	6S010		Slab Panel	E	20					12′-8″														12′-8″		12′-8″		1,712
14	6S012		Slab Panel	E	5					6″		6′-5″		6′-5″										13′-4″		13′-1″		275
			PANEL B120-06 (PER PANEL)																									
28	6S002		Slab Panel	E	20					43′-1″														43′-1″		43′-1″		1,812
90	6S003		Slab Panel	E	5					7″		4′-11″		4′-11″										10′-5″		10′-2″		1,374
14	6S004		Slab Panel	E	5					6″		4′-5″		4′-5″										9′-4″		9′-1″		191
14	5S006		Slab Panel	E	89					10″		10″		2′-5″								5 3/8″		2′-4 1/2″		4′-1″		4′-0″		58
14	5S007		Slab Panel	E	54					16″		18″		18″		10″		10″		18″		1 1/2″		6′-0″		5′-8″		83
3	5S009		Slab Panel	E	54					2′-1″		18″		18″		10″		10″		18″		1 1/2″		6′-9″		6′-5″		20
90	6S010		Slab Panel	E	20					12′-8″														12′-8″		12′-8″		1,712
14	6S012		Slab Panel	E	5					6″		6′-5″		6′-5″										13′-4″		13′-1″		275
			PANEL B120-07 (PER PANEL)																									
28	6S002		Slab Panel	E	20					43′-1″														43′-1″		43′-1″		1,812
90	6S003		Slab Panel	E	5					7″		4′-11″		4′-11″										10′-5″		10′-2″		1,374
14	6S004		Slab Panel	E	5					6″		4′-5″		4′-5″										9′-4″		9′-1″		191
14	5S006		Slab Panel	E	89					10″		10″		2′-5″								5 3/8″		2′-4 1/2″		4′-1″		4′-0″		58
14	5S007		Slab Panel	E	54					16″		18″		18″		10″		10″		18″		1 1/2″		6′-0″		5′-8″		83
3	5S009		Slab Panel	E	54					2′-1″		18″		18″		10″		10″		18″		1 1/2″		6′-9″		6′-5″		20
90	6S010		Slab Panel	E	20					12′-8″														12′-8″		12′-8″		1,712
14	6S012		Slab Panel	E	5					6″		6′-5″		6′-5″										13′-4″		13′-1″		275

BILL OF REINFORCING STEEL (5)

NO. REQ'D.	MARK NO. SIZE	MARK NO. MARK	LOCATION	EPOXY (E)	SHAPE NO.	STIRRUP (S)	SUBSTR. (X)	VARIES (V)	NO. EACH	DIMENSIONS B FT.	B IN.	C FT.	C IN.	D FT.	D IN.	E FT.	E IN.	F FT.	F IN.	H FT.	H IN.	K FT.	K IN.	NOMINAL LENGTH FT.	NOMINAL LENGTH IN.	ACTUAL LENGTH FT.	ACTUAL LENGTH IN.	WEIGHT LBS.
			PANEL B120-08 (PER PANEL)																									
28	6S002		Slab Panel	E	20					43′-1″														43′-1″		43′-1″		1,812
90	6S003		Slab Panel	E	5					7″		4′-11″		4′-11″										10′-5″		10′-2″		1,374
14	6S004		Slab Panel	E	5					6″		4′-5″		4′-5″										9′-4″		9′-1″		191
14	5S006		Slab Panel	E	89					10″		10″		2′-5″								5 3/8″		2′-4 1/2″		4′-1″		4′-0″		58
14	5S007		Slab Panel	E	54					16″		18″		18″		10″		10″		18″		1 1/2″		6′-0″		5′-8″		83
90	6S010		Slab Panel	E	20					12′-8″														12′-8″		12′-8″		1,712
13	6S012		Slab Panel	E	5					6″		6′-5″		6′-5″										13′-4″		13′-1″		255
1	6S013		Slab Panel	E	5					6″		4′-5″		4′-5″										9′-4″		9′-1″		14
			PANEL B120-09 (PER PANEL)																									
28	6S002		Slab Panel	E	20					43′-1″														43′-1″		43′-1″		1,812
90	6S003		Slab Panel	E	5					7″		4′-11″		4′-11″										10′-5″		10′-2″		1,374
14	6S004		Slab Panel	E	5					6″		4′-5″		4′-5″										9′-4″		9′-1″		191
14	5S006		Slab Panel	E	89					10″		10″		2′-5″								5 3/8″		2′-4 1/2″		4′-1″		4′-0″		58
14	5S007		Slab Panel	E	54					16″		18″		18″		10″		10″		18″		1 1/2″		6′-0″		5′-8″		83
90	6S010		Slab Panel	E	20					12′-8″														12′-8″		12′-8″		1,712
13	6S012		Slab Panel	E	5					6″		6′-5″		6′-5″										13′-4″		13′-1″		255
1	6S013		Slab Panel	E	5					6″		4′-5″		4′-5″										9′-4″		9′-1″		14
			PANEL B120-10 (PER PANEL)																									
28	6S002		Slab Panel	E	20					43′-1″														43′-1″		43′-1″		1,812
90	6S003		Slab Panel	E	5					7″		4′-11″		4′-11″										10′-5″		10′-2″		1,374
14	6S004		Slab Panel	E	5					6″		4′-5″		4′-5″										9′-4″		9′-1″		191
14	5S006		Slab Panel	E	89					10″		10″		2′-5″								5 3/8″		2′-4 1/2″		4′-1″		4′-0″		58
14	5S007		Slab Panel	E	54					16″		18″		18″		10″		10″		18″		1 1/2″		6′-0″		5′-8″		83
90	6S010		Slab Panel	E	20					12′-8″														12′-8″		12′-8″		1,712
14	6S012		Slab Panel	E	5					6″		6′-5″		6′-5″										13′-4″		13′-1″		236
2	6S013		Slab Panel	E	5					6″		4′-5″		4′-5″										9′-4″		9′-1″		27
			PANEL B120-11 (PER PANEL)																									
28	6S002		Slab Panel	E	20					43′-1″														43′-1″		43′-1″		1,812
90	6S003		Slab Panel	E	5					7″		4′-11″		4′-11″										10′-5″		10′-2″		1,374
14	6S004		Slab Panel	E	5					6″		4′-5″		4′-5″										9′-4″		9′-1″		191
14	5S006		Slab Panel	E	89					10″		10″		2′-5″								5 3/8″		2′-4 1/2″		4′-1″		4′-0″		58
14	5S007		Slab Panel	E	54					16″		18″		18″		10″		10″		18″		1 1/2″		6′-0″		5′-8″		83
90	6S010		Slab Panel	E	20					12′-8″														12′-8″		12′-8″		1,712
12	6S012		Slab Panel	E	5					6″		6′-5″		6′-5″										13′-4″		13′-1″		236
2	6S013		Slab Panel	E	5					6″		4′-5″		4′-5″										9′-4″		9′-1″		27
			PANEL B120-12 (PER PANEL)																									
28	6S002		Slab Panel	E	20					43′-1″														43′-1″		43′-1″		1,812
90	6S003		Slab Panel	E	5					7″		4′-11″		4′-11″										10′-5″		10′-2″		1,374
14	6S004		Slab Panel	E	5					6″		4′-5″		4′-5″										9′-4″		9′-1″		191
14	5S006		Slab Panel	E	89					10″		10″		2′-5″								5 3/8″		2′-4 1/2″		4′-1″		4′-0″		58
14	5S007		Slab Panel	E	54					16″		18″		18″		10″		10″		18″		1 1/2″		6′-0″		5′-8″		83
90	6S010		Slab Panel	E	20					12′-8″														12′-8″		12′-8″		1,712
11	6S012		Slab Panel	E	5					6″		6′-5″		6′-5″										13′-4″		13′-1″		216
3	6S013		Slab Panel	E	5					6″		4′-5″		4′-5″										9′-4″		9′-1″		41
			PANEL B120-13 (PER PANEL)																									
28	6S002		Slab Panel	E	20					43′-1″														43′-1″		43′-1″		1,812
90	6S003		Slab Panel	E	5					7″		4′-11″		4′-11″										10′-5″		10′-2″		1,374
14	6S004		Slab Panel	E	5					6″		4′-5″		4′-5″										9′-4″		9′-1″		191
14	5S006		Slab Panel	E	89					10″		10″		2′-5″								5 3/8″		2′-4 1/2″		4′-1″		4′-0″		58
14	5S007		Slab Panel	E	54					16″		18″		18″		10″		10″		18″		1 1/2″		6′-0″		5′-8″		83
90	6S010		Slab Panel	E	20					12′-8″														12′-8″		12′-8″		1,712
11	6S012		Slab Panel	E	5					6″		6′-5″		6′-5″										13′-4″		13′-1″		216
3	6S013		Slab Panel	E	5					6″		4′-5″		4′-5″										9′-4″		9′-1″		41

Notes:
For Bar Bending Diagram, see Sheet No. BR184.

BILL OF REINFORCING STEEL

Detailed JUL 2009
Checked JUL 2009

Note: This drawing is not to scale. Follow dimensions.

Sheet No. 197 of 205

\\kcow00\jobs\46440\Bridges\Plans\CdtoMoDOTA6500\J6I0984\A6500-dgn\ZPLOT_B_A6500_197-205_J6I0984_197.dgn 18-MAY-2010 13:42

HANS R. HUTTON NUMBER E-29174 REGISTERED PROFESSIONAL ENGINEER STATE OF MISSOURI

Hans R. Hutton

DATE 5/17/10
ROUTE I-70 | STATE MO/IL
DISTRICT 6 | SHEET NO. BR197
COUNTY ST. LOUIS CITY - MO ST. CLAIR - IL
JOB NO. J6I0984
CONTRACT ID.
PROJECT NO.
BRIDGE NO. A6500

REV.	DATE	DESCRIPTION
A	5-17-10	Waved panel types

MISSOURI HIGHWAYS AND TRANSPORTATION COMMISSION
105 WEST CAPITOL
JEFFERSON CITY, MO 65102
1-888-ASK-MODOT (1-888-275-6636)

HNTB
115 KIRK DRIVE
KANSAS CITY, MO 64105-1310
TELEPHONE (816) 472-1201
CERTIFICATE OF AUTHORITY NO. 001270

LICENSED STRUCTURAL ENGINEER
HANS R. HUTTON
081-006707
STATE OF ILLINOIS

Hans R. Hutton
5-17-2010

BILL OF REINFORCING STEEL (5)

NO. REQ'D.	MARK NO. SIZE	MARK NO. MARK	LOCATION	EPOXY (E)	SHAPE NO.	STIRRUP (S)	SUBSTR. (X)	VARIES (V)	NO. EACH	DIMENSIONS B FT.	B IN.	C FT.	C IN.	D FT.	D IN.	E FT.	E IN.	F FT.	F IN.	H FT.	H IN.	K FT.	K IN.	NOMINAL LENGTH FT.	NOMINAL LENGTH IN.	ACTUAL LENGTH FT.	ACTUAL LENGTH IN.	WEIGHT LBS.
			PANEL B120-14 (PER PANEL)																									
28	6S002	Slab Panel	E	20					43′	-1″														43′	-1″	43′	-1″	1,812
90	6S003	Slab Panel	E	5					7″	4′	-11″	4′	-11″											10′	-5″	10′	-2″	1,374
14	6S004	Slab Panel	E	5					6″	4′	-5″	4′	-5″											9′	-4″	9′	-1″	191
14	5S006	Slab Panel	E	89					10″	10″		2′	-5″							5 3/8″	2′	-4 1/2″		4′	-1″	4′	-0″	58
14	5S007	Slab Panel	E	54					16″	18″		18″		10″		10″		18″		1 1/2″				6′	-0″	5′	-8″	83
90	6S010	Slab Panel	E	20					12′	-8″														12′	-8″	12′	-8″	1,712
10	6S012	Slab Panel	E	5					6″	6′	-5″	6′	-5″											13′	-4″	13′	-1″	197
4	6S013	Slab Panel	E	5					6″	4′	-5″	4′	-5″											9′	-4″	9′	-1″	55
			PANEL B120-15 (PER PANEL)																									
28	6S002	Slab Panel	E	20					43′	-1″														43′	-1″	43′	-1″	1,812
90	6S003	Slab Panel	E	5					7″	4′	-11″	4′	-11″											10′	-5″	10′	-2″	1,374
14	6S004	Slab Panel	E	5					6″	4′	-5″	4′	-5″											9′	-4″	9′	-1″	191
14	5S006	Slab Panel	E	89					10″	10″		2′	-5″							5 3/8″	2′	-4 1/2″		4′	-1″	4′	-0″	58
14	5S007	Slab Panel	E	54					16″	18″		18″		10″		10″		18″		1 1/2″				6′	-0″	5′	-8″	83
90	6S010	Slab Panel	E	20					12′	-8″														12′	-8″	12′	-8″	1,712
10	6S012	Slab Panel	E	5					6″	6′	-5″	6′	-5″											13′	-4″	13′	-1″	197
4	6S013	Slab Panel	E	5					6″	4′	-5″	4′	-5″											9′	-4″	9′	-1″	55
			PANEL B120-16 (PER PANEL)																									
28	6S002	Slab Panel	E	20					43′	-1″														43′	-1″	43′	-1″	1,812
90	6S003	Slab Panel	E	5					7″	4′	-11″	4′	-11″											10′	-5″	10′	-2″	1,374
14	6S004	Slab Panel	E	5					6″	4′	-5″	4′	-5″											9′	-4″	9′	-1″	191
14	5S006	Slab Panel	E	89					10″	10″		2′	-5″							5 3/8″	2′	-4 1/2″		4′	-1″	4′	-0″	58
14	5S007	Slab Panel	E	54					16″	18″		18″		10″		10″		18″		1 1/2″				6′	-0″	5′	-8″	83
90	6S010	Slab Panel	E	20					12′	-8″														12′	-8″	12′	-8″	1,712
9	6S012	Slab Panel	E	5					6″	6′	-5″	6′	-5″											13′	-4″	13′	-1″	177
5	6S013	Slab Panel	E	5					6″	4′	-5″	4′	-5″											9′	-4″	9′	-1″	68
			PANEL B120-17 (PER PANEL)																									
28	6S002	Slab Panel	E	20					43′	-1″														43′	-1″	43′	-1″	1,812
90	6S003	Slab Panel	E	5					7″	4′	-11″	4′	-11″											10′	-5″	10′	-2″	1,374
14	6S004	Slab Panel	E	5					6″	4′	-5″	4′	-5″											9′	-4″	9′	-1″	191
14	5S006	Slab Panel	E	89					10″	10″		2′	-5″							5 3/8″	2′	-4 1/2″		4′	-1″	4′	-0″	58
14	5S007	Slab Panel	E	54					16″	18″		18″		10″		10″		18″		1 1/2″				6′	-0″	5′	-8″	83
90	6S010	Slab Panel	E	20					12′	-8″														12′	-8″	12′	-8″	1,712
9	6S012	Slab Panel	E	5					6″	6′	-5″	6′	-5″											13′	-4″	13′	-1″	177
5	6S013	Slab Panel	E	5					6″	4′	-5″	4′	-5″											9′	-4″	9′	-1″	68
			PANEL B120-18 (PER PANEL)																									
28	6S002	Slab Panel	E	20					43′	-1″														43′	-1″	43′	-1″	1,812
90	6S003	Slab Panel	E	5					7″	4′	-11″	4′	-11″											10′	-5″	10′	-2″	1,374
14	6S004	Slab Panel	E	5					6″	4′	-5″	4′	-5″											9′	-4″	9′	-1″	191
14	5S006	Slab Panel	E	89					10″	10″		2′	-5″							5 3/8″	2′	-4 1/2″		4′	-1″	4′	-0″	58
14	5S007	Slab Panel	E	54					16″	18″		18″		10″		10″		18″		1 1/2″				6′	-0″	5′	-8″	83
90	6S010	Slab Panel	E	20					12′	-8″														12′	-8″	12′	-8″	1,712
9	6S012	Slab Panel	E	5					6″	6′	-5″	6′	-5″											13′	-4″	13′	-1″	177
5	6S013	Slab Panel	E	5					6″	4′	-5″	4′	-5″											9′	-4″	9′	-1″	68
			PANEL B120-19 (PER PANEL)																									
28	6S002	Slab Panel	E	20					43′	-1″														43′	-1″	43′	-1″	1,812
90	6S003	Slab Panel	E	5					7″	4′	-11″	4′	-11″											10′	-5″	10′	-2″	1,374
14	6S004	Slab Panel	E	5					6″	4′	-5″	4′	-5″											9′	-4″	9′	-1″	191
14	5S006	Slab Panel	E	89					10″	10″		2′	-5″							5 3/8″	2′	-4 1/2″		4′	-1″	4′	-0″	58
14	5S007	Slab Panel	E	54					16″	18″		18″		10″		10″		18″		1 1/2″				6′	-0″	5′	-8″	83
90	6S010	Slab Panel	E	20					12′	-8″														12′	-8″	12′	-8″	1,712
9	6S012	Slab Panel	E	5					6″	6′	-5″	6′	-5″											13′	-4″	13′	-1″	177
5	6S013	Slab Panel	E	5					6″	4′	-5″	4′	-5″											9′	-4″	9′	-1″	68

BILL OF REINFORCING STEEL (5)

NO. REQ'D.	MARK NO. SIZE	MARK NO. MARK	LOCATION	EPOXY (E)	SHAPE NO.	STIRRUP (S)	SUBSTR. (X)	VARIES (V)	NO. EACH	DIMENSIONS B FT.	B IN.	C FT.	C IN.	D FT.	D IN.	E FT.	E IN.	F FT.	F IN.	H FT.	H IN.	K FT.	K IN.	NOMINAL LENGTH FT.	NOMINAL LENGTH IN.	ACTUAL LENGTH FT.	ACTUAL LENGTH IN.	WEIGHT LBS.
			PANEL B121-01 (PER PANEL)																									
28	6S002	Slab Panel	E	20					43′	-1″														43′	-1″	43′	-1″	1,812
90	6S003	Slab Panel	E	5					7″	4′	-11″	4′	-11″											10′	-5″	10′	-2″	1,374
14	6S004	Slab Panel	E	5					6″	4′	-5″	4′	-5″											9′	-4″	9′	-1″	191
4	6S005	Slab Panel	E	5					6″	6′	-8″	6′	-8″											13′	-10″	13′	-7″	82
14	5S006	Slab Panel	E	89					10″	10″		2′	-5″							5 3/8″	2′	-4 1/2″		4′	-1″	4′	-0″	58
14	5S007	Slab Panel	E	54					16″	18″		18″		10″		10″		18″		1 1/2″				6′	-0″	5′	-8″	83
16	6S008	Slab Panel	E	20					7′	-0″														7′	-0″	7′	-0″	168
90	6S010	Slab Panel	E	20					12′	-8″														12′	-8″	12′	-8″	1,712
9	6S012	Slab Panel	E	5					6″	6′	-5″	6′	-5″											13′	-4″	13′	-1″	177
5	6S013	Slab Panel	E	5					6″	4′	-5″	4′	-5″											9′	-4″	9′	-1″	68
			PANEL B121-02 (PER PANEL)																									
28	6S002	Slab Panel	E	20					43′	-1″														43′	-1″	43′	-1″	1,812
90	6S003	Slab Panel	E	5					7″	4′	-11″	4′	-11″											10′	-5″	10′	-2″	1,374
14	6S004	Slab Panel	E	5					6″	4′	-5″	4′	-5″											9′	-4″	9′	-1″	191
4	6S005	Slab Panel	E	5					6″	6′	-8″	6′	-8″											13′	-10″	13′	-7″	82
14	5S006	Slab Panel	E	89					10″	10″		2′	-5″							5 3/8″	2′	-4 1/2″		4′	-1″	4′	-0″	58
14	5S007	Slab Panel	E	54					16″	18″		18″		10″		10″		18″		1 1/2″				6′	-0″	5′	-8″	83
16	6S008	Slab Panel	E	20					7′	-0″														7′	-0″	7′	-0″	168
90	6S010	Slab Panel	E	20					12′	-8″														12′	-8″	12′	-8″	1,712
9	6S012	Slab Panel	E	5					6″	6′	-5″	6′	-5″											13′	-4″	13′	-1″	177
5	6S013	Slab Panel	E	5					6″	4′	-5″	4′	-5″											9′	-4″	9′	-1″	68
			PANEL B121-03 (PER PANEL)																									
28	6S002	Slab Panel	E	20					43′	-1″														43′	-1″	43′	-1″	1,812
90	6S003	Slab Panel	E	5					7″	4′	-11″	4′	-11″											10′	-5″	10′	-2″	1,374
14	6S004	Slab Panel	E	5					6″	4′	-5″	4′	-5″											9′	-4″	9′	-1″	191
4	6S005	Slab Panel	E	5					6″	6′	-8″	6′	-8″											13′	-10″	13′	-7″	82
14	5S006	Slab Panel	E	89					10″	10″		2′	-5″							5 3/8″	2′	-4 1/2″		4′	-1″	4′	-0″	58
14	5S007	Slab Panel	E	54					16″	18″		18″		10″		10″		18″		1 1/2″				6′	-0″	5′	-8″	83
16	6S008	Slab Panel	E	20					7′	-0″														7′	-0″	7′	-0″	168
90	6S010	Slab Panel	E	20					12′	-8″														12′	-8″	12′	-8″	1,712
9	6S012	Slab Panel	E	5					6″	6′	-5″	6′	-5″											13′	-4″	13′	-1″	177
5	6S013	Slab Panel	E	5					6″	4′	-5″	4′	-5″											9′	-4″	9′	-1″	68
			PANEL B121-04 (PER PANEL)																									
28	6S002	Slab Panel	E	20					43′	-1″														43′	-1″	43′	-1″	1,812
90	6S003	Slab Panel	E	5					7″	4′	-11″	4′	-11″											10′	-5″	10′	-2″	1,374
14	6S004	Slab Panel	E	5					6″	4′	-5″	4′	-5″											9′	-4″	9′	-1″	191
4	6S005	Slab Panel	E	5					6″	6′	-8″	6′	-8″											13′	-10″	13′	-7″	82
14	5S006	Slab Panel	E	89					10″	10″		2′	-5″							5 3/8″	2′	-4 1/2″		4′	-1″	4′	-0″	58
14	5S007	Slab Panel	E	54					16″	18″		18″		10″		10″		18″		1 1/2″				6′	-0″	5′	-8″	83
16	6S008	Slab Panel	E	20					7′	-0″														7′	-0″	7′	-0″	168
90	6S010	Slab Panel	E	20					12′	-8″														12′	-8″	12′	-8″	1,712
9	6S012	Slab Panel	E	5					6″	6′	-5″	6′	-5″											13′	-4″	13′	-1″	177
5	6S013	Slab Panel	E	5					6″	4′	-5″	4′	-5″											9′	-4″	9′	-1″	68
			PANEL B121-05 (PER PANEL)																									
28	6S002	Slab Panel	E	20					43′	-1″														43′	-1″	43′	-1″	1,812
90	6S003	Slab Panel	E	5					7″	4′	-11″	4′	-11″											10′	-5″	10′	-2″	1,374
14	6S004	Slab Panel	E	5					6″	4′	-5″	4′	-5″											9′	-4″	9′	-1″	191
4	6S005	Slab Panel	E	5					6″	6′	-8″	6′	-8″											13′	-10″	13′	-7″	82
14	5S006	Slab Panel	E	89					10″	10″		2′	-5″							5 3/8″	2′	-4 1/2″		4′	-1″	4′	-0″	58
14	5S007	Slab Panel	E	54					16″	18″		18″		10″		10″		18″		1 1/2″				6′	-0″	5′	-8″	83
16	6S008	Slab Panel	E	20					7′	-0″														7′	-0″	7′	-0″	168
90	6S010	Slab Panel	E	20					12′	-8″														12′	-8″	12′	-8″	1,712
10	6S012	Slab Panel	E	5					6″	6′	-5″	6′	-5″											13′	-4″	13′	-1″	197
4	6S013	Slab Panel	E	5					6″	4′	-5″	4′	-5″											9′	-4″	9′	-1″	55

Notes:
For Bar Bending Diagram, see Sheet No. BR184.

BILL OF REINFORCING STEEL

Detailed JUL 2009
Checked JUL 2009

Note: This drawing is not to scale. Follow dimensions.

Sheet No. 198 of 205

STATE OF MISSOURI
HANS R. HUTTON
NUMBER E-29174
REGISTERED ENGINEER
Hans R. Hutton

DATE 5/17/10
ROUTE I-70
STATE MO/IL
DISTRICT 6
SHEET NO. BR198
COUNTY ST. LOUIS CITY - MO, ST. CLAIR - IL
JOB NO. J6I0984
CONTRACT ID.
PROJECT NO.
BRIDGE NO. A6500

DESCRIPTION
DATE
5-17-10 Moved panel types

MISSOURI HIGHWAYS AND TRANSPORTATION COMMISSION
105 WEST CAPITOL
JEFFERSON CITY, MO 65102
1-888-ASK-MODOT (1-888-275-6636)

HNTB
715 KIRK DRIVE
KANSAS CITY, MO 64105-1310
TELEPHONE (816) 472-1201
CERTIFICATE OF AUTHORITY NO. 00170

LICENSED STRUCTURAL ENGINEER
HANS R. HUTTON
081-006707
STATE OF ILLINOIS
Hans R. Hutton
5-17-2010

REV.

BILL OF REINFORCING STEEL (5)

NO. REQ'D.	MARK NO. SIZE	MARK NO. MARK	LOCATION	EPOXY (E)	SHAPE NO.	STIRRUP (S)	SUBSTR. (X)	VARIES (V)	NO. EACH	DIMENSIONS B FT.	B IN.	C FT.	C IN.	D FT.	D IN.	E FT.	E IN.	F FT.	F IN.	H FT.	H IN.	K FT.	K IN.	NOMINAL LENGTH FT.	NOMINAL LENGTH IN.	ACTUAL LENGTH FT.	ACTUAL LENGTH IN.	WEIGHT LBS.
			PANEL B121-06 (PER PANEL)																									
28	6S002		Slab Panel	E	20					43′	-1″													43′	-1″	43′	-1″	1,812
90	6S003		Slab Panel	E	5					7″		4′	-11″	4′	-11″									10′	-5″	10′	-2″	1,374
14	6S004		Slab Panel	E	5					6″		4′	-5″	4′	-5″									9′	-4″	9′	-1″	191
4	6S005		Slab Panel	E	5					6″		6′	-8″	6′	-8″									13′	-10″	13′	-7″	82
14	5S006		Slab Panel	E	89					10″		10″		2′	-5″					5 3/8″		2′	-4 1/2″	4′	-1″	4′	-0″	58
14	5S007		Slab Panel	E	54					16″		18″		18″		10″		10″		18″		1 1/2″		6′	-0″	5′	-8″	83
16	6S008		Slab Panel	E	20					7′	-0″													7′	-0″	7′	-0″	168
90	6S010		Slab Panel	E	20					12′	-8″													12′	-8″	12′	-8″	1,712
10	6S012		Slab Panel	E	5					6″		6′	-5″	6′	-5″									13′	-4″	13′	-1″	197
4	6S013		Slab Panel	E	5					6″		4′	-5″	4′	-5″									9′	-4″	9′	-1″	55
			PANEL B121-07 (PER PANEL)																									
28	6S002		Slab Panel	E	20					43′	-1″													43′	-1″	43′	-1″	1,812
90	6S003		Slab Panel	E	5					7″		4′	-11″	4′	-11″									10′	-5″	10′	-2″	1,374
14	6S004		Slab Panel	E	5					6″		4′	-5″	4′	-5″									9′	-4″	9′	-1″	191
4	6S005		Slab Panel	E	5					6″		6′	-8″	6′	-8″									13′	-10″	13′	-7″	82
14	5S006		Slab Panel	E	89					10″		10″		2′	-5″					5 3/8″		2′	-4 1/2″	4′	-1″	4′	-0″	58
14	5S007		Slab Panel	E	54					16″		18″		18″		10″		10″		18″		1 1/2″		6′	-0″	5′	-8″	83
16	6S008		Slab Panel	E	20					7′	-0″													7′	-0″	7′	-0″	168
90	6S010		Slab Panel	E	20					12′	-8″													12′	-8″	12′	-8″	1,712
10	6S012		Slab Panel	E	5					6″		6′	-5″	6′	-5″									13′	-4″	13′	-1″	197
4	6S013		Slab Panel	E	5					6″		4′	-5″	4′	-5″									9′	-4″	9′	-1″	55
			PANEL B121-08 (PER PANEL)																									
28	6S002		Slab Panel	E	20					43′	-1″													43′	-1″	43′	-1″	1,812
90	6S003		Slab Panel	E	5					7″		4′	-11″	4′	-11″									10′	-5″	10′	-2″	1,374
14	6S004		Slab Panel	E	5					6″		4′	-5″	4′	-5″									9′	-4″	9′	-1″	191
4	6S005		Slab Panel	E	5					6″		6′	-8″	6′	-8″									13′	-10″	13′	-7″	82
14	5S006		Slab Panel	E	89					10″		10″		2′	-5″					5 3/8″		2′	-4 1/2″	4′	-1″	4′	-0″	58
14	5S007		Slab Panel	E	54					16″		18″		18″		10″		10″		18″		1 1/2″		6′	-0″	5′	-8″	83
16	6S008		Slab Panel	E	20					7′	-0″													7′	-0″	7′	-0″	168
90	6S010		Slab Panel	E	20					12′	-8″													12′	-8″	12′	-8″	1,712
10	6S012		Slab Panel	E	5					6″		6′	-5″	6′	-5″									13′	-4″	13′	-1″	197
4	6S013		Slab Panel	E	5					6″		4′	-5″	4′	-5″									9′	-4″	9′	-1″	55
			PANEL B121-09 (PER PANEL)																									
28	6S002		Slab Panel	E	20					43′	-1″													43′	-1″	43′	-1″	1,812
90	6S003		Slab Panel	E	5					7″		4′	-11″	4′	-11″									10′	-5″	10′	-2″	1,374
14	6S004		Slab Panel	E	5					6″		4′	-5″	4′	-5″									9′	-4″	9′	-1″	191
4	6S005		Slab Panel	E	5					6″		6′	-8″	6′	-8″									13′	-10″	13′	-7″	82
14	5S006		Slab Panel	E	89					10″		10″		2′	-5″					5 3/8″		2′	-4 1/2″	4′	-1″	4′	-0″	58
14	5S007		Slab Panel	E	54					16″		18″		18″		10″		10″		18″		1 1/2″		6′	-0″	5′	-8″	83
16	6S008		Slab Panel	E	20					7′	-0″													7′	-0″	7′	-0″	168
90	6S010		Slab Panel	E	20					12′	-8″													12′	-8″	12′	-8″	1,712
11	6S012		Slab Panel	E	5					6″		6′	-5″	6′	-5″									13′	-4″	13′	-1″	216
3	6S013		Slab Panel	E	5					6″		4′	-5″	4′	-5″									9′	-4″	9′	-1″	41
			PANEL B121-10 (PER PANEL)																									
28	6S002		Slab Panel	E	20					43′	-1″													43′	-1″	43′	-1″	1,812
90	6S003		Slab Panel	E	5					7″		4′	-11″	4′	-11″									10′	-5″	10′	-2″	1,374
14	6S004		Slab Panel	E	5					6″		4′	-5″	4′	-5″									9′	-4″	9′	-1″	191
4	6S005		Slab Panel	E	5					6″		6′	-8″	6′	-8″									13′	-10″	13′	-7″	82
14	5S006		Slab Panel	E	89					10″		10″		2′	-5″					5 3/8″		2′	-4 1/2″	4′	-1″	4′	-0″	58
14	5S007		Slab Panel	E	54					16″		18″		18″		10″		10″		18″		1 1/2″		6′	-0″	5′	-8″	83
16	6S008		Slab Panel	E	20					7′	-0″													7′	-0″	7′	-0″	168
90	6S010		Slab Panel	E	20					12′	-8″													12′	-8″	12′	-8″	1,712
11	6S012		Slab Panel	E	5					6″		6′	-5″	6′	-5″									13′	-4″	13′	-1″	216
3	6S013		Slab Panel	E	5					6″		4′	-5″	4′	-5″									9′	-4″	9′	-1″	41

BILL OF REINFORCING STEEL (5)

NO. REQ'D.	MARK NO. SIZE	MARK NO. MARK	LOCATION	EPOXY (E)	SHAPE NO.	STIRRUP (S)	SUBSTR. (X)	VARIES (V)	NO. EACH	DIMENSIONS B FT.	B IN.	C FT.	C IN.	D FT.	D IN.	E FT.	E IN.	F FT.	F IN.	H FT.	H IN.	K FT.	K IN.	NOMINAL LENGTH FT.	NOMINAL LENGTH IN.	ACTUAL LENGTH FT.	ACTUAL LENGTH IN.	WEIGHT LBS.
			PANEL B121-11 (PER PANEL)																									
28	6S002		Slab Panel	E	20					43′	-1″													43′	-1″	43′	-1″	1,812
90	6S003		Slab Panel	E	5					7″		4′	-11″	4′	-11″									10′	-5″	10′	-2″	1,374
14	6S004		Slab Panel	E	5					6″		4′	-5″	4′	-5″									9′	-4″	9′	-1″	191
4	6S005		Slab Panel	E	5					6″		6′	-8″	6′	-8″									13′	-10″	13′	-7″	82
14	5S006		Slab Panel	E	89					10″		10″		2′	-5″					5 3/8″		2′	-4 1/2″	4′	-1″	4′	-0″	58
14	5S007		Slab Panel	E	54					16″		18″		18″		10″		10″		18″		1 1/2″		6′	-0″	5′	-8″	83
16	6S008		Slab Panel	E	20					7′	-0″													7′	-0″	7′	-0″	168
3	5S009		Slab Panel	E	54					2′	-1″	18″		18″		10″		10″		18″		1 1/2″		6′	-9″	6′	-5″	20
90	6S010		Slab Panel	E	20					12′	-8″													12′	-8″	12′	-8″	1,712
11	6S012		Slab Panel	E	5					6″		6′	-5″	6′	-5″									13′	-4″	13′	-1″	216
3	6S013		Slab Panel	E	5					6″		4′	-5″	4′	-5″									9′	-4″	9′	-1″	41
			PANEL B121-12 (PER PANEL)																									
28	6S002		Slab Panel	E	20					43′	-1″													43′	-1″	43′	-1″	1,812
90	6S003		Slab Panel	E	5					7″		4′	-11″	4′	-11″									10′	-5″	10′	-2″	1,374
14	6S004		Slab Panel	E	5					6″		4′	-5″	4′	-5″									9′	-4″	9′	-1″	191
4	6S005		Slab Panel	E	5					6″		6′	-8″	6′	-8″									13′	-10″	13′	-7″	82
14	5S006		Slab Panel	E	89					10″		10″		2′	-5″					5 3/8″		2′	-4 1/2″	4′	-1″	4′	-0″	58
14	5S007		Slab Panel	E	54					16″		18″		18″		10″		10″		18″		1 1/2″		6′	-0″	5′	-8″	83
16	6S008		Slab Panel	E	20					7′	-0″													7′	-0″	7′	-0″	168
3	5S009		Slab Panel	E	54					2′	-1″	18″		18″		10″		10″		18″		1 1/2″		6′	-9″	6′	-5″	20
90	6S010		Slab Panel	E	20					12′	-8″													12′	-8″	12′	-8″	1,712
11	6S012		Slab Panel	E	5					6″		6′	-5″	6′	-5″									13′	-4″	13′	-1″	216
3	6S013		Slab Panel	E	5					6″		4′	-5″	4′	-5″									9′	-4″	9′	-1″	41
			PANEL B121-13 (PER PANEL)																									
28	6S002		Slab Panel	E	20					43′	-1″													43′	-1″	43′	-1″	1,812
90	6S003		Slab Panel	E	5					7″		4′	-11″	4′	-11″									10′	-5″	10′	-2″	1,374
14	6S004		Slab Panel	E	5					6″		4′	-5″	4′	-5″									9′	-4″	9′	-1″	191
4	6S005		Slab Panel	E	5					6″		6′	-8″	6′	-8″									13′	-10″	13′	-7″	82
14	5S006		Slab Panel	E	89					10″		10″		2′	-5″					5 3/8″		2′	-4 1/2″	4′	-1″	4′	-0″	58
14	5S007		Slab Panel	E	54					16″		18″		18″		10″		10″		18″		1 1/2″		6′	-0″	5′	-8″	83
16	6S008		Slab Panel	E	20					7′	-0″													7′	-0″	7′	-0″	168
90	6S010		Slab Panel	E	20					12′	-8″													12′	-8″	12′	-8″	1,712
12	6S012		Slab Panel	E	5					6″		6′	-5″	6′	-5″									13′	-4″	13′	-1″	236
2	6S013		Slab Panel	E	5					6″		4′	-5″	4′	-5″									9′	-4″	9′	-1″	27
			PANEL B121-14 (PER PANEL)																									
28	6S002		Slab Panel	E	20					43′	-1″													43′	-1″	43′	-1″	1,812
90	6S003		Slab Panel	E	5					7″		4′	-11″	4′	-11″									10′	-5″	10′	-2″	1,374
14	6S004		Slab Panel	E	5					6″		4′	-5″	4′	-5″									9′	-4″	9′	-1″	191
4	6S005		Slab Panel	E	5					6″		6′	-8″	6′	-8″									13′	-10″	13′	-7″	82
14	5S006		Slab Panel	E	89					10″		10″		2′	-5″					5 3/8″		2′	-4 1/2″	4′	-1″	4′	-0″	58
14	5S007		Slab Panel	E	54					16″		18″		18″		10″		10″		18″		1 1/2″		6′	-0″	5′	-8″	83
16	6S008		Slab Panel	E	20					7′	-0″													7′	-0″	7′	-0″	168
90	6S010		Slab Panel	E	20					12′	-8″													12′	-8″	12′	-8″	1,712
13	6S012		Slab Panel	E	5					6″		6′	-5″	6′	-5″									13′	-4″	13′	-1″	255
1	6S013		Slab Panel	E	5					6″		4′	-5″	4′	-5″									9′	-4″	9′	-1″	14
			PANEL B121-15 (PER PANEL)																									
28	6S002		Slab Panel	E	20					43′	-1″													43′	-1″	43′	-1″	1,812
90	6S003		Slab Panel	E	5					7″		4′	-11″	4′	-11″									10′	-5″	10′	-2″	1,374
14	6S004		Slab Panel	E	5					6″		4′	-5″	4′	-5″									9′	-4″	9′	-1″	191
4	6S005		Slab Panel	E	5					6″		6′	-8″	6′	-8″									13′	-10″	13′	-7″	82
14	5S006		Slab Panel	E	89					10″		10″		2′	-5″					5 3/8″		2′	-4 1/2″	4′	-1″	4′	-0″	58
14	5S007		Slab Panel	E	54					16″		18″		18″		10″		10″		18″		1 1/2″		6′	-0″	5′	-8″	83
16	6S008		Slab Panel	E	20					7′	-0″													7′	-0″	7′	-0″	168
90	6S010		Slab Panel	E	20					12′	-8″													12′	-8″	12′	-8″	1,712
11	6S012		Slab Panel	E	5					6″		6′	-5″	6′	-5″									13′	-4″	13′	-1″	236
2	6S013		Slab Panel	E	5					6″		4′	-5″	4′	-5″									9′	-4″	9′	-1″	27

Notes:
For Bar Bending Diagram, see Sheet No. BR184.

BILL OF REINFORCING STEEL

Detailed JUL 2009
Checked JUL 2009

Note: This drawing is not to scale. Follow dimensions.

Sheet No. 199 of 205

\\kcow00\Jobs\46440\Bridges\Plans\CdtoMoDOT\A6500\J6I0984\A6500-dgn\ZPLOT_B_A6500_199-205_J6I0984_199.dgn

18-MAY-2010 13:42

STATE OF MISSOURI
HANS R. HUTTON
NUMBER E-29174
REGISTERED ENGINEER
Hans R. Hutton

DATE 5/17/10
ROUTE I-70
STATE MO/IL
DISTRICT 6
SHEET NO. BR199
COUNTY ST. LOUIS CITY - MO ST. CLAIR - IL
JOB NO. J6I0984
CONTRACT ID.
PROJECT NO.
BRIDGE NO. A6500

REV.	DATE	DESCRIPTION
A	5-17-10	Moved panel types

MISSOURI HIGHWAYS AND TRANSPORTATION COMMISSION
105 WEST CAPITOL
JEFFERSON CITY, MO 65102
1-888-ASK-MODOT (1-888-275-6636)

HNTB
715 KIRK DRIVE
KANSAS CITY, MO 64105-1319
TELEPHONE (816) 472-1201
CERTIFICATE OF AUTHORITY NO. 001270

REGISTERED STRUCTURAL ENGINEER
HANS R. HUTTON
081-006707
STATE OF ILLINOIS
Hans R. Hutton
5-17-2010

BILL OF REINFORCING STEEL (5)

NO. REQ'D.	MARK NO. SIZE	MARK NO. MARK	LOCATION	EPOXY (E)	SHAPE NO.	STIRRUP (S)	SUBSTR. (X)	VARIES (V)	NO. EACH	DIMENSIONS B FT.	B IN.	C FT.	C IN.	D FT.	D IN.	E FT.	E IN.	F FT.	F IN.	H FT.	H IN.	K FT.	K IN.	NOMINAL LENGTH FT.	NOMINAL LENGTH IN.	ACTUAL LENGTH FT.	ACTUAL LENGTH IN.	WEIGHT LBS.
			PANEL B121-16 (PER PANEL)																									
28	6S002	Slab Panel		E	20					43′-1″														43′-1″		43′-1″		1,812
90	6S003	Slab Panel		E	5					7″		4′-11″		4′-11″										10′-5″		10′-2″		1,374
14	6S004	Slab Panel		E	5					6″		4′-5″		4′-5″										9′-4″		9′-1″		191
4	6S005	Slab Panel		E	5					6″		6′-8″		6′-8″										13′-10″		13′-7″		82
14	5S006	Slab Panel		E	89					10″		10″		2′-5″						5 3/8″		2′-4 1/2″		4′-1″		4′-0″		58
14	5S007	Slab Panel		E	54					16″		18″		18″		10″		10″		18″		1 1/2″		6′-0″		5′-8″		83
16	6S008	Slab Panel		E	20					7′-0″														7′-0″		7′-0″		168
90	6S010	Slab Panel		E	20					12′-8″														12′-8″		12′-8″		1,712
13	6S012	Slab Panel		E	5					6″		6′-5″		6′-5″										13′-4″		13′-1″		255
1	6S013	Slab Panel		E	5					6″		4′-5″		4′-5″										9′-4″		9′-1″		14
			PANEL B240-01 (PER PANEL)																									
28	6S002	Slab Panel		E	20					43′-1″														43′-1″		43′-1″		1,812
90	6S003	Slab Panel		E	5					7″		4′-11″		4′-11″										10′-5″		10′-2″		1,374
14	6S004	Slab Panel		E	5					6″		4′-5″		4′-5″										9′-4″		9′-1″		191
14	5S006	Slab Panel		E	89					10″		10″		2′-5″						5 3/8″		2′-4 1/2″		4′-1″		4′-0″		58
14	5S007	Slab Panel		E	54					16″		18″		18″		10″		10″		18″		1 1/2″		6′-0″		5′-8″		83
90	6S010	Slab Panel		E	20					12′-8″														12′-8″		12′-8″		1,712
2	6S012	Slab Panel		E	5					6″		6′-5″		6′-5″										13′-4″		13′-1″		39
12	6S014	Slab Panel		E	5					6″		8′-4″		8′-4″										17′-2″		16′-11″		305
			PANEL B240-02 (PER PANEL)																									
28	6S002	Slab Panel		E	20					43′-1″														43′-1″		43′-1″		1,812
90	6S003	Slab Panel		E	5					7″		4′-11″		4′-11″										10′-5″		10′-2″		1,374
14	6S004	Slab Panel		E	5					6″		4′-5″		4′-5″										9′-4″		9′-1″		191
14	5S006	Slab Panel		E	89					10″		10″		2′-5″						5 3/8″		2′-4 1/2″		4′-1″		4′-0″		58
14	5S007	Slab Panel		E	54					16″		18″		18″		10″		10″		18″		1 1/2″		6′-0″		5′-8″		83
90	6S010	Slab Panel		E	20					12′-8″														12′-8″		12′-8″		1,712
2	6S012	Slab Panel		E	5					6″		6′-5″		6′-5″										13′-4″		13′-1″		39
12	6S014	Slab Panel		E	5					6″		8′-4″		8′-4″										17′-2″		16′-11″		305
			PANEL B240-03 (PER PANEL)																									
28	6S002	Slab Panel		E	20					43′-1″														43′-1″		43′-1″		1,812
90	6S003	Slab Panel		E	5					7″		4′-11″		4′-11″										10′-5″		10′-2″		1,374
14	6S004	Slab Panel		E	5					6″		4′-5″		4′-5″										9′-4″		9′-1″		191
14	5S006	Slab Panel		E	89					10″		10″		2′-5″						5 3/8″		2′-4 1/2″		4′-1″		4′-0″		58
14	5S007	Slab Panel		E	54					16″		18″		18″		10″		10″		18″		1 1/2″		6′-0″		5′-8″		83
90	6S010	Slab Panel		E	20					12′-8″														12′-8″		12′-8″		1,712
14	6S012	Slab Panel		E	5					6″		6′-5″		6′-5″										13′-4″		13′-1″		275
			PANEL B240-04 (PER PANEL)																									
28	6S002	Slab Panel		E	20					43′-1″														43′-1″		43′-1″		1,812
90	6S003	Slab Panel		E	5					7″		4′-11″		4′-11″										10′-5″		10′-2″		1,374
14	6S004	Slab Panel		E	5					6″		4′-5″		4′-5″										9′-4″		9′-1″		191
14	5S006	Slab Panel		E	89					10″		10″		2′-5″						5 3/8″		2′-4 1/2″		4′-1″		4′-0″		58
14	5S007	Slab Panel		E	54					16″		18″		18″		10″		10″		18″		1 1/2″		6′-0″		5′-8″		83
3	5S009	Slab Panel		E	54					2′-1″		18″		18″		10″		10″		18″		1 1/2″		6′-9″		6′-5″		20
90	6S010	Slab Panel		E	20					12′-8″														12′-8″		12′-8″		1,712
14	6S012	Slab Panel		E	5					6″		6′-5″		6′-5″										13′-4″		13′-1″		275
			PANEL B240-05 (PER PANEL)																									
28	6S002	Slab Panel		E	20					43′-1″														43′-1″		43′-1″		1,812
90	6S003	Slab Panel		E	5					7″		4′-11″		4′-11″										10′-5″		10′-2″		1,374
14	6S004	Slab Panel		E	5					6″		4′-5″		4′-5″										9′-4″		9′-1″		191
14	5S006	Slab Panel		E	89					10″		10″		2′-5″						5 3/8″		2′-4 1/2″		4′-1″		4′-0″		58
14	5S007	Slab Panel		E	54					16″		18″		18″		10″		10″		18″		1 1/2″		6′-0″		5′-8″		83
3	5S009	Slab Panel		E	54					2′-1″		18″		18″		10″		10″		18″		1 1/2″		6′-9″		6′-5″		20
90	6S010	Slab Panel		E	20					12′-8″														12′-8″		12′-8″		1,712
14	6S012	Slab Panel		E	5					6″		6′-5″		6′-5″										13′-4″		13′-1″		275

BILL OF REINFORCING STEEL (5)

NO. REQ'D.	MARK NO. SIZE	MARK NO. MARK	LOCATION	EPOXY (E)	SHAPE NO.	STIRRUP (S)	SUBSTR. (X)	VARIES (V)	NO. EACH	DIMENSIONS B FT.	B IN.	C FT.	C IN.	D FT.	D IN.	E FT.	E IN.	F FT.	F IN.	H FT.	H IN.	K FT.	K IN.	NOMINAL LENGTH FT.	NOMINAL LENGTH IN.	ACTUAL LENGTH FT.	ACTUAL LENGTH IN.	WEIGHT LBS.
			PANEL B240-06 (PER PANEL)																									
28	6S002	Slab Panel		E	20					43′-1″														43′-1″		43′-1″		1,812
90	6S003	Slab Panel		E	5					7″		4′-11″		4′-11″										10′-5″		10′-2″		1,374
14	6S004	Slab Panel		E	5					6″		4′-5″		4′-5″										9′-4″		9′-1″		191
14	5S006	Slab Panel		E	89					10″		10″		2′-5″						5 3/8″		2′-4 1/2″		4′-1″		4′-0″		58
14	5S007	Slab Panel		E	54					16″		18″		18″		10″		10″		18″		1 1/2″		6′-0″		5′-8″		83
90	6S010	Slab Panel		E	20					12′-8″														12′-8″		12′-8″		1,712
14	6S012	Slab Panel		E	5					6″		6′-5″		6′-5″										13′-4″		13′-1″		275
			PANEL B240-07 (PER PANEL)																									
28	6S002	Slab Panel		E	20					43′-1″														43′-1″		43′-1″		1,812
90	6S003	Slab Panel		E	5					7″		4′-11″		4′-11″										10′-5″		10′-2″		1,374
14	6S004	Slab Panel		E	5					6″		4′-5″		4′-5″										9′-4″		9′-1″		191
14	5S006	Slab Panel		E	89					10″		10″		2′-5″						5 3/8″		2′-4 1/2″		4′-1″		4′-0″		58
14	5S007	Slab Panel		E	54					16″		18″		18″		10″		10″		18″		1 1/2″		6′-0″		5′-8″		83
90	6S010	Slab Panel		E	20					12′-8″														12′-8″		12′-8″		1,712
14	6S012	Slab Panel		E	5					6″		6′-5″		6′-5″										13′-4″		13′-1″		275
			PANEL B240-08 (PER PANEL)																									
28	6S002	Slab Panel		E	20					43′-1″														43′-1″		43′-1″		1,812
90	6S003	Slab Panel		E	5					7″		4′-11″		4′-11″										10′-5″		10′-2″		1,374
14	6S004	Slab Panel		E	5					6″		4′-5″		4′-5″										9′-4″		9′-1″		191
14	5S006	Slab Panel		E	89					10″		10″		2′-5″						5 3/8″		2′-4 1/2″		4′-1″		4′-0″		58
14	5S007	Slab Panel		E	54					16″		18″		18″		10″		10″		18″		1 1/2″		6′-0″		5′-8″		83
90	6S010	Slab Panel		E	20					12′-8″														12′-8″		12′-8″		1,712
14	6S012	Slab Panel		E	5					6″		6′-5″		6′-5″										13′-4″		13′-1″		275
			PANEL B240-09 (PER PANEL)																									
28	6S002	Slab Panel		E	20					43′-1″														43′-1″		43′-1″		1,812
90	6S003	Slab Panel		E	5					7″		4′-11″		4′-11″										10′-5″		10′-2″		1,374
14	6S004	Slab Panel		E	5					6″		4′-5″		4′-5″										9′-4″		9′-1″		191
14	5S006	Slab Panel		E	89					10″		10″		2′-5″						5 3/8″		2′-4 1/2″		4′-1″		4′-0″		58
14	5S007	Slab Panel		E	54					16″		18″		18″		10″		10″		18″		1 1/2″		6′-0″		5′-8″		83
90	6S010	Slab Panel		E	20					12′-8″														12′-8″		12′-8″		1,712
14	6S012	Slab Panel		E	5					6″		6′-5″		6′-5″										13′-4″		13′-1″		275
			PANEL B241-01 (PER PANEL)																									
28	6S002	Slab Panel		E	20					43′-1″														43′-1″		43′-1″		1,812
90	6S003	Slab Panel		E	5					7″		4′-11″		4′-11″										10′-5″		10′-2″		1,374
14	6S004	Slab Panel		E	5					6″		4′-5″		4′-5″										9′-4″		9′-1″		191
14	5S006	Slab Panel		E	89					10″		10″		2′-5″						5 3/8″		2′-4 1/2″		4′-1″		4′-0″		58
14	5S007	Slab Panel		E	54					16″		18″		18″		10″		10″		18″		1 1/2″		6′-0″		5′-8″		83
16	6S008	Slab Panel		E	20					7′-0″														7′-0″		7′-0″		168
90	6S010	Slab Panel		E	20					12′-8″														12′-8″		12′-8″		1,712
12	6S012	Slab Panel		E	5					6″		6′-5″		6′-5″										13′-4″		13′-1″		236
2	6S013	Slab Panel		E	5					6″		4′-5″		4′-5″										9′-4″		9′-1″		27
			PANEL B241-02 (PER PANEL)																									
28	6S002	Slab Panel		E	20					43′-1″														43′-1″		43′-1″		1,812
90	6S003	Slab Panel		E	5					7″		4′-11″		4′-11″										10′-5″		10′-2″		1,374
14	6S004	Slab Panel		E	5					6″		4′-5″		4′-5″										9′-4″		9′-1″		191
4	6S005	Slab Panel		E	5					6″		6′-8″		6′-8″										13′-10″		13′-7″		82
14	5S006	Slab Panel		E	89					10″		10″		2′-5″						5 3/8″		2′-4 1/2″		4′-1″		4′-0″		58
14	5S007	Slab Panel		E	54					16″		18″		18″		10″		10″		18″		1 1/2″		6′-0″		5′-8″		83
16	6S008	Slab Panel		E	20					7′-0″														7′-0″		7′-0″		168
90	6S010	Slab Panel		E	20					12′-8″														12′-8″		12′-8″		1,712
12	6S012	Slab Panel		E	5					6″		6′-5″		6′-5″										13′-4″		13′-1″		236
2	6S013	Slab Panel		E	5					6″		4′-5″		4′-5″										9′-4″		9′-1″		27

Notes:
1. For Bar Bending Diagram, see Sheet No. BR184.

BILL OF REINFORCING STEEL

Detailed JUL 2009
Checked JUL 2009

Note: This drawing is not to scale. Follow dimensions.

Sheet No. 200 of 205

STATE OF MISSOURI
HANS R. HUTTON
NUMBER E-29174
REGISTERED PROFESSIONAL ENGINEER
Hans R. Hutton

DATE 5/17/10
ROUTE I-70
STATE MO/IL
DISTRICT 6
SHEET NO. BR200
COUNTY ST. LOUIS CITY - MO, ST. CLAIR - IL
JOB NO. J6I0984
CONTRACT ID.
PROJECT NO.
BRIDGE NO. A6500

DESCRIPTION	DATE
1 Moved panel types	5-17-10

MISSOURI HIGHWAYS AND TRANSPORTATION COMMISSION
105 WEST CAPITOL
JEFFERSON CITY, MO 65102
1-888-ASK-MODOT (1-888-275-6636)

HNTB
715 KIRK DRIVE
KANSAS CITY, MO 64105-1310
TELEPHONE: 816-472-1201
CERTIFICATE OF AUTHORITY NO. 001270

REGISTERED STRUCTURAL ENGINEER
HANS R. HUTTON
081-006707
STATE OF ILLINOIS
Hans R. Hutton
5-17-2010

REV.

BILL OF REINFORCING STEEL (5)

NO. REQ'D.	MARK NO. SIZE MARK	LOCATION	EPOXY (E)	SHAPE NO.	STIRRUP (S)	SUBSTR. (X)	VARIES (V)	NO. EACH	DIMENSIONS B FT. IN.	C FT. IN.	D FT. IN.	E FT. IN.	F FT. IN.	H FT. IN.	K FT. IN.	NOMINAL LENGTH FT. IN.	ACTUAL LENGTH FT. IN.	WEIGHT LBS.
		PANEL B241-03 (PER PANEL)																
28	6S002	Slab Panel	E	20					43'-1"							43'-1"	43'-1"	1,812
90	6S003	Slab Panel	E	5					7"	4'-11"	4'-11"					10'-5"	10'-2"	1,374
14	6S004	Slab Panel	E	5					6"	4'-5"	4'-5"					9'-4"	9'-1"	191
4	6S005	Slab Panel	E	5					6"	6'-8"	6'-8"					13'-10"	13'-7"	82
14	5S006	Slab Panel	E	89					10"	10"	2'-5"			5 3/8"	2'-4 1/2"	4'-1"	4'-0"	58
14	5S007	Slab Panel	E	54					16"	18"	18"	10"	10"	18"	1 1/2"	6'-0"	5'-8"	83
16	6S008	Slab Panel	E	20					7'-0"							7'-0"	7'-0"	168
90	6S010	Slab Panel	E	20					12'-8"							12'-8"	12'-8"	1,712
12	6S012	Slab Panel	E	5					6"	6'-5"	6'-5"					13'-4"	13'-1"	236
2	6S013	Slab Panel	E	5					6"	4'-5"	4'-5"					9'-4"	9'-1"	27
		PANEL B241-04 (PER PANEL)																
28	6S002	Slab Panel	E	20					43'-1"							43'-1"	43'-1"	1,812
90	6S003	Slab Panel	E	5					7"	4'-11"	4'-11"					10'-5"	10'-2"	1,374
14	6S004	Slab Panel	E	5					6"	4'-5"	4'-5"					9'-4"	9'-1"	191
4	6S005	Slab Panel	E	5					6"	6'-8"	6'-8"					13'-10"	13'-7"	82
14	5S006	Slab Panel	E	89					10"	10"	2'-5"			5 3/8"	2'-4 1/2"	4'-1"	4'-0"	58
14	5S007	Slab Panel	E	54					16"	18"	18"	10"	10"	18"	1 1/2"	6'-0"	5'-8"	83
16	6S008	Slab Panel	E	20					7'-0"							7'-0"	7'-0"	168
90	6S010	Slab Panel	E	20					12'-8"							12'-8"	12'-8"	1,712
11	6S012	Slab Panel	E	5					6"	6'-5"	6'-5"					13'-4"	13'-1"	216
3	6S013	Slab Panel	E	5					6"	4'-5"	4'-5"					9'-4"	9'-1"	41
		PANEL B241-05 (PER PANEL)																
28	6S002	Slab Panel	E	20					43'-1"							43'-1"	43'-1"	1,812
90	6S003	Slab Panel	E	5					7"	4'-11"	4'-11"					10'-5"	10'-2"	1,374
14	6S004	Slab Panel	E	5					6"	4'-5"	4'-5"					9'-4"	9'-1"	191
4	6S005	Slab Panel	E	5					6"	6'-8"	6'-8"					13'-10"	13'-7"	82
14	5S006	Slab Panel	E	89					10"	10"	2'-5"			5 3/8"	2'-4 1/2"	4'-1"	4'-0"	58
14	5S007	Slab Panel	E	54					16"	18"	18"	10"	10"	18"	1 1/2"	6'-0"	5'-8"	83
16	6S008	Slab Panel	E	20					7'-0"							7'-0"	7'-0"	168
90	6S010	Slab Panel	E	20					12'-8"							12'-8"	12'-8"	1,712
11	6S012	Slab Panel	E	5					6"	6'-5"	6'-5"					13'-4"	13'-1"	216
3	6S013	Slab Panel	E	5					6"	4'-5"	4'-5"					9'-4"	9'-1"	41
		PANEL B241-06 (PER PANEL)																
28	6S002	Slab Panel	E	20					43'-1"							43'-1"	43'-1"	1,812
90	6S003	Slab Panel	E	5					7"	4'-11"	4'-11"					10'-5"	10'-2"	1,374
14	6S004	Slab Panel	E	5					6"	4'-5"	4'-5"					9'-4"	9'-1"	191
4	6S005	Slab Panel	E	5					6"	6'-8"	6'-8"					13'-10"	13'-7"	82
14	5S006	Slab Panel	E	89					10"	10"	2'-5"			5 3/8"	2'-4 1/2"	4'-1"	4'-0"	58
14	5S007	Slab Panel	E	54					16"	18"	18"	10"	10"	18"	1 1/2"	6'-0"	5'-8"	83
16	6S008	Slab Panel	E	20					7'-0"							7'-0"	7'-0"	168
90	6S010	Slab Panel	E	20					12'-8"							12'-8"	12'-8"	1,712
11	6S012	Slab Panel	E	5					6"	6'-5"	6'-5"					13'-4"	13'-1"	216
3	6S013	Slab Panel	E	5					6"	4'-5"	4'-5"					9'-4"	9'-1"	41
		PANEL B241-07 (PER PANEL)																
28	6S002	Slab Panel	E	20					43'-1"							43'-1"	43'-1"	1,812
90	6S003	Slab Panel	E	5					7"	4'-11"	4'-11"					10'-5"	10'-2"	1,374
14	6S004	Slab Panel	E	5					6"	4'-5"	4'-5"					9'-4"	9'-1"	191
4	6S005	Slab Panel	E	5					6"	6'-8"	6'-8"					13'-10"	13'-7"	82
14	5S006	Slab Panel	E	89					10"	10"	2'-5"			5 3/8"	2'-4 1/2"	4'-1"	4'-0"	58
14	5S007	Slab Panel	E	54					16"	18"	18"	10"	10"	18"	1 1/2"	6'-0"	5'-8"	83
16	6S008	Slab Panel	E	20					7'-0"							7'-0"	7'-0"	168
90	6S010	Slab Panel	E	20					12'-8"							12'-8"	12'-8"	1,712
11	6S012	Slab Panel	E	5					6"	6'-5"	6'-5"					13'-4"	13'-1"	216
3	6S013	Slab Panel	E	5					6"	4'-5"	4'-5"					9'-4"	9'-1"	41

BILL OF REINFORCING STEEL (5)

NO. REQ'D.	MARK NO. SIZE MARK	LOCATION	EPOXY (E)	SHAPE NO.	STIRRUP (S)	SUBSTR. (X)	VARIES (V)	NO. EACH	DIMENSIONS B FT. IN.	C FT. IN.	D FT. IN.	E FT. IN.	F FT. IN.	H FT. IN.	K FT. IN.	NOMINAL LENGTH FT. IN.	ACTUAL LENGTH FT. IN.	WEIGHT LBS.
		PANEL B241-08 (PER PANEL)																
28	6S002	Slab Panel	E	20					43'-1"							43'-1"	43'-1"	1,812
90	6S003	Slab Panel	E	5					7"	4'-11"	4'-11"					10'-5"	10'-2"	1,374
14	6S004	Slab Panel	E	5					6"	4'-5"	4'-5"					9'-4"	9'-1"	191
4	6S005	Slab Panel	E	5					6"	6'-8"	6'-8"					13'-10"	13'-7"	82
14	5S006	Slab Panel	E	89					10"	10"	2'-5"			5 3/8"	2'-4 1/2"	4'-1"	4'-0"	58
14	5S007	Slab Panel	E	54					16"	18"	18"	10"	10"	18"	1 1/2"	6'-0"	5'-8"	83
16	6S008	Slab Panel	E	20					7'-0"							7'-0"	7'-0"	168
90	6S010	Slab Panel	E	20					12'-8"							12'-8"	12'-8"	1,712
9	6S012	Slab Panel	E	5					6"	6'-5"	6'-5"					13'-4"	13'-1"	177
5	6S013	Slab Panel	E	5					6"	4'-5"	4'-5"					9'-4"	9'-1"	68
		PANEL B241-09 (PER PANEL)																
28	6S002	Slab Panel	E	20					43'-1"							43'-1"	43'-1"	1,812
90	6S003	Slab Panel	E	5					7"	4'-11"	4'-11"					10'-5"	10'-2"	1,374
14	6S004	Slab Panel	E	5					6"	4'-5"	4'-5"					9'-4"	9'-1"	191
4	6S005	Slab Panel	E	5					6"	6'-8"	6'-8"					13'-10"	13'-7"	82
14	5S006	Slab Panel	E	89					10"	10"	2'-5"			5 3/8"	2'-4 1/2"	4'-1"	4'-0"	58
14	5S007	Slab Panel	E	54					16"	18"	18"	10"	10"	18"	1 1/2"	6'-0"	5'-8"	83
16	6S008	Slab Panel	E	20					7'-0"							7'-0"	7'-0"	168
90	6S010	Slab Panel	E	20					12'-8"							12'-8"	12'-8"	1,712
9	6S012	Slab Panel	E	5					6"	6'-5"	6'-5"					13'-4"	13'-1"	177
5	6S013	Slab Panel	E	5					6"	4'-5"	4'-5"					9'-4"	9'-1"	68
		PANEL B241-10 (PER PANEL)																
28	6S002	Slab Panel	E	20					43'-1"							43'-1"	43'-1"	1,812
90	6S003	Slab Panel	E	5					7"	4'-11"	4'-11"					10'-5"	10'-2"	1,374
14	6S004	Slab Panel	E	5					6"	4'-5"	4'-5"					9'-4"	9'-1"	191
4	6S005	Slab Panel	E	5					6"	6'-8"	6'-8"					13'-10"	13'-7"	82
14	5S006	Slab Panel	E	89					10"	10"	2'-5"			5 3/8"	2'-4 1/2"	4'-1"	4'-0"	58
14	5S007	Slab Panel	E	54					16"	18"	18"	10"	10"	18"	1 1/2"	6'-0"	5'-8"	83
16	6S008	Slab Panel	E	20					7'-0"							7'-0"	7'-0"	168
90	6S010	Slab Panel	E	20					12'-8"							12'-8"	12'-8"	1,712
10	6S012	Slab Panel	E	5					6"	6'-5"	6'-5"					13'-4"	13'-1"	197
4	6S013	Slab Panel	E	5					6"	4'-5"	4'-5"					9'-4"	9'-1"	55
		PANEL B241-11 (PER PANEL)																
28	6S002	Slab Panel	E	20					43'-1"							43'-1"	43'-1"	1,812
90	6S003	Slab Panel	E	5					7"	4'-11"	4'-11"					10'-5"	10'-2"	1,374
14	6S004	Slab Panel	E	5					6"	4'-5"	4'-5"					9'-4"	9'-1"	191
4	6S005	Slab Panel	E	5					6"	6'-8"	6'-8"					13'-10"	13'-7"	82
14	5S006	Slab Panel	E	89					10"	10"	2'-5"			5 3/8"	2'-4 1/2"	4'-1"	4'-0"	58
14	5S007	Slab Panel	E	54					16"	18"	18"	10"	10"	18"	1 1/2"	6'-0"	5'-8"	83
16	6S008	Slab Panel	E	20					7'-0"							7'-0"	7'-0"	168
90	6S010	Slab Panel	E	20					12'-8"							12'-8"	12'-8"	1,712
10	6S012	Slab Panel	E	5					6"	6'-5"	6'-5"					13'-4"	13'-1"	197
4	6S013	Slab Panel	E	5					6"	4'-5"	4'-5"					9'-4"	9'-1"	55
		PANEL B241-12 (PER PANEL)																
28	6S002	Slab Panel	E	20					43'-1"							43'-1"	43'-1"	1,812
90	6S003	Slab Panel	E	5					7"	4'-11"	4'-11"					10'-5"	10'-2"	1,374
14	6S004	Slab Panel	E	5					6"	4'-5"	4'-5"					9'-4"	9'-1"	191
4	6S005	Slab Panel	E	5					6"	6'-8"	6'-8"					13'-10"	13'-7"	82
14	5S006	Slab Panel	E	89					10"	10"	2'-5"			5 3/8"	2'-4 1/2"	4'-1"	4'-0"	58
14	5S007	Slab Panel	E	54					16"	18"	18"	10"	10"	18"	1 1/2"	6'-0"	5'-8"	83
16	6S008	Slab Panel	E	20					7'-0"							7'-0"	7'-0"	168
3	5S009	Slab Panel	E	54					2'-1"	18"	18"	10"	10"	18"	1 1/2"	6'-9"	6'-5"	20
90	6S010	Slab Panel	E	20					12'-8"							12'-8"	12'-8"	1,712
9	6S012	Slab Panel	E	5					6"	6'-5"	6'-5"					13'-4"	13'-1"	177
5	6S013	Slab Panel	E	5					6"	4'-5"	4'-5"					9'-4"	9'-1"	68

Notes:
For Bar Bending Diagram, see Sheet No. BR184.

BILL OF REINFORCING STEEL

Detailed JUL 2009
Checked JUL 2009

Note: This drawing is not to scale. Follow dimensions.

Sheet No. 201 of 205

\\kcow00\jobs\46440\Bridges\Plans\CdtoMoDOTA6500\J6I0984\A6500-dgn\ZPLOT_B_A6500_201-205_J6I0984_201.dgn

18-MAY-2010 13:43

STATE OF MISSOURI HANS R. HUTTON NUMBER E-29174 REGISTERED PROFESSIONAL ENGINEER
Hans R. Hutton
DATE 5/17/10
ROUTE I-70 STATE MO/IL
DISTRICT 6 SHEET NO. BR201
COUNTY ST. LOUIS CITY - MO ST. CLAIR - IL
JOB NO. J6I0984
CONTRACT ID.
PROJECT NO.
BRIDGE NO. A6500

DATE	DESCRIPTION
5-17-10	(5) Moved panel types

MISSOURI HIGHWAYS AND TRANSPORTATION COMMISSION
105 WEST CAPITOL
JEFFERSON CITY, MO 65102
1-888-ASK-MODOT (1-888-275-6636)

HNTB
715 KLEE DRIVE
KANSAS CITY, MO 64105-1310
TELEPHONE (816) 472-1201
CERTIFICATE OF AUTHORITY NO. 001270

STATE OF ILLINOIS HANS R. HUTTON 081-006707 REGISTERED STRUCTURAL ENGINEER
Hans R. Hutton
5-17-2010

REV.

BILL OF REINFORCING STEEL (5)

NO. REQ'D.	MARK NO. SIZE	MARK	LOCATION	EPOXY (E)	SHAPE NO.	STIRRUP (S)	SUBSTR. (X)	VARIES (V)	NO. EACH	DIMENSIONS B FT.	B IN.	C FT.	C IN.	D FT.	D IN.	E FT.	E IN.	F FT.	F IN.	H FT.	H IN.	K FT.	K IN.	NOMINAL LENGTH FT.	NOMINAL LENGTH IN.	ACTUAL LENGTH FT.	ACTUAL LENGTH IN.	WEIGHT LBS.
			PANEL B241-13 (PER PANEL)																									
28	6S002		Slab Panel	E	20					43′	-1″													43′	-1″	43′	-1″	1,812
90	6S003		Slab Panel	E	5					7″		4′	-11″	4′	-11″									10′	-5″	10′	-2″	1,374
14	6S004		Slab Panel	E	5					6″		4′	-5″	4′	-5″									9′	-4″	9′	-1″	191
4	6S005		Slab Panel	E	5					6″		6′	-8″	6′	-8″									13′	-10″	13′	-7″	82
14	5S006		Slab Panel	E	89					10″		10″		2′	-5″					5 3/8″		2′	-4 1/2″	4′	-1″	4′	-0″	58
14	5S007		Slab Panel	E	54					16″		18″		18″		10″		10″		18″		1 1/2″		6′	-0″	5′	-8″	83
16	6S008		Slab Panel	E	20					7′	-0″													7′	-0″	7′	-0″	168
3	5S009		Slab Panel	E	54					2′	-1″	18″		18″		10″		10″		18″		1 1/2″		6′	-9″	6′	-5″	20
90	6S010		Slab Panel	E	20					12′	-8″													12′	-8″	12′	-8″	1,712
9	6S012		Slab Panel	E	5					6″		6′	-5″	6′	-5″									13′	-4″	13′	-1″	177
5	6S013		Slab Panel	E	5					6″		4′	-5″	4′	-5″									9′	-4″	9′	-1″	68
			PANEL B241-14 (PER PANEL)																									
28	6S002		Slab Panel	E	20					43′	-1″													43′	-1″	43′	-1″	1,812
90	6S003		Slab Panel	E	5					7″		4′	-11″	4′	-11″									10′	-5″	10′	-2″	1,374
14	6S004		Slab Panel	E	5					6″		4′	-5″	4′	-5″									9′	-4″	9′	-1″	191
4	6S005		Slab Panel	E	5					6″		6′	-8″	6′	-8″									13′	-10″	13′	-7″	82
14	5S006		Slab Panel	E	89					10″		10″		2′	-5″					5 3/8″		2′	-4 1/2″	4′	-1″	4′	-0″	58
14	5S007		Slab Panel	E	54					16″		18″		18″		10″		10″		18″		1 1/2″		6′	-0″	5′	-8″	83
16	6S008		Slab Panel	E	20					7′	-0″													7′	-0″	7′	-0″	168
90	6S010		Slab Panel	E	20					12′	-8″													12′	-8″	12′	-8″	1,712
9	6S012		Slab Panel	E	5					6″		6′	-5″	6′	-5″									13′	-4″	13′	-1″	177
5	6S013		Slab Panel	E	5					6″		4′	-5″	4′	-5″									9′	-4″	9′	-1″	68
			PANEL B241-15 (PER PANEL)																									
28	6S002		Slab Panel	E	20					43′	-1″													43′	-1″	43′	-1″	1,812
90	6S003		Slab Panel	E	5					7″		4′	-11″	4′	-11″									10′	-5″	10′	-2″	1,374
14	6S004		Slab Panel	E	5					6″		4′	-5″	4′	-5″									9′	-4″	9′	-1″	191
4	6S005		Slab Panel	E	5					6″		6′	-8″	6′	-8″									13′	-10″	13′	-7″	82
14	5S006		Slab Panel	E	89					10″		10″		2′	-5″					5 3/8″		2′	-4 1/2″	4′	-1″	4′	-0″	58
14	5S007		Slab Panel	E	54					16″		18″		18″		10″		10″		18″		1 1/2″		6′	-0″	5′	-8″	83
16	6S008		Slab Panel	E	20					7′	-0″													7′	-0″	7′	-0″	168
90	6S010		Slab Panel	E	20					12′	-8″													12′	-8″	12′	-8″	1,712
9	6S012		Slab Panel	E	5					6″		6′	-5″	6′	-5″									13′	-4″	13′	-1″	177
5	6S013		Slab Panel	E	5					6″		4′	-5″	4′	-5″									9′	-4″	9′	-1″	68
			PANEL B241-16 (PER PANEL)																									
28	6S002		Slab Panel	E	20					43′	-1″													43′	-1″	43′	-1″	1,812
90	6S003		Slab Panel	E	5					7″		4′	-11″	4′	-11″									10′	-5″	10′	-2″	1,374
14	6S004		Slab Panel	E	5					6″		4′	-5″	4′	-5″									9′	-4″	9′	-1″	191
4	6S005		Slab Panel	E	5					6″		6′	-8″	6′	-8″									13′	-10″	13′	-7″	82
14	5S006		Slab Panel	E	89					10″		10″		2′	-5″					5 3/8″		2′	-4 1/2″	4′	-1″	4′	-0″	58
14	5S007		Slab Panel	E	54					16″		18″		18″		10″		10″		18″		1 1/2″		6′	-0″	5′	-8″	83
16	6S008		Slab Panel	E	20					7′	-0″													7′	-0″	7′	-0″	168
90	6S010		Slab Panel	E	20					12′	-8″													12′	-8″	12′	-8″	1,712
8	6S012		Slab Panel	E	5					6″		6′	-5″	6′	-5″									13′	-4″	13′	-1″	157
6	6S013		Slab Panel	E	5					6″		4′	-5″	4′	-5″									9′	-4″	9′	-1″	82
			PANEL B241-17 (PER PANEL)																									
28	6S002		Slab Panel	E	20					43′	-1″													43′	-1″	43′	-1″	1,812
90	6S003		Slab Panel	E	5					7″		4′	-11″	4′	-11″									10′	-5″	10′	-2″	1,374
14	6S004		Slab Panel	E	5					6″		4′	-5″	4′	-5″									9′	-4″	9′	-1″	191
4	6S005		Slab Panel	E	5					6″		6′	-8″	6′	-8″									13′	-10″	13′	-7″	82
14	5S006		Slab Panel	E	89					10″		10″		2′	-5″					5 3/8″		2′	-4 1/2″	4′	-1″	4′	-0″	58
14	5S007		Slab Panel	E	54					16″		18″		18″		10″		10″		18″		1 1/2″		6′	-0″	5′	-8″	83
16	6S008		Slab Panel	E	20					7′	-0″													7′	-0″	7′	-0″	168
90	6S010		Slab Panel	E	20					12′	-8″													12′	-8″	12′	-8″	1,712
8	6S012		Slab Panel	E	5					6″		6′	-5″	6′	-5″									13′	-4″	13′	-1″	157
6	6S013		Slab Panel	E	5					6″		4′	-5″	4′	-5″									9′	-4″	9′	-1″	82

BILL OF REINFORCING STEEL (5)

NO. REQ'D.	MARK NO. SIZE	MARK	LOCATION	EPOXY (E)	SHAPE NO.	STIRRUP (S)	SUBSTR. (X)	VARIES (V)	NO. EACH	DIMENSIONS B FT.	B IN.	C FT.	C IN.	D FT.	D IN.	E FT.	E IN.	F FT.	F IN.	H FT.	H IN.	K FT.	K IN.	NOMINAL LENGTH FT.	NOMINAL LENGTH IN.	ACTUAL LENGTH FT.	ACTUAL LENGTH IN.	WEIGHT LBS.
			PANEL B241-18 (PER PANEL)																									
28	6S002		Slab Panel	E	20					43′	-1″													43′	-1″	43′	-1″	1,812
90	6S003		Slab Panel	E	5					7″		4′	-11″	4′	-11″									10′	-5″	10′	-2″	1,374
14	6S004		Slab Panel	E	5					6″		4′	-5″	4′	-5″									9′	-4″	9′	-1″	191
4	6S005		Slab Panel	E	5					6″		6′	-8″	6′	-8″									13′	-10″	13′	-7″	82
14	5S006		Slab Panel	E	89					10″		10″		2′	-5″					5 3/8″		2′	-4 1/2″	4′	-1″	4′	-0″	58
14	5S007		Slab Panel	E	54					16″		18″		18″		10″		10″		18″		1 1/2″		6′	-0″	5′	-8″	83
16	6S008		Slab Panel	E	20					7′	-0″													7′	-0″	7′	-0″	168
90	6S010		Slab Panel	E	20					12′	-8″													12′	-8″	12′	-8″	1,712
8	6S012		Slab Panel	E	5					6″		6′	-5″	6′	-5″									13′	-4″	13′	-1″	157
6	6S013		Slab Panel	E	5					6″		4′	-5″	4′	-5″									9′	-4″	9′	-1″	82
			PANEL B241-19 (PER PANEL)																									
28	6S002		Slab Panel	E	20					43′	-1″													43′	-1″	43′	-1″	1,812
90	6S003		Slab Panel	E	5					7″		4′	-11″	4′	-11″									10′	-5″	10′	-2″	1,374
14	6S004		Slab Panel	E	5					6″		4′	-5″	4′	-5″									9′	-4″	9′	-1″	191
4	6S005		Slab Panel	E	5					6″		6′	-8″	6′	-8″									13′	-10″	13′	-7″	82
14	5S006		Slab Panel	E	89					10″		10″		2′	-5″					5 3/8″		2′	-4 1/2″	4′	-1″	4′	-0″	58
14	5S007		Slab Panel	E	54					16″		18″		18″		10″		10″		18″		1 1/2″		6′	-0″	5′	-8″	83
16	6S008		Slab Panel	E	20					7′	-0″													7′	-0″	7′	-0″	168
90	6S010		Slab Panel	E	20					12′	-8″													12′	-8″	12′	-8″	1,712
8	6S012		Slab Panel	E	5					6″		6′	-5″	6′	-5″									13′	-4″	13′	-1″	157
6	6S013		Slab Panel	E	5					6″		4′	-5″	4′	-5″									9′	-4″	9′	-1″	82
			PANEL C000-01 (PER PANEL)																									
20	6S002		Slab Panel	E	20					43′	-1″													43′	-1″	43′	-1″	1,294
88	6S003		Slab Panel	E	5					7″		4′	-11″	4′	-11″									10′	-5″	10′	-2″	1,344
10	6S004		Slab Panel	E	5					6″		4′	-5″	4′	-5″									9′	-4″	9′	-1″	136
10	5S006		Slab Panel	E	89					10″		10″		2′	-5″					5 3/8″		2′	-4 1/2″	4′	-1″	4′	-0″	42
10	5S007		Slab Panel	E	54					16″		18″		18″		10″		10″		18″		1 1/2″		6′	-0″	5′	-8″	59
174	7S011		Slab Panel	E	20					8′	-8″													8′	-8″	8′	-8″	3,082
10	6S012		Slab Panel	E	5					6″		6′	-5″	6′	-5″									13′	-4″	13′	-1″	197
			CAST-IN-PLACE SLAB																									
920	5S006		Slab	E	89					10″		10″		2′	-5″					5 3/8″		2′	-4 1/2″	4′	-1″	4′	-0″	3,838
752	5S007		Slab	E	54					16″		18″		18″		10″		10″		18″		1 1/2″		6′	-0″	5′	-8″	4,445
1496	6S015		Slab	E	20					45′	-6″													45′	-6″	45′	-6″	102,238
112	6S016		Slab	E	5					6″		4′	-5″	4′	-5″									9′	-4″	9′	-1″	1,528
628	6S018		Slab	E	5					6″		6′	-5″	6′	-5″									13′	-4″	13′	-1″	12,341
28	6S019		Slab	E	45					3′	-6″			7″						18″				3′	-4″	3′	-4″	140
688	7S020		Slab	E	20					40′	-0″													40′	-0″	40′	-0″	56,251
24	7S021		Slab	E	20					48′	-9″													48′	-9″	48′	-9″	2,391
8	7S022		Slab	E	20					19′	-9″													19′	-9″	19′	-9″	323
10	7S023		Slab	E	20					18′	-9″													18′	-9″	18′	-9″	383
504	6S024		Slab	E	23					3′	-4″	2′	-9″	3′	-4″	2′	-4 1/2″	2′	-4 1/2″	2′	-4 3/8″	2′	-4 3/8″	9′	-5″	9′	-5″	7,128
384	6S025		Slab	E	20					46′	-10″													46′	-10″	46′	-10″	27,012
8	6S026		Slab	E	5					6″		8′	-4″	8′	-4″									17′	-2″	16′	-11″	203
312	6S027		Slab	E	20					45′	-7″													45′	-7″	45′	-7″	21,361
48	6S028		Slab	E	20					26′	-9″													26′	-9″	26′	-9″	1,929
40	6S029		Slab	E	20					46′	-0″													46′	-0″	46′	-0″	2,764
12	6S030		Slab	E	20					22′	-2″													22′	-2″	22′	-2″	400
104	6S031		Slab	E	20					35′	-10″													35′	-10″	35′	-10″	5,597
16	6S032		Slab	E	20					19′	-6″													19′	-6″	19′	-6″	469
128	6S034		Slab	E	20					37′	-0″													37′	-0″	37′	-0″	7,113
4	6S035		Slab	E	20					45′	-0″													45′	-0″	45′	-0″	270
104	6S036		Slab	E	20					33′	-9″													33′	-9″	33′	-9″	5,272
16	6S037		Slab	E	20					18′	-6″													18′	-6″	18′	-6″	445
8	6S038		Slab	E	20					22′	-0″													22′	-0″	22′	-0″	264
8	6S039		Slab	E	20					24′	-0″													24′	-0″	24′	-0″	288
128	6S040		Slab	E	20					35′	-0″													35′	-0″	35′	-0″	6,729
4	6S041		Slab	E	20					43′	-0″													43′	-0″	43′	-0″	258
624	6S043		Slab	E	20					27′	-9″													27′	-9″	27′	-9″	26,009
330	6S044		Slab	E	20					41′	-0″													41′	-0″	41′	-0″	20,322
8	7S045		Slab	E	20					40′	-0″													40′	-0″	40′	-0″	654
344	6S046		Slab	E	23					4′	-1″	20″		10″		7″		7″		2′	-10 5/8″	2′	-10 5/8″	7′	-3″	7′	-3″	3,746
36	6S047		Slab	E	20					25′	-5″													25′	-5″	25′	-5″	1,374
56	6S048		Slab	E	5					6″		5′	-3″	5′	-3″									11′	-0″	10′	-9″	904

Notes:
(5) For Bar Bending Diagram, see Sheet No. BR184. Two additional [5]#5-S50 #7-S023 are included in Bill of Reinforcing Steel for testing.

BILL OF REINFORCING STEEL

Detailed JUL 2009
Checked JUL 2009

Note: This drawing is not to scale. Follow dimensions.

\\kcow00\jobs\46440\Bridges\Plans\CdtaMoDOTA6500\J6I0984\A6500-dgn\ZPLOT_B_A6500_202-205_J6I0984_202.dgn 18-MAY-2010 13:43

STATE OF MISSOURI — HANS R. HUTTON — NUMBER E-29074 — REGISTERED PROFESSIONAL ENGINEER

DATE 5/17/10

ROUTE	STATE
I-70	MO/IL
DISTRICT	SHEET NO.
6	BR202

COUNTY: ST. LOUIS CITY - MO, ST. CLAIR - IL
JOB NO.: J6I0984
CONTRACT ID.:
PROJECT NO.:
BRIDGE NO.: A6500

DATE	DESCRIPTION
5-17-10	(5) Moved panel types

MISSOURI HIGHWAYS AND TRANSPORTATION COMMISSION
MoDOT
105 WEST CAPITOL
JEFFERSON CITY, MO 65102
1-888-ASK-MODOT (1-888-275-6636)

HNTB
715 KIRK DRIVE
KANSAS CITY, MO 64105-1310
TELEPHONE (816) 472-1201
CERTIFICATE OF AUTHORITY NO. 001270

LICENSED STRUCTURAL ENGINEER — HANS R. HUTTON 081-006707 — STATE OF ILLINOIS
Hans R. Hutton
5-17-2010

REV.

BILL OF REINFORCING STEEL 4 5

NO. REQ'D.	MARK NO. SIZE	MARK	LOCATION	EPOXY (E)	SHAPE NO.	STIRRUP (S)	SUBSTR. (X)	VARIES (V)	NO. EACH	DIMENSIONS B FT.	B IN.	C FT.	C IN.	D FT.	D IN.	E FT.	E IN.	F FT.	F IN.	H FT.	H IN.	K FT.	K IN.	NOMINAL LENGTH FT.	NOMINAL LENGTH IN.	ACTUAL LENGTH FT.	ACTUAL LENGTH IN.	WEIGHT LBS.
			CAST-IN-PLACE SLAB-CONT'D																									
8	6S049		Slab	E	23					4′	4″	2′	9″	4′	4″	3′	0 3/4″	3′	0 1/2″	3′	0 3/4″	3′	0 1/2″	11′	5″	11′	5″	137
8	6S050		Slab	E	5					6″		4′	9″	4′	9″									10′	0″	9′	9″	117
168	5S052		Slab	E	19					2′	1″	10″												2′	11″	2′	10″	496
40	5S053		Slab	E	27					10″		15″		10″		10″				2 7/8″		14 3/8″		3′	9″	3′	6″	146
80	5S054		Slab	E	27			V	4	10″		15″		10″		10″				2 7/8″		14 3/8″		3′	9″	3′	6″	292
			Increment = 0							10″		15″		10″		10″				0.0000		15″		3′	9″	3′	6″	
48	5S055		Slab	E	39					2′	1″	10″		10″										3′	9″	3′	6″	175
6	6S056		Slab	E	5					6″		7′	2″	7′	2″									14′	10″	14′	7″	131
4	6S057		Slab	E	75					13″		9″		2′	0″	9 1/4″		9 1/4″						6′	11″	6′	8″	40
			MEDIAN BARRIER CURB																									
6108	5M1		Median Barrier	E	2					3′	5″	5″								4 7/8″		7/8″		3′	10″	3′	10″	24.421
10	5M2		Median Barrier	E	23					11′	10″	20′	0″	9′	10″	3″		9′	10″	3 1/2″		11′	10″	41′	8″	41′	8″	435
260	5M3		Median Barrier	E	20					41′	11″													41′	11″	41′	11″	11.367
20	5M4		Median Barrier	E	20					27′	10″													27′	10″	27′	10″	581
20	5M5		Median Barrier	E	20					28′	3″													28′	3″	28′	3″	589
20	5M6		Median Barrier	E	20					28′	8″													28′	8″	28′	8″	598
320	5M7		Median Barrier	E	20					43′	2″													43′	2″	43′	2″	14.407
12	5M8		Median Barrier	E	20					10′	2″													10′	2″	10′	2″	127
10	5M9		Median Barrier	E	20					41′	8″													41′	8″	41′	8″	435
20	5M10		Median Barrier	E	2					3′	5″	17″								16 3/8″		3 1/2″		4′	10″	4′	10″	101
40	5M11		Median Barrier	E	2			V	2	3′	5″	5″								4 7/8″		7/8″		3′	10″	3′	10″	181
			Increment = 3/8″							3′	5″	17″								16 3/8″		3 1/2″		4′	10″	4′	10″	
			BRIDGE RAILING																									
1248	5R1		Bridge Rail	E	23					11″		6 1/4″		11″		8 1/2″		7″		8 1/2″		7″		2′	5″	2′	5″	3,146
20	5R2		Bridge Rail	E	20					41′	8″													41′	8″	41′	8″	869
312	5R3		Bridge Rail	E	20					41′	11″													41′	11″	41′	11″	13,640
24	5R4		Bridge Rail	E	20					27′	10″													27′	10″	27′	10″	697
24	5R5		Bridge Rail	E	20					13′	9″													13′	9″	13′	9″	344
24	5R6		Bridge Rail	E	20					14′	2″													14′	2″	14′	2″	355
24	5R7		Bridge Rail	E	20					28′	8″													28′	8″	28′	8″	718
384	5R8		Bridge Rail	E	20					43′	2″													43′	2″	43′	2″	17.289
12	5R9		Bridge Rail	E	20					20′	8″													20′	8″	20′	8″	259
20	5R10		Bridge Rail	E	23			V	4	11′	10″	20′	0″	9′	10″	1/2″		9′	9 1/2″	5/8″		11′	10″	41′	8″	41′	8″	869
			Increment = 0							11′	10″	20′	0″	9′	10″	3 3/8″		9′	10″	4 1/2″		11′	9 1/2″	41′	8″	41′	8″	
40	5R11		Bridge Rail	E	19					3′	4″	5″												3′	9″	3′	8″	153
40	5R12		Bridge Rail	E	2					3′	5″	5″								4 7/8″		7/8″		3′	10″	3′	10″	160
80	5R13		Bridge Rail	E	19			V	4	3′	4″	5″												3′	9″	3′	8″	327
			Increment = 1/4″							3′	4″	11″												4′	3″	4′	2″	
80	5R14		Bridge Rail	E	2			V	4	3′	5″	5″								4 7/8″		7/8″		3′	10″	3′	10″	337
			Increment = 1/4″							3′	4″	11″								13″		1/8″		4′	3″	4′	3″	
96	5R15		Bridge Rail	E	19					3′	4″	11″												4′	3″	4′	2″	417
84	5R16		Light Blister	E	75					13″		14″		18″		9 1/2″		9 1/2″						6′	4″	6′	1″	533
			TOTALS																									
	2																											70
	2			E																								206
	4																											226
	4			E																								208
	5																											784.728
	5			E																								156.163
	6																											1.072.500
	6			E																								2.300.702
	7																											275.856
	7			E																								130.111
	8																											44.708
	8			E																								2.286
	10																											28.304
	11																											3.780.720
	11			E																								140.424
	18																											3.287.664
	18			E																								145.005
			TOTALS																									9.274.776
			TOTALS	E																								2.875.105

BILL OF REINFORCING STEEL 4 5

NO. REQ'D.	MARK NO. SIZE	MARK	LOCATION	EPOXY (E)	SHAPE NO.	STIRRUP (S)	SUBSTR. (X)	VARIES (V)	NO. EACH	DIMENSIONS B FT.	B IN.	C FT.	C IN.	D FT.	D IN.	E FT.	E IN.	F FT.	F IN.	H FT.	H IN.	K FT.	K IN.	NOMINAL LENGTH FT.	NOMINAL LENGTH IN.	ACTUAL LENGTH FT.	ACTUAL LENGTH IN.	WEIGHT LBS.
			REINFORCING STEEL (BRIDGES)																									
	2																											70
	4																											226
	5																											784.728
	6																											962.539
	7																											275.856
	8																											44.708
	10																											28.304
	11																											3.077.798
	18																											310.896
			TOTALS																									5.485.125
			REINFORCING STEEL (EPOXY COATED)																									
	2			E																								206
	4			E																								208
	6			E																								13.385
	7			E																								57.781
	8			E																								2.286
	11			E																								140.424
	18			E																								145.005
			TOTALS	E																								359.295
			PIERS 11 AND 12 FOUNDATIONS																									
	6																											109.961
	11																											702.922
	18																											2.976.768
			TOTALS																									3.789.651
			PRECAST PRESTRESSED SLAB PANELS																									
	5			E																								62.808
	6			E																								2.287.317
	7			E																								72.330
			TOTALS	E																								2.422.455
			BRIDGE RAILING AND MEDIAN BARRIER CURB																									
	5			E																								93.355

5 Notes:
For Bar Bending Diagram, see Sheet No. BR184.
Two additional #5-W8 are included in Bill of Reinforcing Steel for testing.

BILL OF REINFORCING STEEL

Detailed JUL 2009
Checked JUL 2009

Note: This drawing is not to scale. Follow dimensions.

Sheet No. 203 of 205

\\kccw00\jobs\46440\Bridges\Plans\CdtoMoDOTA6500\J6I0984\A6500-dgn\ZPLOT_B_A6500_203-205_J6I0984_203.dgn

18-MAY-2010 13:43

STATE OF MISSOURI
HANS R. HUTTON
NUMBER E-29574
REGISTERED PROFESSIONAL ENGINEER
Hans R. Hutton

DATE 5/17/10
ROUTE I-70
STATE MO/IL
DISTRICT 6
SHEET NO. BR203
COUNTY ST. LOUIS CITY - MO, ST. CLAIR - IL
JOB NO. J6I0984
CONTRACT ID.
PROJECT NO.
BRIDGE NO. A6500

DESCRIPTION	DATE
1 Revised per ATC	5-17-10
2 Moved bars from Sheet No. BR202	5-17-10

MISSOURI HIGHWAYS AND TRANSPORTATION COMMISSION
105 WEST CAPITOL
JEFFERSON CITY, MO 65101
1-888-ASK-MODOT (1-888-275-6636)

HNTB
715 KIRK DRIVE
KANSAS CITY, MO 64105-1310
TELEPHONE (816) 472-1201
CERTIFICATE OF AUTHORITY NO. 001270

LICENSED STRUCTURAL ENGINEER
HANS R. HUTTON
081-005707
STATE OF ILLINOIS
expires 11-30-2010
Hans R. Hutton
5-17-2010

REV.

4 BLANK SHEET → ~~AS-BUILT DRILLED SHAFT DATA~~

Detailed JUL 2009
Checked JUL 2009

Note: This drawing is not to scale. Follow dimensions.

Sheet No. 204 of 205

\\kcow00\jobs\46440\Bridges\Plans\CdtoMoDOTA6500\J6I0984\A6500-dgn\ZPLOT_B_A6500_204-205_J6I0984_204.dgn

17-MAY-2010 11:33

STATE OF MISSOURI
HANS P. HUTTON
NUMBER E-29574
REGISTERED PROFESSIONAL ENGINEER

Hans P. Hutton

DATE
5/17/10

ROUTE	STATE
I-70	MO/IL
DISTRICT	SHEET NO.
6	BR204

COUNTY
ST. LOUIS CITY - MO
ST. CLAIR - IL

JOB NO.
J6I0984

CONTRACT ID.

PROJECT NO.

BRIDGE NO.
A6500

DATE	DESCRIPTION
5-17-10	4 Revised per ATC

MISSOURI HIGHWAYS AND TRANSPORTATION COMMISSION

MoDOT

105 WEST CAPITOL
JEFFERSON CITY, MO 65102
1-888-ASK-MODOT (1-888-275-6636)

HNTB

715 KIRK DRIVE
KANSAS CITY, MO 64105-1310
TELEPHONE (816) 472-1201
CERTIFICATE OF AUTHORITY
NO. 001270

LICENSED STRUCTURAL ENGINEER
HANS R. HUTTON
081-006707
STATE OF ILLINOIS

Hans R. Hutton
5-17-2010

REV.

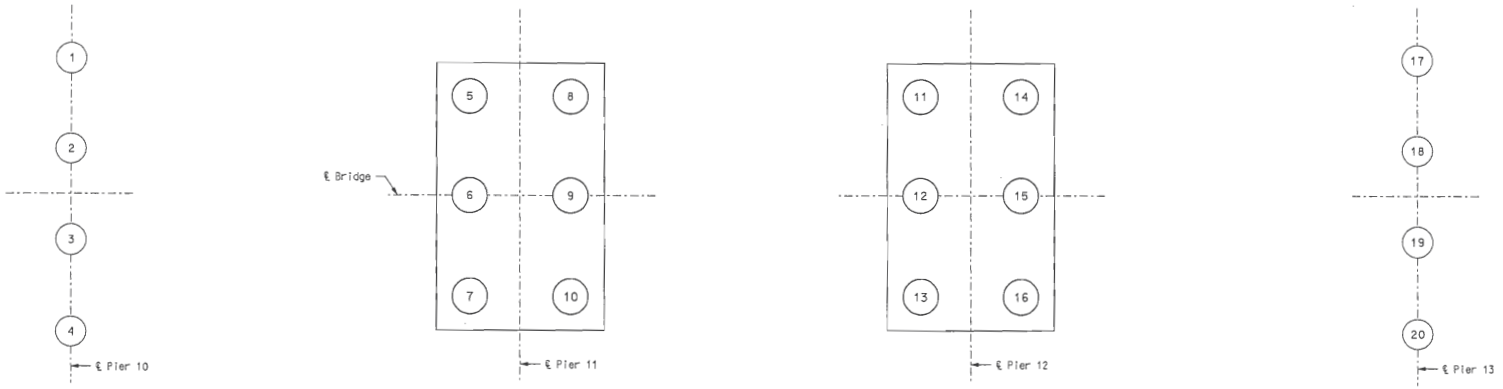

PART PLAN SHOWING
DRILLED SHAFT NUMBERING FOR RECORDING
"AS BUILT DRILLED SHAFT" DATA

4

"AS BUILT DRILLED SHAFT" DATA			
SHAFT NO.	BOTTOM OF DRILLED SHAFT (ELEV.)	BOTTOM OF ROCK SOCKET (ELEV.)	REMARKS
PIER 10			
1			
2			
3			
4			
PIER 11			
5			
6			
7			
8			
9			
10			
PIER 12			
11			
12			
13			
14			
15			
16			
PIER 13			
17			
18			
19			
20			

4

NOTE:
THIS SHEET TO BE COMPLETED BY MoDOT CONSTRUCTION PERSONNEL.

4 AS-BUILT DRILLED SHAFT DATA ☒
~~ALTERNATIVE FOUNDATION~~

STATE OF MISSOURI
HANS R. HUTTON
NUMBER E-26174
REGISTERED PROFESSIONAL ENGINEER
Hans R. Hutton

DATE 5/17/10
ROUTE I-70 | STATE MO/IL
DISTRICT 6 | SHEET NO. BR205
COUNTY ST. LOUIS CITY - MO ST. CLAIR - IL
JOB NO. J6I0984
CONTRACT ID.
PROJECT NO.
BRIDGE NO. A6500

DESCRIPTION	DATE
4 Revised per ATC	5-17-10

MISSOURI HIGHWAYS AND TRANSPORTATION COMMISSION
105 WEST CAPITOL
JEFFERSON CITY, MO 65102
1-888-ASK-MODOT (1-888-275-6636)

HNTB
715 KIRK DRIVE
KANSAS CITY, MO 64105-1310
TELEPHONE (816) 472-1201
CERTIFICATE OF AUTHORITY NO. 001270

LICENSED STRUCTURAL ENGINEER
HANS R. HUTTON
081-006707
STATE OF ILLINOIS
expires 11-30-2010
Hans R. Hutton
5-17-2010

REV.

Detailed JUL 2009
Checked JUL 2009

Note: This drawing is not to scale. Follow dimensions.

Sheet No. 205 of 205

\\kcow00\jobs\46440\Bridges\Plans\CdtoMoDOTA6500\J6I0984\A6500-dgn\ZPLOT_B_A6500_205-205_J6I0984_205.dgn

17-MAY-2010 11:33

Missouri
Department
of Transportation

MoDOT

Pete K. Rahn, Director

105 West Capitol Avenue
P.O. Box 270
Jefferson City, MO 65102
(573) 751-2551
Fax (573) 751-6555
www.modot.org

TO: John Grana
Resident Engineer – MRB Project Office

CC/ATT: Dave Ahlvers–cm
Dean Franke-br
Kent Nelson-br

CC: Chad Daniel-br

FROM: Greg Sunde GS
Structural Liaison Engineer

DATE: September 10, 2010

SUBJECT: Construction Change
December 8, 2009 Letting
St. Louis City
Job J6I0984
Bridge No. A6500 (Main Spans over the Mississippi)

Attached are plan sheets 8, 59, 185, 186 & 203 which should be added to MTA's ATC set of plans. These changes are result from MTA's RFI #058 where MTA asked for confirmation of the orientation of certain rebar that appeared would protrude from the concrete in Piers 11 & 12 at about elevation 450'.

These changes correct the problem and are marked as Revision 6.

If you have any questions please contact me at 573-522-2560.

gs
attachment

ESTIMATED QUANTITIES

ITEM		SUBSTR.	SUPERSTR.	TOTAL
Latex Modified Concrete Wearing Surface (Alternate A)	sq. yard	——	24,800	24,800
Asphalt Wearing Surface (Alternate B)	sq. yard	——	24,800	24,800
Drilled Shafts (10'-0" Dia.)	linear foot	564.0	——	564.0
Rock Sockets (9'-6" Dia.)	linear foot	224.0	——	224.0
Television Camera Inspection	each	8	——	8
SID Inspection	each	8	——	8
Foundation Inspection Holes	linear foot	304.0	——	304.0
Concrete Coring	linear foot	148.0	——	148.0
Sonic Logging Testing	each	8	——	8
Class B-1 Concrete (Substructure)	cu. yard	2165.1	——	2165.1
※ Median Barrier Curb (Type C)	linear foot	——	2767	2767
Class A-1 Concrete	cu. yard	15,536.4	——	15,536.4
Counterweight Concrete	lump sum	——	——	1
Precast Prestressed Concrete Slab Panels	sq. yard	——	28,625	28,625
Reinforcing Steel (Bridges)	pound	5,546,610	——	5,546,610
Mechanical Bar Splice	each	6876	——	6876
Reinforcing Steel (Epoxy Coated)	pound	359,570	——	359,570
Protective Coating - Concrete Bents and Piers (Epoxy)	lump sum	——	——	1
Temporary Coating - Concrete Bents and Piers (Weathering Steel)	lump sum	——	——	1
Protective Coating - Towers (Non-Epoxy)	lump sum	——	——	1
Fabricated Structural Carbon Steel (Miscellaneous)	pound	2040	8740	10,780
Fabricated Structural Low Alloy Steel (Plate Girder) A709, Gr. HPS70W	pound	——	6,456,410	6,456,410
Fabricated Structural Low Alloy Steel (Plate Girder) A709, Gr. HPS50W	pound	——	8,246,730	8,246,730
Drainage System (On Structure)	lump sum	——	——	1
Post-Tensioning System at Towers	lump sum	——	——	1
Inspection Access	lump sum	——	——	1
Stay Cables	lump sum	——	——	1
Stay Cable Testing	lump sum	——	——	1
Tie-Downs	lump sum	——	——	1
Inspection Traveler	lump sum	——	——	1
Lock-Up Device	each	8	——	8
Fabricated Structural Low Alloy Steel (Tower Anchor Box) A709, Gr. HPS50W	pound	1,653,920	——	1,653,920
Bridge Railing	linear foot	——	5534	5534
POT Bearing	each	——	4	4
Modular Expansion Joint System	linear foot	——	172	172

Notes:
※ Median Barrier Curb (Type C) shall be cast-in-place option or slip-form option.

4

ESTIMATED QUANTITIES - CAISSON FOUNDATION

ITEM		TOTAL
Foundation - Pier 11	lump sum	1
Foundation - Pier 12	lump sum	1

4

FOUNDATIONS AT PIERS 11 & 12

ESTIMATED QUANTITIES - ALTERNATIVE FOUNDATION

ITEM		Pier 11	Pier 12	TOTAL
Drilled Shafts (10'-0" Dia.) (11'-6")	linear foot	819.0	1029.0	1848.0
Rock Sockets (9'-6" Dia.) (11'-0")	linear foot	616.0	616.0	1232.0
Television Camera Inspection	each	14	14	28
SID Inspection	each			
Foundation Inspection Holes	linear foot	756.0	756.0	1512.0
Concrete Coring	linear foot	103.5	118.5	222.0
Sonic Logging Testing	each	14	14	28
Drilled Shaft Load Test	each			
Seal Concrete	cu. yard	4040.4	4040.4	8080.8
Class B-1 Concrete (Substructure)	cu. yard	6222.2	6222.2	12,444.4
Reinforcing Steel (Bridges)	pound	3,349,920	3,438,750	6,788,670
Mechanical Bar Splice	each	784	784	1568

351.0	441.0	792.0
132.0	99.0	231.0
6	6	12
6	6	12
192.0	159.0	351.0
81.5	91.0	172.5
6	6	12
1	——	1
2336.4	2336.4	4672.8
3585.2	3585.2	7170.4
1,876,960	1,912,690	3,789,650
1480	1480	2960

4 4 4

114.0 4
194.0 4
134.3 4
5,487,960 6
5,485,130 4
8176 4
359,300 4
6,849,270 3
7,853,870 3

ESTIMATED QUANTITIES

Detailed JUL 2009
Checked JUL 2009

Note: This drawing is not to scale. Follow dimensions.

Sheet No. 8 of 205

\\kcow00\jobs\46440\Bridges\Plans\Drawings\ZPLOT_B_A6500_008-205_J6I0984_008.dgn

08-SEP-2010 14:34

HANS R. HUTTON NUMBER E-09174 REGISTERED PROFESSIONAL ENGINEER STATE OF MISSOURI
Hans R. Hutton

DATE 9/10/10
ROUTE I-70 | STATE MO/IL
DISTRICT 6 | SHEET NO. BR8
COUNTY ST. LOUIS CITY - MO, ST. CLAIR - IL
JOB NO. J6I0984
CONTRACT ID.
PROJECT NO.
BRIDGE NO. A6500

DATE	DESCRIPTION
11-25-09	4 Revised Struct. Steel quantity
5-17-10	3 Revised per ATC
9-3-10	2 Revised Reinforcing Steel

MISSOURI HIGHWAYS AND TRANSPORTATION COMMISSION
105 WEST CAPITOL
JEFFERSON CITY, MO 65102
1-888-ASK-MODOT (1-888-275-6636)

HNTB
715 KIRK DRIVE
KANSAS CITY, MO 64105-1310
TELEPHONE (816) 472-1201
CERTIFICATE OF AUTHORITY NO. 001270

LICENSED STRUCTURAL ENGINEER
HANS R. HUTTON
081-006707
STATE OF ILLINOIS
expires 11-30-2010
Hans R. Hutton
9-10-2010

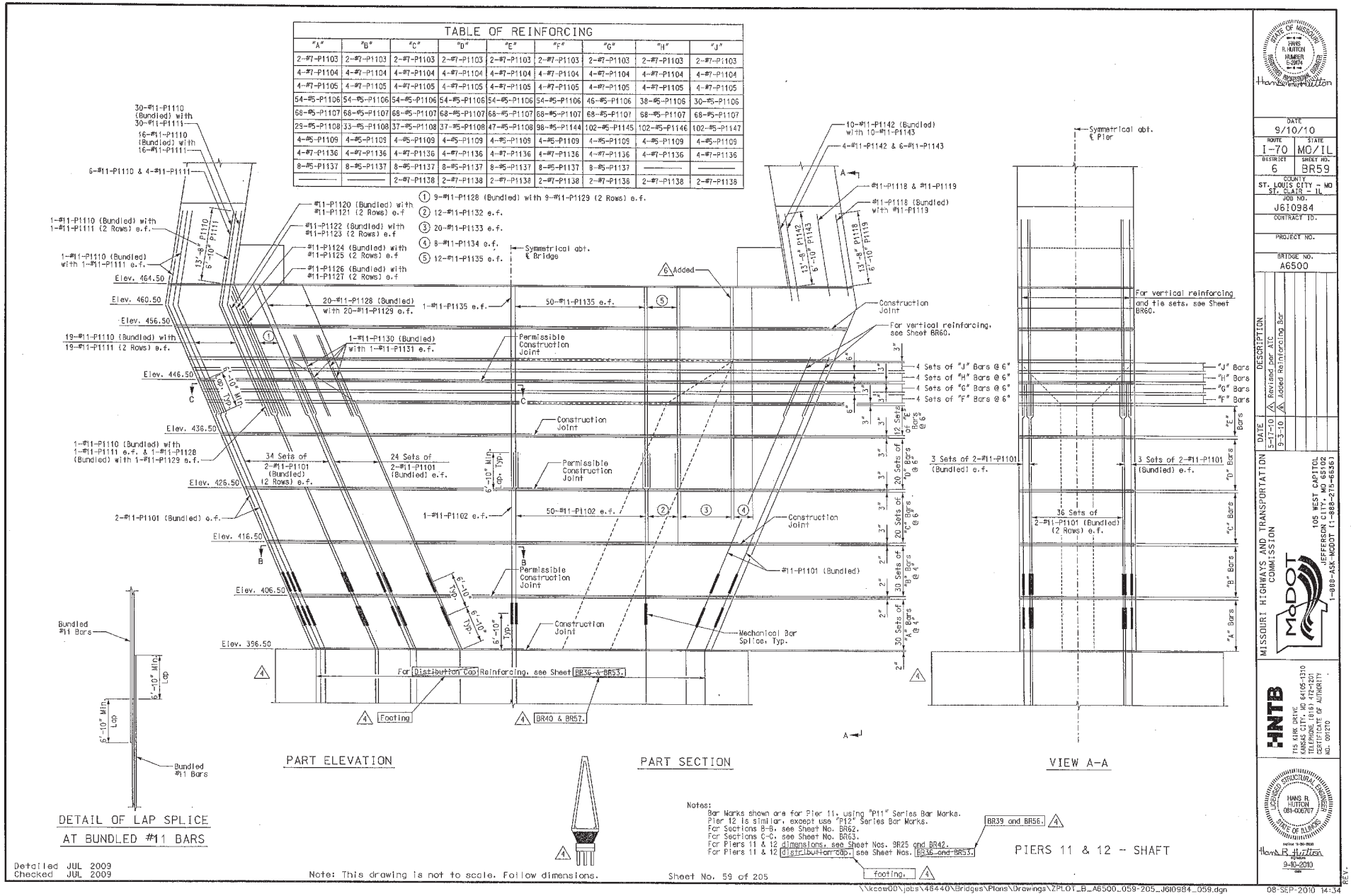
TABLE OF REINFORCING
"A" | "B" | "C" | "D" | "E" | "F" | "G" | "H" | "J"
2-#7-P1103 | 2-#7-P1103 | 2-#7-P1103 | 2-#7-P1103 | 2-#7-P1103 | 2-#7-P1103 | 2-#7-P1103 | 2-#7-P1103 | 2-#7-P1103
4-#7-P1104 | 4-#7-P1104 | 4-#7-P1104 | 4-#7-P1104 | 4-#7-P1104 | 4-#7-P1104 | 4-#7-P1104 | 4-#7-P1104 | 4-#7-P1104
4-#7-P1105 | 4-#7-P1105 | 4-#7-P1105 | 4-#7-P1105 | 4-#7-P1105 | 4-#7-P1105 | 4-#7-P1105 | 4-#7-P1105 | 4-#7-P1105
54-#5-P1106 | 54-#5-P1106 | 54-#5-P1106 | 54-#5-P1106 | 54-#5-P1106 | 54-#5-P1106 | 46-#5-P1106 | 38-#5-P1106 | 30-#5-P1106
68-#5-P1107 | 68-#5-P1107 | 68-#5-P1107 | 68-#5-P1107 | 68-#5-P1107 | 68-#5-P1107 | 68-#5-P1107 | 68-#5-P1107 | 68-#5-P1107
29-#5-P1108 | 33-#5-P1108 | 37-#5-P1108 | 37-#5-P1108 | 47-#5-P1108 | 98-#5-P1144 | 102-#5-P1145 | 102-#5-P1146 | 102-#5-P1147
4-#5-P1109 | 4-#5-P1109 | 4-#5-P1109 | 4-#5-P1109 | 4-#5-P1109 | 4-#5-P1109 | 4-#5-P1109 | 4-#5-P1109 | 4-#5-P1109
4-#7-P1136 | 4-#7-P1136 | 4-#7-P1136 | 4-#7-P1136 | 4-#7-P1136 | 4-#7-P1136 | 4-#7-P1136 | 4-#7-P1136 | 4-#7-P1136
8-#5-P1137 | 8-#5-P1137 | 8-#5-P1137 | 8-#5-P1137 | 8-#5-P1137 | 8-#5-P1137 | 8-#5-P1137 | —— | ——
—— | —— | 2-#7-P1138 | 2-#7-P1138 | 2-#7-P1138 | 2-#7-P1138 | 2-#7-P1136 | 2-#7-P1138 | 2-#7-P1138
30-#11-P1110 (Bundled) with 30-#11-P1111
16-#11-P1110 (Bundled) with 16-#11-P1111
6-#11-P1110 & 4-#11-P1111
1-#11-P1110 (Bundled) with 1-#11-P1111 (2 Rows) e.f.
1-#11-P1110 (Bundled) with 1-#11-P1111 e.f.
13'-8" P1110
6'-10" P1111
Elev. 464.50
Elev. 460.50
Elev. 456.50
19-#11-P1110 (Bundled) with 19-#11-P1111 (2 Rows) e.f.
Elev. 446.50
6'-10" Min. Lap, Typ.
Elev. 436.50
1-#11-P1110 (Bundled) with 1-#11-P1111 e.f. & 1-#11-P1128 (Bundled) with 1-#11-P1129 e.f.
Elev. 426.50
2-#11-P1101 (Bundled) e.f.
Elev. 416.50
Elev. 406.50
Elev. 396.50
#11-P1120 (Bundled) with #11-P1121 (2 Rows) e.f
#11-P1122 (Bundled) with #11-P1123 (2 Rows) e.f
#11-P1124 (Bundled) with #11-P1125 (2 Rows) e.f
#11-P1126 (Bundled) with #11-P1127 (2 Rows) e.f
1 9-#11-P1128 (Bundled) with 9-#11-P1129 (2 Rows) e.f.
2 12-#11-P1132 e.f.
3 20-#11-P1133 e.f.
4 8-#11-P1134 e.f.
5 12-#11-P1135 e.f.
Symmetrical abt. ℄ Bridge
20-#11-P1128 (Bundled) with 20-#11-P1129 e.f.
1-#11-P1135 e.f.
50-#11-P1135 e.f.
1-#11-P1130 (Bundled) with 1-#11-P1131 e.f.
Permissible Construction Joint
34 Sets of 2-#11-P1101 (Bundled) 12 Rows) e.f.
24 Sets of 2-#11-P1101 (Bundled) e.f.
6'-10" Min. Lap, Typ.
1-#11-P1102 e.f.
50-#11-P1102 e.f.
Construction Joint
#11-P1101 (Bundled)
Mechanical Bar Splice, Typ.
6'-10" Typ.
For Distribution Cap Reinforcing, see Sheet BR36 & BR53.
4 Footing
4 BR40 & BR57.
6 Added
10-#11-P1142 (Bundled) with 10-#11-P1143
4-#11-P1142 & 6-#11-P1143
#11-P1118 & #11-P1119
#11-P1118 (Bundled) with #11-P1119
13'-8" P1142
6'-10" P1143
13'-8" P1118
6'-10" P1119
For vertical reinforcing, see Sheet BR60.
4 Sets of "J" Bars @ 6"
4 Sets of "H" Bars @ 6"
4 Sets of "G" Bars @ 6"
4 Sets of "F" Bars @ 6"
12 Sets of "E" Bars @ 6"
20 Sets of "D" Bars @ 6"
20 Sets of "C" Bars @ 6"
30 Sets of "B" Bars @ 4"
30 Sets of "A" Bars @ 4"
"J" Bars
"H" Bars
"G" Bars
"F" Bars
"E" Bars
"D" Bars
"C" Bars
"B" Bars
"A" Bars
3 Sets of 2-#11-P1101 (Bundled) e.f.
36 Sets of 2-#11-P1101 (Bundled) (2 Rows) e.f.
Symmetrical abt. ℄ Pier
For vertical reinforcing and tie sets, see Sheet BR60.
Bundled #11 Bars
6'-10" Min. Lap
DETAIL OF LAP SPLICE AT BUNDLED #11 BARS
PART ELEVATION
PART SECTION
VIEW A-A
Notes:
Bar Marks shown are for Pier 11, using "P11" Series Bar Marks.
Pier 12 is similar, except use "P12" Series Bar Marks.
For Sections B-B, see Sheet No. BR62.
For Sections C-C, see Sheet No. BR63.
For Piers 11 & 12 dimensions, see Sheet Nos. BR25 and BR42.
For Piers 11 & 12 distribution cap, see Sheet Nos. BR36 and BR53.
BR39 and BR56. 4
footing. 4
PIERS 11 & 12 - SHAFT
Detailed JUL 2009
Checked JUL 2009
Note: This drawing is not to scale. Follow dimensions.
Sheet No. 59 of 205
\\kcsw00\jobs\46440\Bridges\Plans\Drawings\ZPLOT_B_A6500_059-205_J610984_059.dgn
08-SEP-2010 14:34
STATE OF MISSOURI HANS R. HUTTON NUMBER E-20174 REGISTERED PROFESSIONAL ENGINEER
DATE 9/10/10
ROUTE I-70 STATE MO/IL
DISTRICT 6 SHEET NO. BR59
COUNTY ST. LOUIS CITY - MO ST. CLAIR - IL
JOB NO. J610984
CONTRACT ID.
PROJECT NO.
BRIDGE NO. A6500
DESCRIPTION
DATE
5-17-10 Revised per ATC
9-3-10 Added Reinforcing Bar
MISSOURI HIGHWAYS AND TRANSPORTATION COMMISSION
105 WEST CAPITOL JEFFERSON CITY, MO 65102
1-888-ASK-MODOT (1-888-275-6636)
HNTB
715 KIRK DRIVE KANSAS CITY, MO 64105-1310
TELEPHONE (816) 472-1201
CERTIFICATE OF AUTHORITY NO. 001270
HANS R. HUTTON 081-006707 REGISTERED PROFESSIONAL ENGINEER STATE OF ILLINOIS
9-10-2010
REV.

BILL OF REINFORCING STEEL

NO. REQ'D.	MARK NO. SIZE	MARK NO. MARK	LOCATION	EPOXY (E)	SHAPE NO.	STIRRUP (S)	SUBSTR. (X)	VARIES (V)	NO. EACH	DIMENSIONS B FT.	B IN.	C FT.	C IN.	D FT.	D IN.	E FT.	E IN.	F FT.	F IN.	H FT.	H IN.	K FT.	K IN.	NOMINAL LENGTH FT.	NOMINAL LENGTH IN.	ACTUAL LENGTH FT.	ACTUAL LENGTH IN.	WEIGHT LBS.
			PIER 11																									
1064	11	P1101	Vertical		20		X			40′-8″														40′	8″	40′	8″	229,890
202	11	P1102	Vertical		20		X			30′-0″														30′	0″	30′	0″	32,197
280	7	P1103	Horizontal		86		X			20′-11″		2′-0″		3″						23″		23″		26′	2″	26′	2″	14,976
512	7	P1104	Horizontal		88		X			18′-0″		2′-0″		3″						23″		23″		23′	3″	23′	3″	24,332
512	7	P1105	Horizontal		65		X			15′-4″		2′-0″		3″						10′-10 1/8″		10′-10 1/8″		16′	11″	16′	11″	17,704
7032	5	P1106	Horizontal		3	S	X			3′-6″														4′	0″	4′	0″	29,338
13674	5	P1107	Horizontal		3	S	X			12′-0″														12′	6″	12′	6″	178,275
3904	5	P1108	Horizontal		4	S	X			5′-6″		6″												6′	6″	6′	5″	26,128
624	5	P1109	Horizontal		3	S	X			18′-0″														18′	6″	18′	6″	12,040
352	11	P1110	Vertical		2		X			22′-2″		17′-9″								9′-4 3/8″		15′-0 3/8″		39′	11″	39′	11″	74,651
348	11	P1111	Vertical		2		X			29′-0″		10′-11″								5′-9 3/8″		9′-3 1/8″		39′	11″	39′	11″	73,803
32	11	P1112	Vertical		20		X			18′-6″														18′	6″	18′	6″	3,145
32	11	P1113	Vertical		20		X			25′-4″														25′	4″	25′	4″	4,307
16	11	P1114	Vertical		20		X			12′-0″														12′	0″	12′	0″	1,020
16	11	P1115	Vertical		20		X			18′-10″														18′	10″	18′	10″	1,601
32	11	P1116	Vertical		20		X			15′-3″														15′	3″	15′	3″	2,593
32	11	P1117	Vertical		20		X			22′-1″														22′	1″	22′	1″	3,755
60	11	P1118	Vertical		20		X			15′-4″														15′	4″	15′	4″	4,888
60	11	P1119	Vertical		20		X			8′-6″														8′	6″	8′	6″	2,710
8	11	P1120	Vertical		20		X			22′-8″														22′	8″	22′	8″	963
8	11	P1121	Vertical		20		X			29′-6″														29′	6″	29′	6″	1,254
8	11	P1122	Vertical		20		X			23′-7″														23′	7″	23′	7″	1,002
8	11	P1123	Vertical		20		X			30′-5″														30′	5″	30′	5″	1,293
8	11	P1124	Vertical		20		X			24′-6″														24′	6″	24′	6″	1,041
8	11	P1125	Vertical		20		X			31′-4″														31′	4″	31′	4″	1,332
8	11	P1126	Vertical		20		X			25′-6″														25′	6″	25′	6″	1,084
8	11	P1127	Vertical		20		X			32′-4″														32′	4″	32′	4″	1,374
156	11	P1128	Vertical		20		X			26′-3″														26′	3″	26′	3″	21,757
156	11	P1129	Vertical		20		X			33′-1″														33′	1″	33′	1″	27,420
16	11	P1130	Vertical		20		X			16′-0″														16′	0″	16′	0″	1,360
16	11	P1131	Vertical		20		X			22′-10″														22′	10″	22′	10″	1,941
48	11	P1132	Vertical		20		X			16′-10″		13′-7 7/8″		6		Added 6						6 31′-1 1/8″		16′	10″	16′	10″	4,293
80	11	P1133	Vertical	6	23 20		X			27′-9″		11′-4″		6′-2″		4′-4 3/8″		4′-4 3/8″		9′-7 1/4″		9′-7 1/4″		27′	9″	27′	9″	11,795
32	11	P1134	Vertical		20		X			13′-9″												6 13,212		13′	9″	13′	9″	2,338
250	11	P1135	Vertical		23		X			13′-7″		11′-4″		16′-2″		11′-5 1/8″		11′-5 1/8″		9′-7 1/4″		9′-7 1/4″		41′	1″	41′	1″	54,569
620	7	P1136	Horizontal		4	S	X			46′-1″		2′-0″												48′	10″	48′	8″	61,674
960	5	P1137	Horizontal		3	S	X			6′-8″														7′	2″	7′	2″	7,176
190	7	P1138	Horizontal		5		X			39′-7″		2′-0″		2′-0″										43′	7″	43′	3″	16,797
232	5	P1139	Vertical		5		X			2′-0″		3′-2″		3′-2″										8′	4″	8′	1″	1,956
80	5	P1140	Horizontal		5		X			2′-0″		9′-10″		9′-10″										21′	8″	21′	5″	1,787
40	5	P1141	Horizontal		5		X			2′-0″		5′-10″		5′-10″										13′	8″	13′	5″	560
28	11	P1142	Vertical		20		X			16′-4″														16′	4″	16′	4″	2,430
32	11	P1143	Vertical		20		X			9′-6″														9′	6″	9′	6″	1,615
392	5	P1144	Horizontal		3	S	X			5′-8″														6′	2″	6′	2″	2,521
408	5	P1145	Horizontal		3	S	X			7′-8″														8′	2″	8′	2″	3,475
408	5	P1146	Horizontal		3	S	X			9′-8″														10′	2″	10′	2″	4,326
408	5	P1147	Horizontal		3	S	X			11′-8″														12′	2″	12′	2″	5,177
128	5	P1148	Horizontal		5		X			16″		3′-2″		3′-2″										7′	8″	7′	5″	990
64	7	P1149	Horizontal		4	S	X			17″		2′-0″												4′	2″	4′	0″	523
104	6	P1150	Horizontal		5		X			21′-4″		3′-7″		3′-7″										28′	6″	28′	3″	4,413
38	8	P1151	Vertical		53	S	X			2′-11″		8′-3″												24′	1″	23′	6″	2,384
76	8	P1152	Vertical		53	S	X			3′-6″		8′-3″												25′	3″	24′	8″	5,005
38	8	P1153	Vertical		13	S	X			2′-0″		8′-4″		3′-3″		8′-3″								23′	7″	23′	0″	2,334
24	11	P1154	Horizontal		20		X			14′-6″														14′	6″	14′	6″	1,849
46	10	P1155	Horizontal		17		X			40′-1″														41′	6″	41′	6″	8,214
23	10	P1156	Horizontal		20		X			60′-0″														60′	0″	60′	0″	5,938

BILL OF REINFORCING STEEL

NO. REQ'D.	MARK NO. SIZE	MARK NO. MARK	LOCATION	EPOXY (E)	SHAPE NO.	STIRRUP (S)	SUBSTR. (X)	VARIES (V)	NO. EACH	DIMENSIONS B FT.	B IN.	C FT.	C IN.	D FT.	D IN.	E FT.	E IN.	F FT.	F IN.	H FT.	H IN.	K FT.	K IN.	NOMINAL LENGTH FT.	NOMINAL LENGTH IN.	ACTUAL LENGTH FT.	ACTUAL LENGTH IN.	WEIGHT LBS.
			PIER 11—CONT'D																									
1312	11	T1101	Vertical		20		X			30′-4″														30′	4″	30′	4″	211,443
136	11	T1102	Vertical		20		X			16′-6″														16′	6″	16′	6″	11,922
288	11	T1103	Vertical		20		X			23′-4″														23′	4″	23′	4″	35,703
1800	5	T1104	Horizontal		4	S	X			11′-9″		6″												12′	9″	12′	8″	23,780
900	5	T1105	Horizontal		4	S	X			21′-8″		6″												22′	8″	22′	7″	21,199
3572	6	T1106	Horizontal		53	S	X			20″		21′-8″												48′	0″	47′	7″	255,291
2624	6	T1107	Horizontal		53	S	X			20″		11′-9″												28′	2″	27′	9″	109,370
72	6	T1108	Horizontal		53	S	X			20″		9′-2″												23′	0″	22′	7″	2,442
25732	5	T1109	Horizontal		4	S	X			20″		6″												2′	8″	2′	7″	69,333
40	11	T1110	Vertical		20		X			25′-8″														25′	8″	25′	8″	5,455
64	7	T1111	Vertical		20		X			12′-0″														12′	0″	12′	0″	1,570
4	11	T1112	Vertical		20		X			38′-7″														38′	7″	38′	7″	820
16	11	T1113	Vertical		20		X			23′-11″														23′	11″	23′	11″	2,033
24	11	T1114	Vertical		20		X			30′-11″														30′	11″	30′	11″	3,942
144	11	T1115	Vertical		20		X			23′-6″														23′	6″	23′	6″	17,979
640	5	T1116	Horizontal		4	S	X			2′-2″		6″												3′	2″	3′	1″	2,058
1860	11	T1117	Vertical		20		X			37′-3″														37′	3″	37′	3″	368,111
156	11	T1118	Vertical		20		X			30′-2″														30′	2″	30′	2″	25,003
8	11	T1120	Vertical		20		X			7′-0″														7′	0″	7′	0″	298
8	11	T1121	Vertical		20		X			8′-3″														8′	3″	8′	3″	351
8	11	T1122	Vertical		20		X			15′-9″														15′	8″	15′	8″	666
4	11	T1123	Vertical		20		X			34′-5″														34′	5″	34′	5″	731
8	11	T1124	Vertical		20		X			18′-7″														18′	7″	18′	7″	790
8	11	T1125	Vertical		20		X			20′-10″														20′	10″	20′	10″	886
4	11	T1126	Vertical		20		X			14′-4″														14′	4″	14′	4″	305
4	11	T1127	Vertical		20		X			12′-6″														12′	6″	12′	6″	266
324	11	T1128	Vertical		20		X			38′-9″														38′	9″	38′	9″	66,705
12	11	T1129	Vertical		20		X			10′-2″														10′	2″	10′	2″	648
4	11	T1130	Vertical		20		X			18′-9″														18′	9″	18′	9″	398
4	11	T1131	Vertical		20		X			8′-11″														8′	11″	8′	11″	189
4	11	T1132	Vertical		20		X			21′-7″														21′	7″	21′	7″	459
16	11	T1133	Vertical		20		X			8′-6″														8′	6″	8′	6″	723
8	11	T1134	Vertical		20		X			7′-10″														7′	10″	7′	10″	333
192	6	T1135	Horizontal		53	S	X			20″		3′-6″												11′	8″	11′	3″	3,244
192	6	T1136	Horizontal		53	S	X			20″		6′-1″												16′	10″	16′	5″	4,734
608	6	T1137	Horizontal		53	S	X			20″		4′-5″												13′	8″	13′	3″	12,100
96	6	T1138	Horizontal		53	S	X			20″		5′-7″												15′	10″	15′	6″	2,223
536	6	T1139	Horizontal		53	S	X			20″		5′-1″												14′	10″	14′	5″	11,606
720	6	T1140	Horizontal		47	S	X			5′-7″		20″												10′	3″	10′	0″	10,814
324	11	T1141	Vertical		20		X			47′-9″														47′	9″	47′	9″	82,197
16	11	T1142	Vertical		20		X			4′-11″														4′	11″	4′	11″	418
8	11	T1143	Vertical		20		X			4′-6″														4′	6″	4′	6″	191
16	11	T1144	Vertical		20		X			4′-7″														4′	7″	4′	7″	390
56	11	T1145	Vertical		20		X			4′-4″														4′	4″	4′	4″	1,289
48	11	T1146	Vertical		20		X			4′-2″														4′	2″	4′	2″	1,063
8	11	T1147	Vertical		20		X			42′-1″														42′	1″	42′	1″	1,789
4	11	T1148	Vertical		20		X			42′-10″														42′	10″	42′	10″	910
96	11	T1149	Vertical		20		X			4′-3″														4′	3″	4′	3″	2,168
316	11	T1150	Vertical		20		X			44′-0″														44′	0″	44′	0″	73,872
8	6	T1151	Horizontal		4	S	X			32′-4″		12″												34′	0″	33′	11″	406
36	6	T1152	Horizontal		15		X			2′-7″		12′-2″		2′-7″		2′-6 5/8″		4 3/4″		2′-6 5/8″		4 3/4″		17′	4″	17′	4″	937
24	6	T1153	Horizontal		4	S	X	V	8	31′-8″		12″												33′	4″	33′	3″	1,206
			Increment = 2 1/8″							32′-1″		12″												33′	9″	33′	8″	
10	6	T1154	Horizontal		4	S	X			11′-5″		12″												13′	1″	13′	0″	195
250	6	T1155	Horizontal		4	S	X	V	10	5′-0″		12″												6′	8″	6′	7″	3,630
			Increment = 3 1/8″							11′-2″		12″												12′	10″	12′	9″	
12	6	T1156	Horizontal		53	S	X	V	4	20″		16′-7″												37′	10″	37′	5″	683
			Increment = 6″							20″		17′-1″												38′	10″	38′	5″	
32	6	T1157	Horizontal		4	S	X	V	8	29′-10″		12″												31′	6″	31′	5″	1,528
			Increment = 3″							30′-7″		12″												32′	3″	32′	2″	
16	6	T1158	Horizontal		53	S	X	V	4	20″		14′-6″												33′	8″	33′	3″	817
			Increment = 6″							20″		15′-3″												35′	2″	34′	9″	
24	6	T1159	Horizontal		4	S	X	V	8	28′-1″		12″												29′	9″	29′	8″	1,077
			Increment = 2 5/8″							28′-6 3/4″		12″												30′	3″	30′	1″	
16	6	T1160	Horizontal		53	S	X	V	4	20″		12′-9″												30′	2″	29′	9″	733
			Increment = 6″							20″		13′-6″												31′	8″	31′	3″	

Notes:
For Bar Bending Diagram, see Sheet No. BR184.

BILL OF REINFORCING STEEL

Detailed JUL 2009
Checked JUL 2009

Note: This drawing is not to scale. Follow dimensions.

Sheet No. 185 of 205

\\kcow00\jobs\46440\Bridges\Plans\Drawings\ZPLOT_B_A6500_185-205_J610984_185.dgn

08-SEP-2010 14:34

STATE OF MISSOURI
HANS R. HUTTON
NUMBER E-26174
REGISTERED PROFESSIONAL ENGINEER
Hans R. Hutton

DATE 9/10/10
ROUTE I-70
STATE MO/IL
DISTRICT 6
SHEET NO. BR185
COUNTY ST. LOUIS CITY - MO / ST. CLAIR - IL
JOB NO. J610984
CONTRACT ID.
PROJECT NO.
BRIDGE NO. A6500

REV.	DESCRIPTION	DATE
A	Revised Reinforcing Steel	9-3-10

MISSOURI HIGHWAYS AND TRANSPORTATION COMMISSION
105 WEST CAPITOL
JEFFERSON CITY, MO 65102
1-888-ASK-MODOT (1-888-275-6636)

HNTB
715 KIRK DRIVE
KANSAS CITY, MO 64105-1310
TELEPHONE (816) 472-1201
CERTIFICATE OF AUTHORITY NO. 001270

STATE OF ILLINOIS
LICENSED STRUCTURAL ENGINEER
HANS R. HUTTON
081-006707
expires 11-30-2010
Hans R. Hutton
9-10-2010
date

BILL OF REINFORCING STEEL

NO. REQ'D.	MARK NO. SIZE	MARK NO. MARK	LOCATION	EPOXY (E)	SHAPE NO.	STIRRUP (S)	SUBSTR. (X)	VARIES (V)	NO. EACH	DIMENSIONS B FT.	B IN.	C FT.	C IN.	D FT.	D IN.	E FT.	E IN.	F FT.	F IN.	H FT.	H IN.	K FT.	K IN.	NOMINAL LENGTH FT.	NOMINAL LENGTH IN.	ACTUAL LENGTH FT.	ACTUAL LENGTH IN.	WEIGHT LBS.
			PIER 11–CONT'D																									
88		6T1161	Horizontal		4	S	X	V	8	24′	-2″		12″											25′	-10″	25′	-9″	3,574
			Increment = $3\frac{1}{4}$″							26′	-9″		12″											28′	-5″	28′	-4″	
48		1T1162	Vertical		20		X			4′	-1″													4′	-1″	4′	-1″	1,041
24		1T1163	Vertical		20		X			3′	-11″													3′	-11″	3′	-11″	499
20		1T1164	Vertical		20		X			11′	-3″													11′	-3″	11′	-3″	1,195
8		1T1165	Vertical		20		X			10′	-7″													10′	-7″	10′	-7″	450
152		1T1166	Vertical		20		X			18′	-11″													18′	-11″	18′	-11″	15,277
204		1T1167	Vertical		20		X			13′	-10″													13′	-10″	13′	-10″	14,993
4		6T1168	Horizontal		4	S	X			23′	-11″		12″											25′	-7″	25′	-8″	153
4		6T1169	Horizontal		4	S	X			23′	-9″		12″											25′	-5″	25′	-4″	152
4		6T1170	Vertical		20		X			2′	-11″													2′	-11″	2′	-11″	18
4		6T1171	Vertical		20		X			6′	-3″													6′	-3″	6′	-3″	38
4		6T1172	Vertical		20		X			9′	-7″													9′	-7″	9′	-7″	58
4		6T1173	Vertical		20		X			12′	-11″													12′	-11″	12′	-11″	78
4		6T1174	Vertical		20		X			15′	-5″													15′	-5″	15′	-5″	93
4		6T1175	Vertical		20		X			18′	-9″													18′	-9″	18′	-9″	113
4		6T1176	Vertical		20		X			22′	-1″													22′	-1″	22′	-1″	133
6		6T1177	Vertical		20		X			25′	-2″													25′	-2″	25′	-2″	227
101		6T1178	Horizontal		4	S	X			21′	-8″		12″											23′	-4″	23′	-3″	3,527
20		6T1179	Horizontal		5		X			21′	-8″		12″		12″									23′	-8″	23′	-6″	703
72		6T1180	Vertical		20		X			8′	-8″													8′	-8″	8′	-8″	937
104		6T1181	Vertical		5		X				18″		2′	-7″	2′	-7″								6′	-8″	6′	-5″	1,002
12		6T1182	Vertical		5		X				18″		2′	-7″	6′	-1″								10′	-2″	9′	-11″	179
18		6T1183	Vertical		5		X			3′	-7″		2′	-7″	2′	-7″								8′	-9″	8′	-6″	230
36		1T1184	Vertical		20		X			25′	-1″													25′	-1″	25′	-1″	4,798
28		6T1185	Horizontal		4	S	X			5′	-1″		12″											6′	-9″	6′	-8″	280
28		6T1186	Horizontal		4	S	X			4′	-6″		12″											6′	-2″	6′	-1″	256
16		6T1187	Horizontal		4	S	X			11′	-9″		12″											13′	-5″	13′	-4″	320
72		5T1188	Top & Bottom		5		X			8′	-8″		11″		11″									10′	-6″	10′	-3″	770
26		5T1189	Top & Bottom		5		X			17′	-4″		11″		11″									19′	-2″	18′	-11″	513
6		5T1190	Top		5		X			5′	-11″		11″		11″									7′	-9″	7′	-6″	47
6		5T1191	Bottom		5		X			5′	-11″		15″		11″									8′	-1″	7′	-10″	49
3		5T1192	Top		5		X			11′	-2″		11″		11″									13′	-0″	12′	-9″	40
3		5T1193	Bottom		5		X			11′	-2″		23″		11″									14′	-0″	13′	-9″	43
5		5T1194	Top		5		X				15″		11″		11″									3′	-1″	2′	-10″	15
5		5T1195	Bottom		5		X				15″		16″		11″									3′	-6″	3′	-3″	17
5		5T1196	Top		5		X			4′	-1″		11″		11″									5′	-11″	5′	-8″	30
5		5T1197	Bottom		5		X			4′	-1″		16″		11″									6′	-4″	6′	-1″	32
3		5T1198	Top		5		X			8′	-7″		11″		11″									10′	-5″	10′	-2″	32
3		5T1199	Bottom		5		X			8′	-7″		15″		11″									10′	-9″	10′	-6″	33
3		5T11100	Top		5		X			2′	-5″		11″		11″									4′	-3″	4′	-0″	13
3		5T11101	Bottom		5		X			2′	-5″		23″		15″									5′	-7″	5′	-4″	17
12		5T11102	Top		5		X			2′	-8″		11″		11″									4′	-6″	4′	-3″	53
12		5T11103	Bottom		5		X			2′	-8″		16″		11″									4′	-11″	4′	-8″	58
6		5T11104	Top		5		X			2′	-10″		11″		11″									4′	-8″	4′	-5″	28
6		5T11105	Bottom		5		X			2′	-10″		23″		11″									5′	-8″	5′	-5″	34
6		5T11106	Horizontal		5		X			3′	-7″	2′	-10″	2′	-10″									9′	-3″	9′	-0″	56
4		5T11107	Horizontal		5		X			3′	-1″	2′	-10″	2′	-10″									8′	-9″	8′	-6″	35
12		5T11108	Horizontal		20		X			5′	-0″													5′	-0″	5′	-0″	63
4		5T11109	Horizontal		2		X			4′	-0″		9″						$6\frac{1}{2}$″		$6\frac{1}{2}$″			4′	-9″	4′	-9″	20
76		8T11110	Vertical		5		X				22″	6′	-8″	6′	-8″									15′	-2″	14′	-9″	2,993
152		8T11111	Vertical		5		X			3′	-2″	6′	-8″	6′	-8″									16′	-6″	16′	-1″	6,527
76		8T11112	Vertical		5		X			2′	-5″	6′	-8″	6′	-8″									15′	-9″	15′	-4″	3,111
64		1T11113	Horizontal		20		X			14′	-6″													14′	-6″	14′	-6″	4,930
2		6T11114	Spiral		35		X			3′	-6″		5″	14′	-7″									405′	-9″	405′	-9″	1,219
24		7T11115	Vertical		5		X				18″	3′	-0″	3′	-0″									7′	-6″	7′	-2″	352
2		5T11116	Trans. Brg.		20		X			6′	-7″													6′	-7″	6′	-7″	14
14		5T11117	Trans. Brg.		15		X			2′	-5″	3′	-10″	2′	-5″	$20\frac{1}{2}$″		$20\frac{1}{2}$″		$20\frac{1}{2}$″		8′	-8″	8′	-8″	127
10		5T11118	Trans. Brg.		2		X			7′	-8″	2′	-5″					$21\frac{1}{2}$″		$21\frac{1}{2}$″		10′	-2″	10′	-2″	106
14		4T11119	Horizontal		20		X			4′	-6″													4′	-6″	4′	-6″	42
20		4T11120	Horizontal		5		X			3′	-2″		14″		14″									5′	-6″	5′	-4″	71
10		6T11121	Horizontal		4	S	X			11′	-8″		12″											13′	-4″	13′	-3″	199
36		6T11122	Horizontal		15		X			2′	-7″	11′	-9″	2′	-7″	2′	-6$\frac{5}{8}$″	4$\frac{3}{4}$″	2′	-5$\frac{3}{8}$″	4$\frac{3}{4}$″	16′	-11″	16′	-11″	915
8		WW1101	Spiral		22		X				18″		9$\frac{1}{8}$″											26′	-1″	26′	-1″	35

BILL OF REINFORCING STEEL

NO. REQ'D.	MARK NO. SIZE	MARK NO. MARK	LOCATION	EPOXY (E)	SHAPE NO.	STIRRUP (S)	SUBSTR. (X)	VARIES (V)	NO. EACH	DIMENSIONS B FT.	B IN.	C FT.	C IN.	D FT.	D IN.	E FT.	E IN.	F FT.	F IN.	H FT.	H IN.	K FT.	K IN.	NOMINAL LENGTH FT.	NOMINAL LENGTH IN.	ACTUAL LENGTH FT.	ACTUAL LENGTH IN.	WEIGHT LBS.
			PIER 12																									
1064		11P1201	Vertical		20		X			40′	-8″													40′	-8″	40′	-8″	229,890
202		11P1202	Vertical		20		X			30′	-0″													30′	-0″	30′	-0″	32,197
280		7P1203	Horizontal		88		X			20′	-11″	2′	-0″	3″						23″		23″		26′	-2″	26′	-2″	14,976
512		7P1204	Horizontal		88		X			18′	-0″	2′	-0″	3″						23″		23″		23′	-3″	23′	-3″	24,332
512		7P1205	Horizontal		65		X			15′	-4″	2′	-0″	3″						10′	-10$\frac{1}{8}$″	10′	-10$\frac{1}{8}$″	16′	-11″	16′	-11″	17,704
7032		5P1206	Horizontal		3	S	X			3′	-6″													4′	-0″	4′	-0″	29,338
13674		5P1207	Horizontal		3	S	X			12′	-0″													12′	-6″	12′	-6″	178,275
3904		5P1208	Horizontal		4	S	X			5′	-6″		6″											6′	-6″	6′	-6″	26,128
624		5P1209	Horizontal		3	S	X			18′	-0″													18′	-6″	18′	-6″	12,040
352		11P1210	Vertical		2		X			22′	-2″	17′	-9″							9′	-4$\frac{7}{8}$″	15′	-0$\frac{3}{8}$″	39′	-11″	39′	-11″	74,651
348		11P1211	Vertical		2		X			29′	-0″	10′	-11″							5′	-9$\frac{3}{8}$″	9′	-3$\frac{1}{4}$″	39′	-11″	39′	-11″	73,803
32		11P1212	Vertical		20		X			18′	-6″													18′	-6″	18′	-6″	3,145
32		11P1213	Vertical		20		X			25′	-4″													25′	-4″	25′	-4″	4,307
16		11P1214	Vertical		20		X			12′	-0″													12′	-0″	12′	-0″	1,020
16		11P1215	Vertical		20		X			18′	-10″													18′	-10″	18′	-10″	1,601
32		11P1216	Vertical		20		X			15′	-3″													15′	-3″	15′	-3″	2,593
32		11P1217	Vertical		20		X			22′	-1″													22′	-1″	22′	-1″	3,755
60		11P1218	Vertical		20		X			15′	-4″													15′	-4″	15′	-4″	4,888
60		11P1219	Vertical		20		X			8′	-6″													8′	-6″	8′	-6″	2,710
8		11P1220	Vertical		20		X			22′	-8″													22′	-8″	22′	-8″	963
8		11P1221	Vertical		20		X			29′	-6″													29′	-6″	29′	-6″	1,254
8		11P1222	Vertical		20		X			23′	-7″													23′	-7″	23′	-7″	1,002
8		11P1223	Vertical		20		X			30′	-5″													30′	-5″	30′	-5″	1,293
8		11P1224	Vertical		20		X			24′	-6″													24′	-6″	24′	-6″	1,041
8		11P1225	Vertical		20		X			31′	-4″													31′	-4″	31′	-4″	1,332
8		11P1226	Vertical		20		X			25′	-6″													25′	-6″	25′	-6″	1,084
8		11P1227	Vertical		20		X			32′	-4″													32′	-4″	32′	-4″	1,374
156		11P1228	Vertical		20		X			26′	-3″													26′	-3″	26′	-3″	21,757
156		11P1229	Vertical		20		X			33′	-1″													33′	-1″	33′	-1″	27,420
16		11P1230	Vertical		20		X			16′	-0″													16′	-0″	16′	-0″	1,360
16		11P1231	Vertical		20		X			22′	-10″													22′	-10″	22′	-10″	1,941
48		11P1232	Vertical		20		X			16′	-10″	13′	-7″	6	Added 6					6	31′	-1″		16′	-10″	16′	-10″	4,293
80		11P1233	Vertical	6	23 20		X			27′	-9″	11′	-4″	6′	-2″	4′	-4$\frac{3}{4}$″	4′	-4$\frac{3}{4}$″	9′	-7$\frac{1}{4}$″	9′	-7$\frac{1}{4}$″	27′	-9″	27′	-9″	11,795
32		11P1234	Vertical		20		X			13′	-9″											13	212	13′	-9″	13′	-9″	2,338
250		11P1235	Vertical		23		X			13′	-7″	11′	-4″	16′	-2″	11′	-5$\frac{1}{8}$″	11′	-5$\frac{1}{8}$″	9′	-7$\frac{1}{4}$″	9′	-7$\frac{1}{4}$″	41′	-1″	41′	-1″	54,569
620		7P1236	Horizontal		4	S	X			46′	-1″	2′	-0″											48′	-10″	48′	-8″	61,674
960		5P1237	Horizontal		3	S	X			6′	-8″													7′	-2″	7′	-2″	7,176
190		7P1238	Horizontal		5		X			39′	-7″	2′	-0″	2′	-0″									43′	-7″	43′	-3″	16,797
232		5P1239	Vertical		5		X			2′	-0″	3′	-2″	3′	-2″									8′	-4″	8′	-1″	1,956
80		5P1240	Horizontal		5		X			2′	-0″	9′	-0″	9′	-10″									21′	-8″	21′	-5″	1,787
40		5P1241	Horizontal		5		X			2′	-0″	5′	-10″	5′	-10″									13′	-8″	13′	-5″	560
28		11P1242	Vertical		20		X			16′	-4″													16′	-4″	16′	-4″	2,430
32		11P1243	Vertical		20		X			9′	-6″													9′	-6″	9′	-6″	1,615
392		5P1244	Horizontal		3	S	X			5′	-8″													6′	-2″	6′	-2″	2,521
408		5P1245	Horizontal		3	S	X			7′	-8″													8′	-2″	8′	-2″	3,475
408		5P1246	Horizontal		3	S	X			9′	-8″													10′	-2″	10′	-2″	4,326
408		5P1247	Horizontal		3	S	X			11′	-8″													12′	-2″	12′	-2″	5,177
128		5P1248	Horizontal		5		X				16″	3′	-2″	3′	-2″									7′	-8″	7′	-5″	990
64		7P1249	Horizontal		4	S	X				17″	2′	-0″											4′	-2″	4′	-0″	523
104		6P1250	Horizontal		5		X			21′	-4″	3′	-7″	3′	-7″									28′	-6″	28′	-3″	4,413
38		8P1251	Vertical		53	S	X			2′	-11″	8′	-3″											24′	-1″	23′	-6″	2,384
76		8P1252	Vertical		53	S	X			3′	-6″	8′	-3″											25′	-3″	24′	-8″	5,005
38		8P1253	Vertical		13	S	X			2′	-0″	8′	-4″	3′	-3″	8′	-3″							23′	-7″	23′	-0″	2,334
24		11P1254	Horizontal		20		X			14′	-6″													14′	-6″	14′	-6″	1,849
46		10P1255	Horizontal		17		X			40′	-1″													41′	-6″	41′	-6″	8,214
23		10P1256	Horizontal		20		X			60′	-0″													60′	-0″	60′	-0″	5,938

Notes:
For Bar Bending Diagram, see Sheet No. BR184.

BILL OF REINFORCING STEEL

Detailed JUL 2009
Checked JUL 2009

Note: This drawing is not to scale. Follow dimensions.

Sheet No. 186 of 205

\\kcow00\jobs\46440\Bridges\Plans\Drawings\ZPLOT_B_A6500_186-205_J610984_186.dgn

08-SEP-2010 14:34

STATE OF MISSOURI
HANS R. HUTTON
NUMBER E-29714
REGISTERED PROFESSIONAL ENGINEER
Hans R. Hutton

DATE 9/10/10
ROUTE I-70
STATE MO/IL
DISTRICT 6
SHEET NO. BR186
COUNTY ST. LOUIS CITY - MO ST. CLAIR - IL
JOB NO. J610984
CONTRACT ID.
PROJECT NO.
BRIDGE NO. A6500

REV.	DESCRIPTION	DATE
A	Revised Reinforcing Steel	9-3-10

MISSOURI HIGHWAYS AND TRANSPORTATION COMMISSION
MoDOT
105 WEST CAPITOL
JEFFERSON CITY, MO 65102
1-888-ASK-MODOT (1-888-275-6636)

HNTB
715 KIRK DRIVE
KANSAS CITY, MO 64105-1310
TELEPHONE (816) 472-1201
CERTIFICATE OF AUTHORITY NO. 001270

LICENSED STRUCTURAL ENGINEER
HANS R. HUTTON
081-006707
STATE OF ILLINOIS
Hans R. Hutton
Signature
9-10-2010
Date

BILL OF REINFORCING STEEL (4) (5)

NO. REQ'D.	MARK NO. SIZE	MARK NO. MARK	LOCATION	EPOXY (E)	SHAPE NO.	STIRRUP (S)	SUBSTR. (X)	VARIES (V)	NO. EACH	DIMENSIONS B FT.	B IN.	C FT.	C IN.	D FT.	D IN.	E FT.	E IN.	F FT.	F IN.	H FT.	H IN.	K FT.	K IN.	NOMINAL LENGTH FT.	NOMINAL LENGTH IN.	ACTUAL LENGTH FT.	ACTUAL LENGTH IN.	WEIGHT LBS.
			CAST-IN-PLACE SLAB-CONT'D																									
8		6S049	Slab	E	23					4′-4″		2′-9″		4′-4″		3′-0¾″		3′-0¾″		3′-0¾″		3′-0¾″		11′-5″		11′-5″		137
8		6S050	Slab	E	5					6″		4′-9″		4′-9″										10′-0″		9′-9″		117
168		5S052	Slab	E	19					2′-1″		10″												2′-11″		2′-10″		496
40		5S053	Slab	E	27					10″		15″		10″		10″				2⅛″		14½″		3′-9″		3′-6″		146
80		5S054	Slab	E	27			V	4	10″		15″		10″		10″				2⅛″		14½″		3′-9″		3′-6″		292
			Increment = 0							10″		15″		10″		10″				0.0000		15″		3′-9″		3′-6″		
48		5S055	Slab	E	39					2′-1″		10″		10″										3′-9″		3′-6″		175
6		6S056	Slab	E	5					6″		7′-2″		7′-2″										14′-10″		14′-7″		131
4		6S057	Slab	E	75					13″		9″		2′-0″		9½″		9½″						6′-11″		6′-8″		40
			MEDIAN BARRIER CURB																									
6108		5M1	Median Barrier	E	2					3′-5″		5″								4½″		½″		3′-10″		3′-10″		24,421
10		5M2	Median Barrier	E	23					11′-10″		20′-0″		9′-10″		3″		9′-10″		3½″		11′-10″		41′-8″		41′-8″		435
260		5M3	Median Barrier	E	20					41′-11″														41′-11″		41′-11″		11,367
20		5M4	Median Barrier	E	20					27′-10″														27′-10″		27′-10″		581
20		5M5	Median Barrier	E	20					28′-3″														28′-3″		28′-3″		589
20		5M6	Median Barrier	E	20					28′-8″														28′-8″		28′-8″		598
320		5M7	Median Barrier	E	20					43′-2″														43′-2″		43′-2″		14,407
12		5M8	Median Barrier	E	20					10′-2″														10′-2″		10′-2″		127
10		5M9	Median Barrier	E	20					41′-8″														41′-8″		41′-8″		435
20		5M10	Median Barrier	E	2					3′-5″		17″								16⅝″		3⅝″		4′-10″		4′-10″		101
40		5M11	Median Barrier	E	2			V	2	3′-5″		5″								4⅝″		⅝″		3′-10″		3′-10″		181
			Increment = ⅝″							3′-5″		17″								16⅝″		3⅝″		4′-10″		4′-10″		
			BRIDGE RAILING																									
1248		5R1	Bridge Rail	E	23					11″		6½″		11″		8½″		7″		8½″		7″		2′-5″		2′-5″		3,146
20		5R2	Bridge Rail	E	20					41′-8″														41′-8″		41′-8″		869
312		5R3	Bridge Rail	E	20					41′-11″														41′-11″		41′-11″		13,640
24		5R4	Bridge Rail	E	20					27′-10″														27′-10″		27′-10″		697
24		5R5	Bridge Rail	E	20					13′-9″														13′-9″		13′-9″		344
24		5R6	Bridge Rail	E	20					14′-2″														14′-2″		14′-2″		355
24		5R7	Bridge Rail	E	20					28′-8″														28′-8″		28′-8″		718
384		5R8	Bridge Rail	E	20					43′-2″														43′-2″		43′-2″		17,289
12		5R9	Bridge Rail	E	20					20′-8″														20′-8″		20′-8″		259
20		5R10	Bridge Rail	E	23			V	4	11′-10″		20′-0″		9′-10″		7/8″		9′-9⅛″		5/8″		11′-10″		41′-8″		41′-8″		869
			Increment = 0							11′-10″		20′-0″		9′-10″		3⅜″		9′-10″		4½″		11′-9⅛″		41′-8″		41′-8″		
40		5R11	Bridge Rail	E	19					3′-4″		5″												3′-9″		3′-8″		153
40		5R12	Bridge Rail	E	2					3′-5″		5″								4¼″		⅛″		3′-10″		3′-10″		150
80		5R13	Bridge Rail	E	19			V	4	3′-4″		5″												3′-9″		3′-8″		327
			Increment = ⅛″							3′-4″		11″												4′-3″		4′-2″		
80		5R14	Bridge Rail	E	2			V	4	3′-5″		5″								4¼″		⅛″		3′-10″		3′-10″		337
			Increment = ¼″							3′-4″		11″								13″		⅛″		4′-3″		4′-3″		
96		5R15	Bridge Rail	E	19					3′-4″		11″												4′-3″		4′-2″		417
84		5R16	Light Blister	E	75					13″		14″		18″		9½″		9½″						6′-4″		6′-1″		533
			TOTALS																									
	2																											70
	2			E																								206
	4																											226
	4			E																								208
	5																											784,728
	5			E																								156,163
	6																											1,072,500
	6			E																								2,300,702
	7																											275,856
	7			E																								130,111
	8																											44,708
	8			E																								2,286
	10																											28,304
	11																											3,783,554
	11			E																								140,424
	18																									(6) 3,783,554		(3,780,720)
	18			E																								145,005
			TOTALS																							(6) 9,277,610		(9,274,776)
			TOTALS	E																								2,875,105

BILL OF REINFORCING STEEL (4) (5)

NO. REQ'D.	MARK NO. SIZE	MARK NO. MARK	LOCATION	EPOXY (E)	SHAPE NO.	STIRRUP (S)	SUBSTR. (X)	VARIES (V)	NO. EACH	DIMENSIONS B FT.	B IN.	C FT.	C IN.	D FT.	D IN.	E FT.	E IN.	F FT.	F IN.	H FT.	H IN.	K FT.	K IN.	NOMINAL LENGTH FT.	NOMINAL LENGTH IN.	ACTUAL LENGTH FT.	ACTUAL LENGTH IN.	WEIGHT LBS.
			REINFORCING STEEL (BRIDGES)																									
	2																											70
	4																											226
	5																											784,728
	6																											962,539
	7																											275,856
	8																											44,708
	10																											28,304
	11																									(6) 3,080,632		(3,077,798)
	18																											310,896
			TOTALS																							(6) 5,487,959		(5,485,125)
			REINFORCING STEEL (EPOXY COATED)																									
	2			E																								206
	4			E																								208
	6			E																								13,385
	7			E																								57,781
	8			E																								2,286
	11			E																								140,424
	18			E																								145,005
			TOTALS	E																								359,295
			PIERS 11 AND 12 FOUNDATIONS																									
	6																											109,961
	11																											702,922
	18																											2,976,768
			TOTALS																									3,789,651
			PRECAST PRESTRESSED SLAB PANELS																									
	5			E																								62,808
	6			E																								2,287,317
	7			E																								72,330
			TOTALS	E																								2,422,455
			BRIDGE RAILING AND MEDIAN BARRIER CURB																									
	5			E																								93,355

(5) Notes:
For Bar Bending Diagram, see Sheet No. BR184.
Two additional #5-M8 are included in Bill of Reinforcing Steel for testing.

BILL OF REINFORCING STEEL

Detailed JUL 2009
Checked JUL 2009

Note: This drawing is not to scale. Follow dimensions.

Sheet No. 203 of 205

\\kcow00\jobs\46440\Bridges\Plans\Drawings\ZPLOT_B_A6500_203-205_J610984_203.dgn

08-SEP-2010 14:34

STATE OF MISSOURI HANS R. HUTTON NUMBER E-29174 REGISTERED PROFESSIONAL ENGINEER

DATE 9/10/10
ROUTE I-70 STATE MO/IL
DISTRICT 6 SHEET NO. BR203
COUNTY ST. LOUIS CITY - MO ST. CLAIR - IL
JOB NO. J610984
CONTRACT ID.
PROJECT NO.
BRIDGE NO. A6500

DATE	DESCRIPTION
5-17-10	(1) Revised per ATC
5-17-10	(2) Moved bars from Sheet No. BR202
9-3-10	(3) Revised Reinforcing Steel

MISSOURI HIGHWAYS AND TRANSPORTATION COMMISSION
105 WEST CAPITOL JEFFERSON CITY, MO 65101
1-888-ASK-MODOT (1-888-275-6636)

HNTB
715 KIRK DRIVE KANSAS CITY, MO 64105-1310 TELEPHONE (816) 472-1201
CERTIFICATE OF AUTHORITY NO. 001270

LICENSED STRUCTURAL ENGINEER HANS R. HUTTON 081-006707 STATE OF ILLINOIS
expires 11-30-2009
Hans R Hutton
9-10-2010

REV.

Missouri
Department
of Transportation

MoDOT

Pete K. Rahn, Director

105 West Capitol Avenue
P.O. Box 270
Jefferson City, MO 65102
(573) 751-2551
Fax (573) 751-6555
www.modot.org

TO: John Grana
Resident Engineer – MRB Project Office

CC/ATT: Dave Ahlvers–cm
Dean Franke-br
Kent Nelson-br

CC: Chad Daniel-br

FROM: Greg Sunde GS
Structural Liaison Engineer

DATE: October 1, 2010

SUBJECT: Construction Change
January 22, 2010 Letting
St. Louis City
Job J6I0984B
Bridge No. A6500 (Missouri Approach Spans)

Attached is plan sheet 38 which shows changes to the Intermediate Diaphragm Layout. HNTB noticed the error when responding to Fred Weber's RFI #11.

If you have any questions please contact me at 573-522-2560.

gs
attachment

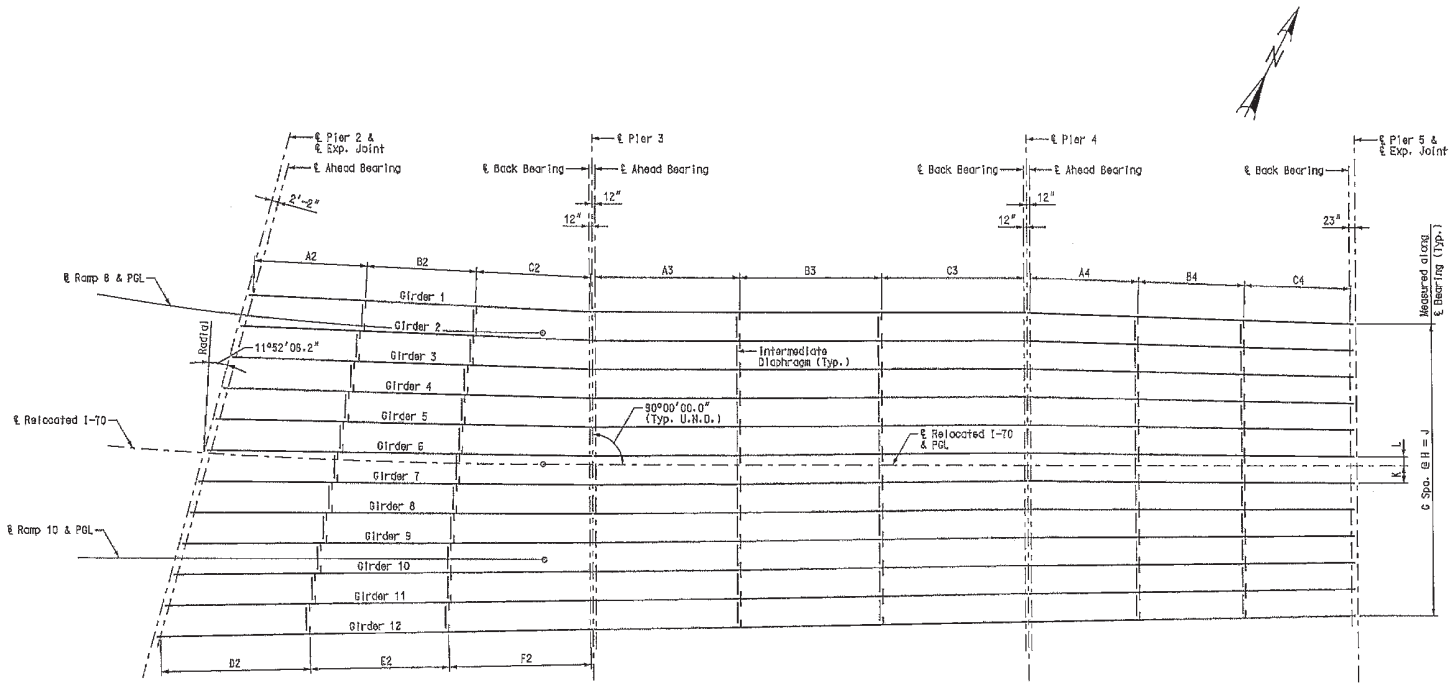

FRAMING PLAN

INTERMEDIATE DIAPHRAGM LAYOUT DIMENSIONS – UNIT 2

Location	A2	B2	C2	D2	E2	F2	A3	B3	C3	A4	B4	C4
Girder 1	36'-5 1/2"	37'-7 1/4"	37'-5 3/4"	-	-	-	47'-4"	47'-4"	47'-4"	35'-8 5/8"	35'-8 3/8"	35'-8 1/2"
Girder 2	37'-4 1/2"	38'-6 1/2"	38'-5 1/4"	38'-9 1/2"	37'-7 7/8"	37'-10 3/8"	47'-4"	47'-4"	47'-4"	35'-8 1/4"	35'-8 1/2"	35'-8 3/8"
Girder 3	38'-2 1/2"	39'-6"	39'-4 1/2"	39'-9 1/2"	38'-6 3/8"	38'-9 3/8"	47'-4"	47'-4"	47'-4"	35'-8 1/4"	35'-8 1/2"	35'-8 3/8"
Girder 4	39'-1 1/2"	40'-5 1/2"	40'-4 1/4"	40'-8 3/8"	39'-5"	39'-8 1/2"	47'-4"	47'-4"	47'-4"	35'-8 3/8"	35'-8 3/8"	35'-8 1/2"
Girder 5	40'-0 1/2"	41'-4 1/4"	41'-3 5/8"	41'-8"	40'-5 1/2"	40'-8 7/8"	47'-4"	47'-4"	47'-4"	35'-8 3/8"	35'-8 3/8"	35'-8 1/2"
Girder 6	40'-11"	42'-3 1/8"	42'-3 1/8"	42'-7 1/8"	41'-4 1/4"	41'-5 5/8"	47'-4"	47'-4"	47'-4 1/8"	35'-8 3/8"	35'-8 3/8"	35'-8 1/2"
Girder 7	41'-9 3/4"	43'-2 5/8"	43'-2 5/8"	43'-7 1/8"	42'-3 3/8"	42'-4 1/2"	47'-4"	47'-4"	47'-4 1/8"	35'-8 3/8"	35'-8 3/8"	35'-8 1/2"
Girder 8	42'-8 3/4"	44'-1 7/8"	44'-2"	44'-6 1/2"	43'-2 5/8"	43'-3 1/2"	47'-4"	47'-4"	47'-4 1/8"	35'-8 3/8"	35'-8 3/8"	35'-8 3/8"
Girder 9	43'-7 7/8"	45'-1"	45'-1 1/8"	45'-6 1/2"	44'-1 7/8"	44'-2 1/8"	47'-4 1/8"	47'-4"	47'-4 1/8"	35'-8 3/8"	35'-8 3/8"	35'-8 3/8"
Girder 10	44'-6 3/8"	46'-0 1/8"	46'-1 1/8"	46'-6"	45'-1"	45'-1"	47'-4 1/8"	47'-4"	47'-4 1/8"	35'-8 3/8"	35'-8 3/8"	35'-8 3/8"
Girder 11	47'-5 1/2"	46'-0 1/8"	45'-11 7/8"	47'-5 1/2"	46'-0 1/2"	45'-11 7/8"	47'-4 1/8"	47'-4"	47'-4 1/8"	35'-8 3/8"	35'-8 3/8"	35'-8 3/8"
Girder 12	-	-	-	48'-5"	46'-11 1/2"	46'-10 3/8"	47'-4 1/8"	47'-4 1/8"	47'-4 1/8"	35'-8 3/8"	35'-8 3/8"	35'-8 3/8"

GIRDER LAYOUT DIMENSIONS – UNIT 2

Location	G	H	J	K	L
Pier 2 ℄ Ahead Brg.	11	10'-7 5/8"	116'-11 7/8"	9'-7 1/8"	12 1/2"
Pier 3 ℄ Back Brg.	11	9'-6 1/2"	104'-11 1/8"	6'-9 1/8"	2'-9"
Pier 3 ℄ Ahead Brg.	11	9'-6 1/2"	104'-10 1/8"	6'-9 3/8"	2'-9"
Pier 4 ℄ Back Brg.	11	9'-3 3/8"	102'-11 1/8"	5'-3"	4'-0 1/8"
Pier 4 ℄ Ahead Brg.	11	9'-3 1/4"	101'-11 3/8"	5'-2 3/8"	4'-0 1/8"
Pier 5 ℄ Back Brg.	11	8'-9 1/8"	96'-4 1/8"	5'-7 1/8"	3'-1 1/4"

41'-11 1/2"	50'-2"
41'-11 1/2"	50'-0 3/8"

	41'-11 1/2"	50'-0 3/8"
50'-4 3/8"	42'-0"	49'-11"

Note:
Dimensions "A", "B", "C", "D", "E", and "F" measured along ℄ Girder.

FRAMING PLAN – UNIT 2

Detailed OCT 2009
Checked OCT 2009

Note: This drawing is not to scale. Follow dimensions.

Sheet No. 38 of 125

\\stlw00\pmwork\Jobs\46440\Techprod\Bridges\MO-Approach\Drawings\Baseline Drawings\BL_A6500_038-125_J6I0984B_038_REV1.dgn

30-SEP-2010 13:38

LAWRENCE (BL) ROLNES, JR. NUMBER PE-2004008347 PROFESSIONAL ENGINEER STATE OF MISSOURI

9/30/10

DATE 09/30/10

ROUTE	STATE
I-70	MO
DISTRICT 6	SHEET NO. BR38

COUNTY: St. Louis City - MO

JOB NO. J6I0984B

CONTRACT ID.

PROJECT NO.

BRIDGE NO. A6500

DATE	DESCRIPTION
9-29-10	⚠1 Revised diaphragm dimensions

MISSOURI HIGHWAYS AND TRANSPORTATION COMMISSION

MoDOT

105 WEST CAPITOL
JEFFERSON CITY, MO 65102
1-888-ASK-MODOT (1-888-275-6636)

HNTB
715 KIRK DRIVE
KANSAS CITY, MO 64105-1310
TELEPHONE (816) 472-1201
CERTIFICATE OF AUTHORITY NO. 001209

REV.

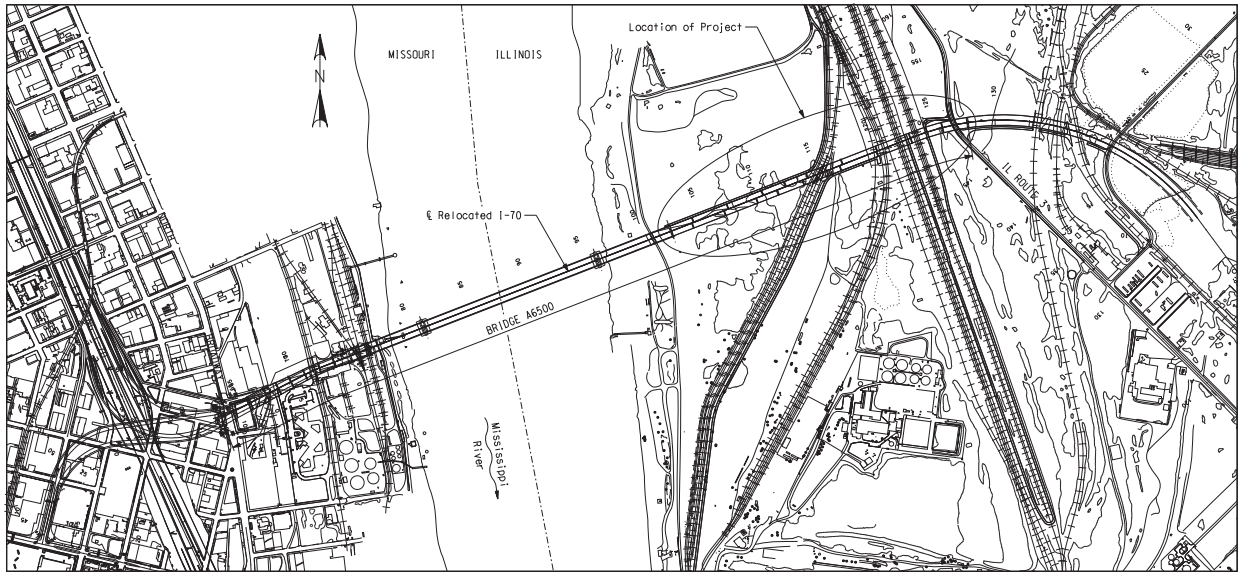

LICENSED STRUCTURAL ENGINEER
RICHARD L. [illegible]
062071010
004575
CHICAGO, ILLINOIS
STATE OF ILLINOIS

EXPIRES 11.30.2010

SEAL APPLIES TO SHEETS 1-152

INDEX OF DRAWINGS

1 TITLE SHEET
2 OVERALL MISSISSIPPI RIVER BRIDGE LAYOUT
3 GENERAL PLAN AND ELEVATION - SPANS (13-14), (14-15), AND (15-16)
4 GENERAL PLAN AND ELEVATION - SPANS (16-17), (17-18), AND (18-19)
5 GENERAL PLAN AND ELEVATION - SPANS (19-20) AND (20-21)
6 GENERAL PLAN AND ELEVATION - SPANS (21-22) AND (22-23)
7 GENERAL NOTES AND ESTIMATED QUANTITIES
8 SUBSTRUCTURE LAYOUT
9 BORING DATA (1 OF 7)
10 BORING DATA (2 OF 7)
11 BORING DATA (3 OF 7)
12 BORING DATA (4 OF 7)
13 BORING DATA (5 OF 7)
14 BORING DATA (6 OF 7)
15 BORING DATA (7 OF 7)
16 PIER 13 (FOR INFORMATION ONLY)
17 PIER 14 WB
18 PIER 14 EB
19 PIER 15 WB
20 PIER 15 EB
21 PIER 16 WB
22 PIER 16 EB
23 PIER 17 WB
24 PIER 17 EB
25 PIER 18 WB
26 PIER 18 EB
27 PIER 19 WB
28 PIER 19 WB - DETAILS
29 PIER 19 EB
30 PIER 19 EB - DETAILS
31 PIER 20 WB
32 PIER 20 EB
33 PIER 21 WB
34 PIER 21 EB
35 PIER CRASHWALL DETAIL SHEET
36 PIER 22 WB
37 PIER 22 EB
38 PIER 23 WB
39 PIER 23 WB - DETAILS
40 PIER 23 EB
41 PIER 23 EB - DETAILS
42 DETAILS OF HIGH LOAD MULTI-ROTATIONAL BEARING ASSEMBLY - UNI-DIRECTIONAL EXPANSION
43 DETAILS OF HIGH LOAD MULTI-ROTATIONAL BEARING ASSEMBLY - FIXED
44 BEARING DEVICE ALIGNMENT AND ANCHOR ROD SETTING PLAN WB - UNIT 1
45 BEARING DEVICE ALIGNMENT AND ANCHOR ROD SETTING PLAN EB - UNIT 1
46 BEARING DEVICE ALIGNMENT AND ANCHOR ROD SETTING PLAN WB - UNIT 2
47 BEARING DEVICE ALIGNMENT AND ANCHOR ROD SETTING PLAN EB - UNIT 2
48 FRAMING PLAN WB - UNIT 1
49 FRAMING PLAN EB - UNIT 1
50 FRAMING PLAN WB - UNIT 2 (1 OF 2)
51 FRAMING PLAN WB - UNIT 2 (2 OF 2)
52 FRAMING PLAN EB - UNIT 2 (1 OF 2)
53 FRAMING PLAN EB - UNIT 2 (2 OF 2)
54 GIRDER ELEVATION WB - UNIT 1 (1 OF 2)
55 GIRDER ELEVATION WB - UNIT 1 (2 OF 2)
56 GIRDER ELEVATION EB - UNIT 1 (1 OF 2)
57 GIRDER ELEVATION EB - UNIT 1 (2 OF 2)
58 GIRDER ELEVATION WB - UNIT 2 (1 OF 3)
59 GIRDER ELEVATION WB - UNIT 2 (2 OF 3)
60 GIRDER ELEVATION WB - UNIT 2 (3 OF 3)
61 GIRDER ELEVATION EB - UNIT 2 (1 OF 3)
62 GIRDER ELEVATION EB - UNIT 2 (2 OF 3)
63 GIRDER ELEVATION EB - UNIT 2 (3 OF 3)
64 PART LONGITUDINAL SECTION - UNIT 1 EB AND WB
65 PART LONGITUDINAL SECTION - UNIT 2 EB AND WB
66 DEAD LOAD DEFLECTIONS AND CAMBER DIAGRAM WB - UNIT 1 (1 OF 2)
67 DEAD LOAD DEFLECTIONS AND CAMBER DIAGRAM WB - UNIT 1 (2 OF 2)
68 DEAD LOAD DEFLECTIONS AND CAMBER DIAGRAM EB - UNIT 1 (1 OF 2)
69 DEAD LOAD DEFLECTIONS AND CAMBER DIAGRAM EB - UNIT 1 (2 OF 2)
70 DEAD LOAD DEFLECTIONS AND CAMBER DIAGRAM WB - UNIT 2 (1 OF 3)
71 DEAD LOAD DEFLECTIONS AND CAMBER DIAGRAM WB - UNIT 2 (2 OF 3)
72 DEAD LOAD DEFLECTIONS AND CAMBER DIAGRAM WB - UNIT 2 (3 OF 3)
73 DEAD LOAD DEFLECTIONS AND CAMBER DIAGRAM EB - UNIT 2 (1 OF 3)
74 DEAD LOAD DEFLECTIONS AND CAMBER DIAGRAM EB - UNIT 2 (2 OF 3)
75 DEAD LOAD DEFLECTIONS AND CAMBER DIAGRAM EB - UNIT 2 (3 OF 3)
76 THEORETICAL BOTTOM OF SLAB ELEVATIONS WB - UNIT 1
77 THEORETICAL BOTTOM OF SLAB ELEVATIONS EB - UNIT 1
78 THEORETICAL BOTTOM OF SLAB ELEVATIONS WB - UNIT 2
79 THEORETICAL BOTTOM OF SLAB ELEVATIONS EB - UNIT 2
80 BOLTED FIELD SPLICE DETAILS - WB UNIT 1
81 BOLTED FIELD SPLICE DETAILS - EB UNIT 1
82 BOLTED FIELD SPLICE DETAILS - WB UNIT 2 (1 OF 2)
83 BOLTED FIELD SPLICE DETAILS - WB UNIT 2 (2 OF 2)
84 BOLTED FIELD SPLICE DETAILS - EB UNIT 2 (1 OF 2)
85 BOLTED FIELD SPLICE DETAILS - EB UNIT 2 (2 OF 2)
86 CROSS FRAME AND DIAPHRAGM DETAILS - UNIT 1
87 CROSS FRAME AND DIAPHRAGM DETAILS - UNIT 2
88 STIFFENER AND MISCELLANEOUS STEEL DETAILS
89 SLAB OFFSETS - UNIT 2
90 SLAB PLAN SHOWING REINFORCING WB - UNIT 1 (1 OF 2)
91 SLAB PLAN SHOWING REINFORCING WB - UNIT 1 (2 OF 2)
92 SLAB PLAN SHOWING REINFORCING EB - UNIT 1 (1 OF 2)
93 SLAB PLAN SHOWING REINFORCING EB - UNIT 1 (2 OF 2)
94 SLAB PLAN SHOWING REINFORCING WB - UNIT 2 (1 OF 3)
95 SLAB PLAN SHOWING REINFORCING WB - UNIT 2 (2 OF 3)
96 SLAB PLAN SHOWING REINFORCING WB - UNIT 2 (3 OF 3)
97 SLAB PLAN SHOWING REINFORCING EB - UNIT 2 (1 OF 3)
98 SLAB PLAN SHOWING REINFORCING EB - UNIT 2 (2 OF 3)
99 SLAB PLAN SHOWING REINFORCING EB - UNIT 2 (3 OF 3)
100 SLAB DETAILS
101 PRECAST PRESTRESSED PANEL DETAILS
102 SLAB CROSS SECTION WB - UNIT 1
103 SLAB CROSS SECTION EB - UNIT 1
104 SLAB CROSS SECTION WB - UNIT 2
105 SLAB CROSS SECTION EB - UNIT 2
106 SLAB POURING SEQUENCE - UNIT 1
107 SLAB POURING SEQUENCE - UNIT 2
108 LIGHT POLE BLISTER LAYOUT
109 LEFT BARRIER CURB (TYPE D) WB - SECTIONS (1 OF 2)
110 LEFT BARRIER CURB (TYPE D) WB - SECTIONS (2 OF 2)
111 RIGHT BARRIER CURB (TYPE D) WB - SECTIONS (1 OF 2)
112 RIGHT BARRIER CURB (TYPE D) WB - SECTIONS (2 OF 2)
113 LEFT BARRIER CURB (TYPE D) EB - SECTIONS (1 OF 2)
114 LEFT BARRIER CURB (TYPE D) EB - SECTIONS (2 OF 2)
115 RIGHT BARRIER CURB (TYPE D) EB - SECTIONS (1 OF 2)
116 RIGHT BARRIER CURB (TYPE D) EB - SECTIONS (2 OF 2)
117 BARRIER CURB (TYPE D) - DETAILS
118 BAR SUPPORT DETAILS
119 BARRIER CURB COVER PLATE DETAILS - PIER 17 (1 OF 2)
120 BARRIER CURB COVER PLATE DETAILS - PIER 17 (2 OF 2)
121 MODULAR EXPANSION JOINT DETAILS WB - PIER 13
122 MODULAR EXPANSION JOINT DETAILS EB - PIER 13
123 MODULAR EXPANSION JOINT DETAILS WB - PIER 17
124 MODULAR EXPANSION JOINT DETAILS EB - PIER 17
125 MODULAR EXPANSION SWIVEL JOINT DETAILS WB - PIER 23
126 MODULAR EXPANSION SWIVEL JOINT DETAILS EB - PIER 23
127 DRAINAGE PLAN AND ELEVATION - UNIT 1
128 DRAINAGE PLAN AND ELEVATION - UNIT 2
129 DRAINAGE SYSTEM DETAILS 1
130 DRAINAGE SYSTEM DETAILS 2
131 DRY STANDPIPE
132 RAILROAD LAYOUT
133 RAILROAD CLEARANCE DETAILS
134 EXISTING TRACK PROFILES 1
135 EXISTING TRACK PROFILES 2
136 EXISTING TRACK PROFILES 3
137 EXISTING TRACK PROFILES 4
138 EXISTING TRACK PROFILES 5
139 EXISTING TRACK PROFILES 6
140 EXISTING TRACK PROFILES 7
141 BAR BENDING DIAGRAMS
142 BILL OF REINFORCING STEEL
143 BILL OF REINFORCING STEEL
144 BILL OF REINFORCING STEEL
145 BILL OF REINFORCING STEEL
146 BILL OF REINFORCING STEEL
147 BILL OF REINFORCING STEEL
148 BILL OF REINFORCING STEEL
149 BILL OF REINFORCING STEEL
150 AS BUILT DRILLED SHAFT DATA - UNIT 1
151 AS BUILT DRILLED SHAFT DATA - UNIT 2 (1 OF 2)
152 AS BUILT DRILLED SHAFT DATA - UNIT 2 (2 OF 2)

I-70 MISSISSIPPI RIVER BRIDGE
ILLINOIS APPROACH

Detailed JUL 2009
Checked JUL 2009

Note: This drawing is not to scale. Follow dimensions.

Sheet No. 1 of 152

S:\IDOT\0906601\Draw_IDOT\CADD_Sheets\Structural\B_A6500_001-152_J6I0984C_001.dgn

CONTRACT NO. 76D61

F.A. ROUTE	SECTION
999	82-1B-2
FED. AID PROJECT	ILLINOIS
COUNTY	ST. CLAIR

USER NAME = Brian Eads
PLOT SCALE = @1.0000 '=' IN.
PLOT DATE = 3/9/2010

DESIGNED - HNTB
CHECKED - CMT
DRAWN - CMT / HNTB
REVISED -
REVISED -
REVISED -
REVISED -

ILLINOIS APPROACH STRUCTURE
FOR NEW I-70 MISSISSIPPI RIVER BRIDGE

STATE OF ILLINOIS
DEPARTMENT OF TRANSPORTATION

MISSOURI HIGHWAYS
AND TRANSPORTATION COMMISSION

HNTB
715 KIRK DRIVE
KANSAS CITY, MO 64105
TELEPHONE (816) 472-1201
CERTIFICATE OF AUTHORITY
NO. 001270

CMT
CRAWFORD, MURPHY & TILLY, INC.
2750 WEST WASHINGTON STREET
SPRINGFIELD, IL 62702
TELEPHONE (217) 787-8050
ENGINEERING CORPORATION - 000631

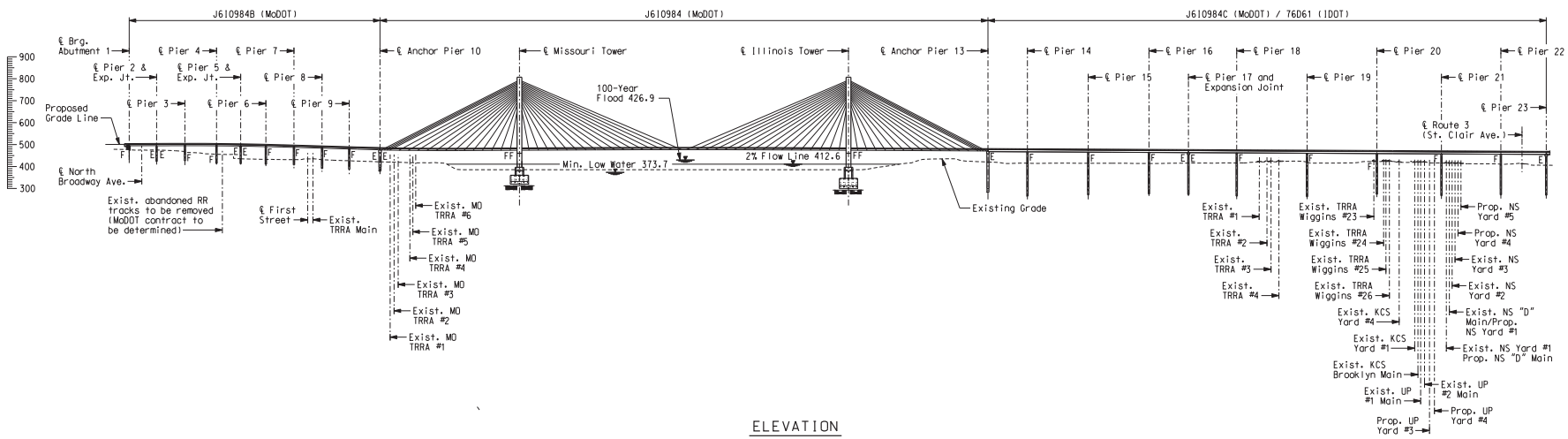

ELEVATION

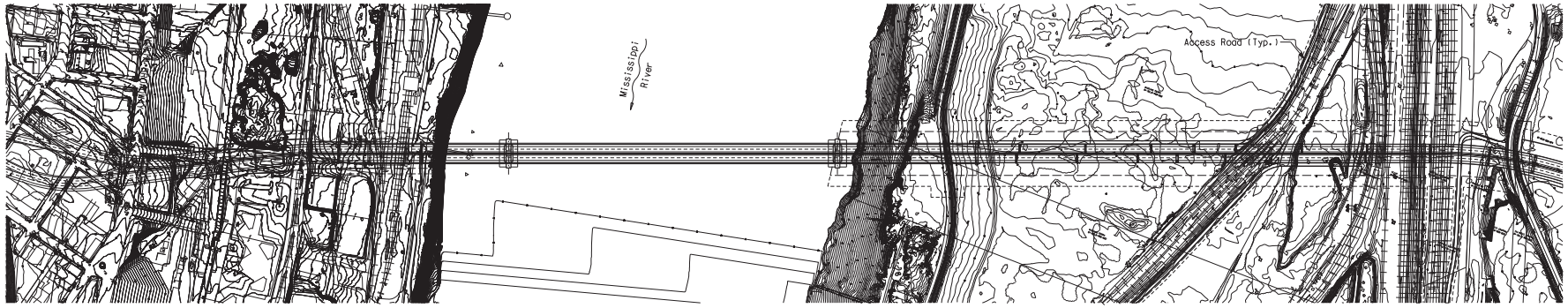

PLAN

SCALE
0 250' 500' 750' 1000' 1250'

Detailed JUL 2009
Checked JUL 2009

Note: This drawing is not to scale. Follow dimensions.

Sheet No. 2 of 152

OVERALL MISSISSIPPI RIVER BRIDGE LAYOUT

s:\idot\0906601\draw_idot\cadd_sheets\structural\B_A6500_002-152_J6l0984C_002.dgn

CONTRACT NO. 76D61

F.A. ROUTE	SECTION
999	82-1B-2
FED. AID PROJECT	ILLINOIS
COUNTY	ST. CLAIR

USER NAME = jjolliff
PLOT SCALE = $SCALE$
PLOT DATE = 3/8/2010
DESIGNED - HNTB
CHECKED - CMT
DRAWN - CMT / HNTB
REVISED -
REVISED -
REVISED -
REVISED -

ILLINOIS APPROACH STRUCTURE FOR NEW I-70 MISSISSIPPI RIVER BRIDGE

STATE OF ILLINOIS
DEPARTMENT OF TRANSPORTATION

MISSOURI HIGHWAYS AND TRANSPORTATION COMMISSION

HNTB
715 KIRK DRIVE
KANSAS CITY, MO 64105
TELEPHONE (816) 472-1201
CERTIFICATE OF AUTHORITY NO. 001270

CMT
CRAWFORD, MURPHY & TILLY, INC.
2750 WEST WASHINGTON STREET
SPRINGFIELD, IL 62702
TELEPHONE (217) 787-8050
ENGINEERING CORPORATION - 000631

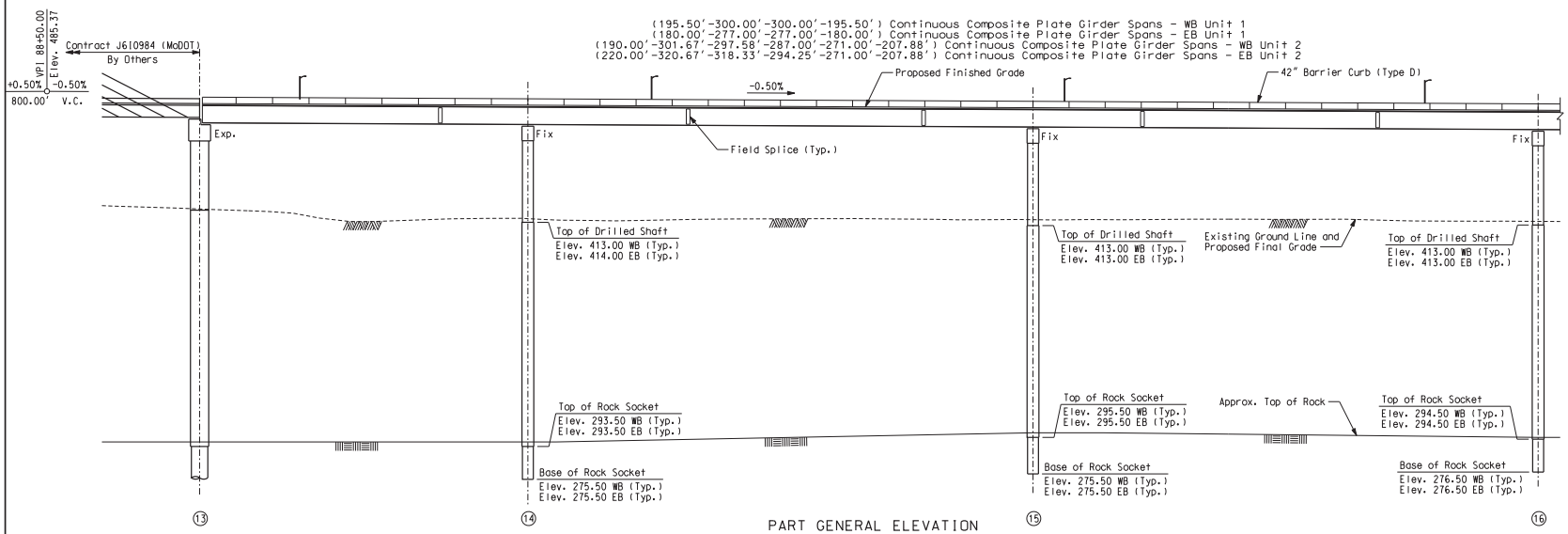

PART GENERAL ELEVATION

(Eastbound Spans Shown)

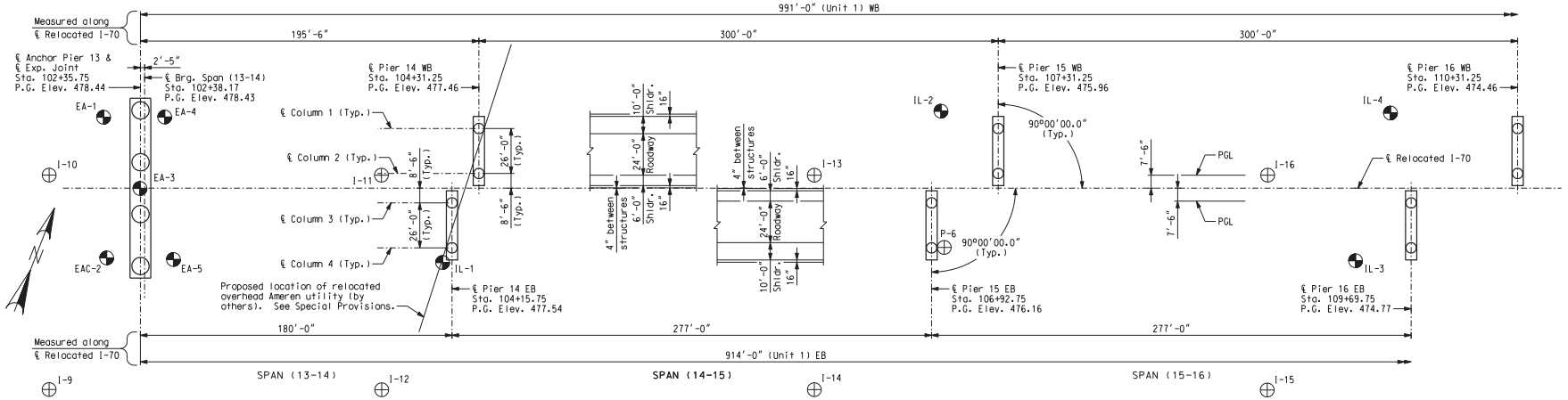

PART PLAN

Notes:
"⊕" Indicates location of borings drilled in 2008 - 2009.
"⊕" Indicates approximate location of borings drilled prior to 2008.
All dimensions are horizontal.

Notice and Disclaimer Regarding Boring Log Data

The locations of all subsurface borings for this structure are shown on the bridge plan sheets for this structure. Boring data for the locations shown ⊕ are located on Sheet Nos. 9 thru 15. The boring data for all locations indicated, as well as any other boring logs or other factual records of subsurface data and investigations performed by the department for the design of the project, will be provided in the bridge electronic deliverable file or will be available from the Project Contact upon written request as outlined in the Project Special Provisions. No greater significance or weight should be given to the boring data depicted on the plan sheets than is subsurface data available from the district or elsewhere.

These borings represent the findings from the drill hole at the location and time shown. Any extensions, interpolations or extensions beyond the diameter of the drilling instrument are not warranted and should only be used by others, for any reason, at their own risk. Any claims for either Type I or II changed site condition by a bidder or contractor or those claiming under them will be judged by the Engineer based on his/her engineering judgement as to the range of possible reasonable expectations that those borings produced.

B.M. #7, Set in the southwest corner of concrete to a 6'x6' sq. manhole structure on the east side of Front Street in gravel at edge of asphalt between low service pumpstation and Bistate Warehousing, Inc. 650 N. Front Street, 0.7 mile north of the intersection of Front Street and River Park, St. Louis, MO. Elev. = 416.06

B.M. #10, Set in concrete median on the east side of Illinois Route 3 (St. Clair Ave.) between two railroad bridges. Approximately 0.1 mile south of 1st Street (in front of 301 St. Clair Ave. Warehouse & Store Fixture Co.) Elev. 420.78

B.M. #11, Set in the back of a 4.5' concrete walk (end of walk), located on the west side of Illinois Route 3 approximately 0.3 miles south of Canal Street. Elev. = 414.02

Detailed JUL 2009
Checked JUL 2009

Note: This drawing is not to scale. Follow dimensions.

Sheet No. 3 of 152

GENERAL PLAN AND ELEVATION - SPANS (13-14), (14-15), AND (15-16)

s:\idot\0906601\draw_idot\cadd_sheets\structural\B_A6500_003-152_J6I0984C_003.dgn

CONTRACT NO. 76D61

F.A. ROUTE	SECTION
999	82-1B-2
FED. AID PROJECT	ILLINOIS
COUNTY	ST. CLAIR

USER NAME = jjolliff
PLOT SCALE = $SCALE$
PLOT DATE = 3/8/2010
DESIGNED - HNTB
CHECKED - CMT
DRAWN - CMT / HNTB
REVISED -
REVISED -
REVISED -
REVISED -

ILLINOIS APPROACH STRUCTURE
FOR NEW I-70 MISSISSIPPI RIVER BRIDGE

STATE OF ILLINOIS
DEPARTMENT OF TRANSPORTATION

MISSOURI HIGHWAYS
AND TRANSPORTATION COMMISSION

HNTB
715 KIRK DRIVE
KANSAS CITY, MO 64105
TELEPHONE (816) 472-1201
CERTIFICATE OF AUTHORITY
NO. 001270

CMT
CRAWFORD, MURPHY & TILLY, INC.
2750 WEST WASHINGTON STREET
SPRINGFIELD, IL 62702
TELEPHONE (217) 787-8050
ENGINEERING CORPORATION - 000631

(195.50'-300.00'-300.00'-195.50') Continuous Composite Plate Girder Spans - WB Unit 1
(180.00'-277.00'-277.00'-180.00') Continuous Composite Plate Girder Spans - EB Unit 1
(190.00'-301.67'-297.58'-287.00'-271.00'-207.88') Continuous Composite Plate Girder Spans - WB Unit 2
(220.00'-320.67'-318.33'-294.25'-271.00'-207.88') Continuous Composite Plate Girder Spans - EB Unit 2

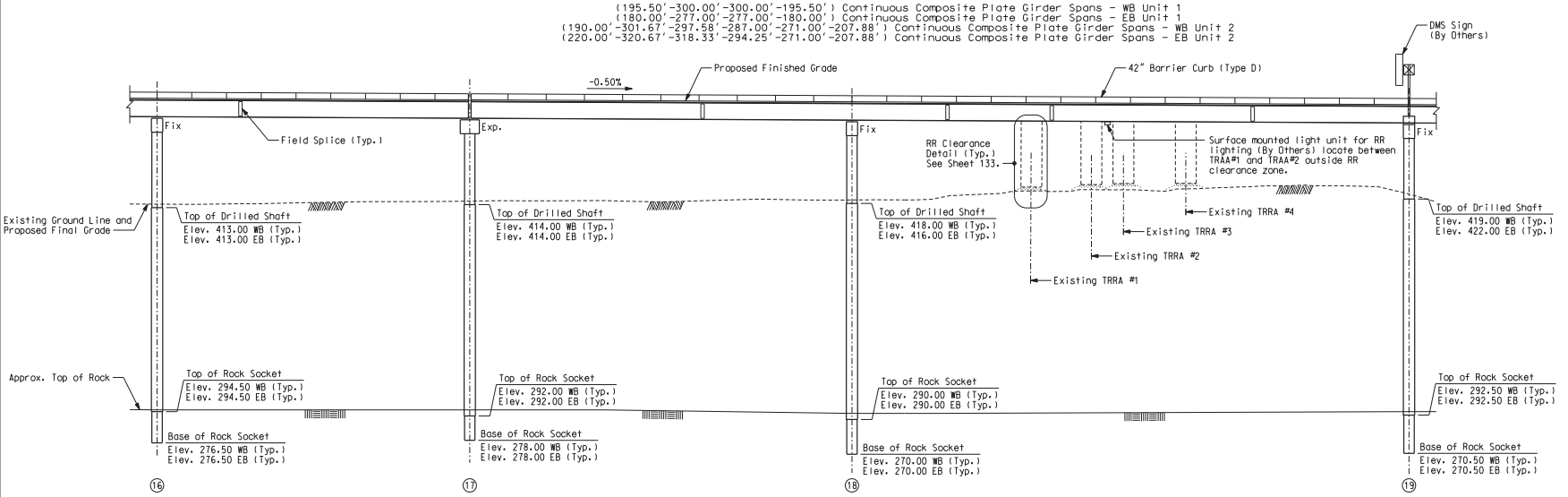

PART GENERAL ELEVATION

(Eastbound Spans Shown)

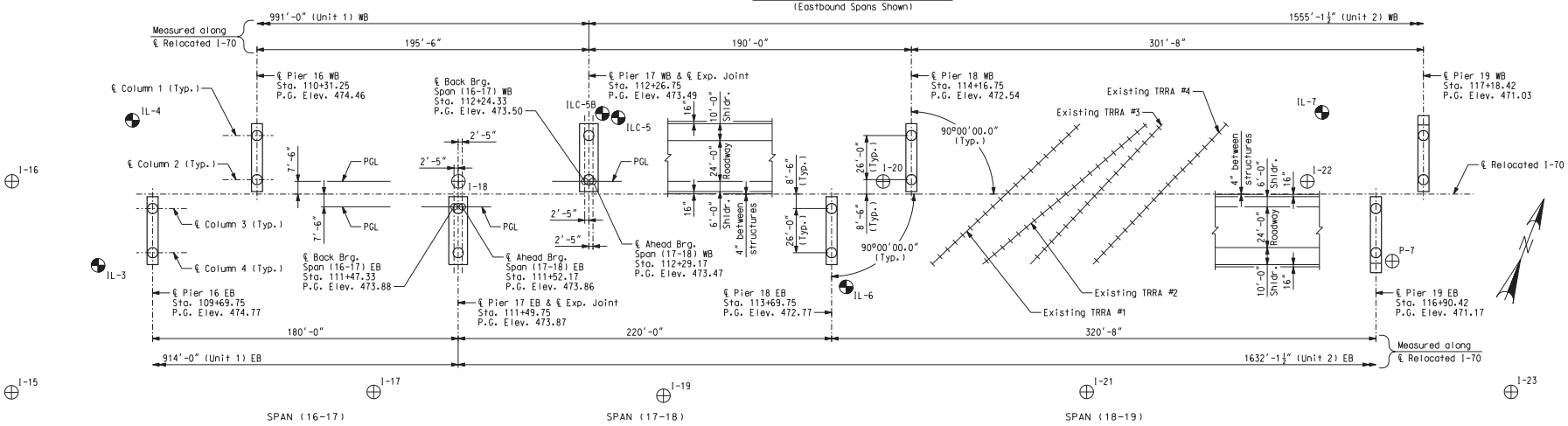

PART PLAN

Notes:

"⊕" Indicates location of borings drilled in 2008 - 2009.

"⊕" Indicates approximate location of borings drilled prior to 2008.

All dimensions are horizontal.
Boring data for the borings drilled in 2008 - 2009 is shown on Sheet Nos. 9 thru 15.
See sheet no. 108 for light poile blister layout.

Detailed JUL 2009
Checked JUL 2009

Note: This drawing is not to scale. Follow dimensions.

GENERAL PLAN AND ELEVATION - SPANS (16-17), (17-18), AND (18-19)

Sheet No. 4 of 152

s:\idot\0906601\draw_idot\cadd_sheets\structural\B_A6500_004-152_J6I0984C_004.dgn

CONTRACT NO. 76D61

F.A. ROUTE	SECTION
999	82-1B-2
FED. AID PROJECT	ILLINOIS
COUNTY	ST. CLAIR

USER NAME = jjolliff
PLOT SCALE = $SCALE$
PLOT DATE = 3/8/2010
DESIGNED - HNTB
CHECKED - CMT
DRAWN - CMT / HNTB
REVISED -
REVISED -
REVISED -
REVISED -

ILLINOIS APPROACH STRUCTURE FOR NEW I-70 MISSISSIPPI RIVER BRIDGE

STATE OF ILLINOIS
DEPARTMENT OF TRANSPORTATION

MISSOURI HIGHWAYS AND TRANSPORTATION COMMISSION

HNTB
715 KIRK DRIVE
KANSAS CITY, MO 64105
TELEPHONE (816) 472-1201
CERTIFICATE OF AUTHORITY NO. 001270

CMT
CRAWFORD, MURPHY & TILLY, INC.
2750 WEST WASHINGTON STREET
SPRINGFIELD, IL 62702
TELEPHONE (217) 787-8050
ENGINEERING CORPORATION - 000631

(195.50'-300.00'-300.00'-195.50') Continuous Composite Plate Girder Spans - WB Unit 1
(180.00'-277.00'-277.00'-180.00') Continuous Composite Plate Girder Spans - EB Unit 1
(190.00'-301.67'-297.58'-287.00'-271.00'-207.88') Continuous Composite Plate Girder Spans - WB Unit 2
(220.00'-320.67'-318.33'-294.25'-271.00'-207.88') Continuous Composite Plate Girder Spans - EB Unit 2

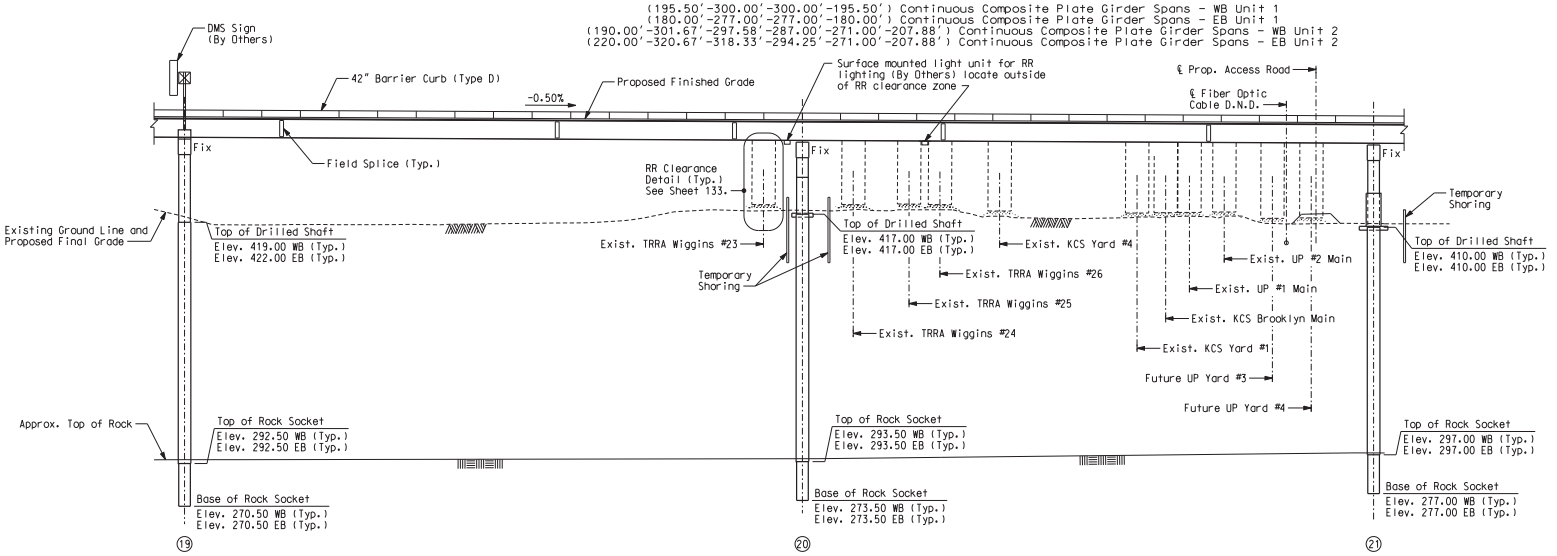

PART GENERAL ELEVATION

(Eastbound Spans Shown)

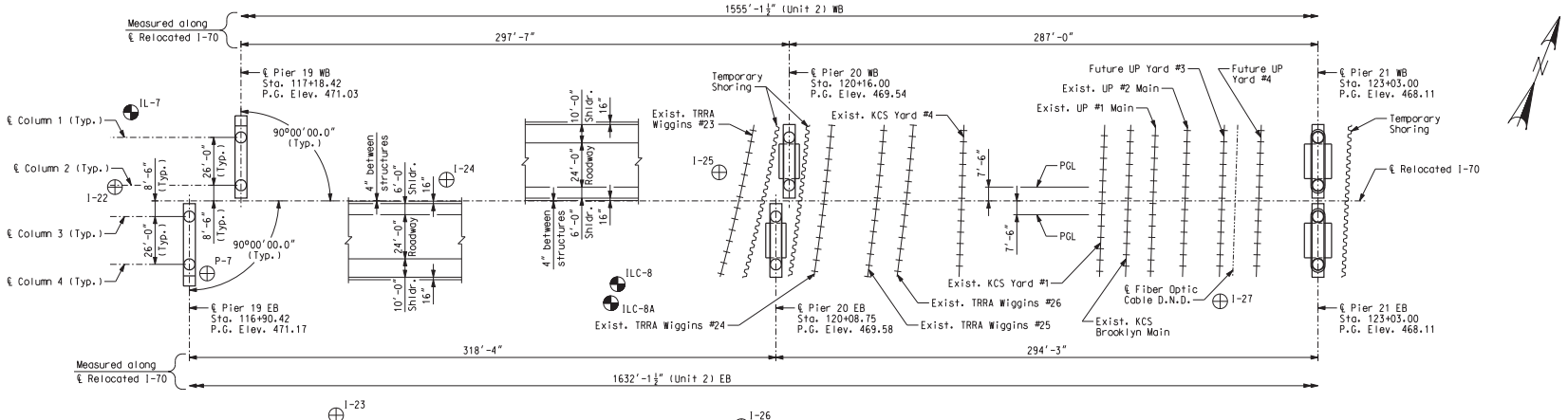

PART PLAN

Notes:

"⊕" Indicates location of borings drilled in 2008 - 2009.

"⊕" Indicates approximate location of borings drilled prior to 2008.

All dimensions are horizontal.
Boring data for the borings drilled in 2008 - 2009 is shown on Sheet Nos. 9 thru 15.
See sheet no. 108 for light pole blister layout.

GENERAL PLAN AND ELEVATION - SPANS (19-20) AND (20-21)

Detailed JUL 2009
Checked JUL 2009

Note: This drawing is not to scale. Follow dimensions.

s:\idot\0906601\draw_idot\cadd_sheets\structural\B_A6500_005-152_J6l0984C_005.dgn

CONTRACT NO. 76D61

F.A. ROUTE	SECTION
999	82-1B-2
FED. AID PROJECT	ILLINOIS
COUNTY	ST. CLAIR

USER NAME = jjollff
PLOT SCALE = $SCALE$
PLOT DATE = 3/8/2010
DESIGNED - HNTB
CHECKED - CMT
DRAWN - CMT / HNTB
REVISED -
REVISED -
REVISED -
REVISED -

ILLINOIS APPROACH STRUCTURE
FOR NEW I-70 MISSISSIPPI RIVER BRIDGE

STATE OF ILLINOIS
DEPARTMENT OF TRANSPORTATION

MISSOURI HIGHWAYS
AND TRANSPORTATION COMMISSION

HNTB
715 KIRK DRIVE
KANSAS CITY, MO 64105
TELEPHONE (816) 472-1201
CERTIFICATE OF AUTHORITY
NO. 001270

CMT
CRAWFORD, MURPHY & TILLY, INC.
2750 WEST WASHINGTON STREET
SPRINGFIELD, IL 62702
TELEPHONE (217) 787-8050
ENGINEERING CORPORATION - 000631

(195.50'-300.00'-300.00'-195.50') Continuous Composite Plate Girder Spans - WB Unit 1
(180.00'-277.00'-277.00'-180.00') Continuous Composite Plate Girder Spans - EB Unit 1
(190.00'-301.67'-297.58'-287.00'-271.00'-207.88') Continuous Composite Plate Girder Spans - WB Unit 2
(220.00'-320.67'-318.33'-294.25'-271.00'-207.88') Continuous Composite Plate Girder Spans - EB Unit 2

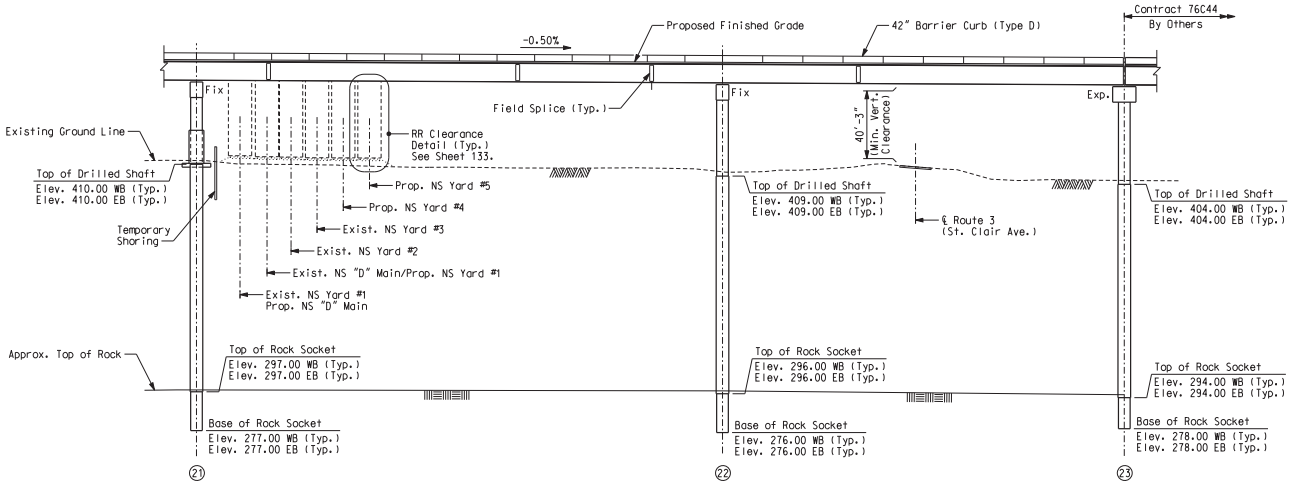

PART GENERAL ELEVATION

(Eastbound Spans Shown)

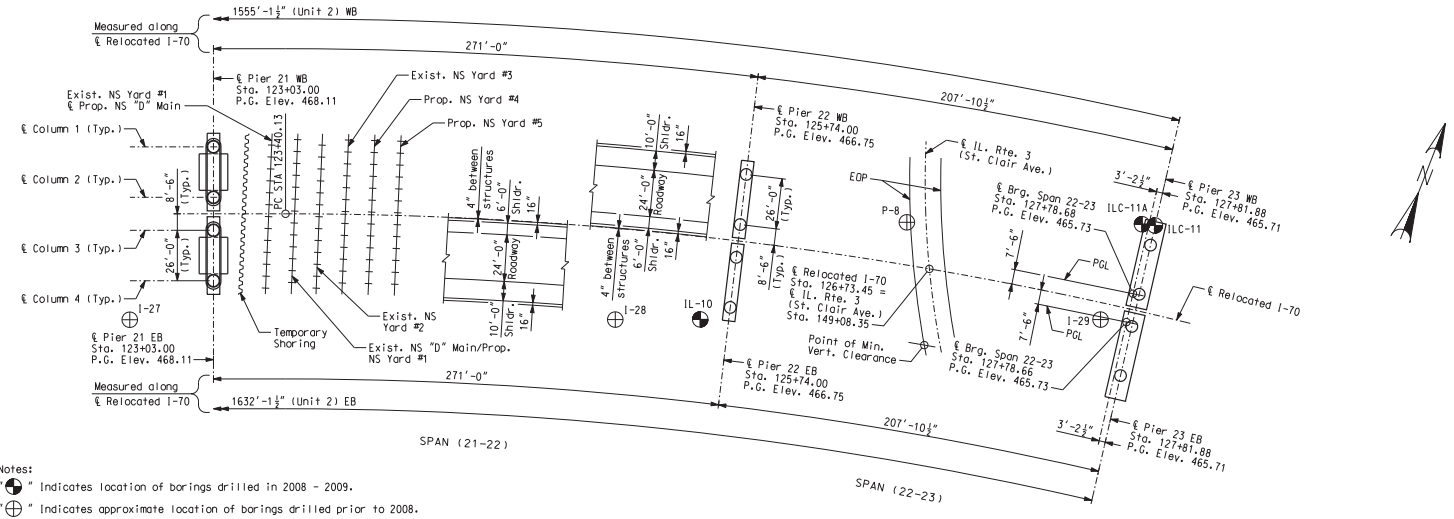

PART PLAN

Notes:
"◔" Indicates location of borings drilled in 2008 - 2009.
"⊕" Indicates approximate location of borings drilled prior to 2008.
All dimensions are horizontal.
Boring data for the borings drilled in 2008 - 2009 is shown on Sheet Nos. 9 thru 15.

GENERAL PLAN AND ELEVATION - SPANS (21-22) AND (22-23)

Detailed JUL 2009
Checked JUL 2009

Note: This drawing is not to scale. Follow dimensions.

Sheet No. 6 of 152

s:\idot\0906601\draw_idot\cadd_sheets\structural\B_A6500_006-152_J6l0984C_006.dgn

CONTRACT NO. 76D61

F.A. ROUTE	SECTION
999	82-1B-2
FED. AID PROJECT	ILLINOIS
COUNTY	ST. CLAIR

USER NAME = jjolliff
PLOT SCALE = $SCALE$
PLOT DATE = 3/8/2010
DESIGNED - HNTB
CHECKED - CMT
DRAWN - CMT / HNTB
REVISED -
REVISED -
REVISED -
REVISED -

ILLINOIS APPROACH STRUCTURE
FOR NEW I-70 MISSISSIPPI RIVER BRIDGE

STATE OF ILLINOIS
DEPARTMENT OF TRANSPORTATION

MISSOURI HIGHWAYS
AND TRANSPORTATION COMMISSION

HNTB
715 KIRK DRIVE
KANSAS CITY, MO 64105
TELEPHONE (816) 472-1201
CERTIFICATE OF AUTHORITY
NO. 001270

CMT
CRAWFORD, MURPHY & TILLY, INC.
2750 WEST WASHINGTON STREET
SPRINGFIELD, IL 62702
TELEPHONE (217) 787-8050
ENGINEERING CORPORATION - 000631

GENERAL NOTES:

Design Specifications:
2007 - AASHTO LRFD 4th Edition and 2008 Interims
Load and Resistance Factor Design
2009 - AASHTO 1st Edition Guide Specifications for LRFD Seismic Design
Seismic Design Category = Seismic Performance Zone 2 or 3
Seismic Peak Horizontal Ground Acceleration:
Design earthquake = 0.17 G
Maximum credible earthquake = 0.23 G

Design Loading:
HL-93 (LRFD Superstructure, LRFD Substructure)
35#/Sq. Ft. Future Wearing Surface
Earth 120#/Cu. Ft., Equivalent Fluid Pressure 45#/Cu. Ft.
Superstructure: Continuous composite

Design Unit Stresses:

Class B Concrete (Substructure)	f'c = 3,000 psi
Class B-2 Concrete (Drilled Shafts & Rock Sockets)	f'c = 5,500 psi
Class B-1 Concrete (Barrier Curbs)	f'c = 4,000 psi
Class B-2 Concrete (Superstructure, except Barrier Curbs)	f'c = 4,000 psi
Reinforcing Steel (Grade 60)	fy = 60,000 psi
Structural Steel (ASTM A709 Grade 50W)	fy = 50,000 psi
Structural Steel (ASTM A709 Grade HPS70W)	fy = 70,000 psi
Steel casing for drilled shafts (ASTM A252 Grade 2)	fy = 35,000 psi

Fabricated Structural Steel:
All fabricated structural steel shall be ASTM A709 Grade 50W unless noted otherwise.

Fabricated Steel Connections:
Field connections shall be made with 1" diameter high strength bolts and 1 1/16" diameter holes, except as noted.

Joint Filler:
All joint filler shall be in accordance with Sec 1057 for preformed sponge rubber expansion and partition joint filler, except as noted.

Reinforcing Steel:
Minimum clearance to reinforcing steel shall be 1-1/2", unless otherwise shown.
For bar supports for concrete reinforcement, see Sheet No. 118.

Structural Steel Protective Coating:
System H in accordance with Sec 1081.
Portions of the structural steel embedded in or in contact with concrete, including but not limited to the top flange of girders, shall be coated with not less than 2.0 mils of the prime coat for System H.

Prime Coat:
The prime coat shall be applied in the fabrication shop. The cost of the prime coat will be considered completely covered by the contract unit price for the Fabricated Structural Steel. The surfaces of all structural steel located under expansion joints shall be coated with complete System H within a distance of 1 1/2 times the girder depth, but not less than 10 feet, from the centerline of all deck joints. Within this limit, items to be coated shall include all surfaces of beam, girders, diaphragms, stiffeners, bearings and miscellaneous structural steel items.

Field Coat:
The color of the field coat shall be Brown (Federal Standard #30045). The cost of the intermediate and finish field coats will be considered completely covered by the contract unit price for the Fabricated Structural Steel. At the option of the contractor, the intermediate and finish field coats may be applied in the shop. The contractor shall exercise extreme care during all phases of loading, hauling, handling, erection and pouring of the slab to minimize damage and shall be fully responsible for all repairs and cleaning of the coating systems as required by the engineer.

Concrete Protective Coatings:
Temporary coating for concrete bents and piers (weathering steel) shall be applied on all concrete surfaces above the ground line on all intermediate bents in accordance with Sec 711.
Protective coating for concrete piers (Epoxy) shall be applied as shown on the bridge plans and in accordance with Sec 711.

Miscellaneous:
A minimum vertical clearance of 16'-6" over existing IL Rte. 3 and a minimum lateral clearance of 15'-0" centered on existing lanes shall be maintained during construction.
A minimum vertical clearance of 22'-0" from top of rails and a minimum lateral clearance of 13'-0" from the centerline of track to nearest temporary construction falsework shall be maintained at all times during construction. See Special Provisions for flagging requirements and railroad insurance.
High strength bolts, nuts, and washers will be sampled for quality assurance as specified in Sec 106 and Field Section (FS-712) from the MoDOT Materials Manual.

Abbreviations:
E.F. denotes Each Face
N.F. denotes Near Face
F.F. denotes Far Face

The contractor shall submit, for the engineer's approval, a detailed erection plan and procedure, including but not limited to, the sequence of girder erection and bolt tightening, and provisions for the stability of girders and blocking of the bearings during erection and until the concrete deck has reached its design strength. The detailed erection plan and procedure shall be sealed by a licensed structural engineer in the state of Illinois. The engineer's review of such plan and procedure does not relieve the contractor of any responsibility.

The contractor's attention is directed to the requirements for stability of steel girders from erection through strength development of the concrete deck. The girders on this bridge shall be stabilized by use of falsework, temporary bracing, compression flange stiffening trusses, by use of one or more holding cranes until a sufficient number of girders have been erected, are in place and cross frames installed or other proven methods as detailed by the contractor's engineer. The methods used by the contractor shall address all temporary girder conditions including but not limited to wind, simple and cantilever span conditions, temporary support points and reactions, and expected deflections for temporary conditions. The above requirements shall be documented in the stability calculations and erection drawings submitted for review.

The details in the plans were developed assuming the girder cross frames are fully installed and that the contractor adheres to the pouring sequences shown in the plans. The contractor's erection procedure or changes to the pouring sequences could cause deflections, camber, and screed elevations to differ from those calculated in the plans. The differences could affect "fit up" of the steel or incorrect final deck elevations.

If the contractor elects to change the pouring sequences, the effects shall be fully evaluated by the contractor's engineer allowing sufficient time for engineer's review and prior to fabrication. The engineer's review of such changes will be at the contractor's expense and does not relieve the contractor of any responsibility.

ESTIMATED QUANTITIES (BRIDGE)

	Item		Substr.	Superstr.	Total
	Class 1 Excavation	cu. yard	80	---	80
	Temporary Shoring	lump sum	1	---	1
	Drilled Shafts (6 ft. 6 in. Dia.)	linear foot	4.694.0	---	4.694.0
	Rock Sockets (6 ft. 0 in. Dia.)	linear foot	828.0	---	828.0
	Supplementary Television Camera Inspection	each	20	---	20
	Foundation Inspection Holes	linear foot	1,228.0	---	1,228.0
	Concrete Coring	linear foot	556.0	---	556.0
	Sonic Logging Testing	each	40	---	40
	Class B Concrete (Substructure)	cu. yard	3,904.7	---	3,904.7
	Slab On Steel	sq. yard	---	24,113	24,113
*	Barrier Curb (Type D)	linear foot	---	10,169	10,169
	Reinforcing Steel (Bridges)	pound	3,349,950	---	3,349,950
	Mechanical Bar Splice	each	5,200	---	5,200
	Standpipe	lump sum	---	1	1
	Reinforcing Steel (Epoxy Coated)	pound	177,290	---	177,290
	Protective Coating - Concrete Bents and Piers (Epoxy)	lump sum	1	---	1
	Temporary Coating - Concrete Bents and Piers (Weathering Steel)	lump sum	1	---	1
	Fabricated Structural Low Alloy Steel (Misc)	pound	---	595,560	595,560
	Fabricated Structural Low Alloy Steel (Plate Girder) A709, Grade 50W	pound	---	9,099,470	9,099,470
	Fabricated Structural Low Alloy Steel (Plate Girder) A709 Grade HPS70W	pound	---	2,116,700	2,116,700
	Drainage System (On Structure)	lump sum	---	1	1
	POT Bearing	each	---	96	96
	Modular Expansion Joint	linear foot	---	80	80
**	Non-Special Waste Disposal	cu. yard	612	---	612

Notes:
* Slip-forming of the barrier curbs is not allowed.
** Non-Special Waste Disposal is included in the "SUMMARY OF QUANTITES (ROADWAY)" table in the Roadway drawings.

The cost of any required excavation down to the top of the drilled shafts will be considered completely covered by the contract unit price for Drilled Shafts (6 ft. 6 in. Dia.), unless noted otherwise.

Contractor shall dispose of excavated material and drilling fluids removed from drilled shafts in accordance with Sec 701.4.7.2. Additionally, the contractor shall be responsible for securing a suitable off-site location to dispose of these materials. Payment for removal and disposal of said materials shall be completely covered by the contract unit price for Drilled Shafts (6ft. 6in. Dia.) and Rock Sockets (6ft. 0in. Dia.). Approval of said off-site disposal locations shall be done in accordance with Article 107.22 of the Illinois Standard Specification for Road and Bridge Construction.

Concrete coring shall be performed on 10% of the drilled shafts in accordance with Sec 701.

The contractor shall use a mechanical bar splice for #18-V, #14-V and #11-V Bars at the specified locations. The total bar lengths for bars indicated in the bill of reinforcing steel are determined based on the end of bars being located at the end of the adjacent bar. No additional payment will be made for any additional bar lengths required for the mechanical bar splice. Mechanical bar splice shall be in accordance with the Special Provision for Mechanical Bar Splice. Substitution of lap splices at any location indicating mechanical bar splices is not allowed.

All erosion control measures and maintenance plans shall be subject to review and approval of the affected Railroads in addition to IDOT requirements.

Note:
On all bridge drawings (Sheets 1 thru 152) "Sec" refers to the sections in the Special Provisions unless specified otherwise.

ESTIMATED QUANTITIES FOR SLAB ON STEEL

Item		Total
Class B-2 Concrete	cu. yard	4,562.0
Reinforcing Steel (Epoxy Coated)	pound	1,431,059

Notes:
The table of Estimated Quantities for Slab on Steel represents the quantities used by the State in preparing the cost estimate for concrete slabs. The area of the concrete slab will be measured to the nearest square yard with the horizontal dimensions as shown on the plan of slab. Payment for prestressed panels, stay-in-place forms, conventional forms, all concrete, and coated and uncoated reinforcing steel will be considered completely covered by the contract unit price for the slab. Variations may be encountered in the estimated quantities but the variations cannot be used for an adjustment in the contract unit price.

Method of forming the slabs shall be as shown on the plans and in accordance with Sec 703. All hardware for forming the slab to be left in place as a permanent part of the structure shall be coated in accordance with ASTM A123 or ASTM B633 with a thickness class SC 4 and a finish type I, II, or III.

The prestressed panel quantities are not included in the table of Estimated Quantities for Slab on Steel.

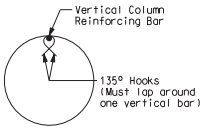

DETAIL OF SEISMIC STIRRUP BAR

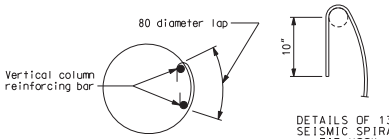

ANCHOR SPLICES IN SPIRAL AROUND VERTICAL BAR
(USE FOR INTERMEDIATE SPLICES OF SPIRALS)

FOUNDATION DATA

	Pier No.		14 (WB)	14 (EB)	15 (WB)	15 (EB)	16 (WB)	16 (EB)	17 (WB)	17 (EB)	18 (WB)	18 (EB)	19 (WB)	19 (EB)	20 (WB)	20 (EB)	21 (WB)	21 (EB)	22 (WB)	22 (EB)	23 (WB)	23 (EB)
Rock Sockets	Foundation Material		Rock	Rock	Rock	Rock	Rock	Rock	Rock	Rock	Rock	Rock	Rock	Rock	Rock	Rock	Rock	Rock	Rock	Rock	Rock	Rock
	Number		2	2	2	2	2	2	2	2	2	2	2	2	2	2	2	2	2	2	2	2
	Design Side Friction	kips/sq. foot	11.70	11.70	11.70	11.70	11.70	11.70	11.70	11.70	11.70	11.70	11.70	11.70	11.70	11.70	11.70	11.70	11.70	11.70	11.70	11.70
	Design End Bearing	kips/sq. foot	0.0	0.0	0.0	0.0	0.0	0.0	0.0	0.0	0.0	0.0	0.0	0.0	0.0	0.0	0.0	0.0	0.0	0.0	0.0	0.0

Detailed JUL 2009
Checked JUL 2009

Note: This drawing is not to scale. Follow dimensions.

Sheet No. 7 of 152

GENERAL NOTES AND ESTIMATED QUANTITIES

s:\idot\0906601\draw_idot\cadd_sheets\structural\B_A6500_007-152_J6I0984C_007.dgn

CONTRACT NO. 76D61

F.A. ROUTE	SECTION
999	82-1B-2
FED. AID PROJECT	ILLINOIS
COUNTY	ST. CLAIR

USER NAME = jjollff
PLOT SCALE = $SCALE$
PLOT DATE = 3/8/2010
DESIGNED - HNTB
CHECKED - CMT
DRAWN - CMT / HNTB
REVISED -
REVISED -
REVISED -
REVISED -

ILLINOIS APPROACH STRUCTURE
FOR NEW I-70 MISSISSIPPI RIVER BRIDGE

STATE OF ILLINOIS
DEPARTMENT OF TRANSPORTATION

MISSOURI HIGHWAYS
AND TRANSPORTATION COMMISSION

HNTB
715 KIRK DRIVE
KANSAS CITY, MO 64105
TELEPHONE (816) 472-1201
CERTIFICATE OF AUTHORITY
NO. 001270

CMT
CRAWFORD, MURPHY & TILLY, INC.
2750 WEST WASHINGTON STREET
SPRINGFIELD, IL 62702
TELEPHONE (217) 787-8050
ENGINEERING CORPORATION - 000631

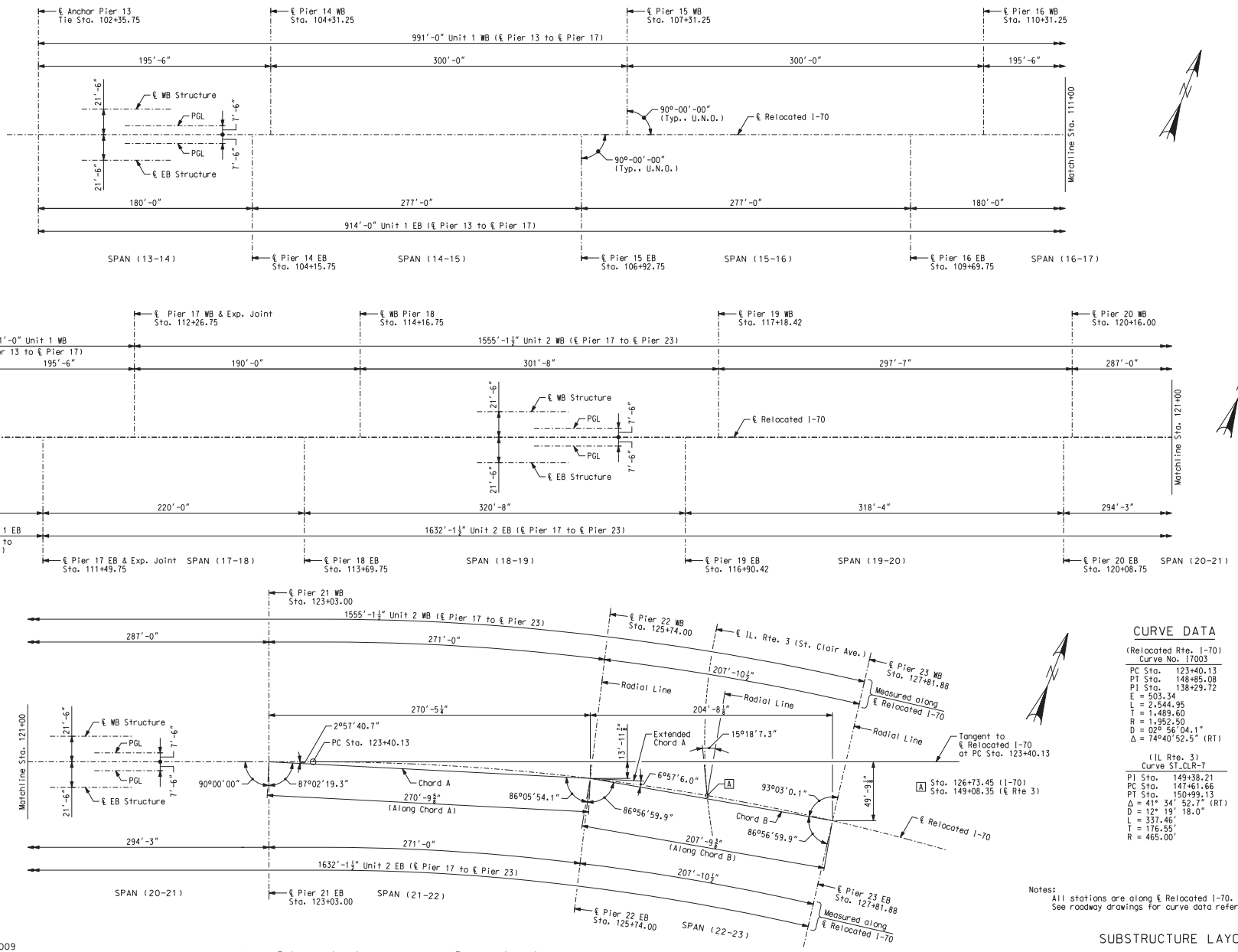

CURVE DATA

(Relocated Rte. I-70)
Curve No. I7003

PC Sta. 123+40.13
PT Sta. 148+85.08
PI Sta. 138+29.72
E = 503.34
L = 2,544.95
T = 1,489.60
R = 1,952.50
D = 02° 56'04.1"
Δ = 74°40'52.5" (RT)

(IL Rte. 3)
Curve ST_CLR-7

PI Sta. 149+38.21
PC Sta. 147+61.66
PT Sta. 150+99.13
Δ = 41° 34' 52.7" (RT)
D = 12° 19' 18.0"
L = 337.46'
T = 176.55'
R = 465.00'

Notes:
All stations are along ℄ Relocated I-70.
See roadway drawings for curve data references.

SUBSTRUCTURE LAYOUT

Detailed JUL 2009
Checked JUL 2009

Note: This drawing is not to scale. Follow dimensions.

Sheet No. 8 of 152

s:\idot\0906601\draw_idot\cadd_sheets\structural\B_A6500_008-152_J6I0984C_008.dgn

CONTRACT NO. 76D61

F.A. ROUTE	SECTION
999	82-1B-2
FED. AID PROJECT	ILLINOIS
COUNTY	ST. CLAIR

USER NAME = jjolliff
PLOT SCALE = $SCALE$
PLOT DATE = 3/8/2010
DESIGNED - HNTB
CHECKED - CMT
DRAWN - CMT / HTNB
REVISED -
REVISED -
REVISED -
REVISED -

ILLINOIS APPROACH STRUCTURE
FOR NEW I-70 MISSISSIPPI RIVER BRIDGE

STATE OF ILLINOIS
DEPARTMENT OF TRANSPORTATION

MISSOURI HIGHWAYS
AND TRANSPORTATION COMMISSION

HNTB
715 KIRK DRIVE
KANSAS CITY, MO 64105
TELEPHONE (816) 472-1201
CERTIFICATE OF AUTHORITY
NO. 001270

CMT
CRAWFORD, MURPHY & TILLY, INC.
2750 WEST WASHINGTON STREET
SPRINGFIELD, IL 62702
TELEPHONE (217) 787-8050
ENGINEERING CORPORATION - 000631

TYPICAL BORING

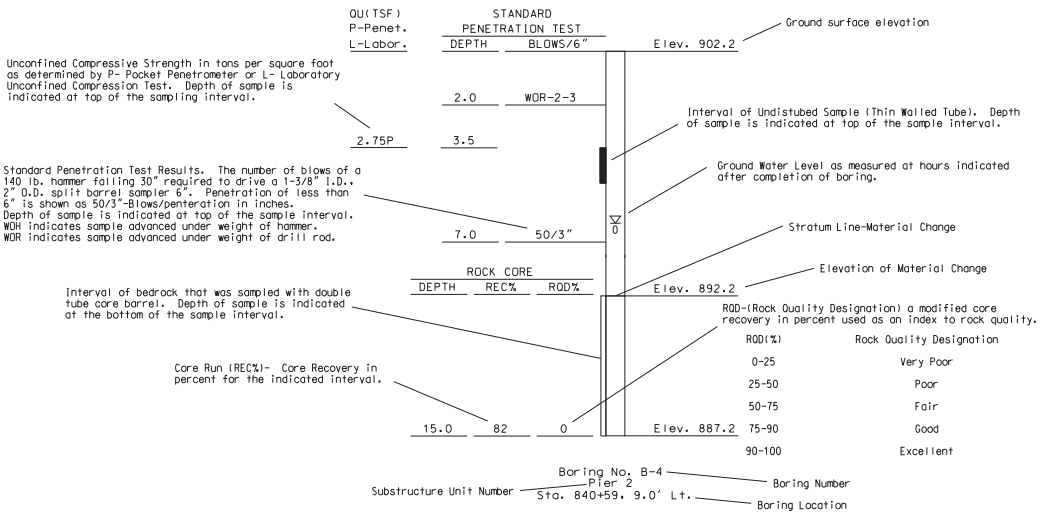

GENERAL NOTES:

The borings shown in these plans were drilled by Geotechnology, Inc., under the direction of HNTB Corporation, between September 29, 2008 and January 12, 2009.

For boring locations in plan, see Sheet Nos. 3 through 6.

The ground water levels shown were recorded during time of drilling. Porosity of soil strata, weather conditions, seasonal changes, site topography, etc., may cause changes in the water levels reported.

The boring information shown on this drawing is abbreviated. The boring data for all locations indicated, as well as any other boring logs or other factual records of subsurface data and investigations performed by the department for the design of the project, will be provided in the bridge electronic deliverable file or will be available from the Project Contact upon written request as outlined in the Project Special Provisions. No greater significance or weight should be given to the boring data depicted on the plan sheets than is subsurface data available from the district or elsewhere.

For notice and disclaimer regarding boring log data, see Sheet No. 3.

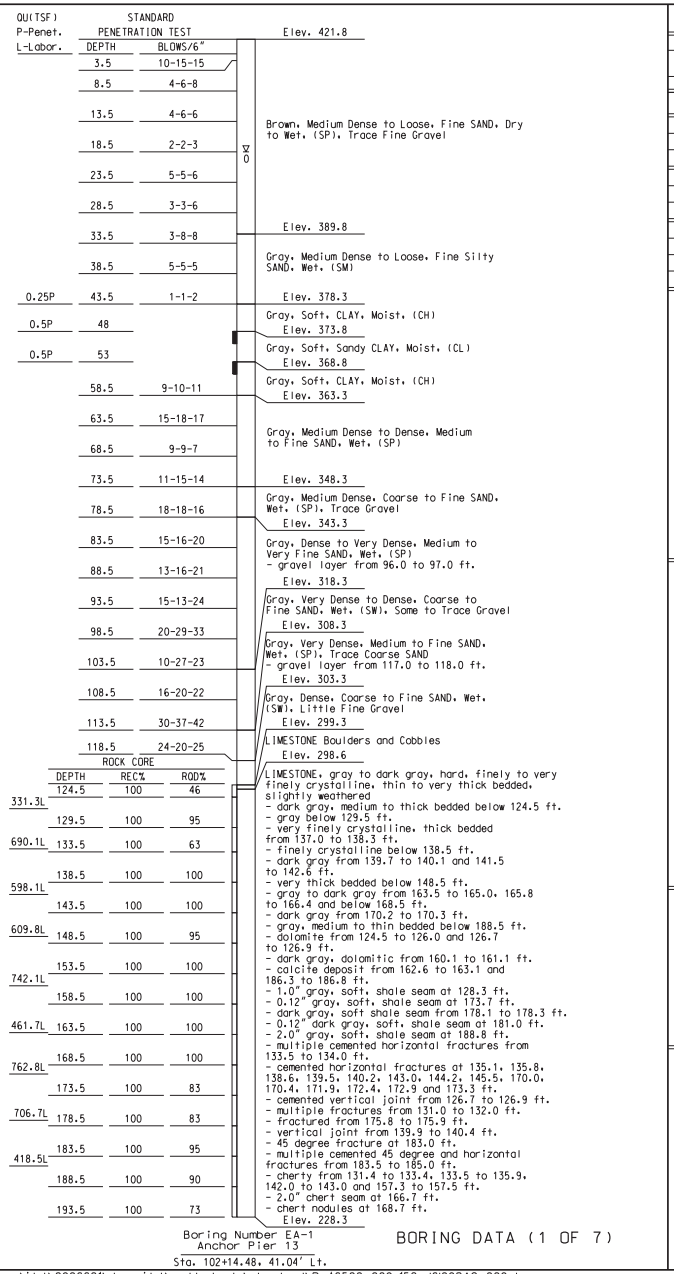

BORING DATA (1 OF 7)

CONTRACT NO. 76061

F.A. ROUTE	SECTION
999	82-1B-2
FED. AID PROJECT	ILLINOIS
COUNTY	ST. CLAIR

USER NAME = jjolliff
PLOT SCALE = $SCALE$
PLOT DATE = 3/8/2010

DESIGNED - HNTB
CHECKED - CMT
DRAWN - CMT / HTNB
REVISED -
REVISED -
REVISED -
REVISED -

ILLINOIS APPROACH STRUCTURE FOR NEW I-70 MISSISSIPPI RIVER BRIDGE

STATE OF ILLINOIS
DEPARTMENT OF TRANSPORTATION

MISSOURI HIGHWAYS AND TRANSPORTATION COMMISSION

HNTB
715 KIRK DRIVE
KANSAS CITY, MO 64105
TELEPHONE (816) 472-1201
CERTIFICATE OF AUTHORITY NO. 001270

CMT
CRAWFORD, MURPHY & TILLY, INC.
2750 WEST WASHINGTON STREET
SPRINGFIELD, IL 62702
TELEPHONE (217) 787-8050
ENGINEERING CORPORATION - 000631

Detailed JUL 2009
Checked JUL 2009

Note: This drawing is not to scale. Follow dimensions.

s:\idot\0906601\draw_idot\cadd_sheets\structural\B_A6500_009-152_J6l0984C_009.dgn

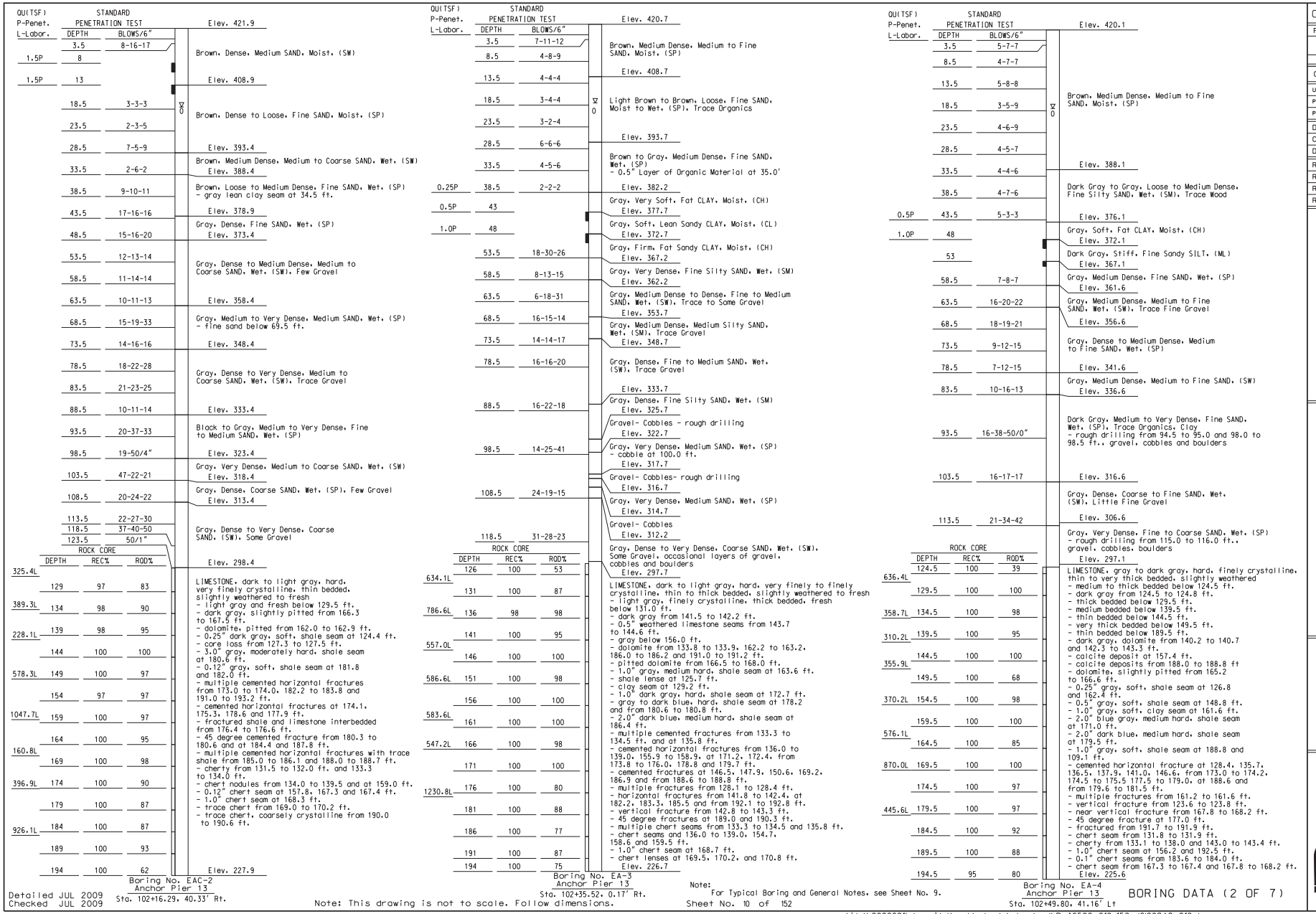
QU(TSF) P-Penet. L-Labor.
STANDARD PENETRATION TEST
DEPTH
BLOWS/6"
ROCK CORE
REC%
RQD%
Elev. 421.9
3.5 8-16-17
Brown, Dense, Medium SAND, Moist, (SW)
1.5P 8
Elev. 408.9
1.5P 13
18.5 3-3-3
Brown, Dense to Loose, Fine SAND, Moist, (SP)
23.5 2-3-5
Elev. 393.4
28.5 7-5-9
Brown, Medium Dense, Medium to Coarse SAND, Wet, (SW)
33.5 2-6-2
Elev. 388.4
38.5 9-10-11
Brown, Loose to Medium Dense, Fine SAND, Wet, (SP)
- gray lean clay seam at 34.5 ft.
43.5 17-16-16
Elev. 378.9
48.5 15-16-20
Gray, Dense, Fine SAND, Wet, (SP)
Elev. 373.4
53.5 12-13-14
58.5 11-14-14
Gray, Dense to Medium Dense, Medium to Coarse SAND, Wet, (SW), Few Gravel
63.5 10-11-13
Elev. 358.4
68.5 15-19-33
Gray, Medium to Very Dense, Medium SAND, Wet, (SP)
- fine sand below 69.5 ft.
73.5 14-16-16
Elev. 348.4
78.5 18-22-28
83.5 21-23-25
Gray, Dense to Very Dense, Medium to Coarse SAND, Wet, (SW), Trace Gravel
88.5 10-11-14
Elev. 333.4
93.5 20-37-33
Black to Gray, Medium to Very Dense, Fine to Medium SAND, Wet, (SP)
98.5 19-50/4"
Elev. 323.4
103.5 47-22-21
Gray, Very Dense, Medium to Coarse SAND, Wet, (SW)
Elev. 318.4
108.5 20-24-22
Gray, Dense, Coarse SAND, Wet, (SP), Few Gravel
Elev. 313.4
113.5 22-27-30
118.5 37-40-50
123.5 50/1"
Gray, Dense to Very Dense, Coarse SAND, (SW), Some Gravel
Elev. 298.4
325.4L
129 97 83
LIMESTONE, dark to light gray, hard, very finely crystalline, thin bedded, slightly weathered to fresh
- light gray and fresh below 129.5 ft.
- dark gray, slightly pitted from 166.3 to 167.5 ft.
389.3L 134 98 90
- dolomite, pitted from 162.0 to 162.9 ft.
228.1L 139 98 95
- 0.25" dark gray, soft, shale seam at 124.4 ft.
- core loss from 127.3 to 127.5 ft.
144 100 100
- 3.0" gray, moderately hard, shale seam at 180.6 ft.
578.3L 149 100 97
- 0.12" gray, soft, shale seam at 181.8 and 182.0 ft.
- multiple cemented horizontal fractures from 173.0 to 174.0, 182.2 to 183.8 and 191.0 to 193.2 ft.
154 97 97
- cemented horizontal fractures at 174.1, 175.3, 178.6 and 177.9 ft.
1047.7L 159 100 97
- fractured shale and limestone interbedded from 176.4 to 176.6 ft.
164 100 95
- 45 degree cemented fracture from 180.3 to 180.6 and at 184.4 and 187.8 ft.
160.8L 169 100 98
- multiple cemented horizontal fractures with trace shale from 185.0 to 186.1 and 188.0 to 188.7 ft.
- cherty from 131.5 to 132.0 ft. and 133.3 to 134.0 ft.
396.9L 174 100 90
- chert nodules from 134.0 to 139.5 and at 159.0 ft.
- 0.12" chert seam at 157.8, 167.3 and 167.4 ft.
179 100 87
- 1.0" chert seam at 168.3 ft.
- trace chert from 169.0 to 170.2 ft.
926.1L 184 100 87
- trace chert, coarsely crystalline from 190.0 to 190.6 ft.
189 100 93
194 100 62
Elev. 227.9
Boring No. EAC-2
Anchor Pier 13
Sta. 102+16.29, 40.33' Rt.
Detailed JUL 2009
Checked JUL 2009
QU(TSF) P-Penet. L-Labor.
STANDARD PENETRATION TEST
DEPTH
BLOWS/6"
ROCK CORE
REC%
RQD%
Elev. 420.7
3.5 7-11-12
Brown, Medium Dense, Medium to Fine SAND, Moist, (SP)
8.5 4-8-9
Elev. 408.7
13.5 4-4-4
18.5 3-4-4
Light Brown to Brown, Loose, Fine SAND, Moist to Wet, (SP), Trace Organics
23.5 3-2-4
Elev. 393.7
28.5 6-6-6
Brown to Gray, Medium Dense, Fine SAND, Wet, (SP)
- 0.5" Layer of Organic Material at 35.0'
33.5 4-5-6
0.25P 38.5 2-2-2
Elev. 382.2
Gray, Very Soft, Fat CLAY, Moist, (CH)
0.5P 43
Elev. 377.7
Gray, Soft, Lean Sandy CLAY, Moist, (CL)
1.0P 48
Elev. 372.7
53.5 18-30-26
Gray, Firm, Fat Sandy CLAY, Moist, (CH)
Elev. 367.2
58.5 8-13-15
Gray, Very Dense, Fine Silty SAND, Wet, (SM)
Elev. 362.2
63.5 6-18-31
Gray, Medium Dense to Dense, Fine to Medium SAND, Wet, (SW), Trace to Some Gravel
Elev. 353.7
68.5 16-15-14
Gray, Medium Dense, Medium Silty SAND, Wet, (SM), Trace Gravel
73.5 14-14-17
Elev. 348.7
78.5 16-16-20
Gray, Dense, Fine to Medium SAND, Wet, (SW), Trace Gravel
Elev. 333.7
88.5 16-22-18
Gray, Dense, Fine Silty SAND, Wet, (SM)
Elev. 325.7
Gravel- Cobbles - rough drilling
Elev. 322.7
98.5 14-25-41
Gray, Very Dense, Medium SAND, Wet, (SP)
- cobble at 100.0 ft.
Elev. 317.7
Gravel- Cobbles- rough drilling
Elev. 316.7
108.5 24-19-15
Gray, Very Dense, Medium SAND, Wet, (SP)
Elev. 314.7
Gravel- Cobbles
Elev. 312.2
118.5 31-28-23
Gray, Dense to Very Dense, Coarse SAND, Wet, (SW), Some Gravel, occasional layers of gravel, cobbles and boulders
Elev. 297.7
634.1L 126 100 53
LIMESTONE, dark to light gray, hard, very finely to finely crystalline, thin to thick bedded, slightly weathered to fresh
- light gray, finely crystalline, thick bedded, fresh below 131.0 ft.
131 100 87
- dark gray from 141.5 to 142.2 ft.
786.6L 136 98 98
- 0.5" weathered limestone seams from 143.7 to 144.6 ft.
141 100 95
- gray below 156.0 ft.
557.0L
- dolomite from 133.8 to 133.9, 162.2 to 163.2, 186.0 to 186.2 and 191.0 to 191.2 ft.
146 100 100
- pitted dolomite from 166.5 to 168.0 ft.
- 1.0" gray, medium hard, shale seam at 163.6 ft.
586.6L 151 100 98
- shale lense at 125.7 ft.
- clay seam at 129.2 ft.
- 1.0" dark gray, hard, shale seam at 172.7 ft.
156 100 100
- gray to dark blue, hard, shale seam at 178.2 and from 180.6 to 180.8 ft.
583.6L
- 2.0" dark blue, medium hard, shale seam at 186.4 ft.
161 100 100
- multiple cemented fractures from 133.3 to 134.5 ft. and at 135.8 ft.
547.2L 166 100 98
- cemented horizontal fractures from 136.0 to 139.0, 155.9 to 158.9, at 171.2, 172.4, from 173.8 to 176.0, 178.8 and 179.7 ft.
171 100 100
- cemented fractures at 146.5, 147.9, 150.6, 169.2, 186.9 and from 188.6 to 188.8 ft.
- multiple fractures from 128.1 to 128.4 ft.
1230.8L 176 100 80
- horizontal fractures from 141.8 to 142.4, at 182.2, 183.3, 185.5 and from 192.1 to 192.8 ft.
- vertical fracture from 142.8 to 143.3 ft.
181 100 88
- 45 degree fractures at 189.0 and 190.3 ft.
- multiple chert seams from 133.3 to 134.5 and 135.8 ft.
- chert seams and 136.0 to 139.0, 154.7, 158.6 and 159.5 ft.
186 100 77
- 1.0" chert seam at 168.7 ft.
- chert lenses at 169.5, 170.2, and 170.8 ft.
191 100 87
Elev. 226.7
194 100 75
Boring No. EA-3
Anchor Pier 13
Sta. 102+35.52, 0.17' Rt.
QU(TSF) P-Penet. L-Labor.
STANDARD PENETRATION TEST
DEPTH
BLOWS/6"
ROCK CORE
REC%
RQD%
Elev. 420.1
3.5 5-7-7
8.5 4-7-7
13.5 5-8-8
18.5 3-5-9
Brown, Medium Dense, Medium to Fine SAND, Moist, (SP)
23.5 4-6-9
28.5 4-5-7
33.5 4-4-6
Elev. 388.1
38.5 4-7-6
Dark Gray to Gray, Loose to Medium Dense, Fine Silty SAND, Wet, (SM), Trace Wood
0.5P 43.5 5-3-3
Elev. 376.1
1.0P 48
Gray, Soft, Fat CLAY, Moist, (CH)
Elev. 372.1
53
Dark Gray, Stiff, Fine Sandy SILT, (ML)
Elev. 367.1
58.5 7-8-7
Gray, Medium Dense, Fine SAND, Wet, (SP)
Elev. 361.6
63.5 16-20-22
Gray, Medium Dense, Medium to Fine SAND, Wet, (SW), Trace Fine Gravel
Elev. 356.6
68.5 18-19-21
73.5 9-12-15
Gray, Dense to Medium Dense, Medium to Fine SAND, Wet, (SP)
78.5 7-12-15
Elev. 341.6
83.5 10-16-13
Gray, Medium Dense, Medium to Fine SAND, (SW)
Elev. 336.6
93.5 16-38-50/0"
Dark Gray, Medium to Very Dense, Fine SAND, Wet, (SP), Trace Organics, Clay
- rough drilling from 94.5 to 95.0 and 98.0 to 98.5 ft., gravel, cobbles and boulders
103.5 16-17-17
Elev. 316.6
113.5 21-34-42
Gray, Dense, Coarse to Fine SAND, Wet, (SW), Little Fine Gravel
Elev. 306.6
Gray, Very Dense, Fine to Coarse SAND, Wet, (SP)
- rough drilling from 115.0 to 116.0 ft., gravel, cobbles, boulders
Elev. 297.1
636.4L 124.5 100 39
LIMESTONE, gray to dark gray, hard, finely crystalline, thin to very thick bedded, slightly weathered
- medium to thick bedded below 124.5 ft.
- dark gray from 124.5 to 124.8 ft.
129.5 100 100
- thick bedded below 129.5 ft.
- medium bedded below 139.5 ft.
358.7L 134.5 100 98
- thin bedded below 144.5 ft.
- very thick bedded below 149.5 ft.
- thin bedded below 189.5 ft.
310.2L 139.5 100 95
- dark gray, dolomite from 140.2 to 140.7 and 142.3 to 143.3 ft.
- calcite deposit at 157.4 ft.
144.5 100 100
- calcite deposits from 188.0 to 188.8 ft
355.9L
- dolomite, slightly pitted from 165.2 to 166.6 ft.
149.5 100 68
- 0.25" gray, soft, shale seam at 126.8 and 162.4 ft.
370.2L 154.5 100 98
- 0.5" gray, soft, shale seam at 148.8 ft.
- 1.0" gray, soft, clay seam at 161.6 ft.
- 2.0" blue gray, medium hard, shale seam at 171.0 ft.
159.5 100 100
- 2.0" dark blue, medium hard, shale seam at 179.5 ft.
576.1L
- 1.0" gray, soft, shale seam at 188.8 and 109.1 ft.
164.5 100 85
- cemented horizontal fracture at 128.4, 135.7, 136.5, 137.9, 141.0, 146.6, from 173.0 to 174.2, 174.5 to 175.5 177.5 to 179.0, at 188.6 and from 179.6 to 181.5 ft.
870.0L 169.5 100 100
- multiple fractures from 161.2 to 161.6 ft.
- vertical fracture from 123.6 to 123.8 ft.
174.5 100 97
- near vertical fracture from 167.8 to 168.2 ft.
445.6L 179.5 100 97
- 45 degree fracture at 177.0 ft.
- fractured from 191.7 to 191.9 ft.
- cherty from 131.8 to 131.9 ft.
184.5 100 92
- 0.1" chert seams from 183.6 to 184.0 ft.
- chert seam from 167.3 to 167.4 and 167.8 to 168.2 ft.
189.5 100 88
Elev. 225.6
194.5 95 80
Boring No. EA-4
Anchor Pier 13
Sta. 102+49.80, 41.16' Lt
Note: This drawing is not to scale. Follow dimensions.
Note: For Typical Boring and General Notes, see Sheet No. 9.
Sheet No. 10 of 152
BORING DATA (2 OF 7)
CONTRACT NO. 76D61
F.A. ROUTE 999
SECTION 82-1B-2
FED. AID PROJECT
ILLINOIS
COUNTY ST. CLAIR
USER NAME = jjolliff
PLOT SCALE = $SCALE$
PLOT DATE = 3/8/2010
DESIGNED - HNTB
CHECKED - CMT
DRAWN - CMT / HTNB
REVISED -
REVISED -
REVISED -
REVISED -
ILLINOIS APPROACH STRUCTURE FOR NEW I-70 MISSISSIPPI RIVER BRIDGE
STATE OF ILLINOIS DEPARTMENT OF TRANSPORTATION
MISSOURI HIGHWAYS AND TRANSPORTATION COMMISSION
HNTB
715 KIRK DRIVE
KANSAS CITY, MO 64105
TELEPHONE (816) 472-1201
CERTIFICATE OF AUTHORITY NO. 001270
CMT
CRAWFORD, MURPHY & TILLY, INC.
2750 WEST WASHINGTON STREET
SPRINGFIELD, IL 62702
TELEPHONE (217) 787-8050
ENGINEERING CORPORATION - 000631
s:\idot\0906601\draw_idot\cadd_sheets\structural\B_A6500_010-152_J6I0984C_010.dgn

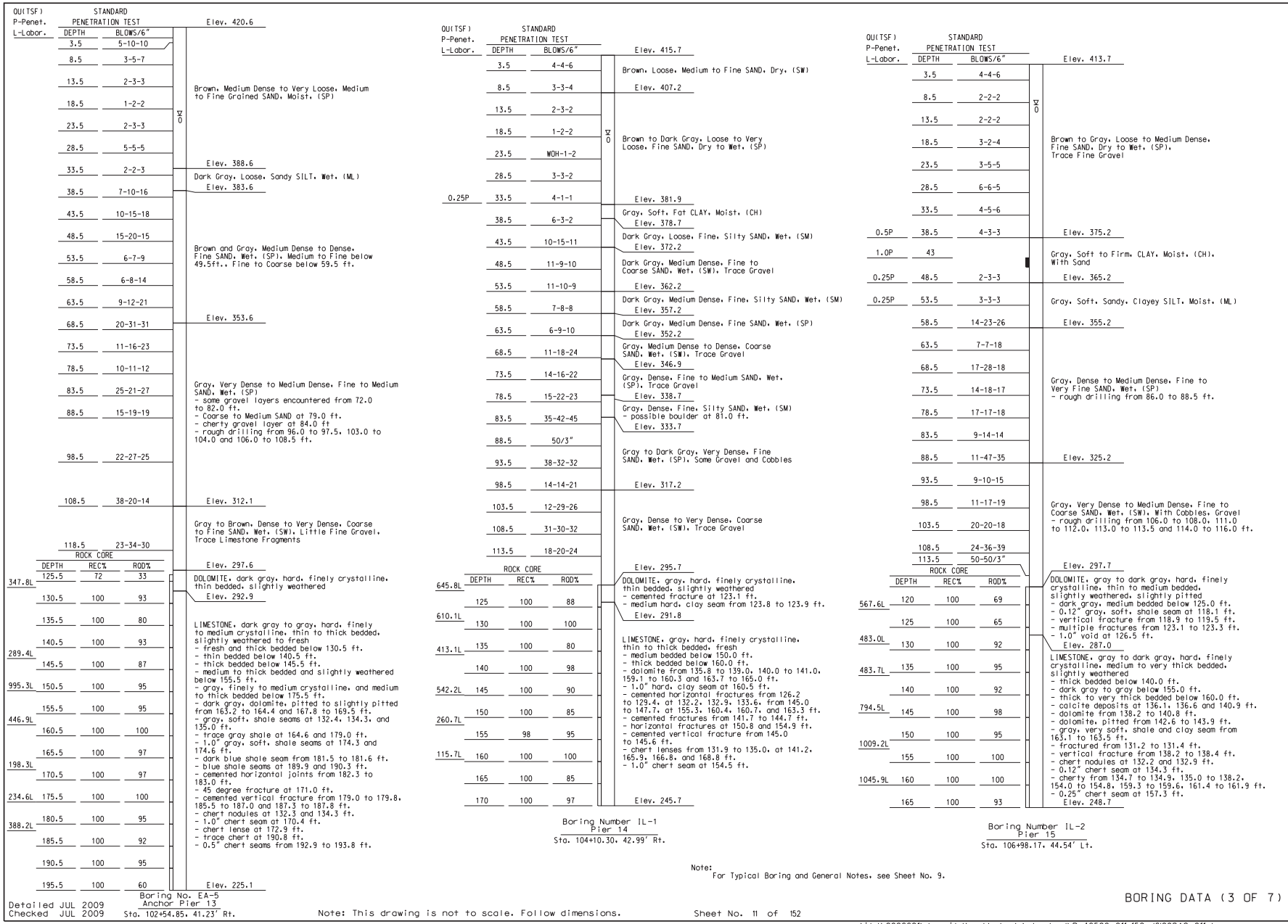

Note:
For Typical Boring and General Notes, see Sheet No. 9.

BORING DATA (3 OF 7)

Detailed JUL 2009
Checked JUL 2009

Note: This drawing is not to scale. Follow dimensions.

Sheet No. 11 of 152

s:\idot\0906601\draw_idot\cadd_sheets\structural\B_A6500_011-152_J6I0984C_011.dgn

CONTRACT NO. 76D61

F.A. ROUTE	SECTION
999	82-1B-2
FED. AID PROJECT	ILLINOIS
COUNTY	ST. CLAIR

USER NAME = jjolliff
PLOT SCALE = $SCALE$
PLOT DATE = 3/8/2010
DESIGNED - HNTB
CHECKED - CMT
DRAWN - CMT / HTNB
REVISED -
REVISED -
REVISED -
REVISED -

ILLINOIS APPROACH STRUCTURE FOR NEW I-70 MISSISSIPPI RIVER BRIDGE

STATE OF ILLINOIS
DEPARTMENT OF TRANSPORTATION

MISSOURI HIGHWAYS AND TRANSPORTATION COMMISSION

HNTB
715 KIRK DRIVE
KANSAS CITY, MO 64105
TELEPHONE (816) 472-1201
CERTIFICATE OF AUTHORITY NO. 001270

CMT
CRAWFORD, MURPHY & TILLY, INC.
2750 WEST WASHINGTON STREET
SPRINGFIELD, IL 62702
TELEPHONE (217) 787-8050
ENGINEERING CORPORATION - 000631

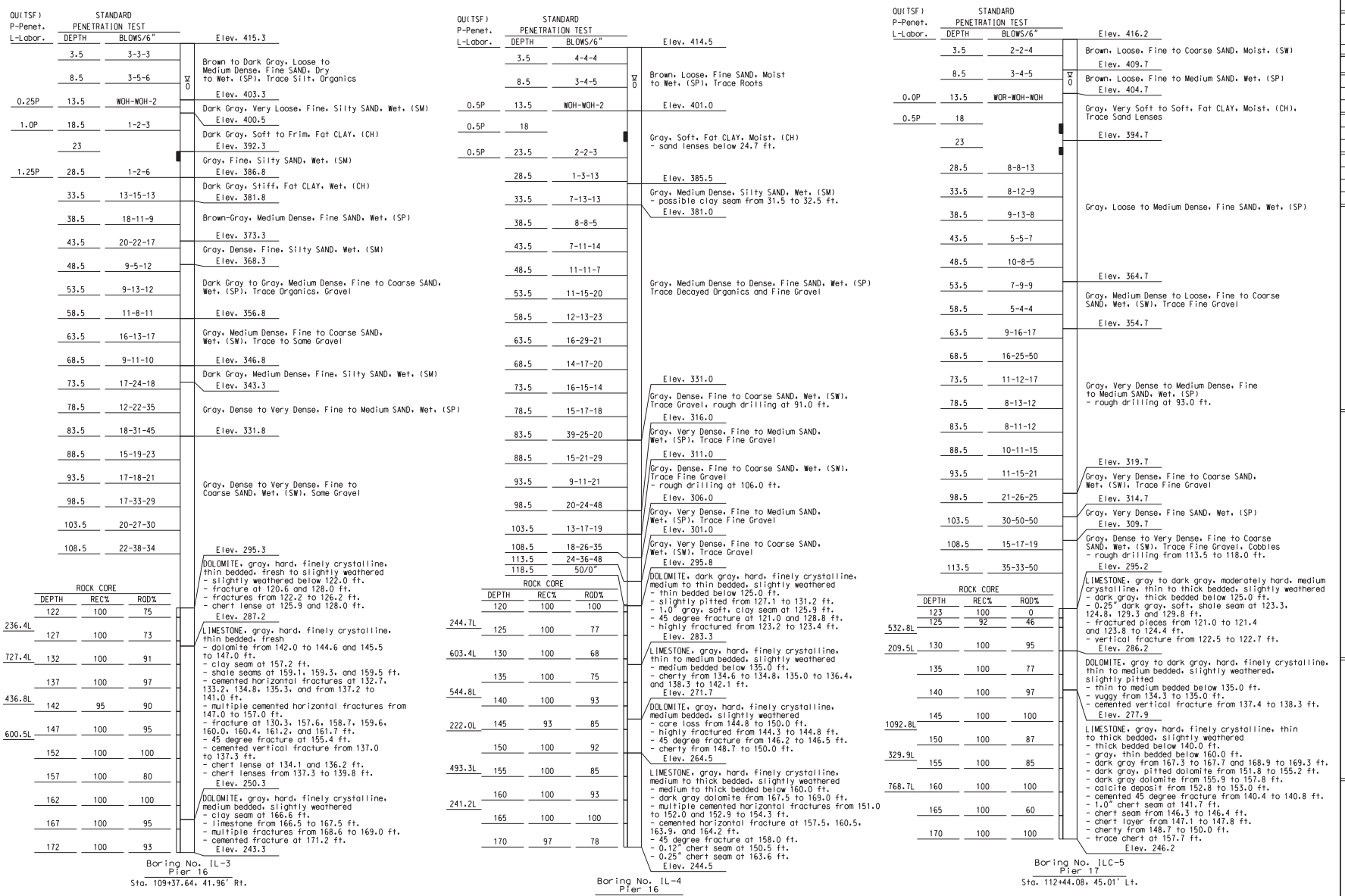

Note:
For Typical Boring and General Notes, see Sheet No. 9.

BORING DATA (4 OF 7)

CONTRACT NO. 76D61

F.A. ROUTE	SECTION
999	82-1B-2
FED. AID PROJECT	ILLINOIS
COUNTY	ST. CLAIR

USER NAME = jjolliff
PLOT SCALE = $SCALE$
PLOT DATE = 3/8/2010
DESIGNED - HNTB
CHECKED - CMT
DRAWN - CMT / HTNB
REVISED -
REVISED -
REVISED -
REVISED -

ILLINOIS APPROACH STRUCTURE FOR NEW I-70 MISSISSIPPI RIVER BRIDGE

STATE OF ILLINOIS
DEPARTMENT OF TRANSPORTATION

MISSOURI HIGHWAYS AND TRANSPORTATION COMMISSION

HNTB
715 KIRK DRIVE
KANSAS CITY, MO 64105
TELEPHONE (816) 472-1201
CERTIFICATE OF AUTHORITY NO. 001270

CMT
CRAWFORD, MURPHY & TILLY, INC.
2750 WEST WASHINGTON STREET
SPRINGFIELD, IL 62702
TELEPHONE (217) 787-8050
ENGINEERING CORPORATION - 000631

Detailed JUL 2009
Checked JUL 2009

Note: This drawing is not to scale. Follow dimensions.

s:\idot\0906601\draw_idot\cadd_sheets\structural\B_A6500_012-152_J6I0984C_012.dgn

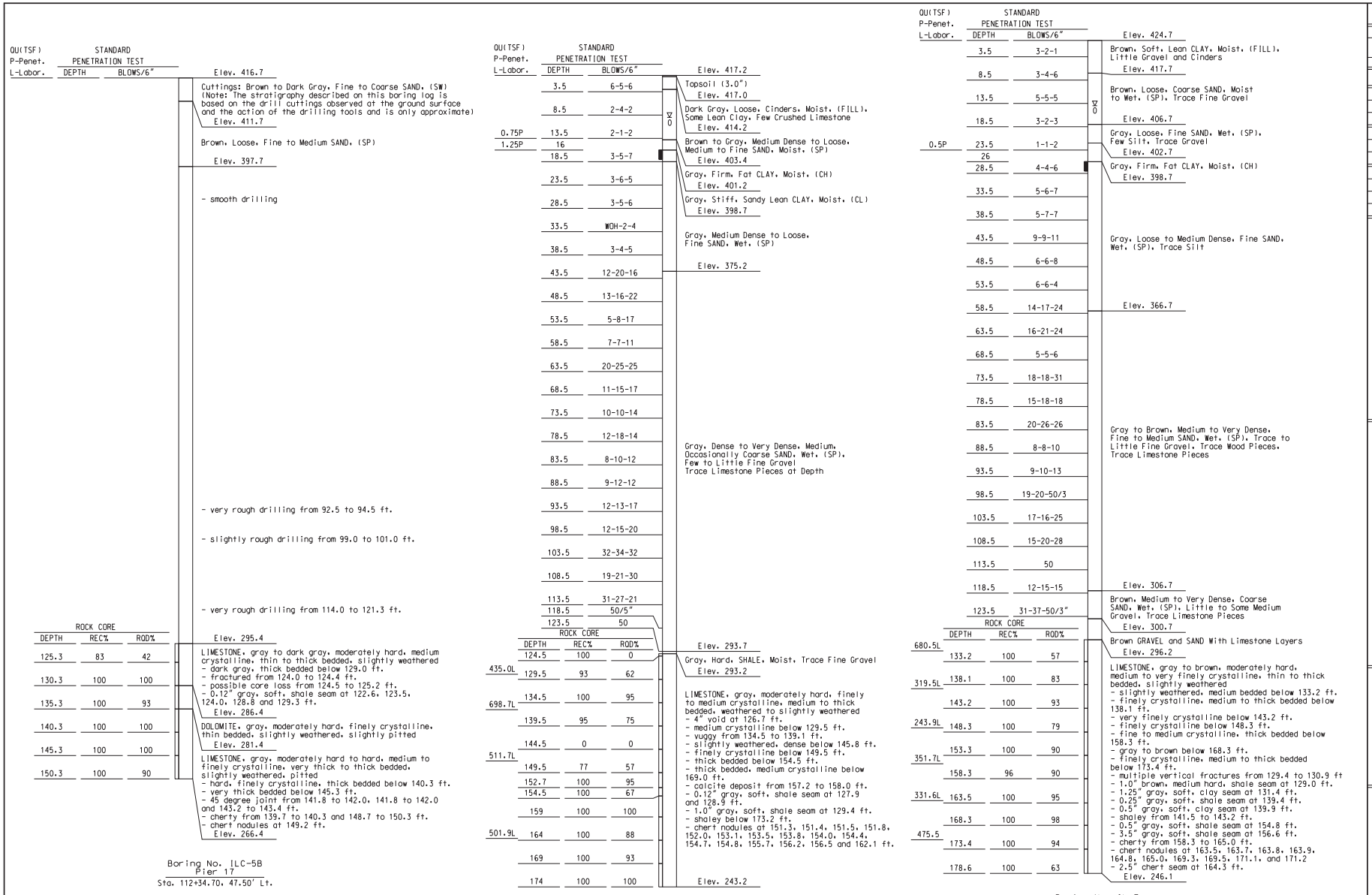
QU(TSF) P-Penet. L-Labor.
STANDARD PENETRATION TEST
DEPTH
BLOWS/6"
Elev. 416.7
Cuttings: Brown to Dark Gray, Fine to Coarse SAND, (SW) (Note: The stratigraphy described on this boring log is based on the drill cuttings observed at the ground surface and the action of the drilling tools and is only approximate)
Elev. 411.7
Brown, Loose, Fine to Medium SAND, (SP)
Elev. 397.7
- smooth drilling
- very rough drilling from 92.5 to 94.5 ft.
- slightly rough drilling from 99.0 to 101.0 ft.
- very rough drilling from 114.0 to 121.3 ft.
ROCK CORE
DEPTH REC% ROD%
125.3 83 42
130.3 100 100
135.3 100 93
140.3 100 100
145.3 100 100
150.3 100 90
Elev. 295.4
LIMESTONE, gray to dark gray, moderately hard, medium crystalline, thin to thick bedded, slightly weathered
- dark gray, thick bedded below 129.0 ft.
- fractured from 124.0 to 124.4 ft.
- possible core loss from 124.5 to 125.2 ft.
- 0.12" gray, soft, shale seam at 122.6, 123.5, 124.0, 128.8 and 129.3 ft.
Elev. 286.4
DOLOMITE, gray, moderately hard, finely crystalline, thin bedded, slightly weathered, slightly pitted
Elev. 281.4
LIMESTONE, gray, moderately hard to hard, medium to finely crystalline, very thick to thick bedded, slightly weathered, pitted
- hard, finely crystalline, thick bedded below 140.3 ft.
- very thick bedded below 145.3 ft.
- 45 degree joint from 141.8 to 142.0, 141.8 to 142.0 and 143.2 to 143.4 ft.
- cherty from 139.7 to 140.3 and 148.7 to 150.3 ft.
- chert nodules at 149.2 ft.
Elev. 266.4
Boring No. ILC-5B
Pier 17
Sta. 112+34.70, 47.50' Lt.
QU(TSF) P-Penet. L-Labor.
STANDARD PENETRATION TEST
DEPTH BLOWS/6"
0.75P 13.5 2-1-2
1.25P 16
18.5 3-5-7
23.5 3-6-5
28.5 3-5-6
33.5 WOH-2-4
38.5 3-4-5
43.5 12-20-16
48.5 13-16-22
53.5 5-8-17
58.5 7-7-11
63.5 20-25-25
68.5 11-15-17
73.5 10-10-14
78.5 12-18-14
83.5 8-10-12
88.5 9-12-12
93.5 12-13-17
98.5 12-15-20
103.5 32-34-32
108.5 19-21-30
113.5 31-27-21
118.5 50/5"
123.5 50
ROCK CORE
DEPTH REC% ROD%
124.5 100 0
435.0L 129.5 93 62
134.5 100 95
698.7L 139.5 95 75
144.5 0 0
511.7L 149.5 77 57
152.7 100 95
154.5 100 67
159 100 100
501.9L 164 100 88
169 100 93
174 100 100
Elev. 417.2
Topsoil (3.0")
Elev. 417.0
Dark Gray, Loose, Cinders, Moist, (FILL), Some Lean Clay, Few Crushed Limestone
Elev. 414.2
Brown to Gray, Medium Dense to Loose, Medium to Fine SAND, Moist, (SP)
Elev. 403.4
Gray, Firm, Fat CLAY, Moist, (CH)
Elev. 401.2
Gray, Stiff, Sandy Lean CLAY, Moist, (CL)
Elev. 398.7
Gray, Medium Dense to Loose, Fine SAND, Wet, (SP)
Elev. 375.2
Gray, Dense to Very Dense, Medium, Occasionally Coarse SAND, Wet, (SP), Few to Little Fine Gravel Trace Limestone Pieces at Depth
Elev. 293.7
Gray, Hard, SHALE, Moist, Trace Fine Gravel
Elev. 293.2
LIMESTONE, gray, moderately hard, finely to medium crystalline, medium to thick bedded, weathered to slightly weathered
- 4" void at 126.7 ft.
- medium crystalline below 129.5 ft.
- vuggy from 134.5 to 139.1 ft.
- slightly weathered, dense below 145.8 ft.
- finely crystalline below 149.5 ft.
- thick bedded below 154.5 ft.
- thick bedded, medium crystalline below 169.0 ft.
- calcite deposit from 157.2 to 158.0 ft.
- 0.12" gray, soft, shale seam at 127.9 and 128.9 ft.
- 1.0" gray, soft, shale seam at 129.4 ft.
- shaley below 173.2 ft.
- chert nodules at 151.3, 151.4, 151.5, 151.8, 152.0, 153.1, 153.5, 153.8, 154.0, 154.4, 154.7, 154.8, 155.7, 156.2, 156.5 and 162.1 ft.
Elev. 243.2
Boring No. IL-6
Pier 18
Sta. 113+78.36, 54.65' Rt.
QU(TSF) P-Penet. L-Labor.
STANDARD PENETRATION TEST
DEPTH BLOWS/6"
0.5P 23.5 1-1-2
26
28.5 4-4-6
33.5 5-6-7
38.5 5-7-7
43.5 9-9-11
48.5 6-6-8
53.5 6-6-4
58.5 14-17-24
63.5 16-21-24
68.5 5-5-6
73.5 18-18-31
78.5 15-18-18
83.5 20-26-26
88.5 8-8-10
93.5 9-10-13
98.5 19-20-50/3
103.5 17-16-25
108.5 15-20-28
113.5 50
118.5 12-15-15
123.5 31-37-50/3"
ROCK CORE
DEPTH REC% ROD%
680.5L 133.2 100 57
319.5L 138.1 100 83
143.2 100 93
243.9L 148.3 100 79
153.3 100 90
351.7L 158.3 96 90
331.6L 163.5 100 95
168.3 100 98
475.5 173.4 100 94
178.6 100 63
Elev. 424.7
Brown, Soft, Lean CLAY, Moist, (FILL), Little Gravel and Cinders
Elev. 417.7
Brown, Loose, Coarse SAND, Moist to Wet, (SP), Trace Fine Gravel
Elev. 406.7
Gray, Loose, Fine SAND, Wet, (SP), Few Silt, Trace Gravel
Elev. 402.7
Gray, Firm, Fat CLAY, Moist, (CH)
Elev. 398.7
Gray, Loose to Medium Dense, Fine SAND, Wet, (SP), Trace Silt
Elev. 366.7
Gray to Brown, Medium to Very Dense, Fine to Medium SAND, Wet, (SP), Trace to Little Fine Gravel, Trace Wood Pieces, Trace Limestone Pieces
Elev. 306.7
Brown, Medium to Very Dense, Coarse SAND, Wet, (SP), Little to Some Medium Gravel, Trace Limestone Pieces
Elev. 300.7
Brown GRAVEL and SAND With Limestone Layers
Elev. 296.2
LIMESTONE, gray to brown, moderately hard, medium to very finely crystalline, thin to thick bedded, slightly weathered
- slightly weathered, medium bedded below 133.2 ft.
- finely crystalline, medium to thick bedded below 138.1 ft.
- very finely crystalline below 143.2 ft.
- finely crystalline below 148.3 ft.
- fine to medium crystalline, thick bedded below 158.3 ft.
- gray to brown below 168.3 ft.
- finely crystalline, medium to thick bedded below 173.4 ft.
- multiple vertical fractures from 129.4 to 130.9 ft
- 1.0" brown, medium hard, shale seam at 129.0 ft.
- 1.25" gray, soft, clay seam at 131.4 ft.
- 0.25" gray, soft, shale seam at 139.4 ft.
- 0.5" gray, soft, clay seam at 139.9 ft.
- shaley from 141.5 to 143.2 ft.
- 0.5" gray, soft, shale seam at 154.8 ft.
- 3.5" gray, soft, shale seam at 156.6 ft.
- cherty from 158.3 to 165.0 ft.
- chert nodules at 163.5, 163.7, 163.8, 163.9, 164.8, 165.0, 169.3, 169.5, 171.1, and 171.2
- 2.5" chert seam at 164.3 ft.
Elev. 246.1
Boring No. IL-7
Pier 19
Sta. 116+58.68, 48.13' Lt.
Note:
For Typical Boring and General Notes, see Sheet No. 9.
BORING DATA (5 OF 7)
Detailed JUL 2009
Checked JUL 2009
Note: This drawing is not to scale. Follow dimensions.
Sheet No. 13 of 152
CONTRACT NO. 76D61
F.A. ROUTE 999
SECTION 82-1B-2
FED. AID PROJECT ILLINOIS
COUNTY ST. CLAIR
USER NAME = jjolliff
PLOT SCALE = $SCALE$
PLOT DATE = 3/8/2010
DESIGNED - HNTB
CHECKED - CMT
DRAWN - CMT / HTNB
REVISED -
REVISED -
REVISED -
REVISED -
ILLINOIS APPROACH STRUCTURE FOR NEW I-70 MISSISSIPPI RIVER BRIDGE
STATE OF ILLINOIS DEPARTMENT OF TRANSPORTATION
MISSOURI HIGHWAYS AND TRANSPORTATION COMMISSION
HNTB
715 KIRK DRIVE
KANSAS CITY, MO 64105
TELEPHONE (816) 472-1201
CERTIFICATE OF AUTHORITY NO. 001270
CMT
CRAWFORD, MURPHY & TILLY, INC.
2750 WEST WASHINGTON STREET
SPRINGFIELD, IL 62702
TELEPHONE (217) 787-8050
ENGINEERING CORPORATION - 000631
s:\idot\0906601\draw_idot\cadd_sheets\structural\B_A6500_013-152_J6I0984C_013.dgn

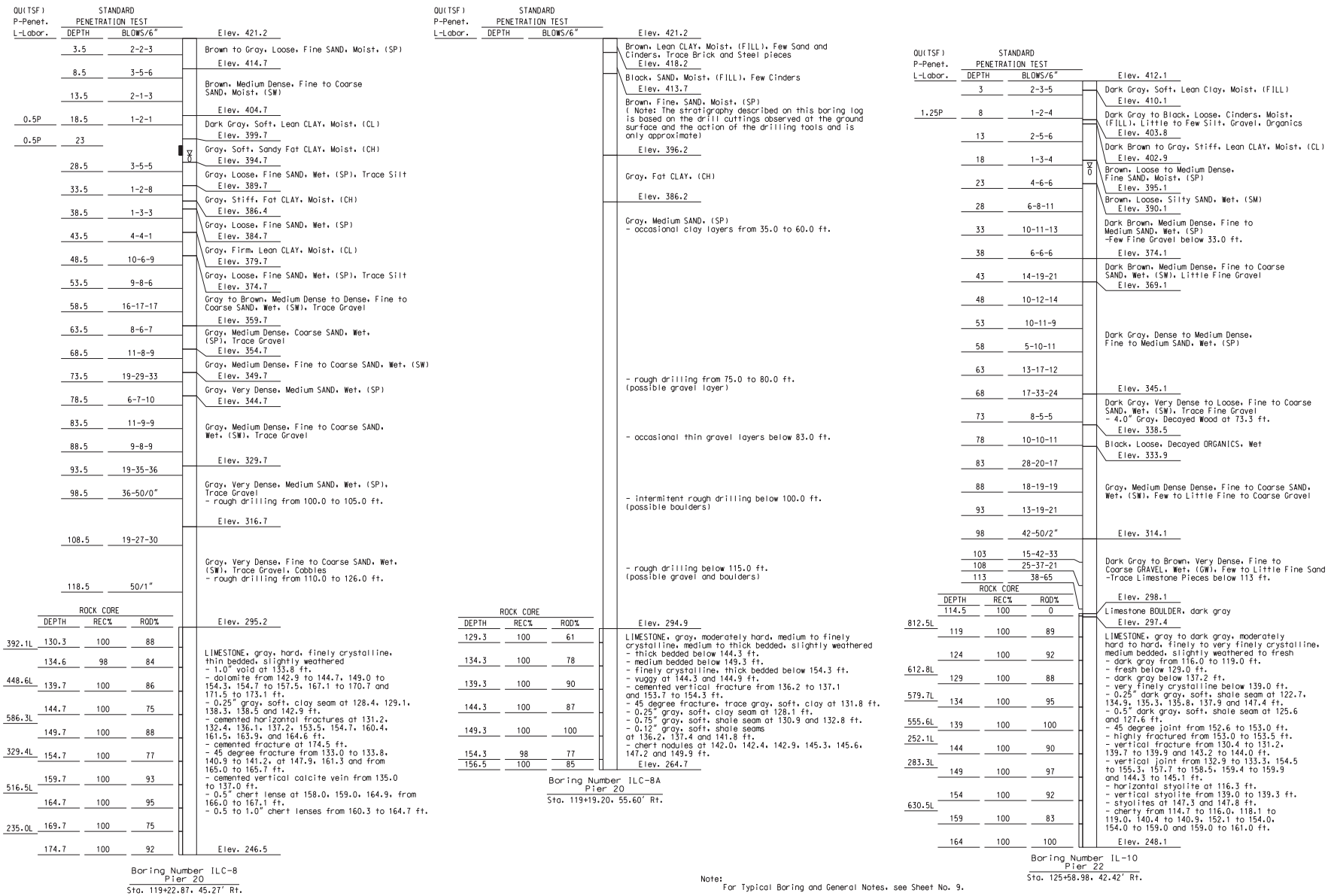
QU(TSF) P-Penet. L-Labor.
STANDARD PENETRATION TEST
DEPTH
BLOWS/6"
Elev. 421.2
3.5 2-2-3
Brown to Gray, Loose, Fine SAND, Moist, (SP)
Elev. 414.7
8.5 3-5-6
Brown, Medium Dense, Fine to Coarse SAND, Moist, (SW)
Elev. 404.7
13.5 2-1-3
0.5P 18.5 1-2-1
Dark Gray, Soft, Lean CLAY, Moist, (CL)
Elev. 399.7
0.5P 23
Gray, Soft, Sandy Fat CLAY, Moist, (CH)
Elev. 394.7
28.5 3-5-5
Gray, Loose, Fine SAND, Wet, (SP), Trace Silt
Elev. 389.7
33.5 1-2-8
Gray, Stiff, Fat CLAY, Moist, (CH)
Elev. 386.4
38.5 1-3-3
Gray, Loose, Fine SAND, Wet, (SP)
Elev. 384.7
43.5 4-4-1
Gray, Firm, Lean CLAY, Moist, (CL)
Elev. 379.7
48.5 10-6-9
Gray, Loose, Fine SAND, Wet, (SP), Trace Silt
Elev. 374.7
53.5 9-8-6
Gray to Brown, Medium Dense to Dense, Fine to Coarse SAND, Wet, (SW), Trace Gravel
Elev. 359.7
58.5 16-17-17
Gray, Medium Dense, Coarse SAND, Wet, (SP), Trace Gravel
Elev. 354.7
63.5 8-6-7
Gray, Medium Dense, Fine to Coarse SAND, Wet, (SW)
Elev. 349.7
68.5 11-8-9
Gray, Very Dense, Medium SAND, Wet, (SP)
Elev. 344.7
73.5 19-29-33
Gray, Medium Dense, Fine to Coarse SAND, Wet, (SW), Trace Gravel
78.5 6-7-10
Elev. 329.7
83.5 11-9-9
Gray, Very Dense, Medium SAND, Wet, (SP), Trace Gravel
- rough drilling from 100.0 to 105.0 ft.
88.5 9-8-8
Elev. 316.7
93.5 19-35-36
Gray, Very Dense, Fine to Coarse SAND, Wet, (SW), Trace Gravel, Cobbles
- rough drilling from 110.0 to 126.0 ft.
98.5 36-50/0"
Elev. 295.2
108.5 19-27-30
118.5 50/1"
ROCK CORE
DEPTH REC% ROD%
130.3 100 88
392.1L
134.6 98 84
LIMESTONE, gray, hard, finely crystalline, thin bedded, slightly weathered
- 1.0" void at 133.8 ft.
- dolomite from 142.9 to 144.7, 149.0 to 154.3, 154.7 to 157.5, 167.1 to 170.7 and 171.5 to 173.1 ft.
- 0.25" gray, soft, clay seam at 128.4, 129.1, 138.3, 138.5 and 142.9 ft.
- cemented horizontal fractures at 131.2, 132.4, 136.1, 137.2, 153.5, 154.7, 160.4, 161.5, 163.9, and 164.6 ft.
- cemented fracture at 174.5 ft.
- 45 degree fracture from 133.0 to 133.8, 140.9 to 141.2, at 147.9, 161.3 and from 165.0 to 165.7 ft.
- cemented vertical calcite vein from 135.0 to 137.0 ft.
- 0.5" chert lense at 158.0, 159.0, 164.9, from 166.0 to 167.1 ft.
- 0.5 to 1.0" chert lenses from 160.3 to 164.7 ft.
139.7 100 86
448.6L
144.7 100 75
586.3L
149.7 100 88
329.4L
154.7 100 77
159.7 100 93
516.5L
164.7 100 95
235.0L
169.7 100 75
174.7 100 92
Elev. 246.5
Boring Number ILC-8
Pier 20
Sta. 119+22.87, 45.27' Rt.
QU(TSF) P-Penet. L-Labor.
STANDARD PENETRATION TEST
DEPTH
BLOWS/6"
Elev. 421.2
Brown, Lean CLAY, Moist, (FILL), Few Sand and Cinders, Trace Brick and Steel pieces
Elev. 418.2
Black, SAND, Moist, (FILL), Few Cinders
Elev. 413.7
Brown, Fine, SAND, Moist, (SP)
(Note: The stratigraphy described on this boring log is based on the drill cuttings observed at the ground surface and the action of the drilling tools and is only approximate)
Elev. 396.2
Gray, Fat CLAY, (CH)
Elev. 386.2
Gray, Medium SAND, (SP)
- occasional clay layers from 35.0 to 60.0 ft.
- rough drilling from 75.0 to 80.0 ft. (possible gravel layer)
- occasional thin gravel layers below 83.0 ft.
- intermitent rough drilling below 100.0 ft. (possible boulders)
- rough drilling below 115.0 ft. (possible gravel and boulders)
ROCK CORE
DEPTH REC% ROD%
129.3 100 61
LIMESTONE, gray, moderately hard, medium to finely crystalline, medium to thick bedded, slightly weathered
- thick bedded below 144.3 ft.
- medium bedded below 149.3 ft.
- finely crystalline, thick bedded below 154.3 ft.
- vuggy at 144.3 and 144.9 ft.
- cemented vertical fracture from 136.2 to 137.1 and 153.7 to 154.3 ft.
- 45 degree fracture, trace gray, soft, clay at 131.8 ft.
- 0.25" gray, soft, clay seam at 128.1 ft.
- 0.75" gray, soft, shale seam at 130.9 and 132.8 ft.
- 0.12" gray, soft, shale seams at 136.2, 137.4 and 141.8 ft.
- chert nodules at 142.0, 142.4, 142.9, 145.3, 145.6, 147.2 and 149.9 ft.
134.3 100 78
139.3 100 90
144.3 100 87
149.3 100 100
154.3 98 77
156.5 100 85
Elev. 294.9
Elev. 264.7
Boring Number ILC-8A
Pier 20
Sta. 119+19.20, 55.60' Rt.
QU(TSF) P-Penet. L-Labor.
STANDARD PENETRATION TEST
DEPTH
BLOWS/6"
Elev. 412.1
3 2-3-5
Dark Gray, Soft, Lean Clay, Moist, (FILL)
Elev. 410.1
1.25P 8 1-2-4
Dark Gray to Black, Loose, Cinders, Moist, (FILL), Little to Few Silt, Gravel, Organics
Elev. 403.8
13 2-5-6
Dark Brown to Gray, Stiff, Lean CLAY, Moist, (CL)
Elev. 402.9
18 1-3-4
Brown, Loose to Medium Dense, Fine SAND, Moist, (SP)
Elev. 395.1
23 4-6-6
Brown, Loose, Silty SAND, Wet, (SM)
Elev. 390.1
28 6-8-11
Dark Brown, Medium Dense, Fine to Medium SAND, Wet, (SP)
-Few Fine Gravel below 33.0 ft.
33 10-11-13
Elev. 374.1
38 6-6-6
Dark Brown, Medium Dense, Fine to Coarse SAND, Wet, (SW), Little Fine Gravel
Elev. 369.1
43 14-19-21
48 10-12-14
53 10-11-9
Dark Gray, Dense to Medium Dense, Fine to Medium SAND, Wet, (SP)
58 5-10-11
63 13-17-12
Elev. 345.1
68 17-33-24
Dark Gray, Very Dense to Loose, Fine to Coarse SAND, Wet, (SW), Trace Fine Gravel
- 4.0" Gray, Decayed Wood at 73.3 ft.
73 8-5-5
Elev. 338.5
78 10-10-11
Black, Loose, Decayed ORGANICS, Wet
Elev. 333.9
83 28-20-17
88 18-19-19
Gray, Medium Dense Dense, Fine to Coarse SAND, Wet, (SW), Few to Little Fine to Coarse Gravel
93 13-19-21
98 42-50/2"
Elev. 314.1
103 15-42-33
108 25-37-21
113 38-65
Dark Gray to Brown, Very Dense, Fine to Coarse GRAVEL, Wet, (GW), Few to Little Fine Sand
-Trace Limestone Pieces below 113 ft.
ROCK CORE
DEPTH REC% ROD%
114.5 100 0
Elev. 298.1
Limestone BOULDER, dark gray
812.5L 119 100 89
Elev. 297.4
LIMESTONE, gray to dark gray, moderately hard to hard, finely to very finely crystalline, medium bedded, slightly weathered to fresh
- dark gray from 116.0 to 119.0 ft.
- fresh below 129.0 ft.
- dark gray below 137.2 ft.
- very finely crystalline below 139.0 ft.
- 0.25" dark gray, soft, shale seam at 122.7, 134.9, 135.3, 135.8, 137.9 and 147.4 ft.
- 0.5" dark gray, soft, shale seam at 125.6 and 127.6 ft.
- 45 degree joint from 152.6 to 153.0 ft.
- highly fractured from 153.0 to 153.5 ft.
- vertical fracture from 130.4 to 131.2, 139.7 to 139.9 and 143.2 to 144.0 ft.
- vertical joint from 132.9 to 133.3, 154.5 to 155.3, 157.7 to 158.5, 159.4 to 159.9 and 144.3 to 145.1 ft.
- horizontal styolite at 116.3 ft.
- vertical styolite from 139.0 to 139.3 ft.
- styolites at 147.3 and 147.8 ft.
- cherty from 114.7 to 116.0, 118.1 to 119.0, 140.4 to 140.9, 152.1 to 154.0, 154.0 to 159.0 and 159.0 to 161.0 ft.
124 100 92
612.8L
129 100 88
579.7L
134 100 95
555.6L
139 100 100
252.1L
144 100 90
283.3L
149 100 97
154 100 92
630.5L
159 100 83
164 100 100
Elev. 248.1
Boring Number IL-10
Pier 22
Sta. 125+58.98, 42.42' Rt.
Note:
For Typical Boring and General Notes, see Sheet No. 9.
BORING DATA (6 OF 7)
CONTRACT NO. 76D61
F.A. ROUTE 999
SECTION 82-1B-2
FED. AID PROJECT
ILLINOIS
COUNTY ST. CLAIR
USER NAME = jjolliff
PLOT SCALE = $SCALE$
PLOT DATE = 3/8/2010
DESIGNED - HNTB
CHECKED - CMT
DRAWN - CMT / HTNB
REVISED -
REVISED -
REVISED -
REVISED -
ILLINOIS APPROACH STRUCTURE FOR NEW I-70 MISSISSIPPI RIVER BRIDGE
STATE OF ILLINOIS DEPARTMENT OF TRANSPORTATION
MISSOURI HIGHWAYS AND TRANSPORTATION COMMISSION
HNTB
715 KIRK DRIVE
KANSAS CITY, MO 64105
TELEPHONE (816) 472-1201
CERTIFICATE OF AUTHORITY NO. 001270
CMT
CRAWFORD, MURPHY & TILLY, INC.
2750 WEST WASHINGTON STREET
SPRINGFIELD, IL 62702
TELEPHONE (217) 787-8050
ENGINEERING CORPORATION - 000631
Detailed JUL 2009
Checked JUL 2009
Note: This drawing is not to scale. Follow dimensions.
Sheet No. 14 of 152
s:\idot\0906601\draw_idot\cadd_sheets\structural\B_A6500_014-152_J6I0984C_014.dgn

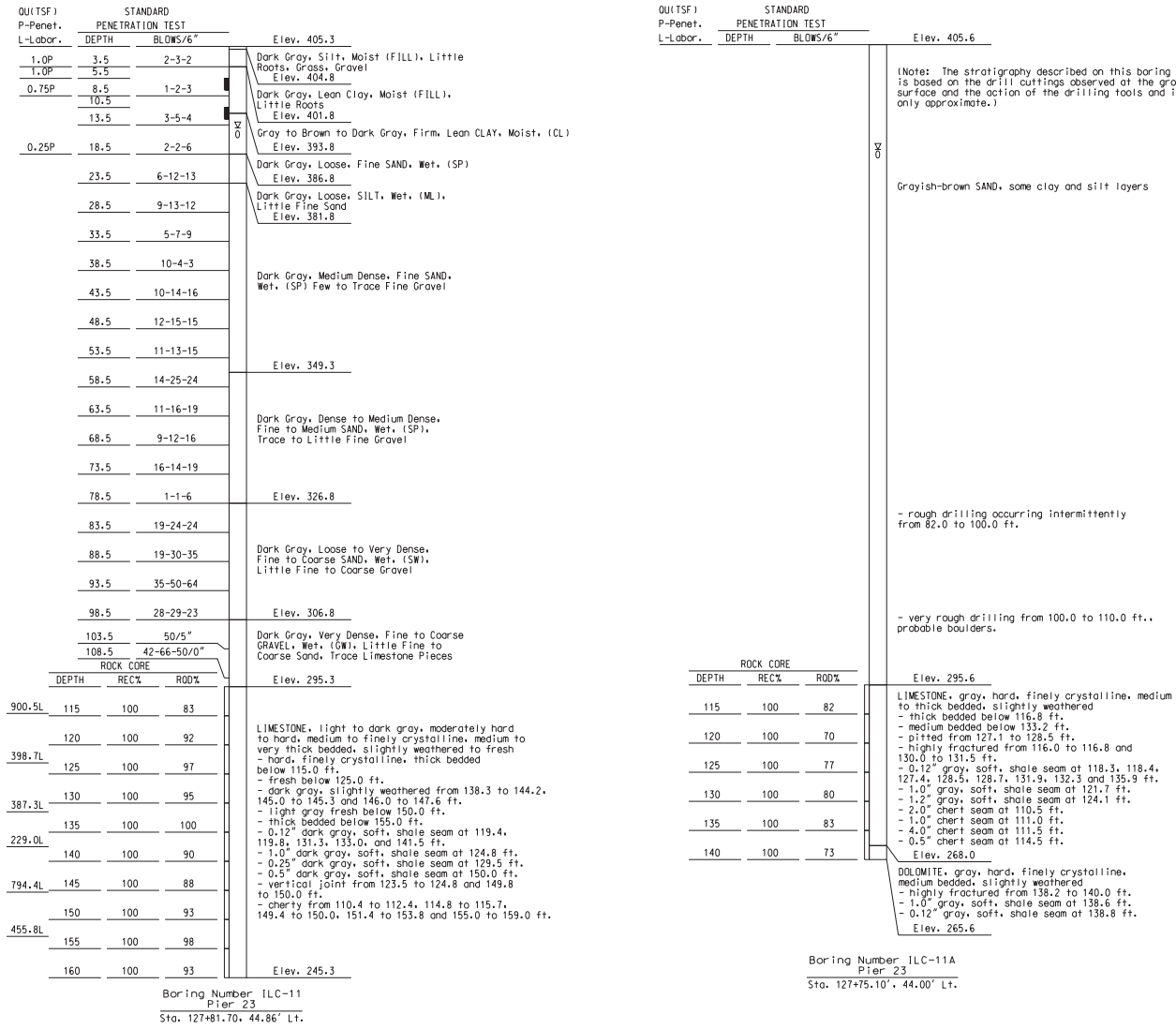

Note:
For Typical Boring and General Notes, see Sheet No. 9.

BORING DATA (7 OF 7)

CONTRACT NO. 76D61

F.A. ROUTE	SECTION
999	82-1B-2
FED. AID PROJECT	ILLINOIS
COUNTY	ST. CLAIR

USER NAME = jjolliff
PLOT SCALE = $SCALE$
PLOT DATE = 3/8/2010
DESIGNED - HNTB
CHECKED - CMT
DRAWN - CMT / HTNB
REVISED -
REVISED -
REVISED -
REVISED -

ILLINOIS APPROACH STRUCTURE
FOR NEW I-70 MISSISSIPPI RIVER BRIDGE

STATE OF ILLINOIS
DEPARTMENT OF TRANSPORTATION

MISSOURI HIGHWAYS
AND TRANSPORTATION COMMISSION

HNTB
715 KIRK DRIVE
KANSAS CITY, MO 64105
TELEPHONE (816) 472-1201
CERTIFICATE OF AUTHORITY
NO. 001270

CMT
CRAWFORD, MURPHY & TILLY, INC.
2750 WEST WASHINGTON STREET
SPRINGFIELD, IL 62702
TELEPHONE (217) 787-8050
ENGINEERING CORPORATION - 000631

Detailed JUL 2009
Checked JUL 2009

Note: This drawing is not to scale. Follow dimensions.

s:\idot\0906601\draw_idot\cadd_sheets\structural\B_A6500_015-152_J6I0984C_015.dgn

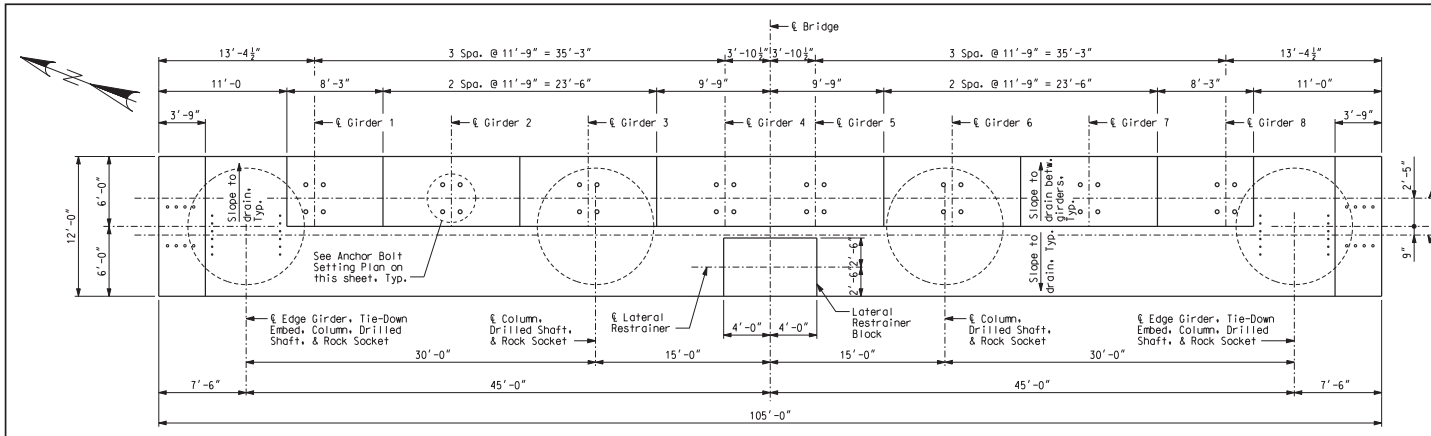

PLAN

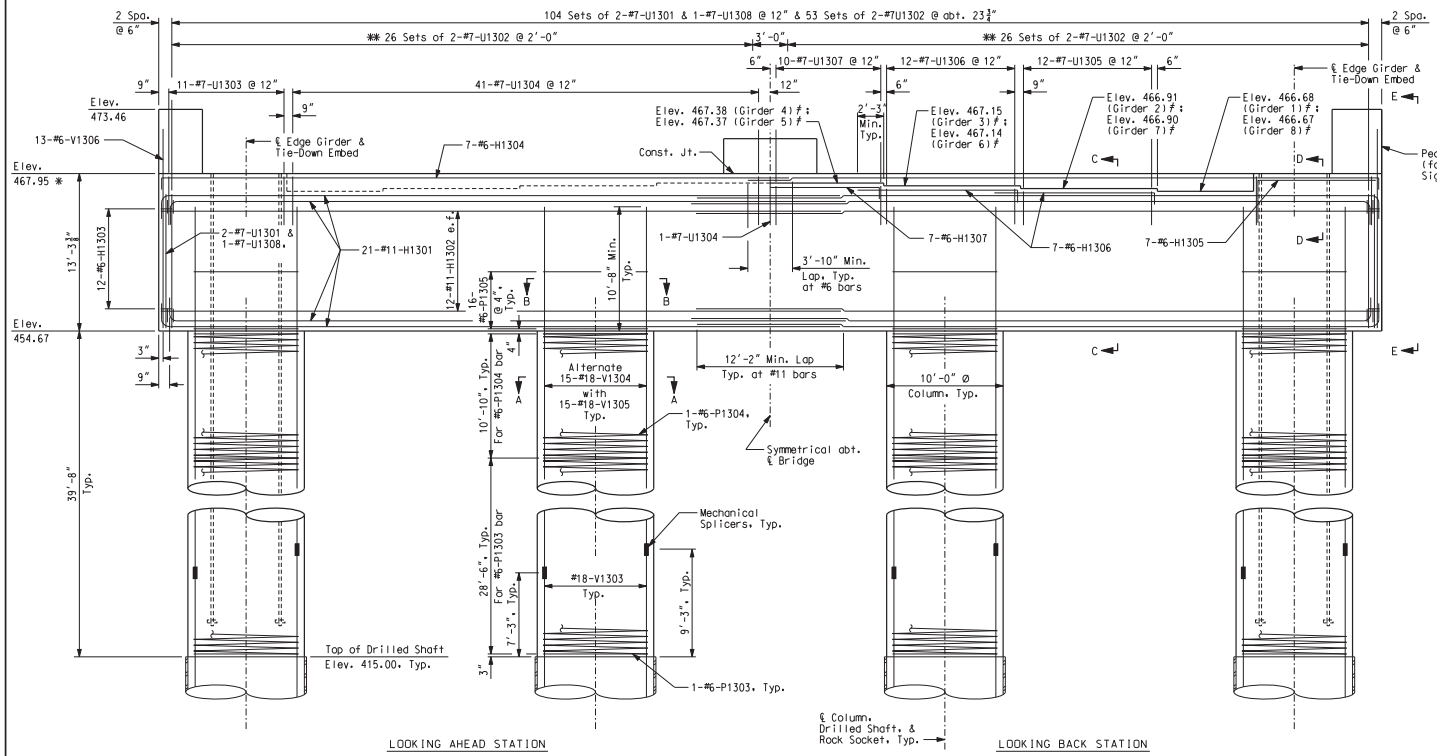

ELEVATION

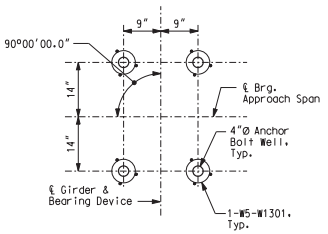

ANCHOR BOLT WELL SETTING PLAN

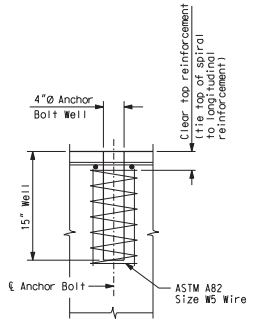

ANCHOR BOLT WELL DETAIL

Notes:
All reinforcing bars in the top of the capbeam shall be spaced to clear anchor bolt wells for bearings by at least 1/2″.
Seal top and both faces of capbeam with Protective Coating.
✻ Elevation taken at ℄ Pier.
℉ Elevation taken at ℄ Brg. Approach Span.
✻✻ Space to clear column reinforcing and anchor bolt wells.

PIER 13 (FOR INFORMATION ONLY)

Detailed JUL 2009
Checked JUL 2009

Note: This drawing is not to scale. Follow dimensions.

Sheet No. 16 of 152

s:\idot\0906601\draw_idot\cadd_sheets\structural\B_A6500_016-152_J6I0984C_016.dgn

CONTRACT NO. 76D61

F.A. ROUTE	SECTION
999	82-1B-2
FED. AID PROJECT	ILLINOIS
COUNTY	ST. CLAIR

USER NAME = jjolliff
PLOT SCALE = $SCALE$
PLOT DATE = 3/8/2010
DESIGNED - HNTB
CHECKED - CMT
DRAWN - CMT / HTNB
REVISED -
REVISED -
REVISED -
REVISED -

ILLINOIS APPROACH STRUCTURE FOR NEW I-70 MISSISSIPPI RIVER BRIDGE

STATE OF ILLINOIS
DEPARTMENT OF TRANSPORTATION

MISSOURI HIGHWAYS AND TRANSPORTATION COMMISSION

HNTB
715 KIRK DRIVE
KANSAS CITY, MO 64105
TELEPHONE (816) 472-1201
CERTIFICATE OF AUTHORITY NO. 001270

CMT
CRAWFORD, MURPHY & TILLY, INC.
2750 WEST WASHINGTON STREET
SPRINGFIELD, IL 62702
TELEPHONE (217) 787-8050
ENGINEERING CORPORATION - 000631

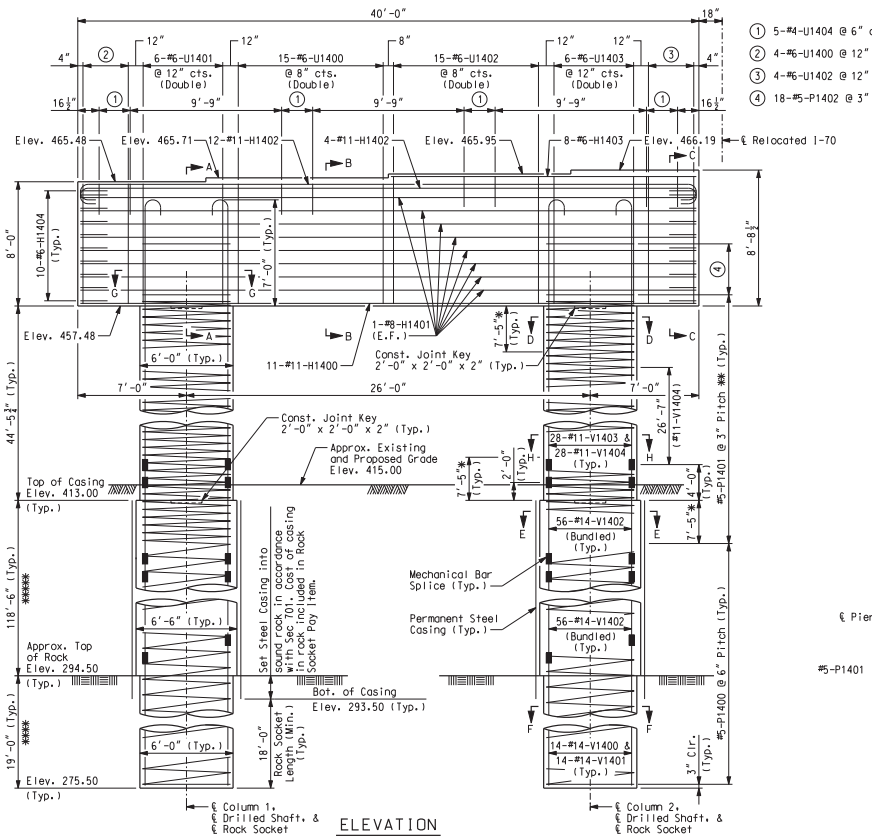

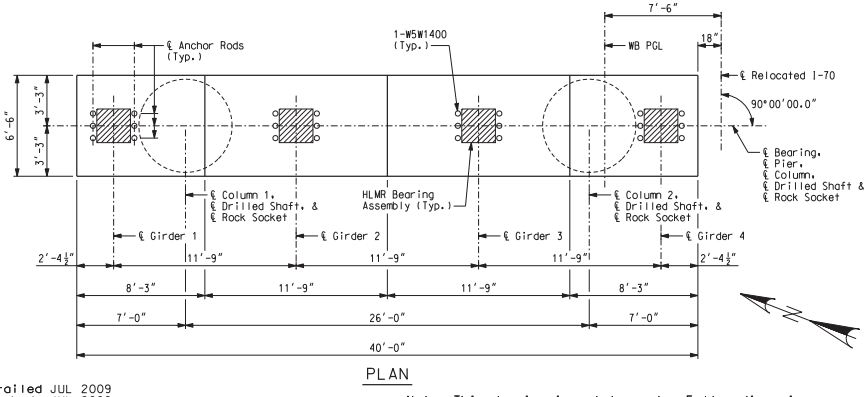

1. 5-#4-U1404 @ 6" cts.
2. 4-#6-U1400 @ 12" cts. (Double)
3. 4-#6-U1402 @ 12" cts. (Double)
4. 18-#5-P1402 @ 3" cts. (Typ.) ***

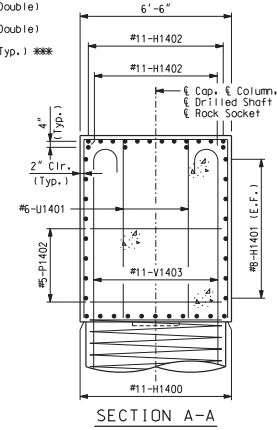

SECTION A-A

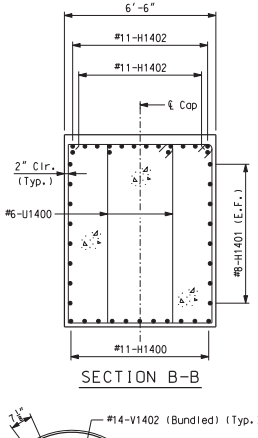

SECTION B-B

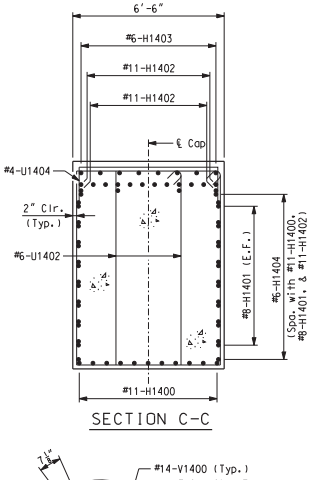

SECTION C-C

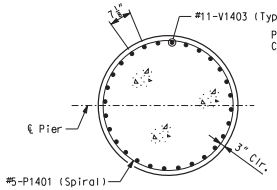

SECTION D-D
(6'-0" Diameter)

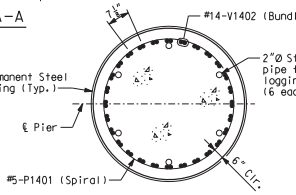

SECTION E-E
(6'-6" Diameter)

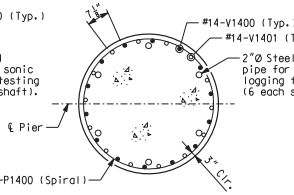

SECTION F-F
(6'-0" Diameter)

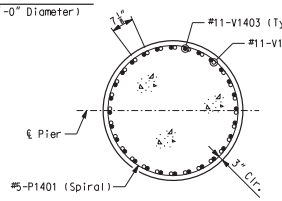

SECTION H-H
(6'-0" Diameter)

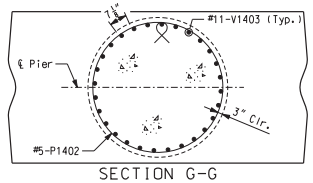

SECTION G-G
(Beam Cap reinforcement not shown)

SUBSTRUCTURE QUANTITY TABLE FOR PIER 14 WB		
Item		Quantity
Drilled Shafts (6 ft. 6 in. Dia.)	linear foot	237.0
Rock Sockets (6 ft. 0 in. Dia.)	linear foot	38.0
Supplementary Television Camera Inspection	each	1
Foundation Inspection Holes	linear foot	58.0
Sonic Logging Testing	each	2
Class B Concrete (Substructure)	cu. yard	173.6
Reinforcing Steel (Bridges)	pound	161,940
Mechanical Bar Splice	each	280

Note:
These quantities are included in the estimated quantities table on Sheet No. 7.

Notes:
An additional 4 feet has been added to #5-P1400, #14-V1400 and #14-V1401 lengths for possible change in drilled shaft or rock socket depth. This excess length shall be cut off or included in the reinforcement lap if not required.
Sonic logging testing shall be performed on all drilled shafts and rock sockets.
All reinforcing bars in the tops of substructure beams or caps shall be spaced to clear anchor rod wells for bearings by at least 1/2".
The hooks of V-Bars embedded in the beam cap shall be oriented inward. Bending the hook outward, away from the column core, is not allowed.
The thickness of steel casing shall meet all the requirements of Sec 701 with minimum thickness being 3/8 inch. Thicker casing may be required for installation.
For details of HLMR Bearing Assembly, see Sheet No. 43.
For Anchor Rod Well Details and Anchor Rod Setting Plan, see Sheet No. 44.
For details of seismic stirrup bars, see Sheet No. 7.
* Lapping of spiral reinforcement in this region not permitted.
** Continue spiral bars to the bottom of the beam cap stirrup reinforcing bar.
*** Splice locations shall be staggered.
Anchorage of spiral reinforcement shall be provided by 1-1/2 extra turns of spiral bar at each end of spiral unit.
**** Pay Items Rock Socket (6 ft. 0 in. Dia.).
***** Pay Items Drilled Shaft (6 ft. 6 in. Dia.).

PIER 14 WB

Detailed JUL 2009
Checked JUL 2009

Note: This drawing is not to scale. Follow dimensions.

Sheet No. 17 of 152

CONTRACT NO. 76D61

F.A. ROUTE	SECTION
999	82-1B-2
FED. AID PROJECT	ILLINOIS
COUNTY	ST. CLAIR

USER NAME = jjolliff
PLOT SCALE = #SCALE#
PLOT DATE = 3/8/2010
DESIGNED - HNTB
CHECKED - CMT
DRAWN - CMT / HTNB
REVISED -
REVISED -
REVISED -
REVISED -

ILLINOIS APPROACH STRUCTURE FOR NEW I-70 MISSISSIPPI RIVER BRIDGE

STATE OF ILLINOIS
DEPARTMENT OF TRANSPORTATION

MISSOURI HIGHWAYS AND TRANSPORTATION COMMISSION

HNTB
715 KIRK DRIVE
KANSAS CITY, MO 64105
TELEPHONE (816) 472-1201
CERTIFICATE OF AUTHORITY NO. 001270

CMT
CRAWFORD, MURPHY & TILLY, INC.
2750 WEST WASHINGTON STREET
SPRINGFIELD, IL 62702
TELEPHONE (217) 787-8050
ENGINEERING CORPORATION - 000631

s:\idot\0906601\draw_idot\cadd_sheets\structural\B_A6500_017-152_J6I0984C_017.dgn

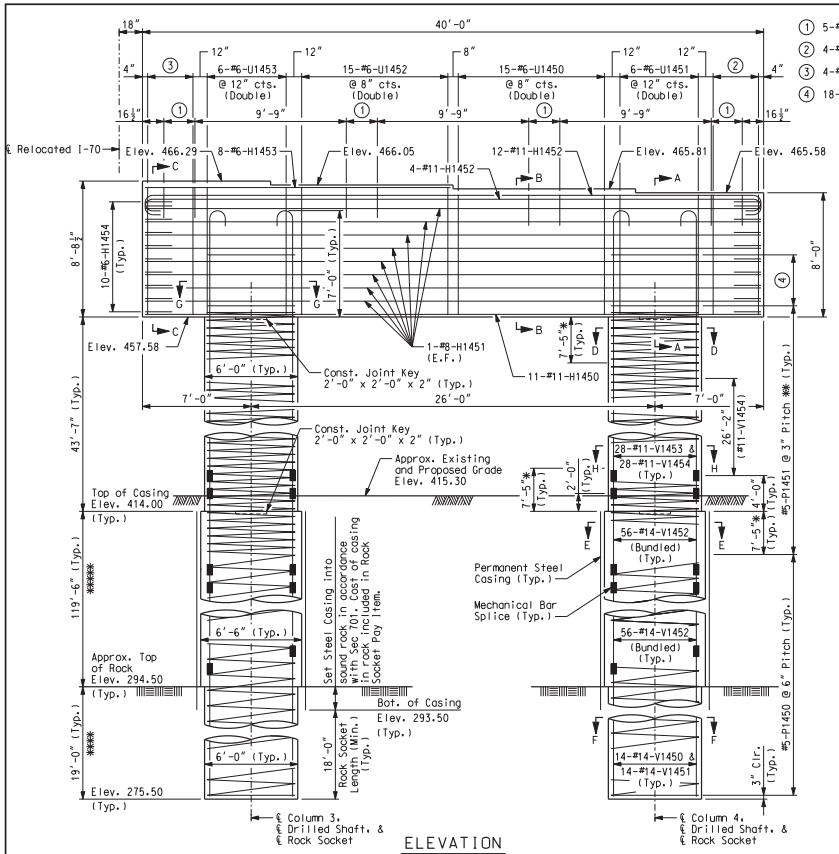

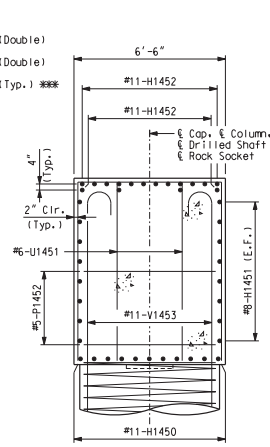

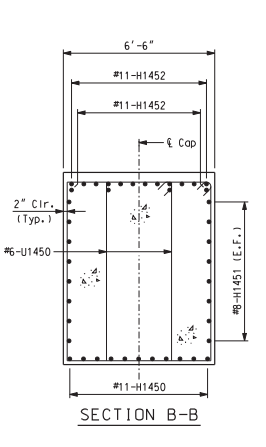

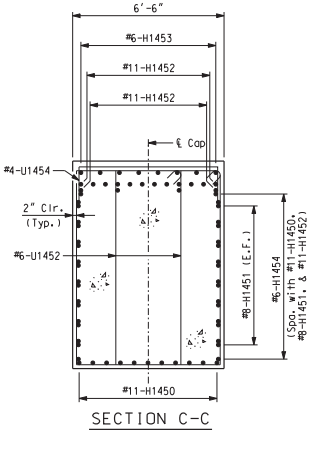

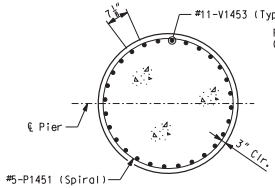

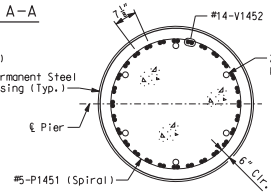

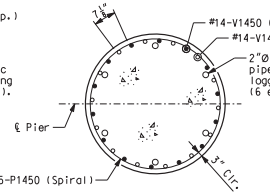

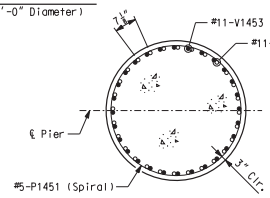

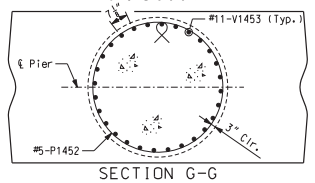

SUBSTRUCTURE QUANTITY TABLE FOR PIER 14 EB		
Item		Quantity
Drilled Shafts (6 ft. 6 in. Dia.)	linear foot	239.0
Rock Sockets (6 ft. 0 in. Dia.)	linear foot	38.0
Supplementary Television Camera Inspection	each	1
Foundation Inspection Holes	linear foot	58.0
Sonic Logging Testing	each	2
Class B Concrete (Substructure)	cu. yard	171.8
Reinforcing Steel (Bridges)	pound	161,910
Mechanical Bar Splice	each	280

Note:
These quantities are included in the estimated quantities table on Sheet No. 7.

Notes:
An additional 4 feet has been added to #5-P1450, #14-V1450 and #14-V1451 lengths for possible change in drilled shaft or rock socket depth. This excess length shall be cut off or included in the reinforcement lap if not required.
Sonic logging testing shall be performed on all drilled shafts and rock sockets.
All reinforcing bars in the tops of substructure beams or caps shall be spaced to clear anchor rod wells for bearings by at least 1/2".
The hooks of V-Bars embedded in the beam cap shall be oriented inward. Bending the hook outward, away from the column core, is not allowed.
The thickness of steel casing shall meet all the requirements of Sec 701 with minimum thickness being 3/8 inch. Thicker casing may be required for installation.
For details of HLMR Bearing Assembly, see Sheet No. 43.
For Anchor Rod Well Details and Anchor Rod Setting Plan, see Sheet No. 45.
For details of seismic stirrup bars, see Sheet No. 7.
* Lapping of spiral reinforcement in this region not permitted.
** Continue spiral bars to the bottom of the beam cap stirrup reinforcing bar.
*** Splice locations shall be staggered.
Anchorage of spiral reinforcement shall be provided by 1-1/2 extra turns of spiral bar at each end of spiral unit.
**** Pay Items Rock Socket (6 ft. 0 in. Dia.).
***** Pay Items Drilled Shaft (6 ft. 6 in. Dia.).

PIER 14 EB

Detailed JUL 2009
Checked JUL 2009

Note: This drawing is not to scale. Follow dimensions.

Sheet No. 18 of 152

CONTRACT NO. 76D61

F.A. ROUTE	SECTION
999	82-1B-2
FED. AID PROJECT	ILLINOIS
COUNTY	ST. CLAIR

USER NAME = jjolliff
PLOT SCALE = $SCALE$
PLOT DATE = 3/8/2010
DESIGNED - HNTB
CHECKED - CMT
DRAWN - CMT / HTNB
REVISED -
REVISED -
REVISED -
REVISED -

ILLINOIS APPROACH STRUCTURE FOR NEW I-70 MISSISSIPPI RIVER BRIDGE

STATE OF ILLINOIS
DEPARTMENT OF TRANSPORTATION

MISSOURI HIGHWAYS AND TRANSPORTATION COMMISSION

HNTB
715 KIRK DRIVE
KANSAS CITY, MO 64105
TELEPHONE (816) 472-1201
CERTIFICATE OF AUTHORITY NO. 001270

CMT
CRAWFORD, MURPHY & TILLY, INC.
2750 WEST WASHINGTON STREET
SPRINGFIELD, IL 62702
TELEPHONE (217) 787-8050
ENGINEERING CORPORATION - 000631

s:\idot\0906601\draw_idot\cadd_sheets\structural\B_A6500_018-152_J6I0984C_018.dgn

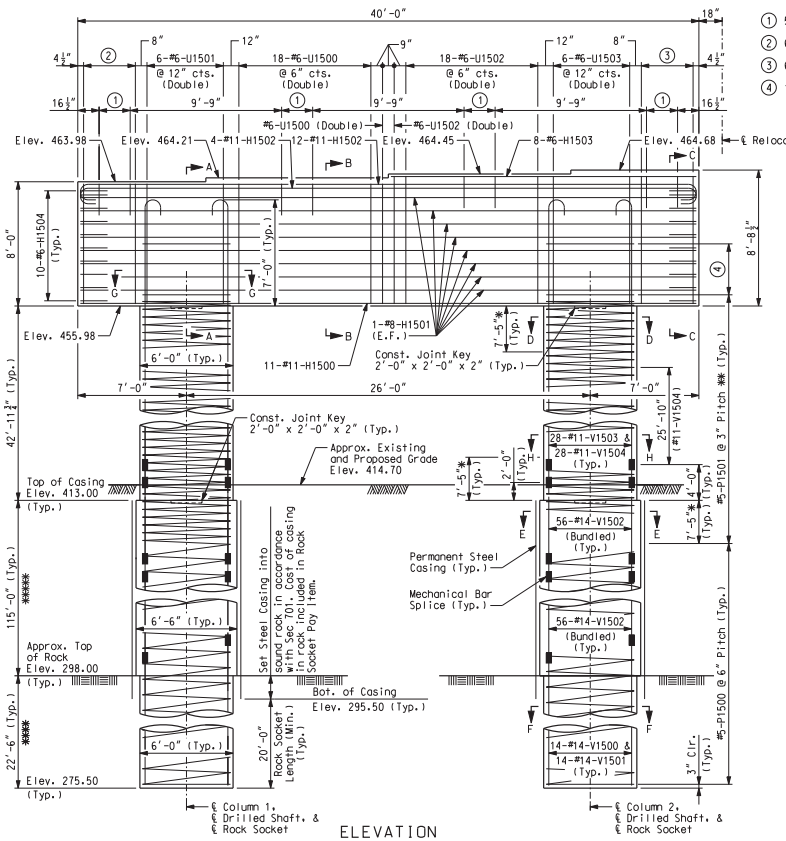

ELEVATION

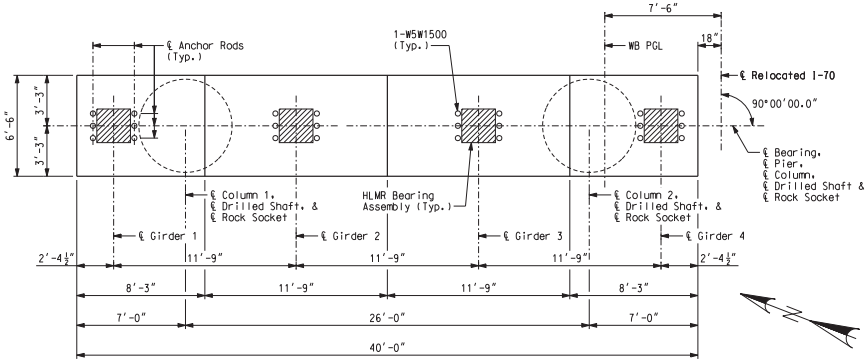

PLAN

Detailed JUL 2009
Checked JUL 2009

Note: This drawing is not to scale. Follow dimensions.

① 5-#4-U1504 @ 6" cts.
② 6-#6-U1500 @ 8" cts. (Double)
③ 6-#6-U1502 @ 8" cts. (Double)
④ 18-#5-P1502 @ 3" cts. (Typ.) ***

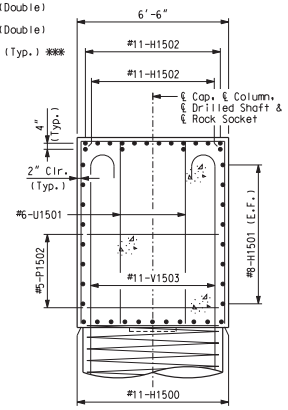

SECTION A-A

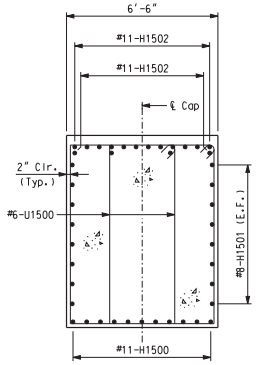

SECTION B-B

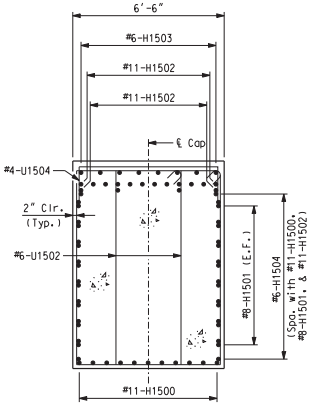

SECTION C-C

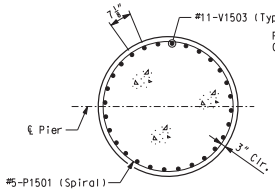

SECTION D-D
(6'-0" Diameter)

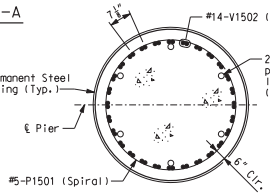

SECTION E-E
(6'-6" Diameter)

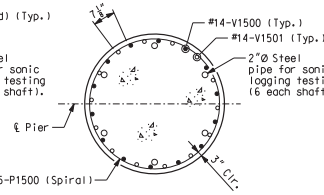

SECTION F-F
(6'-0" Diameter)

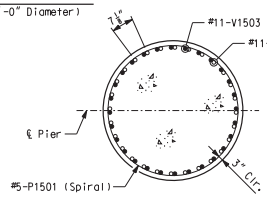

SECTION H-H
(6'-0" Diameter)

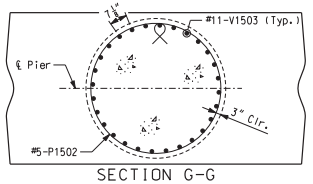

SECTION G-G
(Beam Cap reinforcement not shown)

SUBSTRUCTURE QUANTITY TABLE FOR PIER 15 WB

Item		Quantity
Drilled Shafts (6 ft. 6 in. Dia.)	linear foot	230.0
Rock Sockets (6 ft. 0 in. Dia.)	linear foot	45.0
Supplementary Television Camera Inspection	each	1
Foundation Inspection Holes	linear foot	65.0
Sonic Logging Testing	each	2
Class B Concrete (Substructure)	cu. yard	170.4
Reinforcing Steel (Bridges)	pound	161,940
Mechanical Bar Splice	each	280

Note:
These quantities are included in the estimated quantities table on Sheet No. 7.

Notes:
An additional 4 feet has been added to #5-P1500, #14-V1500 and #14-V1501 lengths for possible change in drilled shaft or rock socket depth. This excess length shall be cut off or included in the reinforcement lap if not required.
Sonic logging testing shall be performed on all drilled shafts and rock sockets.
All reinforcing bars in the tops of substructure beams or caps shall be spaced to clear anchor rod wells for bearings by at least 1/2".
The hooks of V-Bars embedded in the beam cap shall be oriented inward. Bending the hook outward, away from the column core, is not allowed.
The thickness of steel casing shall meet all the requirements of Sec 701 with minimum thickness being 3/8 inch. Thicker casing may be required for installation.
For details of HLMR Bearing Assembly, see Sheet No. 43.
For Anchor Rod Well Details and Anchor Rod Setting Plan, see Sheet No. 44.
For details of seismic stirrup bars, see Sheet No. 7.
* Lapping of spiral reinforcement in this region not permitted.
** Continue spiral bars to the bottom of the beam cap stirrup reinforcing bar.
*** Splice locations shall be staggered.
Anchorage of spiral reinforcement shall be provided by 1-1/2 extra turns of spiral bar at each end of spiral unit.
**** Pay Items Rock Socket (6 ft. 0 in. Dia.).
***** Pay Items Drilled Shaft (6 ft. 6 in. Dia.).

PIER 15 WB

Sheet No. 19 of 152

CONTRACT NO. 76D61

F.A. ROUTE	SECTION
999	82-1B-2
FED. AID PROJECT	ILLINOIS
COUNTY	ST. CLAIR

USER NAME = jjolliff
PLOT SCALE = $SCALE$
PLOT DATE = 3/8/2010
DESIGNED - HNTB
CHECKED - CMT
DRAWN - CMT / HTNB
REVISED -
REVISED -
REVISED -
REVISED -

ILLINOIS APPROACH STRUCTURE FOR NEW I-70 MISSISSIPPI RIVER BRIDGE

STATE OF ILLINOIS
DEPARTMENT OF TRANSPORTATION

MISSOURI HIGHWAYS AND TRANSPORTATION COMMISSION

HNTB
715 KIRK DRIVE
KANSAS CITY, MO 64105
TELEPHONE (816) 472-1201
CERTIFICATE OF AUTHORITY NO. 001270

CMT
CRAWFORD, MURPHY & TILLY, INC.
2750 WEST WASHINGTON STREET
SPRINGFIELD, IL 62702
TELEPHONE (217) 787-8050
ENGINEERING CORPORATION - 000631

s:\idot\0906601\draw_idot\cadd_sheets\structural\B_A6500_019-152_J6I0984C_019.dgn

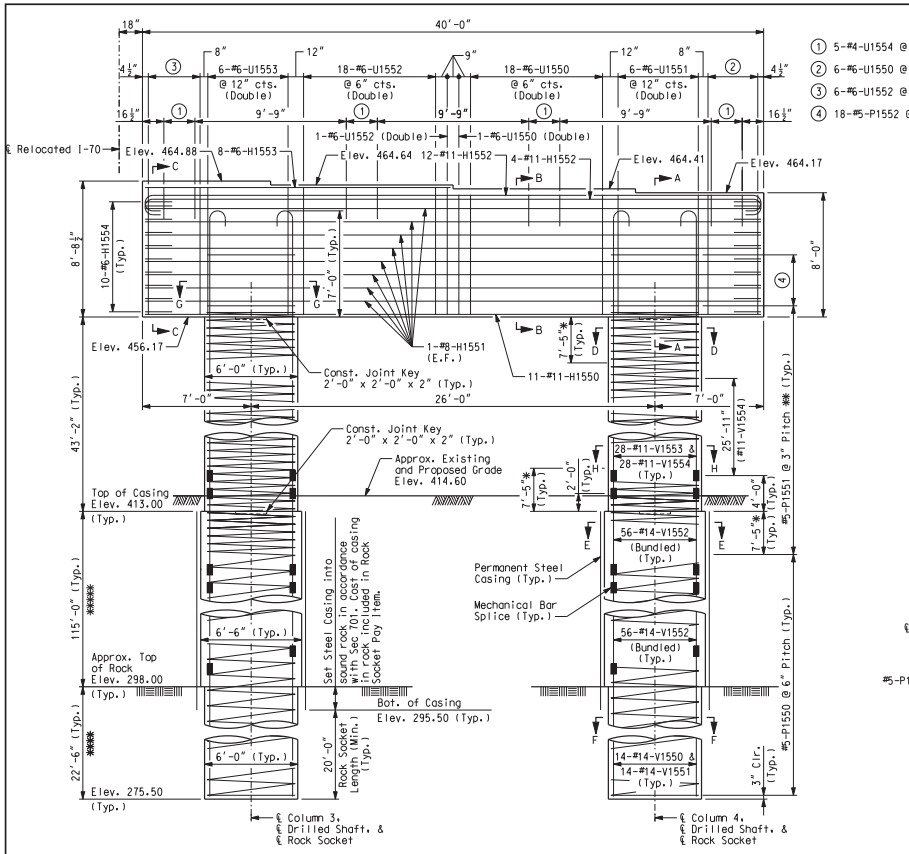

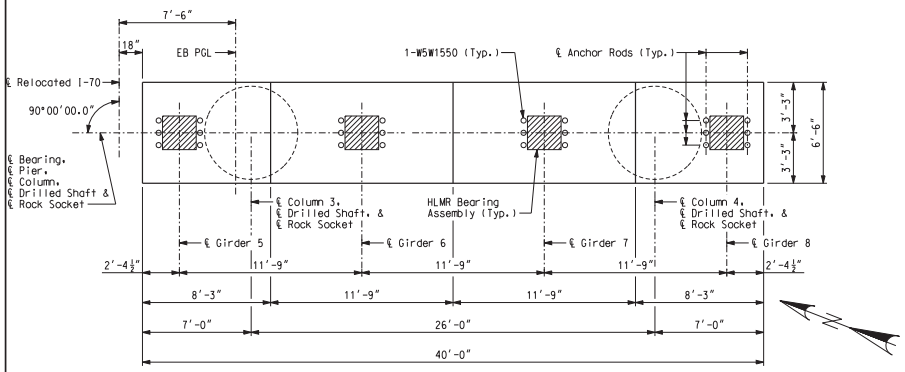

PLAN

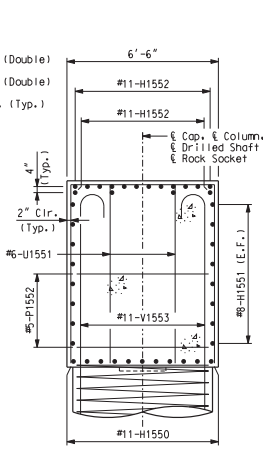

SECTION A-A

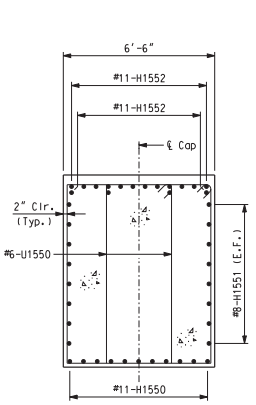

SECTION B-B

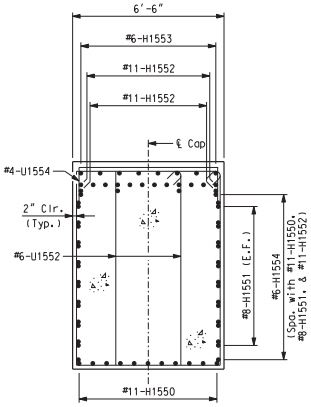

SECTION C-C

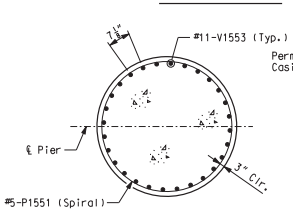

SECTION D-D
(6'-0" Diameter)

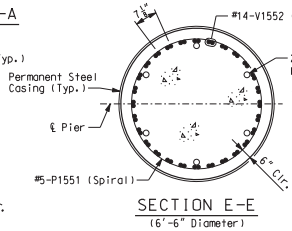

SECTION E-E
(6'-6" Diameter)

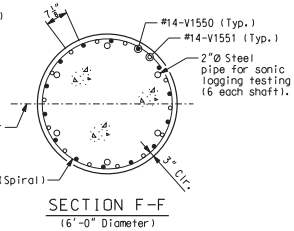

SECTION F-F
(6'-0" Diameter)

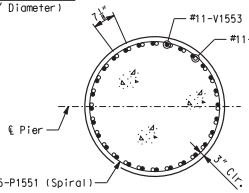

SECTION H-H
(6'-0" Diameter)

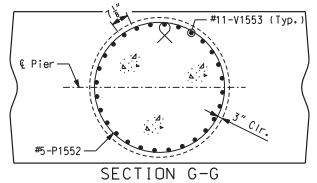

SECTION G-G
(Beam Cap reinforcement not shown)

SUBSTRUCTURE QUANTITY TABLE FOR PIER 15 EB

Item		Quantity
Drilled Shafts (6 ft. 6 in. Dia.)	linear foot	230.0
Rock Sockets (6 ft. 0 in. Dia.)	linear foot	45.0
Supplementary Television Camera Inspection	each	1
Foundation Inspection Holes	linear foot	65.0
Sonic Logging Testing	each	2
Class B Concrete (Substructure)	cu. yard	170.9
Reinforcing Steel (Bridges)	pound	162,080
Mechanical Bar Splice	each	280

Note:
These quantities are included in the estimated quantities table on Sheet No. 7.

Notes:
An additional 4 feet has been added to #5-P1550, #14-V1550 and #14-V1551 lengths for possible change in drilled shaft or rock socket depth. This excess length shall be cut off or included in the reinforcement lap if not required.
Sonic logging testing shall be performed on all drilled shafts and rock sockets.
All reinforcing bars in the tops of substructure beams or caps shall be spaced to clear anchor rod wells for bearings by at least 1/2".
The hooks of V-Bars embedded in the beam cap shall be oriented inward. Bending the hook outward, away from the column core, is not allowed.
The thickness of steel casing shall meet all the requirements of Sec 701 with minimum thickness being 3/8 inch. Thicker casing may be required for installation.
For details of HLMR Bearing Assembly, see Sheet No. 43.
For Anchor Rod Well Details and Anchor Rod Setting Plan, see Sheet No. 45.
For details of seismic stirrup bars, see Sheet No. 7.
* Lapping of spiral reinforcement in this region not permitted.
** Continue spiral bars to the bottom of the beam cap stirrup reinforcing bar.
*** Splice locations shall be staggered.
Anchorage of spiral reinforcement shall be provided by 1-1/2 extra turns of spiral bar at each end of spiral unit.
**** Pay Items Rock Socket (6 ft. 0 in. Dia.).
***** Pay Items Drilled Shaft (6 ft. 6 in. Dia.).

PIER 15 EB

Detailed JUL 2009
Checked JUL 2009

Note: This drawing is not to scale. Follow dimensions.

Sheet No. 20 of 152

CONTRACT NO. 76D61

F.A. ROUTE	SECTION
999	82-1B-2
FED. AID PROJECT	ILLINOIS
COUNTY	ST. CLAIR

USER NAME = jjolliff
PLOT SCALE = #SCALE#
PLOT DATE = 3/8/2010
DESIGNED - HNTB
CHECKED - CMT
DRAWN - CMT / HTNB
REVISED -
REVISED -
REVISED -
REVISED -

ILLINOIS APPROACH STRUCTURE FOR NEW I-70 MISSISSIPPI RIVER BRIDGE

STATE OF ILLINOIS
DEPARTMENT OF TRANSPORTATION

MISSOURI HIGHWAYS AND TRANSPORTATION COMMISSION

HNTB
715 KIRK DRIVE
KANSAS CITY, MO 64105
TELEPHONE (816) 472-1201
CERTIFICATE OF AUTHORITY NO. 001270

CMT
CRAWFORD, MURPHY & TILLY, INC.
2750 WEST WASHINGTON STREET
SPRINGFIELD, IL 62702
TELEPHONE (217) 787-8050
ENGINEERING CORPORATION - 000631

s:\idot\0906601\draw_idot\cadd_sheets\structural\B_A6500_020-152_J6I0984C_020.dgn

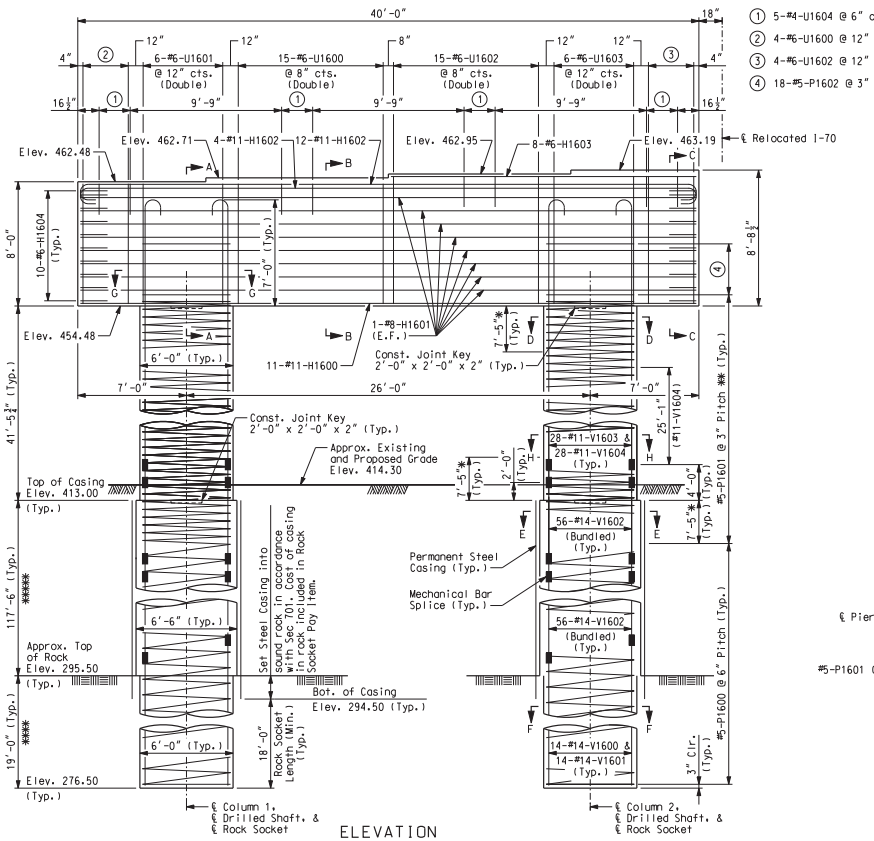

ELEVATION

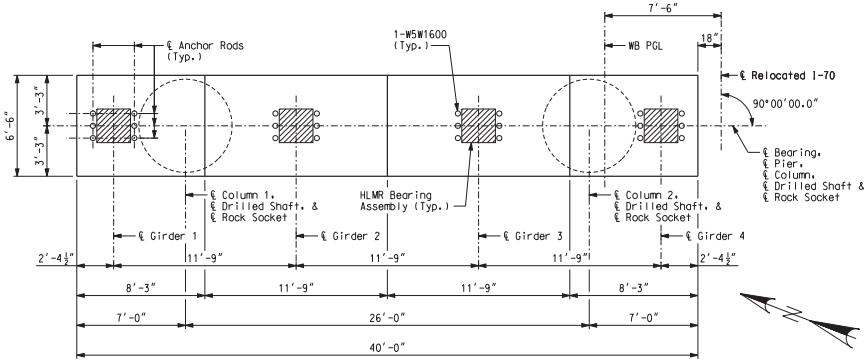

PLAN

Detailed JUL 2009
Checked JUL 2009

Note: This drawing is not to scale. Follow dimensions.

① 5-#4-U1604 @ 6" cts.
② 4-#6-U1600 @ 12" cts. (Double)
③ 4-#6-U1602 @ 12" cts. (Double)
④ 18-#5-P1602 @ 3" cts. (Typ.) ***

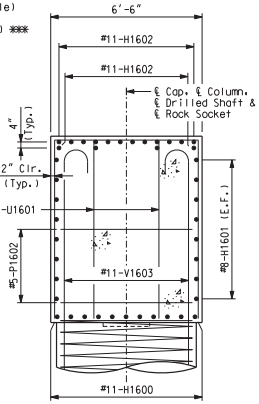

SECTION A-A

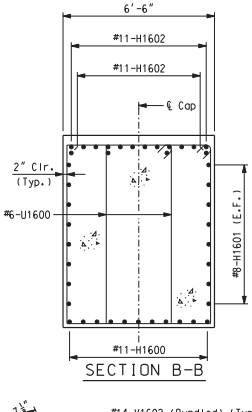

SECTION B-B

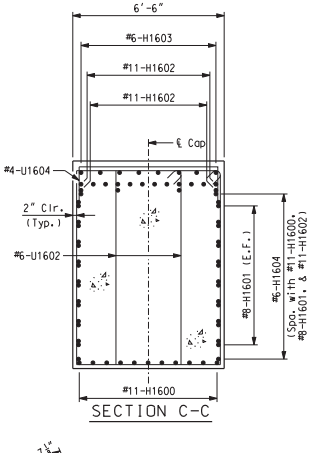

SECTION C-C

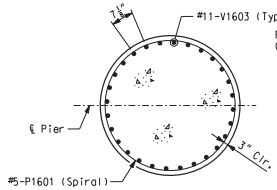

SECTION D-D
(6'-0" Diameter)

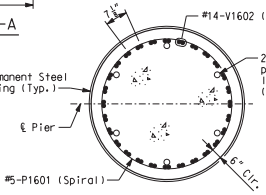

SECTION E-E
(6'-6" Diameter)

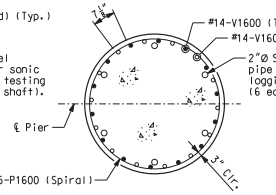

SECTION F-F
(6'-0" Diameter)

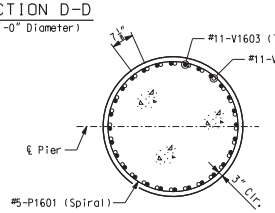

SECTION H-H
(6'-0" Diameter)

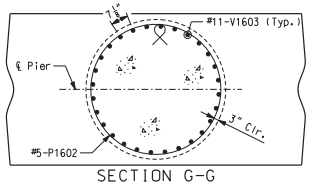

SECTION G-G
(Beam Cap reinforcement not shown)

SUBSTRUCTURE QUANTITY TABLE FOR PIER 16 WB		
Item		Quantity
Drilled Shafts (6 ft. 6 in. Dia.)	linear foot	235.0
Rock Sockets (6 ft. 0 in. Dia.)	linear foot	38.0
Supplementary Television Camera Inspection	each	1
Foundation Inspection Holes	linear foot	58.0
Sonic Logging Testing	each	2
Class B Concrete (Substructure)	cu. yard	167.3
Reinforcing Steel (Bridges)	pound	159,670
Mechanical Bar Splice	each	280

Note:
These quantities are included in the estimated quantities table on Sheet No. 7.

Notes:
An additional 4 feet has been added to #5-P1600, #14-V1600 and #14-V1601 lengths for possible change in drilled shaft or rock socket depth. This excess length shall be cut off or included in the reinforcement lap if not required.
Sonic logging testing shall be performed on all drilled shafts and rock sockets.
All reinforcing bars in the tops of substructure beams or caps shall be spaced to clear anchor rod wells for bearings by at least 1/2".
The hooks of V-Bars embedded in the beam cap shall be oriented inward. Bending the hook outward, away from the column core, is not allowed.
The thickness of steel casing shall meet all the requirements of Sec 701 with minimum thickness being 3/8 inch. Thicker casing may be required for installation.
For details of HLMR Bearing Assembly, see Sheet No. 43.
For Anchor Rod Well Details and Anchor Rod Setting Plan, see Sheet No. 44.
For details of seismic stirrup bars, see Sheet No. 7.
* Lapping of spiral reinforcement in this region not permitted.
** Continue spiral bars to the bottom of the beam cap stirrup reinforcing bar.
*** Splice locations shall be staggered.
Anchorage of spiral reinforcement shall be provided by 1-1/2 extra turns of spiral bar at each end of spiral unit.
**** Pay Items Rock Socket (6 ft. 0 in. Dia.).
***** Pay Items Drilled Shaft (6 ft. 6 in. Dia.).

PIER 16 WB

Sheet No. 21 of 152

CONTRACT NO. 76D61

F.A. ROUTE	SECTION
999	82-1B-2
FED. AID PROJECT	ILLINOIS
COUNTY	ST. CLAIR

USER NAME = jjolliff
PLOT SCALE = $SCALE$
PLOT DATE = 3/8/2010
DESIGNED - HNTB
CHECKED - CMT
DRAWN - CMT / HTNB
REVISED -
REVISED -
REVISED -
REVISED -

ILLINOIS APPROACH STRUCTURE FOR NEW I-70 MISSISSIPPI RIVER BRIDGE

STATE OF ILLINOIS
DEPARTMENT OF TRANSPORTATION

MISSOURI HIGHWAYS AND TRANSPORTATION COMMISSION

HNTB
715 KIRK DRIVE
KANSAS CITY, MO 64105
TELEPHONE (816) 472-1201
CERTIFICATE OF AUTHORITY NO. 001270

CMT
CRAWFORD, MURPHY & TILLY, INC.
2750 WEST WASHINGTON STREET
SPRINGFIELD, IL 62702
TELEPHONE (217) 787-8050
ENGINEERING CORPORATION - 000631

s:\idot\0906601\draw_idot\cadd_sheets\structural\B_A6500_021-152_J6I0984C_021.dgn

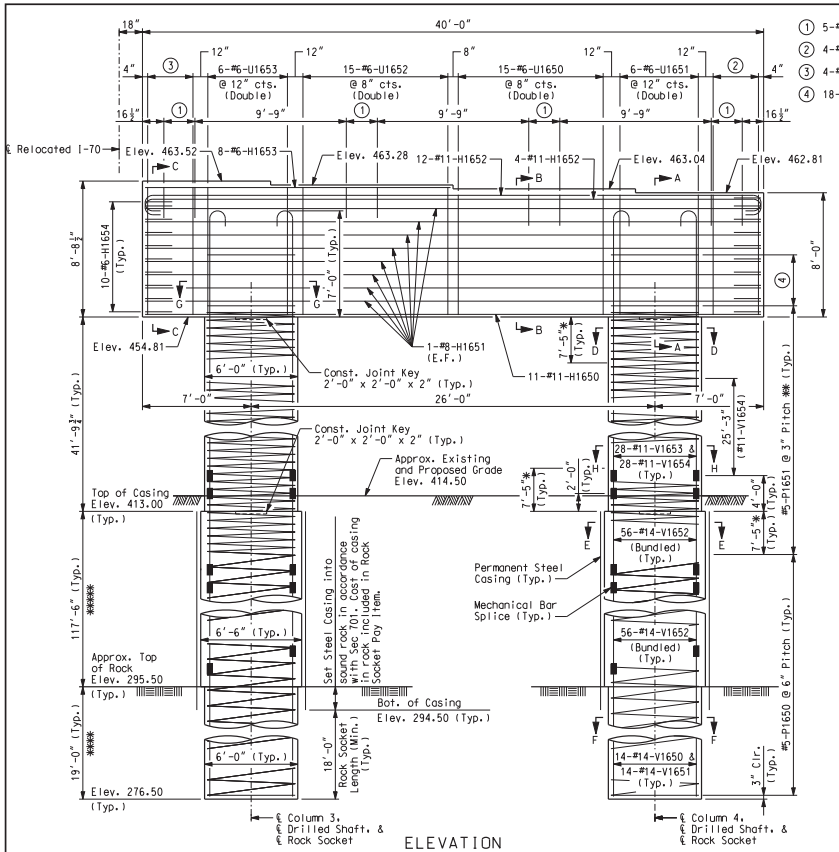

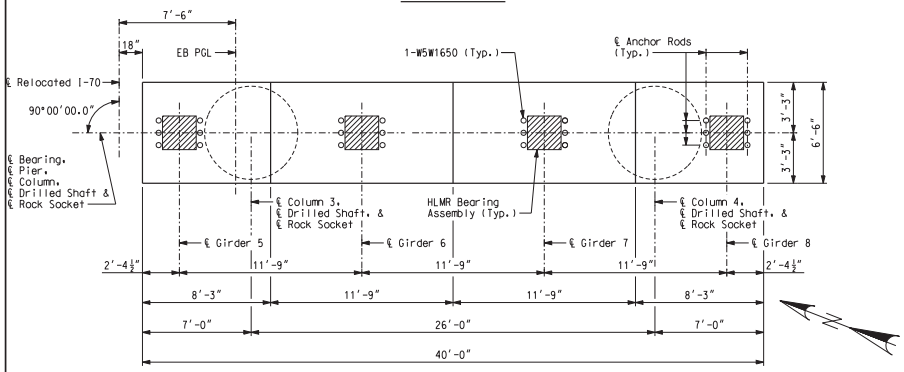

Detailed JUL 2009
Checked JUL 2009

Note: This drawing is not to scale. Follow dimensions.

① 5-#4-U1654 @ 6" cts.
② 4-#6-U1650 @ 12" cts. (Double)
③ 4-#6-U1652 @ 12" cts. (Double)
④ 18-#5-P1652 @ 3" cts. (Typ.) ***

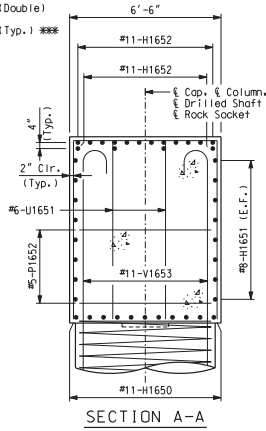

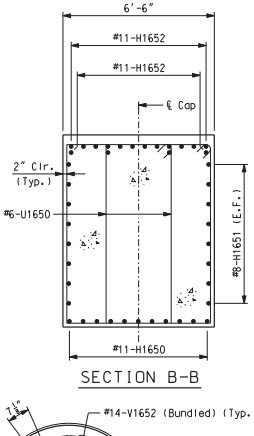

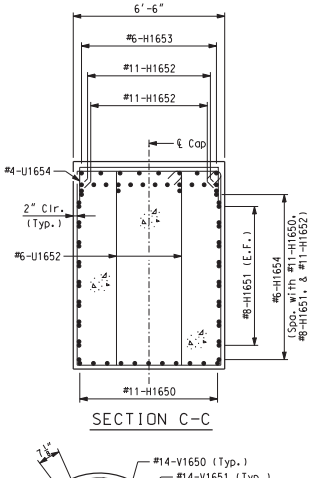

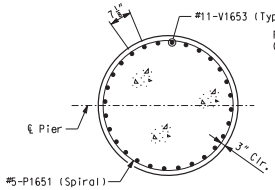

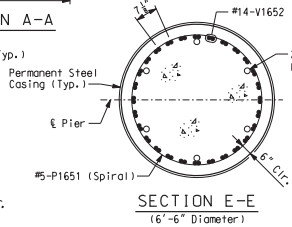

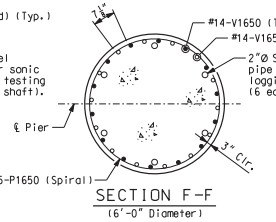

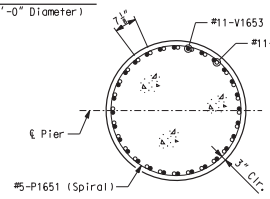

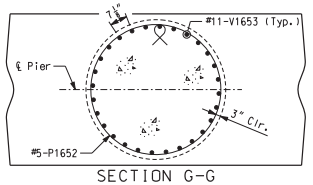

SUBSTRUCTURE QUANTITY TABLE FOR PIER 16 EB		
Item		Quantity
Drilled Shafts (6 ft. 6 in. Dia.)	linear foot	235.0
Rock Sockets (6 ft. 0 in. Dia.)	linear foot	38.0
Supplementary Television Camera Inspection	each	1
Foundation Inspection Holes	linear foot	58.0
Sonic Logging Testing	each	2
Class B Concrete (Substructure)	cu. yard	168.1
Reinforcing Steel (Bridges)	pound	159,870
Mechanical Bar Splice	each	280

Note:
These quantities are included in the estimated quantities table on Sheet No. 7.

Notes:
An additional 4 feet has been added to #5-P1650, #14-V1650 and #14-V1651 lengths for possible change in drilled shaft or rock socket depth. This excess length shall be cut off or included in the reinforcement lap if not required.
Sonic logging testing shall be performed on all drilled shafts and rock sockets.
All reinforcing bars in the tops of substructure beams or caps shall be spaced to clear anchor rod wells for bearings by at least 1/2".
The hooks of V-Bars embedded in the beam cap shall be oriented inward. Bending the hook outward, away from the column core, is not allowed.
The thickness of steel casing shall meet all the requirements of Sec 701 with minimum thickness being 3/8 inch. Thicker casing may be required for installation.
For details of HLMR Bearing Assembly, see Sheet No. 43.
For Anchor Rod Well Details and Anchor Rod Setting Plan, see Sheet No. 45.
For details of seismic stirrup bars, see Sheet No. 7.
* Lapping of spiral reinforcement in this region not permitted.
** Continue spiral bars to the bottom of the beam cap stirrup reinforcing bar.
*** Splice locations shall be staggered.
Anchorage of spiral reinforcement shall be provided by 1-1/2 extra turns of spiral bar at each end of spiral unit.
**** Pay Items Rock Socket (6 ft. 0 in. Dia.).
***** Pay Items Drilled Shaft (6 ft. 6 in. Dia.).

PIER 16 EB

Sheet No. 22 of 152

CONTRACT NO. 76D61

F.A. ROUTE	SECTION
999	82-1B-2
FED. AID PROJECT	ILLINOIS
COUNTY	ST. CLAIR

USER NAME = jjolliff
PLOT SCALE = $SCALE$
PLOT DATE = 3/8/2010
DESIGNED - HNTB
CHECKED - CMT
DRAWN - CMT / HTNB
REVISED -
REVISED -
REVISED -
REVISED -

ILLINOIS APPROACH STRUCTURE FOR NEW I-70 MISSISSIPPI RIVER BRIDGE

STATE OF ILLINOIS
DEPARTMENT OF TRANSPORTATION

MISSOURI HIGHWAYS AND TRANSPORTATION COMMISSION

HNTB
715 KIRK DRIVE
KANSAS CITY, MO 64105
TELEPHONE (816) 472-1201
CERTIFICATE OF AUTHORITY NO. 001270

CMT
CRAWFORD, MURPHY & TILLY, INC.
2750 WEST WASHINGTON STREET
SPRINGFIELD, IL 62702
TELEPHONE (217) 787-8050
ENGINEERING CORPORATION - 000631

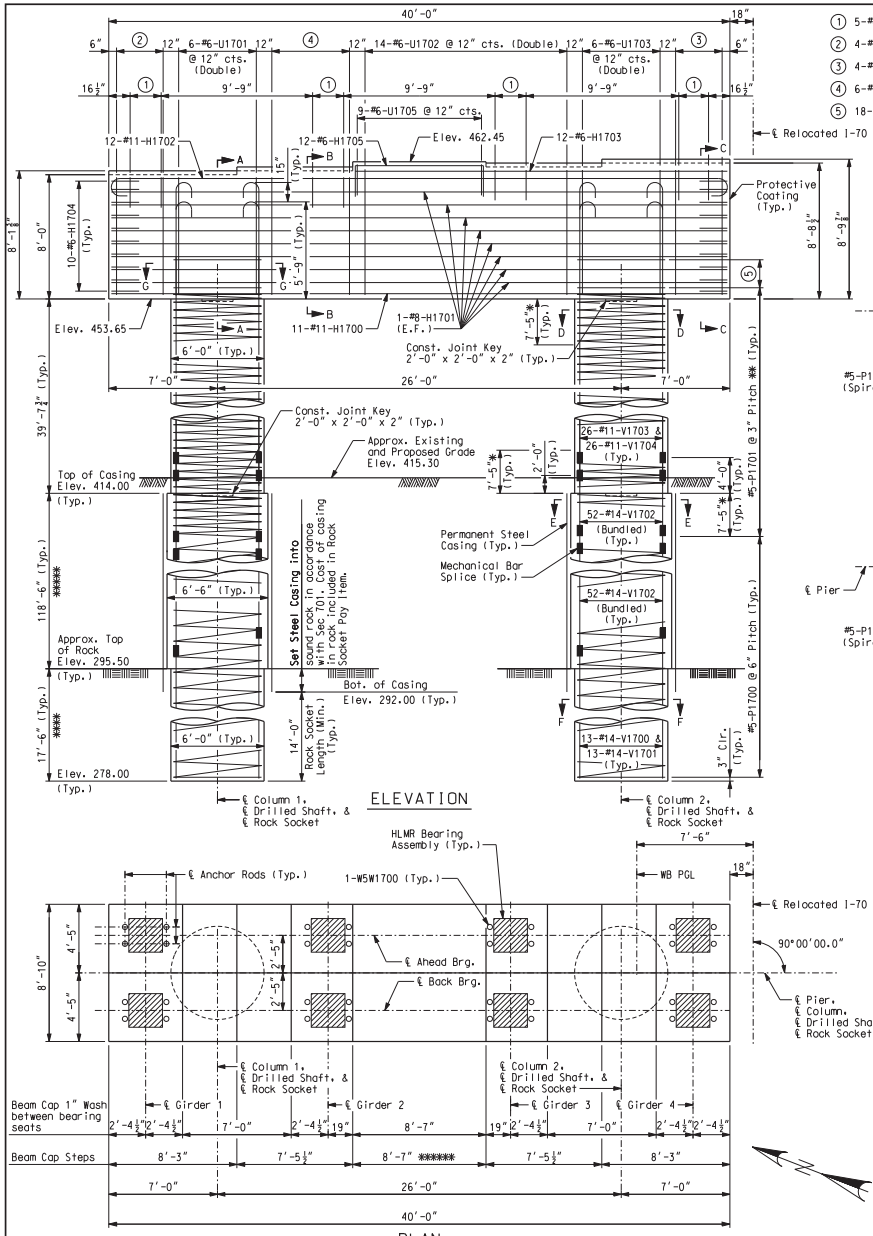

① 5-#4-U1704 @ 6" cts.
② 4-#6-U1700 @ 12" cts. (Double)
③ 4-#6-U1702 @ 12" cts. (Double)
④ 6-#6-U1700 @ 12" cts. (Double)
⑤ 18-#5-P1702 @ 3" cts. (Typ.) ***

SUBSTRUCTURE QUANTITY TABLE FOR PIER 17 WB		
Item		Quantity
Drilled Shafts (6 ft. 6 in. Dia.)	linear foot	237.0
Rock Sockets (6 ft. 0 in. Dia.)	linear foot	35.0
Supplementary Television Camera Inspection	each	1
Foundation Inspection Holes	linear foot	55.0
Sonic Logging Testing	each	2
Class B Concrete (Substructure)	cu. yard	194.4
Reinforcing Steel (Bridges)	pound	116,940
Mechanical Bar Splice	each	260
Reinforcing Steel (Epoxy Coated)	pound	37,350

Note: These quantities are included in the estimated quantities table on Sheet No. 7.

GIRDER SEAT ELEVATIONS		
Girder	Back Brg.	Ahead Brg.
1	461.76	461.65
2	462.00	461.89
3	462.23	462.12
4	462.47	462.36

Notes:
An additional 4 feet has been added to #5-P1700, #14-V1700 and #14-V1701 lengths for possible change in drilled shaft or rock socket depth. This excess length shall be cut off or included in the reinforcement lap if not required.
Sonic logging testing shall be performed on all drilled shafts and rock sockets.
All reinforcing bars in the tops of substructure beams or caps shall be spaced to clear anchor rod wells for bearings by at least 1/2".
The hooks of V-Bars embedded in the beam cap shall be oriented inward. Bending the hook outward, away from the column core, is not allowed.
The thickness of steel casing shall meet all the requirements of Sec 701 with minimum thickness being 3/8 inch. Thicker casing may be required for installation.
For details of HLMR Bearing Assembly, see Sheet No. 42.
For Anchor Rod Well Details and Anchor Rod Setting Plan, see Sheet Nos. 44 and 46.
For details of seismic stirrup bars, see Sheet No. 7.
* Lapping of spiral reinforcement in this region not permitted.
** Continue spiral bars to the bottom of the beam cap stirrup reinforcing bar.
*** Splice locations shall be staggered.
Anchorage of spiral reinforcement shall be provided by 1-1/2 extra turns of spiral bar at each end of spiral unit.
**** Pay Items Rock Socket (6 ft. 0 in. Dia.).
***** Pay Items Drilled Shaft (6 ft. 6 in. Dia.).
****** Shear Block Dimension assumes masonry plate width of 3'-0" and 1" clear on either side to shear block. If Masonry plate is wider than 3'-0" contractor shall adjust the shear block dimension to provide 1" clear.
Seal back face of beam, top of beam, ends of beam, and front face of beam with Protective Coating - Concrete Bents and Piers (Epoxy).

PIER 17 WB

Detailed JUL 2009
Checked JUL 2009

Note: This drawing is not to scale. Follow dimensions.

Sheet No. 23 of 152

CONTRACT NO. 76D61

F.A. ROUTE	SECTION
999	82-1B-2
FED. AID PROJECT	ILLINOIS
COUNTY	ST. CLAIR

USER NAME = jjolliff
PLOT SCALE = $SCALE$
PLOT DATE = 3/8/2010
DESIGNED - HNTB
CHECKED - CMT
DRAWN - CMT / HTNB
REVISED -
REVISED -
REVISED -
REVISED -

ILLINOIS APPROACH STRUCTURE
FOR NEW I-70 MISSISSIPPI RIVER BRIDGE

STATE OF ILLINOIS
DEPARTMENT OF TRANSPORTATION

MISSOURI HIGHWAYS
AND TRANSPORTATION COMMISSION

HNTB
715 KIRK DRIVE
KANSAS CITY, MO 64105
TELEPHONE (816) 472-1201
CERTIFICATE OF AUTHORITY NO. 001270

CMT
CRAWFORD, MURPHY & TILLY, INC.
2750 WEST WASHINGTON STREET
SPRINGFIELD, IL 62702
TELEPHONE (217) 787-8050
ENGINEERING CORPORATION - 000631

s:\idot\0906601\draw_idot\cadd_sheets\structural\B_A6500_023-152_J6I0984C_023.dgn

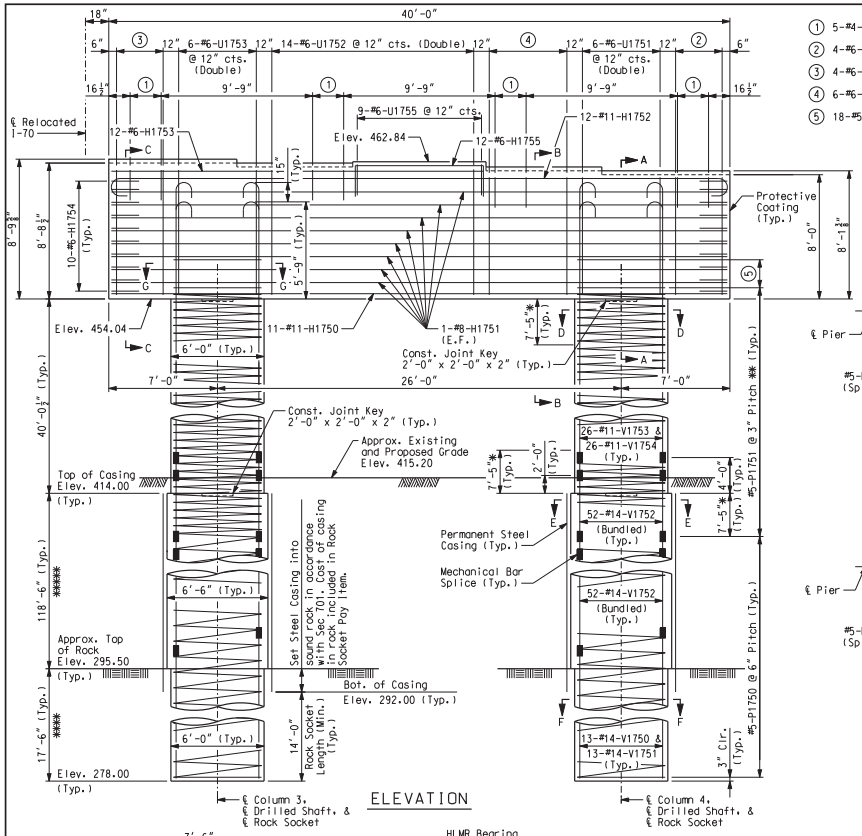

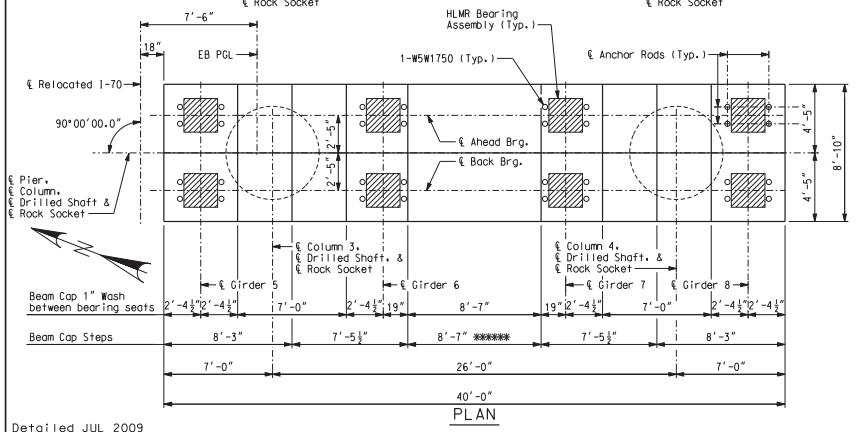

Detailed JUL 2009
Checked JUL 2009

Note: This drawing is not to scale. Follow dimensions.

1. 5-#4-U1754 @ 6" cts.
2. 4-#6-U1750 @ 12" cts. (Double)
3. 4-#6-U1752 @ 12" cts. (Double)
4. 6-#6-U1750 @ 12" cts. (Double)
5. 18-#5-P1752 @ 3" cts. (Typ.) ***

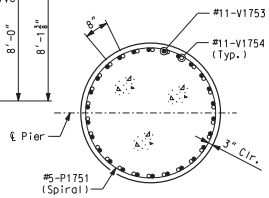

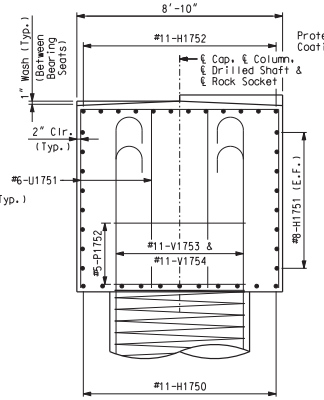

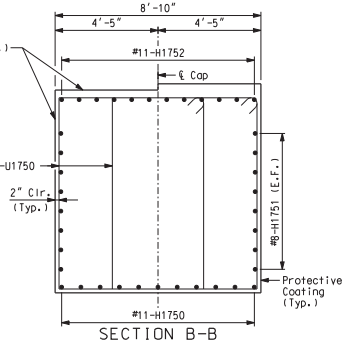

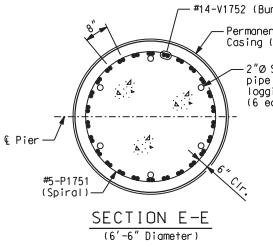

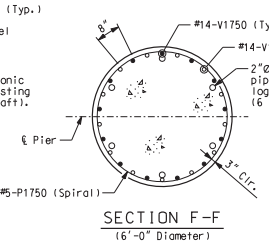

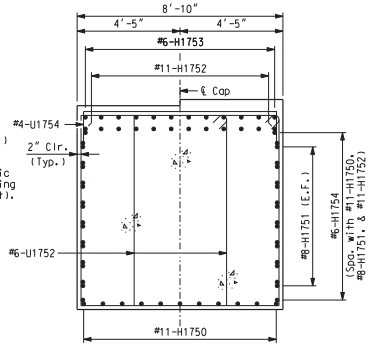

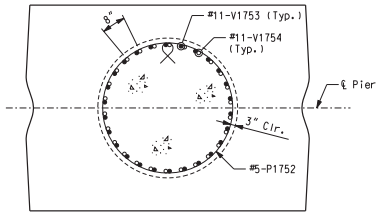

GIRDER SEAT ELEVATIONS		
Girder	Back Brg.	Ahead Brg.
5	462.84	462.75
6	462.61	462.51
7	462.37	462.27
8	462.14	462.04

SUBSTRUCTURE QUANTITY TABLE FOR PIER 17 EB		
Item		Quantity
Drilled Shafts (6 ft. 6 in. Dia.)	linear foot	237.0
Rock Sockets (6 ft. 0 in. Dia.)	linear foot	35.0
Supplementary Television Camera Inspection	each	1
Foundation Inspection Holes	linear foot	55.0
Sonic Logging Testing	each	2
Class B Concrete (Substructure)	cu. yard	195.1
Reinforcing Steel (Bridges)	pound	116,990
Mechanical Bar Splice	each	260
Reinforcing Steel (Epoxy Coated)	pound	36,930

Note: These quantities are included in the estimated quantities table on Sheet No. 7.

Notes:

An additional 4 feet has been added to #5-P1750, #14-V1750 and #14-V1751 lengths for possible change in drilled shaft or rock socket depth. This excess length shall be cut off or included in the reinforcement lap if not required.

Sonic logging testing shall be performed on all drilled shafts and rock sockets.

All reinforcing bars in the tops of substructure beams or caps shall be spaced to clear anchor rod wells for bearings by at least 1/2".

The hooks of V-Bars embedded in the beam cap shall be oriented inward. Bending the hook outward, away from the column core, is not allowed.

The thickness of steel casing shall meet all the requirements of Sec 701 with minimum thickness being 3/8 inch. Thicker casing may be required for installation.

For details of HLMR Bearing Assembly, see Sheet No. 42.

For Anchor Rod Well Details and Anchor Rod Setting Plan, see Sheet Nos. 45 and 47.

For details of seismic stirrup bars, see Sheet No. 7.

* Lapping of spiral reinforcement in this region not permitted.

** Continue spiral bars to the bottom of the beam cap stirrup reinforcing bar.

*** Splice locations shall be staggered.

Anchorage of spiral reinforcement shall be provided by 1-1/2 extra turns of spiral bar at each end of spiral unit.

**** Pay Items Rock Socket (6 ft. 0 in. Dia.).

***** Pay Items Drilled Shaft (6 ft. 6 in. Dia.).

****** Shear Block Dimension assumes masonry plate width of 3'-0" and 1" clear on either side to shear block. If Masonry plate is wider than 3'-0" contractor shall adjust the shear block dimension to provide 1" clear.

Seal back face of beam, top of beam, ends of beam, and front face of beam with Protective Coating - Concrete Bents and Piers (Epoxy).

PIER 17 EB

Sheet No. 24 of 152

CONTRACT NO. 76D61	
F.A. ROUTE	SECTION
999	82-1B-2
FED. AID PROJECT	ILLINOIS
COUNTY	ST. CLAIR
USER NAME = jjolliff	
PLOT SCALE = $SCALE$	
PLOT DATE = 3/8/2010	
DESIGNED - HNTB	
CHECKED - CMT	
DRAWN - CMT / HTNB	
REVISED -	
REVISED -	
REVISED -	
REVISED -	

ILLINOIS APPROACH STRUCTURE FOR NEW I-70 MISSISSIPPI RIVER BRIDGE

STATE OF ILLINOIS
DEPARTMENT OF TRANSPORTATION

MISSOURI HIGHWAYS AND TRANSPORTATION COMMISSION

HNTB
715 KIRK DRIVE
KANSAS CITY, MO 64105
TELEPHONE (816) 472-1201
CERTIFICATE OF AUTHORITY NO. 001270

CMT
CRAWFORD, MURPHY & TILLY, INC.
2750 WEST WASHINGTON STREET
SPRINGFIELD, IL 62702
TELEPHONE (217) 787-8050
ENGINEERING CORPORATION - 000631

s:\idot\0906601\draw_idot\cadd_sheets\structural\B_A6500_024-152_J6I0984C_024.dgn

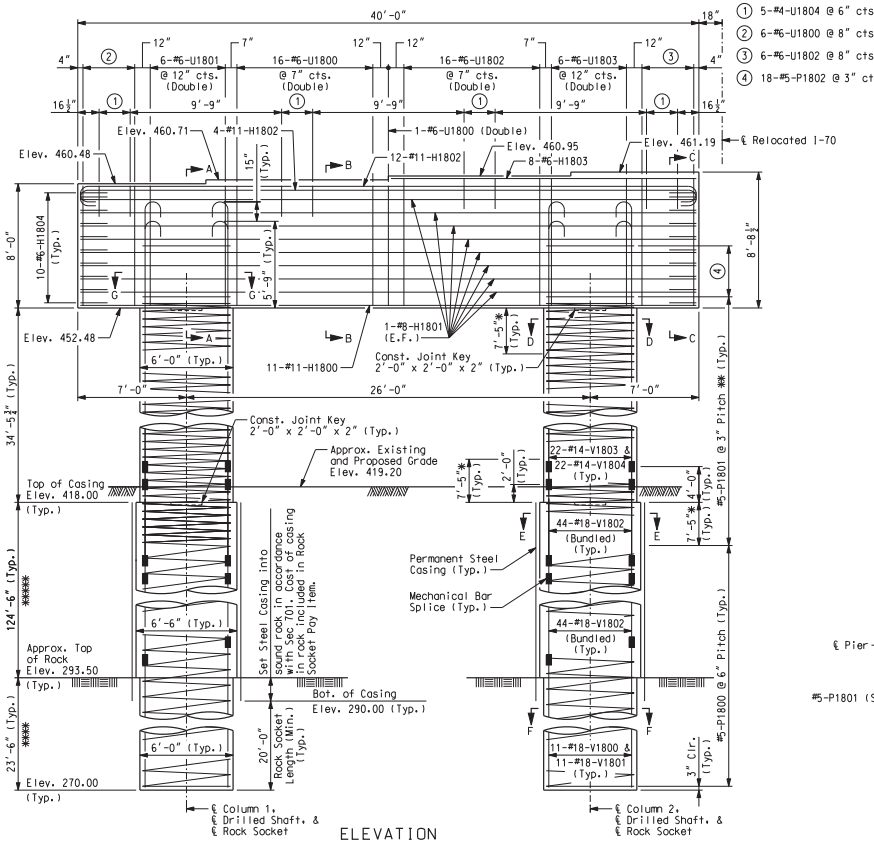

ELEVATION

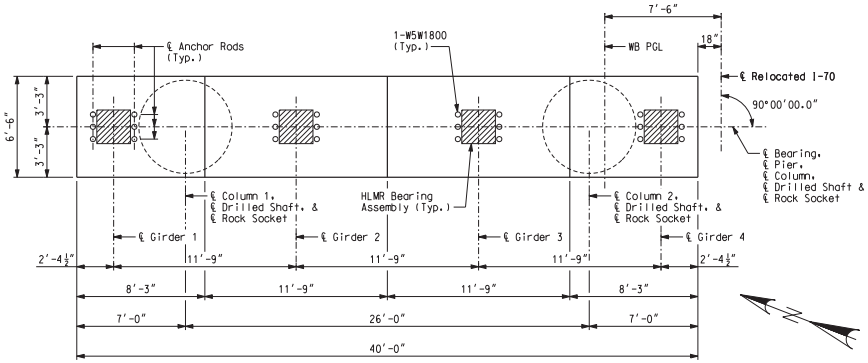

PLAN

Detailed JUL 2009
Checked JUL 2009

Note: This drawing is not to scale. Follow dimensions.

1. 5-#4-U1804 @ 6" cts.
2. 6-#6-U1800 @ 8" cts. (Double)
3. 6-#6-U1802 @ 8" cts. (Double)
4. 18-#5-P1802 @ 3" cts. (Typ.) ***

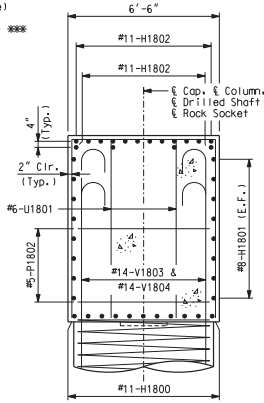

SECTION A-A

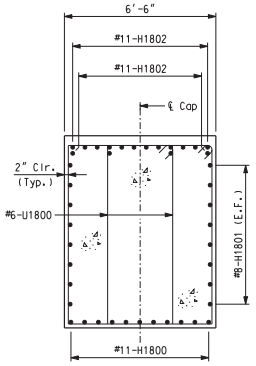

SECTION B-B

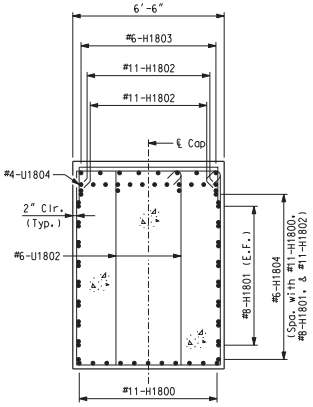

SECTION C-C

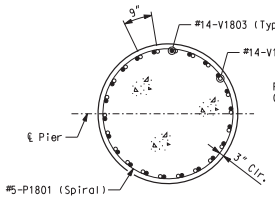

SECTION D-D
(6'-0" Diameter)

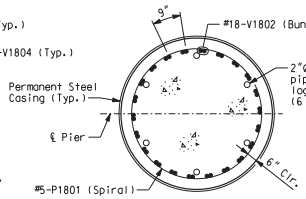

SECTION E-E
(6'-6" Diameter)

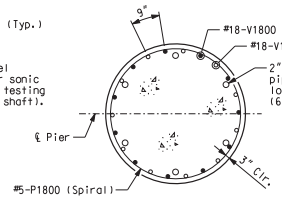

SECTION F-F
(6'-0" Diameter)

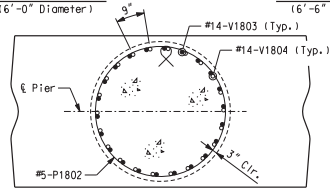

SECTION G-G
(Beam Cap reinforcement not shown)

SUBSTRUCTURE QUANTITY TABLE FOR PIER 18 WB		
Item		Quantity
Drilled Shafts (6 ft. 6 in. Dia.)	linear foot	249.0
Rock Sockets (6 ft. 0 in. Dia.)	linear foot	47.0
Supplementary Television Camera Inspection	each	1
Foundation Inspection Holes	linear foot	67.0
Sonic Logging Testing	each	2
Class B Concrete (Substructure)	cu. yard	152.7
Reinforcing Steel (Bridges)	pound	215,210
Mechanical Bar Splice	each	220
Non-Special Waste Disposal	cu. yard	26.2

Note:
These quantities are included in the estimated quantities table on Sheet No. 7.

Notes:
An additional 4 feet has been added to #5-P1800, #18-V1800 and #18-V1801 lengths for possible change in drilled shaft or rock socket depth. This excess length shall be cut off or included in the reinforcement lap if not required.
Sonic logging testing shall be performed on all drilled shafts and rock sockets.
All reinforcing bars in the tops of substructure beams or caps shall be spaced to clear anchor rod wells for bearings by at least 1/2".
The hooks of V-Bars embedded in the beam cap shall be oriented inward. Bending the hook outward, away from the column core, is not allowed.
The thickness of steel casing shall meet all the requirements of Sec 701 with minimum thickness being 3/8 inch. Thicker casing may be required for installation.
For details of HLMR Bearing Assembly, see Sheet No. 43.
For Anchor Rod Well Details and Anchor Rod Setting Plan, see Sheet No. 46.
For details of seismic stirrup bars, see Sheet No. 7.
* Lapping of spiral reinforcement in this region not permitted.
** Continue spiral bars to the bottom of the beam cap stirrup reinforcing bar.
*** Splice locations shall be staggered.
Anchorage of spiral reinforcement shall be provided by 1-1/2 extra turns of spiral bar at each end of spiral unit.
**** Pay Items Rock Socket (6 ft. 0 in. Dia.).
***** Pay Items Drilled Shaft (6 ft. 6 in. Dia.).

PIER 18 WB

Sheet No. 25 of 152

CONTRACT NO. 76D61

F.A. ROUTE	SECTION
999	82-1B-2
FED. AID PROJECT	ILLINOIS
COUNTY	ST. CLAIR

USER NAME = jjolliff
PLOT SCALE = $SCALE$
PLOT DATE = 3/8/2010
DESIGNED - HNTB
CHECKED - CMT
DRAWN - CMT / HTNB
REVISED -
REVISED -
REVISED -
REVISED -

ILLINOIS APPROACH STRUCTURE FOR NEW I-70 MISSISSIPPI RIVER BRIDGE

STATE OF ILLINOIS
DEPARTMENT OF TRANSPORTATION

MISSOURI HIGHWAYS AND TRANSPORTATION COMMISSION

HNTB
715 KIRK DRIVE
KANSAS CITY, MO 64105
TELEPHONE (816) 472-1201
CERTIFICATE OF AUTHORITY NO. 001270

CMT
CRAWFORD, MURPHY & TILLY, INC.
2750 WEST WASHINGTON STREET
SPRINGFIELD, IL 62702
TELEPHONE (217) 787-8050
ENGINEERING CORPORATION - 000631

s:\idot\0906601\draw_idot\cadd_sheets\structural\B_A6500_025-152_J6I0984C_025.dgn

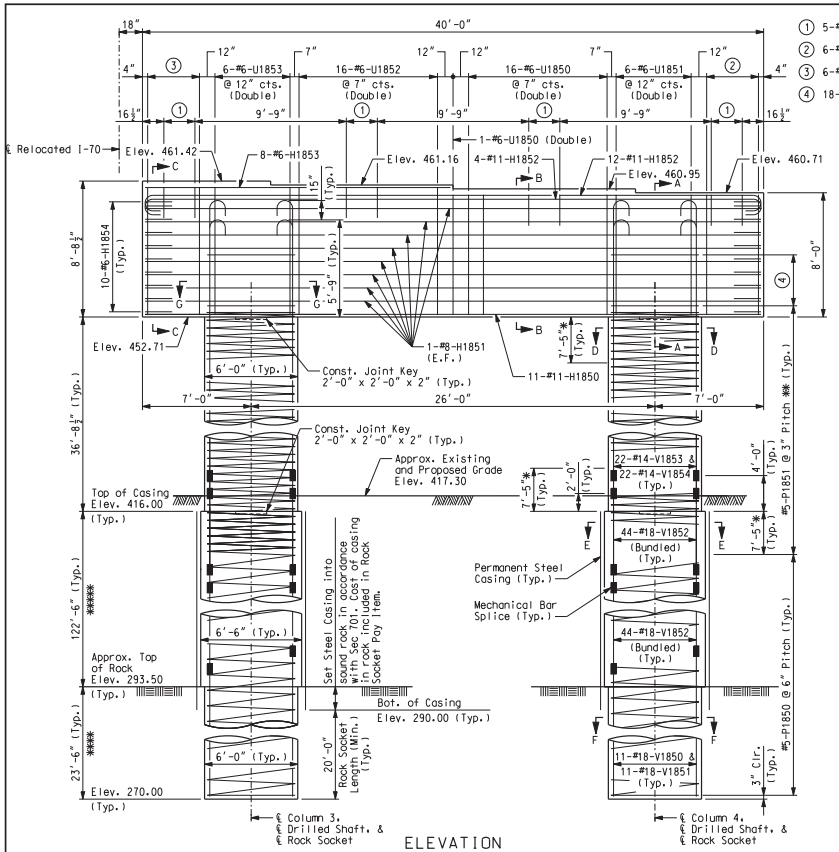

1. 5-#4-U1854 @ 6" cts.
2. 6-#6-U1850 @ 8" cts. (Double)
3. 6-#6-U1852 @ 8" cts. (Double)
4. 18-#5-P1852 @ 3" cts. (Typ.) ***

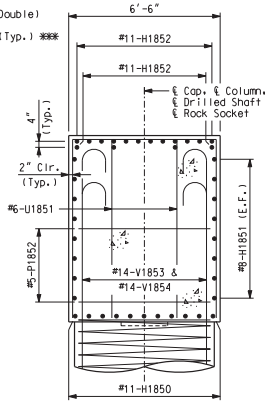

SECTION A-A

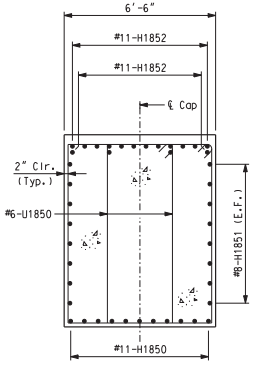

SECTION B-B

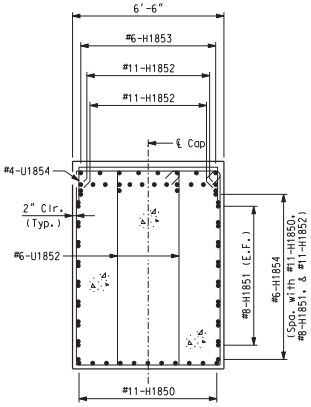

SECTION C-C

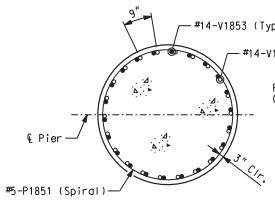

SECTION D-D
(6'-0" Diameter)

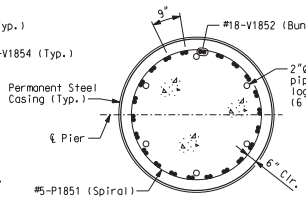

SECTION E-E
(6'-6" Diameter)

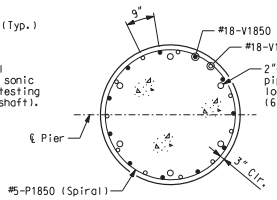

SECTION F-F
(6'-0" Diameter)

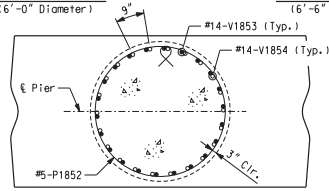

SECTION G-G
(Beam Cap reinforcement not shown)

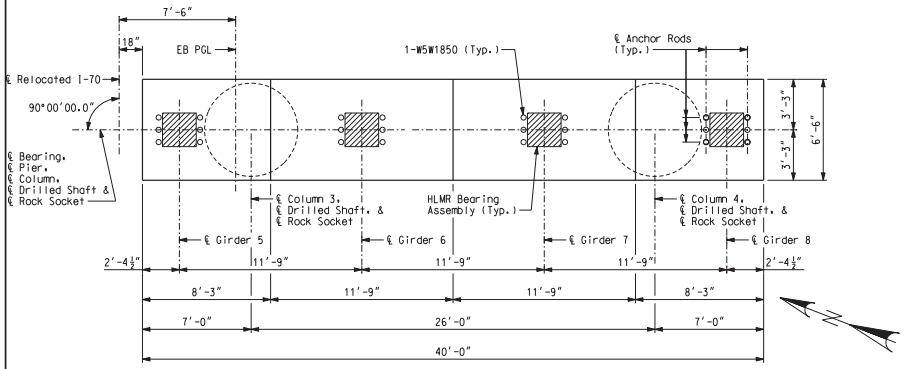

PLAN

Detailed JUL 2009
Checked JUL 2009

Note: This drawing is not to scale. Follow dimensions.

SUBSTRUCTURE QUANTITY TABLE FOR PIER 18 EB

Item		Quantity
Drilled Shafts (6 ft. 6 in. Dia.)	linear foot	245.0
Rock Sockets (6 ft. 0 in. Dia.)	linear foot	47.0
Supplementary Television Camera Inspection	each	1
Foundation Inspection Holes	linear foot	67.0
Sonic Logging Testing	each	2
Class B Concrete (Substructure)	cu. yard	157.3
Reinforcing Steel (Bridges)	pound	215,640
Mechanical Bar Splice	each	220
Non-Special Waste Disposal	cu. yard	26.2

Note:
These quantities are included in the estimated quantities table on Sheet No. 7.

Notes:
An additional 4 feet has been added to #5-P1850, #18-V1850 and #18-V1851 lengths for possible change in drilled shaft or rock socket depth. This excess length shall be cut off or included in the reinforcement lap if not required.
Sonic logging testing shall be performed on all drilled shafts and rock sockets.
All reinforcing bars in the tops of substructure beams or caps shall be spaced to clear anchor rod wells for bearings by at least 1/2".
The hooks of V-Bars embedded in the beam cap shall be oriented inward. Bending the hook outward, away from the column core, is not allowed.
The thickness of steel casing shall meet all the requirements of Sec 701 with minimum thickness being 3/8 inch. Thicker casing may be required for installation.
For details of HLMR Bearing Assembly, see Sheet No. 43.
For Anchor Rod Well Details and Anchor Rod Setting Plan, see Sheet No. 47.
For details of seismic stirrup bars, see Sheet No. 7.
* Lapping of spiral reinforcement in this region not permitted.
** Continue spiral bars to the bottom of the beam cap stirrup reinforcing bar.
*** Splice locations shall be staggered.
Anchorage of spiral reinforcement shall be provided by 1-1/2 extra turns of spiral bar at each end of spiral unit.
**** Pay Items Rock Socket (6 ft. 0 in. Dia.).
***** Pay Items Drilled Shaft (6 ft. 6 in. Dia.).

PIER 18 EB

Sheet No. 26 of 152

CONTRACT NO. 76D61

F.A. ROUTE	SECTION
999	82-1B-2
FED. AID PROJECT	ILLINOIS
COUNTY	ST. CLAIR

USER NAME = jjolliff
PLOT SCALE = $SCALE$
PLOT DATE = 3/8/2010
DESIGNED - HNTB
CHECKED - CMT
DRAWN - CMT / HTNB
REVISED -
REVISED -
REVISED -
REVISED -

ILLINOIS APPROACH STRUCTURE
FOR NEW I-70 MISSISSIPPI RIVER BRIDGE

STATE OF ILLINOIS
DEPARTMENT OF TRANSPORTATION

MISSOURI HIGHWAYS
AND TRANSPORTATION COMMISSION

HNTB
715 KIRK DRIVE
KANSAS CITY, MO 64105
TELEPHONE (816) 472-1201
CERTIFICATE OF AUTHORITY NO. 001270

CMT
CRAWFORD, MURPHY & TILLY, INC.
2750 WEST WASHINGTON STREET
SPRINGFIELD, IL 62702
TELEPHONE (217) 787-8050
ENGINEERING CORPORATION - 000631

s:\idot\0906601\draw_idot\cadd_sheets\structural\B_A6500_026-152_J6I0984C_026.dgn

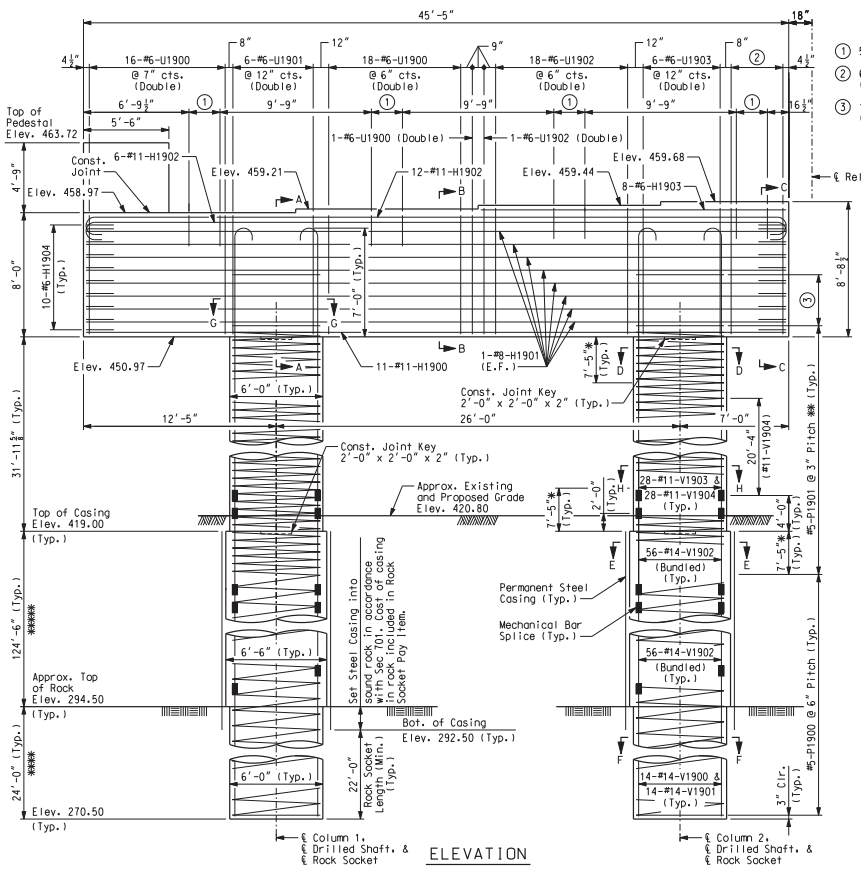

ELEVATION

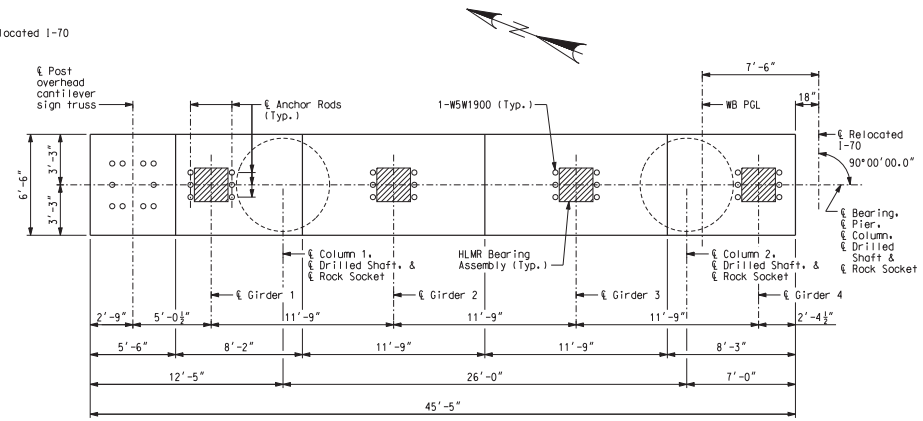

PLAN

Notes:

An additional 4 feet has been added to #5-P1900. #14-V1900 and #14-V1901 lengths for possible change in drilled shaft or rock socket depth. This excess length shall be cut off or included in the reinforcement lap if not required.

Sonic logging testing shall be performed on all drilled shafts and rock sockets.

All reinforcing bars in the tops of substructure beams or caps shall be spaced to clear anchor rod wells for bearings by at least 1/2".

The hooks of V-Bars embedded in the beam cap shall be oriented inward. Bending the hook outward, away from the column core, is not allowed.

The thickness of steel casing shall meet all the requirements of Sec 701 with minimum thickness being 3/8 inch. Thicker casing may be required for installation.

For details of HLMR Bearing Assembly, see Sheet No. 43.

For Anchor Rod Well Details and Anchor Rod Setting Plan, see Sheet No. 46.

For details of seismic stirrup bars, see Sheet No. 7.

* Lapping of spiral reinforcement in this region not permitted.

** Continue spiral bars to the bottom of the beam cap stirrup reinforcing bar.

*** Splice locations shall be staggered.

Anchorage of spiral reinforcement shall be provided by 1-1/2 extra turns of spiral bar at each end of spiral unit.

**** Pay Items Rock Socket (6 ft. 0 in. Dia.).

***** Pay Items Drilled Shaft (6 ft. 6 in. Dia.).

For Sections A-A, B-B, C-C, D-D, E-E, F-F, G-G, H-H, Detail of Cap Beam Pedestal, and Substructure Quantity Table, see Sheet No. 28.

PIER 19 WB

CONTRACT NO. 76D61

F.A. ROUTE	SECTION
999	82-1B-2
FED. AID PROJECT	ILLINOIS
COUNTY	ST. CLAIR

USER NAME = jjolliff
PLOT SCALE = $SCALE$
PLOT DATE = 3/8/2010

DESIGNED - HNTB
CHECKED - CMT
DRAWN - CMT / HTNB
REVISED -
REVISED -
REVISED -
REVISED -

ILLINOIS APPROACH STRUCTURE FOR NEW I-70 MISSISSIPPI RIVER BRIDGE

STATE OF ILLINOIS
DEPARTMENT OF TRANSPORTATION

MISSOURI HIGHWAYS
AND TRANSPORTATION COMMISSION

HNTB
715 KIRK DRIVE
KANSAS CITY, MO 64105
TELEPHONE (816) 472-1201
CERTIFICATE OF AUTHORITY NO. 001270

CMT
CRAWFORD, MURPHY & TILLY, INC.
2750 WEST WASHINGTON STREET
SPRINGFIELD, IL 62702
TELEPHONE (217) 787-8050
ENGINEERING CORPORATION - 000631

Detailed JUL 2009
Checked JUL 2009

Note: This drawing is not to scale. Follow dimensions.

s:\idot\0906601\draw_idot\cadd_sheets\structural\B_A6500_027-152_J6I0984C_027.dgn

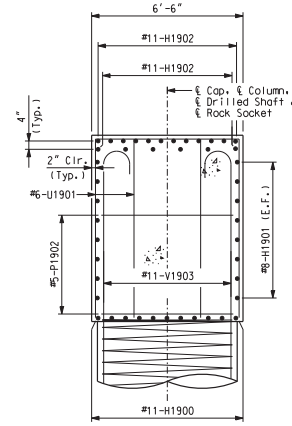

SECTION A-A

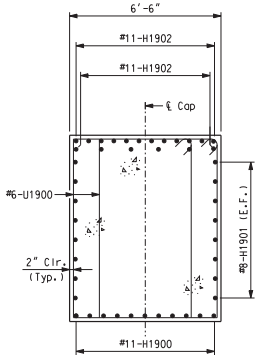

SECTION B-B

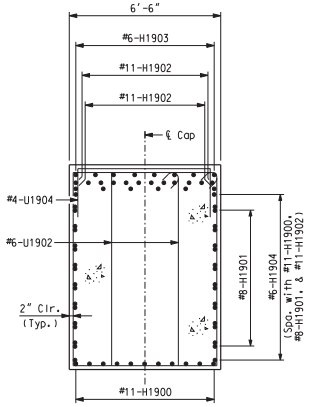

SECTION C-C

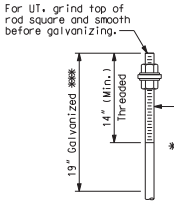

ANCHOR ASSEMBLY DETAIL *

Note:
Anchor rods shall be ASTM F1554, Grade 55.

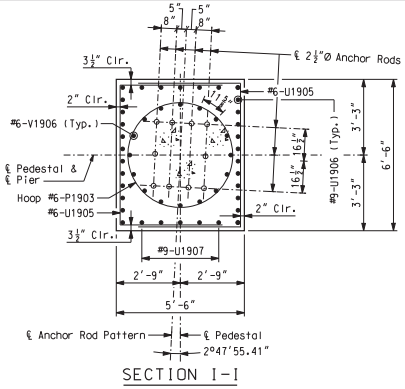

SECTION I-I

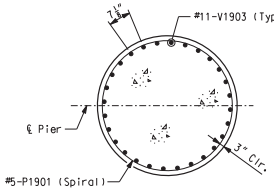

SECTION D-D
(6'-0" Diameter)

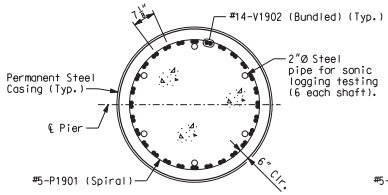

SECTION E-E
(6'-6" Diameter)

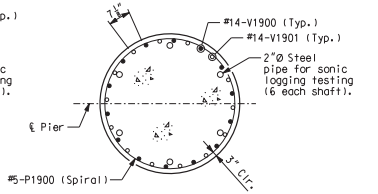

SECTION F-F
(6'-0" Diameter)

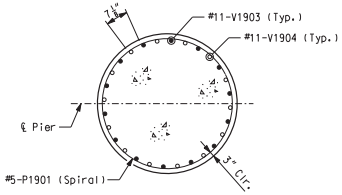

SECTION H-H
(6'-0" Diameter)

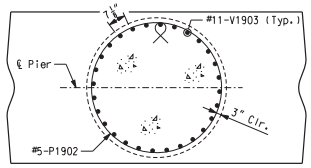

SECTION G-G
(Beam Cap reinforcement not shown)

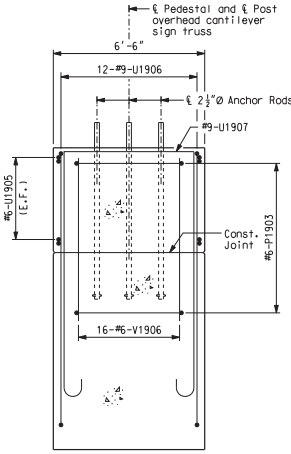

SECTION J-J
(Not all Beam Cap reinforcement shown)

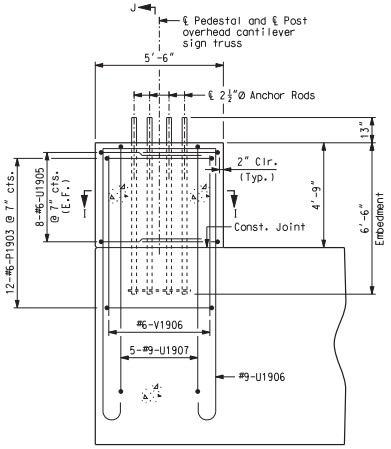

DETAIL OF BEAM CAP PEDESTAL
(Not all Beam Cap reinforcement shown)
(Looking East)

Notes:
For locations of Sections A-A, B-B, C-C, D-D, E-E, F-F, G-G, H-H, and for additional notes, see Sheet No. 27.
Overhead cantilever sign truss for DMS sign included in contract J610984, (By Others).
* Anchorage Assembly including anchor rods, nuts, washers and other hardware shall be included in the cost of Reinforcing Steel (Bridges).

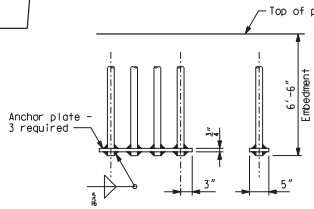

ANCHORAGE ASSEMBLY
DETAIL A

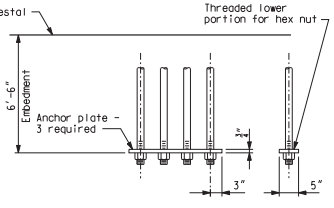

ANCHORAGE ASSEMBLY
DETAIL B
(Optional)

SUBSTRUCTURE QUANTITY TABLE FOR PIER 19 WB

Item		Quantity
Drilled Shafts (6 ft. 6 in. Dia.)	linear foot	249.0
Rock Sockets (6 ft. 0 in. Dia.)	linear foot	48.0
Supplementary Television Camera Inspection	each	1
Foundation Inspection Holes	linear foot	68.0
Sonic Logging Testing	each	2
Class B Concrete (Substructure)	cu. yard	164.1
Reinforcing Steel (Bridges)	pound	163,240
Mechanical Bar Splice	each	280
Reinforcing Steel (Epoxy Coated)	pound	2,470
Non-Special Waste Disposal	cu. yard	26.2

Note:
These quantities are included in the estimated quantities table on Sheet No. 7.

PIER 19 WB - DETAILS

CONTRACT NO. 76D61

F.A. ROUTE	SECTION
999	82-1B-2
FED. AID PROJECT	ILLINOIS
COUNTY	ST. CLAIR

USER NAME = jjolliff
PLOT SCALE = $SCALE$
PLOT DATE = 3/8/2010
DESIGNED - HNTB
CHECKED - CMT
DRAWN - CMT / HTNB
REVISED -
REVISED -
REVISED -
REVISED -

ILLINOIS APPROACH STRUCTURE FOR NEW I-70 MISSISSIPPI RIVER BRIDGE

STATE OF ILLINOIS
DEPARTMENT OF TRANSPORTATION

MISSOURI HIGHWAYS AND TRANSPORTATION COMMISSION

HNTB
715 KIRK DRIVE
KANSAS CITY, MO 64105
TELEPHONE (816) 472-1201
CERTIFICATE OF AUTHORITY NO. 001270

CMT
CRAWFORD, MURPHY & TILLY, INC.
2750 WEST WASHINGTON STREET
SPRINGFIELD, IL 62702
TELEPHONE (217) 787-8050
ENGINEERING CORPORATION - 000631

Detailed JUL 2009
Checked JUL 2009

Note: This drawing is not to scale. Follow dimensions.

s:\idot\0906601\draw_idot\cadd_sheets\structural\B_A6500_028-152_J6l0984C_028.dgn

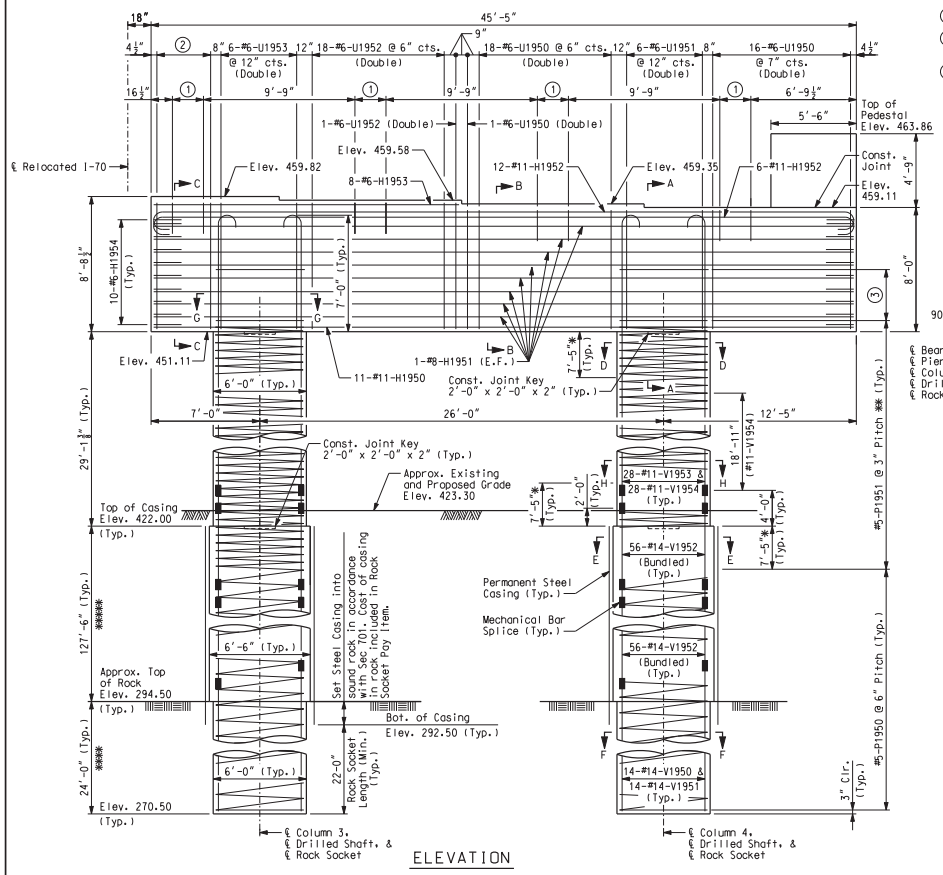

ELEVATION

① 5-#4-U1954 @ 6" cts.
② 6-#6-U1952 @ 8" cts. (Double)
③ 18-#5-P1952 @ 3" cts. (Typ.) ***

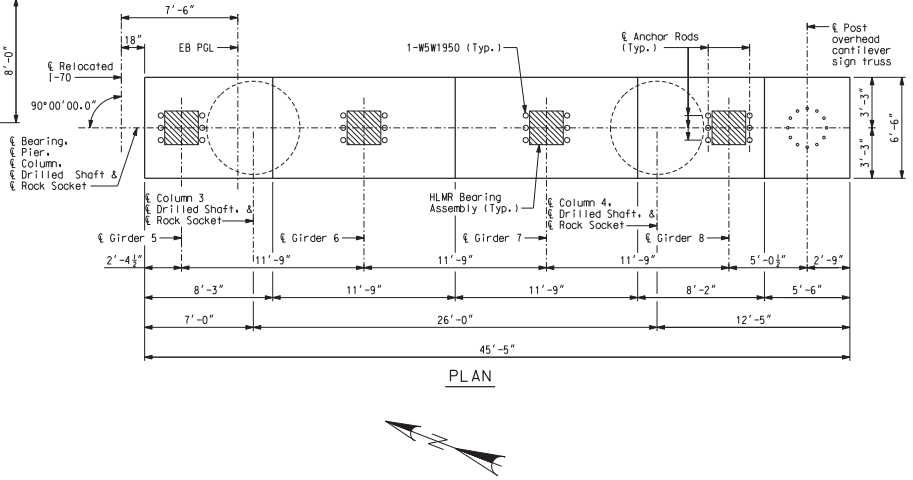

PLAN

Notes:
An additional 4 feet has been added to #5-P1950, #14-V1950 and #14-V1951 lengths for possible change in drilled shaft or rock socket depth. This excess length shall be cut off or included in the reinforcement lap if not required.
Sonic logging testing shall be performed on all drilled shafts and rock sockets.
All reinforcing bars in the tops of substructure beams or caps shall be spaced to clear anchor rod wells for bearings by at least 1/2".
The hooks of V-Bars embedded in the beam cap shall be oriented inward. Bending the hook outward, away from the column core, is not allowed.
The thickness of steel casing shall meet all the requirements of Sec 701 with minimum thickness being 3/8 inch. Thicker casing may be required for installation.
For details of HLMR Bearing Assembly, see Sheet No. 43.
For Anchor Rod Well Details and Anchor Rod Setting Plan, see Sheet No. 46.
For details of seismic stirrup bars, see Sheet No. 7.
* Lapping of spiral reinforcement in this region not permitted.
** Continue spiral bars to the bottom of the beam cap stirrup reinforcing bar.
*** Splice locations shall be staggered.
Anchorage of spiral reinforcement shall be provided by 1-1/2 extra turns of spiral bar at each end of spiral unit.
**** Pay Items Rock Socket (6 ft. 0 in. Dia.).
***** Pay Items Drilled Shaft (6 ft. 6 in. Dia.).
For Sections A-A, B-B, C-C, D-D, E-E, F-F, G-G, H-H, Detail of Cap Beam Pedestal, and Substructure Quantity Table, see Sheet No. 30.

PIER 19 EB

Detailed JUL 2009
Checked JUL 2009

Note: This drawing is not to scale. Follow dimensions.

s:\idot\0906601\draw_idot\cadd_sheets\structural\B_A6500_029-152_J6l0984C_029.dgn

CONTRACT NO. 76D61

F.A. ROUTE	SECTION
999	82-1B-2
FED. AID PROJECT	ILLINOIS
COUNTY	ST. CLAIR

USER NAME = jjolliff
PLOT SCALE = $SCALE$
PLOT DATE = 3/8/2010
DESIGNED - HNTB
CHECKED - CMT
DRAWN - CMT / HTNB
REVISED -
REVISED -
REVISED -
REVISED -

ILLINOIS APPROACH STRUCTURE
FOR NEW I-70 MISSISSIPPI RIVER BRIDGE

STATE OF ILLINOIS
DEPARTMENT OF TRANSPORTATION

MISSOURI HIGHWAYS
AND TRANSPORTATION COMMISSION

HNTB
715 KIRK DRIVE
KANSAS CITY, MO 64105
TELEPHONE (816) 472-1201
CERTIFICATE OF AUTHORITY NO. 001270

CMT
CRAWFORD, MURPHY & TILLY, INC.
2750 WEST WASHINGTON STREET
SPRINGFIELD, IL 62702
TELEPHONE (217) 787-8050
ENGINEERING CORPORATION - 000631

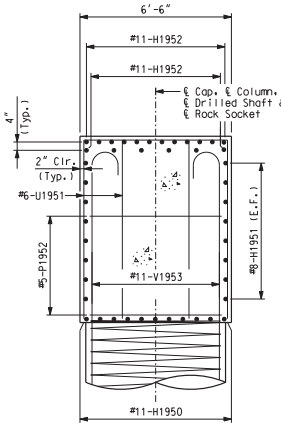

SECTION A-A

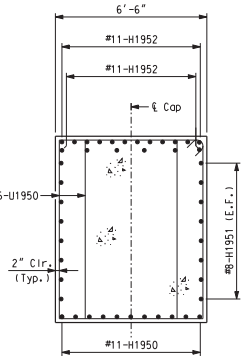

SECTION B-B

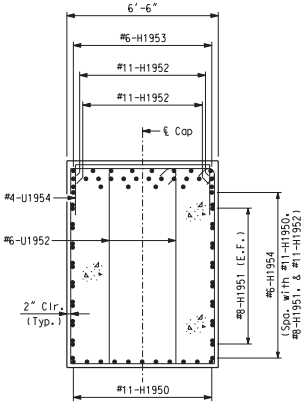

SECTION C-C

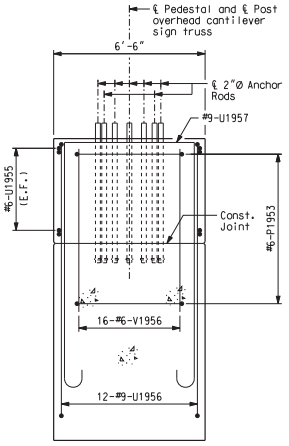

SECTION J-J

(Not All Beam Cap reinforcement shown)

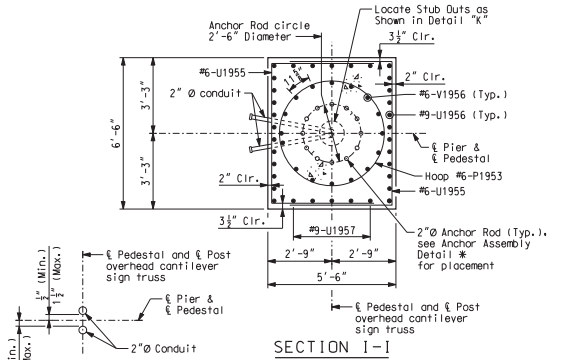

SECTION I-I

DETAIL K

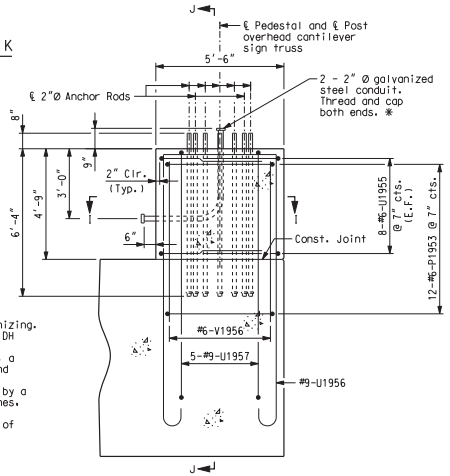

DETAIL OF BEAM CAP PEDESTAL

(All Beam Cap reinforcement not shown)

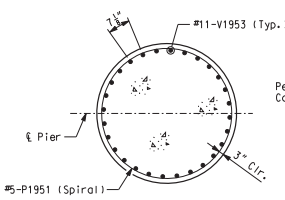

SECTION D-D

(6'-0" Diameter)

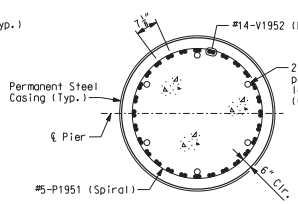

SECTION E-E

(6'-6" Diameter)

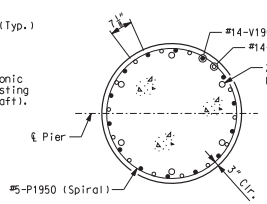

SECTION F-F

(6'-0" Diameter)

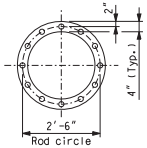

SUGGESTED POSITIONING PLATE

Anchor rods shall conform to AASHTO M314 Grade 105 and meet Charpy V-Notch (CVN) energy of 15 lb.-ft. at 10° F. before galvanizing. Galvanize the upper 18" (✱✱✱) and associated M291, Grade A, C or DH heavy hex nuts and hardened washers per AASHTO M232. No welding shall be permitted on rods. Provide an unfinished nut at bottom, a hexagon locknut and washer above base plate and a leveling nut and washer below base plate. Before or after threading, but before galvanizing, each anchor rod shall be ultrasonically tested (UT) by a Level II or III inspector, qualified in accord with ANSI guidelines, using a straight beam, 1/2"Ø 3.5 mhz. transducer, to insure no rejectable flaws exist in the upper 18" (tension criteria). Cost of testing included in Reinforcing Steel (Bridges).

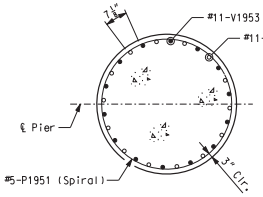

SECTION H-H

(6'-0" Diameter)

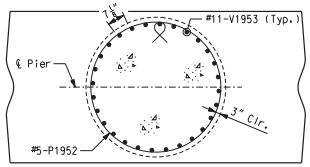

SECTION G-G

(Beam Cap reinforcement not shown)

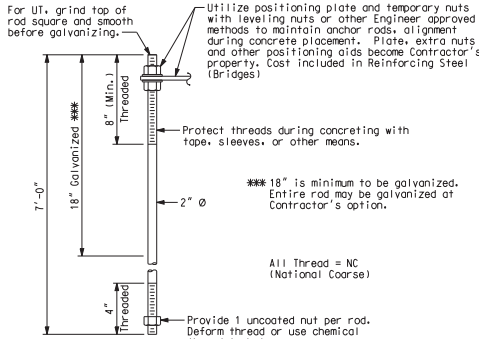

ANCHOR ASSEMBLY DETAIL ✱

Notes:

For location of Sections A-A, B-B, C-C, D-D, E-E, F-F, G-G, and H-H, and for additional notes, see Sheet No. 29.

Overhead Cantilever Sign truss for DMS sign included in IDOT contract (By Others).

✱ Conduit and Anchor Assembly shall be included in the cost of Reinforcing steel (Bridges)

SUBSTRUCTURE QUANTITY TABLE FOR PIER 19 EB

Item		Quantity
Drilled Shafts (6 ft. 6 in. Dia.)	linear foot	255.0
Rock Sockets (6 ft. 0 in. Dia.)	linear foot	48.0
Supplementary Television Camera Inspection	each	1
Foundation Inspection Holes	linear foot	68.0
Sonic Logging Testing	each	2
Class B Concrete (Substructure)	cu. yard	158.1
Reinforcing Steel (Bridges)	pound	163,070
Mechanical Bar Splice	each	280
Reinforcing Steel (Epoxy Coated)	pound	2,280
Non-Special Waste Disposal	cu. yard	26.2

Note:

These quantities are included in the estimated quantities table on Sheet No. 7.

PIER 19 EB - DETAILS

CONTRACT NO. 76D61

F.A. ROUTE	SECTION
999	82-1B-2
FED. AID PROJECT	ILLINOIS
COUNTY	ST. CLAIR

USER NAME = jjolliff
PLOT SCALE = $SCALE$
PLOT DATE = 3/8/2010
DESIGNED - HNTB
CHECKED - CMT
DRAWN - CMT / HTNB
REVISED -
REVISED -
REVISED -
REVISED -

ILLINOIS APPROACH STRUCTURE FOR NEW I-70 MISSISSIPPI RIVER BRIDGE

STATE OF ILLINOIS
DEPARTMENT OF TRANSPORTATION

MISSOURI HIGHWAYS AND TRANSPORTATION COMMISSION

HNTB
715 KIRK DRIVE
KANSAS CITY, MO 64105
TELEPHONE (816) 472-1201
CERTIFICATE OF AUTHORITY NO. 001270

CMT
CRAWFORD, MURPHY & TILLY, INC.
2750 WEST WASHINGTON STREET
SPRINGFIELD, IL 62702
TELEPHONE (217) 787-8050
ENGINEERING CORPORATION - 000631

Detailed JUL 2009
Checked JUL 2009

Note: This drawing is not to scale. Follow dimensions.

s:\idot\0906601\draw_idot\cadd_sheets\structural\B_A6500_030-152_J6l0984C_030.dgn

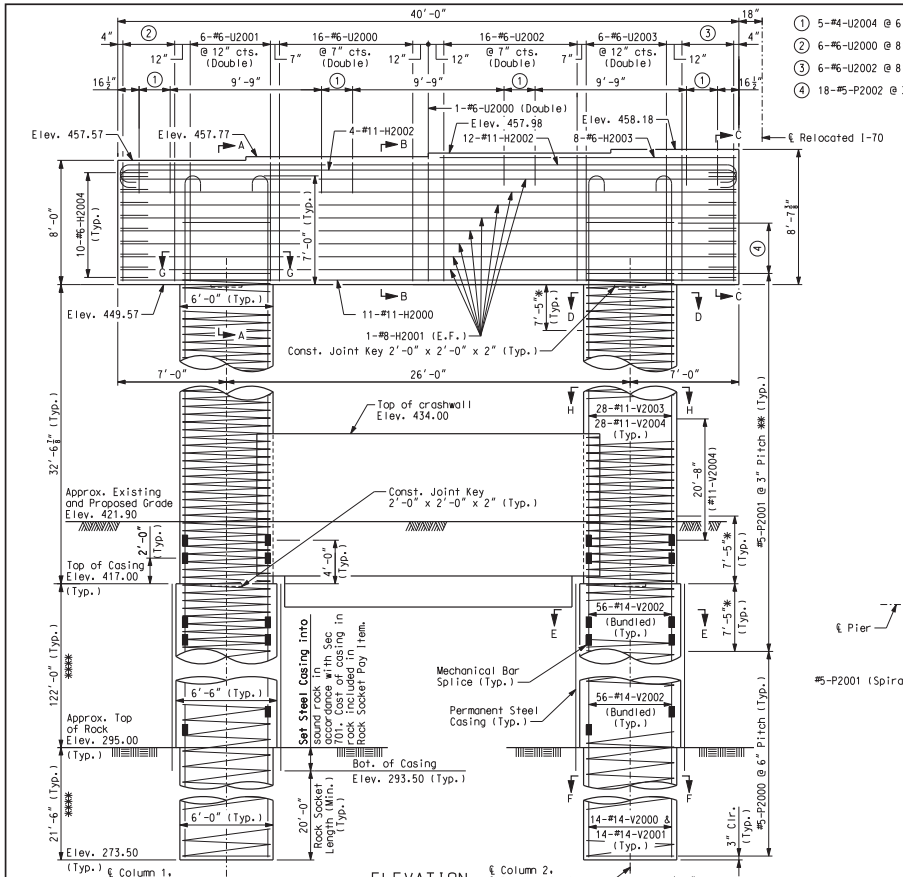

① 5-#4-U2004 @ 6" cts.
② 6-#6-U2000 @ 8" cts. (Double)
③ 6-#6-U2002 @ 8" cts. (Double)
④ 18-#5-P2002 @ 3" cts. (Typ.) ***

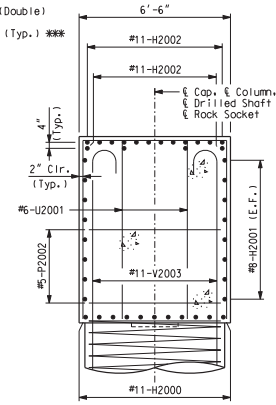

SECTION A-A

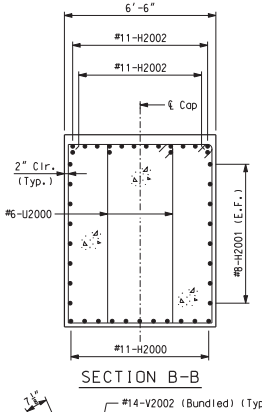

SECTION B-B

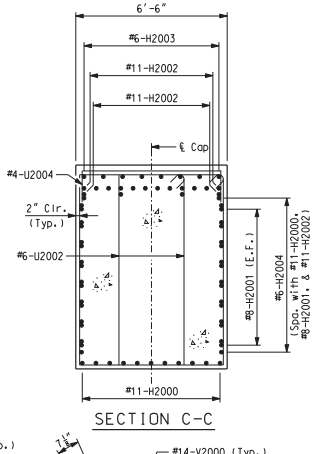

SECTION C-C

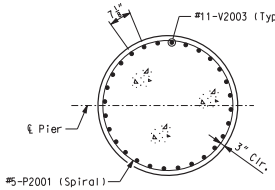

SECTION D-D
(6'-0" Diameter)

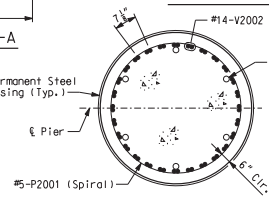

SECTION E-E
(6'-6" Diameter)

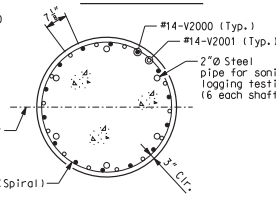

SECTION F-F
(6'-0" Diameter)

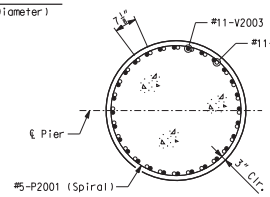

SECTION H-H
(6'-0" Diameter)

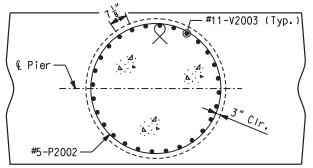

SECTION G-G
(Beam Cap reinforcement not shown)

SUBSTRUCTURE QUANTITY TABLE FOR PIER 20 WB

Item		Quantity
Class 1 Excavation	cu. yard	10
Drilled Shafts (6 ft. 6 in. Dia.)	linear foot	244.0
Rock Sockets (6 ft. 0 in. Dia.)	linear foot	43.0
Supplementary Television Camera Inspection	each	1
Foundation Inspection Holes	linear foot	63.0
Sonic Logging Testing	each	2
Class B Concrete (Substructure)	cu. yard	234.1
Reinforcing Steel (Bridges)	pound	165,150
Mechanical Bar Splice	each	280
Non-Special Waste Disposal	cu. yard	74.7

Note:
These quantities are included in the estimated quantities table on Sheet No. 7.

Notes:
An additional 4 feet has been added to #5-P2000, #14-V2000 and #14-V2001 lengths for possible change in drilled shaft or rock socket depth. This excess length shall be cut off or included in the reinforcement lap if not required.
Required excavation to the top of the drilled shafts is included in the contract unit price for Class 1 Excavation.
Sonic logging testing shall be performed on all drilled shafts and rock sockets.
All reinforcing bars in the tops of substructure beams or caps shall be spaced to clear anchor rod wells for bearings by at least 1/2".
The hooks of V-Bars embedded in the beam cap shall be oriented inward. Bending the hook outward, away from the column core, is not allowed.
The thickness of steel casing shall meet all the requirements of Sec 701 with minimum thickness being 3/8 inch. Thicker casing may be required for installation.
For details of HLMR Bearing Assembly, see Sheet No. 43.
For Anchor Rod Details and Anchor Rod Setting Plan, see Sheet No. 46.
For details of seismic stirrup bars, see Sheet No. 7.
* Lapping of spiral reinforcement in this region not permitted.
** Continue spiral bars to the bottom of the beam cap stirrup reinforcing bar.
*** Splice locations shall be staggered.
Anchorage of spiral reinforcement shall be provided by 1-1/2 extra turns of spiral bar at each end of spiral unit.
**** Pay Items Rock Socket (6 ft. 0 in. Dia.).
***** Pay Items Drilled Shaft (6 ft. 6 in. Dia.).
For Pier Crashwall Details, see Sheet No. 35.
If unsuitable material is encountered, excavation of unsuitable material and furnishing and placing of granular backfill shall be in accordance with Sec 206.

PIER 20 WB

Detailed JUL 2009
Checked JUL 2009

Note: This drawing is not to scale. Follow dimensions.

Sheet No. 31 of 152

CONTRACT NO. 76D61

F.A. ROUTE	SECTION
999	82-1B-2
FED. AID PROJECT	ILLINOIS
COUNTY	ST. CLAIR

USER NAME = jjolliff
PLOT SCALE = $SCALE$
PLOT DATE = 3/8/2010
DESIGNED - HNTB
CHECKED - CMT
DRAWN - CMT / HTNB
REVISED -
REVISED -
REVISED -
REVISED -

ILLINOIS APPROACH STRUCTURE FOR NEW I-70 MISSISSIPPI RIVER BRIDGE

STATE OF ILLINOIS
DEPARTMENT OF TRANSPORTATION

MISSOURI HIGHWAYS AND TRANSPORTATION COMMISSION

HNTB
715 KIRK DRIVE
KANSAS CITY, MO 64105
TELEPHONE (816) 472-1201
CERTIFICATE OF AUTHORITY NO. 001270

CMT
CRAWFORD, MURPHY & TILLY, INC.
2750 WEST WASHINGTON STREET
SPRINGFIELD, IL 62702
TELEPHONE (217) 787-8050
ENGINEERING CORPORATION - 000631

s:\idot\0906601\draw_idot\cadd_sheets\structural\B_A6500_031-152_J6I0984C_031.dgn

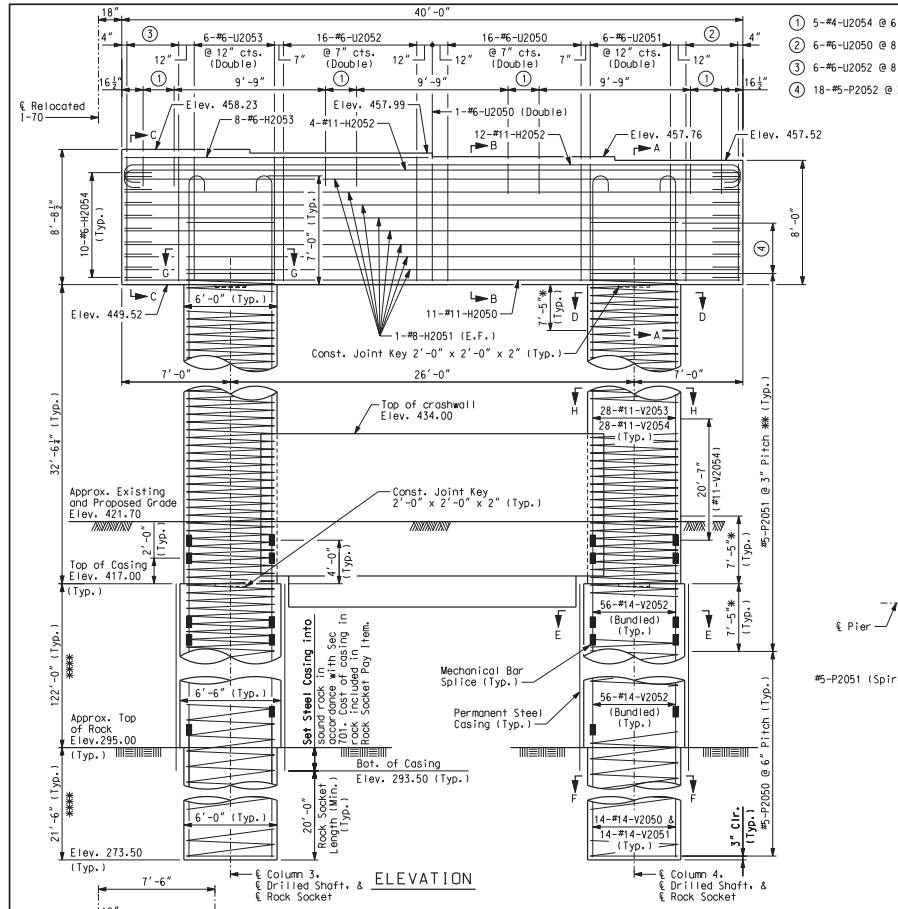

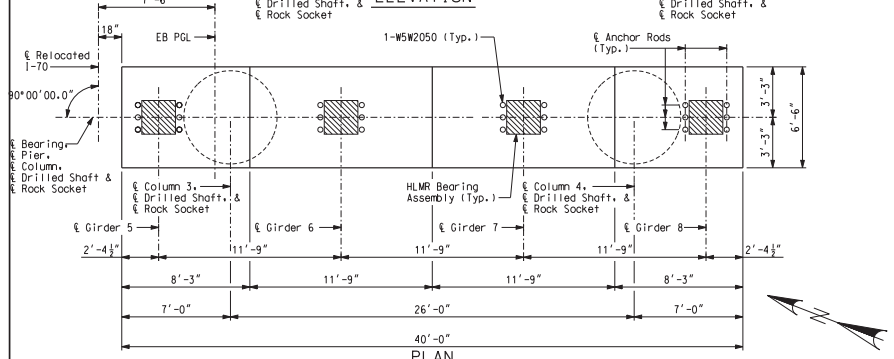

① 5-#4-U2054 @ 6" cts.
② 6-#6-U2050 @ 8" cts. (Double)
③ 6-#6-U2052 @ 8" cts. (Double)
④ 18-#5-P2052 @ 3" cts. (Typ.) ***

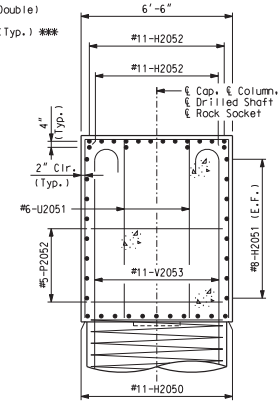

SECTION A-A

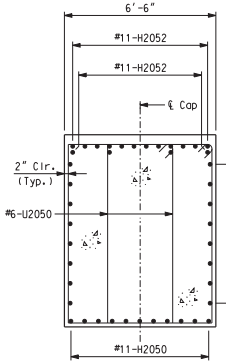

SECTION B-B

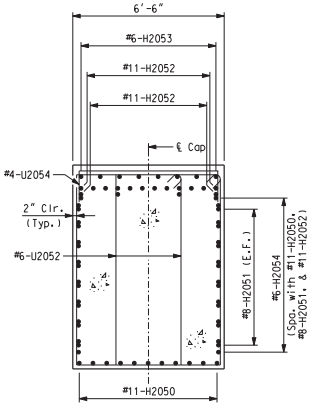

SECTION C-C

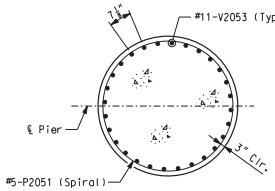

SECTION D-D
(6'-0" Diameter)

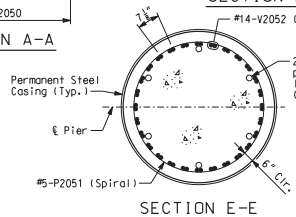

SECTION E-E
(6'-6" Diameter)

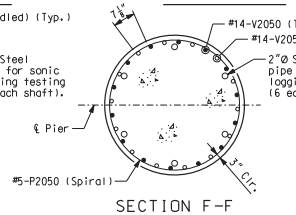

SECTION F-F
(6'-0" Diameter)

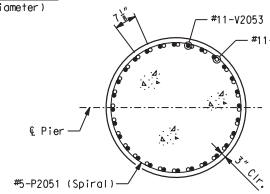

SECTION H-H
(6'-0" Diameter)

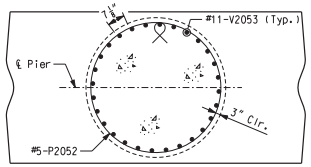

SECTION G-G
(Beam Cap reinforcement not shown)

SUBSTRUCTURE QUANTITY TABLE FOR PIER 20 EB		
Item		Quantity
Class 1 Excavation	cu. yard	10
Drilled Shafts (6 ft. 6 in. Dia.)	linear foot	244.0
Rock Sockets (6 ft. 0 in. Dia.)	linear foot	43.0
Supplementary Television Camera Inspection	each	1
Foundation Inspection Holes	linear foot	63.0
Sonic Logging Testing	each	2
Class B Concrete (Substructure)	cu. yard	234.5
Reinforcing Steel (Bridges)	pound	165,120
Mechanical Bar Splice	each	280
Non-Special Waste Disposal	cu. yard	74.0

Note:
These quantities are included in the estimated quantities table on Sheet No. 7.

Notes:
An additional 4 feet has been added to #5-P2050, #14-V2050 and #14-V2051 lengths for possible change in drilled shaft or rock socket depth. This excess length shall be cut off or included in the reinforcement lap if not required.
Required excavation to the top of the drilled shafts is included in the contract unit price for Class 1 Excavation.
Sonic logging testing shall be performed on all drilled shafts and rock sockets.
All reinforcing bars in the tops of substructure beams or caps shall be spaced to clear anchor rod wells for bearings by at least 1/2".
The hooks of V-Bars embedded in the beam cap shall be oriented inward. Bending the hook outward, away from the column core, is not allowed.
The thickness of steel casing shall meet all the requirements of Sec 701 with minimum thickness being 3/8 inch. Thicker casing may be required for installation.
For details of HLMR Bearing Assembly, see Sheet No. 43.
For Anchor Rod Details and Anchor Rod Setting Plan, see Sheet No. 46.
For details of seismic stirrup bars, see Sheet No. 7.
* Lapping of spiral reinforcement in this region not permitted.
** Continue spiral bars to the bottom of the beam cap stirrup reinforcing bar.
*** Splice locations shall be staggered.
Anchorage of spiral reinforcement shall be provided by 1-1/2 extra turns of spiral bar at each end of spiral unit.
**** Pay Items Rock Socket (6 ft. 0 in. Dia.).
***** Pay Items Drilled Shaft (6 ft. 6 in. Dia.).
For Pier Crashwall Details see Sheet No. 35.
If unsuitable material is encountered, excavation of unsuitable material and furnishing and placing of granular backfill shall be in accordance with Sec 206.

PIER 20 EB

Detailed JUL 2009
Checked JUL 2009

Note: This drawing is not to scale. Follow dimensions.

s:\idot\0906601\draw_idot\cadd_sheets\structural\B_A6500_032-152_J6I0984C_032.dgn

CONTRACT NO. 76D61

F.A. ROUTE	SECTION
999	82-1B-2
FED. AID PROJECT	ILLINOIS
COUNTY	ST. CLAIR

USER NAME = jjolliff
PLOT SCALE = $SCALE$
PLOT DATE = 3/8/2010
DESIGNED - HNTB
CHECKED - CMT
DRAWN - CMT / HTNB
REVISED -
REVISED -
REVISED -
REVISED -

ILLINOIS APPROACH STRUCTURE FOR NEW I-70 MISSISSIPPI RIVER BRIDGE

STATE OF ILLINOIS
DEPARTMENT OF TRANSPORTATION

MISSOURI HIGHWAYS AND TRANSPORTATION COMMISSION

HNTB
715 KIRK DRIVE
KANSAS CITY, MO 64105
TELEPHONE (816) 472-1201
CERTIFICATE OF AUTHORITY NO. 001270

CMT
CRAWFORD, MURPHY & TILLY, INC.
2750 WEST WASHINGTON STREET
SPRINGFIELD, IL 62702
TELEPHONE (217) 787-8050
ENGINEERING CORPORATION - 000631

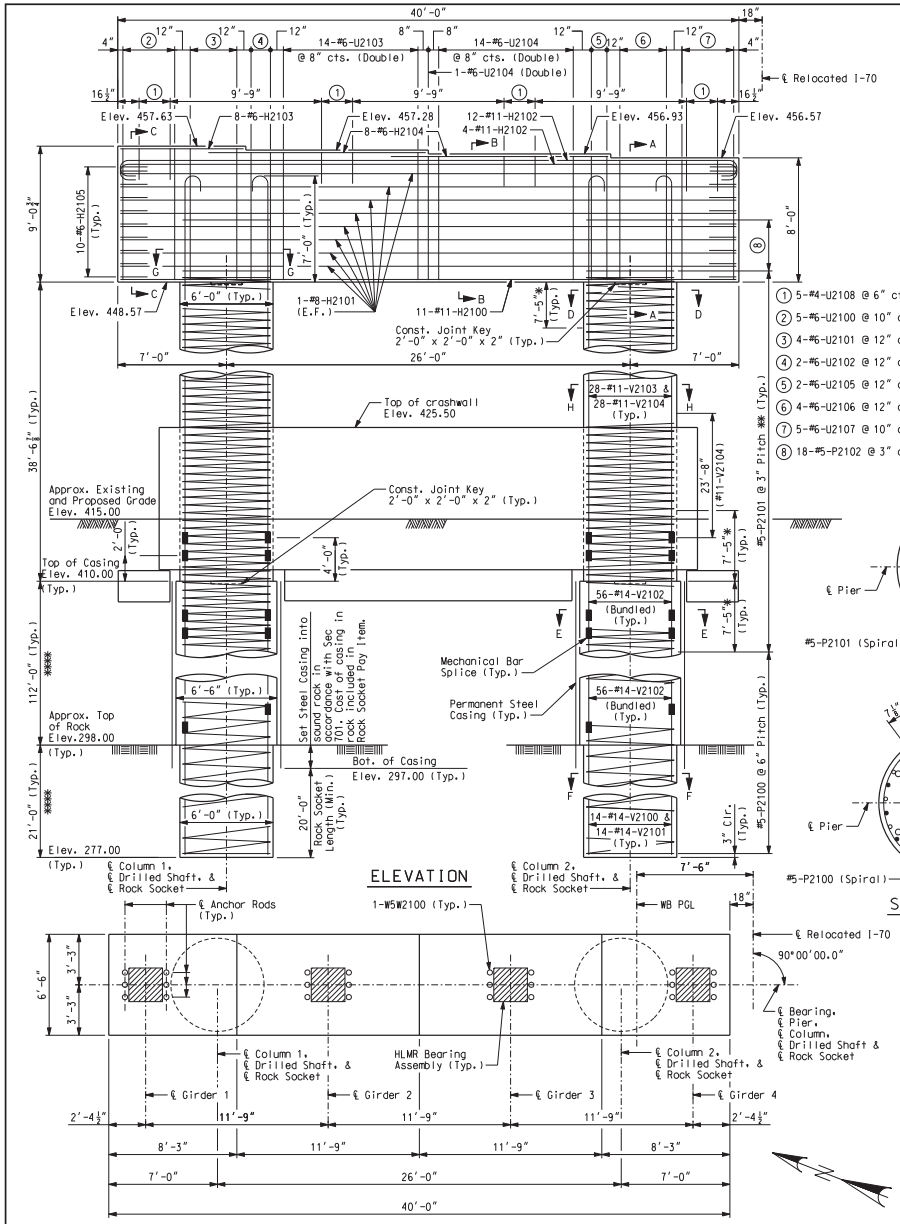

1. 5-#4-U2108 @ 6" cts.
2. 5-#6-U2100 @ 10" cts. (Double)
3. 4-#6-U2101 @ 12" cts. (Double)
4. 2-#6-U2102 @ 12" cts. (Double)
5. 2-#6-U2105 @ 12" cts. (Double)
6. 4-#6-U2106 @ 12" cts. (Double)
7. 5-#6-U2107 @ 10" cts. (Double)
8. 18-#5-P2102 @ 3" cts. (Typ.) ***

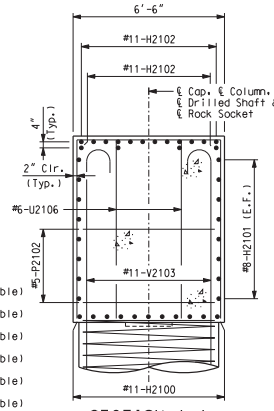

SECTION A-A

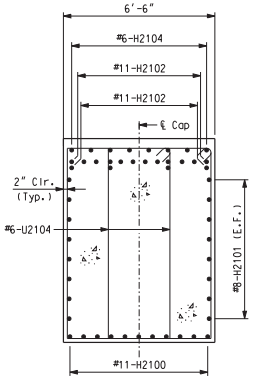

SECTION B-B

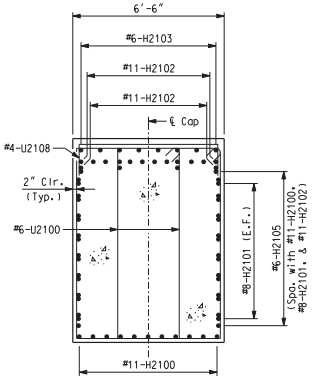

SECTION C-C

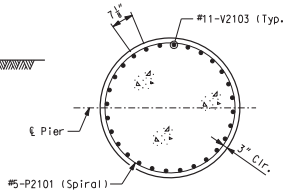

SECTION D-D
(6'-0" Diameter)

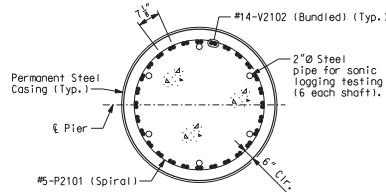

SECTION E-E
(6'-6" Diameter)

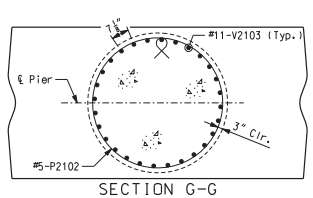

SECTION G-G
(Beam Cap reinforcement not shown)

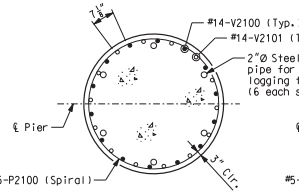

SECTION F-F
(6'-0" Diameter)

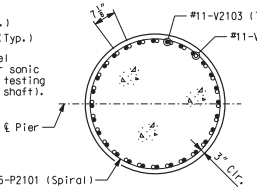

SECTION H-H
(6'-0" Diameter)

SUBSTRUCTURE QUANTITY TABLE FOR PIER 21 WB

Item		Quantity
Class 1 Excavation	cu. yard	30
Drilled Shafts (6 ft. 6 in. Dia.)	linear foot	224.0
Rock Sockets (6 ft. 0 in. Dia.)	linear foot	42.0
Supplementary Television Camera Inspection	each	1
Foundation Inspection Holes	linear foot	62.0
Sonic Logging Testing	each	2
Class B Concrete (Substructure)	cu. yard	300.4
Reinforcing Steel (Bridges)	pound	167,490
Mechanical Bar Splice	each	280
Non-Special Waste Disposal	cu. yard	126.7

Note:
These quantities are included in the estimated quantities table on Sheet No. 7.

Notes:
An additional 4 feet has been added to #5-P2100, #14-V2100 and #14-V2101 lengths for possible change in drilled shaft or rock socket depth. This excess length shall be cut off or included in the reinforcement lap if not required.
Required excavation to the top of the drilled shafts is included in the contract unit price for Class 1 Excavation.
Sonic logging testing shall be performed on all drilled shafts and rock sockets.
All reinforcing bars in the tops of substructure beams or caps shall be spaced to clear anchor rod wells for bearings by at least 1/2 ".
The hooks of V-Bars embedded in the beam cap shall be oriented inward. Bending the hook outward, away from the column core, is not allowed.
The thickness of steel casing shall meet all the requirements of Sec 701 with minimum thickness being 3/8 inch. Thicker casing may be required for installation.
For details of HLMR Bearing Assembly, see Sheet No. 43.
For Anchor Rod Well Details and Anchor Rod Setting Plan, see Sheet No. 46.
For details of seismic stirrup bars, see Sheet No. 7.
* Lapping of spiral reinforcement in this region not permitted.
** Continue spiral bars to the bottom of the beam cap stirrup reinforcing bar.
*** Splice locations shall be staggered.
Anchorage of spiral reinforcement shall be provided by 1-1/2 extra turns of spiral bar at each end of spiral unit.
**** Pay Items Rock Socket (6 ft. 0 in. Dia.).
***** Pay Items Drilled Shaft (6 ft. 6 in. Dia.).
For Pier Crashwall Details, see Sheet No. 35.
If unsuitable material is encountered, excavation of unsuitable material and furnishing and placing of granular backfill shall be in accordance with Sec 206.

PIER 21 WB

Detailed JUL 2009
Checked JUL 2009

Note: This drawing is not to scale. Follow dimensions.

Sheet No. 33 of 152

s:\idot\0906601\draw_idot\cadd_sheets\structural\B_A6500_033-152_J6I0984C_033.dgn

CONTRACT NO. 76D61

F.A. ROUTE	SECTION
999	82-1B-2
FED. AID PROJECT	ILLINOIS
COUNTY	ST. CLAIR

USER NAME = jjolliff
PLOT SCALE = $SCALE$
PLOT DATE = 3/8/2010
DESIGNED - HNTB
CHECKED - CMT
DRAWN - CMT / HTNB
REVISED -
REVISED -
REVISED -
REVISED -

ILLINOIS APPROACH STRUCTURE FOR NEW I-70 MISSISSIPPI RIVER BRIDGE

STATE OF ILLINOIS
DEPARTMENT OF TRANSPORTATION

MISSOURI HIGHWAYS AND TRANSPORTATION COMMISSION

HNTB
715 KIRK DRIVE
KANSAS CITY, MO 64105
TELEPHONE (816) 472-1201
CERTIFICATE OF AUTHORITY NO. 001270

CMT
CRAWFORD, MURPHY & TILLY, INC.
2750 WEST WASHINGTON STREET
SPRINGFIELD, IL 62702
TELEPHONE (217) 787-8050
ENGINEERING CORPORATION - 000631

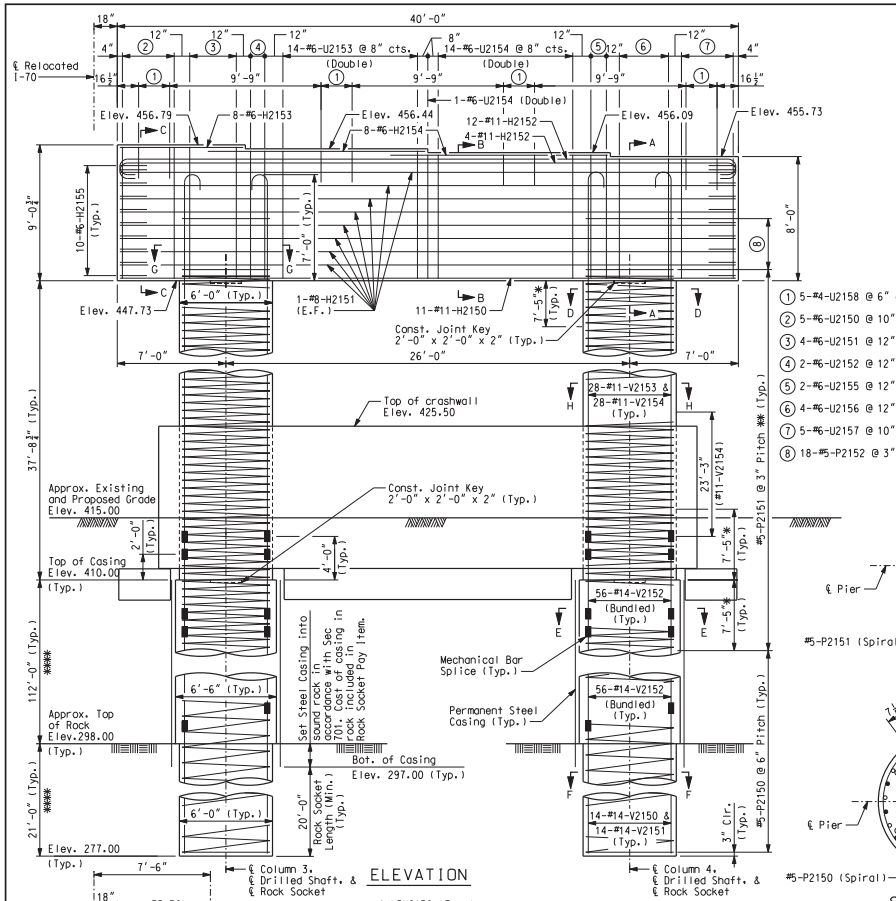

1. 5-#4-U2158 @ 6" cts.
2. 5-#6-U2150 @ 10" cts. (Double)
3. 4-#6-U2151 @ 12" cts. (Double)
4. 2-#6-U2152 @ 12" cts. (Double)
5. 2-#6-U2155 @ 12" cts. (Double)
6. 4-#6-U2156 @ 12" cts. (Double)
7. 5-#6-U2157 @ 10" cts. (Double)
8. 18-#5-P2152 @ 3" cts. (Typ.) ***

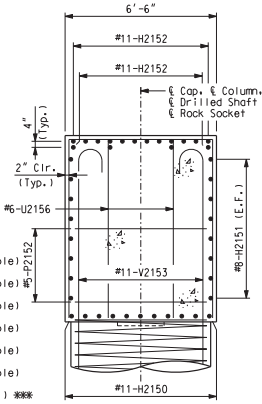

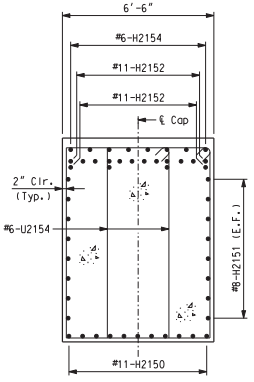

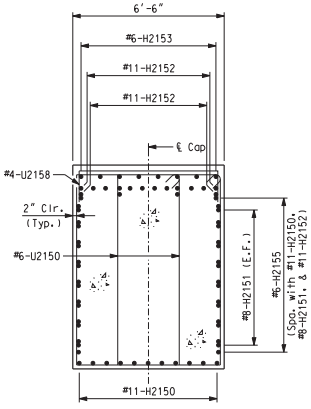

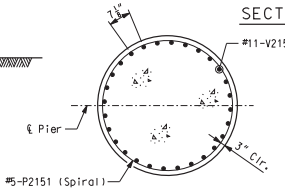

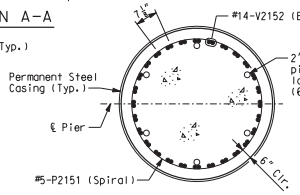

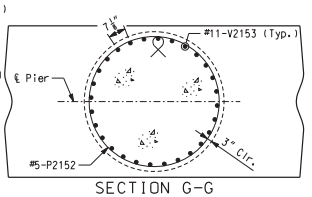

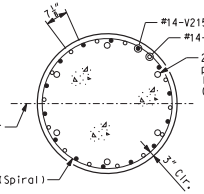

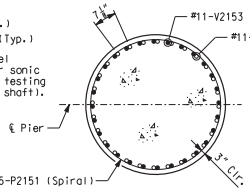

Notes:

An additional 4 feet has been added to #5-P2150, #14-V2150 and #14-V2151 lengths for possible change in drilled shaft or rock socket depth. This excess length shall be cut off or included in the reinforcement lap if not required.

Required excavation to the top of the drilled shafts is included in the contract unit price for Class 1 Excavation.

All reinforcing bars in the tops of substructure beams or caps shall be spaced to clear anchor rod wells for bearings by at least 1/2".

The hooks of V-Bars embedded in the beam cap shall be oriented inward. Bending the hook outward, away from the column core, is not allowed.

The thickness of steel casing shall meet all the requirements of Sec 701 with minimum thickness being 3/8 inch. Thicker casing may be required for installation.

For details of HLMR Bearing Assembly, see Sheet No. 43.

For Anchor Rod Well Details and Anchor Rod Setting Plan, see Sheet No. 47.

* For details of seismic stirrup bars, see Sheet No. 7.

* Lapping of spiral reinforcement in this region not permitted.

** Continue spiral bars to the bottom of the beam cap stirrup reinforcing bar.

*** Splice locations shall be staggered.

Anchorage of spiral reinforcement shall be provided by 1-1/2 extra turns of spiral bar at each end of spiral unit.

**** Pay Items Rock Socket (6 ft. 0 in. Dia.).

***** Pay Items Drilled Shaft (6 ft. 6 in. Dia.).

For Pier Crashwall Details, see Sheet No. 35.

If unsuitable material is encountered, excavation of unsuitable material and furnishing and placing of granular backfill shall be in accordance with Sec 206.

SUBSTRUCTURE QUANTITY TABLE FOR PIER 21 EB

Item		Quantity
Class 1 Excavation	cu. yard	30
Drilled Shafts (6 ft. 6 in. Dia.)	linear foot	224.0
Rock Sockets (6 ft. 0 in. Dia.)	linear foot	42.0
Supplementary Television Camera Inspection	each	1
Foundation Inspection Holes	linear foot	62.0
Sonic Logging Testing	each	2
Class B Concrete (Substructure)	cu. yard	299.3
Reinforcing Steel (Bridges)	pound	167.000
Mechanical Bar Splice	each	280
Non-Special Waste Disposal	cu. yard	126.7

Note:
These quantities are included in the estimated quantities table on Sheet No. 7.

PIER 21 EB

Detailed JUL 2009
Checked JUL 2009

Note: This drawing is not to scale. Follow dimensions.

Sheet No. 34 of 152

CONTRACT NO. 76D61

F.A. ROUTE	SECTION
999	82-1B-2
FED. AID PROJECT	ILLINOIS
COUNTY	ST. CLAIR

USER NAME = jjolliff
PLOT SCALE = $SCALE$
PLOT DATE = 3/8/2010
DESIGNED - HNTB
CHECKED - CMT
DRAWN - CMT / HTNB
REVISED -
REVISED -
REVISED -
REVISED -

ILLINOIS APPROACH STRUCTURE FOR NEW I-70 MISSISSIPPI RIVER BRIDGE

STATE OF ILLINOIS
DEPARTMENT OF TRANSPORTATION

MISSOURI HIGHWAYS AND TRANSPORTATION COMMISSION

HNTB
715 KIRK DRIVE
KANSAS CITY, MO 64105
TELEPHONE (816) 472-1201
CERTIFICATE OF AUTHORITY NO. 001270

CMT
CRAWFORD, MURPHY & TILLY, INC.
2750 WEST WASHINGTON STREET
SPRINGFIELD, IL 62702
TELEPHONE (217) 787-8050
ENGINEERING CORPORATION - 000631

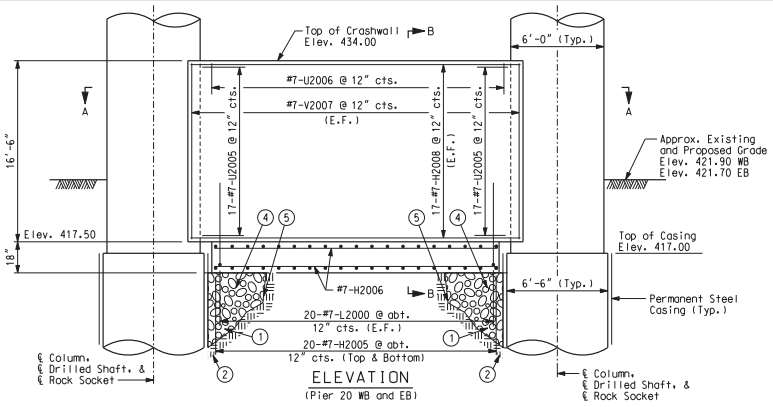

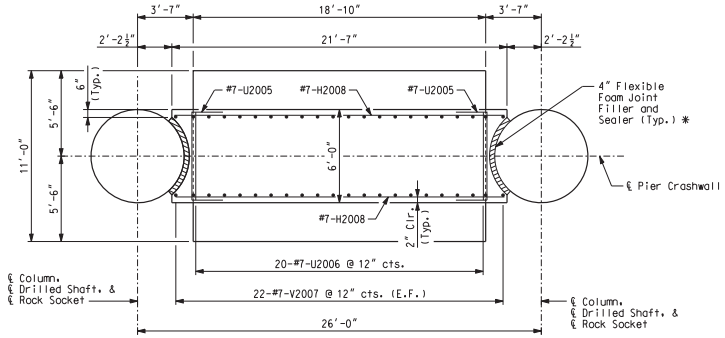

SECTION A-A
(Pier 20 WB and EB)

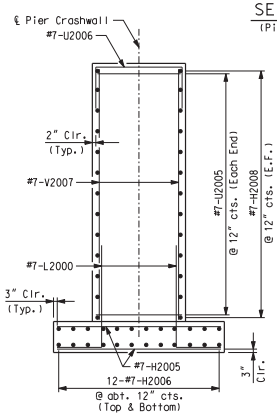

SECTION B-B
(Pier 20)

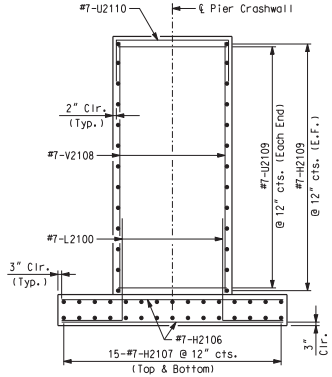

SECTION D-D
(Pier 21)

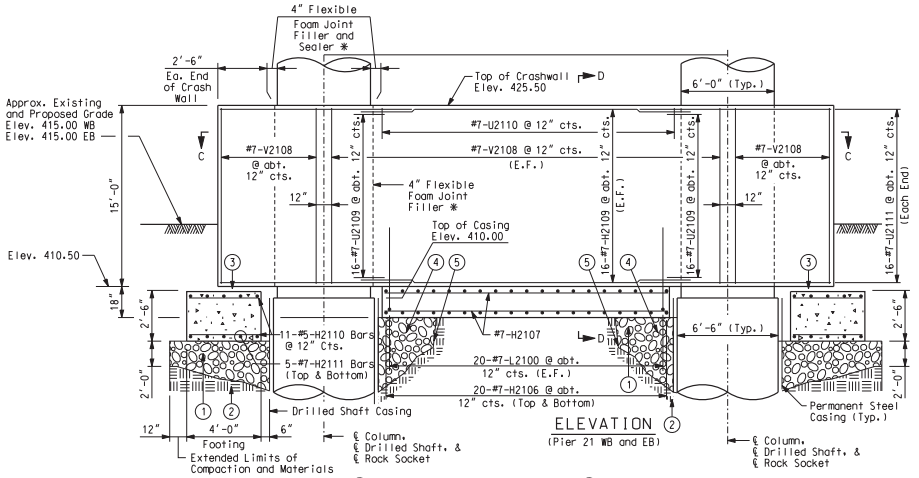

1. Type 5 Aggregate, Min. 2' Thick Compacted to 100% Std. Proctor Density in Accordance with ASTM D698
2. Compact Existing Subgrade to 100% Std. Proctor Density in Accordance with ASTM D698
3. 2 Layers of Kraft Paper (Bond Breaker) Full Contact Surface of End Crash Wall
4. Type 5 Aggregate Min. 2 ft. or to Limits of Excavation for Drilled Shaft-Compact to 100% Std. Proctor Density in Accordance with ASTM D698
5. Limits of Excavation for Drilled Shaft-Compact to 100% Std. Proctor Density in Accordance with ASTM D698

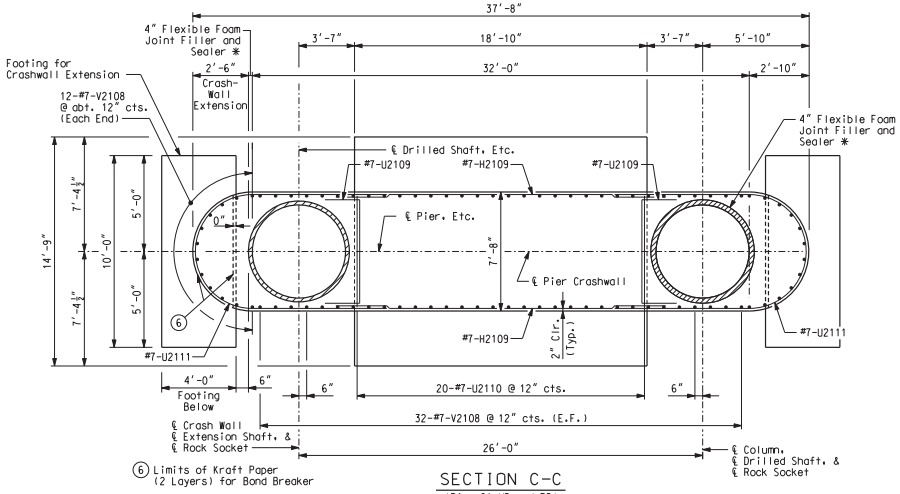

6. Limits of Kraft Paper (2 Layers) for Bond Breaker

SECTION C-C
(Pier 21 WB and EB)

Notes:
For Pier details and quantities, see Sheet Nos. 31, 32, 35, and 33.
* The 4" flexible foam joint filler shall be installed the full height of the interface between the crashwall and columns and shall be in accordance with IDOT Standard Specification Art. 1051.09. The joint filler shall be compatible with sealer meeting the requirements of IDOT Standard Specification Art. 1050.02. The cost of the 4" flexible foam joint filler and sealer shall be included in the total cost of Class B Concrete (Substructure).

PIER CRASHWALL DETAIL SHEET

Detailed JUL 2009
Checked JUL 2009

Note: This drawing is not to scale. Follow dimensions.

s:\idot\0906601\draw_idot\cadd_sheets\structural\B_A6500_035-152_J6l0984C_035.dgn

CONTRACT NO. 76D61

F.A. ROUTE	SECTION
999	82-1B-2
FED. AID PROJECT	ILLINOIS
COUNTY	ST. CLAIR

USER NAME = jjolliff
PLOT SCALE = $SCALE$
PLOT DATE = 3/8/2010
DESIGNED - HNTB
CHECKED - CMT
DRAWN - CMT / HTNB
REVISED -
REVISED -
REVISED -
REVISED -

ILLINOIS APPROACH STRUCTURE
FOR NEW I-70 MISSISSIPPI RIVER BRIDGE

STATE OF ILLINOIS
DEPARTMENT OF TRANSPORTATION

MISSOURI HIGHWAYS
AND TRANSPORTATION COMMISSION

HNTB
715 KIRK DRIVE
KANSAS CITY, MO 64105
TELEPHONE (816) 472-1201
CERTIFICATE OF AUTHORITY
NO. 001270

CMT
CRAWFORD, MURPHY & TILLY, INC.
2750 WEST WASHINGTON STREET
SPRINGFIELD, IL 62702
TELEPHONE (217) 787-8050
ENGINEERING CORPORATION - 000631

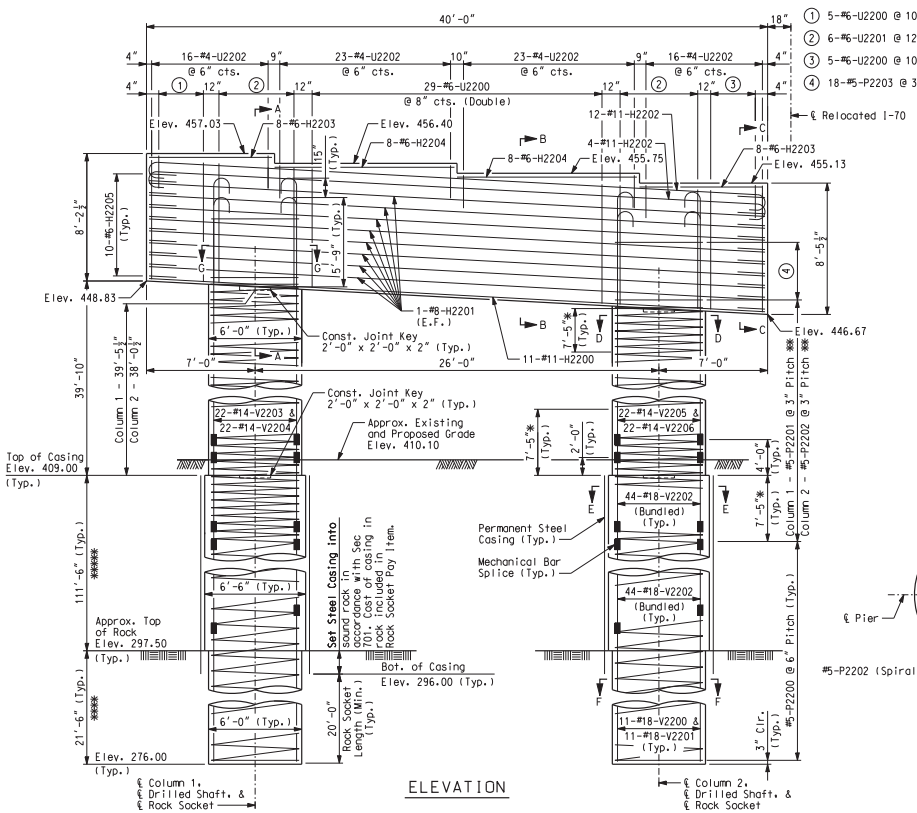

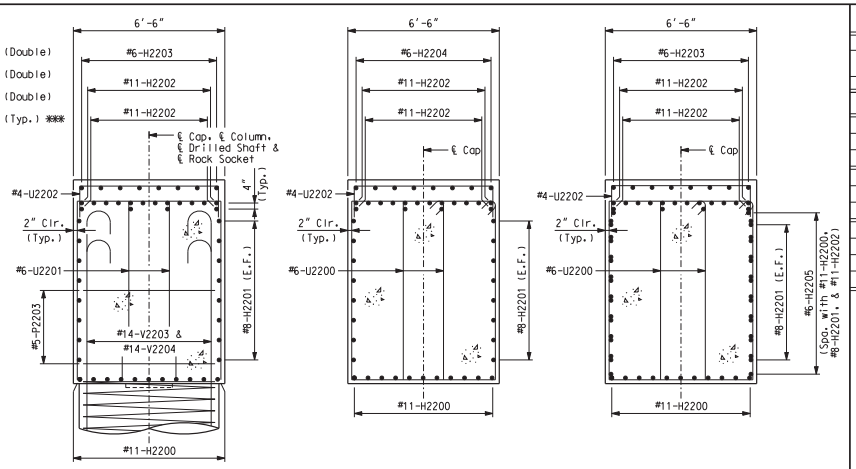

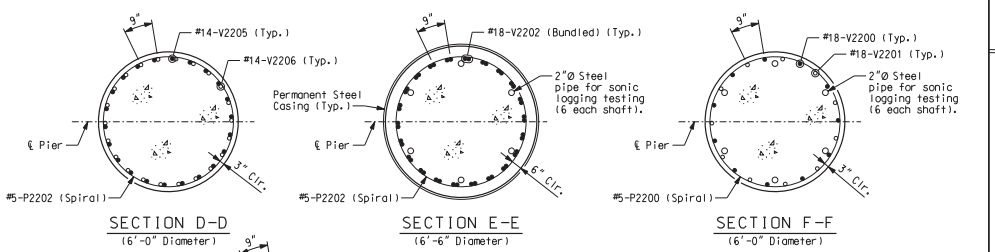

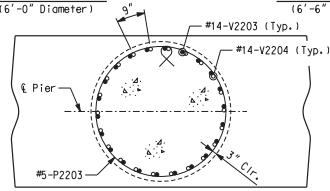

SECTION G-G

(Beam Cap reinforcement not shown)

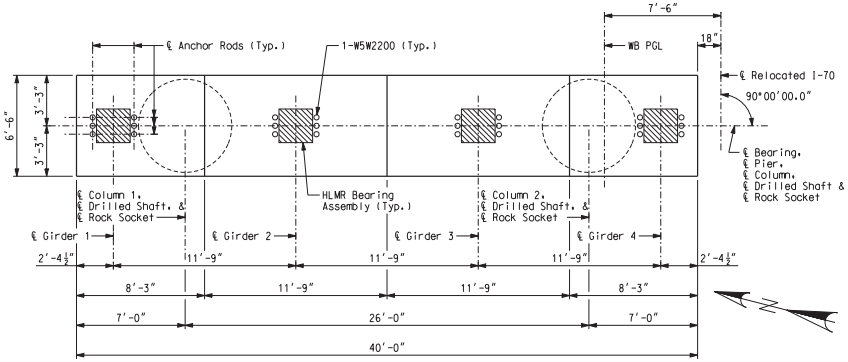

PLAN

Note: This drawing is not to scale. Follow dimensions.

SUBSTRUCTURE QUANTITY TABLE FOR PIER 22 WB		
Item		Quantity
Drilled Shafts (6 ft. 6 in. Dia.)	linear foot	223.0
Rock Sockets (6 ft. 0 in. Dia.)	linear foot	43.0
Supplementary Television Camera Inspection	each	1
Foundation Inspection Holes	linear foot	63.0
Sonic Logging Testing	each	2
Class B Concrete (Substructure)	cu. yard	161.3
Reinforcing Steel (Bridges)	pound	208.650
Mechanical Bar Splice	each	220
Non-Special Waste Disposal	cu. yard	26.2

Note: These quantities are included in the estimated quantities table on Sheet No. 7.

Notes:

An additional 4 feet has been added to #5-P2200, #18-V2200 and #18-V2201 lengths for possible change in drilled shaft or rock socket depth. This excess length shall be cut off or included in the reinforcement lap if not required.

Sonic logging testing shall be performed on all drilled shafts and rock sockets.

All reinforcing bars in the tops of substructure beams or caps shall be spaced to clear anchor bolt wells for bearings by at least 1/2".

The hooks of V-Bars embedded in the beam cap shall be oriented inward. Bending the hook outward, away from the column core, is not allowed.

The thickness of steel casing shall meet all the requirements of Sec 701 with minimum thickness being 3/8 inch. Thicker casing may be required for installation.

For details of HLMR Bearing Assembly, see Sheet No. 43.

For Anchor Rod Well Details and Anchor Rod Setting Plan, see Sheet No. 46.

For details of seismic stirrup bars, see Sheet No. 7.

* Lapping of spiral reinforcement in this region not permitted.

** Continue spiral bars to the bottom of the beam cap stirrup reinforcing bar.

*** Splice locations shall be staggered.

Anchorage of spiral reinforcement shall be provided by 1-1/2 extra turns of spiral bar at each end of spiral unit.

**** Pay Items Rock Socket (6 ft. 0 in. Dia.).

***** Pay Items Drilled Shaft (6 ft. 6 in. Dia.).

PIER 22 WB

Detailed JUL 2009
Checked JUL 2009

Sheet No. 36 of 152

s:\idot\0906601\draw_idot\cadd_sheets\structural\B_A6500_036-152_J6l0984C_036.dgn

CONTRACT NO. 76D61

F.A. ROUTE	SECTION
999	82-1B-2
FED. AID PROJECT	ILLINOIS
COUNTY	ST. CLAIR

USER NAME = jjolliff
PLOT SCALE = $SCALE$
PLOT DATE = 3/8/2010
DESIGNED - HNTB
CHECKED - CMT
DRAWN - CMT / HTNB
REVISED -
REVISED -
REVISED -
REVISED -

ILLINOIS APPROACH STRUCTURE FOR NEW I-70 MISSISSIPPI RIVER BRIDGE

STATE OF ILLINOIS
DEPARTMENT OF TRANSPORTATION

MISSOURI HIGHWAYS AND TRANSPORTATION COMMISSION

HNTB
715 KIRK DRIVE
KANSAS CITY, MO 64105
TELEPHONE (816) 472-1201
CERTIFICATE OF AUTHORITY NO. 001270

CMT
CRAWFORD, MURPHY & TILLY, INC.
2750 WEST WASHINGTON STREET
SPRINGFIELD, IL 62702
TELEPHONE (217) 787-8050
ENGINEERING CORPORATION - 000631

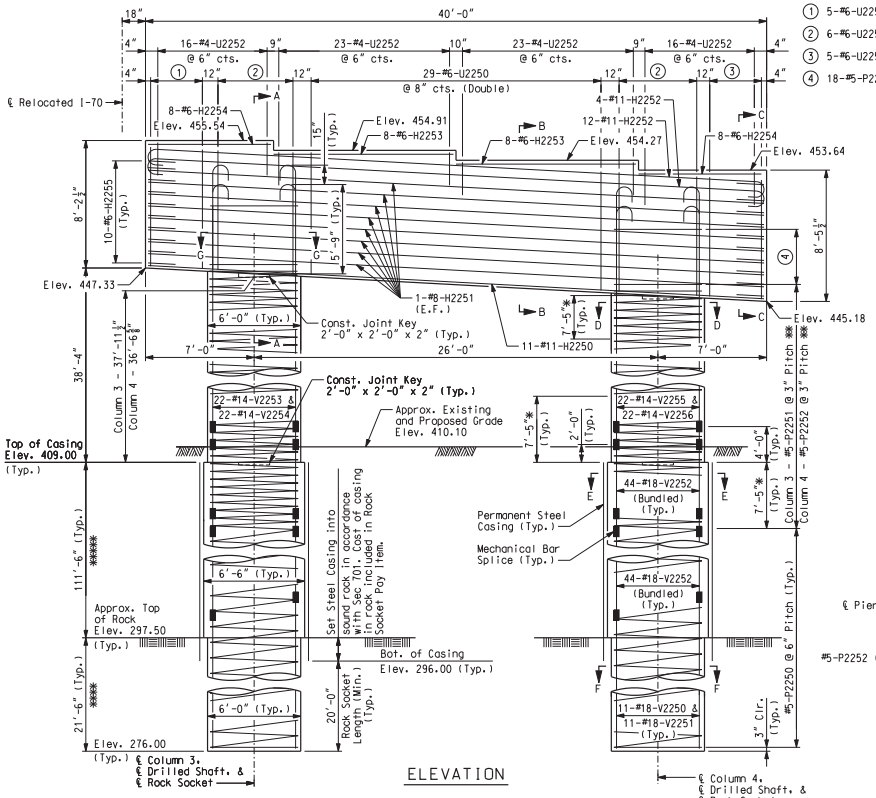

① 5-#6-U2250 @ 10" cts. (Double)
② 6-#6-U2251 @ 12" cts. (Double)
③ 5-#6-U2250 @ 10" cts. (Double)
④ 18-#5-P2253 @ 3" cts. (Typ.) ***

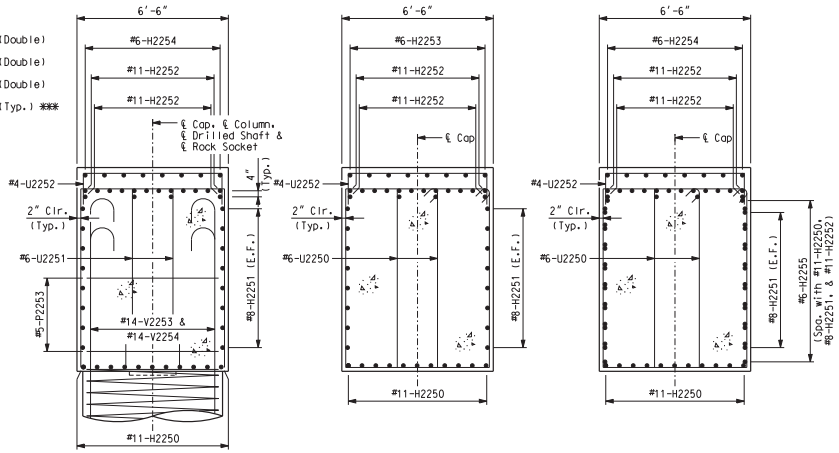

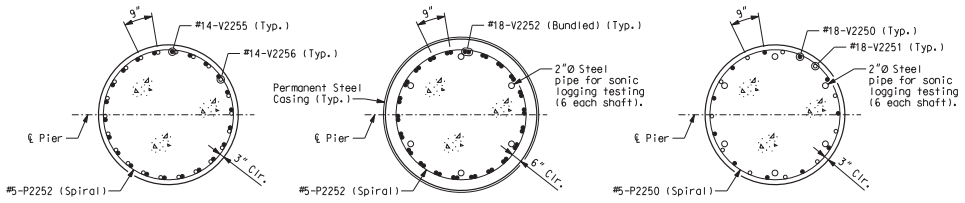

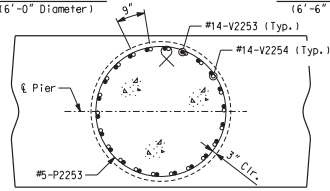

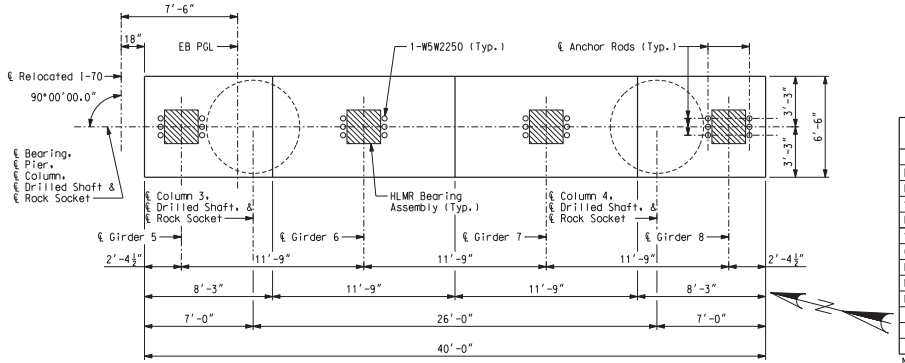

SUBSTRUCTURE QUANTITY TABLE FOR PIER 22 EB		
Item		Quantity
Drilled Shafts (6 ft. 6 in. Dia.)	linear foot	223.0
Rock Sockets (6 ft. 0 in. Dia.)	linear foot	43.0
Supplementary Television Camera Inspection	each	1
Foundation Inspection Holes	linear foot	63.0
Sonic Logging Testing	each	2
Class B Concrete (Substructure)	cu. yard	158.3
Reinforcing Steel (Bridges)	pound	207,420
Mechanical Bar Splice	each	220
Non-Special Waste Disposal	cu. yard	26.2

Note:
These quantities are included in the estimated quantities table on Sheet No. 7.

Notes:
An additional 4 feet has been added to #5-P2250, #18-V2250 and #18-V2251 lengths for possible change in drilled shaft or rock socket depth. This excess length shall be cut off or included in the reinforcement lap if not required.
Sonic logging testing shall be performed on all drilled shafts and rock sockets.
All reinforcing bars in the tops of substructure beams or caps shall be spaced to clear anchor rod wells for bearings by at least 1/2".
The hooks of V-Bars embedded in the beam cap shall be oriented inward. Bending the hook outward, away from the column core, is not allowed.
The thickness of steel casing shall meet all the requirements of Sec 701 with minimum thickness being 3/8 inch. Thicker casing may be required for installation.
For details of HLMR Bearing Assembly, see Sheet No. 43.
For Anchor Rod Well Details and Anchor Rod Setting Plan, see Sheet No. 46.
For details of seismic stirrup bars, see Sheet No. 7.
* Lapping of spiral reinforcement in this region not permitted.
** Continue spiral bars to the bottom of the beam cap stirrup reinforcing bar.
*** Splice locations shall be staggered.
Anchorage of spiral reinforcement shall be provided by 1-1/2 extra turns of spiral bar at each end of spiral unit.
**** Pay Items Rock Socket (6 ft. 0 in. Dia.).
***** Pay Items Drilled Shaft (6 ft. 6 in. Dia.).

PIER 22 EB

Detailed JUL 2009
Checked JUL 2009

Note: This drawing is not to scale. Follow dimensions.

Sheet No. 37 of 152

CONTRACT NO. 76D61

F.A. ROUTE	SECTION
999	82-1B-2
FED. AID PROJECT	ILLINOIS
COUNTY	ST. CLAIR

USER NAME = jjolliff
PLOT SCALE = $SCALE$
PLOT DATE = 3/8/2010
DESIGNED - HNTB
CHECKED - CMT
DRAWN - CMT / HTNB
REVISED -
REVISED -
REVISED -
REVISED -

ILLINOIS APPROACH STRUCTURE FOR NEW I-70 MISSISSIPPI RIVER BRIDGE

STATE OF ILLINOIS
DEPARTMENT OF TRANSPORTATION

MISSOURI HIGHWAYS AND TRANSPORTATION COMMISSION

HNTB
715 KIRK DRIVE
KANSAS CITY, MO 64105
TELEPHONE (816) 472-1201
CERTIFICATE OF AUTHORITY NO. 001270

CMT
CRAWFORD, MURPHY & TILLY, INC.
2750 WEST WASHINGTON STREET
SPRINGFIELD, IL 62702
TELEPHONE (217) 787-8050
ENGINEERING CORPORATION - 000631

s:\idot\0906601\draw_idot\cadd_sheets\structural\B_A6500_037-152_J6I0984C_037.dgn

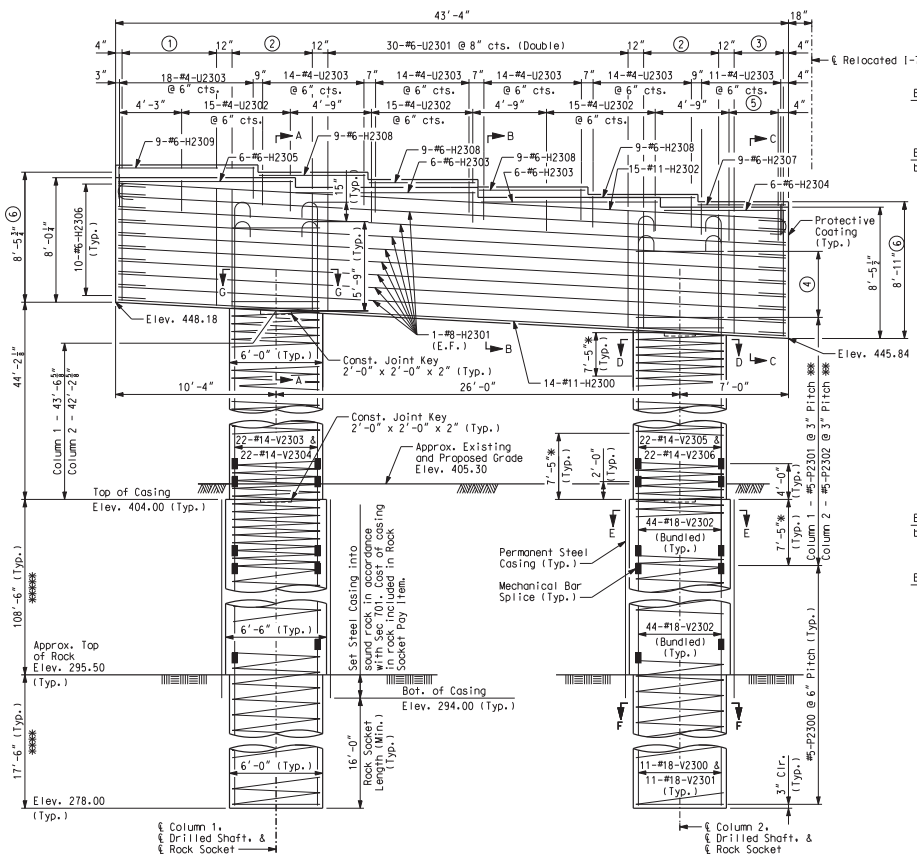

ELEVATION

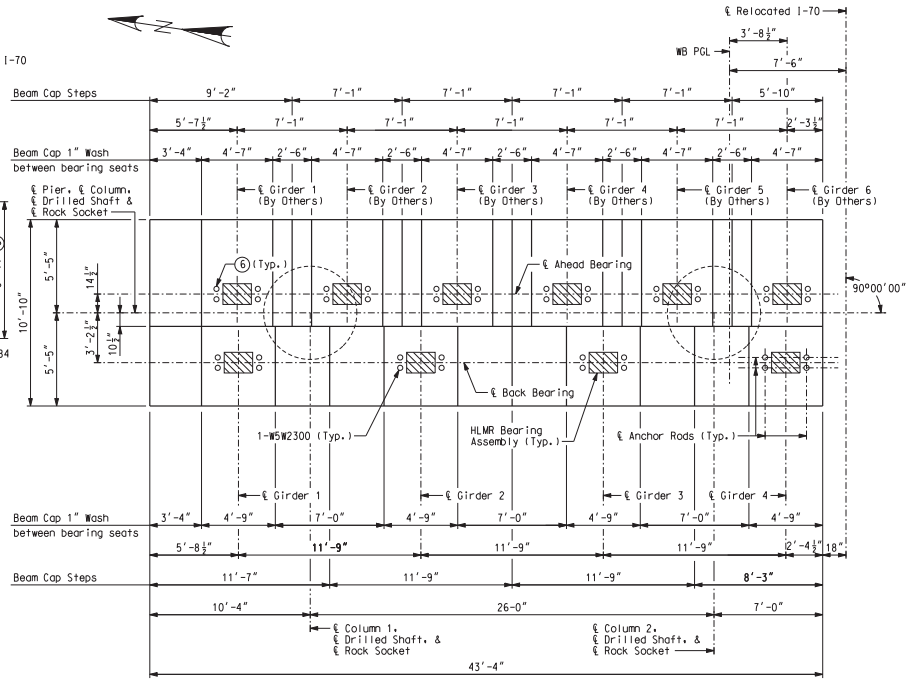

PLAN

GIRDER SEAT ELEVATIONS						
Girder No.	1	2	3	4	5	6
⑥ Ahead Bearing	456.56	456.18	455.80	455.42	455.03	454.65
Back Bearing	456.20	455.56	454.93	454.30	-	-

① 10-#6-U2301 @ abt. 9" cts. (Double)

② 6-#6-U2300 @ 12" cts. (Double)

③ 5-#6-U2301 @ 9" cts. (Double)

④ 18-#5-P2303 @ 3" cts. (Typ.) ***

⑤ 8-#4-U2302 @ 6" cts.

⑥ Ahead bearing seat elevations, anchor rod setting plan, spiral reinforcing, and dimensions indicated are subject to change under separate IDOT contract (By Others). Contractor shall coordinate with IDOT to obtain final ahead bearing details prior to construction.

Notes:

An additional 4 feet has been added to #5-P2300, #18-V2300 and #18-V2301 lengths for possible change in drilled shaft or rock socket depth. This excess length shall be cut off or included in the reinforcement lap if not required.

Sonic logging testing shall be performed on all drilled shafts and rock sockets.

All reinforcing bars in the tops of substructure beams or caps shall be spaced to clear anchor rod wells for bearings by at least 1/2".

The hooks of V-Bars embedded in the beam cap shall be oriented inward. Bending the hook outward, away from the column core, is not allowed.

The thickness of steel casing shall meet all the requirements of Sec 701 with minimum thickness being 3/8 inch. Thicker casing may be required for installation.

For details of HLMR Bearing Assembly, see Sheet No. 42.

For Anchor Rod Well Details and Back Bearing Anchor Rod Setting Plan, see Sheet No. 46.

For details of seismic stirrup bars, see Sheet No. 7.

* Lapping of spiral reinforcement in this region not permitted.

** Continue spiral bars to the bottom of the beam cap stirrup reinforcing bar.

*** Splice locations shall be staggered.

Anchorage of spiral reinforcement shall be provided by 1-1/2 extra turns of spiral bar at each end of spiral unit.

**** Pay Items Rock Socket (6 ft. 0 in. Dia.).

***** Pay Items Drilled Shaft (6 ft. 6 in. Dia.).

For Sections A-A, B-B, C-C, D-D, E-E, F-F, G-G, and Substructure Quantity Table, see Sheet No. 39.

PIER 23 WB

Detailed JUL 2009
Checked JUL 2009

Note: This drawing is not to scale. Follow dimensions.

s:\idot\0906601\draw_idot\cadd_sheets\structural\B_A6500_038-152_J6I0984C_038.dgn

CONTRACT NO. 76D61

F.A. ROUTE	SECTION
999	82-1B-2
FED. AID PROJECT	ILLINOIS
COUNTY	ST. CLAIR

USER NAME = jjolliff
PLOT SCALE = $SCALE$
PLOT DATE = 3/8/2010
DESIGNED - HNTB
CHECKED - CMT
DRAWN - CMT / HNTB
REVISED -
REVISED -
REVISED -
REVISED -

ILLINOIS APPROACH STRUCTURE FOR NEW I-70 MISSISSIPPI RIVER BRIDGE

STATE OF ILLINOIS
DEPARTMENT OF TRANSPORTATION

MISSOURI HIGHWAYS AND TRANSPORTATION COMMISSION

HNTB
715 KIRK DRIVE
KANSAS CITY, MO 64105
TELEPHONE (816) 472-1201
CERTIFICATE OF AUTHORITY NO. 001270

CMT
CRAWFORD, MURPHY & TILLY, INC.
2750 WEST WASHINGTON STREET
SPRINGFIELD, IL 62702
TELEPHONE (217) 787-8050
ENGINEERING CORPORATION - 000631

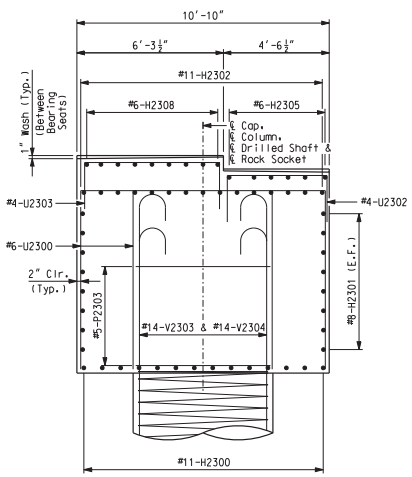

SECTION A-A

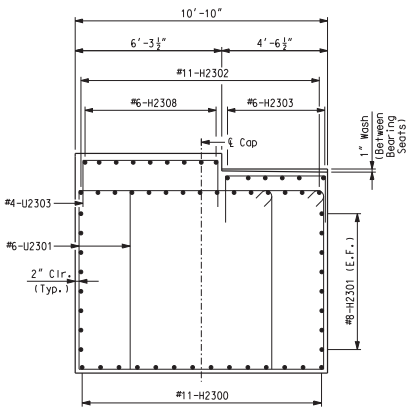

SECTION B-B

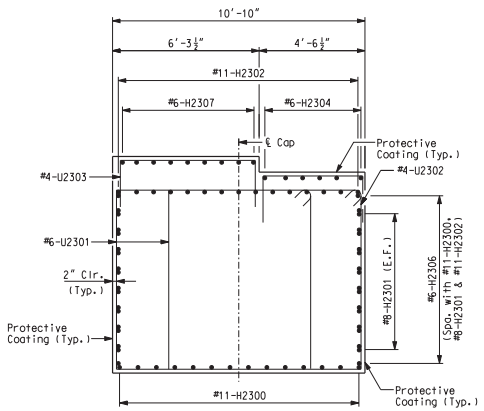

SECTION C-C

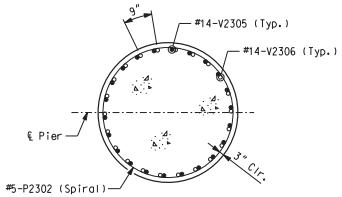

SECTION D-D
(6'-0" Diameter)

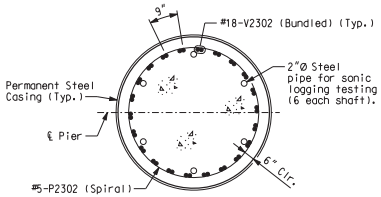

SECTION E-E
(6'-6" Diameter)

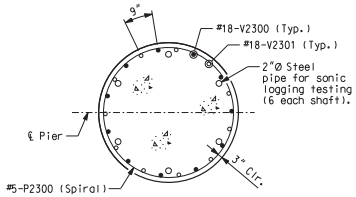

SECTION F-F
(6'-0" Diameter)

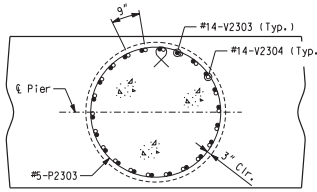

SECTION G-G
(Beam Cap reinforcement not shown)

Note:
Seal back face of beam, top of beam, ends of beam, and front face of beam with Protective Coating - Concrete Bents and Piers (Epoxy). For location of Sections A-A, B-B, C-C, D-D, E-E, F-F, G-G, and additional notes, see Sheet No. 38.

SUBSTRUCTURE QUANTITY TABLE FOR PIER 23 WB

Item		Quantity
Drilled Shafts (6 ft. 6 in. Dia.)	linear foot	217.0
Rock Sockets (6 ft. 0 in. Dia.)	linear foot	35.0
Supplementary Television Camera Inspection	each	1
Foundation Inspection Holes	linear foot	55.0
Sonic Logging Testing	each	2
Class B Concrete (Substructure)	cu. yard	237.3
Reinforcing Steel (Bridges)	pound	155,420
Mechanical Bar Splice	each	220
Reinforcing Steel (Epoxy Coated)	pound	49,660
Non-Special Waste Disposal	cu. yard	26.2

Note:
These quantities are included in the estimated quantities table on Sheet No. 7.

PIER 23 WB - DETAILS

Detailed JUL 2009
Checked JUL 2009

Note: This drawing is not to scale. Follow dimensions.

s:\idot\0906601\draw_idot\cadd_sheets\structural\B_A6500_039-152_J6l0984C_039.dgn

CONTRACT NO. 76D61

F.A. ROUTE	SECTION
999	82-1B-2
FED. AID PROJECT	ILLINOIS
COUNTY	ST. CLAIR

USER NAME = jjolliff
PLOT SCALE = $SCALE$
PLOT DATE = 3/8/2010
DESIGNED - HNTB
CHECKED - CMT
DRAWN - CMT / HTNB
REVISED -
REVISED -
REVISED -
REVISED -

ILLINOIS APPROACH STRUCTURE FOR NEW I-70 MISSISSIPPI RIVER BRIDGE

STATE OF ILLINOIS
DEPARTMENT OF TRANSPORTATION

MISSOURI HIGHWAYS AND TRANSPORTATION COMMISSION

HNTB
715 KIRK DRIVE
KANSAS CITY, MO 64105
TELEPHONE (816) 472-1201
CERTIFICATE OF AUTHORITY NO. 001270

CMT
CRAWFORD, MURPHY & TILLY, INC.
2750 WEST WASHINGTON STREET
SPRINGFIELD, IL 62702
TELEPHONE (217) 787-8050
ENGINEERING CORPORATION - 000631

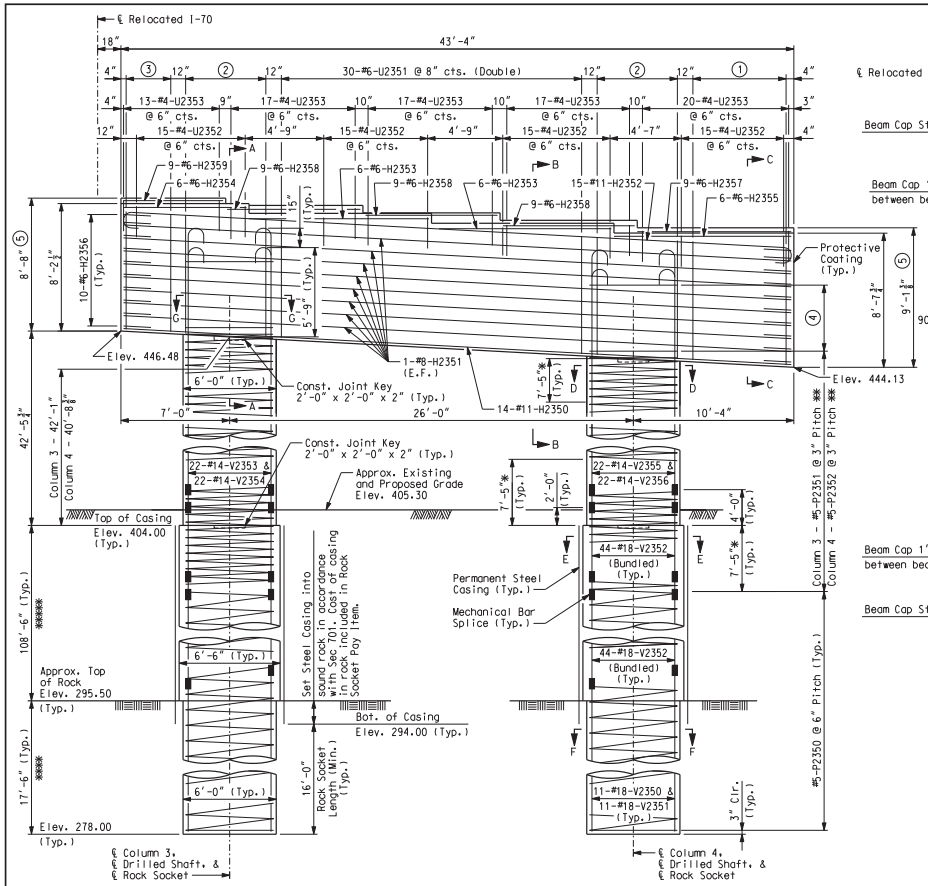

ELEVATION

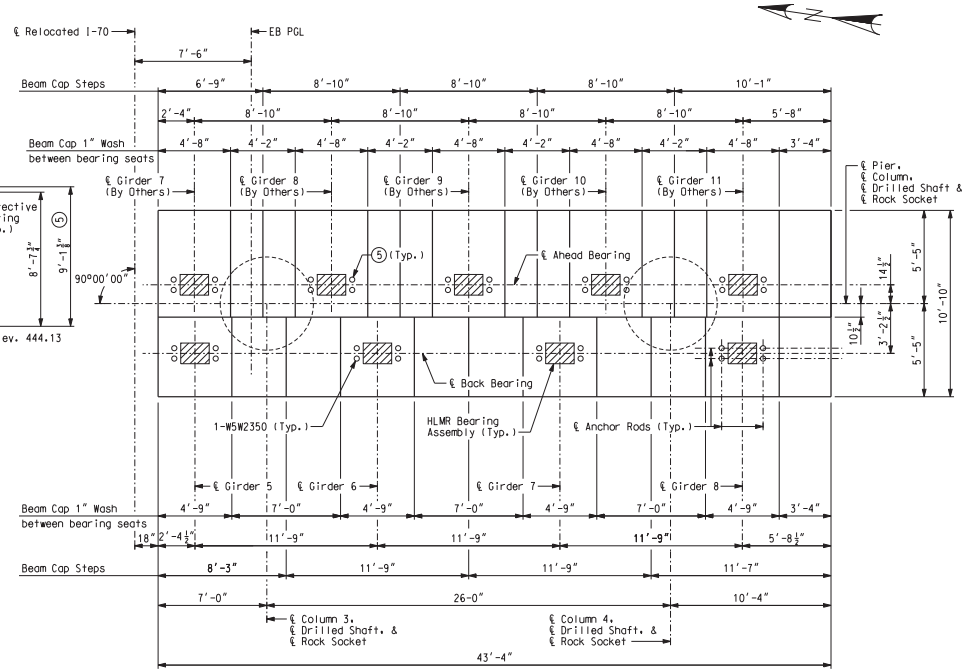

PLAN

GIRDER SEAT ELEVATIONS							
Girder No.	5	6	7	8	9	10	11
⑤ Ahead Bearing	-	-	455.15	454.68	454.20	453.72	453.24
Back Bearing	454.69	454.05	453.42	452.78	-	-	-

① 10-#6-U2351 @ abt.9" cts. (Double)

② 6-#6-U2350 @ 12" cts. (Double)

③ 5-#6-U2351 @ 9" cts. (Double)

④ 18-#5-P2353 @ 3" cts. (Typ.) ***

⑤ Ahead bearing seat elevations, anchor rod setting plan, spiral reinforcing, and dimensions indicated are subject to change under separate IDOT contract (By Others). Contractor shall coordinate with IDOT to obtain final ahead bearing details prior to construction.

Notes:

An additional 4 feet has been added to #5-P2350, #18-V2350 and #18-V2351 lengths for possible change in drilled shaft or rock socket depth. This excess length shall be cut off or included in the reinforcement lap if not required.

Sonic logging testing shall be performed on all drilled shafts and rock sockets.

All reinforcing bars in the tops of substructure beams or caps shall be spaced to clear anchor rod wells for bearings by at least 1/2".

The hooks of V-Bars embedded in the beam cap shall be oriented inward. Bending the hook outward, away from the column core, is not allowed.

The thickness of steel casing shall meet all the requirements of Sec 701 with minimum thickness being 3/8 inch. Thicker casing may be required for installation.

For details of HLMR Bearing Assembly, see Sheet No. 42.

For Anchor Rod Well Details and Back Bearing Anchor Rod Setting Plan, see Sheet No. 46.

For details of seismic stirrup bars, see Sheet No. 7.

* Lapping of spiral reinforcement in this region not permitted.

** Continue spiral bars to the bottom of the beam cap stirrup reinforcing bar.

*** Splice locations shall be staggered.

Anchorage of spiral reinforcement shall be provided by 1-1/2 extra turns of spiral bar at each end of spiral unit.

**** Pay Items Rock Socket (6 ft. 0 in. Dia.).

***** Pay Items Drilled Shaft (6 ft. 6 in. Dia.).

For Sections A-A, B-B, C-C, D-D, E-E, F-F, G-G, and Substructure Quantity Table, see Sheet No. 41.

PIER 23 EB

Detailed JUL 2009
Checked JUL 2009

Note: This drawing is not to scale. Follow dimensions.

s:\idot\0906601\draw_idot\cadd_sheets\structural\B_A6500_040-152_J6I0984C_040.dgn

CONTRACT NO. 76D61

F.A. ROUTE	SECTION
999	82-1B-2
FED. AID PROJECT	ILLINOIS
COUNTY	ST. CLAIR

USER NAME = jjolliff
PLOT SCALE = $SCALE$
PLOT DATE = 3/8/2010
DESIGNED - HNTB
CHECKED - CMT
DRAWN - CMT / HTNB
REVISED -
REVISED -
REVISED -
REVISED -

ILLINOIS APPROACH STRUCTURE FOR NEW I-70 MISSISSIPPI RIVER BRIDGE

STATE OF ILLINOIS
DEPARTMENT OF TRANSPORTATION

MISSOURI HIGHWAYS AND TRANSPORTATION COMMISSION

HNTB
715 KIRK DRIVE
KANSAS CITY, MO 64105
TELEPHONE (816) 472-1201
CERTIFICATE OF AUTHORITY NO. 001270

CMT
CRAWFORD, MURPHY & TILLY, INC.
2750 WEST WASHINGTON STREET
SPRINGFIELD, IL 62702
TELEPHONE (217) 787-8050
ENGINEERING CORPORATION - 000631

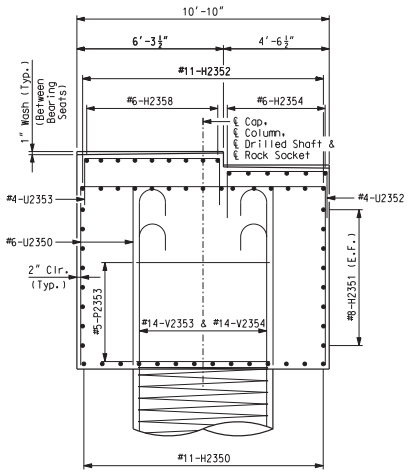

SECTION A-A

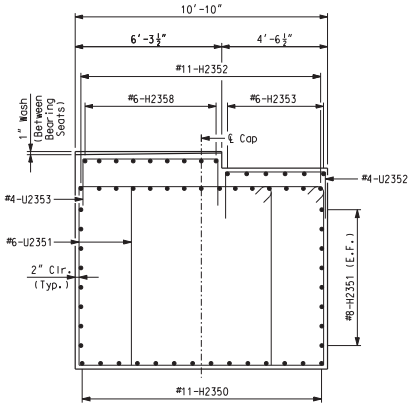

SECTION B-B

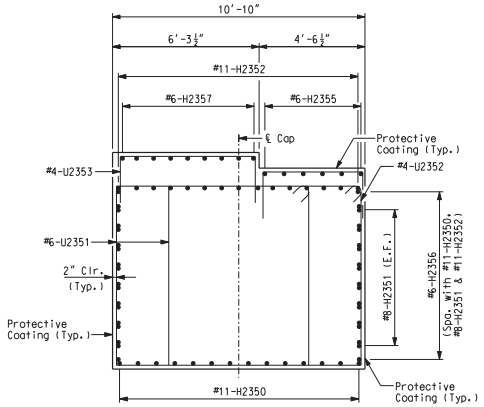

SECTION C-C

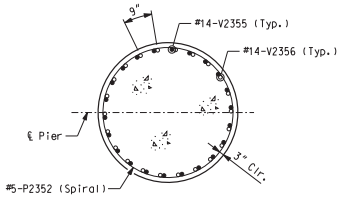

SECTION D-D
(6'-0" Diameter)

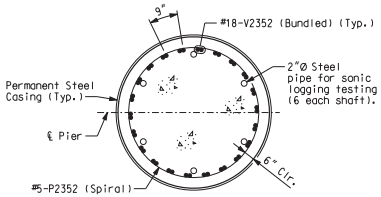

SECTION E-E
(6'-6" Diameter)

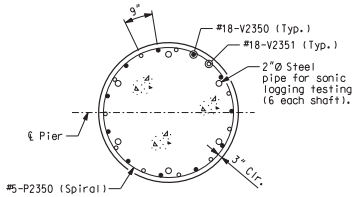

SECTION F-F
(6'-0" Diameter)

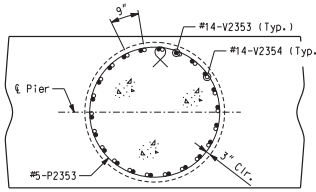

SECTION G-G
(Beam Cap reinforcement not shown)

Note:
Seal back face of beam, top of beam, ends of beam, and front face of beam with Protective Coating - Concrete Bents and Piers (Epoxy). For location of Sections A-A, B-B, C-C, D-D, E-E, F-F, G-G, and additional notes, see Sheet No. 38.

SUBSTRUCTURE QUANTITY TABLE FOR PIER 23 EB

Item		Quantity
Drilled Shafts (6 ft. 6 in. Dia.)	linear foot	217.0
Rock Sockets (6 ft. 0 in. Dia.)	linear foot	35.0
Supplementary Television Camera Inspection	each	1
Foundation Inspection Holes	linear foot	55.0
Sonic Logging Testing	each	2
Class B Concrete (Substructure)	cu. yard	235.7
Reinforcing Steel (Bridges)	pound	155,200
Mechanical Bar Splice	each	220
Reinforcing Steel (Epoxy Coated)	pound	48,600
Non-Special Waste Disposal	cu. yard	26.2

Note:
These quantities are included in the estimated quantities table on Sheet No. 7.

PIER 23 EB - DETAILS

CONTRACT NO. 76D61

F.A. ROUTE	SECTION
999	82-1B-2
FED. AID PROJECT	ILLINOIS
COUNTY	ST. CLAIR

USER NAME = jjolliff
PLOT SCALE = $SCALE$
PLOT DATE = 3/8/2010
DESIGNED - HNTB
CHECKED - CMT
DRAWN - CMT / HTNB
REVISED -
REVISED -
REVISED -
REVISED -

ILLINOIS APPROACH STRUCTURE FOR NEW I-70 MISSISSIPPI RIVER BRIDGE

STATE OF ILLINOIS
DEPARTMENT OF TRANSPORTATION

MISSOURI HIGHWAYS AND TRANSPORTATION COMMISSION

HNTB
715 KIRK DRIVE
KANSAS CITY, MO 64105
TELEPHONE (816) 472-1201
CERTIFICATE OF AUTHORITY NO. 001270

CMT
CRAWFORD, MURPHY & TILLY, INC.
2750 WEST WASHINGTON STREET
SPRINGFIELD, IL 62702
TELEPHONE (217) 787-8050
ENGINEERING CORPORATION - 000631

Detailed JUL 2009
Checked JUL 2009

Note: This drawing is not to scale. Follow dimensions.

s:\idot\0906601\draw_idot\cadd_sheets\structural\B_A6500_041-152_J6I0984C_041.dgn

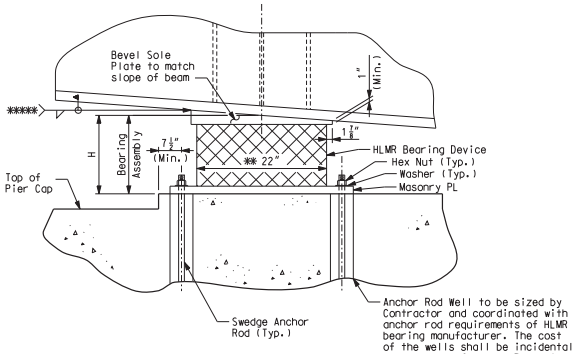

ELEVATION

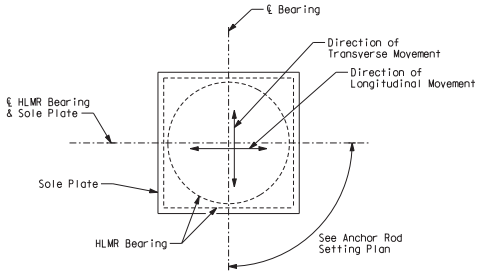

BEARING PLAN

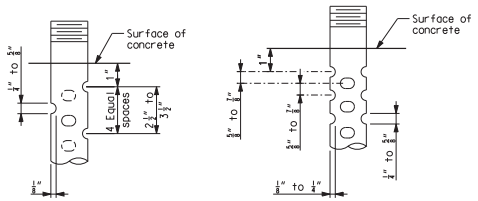

DETAIL OF 3/4"Ø THRU 2 1/2"Ø ANCHOR RODS

OPTIONAL DETAIL OF 1 3/8"Ø THRU 2 1/2"Ø ANCHOR RODS

SWEDGE ANCHOR ROD DETAILS

BEARING DATA TABLE

Location				Pier 13	Pier 17	Pier 23
Fix/Exp.				Guided	Guided	Guided
Quantity. Required				8	16	8
Design load (kip)	Service limit state	Vertical	max.	347	384	410
			perm.	164	184	193
			min.	164	184	193
		Transverse		10	11	18
		Longitudinal		15	15	15
	Strength limit state	Vertical		570	617	664
		Transverse		32	36	34
		Longitudinal		20	20	20
	Extreme Event limit state	Vertical		255	275	297
		Transverse		105	74	67
		Longitudinal		32	34	37
Rotation (rad.)	Strength limit state	Transverse		0	0	0
		Longitudinal		0.014	0.020	0.020
*** One Way Longit. Movement (inch)				12	15	15
(G) Guide Clearance (inch)				1/4	1/4	1/4
Masonry Plate	Lm					
	Wm					
	Tm					
Auxiliary Plate	La			0	0	0
	Wa			0	0	0
	Ta			0	0	0
Sole Plate	Ls					
	Ws					
	T1					
	T2					
Bearing H (inch)				8 *	8 *	8 *
Anchor Rods	d			1 1/4	1 1/4	1 1/4
	Rods / Brg.			4	4	4
Weld Size	W1					
	W2					

Notes:
T2 is upstation of T1.
*** One Way Longitudinal Movement is the maximum one way movement (expansion or contraction) of the superstructure when bearings are set at 60 degrees F plus 1" tolerance.

Indicates parts designed by the manufacturer.

Notes:
The bearing design shall conform to the provisions of AASHTO LRFD Bridge Design Specifications, 4th. ed. with 2008 interims.
The contractor, in coordination with the bearing manufacturer, shall be responsible for sizing the sole plate and masonry plate, weld sizes and lengths and determining the size, number, embedment and location of anchor rods based on the load and movement capacities, indicated in the Bearing Data Table.
The contractor shall submit calculations sealed by a licensed structural engineer, registered in the State of Illinois, indicating conformance with design load and material criteria in the contract documents.
* Maximum vertical dimension of the complete bearing. If the actual bearing dimension differs, adjustments shall be made in the thickness of the sole plate, masonry plate and concrete pad as needed by the contractor at no additional cost to the owner. Contractor shall submit proposed method of adjustment to Engineer for approval.
** Estimated horizontal dimension of the bearing device. If the actual dimension differs, adjust the size of the sole plate and masonry plate as needed by the contractor at no additional cost to the owner.
***** The temperature of the steel adjacent to the elastomer shall be kept below 250°F. All field welding shall be in accordance with Sec 712.6. A bolted connection (designed by the contractor's Illinois licensed structural engineer) may be used in lieu of a field welded connection.
The dimension "H" in the Bearing Data Table represents the assumed total height of bearing mechanism between the sole plate and masonry plate used by the designer to establish the pedestal elevations.
The bearings shall be manufactured HLMR bearings, designed for the load and movement capacities indicated in the Bearing Data Table.
All expansion Bearings shall be guided and shall have a maximum friction coefficient of 3%.
Steel for bearings except for sole plate and masonry plates shall be ASTM A709 Grade 50W and shall be galvanized in accordance with Sec 1080.. Steel for sole plate and masonry plates shall be ASTM A709 Grade 50W. The anchor rods and welds shall have corrosion resistance and weathering characteristics compatible with the base material.
Anchor rods shall conform to ASTM F1554 Grade 55. The anchor rods shall be swedge-type, shall have a minimum diameter of 1 1/4 inches and extend a minimum of 12 inches into the concrete. Hex or Heavy Hex nuts for anchor rods shall conform to AASHTO M291 (ASTM A563) Grade C3 or DH3. Swedging shall be 1-inch less than the extension into the concrete.
Anchor rods shall be installed using a hardened steel washer at each exposed location.
Washers shall conform to ASTM F436, Type 3.
Certified mill test reports, conforming to the requirements of the specifications, for the metals of the bearing device, sole plate, masonry plate and anchor rods (including nuts and washers) shall be submitted.
The masonry plate shall be prepared per the specifications and shop-coated with one coat of inorganic zinc primer (5 mils minimum).
The sole plate shall be prepared per the specifications and shop-coated with two coats of inorganic zinc primer (5 mils minimum).
The bearing device, sole plate and masonry plate shall be assembled in the shop and the bearing assembly shall be field welded to the bottom flange of the steel girder. The welds shall be designed by the contractor in coordination with the bearing manufacturer for the load capacities indicated in the Bearing Data Table.
After installation of the bearings, any uncoated or damaged surfaces of the masonry and sole plates shall be prepared in accordance with the specifications and field-coated with inorganic zinc primer (5 mils minimum)
After installation of the bearings and field-applied prime coats, the surfaces of the masonry and sole plates shall be field-coated with System H intermediate and finish coat.
All bearings shall be marked prior to shipping. The marks shall include the bearing location on the bridge and a direction arrow that points up-station. All marks shall be permanent and be visible after the bearing is installed.
The bearing device, sole plate, masonry plate, anchor rods, washers, anchor rod wells and any other appurtenances included in the fabrication and installation of the bearing device shall be incidental to the pay item "HOT Bearing".
Whenever jacking of the Superstructure is needed to reset the bearings, the contractor shall submit a jacking sequence for approval.
**** At the contractor's option the anchor bolt wells may be omitted, and in lieu thereof, holes drilled into the substructure. The anchor bolt holes shall be drilled in the exact location shown, to the required depth and perpendicular to the plane of the bridge seat. The drilled holes shall be no smaller than the diameter of the holes in the steel bearing plates or castings. The contractor shall not interfere with the beam cap reinforcing steel in any manner. The reinforcing steel shall not be cut or lanced in the event that the drilling for anchor rods interferes with the bars. When the anchor bolts are set in holes or wells, the hole or well shall be clean and dry prior to grouting with an expansive mortar in accordance with Sec 1066. Excess mortar forced out of holes shall be removed.

DETAILS OF HIGH LOAD
MULTI-ROTATIONAL BEARING ASSEMBLY -
UNI-DIRECTIONAL EXPANSION

CONTRACT NO. 76D61

F.A. ROUTE	SECTION
999	82-1B-2
FED. AID PROJECT	ILLINOIS
COUNTY	ST. CLAIR

USER NAME = jjollrf
PLOT SCALE = $SCALE$
PLOT DATE = 3/8/2010
DESIGNED - HNTB
CHECKED - CMT
DRAWN - CMT / HTNB
REVISED -
REVISED -
REVISED -
REVISED -

ILLINOIS APPROACH STRUCTURE
FOR NEW I-70 MISSISSIPPI RIVER BRIDGE

STATE OF ILLINOIS
DEPARTMENT OF TRANSPORTATION

MISSOURI HIGHWAYS
AND TRANSPORTATION COMMISSION

HNTB
715 KIRK DRIVE
KANSAS CITY, MO 64105
TELEPHONE (816) 472-1201
CERTIFICATE OF AUTHORITY
NO. 001270

CMT
CRAWFORD, MURPHY & TILLY, INC.
2750 WEST WASHINGTON STREET
SPRINGFIELD, IL 62702
TELEPHONE (217) 787-8050
ENGINEERING CORPORATION - 000631

Detailed JUL 2009
Checked JUL 2009

Note: This drawing is not to scale. Follow dimensions.

s:\idot\0906601\draw_idot\cadd_sheets\structural\B_A6500_042-152_J6I0984C_042.dgn

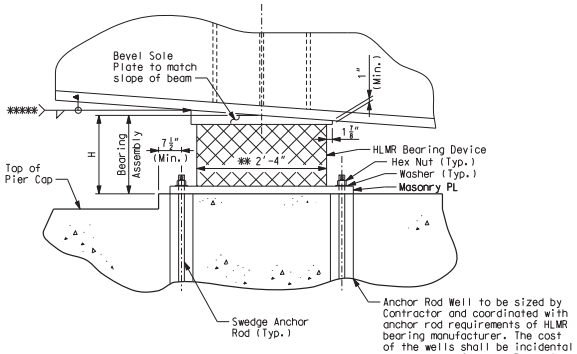

ELEVATION

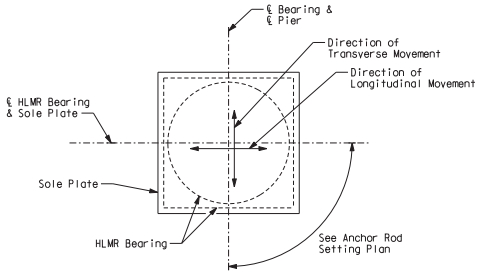

BEARING PLAN

BEARING DATA TABLE

Location				Piers 14-16	Piers 18-22
Fix/Exp.				Fixed	Fixed
Quantity Required				24	40
Design load (kip)	Service limit state	Vertical	max.	1191	1268
			perm.	812	861
			min.	812	861
		Transverse		31	32
		Longitudinal		48	97
	Strength limit state	Vertical		1871	1980
		Transverse		100	97
		Longitudinal		66	124
	Extreme Event limit state	Vertical		1148	1300
		Transverse		279	341
		Longitudinal		114	234
Rotation (rad.)	Strength limit state	Transverse		0.00	0.00
		Longitudinal		0.02	0.02
*** One Way Longit. Movement (inch)				0	0
(G) Guide Clearance (inch)				0	0
Masonry Plate	Lm				
	Wm				
	Tm				
Auxiliary Plate	La			0	0
	Wa			0	0
	Ta			0	0
Sole Plate	Ls				
	Ws				
	T1				
	T2				
Bearing H (inch)				10 *	10 *
Anchor Rods	d			2	2
	Rods / Brg.			6	6
Weld Size	W1				
	W2				

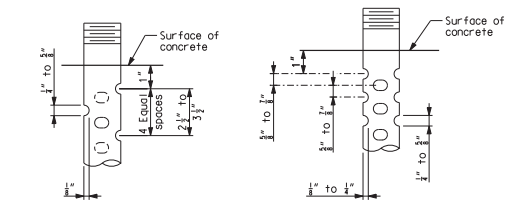

DETAIL OF 3/4"Ø THRU 2 1/2"Ø ANCHOR RODS

OPTIONAL DETAIL OF 1 3/8"Ø THRU 2 1/2"Ø ANCHOR RODS

SWEDGE ANCHOR ROD DETAILS

Notes:
T2 is upstation of T1.
*** One Way Longitudinal Movement is the maximum one way movement (expansion or contraction) of the superstructure when bearings are set at 60 degrees F plus 1" tolerance.

Indicates parts designed by the manufacturer.

Notes:
The bearing design shall conform to the provisions of AASHTO LRFD Bridge Design Specifications, 4th. ed. with 2008 Interims.
The contractor, in coordination with the bearing manufacturer, shall be responsible for sizing the sole plate and masonry plate, weld sizes and lengths and determining the size, number, embedment and location of anchor rods based on the load and movement capacities, indicated in the Bearing Data Table.
The contractor shall submit calculations sealed by a licensed structural engineer, registered in the State of Illinois, indicating conformance with design load and material criteria in the contract documents.
* Maximum vertical dimension of the complete bearing. If the actual bearing dimension differs, adjustments shall be made in the thickness of the sole plate, masonry plate and concrete pad as needed by the contractor at no additional cost to the owner. Contractor shall submit proposed method of adjustment to Engineer for approval.
** Estimated horizontal dimension of the bearing device. If the actual dimension differs, adjust the size of the sole plate, weld sizes and lengths and masonry plate as needed by the contractor at no additional cost to the owner.
***** The temperature of the steel adjacent to the elastomeric shall be kept below 250°F. All field welding shall be in accordance with Sec 712.6. A bolted connection (designed by the contractor's Illinois licensed structural engineer) may be used in lieu of a field welded connection.
The dimension "H" in the Bearing Data Table represents the assumed total height of bearing mechanism between the sole plate and masonry plate used by the designer to establish the pedestal elevations.
The bearings shall be manufactured HLMR bearings, designed for the load and movement capacities indicated in the Bearing Data Table.
Steel for bearings except for sole plate and masonry plates shall be ASTM A709 Grade 50W and shall be galvanized in accordance with Sec 1080. Steel for sole plate and masonry plates shall be ASTM A709 Grade 50W. The anchor rods and welds shall have corrosion resistance and weathering characteristics compatible with the base material.
Anchor rods shall conform to ASTM F1554 Grade 55. The anchor rods shall be swedge-type, shall have a minimum diameter of 2 inches and extend a minimum of 18 inches into the concrete. Hex or Heavy Hex nuts for anchor rods shall conform to AASHTO M291 (ASTM A563) Grade C3 or DH3. Swedging shall be 1-inch less than the extension into the concrete.
Anchor rods shall be installed using a hardened steel washer at each exposed location.
Washers shall conform to ASTM F436, Type 3.
Certified mill test reports, conforming to the requirements of the specifications, for the metals of the bearing device, sole plate, masonry plate and anchor rods (including nuts and washers) shall be submitted.
The masonry plate shall be prepared per the specifications and shop-coated with one coat of inorganic zinc primer (5 mils minimum).
The sole plate shall be prepared per the specifications and shop-coated with two coats of inorganic zinc primer (5 mils minimum).
The bearing device, sole plate and masonry plate shall be assembled in the shop and the bearing assembly shall be field welded to the bottom flange of the steel girder. The welds shall be designed by the contractor in accordance with the bearing manufacturer for the load capacities indicated in the Bearing Data Table.
After installation of the bearings, any uncoated or damaged surfaces of the masonry and sole plates shall be prepared in accordance with the specifications and field-coated with inorganic zinc primer (5 mils minimum)
After installation of the bearings and field-applied prime coats, the surfaces of the masonry and sole plates shall be field-coated with System H intermediate and finish coat.
All bearings shall be marked prior to shipping. The marks shall include the bearing location on the bridge and a direction arrow that points up-station. All marks shall be permanent and be visible after the bearing is installed.
The bearing device, sole plate, masonry plate, anchor rods, washers, anchor rod wells and any other appurtenances included in the fabrication and installation of the bearing device shall be incidental to the pay item "PDT Bearing".
Whenever jacking of the Superstructure is needed to reset the bearings, the contractor shall submit a jacking sequence for approval.
**** At the contractor's option the anchor bolt wells may be omitted, and in lieu thereof, holes drilled into the substructure. The anchor bolt holes shall be drilled in the exact location shown, to the required depth and perpendicular to the plane of the bridge seat. The drilled holes shall be no smaller than the diameter of the holes in the steel bearing plates or castings. The contractor shall not interfere with the beam cap reinforcing steel in any manner. The reinforcing steel shall not be cut or lanced in the event that the drilling for anchor rods interferes with the bars. When the anchor bolts are set in holes or wells, the hole or well shall be clean and dry prior to grouting with an expansive mortar in accordance with Sec 1066. Excess mortar forced out of holes shall be removed.

DETAILS OF HIGH LOAD MULTI-ROTATIONAL BEARING ASSEMBLY - FIXED

CONTRACT NO. 76D61

F.A. ROUTE	SECTION
999	82-1B-2
FED. AID PROJECT	ILLINOIS
COUNTY	ST. CLAIR

USER NAME = jjolliff
PLOT SCALE = $SCALE$
PLOT DATE = 3/8/2010
DESIGNED - HNTB
CHECKED - CMT
DRAWN - CMT / HTNB
REVISED -
REVISED -
REVISED -
REVISED -

ILLINOIS APPROACH STRUCTURE FOR NEW I-70 MISSISSIPPI RIVER BRIDGE

STATE OF ILLINOIS
DEPARTMENT OF TRANSPORTATION

MISSOURI HIGHWAYS AND TRANSPORTATION COMMISSION

HNTB
715 KIRK DRIVE
KANSAS CITY, MO 64105
TELEPHONE (816) 472-1201
CERTIFICATE OF AUTHORITY NO. 001270

CMT
CRAWFORD, MURPHY & TILLY, INC.
2750 WEST WASHINGTON STREET
SPRINGFIELD, IL 62702
TELEPHONE (217) 787-8050
ENGINEERING CORPORATION - 000631

Detailed JUL 2009
Checked JUL 2009

Note: This drawing is not to scale. Follow dimensions.

s:\idot\0906601\draw_idot\cadd_sheets\structural\B_A6500_043-152_J6I0984C_043.dgn

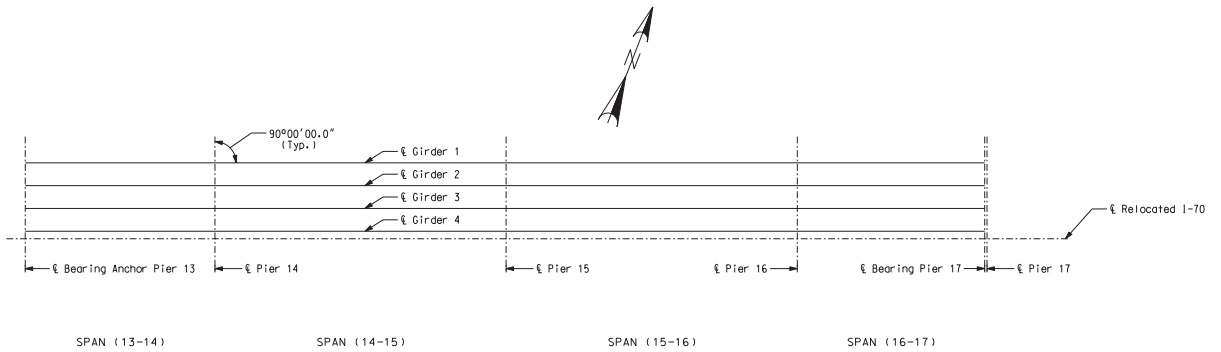

BEARING DEVICE ALIGNMENT PLAN

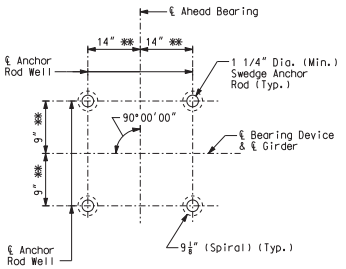

ANCHOR ROD SETTING PLAN
ANCHOR PIER 13

Note:
Anchor Rod Wells will be provided by others (Pier 13 Only).

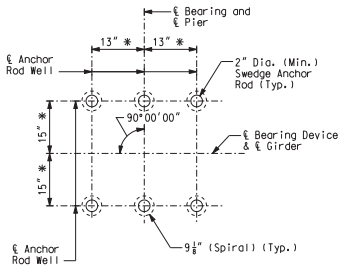

ANCHOR ROD SETTING PLAN
PIER 14

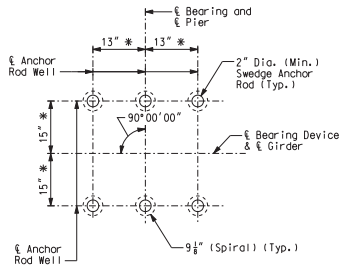

ANCHOR ROD SETTING PLAN
PIER 15

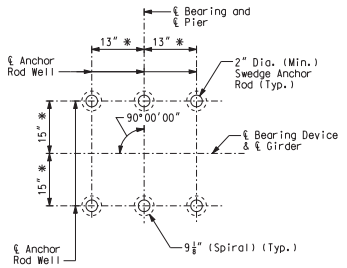

ANCHOR ROD SETTING PLAN
PIER 16

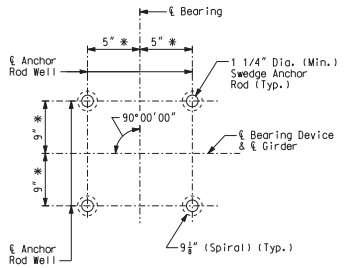

ANCHOR ROD SETTING PLAN
PIER 17 (SPAN 16-17)

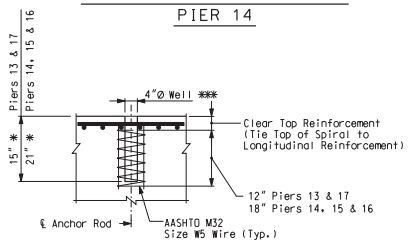

ANCHOR ROD WELL DETAIL

Notes:

Anchor Rod Well sizes are conceptual and shall be sized by Contractor and coordinated with anchor rod requirements of the multi-rotational bearing manufacturer.

* The contractor, in coordination with the bearing manufacturer, shall be responsible for determining the size, number, and location of anchor rods based on the load and movement capacities, as indicated in the Bearing Data shown on Sheet Nos. 42 and 43.

** Anchor rods at Pier 13 have been located to avoid conflict with reinforcement steel in pier cap. Locations of these anchor rods are not subject to adjustment during design of bearing components by bearing manufacturer.

*** At the contractor's option the anchor bolt wells may be omitted, and in lieu thereof, holes drilled into the substructure. The anchor bolt holes shall be drilled in the exact location shown, to the required depth and perpendicular to the plane of the bridge seat. The drilled holes shall be no smaller than the diameter of the holes in the steel bearing plates or castings. The contractor shall not interfere with the beam cap reinforcing steel in any manner. The reinforcing steel shall not be cut or lanced in the event that the drilling for anchor rods interferes with the bars. When the anchor bolts are set in holes or wells, the hole or well shall be clean and dry prior to grouting with an expansive mortar in accordance with Sec 1066. Excess mortar forced out of holes shall be removed.

BEARING DEVICE ALIGNMENT AND ANCHOR ROD SETTING PLAN WB - UNIT 1

Detailed JUL 2009
Checked JUL 2009

Note: This drawing is not to scale. Follow dimensions.

s:\idot\0906601\draw_idot\cadd_sheets\structural\B_A6500_044-152_J6I0984C_044.dgn

CONTRACT NO. 76D61

F.A. ROUTE	SECTION
999	82-1B-2
FED. AID PROJECT	ILLINOIS
COUNTY	ST. CLAIR

USER NAME = jjolliff
PLOT SCALE = $SCALE$
PLOT DATE = 3/8/2010

DESIGNED - HNTB
CHECKED - CMT
DRAWN - CMT / HTNB
REVISED -
REVISED -
REVISED -
REVISED -

ILLINOIS APPROACH STRUCTURE FOR NEW I-70 MISSISSIPPI RIVER BRIDGE

STATE OF ILLINOIS
DEPARTMENT OF TRANSPORTATION

MISSOURI HIGHWAYS AND TRANSPORTATION COMMISSION

HNTB
715 KIRK DRIVE
KANSAS CITY, MO 64105
TELEPHONE (816) 472-1201
CERTIFICATE OF AUTHORITY NO. 001270

CMT
CRAWFORD, MURPHY & TILLY, INC.
2750 WEST WASHINGTON STREET
SPRINGFIELD, IL 62702
TELEPHONE (217) 787-8050
ENGINEERING CORPORATION - 000631

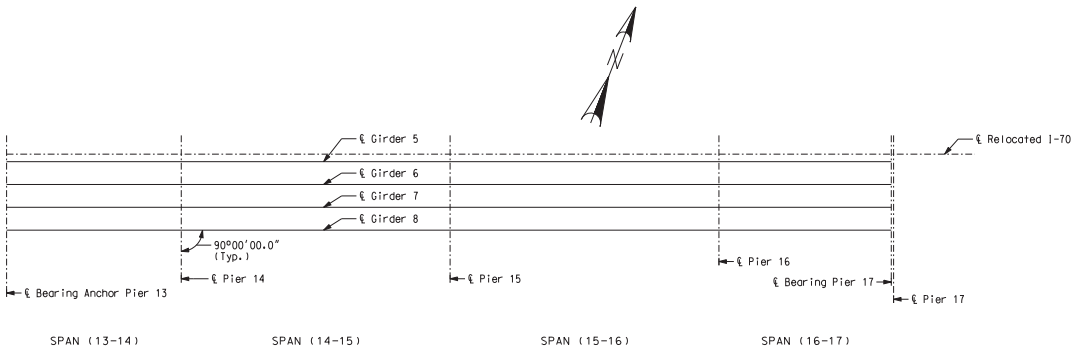

BEARING DEVICE ALIGNMENT PLAN

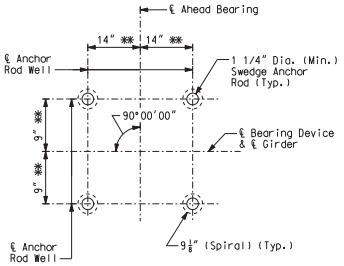

ANCHOR ROD SETTING PLAN
ANCHOR PIER 13

Note:
Anchor Rod Wells will be provided by others (Pier 13 Only).

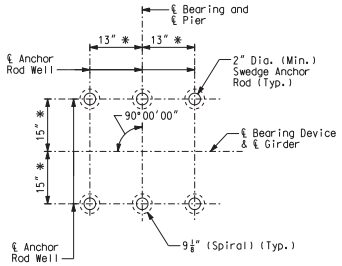

ANCHOR ROD SETTING PLAN
PIER 14

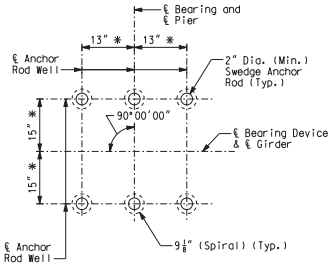

ANCHOR ROD SETTING PLAN
PIER 15

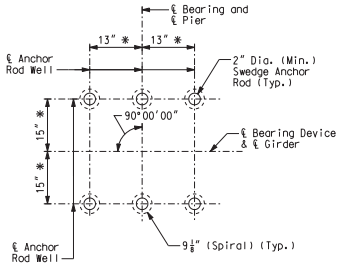

ANCHOR ROD SETTING PLAN
PIER 16

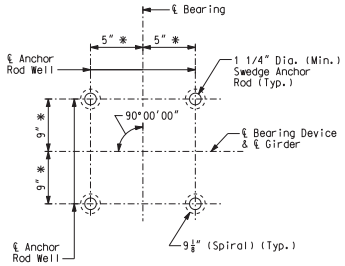

ANCHOR ROD SETTING PLAN
PIER 17 (SPAN 16-17)

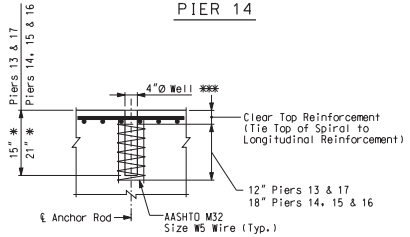

ANCHOR ROD WELL DETAIL

Notes:

Anchor Rod Well sizes are conceptual and shall be sized by Contractor and coordinated with anchor rod requirements of the multi-rotational bearing manufacturer.

* The contractor, in coordination with the bearing manufacturer, shall be responsible for determining the size, number, and location of anchor rods based on the load and movement capacities, as indicated in the Bearing Data shown on Sheet Nos. 42 and 43.

** Anchor rods at Pier 13 have been located to avoid conflict with reinforcement steel in pier cap. Locations of these anchor rods are not subject to adjustment during design of bearing components by bearing manufacturer.

*** At the contractor's option the anchor bolt wells may be omitted, and in lieu thereof, holes drilled into the substructure. The anchor bolt holes shall be drilled in the exact location shown, to the required depth and perpendicular to the plane of the bridge seat. The drilled holes shall be no smaller than the diameter of the holes in the steel bearing plates or castings. The contractor shall not interfere with the beam cap reinforcing steel in any manner. The reinforcing steel shall not be cut or lanced in the event that the drilling for anchor rods interferes with the bars. When the anchor bolts are set in holes or wells, the hole or well shall be clean and dry prior to grouting with an expansive mortar in accordance with Sec 1066. Excess mortar forced out of holes shall be removed.

BEARING DEVICE ALIGNMENT AND ANCHOR ROD SETTING PLAN EB - UNIT 1

Detailed JUL 2009
Checked JUL 2009

Note: This drawing is not to scale. Follow dimensions.

s:\idot\0906601\draw_idot\cadd_sheets\structural\B_A6500_045-152_J6I0984C_045.dgn

CONTRACT NO. 76D61

F.A. ROUTE	SECTION
999	82-1B-2
FED. AID PROJECT	ILLINOIS
COUNTY	ST. CLAIR

USER NAME = jjolliff
PLOT SCALE = $SCALE$
PLOT DATE = 3/8/2010

DESIGNED - HNTB
CHECKED - CMT
DRAWN - CMT / HTNB
REVISED -
REVISED -
REVISED -
REVISED -

ILLINOIS APPROACH STRUCTURE FOR NEW I-70 MISSISSIPPI RIVER BRIDGE

STATE OF ILLINOIS
DEPARTMENT OF TRANSPORTATION

MISSOURI HIGHWAYS AND TRANSPORTATION COMMISSION

HNTB
715 KIRK DRIVE
KANSAS CITY, MO 64105
TELEPHONE (816) 472-1201
CERTIFICATE OF AUTHORITY NO. 001270

CMT
CRAWFORD, MURPHY & TILLY, INC.
2750 WEST WASHINGTON STREET
SPRINGFIELD, IL 62702
TELEPHONE (217) 787-8050
ENGINEERING CORPORATION - 000631

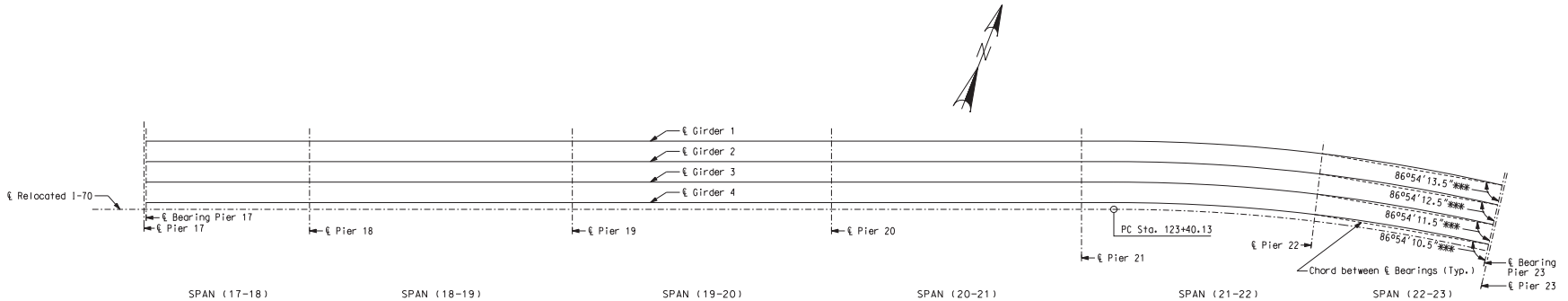

BEARING DEVICE ALIGNMENT PLAN

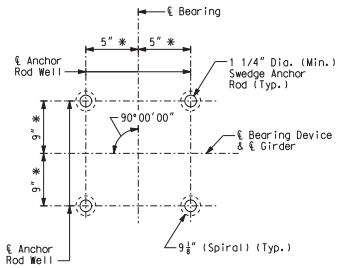

ANCHOR ROD SETTING PLAN
PIER 17 (SPAN 17-18)

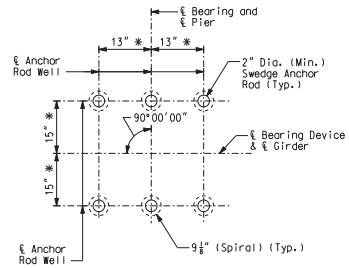

ANCHOR ROD SETTING PLAN
PIER 18

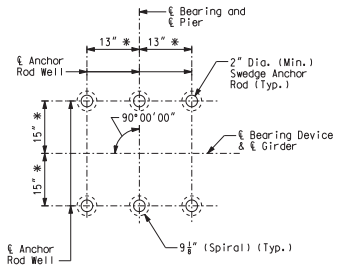

ANCHOR ROD SETTING PLAN
PIER 19

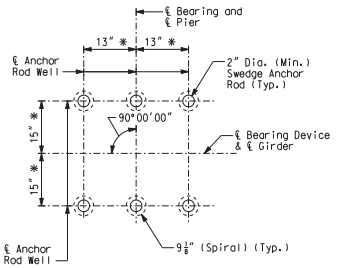

ANCHOR ROD SETTING PLAN
PIER 20

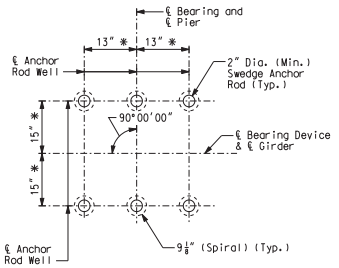

ANCHOR ROD SETTING PLAN
PIER 21

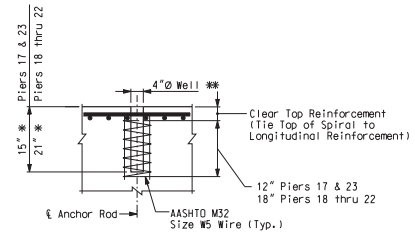

ANCHOR ROD WELL DETAIL

Notes:

* The contractor, in coordination with the bearing manufacturer, shall be responsible for determining the size, number, and location of anchor rods based on the load and movement capacities, as indicated in the Bearing Data shown on Sheet Nos. 42 and 43.

** At the contractor's option the anchor bolt wells may be omitted, and in lieu thereof, holes drilled into the substructure. The anchor bolt holes shall be drilled in the exact location shown, to the required depth and perpendicular to the plane of the bridge seat. The drilled holes shall be no smaller than the diameter of the holes in the steel bearing plates or castings. The contractor shall not interfere with the beam cap reinforcing steel in any manner. The reinforcing steel shall not be cut or lanced in the event that the drilling for anchor rods interferes with the bars. When the anchor bolts are set in holes or wells, the hole or well shall be clean and dry prior to grouting with an expansive mortar in accordance with Sec 1066. Excess mortar forced out of holes shall be removed.

*** Alignment angle measured from ℄ Bearing to ℄ Bearing Device. Anchor Rod Well sizes are conceptual and shall be sized by Contractor and coordinated with anchor rod requirements of the multi-rotational bearing manufacturer.

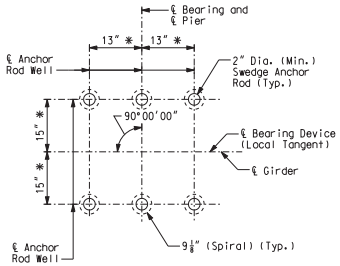

ANCHOR ROD SETTING PLAN
PIER 22

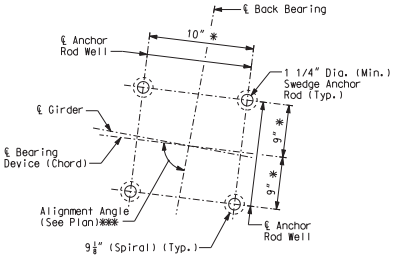

ANCHOR ROD SETTING PLAN
PIER 23

BEARING DEVICE ALIGNMENT AND ANCHOR ROD SETTING PLAN WB - UNIT 2

Detailed JUL 2009
Checked JUL 2009

Note: This drawing is not to scale. Follow dimensions.

s:\idot\0906601\draw_idot\cadd_sheets\structural\B_A6500_046-152_J6l0984C_046.dgn

CONTRACT NO. 76D61

F.A. ROUTE	SECTION
999	82-1B-2
FED. AID PROJECT	ILLINOIS
COUNTY	ST. CLAIR

USER NAME = jjolliff
PLOT SCALE = $SCALE$
PLOT DATE = 3/8/2010

DESIGNED - HNTB
CHECKED - CMT
DRAWN - CMT / HTNB
REVISED -
REVISED -
REVISED -
REVISED -

ILLINOIS APPROACH STRUCTURE FOR NEW I-70 MISSISSIPPI RIVER BRIDGE

STATE OF ILLINOIS
DEPARTMENT OF TRANSPORTATION

MISSOURI HIGHWAYS AND TRANSPORTATION COMMISSION

HNTB
715 KIRK DRIVE
KANSAS CITY, MO 64105
TELEPHONE (816) 472-1201
CERTIFICATE OF AUTHORITY NO. 001270

CMT
CRAWFORD, MURPHY & TILLY, INC.
2750 WEST WASHINGTON STREET
SPRINGFIELD, IL 62702
TELEPHONE (217) 787-8050
ENGINEERING CORPORATION - 000631

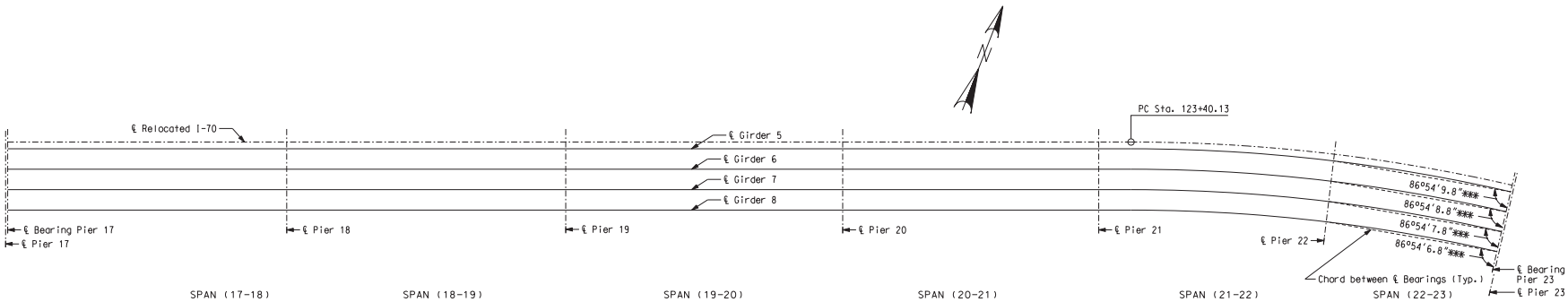

BEARING DEVICE ALIGNMENT PLAN

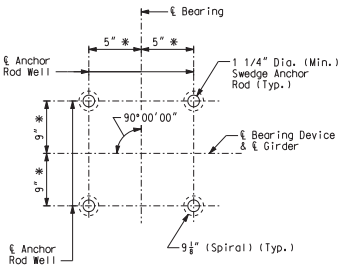

ANCHOR ROD SETTING PLAN
PIER 17 (SPAN 17-18)

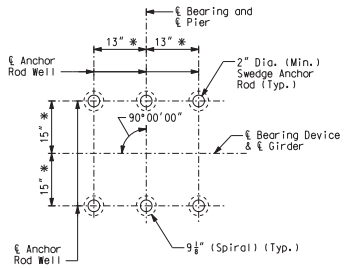

ANCHOR ROD SETTING PLAN
PIER 18

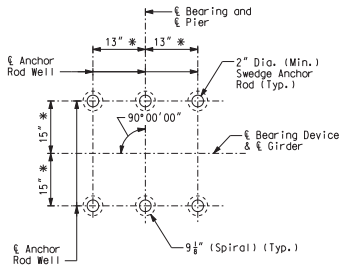

ANCHOR ROD SETTING PLAN
PIER 19

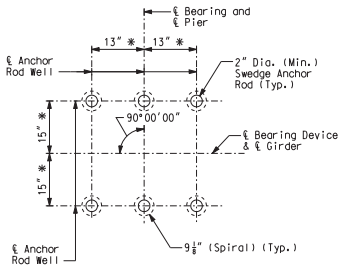

ANCHOR ROD SETTING PLAN
PIER 20

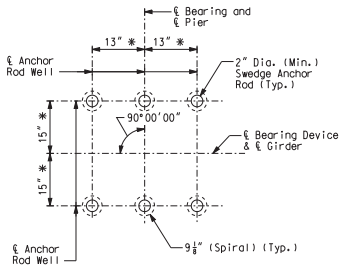

ANCHOR ROD SETTING PLAN
PIER 21

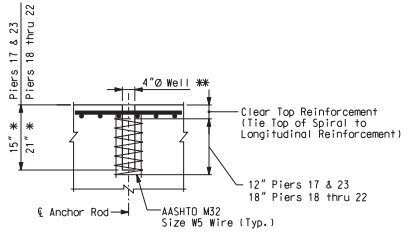

ANCHOR ROD WELL DETAIL

Note:
Anchor Rod Well sizes are conceptual and shall be sized by Contractor and coordinated with anchor rod requirements of the multi-rotational bearing manufacturer.

Notes:

* The contractor, in coordination with the bearing manufacturer, shall be responsible for determining the size, number, and location of anchor rods based on the load and movement capacities, as indicated in the Bearing Data shown on Sheet Nos. 42 and 43.

** At the contractor's option the anchor bolt wells may be omitted, and in lieu thereof, holes drilled into the substructure. The anchor bolt holes shall be drilled in the exact location shown, to the required depth and perpendicular to the plane of the bridge seat. The drilled holes shall be no smaller than the diameter of the holes in the steel bearing plates or castings. The contractor shall not interfere with the beam cap reinforcing steel in any manner. The reinforcing steel shall not be cut or lanced in the event that the drilling for anchor rods interferes with the bars. When the anchor bolts are set in holes or wells, the hole or well shall be clean and dry prior to grouting with an expansive mortar in accordance with Sec 1066. Excess mortar forced out of holes shall be removed.

*** Alignment angle measured from ℄ Bearing to ℄ Bearing Device. Anchor Rod Well sizes are conceptual and shall be sized by Contractor and coordinated with anchor rod requirements of the multi-rotational bearing manufacturer.

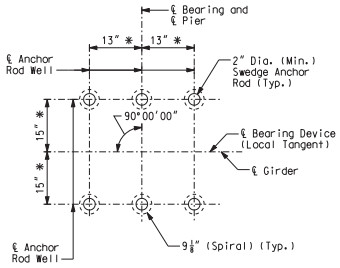

ANCHOR ROD SETTING PLAN
PIER 22

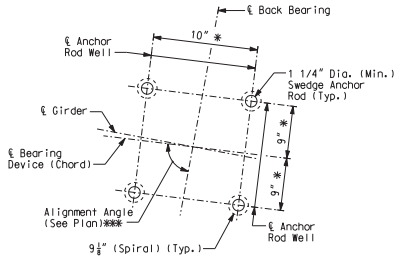

ANCHOR ROD SETTING PLAN
PIER 23

BEARING DEVICE ALIGNMENT AND ANCHOR BOLT SETTING PLAN EB - UNIT 2

Detailed JUL 2009
Checked JUL 2009

Note: This drawing is not to scale. Follow dimensions.

s:\idot\0906601\draw_idot\cadd_sheets\structural\B_A6500_047-152_J6I0984C_047.dgn

CONTRACT NO. 76D61

F.A. ROUTE	SECTION
999	82-1B-2
FED. AID PROJECT	ILLINOIS
COUNTY	ST. CLAIR

USER NAME = jjolliff
PLOT SCALE = $SCALE$
PLOT DATE = 3/8/2010

DESIGNED - HNTB
CHECKED - CMT
DRAWN - CMT / HTNB
REVISED -
REVISED -
REVISED -
REVISED -

ILLINOIS APPROACH STRUCTURE FOR NEW I-70 MISSISSIPPI RIVER BRIDGE

STATE OF ILLINOIS
DEPARTMENT OF TRANSPORTATION

MISSOURI HIGHWAYS AND TRANSPORTATION COMMISSION

HNTB
715 KIRK DRIVE
KANSAS CITY, MO 64105
TELEPHONE (816) 472-1201
CERTIFICATE OF AUTHORITY
NO. 001270

CMT
CRAWFORD, MURPHY & TILLY, INC.
2750 WEST WASHINGTON STREET
SPRINGFIELD, IL 62702
TELEPHONE (217) 787-8050
ENGINEERING CORPORATION - 000631

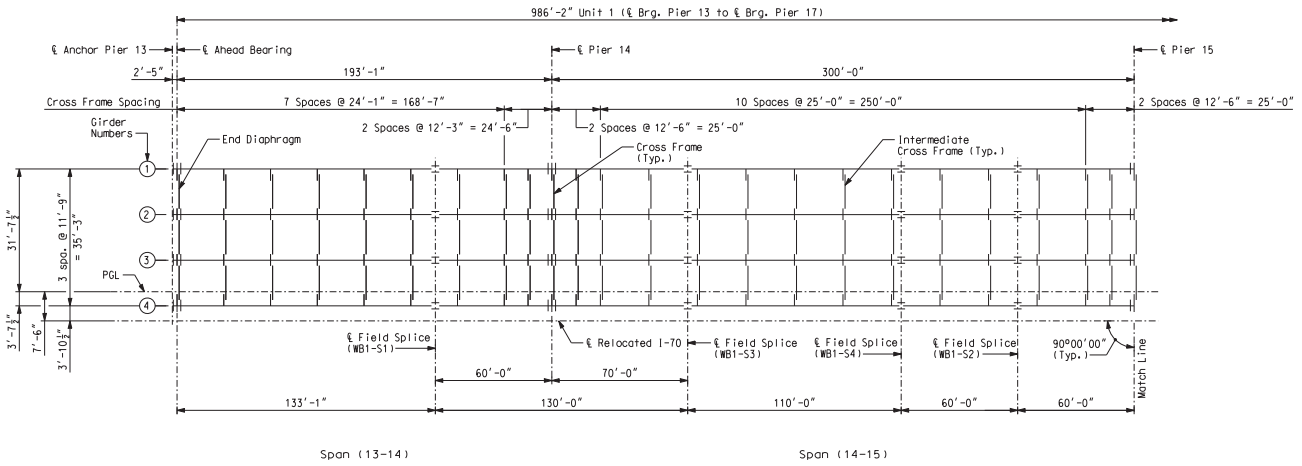

FRAMING PLAN
Span (13-14) & (14-15)

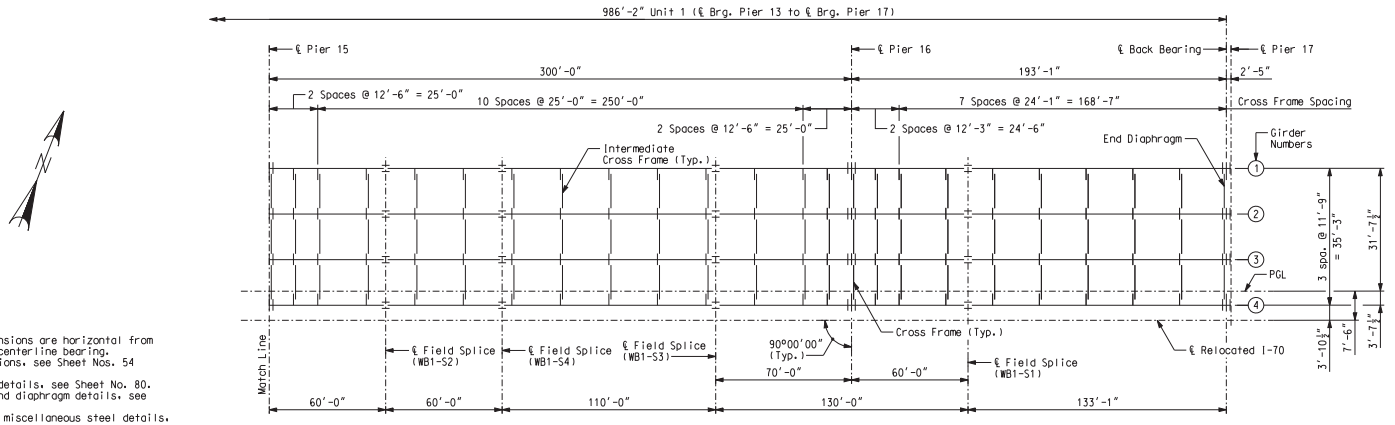

FRAMING PLAN
Span (15-16) & (16-17)

Notes:
Longitudinal dimensions are horizontal from centerline bearing to centerline bearing.
For girder elevations, see Sheet Nos. 54 and 55.
For field splice details, see Sheet No. 80.
For cross frame and diaphragm details, see Sheet No. 86.
For stiffener and miscellaneous steel details, see Sheet No. 88.

Notes:
Longitudinal dimensions are horizontal from centerline bearing to centerline bearing.
For girder elevation, see Sheet Nos. 54 and 55.
For field splice detail, see Sheet No. 80.
For cross frame and diaphragm details, see Sheet No. 86.
For stiffener and miscellaneous steel details, see Sheet No. 88.

FRAMING PLAN WB - UNIT 1

Detailed JUL 2009
Checked JUL 2009

Note: This drawing is not to scale. Follow dimensions.

s:\idot\0906601\draw_idot\cadd_sheets\structural\B_A6500_048-152_J6I0984C_048.dgn

CONTRACT NO. 76D61

F.A. ROUTE	SECTION
999	82-1B-2
FED. AID PROJECT	ILLINOIS
COUNTY	ST. CLAIR

USER NAME = jjolliff
PLOT SCALE = $SCALE$
PLOT DATE = 3/8/2010
DESIGNED - HNTB
CHECKED - CMT
DRAWN - CMT / HTNB
REVISED -
REVISED -
REVISED -
REVISED -

ILLINOIS APPROACH STRUCTURE
FOR NEW I-70 MISSISSIPPI RIVER BRIDGE

STATE OF ILLINOIS
DEPARTMENT OF TRANSPORTATION

MISSOURI HIGHWAYS
AND TRANSPORTATION COMMISSION

HNTB
715 KIRK DRIVE
KANSAS CITY, MO 64105
TELEPHONE (816) 472-1201
CERTIFICATE OF AUTHORITY
NO. 001270

CMT
CRAWFORD, MURPHY & TILLY, INC.
2750 WEST WASHINGTON STREET
SPRINGFIELD, IL 62702
TELEPHONE (217) 787-8050
ENGINEERING CORPORATION - 000631

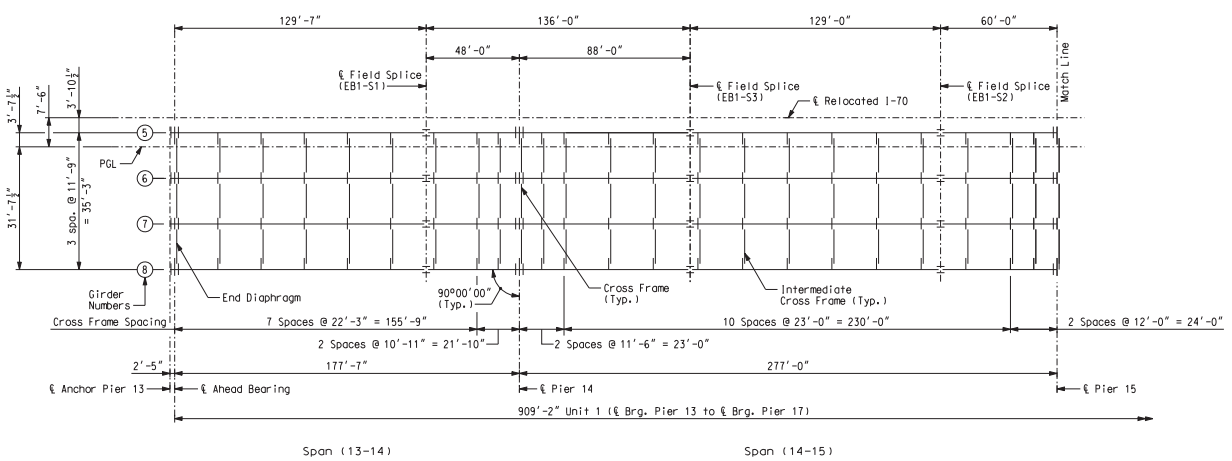

FRAMING PLAN
Span (13-14) & (14-15)

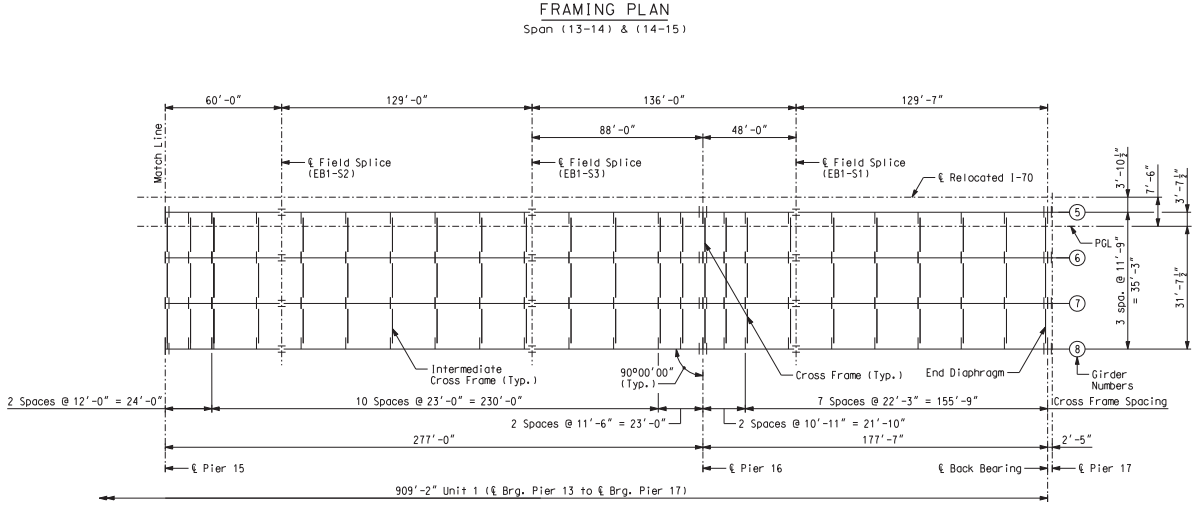

FRAMING PLAN
Span (15-16) & (16-17)

Notes:
Longitudinal dimensions are horizontal from centerline bearing to centerline bearing.
For girder elevation, see Sheet Nos. 56 and 57.
For field splice detail, see Sheet No. 81.
For cross frame and diaphragm details, see Sheet No. 86.
For stiffener and miscellaneous steel details, see Sheet No. 88.

FRAMING PLAN EB - UNIT 1

Detailed JUL 2009
Checked JUL 2009

Note: This drawing is not to scale. Follow dimensions.

s:\idot\0906601\draw_idot\cadd_sheets\structural\B_A6500_049-152_J6I0984C_049.dgn

CONTRACT NO. 76D61

F.A. ROUTE	SECTION
999	82-1B-2
FED. AID PROJECT	ILLINOIS
COUNTY	ST. CLAIR

USER NAME = jjolliff
PLOT SCALE = $SCALE$
PLOT DATE = 3/8/2010

DESIGNED - HNTB
CHECKED - CMT
DRAWN - CMT / HTNB
REVISED -
REVISED -
REVISED -
REVISED -

ILLINOIS APPROACH STRUCTURE FOR NEW I-70 MISSISSIPPI RIVER BRIDGE

STATE OF ILLINOIS
DEPARTMENT OF TRANSPORTATION

MISSOURI HIGHWAYS AND TRANSPORTATION COMMISSION

HNTB
715 KIRK DRIVE
KANSAS CITY, MO 64105
TELEPHONE (816) 472-1201
CERTIFICATE OF AUTHORITY NO. 001270

CMT
CRAWFORD, MURPHY & TILLY, INC.
2750 WEST WASHINGTON STREET
SPRINGFIELD, IL 62702
TELEPHONE (217) 787-8050
ENGINEERING CORPORATION - 000631

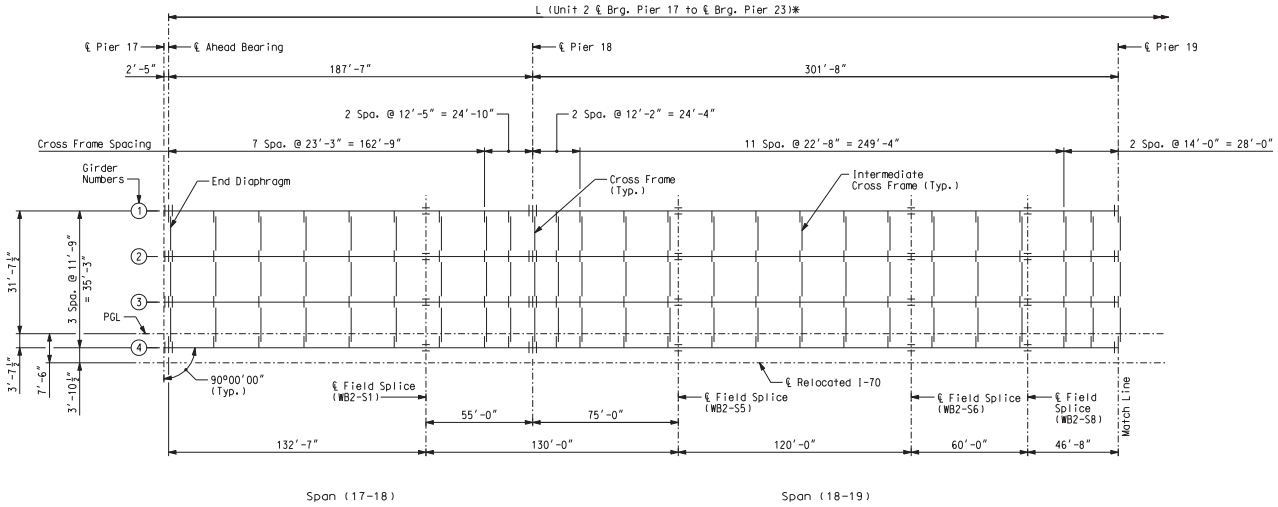

FRAMING PLAN
Span (17-18) & (18-19)

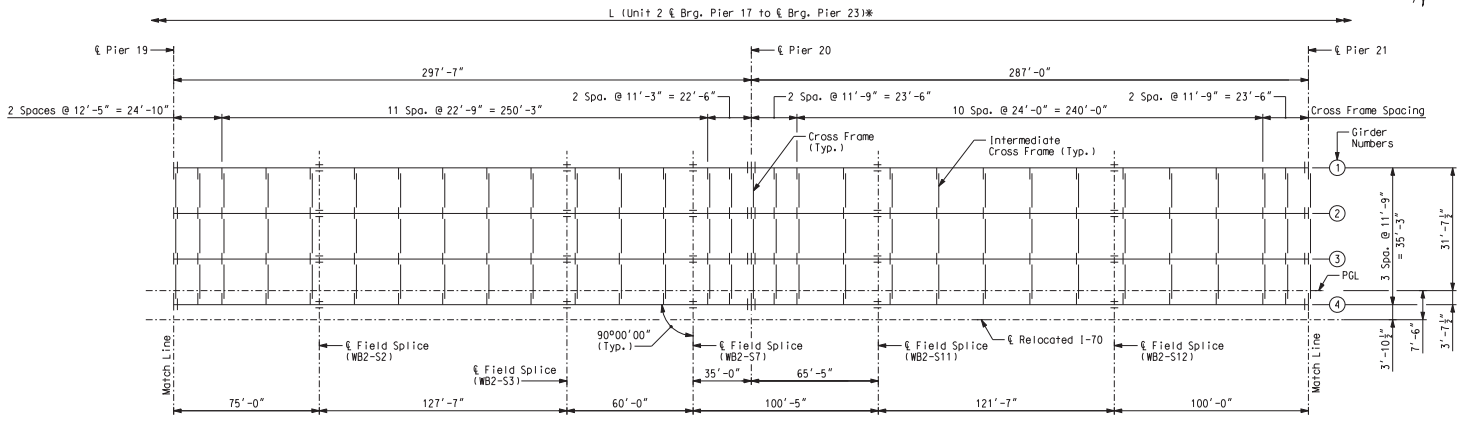

FRAMING PLAN
Span (19-20) & (20-21)

Notes:
Longitudinal dimensions are horizontal from centerline bearing to centerline bearing.
For girder elevation, see Sheet Nos. 58 thru 60.
For field splice detail, see Sheet Nos. 82 and 83.
For cross frame and diaphragm details, see Sheet No. 87.
For stiffener and miscellaneous steel details, see Sheet No. 88.
* For dimension L see Girder Dimensions table on Sheet No. 51.

FRAMING PLAN WB - UNIT 2 (1 OF 2)

Detailed JUL 2009
Checked JUL 2009

Note: This drawing is not to scale. Follow dimensions.

Sheet No. 50 of 152

s:\idot\0906601\draw_idot\cadd_sheets\structural\B_A6500_050-152_J6I0984C_050.dgn

CONTRACT NO. 76D61

F.A. ROUTE	SECTION
999	82-1B-2
FED. AID PROJECT	ILLINOIS
COUNTY	ST. CLAIR

USER NAME = jjollff
PLOT SCALE = $SCALE$
PLOT DATE = 3/8/2010
DESIGNED - HNTB
CHECKED - CMT
DRAWN - CMT / HTNB
REVISED -
REVISED -
REVISED -
REVISED -

ILLINOIS APPROACH STRUCTURE FOR NEW I-70 MISSISSIPPI RIVER BRIDGE

STATE OF ILLINOIS
DEPARTMENT OF TRANSPORTATION

MISSOURI HIGHWAYS AND TRANSPORTATION COMMISSION

HNTB
715 KIRK DRIVE
KANSAS CITY, MO 64105
TELEPHONE (816) 472-1201
CERTIFICATE OF AUTHORITY NO. 001270

CMT
CRAWFORD, MURPHY & TILLY, INC.
2750 WEST WASHINGTON STREET
SPRINGFIELD, IL 62702
TELEPHONE (217) 787-8050
ENGINEERING CORPORATION - 000631

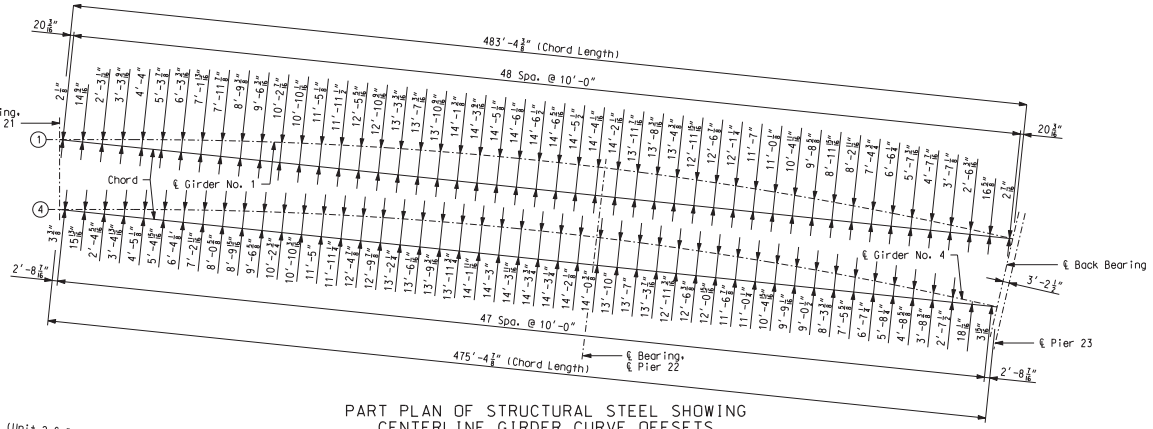

PART PLAN OF STRUCTURAL STEEL SHOWING
CENTERLINE GIRDER CURVE OFFSETS

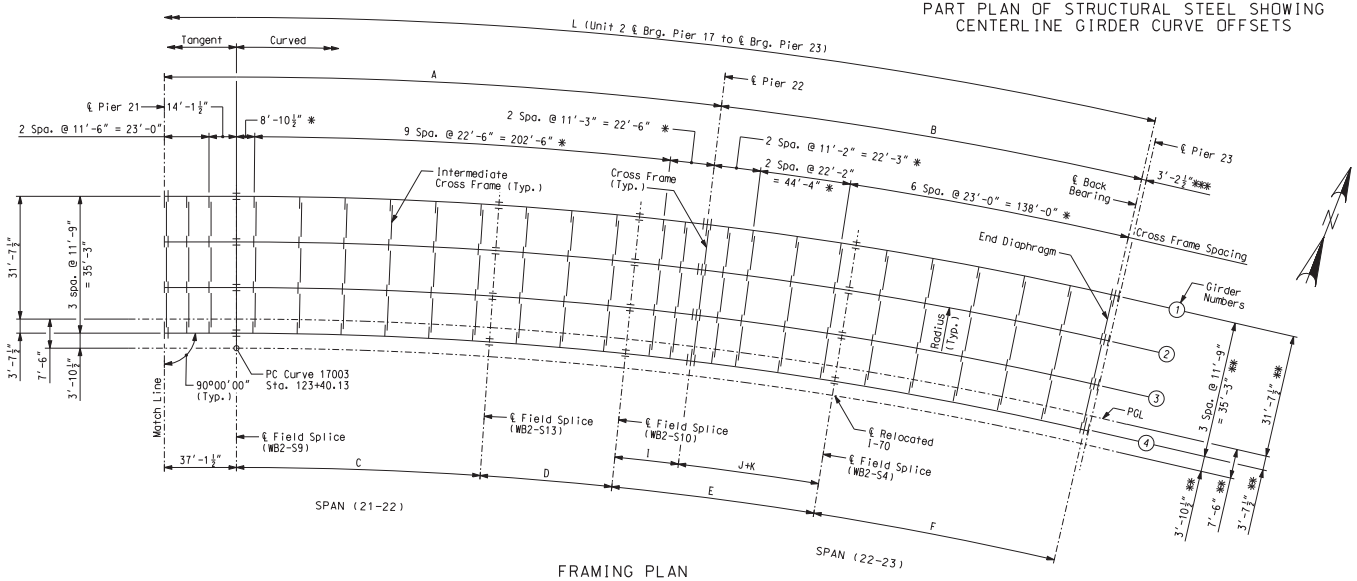

FRAMING PLAN
Span (21-22) & (22-23)

* Measured along ℄ Relocated I-70.
** Dimensions shown are measured radially.
*** ℄ Back Bearing is measured parallel to ℄ Pier 23.

GIRDER DIMENSIONS

Girder	Radius (Feet)	Girder Length		Flange Length									Total Length
		A	B	C	D	E	F	G	H	I	J	K	L
Girder 1	1991.625	275'-8¼"	208'-10"	132'-7⅛"	71'-4⅞"	107'-10⅝"	135'-5⅞"	43'-1⅝"	89'-5¼"	34'-6½"	35'-2½"	38'-1⅝"	1558'-4¼"
Girder 2	1979.875	274'-3⅝"	207'-7"	131'-10"	70'-11¾"	107'-3"	134'-8⅛"	42'-10⅝"	88'-11⅜"	34'-4⅛"	35'-0"	37'-10⅞"	1555'-8⅜"
Girder 3	1968.125	272'-10½"	206'-3⅞"	131'-0⅝"	70'-6¾"	106'-7⅜"	133'-10¼"	42'-7½"	88'-5"	34'-1⅝"	34'-9½"	37'-8¼"	1553'-0⅜"
Girder 4	1956.375	271'-5⅝"	205'-0⅞"	130'-3⅛"	70'-1¾"	105'-11⅜"	133'-0½"	42'-4⅜"	87'-10¾"	33'-11¼"	34'-7"	37'-5½"	1550'-4½"
℄ I-70	1952.500	271'-0"	204'-8"	-	-	-	-	-	-	-	-	-	-

Notes:
Longitudinal dimensions are horizontal arc dimensions from centerline bearing to centerline bearing.
For girder elevation and additional flange transition dimension information, see Sheet No. 60.
Diaphragms in curved portion of girders shall be placed radially.
For field splice detail, see Sheet Nos. 82 and 83.
For cross frame and diaphragm details, see Sheet No. 87.
For stiffener and miscellaneous steel details, see Sheet No. 88.

FRAMING PLAN WB - UNIT 2 (2 OF 2)

Detailed JUL 2009
Checked JUL 2009

Note: This drawing is not to scale. Follow dimensions.

Sheet No. 51 of 152

s:\idot\0906601\draw_idot\cadd_sheets\structural\B_A6500_051-152_J6I0984C_051.dgn

CONTRACT NO. 76D61

F.A. ROUTE	SECTION
999	82-1B-2
FED. AID PROJECT	ILLINOIS
COUNTY	ST. CLAIR

USER NAME = jjolliff
PLOT SCALE = $SCALE$
PLOT DATE = 3/8/2010
DESIGNED - HNTB
CHECKED - CMT
DRAWN - CMT / HTNB
REVISED -
REVISED -
REVISED -
REVISED -

ILLINOIS APPROACH STRUCTURE
FOR NEW I-70 MISSISSIPPI RIVER BRIDGE

STATE OF ILLINOIS
DEPARTMENT OF TRANSPORTATION

MISSOURI HIGHWAYS
AND TRANSPORTATION COMMISSION

HNTB
715 KIRK DRIVE
KANSAS CITY, MO 64105
TELEPHONE (816) 472-1201
CERTIFICATE OF AUTHORITY
NO. 001270

CMT
CRAWFORD, MURPHY & TILLY, INC.
2750 WEST WASHINGTON STREET
SPRINGFIELD, IL 62702
TELEPHONE (217) 787-8050
ENGINEERING CORPORATION - 000631

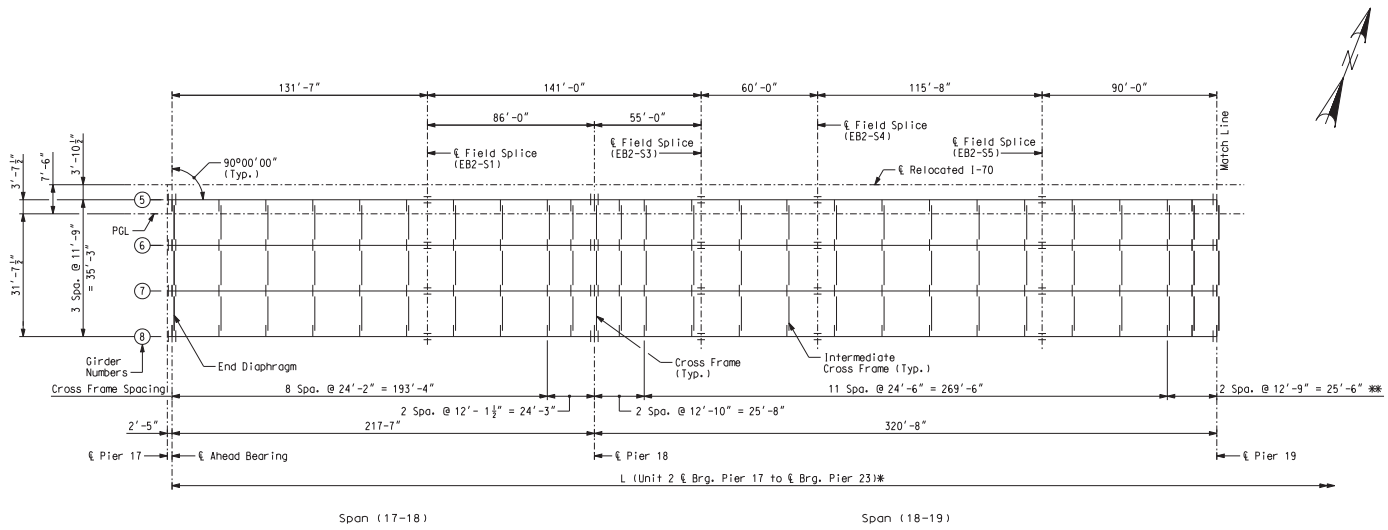

FRAMING PLAN

Span (17-18) & (18-19)

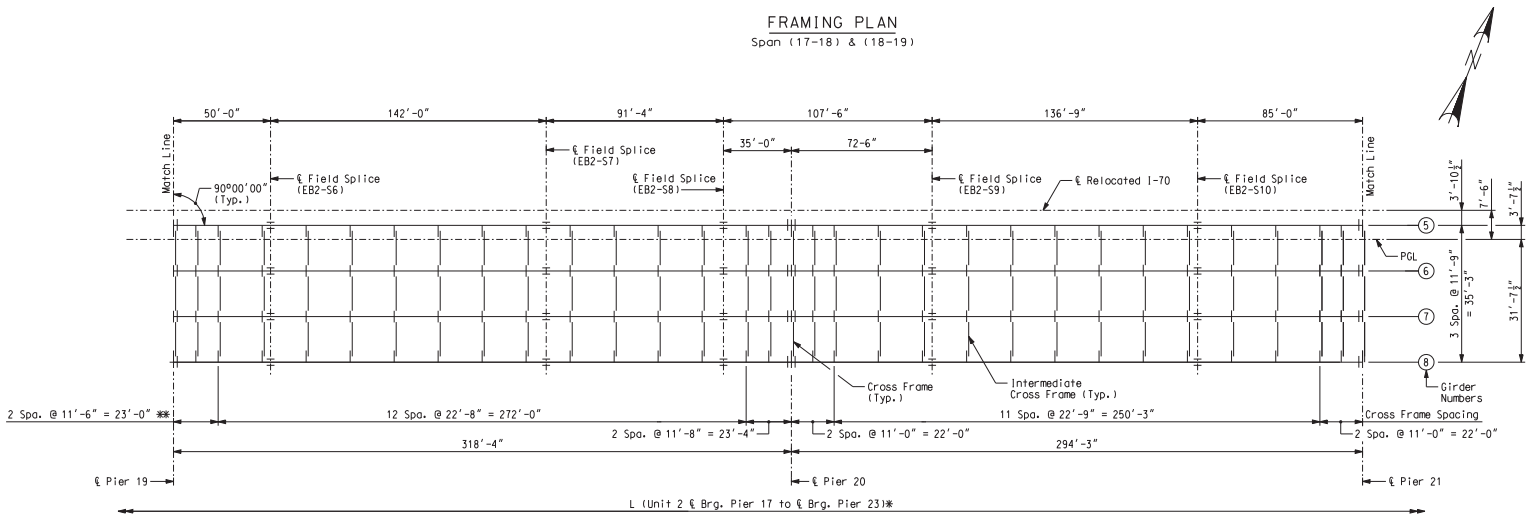

FRAMING PLAN

Span (19-20) & (20-21)

Notes:

Longitudinal dimensions are horizontal from centerline bearing to centerline bearing.

For girder elevation, see Sheet Nos. 61 thru 63.

For field splice detail, see Sheet Nos. 84 and 85.

For cross frame and diaphragm details, see Sheet No. 87.

For stiffener and miscellaneous steel details, see Sheet No. 88.

* For dimension L see Girder Dimensions table on Sheet No. 53.

** Intermediate Cross Frame Connection Plates shall be PL 5/8 x 9 1/2.

FRAMING PLAN EB - UNIT 2 (1 OF 2)

Detailed JUL 2009
Checked JUL 2009

Note: This drawing is not to scale. Follow dimensions.

Sheet No. 52 of 152

s:\idot\0906601\draw_idot\cadd_sheets\structural\B_A6500_052-152_J6I0984C_052.dgn

CONTRACT NO. 76D61

F.A. ROUTE	SECTION
999	82-1B-2
FED. AID PROJECT	ILLINOIS
COUNTY	ST. CLAIR

USER NAME = jjolliff
PLOT SCALE = $SCALE$
PLOT DATE = 3/8/2010

DESIGNED - HNTB
CHECKED - CMT
DRAWN - CMT / HTNB
REVISED -
REVISED -
REVISED -
REVISED -

ILLINOIS APPROACH STRUCTURE FOR NEW I-70 MISSISSIPPI RIVER BRIDGE

STATE OF ILLINOIS
DEPARTMENT OF TRANSPORTATION

MISSOURI HIGHWAYS AND TRANSPORTATION COMMISSION

HNTB
715 KIRK DRIVE
KANSAS CITY, MO 64105
TELEPHONE (816) 472-1201
CERTIFICATE OF AUTHORITY NO. 001270

CMT
CRAWFORD, MURPHY & TILLY, INC.
2750 WEST WASHINGTON STREET
SPRINGFIELD, IL 62702
TELEPHONE (217) 787-8050
ENGINEERING CORPORATION - 000631

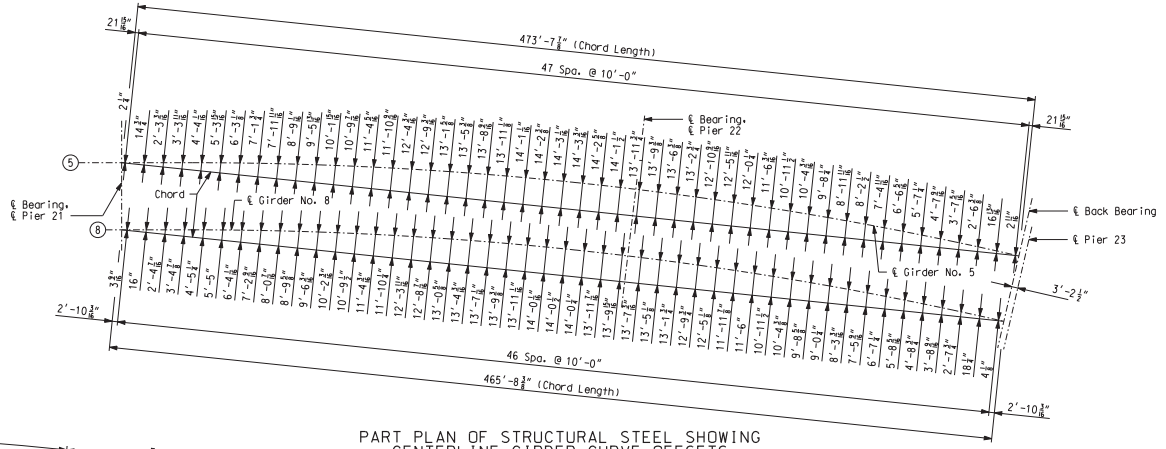

PART PLAN OF STRUCTURAL STEEL SHOWING CENTERLINE GIRDER CURVE OFFSETS

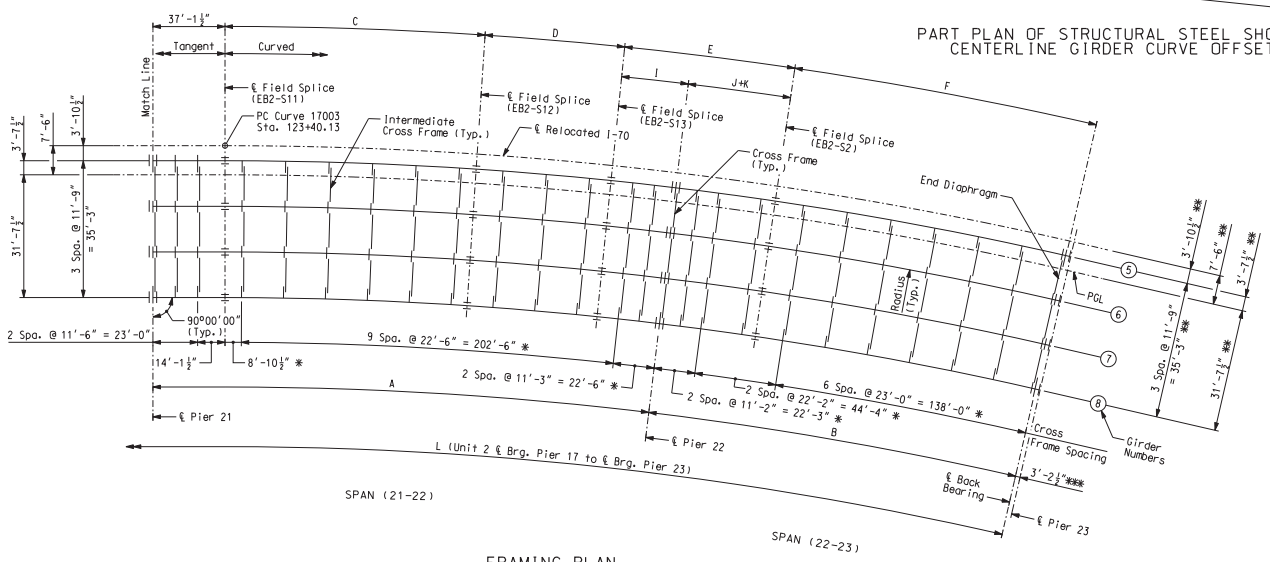

FRAMING PLAN
Span (21-22) & (22-23)

* Measured along ℄ Relocated I-70.
** Dimensions shown are measured radially.
*** ℄ Back Bearing is measured parallel to ℄ Pier 23

GIRDER DIMENSIONS

Girder	Radius (Feet)	Girder Length		Flange Length									Total Length
		A	B	C	D	E	F	G	H	I	J	K	L
℄ I-70	1952.500	271'-0"	204'-8"	-	-	-	-	-	-	-	-	-	-
Girder 5	1948.625	270'-1 3/4"	204'-3"	129'-8 1/4"	69'-10 3/8"	104'-2 1/4"	133'-9 7/8"	52'-11 5/8"	76'-9 3/4"	33'-9 5/8"	35'-2 1/4"	35'-2 3/8"	1625'-7 1/4"
Girder 6	1936.875	269'-1 1/2"	203'-0"	128'-11 1/2"	69'-5 3/8"	103'-7 1/4"	132'-11 7/8"	52'-7 3/4"	76'-3 1/4"	33'-7 1/4"	35'-0"	35'-0"	1622'-11 5/8"
Girder 7	1925.125	267'-8 3/8"	201'-9"	128'-2 1/8"	69'-0 1/4"	102'-11 1/2"	132'-2"	52'-4"	75'-10 1/4"	33'-4 3/4"	34'-9 1/2"	34'-9 1/2"	1620'-3 3/8"
Girder 8	1913.375	266'-3 3/4"	200'-6"	127'-4 3/4"	68'-7 1/4"	102'-4 1/4"	131'-4 1/8"	52'-0 1/8"	75'-4 3/8"	33'-2 1/4"	34'-7"	34'-7"	1617'-7 3/4"

Notes:
Longitudinal dimensions are horizontal arc dimensions from centerline bearing to centerline bearing.
For girder elevation and additional flange transition dimension information, see Sheet No. 63.
Diaphragms in curved portion of girders shall be placed radially.
For field splice detail, see Sheet Nos. 84 and 85.
For cross frame and diaphragm details, see Sheet No. 87.
For stiffener and miscellaneous steel details, see Sheet No. 88.

FRAMING PLAN EB - UNIT 2 (2 OF 2)

Detailed JUL 2009
Checked JUL 2009

Note: This drawing is not to scale. Follow dimensions.

s:\idot\0906601\draw_idot\cadd_sheets\structural\B_A6500_053-152_J6l0984C_053.dgn

CONTRACT NO. 76D61

F.A. ROUTE	SECTION
999	82-1B-2
FED. AID PROJECT	ILLINOIS
COUNTY	ST. CLAIR

USER NAME = jollirf
PLOT SCALE = $SCALE$
PLOT DATE = 3/8/2010
DESIGNED - HNTB
CHECKED - CMT
DRAWN - CMT / HTNB
REVISED -
REVISED -
REVISED -
REVISED -

ILLINOIS APPROACH STRUCTURE FOR NEW I-70 MISSISSIPPI RIVER BRIDGE

STATE OF ILLINOIS
DEPARTMENT OF TRANSPORTATION

MISSOURI HIGHWAYS AND TRANSPORTATION COMMISSION

HNTB
715 KIRK DRIVE
KANSAS CITY, MO 64105
TELEPHONE (816) 472-1201
CERTIFICATE OF AUTHORITY NO. 001270

CMT
CRAWFORD, MURPHY & TILLY, INC.
2750 WEST WASHINGTON STREET
SPRINGFIELD, IL 62702
TELEPHONE (217) 787-8050
ENGINEERING CORPORATION - 000631

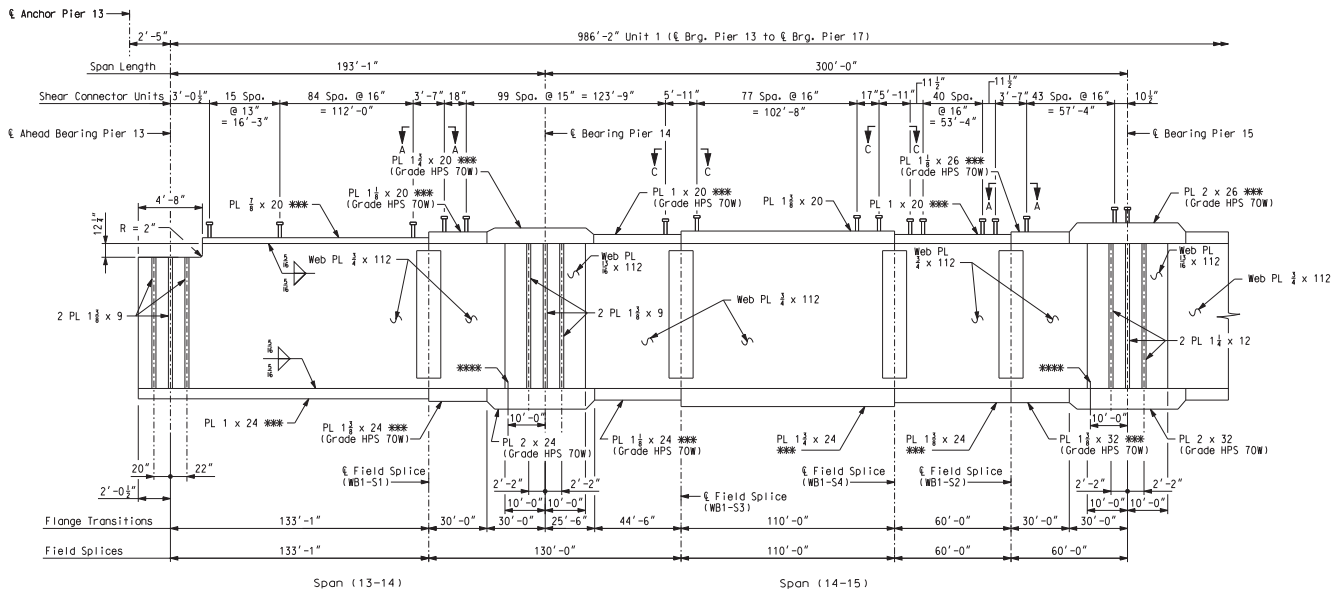

GIRDER ELEVATION
Spans (13-14) & (14-15)

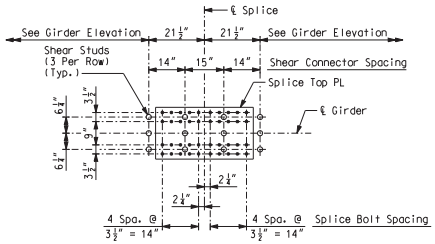

SPLICE PLATE PLAN VIEW A-A
(Field Splice Detail with Shear Studs)

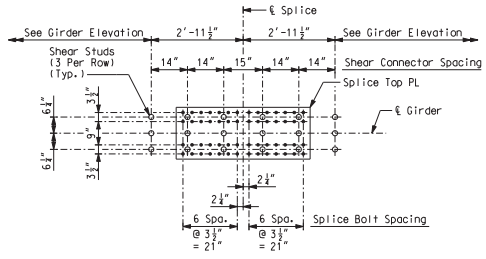

SPLICE PLATE PLAN VIEW C-C
(Field Splice Detail with Shear Studs)

Notes:
Plate girders shall be fabricated to be in accordance with the camber diagram shown on Sheet No. 66.
*** Indicates flange plates subject to notch toughness requirements. All web plates shall be subject to notch toughness requirements. All flange and web splice plates except fill plates shall be subject to notch toughness requirements.
Fabricated structural steel shall be ASTM A709 Grade 50W, except as noted.
Longitudinal dimensions are horizontal from ✱ bearing to ✱ bearing.
For Framing Plan, see Sheet No. 48.
For location of slab drain attachment holes, see slab drain details on Sheet Nos. 127 thru 130.
For detail of expansion device stiffener at Pier 13, see Sheet No. 88.
**** Drip plate, girder 1 only. See Sheet No. 88 for details.
For details of shear connectors, see Sheet No. 88.

CONTRACT NO. 76D61

F.A. ROUTE	SECTION
999	82-1B-2
FED. AID PROJECT	ILLINOIS
COUNTY	ST. CLAIR

USER NAME = jjolliff
PLOT SCALE = $SCALE$
PLOT DATE = 3/8/2010
DESIGNED - HNTB
CHECKED - CMT
DRAWN - CMT / HTNB
REVISED -
REVISED -
REVISED -
REVISED -

ILLINOIS APPROACH STRUCTURE FOR NEW I-70 MISSISSIPPI RIVER BRIDGE

STATE OF ILLINOIS
DEPARTMENT OF TRANSPORTATION

MISSOURI HIGHWAYS AND TRANSPORTATION COMMISSION

HNTB
715 KIRK DRIVE
KANSAS CITY, MO 64105
TELEPHONE (816) 472-1201
CERTIFICATE OF AUTHORITY NO. 001270

CMT
CRAWFORD, MURPHY & TILLY, INC.
2750 WEST WASHINGTON STREET
SPRINGFIELD, IL 62702
TELEPHONE (217) 787-8050
ENGINEERING CORPORATION - 000631

GIRDER ELEVATION WB - UNIT 1 (1 OF 2)

Detailed JUL 2009
Checked JUL 2009

Note: This drawing is not to scale. Follow dimensions.

s:\idot\0906601\draw_idot\cadd_sheets\structural\B_A6500_054-152_J6I0984C_054.dgn

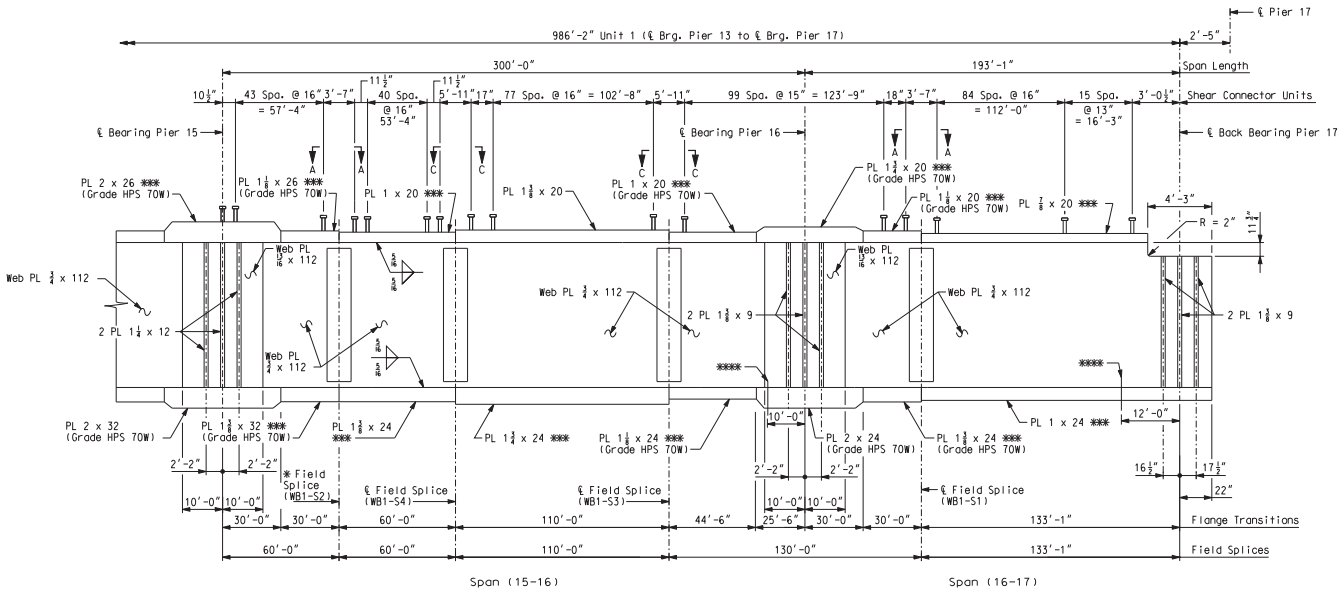

GIRDER ELEVATION
Spans (15-16) & (16-17)

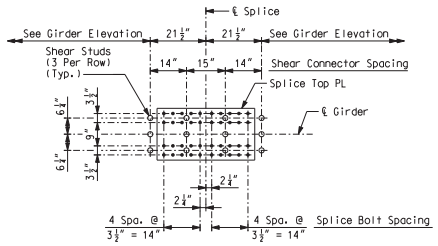

SPLICE PLATE PLAN VIEW A-A
(Field Splice Detail with Shear Studs)

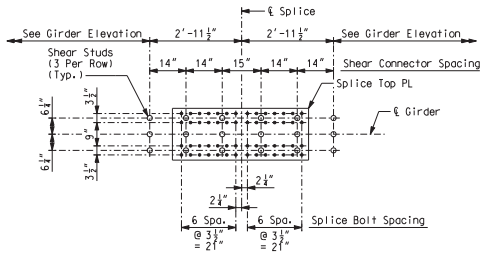

SPLICE PLATE PLAN VIEW C-C
(Field Splice Detail with Shear Studs)

Notes:
Plate girders shall be fabricated to be in accordance with the camber diagram shown on Sheet No. 67.
*** Indicates flange plates subject to notch toughness requirements. All web plates shall be subject to notch toughness requirements. All flange and web splice plates except fill plates shall be subject to notch toughness requirements.
Fabricated structural steel shall be ASTM A709 Grade 50W, except as noted.
Longitudinal dimensions are horizontal from * bearing to * bearing.
For Framing Plan, see Sheet No. 48.
For location of slab drain attachment holes, see slab drain details on Sheet Nos. 127 thru 130.
For detail of expansion device stiffener at Pier 17, see Sheet No. 88.
**** Drip plate, girder 1 only. See Sheet No. 88 for details.
For details of shear connectors, see Sheet No. 88.

CONTRACT NO. 76D61

F.A. ROUTE	SECTION
999	82-1B-2
FED. AID PROJECT	ILLINOIS
COUNTY	ST. CLAIR

USER NAME = jjolliff
PLOT SCALE = $SCALE$
PLOT DATE = 3/8/2010
DESIGNED - HNTB
CHECKED - CMT
DRAWN - CMT / HTNB
REVISED -
REVISED -
REVISED -
REVISED -

ILLINOIS APPROACH STRUCTURE FOR NEW I-70 MISSISSIPPI RIVER BRIDGE

STATE OF ILLINOIS
DEPARTMENT OF TRANSPORTATION

MISSOURI HIGHWAYS AND TRANSPORTATION COMMISSION

HNTB
715 KIRK DRIVE
KANSAS CITY, MO 64105
TELEPHONE (816) 472-1201
CERTIFICATE OF AUTHORITY NO. 001270

CMT
CRAWFORD, MURPHY & TILLY, INC.
2750 WEST WASHINGTON STREET
SPRINGFIELD, IL 62702
TELEPHONE (217) 787-8050
ENGINEERING CORPORATION - 000631

GIRDER ELEVATION WB - UNIT 1 (2 OF 2)

Detailed JUL 2009
Checked JUL 2009

Note: This drawing is not to scale. Follow dimensions.

s:\idot\0906601\draw_idot\cadd_sheets\structural\B_A6500_055-152_J6I0984C_055.dgn

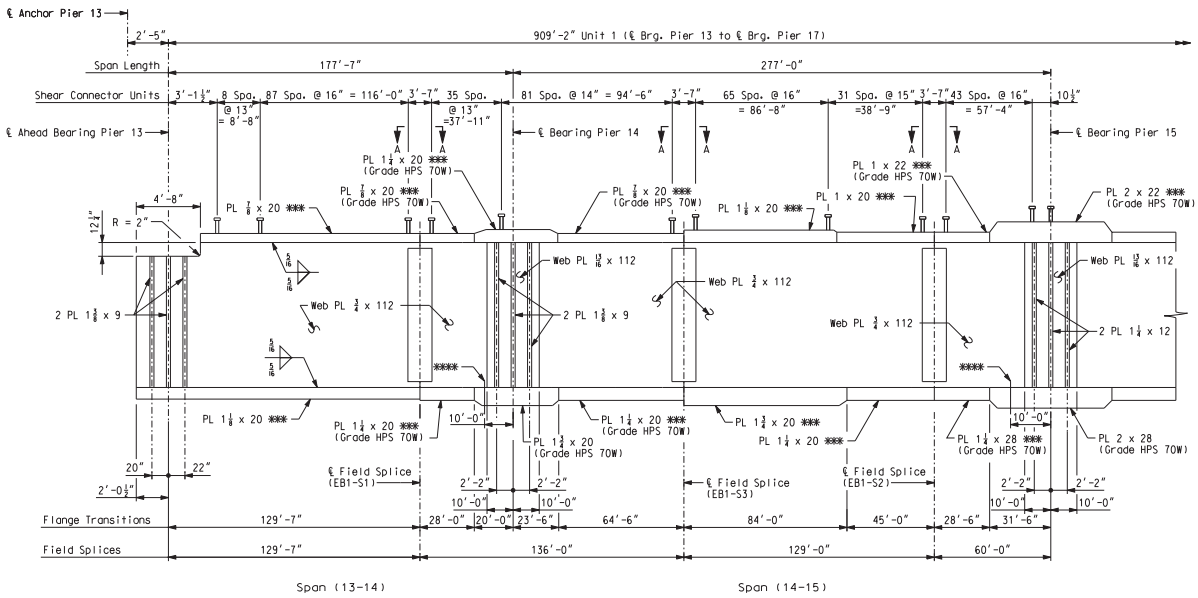

GIRDER ELEVATION
Spans (13-14) & (14-15)

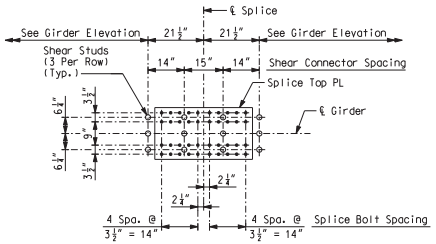

SPLICE PLATE PLAN VIEW A-A
(Field Splice Detail with Shear Studs)

Notes:
Plate girders shall be fabricated to be in accordance with the camber diagram shown on Sheet No. 68.
*** Indicates flange plates subject to notch toughness requirements.
All web plates shall be subject to notch toughness requirements.
All flange and web splice plates except fill plates shall be subject to notch toughness requirements.
Fabricated structural steel shall be ASTM A709 Grade 50W, except as noted.
Longitudinal dimensions are horizontal from * bearing to * bearing.
For Framing Plan, see Sheet No. 49.
For location of slab drain attachment holes, see slab drain details on Sheet Nos. 127 thru 130.
For detail of expansion device stiffener at Pier 13, see Sheet No. 88.
**** Drip plate, girder 8 only. See Sheet No. 88 for details.
For details of shear connectors, see Sheet No. 88.

CONTRACT NO. 76D61

F.A. ROUTE	SECTION
999	82-1B-2
FED. AID PROJECT	ILLINOIS
COUNTY	ST. CLAIR

USER NAME = jjolliff
PLOT SCALE = $SCALE$
PLOT DATE = 3/8/2010
DESIGNED - HNTB
CHECKED - CMT
DRAWN - CMT / HTNB
REVISED -
REVISED -
REVISED -
REVISED -

ILLINOIS APPROACH STRUCTURE FOR NEW I-70 MISSISSIPPI RIVER BRIDGE

STATE OF ILLINOIS
DEPARTMENT OF TRANSPORTATION

MISSOURI HIGHWAYS AND TRANSPORTATION COMMISSION

HNTB
715 KIRK DRIVE
KANSAS CITY, MO 64105
TELEPHONE (816) 472-1201
CERTIFICATE OF AUTHORITY NO. 001270

CMT
CRAWFORD, MURPHY & TILLY, INC.
2750 WEST WASHINGTON STREET
SPRINGFIELD, IL 62702
TELEPHONE (217) 787-8050
ENGINEERING CORPORATION - 000631

GIRDER ELEVATION EB - UNIT 1 (1 OF 2)

Detailed JUL 2009
Checked JUL 2009

Note: This drawing is not to scale. Follow dimensions.

s:\idot\0906601\draw_idot\cadd_sheets\structural\B_A6500_056-152_J6I0984C_056.dgn

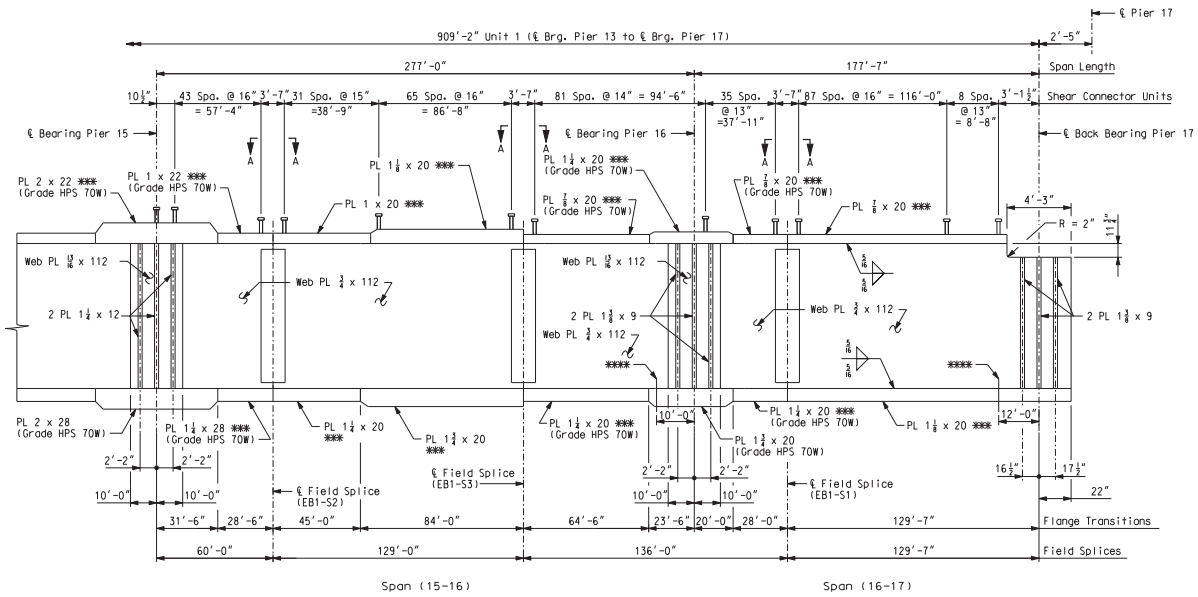

GIRDER ELEVATION
Spans (15-16) & (16-17)

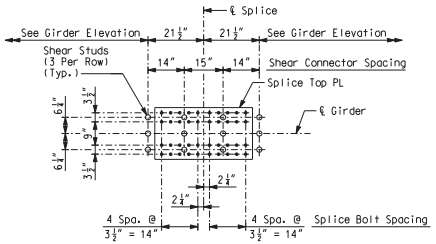

SPLICE PLATE PLAN VIEW A-A
(Field Splice Detail with Shear Studs)

Notes:
Plate girders shall be fabricated to be in accordance with the camber diagram shown on Sheet No. 69.
*** Indicates flange plates subject to notch toughness requirements. All web plates shall be subject to notch toughness requirements. All flange and web splice plates except fill plates shall be subject to notch toughness requirements.
Fabricated structural steel shall be ASTM A709 Grade 50W, except as noted.
Longitudinal dimensions are horizontal from ✱ bearing to ✱ bearing.
For Framing Plan, see Sheet No. 49.
For location of slab drain attachment holes, see slab drain details on Sheet Nos. 127 thru 130.
For detail of expansion device stiffener at Pier 17, see Sheet No. 88.
**** Drip plate, girder 8 only. See Sheet No. 88 for details.
For details of shear connectors, see Sheet No. 88.

GIRDER ELEVATION EB - UNIT 1 (2 OF 2)

Detailed JUL 2009
Checked JUL 2009

Note: This drawing is not to scale. Follow dimensions.

s:\idot\0906601\draw_idot\cadd_sheets\structural\B_A6500_057-152_J6I0984C_057.dgn

CONTRACT NO. 76D61

F.A. ROUTE	SECTION
999	82-1B-2
FED. AID PROJECT	ILLINOIS
COUNTY	ST. CLAIR

USER NAME = jjolliff
PLOT SCALE = $SCALE$
PLOT DATE = 3/8/2010
DESIGNED - HNTB
CHECKED - CMT
DRAWN - CMT / HTNB
REVISED -
REVISED -
REVISED -
REVISED -

ILLINOIS APPROACH STRUCTURE FOR NEW I-70 MISSISSIPPI RIVER BRIDGE

STATE OF ILLINOIS
DEPARTMENT OF TRANSPORTATION

MISSOURI HIGHWAYS AND TRANSPORTATION COMMISSION

HNTB
715 KIRK DRIVE
KANSAS CITY, MO 64105
TELEPHONE (816) 472-1201
CERTIFICATE OF AUTHORITY NO. 001270

CMT
CRAWFORD, MURPHY & TILLY, INC.
2750 WEST WASHINGTON STREET
SPRINGFIELD, IL 62702
TELEPHONE (217) 787-8050
ENGINEERING CORPORATION - 000631

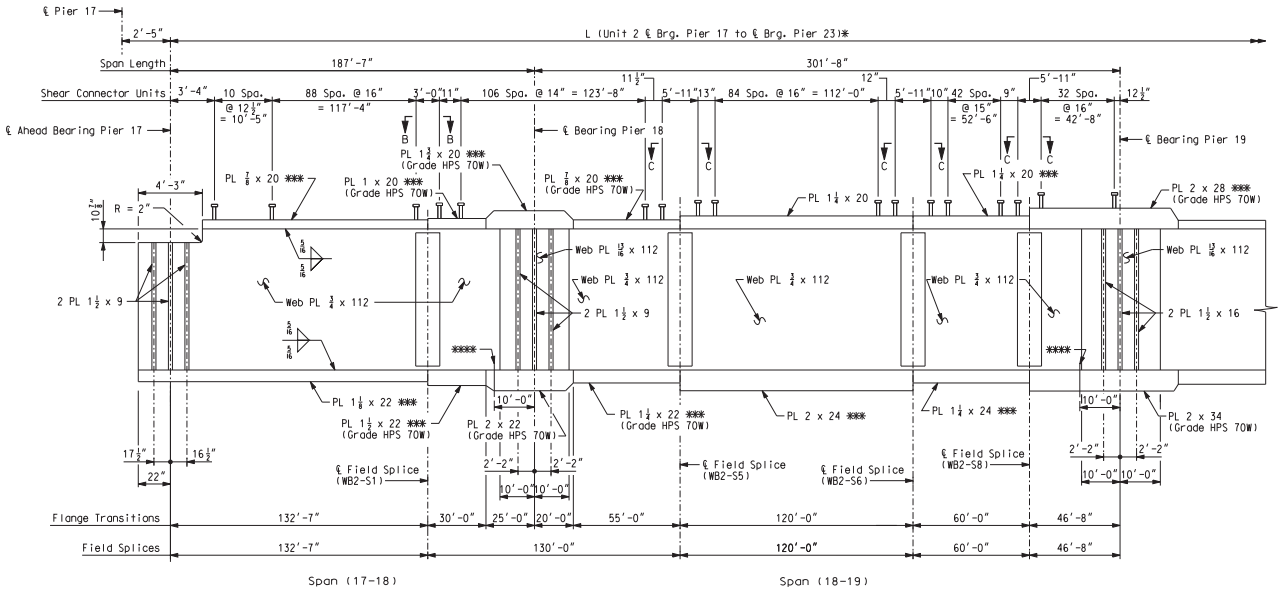

GIRDER ELEVATION
Spans (17-18) & (18-19)

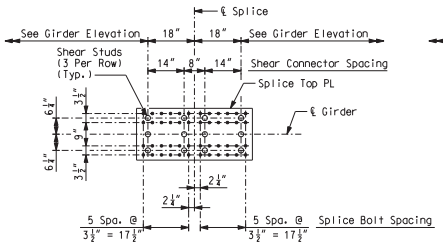

SPLICE PLATE PLAN VIEW B-B
(Field Splice Detail with Shear Studs)

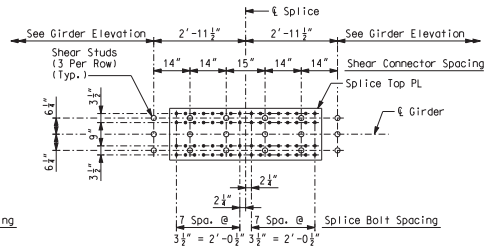

SPLICE PLATE PLAN VIEW C-C
(Field Splice Detail with Shear Studs)
(8 rows of Bolts Each Side of Splice Shown; 7 Row Configuration Similar)

Notes:
* For table of girder dimensions, see Sheet No. 51.
Plate girders shall be fabricated to be in accordance with the camber diagram shown on Sheet No. 70.
*** Indicates flange plates subject to notch toughness requirements.
All web plates shall be subject to notch toughness requirements.
All flange and web splice plates except fill plates shall be subject to notch toughness requirements.
Fabricated structural steel shall be ASTM A709 Grade 50W, except as noted.
Longitudinal dimensions are horizontal from ✱ bearing to ✱ bearing.
For Framing Plan, see Sheet No. 50.
For location of slab drain attachment holes, see slab drain details on Sheet Nos. 127 thru 130.
For detail of expansion device stiffener at Pier 17, see Sheet No. 88.
**** Drip plate, girder 1 only. See Sheet No. 88 for details.
For details of shear connectors, see Sheet No. 88.

GIRDER ELEVATION WB - UNIT 2 (1 OF 3)

Detailed JUL 2009
Checked JUL 2009

Note: This drawing is not to scale. Follow dimensions.

Sheet No. 58 of 152

s:\idot\0906601\draw_idot\cadd_sheets\structural\B_A6500_058-152_J6l0984C_058.dgn

CONTRACT NO. 76D61

F.A. ROUTE	SECTION
999	82-1B-2
FED. AID PROJECT	ILLINOIS
COUNTY	ST. CLAIR

USER NAME = jjolliff
PLOT SCALE = $SCALE$
PLOT DATE = 3/8/2010
DESIGNED - HNTB
CHECKED - CMT
DRAWN - CMT / HTNB
REVISED -
REVISED -
REVISED -
REVISED -

ILLINOIS APPROACH STRUCTURE
FOR NEW I-70 MISSISSIPPI RIVER BRIDGE

STATE OF ILLINOIS
DEPARTMENT OF TRANSPORTATION

MISSOURI HIGHWAYS
AND TRANSPORTATION COMMISSION

HNTB
715 KIRK DRIVE
KANSAS CITY, MO 64105
TELEPHONE (816) 472-1201
CERTIFICATE OF AUTHORITY
NO. 001270

CMT
CRAWFORD, MURPHY & TILLY, INC.
2750 WEST WASHINGTON STREET
SPRINGFIELD, IL 62702
TELEPHONE (217) 787-8050
ENGINEERING CORPORATION - 000631

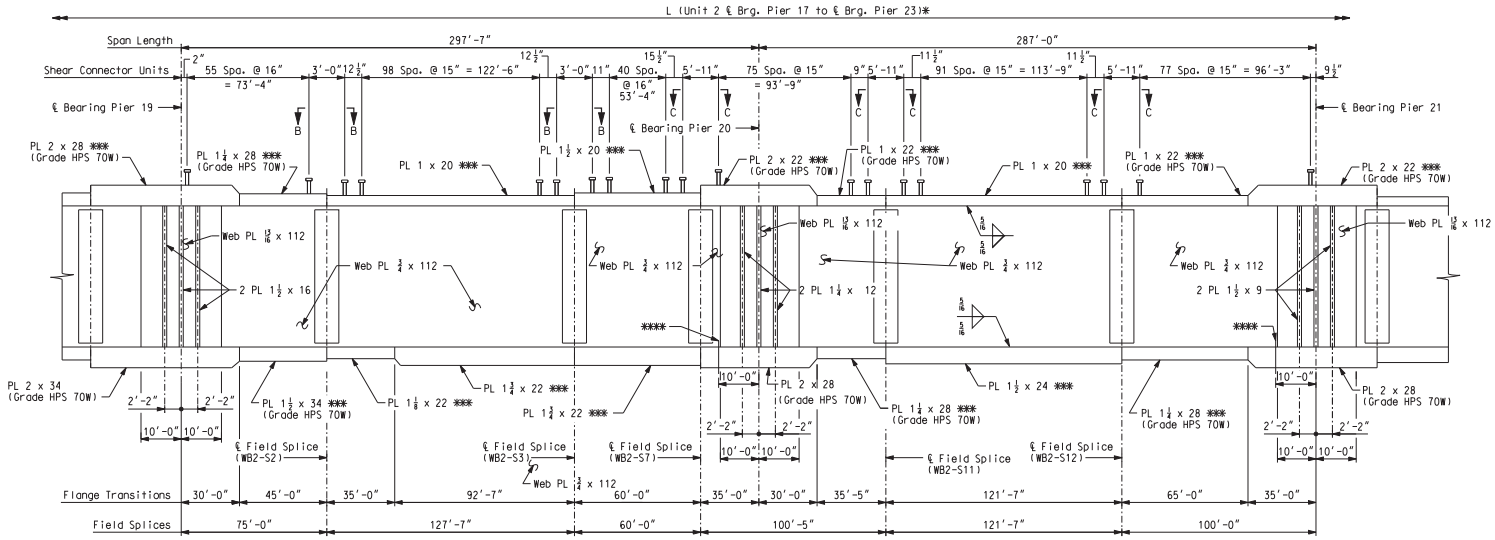

GIRDER ELEVATION
Spans (19-20) & (20-21)

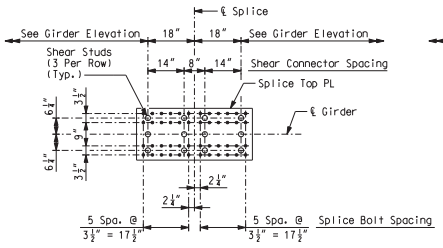

SPLICE PLATE PLAN VIEW B-B
(Field Splice Detail with Shear Studs)

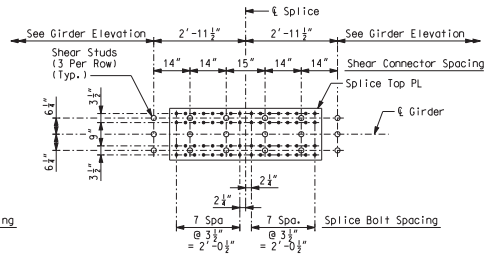

SPLICE PLATE PLAN VIEW C-C
(Field Splice Detail with Shear Studs)
(8 rows of Bolts Each Side of Splice Shown; 7 Row Configuration Similar)

Notes:
* For table of girder dimensions, see Sheet No. 51.
Plate girders shall be fabricated to be in accordance with the camber diagram shown on Sheet No. 71.
*** Indicates flange plates subject to notch toughness requirements.
All web plates shall be subject to notch toughness requirements.
All flange and web splice plates except fill plates shall be subject to notch toughness requirements.
Fabricated structural steel shall be ASTM A709 Grade 50W, except as noted.
Longitudinal dimensions are horizontal from * bearing to * bearing.
For Framing Plan, see Sheet No. 50.
For location of slab drain attachment holes, see slab drain details on Sheet Nos. 127 thru 130.
**** Drip plate, girder 1 only. See Sheet No. 88 for details.
For details of shear connectors, see Sheet No. 88.

CONTRACT NO. 76D61

F.A. ROUTE	SECTION
999	82-1B-2
FED. AID PROJECT	ILLINOIS
COUNTY	ST. CLAIR

USER NAME = jjolliff
PLOT SCALE = $SCALE$
PLOT DATE = 3/8/2010
DESIGNED - HNTB
CHECKED - CMT
DRAWN - CMT / HTNB
REVISED -
REVISED -
REVISED -
REVISED -

ILLINOIS APPROACH STRUCTURE FOR NEW I-70 MISSISSIPPI RIVER BRIDGE

STATE OF ILLINOIS
DEPARTMENT OF TRANSPORTATION

MISSOURI HIGHWAYS AND TRANSPORTATION COMMISSION

HNTB
715 KIRK DRIVE
KANSAS CITY, MO 64105
TELEPHONE (816) 472-1201
CERTIFICATE OF AUTHORITY NO. 001270

CMT
CRAWFORD, MURPHY & TILLY, INC.
2750 WEST WASHINGTON STREET
SPRINGFIELD, IL 62702
TELEPHONE (217) 787-8050
ENGINEERING CORPORATION - 000631

Detailed JUL 2009
Checked JUL 2009

Note: This drawing is not to scale. Follow dimensions.

GIRDER ELEVATION WB - UNIT 2 (2 OF 3)

s:\idot\0906601\draw_idot\cadd_sheets\structural\B_A6500_059-152_J6I0984C_059.dgn

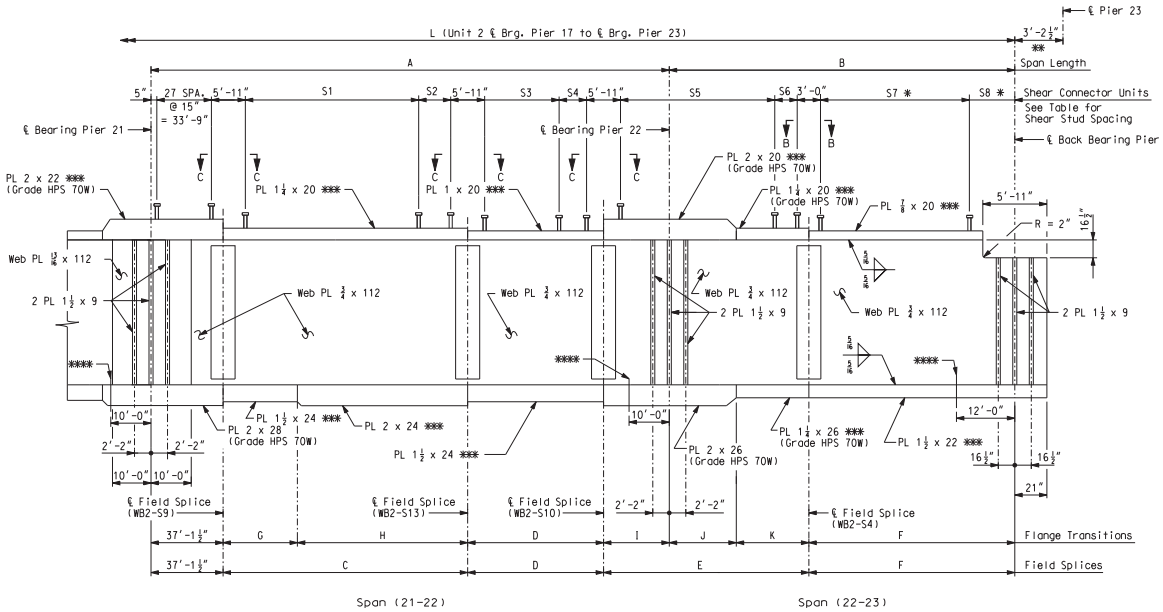

GIRDER ELEVATION
Spans (21-22) & (22-23)

SHEAR STUD SPACING								
Location	S1	S2	S3	S4	S5	S6	S7 *	S8 *
Girder 1	94 Spa. @ 16" = 125'-4"	16⅜"	48 Spa. @ 16" = 64'-0"	17⅞"	82 Spa. @ 15" = 102'-6"	11⅛"	111 Spa. @ 14" = 129'-6"	4'-5⅜"
Girder 2	94 Spa. @ 16" = 125'-4"	7"	48 Spa. @ 16" = 64'-0"	12¼"	81 Spa. @ 15" = 101'-3"	18½"	110 Spa. @ 14" = 128'-4"	4'-10⅛"
Girder 3	93 Spa. @ 16" = 124'-0"	13⅜"	48 Spa. @ 16" = 64'-0"	7¾"	81 Spa. @ 15" = 101'-3"	10⅛"	109 Spa. @ 14" = 127'-2"	5'-2¼"
Girder 4	92 Spa. @ 16" = 122'-8"	20⅛"	47 Spa. @ 16" = 62'-8"	18¾"	80 Spa. @ 15" = 100'-0"	18¼"	109 Spa. @ 14" = 127'-2"	4'-4½"

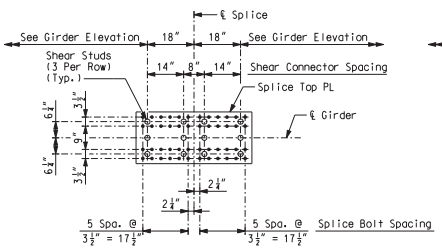

SPLICE PLATE PLAN VIEW B-B
(Field Splice Detail with Shear Studs)

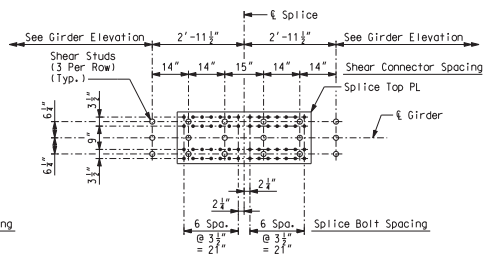

SPLICE PLATE PLAN VIEW C-C
(Field Splice Detail with Shear Studs)

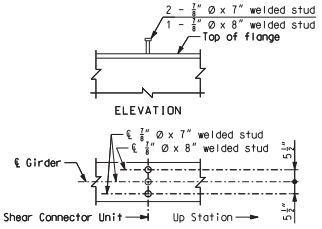

* DETAILS OF SHEAR CONNECTORS FOR S7 AND S8

For total weight of shear connectors, see Sheet No. 88.
Shear connectors shall be in accordance with Sec 712, 1037, and 1080.

Notes:
** * Back Bearing is measured parallel to * Pier 23.
Plate girders shall be fabricated to be in accordance with the camber diagram shown on Sheet No. 72.
*** Indicates flange plates subject to notch toughness requirements.
All web plates shall be subject to notch toughness requirements.
All flange and web splice plates except fill plates shall be subject to notch toughness requirement.
Fabricated structural steel shall be ASTM A709 Grade 50W, except as noted.
Longitudinal dimensions are horizontal arc dimensions from * bearing to * bearing.
For Framing Plan, see Sheet No. 51.
For location of slab drain attachment holes, see slab drain details on Sheet Nos. 127 thru 130.
For detail of expansion device stiffener at Pier 23, see Sheet No. 88.
**** Drip plate, girder 1 only. See Sheet No. 88 for details.
For table of Girder Dimensions, see Sheet No. 51.
For details of shear connectors not shown, see Sheet No. 88.

GIRDER ELEVATION WB - UNIT 2 (3 OF 3)

CONTRACT NO. 76D61

F.A. ROUTE	SECTION
999	82-1B-2
FED. AID PROJECT	ILLINOIS
COUNTY	ST. CLAIR

USER NAME = jjolliff
PLOT SCALE = $SCALE$
PLOT DATE = 3/8/2010
DESIGNED - HNTB
CHECKED - CMT
DRAWN - CMT / HTNB
REVISED -
REVISED -
REVISED -
REVISED -

ILLINOIS APPROACH STRUCTURE FOR NEW I-70 MISSISSIPPI RIVER BRIDGE

STATE OF ILLINOIS
DEPARTMENT OF TRANSPORTATION

MISSOURI HIGHWAYS AND TRANSPORTATION COMMISSION

HNTB
715 KIRK DRIVE
KANSAS CITY, MO 64105
TELEPHONE (816) 472-1201
CERTIFICATE OF AUTHORITY NO. 001270

CMT
CRAWFORD, MURPHY & TILLY, INC.
2750 WEST WASHINGTON STREET
SPRINGFIELD, IL 62702
TELEPHONE (217) 787-8050
ENGINEERING CORPORATION - 000631

Detailed JUL 2009
Checked JUL 2009

Note: This drawing is not to scale. Follow dimensions.

s:\idot\0906601\draw_idot\cadd_sheets\structural\B_A6500_060-152_J6I0984C_060.dgn

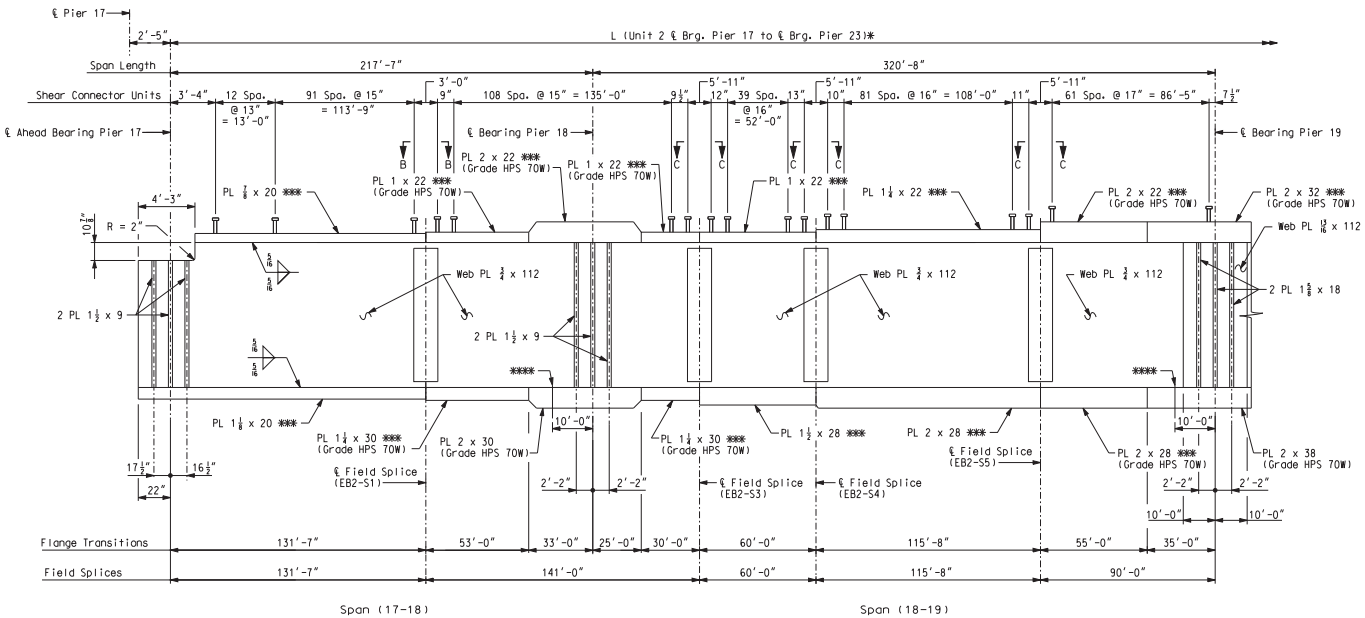

GIRDER ELEVATION
Spans (17-18) & (18-19)

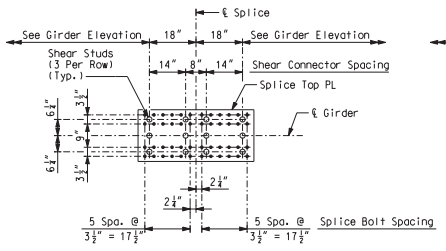

SPLICE PLATE PLAN VIEW B-B
(Field Splice Detail with Shear Studs)

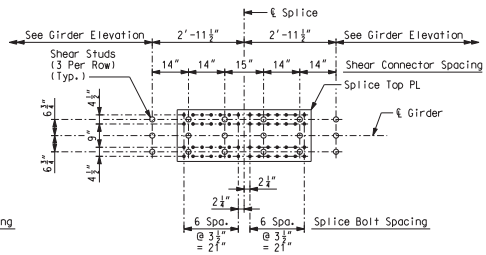

SPLICE PLATE PLAN VIEW C-C
(Field Splice Detail with Shear Studs)

Notes:
* For Table of Dimensions, see Sheet No. 53.
All dimensions measured along ℄ Relocated I-70.
Plate girders shall be fabricated to be in accordance with the camber diagram shown on Sheet No. 73.
*** Indicates flange plates subject to notch toughness requirements.
All web plates shall be subject to notch toughness requirements.
All flange and web splice plates except fill plates shall be subject to notch toughness requirements.
Fabricated structural steel shall be ASTM A709 Grade 50W, except as noted.
Longitudinal dimensions are horizontal from ℄ bearing to ℄ bearing.
For Framing Plan, see Sheet No. 52.
For location of slab drain attachment holes, see slab drain details on Sheet Nos. 127 thru 130.
For detail of expansion device stiffener at Pier 17, see Sheet No. 88.
**** Drip plate, girder 8 only. See Sheet No. 88 for details.
For details of shear connectors, see Sheet No. 88.

CONTRACT NO. 76D61

F.A. ROUTE	SECTION
999	82-1B-2
FED. AID PROJECT	ILLINOIS
COUNTY	ST. CLAIR

USER NAME = jjolliff
PLOT SCALE = $SCALE$
PLOT DATE = 3/8/2010
DESIGNED - HNTB
CHECKED - CMT
DRAWN - CMT / HTNB
REVISED -
REVISED -
REVISED -
REVISED -

ILLINOIS APPROACH STRUCTURE FOR NEW I-70 MISSISSIPPI RIVER BRIDGE

STATE OF ILLINOIS
DEPARTMENT OF TRANSPORTATION

MISSOURI HIGHWAYS AND TRANSPORTATION COMMISSION

HNTB
715 KIRK DRIVE
KANSAS CITY, MO 64105
TELEPHONE (816) 472-1201
CERTIFICATE OF AUTHORITY NO. 001270

CMT
CRAWFORD, MURPHY & TILLY, INC.
2750 WEST WASHINGTON STREET
SPRINGFIELD, IL 62702
TELEPHONE (217) 787-8050
ENGINEERING CORPORATION - 000631

GIRDER ELEVATION EB - UNIT 2 (1 OF 3)

Detailed JUL 2009
Checked JUL 2009

Note: This drawing is not to scale. Follow dimensions.

s:\idot\0906601\draw_idot\cadd_sheets\structural\B_A6500_061-152_J6I0984C_061.dgn

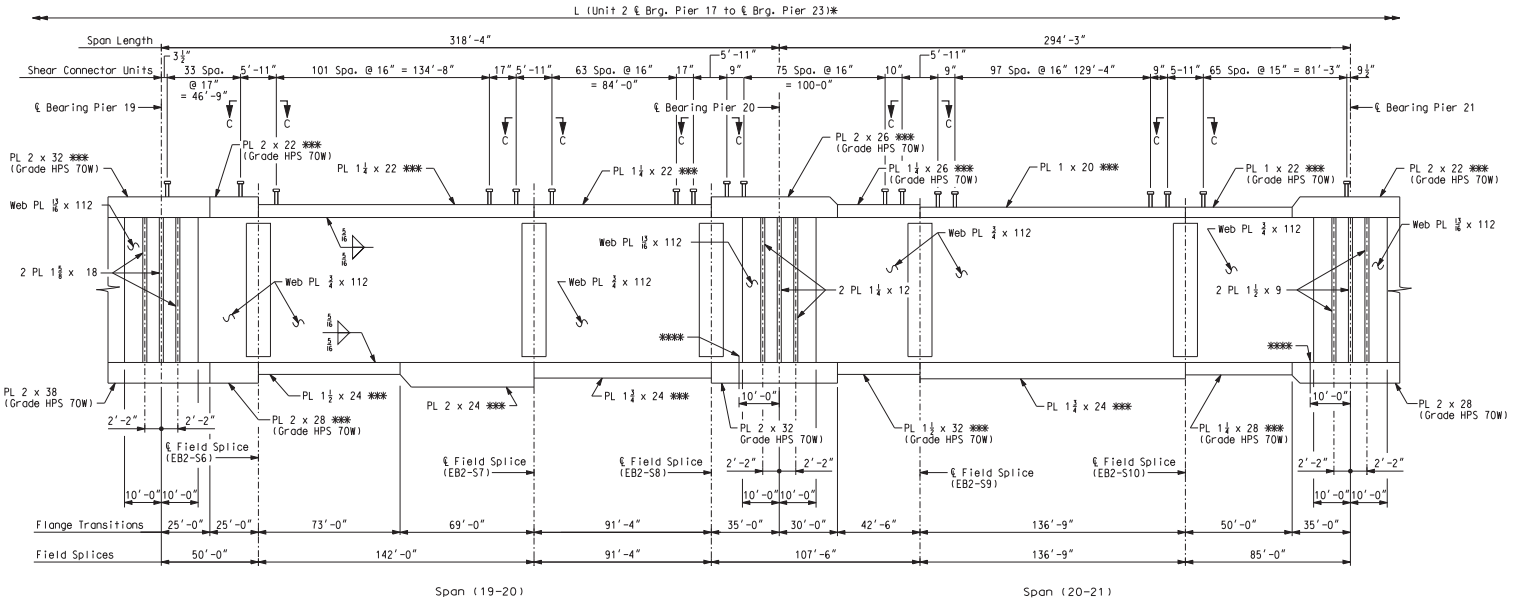

GIRDER ELEVATION
Spans (19-20) & (20-21)

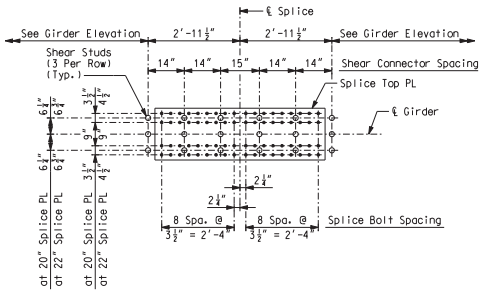

SPLICE PLATE PLAN VIEW C-C
(Field Splice Detail with Shear Studs)
(9 rows of Bolts Each Side of Splice Shown; 7 Row Configuration Similar)

Notes:
* For table of Girder Dimension, see Sheet No. 53.
All dimensions measured along ℄ Relocated I-70.
Plate girders shall be fabricated to be in accordance with the camber diagram shown on Sheet No. 74.
*** Indicates flange plates subject to notch toughness requirements.
All web plates shall be subject to notch toughness requirements.
All flange and web splice plates except fill plates shall be subject to notch toughness requirements.
Fabricated structural steel shall be ASTM A709 Grade 50W, except as noted.
Longitudinal dimensions are horizontal from ℄ bearing to ℄ bearing.
For Framing Plan, see Sheet No. 52.
For location of slab drain attachment holes, see slab drain details on Sheet Nos. 127 thru 130.
**** Drip plate, girder 8 only. See Sheet No. 88 for details.
For details of shear connectors, see Sheet No. 88.

GIRDER ELEVATION EB - UNIT 2 (2 OF 3)

Detailed JUL 2009
Checked JUL 2009

Note: This drawing is not to scale. Follow dimensions.

Sheet No. 62 of 152

s:\idot\0906601\draw_idot\cadd_sheets\structural\B_A6500_062-152_J6l0984C_062.dgn

CONTRACT NO. 76D61

F.A. ROUTE	SECTION
999	82-1B-2
FED. AID PROJECT	ILLINOIS
COUNTY	ST. CLAIR

USER NAME = jjolliff
PLOT SCALE = *SCALE*
PLOT DATE = 3/8/2010
DESIGNED - HNTB
CHECKED - CMT
DRAWN - CMT / HTNB
REVISED -
REVISED -
REVISED -
REVISED -

ILLINOIS APPROACH STRUCTURE FOR NEW I-70 MISSISSIPPI RIVER BRIDGE

STATE OF ILLINOIS
DEPARTMENT OF TRANSPORTATION

MISSOURI HIGHWAYS AND TRANSPORTATION COMMISSION

HNTB
715 KIRK DRIVE
KANSAS CITY, MO 64105
TELEPHONE (816) 472-1201
CERTIFICATE OF AUTHORITY NO. 001270

CMT
CRAWFORD, MURPHY & TILLY, INC.
2750 WEST WASHINGTON STREET
SPRINGFIELD, IL 62702
TELEPHONE (217) 787-8050
ENGINEERING CORPORATION - 000631

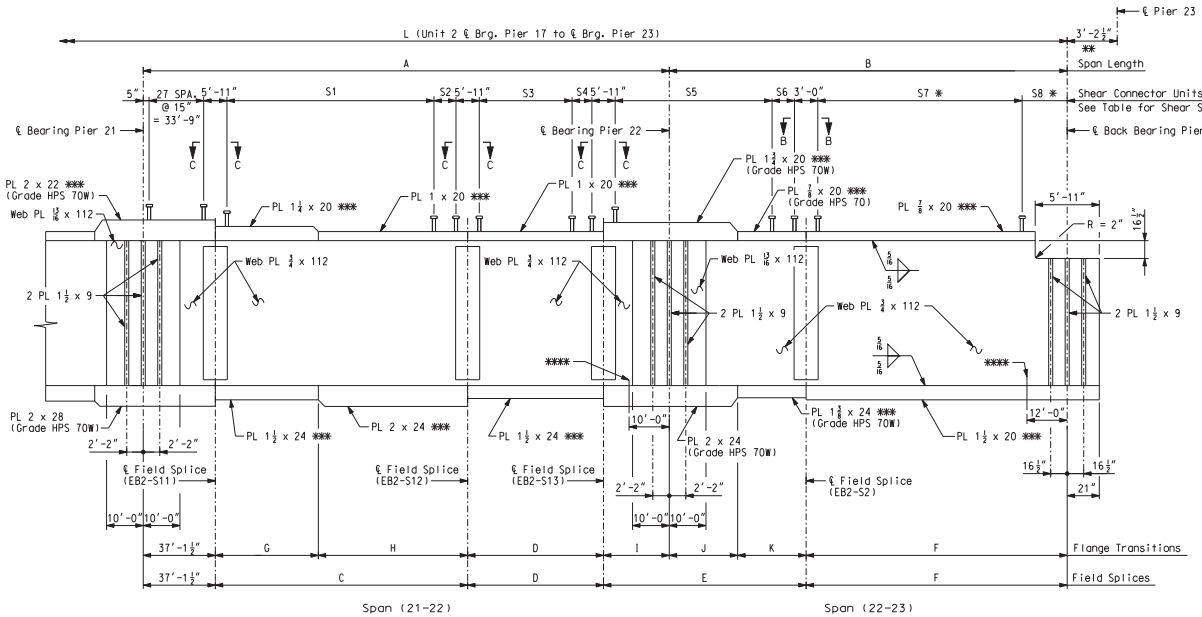

GIRDER ELEVATION

Spans (21-22) & (22-23)

SHEAR STUD SPACING							
Location	S1	S2	S3	S4	S5	S6	S7 *	S8 *
Girder 5	92 Spa. @ 16" = 122'-8"	14"	50 Spa. @ 15" = 62'-6"	17⅜"	79 Spa. @ 15" = 98'-9"	12⅜"	109 Spa. @ 14" = 127'-2"	5'-1⅞"
Girder 6	91 Spa. @ 16" = 121'-4"	20⅜"	50 Spa. @ 15" = 62'-6"	12⅜"	78 Spa. @ 15" = 97'-6"	19⅜"	108 Spa. @ 14" = 126'-0"	5'-5⅜"
Girder 7	91 Spa. @ 16" = 121'-4"	11¼"	50 Spa. @ 15" = 62'-6"	7¼"	78 Spa. @ 15" = 97'-6"	12¼"	108 Spa. @ 14" = 126'-0"	4'-8"
Girder 8	90 Spa. @ 16" = 120'-0"	17¾"	49 Spa. @ 15" = 61'-3"	17¾"	77 Spa. @ 15" = 96'-3"	19¾"	107 Spa. @ 14" = 124'-10"	5'-0⅛"

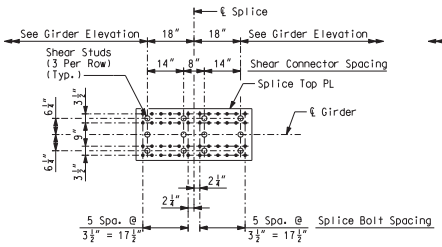

SPLICE PLATE PLAN VIEW B-B

(Field Splice Detail with Shear Studs)

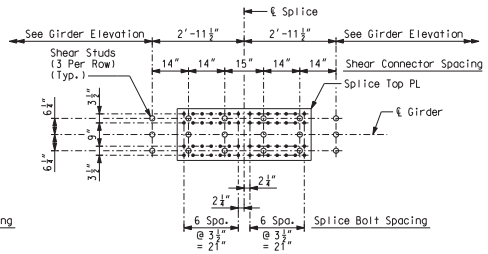

SPLICE PLATE PLAN VIEW C-C

(Field Splice Detail with Shear Studs)

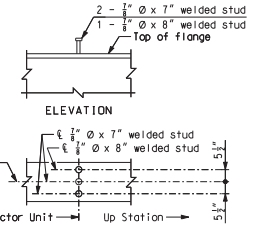

* DETAILS OF SHEAR CONNECTORS FOR S7 AND S8

For total weight of shear connectors, see Sheet No. 88.
Shear connectors shall be in accordance with Sec 712, 1037, and 1080.

Notes:
** ℄ Back Bearing is measured parallel to ℄ Pier 23.
Plate girders shall be fabricated to be in accordance with the camber diagram shown on Sheet No. 75.
*** Indicates flange plates subject to notch toughness requirements.
All web plates shall be subject to notch toughness requirements.
All flange and web splice plates except fill plates shall be subject to notch toughness requirements.
Fabricated structural steel shall be ASTM A709 Grade 50W, except as noted.
Longitudinal dimensions are horizontal arc dimensions from ℄ bearing to ℄ bearing.
For Framing Plan, see Sheet No. 53.
For location of slab drain attachment holes, see slab drain details on Sheet Nos. 127 thru 130.
For detail of expansion device stiffener at Pier 23, see Sheet No. 88.
For table of Girder Dimensions, see Sheet No. 53.
**** Drip plate, girder 8 only. See Sheet No. 88 for details.
For details of shear connectors not shown, see Sheet No. 88.

GIRDER ELEVATION EB - UNIT 2 (3 OF 3)

CONTRACT NO. 76D61

F.A. ROUTE	SECTION
999	82-1B-2
FED. AID PROJECT	ILLINOIS
COUNTY	ST. CLAIR

USER NAME = jjollff
PLOT SCALE = $SCALE$
PLOT DATE = 3/8/2010
DESIGNED - HNTB
CHECKED - CMT
DRAWN - CMT / HTNB
REVISED -
REVISED -
REVISED -
REVISED -

ILLINOIS APPROACH STRUCTURE FOR NEW I-70 MISSISSIPPI RIVER BRIDGE

STATE OF ILLINOIS
DEPARTMENT OF TRANSPORTATION

MISSOURI HIGHWAYS AND TRANSPORTATION COMMISSION

HNTB
715 KIRK DRIVE
KANSAS CITY, MO 64105
TELEPHONE (816) 472-1201
CERTIFICATE OF AUTHORITY NO. 001270

CMT
CRAWFORD, MURPHY & TILLY, INC.
2750 WEST WASHINGTON STREET
SPRINGFIELD, IL 62702
TELEPHONE (217) 787-8050
ENGINEERING CORPORATION - 000631

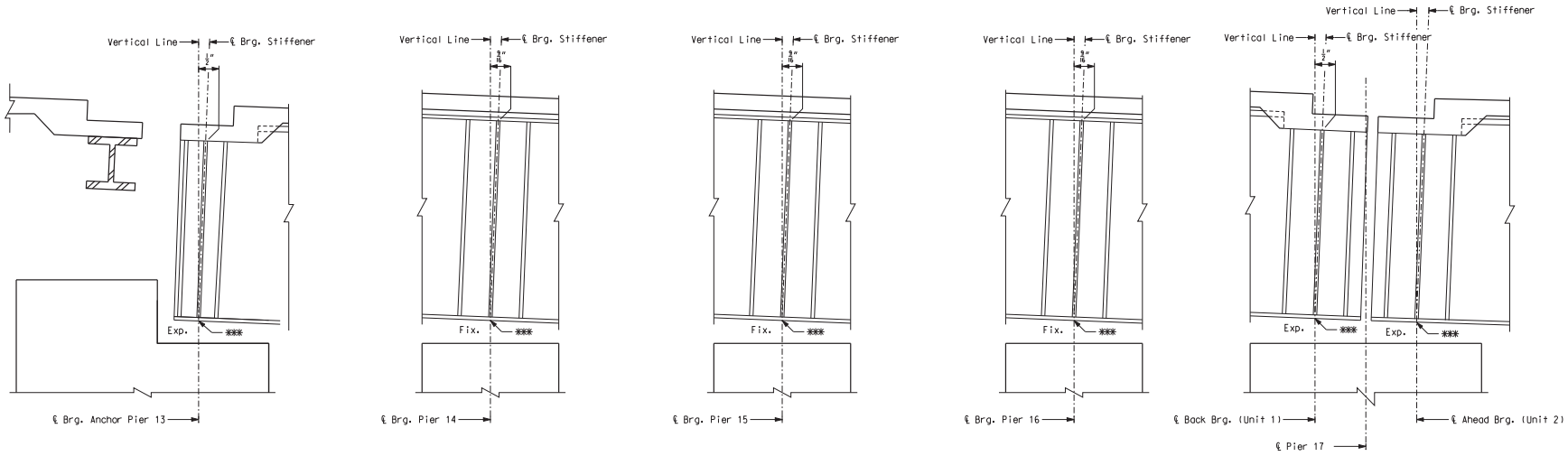

PART LONGITUDINAL SECTION

Notes:
*** Point of Rotation located at bottom of flange.
Dimensions shown are the horizontal dimension at the top of web.

CONTRACT NO. 76D61

F.A. ROUTE	SECTION
999	82-1B-2
FED. AID PROJECT	ILLINOIS
COUNTY	ST. CLAIR

USER NAME = jjolliff
PLOT SCALE = $SCALE$
PLOT DATE = 3/8/2010
DESIGNED - HNTB
CHECKED - CMT
DRAWN - CMT / HTNB
REVISED -
REVISED -
REVISED -
REVISED -

ILLINOIS APPROACH STRUCTURE
FOR NEW I-70 MISSISSIPPI RIVER BRIDGE

STATE OF ILLINOIS
DEPARTMENT OF TRANSPORTATION

MISSOURI HIGHWAYS
AND TRANSPORTATION COMMISSION

HNTB
715 KIRK DRIVE
KANSAS CITY, MO 64105
TELEPHONE (816) 472-1201
CERTIFICATE OF AUTHORITY
NO. 001270

CMT
CRAWFORD, MURPHY & TILLY, INC.
2750 WEST WASHINGTON STREET
SPRINGFIELD, IL 62702
TELEPHONE (217) 787-8050
ENGINEERING CORPORATION - 000631

Detailed JUL 2009
Checked JUL 2009

Note: This drawing is not to scale. Follow dimensions.

PART LONGITUDINAL SECTION - UNIT 1 EB AND WB

s:\idot\0906601\draw_idot\cadd_sheets\structural\B_A6500_064-152_J6I0984C_064.dgn

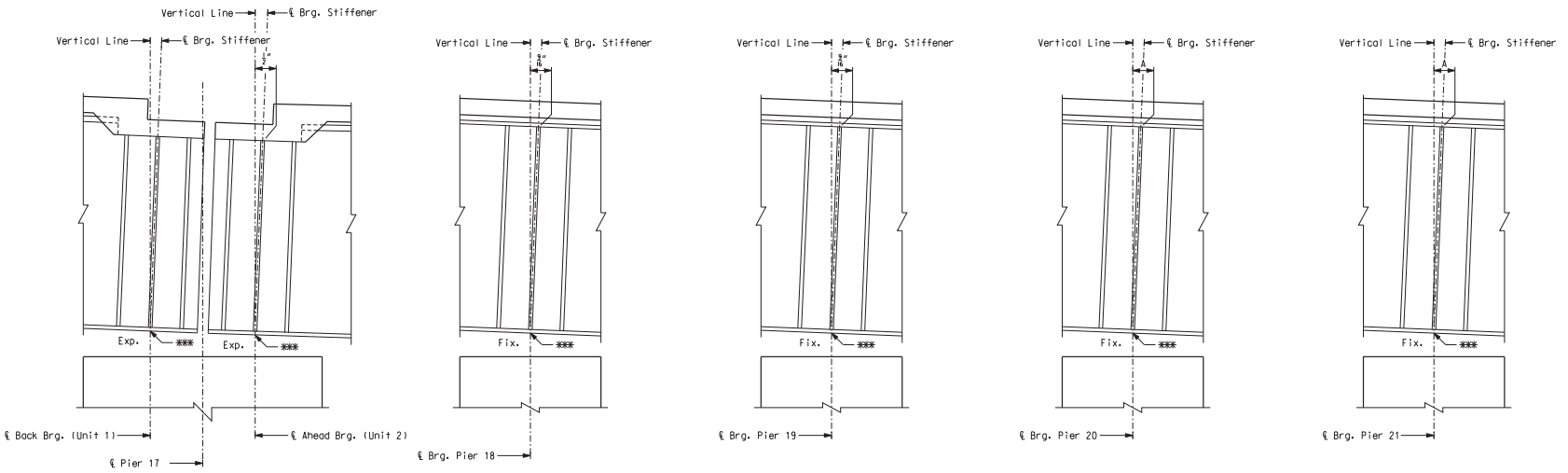

PART LONGITUDINAL SECTION

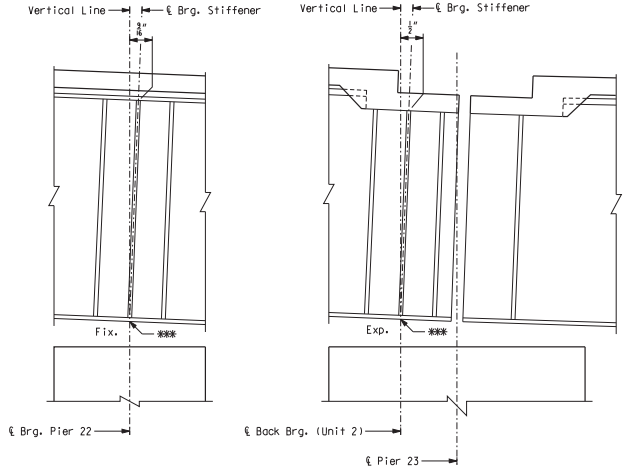

PART LONGITUDINAL SECTION

TABLE OF TILT DIMENSIONS "A"		
Location	Pier 20	Pier 21
Girder 1	0"	0"
Girder 2	3/16"	3/16"
Girder 3	7/16"	7/16"
Girder 4	5/8"	5/8"
Girder 5	9/16"	1/2"
Girder 6	9/16"	3/4"
Girder 7	9/16"	15/16"
Girder 8	9/16"	1 3/16"

Notes:
*** Point of Rotation located at bottom of flange. Dimensions shown and Dimension "A" are the horizontal dimension at the top of web.

PART LONGITUDINAL SECTION - UNIT 2 EB AND WB

CONTRACT NO. 76D61

F.A. ROUTE	SECTION
999	82-1B-2
FED. AID PROJECT	ILLINOIS
COUNTY	ST. CLAIR

USER NAME = jjolliff
PLOT SCALE = $SCALE$
PLOT DATE = 3/8/2010
DESIGNED - HNTB
CHECKED - CMT
DRAWN - CMT / HTNB
REVISED -
REVISED -
REVISED -
REVISED -

ILLINOIS APPROACH STRUCTURE FOR NEW I-70 MISSISSIPPI RIVER BRIDGE

STATE OF ILLINOIS
DEPARTMENT OF TRANSPORTATION

MISSOURI HIGHWAYS AND TRANSPORTATION COMMISSION

HNTB
715 KIRK DRIVE
KANSAS CITY, MO 64105
TELEPHONE (816) 472-1201
CERTIFICATE OF AUTHORITY NO. 001270

CMT
CRAWFORD, MURPHY & TILLY, INC.
2750 WEST WASHINGTON STREET
SPRINGFIELD, IL 62702
TELEPHONE (217) 787-8050
ENGINEERING CORPORATION - 000631

Detailed JUL 2009
Checked JUL 2009

Note: This drawing is not to scale. Follow dimensions.

s:\idot\0906601\draw_idot\cadd_sheets\structural\B_A6500_065-152_J6I0984C_065.dgn

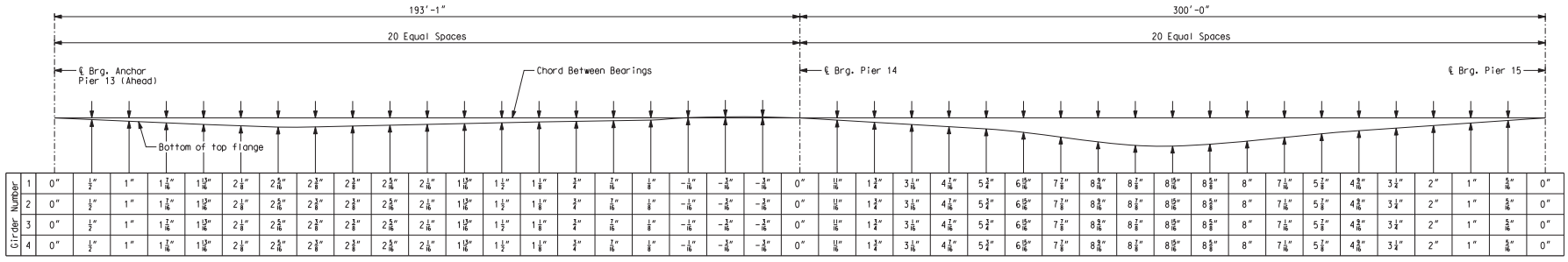

| Girder Number | | |

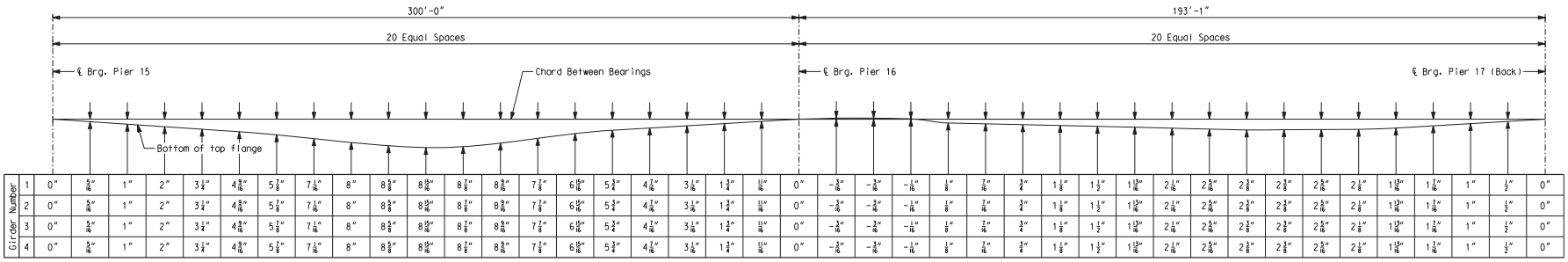

| Girder Number | | |

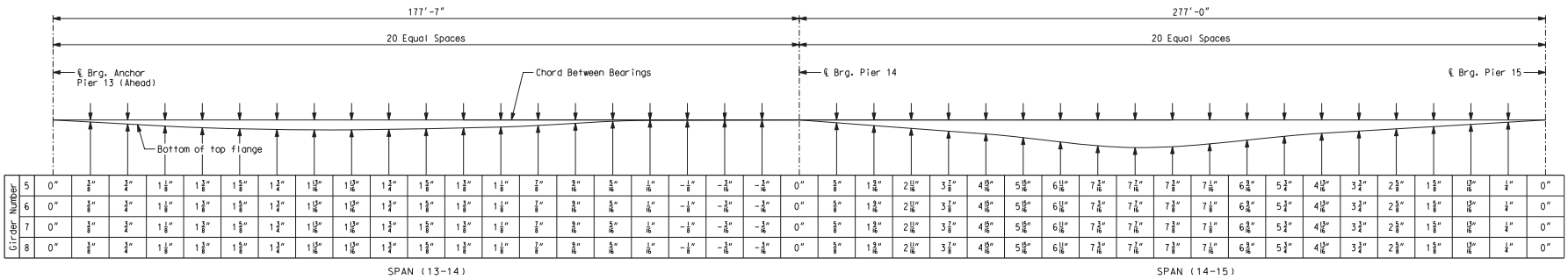

DEAD LOAD DEFLECTIONS

Notes:
24% of dead load deflection in span (13-14) and 29% of dead load deflection in span (14-15) is due to the weight of structural steel.
Dead load deflection includes weight of structural steel, concrete slab, and barrier curbs.
Negative values indicate upward deflection.

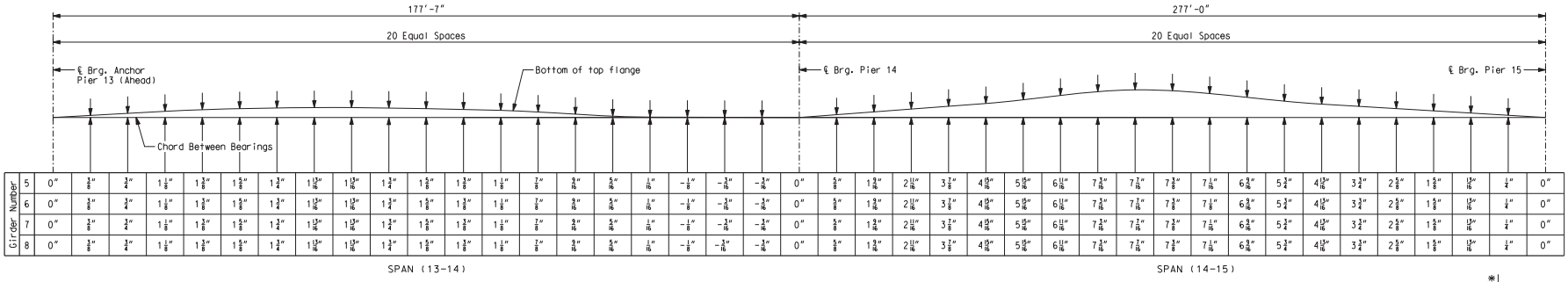

CAMBER DIAGRAM

Notes:
Camber includes allowance for dead load deflection due to concrete slab, curbs, and structural steel.
Positive values are above the chord between bents and negative values are below the chord between bents.

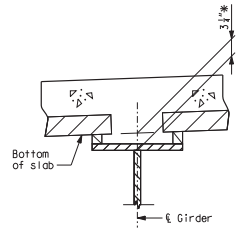

* Dimensions may vary if the girder camber after erection differs from plan camber by more or less than the % of Dead Load Deflection due to weight of structural steel. No payment will be made for any adjustment in forming or additional concrete required for variation in haunching.

THEORETICAL SLAB HAUNCH

DEAD LOAD DEFLECTIONS AND CAMBER DIAGRAM EB - UNIT 1 (1 OF 2)

Detailed JUL 2009
Checked JUL 2009

Note: This drawing is not to scale. Follow dimensions.

s:\idot\0906601\draw_idot\cadd_sheets\structural\B_A6500_068-152_J6I0984C_068.dgn

CONTRACT NO. 76D61

F.A. ROUTE	SECTION
999	82-1B-2
FED. AID PROJECT	ILLINOIS
COUNTY	ST. CLAIR

USER NAME = jjolliff
PLOT SCALE = $SCALE$
PLOT DATE = 3/8/2010
DESIGNED - HNTB
CHECKED - CMT
DRAWN - CMT / HTNB
REVISED -
REVISED -
REVISED -
REVISED -

ILLINOIS APPROACH STRUCTURE FOR NEW I-70 MISSISSIPPI RIVER BRIDGE

STATE OF ILLINOIS
DEPARTMENT OF TRANSPORTATION

MISSOURI HIGHWAYS AND TRANSPORTATION COMMISSION

HNTB
715 KIRK DRIVE
KANSAS CITY, MO 64105
TELEPHONE (816) 472-1201
CERTIFICATE OF AUTHORITY NO. 001270

CMT
CRAWFORD, MURPHY & TILLY, INC.
2750 WEST WASHINGTON STREET
SPRINGFIELD, IL 62702
TELEPHONE (217) 787-8050
ENGINEERING CORPORATION - 000631

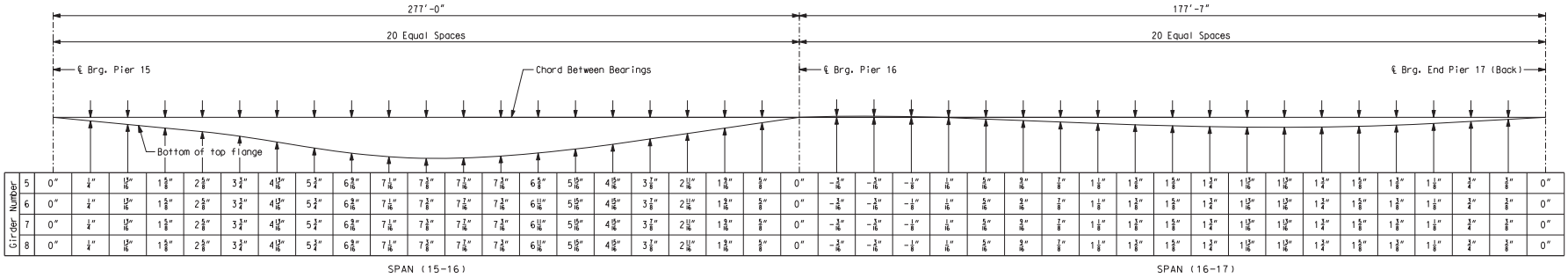

| Girder Number | | |

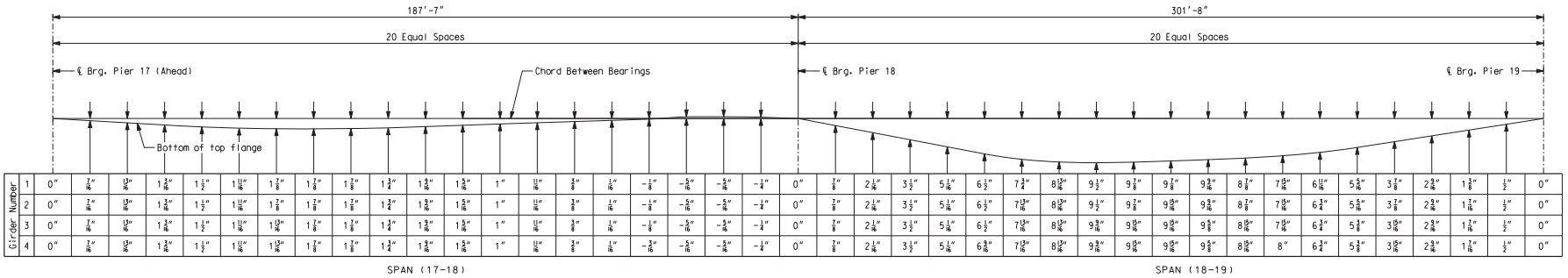

| Girder Number | | |

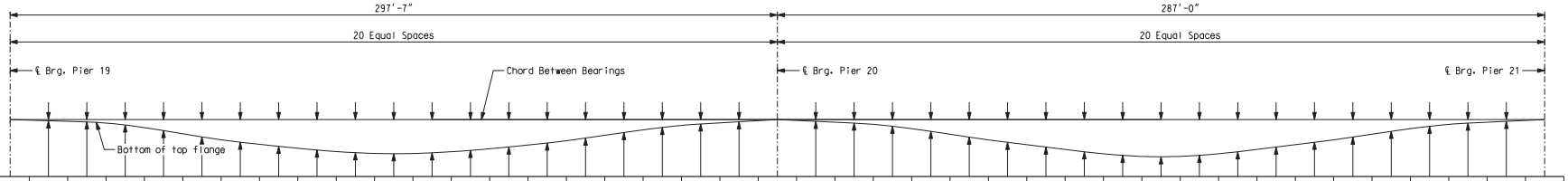

| Girder Number | | |

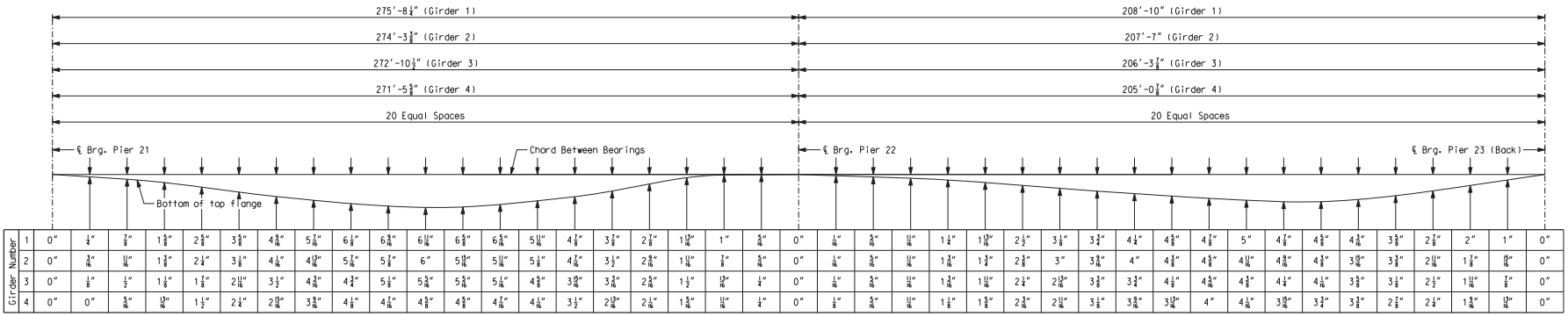

| Girder Number | | |

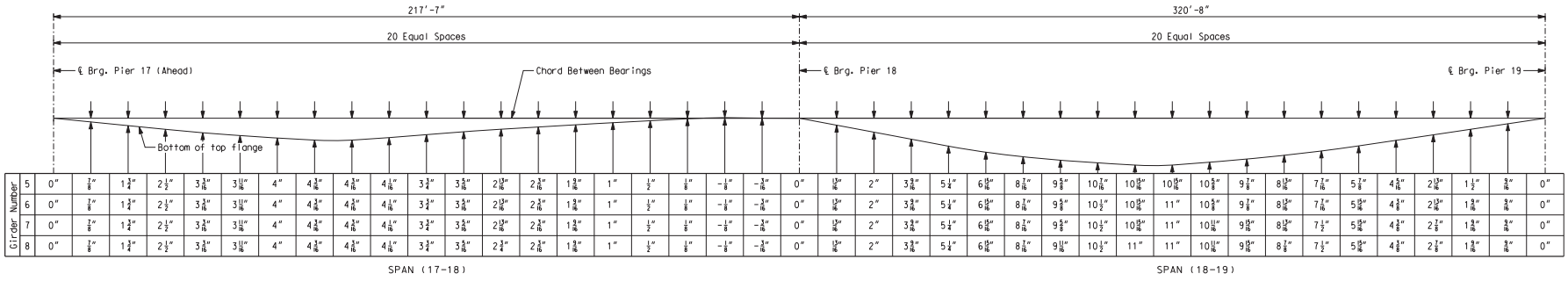

| Girder Number | | |

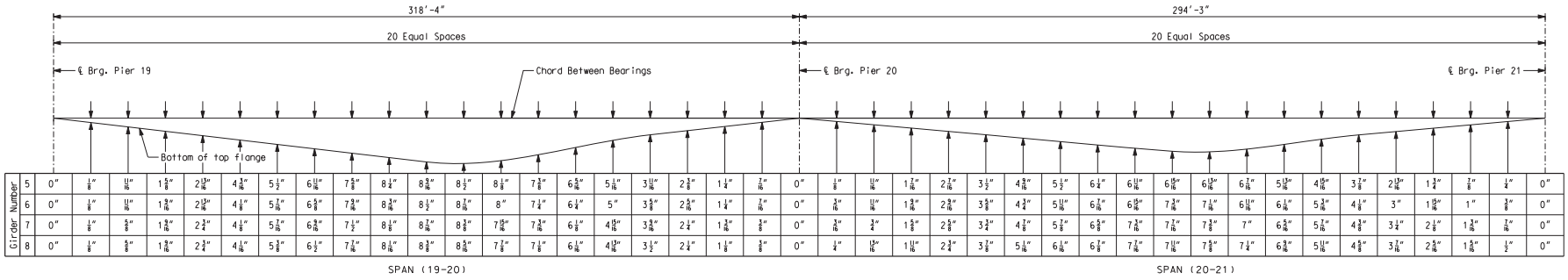

| Girder Number | | |

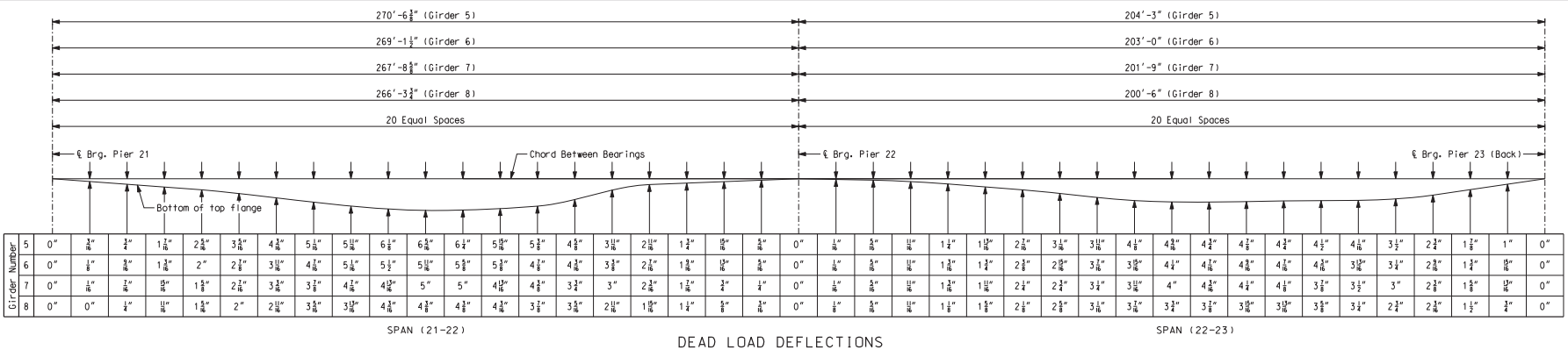

Girder Number																																		
	5	0"	3/16"	3/4"	1 7/16"	2 5/16"	3 5/16"	4 3/16"	5 1/16"	5 11/16"	6 1/8"	6 5/16"	6 1/4"	5 15/16"	5 3/8"	4 5/8"	3 11/16"	2 11/16"	1 3/4"	15/16"	5/16"	0"	1/16"	5/16"	11/16"	1 1/4"	1 13/16"	2 7/16"	3 1/16"	3 11/16"	4 1/16"	4 3/8"	4 3/4"	4 7/8"	4 1/4"	4 1/2"	4 1/16"	3 1/2"	2 3/4"	1 7/8"	1"	0"
	6	0"	1/8"	9/16"	1 1/16"	2"	2 7/8"	3 11/16"	4 7/16"	5 1/16"	5 1/2"	5 11/16"	5 5/8"	5 3/8"	4 7/8"	4 3/8"	3 3/4"	2 7/16"	1 9/16"	13/16"	5/16"	0"	1/16"	5/16"	11/16"	1 1/8"	1 1/4"	2 1/8"	2 15/16"	3 1/16"	3 15/16"	4 1/4"	4 7/16"	4 3/8"	4 7/16"	4 1/16"	3 15/16"	3 1/4"	2 5/16"	1 3/4"	15/16"	0"
	7	0"	1/16"	7/16"	15/16"	1 5/8"	2 1/16"	3 1/16"	3 7/8"	4 7/16"	4 13/16"	5"	5"	4 13/16"	4 3/8"	3 3/4"	3"	2 3/16"	1 7/16"	3/4"	1/4"	0"	1/16"	5/16"	11/16"	1 1/8"	1 11/16"	2 1/4"	2 3/4"	3 1/4"	3 11/16"	4"	4 3/16"	4 1/4"	4 1/8"	3 7/8"	3 1/2"	3"	2 3/8"	1 5/8"	15/16"	0"
	8	0"	0"	1/4"	11/16"	1 5/16"	2"	2 11/16"	3 5/16"	3 13/16"	4 3/16"	4 3/8"	4 3/8"	4 3/16"	3 7/8"	3 5/16"	2 11/16"	1 15/16"	1 1/4"	5/8"	3/16"	0"	1/8"	5/16"	11/16"	1 1/8"	1 5/8"	2 1/8"	2 5/8"	3 1/16"	3 7/16"	3 3/4"	3 7/8"	3 15/16"	3 13/16"	3 5/8"	3 1/4"	2 3/4"	2 3/16"	1 1/2"	3/4"	0"

SPAN (21-22) SPAN (22-23)

DEAD LOAD DEFLECTIONS

Notes:
32% of dead load deflection in span (21-22) and 27% of dead load deflection in Span (22-23) is due to the weight of structural steel.
Dead load deflection includes weight of structural steel, concrete slab, and barrier curbs.
Negative values indicate upward deflection.

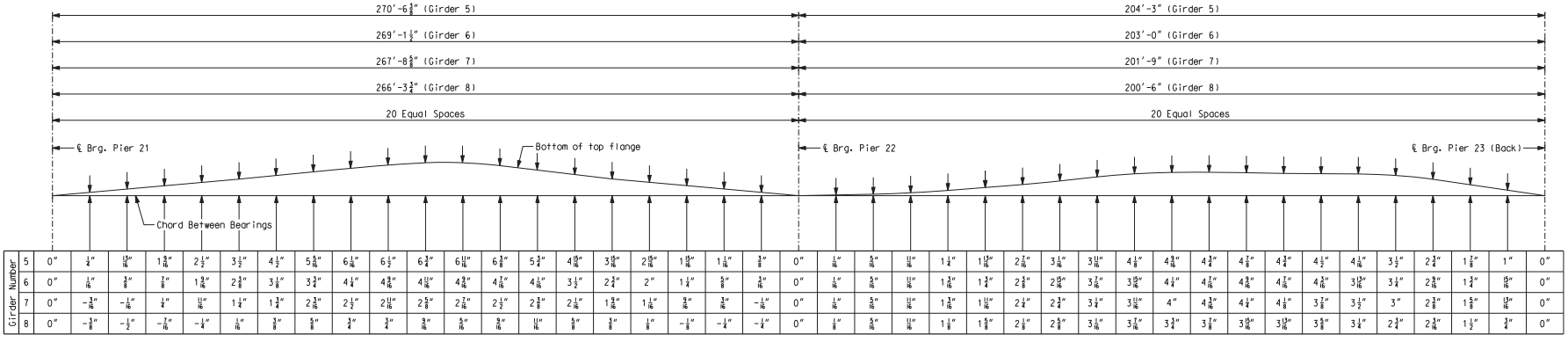

Girder Number																																		
	5	0"	1/4"	5/16"	1 3/16"	2 1/2"	3 1/2"	4 1/2"	5 5/16"	6 1/16"	6 1/2"	6 3/4"	6 11/16"	6 3/8"	5 3/4"	4 15/16"	3 15/16"	2 15/16"	1 15/16"	1 1/16"	3/8"	0"	1/16"	5/16"	11/16"	1 1/4"	1 13/16"	2 7/16"	3 1/16"	3 11/16"	4 1/16"	4 3/8"	4 3/4"	4 7/8"	4 1/4"	4 1/2"	4 1/16"	3 1/2"	2 3/4"	1 7/8"	1"	0"
	6	0"	1/16"	3/8"	7/8"	1 9/16"	2 3/8"	3 1/16"	3 3/4"	4 1/4"	4 9/16"	4 11/16"	4 9/16"	4 7/16"	4 1/16"	3 1/2"	2 3/4"	2"	1 1/4"	5/8"	3/16"	0"	1/16"	5/16"	11/16"	1 1/8"	1 1/4"	2 1/8"	2 15/16"	3 1/16"	3 15/16"	4 1/16"	4 7/16"	4 3/8"	4 7/16"	4 1/16"	3 15/16"	3 1/4"	2 5/16"	1 3/4"	15/16"	0"
	7	0"	-1/16"	-1/16"	1/4"	11/16"	1 1/4"	1 3/4"	2 3/16"	2 1/2"	2 11/16"	2 5/8"	2 7/16"	2 1/2"	2 3/8"	2 1/16"	1 9/16"	1 1/16"	9/16"	3/16"	-1/16"	0"	1/16"	5/16"	11/16"	1 1/16"	1 11/16"	2 1/4"	2 3/4"	3 1/4"	3 11/16"	4"	4 3/16"	4 1/4"	4 1/8"	3 7/8"	3 1/2"	3"	2 3/8"	1 5/8"	15/16"	0"
	8	0"	-1/8"	-1/2"	-7/16"	-1/4"	1/16"	3/8"	5/8"	3/4"	3/4"	5/16"	5/16"	9/16"	11/16"	5/8"	3/8"	1/8"	-1/8"	-1/4"	-1/4"	0"	1/8"	5/16"	11/16"	1 1/8"	1 5/8"	2 1/8"	2 5/8"	3 1/16"	3 7/16"	3 3/4"	3 7/8"	3 15/16"	3 13/16"	3 5/8"	3 1/4"	2 3/4"	2 3/16"	1 1/2"	3/4"	0"

SPAN (21-22) SPAN (22-23)

CAMBER DIAGRAM

Notes:
Camber includes allowance for dead load deflection due to concrete slab, curbs, and structural steel.
Positive values are above the chord between bents and negative values are below the chord between bents.

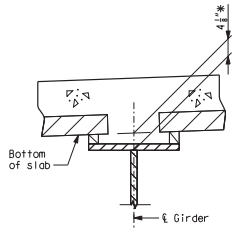

* Dimensions may vary if the girder camber after erection differs from plan camber by more or less than the % of Dead Load Deflection due to weight of structural steel. No payment will be made for any adjustment in forming or additional concrete required for variation in haunching.

THEORETICAL SLAB HAUNCH

DEAD LOAD DEFLECTIONS AND CAMBER DIAGRAM EB - UNIT 2 (3 OF 3)

Detailed JUL 2009
Checked JUL 2009

Note: This drawing is not to scale. Follow dimensions.

s:\idot\0906601\draw_idot\cadd_sheets\structural\B_A6500_075-152_J6I0984C_075.dgn

CONTRACT NO. 76D61

F.A. ROUTE	SECTION
999	82-1B-2
FED. AID PROJECT	ILLINOIS
COUNTY	ST. CLAIR

USER NAME = jjolliff
PLOT SCALE = $SCALE$
PLOT DATE = 3/8/2010
DESIGNED - HNTB
CHECKED - CMT
DRAWN - CMT / HTNB
REVISED -
REVISED -
REVISED -
REVISED -

ILLINOIS APPROACH STRUCTURE FOR NEW I-70 MISSISSIPPI RIVER BRIDGE

STATE OF ILLINOIS
DEPARTMENT OF TRANSPORTATION

MISSOURI HIGHWAYS
AND TRANSPORTATION COMMISSION

HNTB
715 KIRK DRIVE
KANSAS CITY, MO 64105
TELEPHONE (816) 472-1201
CERTIFICATE OF AUTHORITY
NO. 001270

CMT
CRAWFORD, MURPHY & TILLY, INC.
2750 WEST WASHINGTON STREET
SPRINGFIELD, IL 62702
TELEPHONE (217) 787-8050
ENGINEERING CORPORATION - 000631

** THEORETICAL BOTTOM OF SLAB ELEVATIONS AT ℄ OF GIRDER (PRIOR TO FORMING FOR SLAB)

	Span (13-14) (℄ Brg. - ℄ Brg.)																				
	℄ Brg.	.05	.10	.15	.20	.25	.30	.35	.40	.45	.50	.55	.60	.65	.70	.75	.80	.85	.90	.95	℄ Brg.
Girder 1	477.05	477.03	477.01	476.99	476.97	476.94	476.90	476.86	476.81	476.76	476.70	476.64	476.57	476.50	476.43	476.36	476.29	476.23	476.17	476.12	476.08
Girder 2	477.28	477.27	477.25	477.23	477.20	477.17	477.14	477.10	477.05	476.99	476.94	476.87	476.80	476.73	476.66	476.59	476.52	476.46	476.40	476.36	476.32
Girder 3	477.52	477.50	477.48	477.46	477.44	477.41	477.37	477.33	477.28	477.23	477.17	477.11	477.04	476.97	476.90	476.83	476.76	476.70	476.64	476.59	476.55
Girder 4	477.75	477.74	477.72	477.70	477.67	477.64	477.61	477.57	477.52	477.46	477.40	477.34	477.27	477.20	477.13	477.06	476.99	476.93	476.87	476.83	476.79
	Span (14-15) (℄ Brg. - ℄ Brg.)																				
	℄ Brg.	.05	.10	.15	.20	.25	.30	.35	.40	.45	.50	.55	.60	.65	.70	.75	.80	.85	.90	.95	℄ Brg.
Girder 1	476.08	476.05	476.03	476.03	476.04	476.04	476.03	476.01	475.98	475.92	475.85	475.76	475.65	475.52	475.38	475.22	475.07	474.92	474.79	474.67	474.58
Girder 2	476.32	476.28	476.27	476.27	476.27	476.27	476.27	476.25	476.21	476.16	476.08	475.99	475.88	475.75	475.61	475.46	475.31	475.16	475.02	474.91	474.82
Girder 3	476.55	476.52	476.50	476.50	476.51	476.51	476.50	476.48	476.45	476.39	476.32	476.23	476.12	475.99	475.85	475.69	475.54	475.39	475.26	475.14	475.05
Girder 4	476.79	476.75	476.74	476.74	476.74	476.74	476.74	476.72	476.68	476.63	476.55	476.46	476.35	476.22	476.08	475.93	475.78	475.63	475.49	475.38	475.29
	Span (15-16) (℄ Brg. - ℄ Brg.)																				
	℄ Brg.	.05	.10	.15	.20	.25	.30	.35	.40	.45	.50	.55	.60	.65	.70	.75	.80	.85	.90	.95	℄ Brg.
Girder 1	474.58	474.52	474.49	474.47	474.47	474.47	474.48	474.47	474.45	474.41	474.35	474.27	474.18	474.06	473.93	473.79	473.64	473.48	473.33	473.20	473.08
Girder 2	474.82	474.76	474.72	474.71	474.71	474.71	474.71	474.70	474.68	474.64	474.58	474.51	474.41	474.30	474.17	474.02	473.87	473.72	473.57	473.43	473.32
Girder 3	475.05	474.99	474.96	474.94	474.94	474.94	474.95	474.94	474.92	474.88	474.82	474.74	474.65	474.53	474.40	474.26	474.11	473.95	473.80	473.67	473.55
Girder 4	475.29	475.23	475.19	475.18	475.18	475.18	475.18	475.17	475.15	475.11	475.05	474.98	474.88	474.77	474.64	474.49	474.34	474.19	474.04	473.90	473.79
	Span (16-17) (℄ Brg. - ℄ Brg.)																				
	℄ Brg.	.05	.10	.15	.20	.25	.30	.35	.40	.45	.50	.55	.60	.65	.70	.75	.80	.85	.90	.95	℄ Brg.
Girder 1	473.08	473.02	472.98	472.94	472.90	472.87	472.85	472.82	472.79	472.77	472.73	472.70	472.66	472.61	472.55	472.49	472.42	472.35	472.28	472.20	472.12
Girder 2	473.32	473.26	473.21	473.17	473.14	473.11	473.08	473.06	473.03	473.00	472.97	472.93	472.89	472.84	472.79	472.73	472.66	472.59	472.51	472.43	472.35
Girder 3	473.55	473.49	473.45	473.41	473.37	473.34	473.32	473.29	473.27	473.24	473.20	473.17	473.13	473.08	473.02	472.96	472.90	472.82	472.75	472.67	472.59
Girder 4	473.79	473.73	473.68	473.64	473.61	473.58	473.55	473.53	473.50	473.47	473.44	473.40	473.36	473.31	473.26	473.20	473.13	473.06	472.98	472.90	472.82

** Elevations are based on a constant slab thickness of 9" and include allowance for theoretical dead load deflections due to weight of Slab (including Prestressed Panel) and Barrier Curbs.

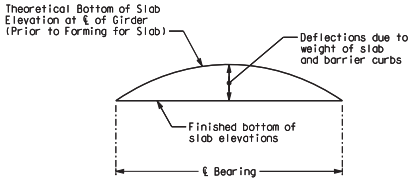

TYPICAL SLAB ELEVATIONS DIAGRAM

THEORETICAL BOTTOM OF SLAB ELEVATIONS WB - UNIT 1

Detailed JUL 2009
Checked JUL 2009

Note: This drawing is not to scale. Follow dimensions.

s:\idot\0906601\draw_idot\cadd_sheets\structural\B_A6500_076-152_J6l0984C_076.dgn

CONTRACT NO. 76D61

F.A. ROUTE	SECTION
999	82-1B-2
FED. AID PROJECT	ILLINOIS
COUNTY	ST. CLAIR

USER NAME = jjolliff
PLOT SCALE = $SCALE$
PLOT DATE = 3/8/2010
DESIGNED - HNTB
CHECKED - CMT
DRAWN - CMT / HTNB
REVISED -
REVISED -
REVISED -
REVISED -

ILLINOIS APPROACH STRUCTURE
FOR NEW I-70 MISSISSIPPI RIVER BRIDGE

STATE OF ILLINOIS
DEPARTMENT OF TRANSPORTATION

MISSOURI HIGHWAYS
AND TRANSPORTATION COMMISSION

HNTB
715 KIRK DRIVE
KANSAS CITY, MO 64105
TELEPHONE (816) 472-1201
CERTIFICATE OF AUTHORITY
NO. 001270

CMT
CRAWFORD, MURPHY & TILLY, INC.
2750 WEST WASHINGTON STREET
SPRINGFIELD, IL 62702
TELEPHONE (217) 787-8050
ENGINEERING CORPORATION - 000631

✳✳ THEORETICAL BOTTOM OF SLAB ELEVATIONS AT ℄ OF GIRDER (PRIOR TO FORMING FOR SLAB)

	Span (13-14) (℄ Brg. - ℄ Brg.)																				
	℄ Brg.	.05	.10	.15	.20	.25	.30	.35	.40	.45	.50	.55	.60	.65	.70	.75	.80	.85	.90	.95	℄ Brg.
Girder 5	477.75	477.73	477.71	477.69	477.66	477.63	477.60	477.56	477.51	477.46	477.41	477.35	477.29	477.23	477.17	477.11	477.05	476.99	476.94	476.90	476.86
Girder 6	477.52	477.50	477.48	477.45	477.43	477.40	477.36	477.32	477.28	477.23	477.17	477.12	477.06	477.00	476.93	476.87	476.81	476.76	476.71	476.66	476.63
Girder 7	477.28	477.26	477.24	477.22	477.19	477.16	477.13	477.09	477.04	476.99	476.94	476.88	476.82	476.76	476.70	476.64	476.58	476.52	476.47	476.43	476.39
Girder 8	477.05	477.03	477.01	476.98	476.96	476.93	476.89	476.85	476.81	476.76	476.70	476.65	476.59	476.53	476.46	476.40	476.34	476.29	476.24	476.19	476.16
	Span (14-15) (℄ Brg. - ℄ Brg.)																				
	℄ Brg.	.05	.10	.15	.20	.25	.30	.35	.40	.45	.50	.55	.60	.65	.70	.75	.80	.85	.90	.95	℄ Brg.
Girder 5	476.86	476.83	476.82	476.82	476.82	476.81	476.80	476.78	476.74	476.68	476.61	476.53	476.42	476.31	476.18	476.05	475.91	475.78	475.67	475.56	475.48
Girder 6	476.63	476.60	476.58	476.58	476.58	476.58	476.57	476.54	476.50	476.45	476.38	476.29	476.19	476.07	475.95	475.81	475.68	475.55	475.43	475.33	475.24
Girder 7	476.39	476.36	476.35	476.35	476.35	476.34	476.33	476.31	476.27	476.21	476.14	476.06	475.95	475.84	475.71	475.58	475.44	475.31	475.20	475.09	475.01
Girder 8	476.16	476.13	476.11	476.11	476.11	476.11	476.10	476.07	476.03	475.98	475.91	475.82	475.72	475.60	475.48	475.34	475.21	475.08	474.96	474.86	474.77
	Span (15-16) (℄ Brg. - ℄ Brg.)																				
	℄ Brg.	.05	.10	.15	.20	.25	.30	.35	.40	.45	.50	.55	.60	.65	.70	.75	.80	.85	.90	.95	℄ Brg.
Girder 5	475.48	475.42	475.39	475.37	475.36	475.36	475.35	475.34	475.32	475.28	475.23	475.16	475.07	474.98	474.86	474.73	474.60	474.46	474.33	474.20	474.09
Girder 6	475.24	475.19	475.15	475.13	475.12	475.12	475.12	475.10	475.08	475.04	474.99	474.92	474.84	474.74	474.63	474.50	474.36	474.23	474.09	473.97	473.86
Girder 7	475.01	474.95	474.92	474.90	474.89	474.89	474.88	474.87	474.85	474.81	474.76	474.69	474.60	474.51	474.39	474.26	474.13	473.99	473.86	473.73	473.62
Girder 8	474.77	474.72	474.68	474.66	474.65	474.65	474.65	474.63	474.61	474.57	474.52	474.45	474.37	474.27	474.16	474.03	473.89	473.76	473.62	473.50	473.39
	Span (16-17) (℄ Brg. - ℄ Brg.)																				
	℄ Brg.	.05	.10	.15	.20	.25	.30	.35	.40	.45	.50	.55	.60	.65	.70	.75	.80	.85	.90	.95	℄ Brg.
Girder 5	474.09	474.04	473.99	473.96	473.92	473.89	473.87	473.84	473.81	473.78	473.75	473.72	473.68	473.63	473.58	473.53	473.47	473.41	473.34	473.27	473.21
Girder 6	473.86	473.80	473.76	473.72	473.69	473.66	473.63	473.60	473.58	473.55	473.52	473.48	473.44	473.40	473.35	473.29	473.24	473.17	473.11	473.04	472.97
Girder 7	473.62	473.57	473.52	473.49	473.45	473.42	473.40	473.37	473.34	473.31	473.28	473.25	473.21	473.16	473.11	473.06	473.00	472.94	472.87	472.81	472.74
Girder 8	473.39	473.33	473.29	473.25	473.22	473.19	473.16	473.13	473.11	473.08	473.05	473.01	472.97	472.93	472.88	472.82	472.77	472.70	472.64	472.57	472.50

✳✳ Elevations are based on a constant slab thickness of 9" and include allowance for theoretical dead load deflections due to weight of Slab (including Prestressed Panel) and Barrier Curbs.

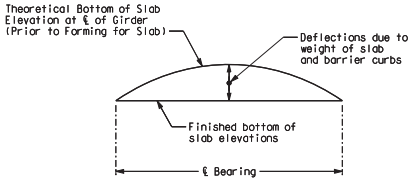

TYPICAL SLAB ELEVATIONS DIAGRAM

THEORETICAL BOTTOM OF SLAB ELEVATIONS EB - UNIT 1

Detailed JUL 2009
Checked JUL 2009

Note: This drawing is not to scale. Follow dimensions.

s:\idot\0906601\draw_idot\cadd_sheets\structural\B_A6500_077-152_J6I0984C_077.dgn

CONTRACT NO. 76D61

F.A. ROUTE	SECTION
999	82-1B-2
FED. AID PROJECT	ILLINOIS
COUNTY	ST. CLAIR

USER NAME = jjolliff
PLOT SCALE = $SCALE$
PLOT DATE = 3/8/2010
DESIGNED - HNTB
CHECKED - CMT
DRAWN - CMT / HTNB
REVISED -
REVISED -
REVISED -
REVISED -

ILLINOIS APPROACH STRUCTURE
FOR NEW I-70 MISSISSIPPI RIVER BRIDGE

STATE OF ILLINOIS
DEPARTMENT OF TRANSPORTATION

MISSOURI HIGHWAYS
AND TRANSPORTATION COMMISSION

HNTB
715 KIRK DRIVE
KANSAS CITY, MO 64105
TELEPHONE (816) 472-1201
CERTIFICATE OF AUTHORITY
NO. 001270

CMT
CRAWFORD, MURPHY & TILLY, INC.
2750 WEST WASHINGTON STREET
SPRINGFIELD, IL 62702
TELEPHONE (217) 787-8050
ENGINEERING CORPORATION - 000631

✳✳ THEORETICAL BOTTOM OF SLAB ELEVATIONS AT ℄ OF GIRDER (PRIOR TO FORMING FOR SLAB)

	Span (17-18) (℄ Brg. - ℄ Brg.)																				
	℄ Brg.	.05	.10	.15	.20	.25	.30	.35	.40	.45	.50	.55	.60	.65	.70	.75	.80	.85	.90	.95	℄ Brg.
Girder 1	472.09	472.07	472.05	472.03	472.00	471.97	471.93	471.89	471.84	471.79	471.73	471.67	471.60	471.53	471.47	471.40	471.34	471.28	471.23	471.19	471.15
Girder 2	472.33	472.31	472.29	472.26	472.23	472.20	472.16	472.12	472.07	472.02	471.96	471.90	471.84	471.77	471.70	471.64	471.57	471.52	471.47	471.42	471.39
Girder 3	472.56	472.54	472.52	472.50	472.47	472.44	472.40	472.36	472.31	472.26	472.20	472.14	472.07	472.00	471.94	471.87	471.81	471.75	471.70	471.66	471.62
Girder 4	472.80	472.78	472.76	472.73	472.70	472.67	472.63	472.59	472.54	472.49	472.43	472.37	472.31	472.24	472.17	472.11	472.04	471.99	471.94	471.89	471.86
	Span (18-19) (℄ Brg. - ℄ Brg.)																				
	℄ Brg.	.05	.10	.15	.20	.25	.30	.35	.40	.45	.50	.55	.60	.65	.70	.75	.80	.85	.90	.95	℄ Brg.
Girder 1	471.15	471.12	471.12	471.12	471.14	471.14	471.14	471.12	471.09	471.03	470.96	470.86	470.75	470.62	470.48	470.32	470.16	470.01	469.87	469.75	469.65
Girder 2	471.39	471.36	471.35	471.36	471.37	471.38	471.37	471.36	471.32	471.27	471.19	471.10	470.99	470.86	470.71	470.56	470.40	470.25	470.11	469.98	469.88
Girder 3	471.62	471.59	471.59	471.59	471.61	471.61	471.61	471.59	471.56	471.50	471.43	471.34	471.22	471.09	470.95	470.79	470.64	470.49	470.35	470.22	470.12
Girder 4	471.86	471.83	471.82	471.83	471.84	471.85	471.85	471.83	471.79	471.74	471.67	471.57	471.46	471.33	471.18	471.03	470.87	470.72	470.58	470.45	470.35
	Span (19-20) (℄ Brg. - ℄ Brg.)																				
	℄ Brg.	.05	.10	.15	.20	.25	.30	.35	.40	.45	.50	.55	.60	.65	.70	.75	.80	.85	.90	.95	℄ Brg.
Girder 1	469.65	469.58	469.53	469.50	469.48	469.47	469.46	469.44	469.41	469.37	469.30	469.23	469.13	469.02	468.89	468.76	468.62	468.48	468.36	468.25	468.24
Girder 2	469.88	469.81	469.76	469.73	469.71	469.70	469.69	469.67	469.64	469.60	469.54	469.46	469.36	469.25	469.12	468.99	468.85	468.72	468.59	468.49	468.45
Girder 3	470.12	470.05	470.00	469.97	469.95	469.94	469.92	469.90	469.87	469.83	469.77	469.69	469.59	469.48	469.35	469.22	469.08	468.95	468.82	468.72	468.65
Girder 4	470.35	470.28	470.23	470.20	470.18	470.17	470.16	470.14	470.10	470.06	470.00	469.92	469.82	469.71	469.58	469.45	469.31	469.18	469.06	468.95	468.85
	Span (20-21) (℄ Brg. - ℄ Brg.)																				
	℄ Brg.	.05	.10	.15	.20	.25	.30	.35	.40	.45	.50	.55	.60	.65	.70	.75	.80	.85	.90	.95	℄ Brg.
Girder 1	468.24	468.26	468.30	468.35	468.41	468.48	468.54	468.60	468.64	468.67	468.68	468.67	468.65	468.61	468.56	468.51	468.45	468.39	468.35	468.31	468.30
Girder 2	468.45	468.44	468.45	468.47	468.51	468.55	468.59	468.62	468.63	468.63	468.62	468.58	468.53	468.47	468.39	468.31	468.22	468.13	468.06	467.99	467.95
Girder 3	468.65	468.61	468.60	468.60	468.61	468.62	468.63	468.63	468.62	468.60	468.56	468.50	468.42	468.33	468.22	468.11	467.99	467.87	467.77	467.67	467.60
Girder 4	468.85	468.79	468.75	468.72	468.70	468.69	468.67	468.65	468.61	468.56	468.49	468.41	468.30	468.18	468.05	467.91	467.76	467.62	467.48	467.35	467.25
	Span (21-22) (℄ Brg. - ℄ Brg.)✳																				
	℄ Brg.	.05	.10	.15	.20	.25	.30	.35	.40	.45	.50	.55	.60	.65	.70	.75	.80	.85	.90	.95	℄ Brg.
Girder 1	468.30	468.32	468.35	468.40	468.45	468.51	468.57	468.62	468.66	468.68	468.69	468.68	468.60	468.50	468.38	468.26	468.13	468.01	467.89	467.79	467.71
Girder 2	467.95	467.93	467.94	467.95	467.97	468.00	468.03	468.05	468.06	468.06	468.04	468.01	467.93	467.83	467.72	467.60	467.48	467.37	467.26	467.16	467.07
Girder 3	467.60	467.55	467.52	467.51	467.50	467.49	467.49	467.48	467.46	467.43	467.39	467.34	467.26	467.17	467.06	466.95	466.84	466.72	466.62	466.52	466.44
Girder 4	467.25	467.17	467.11	467.06	467.02	466.99	466.95	466.91	466.87	466.81	466.74	466.67	466.59	466.50	466.40	466.30	466.19	466.08	465.98	465.88	465.80
	Span (22-23) (℄ Brg. - ℄ Brg.)✳																				
	℄ Brg.	.05	.10	.15	.20	.25	.30	.35	.40	.45	.50	.55	.60	.65	.70	.75	.80	.85	.90	.95	℄ Brg.
Girder 1	467.71	467.66	467.63	467.60	467.58	467.57	467.56	467.54	467.53	467.51	467.48	467.44	467.40	467.34	467.26	467.19	467.10	467.00	466.90	466.79	466.68
Girder 2	467.07	467.03	466.99	466.97	466.95	466.93	466.91	466.90	466.88	466.86	466.83	466.79	466.74	466.69	466.62	466.54	466.45	466.36	466.26	466.16	466.05
Girder 3	466.44	466.39	466.36	466.33	466.31	466.29	466.27	466.25	466.23	466.21	466.18	466.14	466.09	466.03	465.97	465.88	465.80	465.71	465.62	465.52	465.42
Girder 4	465.80	465.76	465.72	465.69	465.67	465.65	465.63	465.61	465.59	465.56	465.52	465.48	465.43	465.37	465.30	465.23	465.15	465.07	464.97	464.88	464.78

✳ Measured along ℄ girder.
✳✳ Elevations are based on a constant slab thickness of 9" and include allowance for theoretical dead load deflections due to weight of Slab (including Prestressed Panel) and Barrier Curbs.

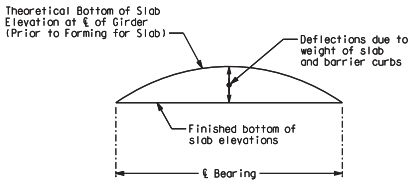

TYPICAL SLAB ELEVATIONS DIAGRAM

THEORETICAL BOTTOM OF SLAB ELEVATIONS WB - UNIT 2

Detailed JUL 2009
Checked JUL 2009

Note: This drawing is not to scale. Follow dimensions.

s:\idot\0906601\draw_idot\cadd_sheets\structural\B_A6500_078-152_J6I0984C_078.dgn

CONTRACT NO. 76D61

F.A. ROUTE	SECTION
999	82-1B-2
FED. AID PROJECT	ILLINOIS
COUNTY	ST. CLAIR

USER NAME = jjolliff
PLOT SCALE = $SCALE$
PLOT DATE = 3/8/2010
DESIGNED - HNTB
CHECKED - CMT
DRAWN - CMT / HTNB
REVISED -
REVISED -
REVISED -
REVISED -

ILLINOIS APPROACH STRUCTURE FOR NEW I-70 MISSISSIPPI RIVER BRIDGE

STATE OF ILLINOIS
DEPARTMENT OF TRANSPORTATION

MISSOURI HIGHWAYS AND TRANSPORTATION COMMISSION

HNTB
715 KIRK DRIVE
KANSAS CITY, MO 64105
TELEPHONE (816) 472-1201
CERTIFICATE OF AUTHORITY NO. 001270

CMT
CRAWFORD, MURPHY & TILLY, INC.
2750 WEST WASHINGTON STREET
SPRINGFIELD, IL 62702
TELEPHONE (217) 787-8050
ENGINEERING CORPORATION - 000631

✳✳ THEORETICAL BOTTOM OF SLAB ELEVATIONS AT ℄ OF GIRDER (PRIOR TO FORMING FOR SLAB)

	Span (17-18) (℄ Brg. - ℄ Brg.)																				
	℄ Brg.	.05	.10	.15	.20	.25	.30	.35	.40	.45	.50	.55	.60	.65	.70	.75	.80	.85	.90	.95	℄ Brg.
Girder 5	473.18	473.18	473.19	473.18	473.17	473.15	473.11	473.07	473.02	472.96	472.89	472.81	472.72	472.63	472.54	472.44	472.36	472.28	472.21	472.14	472.09
Girder 6	472.95	472.95	472.95	472.94	472.93	472.91	472.88	472.84	472.79	472.72	472.65	472.57	472.48	472.39	472.30	472.21	472.12	472.04	471.97	471.91	471.86
Girder 7	472.71	472.71	472.71	472.71	472.70	472.68	472.64	472.60	472.55	472.49	472.42	472.34	472.25	472.16	472.07	471.97	471.89	471.81	471.74	471.67	471.62
Girder 8	472.48	472.48	472.48	472.47	472.46	472.44	472.41	472.37	472.32	472.25	472.18	472.10	472.01	471.92	471.83	471.74	471.65	471.57	471.50	471.44	471.39
	Span (18-19) (℄ Brg. - ℄ Brg.)																				
	℄ Brg.	.05	.10	.15	.20	.25	.30	.35	.40	.45	.50	.55	.60	.65	.70	.75	.80	.85	.90	.95	℄ Brg.
Girder 5	472.09	472.05	472.04	472.04	472.05	472.06	472.07	472.05	472.02	471.96	471.88	471.78	471.66	471.52	471.37	471.20	471.04	470.88	470.73	470.60	470.49
Girder 6	471.86	471.82	471.80	471.80	471.82	471.83	471.83	471.82	471.78	471.73	471.65	471.55	471.43	471.29	471.13	470.97	470.80	470.64	470.49	470.36	470.26
Girder 7	471.62	471.58	471.57	471.57	471.58	471.59	471.60	471.58	471.55	471.49	471.42	471.32	471.20	471.06	470.90	470.74	470.57	470.41	470.26	470.13	470.02
Girder 8	471.39	471.35	471.33	471.34	471.35	471.36	471.36	471.35	471.31	471.26	471.18	471.08	470.96	470.82	470.67	470.50	470.34	470.17	470.02	469.89	469.79
	Span (19-20) (℄ Brg. - ℄ Brg.)																				
	℄ Brg.	.05	.10	.15	.20	.25	.30	.35	.40	.45	.50	.55	.60	.65	.70	.75	.80	.85	.90	.95	℄ Brg.
Girder 5	470.49	470.42	470.38	470.35	470.34	470.34	470.34	470.33	470.30	470.26	470.19	470.11	470.01	469.88	469.74	469.59	469.43	469.27	469.13	469.00	468.90
Girder 6	470.26	470.19	470.14	470.12	470.11	470.11	470.10	470.09	470.06	470.02	469.96	469.87	469.77	469.64	469.50	469.35	469.19	469.04	468.89	468.77	468.66
Girder 7	470.02	469.95	469.91	469.88	469.87	469.87	469.87	469.85	469.83	469.78	469.72	469.63	469.53	469.40	469.26	469.11	468.95	468.80	468.66	468.53	468.43
Girder 8	469.79	469.72	469.67	469.64	469.63	469.63	469.63	469.62	469.59	469.54	469.48	469.39	469.29	469.16	469.02	468.87	468.71	468.56	468.42	468.29	468.19
	Span (20-21) (℄ Brg. - ℄ Brg.)																				
	℄ Brg.	.05	.10	.15	.20	.25	.30	.35	.40	.45	.50	.55	.60	.65	.70	.75	.80	.85	.90	.95	℄ Brg.
Girder 5	468.90	468.83	468.79	468.76	468.75	468.74	468.72	468.71	468.68	468.63	468.57	468.49	468.39	468.28	468.16	468.03	467.89	467.76	467.65	467.55	467.46
Girder 6	468.66	468.60	468.56	468.53	468.52	468.51	468.50	468.48	468.45	468.41	468.35	468.27	468.17	468.06	467.94	467.80	467.66	467.51	467.36	467.23	467.11
Girder 7	468.43	468.37	468.33	468.30	468.29	468.28	468.27	468.26	468.23	468.19	468.13	468.05	467.95	467.84	467.72	467.58	467.44	467.25	467.07	466.91	466.76
Girder 8	468.19	468.13	468.09	468.07	468.06	468.05	468.05	468.03	468.00	467.96	467.91	467.83	467.73	467.62	467.50	467.36	467.21	466.99	466.78	466.59	466.41
	Span (21-22) (℄ Brg. - ℄ Brg.)✳																				
	℄ Brg.	.05	.10	.15	.20	.25	.30	.35	.40	.45	.50	.55	.60	.65	.70	.75	.80	.85	.90	.95	℄ Brg.
Girder 5	467.46	467.41	467.38	467.36	467.35	467.35	467.34	467.33	467.30	467.27	467.22	467.16	467.07	466.97	466.86	466.74	466.62	466.49	466.38	466.28	466.20
Girder 6	467.11	467.03	466.97	466.92	466.88	466.84	466.81	466.76	466.71	466.65	466.57	466.49	466.40	466.31	466.20	466.09	465.97	465.85	465.74	465.64	465.56
Girder 7	466.76	466.65	466.56	466.48	466.40	466.34	466.27	466.20	466.12	466.03	465.93	465.82	465.74	465.65	465.54	465.43	465.32	465.21	465.10	465.01	464.93
Girder 8	466.41	466.27	466.14	466.03	465.93	465.83	465.73	465.63	465.52	465.41	465.28	465.15	465.07	464.99	464.89	464.78	464.67	464.57	464.46	464.37	464.29
	Span (22-23) (℄ Brg. - ℄ Brg.)✳																				
	℄ Brg.	.05	.10	.15	.20	.25	.30	.35	.40	.45	.50	.55	.60	.65	.70	.75	.80	.85	.90	.95	℄ Brg.
Girder 5	466.20	466.15	466.12	466.09	466.07	466.06	466.04	466.03	466.01	465.99	465.96	465.92	465.88	465.82	465.75	465.68	465.59	465.49	465.39	465.28	465.17
Girder 6	465.56	465.52	465.48	465.45	465.43	465.42	465.40	465.38	465.37	465.34	465.31	465.27	465.22	465.17	465.10	465.02	464.94	464.85	464.75	464.64	464.54
Girder 7	464.93	464.88	464.85	464.82	464.79	464.78	464.76	464.74	464.72	464.69	464.66	464.62	464.57	464.51	464.45	464.37	464.29	464.20	464.10	464.01	463.90
Girder 8	464.29	464.25	464.21	464.18	464.16	464.14	464.11	464.09	464.07	464.04	464.00	463.96	463.91	463.86	463.79	463.72	463.64	463.55	463.46	463.37	463.27

✳ Measured along ℄ girder.
✳✳ Elevations are based on a constant slab thickness of 9" and include allowance for theoretical dead load deflections due to weight of Slab (including Prestressed Panel) and Barrier Curbs.

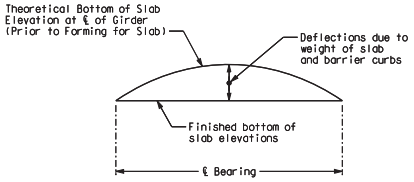

TYPICAL SLAB ELEVATIONS DIAGRAM

THEORETICAL BOTTOM OF SLAB ELEVATIONS EB - UNIT 2

Detailed JUL 2009
Checked JUL 2009

Note: This drawing is not to scale. Follow dimensions.

s:\idot\0906601\draw_idot\cadd_sheets\structural\B_A6500_079-152_J6I0984C_079.dgn

CONTRACT NO. 76D61

F.A. ROUTE	SECTION
999	82-1B-2
FED. AID PROJECT	ILLINOIS
COUNTY	ST. CLAIR

USER NAME = jjolliff
PLOT SCALE = $SCALE$
PLOT DATE = 3/8/2010
DESIGNED - HNTB
CHECKED - CMT
DRAWN - CMT / HTNB
REVISED -
REVISED -
REVISED -
REVISED -

ILLINOIS APPROACH STRUCTURE FOR NEW I-70 MISSISSIPPI RIVER BRIDGE

STATE OF ILLINOIS
DEPARTMENT OF TRANSPORTATION

MISSOURI HIGHWAYS AND TRANSPORTATION COMMISSION

HNTB
715 KIRK DRIVE
KANSAS CITY, MO 64105
TELEPHONE (816) 472-1201
CERTIFICATE OF AUTHORITY NO. 001270

CMT
CRAWFORD, MURPHY & TILLY, INC.
2750 WEST WASHINGTON STREET
SPRINGFIELD, IL 62702
TELEPHONE (217) 787-8050
ENGINEERING CORPORATION - 000631

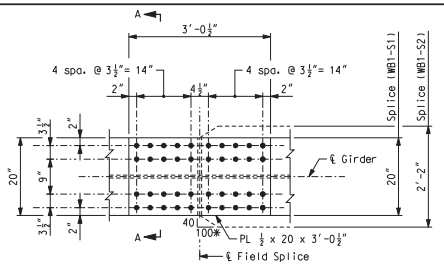

PLAN - TOP FLANGE

TABLE OF DIMENSIONS - FIELD SPLICE						
Splice	Top Flange			Bottom Flange		
	PL"A"	PL"B"	FILL PL"C"	PL"D"	PL"E"	FILL PL"F"
(WB1-S1)	⅞ x 20	1⅛ x 20	¼ x 20 x 18"	1 x 24	1⅛ x 24	⅜ x 24 x 21½"
(WB1-S2)	1 x 20	1⅛ x 26	¼ x 20 x 18"	1⅜ x 24	1⅜ x 32	-
(WB1-S3)	1 x 20	1⅛ x 20	⅜ x 20 x 2'-1"	1⅛ x 24	1¼ x 24	⅝ x 24 x 2'-8"
(WB1-S4)	1 x 20	1⅛ x 20	⅜ x 20 x 2'-1"	1⅛ x 24	1¼ x 24	⅝ x 24 x 2'-8"

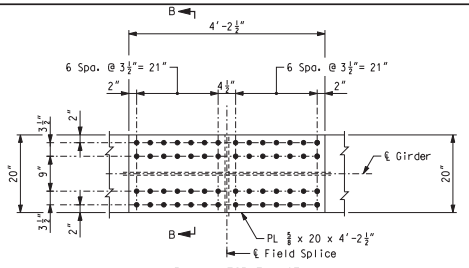

PLAN - TOP FLANGE

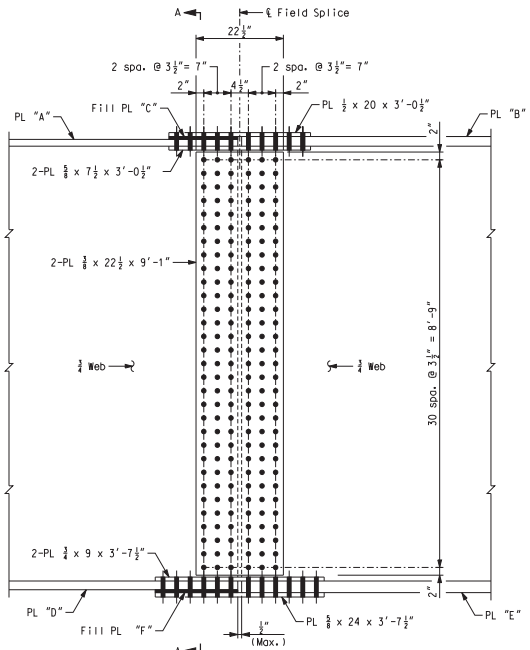

ELEVATION

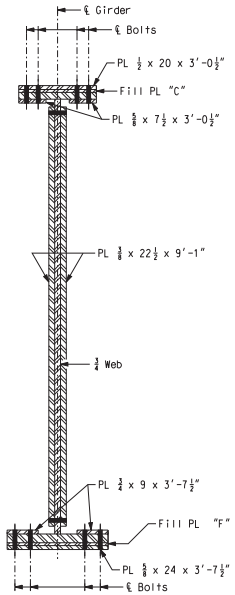

SECTION A-A

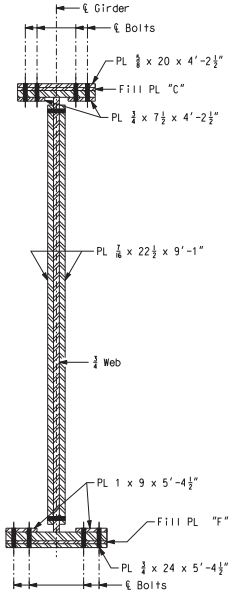

SECTION B-B

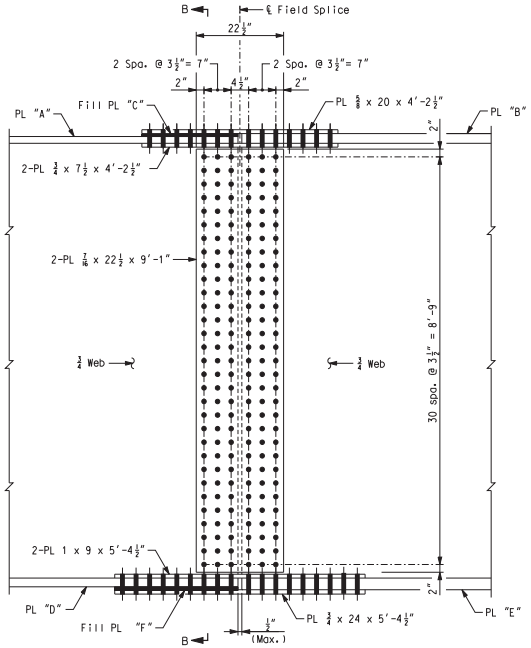

ELEVATION

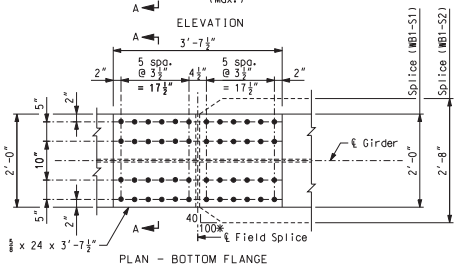

PLAN - BOTTOM FLANGE

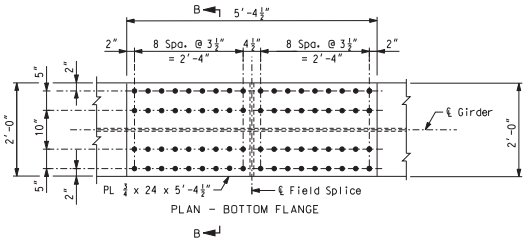

PLAN - BOTTOM FLANGE

Notes:
Use 1" Ø A325 high strength bolts with 1 1/16" Ø holes.
Faying surfaces shall be in accordance with Sec.1080.4 for weathering steel and Sec. 1081 for surface preparation.
All splice plates except fill plates shall be subject to notch toughness requirements.
Fabricated structural steel for splice plates and fill plates shall be ASTM A709 Grade 50W.
For location of field splices, see Sheet Nos. 49 and 55.
* When width of flanges being spliced differs by more than 2", the larger flange shall be beveled as indicated.

FIELD SPLICE (WB1-S1) & (WB1-S2)

FIELD SPLICE (WB1-S3) AND (WB1-S4)

BOLTED FIELD SPLICE DETAILS - WB UNIT 1

Detailed JUL 2009
Checked JUL 2009

Note: This drawing is not to scale. Follow dimensions.

s:\idot\0906601\draw_idot\cadd_sheets\structural\B_A6500_080-152_J6I0984C_080.dgn

CONTRACT NO. 76D61

F.A. ROUTE	SECTION
999	82-1B-2
FED. AID PROJECT	ILLINOIS
COUNTY	ST. CLAIR

USER NAME = jjolliff
PLOT SCALE = $SCALE$
PLOT DATE = 3/8/2010
DESIGNED - HNTB
CHECKED - CMT
DRAWN - CMT / HTNB
REVISED -
REVISED -
REVISED -
REVISED -

ILLINOIS APPROACH STRUCTURE FOR NEW I-70 MISSISSIPPI RIVER BRIDGE

STATE OF ILLINOIS
DEPARTMENT OF TRANSPORTATION

MISSOURI HIGHWAYS AND TRANSPORTATION COMMISSION

HNTB
715 KIRK DRIVE
KANSAS CITY, MO 64105
TELEPHONE (816) 472-1201
CERTIFICATE OF AUTHORITY NO. 001270

CMT
CRAWFORD, MURPHY & TILLY, INC.
2750 WEST WASHINGTON STREET
SPRINGFIELD, IL 62702
TELEPHONE (217) 787-8050
ENGINEERING CORPORATION - 000631

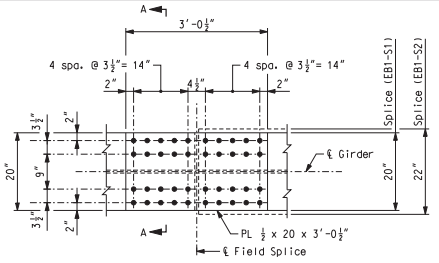

PLAN - TOP FLANGE

TABLE OF DIMENSIONS - FIELD SPLICE						
Splice	Top Flange			Bottom Flange		
	PL "A"	PL "B"	FILL PL "C"	PL "D"	PL "E"	FILL PL "F"
(EB1-S1)	⅞ x 20	⅞ x 20	-	1¼ x 20	1¼ x 20	⅛ x 20 x 18"
(EB1-S2)	1 x 20	1 x 22	-	1¼ x 20	1¼ x 28	-

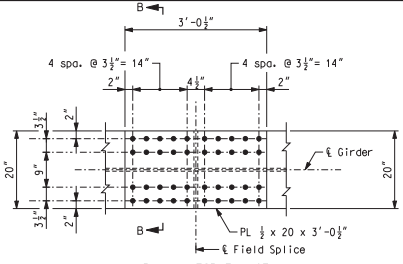

PLAN - TOP FLANGE

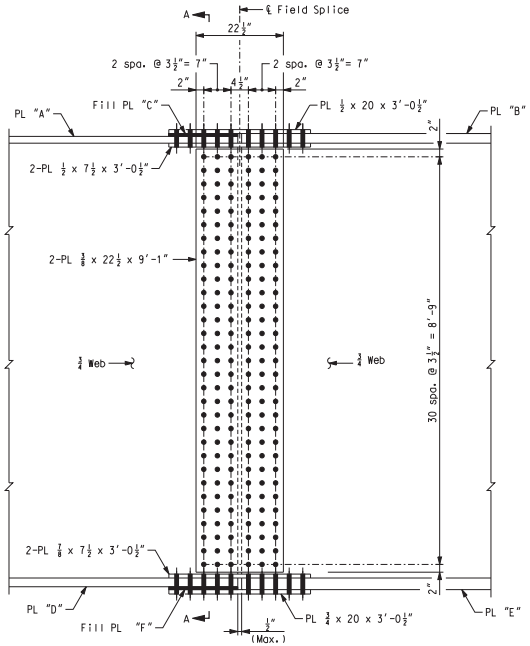

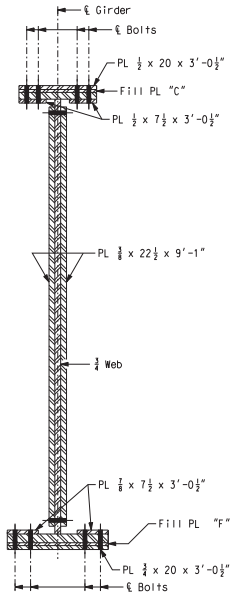

SECTION A-A

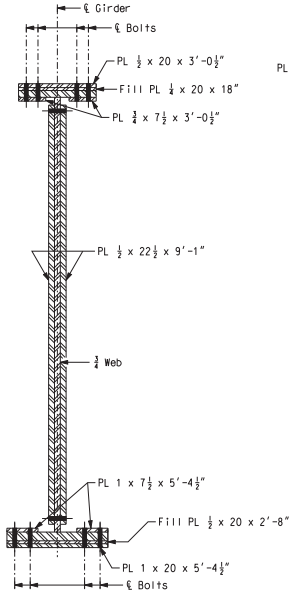

SECTION B-B

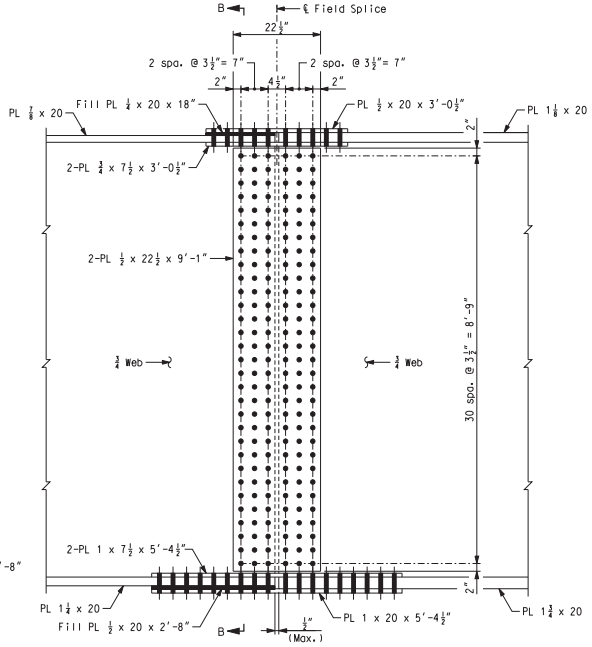

ELEVATION

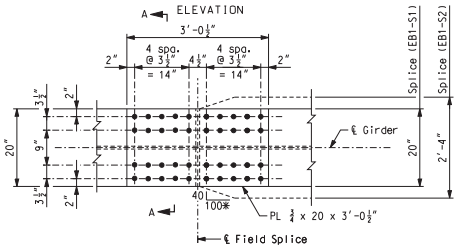

PLAN - BOTTOM FLANGE

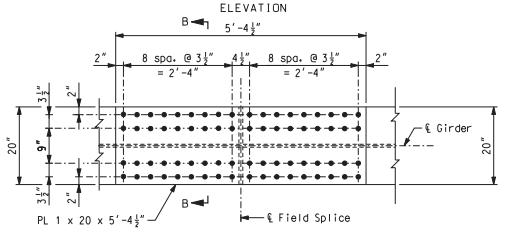

PLAN - BOTTOM FLANGE

Notes:
Use 1" Ø A325 high strength bolts with 1 1/16" Ø holes.
Faying surfaces shall be in accordance with Sec. 1080.4 for weathering steel and Sec 1081 for surface preparation.
All splice plates except fill plates shall be subject to notch toughness requirements.
Fabricated structural steel for splice plates and fill plates shall be ASTM A709 Grade 50W.
For location of field splices, see Sheet Nos. 56 and 57.
* When width of flanges being spliced differs by more than 2", the larger flange shall be beveled as indicated.

FIELD SPLICE (EB1-S1) & (EB1-S2)

FIELD SPLICE (EB1-S3)

BOLTED FIELD SPLICE DETAILS - EB UNIT 1

Detailed JUL 2009
Checked JUL 2009

Note: This drawing is not to scale. Follow dimensions.

Sheet No. 81 of 152

s:\idot\0906601\draw_idot\cadd_sheets\structural\B_A6500_081-152_J6I0984C_081.dgn

CONTRACT NO. 76D61

F.A. ROUTE	SECTION
999	82-1B-2
FED. AID PROJECT	ILLINOIS
COUNTY	ST. CLAIR

USER NAME = jjolliff
PLOT SCALE = $SCALE$
PLOT DATE = 3/8/2010
DESIGNED - HNTB
CHECKED - CMT
DRAWN - CMT / HTNB
REVISED -
REVISED -
REVISED -
REVISED -

ILLINOIS APPROACH STRUCTURE FOR NEW I-70 MISSISSIPPI RIVER BRIDGE

STATE OF ILLINOIS
DEPARTMENT OF TRANSPORTATION

MISSOURI HIGHWAYS AND TRANSPORTATION COMMISSION

HNTB
715 KIRK DRIVE
KANSAS CITY, MO 64105
TELEPHONE (816) 472-1201
CERTIFICATE OF AUTHORITY NO. 001270

CMT
CRAWFORD, MURPHY & TILLY, INC.
2750 WEST WASHINGTON STREET
SPRINGFIELD, IL 62702
TELEPHONE (217) 787-8050
ENGINEERING CORPORATION - 000631

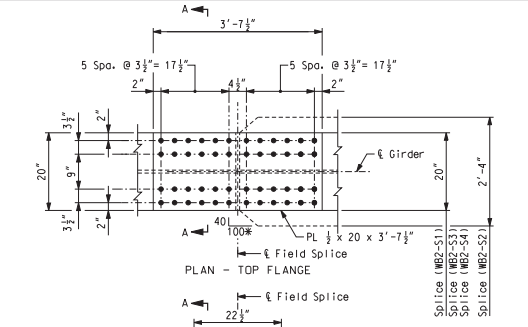

PLAN - TOP FLANGE

TABLE OF DIMENSIONS - FIELD SPLICE						
Splice	Top Flange			Bottom Flange		
	PL"A"	PL"B"	FILL PL"C"	PL"D"	PL"E"	FILL PL"F"
(WB2-S1)	⅞ x 20	1 x 20	⅜ x 20 x 21½"	1⅛ x 22	1½ x 22	⅜ x 22 x 2'-4½"
(WB2-S2)	1 x 20	1¼ x 28	½ x 20 x 21½"	1⅛ x 22	1½ x 34	⅜ x 22 x 2'-4½"
(WB2-S3)	1 x 20	1½ x 20	½ x 20 x 21½"	1¾ x 22	1¾ x 22	-
(WB2-S4)	⅞ x 20	1¼ x 20	⅜ x 20 x 21½"	1½ x 22	1¼ x 26	¼ x 22 x 2'-4½" **
(WB2-S5)	⅞ x 20	1¼ x 20	⅜ x 20 x 2'-4½"	1¼ x 22	2 x 24	¾ x 22 x 2'-11½"
(WB2-S7)	1½ x 20	2 x 22	½ x 20 x 2'-4½"	1¾ x 22	2 x 28	¼ x 22 x 2'-11½"

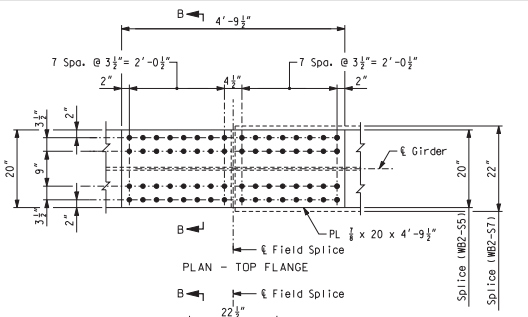

PLAN - TOP FLANGE

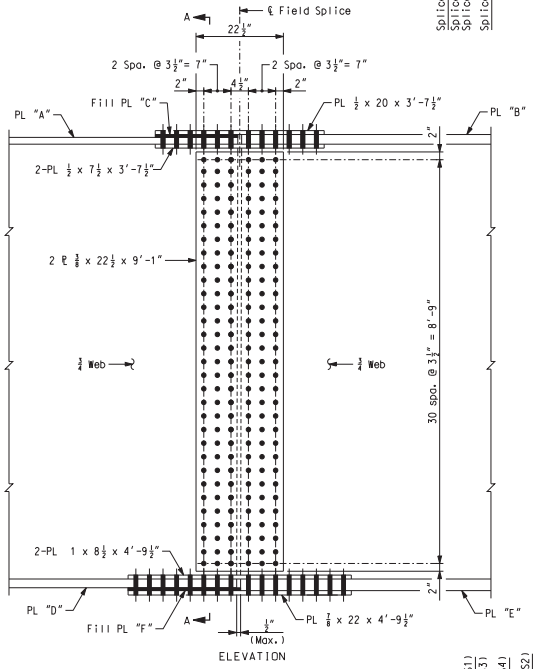

ELEVATION

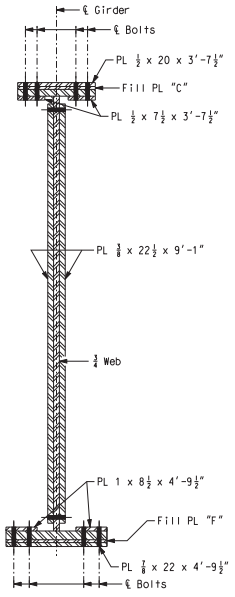

SECTION A-A

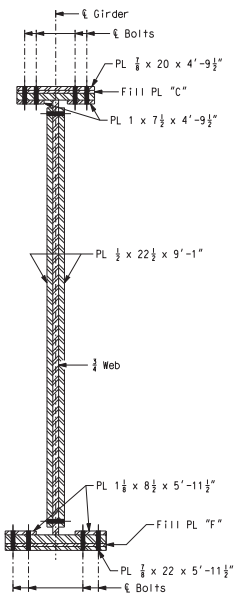

SECTION B-B

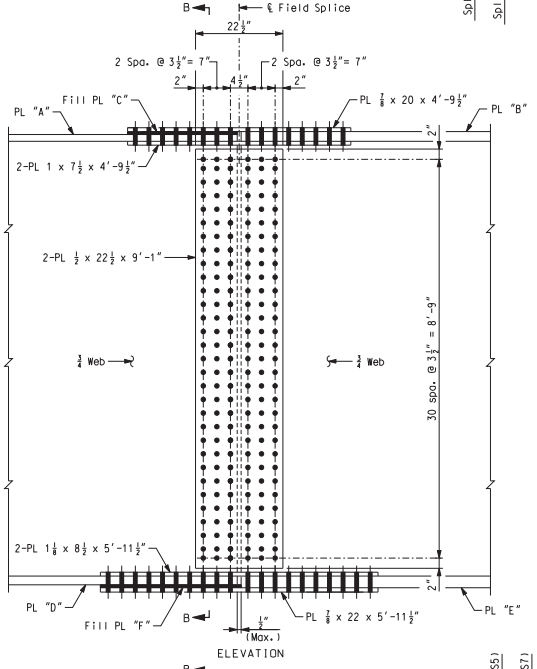

ELEVATION

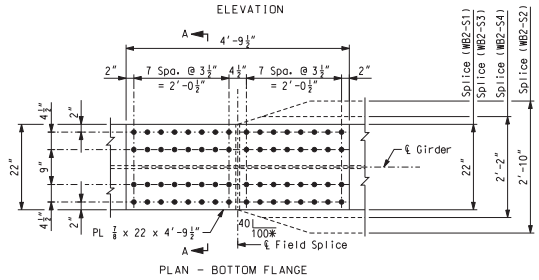

PLAN - BOTTOM FLANGE

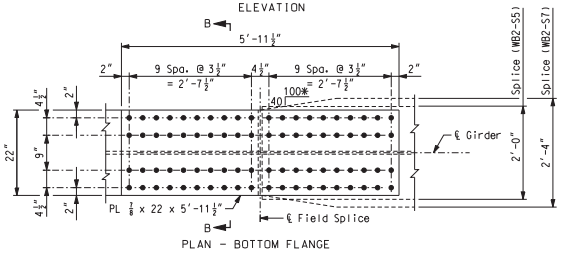

PLAN - BOTTOM FLANGE

Notes:
Use 1" Ø A325 high strength bolts with 1 1/16" Ø holes.
Faying surfaces shall be in accordance with Sec. 1080.4 for weathering steel and Sec. 1081 for surface preparation.
All splice plates except fill plates shall be subject to notch toughness requirements.
Fabricated structural steel for splice plates and fill plates shall be ASTM A709 Grade 50W.
For locations of field splices, see Sheet Nos. 58 thru 60.
* When width of flanges being spliced differs by more than 2", the larger flanges shall be beveled as indicated.
** Fill PL "F" placed with PL "E" at Splice (WB2-S4).

FIELD SPLICE (WB2-S1) THRU (WB2-S4)

FIELD SPLICE (WB2-S5) AND (WB2-S7)

BOLTED FIELD SPLICE DETAILS - WB UNIT 2 (1 OF 2)

Detailed JUL 2009
Checked JUL 2009

Note: This drawing is not to scale. Follow dimensions.

s:\idot\0906601\draw_idot\cadd_sheets\structural\B_A6500_082-152_J6I0984C_082.dgn

CONTRACT NO. 76D61

F.A. ROUTE	SECTION
999	82-1B-2
FED. AID PROJECT	ILLINOIS
COUNTY	ST. CLAIR

USER NAME = jjolliff
PLOT SCALE = $SCALE$
PLOT DATE = 3/8/2010
DESIGNED - HNTB
CHECKED - CMT
DRAWN - CMT / HTNB
REVISED -
REVISED -
REVISED -
REVISED -

ILLINOIS APPROACH STRUCTURE FOR NEW I-70 MISSISSIPPI RIVER BRIDGE

STATE OF ILLINOIS
DEPARTMENT OF TRANSPORTATION

MISSOURI HIGHWAYS AND TRANSPORTATION COMMISSION

HNTB
715 KIRK DRIVE
KANSAS CITY, MO 64105
TELEPHONE (816) 472-1201
CERTIFICATE OF AUTHORITY NO. 001270

CMT
CRAWFORD, MURPHY & TILLY, INC.
2750 WEST WASHINGTON STREET
SPRINGFIELD, IL 62702
TELEPHONE (217) 787-8050
ENGINEERING CORPORATION - 000631

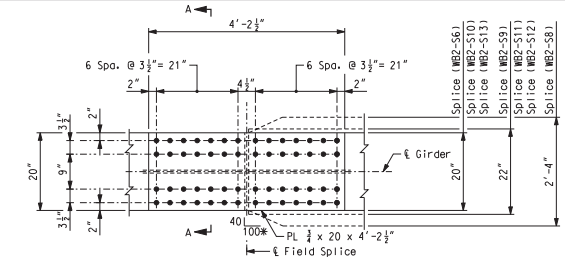

PLAN - TOP FLANGE

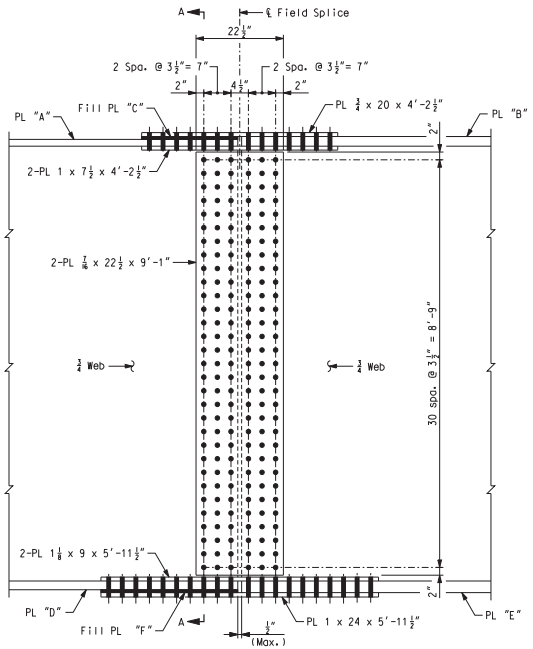

ELEVATION

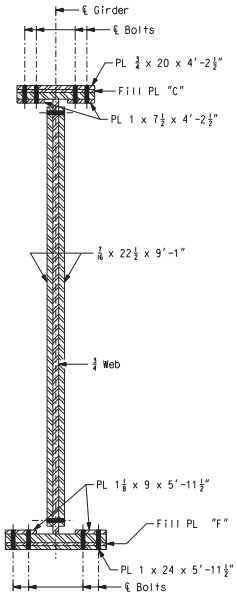

SECTION A-A

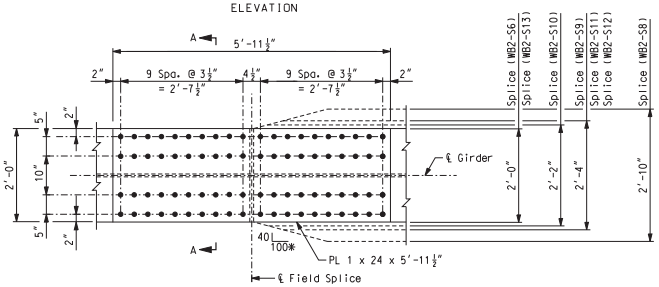

PLAN - BOTTOM FLANGE

TABLE OF DIMENSIONS - FIELD SPLICE						
Splice	Top Flange			Bottom Flange		
	PL "A"	PL "B"	FILL PL "C"	PL "D"	PL "E"	FILL PL "F"
(WB2-S6)	1¼ x 20	1¼ x 20	-	1¼ x 24	2 x 24	¾ x 24 x 2'-11½"
(WB2-S8)	1¼ x 20	2 x 28	¾ x 20 x 2'-1"	1¼ x 24	2 x 34	¾ x 24 x 2'-11½"
(WB2-S9)	1¼ x 20	2 X 22	¾ x 20 x 2'-1"	1½ x 24	2 x 28	½ x 24 x 2'-11½"
(WB2-S10)	1 x 20	2 x 20	1 x 20 x 2'-1"	1½ x 24	2 x 26	½ x 24 x 2'-11½"
(WB2-S11)	1 x 20	1 X 22	-	1½ x 24	1¼ x 28	¼ x 24 x 2'-11½" **
(WB2-S12)	1 x 20	1 X 22	-	1½ x 24	1¼ x 28	¼ x 24 x 2'-11½" **
(WB2-S13)	1 x 20	1¼ x 20	¼ x 20 x 2'-1"	1½ x 24	2 x 24	½ x 24 x 2'-11½"

FIELD SPLICE (WB2-S6), (WB2-S8), (WB2-S9), (WB2-S10), (WB2-S11), (WB2-S12), & (WB2-S13)

Notes:
Use 1" Ø A325 high strength bolts with 1 1/16" Ø holes.
Faying surfaces shall be in accordance with Sec. 1080.4 for weathering steel and Sec. 1081 for surface preparation.
All splice plates except fill plates shall be subject to notch toughness requirements.
Fabricated structural steel for splice plates and fill plates shall be ASTM A709 Grade 50W.
For location of field splices, see Sheet Nos. 58 thru 60.
* When width of flanges being spliced differs by more than 2", the larger flange shall be beveled as indicated.
** Fill PL "F" placed with PL "E" at Splice (WB2-S11) and Splice (WB2-S12).

BOLTED FIELD SPLICE DETAILS - WB UNIT 2 (2 OF 2)

Detailed JUL 2009
Checked JUL 2009

Note: This drawing is not to scale. Follow dimensions.

Sheet No. 83 of 152

s:\idot\0906601\draw_idot\cadd_sheets\structural\B_A6500_083-152_J6l0984C_083.dgn

CONTRACT NO. 76D61

F.A. ROUTE	SECTION
999	82-1B-2
FED. AID PROJECT	ILLINOIS
COUNTY	ST. CLAIR

USER NAME = jjollff
PLOT SCALE = $SCALE$
PLOT DATE = 3/8/2010
DESIGNED - HNTB
CHECKED - CMT
DRAWN - CMT / HTNB
REVISED -
REVISED -
REVISED -
REVISED -

ILLINOIS APPROACH STRUCTURE FOR NEW I-70 MISSISSIPPI RIVER BRIDGE

STATE OF ILLINOIS
DEPARTMENT OF TRANSPORTATION

MISSOURI HIGHWAYS AND TRANSPORTATION COMMISSION

HNTB
715 KIRK DRIVE
KANSAS CITY, MO 64105
TELEPHONE (816) 472-1201
CERTIFICATE OF AUTHORITY NO. 001270

CMT
CRAWFORD, MURPHY & TILLY, INC.
2750 WEST WASHINGTON STREET
SPRINGFIELD, IL 62702
TELEPHONE (217) 787-8050
ENGINEERING CORPORATION - 000631

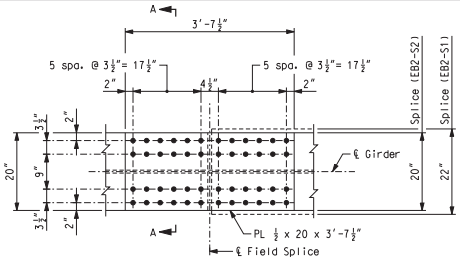

PLAN - TOP FLANGE

TABLE OF DIMENSIONS - FIELD SPLICE						
Splice	Top Flange			Bottom Flange		
	PL "A"	PL "B"	FILL PL "C"	PL "D"	PL "E"	FILL PL "F"
(EB2-S1)	⅞ x 20	1 x 22	⅛ x 20 x 21½"	1⅛ x 20	1¼ x 30	¼ x 20 x 2'-1"
(EB2-S2)	⅞ x 20	⅞ x 20	-	1½ x 20	1⅜ x 24	¼ x 20 x 2'-1" **
(EB2-S3)	1 x 22	1 x 22	-	1½ x 28	1¼ x 30	¼ x 28 x 3'-6½" **
(EB2-S4)	1 x 22	1¼ x 22	¼ x 22 x 2'-1"	1½ x 28	2 x 28	½ x 28 x 3'-6½"
(EB2-S5)	1¼ x 22	2 x 22	¾ x 22 x 2'-1"	2 x 28	2 x 28	-

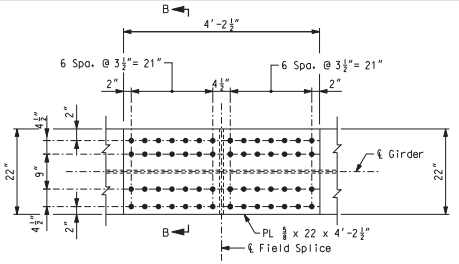

PLAN - TOP FLANGE

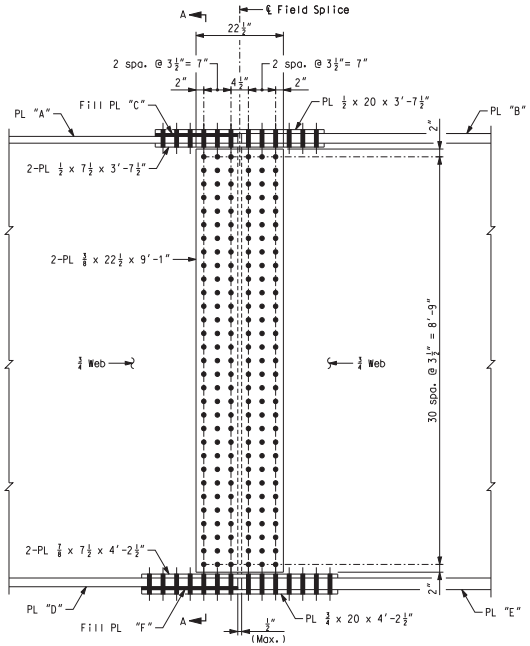

ELEVATION

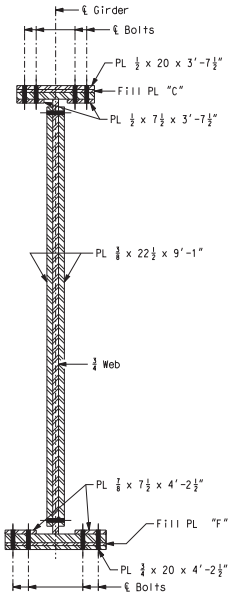

SECTION A-A

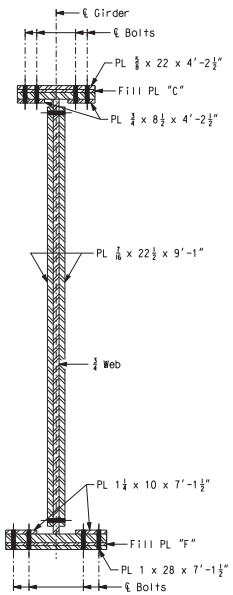

SECTION B-B

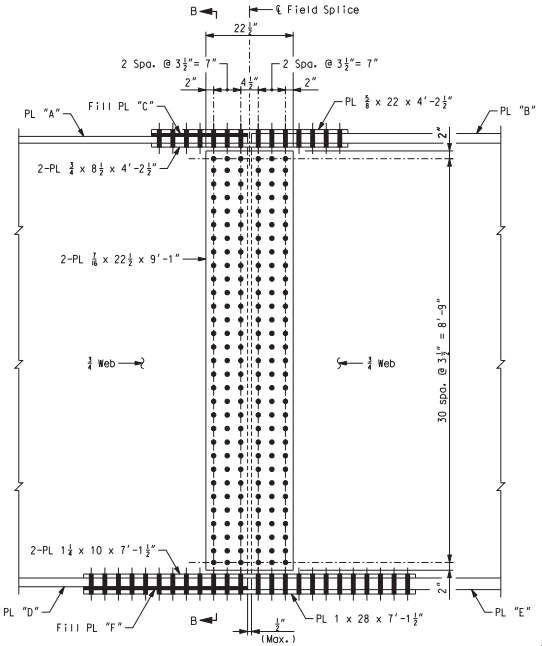

ELEVATION

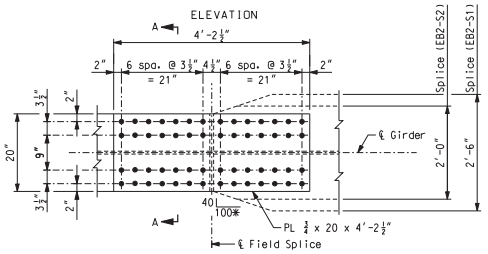

PLAN - BOTTOM FLANGE

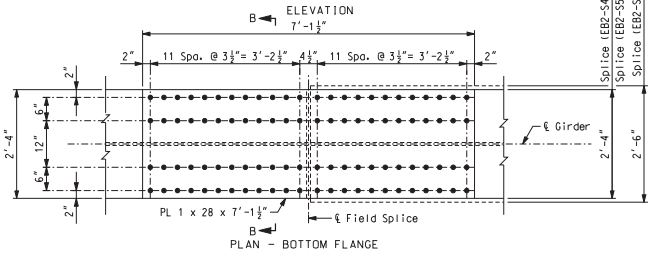

PLAN - BOTTOM FLANGE

Notes:
Use 1" Ø A325 high strength bolts with 1 1/16" Ø holes.
Faying surfaces shall be in accordance with Sec. 1080.4 for weathering steel and Sec. 1081 for surface preparation.
All splice plates except fill plates shall be subject to notch toughness requirements.
Fabricated structural steel for splice plates and fill plates shall be ASTM A709 Grade 50W.
For location of field splices, see Sheet Nos. 61 thru 63.
* When width of flanges being spliced differs by more than 2", the larger flange shall be beveled as indicated.
** Fill PL "F" placed with PL "E" at Splice (EB2-S2) and Splice (EB2-S3).

FIELD SPLICE (EB2-S1) AND (EB2-S2)

FIELD SPLICE (EB2-S3), (EB2-S4), AND (EB2-S5)

Detailed JUL 2009
Checked JUL 2009

Note: This drawing is not to scale. Follow dimensions.

Sheet No. 84 of 152

BOLTED FIELD SPLICE DETAILS - EB UNIT 2 (1 OF 2)

s:\idot\0906601\draw_idot\cadd_sheets\structural\B_A6500_084-152_J6l0984C_084.dgn

CONTRACT NO. 76D61

F.A. ROUTE	SECTION
999	82-1B-2
FED. AID PROJECT	ILLINOIS
COUNTY	ST. CLAIR

USER NAME = jjolliff
PLOT SCALE = $SCALE$
PLOT DATE = 3/8/2010
DESIGNED - HNTB
CHECKED - CMT
DRAWN - CMT / HTNB
REVISED -
REVISED -
REVISED -
REVISED -

ILLINOIS APPROACH STRUCTURE FOR NEW I-70 MISSISSIPPI RIVER BRIDGE

STATE OF ILLINOIS
DEPARTMENT OF TRANSPORTATION

MISSOURI HIGHWAYS AND TRANSPORTATION COMMISSION

HNTB
715 KIRK DRIVE
KANSAS CITY, MO 64105
TELEPHONE (816) 472-1201
CERTIFICATE OF AUTHORITY NO. 001270

CMT
CRAWFORD, MURPHY & TILLY, INC.
2750 WEST WASHINGTON STREET
SPRINGFIELD, IL 62702
TELEPHONE (217) 787-8050
ENGINEERING CORPORATION - 000631

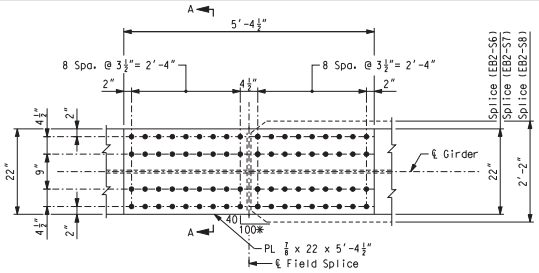

PLAN - TOP FLANGE

TABLE OF DIMENSIONS - FIELD SPLICE						
Splice	Top Flange			Bottom Flange		
	PL "A"	PL "B"	FILL PL "C"	PL "D"	PL "E"	FILL PL "F"
(EB2-S6)	1¼ x 22	2 x 22	¾ x 22 x 2'-8"	1½ x 24	2 x 28	½ x 24 x 3'-3"
(EB2-S7)	1¼ x 22	1¼ x 22	-	1¾ x 24	2 x 24	¼ x 24 x 3'-3"
(EB2-S8)	1¼ x 22	2 x 26	¾ x 22 x 2'-8"	1¾ x 24	2 x 32	¼ x 24 x 3'-3"
(EB2-S9)	1 x 20	1¼ x 26	¼ x 20 x 2'-1"	1¾ x 24	1½ x 32	¼ x 24 x 2'-11½" **
(EB2-S10)	1 x 20	1 x 22	-	1¾ x 24	1¼ x 28	½ x 24 x 2'-11½" **
(EB2-S11)	1¼ x 20	2 x 22	¾ x 20 x 2'-1"	1½ x 24	2 x 28	½ x 24 x 2'-11½"
(EB2-S12)	1 x 20	1 x 20	-	1½ x 24	2 x 24	½ x 24 x 2'-11½"
(EB2-S13)	1 x 20	1¾ x 20	¾ x 20 x 2'-1"	1½ x 24	2 x 24	½ x 24 x 2'-11½"

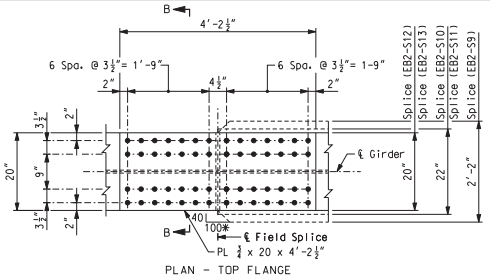

PLAN - TOP FLANGE

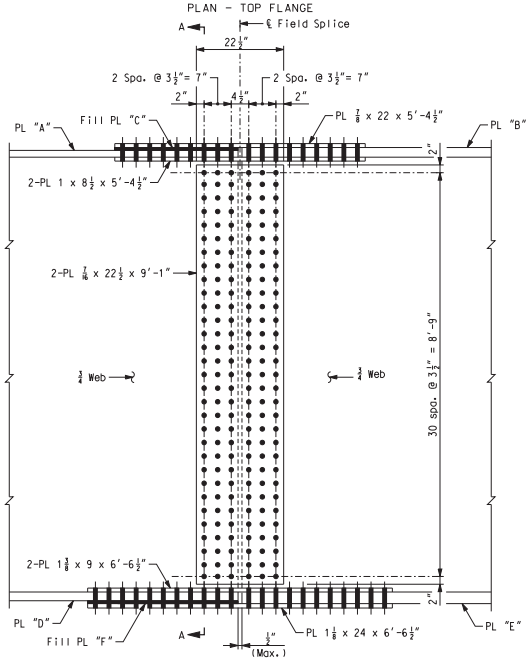

ELEVATION

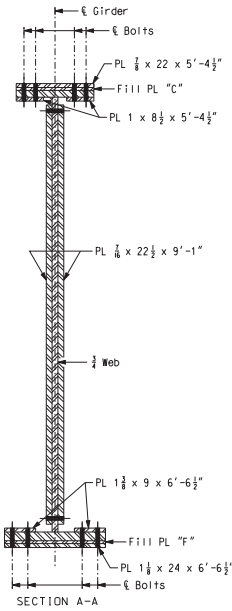

SECTION A-A

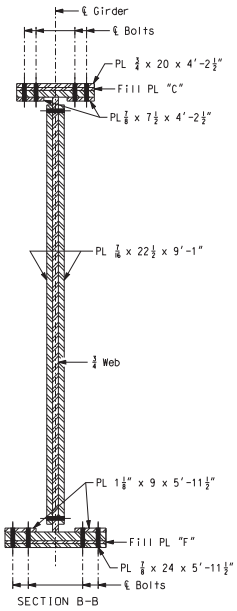

SECTION B-B

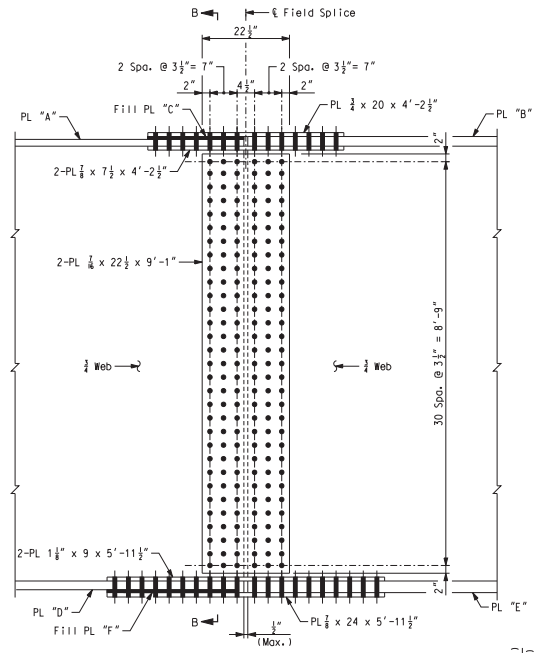

ELEVATION

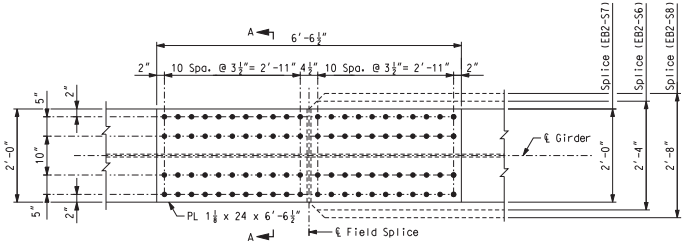

PLAN - BOTTOM FLANGE

FIELD SPLICE (EB2-S6) THRU (EB2-S8)

Notes:
Use 1" Ø A325 high strength bolts with 1 1/16" Ø holes.
Faying surfaces shall be in accordance with Sec. 1080.4 for weathering steel and Sec 1081 for surface preparation.
All splice plates except fill plates shall be subject to notch toughness requirements.
Fabricated structural steel for splice plates and fill plates shall be ASTM A709 Grade 50W.
For location of field splices, see Sheet Nos. 61 thru 63.
* When width of flanges being spliced differs by more than 2", the larger flange shall be beveled as indicated.
** Fill PL "F" placed with PL "E" at Splice (EB2-S9) and Splice (EB2-S10).

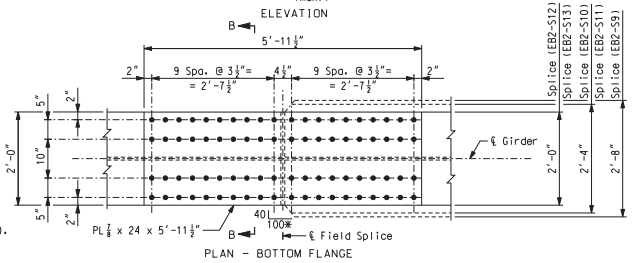

PLAN - BOTTOM FLANGE

FIELD SPLICE (EB2-S9) THRU (EB2-S13)

BOLTED FIELD SPLICE DETAILS - EB UNIT 2 (2 OF 2)

Detailed JUL 2009
Checked JUL 2009

Note: This drawing is not to scale. Follow dimensions.

Sheet No. 85 of 152

s:\idot\0906601\draw_idot\cadd_sheets\structural\B_A6500_085-152_J6I0984C_085.dgn

CONTRACT NO. 76D61

F.A. ROUTE	SECTION
999	82-1B-2
FED. AID PROJECT	ILLINOIS
COUNTY	ST. CLAIR

USER NAME = jjolliff
PLOT SCALE = $SCALE$
PLOT DATE = 3/8/2010

DESIGNED - HNTB
CHECKED - CMT
DRAWN - CMT / HTNB
REVISED -
REVISED -
REVISED -
REVISED -

ILLINOIS APPROACH STRUCTURE FOR NEW I-70 MISSISSIPPI RIVER BRIDGE

STATE OF ILLINOIS
DEPARTMENT OF TRANSPORTATION

MISSOURI HIGHWAYS AND TRANSPORTATION COMMISSION

HNTB
715 KIRK DRIVE
KANSAS CITY, MO 64105
TELEPHONE (816) 472-1201
CERTIFICATE OF AUTHORITY NO. 001270

CMT
CRAWFORD, MURPHY & TILLY, INC.
2750 WEST WASHINGTON STREET
SPRINGFIELD, IL 62702
TELEPHONE (217) 787-8050
ENGINEERING CORPORATION - 000631

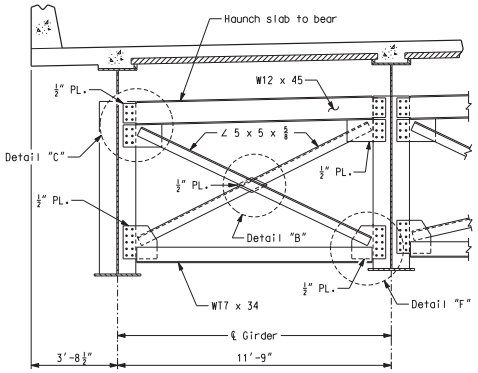

TYPICAL PART SECTION SHOWING
END DIAPHRAGM AT PIERS 13 AND 17

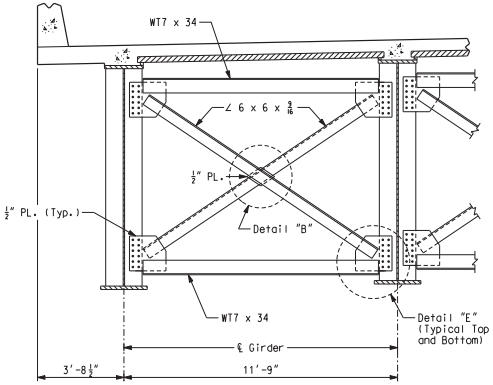

TYPICAL PART SECTION SHOWING
CROSS FRAME AT PIERS 14, 15, AND 16

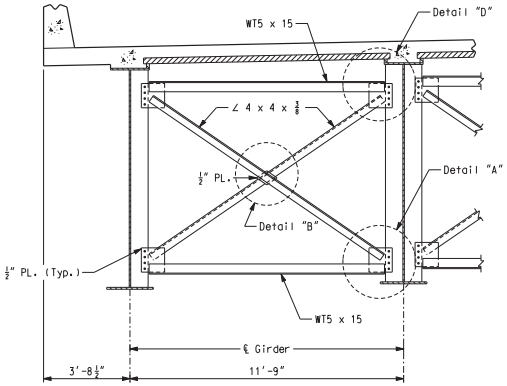

TYPICAL PART SECTION SHOWING
INTERMEDIATE CROSS FRAMES

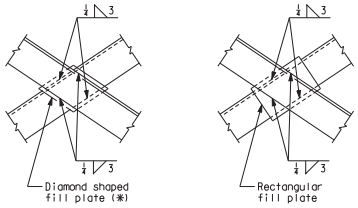

DETAIL "B"

OPTIONAL
DETAIL "B"

(*) At the contractor's option, rectangular fill plates may be used in lieu of diamond fill plates as shown in Optional Detail "B".

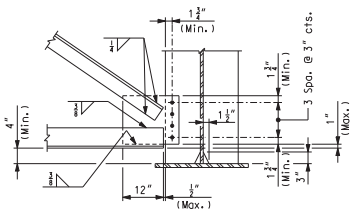

DETAIL "A"

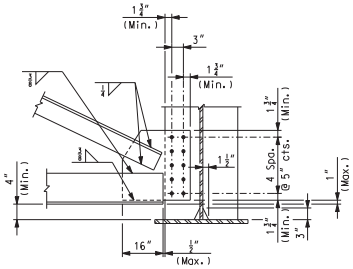

DETAIL "F"

Note:
All bolts shall be 1" Ø ASTM A325 High Strength Bolts.
All steel shall be ASTM A709 Grade 50W.

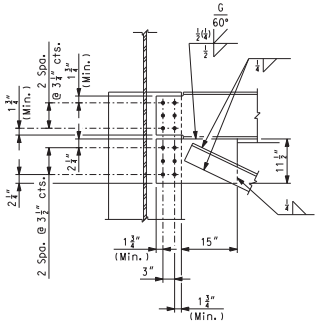

DETAIL "C"

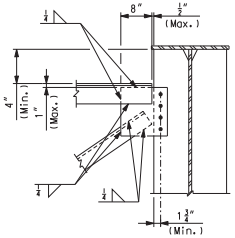

DETAIL "D"

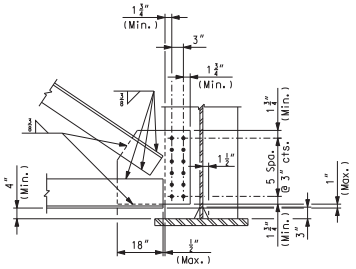

DETAIL "E"

CROSS FRAME AND DIAPHRAGM DETAILS - UNIT 1

Detailed JUL 2009
Checked JUL 2009

Note: This drawing is not to scale. Follow dimensions.

Sheet No. 86 of 152

s:\idot\0906601\draw_idot\cadd_sheets\structural\B_A6500_086-152_J6l0984C_086.dgn

CONTRACT NO. 76D61

F.A. ROUTE	SECTION
999	82-1B-2
FED. AID PROJECT	ILLINOIS
COUNTY	ST. CLAIR

USER NAME = jjolliff
PLOT SCALE = $SCALE$
PLOT DATE = 3/8/2010
DESIGNED - HNTB
CHECKED - CMT
DRAWN - CMT / HTNB
REVISED -
REVISED -
REVISED -
REVISED -

ILLINOIS APPROACH STRUCTURE
FOR NEW I-70 MISSISSIPPI RIVER BRIDGE

STATE OF ILLINOIS
DEPARTMENT OF TRANSPORTATION

MISSOURI HIGHWAYS
AND TRANSPORTATION COMMISSION

HNTB
715 KIRK DRIVE
KANSAS CITY, MO 64105
TELEPHONE (816) 472-1201
CERTIFICATE OF AUTHORITY
NO. 001270

CMT
CRAWFORD, MURPHY & TILLY, INC.
2750 WEST WASHINGTON STREET
SPRINGFIELD, IL 62702
TELEPHONE (217) 787-8050
ENGINEERING CORPORATION - 000631

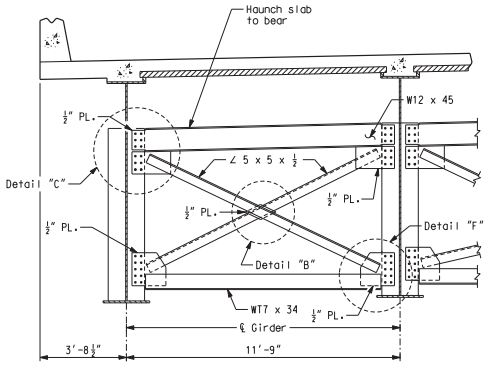

TYPICAL PART SECTION SHOWING
END DIAPHRAGM AT PIERS 17 AND 23

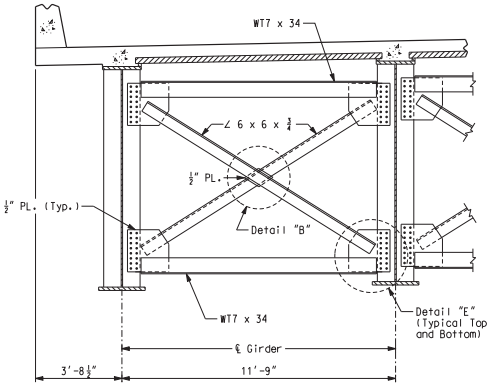

TYPICAL PART SECTION SHOWING
CROSS FRAME AT PIERS 18, 19, 20, 21, AND 22

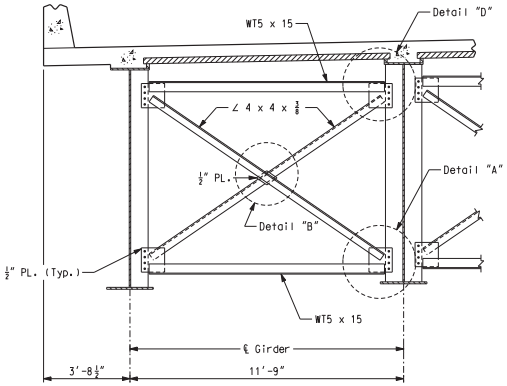

TYPICAL PART SECTION SHOWING
INTERMEDIATE CROSS FRAMES

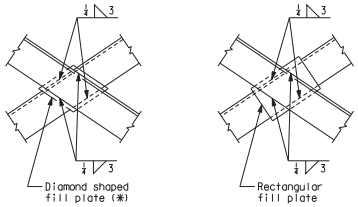

DETAIL "B"

OPTIONAL
DETAIL "B"

(*) At the contractor's option, rectangular fill plates may be used in lieu of diamond fill plates as shown in Optional Detail "B".

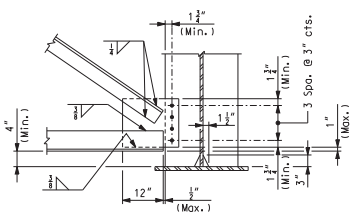

DETAIL "A"

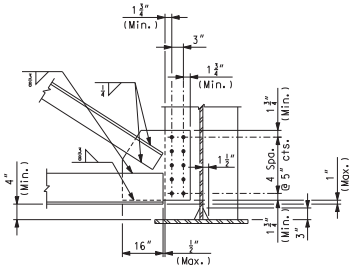

DETAIL "F"

Note:
All bolts shall be 1" Ø ASTM A325 High Strength Bolts.
All steel shall be ASTM A709 Grade 50W.

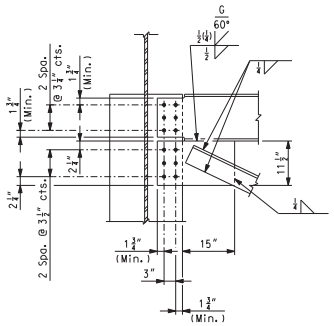

DETAIL "C"

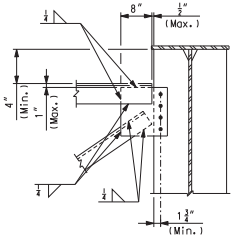

DETAIL "D"

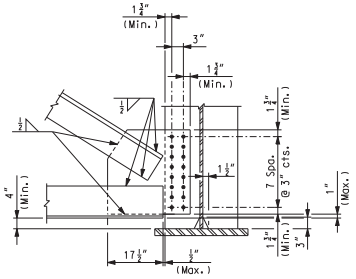

DETAIL "E"

CROSS FRAME AND DIAPHRAGM DETAILS - UNIT 2

Detailed JUL 2009
Checked JUL 2009

Note: This drawing is not to scale. Follow dimensions.

Sheet No. 87 of 152

s:\idot\0906601\draw_idot\cadd_sheets\structural\B_A6500_087-152_J6I0984C_087.dgn

CONTRACT NO. 76D61

F.A. ROUTE	SECTION
999	82-1B-2
FED. AID PROJECT	ILLINOIS
COUNTY	ST. CLAIR

USER NAME = jjolliff
PLOT SCALE = $SCALE$
PLOT DATE = 3/8/2010
DESIGNED - HNTB
CHECKED - CMT
DRAWN - CMT / HTNB
REVISED -
REVISED -
REVISED -
REVISED -

ILLINOIS APPROACH STRUCTURE
FOR NEW I-70 MISSISSIPPI RIVER BRIDGE

STATE OF ILLINOIS
DEPARTMENT OF TRANSPORTATION

MISSOURI HIGHWAYS
AND TRANSPORTATION COMMISSION

HNTB
715 KIRK DRIVE
KANSAS CITY, MO 64105
TELEPHONE (816) 472-1201
CERTIFICATE OF AUTHORITY
NO. 001270

CMT
CRAWFORD, MURPHY & TILLY, INC.
2750 WEST WASHINGTON STREET
SPRINGFIELD, IL 62702
TELEPHONE (217) 787-8050
ENGINEERING CORPORATION - 000631

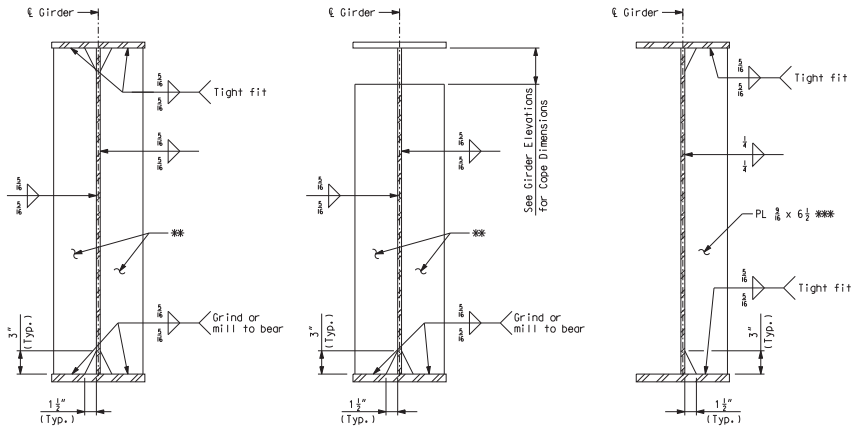

BEARING AND JACKING STIFFENER PIERS 14, 15, 16, 18, 19, 20, 21, AND 22

BEARING, JACKING AND EXPANSION DEVICE STIFFENERS PIERS 13, 17, AND 23

INTERMEDIATE STIFFENER AND INTERMEDIATE CROSS FRAME CONNECTION PLATE

*** Except as shown on Sheet No. 52.

WELDING DETAILS

Notes:
** For stiffener dimensions, see Girder Elevation Sheet Nos. 54 thru 63.
Fabricated structural steel for bearing stiffeners, intermediate stiffeners, and connection plates, shall be ASTM A709 Grade 50W.
Transverse web stiffeners shall be located as shown on the Framing Plan.

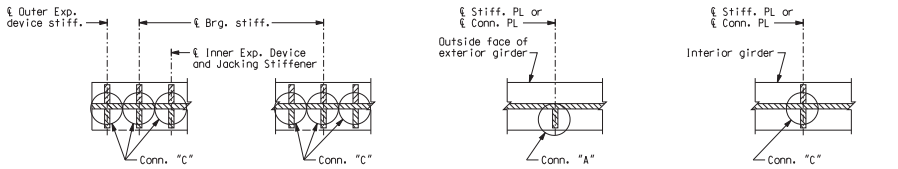

BEARING STIFFENER PIERS 13, 17, AND 23

BEARING STIFFENER PIERS 14, 15, 16, 18, 19, 20, 21, AND 22

INTERMEDIATE STIFFENER AND INTERMEDIATE CROSS FRAME CONNECTION PLATE

INTERMEDIATE STIFFENER AND INTERMEDIATE CROSS FRAME CONNECTION PLATE

TYPICAL LOCATION DETAILS

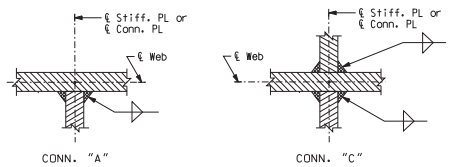

WELDING DETAILS

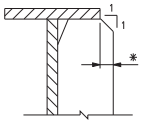

STIFFENER BEVEL DETAIL

* When dimension exceeds ½", bevel stiffener plate.

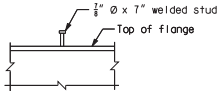

DETAILS OF SHEAR CONNECTORS

(Except as shown on Sheet Nos. 60 and 63)

Weight of 63,050 pounds of shear connectors is included in the weight of Fabricated Structural Low Alloy (Plate Girder) A709 Grade 50W.
Shear connectors shall be in accordance with Sec 712, 1037, and 1080.

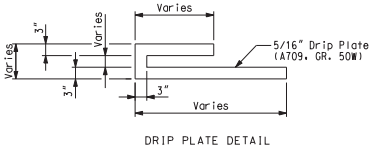

DRIP PLATE DETAIL

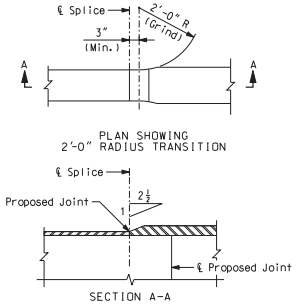

WELDED SHOP FLANGE SPLICE

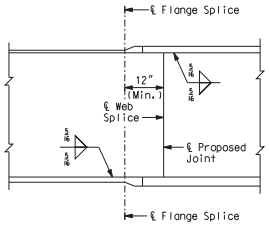

WELDED SHOP WEB SPLICE

Note:
Welded shop web and flange splices may be permitted when detailed on the shop drawings and approved by the engineer. No additional payment will be made for optional welded shop web and flange splices.

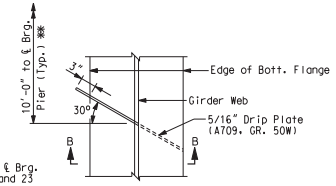

** 12'-0" to ℄ Brg. Piers 17 and 23

PLAN - DRIP PLATE

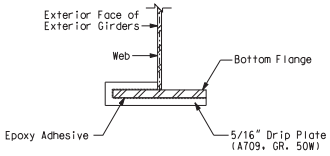

SECTION B-B

DRIP PLATE DETAILS

Notes:
Girder 1 shown, Girder 8 opposite hand.
Drip plates shall be installed on suitably prepared surfaces after shop priming, using a two component epoxy suitable for structural steel under prolonged exposure. Plates shall be painted with the paint specified for structural steel.

STIFFENER AND MISCELLANEOUS STEEL DETAILS

CONTRACT NO. 76D61

F.A. ROUTE	SECTION
999	82-1B-2
FED. AID PROJECT	ILLINOIS
COUNTY	ST. CLAIR

USER NAME = jjolliff
PLOT SCALE = $SCALE$
PLOT DATE = 3/8/2010
DESIGNED - HNTB
CHECKED - CMT
DRAWN - CMT / HTNB
REVISED -
REVISED -
REVISED -
REVISED -

ILLINOIS APPROACH STRUCTURE FOR NEW I-70 MISSISSIPPI RIVER BRIDGE

STATE OF ILLINOIS
DEPARTMENT OF TRANSPORTATION

MISSOURI HIGHWAYS AND TRANSPORTATION COMMISSION

HNTB
715 KIRK DRIVE
KANSAS CITY, MO 64105
TELEPHONE (816) 472-1201
CERTIFICATE OF AUTHORITY NO. 001270

CMT
CRAWFORD, MURPHY & TILLY, INC.
2750 WEST WASHINGTON STREET
SPRINGFIELD, IL 62702
TELEPHONE (217) 787-8050
ENGINEERING CORPORATION - 000631

Detailed JUL 2009
Checked JUL 2009

Note: This drawing is not to scale. Follow dimensions.

s:\idot\0906601\draw_idot\cadd_sheets\structural\B_A6500_088-152_J6I0984C_088.dgn

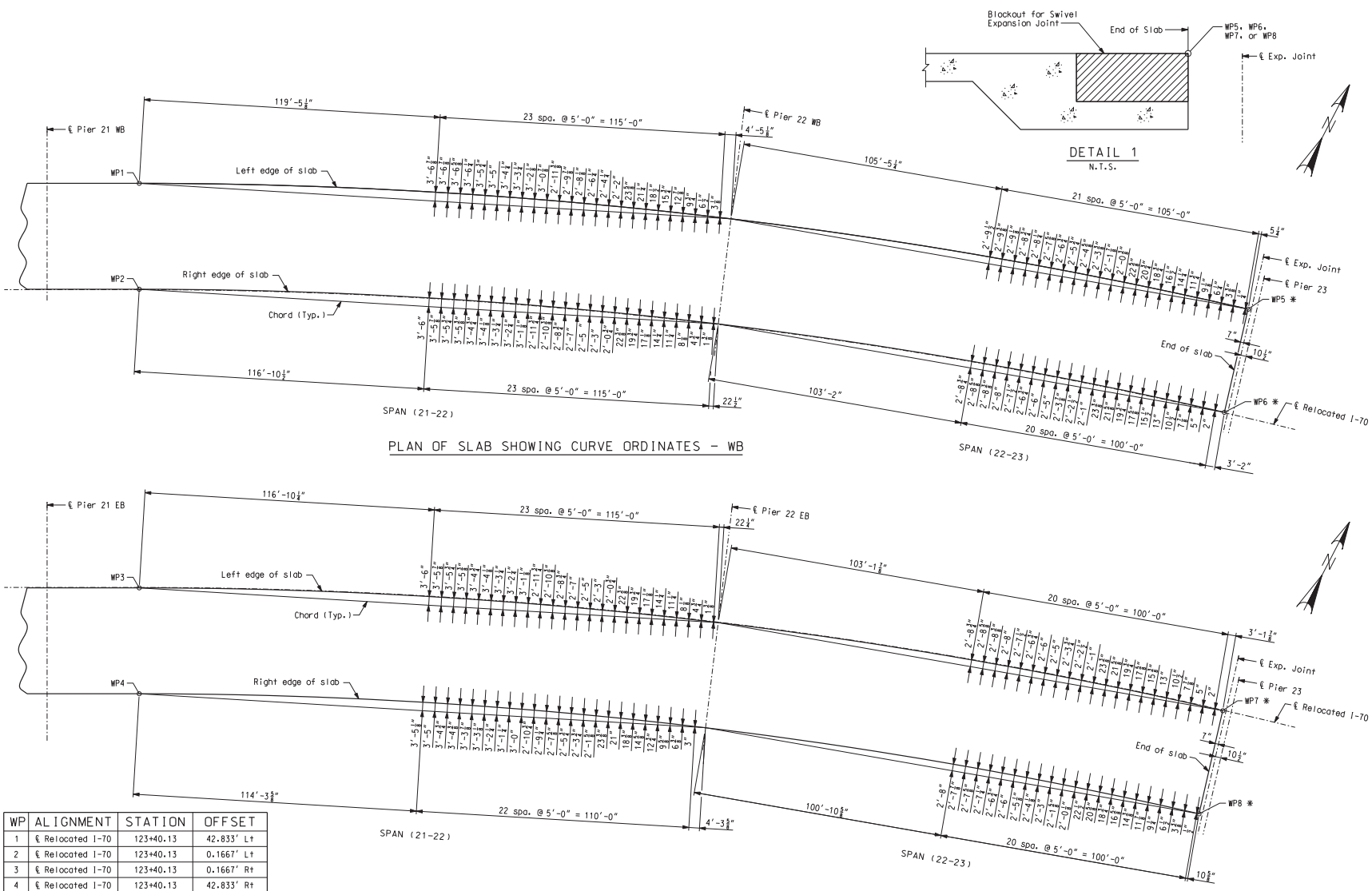

WP	ALIGNMENT	STATION	OFFSET
1	℄ Relocated I-70	123+40.13	42.833′ Lt
2	℄ Relocated I-70	123+40.13	0.1667′ Lt
3	℄ Relocated I-70	123+40.13	0.1667′ Rt
4	℄ Relocated I-70	123+40.13	42.833′ Rt
5	℄ Relocated I-70	127+80.45	42.833′ Lt
6	℄ Relocated I-70	127+80.42	0.1667′ Lt
7	℄ Relocated I-70	127+80.42	0.1667′ Rt
8	℄ Relocated I-70	127+80.39	42.833′ Rt

Note:
* Workpoints are located at end of slab. See Detail 1, this sheet.

SLAB OFFSET - UNIT 2

Detailed JUL 2009
Checked JUL 2009

Note: This drawing is not to scale. Follow dimensions.

s:\idot\0906601\draw_idot\cadd_sheets\structural\B_A6500_089-152_J6I0984C_089.dgn

CONTRACT NO. 76D61

F.A. ROUTE	SECTION
999	82-1B-2
FED. AID PROJECT	ILLINOIS
COUNTY	ST. CLAIR

USER NAME = jjolliff
PLOT SCALE = $SCALE$
PLOT DATE = 3/8/2010
DESIGNED - HNTB
CHECKED - CMT
DRAWN - CMT / HTNB
REVISED -
REVISED -
REVISED -
REVISED -

ILLINOIS APPROACH STRUCTURE
FOR NEW I-70 MISSISSIPPI RIVER BRIDGE

STATE OF ILLINOIS
DEPARTMENT OF TRANSPORTATION

MISSOURI HIGHWAYS
AND TRANSPORTATION COMMISSION

HNTB
715 KIRK DRIVE
KANSAS CITY, MO 64105
TELEPHONE (816) 472-1201
CERTIFICATE OF AUTHORITY
NO. 001270

CMT
CRAWFORD, MURPHY & TILLY, INC.
2750 WEST WASHINGTON STREET
SPRINGFIELD, IL 62702
TELEPHONE (217) 787-8050
ENGINEERING CORPORATION - 000631

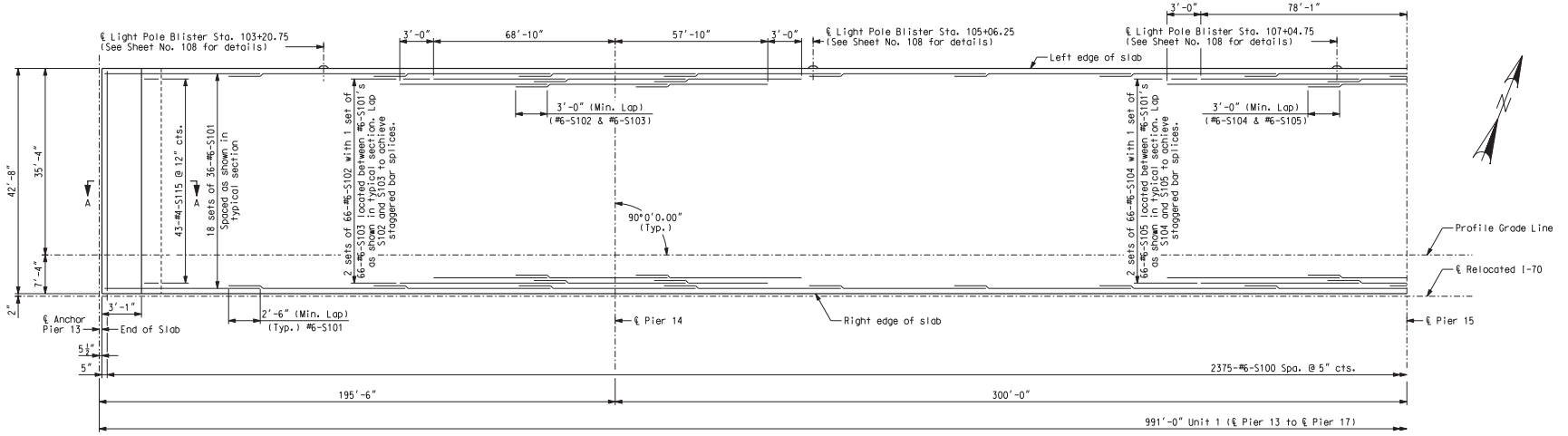

TOP REINFORCING

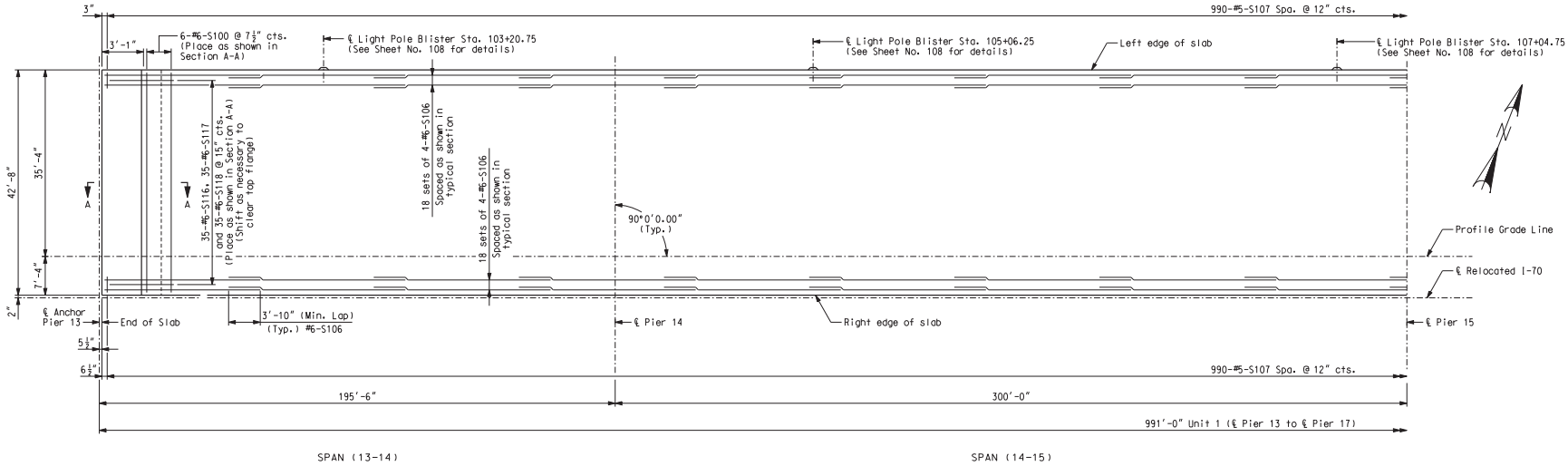

BOTTOM REINFORCING

Notes:
For typical bridge section and reinforcing, see Sheet No. 102.
For location of slab drains, see Sheet No. 127.
For details and reinforcing of barrier curbs, see Sheet Nos. 109 thru 117.
For slab pouring sequence, see Sheet No. 106.
Longitudinal slab dimensions are measured horizontally. See Sheet No. 100 for Section A-A.
Light poles, lights and other electrical appurtenances are by others. See electrical details in contract J610984 - MoDOT.

SLAB PLAN SHOWING REINFORCING WB - UNIT 1 (1 OF 2)

Detailed JUL 2009
Checked JUL 2009

Note: This drawing is not to scale. Follow dimensions.

s:\idot\0906601\draw_idot\cadd_sheets\structural\B_A6500_090-152_J6I0984C_090.dgn

CONTRACT NO. 76D61

F.A. ROUTE	SECTION
999	82-1B-2
FED. AID PROJECT	ILLINOIS
COUNTY	ST. CLAIR

USER NAME = jyollrff
PLOT SCALE = $SCALE$
PLOT DATE = 3/8/2010

DESIGNED - HNTB
CHECKED - CMT
DRAWN - CMT / HTNB
REVISED -
REVISED -
REVISED -
REVISED -

ILLINOIS APPROACH STRUCTURE FOR NEW I-70 MISSISSIPPI RIVER BRIDGE

STATE OF ILLINOIS
DEPARTMENT OF TRANSPORTATION

MISSOURI HIGHWAYS AND TRANSPORTATION COMMISSION

HNTB
715 KIRK DRIVE
KANSAS CITY, MO 64105
TELEPHONE (816) 472-1201
CERTIFICATE OF AUTHORITY NO. 001270

CMT
CRAWFORD, MURPHY & TILLY, INC.
2750 WEST WASHINGTON STREET
SPRINGFIELD, IL 62702
TELEPHONE (217) 787-8050
ENGINEERING CORPORATION - 000631

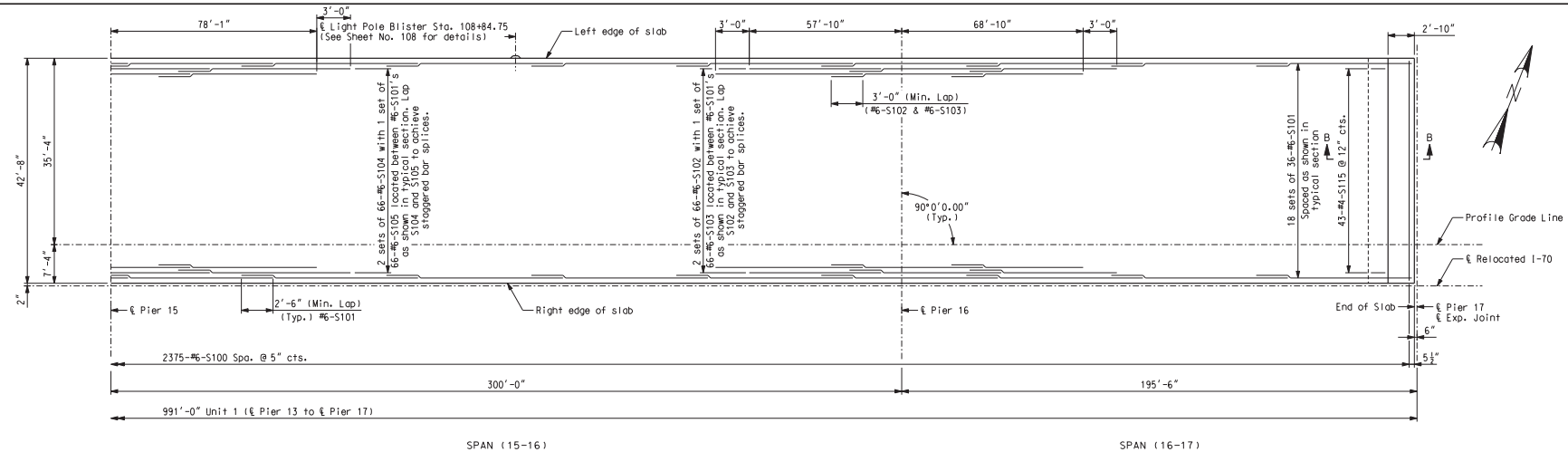

TOP REINFORCING

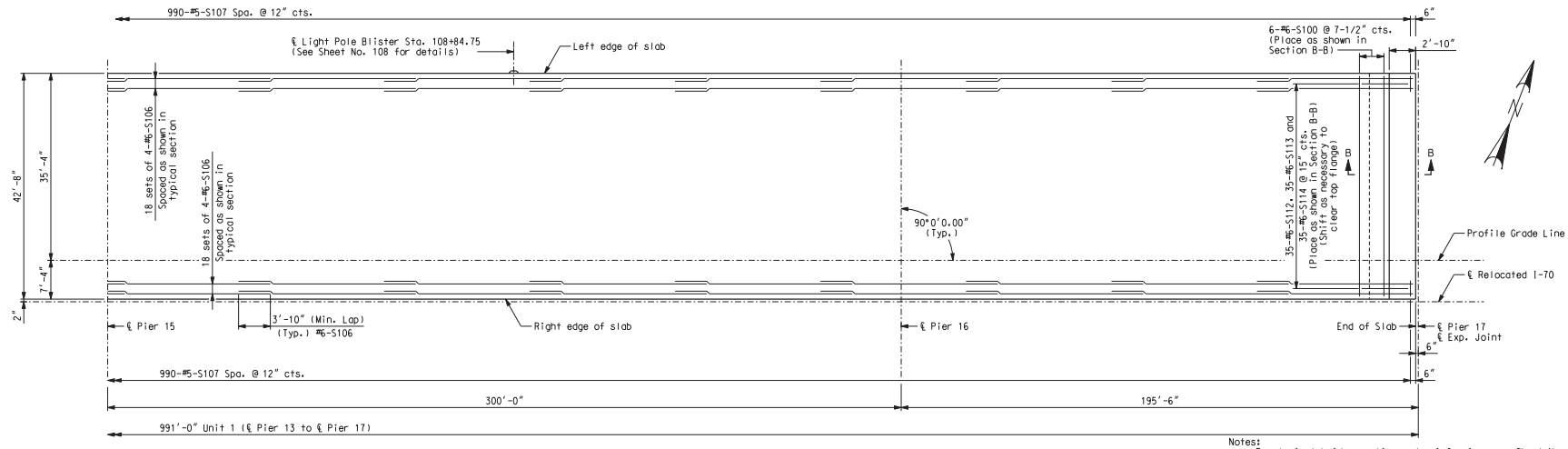

BOTTOM REINFORCING

Notes:

For typical bridge section and reinforcing, see Sheet No. 102.
For location of slab drains, see Sheet No. 127.
For details and reinforcing of barrier curbs, see Sheet Nos. 109 thru 117.
For slab pouring sequence, see Sheet No. 106.
Longitudinal slab dimensions are measured horizontally.
Longitudinal reinforcing steel shall be placed so that ends shall not be more than 1" ± from the vertical plate and the vertical leg of the angle at expansion device (Pier 17).
Concrete shall be forced under and around the joint members and hardware. Proper consolidation shall be achieved by localized internal vibration. Finishing of the concrete shall be achieved by hand finishing within one foot of the expansion device. The vertical and horizontal concrete vent holes shall be offset from each other. Do not alternate holes at the 12" spacing.
See Sheet No. 100 for Section B-B.
Light poles, lights and other electrical appurtenances are by others. See electrical details in contract J6I0984 - MoDOT.

SLAB PLAN SHOWING REINFORCING WB - UNIT 1 (2 OF 2)

Detailed JUL 2009
Checked JUL 2009

Note: This drawing is not to scale. Follow dimensions.

Sheet No. 91 of 152

s:\idot\0906601\draw_idot\cadd_sheets\structural\B_A6500_091-152_J6I0984C_091.dgn

CONTRACT NO. 76D61

F.A. ROUTE	SECTION
999	82-1B-2
FED. AID PROJECT	ILLINOIS
COUNTY	ST. CLAIR

USER NAME = jjolliff
PLOT SCALE = $SCALE$
PLOT DATE = 3/8/2010

DESIGNED - HNTB
CHECKED - CMT
DRAWN - CMT / HTNB

REVISED -
REVISED -
REVISED -
REVISED -

ILLINOIS APPROACH STRUCTURE FOR NEW I-70 MISSISSIPPI RIVER BRIDGE

STATE OF ILLINOIS
DEPARTMENT OF TRANSPORTATION

MISSOURI HIGHWAYS AND TRANSPORTATION COMMISSION

HNTB
715 KIRK DRIVE
KANSAS CITY, MO 64105
TELEPHONE (816) 472-1201
CERTIFICATE OF AUTHORITY NO. 001270

CMT
CRAWFORD, MURPHY & TILLY, INC.
2750 WEST WASHINGTON STREET
SPRINGFIELD, IL 62702
TELEPHONE (217) 787-8050
ENGINEERING CORPORATION - 000631

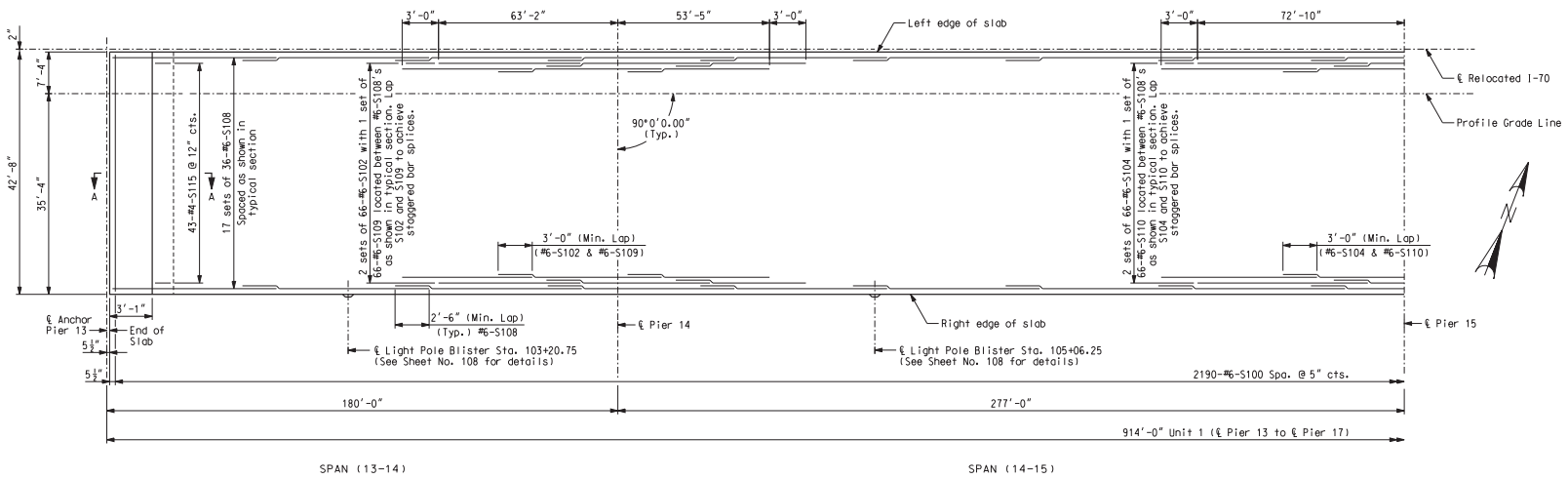

TOP REINFORCING

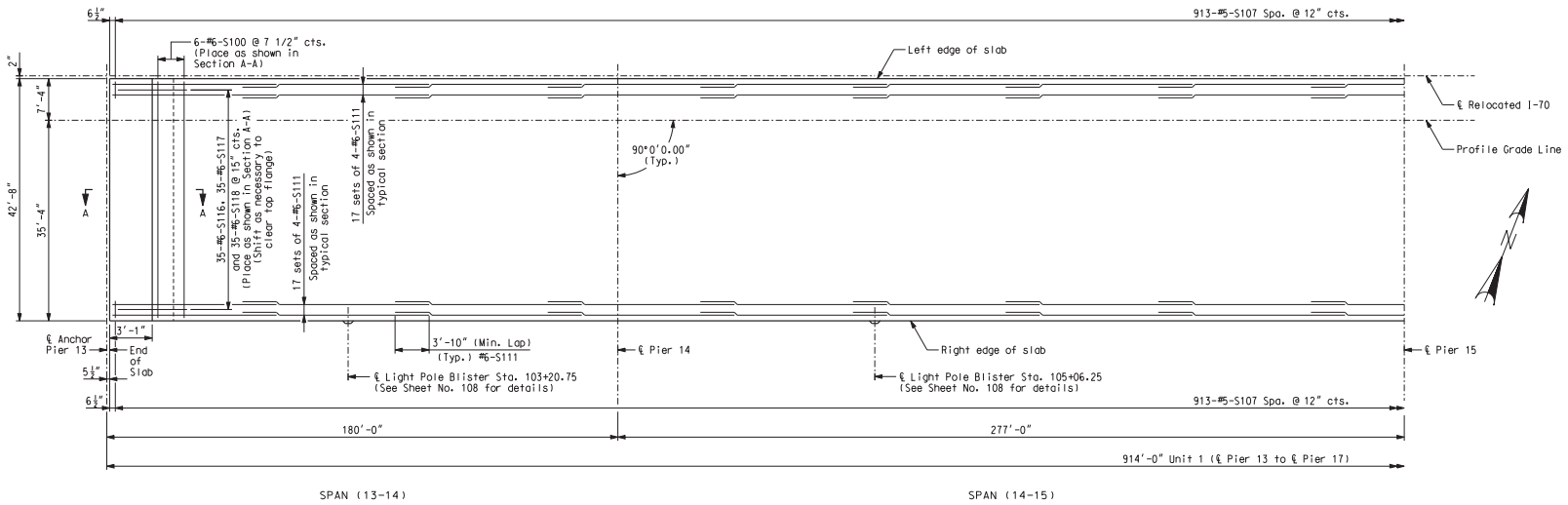

BOTTOM REINFORCING

Notes:
For typical bridge section and reinforcing, see Sheet No. 103.
For location of slab drains, see Sheet No. 127.
For details and reinforcing of barrier curbs, see Sheet Nos. 109 thru 117.
For slab pouring sequence, see Sheet No. 106.
Longitudinal slab dimensions are measured horizontally. See Sheet No. 100 for Section A-A.
Light poles, lights and other electrical appurtenances are by others. See electrical details in contract J6I0984 - MoDOT.

SLAB PLAN SHOWING REINFORCING EB - UNIT 1 (1 OF 2)

Detailed JUL 2009
Checked JUL 2009

Note: This drawing is not to scale. Follow dimensions.

s:\idot\0906601\draw_idot\cadd_sheets\structural\B_A6500_092-152_J6I0984C_092.dgn

CONTRACT NO. 76D61

F.A. ROUTE	SECTION
999	82-1B-2
FED. AID PROJECT	ILLINOIS
COUNTY	ST. CLAIR

USER NAME = jjolliff
PLOT SCALE = $SCALE$
PLOT DATE = 3/8/2010
DESIGNED - HNTB
CHECKED - CMT
DRAWN - CMT / HTNB
REVISED -
REVISED -
REVISED -
REVISED -

ILLINOIS APPROACH STRUCTURE FOR NEW I-70 MISSISSIPPI RIVER BRIDGE

STATE OF ILLINOIS
DEPARTMENT OF TRANSPORTATION

MISSOURI HIGHWAYS AND TRANSPORTATION COMMISSION

HNTB
715 KIRK DRIVE
KANSAS CITY, MO 64105
TELEPHONE (816) 472-1201
CERTIFICATE OF AUTHORITY NO. 001270

CMT
CRAWFORD, MURPHY & TILLY, INC.
2750 WEST WASHINGTON STREET
SPRINGFIELD, IL 62702
TELEPHONE (217) 787-8050
ENGINEERING CORPORATION - 000631

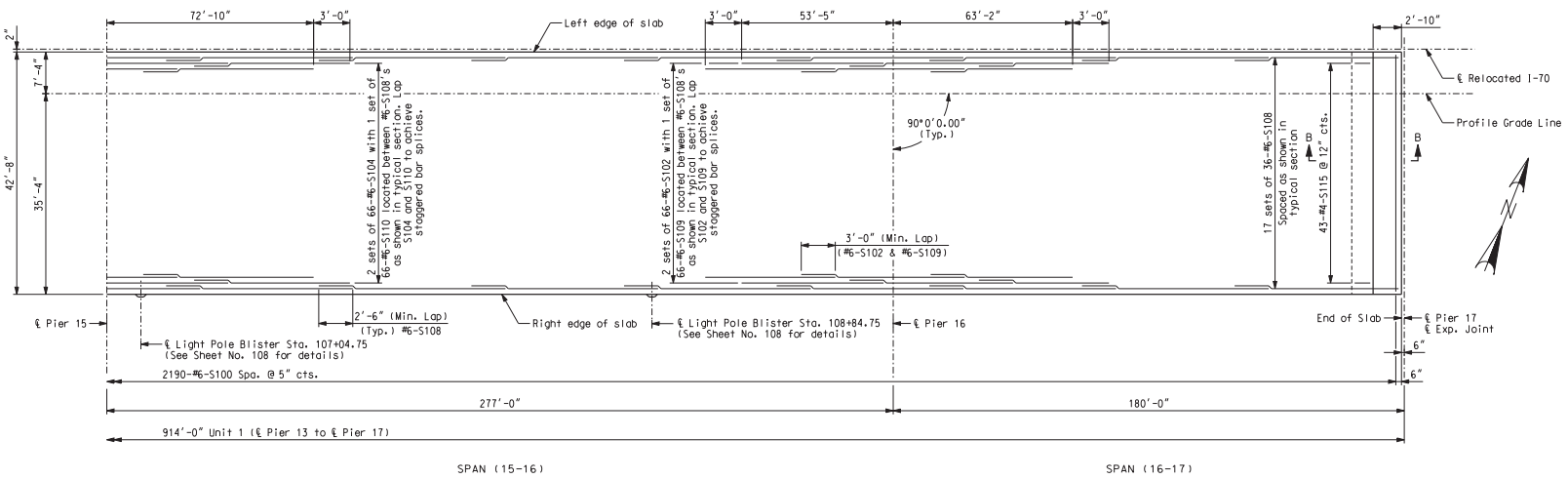

TOP REINFORCING

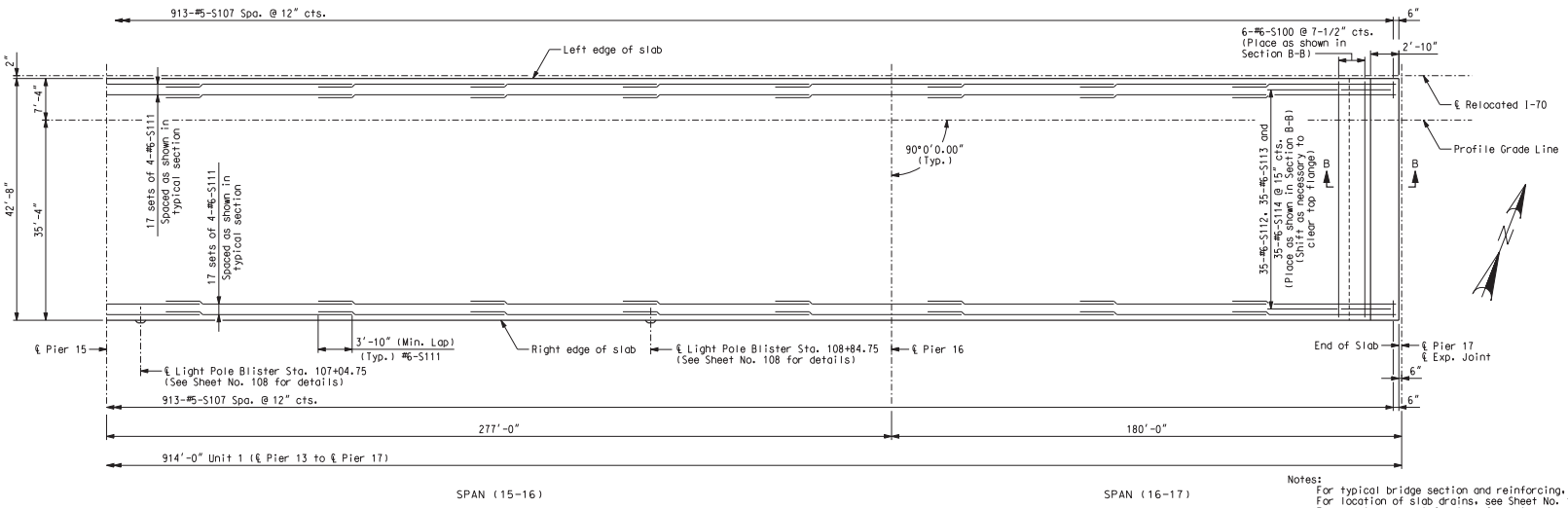

BOTTOM REINFORCING

Notes:
For typical bridge section and reinforcing, see Sheet No. 103.
For location of slab drains, see Sheet No. 127.
For details and reinforcing of barrier curbs, see Sheet Nos. 109 thru 117.
For slab pouring sequence, see Sheet No. 106.
Longitudinal slab dimensions are measured horizontally.
Longitudinal reinforcing steel shall be placed so that ends shall not be more than 1"± from the vertical plate and the vertical leg of the angle at expansion device (Pier 17).
Concrete shall be forced under and around the joint members and hardware. Proper consolidation shall be achieved by localized internal vibration. Finishing of the concrete shall be achieved by hand finishing within one foot of the expansion device. The vertical and horizontal concrete vent holes shall be offset from each other. Do not alternate holes at the 12" spacing.
See Sheet No. 100 for Section B-B.
Light poles, lights and other electrical appurtenances are by others. See electrical details in contract J6I0984 - MoDOT.

Detailed JUL 2009
Checked JUL 2009

Note: This drawing is not to scale. Follow dimensions.

Sheet No. 93 of 152

SLAB PLAN SHOWING REINFORCING EB - UNIT 1 (2 OF 2)

s:\idot\0906601\draw_idot\cadd_sheets\structural\B_A6500_093-152_J6I0984C_093.dgn

CONTRACT NO. 76D61

F.A. ROUTE	SECTION
999	82-1B-2
FED. AID PROJECT	ILLINOIS
COUNTY	ST. CLAIR

USER NAME = jjolliff
PLOT SCALE = $SCALE$
PLOT DATE = 3/8/2010
DESIGNED - HNTB
CHECKED - CMT
DRAWN - CMT / HTNB
REVISED -
REVISED -
REVISED -
REVISED -

ILLINOIS APPROACH STRUCTURE FOR NEW I-70 MISSISSIPPI RIVER BRIDGE

STATE OF ILLINOIS
DEPARTMENT OF TRANSPORTATION

MISSOURI HIGHWAYS AND TRANSPORTATION COMMISSION

HNTB
715 KIRK DRIVE
KANSAS CITY, MO 64105
TELEPHONE (816) 472-1201
CERTIFICATE OF AUTHORITY NO. 001270

CMT
CRAWFORD, MURPHY & TILLY, INC.
2750 WEST WASHINGTON STREET
SPRINGFIELD, IL 62702
TELEPHONE (217) 787-8050
ENGINEERING CORPORATION - 000631

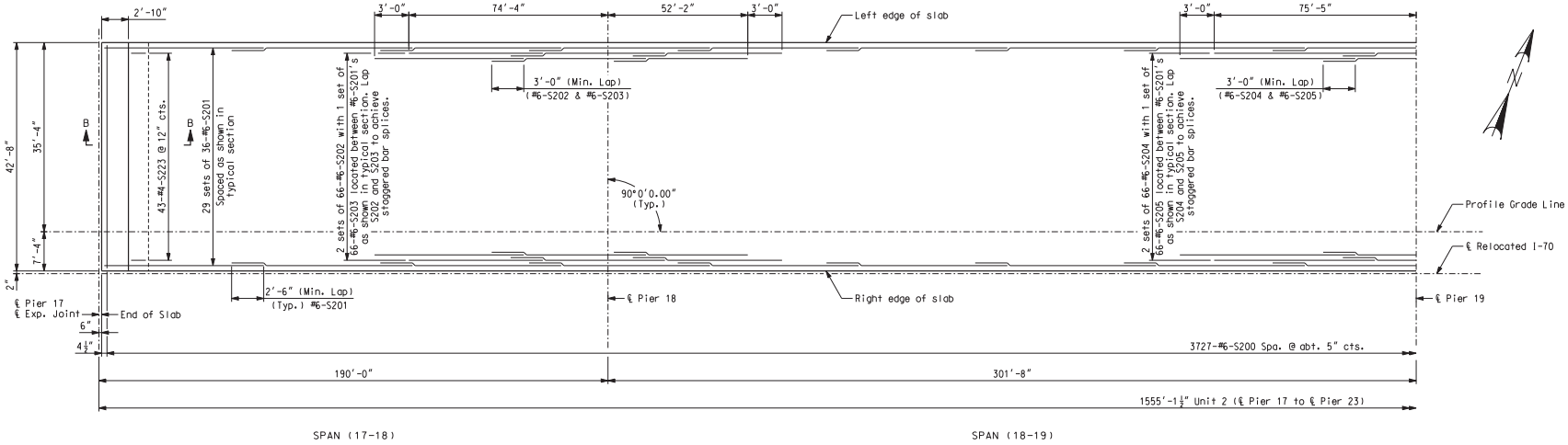

TOP REINFORCING

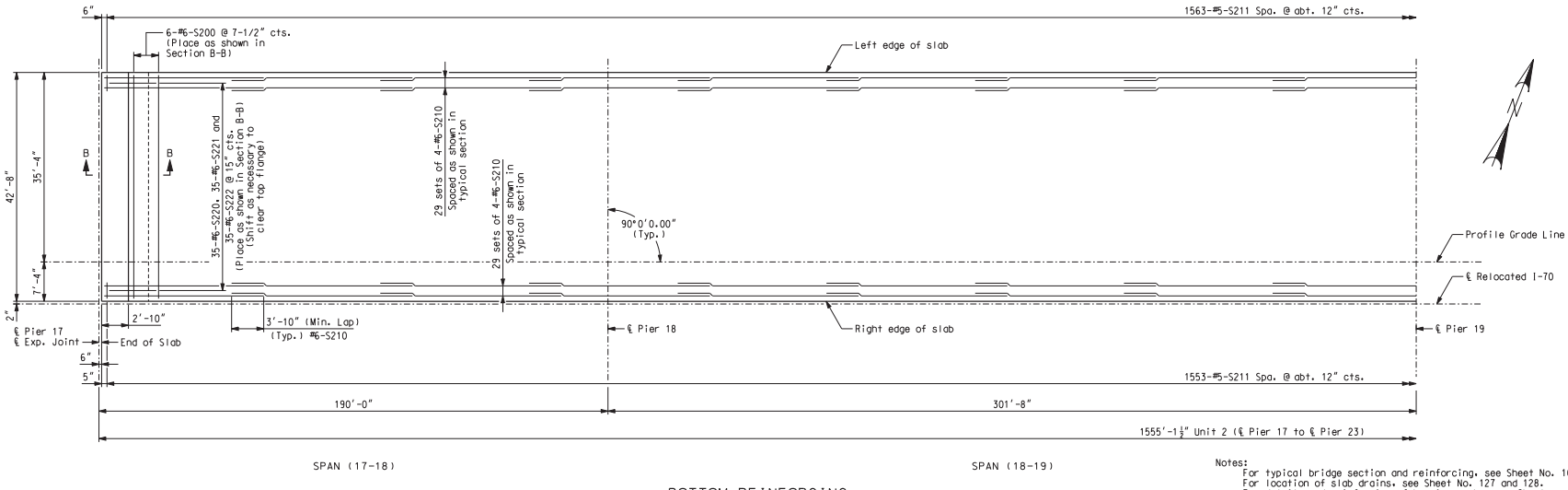

BOTTOM REINFORCING

Notes:
For typical bridge section and reinforcing, see Sheet No. 104.
For location of slab drains, see Sheet No. 127 and 128.
For details and reinforcing of barrier curbs, see Sheet Nos. 109 thru 117.
For slab pouring sequence, see Sheet No. 107.
Longitudinal slab dimensions are measured horizontally.
Longitudinal reinforcing steel shall be placed so that ends shall not be more than 1"± from the vertical plate and the vertical leg of the angle at expansion device (Pier 17).
Concrete shall be forced under and around the joint members and hardware. Proper consolidation shall be achieved by localized internal vibration. Finishing of the concrete shall be achieved by hand finishing within one foot of the expansion device. The vertical and horizontal concrete vent holes shall be offset from each other. Do not alternate holes at the 12" spacing.
See Sheet No. 100 for Section B-B.

SLAB PLAN SHOWING REINFORCING WB - UNIT 2 (1 OF 3)

Detailed JUL 2009
Checked JUL 2009

Note: This drawing is not to scale. Follow dimensions.

s:\idot\0906601\draw_idot\cadd_sheets\structural\B_A6500_094-152_J6l0984C_094.dgn

CONTRACT NO. 76D61

F.A. ROUTE	SECTION
999	82-1B-2
FED. AID PROJECT	ILLINOIS
COUNTY	ST. CLAIR

USER NAME = jjolliff
PLOT SCALE = $SCALE$
PLOT DATE = 3/8/2010
DESIGNED - HNTB
CHECKED - CMT
DRAWN - CMT / HTNB
REVISED -
REVISED -
REVISED -
REVISED -

ILLINOIS APPROACH STRUCTURE FOR NEW I-70 MISSISSIPPI RIVER BRIDGE

STATE OF ILLINOIS
DEPARTMENT OF TRANSPORTATION

MISSOURI HIGHWAYS AND TRANSPORTATION COMMISSION

HNTB
715 KIRK DRIVE
KANSAS CITY, MO 64105
TELEPHONE (816) 472-1201
CERTIFICATE OF AUTHORITY NO. 001270

CMT
CRAWFORD, MURPHY & TILLY, INC.
2750 WEST WASHINGTON STREET
SPRINGFIELD, IL 62702
TELEPHONE (217) 787-8050
ENGINEERING CORPORATION - 000631

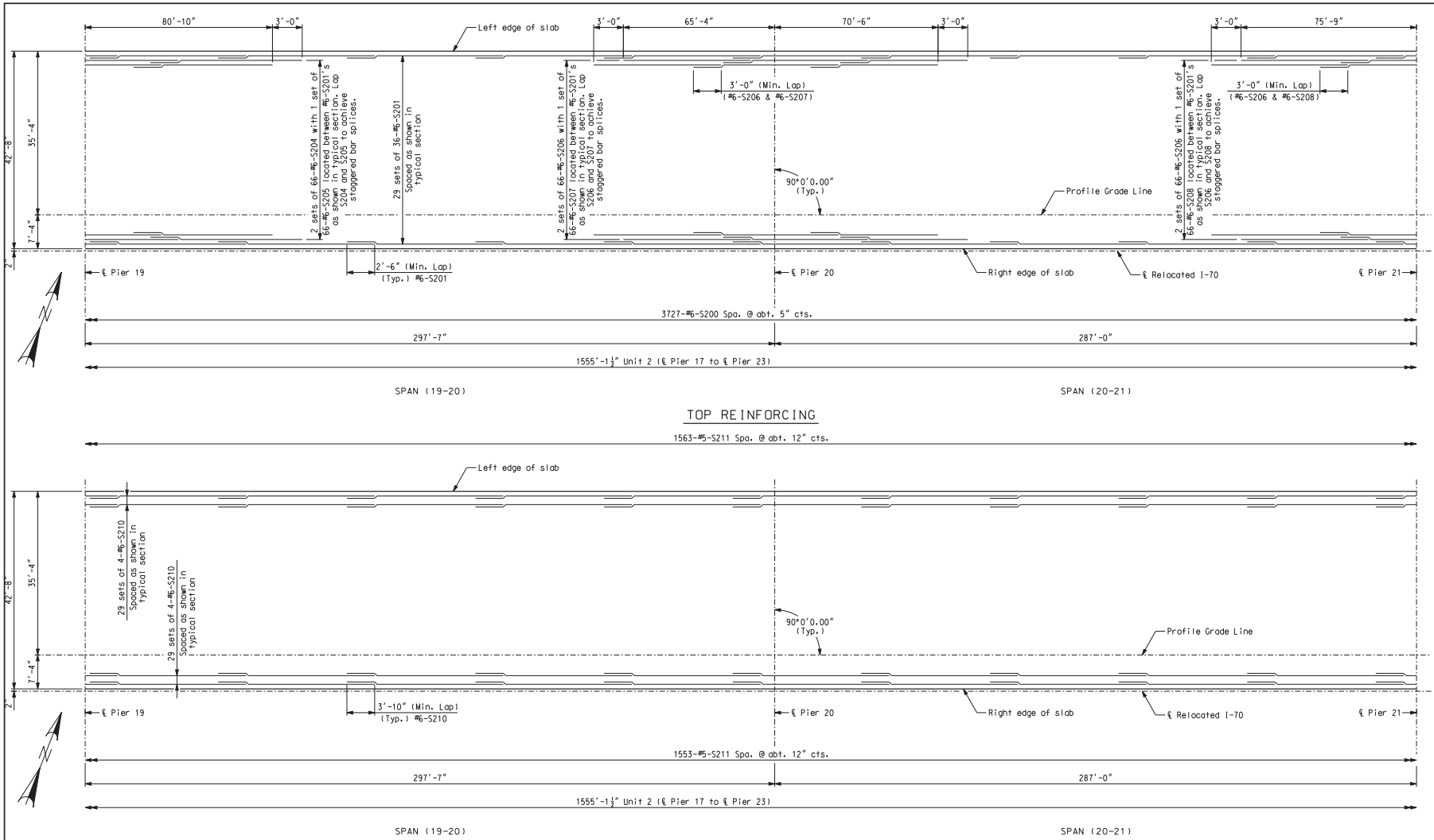

TOP REINFORCING

BOTTOM REINFORCING

Notes:
For typical bridge section and reinforcing, see Sheet No. 104.
For location of slab drains, see Sheet No. 128.
For details and reinforcing of barrier curbs, see Sheet Nos. 109 thru 117.
For slab pouring sequence, see Sheet No. 107.
Longitudinal slab dimensions are measured horizontally.

SLAB PLAN SHOWING REINFORCING WB - UNIT 2 (2 OF 3)

Detailed JUL 2009
Checked JUL 2009

Note: This drawing is not to scale. Follow dimensions.

Sheet No. 95 of 152

s:\idot\0906601\draw_idot\cadd_sheets\structural\B_A6500_095-152_J6I0984C_095.dgn

CONTRACT NO. 76D61

F.A. ROUTE	SECTION
999	82-1B-2
FED. AID PROJECT	ILLINOIS
COUNTY	ST. CLAIR

USER NAME = jjolliff
PLOT SCALE = $SCALE$
PLOT DATE = 3/8/2010

DESIGNED - HNTB
CHECKED - CMT
DRAWN - CMT / HTNB
REVISED -
REVISED -
REVISED -
REVISED -

ILLINOIS APPROACH STRUCTURE FOR NEW I-70 MISSISSIPPI RIVER BRIDGE

STATE OF ILLINOIS
DEPARTMENT OF TRANSPORTATION

MISSOURI HIGHWAYS AND TRANSPORTATION COMMISSION

HNTB
715 KIRK DRIVE
KANSAS CITY, MO 64105
TELEPHONE (816) 472-1201
CERTIFICATE OF AUTHORITY NO. 001270

CMT
CRAWFORD, MURPHY & TILLY, INC.
2750 WEST WASHINGTON STREET
SPRINGFIELD, IL 62702
TELEPHONE (217) 787-8050
ENGINEERING CORPORATION - 000631

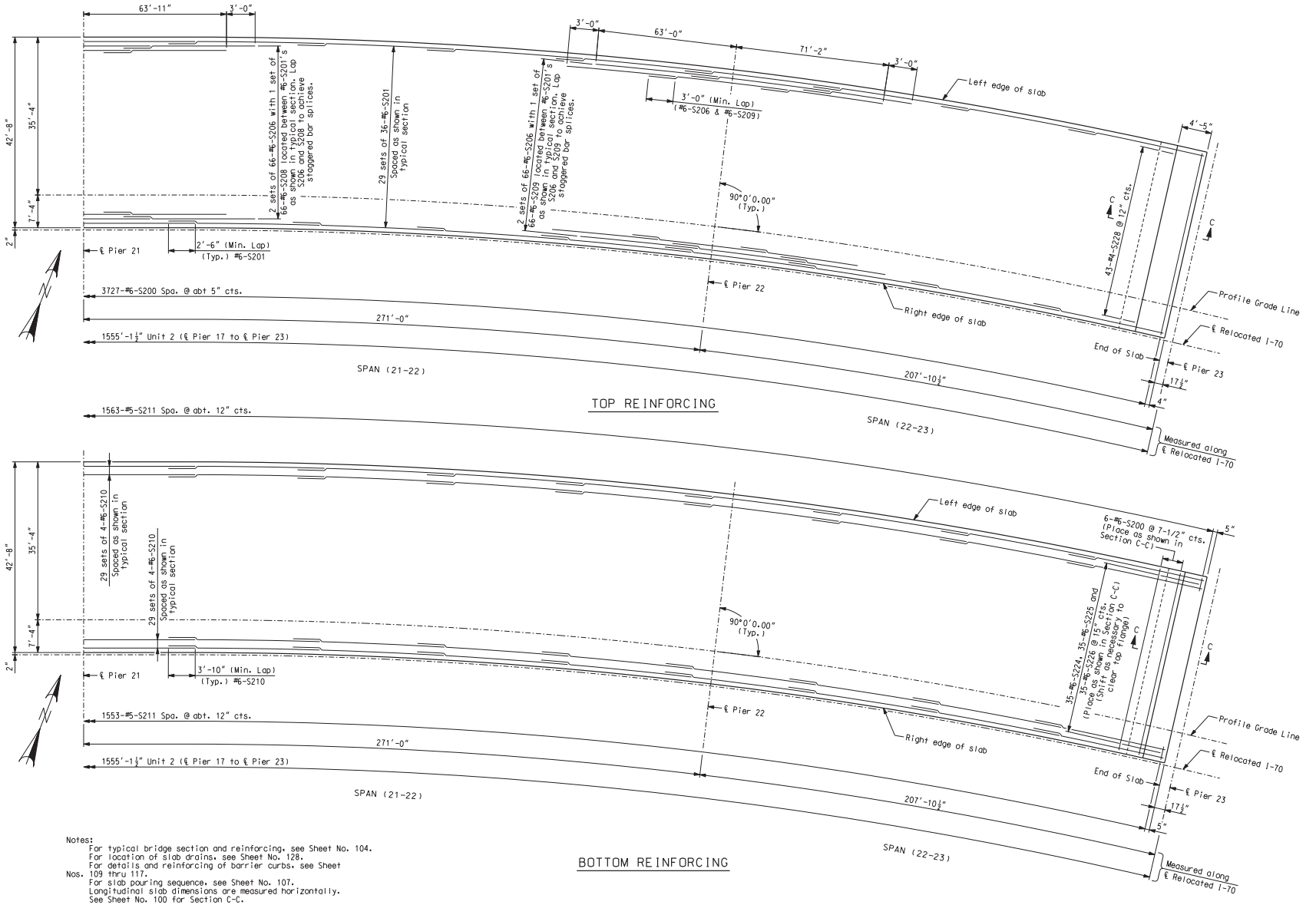

Notes:
For typical bridge section and reinforcing, see Sheet No. 104.
For location of slab drains, see Sheet No. 128.
For details and reinforcing of barrier curbs, see Sheet Nos. 109 thru 117.
For slab pouring sequence, see Sheet No. 107.
Longitudinal slab dimensions are measured horizontally. See Sheet No. 100 for Section C-C.

SLAB PLAN SHOWING REINFORCING WB - UNIT 2 (3 OF 3)

Detailed JUL 2009
Checked JUL 2009

Note: This drawing is not to scale. Follow dimensions.

s:\idot\0906601\draw_idot\cadd_sheets\structural\B_A6500_096-152_J6l0984C_096.dgn

CONTRACT NO. 76D61

F.A. ROUTE	SECTION
999	82-1B-2
FED. AID PROJECT	ILLINOIS
COUNTY	ST. CLAIR

USER NAME = jjolliff
PLOT SCALE = $SCALE$
PLOT DATE = 3/8/2010
DESIGNED - HNTB
CHECKED - CMT
DRAWN - CMT / HTNB
REVISED -
REVISED -
REVISED -
REVISED -

ILLINOIS APPROACH STRUCTURE FOR NEW I-70 MISSISSIPPI RIVER BRIDGE

STATE OF ILLINOIS
DEPARTMENT OF TRANSPORTATION

MISSOURI HIGHWAYS AND TRANSPORTATION COMMISSION

HNTB
715 KIRK DRIVE
KANSAS CITY, MO 64105
TELEPHONE (816) 472-1201
CERTIFICATE OF AUTHORITY NO. 001270

CMT
CRAWFORD, MURPHY & TILLY, INC.
2750 WEST WASHINGTON STREET
SPRINGFIELD, IL 62702
TELEPHONE (217) 787-8050
ENGINEERING CORPORATION - 000631

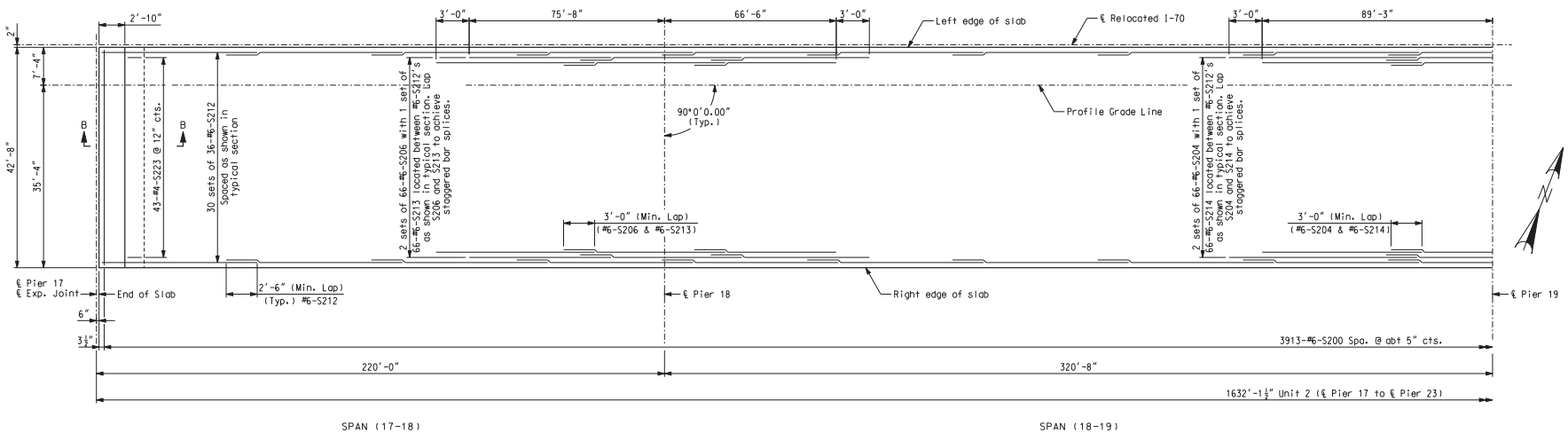

TOP REINFORCING

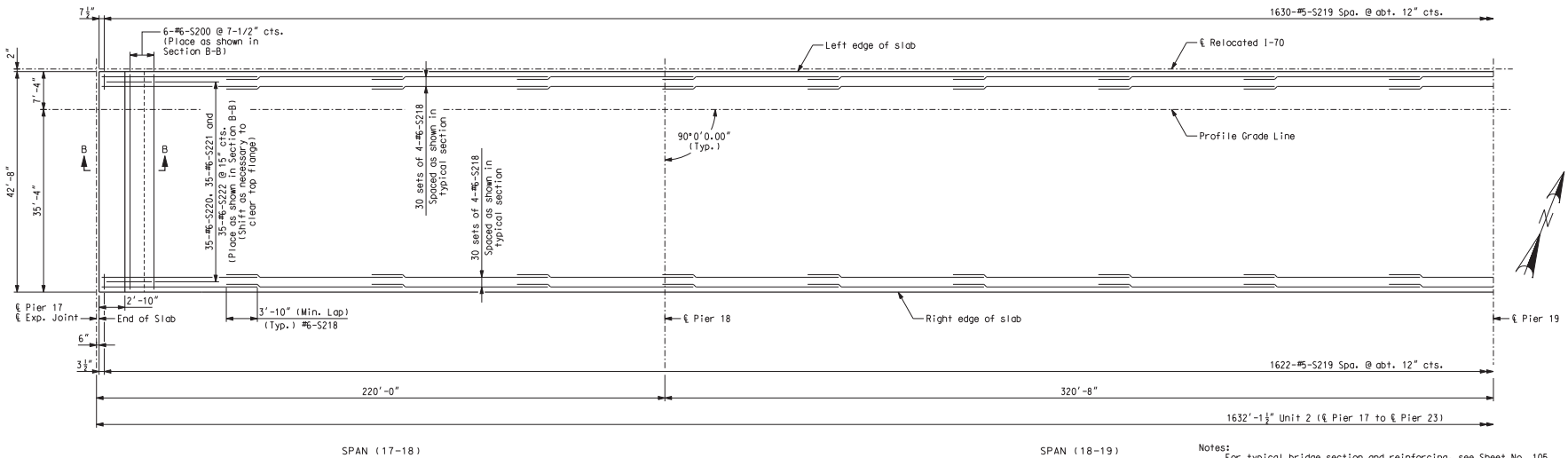

BOTTOM REINFORCING

Notes:
For typical bridge section and reinforcing, see Sheet No. 105.
For location of slab drains, see Sheet Nos. 127 and 128.
For details and reinforcing of barrier curbs, see Sheet Nos. 109 thru 117.
For slab pouring sequence, see Sheet No. 107.
Longitudinal slab dimensions are measured horizontally.
Longitudinal reinforcing steel shall be placed so that ends shall not be more than 1"± from the vertical plate and the vertical leg of the angle at expansion device (Pier 17).
Concrete shall be forced under and around the joint members and hardware. Proper consolidation shall be achieved by localized internal vibration. Finishing of the concrete shall be achieved by hand finishing within one foot of the expansion device. The vertical and horizontal concrete vent holes shall be offset from each other. Do not alternate holes at the 12" spacing.
See Sheet No. 100 for Section B-B.

SLAB PLAN SHOWING REINFORCING EB - UNIT 2 (1 OF 3)

Detailed JUL 2009
Checked JUL 2009

Note: This drawing is not to scale. Follow dimensions.

s:\idot\0906601\draw_idot\cadd_sheets\structural\B_A6500_097-152_J6I0984C_097.dgn

CONTRACT NO. 76D61

F.A. ROUTE	SECTION
999	82-1B-2
FED. AID PROJECT	ILLINOIS
COUNTY	ST. CLAIR

USER NAME = jjolliff
PLOT SCALE = $SCALE$
PLOT DATE = 3/8/2010
DESIGNED - HNTB
CHECKED - CMT
DRAWN - CMT / HTNB
REVISED -
REVISED -
REVISED -
REVISED -

ILLINOIS APPROACH STRUCTURE FOR NEW I-70 MISSISSIPPI RIVER BRIDGE

STATE OF ILLINOIS
DEPARTMENT OF TRANSPORTATION

MISSOURI HIGHWAYS AND TRANSPORTATION COMMISSION

HNTB
715 KIRK DRIVE
KANSAS CITY, MO 64105
TELEPHONE (816) 472-1201
CERTIFICATE OF AUTHORITY NO. 001270

CMT
CRAWFORD, MURPHY & TILLY, INC.
2750 WEST WASHINGTON STREET
SPRINGFIELD, IL 62702
TELEPHONE (217) 787-8050
ENGINEERING CORPORATION - 000631

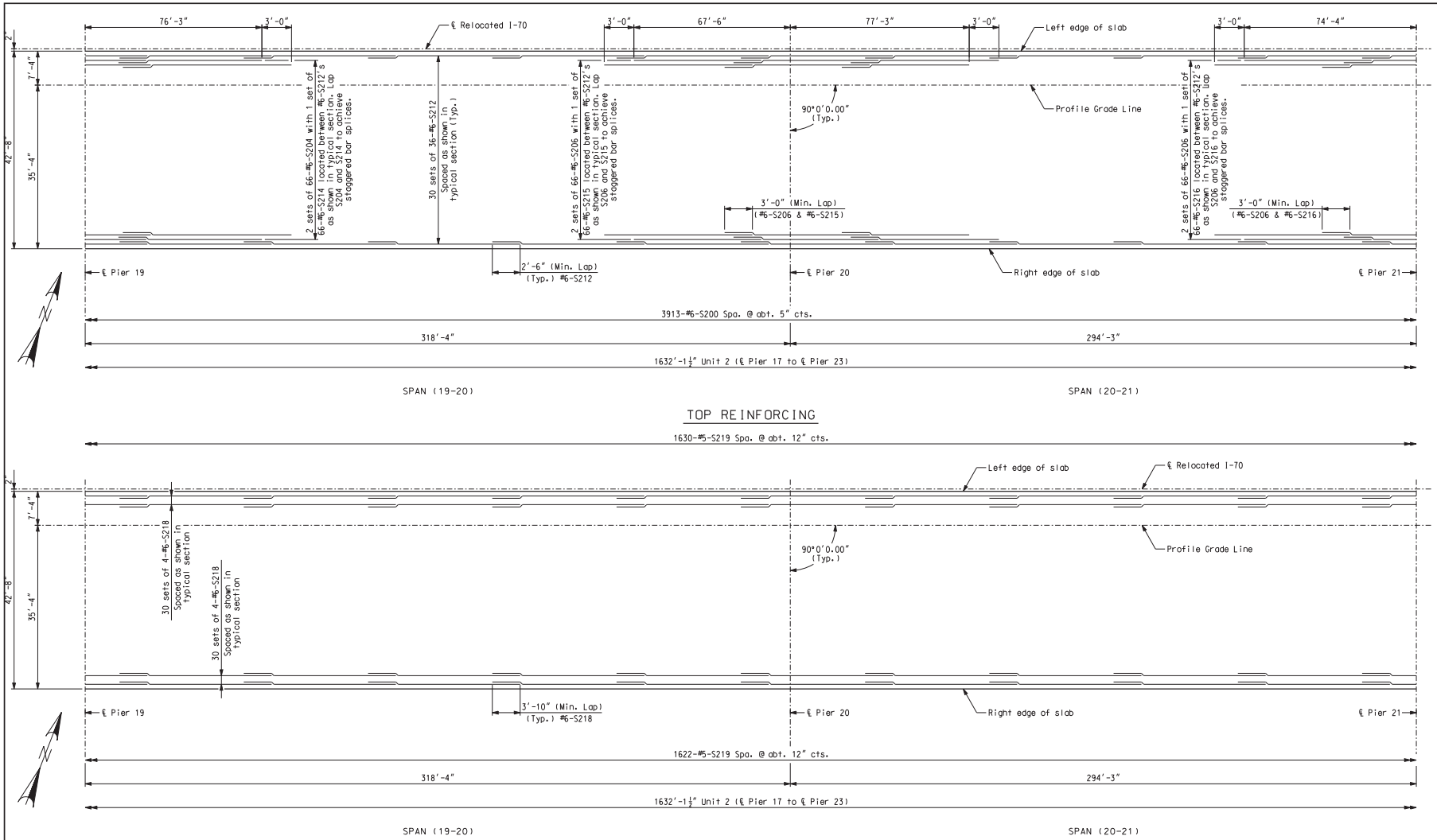

Notes:
For typical bridge section and reinforcing, see Sheet No. 105.
For location of slab drains, see Sheet No. 128.
For details and reinforcing of barrier curbs, see Sheet Nos. 109 thru 117.
For slab pouring sequence, see Sheet No. 107.
Longitudinal slab dimensions are measured horizontally.

SLAB PLAN SHOWING REINFORCING EB - UNIT 2 (2 OF 3)

Detailed JUL 2009
Checked JUL 2009

Note: This drawing is not to scale. Follow dimensions.

s:\idot\0906601\draw_idot\cadd_sheets\structural\B_A6500_098-152_J6I0984C_098.dgn

CONTRACT NO. 76D61

F.A. ROUTE	SECTION
999	82-1B-2
FED. AID PROJECT	ILLINOIS
COUNTY	ST. CLAIR

USER NAME = jjolliff
PLOT SCALE = $SCALE$
PLOT DATE = 3/8/2010
DESIGNED - HNTB
CHECKED - CMT
DRAWN - CMT / HTNB
REVISED -
REVISED -
REVISED -
REVISED -

ILLINOIS APPROACH STRUCTURE FOR NEW I-70 MISSISSIPPI RIVER BRIDGE

STATE OF ILLINOIS
DEPARTMENT OF TRANSPORTATION

MISSOURI HIGHWAYS AND TRANSPORTATION COMMISSION

HNTB
715 KIRK DRIVE
KANSAS CITY, MO 64105
TELEPHONE (816) 472-1201
CERTIFICATE OF AUTHORITY NO. 001270

CMT
CRAWFORD, MURPHY & TILLY, INC.
2750 WEST WASHINGTON STREET
SPRINGFIELD, IL 62702
TELEPHONE (217) 787-8050
ENGINEERING CORPORATION - 000631

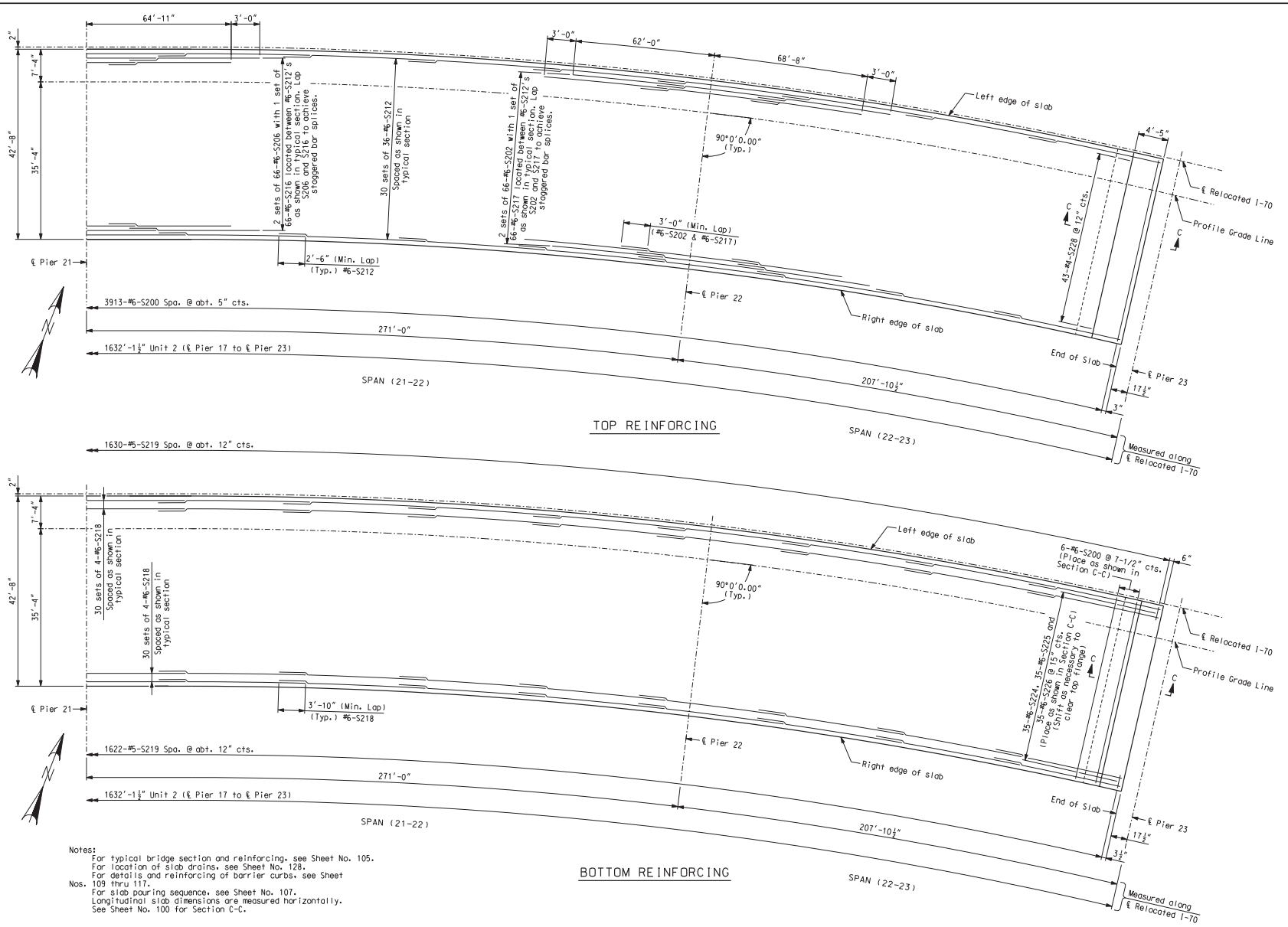

Notes:
For typical bridge section and reinforcing, see Sheet No. 105.
For location of slab drains, see Sheet No. 128.
For details and reinforcing of barrier curbs, see Sheet Nos. 109 thru 117.
For slab pouring sequence, see Sheet No. 107.
Longitudinal slab dimensions are measured horizontally.
See Sheet No. 100 for Section C-C.

SLAB PLAN SHOWING REINFORCING EB - UNIT 2 (3 OF 3)

Detailed JUL 2009
Checked JUL 2009

Note: This drawing is not to scale. Follow dimensions.

s:\idot\0906601\draw_idot\cadd_sheets\structural\B_A6500_099-152_J6l0984C_099.dgn

CONTRACT NO. 76D61

F.A. ROUTE	SECTION
999	82-1B-2
FED. AID PROJECT	ILLINOIS
COUNTY	ST. CLAIR

USER NAME = jjolliff
PLOT SCALE = $SCALE$
PLOT DATE = 3/8/2010
DESIGNED - HNTB
CHECKED - CMT
DRAWN - CMT / HTNB
REVISED -
REVISED -
REVISED -
REVISED -

ILLINOIS APPROACH STRUCTURE FOR NEW I-70 MISSISSIPPI RIVER BRIDGE

STATE OF ILLINOIS
DEPARTMENT OF TRANSPORTATION

MISSOURI HIGHWAYS AND TRANSPORTATION COMMISSION

HNTB
715 KIRK DRIVE
KANSAS CITY, MO 64105
TELEPHONE (816) 472-1201
CERTIFICATE OF AUTHORITY NO. 001270

CMT
CRAWFORD, MURPHY & TILLY, INC.
2750 WEST WASHINGTON STREET
SPRINGFIELD, IL 62702
TELEPHONE (217) 787-8050
ENGINEERING CORPORATION - 000631

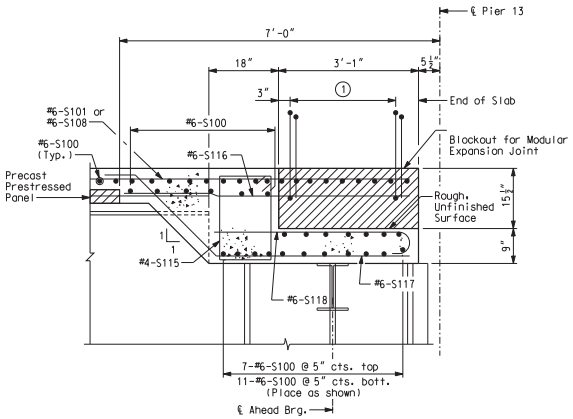

SECTION A-A
(at Pier 13)
(Looking South)

Note:
Modular Expansion Joint to be provided by others.

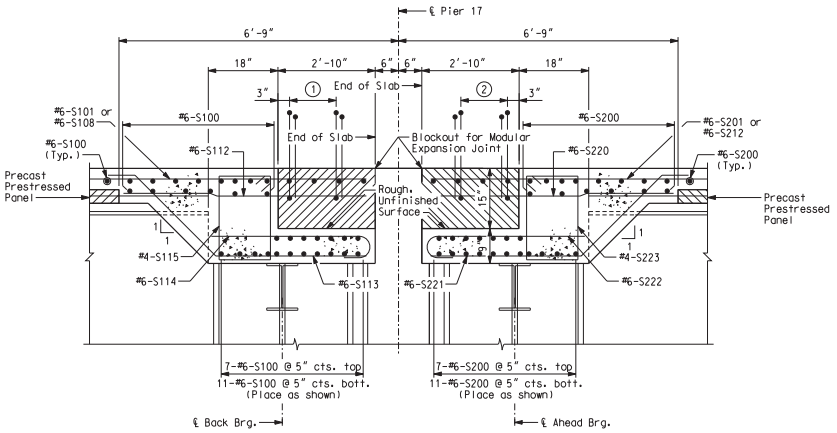

SECTION B-B
(at Pier 17)
(Looking North)

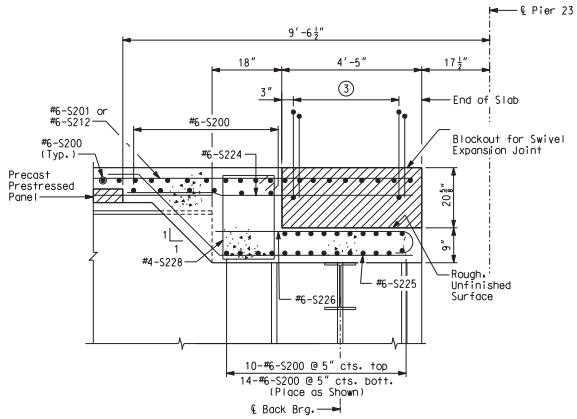

SECTION C-C
(at Pier 23)
(Looking North)

Note:
Modular Swivel Expansion Joint to be provided by others.

① 3 pairs of #5-R102 and #5-R103 bars @ 12" cts. shall be embedded in blockout concrete after expansion joint is in place *

② 3 pairs of #5-R202 and #5-R203 bars @ 12" cts. shall be embedded in blockout concrete after expansion joint is in place *

③ 4 pairs of #5-R202 and #5-R203 bars @ 12" cts. shall be embedded in blockout concrete after expansion joint is in place *

Notes:
For location of Section A-A, see Sheet Nos. 90 and 92.
For location of Section B-B, see Sheet Nos. 91, 93, 94 and 97.
For location of Section C-C, see Sheet Nos. 96 and 99.
Rotate #6-S114, #6-S118, #6-S222 and #6-S226 bars to maintain min. clearance.
Bars which interfere with the modular expansion joint boxes, shall be saw cut within 1 1/2" of expansion joint box(s). All other reinforcing steel between expansion joint box(s) shall remain and shall be incorporated in the concrete pour with the modular expansion joint.
* For Part Section A-A showing placement of #5-R102, #5-R103, #5-R202, and #5-R203 bars, see Sheet No. 117. For bar callouts, see Sheet Nos. 109 thru 116.

SLAB DETAILS

Detailed JUL 2009
Checked JUL 2009

Note: This drawing is not to scale. Follow dimensions.

s:\idot\0906601\draw_idot\cadd_sheets\structural\B_A6500_100-152_J6I0984C_100.dgn

CONTRACT NO. 76D61

F.A. ROUTE	SECTION
999	82-1B-2
FED. AID PROJECT	ILLINOIS
COUNTY	ST. CLAIR

USER NAME = jjolliff
PLOT SCALE = $SCALE$
PLOT DATE = 3/8/2010

DESIGNED - HNTB
CHECKED - CMT
DRAWN - CMT / HTNB
REVISED -
REVISED -
REVISED -
REVISED -

ILLINOIS APPROACH STRUCTURE
FOR NEW I-70 MISSISSIPPI RIVER BRIDGE

STATE OF ILLINOIS
DEPARTMENT OF TRANSPORTATION

MISSOURI HIGHWAYS
AND TRANSPORTATION COMMISSION

HNTB
715 KIRK DRIVE
KANSAS CITY, MO 64105
TELEPHONE (816) 472-1201
CERTIFICATE OF AUTHORITY
NO. 001270

CMT
CRAWFORD, MURPHY & TILLY, INC.
2750 WEST WASHINGTON STREET
SPRINGFIELD, IL 62702
TELEPHONE (217) 787-8050
ENGINEERING CORPORATION - 000631

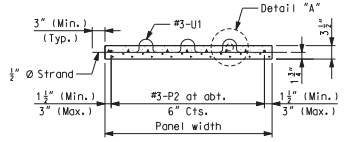

SECTION C-C

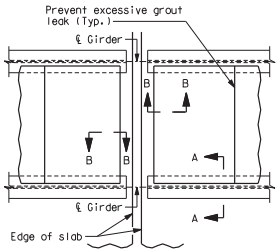

PANELS-SQUARED ENDS

PLAN OF PRECAST PRESTRESSED PANELS PLACEMENT

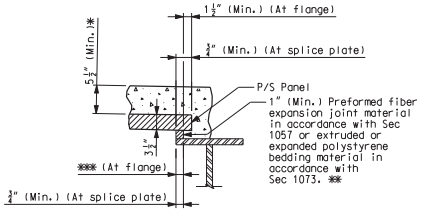

SECTION A-A

Note:
The thickness of the preformed fiber expansion joint material or polystyrene bedding material shall be adjusted to achieve the slab haunching dimension found on Sheet Nos. 66 thru 75. These adjustments shall be within the limits noted in general notes.

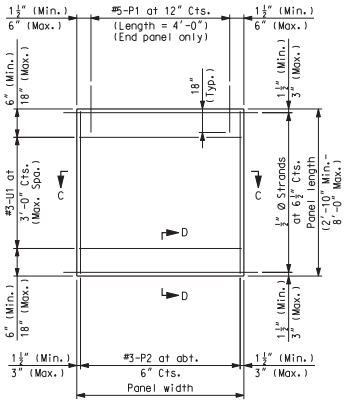

PLAN OF PRECAST PRESTRESSED PANEL

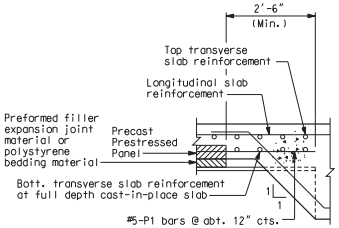

PART SECTION B-B

GENERAL NOTES

Prestressed Panel Notes:

Precast panels shall be in accordance with Sec 1029.

Concrete for prestressed panels shall be Class A-1 with f'c = 6,000 psi, f'ci = 4,000 psi.

The top surface of all panels shall receive a scored finish with a depth of scoring of 1/8" perpendicular to the prestressing strands in the panels with a maximum spacing of 1".

Prestressing tendons shall be high-tensile strength uncoated seven-wire, low-relaxation strands for prestressed concrete in accordance with AASHTO M 203 Grade 270, with nominal diameter of strand = 1/2" and nominal area = 0.153 sq. in. and minimum ultimate strength = 41.31 kips (270 ksi).

Initial prestressing force = 30.9 kips/strand. The method and sequence of releasing the strands shall be shown on the shop drawings.

Suitable anchorage devices for lifting panels may be cast in panels, provided the devices are shown on the shop drawings and approved by the engineer. Panel lengths shall be determined by the contractor and shown on the shop drawings.

Minimum preformed fiber expansion joint material or polystyrene bedding material thickness shall be 1 inch, except over splice plates where minimum thickness shall be 1/4 inch. When the material is less than 1/2 inch thick over a splice plate, the width of material at the splice shall be the same width as panel on splice. Thicker material may be used on one or both sides of the girder to reduce cast-in-place concrete thickness to within tolerances. No more than 3" total thickness shall be used in the tangent regions of the girder and no more than 4" total thickness shall be used in superelevation transition and full superelevation regions of the girder.

The same thickness of material shall be used under any one edge of any panel except at splices, and the maximum change in thickness between adjacent panels shall be 1/4 inch to correct for variations from girder camber diagram. The polystyrene bedding material may be cut to match haunch height above top of flange.

Reinforcing Steel Notes:

All dimensions are out to out.

Minimum clearance to reinforcing steel shall be 1 1/2", unless otherwise shown.

Hooks and bends shall be in accordance with the CRSI Manual of Standard Practice for Detailing Reinforced Concrete Structures. Stirrup and Tie Dimensions.

Actual lengths are measured along centerline of bar to the nearest inch.

The prestressed panel quantities are not included in the table of estimated quantities for slab.

If U1 bars interfere with placement of slab steel, U1 loops may be bent over, as necessary, to clear slab steel.

Welded wire fabric or welded deformed bar mats providing a minimum area of reinforcing perpendicular to strands of 0.22 sq. in./ft., with spacing parallel to strands sufficient to insure proper handling, may be used in lieu of the #3-P2 bars shown. Wire or bar diameter shall not be larger than 0.375 inches.

The reinforcing steel shall be tied securely to the 1/2"Ø strands with the following maximum spacing in each direction:

#3-P2 bars at 16 inches.

Welded wire fabric or welded deformed bar mats at 2'-0".

Tie the #3-U1 bars to the #3-P2 bars, to the welded wire fabric or the welded deformed bar mats at about 3'-0" centers.

All reinforcement other than prestressing strands shall be epoxy coated.

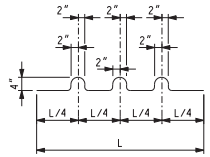

BENDING DIAGRAM FOR U1 BAR

(U1 Bars may be oriented at right angles to location and spacing shown. U1 Bars shall be placed between P1 bars).

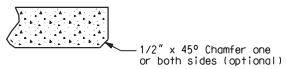

SECTION D-D

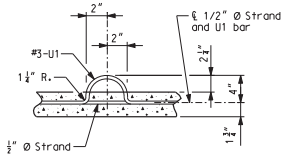

DETAIL "A"

Notes:

The thickness of the preformed fiber expansion joint material or polystyrene bedding material shall be adjusted to achieve the slab haunching dimension found on sheet 66 thru 75. These adjustments shall be within the limits noted in general notes.

* Adjustment in the slab thickness, preformed fiber expansion joint material or polystyrene bedding material thickness, or grade will be necessary if the girder camber after erection differs from plan camber by more than the % of dead load deflection due to the weight of structural steel. No payment will be made for additional labor or materials for the adjustment.

Minimum reinforcement steel length shall be 2'-0".

** All panel support pads shall be glued to the girder. When support thickness exceeds 1 1/2 inches, the pads shall be glued top and bottom. The glue used shall be the type recommended by the panel support pads manufacturer.

*** 2 1/2" in tangent regions (normal crown) of girders.
3" in superelevated and transition regions.

DETAILS OF PRECAST PRESTRESSED PANELS

Detailed JUL 2009
Checked JUL 2009

Note: This drawing is not to scale. Follow dimensions.

Sheet No. 101 of 152

CONTRACT NO. 76D61

F.A. ROUTE	SECTION
999	82-1B-2
FED. AID PROJECT	ILLINOIS
COUNTY	ST. CLAIR

USER NAME = jjolliff
PLOT SCALE = $SCALE$
PLOT DATE = 3/8/2010

DESIGNED - HNTB
CHECKED - CMT
DRAWN - CMT / HTNB
REVISED -
REVISED -
REVISED -
REVISED -

ILLINOIS APPROACH STRUCTURE
FOR NEW I-70 MISSISSIPPI RIVER BRIDGE

STATE OF ILLINOIS
DEPARTMENT OF TRANSPORTATION

MISSOURI HIGHWAYS
AND TRANSPORTATION COMMISSION

HNTB
715 KIRK DRIVE
KANSAS CITY, MO 64105
TELEPHONE (816) 472-1201
CERTIFICATE OF AUTHORITY
NO. 001270

CMT
CRAWFORD, MURPHY & TILLY, INC.
2750 WEST WASHINGTON STREET
SPRINGFIELD, IL 62702
TELEPHONE (217) 787-8050
ENGINEERING CORPORATION - 000631

s:\idot\0906601\draw_idot\cadd_sheets\structural\B_A6500_101-152_J6I0984C_101.dgn

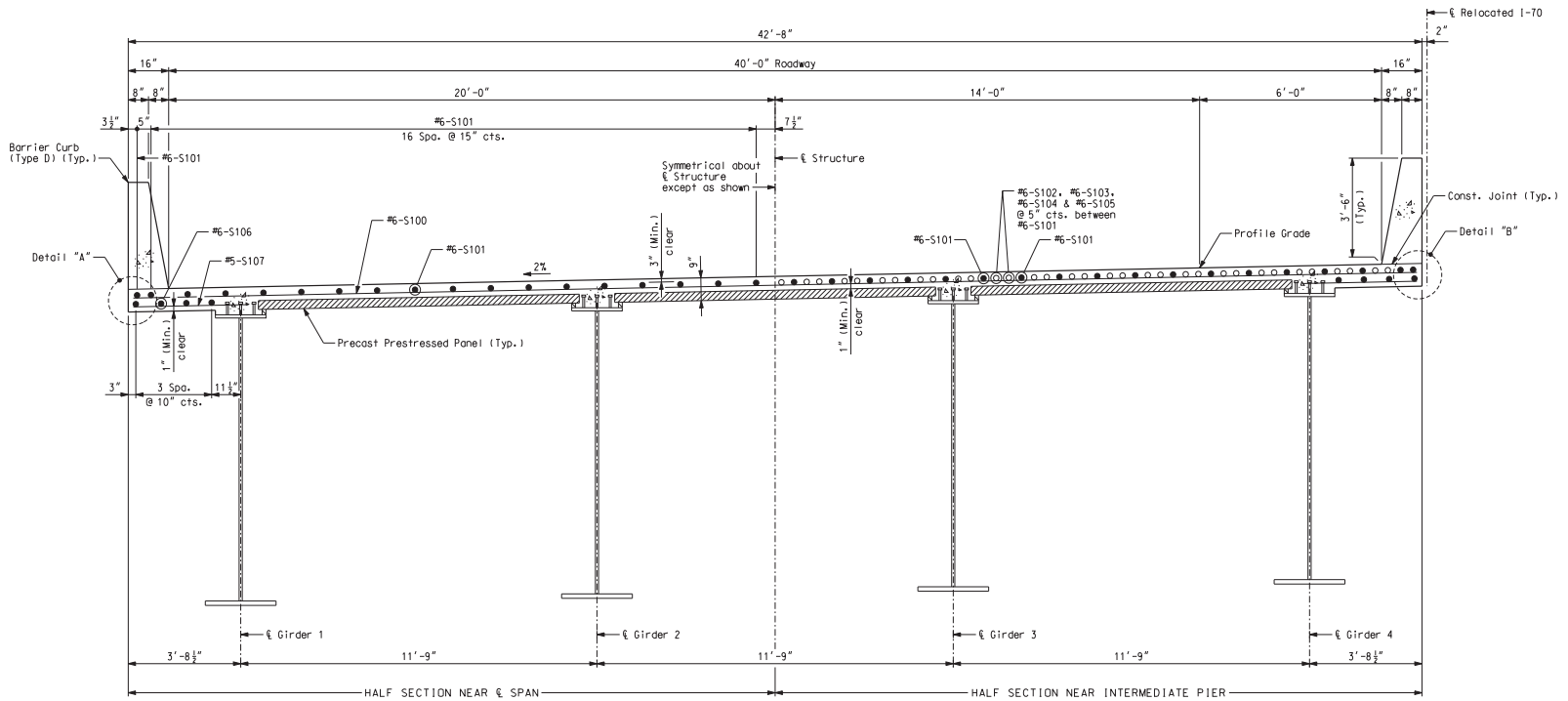

TYPICAL BRIDGE SECTION

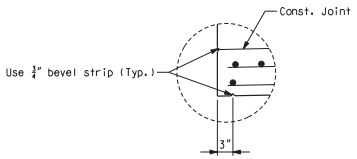

DETAIL "A"

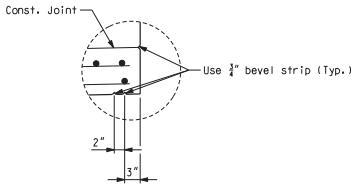

DETAIL "B"

Notes:
Longitudinal slab dimensions are measured horizontally.
For slab pouring sequence, see Sheet No. 106.
For theoretical slab haunch, see Sheet Nos. 66 and 67.
For details and reinforcement of barrier curbs not shown, see Sheet Nos. 109 thru 117.
For details of precast panels, see Sheet No. 101.
For plan of slab showing reinforcement, see Sheet Nos. 90 and 91.

SLAB CROSS SECTION WB - UNIT 1

Detailed JUL 2009
Checked JUL 2009

Note: This drawing is not to scale. Follow dimensions.

s:\idot\0906601\draw_idot\cadd_sheets\structural\B_A6500_102-152_J6I0984C_102.dgn

CONTRACT NO. 76D61

F.A. ROUTE	SECTION
999	82-1B-2
FED. AID PROJECT	ILLINOIS
COUNTY	ST. CLAIR

USER NAME = jjolliff
PLOT SCALE = $SCALE$
PLOT DATE = 3/8/2010

DESIGNED - HNTB
CHECKED - CMT
DRAWN - CMT / HTNB
REVISED -
REVISED -
REVISED -
REVISED -

ILLINOIS APPROACH STRUCTURE
FOR NEW I-70 MISSISSIPPI RIVER BRIDGE

STATE OF ILLINOIS
DEPARTMENT OF TRANSPORTATION

MISSOURI HIGHWAYS
AND TRANSPORTATION COMMISSION

HNTB
715 KIRK DRIVE
KANSAS CITY, MO 64105
TELEPHONE (816) 472-1201
CERTIFICATE OF AUTHORITY
NO. 001270

CMT
CRAWFORD, MURPHY & TILLY, INC.
2750 WEST WASHINGTON STREET
SPRINGFIELD, IL 62702
TELEPHONE (217) 787-8050
ENGINEERING CORPORATION - 000631

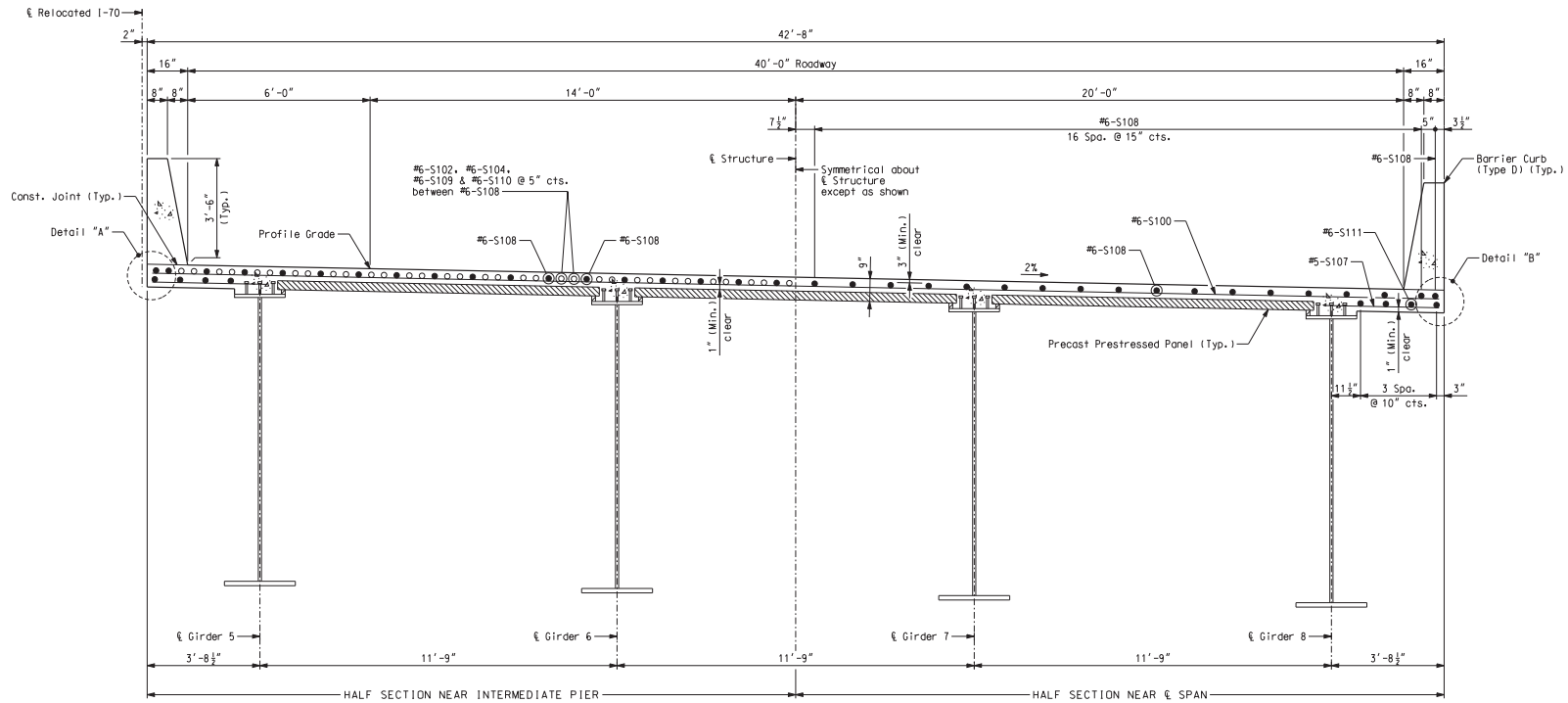

TYPICAL BRIDGE SECTION

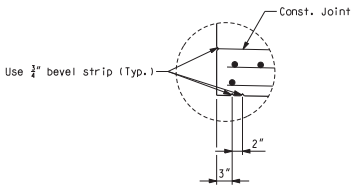

DETAIL "A"

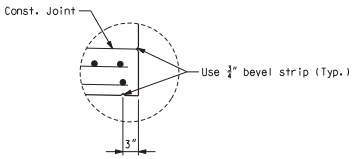

DETAIL "B"

Notes:
Longitudinal slab dimensions are measured horizontally.
For slab pouring sequence, see Sheet No. 106.
For theoretical slab haunch, see Sheet Nos. 68 and 69.
For details and reinforcement of barrier curbs not shown, see Sheet Nos. 109 thru 117.
For details of precast panels, see Sheet No. 101.
For plan of slab showing reinforcement, see Sheet Nos. 92 and 93.

SLAB CROSS SECTION EB - UNIT 1

Detailed JUL 2009
Checked JUL 2009

Note: This drawing is not to scale. Follow dimensions.

Sheet No. 103 of 152

s:\idot\0906601\draw_idot\cadd_sheets\structural\B_A6500_103-152_J6I0984C_103.dgn

CONTRACT NO. 76D61

F.A. ROUTE	SECTION
999	82-1B-2
FED. AID PROJECT	ILLINOIS
COUNTY	ST. CLAIR

USER NAME = jjolliff
PLOT SCALE = $SCALE$
PLOT DATE = 3/8/2010
DESIGNED - HNTB
CHECKED - CMT
DRAWN - CMT / HTNB
REVISED -
REVISED -
REVISED -
REVISED -

ILLINOIS APPROACH STRUCTURE
FOR NEW I-70 MISSISSIPPI RIVER BRIDGE

STATE OF ILLINOIS
DEPARTMENT OF TRANSPORTATION

MISSOURI HIGHWAYS
AND TRANSPORTATION COMMISSION

HNTB
715 KIRK DRIVE
KANSAS CITY, MO 64105
TELEPHONE (816) 472-1201
CERTIFICATE OF AUTHORITY
NO. 001270

CMT
CRAWFORD, MURPHY & TILLY, INC.
2750 WEST WASHINGTON STREET
SPRINGFIELD, IL 62702
TELEPHONE (217) 787-8050
ENGINEERING CORPORATION - 000631

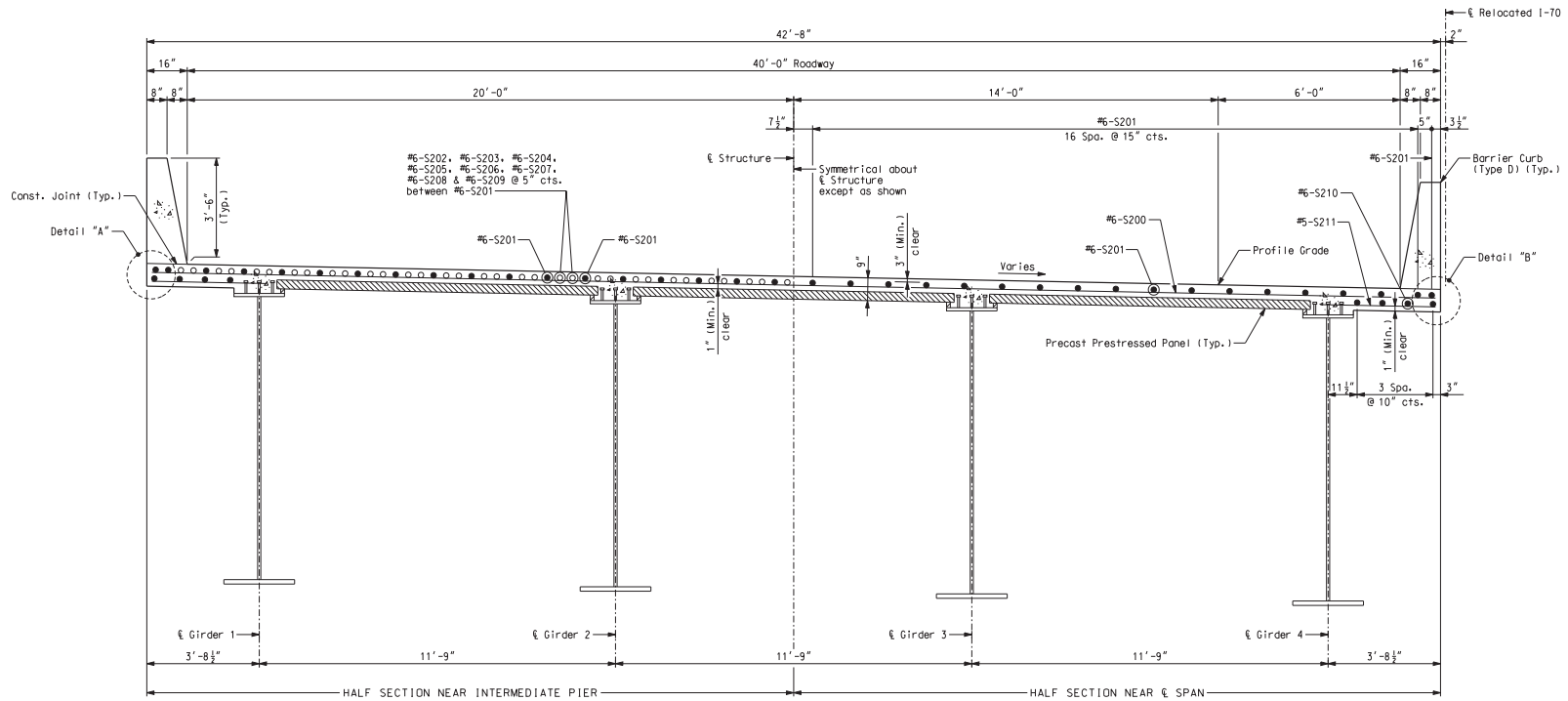

TYPICAL BRIDGE SECTION

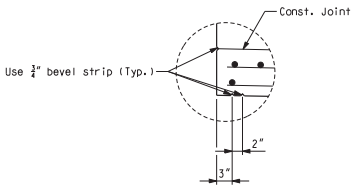

DETAIL "A"

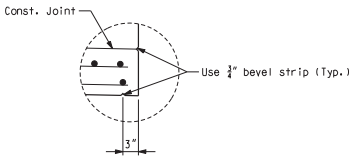

DETAIL "B"

Notes:
Longitudinal slab dimensions are measured horizontally.
For slab pouring sequence, see Sheet No. 107.
For theoretical slab haunch, see Sheet Nos. 70 thru 72.
For details and reinforcement of barrier curbs not shown, see Sheet Nos. 109 thru 117.
For details of precast panels, see Sheet No. 101.
For plan of slab showing reinforcement, see Sheet Nos. 94, 95, and 96.

SLAB CROSS SECTION WB - UNIT 2

Detailed JUL 2009
Checked JUL 2009

Note: This drawing is not to scale. Follow dimensions.

s:\idot\0906601\draw_idot\cadd_sheets\structural\B_A6500_104-152_J6I0984C_104.dgn

CONTRACT NO. 76D61

F.A. ROUTE	SECTION
999	82-1B-2
FED. AID PROJECT	ILLINOIS
COUNTY	ST. CLAIR

USER NAME = jjolliff
PLOT SCALE = $SCALE$
PLOT DATE = 3/8/2010
DESIGNED - HNTB
CHECKED - CMT
DRAWN - CMT / HTNB
REVISED -
REVISED -
REVISED -
REVISED -

ILLINOIS APPROACH STRUCTURE
FOR NEW I-70 MISSISSIPPI RIVER BRIDGE

STATE OF ILLINOIS
DEPARTMENT OF TRANSPORTATION

MISSOURI HIGHWAYS
AND TRANSPORTATION COMMISSION

HNTB
715 KIRK DRIVE
KANSAS CITY, MO 64105
TELEPHONE (816) 472-1201
CERTIFICATE OF AUTHORITY
NO. 001270

CMT
CRAWFORD, MURPHY & TILLY, INC.
2750 WEST WASHINGTON STREET
SPRINGFIELD, IL 62702
TELEPHONE (217) 787-8050
ENGINEERING CORPORATION - 000631

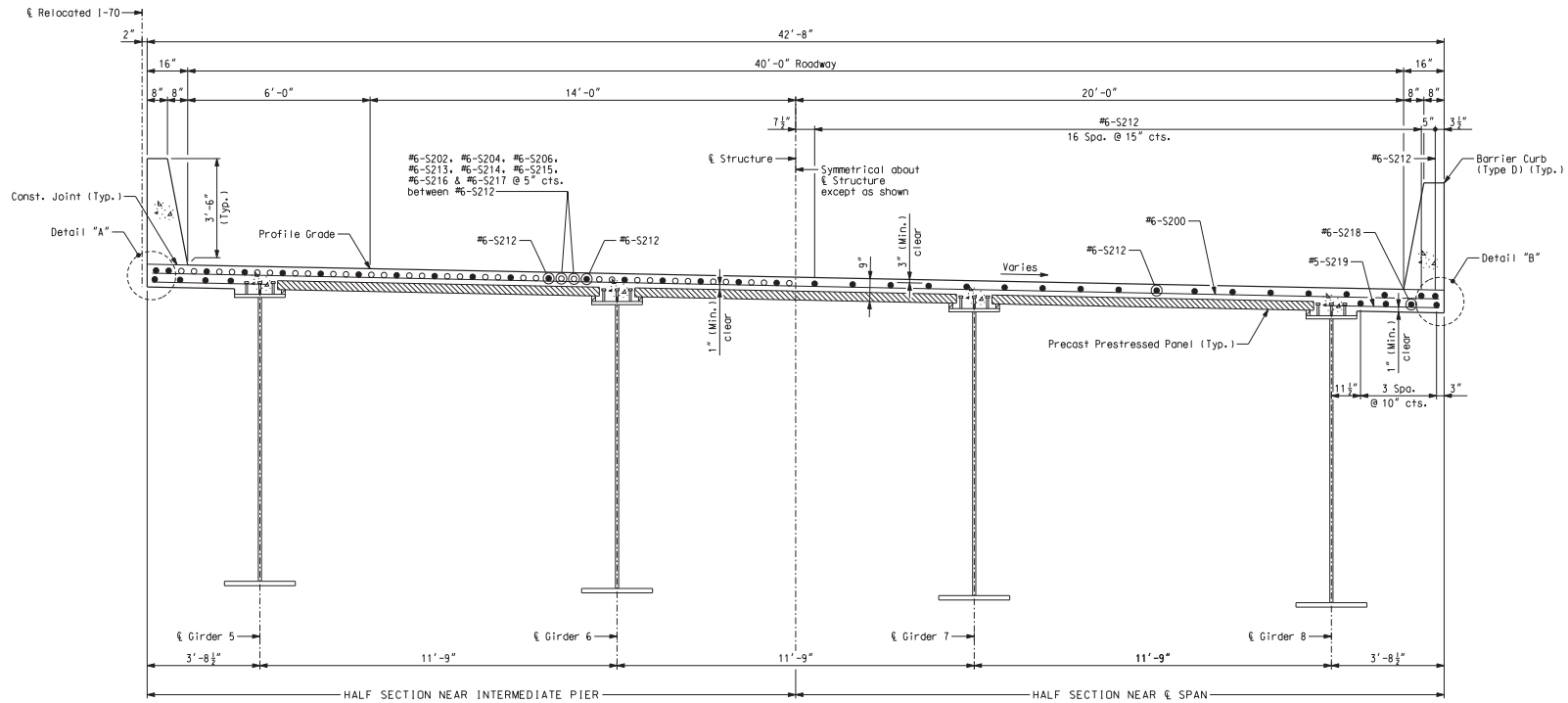

TYPICAL BRIDGE SECTION

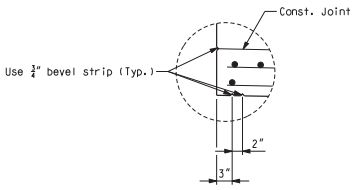

DETAIL "A"

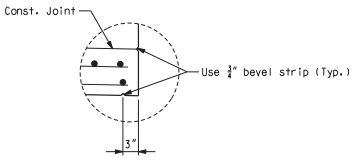

DETAIL "B"

Notes:
Longitudinal slab dimensions are measured horizontally.
For slab pouring sequence, see Sheet No. 107.
For theoretical slab haunch, see Sheet No. 73 thru 75.
For details and reinforcement of barrier curbs not shown, see Sheet Nos. 109 thru 117.
For details of precast panels, see Sheet No. 101.
For plan of slab showing reinforcement, see Sheet Nos. 97, 98, and 99.

SLAB CROSS SECTION EB - UNIT 2

Detailed JUL 2009
Checked JUL 2009

Note: This drawing is not to scale. Follow dimensions.

s:\idot\0906601\draw_idot\cadd_sheets\structural\B_A6500_105-152_J6I0984C_105.dgn

CONTRACT NO. 76D61

F.A. ROUTE	SECTION
999	82-1B-2
FED. AID PROJECT	ILLINOIS
COUNTY	ST. CLAIR

USER NAME = jjolliff
PLOT SCALE = $SCALE$
PLOT DATE = 3/8/2010

DESIGNED - HNTB
CHECKED - CMT
DRAWN - CMT / HTNB
REVISED -
REVISED -
REVISED -
REVISED -

ILLINOIS APPROACH STRUCTURE
FOR NEW I-70 MISSISSIPPI RIVER BRIDGE

STATE OF ILLINOIS
DEPARTMENT OF TRANSPORTATION

MISSOURI HIGHWAYS
AND TRANSPORTATION COMMISSION

HNTB
715 KIRK DRIVE
KANSAS CITY, MO 64105
TELEPHONE (816) 472-1201
CERTIFICATE OF AUTHORITY
NO. 001270

CMT
CRAWFORD, MURPHY & TILLY, INC.
2750 WEST WASHINGTON STREET
SPRINGFIELD, IL 62702
TELEPHONE (217) 787-8050
ENGINEERING CORPORATION - 000631

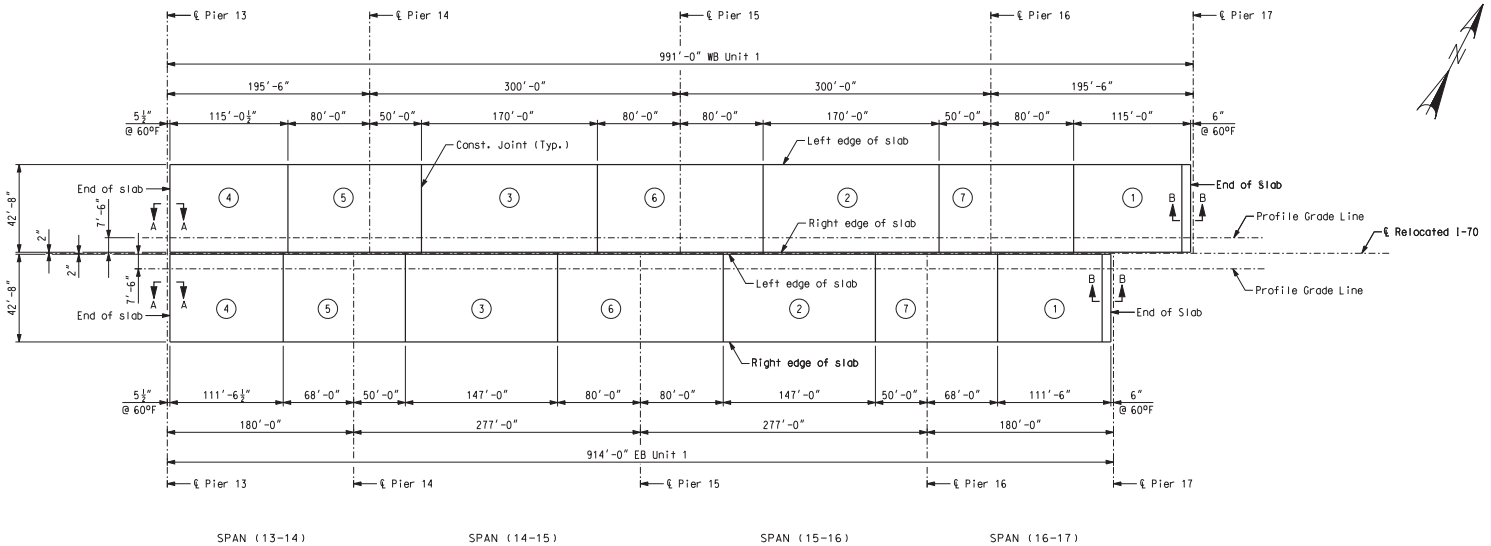

SLAB POURING SEQUENCE

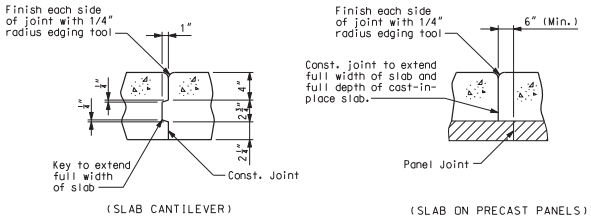

SLAB CONSTRUCTION JOINT DETAILS

	Sequence of Pours							Min. rate of pour cu. yds./hr.	
	Direction							With Retarder	No Retarder
Basic sequence	1	2	3	4	5	6	7	65	65
	Either Direction								
Alternate pours to the basic skip sequence are subject to the approval of the engineer in accordance with Sec 703.									
Alternate "A" pours	1	7 + 2		6 + 3		5 + 4		65	65
	End to 7	1 to 6		2 to 5		3 to End			
Alternate "B" pours	1 + 7 + 2			6 + 3		5 + 4		65	65
	End to 6			2 to 5		3 to End			
Alternate "C" pours	1 + 7 + 2					6 + 3 + 5 + 4		65	65
	End to 6					2 to End			
Alternate "D" pours	1 + 7 + 2 + 6 + 3 + 5 + 4							65	65
	End to End								

For Section A-A, see Sheet No. 100
For Section B-B, see Sheet No. 100

Notes:
Longitudinal and transverse dimensions are measured horizontally.
Transverse construction joints shall be placed normal to Bridge ℄.
The contractor shall pour and satisfactorily finish the slab pours at the rate given. Retarder, if used, shall be an approved type and retard the set of concrete to 2.5 hours.

SLAB POURING SEQUENCE - UNIT 1

CONTRACT NO. 76D61

F.A. ROUTE	SECTION
999	82-1B-2
FED. AID PROJECT	ILLINOIS
COUNTY	ST. CLAIR

USER NAME = jjolliff
PLOT SCALE = $SCALE$
PLOT DATE = 3/8/2010
DESIGNED - HNTB
CHECKED - CMT
DRAWN - CMT / HTNB
REVISED -
REVISED -
REVISED -
REVISED -

ILLINOIS APPROACH STRUCTURE
FOR NEW I-70 MISSISSIPPI RIVER BRIDGE

STATE OF ILLINOIS
DEPARTMENT OF TRANSPORTATION

MISSOURI HIGHWAYS
AND TRANSPORTATION COMMISSION

HNTB
715 KIRK DRIVE
KANSAS CITY, MO 64105
TELEPHONE (816) 472-1201
CERTIFICATE OF AUTHORITY
NO. 001270

CMT
CRAWFORD, MURPHY & TILLY, INC.
2750 WEST WASHINGTON STREET
SPRINGFIELD, IL 62702
TELEPHONE (217) 787-8050
ENGINEERING CORPORATION - 000631

Detailed JUL 2009
Checked JUL 2009

Note: This drawing is not to scale. Follow dimensions.

s:\idot\0906601\draw_idot\cadd_sheets\structural\B_A6500_106-152_J6I0984C_106.dgn

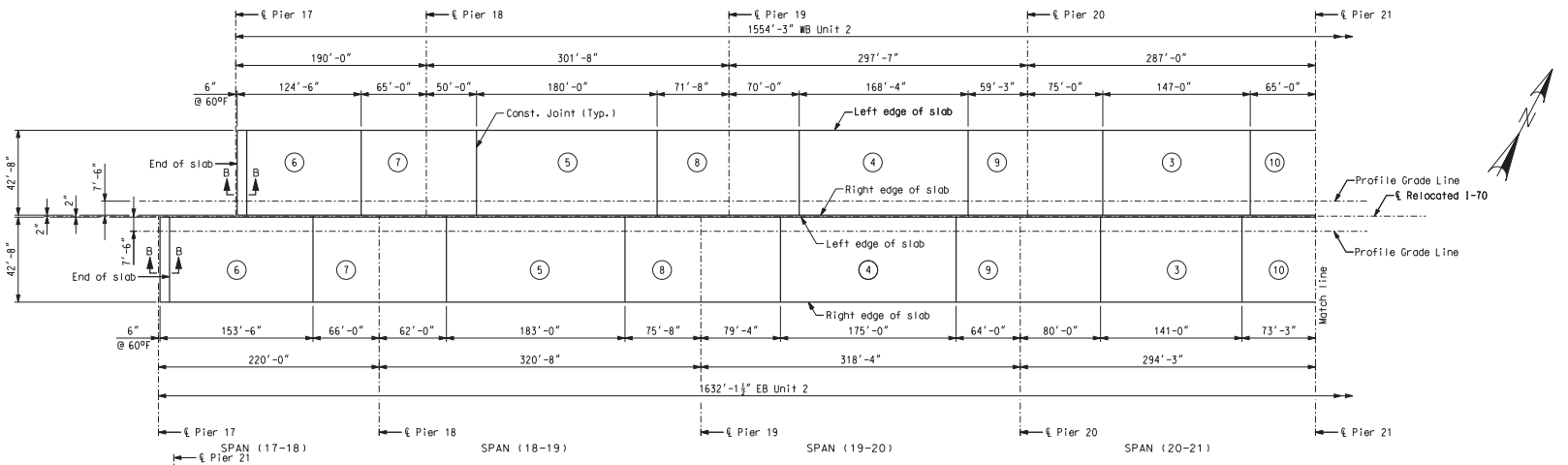

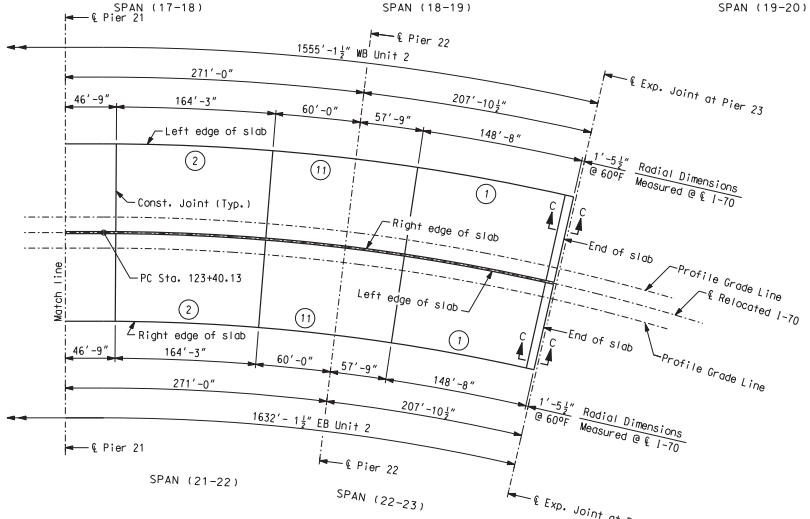

	Sequence of Pours											Min. rate of pour cu. yds./hr.	
	Direction											With Retarder	No Retarder
Basic sequence	1	2	3	4	5	6	7	8	9	10	11	65	65
	Either Direction												
Alternate pours to the basic skip sequence are subject to the approval of the engineer in accordance with Sec 703.													
Alternate "A" pours	1		11 + 2		10 + 3		9 + 4		8 + 5		7 + 6	65	65
	End to 11		1 to 10		2 to 9		3 to 8		4 to 7		5 to End		
Alternate "B" pours	1 + 11 + 2			10 + 3			9 + 4			8 + 5		6 + 7	65	65
	End to 10			2 to 9			3 to 8			4 to 7		5 to End		
Alternate "C" pours	1 + 11 + 2				10 + 3 + 9 + 4				8 + 5 + 7 + 6				65	65
	End to 10				2 to 8				4 to End					
Alternate "D" pours	1 + 11 + 2 + 10 + 3 + 9 + 4 + 8 + 5 + 7 + 6												65	65
	End to End													

For Section B-B, see Sheet No. 100
For Section C-C, see Sheet No. 100

Notes:
Longitudinal and transverse dimensions are measured horizontally.
Transverse construction joints shall be placed normal to Bridge ℄.
The contractor shall pour and satisfactorily finish the slab pours at the rate given. Retarder, if used, shall be an approved type and retard the set of concrete to 2.5 hours.

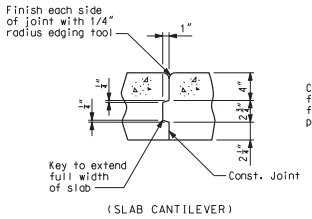

(SLAB CANTILEVER)

SLAB POURING SEQUENCE

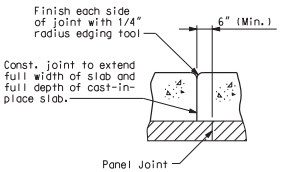

(SLAB ON PRECAST PANELS)

SLAB CONSTRUCTION JOINT DETAILS

SLAB POURING SEQUENCE - UNIT 2

Detailed JUL 2009
Checked JUL 2009

Note: This drawing is not to scale. Follow dimensions.

s:\idot\0906601\draw_idot\cadd_sheets\structural\B_A6500_107-152_J6I0984C_107.dgn

CONTRACT NO. 76D61

F.A. ROUTE	SECTION
999	82-1B-2
FED. AID PROJECT	ILLINOIS
COUNTY	ST. CLAIR

USER NAME = jjolliff
PLOT SCALE = $SCALE$
PLOT DATE = 3/8/2010
DESIGNED - HNTB
CHECKED - CMT
DRAWN - CMT / HTNB
REVISED -
REVISED -
REVISED -
REVISED -

ILLINOIS APPROACH STRUCTURE
FOR NEW I-70 MISSISSIPPI RIVER BRIDGE

STATE OF ILLINOIS
DEPARTMENT OF TRANSPORTATION

MISSOURI HIGHWAYS
AND TRANSPORTATION COMMISSION

HNTB
715 KIRK DRIVE
KANSAS CITY, MO 64105
TELEPHONE (816) 472-1201
CERTIFICATE OF AUTHORITY
NO. 001270

CMT
CRAWFORD, MURPHY & TILLY, INC.
2750 WEST WASHINGTON STREET
SPRINGFIELD, IL 62702
TELEPHONE (217) 787-8050
ENGINEERING CORPORATION - 000631

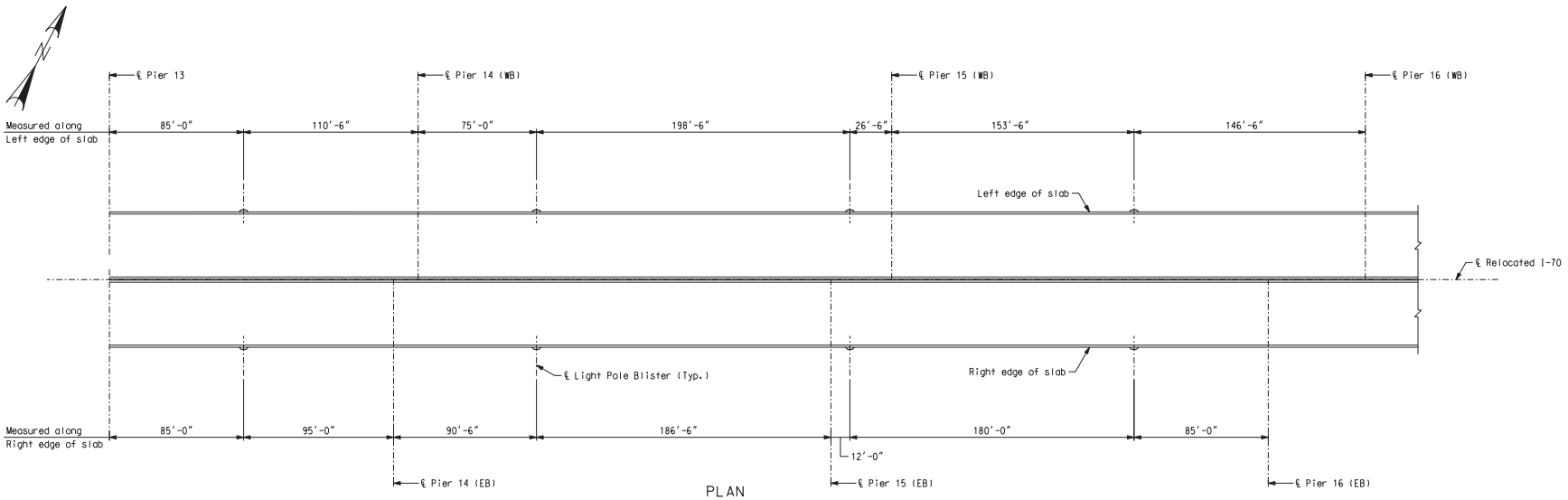

PLAN

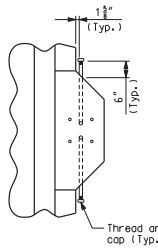

PLAN SHOWING CONDUIT

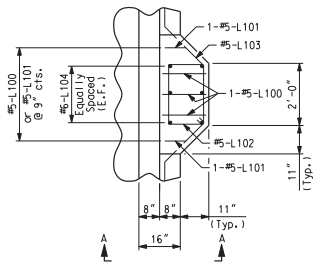

LIGHT POLE MOUNTING PLAN SHOWING REINFORCEMENT

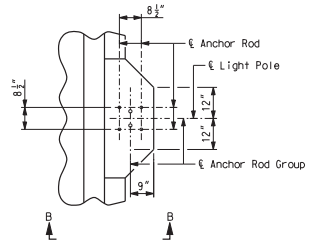

LIGHT POLE MOUNTING PLAN

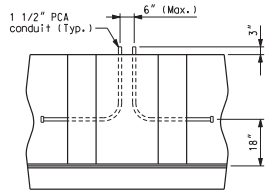

ELEVATION SHOWING CONDUIT

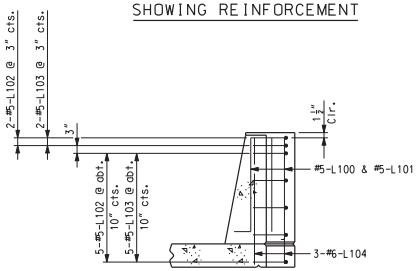

ELEVATION A-A

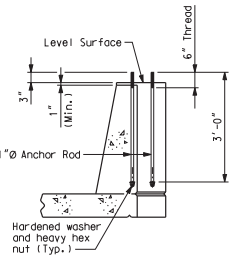

ELEVATION B-B

Notes:
Anchor rods and nuts shall be AASHTO M314-90 Grade 55. Anchor rods, nuts and washers shall be fully galvanized.
Anchor rods shall be placed vertically.
Light poles and wiring are to be furnished in contract J6I0984, by Others.
Cost of steel reinforcement, anchor rods, nuts, washers and conduits will be considered completely covered by contract unit price for "Barrier Curb (Type D)" per linear foot.
See sheet no.s 4 thru 5 for surface mounted light units for railroad tracks.

LIGHT POLE BLISTER LAYOUT

Detailed JUL 2009
Checked JUL 2009

Note: This drawing is not to scale. Follow dimensions.

Sheet No. 108 of 152

s:\idot\0906601\draw_idot\cadd_sheets\structural\B_A6500_108-152_J6I0984C_108.dgn

CONTRACT NO. 76D61

F.A. ROUTE	SECTION
999	82-1B-2
FED. AID PROJECT	ILLINOIS
COUNTY	ST. CLAIR

USER NAME = jjolliff
PLOT SCALE = $SCALE$
PLOT DATE = 3/8/2010
DESIGNED - HNTB
CHECKED - CMT
DRAWN - CMT / HTNB
REVISED -
REVISED -
REVISED -
REVISED -

ILLINOIS APPROACH STRUCTURE FOR NEW I-70 MISSISSIPPI RIVER BRIDGE

STATE OF ILLINOIS
DEPARTMENT OF TRANSPORTATION

MISSOURI HIGHWAYS AND TRANSPORTATION COMMISSION

HNTB
715 KIRK DRIVE
KANSAS CITY, MO 64105
TELEPHONE (816) 472-1201
CERTIFICATE OF AUTHORITY NO. 001270

CMT
CRAWFORD, MURPHY & TILLY, INC.
2750 WEST WASHINGTON STREET
SPRINGFIELD, IL 62702
TELEPHONE (217) 787-8050
ENGINEERING CORPORATION - 000631

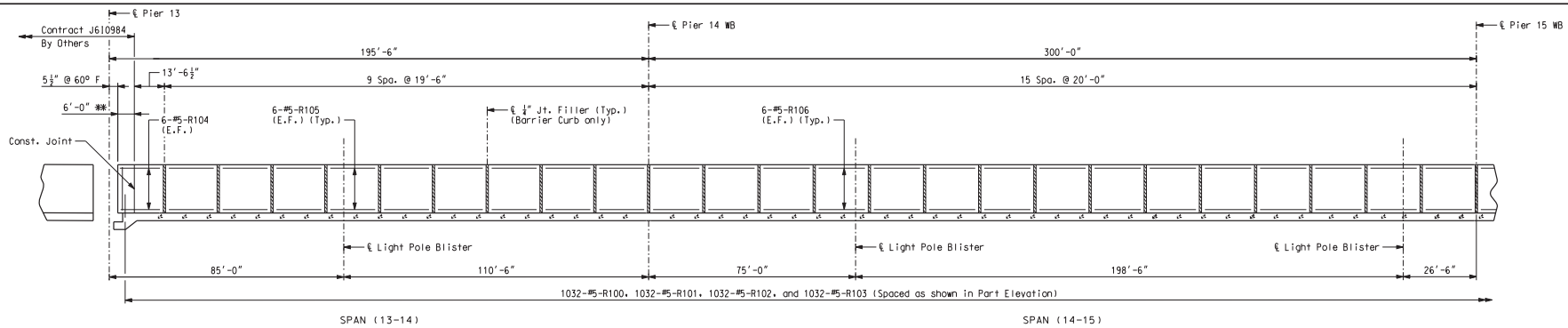

SECTION NEAR BARRIER CURB (TYPE D)

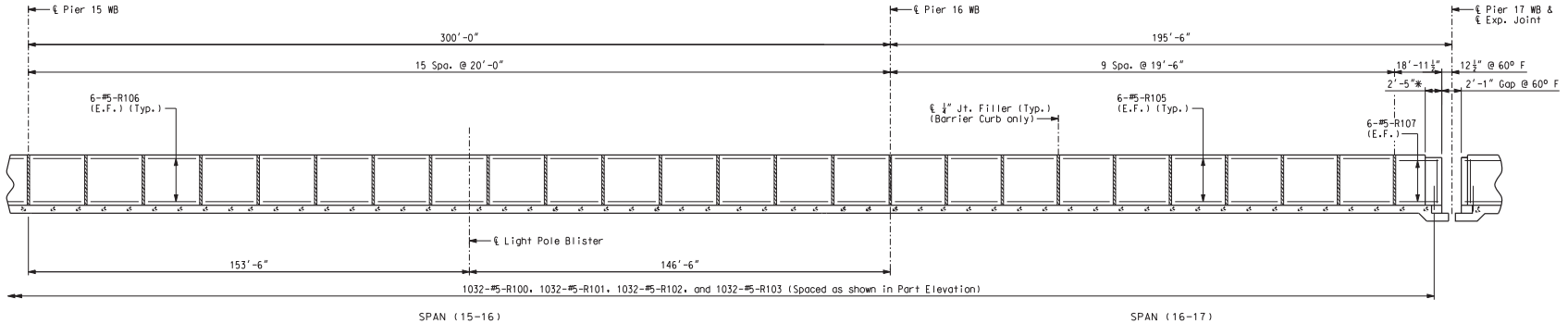

SECTION NEAR BARRIER CURB (TYPE D)

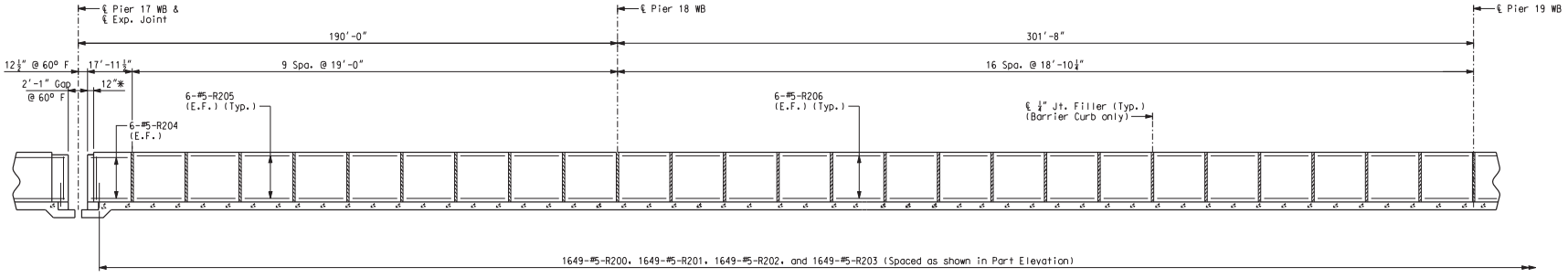

SECTION NEAR BARRIER CURB (TYPE D)

Notes:
Longitudinal dimensions are horizontal.
* Limits of recess for expansion joint cover PL. For barrier cover plate details, see Sheet No. 119.
** Barrier segment reinforcement included in this contract. Forming and concrete placement for barrier included in Contract J610984, by Others. For reinforcement at light pole blisters, see Sheet No. 108.

LEFT BARRIER CURB (TYPE D) WB - SECTIONS (1 OF 2)

Detailed JUL 2009
Checked JUL 2009

Note: This drawing is not to scale. Follow dimensions.

Sheet No. 109 of 152

s:\idot\0906601\draw_idot\cadd_sheets\structural\B_A6500_109-152_J610984C_109.dgn

CONTRACT NO. 76D61

F.A. ROUTE	SECTION
999	82-1B-2
FED. AID PROJECT	ILLINOIS
COUNTY	ST. CLAIR

USER NAME = jjolliff
PLOT SCALE = $SCALE$
PLOT DATE = 3/8/2010
DESIGNED - HNTB
CHECKED - CMT
DRAWN - CMT / HTNB
REVISED -
REVISED -
REVISED -
REVISED -

ILLINOIS APPROACH STRUCTURE
FOR NEW I-70 MISSISSIPPI RIVER BRIDGE

STATE OF ILLINOIS
DEPARTMENT OF TRANSPORTATION

MISSOURI HIGHWAYS
AND TRANSPORTATION COMMISSION

HNTB
715 KIRK DRIVE
KANSAS CITY, MO 64105
TELEPHONE (816) 472-1201
CERTIFICATE OF AUTHORITY
NO. 001270

CMT
CRAWFORD, MURPHY & TILLY, INC.
2750 WEST WASHINGTON STREET
SPRINGFIELD, IL 62702
TELEPHONE (217) 787-8050
ENGINEERING CORPORATION - 000631

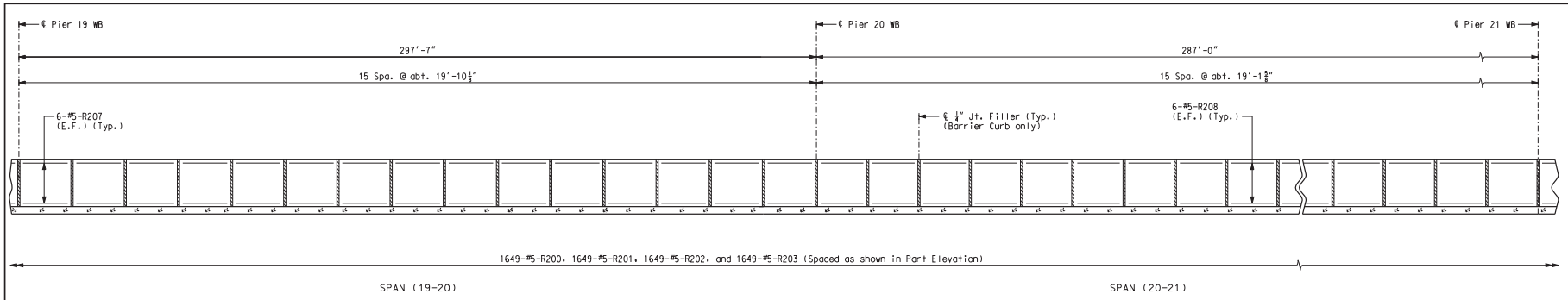

SECTION NEAR BARRIER CURB (TYPE D)

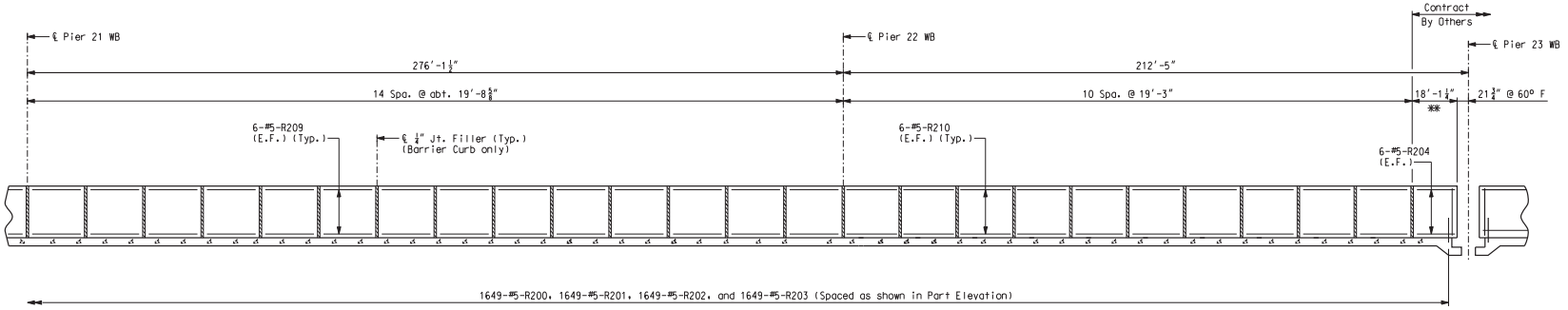

SECTION NEAR BARRIER CURB (TYPE D)

Notes:
Longitudinal dimensions are horizontal.
** Barrier segment reinforcement included in this contract. Forming and concrete placement for barrier included in Contract by Others.

LEFT BARRIER CURB (TYPE D) WB - SECTIONS (2 OF 2)

Detailed JUL 2009
Checked JUL 2009

Note: This drawing is not to scale. Follow dimensions.

Sheet No. 110 of 152

s:\idot\0906601\draw_idot\cadd_sheets\structural\B_A6500_110-152_J6I0984C_110.dgn

CONTRACT NO. 76D61

F.A. ROUTE	SECTION
999	82-1B-2
FED. AID PROJECT	ILLINOIS
COUNTY	ST. CLAIR

USER NAME = jjollff
PLOT SCALE = $SCALE$
PLOT DATE = 3/8/2010
DESIGNED - HNTB
CHECKED - CMT
DRAWN - CMT / HTNB
REVISED -
REVISED -
REVISED -
REVISED -

ILLINOIS APPROACH STRUCTURE FOR NEW I-70 MISSISSIPPI RIVER BRIDGE

STATE OF ILLINOIS
DEPARTMENT OF TRANSPORTATION

MISSOURI HIGHWAYS AND TRANSPORTATION COMMISSION

HNTB
715 KIRK DRIVE
KANSAS CITY, MO 64105
TELEPHONE (816) 472-1201
CERTIFICATE OF AUTHORITY NO. 001270

CMT
CRAWFORD, MURPHY & TILLY, INC.
2750 WEST WASHINGTON STREET
SPRINGFIELD, IL 62702
TELEPHONE (217) 787-8050
ENGINEERING CORPORATION - 000631

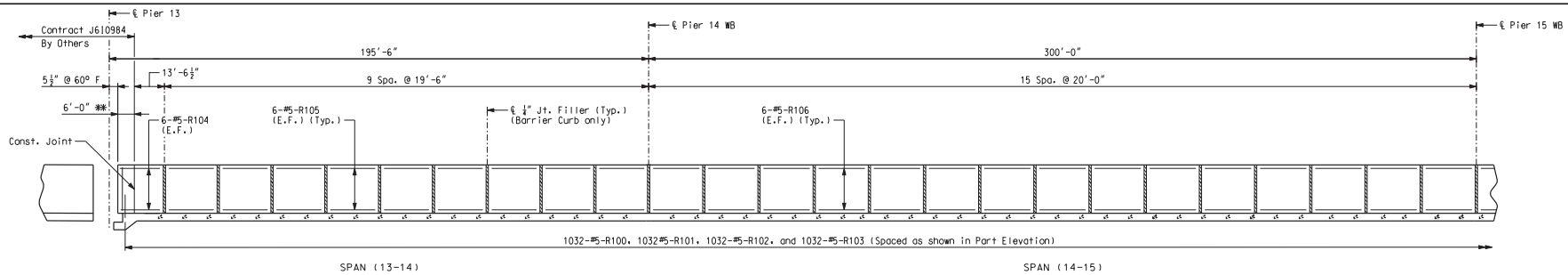

SECTION NEAR BARRIER CURB (TYPE D)

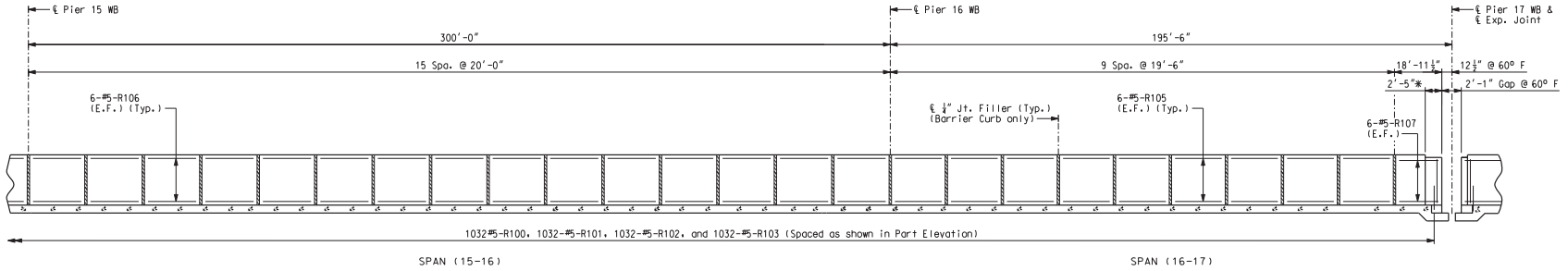

SECTION NEAR BARRIER CURB (TYPE D)

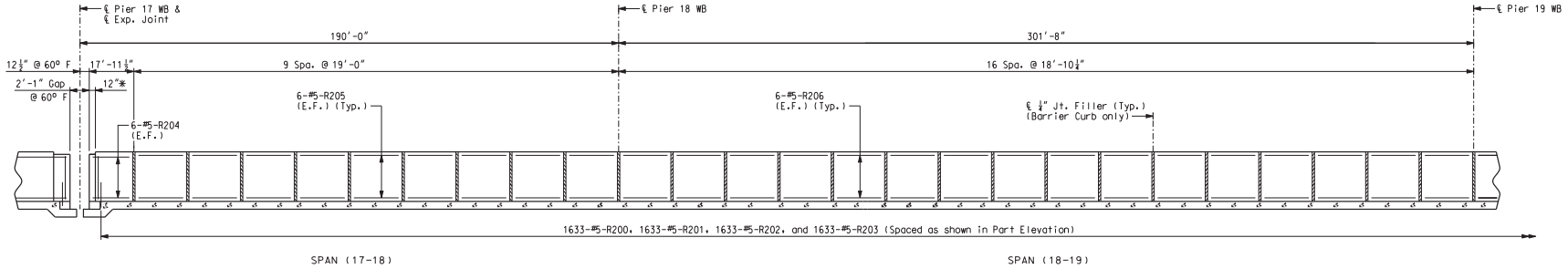

SECTION NEAR BARRIER CURB (TYPE D)

Notes:
Longitudinal dimensions are horizontal.
* Limits of recess for expansion joint cover PL. For barrier cover plate details, see Sheet No. 120.
** Barrier segment reinforcement included in this contract. Forming and concrete placement for barrier included in Contract J610984, by Others. For reinforcement at light pole blisters, see Sheet No. 108.

RIGHT BARRIER CURB (TYPE D) WB - SECTIONS (1 OF 2)

Detailed JUL 2009
Checked JUL 2009

Note: This drawing is not to scale. Follow dimensions.

Sheet No. 111 of 152

s:\idot\0906601\draw_idot\cadd_sheets\structural\B_A6500_111-152_J6I0984C_111.dgn

CONTRACT NO. 76D61

F.A. ROUTE	SECTION
999	82-1B-2
FED. AID PROJECT	ILLINOIS
COUNTY	ST. CLAIR

USER NAME = jjolliff
PLOT SCALE = $SCALE$
PLOT DATE = 3/8/2010

DESIGNED - HNTB
CHECKED - CMT
DRAWN - CMT / HTNB
REVISED -
REVISED -
REVISED -
REVISED -

ILLINOIS APPROACH STRUCTURE
FOR NEW I-70 MISSISSIPPI RIVER BRIDGE

STATE OF ILLINOIS
DEPARTMENT OF TRANSPORTATION

MISSOURI HIGHWAYS
AND TRANSPORTATION COMMISSION

HNTB
715 KIRK DRIVE
KANSAS CITY, MO 64105
TELEPHONE (816) 472-1201
CERTIFICATE OF AUTHORITY
NO. 001270

CMT
CRAWFORD, MURPHY & TILLY, INC.
2750 WEST WASHINGTON STREET
SPRINGFIELD, IL 62702
TELEPHONE (217) 787-8050
ENGINEERING CORPORATION - 000631

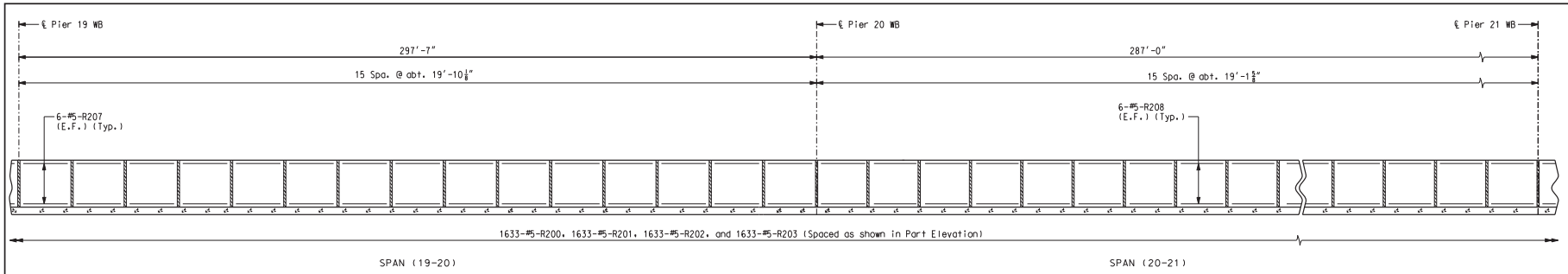

SECTION NEAR BARRIER CURB (TYPE D)

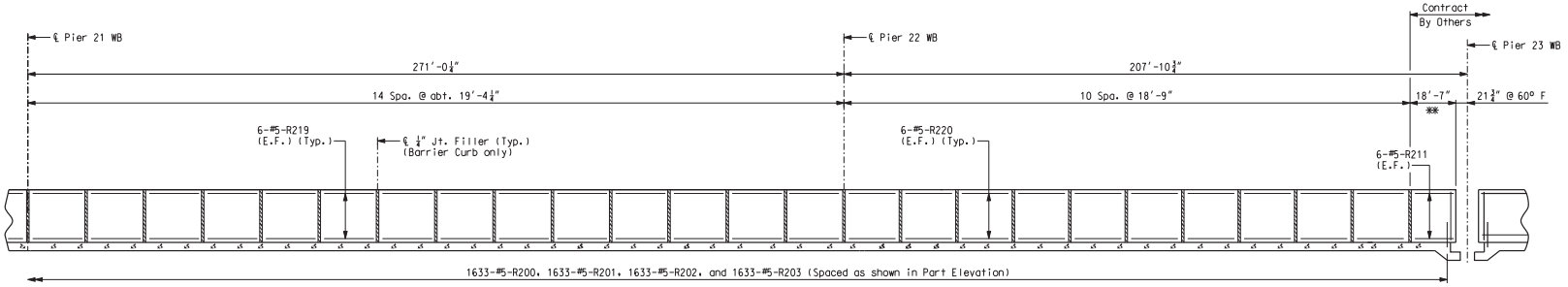

SECTION NEAR BARRIER CURB (TYPE D)

Notes:
Longitudinal dimensions are horizontal.
** Barrier segment reinforcement included in this contract. Forming and concrete placement for barrier included in Contract by Others.

RIGHT BARRIER CURB (TYPE D) WB - SECTIONS (2 OF 2)

Detailed JUL 2009
Checked JUL 2009

Note: This drawing is not to scale. Follow dimensions.

s:\idot\0906601\draw_idot\cadd_sheets\structural\B_A6500_112-152_J6I0984C_112.dgn

CONTRACT NO. 76D61

F.A. ROUTE	SECTION
999	82-1B-2
FED. AID PROJECT	ILLINOIS
COUNTY	ST. CLAIR

USER NAME = jjolliff
PLOT SCALE = $SCALE$
PLOT DATE = 3/8/2010
DESIGNED - HNTB
CHECKED - CMT
DRAWN - CMT / HTNB
REVISED -
REVISED -
REVISED -
REVISED -

ILLINOIS APPROACH STRUCTURE
FOR NEW I-70 MISSISSIPPI RIVER BRIDGE

STATE OF ILLINOIS
DEPARTMENT OF TRANSPORTATION

MISSOURI HIGHWAYS
AND TRANSPORTATION COMMISSION

HNTB
715 KIRK DRIVE
KANSAS CITY, MO 64105
TELEPHONE (816) 472-1201
CERTIFICATE OF AUTHORITY
NO. 001270

CMT
CRAWFORD, MURPHY & TILLY, INC.
2750 WEST WASHINGTON STREET
SPRINGFIELD, IL 62702
TELEPHONE (217) 787-8050
ENGINEERING CORPORATION - 000631

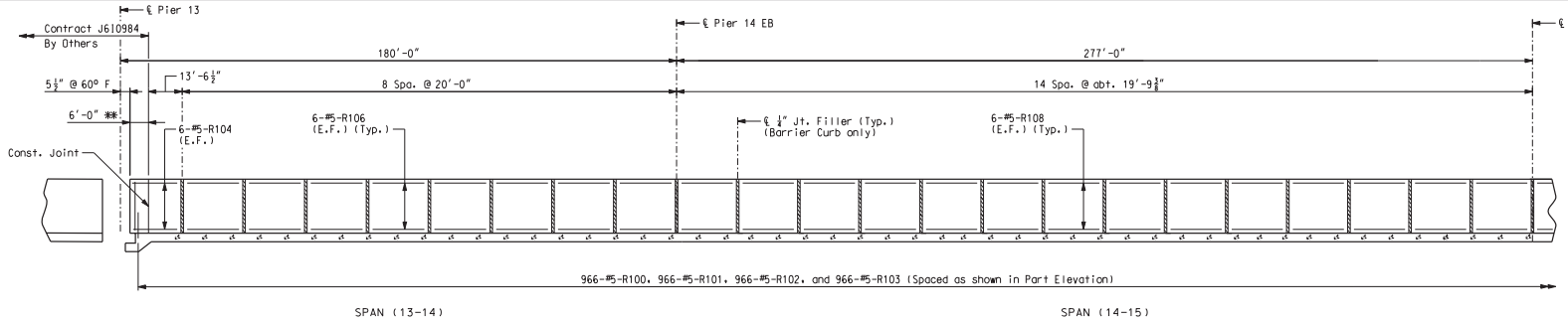

SECTION NEAR BARRIER CURB (TYPE D)

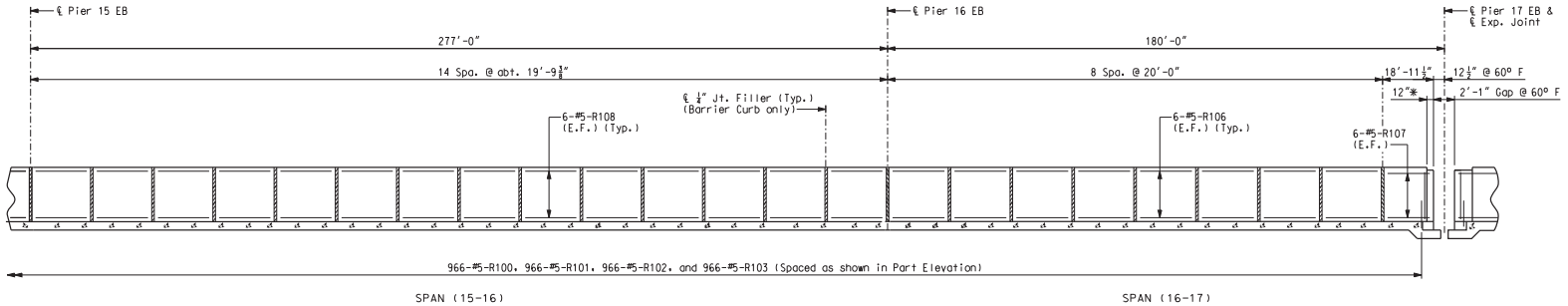

SECTION NEAR BARRIER CURB (TYPE D)

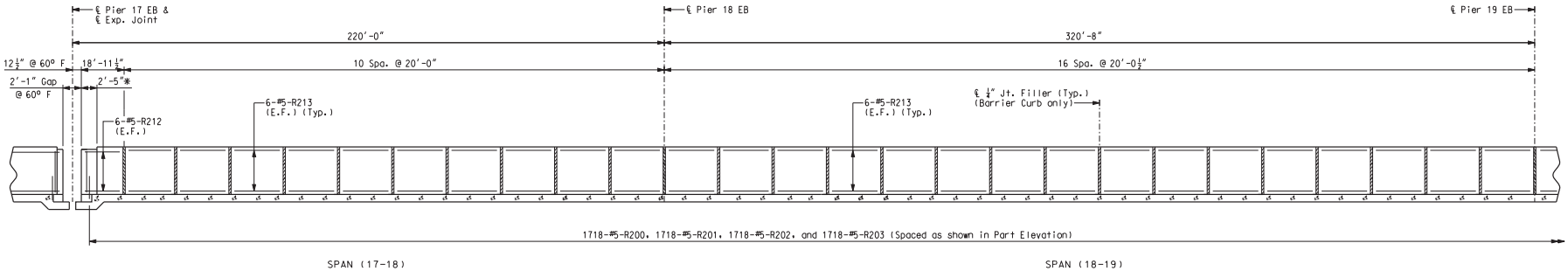

SECTION NEAR BARRIER CURB (TYPE D)

Notes:
Longitudinal dimensions are horizontal.
* Limits of recess for expansion joint cover PL. For barrier cover plate details, see Sheet No. 120.
** Barrier segment reinforcement included in this contract. Forming and concrete placement for barrier included in Contract J6I0984, by Others. For reinforcement at light pole blisters, see Sheet No. 108.

LEFT BARRIER CURB (TYPE D) EB - SECTIONS (1 OF 2)

Detailed JUL 2009
Checked JUL 2009

Note: This drawing is not to scale. Follow dimensions.

Sheet No. 113 of 152

s:\idot\0906601\draw_idot\cadd_sheets\structural\B_A6500_113-152_J6I0984C_113.dgn

CONTRACT NO. 76D61

F.A. ROUTE	SECTION
999	82-1B-2
FED. AID PROJECT	ILLINOIS
COUNTY	ST. CLAIR

USER NAME = jjolliff
PLOT SCALE = $SCALE$
PLOT DATE = 3/8/2010

DESIGNED - HNTB
CHECKED - CMT
DRAWN - CMT / HTNB
REVISED -
REVISED -
REVISED -
REVISED -

ILLINOIS APPROACH STRUCTURE
FOR NEW I-70 MISSISSIPPI RIVER BRIDGE

STATE OF ILLINOIS
DEPARTMENT OF TRANSPORTATION

MISSOURI HIGHWAYS
AND TRANSPORTATION COMMISSION

HNTB
715 KIRK DRIVE
KANSAS CITY, MO 64105
TELEPHONE (816) 472-1201
CERTIFICATE OF AUTHORITY
NO. 001270

CMT
CRAWFORD, MURPHY & TILLY, INC.
2750 WEST WASHINGTON STREET
SPRINGFIELD, IL 62702
TELEPHONE (217) 787-8050
ENGINEERING CORPORATION - 000631

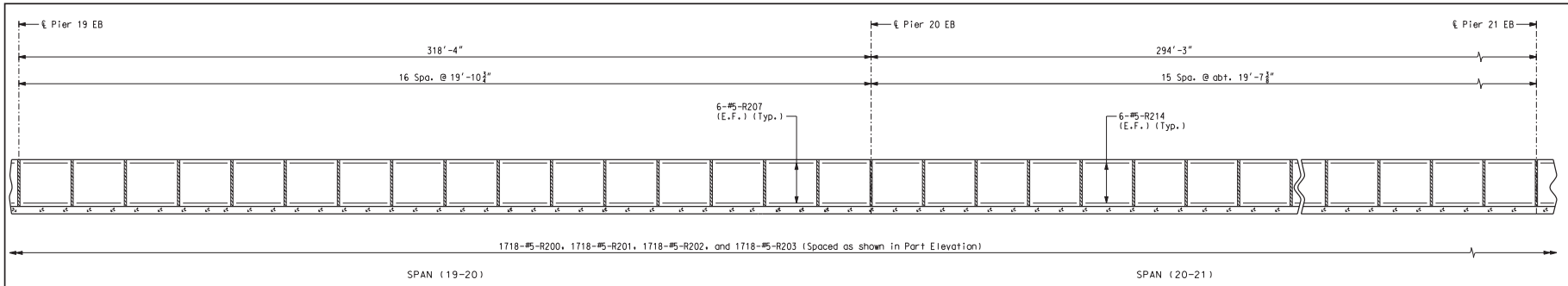

SECTION NEAR BARRIER CURB (TYPE D)

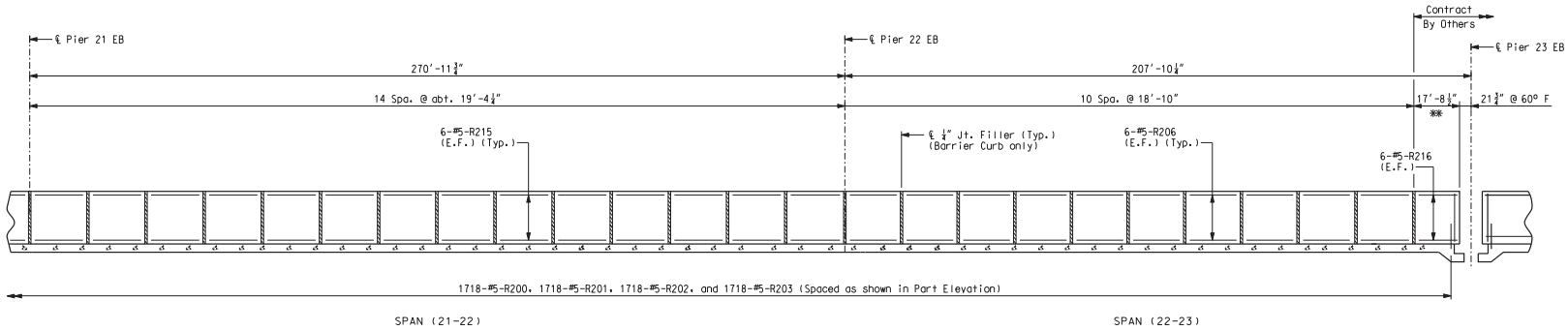

SECTION NEAR BARRIER CURB (TYPE D)

Notes:
Longitudinal dimensions are horizontal.
** Barrier segment reinforcement included in this contract. Forming and concrete placement for barrier included in Contract by Others.

LEFT BARRIER CURB (TYPE D) EB - SECTIONS (2 OF 2)

Detailed JUL 2009
Checked JUL 2009

Note: This drawing is not to scale. Follow dimensions.

Sheet No. 114 of 152

s:\idot\0906601\draw_idot\cadd_sheets\structural\B_A6500_114-152_J6I0984C_114.dgn

CONTRACT NO. 76D61

F.A. ROUTE	SECTION
999	82-1B-2
FED. AID PROJECT	ILLINOIS
COUNTY	ST. CLAIR

USER NAME = jjolliff
PLOT SCALE = $SCALE$
PLOT DATE = 3/8/2010
DESIGNED - HNTB
CHECKED - CMT
DRAWN - CMT / HTNB
REVISED -
REVISED -
REVISED -
REVISED -

ILLINOIS APPROACH STRUCTURE
FOR NEW I-70 MISSISSIPPI RIVER BRIDGE

STATE OF ILLINOIS
DEPARTMENT OF TRANSPORTATION

MISSOURI HIGHWAYS
AND TRANSPORTATION COMMISSION

HNTB
715 KIRK DRIVE
KANSAS CITY, MO 64105
TELEPHONE (816) 472-1201
CERTIFICATE OF AUTHORITY
NO. 001270

CMT
CRAWFORD, MURPHY & TILLY, INC.
2750 WEST WASHINGTON STREET
SPRINGFIELD, IL 62702
TELEPHONE (217) 787-8050
ENGINEERING CORPORATION - 000631

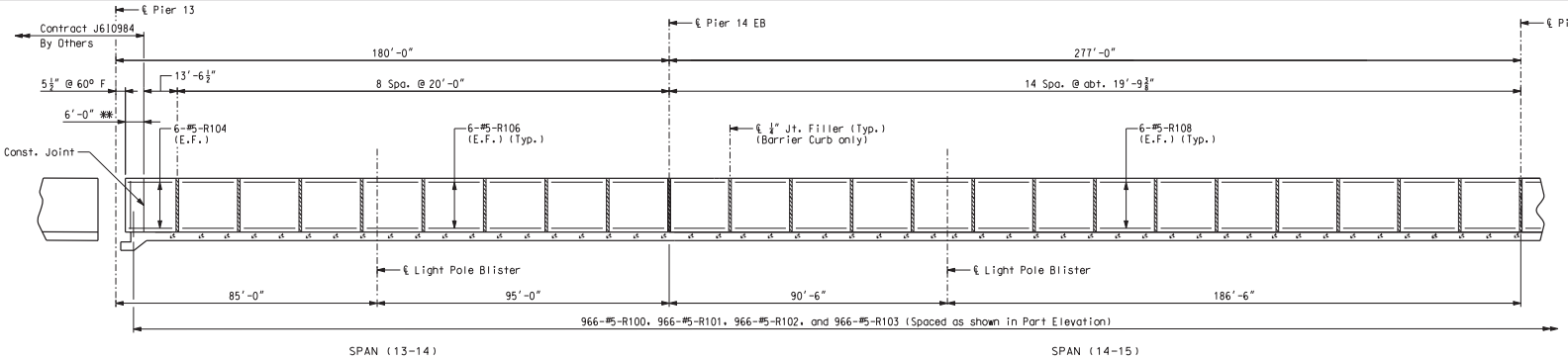

SECTION NEAR BARRIER CURB (TYPE D)

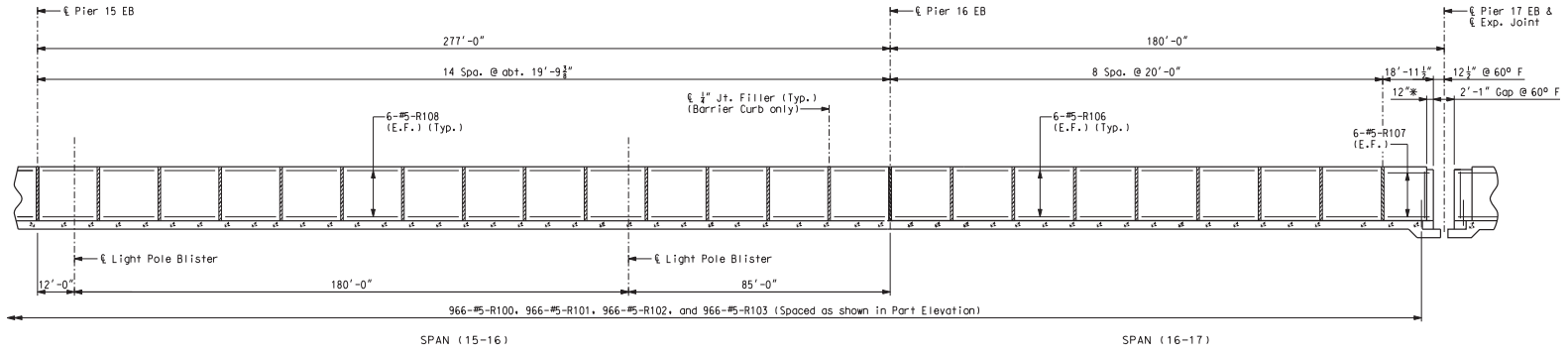

SECTION NEAR BARRIER CURB (TYPE D)

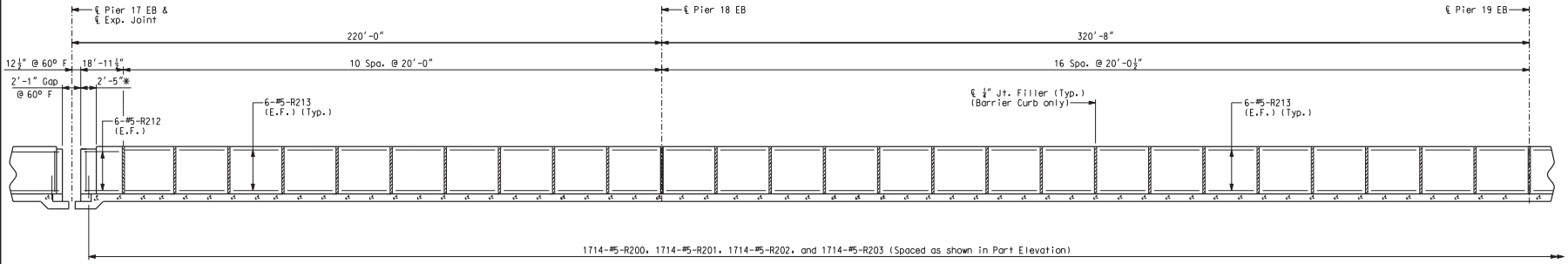

SECTION NEAR BARRIER CURB (TYPE D)

Notes:
Longitudinal dimensions are horizontal.
* Limits of recess for expansion joint cover PL. For barrier cover plate details, see Sheet No. 119.
** Barrier segment reinforcement included in this contract. Forming and concrete placement for barrier included in Contract J610984, by Others. For reinforcement at light pole blisters, see Sheet No. 108.

RIGHT BARRIER CURB (TYPE D) EB - SECTIONS (1 OF 2)

Detailed JUL 2009
Checked JUL 2009

Note: This drawing is not to scale. Follow dimensions.

s:\idot\0906601\draw_idot\cadd_sheets\structural\B_A6500_115-152_J6I0984C_115.dgn

CONTRACT NO. 76D61

F.A. ROUTE	SECTION
999	82-1B-2
FED. AID PROJECT	ILLINOIS
COUNTY	ST. CLAIR

USER NAME = jjolliff
PLOT SCALE = $SCALE$
PLOT DATE = 3/8/2010

DESIGNED - HNTB
CHECKED - CMT
DRAWN - CMT / HTNB
REVISED -
REVISED -
REVISED -
REVISED -

ILLINOIS APPROACH STRUCTURE
FOR NEW I-70 MISSISSIPPI RIVER BRIDGE

STATE OF ILLINOIS
DEPARTMENT OF TRANSPORTATION

MISSOURI HIGHWAYS
AND TRANSPORTATION COMMISSION

HNTB
715 KIRK DRIVE
KANSAS CITY, MO 64105
TELEPHONE (816) 472-1201
CERTIFICATE OF AUTHORITY
NO. 001270

CMT
CRAWFORD, MURPHY & TILLY, INC.
2750 WEST WASHINGTON STREET
SPRINGFIELD, IL 62702
TELEPHONE (217) 787-8050
ENGINEERING CORPORATION - 000631

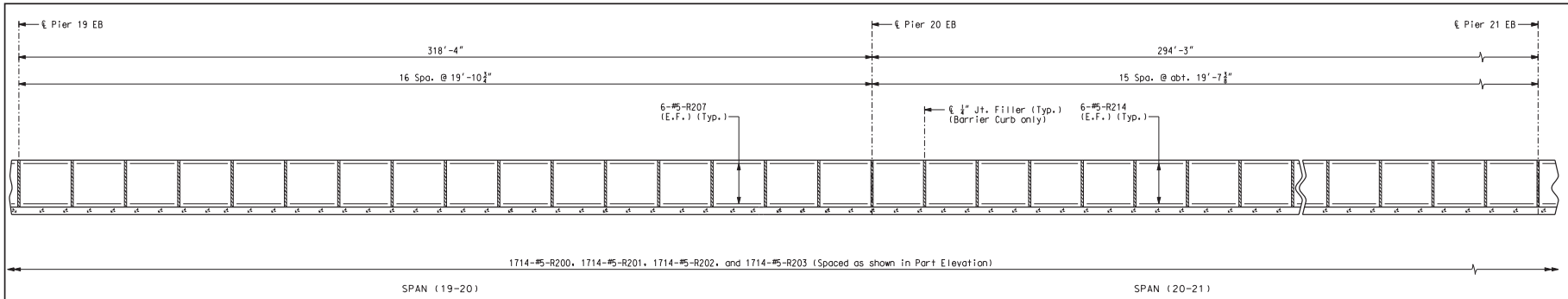

SECTION NEAR BARRIER CURB (TYPE D)

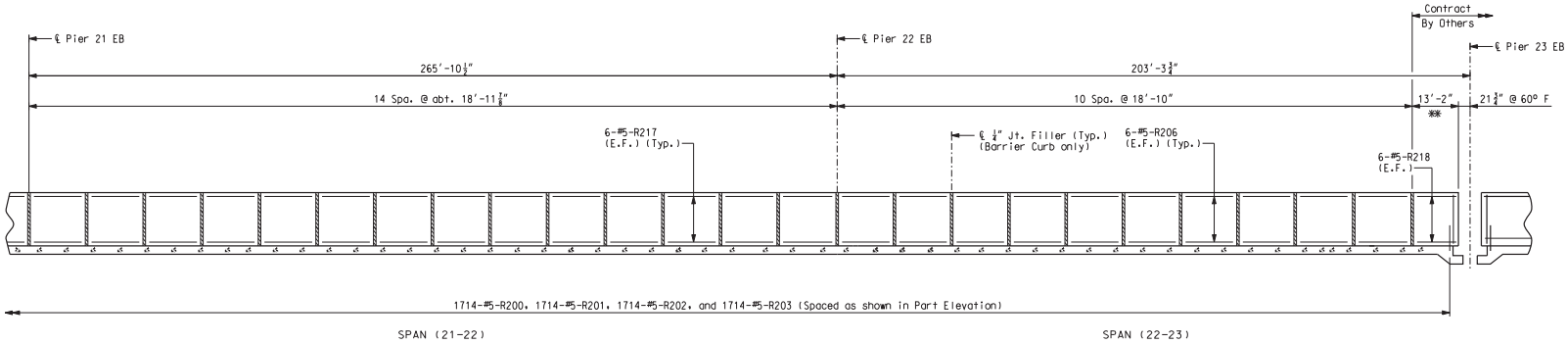

SECTION NEAR BARRIER CURB (TYPE D)

Notes:
Longitudinal dimensions are horizontal.
** Barrier segment reinforcement included in this contract. Forming and concrete placement for barrier included in Contract by Others.
Cost of furnishing and installing name plate will be considered completely covered by the contract unit price of "Barrier Curb (Type D)"

RIGHT BARRIER CURB (TYPE D) EB - SECTIONS (2 OF 2)

Detailed JUL 2009
Checked JUL 2009

Note: This drawing is not to scale. Follow dimensions.

s:\idot\0906601\draw_idot\cadd_sheets\structural\B_A6500_116-152_J6I0984C_116.dgn

CONTRACT NO. 76D61

F.A. ROUTE	SECTION
999	82-1B-2
FED. AID PROJECT	ILLINOIS
COUNTY	ST. CLAIR

USER NAME = jyoll1ff
PLOT SCALE = $SCALE$
PLOT DATE = 3/8/2010
DESIGNED - HNTB
CHECKED - CMT
DRAWN - CMT / HTNB
REVISED -
REVISED -
REVISED -
REVISED -

ILLINOIS APPROACH STRUCTURE
FOR NEW I-70 MISSISSIPPI RIVER BRIDGE

STATE OF ILLINOIS
DEPARTMENT OF TRANSPORTATION

MISSOURI HIGHWAYS
AND TRANSPORTATION COMMISSION

HNTB
715 KIRK DRIVE
KANSAS CITY, MO 64105
TELEPHONE (816) 472-1201
CERTIFICATE OF AUTHORITY
NO. 001270

CMT
CRAWFORD, MURPHY & TILLY, INC.
2750 WEST WASHINGTON STREET
SPRINGFIELD, IL 62702
TELEPHONE (217) 787-8050
ENGINEERING CORPORATION - 000631

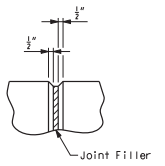

FILLED JOINT DETAIL

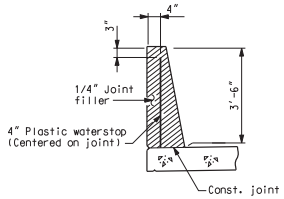

DETAILS OF PLASTIC WATERSTOP

Notes:
Plastic waterstop shall be placed in all filled joints - lower side barriers only.
Cost of plastic waterstop, complete-in-place, will be considered completely covered by the contract unit price for Barrier Curb (Type D).

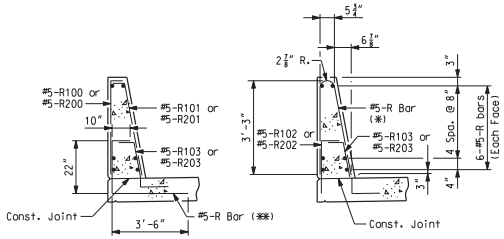

R-BAR PERMISSIBLE ALTERNATE SHAPES

(*) The R100 and R101 or R200 and R201 bar combination may be furnished as one bar, as shown, at the contractor's option. (All dimensions are out to out.)

(**) The R102 or R102 bar and #5 bottom transverse slab bar in cantilever (P/S panels only) combination may be furnished as one bar as shown, at the contractor's option.

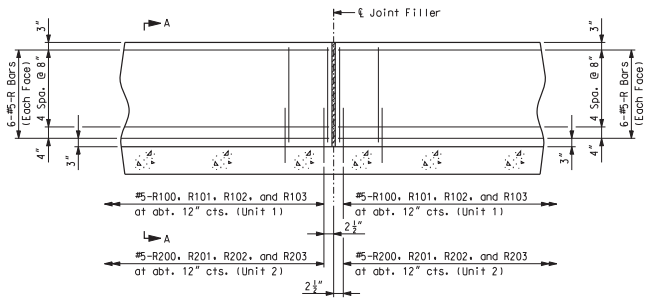

PART ELEVATION

(Cast-in-place Conventional Forming Option)

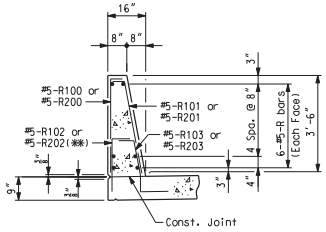

PART SECTION A-A

Notes:
Use a minimum lap of 2'-11" for #5 horizontal barrier curb (Type D) bars.
The cross-sectional area above the slab = 3.49 sq. ft.

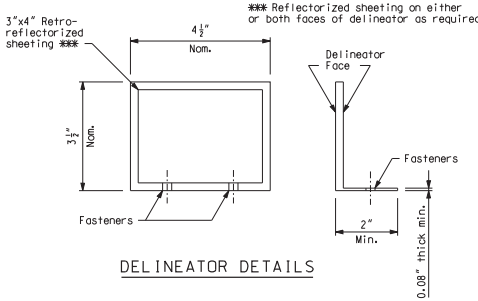

DELINEATOR DETAILS

Notes:
Concrete in the barrier curb (Type D) shall be Class B-1.
Top of barrier curb (Type D) shall be built parallel to grade with barrier curb joints normal to grade.
All exposed edges of barrier curb (Type D) shall have either a 1/2 " radius or a 3/8" bevel, unless otherwise noted.
Payment for all concrete and reinforcement, complete-in-place, will be completely covered by the contract unit price for Barrier Curb (Type D) per linear foot.
Measured length includes sections at modular expansion joints with reinforcing steel provided under this contract, but formed and poured by others.
Measurement of Barrier Curb (Type D) is to the nearest linear foot for each structure, measured along the outside top of slab from end of slab to end of slab.
Concrete traffic barrier delineators shall be placed on top of the Barrier Curb (Type D) as shown in the Delineator Details and in accordance with Sec 617. Concrete traffic barrier delineators will be considered completely covered by the contract unit price for "Barrier Curb (Type D)".
The curb shall be cured by application of Type 1-D or Type 2 Liquid Membrane-Forming Compound in accordance with Sec 1055. Surface sealing for concrete in accordance with Sec 703 is not required. Application of linseed oil at the contractor's expense is permitted.

BARRIER CURB (TYPE D) - DETAILS

Detailed JUL 2009
Checked JUL 2009

Note: This drawing is not to scale. Follow dimensions.

Sheet No. 117 of 152

s:\idot\0906601\draw_idot\cadd_sheets\structural\B_A6500_117-152_J6I0984C_117.dgn

CONTRACT NO. 76D61

F.A. ROUTE	SECTION
999	82-1B-2
FED. AID PROJECT	ILLINOIS
COUNTY	ST. CLAIR

USER NAME = jjolliff
PLOT SCALE = $SCALE$
PLOT DATE = 3/8/2010
DESIGNED - HNTB
CHECKED - CMT
DRAWN - CMT / HTNB
REVISED -
REVISED -
REVISED -
REVISED -

ILLINOIS APPROACH STRUCTURE FOR NEW I-70 MISSISSIPPI RIVER BRIDGE

STATE OF ILLINOIS
DEPARTMENT OF TRANSPORTATION

MISSOURI HIGHWAYS
AND TRANSPORTATION COMMISSION

HNTB
715 KIRK DRIVE
KANSAS CITY, MO 64105
TELEPHONE (816) 472-1201
CERTIFICATE OF AUTHORITY
NO. 001270

CMT
CRAWFORD, MURPHY & TILLY, INC.
2750 WEST WASHINGTON STREET
SPRINGFIELD, IL 62702
TELEPHONE (217) 787-8050
ENGINEERING CORPORATION - 000631

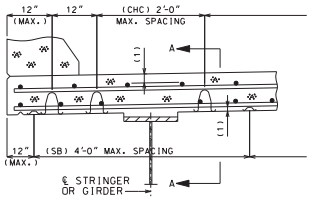

PART CROSS SECTION

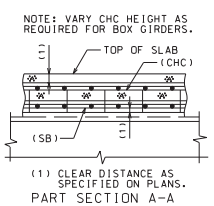

PART SECTION A-A

W BEAM SPANS
PLATE GIRDER SPANS
PRESTRESSED GIRDER SPANS
DECK GIRDER SPANS
BOX GIRDER SPANS (TOP SLAB ONLY)

SLABS ON STRINGERS AND GIRDERS

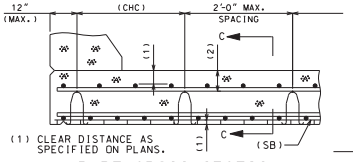

PART CROSS SECTION

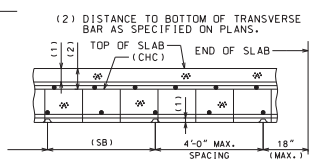

PART SECTION C-C

SLAB SPANS - NO VOIDS (SOLID)
TRUSSES - NO LONGITUDINAL STRINGERS

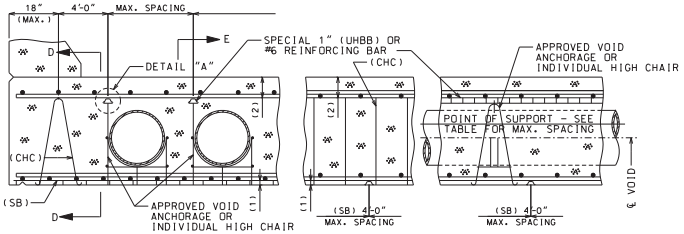

PART CROSS SECTION | PART SECTION D-D | PART SECTION E-E

SLAB SPANS - WITH VOIDS

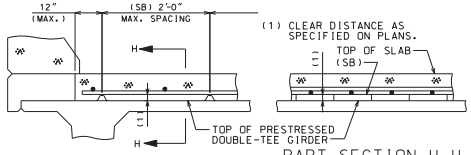

PART CROSS SECTION | PART SECTION H-H

SLABS ON P/S DOUBLE-TEE GIRDER

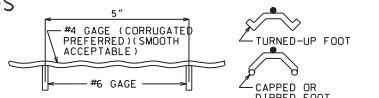

ELEVATION | SECTION

SLAB BOLSTER - SB

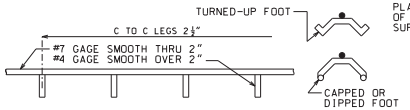

ELEVATION | SECTION

BEAM BOLSTER - BB

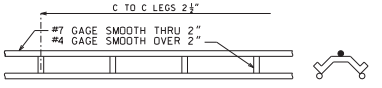

ELEVATION | SECTION

BEAM BOLSTER UPPER - BBU

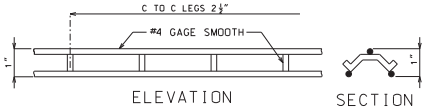

ELEVATION | SECTION

SPECIAL 1" UPPER HEAVY BEAM BOLSTER (SPECIAL 1" UHBB)

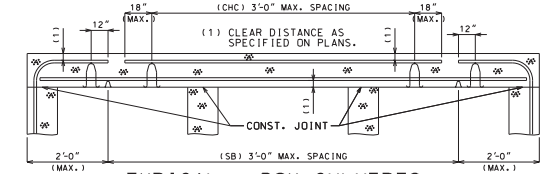

PART CROSS SECTION | PART SECTION B-B

BOX GIRDER - BOTTOM SLAB

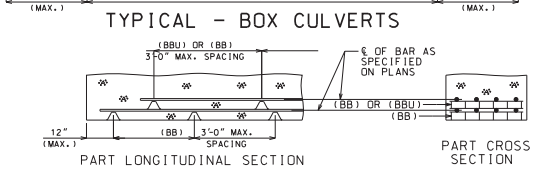

TYPICAL - BOX CULVERTS

PART LONGITUDINAL SECTION | PART CROSS SECTION

DECK GIRDERS
SUBSTRUCTURE BEAMS
VOIDED SLAB DROP PANELS
BOX GIRDER CROSS BEAMS
} RECOMMENDED METHOD

TYPICAL - BEAMS & GIRDERS

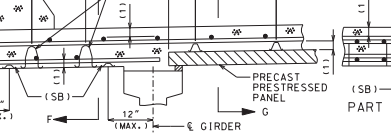

PART CROSS SECTION

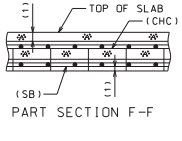

PART SECTION F-F

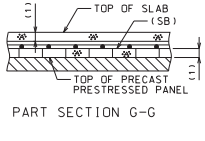

PART SECTION G-G

VOIDS	MAX. SPACING
14" & LESS	4'-0"
16" & 17"	3'-0"
19"	2'-6"
21"	2'-0"
22"	21"
23" & UP	18"

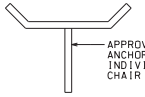

SLABS ON PRECAST PRESTRESSED PANELS

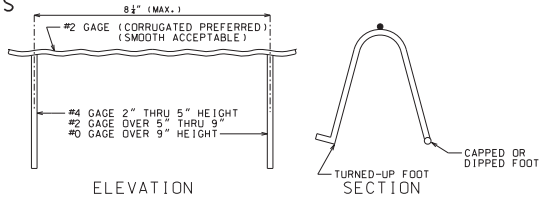

ELEVATION | SECTION

PART DETAIL "A"

CONTINUOUS HIGH CHAIR - CHC

ALL CONTACT POINTS ON WIRE BAR SUPPORTS SHALL BE SECURELY WELDED.

A TURNED-UP, CAPPED OR DIPPED FOOT SHALL BE ON ALL BAR SUPPORTS BEARING ON FORMS. WHERE BAR SUPPORTS ARE USED ON EARTH OR AGGREGATE SUBGRADES, SUITABLE PLATES, CONTINUOUS BARS OR PRECAST CONCRETE BAR SUPPORTS SHALL BE PROVIDED TO PREVENT DISPLACEMENT OF THE SUPPORT FOOT.

ALL DIMENSIONS TO REINFORCING STEEL ARE TO ℄ BAR EXCEPT WHERE CLEAR DISTANCE FROM FACE OF CONCRETE IS INDICATED. HEIGHT OF BAR SUPPORTS TO BE THAT REQUIRED TO SUPPORT BARS IN EXACT POSITIONS SHOWN ON PLANS.

SPIRAL REINFORCING SHALL BE SUPPORTED BY USE OF APPROVED SPIRAL SPACERS AT NOT MORE THAN 3'-0" CENTERS. PAYMENT FOR SPACERS AND ALL OTHER BAR SUPPORTS WILL BE CONSIDERED COMPLETELY COVERED BY THE CONTRACT UNIT PRICE FOR OTHER ITEMS.

WHEN BARS OF DIFFERENT SIZES ARE USED IN THE SAME MEMBERS, THE SELECTION OF BAR SUPPORTS SHALL BE BASED ON THE LARGER SIZE.

SUPPORTS FOR THE UPPER LAYERS NEED NOT BE DIRECTLY OVER THE SUPPORTS BELOW.

ALL BAR SUPPORTS SHALL BE IN ACCORDANCE WITH C.R.S.I. MANUAL OF STANDARD PRACTICE, EXCEPT AS SHOWN.

WIRE BAR AND REINFORCING BAR SUPPORTS USED WITH EPOXY COATED REINFORCING STEEL SHALL BE COATED ENTIRELY WITH AN EPOXY OR PLASTIC MATERIAL.

ALL UNCOATED WIRE BAR SUPPORTS SHALL HAVE CAPPED OR DIPPED FEET FOR THOSE APPLICATIONS WHERE MINIMIZING RUST SPOTS AND SURFACE BLEMISHES ARE EXPECTED TO BECOME VISIBLE. COLOR SHALL MATCH CONCRETE.

INDIVIDUAL HIGH CHAIRS AND SPACING WILL BE PERMITTED AS APPROVED BY THE ENGINEER. INDIVIDUAL HIGH CHAIRS SHALL NOT BE PERMITTED FOR USE ON SOLID SLAB AND VOIDED SLAB BRIDGES, EXCEPT AS SHOWN.

PLASTIC BAR SUPPORTS SHALL MEET OR EXCEED THE LOAD CARRYING CAPACITY OF AND BE PLACED AT THE SAME SPACING FOR STEEL WIRE BAR SUPPORTS AS SHOWN.

CONTRACT NO. 76D61

F.A. ROUTE	SECTION
999	82-1B-2
FED. AID PROJECT	ILLINOIS
COUNTY	ST. CLAIR

USER NAME = jjolliff
PLOT SCALE = $SCALE$
PLOT DATE = 3/8/2010
DESIGNED - HNTB
CHECKED - CMT
DRAWN - CMT / HTNB
REVISED -
REVISED -
REVISED -
REVISED -

ILLINOIS APPROACH STRUCTURE FOR NEW I-70 MISSISSIPPI RIVER BRIDGE

STATE OF ILLINOIS
DEPARTMENT OF TRANSPORTATION

MISSOURI HIGHWAYS AND TRANSPORTATION COMMISSION

HNTB
715 KIRK DRIVE
KANSAS CITY, MO 64105
TELEPHONE (816) 472-1201
CERTIFICATE OF AUTHORITY NO. 001270

CMT
CRAWFORD, MURPHY & TILLY, INC.
2750 WEST WASHINGTON STREET
SPRINGFIELD, IL 62702
TELEPHONE (217) 787-8050
ENGINEERING CORPORATION - 000631

Detailed JUL 2009
Checked JUL 2009

Note: This drawing is not to scale. Follow dimensions.

s:\idot\0906601\draw_idot\cadd_sheets\structural\B_A6500_118-152_J6I0984C_118.dgn

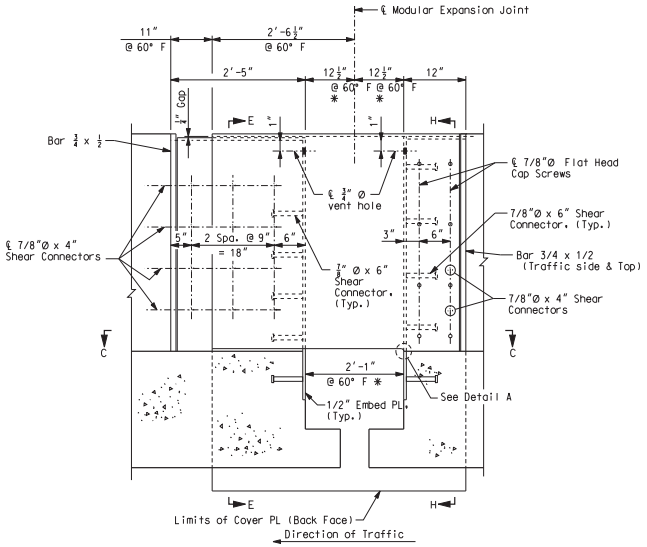

ELEVATION - BARRIER CURB COVER PLATES

WB - Left Barrier
EB - Right Barrier

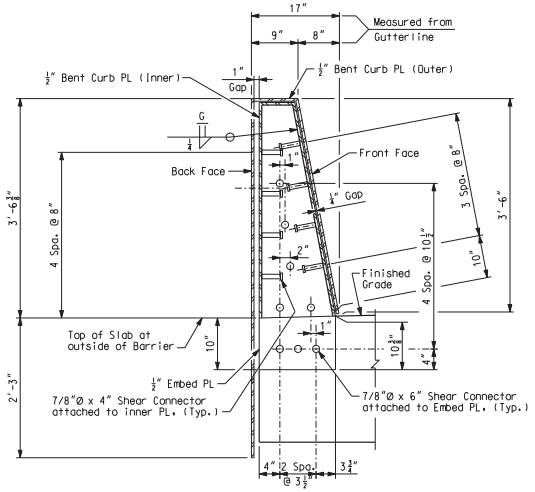

SECTION E-E

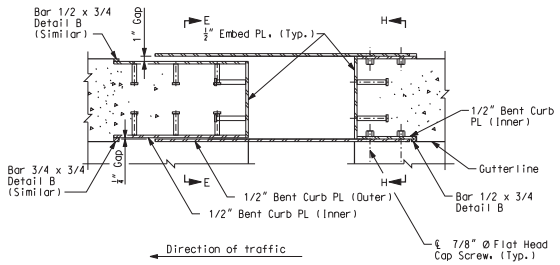

SECTION C-C

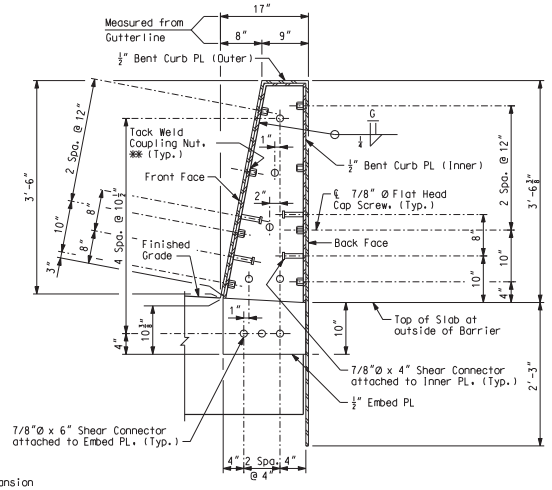

SECTION H-H

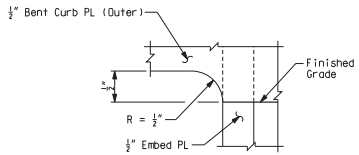

DETAIL A

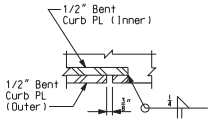

DETAIL B

Notes:

* Gap dimension @ 60°F is dependent upon modular expansion joint selection. Contractor is responsible for coordinating any revisions required due to deviations from dimensions shown.

Barrier curb cover plates shall be ASTM A240 Type 304 stainless steel.

Payment for furnishing and installing the barrier curb cover plates will be considered completely covered by the contract unit price for Modular Expansion Joint per linear foot.

** Plug end of coupling nut to maintain void for screw placement.

Flat head cap screws shall be in accordance with ASTM A449.

BARRIER CURB COVER PLATE DETAILS - PIER 17 (1 OF 2)

Detailed JUL 2009
Checked JUL 2009

Note: This drawing is not to scale. Follow dimensions.

Sheet No. 119 of 152

s:\idot\0906601\draw_idot\cadd_sheets\structural\B_A6500_119-152_J6I0984C_119.dgn

CONTRACT NO. 76D61

F.A. ROUTE	SECTION
999	82-1B-2
FED. AID PROJECT	ILLINOIS
COUNTY	ST. CLAIR

USER NAME = jjolliff
PLOT SCALE = $SCALE$
PLOT DATE = 3/8/2010
DESIGNED - HNTB
CHECKED - CMT
DRAWN - CMT / HTNB
REVISED -
REVISED -
REVISED -
REVISED -

ILLINOIS APPROACH STRUCTURE FOR NEW I-70 MISSISSIPPI RIVER BRIDGE

STATE OF ILLINOIS
DEPARTMENT OF TRANSPORTATION

MISSOURI HIGHWAYS AND TRANSPORTATION COMMISSION

HNTB
715 KIRK DRIVE
KANSAS CITY, MO 64105
TELEPHONE (816) 472-1201
CERTIFICATE OF AUTHORITY NO. 001270

CMT
CRAWFORD, MURPHY & TILLY, INC.
2750 WEST WASHINGTON STREET
SPRINGFIELD, IL 62702
TELEPHONE (217) 787-8050
ENGINEERING CORPORATION - 000631

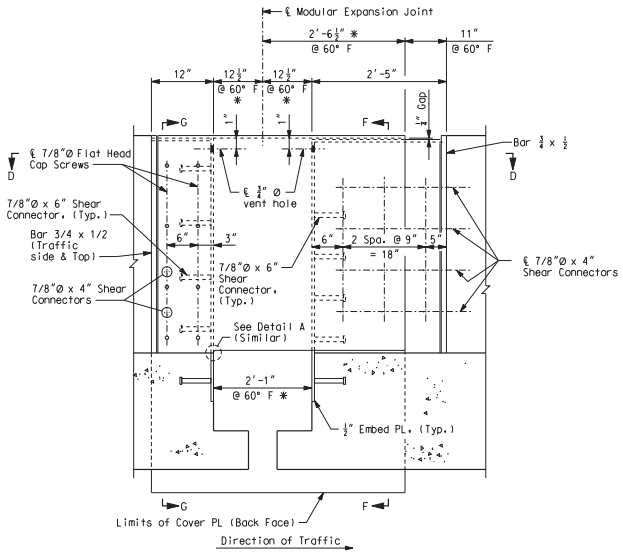

ELEVATION - BARRIER CURB COVER PLATES

WB - Right Barrier
EB - Left Barrier

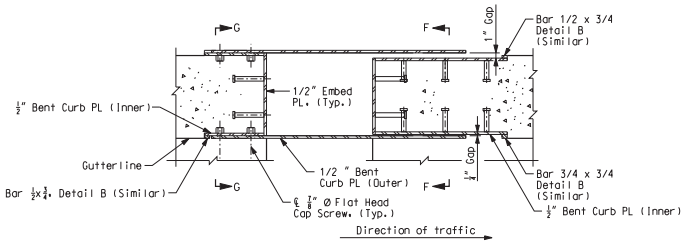

SECTION D-D

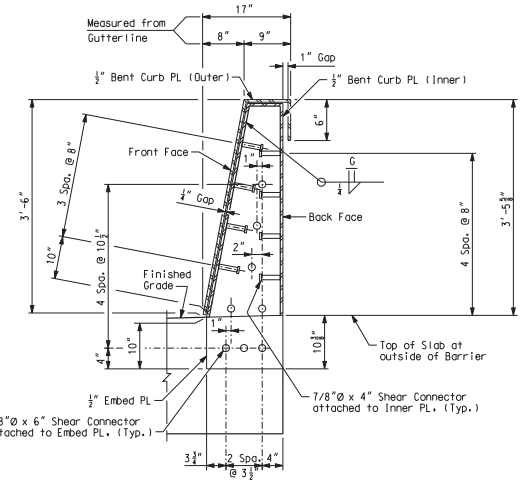

SECTION F-F

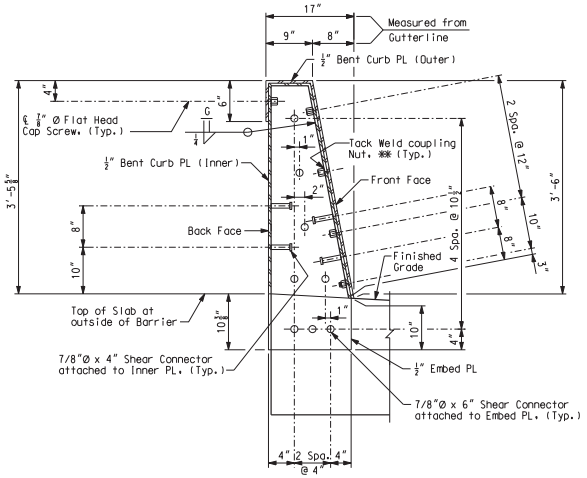

SECTION G-G

Notes:
* Gap dimension @ 60°F is dependent upon modular expansion joint selection. Contractor is responsible for coordinating any revisions required due to deviations from dimensions shown.
Barrier plates shall be ASTM A240 Type 304 stainless steel.
For Details "A" and "B" see Sheet 119.
Payment for furnishing and installing the barrier curb cover plates will be considered completely covered by the contract unit price for Modular Expansion Joint per linear foot.
** Plug end of coupling nut to maintain void for screw placement.
Flat head cap screws shall be in accordance with ASTM A449.

BARRIER CURB COVER PLATE DETAILS - PIER 17 (2 OF 2)

Detailed JUL 2009
Checked JUL 2009

Note: This drawing is not to scale. Follow dimensions.

Sheet No. 120 of 152

s:\idot\0906601\draw_idot\cadd_sheets\structural\B_A6500_120-152_J6I0984C_120.dgn

CONTRACT NO. 76D61

F.A. ROUTE	SECTION
999	82-1B-2
FED. AID PROJECT	ILLINOIS
COUNTY	ST. CLAIR

USER NAME = jjolliff
PLOT SCALE = $SCALE$
PLOT DATE = 3/8/2010
DESIGNED - HNTB
CHECKED - CMT
DRAWN - CMT / HTNB
REVISED -
REVISED -
REVISED -
REVISED -

ILLINOIS APPROACH STRUCTURE FOR NEW I-70 MISSISSIPPI RIVER BRIDGE

STATE OF ILLINOIS
DEPARTMENT OF TRANSPORTATION

MISSOURI HIGHWAYS AND TRANSPORTATION COMMISSION

HNTB
715 KIRK DRIVE
KANSAS CITY, MO 64105
TELEPHONE (816) 472-1201
CERTIFICATE OF AUTHORITY NO. 001270

CMT
CRAWFORD, MURPHY & TILLY, INC.
2750 WEST WASHINGTON STREET
SPRINGFIELD, IL 62702
TELEPHONE (217) 787-8050
ENGINEERING CORPORATION - 000631

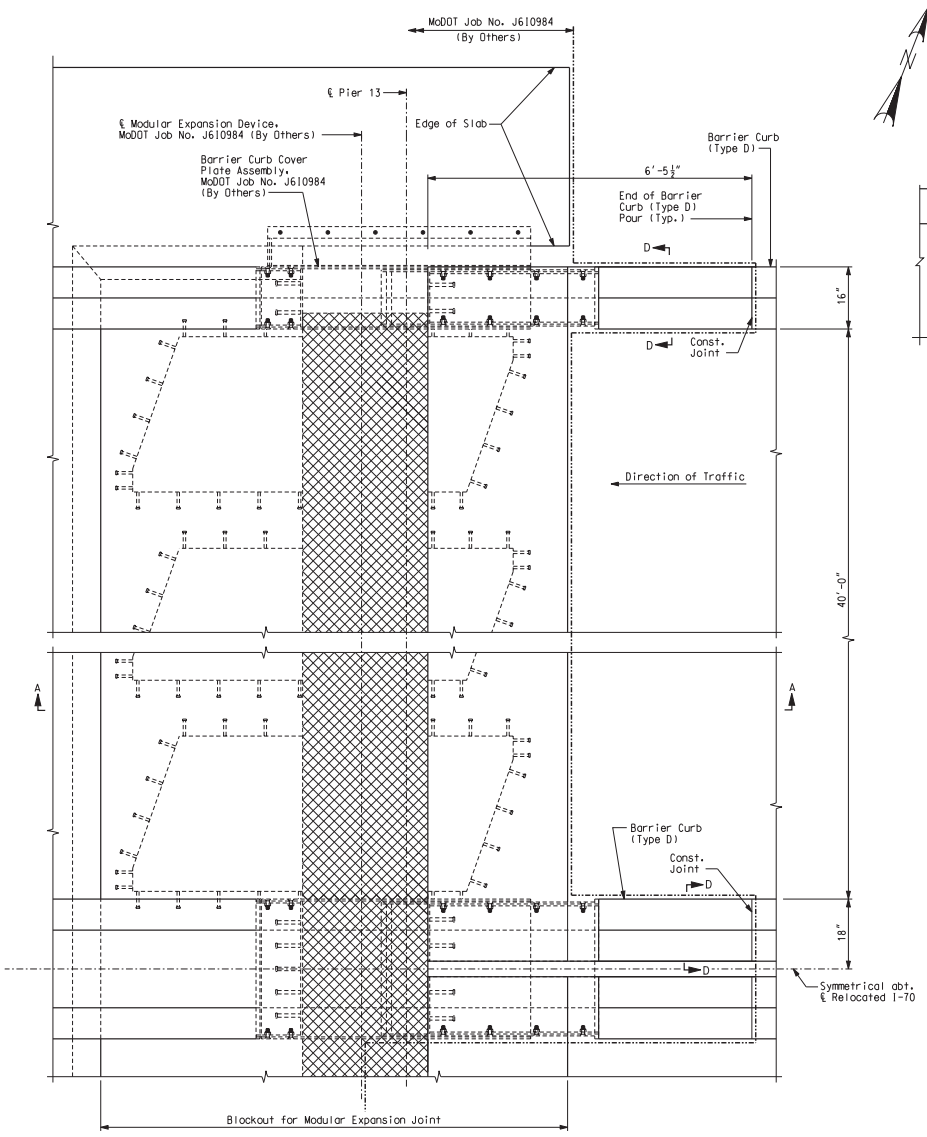

PLAN – PIER 13

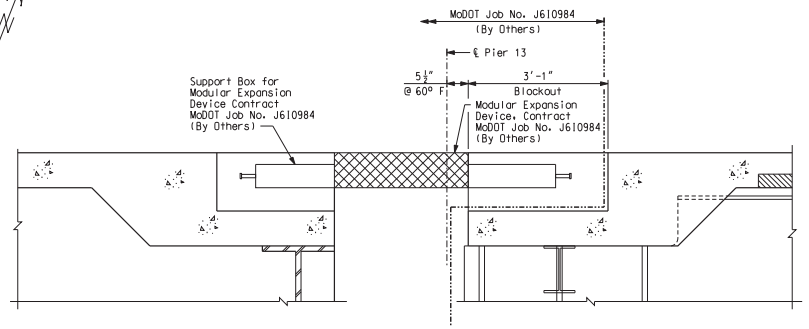

SECTION A–A

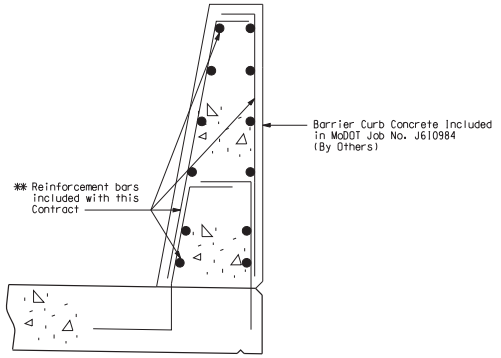

SECTION D–D

Notes:
Design movements for Modular Expansion Device shall be determined by the main span contractor MoDOT Job No. J610984 (By Others)
For slab reinforcing at Expansion Joints, see Sheet No. 100.
** For details of Barrier Curb (Type D), see Sheet Nos. 109 thru 118.

MODULAR EXPANSION JOINT DETAILS WB – PIER 13

Detailed JUL 2009
Checked JUL 2009

Note: This drawing is not to scale. Follow dimensions.

Sheet No. 121 of 152

s:\idot\0906601\draw_idot\cadd_sheets\structural\B_A6500_121-152_J610984C_121.dgn

CONTRACT NO. 76D61

F.A. ROUTE	SECTION
999	82-1B-2
FED. AID PROJECT	ILLINOIS
COUNTY	ST. CLAIR

USER NAME = jjolliff
PLOT SCALE = $SCALE$
PLOT DATE = 3/8/2010
DESIGNED - HNTB
CHECKED - CMT
DRAWN - CMT / HTNB
REVISED -
REVISED -
REVISED -
REVISED -

ILLINOIS APPROACH STRUCTURE
FOR NEW I-70 MISSISSIPPI RIVER BRIDGE

STATE OF ILLINOIS
DEPARTMENT OF TRANSPORTATION

MISSOURI HIGHWAYS
AND TRANSPORTATION COMMISSION

HNTB
715 KIRK DRIVE
KANSAS CITY, MO 64105
TELEPHONE (816) 472-1201
CERTIFICATE OF AUTHORITY
NO. 001270

CMT
CRAWFORD, MURPHY & TILLY, INC.
2750 WEST WASHINGTON STREET
SPRINGFIELD, IL 62702
TELEPHONE (217) 787-8050
ENGINEERING CORPORATION - 000631

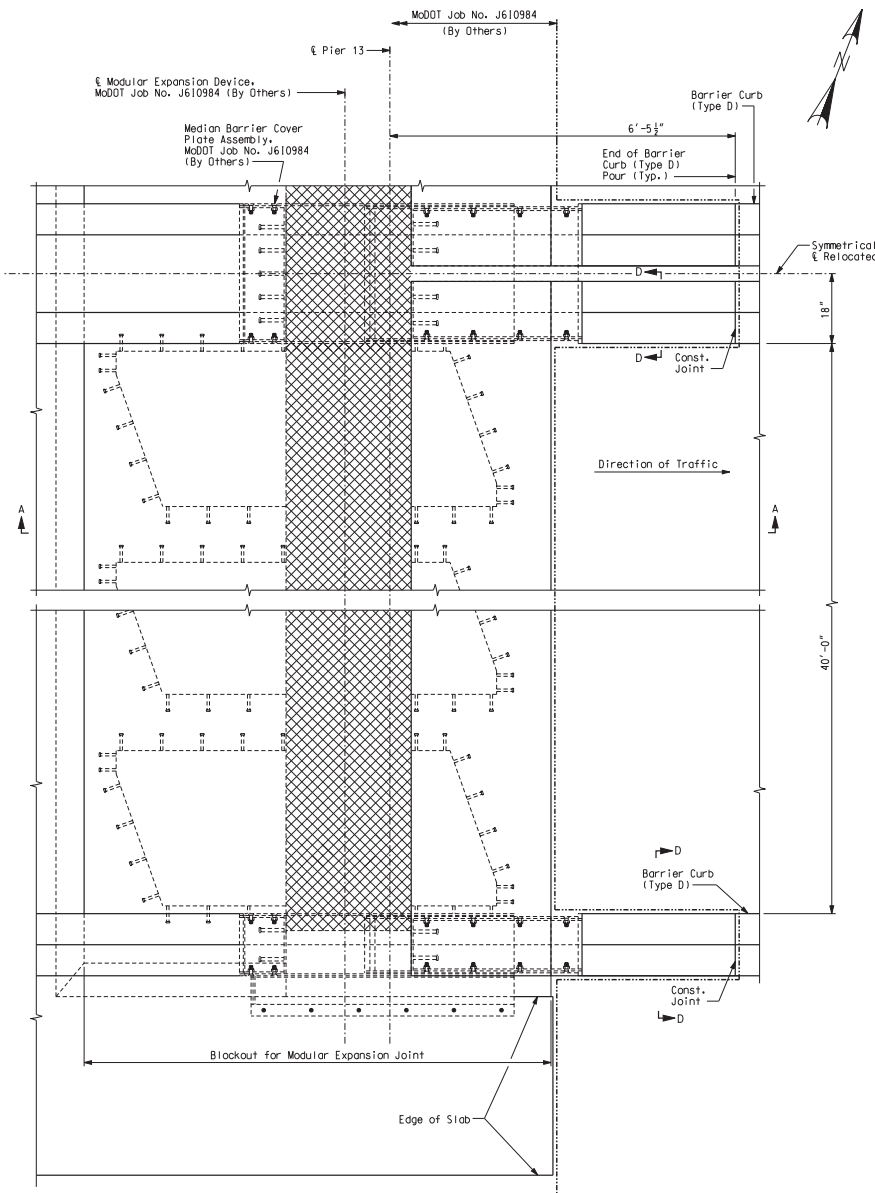

PLAN - PIER 13

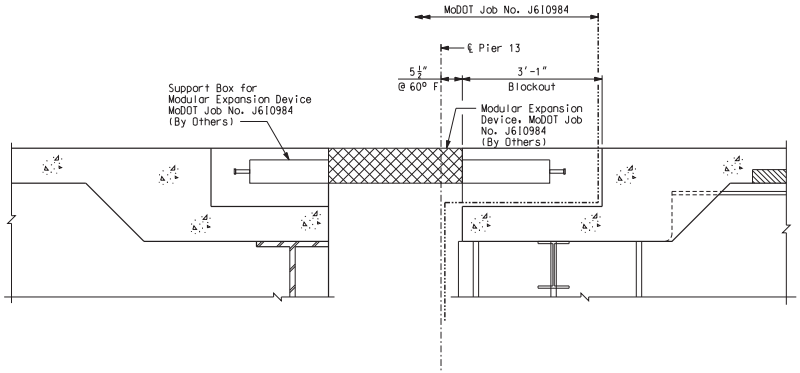

SECTION A-A

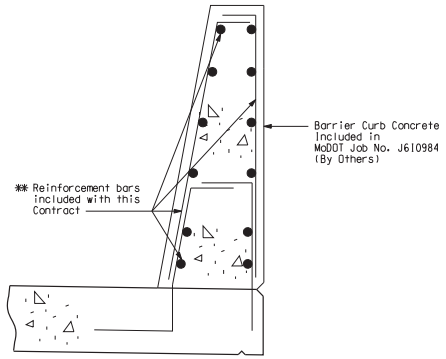

SECTION D-D

Notes:
Design movements for Modular Expansion Device shall be determined by the main span contractor MoDOT Job No. J6I0984 (By Others)
For slab reinforcing at Expansion Joints, see Sheet No. 100.
** For details of Barrier Curb (Type D), see Sheet Nos. 109 thru 118.

MODULAR EXPANSION JOINT DETAILS EB - PIER 13

Detailed JUL 2009
Checked JUL 2009

Note: This drawing is not to scale. Follow dimensions.

Sheet No. 122 of 152

s:\idot\0906601\draw_idot\cadd_sheets\structural\B_A6500_122-152_J6I0984C_122.dgn

CONTRACT NO. 76D61

F.A. ROUTE	SECTION
999	82-1B-2
FED. AID PROJECT	ILLINOIS
COUNTY	ST. CLAIR

USER NAME = jollrff
PLOT SCALE = $SCALE$
PLOT DATE = 3/8/2010
DESIGNED - HNTB
CHECKED - CMT
DRAWN - CMT / HTNB
REVISED -
REVISED -
REVISED -
REVISED -

ILLINOIS APPROACH STRUCTURE
FOR NEW I-70 MISSISSIPPI RIVER BRIDGE

STATE OF ILLINOIS
DEPARTMENT OF TRANSPORTATION

MISSOURI HIGHWAYS
AND TRANSPORTATION COMMISSION

HNTB
715 KIRK DRIVE
KANSAS CITY, MO 64105
TELEPHONE (816) 472-1201
CERTIFICATE OF AUTHORITY
NO. 001270

CMT
CRAWFORD, MURPHY & TILLY, INC.
2750 WEST WASHINGTON STREET
SPRINGFIELD, IL 62702
TELEPHONE (217) 787-8050
ENGINEERING CORPORATION - 000631

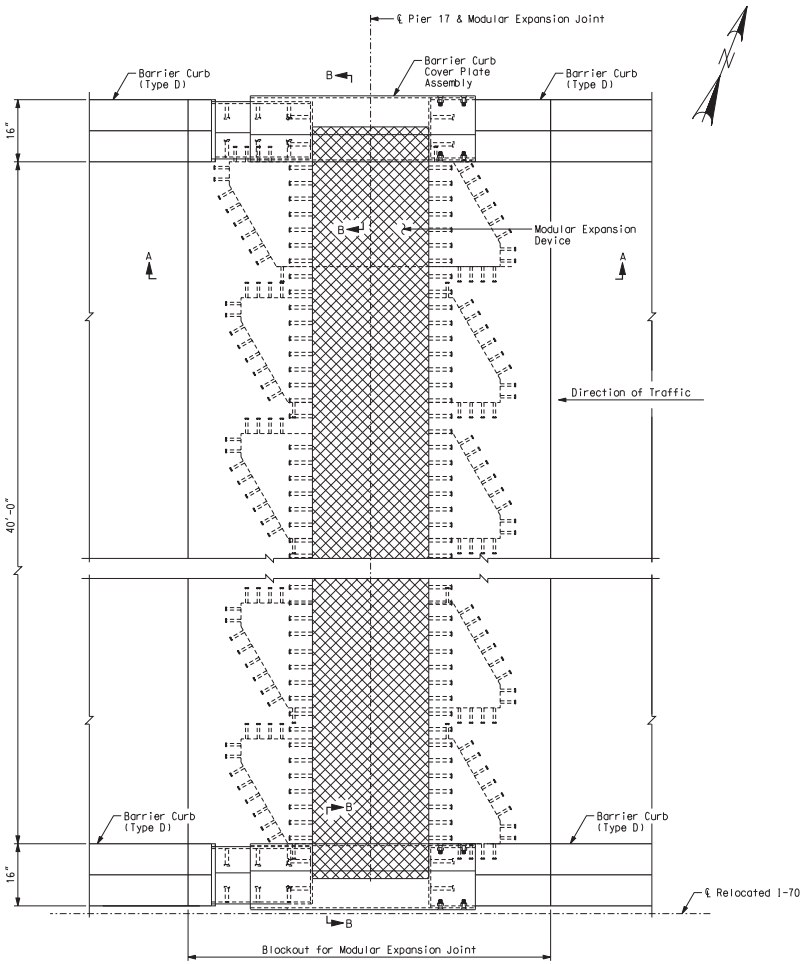

PLAN

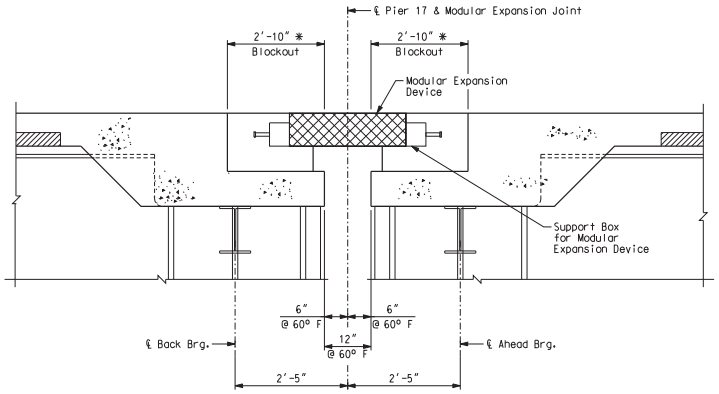

SECTION A-A

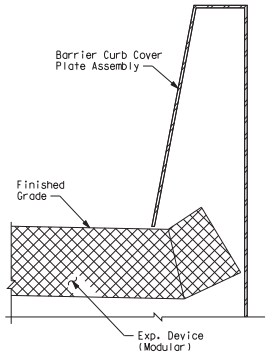

SECTION B-B

Notes:
Design movements for Modular Expansion Device are 5.77 inches for closing and 8.67 inches for opening (LRFD Service I).
For slab reinforcing at Expansion Joints, see Sheet No. 100.
For details of Barrier Curb (Type D), see Sheets Nos. 109 thru 118.
For details of Barrier Curb Cover Plate Assembly, see Sheets Nos. 119 and 120.
The cost of materials, fabrication, and installation of Expansion Joint shall be included in the pay item "Modular Expansion Joint".
* Dimensions dependent upon Modular Expansion Joint selection.
Contractor is responsible for coordinating any revisions required due to deviations from dimensions shown.
For additional requirements for Modular Expansion Device, see Special Provisions.

MODULAR EXPANSION JOINT DETAILS WB - PIER 17

CONTRACT NO. 76D61

F.A. ROUTE	SECTION
999	82-1B-2
FED. AID PROJECT	ILLINOIS
COUNTY	ST. CLAIR

USER NAME = jjolliff
PLOT SCALE = $SCALE$
PLOT DATE = 3/8/2010
DESIGNED - HNTB
CHECKED - CMT
DRAWN - CMT / HTNB
REVISED -
REVISED -
REVISED -
REVISED -

ILLINOIS APPROACH STRUCTURE FOR NEW I-70 MISSISSIPPI RIVER BRIDGE

STATE OF ILLINOIS
DEPARTMENT OF TRANSPORTATION

MISSOURI HIGHWAYS
AND TRANSPORTATION COMMISSION

HNTB
715 KIRK DRIVE
KANSAS CITY, MO 64105
TELEPHONE (816) 472-1201
CERTIFICATE OF AUTHORITY
NO. 001270

CMT
CRAWFORD, MURPHY & TILLY, INC.
2750 WEST WASHINGTON STREET
SPRINGFIELD, IL 62702
TELEPHONE (217) 787-8050
ENGINEERING CORPORATION - 000631

Detailed JUL 2009
Checked JUL 2009

Note: This drawing is not to scale. Follow dimensions.

s:\idot\0906601\draw_idot\cadd_sheets\structural\B_A6500_123-152_J6I0984C_123.dgn

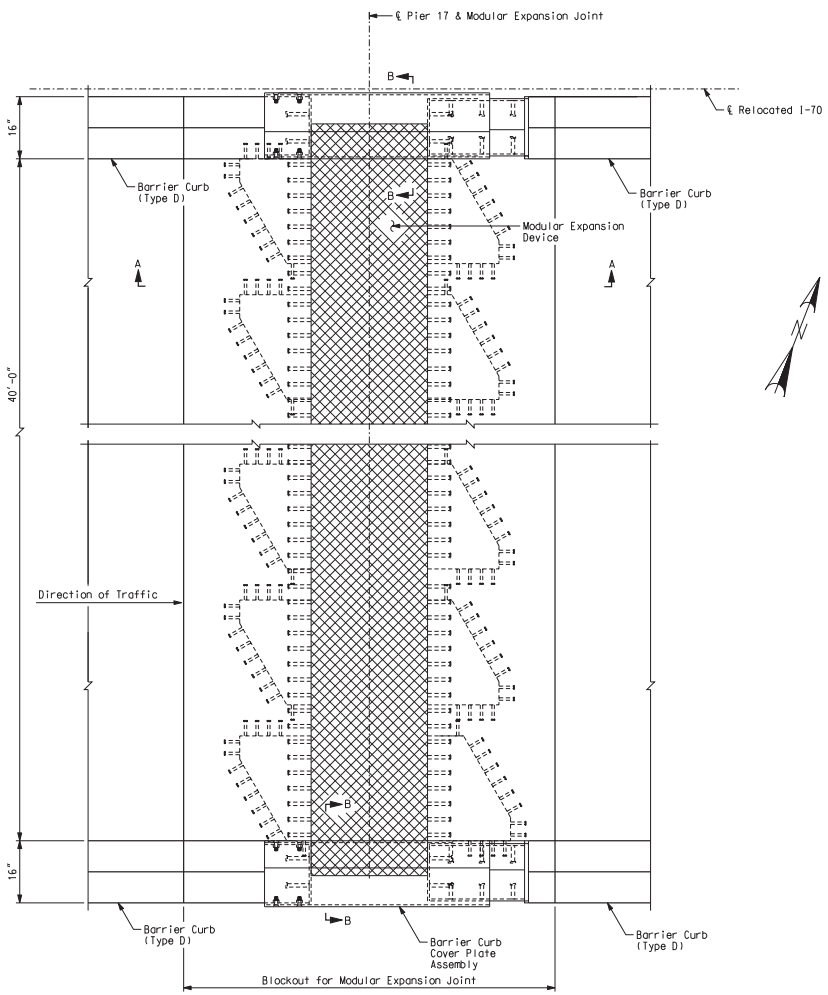

PLAN

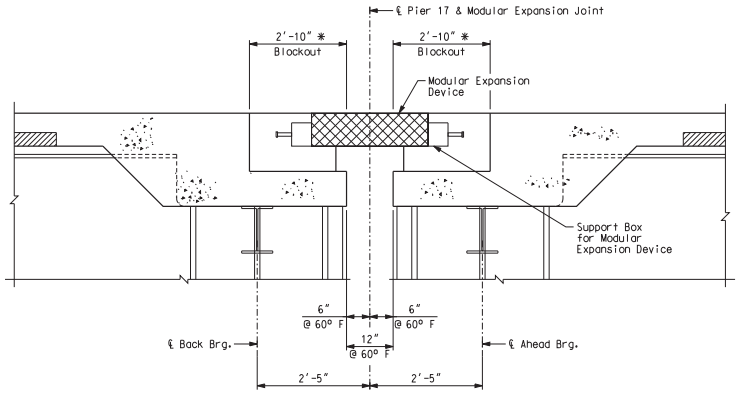

SECTION A-A

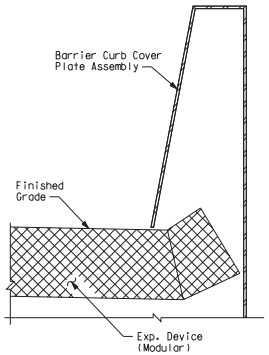

SECTION B-B

Notes:
Design movements for Modular Expansion Device are 5.93 inches for closing and 8.90 inches for opening (LRFD Service I).
For slab reinforcing at Expansion Joints, see Sheet No. 100.
For details of Barrier Curb (Type D), see Sheets Nos. 109 thru 118.
For details of Barrier Curb Cover Plate Assembly, see Sheets Nos. 119 and 120.
The cost of materials, fabrication, and installation of Expansion Joint shall be included in the pay item "Modular Expansion Joint".
* Dimensions dependent upon Modular Expansion Joint selection.
Contractor is responsible for coordinating any revisions required due to deviations from dimensions shown.
For additional requirements for Modular Expansion Device, see Special Provisions.

MODULAR EXPANSION JOINT DETAILS EB - PIER 17

CONTRACT NO. 76D61

F.A. ROUTE	SECTION
999	82-1B-2
FED. AID PROJECT	ILLINOIS
COUNTY	ST. CLAIR

USER NAME = jjolliff
PLOT SCALE = $SCALE$
PLOT DATE = 3/8/2010
DESIGNED - HNTB
CHECKED - CMT
DRAWN - CMT / HTNB
REVISED -
REVISED -
REVISED -
REVISED -

ILLINOIS APPROACH STRUCTURE FOR NEW I-70 MISSISSIPPI RIVER BRIDGE

STATE OF ILLINOIS
DEPARTMENT OF TRANSPORTATION

MISSOURI HIGHWAYS AND TRANSPORTATION COMMISSION

HNTB
715 KIRK DRIVE
KANSAS CITY, MO 64105
TELEPHONE (816) 472-1201
CERTIFICATE OF AUTHORITY NO. 001270

CMT
CRAWFORD, MURPHY & TILLY, INC.
2750 WEST WASHINGTON STREET
SPRINGFIELD, IL 62702
TELEPHONE (217) 787-8050
ENGINEERING CORPORATION - 000631

Detailed JUL 2009
Checked JUL 2009

Note: This drawing is not to scale. Follow dimensions.

s:\idot\0906601\draw_idot\cadd_sheets\structural\B_A6500_124-152_J6I0984C_124.dgn

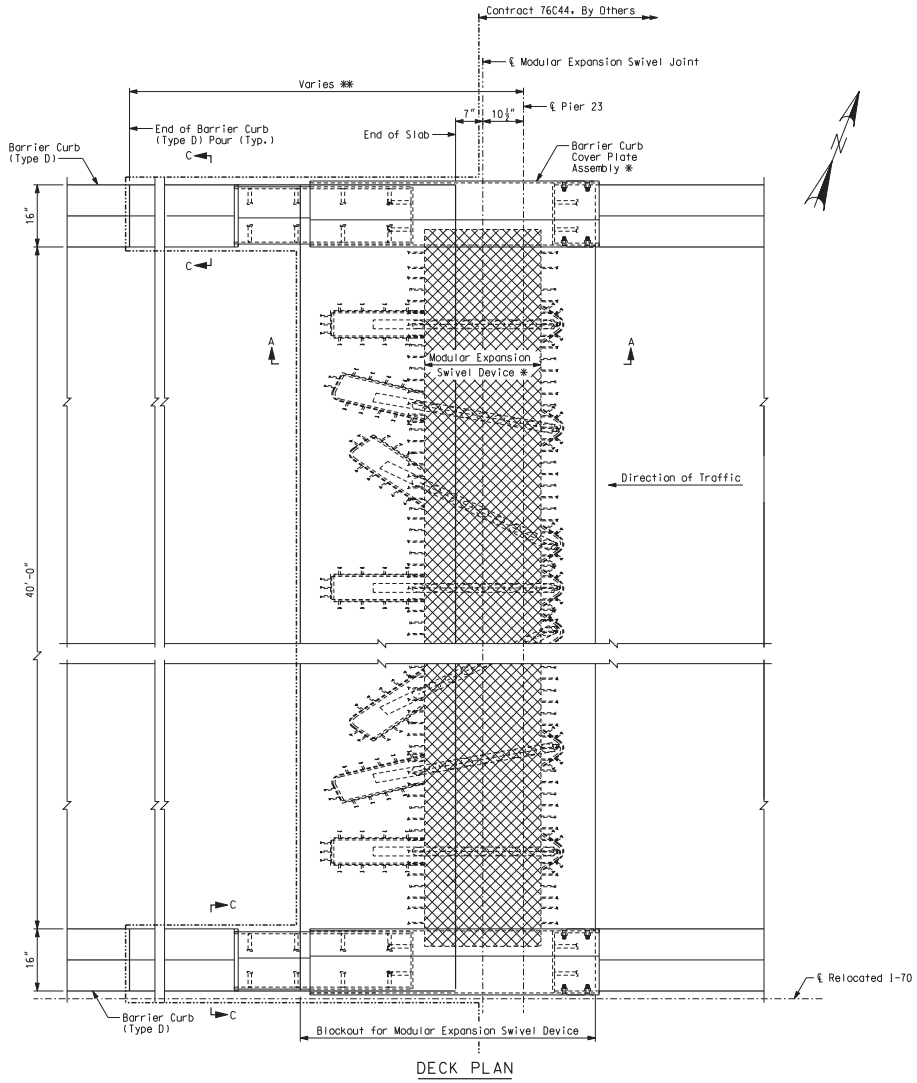

DECK PLAN

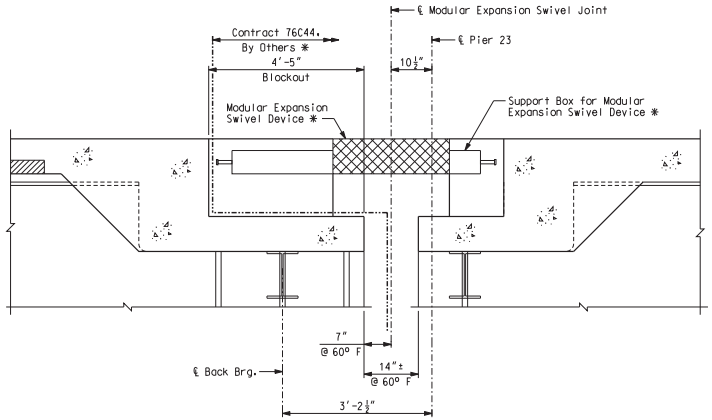

SECTION A-A

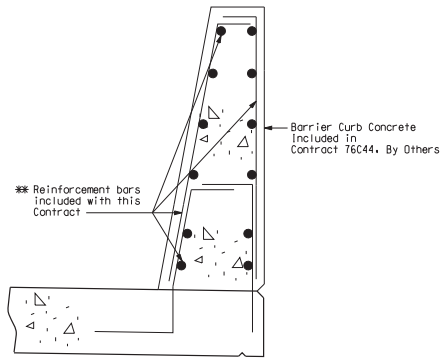

SECTION C-C
(Slab Superelevation not shown)

Notes:
For slab reinforcing at Expansion Joints, see Sheet No. 100.
** For details of Barrier Curb (Type D), see Sheet Nos. 109 thru 118.
* Barrier segment, barrier curb cover plate assembly, and Modular Expansion Swivel Joint included in Contract 76C44. By Others.

MODULAR EXPANSION SWIVEL JOINT DETAILS WB - PIER 23

CONTRACT NO. 76D61

F.A. ROUTE	SECTION
999	82-1B-2
FED. AID PROJECT	ILLINOIS
COUNTY	ST. CLAIR

USER NAME = jolliff
PLOT SCALE = $SCALE$
PLOT DATE = 3/8/2010
DESIGNED - HNTB
CHECKED - CMT
DRAWN - CMT / HTNB
REVISED -
REVISED -
REVISED -
REVISED -

ILLINOIS APPROACH STRUCTURE FOR NEW I-70 MISSISSIPPI RIVER BRIDGE

STATE OF ILLINOIS
DEPARTMENT OF TRANSPORTATION

MISSOURI HIGHWAYS AND TRANSPORTATION COMMISSION

HNTB
715 KIRK DRIVE
KANSAS CITY, MO 64105
TELEPHONE (816) 472-1201
CERTIFICATE OF AUTHORITY NO. 001270

CMT
CRAWFORD, MURPHY & TILLY, INC.
2750 WEST WASHINGTON STREET
SPRINGFIELD, IL 62702
TELEPHONE (217) 787-8050
ENGINEERING CORPORATION - 000631

Detailed JUL 2009
Checked JUL 2009

Note: This drawing is not to scale. Follow dimensions.

s:\idot\0906601\draw_idot\cadd_sheets\structural\B_A6500_125-152_J6I0984C_125.dgn

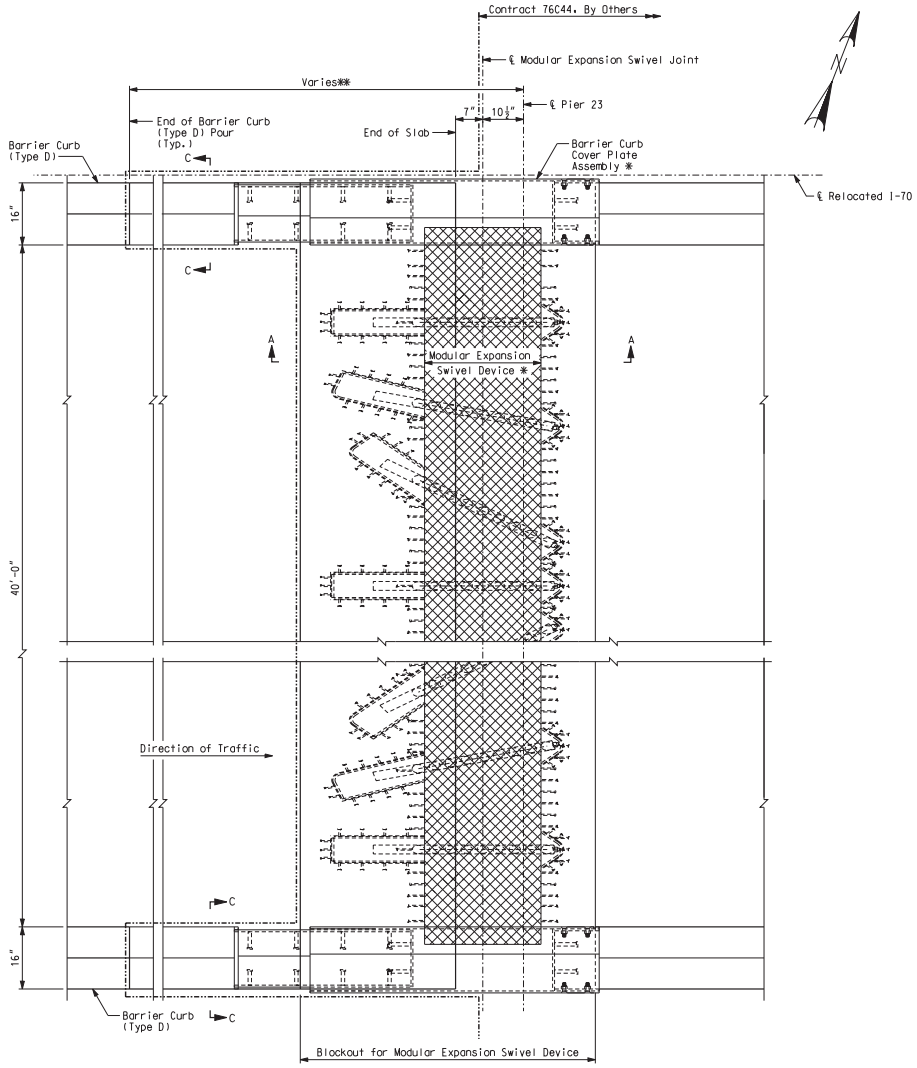

DECK PLAN

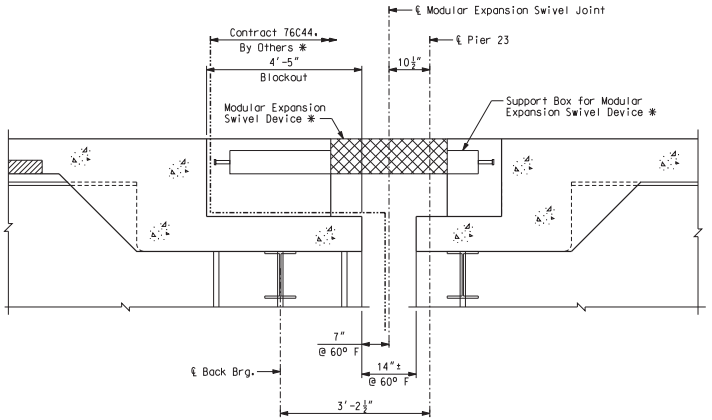

SECTION A-A

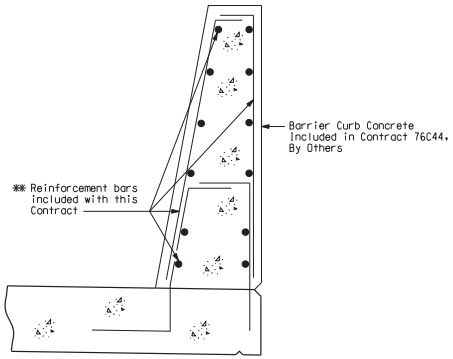

SECTION C-C

Notes:
For slab reinforcing at Expansion Joints, see Sheet No. 100.
** For details of Barrier Curb (Type D), see Sheet Nos. 109 thru 118.
* Barrier segment, barrier curb cover plate assembly, and Modular Expansion Swivel Joint included in Contract 76C44, By Others.

MODULAR EXPANSION SWIVEL JOINT DETAILS EB - PIER 23

CONTRACT NO. 76D61

F.A. ROUTE	SECTION
999	82-1B-2
FED. AID PROJECT	ILLINOIS
COUNTY	ST. CLAIR

USER NAME = jjolliff
PLOT SCALE = $SCALE$
PLOT DATE = 3/8/2010
DESIGNED - HNTB
CHECKED - CMT
DRAWN - CMT / HTNB
REVISED -
REVISED -
REVISED -
REVISED -

ILLINOIS APPROACH STRUCTURE FOR NEW I-70 MISSISSIPPI RIVER BRIDGE

STATE OF ILLINOIS
DEPARTMENT OF TRANSPORTATION

MISSOURI HIGHWAYS AND TRANSPORTATION COMMISSION

HNTB
715 KIRK DRIVE
KANSAS CITY, MO 64105
TELEPHONE (816) 472-1201
CERTIFICATE OF AUTHORITY NO. 001270

CMT
CRAWFORD, MURPHY & TILLY, INC.
2750 WEST WASHINGTON STREET
SPRINGFIELD, IL 62702
TELEPHONE (217) 787-8050
ENGINEERING CORPORATION - 000631

Detailed JUL 2009
Checked JUL 2009

Note: This drawing is not to scale. Follow dimensions.

s:\idot\0906601\draw_idot\cadd_sheets\structural\B_A6500_126-152_J6I0984C_126.dgn

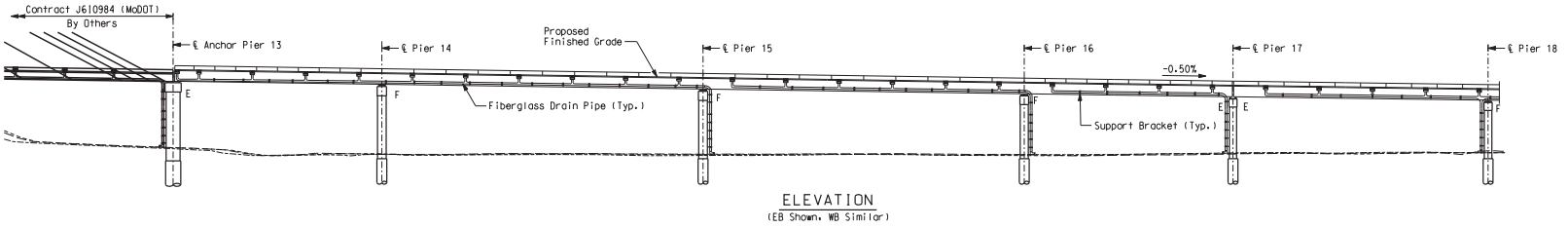

ELEVATION
(EB Shown, WB Similar)

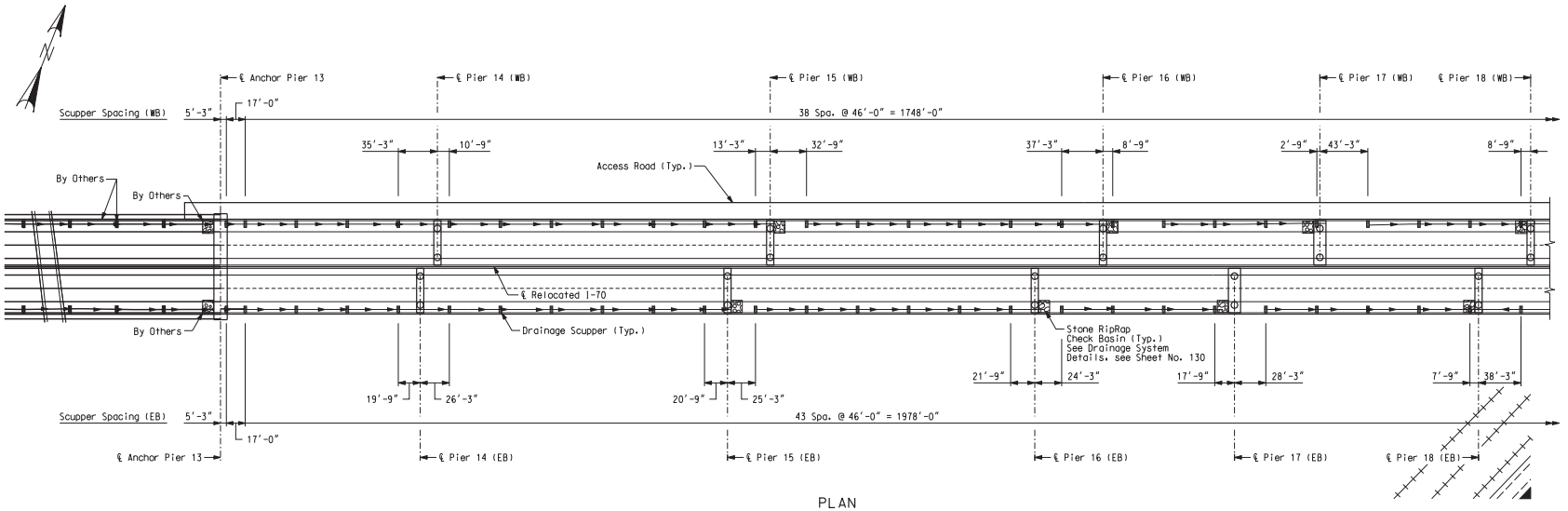

PLAN

LEGEND

- Drainage Scupper
- Fiberglass Drain Pipe.
- Stone Riprap Check Basin

General Notes:
All pipe shall be 12" fiberglass unless otherwise noted.
Stone rip rap check basins will be located at each scupper outlet point for velocity dissipation. Check basin dimensions are given on Sheet 130.
Stone rip rap check basins shall be Class A6 (Special). (Roadway Item)
All drainage structures shall be Neenah designation R3921-V1 or approved equal.
Layout lengths are provided along edge of deck. Profile view shows drainage pipe slope for scuppers and pipe located in the eastbound lanes only.
Pipe slope shall follow the longitudinal slope of the roadway. Where a backslope is required for outletting purposes, the slope will be 0.5% min.
See Drainage System Details for scupper and pipe connection information.

DRAINAGE PLAN AND ELEVATION 1

Detailed JUL 2009
Checked JUL 2009

Note: This drawing is not to scale. Follow dimensions.

Sheet No. 127 of 152

s:\idot\0906601\draw_idot\cadd_sheets\structural\B_A6500_127-152_J6I0984C_127.dgn

CONTRACT NO. 76D61

F.A. ROUTE	SECTION
999	82-1B-2
FED. AID PROJECT	ILLINOIS
COUNTY	ST. CLAIR

USER NAME = jjolliff
PLOT SCALE = $SCALE$
PLOT DATE = 3/8/2010
DESIGNED - HNTB
CHECKED - CMT
DRAWN - CMT / HNTB
REVISED -
REVISED -
REVISED -
REVISED -

ILLINOIS APPROACH STRUCTURE
FOR NEW I-70 MISSISSIPPI RIVER BRIDGE

STATE OF ILLINOIS
DEPARTMENT OF TRANSPORTATION

MISSOURI HIGHWAYS
AND TRANSPORTATION COMMISSION

HNTB
715 KIRK DRIVE
KANSAS CITY, MO 64105
TELEPHONE (816) 472-1201
CERTIFICATE OF AUTHORITY
NO. 001270

CMT
CRAWFORD, MURPHY & TILLY, INC.
2750 WEST WASHINGTON STREET
SPRINGFIELD, IL 62702
TELEPHONE (217) 787-8050
ENGINEERING CORPORATION - 000631

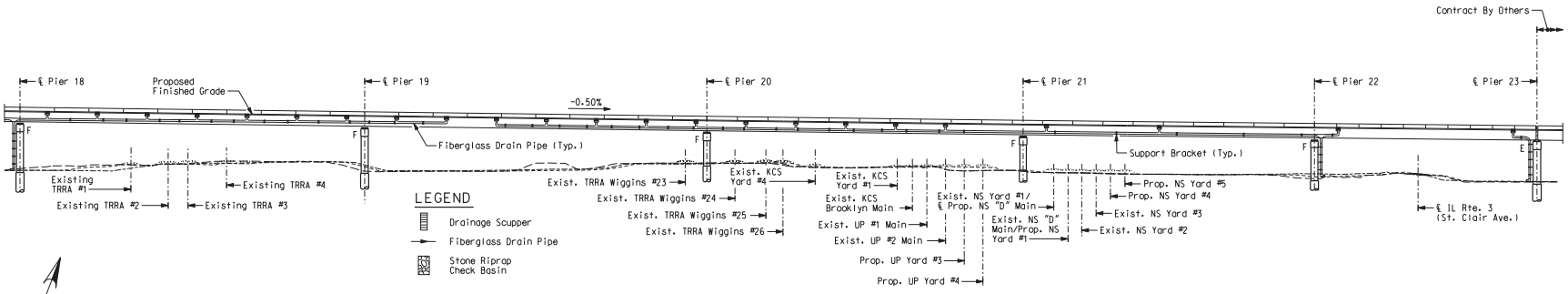

ELEVATION
(EB Shown, WB Similar)

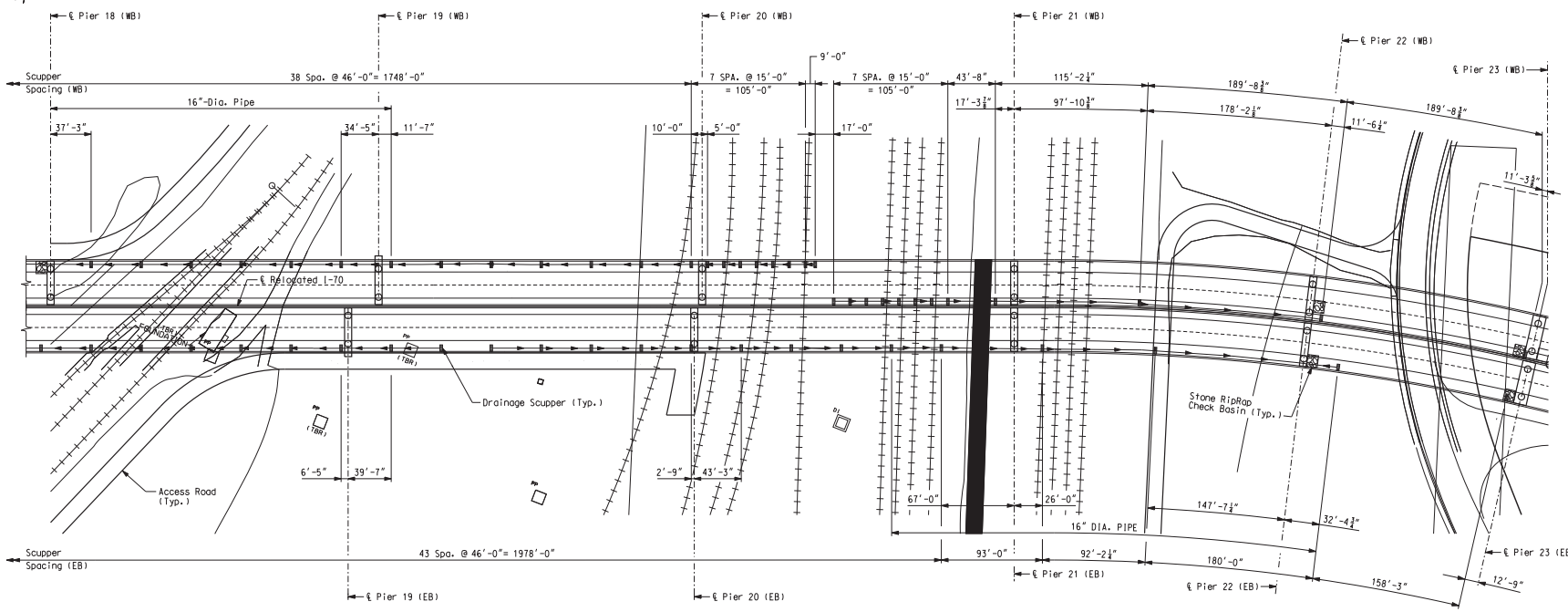

PLAN

Note:
Scuppers shall not outlet at Pier 19, 20, or 21 due to the proximity to the railroad tracks, and the existing Wiggins #2 yard footprint.

Detailed JUL 2009
Checked JUL 2009

Note: This drawing is not to scale. Follow dimensions.

Sheet No. 128 of 152

DRAINAGE PLAN AND ELEVATION 2

s:\idot\0906601\draw_idot\cadd_sheets\structural\B_A6500_128-152_J6I0984C_128.dgn

CONTRACT NO. 76D61

F.A. ROUTE	SECTION
999	82-1B-2
FED. AID PROJECT	ILLINOIS
COUNTY	ST. CLAIR

USER NAME = jjolliff
PLOT SCALE = $SCALE$
PLOT DATE = 3/8/2010
DESIGNED - HNTB
CHECKED - CMT
DRAWN - CMT / HTNB
REVISED -
REVISED -
REVISED -
REVISED -

ILLINOIS APPROACH STRUCTURE
FOR NEW I-70 MISSISSIPPI RIVER BRIDGE

STATE OF ILLINOIS
DEPARTMENT OF TRANSPORTATION

MISSOURI HIGHWAYS
AND TRANSPORTATION COMMISSION

HNTB
715 KIRK DRIVE
KANSAS CITY, MO 64105
TELEPHONE (816) 472-1201
CERTIFICATE OF AUTHORITY
NO. 001270

CMT
CRAWFORD, MURPHY & TILLY, INC.
2750 WEST WASHINGTON STREET
SPRINGFIELD, IL 62702
TELEPHONE (217) 787-8050
ENGINEERING CORPORATION - 000631

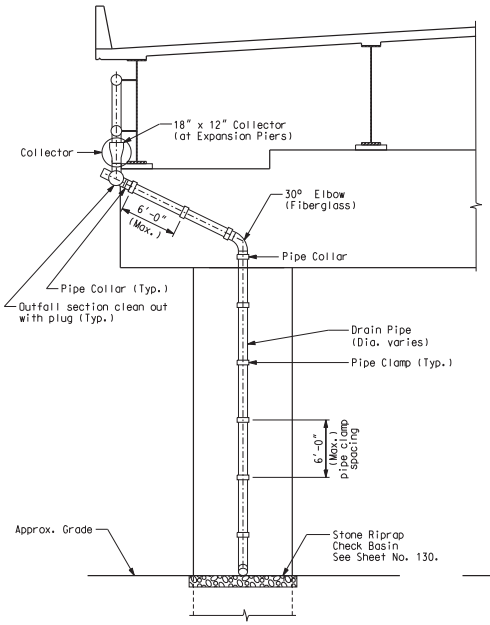

ELEVATION
SCUPPER OUTFALL

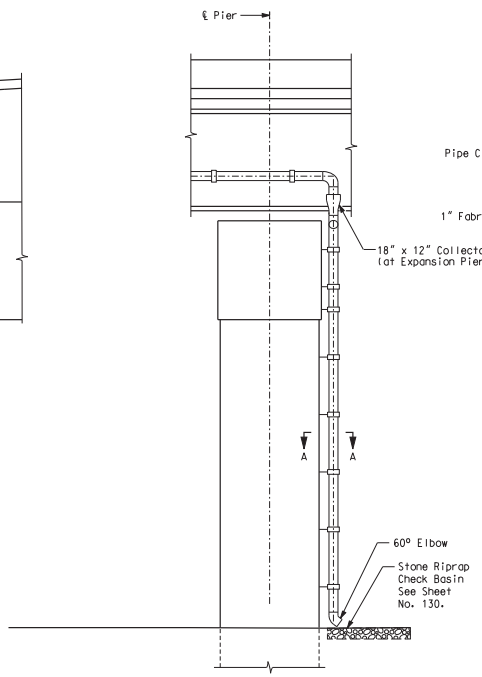

END VIEW
SCUPPER OUTFALL

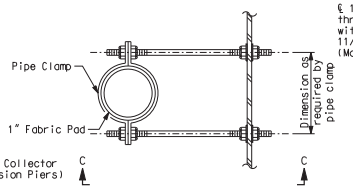

SUPPORT BRACKET

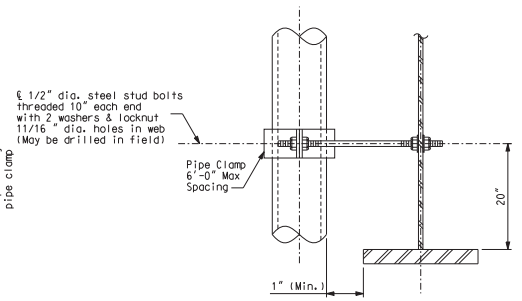

VIEW C-C

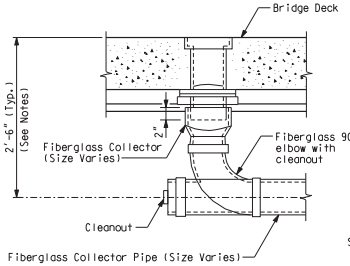

COLLECTOR PIPE
DETAIL - END SECTION

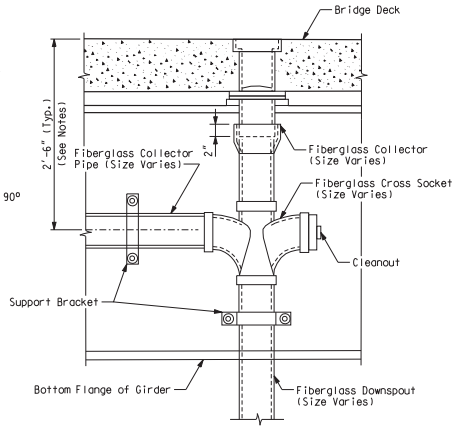

COLLECTOR PIPE
DETAIL - OUTFALL SECTION

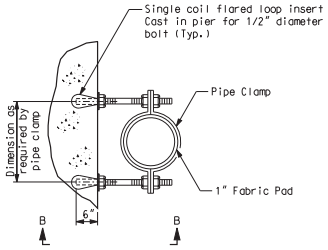

SECTION A-A

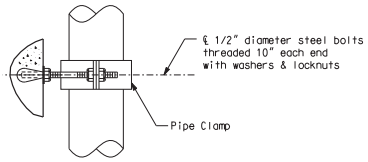

VIEW B-B

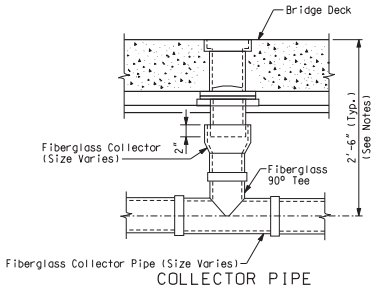

COLLECTOR PIPE
DETAIL - TEE SECTION

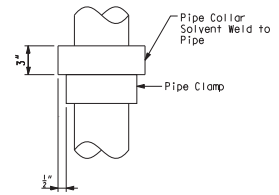

PIPE COLLAR DETAIL

Notes:
In areas where the pipe collector system flows opposite the bridge profile, the typical height shall vary as necessary to meet a minimum 0.5% slope to drain.
All downspouts from scuppers shall be 6" unless otherwise noted.
All fiberglass collectors and pipe clamps shall match the pipe size(s) shown in the drainage plan and profile.
All pipe clamps, fabric pads inserts, collectors and other work necessary to install the system shall be considered completely covered by bid item, Drainage System (On Structure).
All fiberglass pipe shall conform to ASTM D 2996 with a short-time rupture strength hoop tensile stress of 30,000 psi min. Color shall be concrete gray.

DRAINAGE SYSTEM DETAILS 1

Detailed JUL 2009
Checked JUL 2009

Note: This drawing is not to scale. Follow dimensions.

Sheet No. 129 of 152

s:\idot\0906601\draw_idot\cadd_sheets\structural\B_A6500_129-152_J6I0984C_129.dgn

CONTRACT NO. 76D61

F.A. ROUTE	SECTION
999	82-1B-2
FED. AID PROJECT	ILLINOIS
COUNTY	ST. CLAIR

USER NAME = jjolliff
PLOT SCALE = $SCALE$
PLOT DATE = 3/8/2010
DESIGNED - HNTB
CHECKED - CMT
DRAWN - CMT / HTNB
REVISED -
REVISED -
REVISED -
REVISED -

ILLINOIS APPROACH STRUCTURE
FOR NEW I-70 MISSISSIPPI RIVER BRIDGE

STATE OF ILLINOIS
DEPARTMENT OF TRANSPORTATION

MISSOURI HIGHWAYS
AND TRANSPORTATION COMMISSION

HNTB
715 KIRK DRIVE
KANSAS CITY, MO 64105
TELEPHONE (816) 472-1201
CERTIFICATE OF AUTHORITY
NO. 001270

CMT
CRAWFORD, MURPHY & TILLY, INC.
2750 WEST WASHINGTON STREET
SPRINGFIELD, IL 62702
TELEPHONE (217) 787-8050
ENGINEERING CORPORATION - 000631

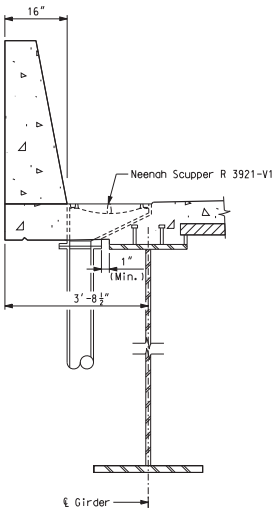

SCUPPER TYPICAL SECTION

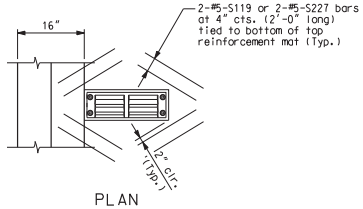

PLAN

Note:
Shift transverse reinforcement and cut longitudinal reinforcement to clear drainage scuppers. Coat exposed ends with epoxy paint. Cost shall be incidental to drainage system.

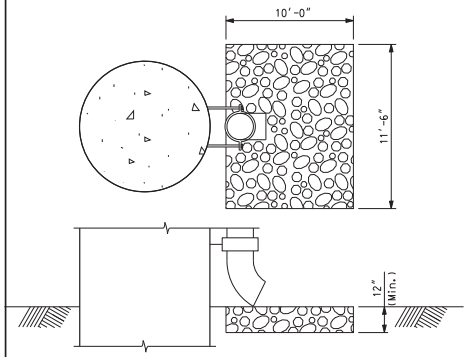

STONE RIPRAP CHECK BASIN DETAIL

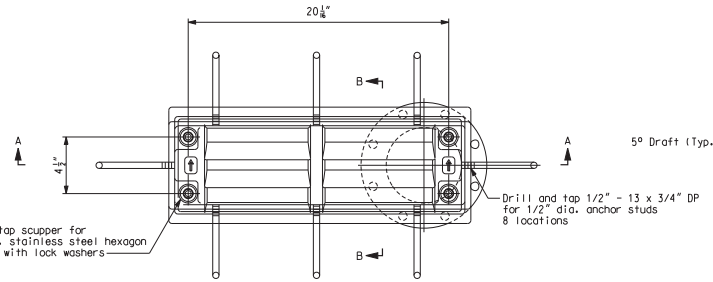

PLAN

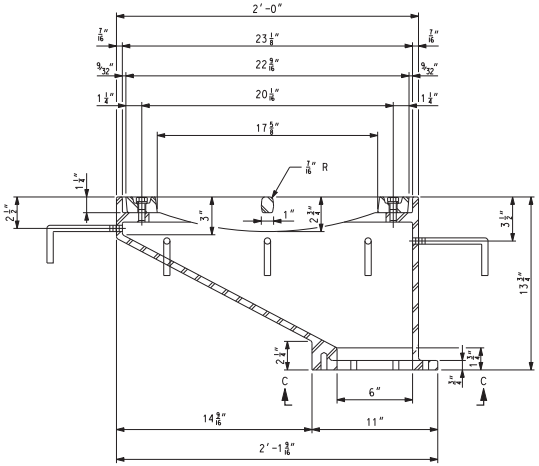

SECTION A-A

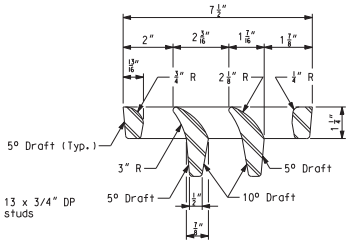

VANE GRATE DETAIL

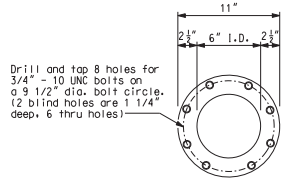

VIEW C-C

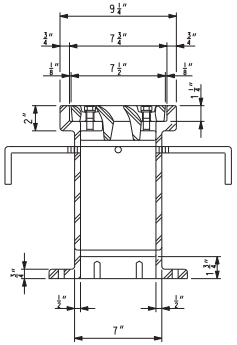

SECTION B-B

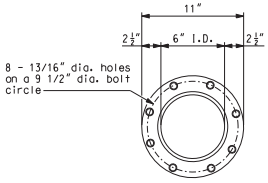

VIEW D-D

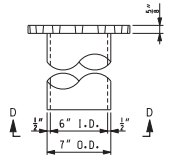

DOWNSPOUT

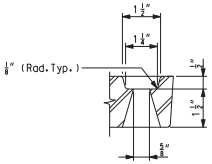

GRATE BOLT HOLE DETAIL

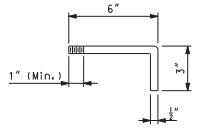

ANCHOR STUD DETAIL

Notes:
All cast iron parts shall be gray iron conforming to the requirements of AASHTO M 105, Class 35B.
Bolts, anchor studs, washers and nuts shall conform to the requirements of ASTM A 307 and shall be galvanized according to Sec 1080.
As an alternate, bolts, anchor studs, washers and nuts may be stainless steel in accordance with Sec 1080.
All castings shall conform to the requirements of AASHTO M 306.
Structural steel weldments of equal sections and of the same configuration may be substituted for the cast iron scupper frame. Fillet or full penetration welds shall be used for the weldments. Details shall be submitted to the Engineer for approval. Structural steel weldments shall not be substituted for the cast iron scupper grate. Structural steel frames and downspouts shall be galvanized according to AASHTO M111.
Payment for scupper, grate, downspout, and all hardware shall be considered completely covered by the contract price for Drainage System (On Structure).
Payment for stone riprap check basin shall be made under pay item Stone Riprap, Class A6 (Special), per square yard (Roadway Item).

DRAINAGE SYSTEM DETAILS 2

Detailed JUL 2009
Checked JUL 2009

Note: This drawing is not to scale. Follow dimensions.

Sheet No. 130 of 152

s:\idot\0906601\draw_idot\cadd_sheets\structural\B_A6500_130-152_J6I0984C_130.dgn

CONTRACT NO. 76D61

F.A. ROUTE	SECTION
999	82-1B-2
FED. AID PROJECT	ILLINOIS
COUNTY	ST. CLAIR

USER NAME = jjolliff
PLOT SCALE = $SCALE$
PLOT DATE = 3/8/2010
DESIGNED - HNTB
CHECKED - CMT
DRAWN - CMT / HTNB
REVISED -
REVISED -
REVISED -
REVISED -

ILLINOIS APPROACH STRUCTURE
FOR NEW I-70 MISSISSIPPI RIVER BRIDGE

STATE OF ILLINOIS
DEPARTMENT OF TRANSPORTATION

MISSOURI HIGHWAYS
AND TRANSPORTATION COMMISSION

HNTB
715 KIRK DRIVE
KANSAS CITY, MO 64105
TELEPHONE (816) 472-1201
CERTIFICATE OF AUTHORITY
NO. 001270

CMT
CRAWFORD, MURPHY & TILLY, INC.
2750 WEST WASHINGTON STREET
SPRINGFIELD, IL 62702
TELEPHONE (217) 787-8050
ENGINEERING CORPORATION - 000631

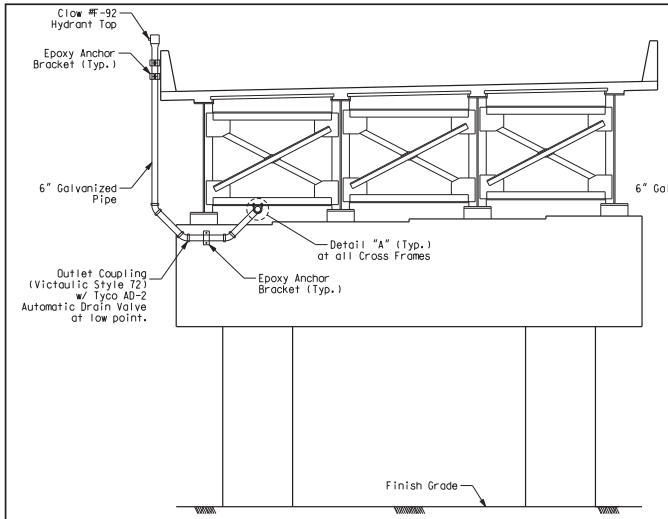

ELEVATION LOOKING EAST
AT PIER 18 WB

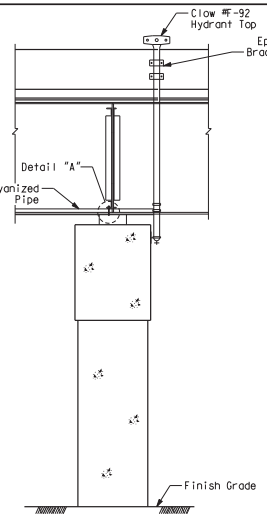

ELEVATION LOOKING SOUTH
AT PIER 18 WB

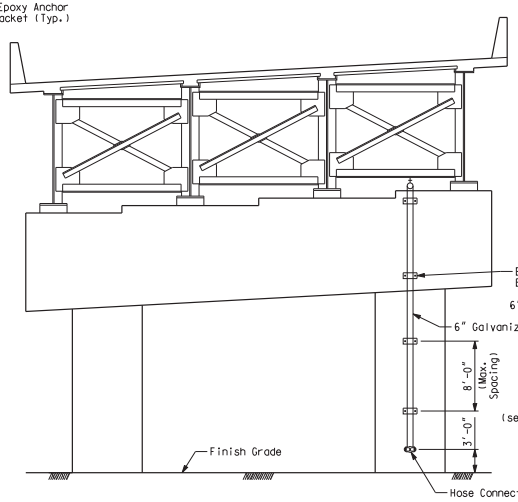

ELEVATION LOOKING WEST
AT PIER 22 WB

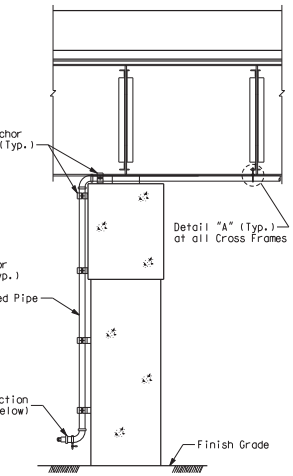

ELEVATION LOOKING SOUTH
AT PIER 22 WB

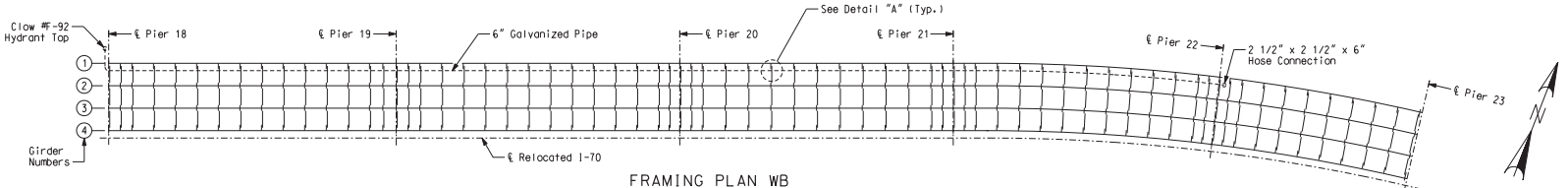

FRAMING PLAN WB

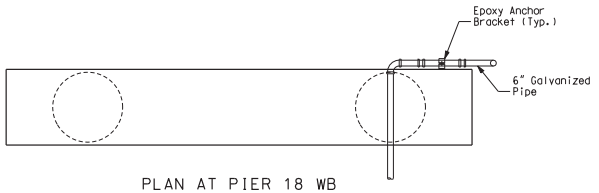

PLAN AT PIER 18 WB

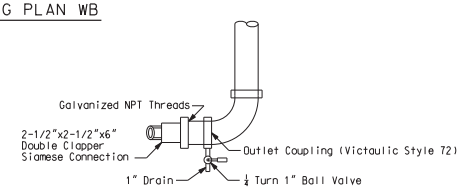

HOSE CONNECTION

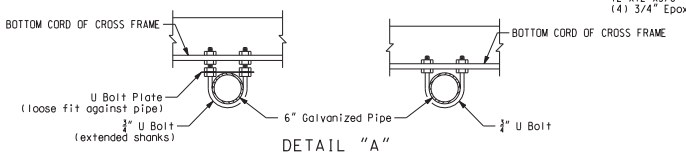

DETAIL "A"

Note A: Extend shanks as needed to provide required slope (See General Note 2). Provide U Bolt Plate when clearance allows.

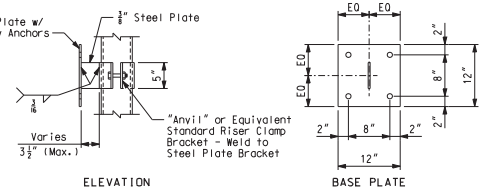

EPOXY ANCHOR BRACKET

General Notes:
1. Payment for pipe, fittings, hangers, anchors and all hardware shall be included in pay item "Standpipe".
2. Standpipe shall follow slope of Cross Frames from Pier 18WB to Sta. 120+00 and shall have a slope of atleast 0.15% from Sta. 120+00 to Pier 22WB, to ensure drainage of standpipe.

Structural Notes:
1. Steel shall conform to the following grades:
   All Angles, Base Plates, Conn. Plates (U.N.O.)----------A36
   U Bolts----------A307
2. Fabricator is responsible for the design of connections not designed on the drawings. Any connection that is not shown or is not completely detailed on the structural drawings shall be designed, detailed and sealed by a structural engineer, licensed in the state of Illinois.
3. The minimum plate thickness shall be ¼". The minimum bolt diameter shall be ½". The minimum weld shall be ⅛" and the minimum design load on any connection shall be 10k unless noted otherwise.
4. All elements shall be hot dip galvanized.

Epoxy Anchors:
1. Epoxy anchors to be provided shall have the following embedments and working loads (U.N.O.)

	Anchor Dia.	Min. Emb.	Tension Cap (lb.)	Shear Cap (lb.)
Concrete	3/4"	6 5/8"	7,400	4,300

Pipe and Fittings:
1. All pipe shall be schedule 40 hot-dipped galvanized meeting the requirements of ASTM-A53, NFPA 14, and shall be Factory Mutual approved. Piping shall have grooved ends compatible with fittings.
2. All fittings shall be standard victaulic grooved joint cast ductile iron conforming to ASTM A-536, Grade 64-45-12. Fittings shall be hot-dipped galvanized in accordance with Sec 1080.

DRY STANDPIPE

Detailed JUL 2009
Checked JUL 2009

Note: This drawing is not to scale. Follow dimensions.

Sheet No. 131 of 152

s:\idot\0906601\draw_idot\cadd_sheets\structural\B_A6500_131-152_J6I0984C_131.dgn

CONTRACT NO. 76D61

F.A. ROUTE	SECTION
999	82-1B-2
FED. AID PROJECT	ILLINOIS
COUNTY	ST. CLAIR

USER NAME = jjolliff
PLOT SCALE = $SCALE$
PLOT DATE = 3/8/2010
DESIGNED - HNTB
CHECKED - CMT
DRAWN - CMT / HTNB
REVISED -
REVISED -
REVISED -
REVISED -

ILLINOIS APPROACH STRUCTURE FOR NEW I-70 MISSISSIPPI RIVER BRIDGE

STATE OF ILLINOIS
DEPARTMENT OF TRANSPORTATION

MISSOURI HIGHWAYS AND TRANSPORTATION COMMISSION

HNTB
715 KIRK DRIVE
KANSAS CITY, MO 64105
TELEPHONE (816) 472-1201
CERTIFICATE OF AUTHORITY NO. 001270

CMT
CRAWFORD, MURPHY & TILLY, INC.
2750 WEST WASHINGTON STREET
SPRINGFIELD, IL 62702
TELEPHONE (217) 787-8050
ENGINEERING CORPORATION - 000631

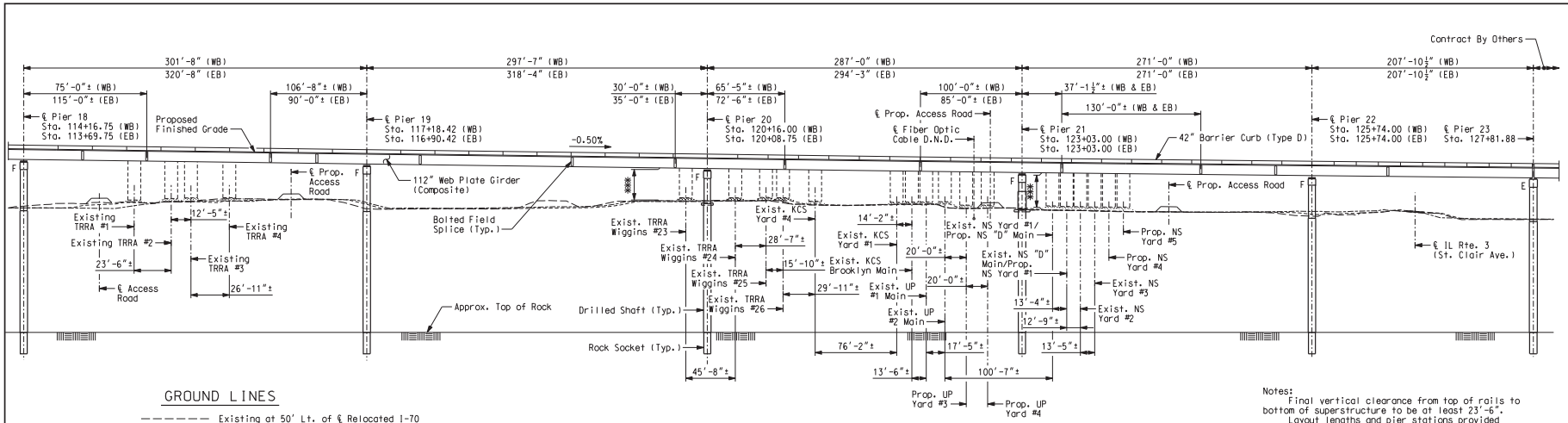

GROUND LINES

Existing at 50' Lt. of ℄ Relocated I-70
Existing at ℄ Relocated I-70
Existing at 50' Rt. of ℄ Relocated I-70

ELEVATION

Notes:
Final vertical clearance from top of rails to bottom of superstructure to be at least 23'-6".
Layout lengths and pier stations provided along ℄ Relocated I-70.
Dimensions shown between adjacent tracks are measured along ℄ Relocated I-70 and at Rt. angles to tracks.

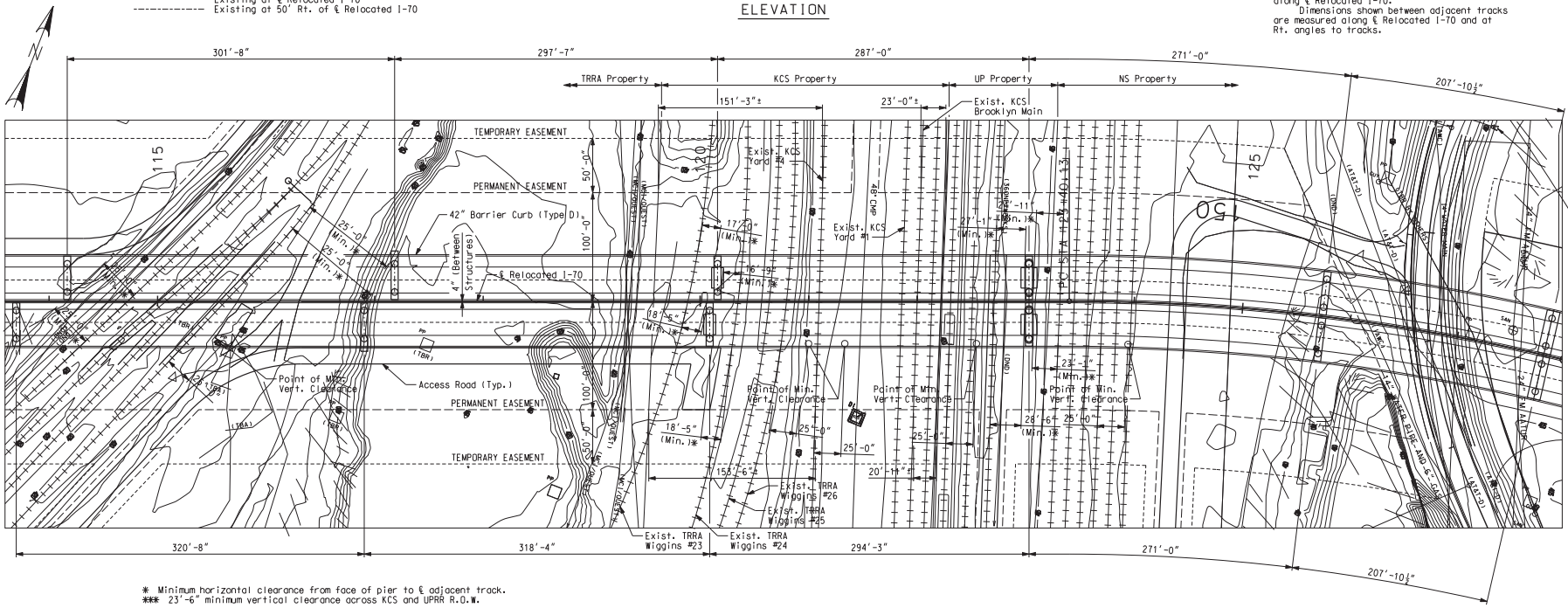

* Minimum horizontal clearance from face of pier to ℄ adjacent track.
*** 23'-6" minimum vertical clearance across KCS and UPRR R.O.W.

PLAN

RAILROAD LAYOUT

Detailed JUL 2009
Checked JUL 2009

Note: This drawing is not to scale. Follow dimensions.

Sheet No. 132 of 152

s:\idot\0906601\draw_idot\cadd_sheets\structural\B_A6500_132-152_J6I0984C_132.dgn

CONTRACT NO. 76D61

F.A. ROUTE	SECTION
999	82-1B-2
FED. AID PROJECT	ILLINOIS
COUNTY	ST. CLAIR

USER NAME = jjolliff
PLOT SCALE = $SCALE$
PLOT DATE = 3/8/2010
DESIGNED - HNTB
CHECKED - CMT
DRAWN - CMT / HTNB
REVISED -
REVISED -
REVISED -
REVISED -

ILLINOIS APPROACH STRUCTURE
FOR NEW I-70 MISSISSIPPI RIVER BRIDGE

STATE OF ILLINOIS
DEPARTMENT OF TRANSPORTATION

MISSOURI HIGHWAYS
AND TRANSPORTATION COMMISSION

HNTB
715 KIRK DRIVE
KANSAS CITY, MO 64105
TELEPHONE (816) 472-1201
CERTIFICATE OF AUTHORITY
NO. 001270

CMT
CRAWFORD, MURPHY & TILLY, INC.
2750 WEST WASHINGTON STREET
SPRINGFIELD, IL 62702
TELEPHONE (217) 787-8050
ENGINEERING CORPORATION - 000631

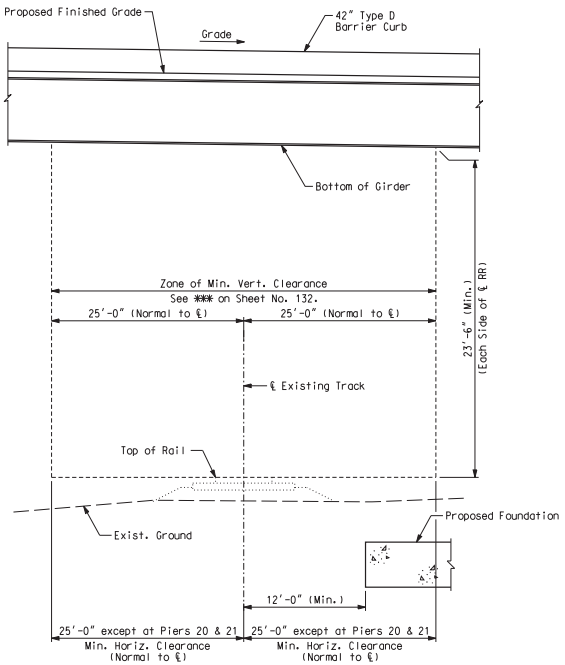

RR CLEARANCE DETAIL

SUMMARY OF ACTUAL MINIMUM VERTICAL CLEARANCE

Track	Minimum Vertical Clearance (ft)	Location of Minimum Vertical Clearance
TRRA #1	37.045	WB Girder 1
TRRA #2	36.773	WB Girder 1
TRRA #3	36.457	WB Girder 1
TRRA #4	36.163	WB Girder 1
Wiggins #23	35.064	WB Girder 1
Wiggins #24	34.522	EB Girder 8
Wiggins #25	33.560	EB Girder 8
Wiggins #26	33.472	EB Girder 8
KCS #4	38.170	EB Girder 8
KCS Yard Track #1	37.151	EB Girder 8
KCS Brooklyn	37.031	EB Girder 8
U.P. #1	36.613	EB Girder 8
U.P. #2	36.550	EB Girder 8
NS Yard #1	41.049	EB Girder 8
NS "D" #1	41.262	EB Girder 8
NS Yard #2	41.011	EB Girder 8
NS Yard #3	41.493	EB Girder 8
NS Yard #4	Proposed	n/a
NS Yard #5	Proposed	n/a
IL Route 3		
SB EOP	40.287	EB Girder 8
Centerline	41.211	EB Girder 8
NB EOP	42.893	EB Girder 8

General Notes:

1. The proposed grade separation project shall not increase the quantity and/or characteristics of the flow in the TRRA, NS, UP and KCS ditches and/or drainage structures.
2. The elevation of the existing top-of-rail profile shall be verified before beginning construction. All discrepancies shall be brought to the attention of the Railroad prior to construction.
3. All shoring systems that impact the TRRA, NS, UP and KCS operations and/or support the Railroads embankment shall be designed and constructed per current Railroad Guidelines for Temporary Shoring. Shoring systems shall be paid for under "Temporary Shoring".
4. All demolitions within the TRRA, NS, UP and KCS right-of-way and/or demolition that may impact the Railroad's tracks or operations shall be in compliance with the Railroad's Demolition Guidelines.
5. Erection over the TRRA, NS, UP and KCS right-of-way shall be designed to cause no interruption to the Railroad's operation, enabling the track(s) to remain open to traffic per the Railroad's requirements.
6. Girders may not be set until notification is received from assigned flagman that a sufficient window of time is available. At least 1/2 of all bolts in each splice shall be placed prior to release of the girder.
7. UP and NS Railroad requirements do not allow work within 50 feet of track centerline when a train passes the work site and all personnel must clear the area within 25 feet of the track centerline and secure all equipment.
8. All permanent clearances shall be verified before project closing.
9. Erosion control measures shall be implemented and maintained during construction to prevent siltation of Railroad ditches. In addition to IDOT requirements, such measures shall be subject to review and approval of the affected Railroads.
10. Contractor is advised that turnaround space at ends of access roads is limited. Caution shall be exercised to avoid fouling tracks.

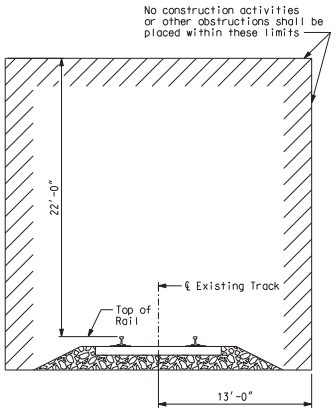

MINIMUM CONSTRUCTION CLEARANCE ENVELOPE

(Normal to ℄ Track) (Except at Pier 20)

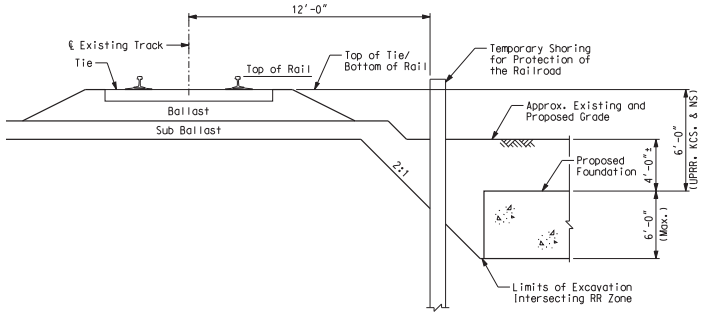

TYPICAL SHORING DETAIL

RAILROAD CLEARANCE DETAILS

Detailed JUL 2009
Checked JUL 2009

Note: This drawing is not to scale. Follow dimensions.

Sheet No. 133 of 152

s:\idot\0906601\draw_idot\cadd_sheets\structural\B_A6500_133-152_J6I0984C_133.dgn

CONTRACT NO. 76D61

F.A. ROUTE	SECTION
999	82-1B-2
FED. AID PROJECT	ILLINOIS
COUNTY	ST. CLAIR

USER NAME = jjolliff
PLOT SCALE = $SCALE$
PLOT DATE = 3/8/2010

DESIGNED - HNTB
CHECKED - CMT
DRAWN - CMT / HTNB
REVISED -
REVISED -
REVISED -
REVISED -

ILLINOIS APPROACH STRUCTURE FOR NEW I-70 MISSISSIPPI RIVER BRIDGE

STATE OF ILLINOIS
DEPARTMENT OF TRANSPORTATION

MISSOURI HIGHWAYS AND TRANSPORTATION COMMISSION

HNTB
715 KIRK DRIVE
KANSAS CITY, MO 64105
TELEPHONE (816) 472-1201
CERTIFICATE OF AUTHORITY NO. 001270

CMT
CRAWFORD, MURPHY & TILLY, INC.
2750 WEST WASHINGTON STREET
SPRINGFIELD, IL 62702
TELEPHONE (217) 787-8050
ENGINEERING CORPORATION - 000631

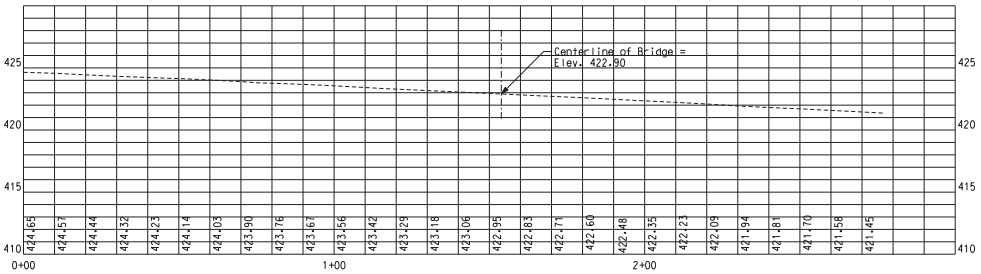

EXISTING TOP OF RAIL PROFILE
TRRA #1

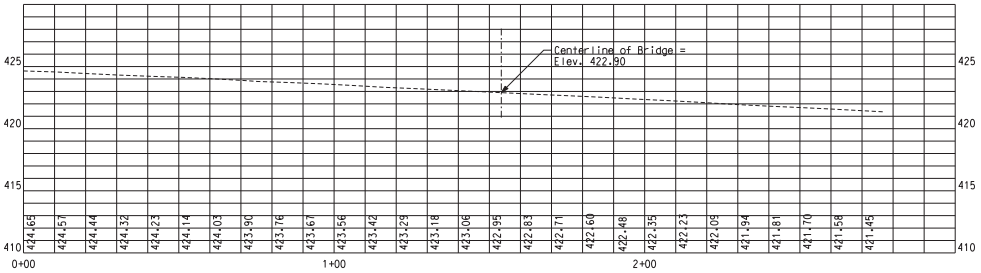

EXISTING TOP OF RAIL PROFILE
TRRA #2

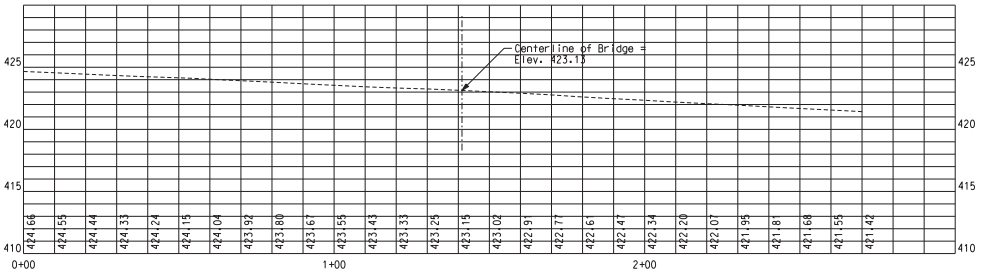

EXISTING TOP OF RAIL PROFILE
TRRA #3

EXISTING TRACK PROFILES 1

Detailed JUL 2009
Checked JUL 2009

Note: This drawing is not to scale. Follow dimensions.

Sheet No. 134 of 152

s:\idot\0906601\draw_idot\cadd_sheets\structural\B_A6500_134-152_J6I0984C_134.dgn

CONTRACT NO. 76D61

F.A. ROUTE	SECTION
999	82-1B-2
FED. AID PROJECT	ILLINOIS
COUNTY	ST. CLAIR

USER NAME = jjolliff
PLOT SCALE = $SCALE$
PLOT DATE = 3/8/2010

DESIGNED - HNTB
CHECKED - CMT
DRAWN - CMT / HTNB
REVISED -
REVISED -
REVISED -
REVISED -

ILLINOIS APPROACH STRUCTURE
FOR NEW I-70 MISSISSIPPI RIVER BRIDGE

STATE OF ILLINOIS
DEPARTMENT OF TRANSPORTATION

MISSOURI HIGHWAYS
AND TRANSPORTATION COMMISSION

HNTB
715 KIRK DRIVE
KANSAS CITY, MO 64105
TELEPHONE (816) 472-1201
CERTIFICATE OF AUTHORITY
NO. 001270

CMT
CRAWFORD, MURPHY & TILLY, INC.
2750 WEST WASHINGTON STREET
SPRINGFIELD, IL 62702
TELEPHONE (217) 787-8050
ENGINEERING CORPORATION - 000631

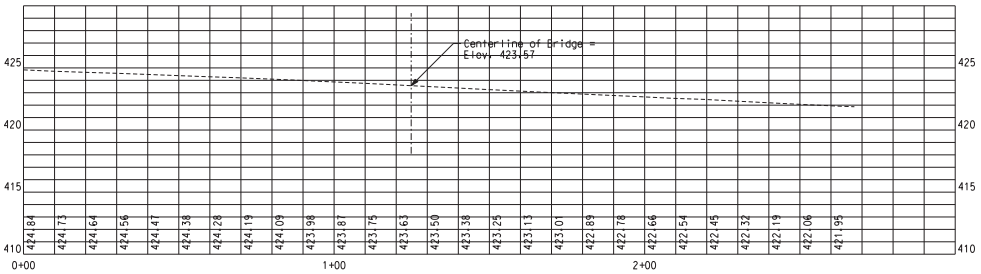

EXISTING TOP OF RAIL PROFILE
TRRA #4

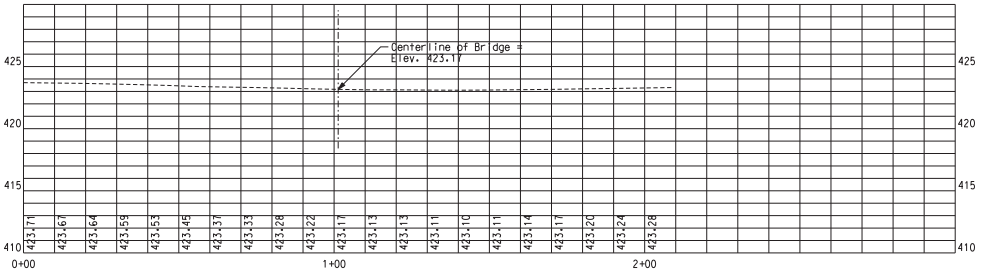

EXISTING TOP OF RAIL PROFILE
TRRA WIGGINS #23

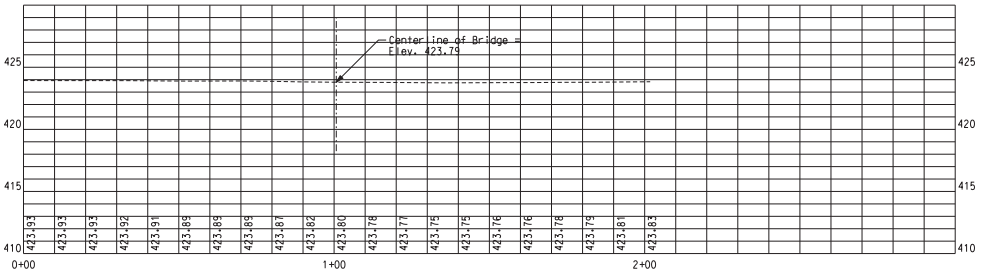

EXISTING TOP OF RAIL PROFILE
TRRA WIGGINS #24

CONTRACT NO. 76D61

F.A. ROUTE	SECTION
999	82-1B-2
FED. AID PROJECT	ILLINOIS
COUNTY	ST. CLAIR

USER NAME = jjolliff
PLOT SCALE = $SCALE$
PLOT DATE = 3/8/2010

DESIGNED - HNTB
CHECKED - CMT
DRAWN - CMT / HTNB
REVISED -
REVISED -
REVISED -
REVISED -

ILLINOIS APPROACH STRUCTURE
FOR NEW I-70 MISSISSIPPI RIVER BRIDGE

STATE OF ILLINOIS
DEPARTMENT OF TRANSPORTATION

MISSOURI HIGHWAYS
AND TRANSPORTATION COMMISSION

HNTB
715 KIRK DRIVE
KANSAS CITY, MO 64105
TELEPHONE (816) 472-1201
CERTIFICATE OF AUTHORITY
NO. 001270

CMT
CRAWFORD, MURPHY & TILLY, INC.
2750 WEST WASHINGTON STREET
SPRINGFIELD, IL 62702
TELEPHONE (217) 787-8050
ENGINEERING CORPORATION - 000631

EXISTING TRACK PROFILES 2

Detailed JUL 2009
Checked JUL 2009

Note: This drawing is not to scale. Follow dimensions.

s:\idot\0906601\draw_idot\cadd_sheets\structural\B_A6500_135-152_J6I0984C_135.dgn

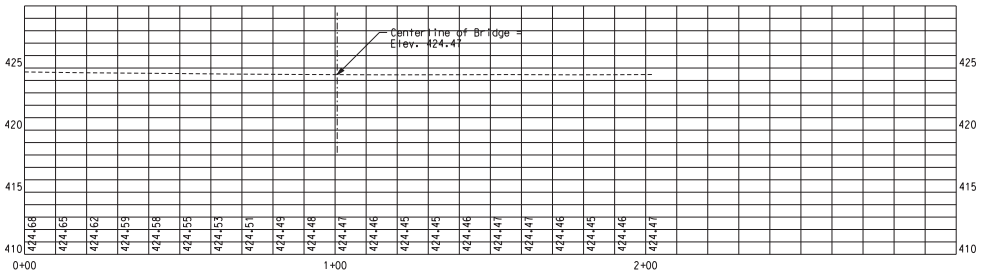

EXISTING TOP OF RAIL PROFILE
TRRA WIGGINS #25

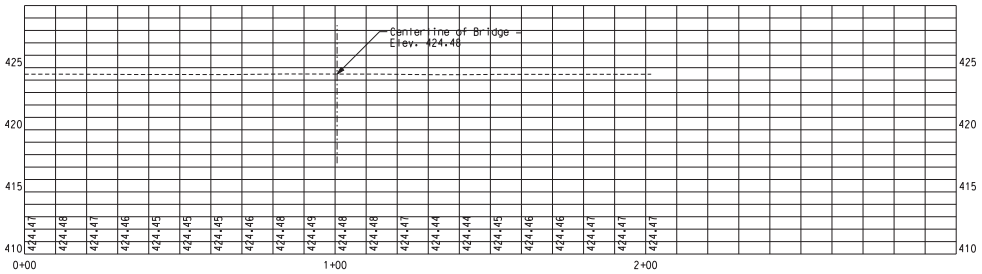

EXISTING TOP OF RAIL PROFILE
TRRA WIGGINS #26

CONTRACT NO. 76D61

F.A. ROUTE	SECTION
999	82-1B-2
FED. AID PROJECT	ILLINOIS
COUNTY	ST. CLAIR

USER NAME = jjolliff
PLOT SCALE = $SCALE$
PLOT DATE = 3/8/2010

DESIGNED - HNTB
CHECKED - CMT
DRAWN - CMT / HTNB
REVISED -
REVISED -
REVISED -
REVISED -

ILLINOIS APPROACH STRUCTURE
FOR NEW I-70 MISSISSIPPI RIVER BRIDGE

STATE OF ILLINOIS
DEPARTMENT OF TRANSPORTATION

MISSOURI HIGHWAYS
AND TRANSPORTATION COMMISSION

HNTB
715 KIRK DRIVE
KANSAS CITY, MO 64105
TELEPHONE (816) 472-1201
CERTIFICATE OF AUTHORITY
NO. 001270

CMT
CRAWFORD, MURPHY & TILLY, INC.
2750 WEST WASHINGTON STREET
SPRINGFIELD, IL 62702
TELEPHONE (217) 787-8050
ENGINEERING CORPORATION - 000631

EXISTING TRACK PROFILES 3

Detailed JUL 2009
Checked JUL 2009

Note: This drawing is not to scale. Follow dimensions.

s:\idot\0906601\draw_idot\cadd_sheets\structural\B_A6500_136-152_J6I0984C_136.dgn

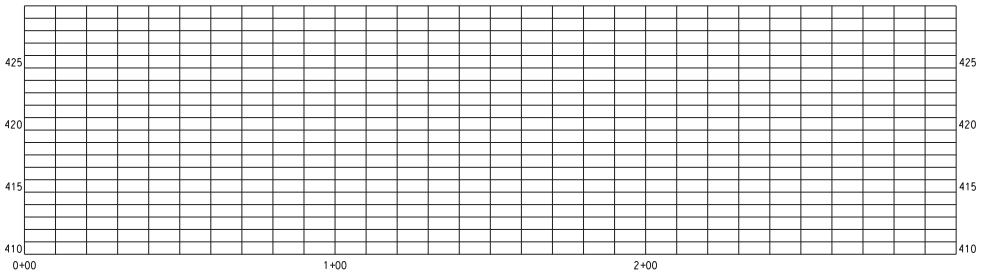

PROFILE NOT SURVEYED
KCS YARD #4
MP 279.34 (4895' from N. POS Trk. #4)

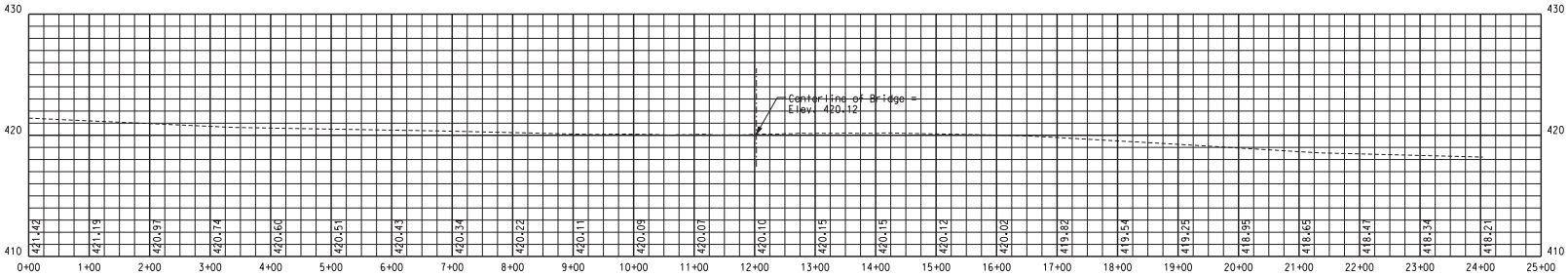

EXISTING TOP OF RAIL PROFILE
KCS YARD #1
MP 279.34 (4182' from N. POS Trk. #1)

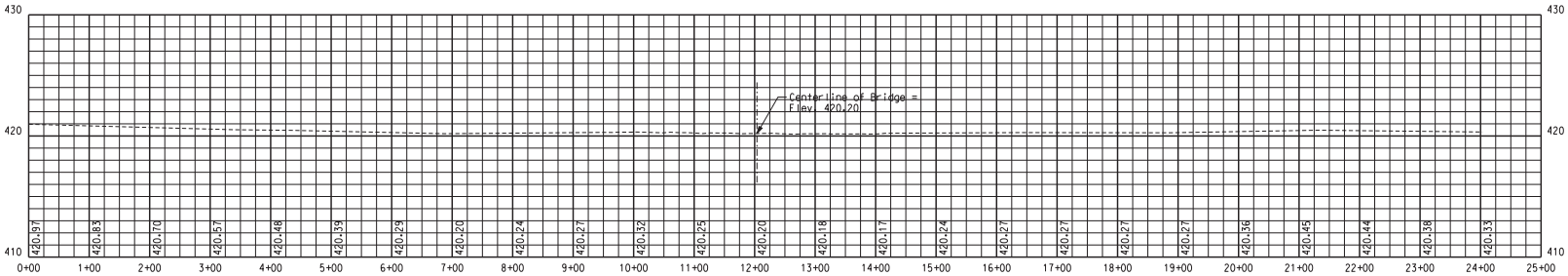

EXISTING TOP OF RAIL PROFILE
KCS BROOKLYN MAIN
MP 279.34 (11,749 from Bissell Avenue At-Grade Crossing Centerline)

Detailed JUL 2009
Checked JUL 2009

Note: This drawing is not to scale. Follow dimensions.

Sheet No. 137 of 152

EXISTING TRACK PROFILES 4

s:\idot\0906601\draw_idot\cadd_sheets\structural\B_A6500_137-152_J6I0984C_137.dgn

CONTRACT NO. 76D61

F.A. ROUTE	SECTION
999	82-1B-2
FED. AID PROJECT	ILLINOIS
COUNTY	ST. CLAIR

USER NAME = jjolliff
PLOT SCALE = $SCALE$
PLOT DATE = 3/8/2010

DESIGNED - HNTB
CHECKED - CMT
DRAWN - CMT / HTNB
REVISED -
REVISED -
REVISED -
REVISED -

ILLINOIS APPROACH STRUCTURE
FOR NEW I-70 MISSISSIPPI RIVER BRIDGE

STATE OF ILLINOIS
DEPARTMENT OF TRANSPORTATION

MISSOURI HIGHWAYS
AND TRANSPORTATION COMMISSION

HNTB
715 KIRK DRIVE
KANSAS CITY, MO 64105
TELEPHONE (816) 472-1201
CERTIFICATE OF AUTHORITY
NO. 001270

CMT
CRAWFORD, MURPHY & TILLY, INC.
2750 WEST WASHINGTON STREET
SPRINGFIELD, IL 62702
TELEPHONE (217) 787-8050
ENGINEERING CORPORATION - 000631

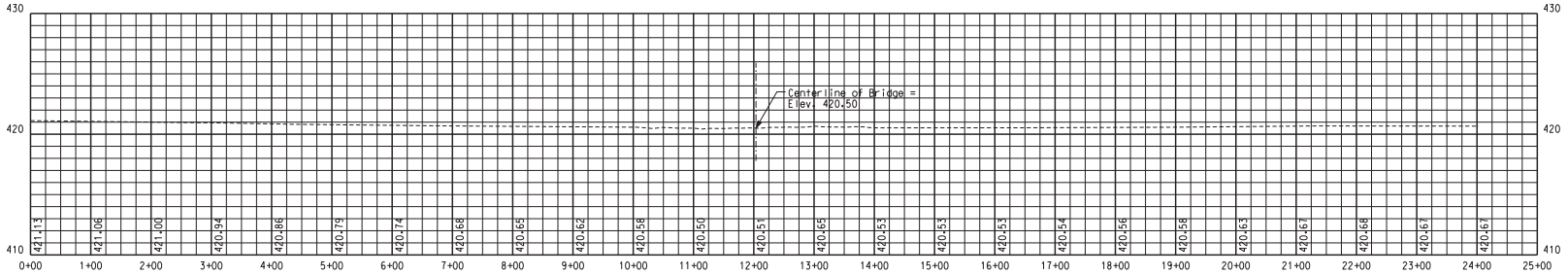

EXISTING TOP OF RAIL PROFILE
UP #1 MAIN

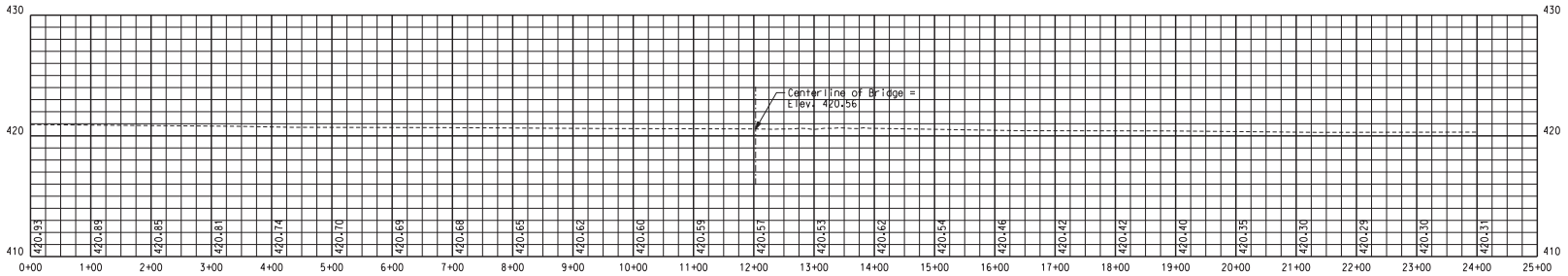

EXISTING TOP OF RAIL PROFILE
UP #2 MAIN

CONTRACT NO. 76D61

F.A. ROUTE	SECTION
999	82-1B-2
FED. AID PROJECT	ILLINOIS
COUNTY	ST. CLAIR

USER NAME = jolliff
PLOT SCALE = $SCALE$
PLOT DATE = 3/8/2010

DESIGNED - HNTB
CHECKED - CMT
DRAWN - CMT / HTNB
REVISED -
REVISED -
REVISED -
REVISED -

ILLINOIS APPROACH STRUCTURE
FOR NEW I-70 MISSISSIPPI RIVER BRIDGE

STATE OF ILLINOIS
DEPARTMENT OF TRANSPORTATION

MISSOURI HIGHWAYS
AND TRANSPORTATION COMMISSION

HNTB
715 KIRK DRIVE
KANSAS CITY, MO 64105
TELEPHONE (816) 472-1201
CERTIFICATE OF AUTHORITY
NO. 001270

CMT
CRAWFORD, MURPHY & TILLY, INC.
2750 WEST WASHINGTON STREET
SPRINGFIELD, IL 62702
TELEPHONE (217) 787-8050
ENGINEERING CORPORATION - 000631

EXISTING TRACK PROFILES 5

Detailed JUL 2009
Checked JUL 2009

Note: This drawing is not to scale. Follow dimensions.

s:\idot\0906601\draw_idot\cadd_sheets\structural\B_A6500_138-152_J6I0984C_138.dgn

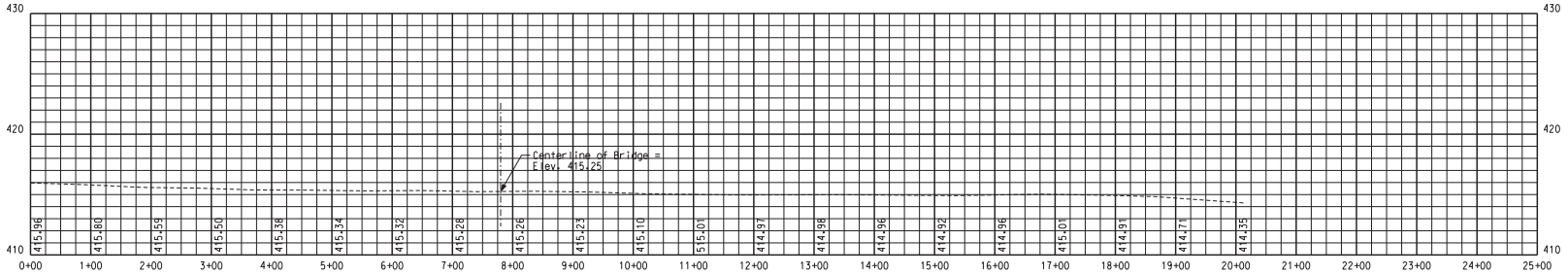

EXISTING TOP OF RAIL PROFILE
NS YARD #1

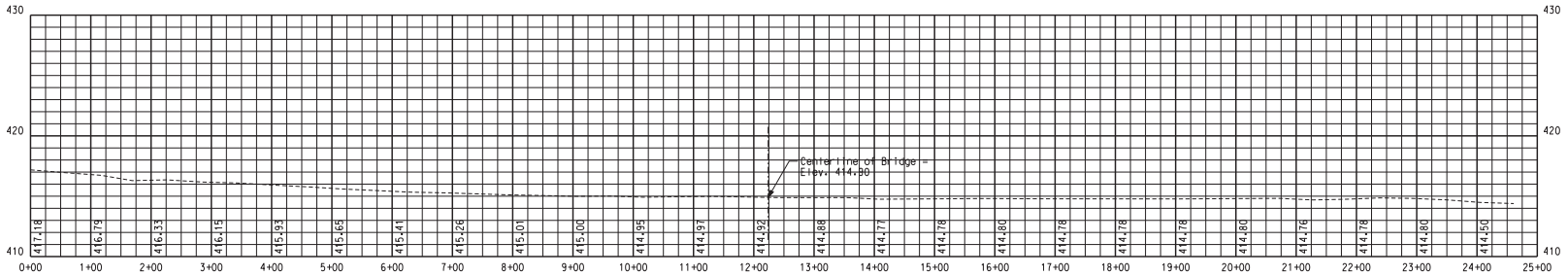

EXISTING TOP OF RAIL PROFILE
NS "D" MAIN

MP 3-4 + 31+12

EXISTING TRACK PROFILES 6

Detailed JUL 2009
Checked JUL 2009

Note: This drawing is not to scale. Follow dimensions.

Sheet No. 139 of 152

s:\idot\0906601\draw_idot\cadd_sheets\structural\B_A6500_139-152_J6I0984C_139.dgn

CONTRACT NO. 76D61

F.A. ROUTE	SECTION
999	82-1B-2
FED. AID PROJECT	ILLINOIS
COUNTY	ST. CLAIR

USER NAME = jjolliff
PLOT SCALE = $SCALE$
PLOT DATE = 3/8/2010

DESIGNED - HNTB
CHECKED - CMT
DRAWN - CMT / HTNB
REVISED -
REVISED -
REVISED -
REVISED -

ILLINOIS APPROACH STRUCTURE
FOR NEW I-70 MISSISSIPPI RIVER BRIDGE

STATE OF ILLINOIS
DEPARTMENT OF TRANSPORTATION

MISSOURI HIGHWAYS
AND TRANSPORTATION COMMISSION

HNTB
715 KIRK DRIVE
KANSAS CITY, MO 64105
TELEPHONE (816) 472-1201
CERTIFICATE OF AUTHORITY
NO. 001270

CMT
CRAWFORD, MURPHY & TILLY, INC.
2750 WEST WASHINGTON STREET
SPRINGFIELD, IL 62702
TELEPHONE (217) 787-8050
ENGINEERING CORPORATION - 000631

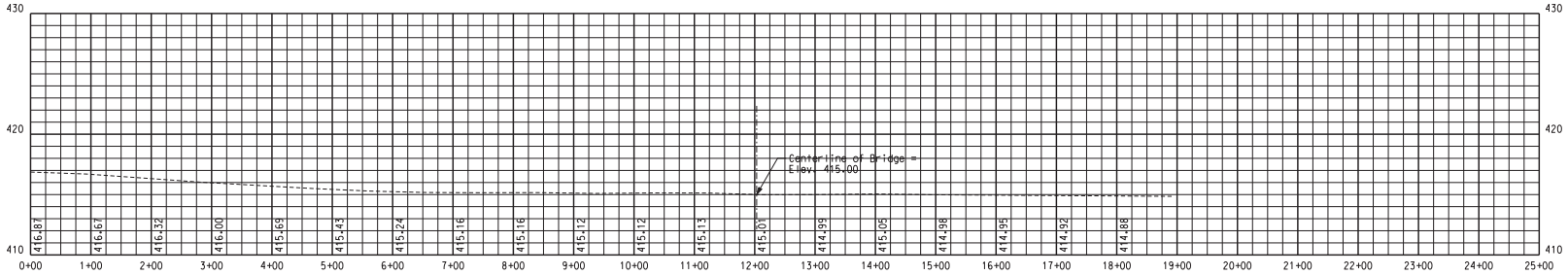

EXISTING TOP OF RAIL PROFILE
NS YARD #2

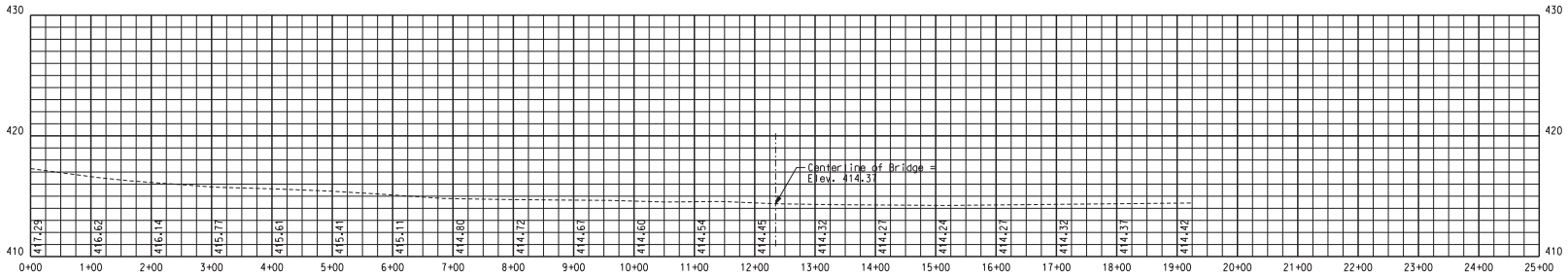

EXISTING TOP OF RAIL PROFILE
NS YARD #3

CONTRACT NO. 76D61

F.A. ROUTE	SECTION
999	82-1B-2
FED. AID PROJECT	ILLINOIS
COUNTY	ST. CLAIR

USER NAME = jjolliff
PLOT SCALE = $SCALE$
PLOT DATE = 3/8/2010

DESIGNED - HNTB
CHECKED - CMT
DRAWN - CMT / HTNB
REVISED -
REVISED -
REVISED -
REVISED -

ILLINOIS APPROACH STRUCTURE
FOR NEW I-70 MISSISSIPPI RIVER BRIDGE

STATE OF ILLINOIS
DEPARTMENT OF TRANSPORTATION

MISSOURI HIGHWAYS
AND TRANSPORTATION COMMISSION

HNTB
715 KIRK DRIVE
KANSAS CITY, MO 64105
TELEPHONE (816) 472-1201
CERTIFICATE OF AUTHORITY
NO. 001270

CMT
CRAWFORD, MURPHY & TILLY, INC.
2750 WEST WASHINGTON STREET
SPRINGFIELD, IL 62702
TELEPHONE (217) 787-8050
ENGINEERING CORPORATION - 000631

Detailed JUL 2009
Checked JUL 2009

Note: This drawing is not to scale. Follow dimensions.

EXISTING TRACK PROFILES 7

s:\idot\0906601\draw_idot\cadd_sheets\structural\B_A6500_140-152_J6I0984C_140.dgn

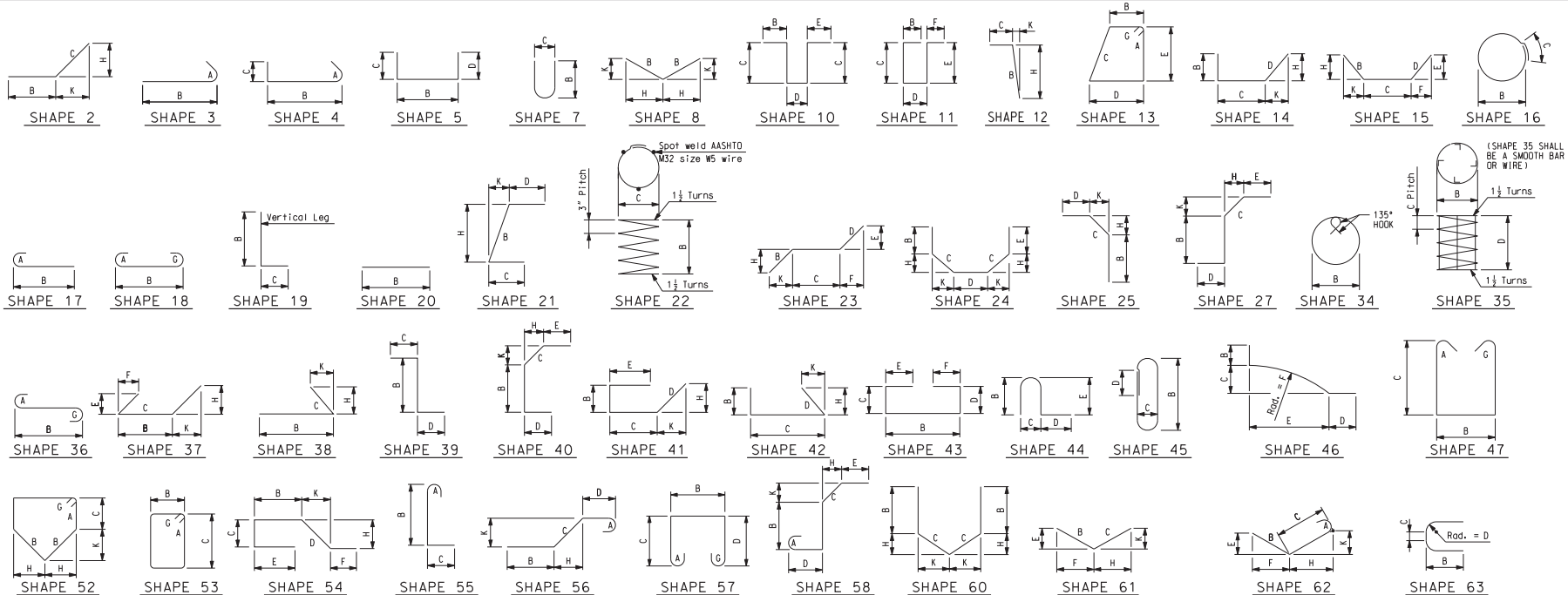

STIRRUP HOOK DIMENSIONS

Bar Size	D (in)	All Grades		
		90° Hooks	135° Hooks	
		Hook A or G (in)	Hook A or G (in)	Approx. H (in)
#4	2"	4½"	4½"	3"
#5	2½"	6"	5½"	3¾"
#6	4½"	12"	8"	4½"

END HOOK DIMENSIONS

Bar Size	D (in)	All Grades		
		180° Hooks		90° Hooks
		Hook A or G (in)	J (in)	Hook A or G (in)
#3	2½"	5"	3"	6"
#4	3"	6"	4"	8"
#5	3¾"	7"	5"	10"
#6	4½"	8"	6"	12"
#7	5¼"	10"	7"	14"
#8	6"	11"	8"	16"
#9	9½"	15"	11¾"	19"
#10	10¾"	17"	13¼"	22"
#11	12"	19"	14¾"	2'-0"
#14	18¼"	2'-3"	21¾"	2'-7"
#18	2'-0"	3'-0"	2'-4½"	3'-5"

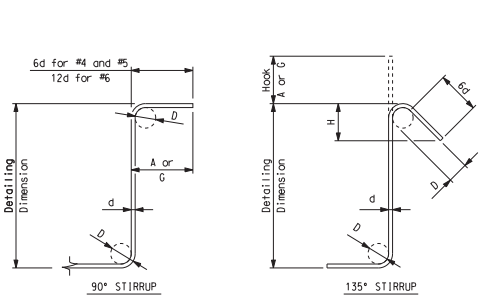

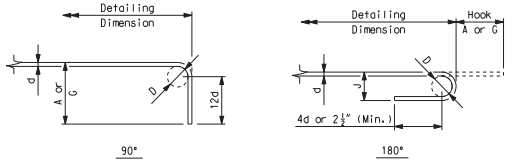

Notes:
All standard hooks and bends other than 180 degree are to be bent with same procedure as for 90 degree standard hooks.
Hooks and bends shall be in accordance with the procedures as shown on this sheet.
Nominal lengths are based on out-to-out dimensions shown in bending diagrams and are listed for fabricators use. (Nearest inch)
Pay weights are based on actual lengths.
Unless otherwise noted, diameter "D" is the same for all bends and hooks on a bar.
E = Epoxy coated reinforcement.
S = Stirrup.
X = Bar is included in substructure quantities.
Actual lengths are measured along centerline bar to the nearest inch.
V = Bar dimensions vary in equal increments between dimensions shown on this line and the following line.
No. ea. = Number of bars of each length.
Four angle or channel spacers are required for each column spiral. Spacers are to be placed on inside of spirals. Length and weight of column spirals do not include splices or spacers.
Reinforcing steel (Grade 60) fy = 60,000 psi.

BAR BENDING DIAGRAMS

Detailed JUL 2009
Checked JUL 2009

Note: This drawing is not to scale. Follow dimensions.

Sheet No. 141 of 152

CONTRACT NO. 76D61

F.A. ROUTE	SECTION
999	82-1B-2
FED. AID PROJECT	ILLINOIS
COUNTY	ST. CLAIR

USER NAME = jjolliff
PLOT SCALE = $SCALE$
PLOT DATE = 3/8/2010
DESIGNED - HNTB
CHECKED - CMT
DRAWN - CMT / HTNB
REVISED -
REVISED -
REVISED -
REVISED -

ILLINOIS APPROACH STRUCTURE
FOR NEW I-70 MISSISSIPPI RIVER BRIDGE

STATE OF ILLINOIS
DEPARTMENT OF TRANSPORTATION

MISSOURI HIGHWAYS
AND TRANSPORTATION COMMISSION

HNTB
715 KIRK DRIVE
KANSAS CITY, MO 64105
TELEPHONE (816) 472-1201
CERTIFICATE OF AUTHORITY
NO. 001270

CMT
CRAWFORD, MURPHY & TILLY, INC.
2750 WEST WASHINGTON STREET
SPRINGFIELD, IL 62702
TELEPHONE (217) 787-8050
ENGINEERING CORPORATION - 000631

s:\idot\0906601\draw_idot\cadd_sheets\structural\B_A6500_141-152_J6I0984C_141.dgn

BILL OF REINFORCING STEEL

NO. REQ'D.	MARK NO. SIZE	MARK NO. MARK	LOCATION	EPOXY (E)	SHAPE NO.	STIRRUP (S)	SUBSTR. (X)	VARIES (V)	NO. EACH	DIMENSIONS B	C	D	E	F	H	K	NOMINAL LENGTH	ACTUAL LENGTH	WEIGHT
										FT. IN.	FT. IN.	FT. IN.	FT. IN.	FT. IN.	FT. IN.	FT. IN.	FT. IN.	FT. IN.	FT. IN.	LBS.
			PIER 14 WB																
11	11	H1400	Beam		20		X			39'-8"							39'-8"	39'-8"	2,318
16	8	H1401	Beam		20		X			39'-8"							39'-8"	39'-8"	1,695
16	11	H1402	Beam		18		X			39'-8"							42'-10"	42'-10"	3,641
8	6	H1403	Beam		20		X			19'-8"							19'-8"	19'-8"	236
20	6	H1404	Beam		5	S	X			6'-0"	22"	22"					9'-8"	9'-5"	283
2	5	P1400	Drilled Shaft		35		X			5'-6"	6"	133'-10"					4629'-1"	4629'-1"	9,656
2	5	P1401	Drilled Shaft & Column		35		X			5'-6"	3"	52'-1"					3606'-8"	3606'-8"	7,524
36	5	P1402	Beam		34	S	X			5'-6"							18'-1"	18'-1"	679
38	6	U1400	Beam		53	S	X			4'-6"	7'-8"						25'-8"	25'-3"	1,441
12	6	U1401	Beam		5	S	X			4'-6"	7'-8"	7'-8"					19'-10"	19'-7"	353
38	6	U1402	Beam		53	S	X			4'-6"	8'-1"						26'-6"	26'-1"	1,489
12	6	U1403	Beam		5	S	X			4'-6"	8'-1"	8'-1"					20'-8"	20'-5"	368
20	4	U1404	Beam		5	S	X			6'-2"	18"	18"					9'-2"	9'-0"	120
28	14	V1400	Drilled Shaft		20		X			33'-3"							33'-3"	33'-3"	7,122
28	14	V1401	Drilled Shaft		20		X			35'-3"							35'-3"	35'-3"	7,551
224	14	V1402	Drilled Shaft		20		X			55'-0"							55'-0"	55'-0"	94,248
56	11	V1403	Column		17		X			49'-6"							51'-1"	51'-1"	15,199
56	11	V1404	Column		20		X			26'-7"							26'-7"	26'-7"	7,909
24	W5	W1400	Beam		22		X			18"	9 1/8"						26'-1"	26'-1"	105
			PIER 14 EB																
11	11	H1450	Beam		20		X			39'-8"							39'-8"	39'-8"	2,318
16	8	H1451	Beam		20		X			39'-8"							39'-8"	39'-8"	1,695
16	11	H1452	Beam		18		X			39'-8"							42'-10"	42'-10"	3,641
8	6	H1453	Beam		20		X			19'-8"							19'-8"	19'-8"	236
20	6	H1454	Beam		5	S	X			6'-0"	22"	22"					9'-8"	9'-5"	283
2	5	P1450	Drilled Shaft		35		X			5'-6"	6"	134'-10"					4663'-4"	4663'-4"	9,728
2	5	P1451	Drilled Shaft & Column		35		X			5'-6"	3"	51'-2"					3543'-11"	3543'-11"	7,393
36	5	P1452	Beam		34	S	X			5'-6"							18'-1"	18'-1"	679
38	6	U1450	Beam		53	S	X			4'-6"	7'-8"						25'-8"	25'-3"	1,441
12	6	U1451	Beam		5	S	X			4'-6"	7'-8"	7'-8"					19'-10"	19'-7"	353
38	6	U1452	Beam		53	S	X			4'-6"	8'-1"						26'-6"	26'-1"	1,489
12	6	U1453	Beam		5	S	X			4'-6"	8'-1"	8'-1"					20'-8"	20'-5"	368
20	4	U1454	Beam		5	S	X			6'-2"	18"	18"					9'-2"	9'-0"	120
28	14	V1450	Drilled Shaft		20		X			34'-3"							34'-3"	34'-3"	7,336
28	14	V1451	Drilled Shaft		20		X			36'-3"							36'-3"	36'-3"	7,765
224	14	V1452	Drilled Shaft		20		X			55'-0"							55'-0"	55'-0"	94,248
56	11	V1453	Column		17		X			48'-7"							50'-2"	50'-2"	14,926
56	11	V1454	Column		20		X			26'-2"							26'-2"	26'-2"	7,785
24	W5	W1450	Beam		22		X			18"	9 1/8"						26'-1"	26'-1"	105

BILL OF REINFORCING STEEL

NO. REQ'D.	MARK NO. SIZE	MARK NO. MARK	LOCATION	EPOXY (E)	SHAPE NO.	STIRRUP (S)	SUBSTR. (X)	VARIES (V)	NO. EACH	DIMENSIONS B	C	D	E	F	H	K	NOMINAL LENGTH	ACTUAL LENGTH	WEIGHT
										FT. IN.	FT. IN.	FT. IN.	FT. IN.	FT. IN.	FT. IN.	FT. IN.	FT. IN.	FT. IN.	FT. IN.	LBS.
			PIER 15 WB																
11	11	H1500	Beam		20		X			39'-8"							39'-8"	39'-8"	2,318
16	8	H1501	Beam		20		X			39'-8"							39'-8"	39'-8"	1,695
16	11	H1502	Beam		18		X			39'-8"							42'-10"	42'-10"	3,641
8	6	H1503	Beam		20		X			19'-8"							19'-8"	19'-8"	236
20	6	H1504	Beam		5	S	X			6'-0"	22"	22"					9'-8"	9'-5"	283
2	5	P1500	Drilled Shaft		35		X			5'-6"	6"	133'-10"					4629'-1"	4629'-1"	9,656
2	5	P1501	Drilled Shaft & Column		35		X			5'-6"	3"	50'-6"					3498'-3"	3498'-3"	7,297
36	5	P1502	Beam		34	S	X			5'-6"							18'-1"	18'-1"	679
50	6	U1500	Beam		53	S	X			4'-6"	7'-8"						25'-8"	25'-3"	1,896
12	6	U1501	Beam		5	S	X			4'-6"	7'-8"	7'-8"					19'-10"	19'-7"	353
50	6	U1502	Beam		53	S	X			4'-6"	8'-1"						26'-6"	26'-1"	1,959
12	6	U1503	Beam		5	S	X			4'-6"	8'-1"	8'-1"					20'-8"	20'-5"	368
20	4	U1504	Beam		5	S	X			6'-2"	18"	18"					9'-2"	9'-0"	120
28	14	V1500	Drilled Shaft		20		X			33'-3"							33'-3"	33'-3"	7,122
28	14	V1501	Drilled Shaft		20		X			35'-3"							35'-3"	35'-3"	7,551
224	14	V1502	Drilled Shaft		20		X			55'-0"							55'-0"	55'-0"	94,248
56	11	V1503	Column		17		X			47'-11"							49'-6"	49'-6"	14,728
56	11	V1504	Column		20		X			25'-10"							25'-10"	25'-10"	7,686
24	W5	W1550	Beam		22		X			18"	9 1/8"						26'-1"	26'-1"	105
			PIER 15 EB																
11	11	H1550	Beam		20		X			39'-8"							39'-8"	39'-8"	2,318
16	8	H1551	Beam		20		X			39'-8"							39'-8"	39'-8"	1,695
16	11	H1552	Beam		18		X			39'-8"							42'-10"	42'-10"	3,641
8	6	H1553	Beam		20		X			19'-8"							19'-8"	19'-8"	236
20	6	H1554	Beam		5	S	X			6'-0"	22"	22"					9'-8"	9'-5"	283
2	5	P1550	Drilled Shaft		35		X			5'-6"	6"	133'-10"					4629'-1"	4629'-1"	9,656
2	5	P1551	Drilled Shaft & Column		35		X			5'-6"	3"	50'-9"					3515'-5"	3515'-5"	7,333
36	5	P1552	Beam		34	S	X			5'-6"							18'-1"	18'-1"	679
50	6	U1550	Beam		53	S	X			4'-6"	7'-8"						25'-8"	25'-3"	1,896
12	6	U1551	Beam		5	S	X			4'-6"	7'-8"	7'-8"					19'-10"	19'-7"	353
50	6	U1552	Beam		53	S	X			4'-6"	8'-1"						26'-6"	26'-1"	1,959
12	6	U1553	Beam		5	S	X			4'-6"	8'-1"	8'-1"					20'-8"	20'-5"	368
20	4	U1554	Beam		5	S	X			6'-2"	18"	18"					9'-2"	9'-0"	120
28	14	V1550	Drilled Shaft		20		X			33'-3"							33'-3"	33'-3"	7,122
28	14	V1551	Drilled Shaft		20		X			35'-3"							35'-3"	35'-3"	7,551
224	14	V1552	Drilled Shaft		20		X			55'-0"							55'-0"	55'-0"	94,248
56	11	V1553	Column		17		X			48'-2"							49'-9"	49'-9"	14,802
56	11	V1554	Column		20		X			25'-11"							25'-11"	25'-11"	7,711
24	W5	W1550	Beam		22		X			18"	9 1/8"						26'-1"	26'-1"	105

BILL OF REINFORCING STEEL

Detailed JUL 2009
Checked JUL 2009

Note: This drawing is not to scale. Follow dimensions.

s:\idot\0906601\draw_idot\cadd_sheets\structural\B_A6500_142-152_J6I0984C_142.dgn

CONTRACT NO. 76D61

F.A. ROUTE	SECTION
999	82-1B-2
FED. AID PROJECT	ILLINOIS
COUNTY	ST. CLAIR

USER NAME = jjolliff
PLOT SCALE = $SCALE$
PLOT DATE = 3/8/2010
DESIGNED - HNTB
CHECKED - CMT
DRAWN - CMT / HTNB
REVISED -
REVISED -
REVISED -
REVISED -

ILLINOIS APPROACH STRUCTURE
FOR NEW I-70 MISSISSIPPI RIVER BRIDGE

STATE OF ILLINOIS
DEPARTMENT OF TRANSPORTATION

MISSOURI HIGHWAYS
AND TRANSPORTATION COMMISSION

HNTB
715 KIRK DRIVE
KANSAS CITY, MO 64105
TELEPHONE (816) 472-1201
CERTIFICATE OF AUTHORITY
NO. 001270

CMT
CRAWFORD, MURPHY & TILLY, INC.
2750 WEST WASHINGTON STREET
SPRINGFIELD, IL 62702
TELEPHONE (217) 787-8050
ENGINEERING CORPORATION - 000631

BILL OF REINFORCING STEEL

NO. REQ'D.	MARK NO. SIZE	MARK NO. MARK	LOCATION	EPOXY (E)	SHAPE NO.	STIRRUP (S)	SUBSTR. (X)	VARIES (V)	NO. EACH	DIMENSIONS B	C	D	E	F	H	K	NOMINAL LENGTH	ACTUAL LENGTH	WEIGHT
										FT. IN.	FT. IN.	FT. IN.	FT. IN.	FT. IN.	FT. IN.	FT. IN.	FT. IN.	FT. IN.	LBS.
			PIER 16 WB																
11		11H1600	Beam		20		X			39'-8"							39'-8"	39'-8"	2,318
16		8H1601	Beam		20		X			39'-8"							39'-8"	39'-8"	1,695
16		11H1602	Beam		18		X			39'-8"							42'-10"	42'-10"	3,641
8		6H1603	Beam		20		X			19'-8"							19'-8"	19'-8"	236
20		6H1604	Beam		5	S	X			6'-0"	22"	22"					9'-8"	9'-5"	283
2		5P1600	Drilled Shaft		35		X			5'-6"	6"	132'-10"					4594'-11"	4594'-11"	9,585
2		5P1601	Drilled Shaft & Column		35		X			5'-6"	3"	49'-1"					3401'-3"	3401'-3"	7,095
36		5P1602	Beam		34	S	X			5'-6"							18'-1"	18'-1"	679
38		6U1600	Beam		53	S	X			4'-6"	7'-8"						25'-8"	25'-3"	1,441
12		6U1601	Beam		5	S	X			4'-6"	7'-8"	7'-8"					19'-10"	19'-7"	353
38		6U1602	Beam		53	S	X			4'-6"	8'-1"						26'-6"	26'-1"	1,489
12		6U1603	Beam		5	S	X			4'-6"	8'-1"	8'-1"					20'-8"	20'-5"	368
20		4U1604	Beam		5	S	X			6'-2"	18"	18"					9'-2"	9'-0"	120
28		14V1600	Drilled Shaft		20		X			32'-3"							32'-3"	32'-3"	6,908
28		14V1601	Drilled Shaft		20		X			34'-3"							34'-3"	34'-3"	7,336
224		14V1602	Drilled Shaft		20		X			55'-0"							55'-0"	55'-0"	94,248
56		11V1603	Column		17		X			46'-6"							48'-1"	48'-1"	14,306
56		11V1604	Column		20		X			25'-1"							25'-1"	25'-1"	7,463
24		W5W1600	Beam		22		X			18"	9 1/8"						26'-1"	26'-1"	105
			PIER 16 EB																
11		11H1650	Beam		20		X			39'-8"							39'-8"	39'-8"	2,318
16		8H1651	Beam		20		X			39'-8"							39'-8"	39'-8"	1,695
16		11H1652	Beam		18		X			39'-8"							42'-10"	42'-10"	3,641
8		6H1653	Beam		20		X			19'-8"							19'-8"	19'-8"	236
20		6H1654	Beam		5	S	X			6'-0"	22"	22"					9'-8"	9'-5"	283
2		5P1650	Drilled Shaft		35		X			5'-6"	6"	132'-10"					4594'-11"	4594'-11"	9,585
2		5P1651	Drilled Shaft & Column		35		X			5'-6"	3"	49'-5"					3424'-1"	3424'-1"	7,143
36		5P1652	Beam		34	S	X			5'-6"							18'-1"	18'-1"	679
38		6U1650	Beam		53	S	X			4'-6"	7'-8"						25'-8"	25'-3"	1,441
12		6U1651	Beam		5	S	X			4'-6"	7'-8"	7'-8"					19'-10"	19'-7"	353
38		6U1652	Beam		53	S	X			4'-6"	8'-1"						26'-6"	26'-1"	1,489
12		6U1653	Beam		5	S	X			4'-6"	8'-1"	8'-1"					20'-8"	20'-5"	368
20		4U1654	Beam		5	S	X			6'-2"	18"	18"					9'-2"	9'-0"	120
28		14V1650	Drilled Shaft		20		X			32'-3"							32'-3"	32'-3"	6,908
28		14V1651	Drilled Shaft		20		X			34'-3"							34'-3"	34'-3"	7,336
224		14V1652	Drilled Shaft		20		X			55'-0"							55'-0"	55'-0"	94,248
56		11V1653	Column		17		X			46'-10"							48'-5"	48'-5"	14,405
56		11V1654	Column		20		X			25'-3"							25'-3"	25'-3"	7,513
24		W5W1650	Beam		22		X			18"	9 1/8"						26'-1"	26'-1"	105

BILL OF REINFORCING STEEL

NO. REQ'D.	MARK NO. SIZE	MARK NO. MARK	LOCATION	EPOXY (E)	SHAPE NO.	STIRRUP (S)	SUBSTR. (X)	VARIES (V)	NO. EACH	DIMENSIONS B	C	D	E	F	H	K	NOMINAL LENGTH	ACTUAL LENGTH	WEIGHT
										FT. IN.	FT. IN.	FT. IN.	FT. IN.	FT. IN.	FT. IN.	FT. IN.	FT. IN.	FT. IN.	LBS.
			PIER 17 WB																
13		11H1700	Beam *	E	20		X			39'-8"							39'-8"	39'-8"	2,740
18		8H1701	Beam *	E	20		X			39'-8"							39'-8"	39'-8"	1,906
12		11H1702	Beam	E	18		X			39'-8"							42'-10"	42'-10"	2,731
12		6H1703	Beam	E	20		X			23'-11"							23'-11"	23'-11"	431
20		6H1704	Beam	E	5	S	X			8'-4"	22"	22"					12'-0"	11'-9"	353
12		6H1705	Beam	E	20		X			8'-3"							8'-3"	8'-3"	149
2		5P1700	Drilled Shaft		35		X			5'-6"	6"	132'-4"					4577'-9"	4577'-9"	9,549
2		5P1701	Drilled Shaft & Column		35		X			5'-6"	3"	47'-4"					3281'-6"	3281'-6"	6,845
36		5P1702	Beam	E	34	S	X			5'-6"							18'-1"	18'-1"	679
20		6U1700	Beam	E	53	S	X			6'-3"	7'-7"						29'-0"	28'-7"	859
12		6U1701	Beam	E	5	S	X			6'-3"	7'-7"	7'-7"					21'-5"	21'-2"	382
36		6U1702	Beam	E	53	S	X			6'-3"	8'-0"						29'-10"	29'-5"	1,591
12		6U1703	Beam	E	5	S	X			6'-3"	8'-0"	8'-0"					22'-3"	22'-0"	397
22		4U1704	Beam *	E	5	S	X			8'-6"	18"	18"					11'-6"	11'-4"	167
9		6U1705	Beam	E	5	S	X			8'-6"	18"	18"					11'-6"	11'-3"	152
26		14V1700	Drilled Shaft		20		X			31'-9"							31'-9"	31'-9"	6,315
26		14V1701	Drilled Shaft		20		X			33'-9"							33'-9"	33'-9"	6,713
208		14V1702	Drilled Shaft		20		X			55'-0"							55'-0"	55'-0"	87,516
52		11V1703	Column	E	17		X			42'-9"							44'-4"	44'-4"	12,248
52		11V1704	Column	E	17		X			43'-6"							45'-1"	45'-1"	12,455
32		W5W1700	Beam	E	22		X			12"	9 1/8"						19'-9"	19'-9"	106
			PIER 17 EB																
11		11H1750	Beam	E	20		X			39'-8"							39'-8"	39'-8"	2,318
16		8H1751	Beam	E	20		X			39'-8"							39'-8"	39'-8"	1,695
12		11H1752	Beam	E	18		X			39'-8"							42'-10"	42'-10"	2,731
12		6H1753	Beam	E	20		X			23'-11"							23'-11"	23'-11"	431
20		6H1754	Beam	E	5	S	X			8'-4"	22"	22"					12'-0"	11'-9"	353
12		6H1755	Beam	E	20		X			8'-3"							8'-3"	8'-3"	149
2		5P1750	Drilled Shaft		35		X			5'-6"	6"	132'-4"					4577'-9"	4577'-9"	9,549
2		5P1751	Drilled Shaft & Column		35		X			5'-6"	3"	47'-8"					3304'-3"	3304'-3"	6,893
36		5P1752	Beam	E	34	S	X			5'-6"							18'-1"	18'-1"	679
20		6U1750	Beam	E	53	S	X			6'-3"	7'-7"						29'-0"	28'-7"	859
12		6U1751	Beam	E	5	S	X			6'-3"	7'-7"	7'-7"					21'-5"	21'-2"	382
36		6U1752	Beam	E	53	S	X			6'-3"	8'-0"						29'-10"	29'-5"	1,591
12		6U1753	Beam	E	5	S	X			6'-3"	8'-0"	8'-0"					22'-3"	22'-0"	397
20		4U1754	Beam	E	5	S	X			8'-6"	18"	18"					11'-6"	11'-4"	151
9		6U1755	Beam	E	5	S	X			8'-6"	18"	18"					11'-6"	11'-3"	152
26		14V1750	Drilled Shaft		20		X			31'-9"							31'-9"	31'-9"	6,315
26		14V1751	Drilled Shaft		20		X			33'-9"							33'-9"	33'-9"	6,713
208		14V1752	Drilled Shaft		20		X			55'-0"							55'-0"	55'-0"	87,516
52		11V1753	Column	E	17		X			43'-2"							44'-9"	44'-9"	12,363
52		11V1754	Column	E	17		X			43'-11"							45'-6"	45'-6"	12,571
32		W5W1750	Beam	E	22		X			12"	9 1/8"						19'-9"	19'-9"	106

* Two additional #4-U1704, #8-H1701, and #11-H1700 are included in the bar bill for testing.

BILL OF REINFORCING STEEL

Detailed JUL 2009
Checked JUL 2009

Note: This drawing is not to scale. Follow dimensions.

s:\idot\0906601\draw_idot\cadd_sheets\structural\B_A6500_143-152_J6I0984C_143.dgn

CONTRACT NO. 76D61

F.A. ROUTE	SECTION
999	82-1B-2
FED. AID PROJECT	ILLINOIS
COUNTY	ST. CLAIR

USER NAME = jjolliff
PLOT SCALE = $SCALE$
PLOT DATE = 3/8/2010

DESIGNED - HNTB
CHECKED - CMT
DRAWN - CMT / HTNB
REVISED -
REVISED -
REVISED -
REVISED -

ILLINOIS APPROACH STRUCTURE
FOR NEW I-70 MISSISSIPPI RIVER BRIDGE

STATE OF ILLINOIS
DEPARTMENT OF TRANSPORTATION

MISSOURI HIGHWAYS
AND TRANSPORTATION COMMISSION

HNTB
715 KIRK DRIVE
KANSAS CITY, MO 64105
TELEPHONE (816) 472-1201
CERTIFICATE OF AUTHORITY
NO. 001270

CMT
CRAWFORD, MURPHY & TILLY, INC.
2750 WEST WASHINGTON STREET
SPRINGFIELD, IL 62702
TELEPHONE (217) 787-8050
ENGINEERING CORPORATION - 000631

BILL OF REINFORCING STEEL

NO. REQ'D.	MARK NO. SIZE	MARK NO. MARK	LOCATION	EPOXY (E)	SHAPE NO.	STIRRUP (S)	SUBSTR. (X)	VARIES (V)	NO. EACH	DIMENSIONS B FT. IN.	C FT. IN.	D FT. IN.	E FT. IN.	F FT. IN.	H FT. IN.	K FT. IN.	NOMINAL LENGTH FT. IN.	ACTUAL LENGTH FT. IN.	WEIGHT LBS.
			PIER 18 WB																
11	11H	1800	Beam		20		X			39'-8"							39'-8"	39'-8"	2,318
16	8H	1801	Beam		20		X			39'-8"							39'-8"	39'-8"	1,695
16	11H	1802	Beam		18		X			39'-8"							42'-10"	42'-10"	3,641
8	6H	1803	Beam		20		X			19'-8"							19'-8"	19'-8"	236
20	6H	1804	Beam		5	S	X			6'-0"	22"	22"					9'-8"	9'-5"	283
2	5P	1800	Drilled Shaft		35		X			5'-6"	6"	144'-4"					4988'-8"	4988'-8"	10,406
2	5P	1801	Drilled Shaft & Column		35		X			5'-6"	3"	42'-1"					2922'-0"	2922'-0"	6,095
36	5P	1802	Beam		34	S	X			5'-6"							18'-1"	18'-1"	679
46	6U	1800	Beam		53	S	X			4'-6"	7'-8"						25'-8"	25'-3"	1,745
12	6U	1801	Beam		5	S	X			4'-6"	7'-8"	7'-8"					19'-10"	19'-7"	353
44	6U	1802	Beam		53	S	X			4'-6"	8'-1"						26'-6"	26'-1"	1,724
12	6U	1803	Beam		5	S	X			4'-6"	8'-1"	8'-1"					20'-8"	20'-5"	368
20	4U	1804	Beam		5	S	X			6'-2"	18"	18"					9'-2"	9'-0"	120
22	18V	1800	Drilled Shaft		20		X			43'-9"							43'-9"	43'-9"	13,090
22	18V	1801	Drilled Shaft		20		X			45'-9"							45'-9"	45'-9"	13,688
176	18V	1802	Drilled Shaft		20		X			55'-0"							55'-0"	55'-0"	131,648
44	14V	1803	Column		17		X			38'-3"							40'-6"	40'-6"	13,632
44	14V	1804	Column		17		X			37'-6"							39'-9"	39'-9"	13,380
24	W5W	1800	Beam		22		X			18"	9 1/8"						26'-1"	26'-1"	105
			PIER 18 EB																
11	11H	1850	Beam		20		X			39'-8"							39'-8"	39'-8"	2,318
16	8H	1851	Beam		20		X			39'-8"							39'-8"	39'-8"	1,695
16	11H	1852	Beam		18		X			39'-8"							42'-10"	42'-10"	3,641
8	6H	1853	Beam		20		X			19'-8"							19'-8"	19'-8"	236
20	6H	1854	Beam		5	S	X			6'-0"	22"	22"					9'-8"	9'-5"	283
2	5P	1850	Drilled Shaft		35		X			5'-6"	6"	142'-4"					4920'-2"	4920'-2"	10,263
2	5P	1851	Drilled Shaft & Column		35		X			5'-6"	3"	44'-3"					3070'-4"	3070'-4"	6,405
36	5P	1852	Beam		34	S	X			5'-6"							18'-1"	18'-1"	679
46	6U	1850	Beam		53	S	X			4'-6"	7'-8"						25'-8"	25'-3"	1,745
12	6U	1851	Beam		5	S	X			4'-6"	7'-8"	7'-8"					19'-10"	19'-7"	353
44	6U	1852	Beam		53	S	X			4'-6"	8'-1"						26'-6"	26'-1"	1,724
12	6U	1853	Beam		5	S	X			4'-6"	8'-1"	8'-1"					20'-8"	20'-5"	368
20	4U	1854	Beam		5	S	X			6'-2"	18"	18"					9'-2"	9'-0"	120
22	18V	1850	Drilled Shaft		20		X			41'-9"							41'-9"	41'-9"	12,492
22	18V	1851	Drilled Shaft		20		X			43'-9"							43'-9"	43'-9"	13,090
176	18V	1852	Drilled Shaft		20		X			55'-0"							55'-0"	55'-0"	131,648
44	14V	1853	Column		17		X			40'-5"							42'-8"	42'-8"	14,362
44	14V	1854	Column		17		X			39'-8"							41'-11"	41'-11"	14,109
24	W5W	1850	Beam		22		X			18"	9 1/8"						26'-1"	26'-1"	105

BILL OF REINFORCING STEEL

NO. REQ'D.	MARK NO. SIZE	MARK NO. MARK	LOCATION	EPOXY (E)	SHAPE NO.	STIRRUP (S)	SUBSTR. (X)	VARIES (V)	NO. EACH	DIMENSIONS B FT. IN.	C FT. IN.	D FT. IN.	E FT. IN.	F FT. IN.	H FT. IN.	K FT. IN.	NOMINAL LENGTH FT. IN.	ACTUAL LENGTH FT. IN.	WEIGHT LBS.
			PIER 19 WB																
11	11H	1900	Beam		20		X			45'-1"							45'-1"	45'-1"	2,635
16	8H	1901	Beam		20		X			45'-1"							45'-1"	45'-1"	1,926
18	11H	1902	Beam		18		X			45'-1"							48'-3"	48'-3"	4,614
8	6H	1903	Beam		20		X			19'-8"							19'-8"	19'-8"	236
20	6H	1904	Beam		5	S	X			6'-0"	22"	22"					9'-8"	9'-5"	283
2	5P	1900	Drilled Shaft		35		X			5'-6"	6"	144'-10"					5005'-10"	5005'-10"	10,442
2	5P	1901	Drilled Shaft & Column		35		X			5'-6"	3"	39'-6"					2745'-2"	2745'-2"	5,726
36	5P	1902	Beam		34	S	X			5'-6"							18'-1"	18'-1"	679
12	6P	1903	Pedestal	E	16		X			4'-6"	2'-8"						16'-10"	16'-10"	303
70	6U	1900	Beam		53	S	X			4'-6"	7'-8"						25'-8"	25'-3"	2,655
12	6U	1901	Beam		5	S	X			4'-6"	7'-8"	7'-8"					19'-10"	19'-7"	353
50	6U	1902	Beam		53	S	X			4'-6"	8'-1"						26'-6"	26'-1"	1,959
12	6U	1903	Beam		5	S	X			4'-6"	8'-1"	8'-1"					20'-8"	20'-5"	368
20	4U	1904	Beam		5	S	X			6'-2"	18"	18"					9'-2"	9'-0"	120
16	6U	1905	Pedestal	E	5	S	X			5'-11"	4'-8"	4'-8"					15'-3"	15'-0"	360
14	9U	1906	Pedestal *	E	57	S	X			5'-0"	9'-4"	9'-4"					26'-2"	25'-8"	1,222
5	9U	1907	Pedestal	E	57	S	X			5'-9"	8'-1"	8'-1"					24'-5"	23'-11"	407
28	14V	1900	Drilled Shaft		20		X			44'-3"							44'-3"	44'-3"	9,478
28	14V	1901	Drilled Shaft		20		X			46'-3"							46'-3"	46'-3"	9,907
224	14V	1902	Drilled Shaft		20		X			55'-0"							55'-0"	55'-0"	94,248
56	11V	1903	Column		17		X			36'-11"							38'-6"	38'-6"	11,455
56	11V	1904	Column		20		X			20'-4"							20'-4"	20'-4"	6,050
16	6V	1906	Pedestal	E	20		X			7'-3"							7'-3"	7'-3"	174
24	W5W	1900	Beam		22		X			18"	9 1/8"						26'-1"	26'-1"	105
			PIER 19 EB																
11	11H	1950	Beam		20		X			45'-1"							45'-1"	45'-1"	2,635
16	8H	1951	Beam		20		X			45'-1"							45'-1"	45'-1"	1,926
18	11H	1952	Beam		18		X			45'-1"							48'-3"	48'-3"	4,614
8	6H	1953	Beam		20		X			19'-8"							19'-8"	19'-8"	236
20	6H	1954	Beam		5	S	X			6'-0"	22"	22"					9'-8"	9'-5"	283
2	5P	1950	Drilled Shaft		35		X			5'-6"	6"	147'-10"					5108'-7"	5108'-7"	10,657
2	5P	1951	Drilled Shaft & Column		35		X			5'-6"	3"	36'-8"					2551'-2"	2551'-2"	5,322
36	5P	1952	Beam		34	S	X			5'-6"							18'-1"	18'-1"	679
12	6P	1953	Pedestal	E	16		X			4'-6"	2'-8"						16'-10"	16'-10"	303
70	6U	1950	Beam		53	S	X			4'-6"	7'-8"						25'-8"	25'-3"	2,655
12	6U	1951	Beam		5	S	X			4'-6"	7'-8"	7'-8"					19'-10"	19'-7"	353
50	6U	1952	Beam		53	S	X			4'-6"	8'-1"						26'-6"	26'-1"	1,959
12	6U	1953	Beam		5	S	X			4'-6"	8'-1"	8'-1"					20'-8"	20'-5"	368
20	4U	1954	Beam		5	S	X			6'-2"	18"	18"					9'-2"	9'-0"	120
16	6U	1955	Pedestal	E	5	S	X			5'-11"	4'-8"	4'-8"					15'-3"	15'-0"	360
12	9U	1956	Pedestal	E	57	S	X			5'-0"	9'-4"	9'-4"					26'-2"	25'-8"	1,047
5	9U	1957	Pedestal	E	57	S	X			5'-9"	8'-1"	8'-1"					24'-5"	23'-11"	407
28	14V	1950	Drilled Shaft		20		X			47'-3"							47'-3"	47'-3"	10,121
28	14V	1951	Drilled Shaft		20		X			49'-3"							49'-3"	49'-3"	10,549
224	14V	1952	Drilled Shaft		20		X			55'-0"							55'-0"	55'-0"	94,248
56	11V	1953	Column		17		X			34'-1"							35'-8"	35'-8"	10,612
56	11V	1954	Column		20		X			18'-11"							18'-11"	18'-11"	5,628
16	6V	1956	Pedestal	E	20		X			6'-8"							6'-8"	6'-8"	160
24	W5W	1950	Beam		22		X			18"	9 1/8"						26'-1"	26'-1"	105

* Two additional #9-U1906 are included in the bar bill for testing.

BILL OF REINFORCING STEEL

Detailed JUL 2009
Checked JUL 2009

Note: This drawing is not to scale. Follow dimensions.

s:\idot\0906601\draw_idot\cadd_sheets\structural\B_A6500_144-152_J6I0984C_144.dgn

CONTRACT NO. 76D61

F.A. ROUTE	SECTION
999	82-1B-2
FED. AID PROJECT	ILLINOIS
COUNTY	ST. CLAIR

USER NAME = jyollrf
PLOT SCALE = $SCALE$
PLOT DATE = 3/8/2010

DESIGNED - HNTB
CHECKED - CMT
DRAWN - CMT / HTNB
REVISED -
REVISED -
REVISED -
REVISED -

ILLINOIS APPROACH STRUCTURE
FOR NEW I-70 MISSISSIPPI RIVER BRIDGE

STATE OF ILLINOIS
DEPARTMENT OF TRANSPORTATION

MISSOURI HIGHWAYS
AND TRANSPORTATION COMMISSION

HNTB
715 KIRK DRIVE
KANSAS CITY, MO 64105
TELEPHONE (816) 472-1201
CERTIFICATE OF AUTHORITY
NO. 001270

CMT
CRAWFORD, MURPHY & TILLY, INC.
2750 WEST WASHINGTON STREET
SPRINGFIELD, IL 62702
TELEPHONE (217) 787-8050
ENGINEERING CORPORATION - 000631

BILL OF REINFORCING STEEL

NO. REQ'D.	MARK NO. SIZE	MARK NO. MARK	LOCATION	EPOXY (E)	SHAPE NO.	STIRRUP (S)	SUBSTR. (X)	VARIES (V)	NO. EACH	DIMENSIONS B	C	D	E	F	H	K	NOMINAL LENGTH	ACTUAL LENGTH	WEIGHT
										FT. IN.	FT. IN.	FT. IN.	FT. IN.	FT. IN.	FT. IN.	FT. IN.	FT. IN.	FT. IN.	LBS.
			PIER 20 WB																
11		11H2000	Beam		20		X			39'-8"							39'-8"	39'-8"	2,318
16		8H2001	Beam		20		X			39'-8"							39'-8"	39'-8"	1,695
16		11H2002	Beam		18		X			39'-8"							42'-10"	42'-10"	3,641
8		6H2003	Beam		20		X			19'-8"							19'-8"	19'-8"	236
20		6H2004	Beam		5	S	X			6'-0"	22"	22"					9'-8"	9'-5"	283
40		7H2005	Crashwall		20		X			10'-6"							10'-6"	10'-6"	858
24		7H2006	Crashwall		20		X			18'-4"							18'-4"	18'-4"	899
34		7H2008	Crashwall		20		X			21'-3"							21'-3"	21'-3"	1,477
40		7L2000	Crashwall		19		X			5'-2"	2'-6"						7'-8"	7'-6"	613
2		5P2000	Drilled Shaft		35		X			5'-6"	6"	139'-10"					4834'-7"	4834'-7"	10,085
2		5P2001	Drilled Shaft & Column		35		X			5'-6"	3"	40'-2"					2790'-9"	2790'-9"	5,822
36		5P2002	Beam		34	S	X			5'-6"							18'-1"	18'-1"	679
46		6U2000	Beam		53	S	X			4'-6"	7'-8"						25'-8"	25'-3"	1,745
12		6U2001	Beam		5	S	X			4'-6"	7'-8"	7'-8"					19'-10"	19'-7"	353
44		6U2002	Beam		53	S	X			4'-6"	8'-0"						26'-4"	25'-11"	1,713
12		6U2003	Beam		5	S	X			4'-6"	8'-0"	8'-0"					20'-6"	20'-3"	365
20		4U2004	Beam		5	S	X			6'-2"	18"	18"					9'-2"	9'-0"	120
34		7U2005	Crashwall		5	S	X			5'-8"	3'-9"	3'-9"					13'-2"	12'-10"	892
20		7U2006	Crashwall		5	S	X			5'-8"	3'-9"	3'-9"					13'-2"	12'-10"	525
28		14V2000	Drilled Shaft		20		X			39'-3"							39'-3"	39'-3"	8,407
28		14V2001	Drilled Shaft		20		X			41'-3"							41'-3"	41'-3"	8,836
224		14V2002	Drilled Shaft		20		X			55'-0"							55'-0"	55'-0"	94,248
56		11V2003	Column		17		X			37'-6"							39'-1"	39'-1"	11,628
56		11V2004	Column		20		X			20'-8"							20'-8"	20'-8"	6,149
44		7V2007	Crashwall		20		X			16'-2"							16'-2"	16'-2"	1,454
24		W5W2000	Beam		22		X			18"	$9\frac{1}{8}$"						26'-1"	26'-1"	105

BILL OF REINFORCING STEEL

NO. REQ'D.	MARK NO. SIZE	MARK NO. MARK	LOCATION	EPOXY (E)	SHAPE NO.	STIRRUP (S)	SUBSTR. (X)	VARIES (V)	NO. EACH	DIMENSIONS B	C	D	E	F	H	K	NOMINAL LENGTH	ACTUAL LENGTH	WEIGHT
										FT. IN.	FT. IN.	FT. IN.	FT. IN.	FT. IN.	FT. IN.	FT. IN.	FT. IN.	FT. IN.	LBS.
			PIER 20 EB																
40		7H2005	Crashwall		20		X			10'-6"							10'-6"	10'-6"	858
24		7H2006	Crashwall		20		X			18'-4"							18'-4"	18'-4"	899
34		7H2008	Crashwall		20		X			21'-3"							21'-3"	21'-3"	1,477
11		11H2050	Beam		20		X			39'-8"							39'-8"	39'-8"	2,318
16		8H2051	Beam		20		X			39'-8"							39'-8"	39'-8"	1,695
16		11H2052	Beam		18		X			39'-8"							42'-10"	42'-10"	3,641
8		6H2053	Beam		20		X			19'-8"							19'-8"	19'-8"	236
20		6H2054	Beam		5	S	X			6'-0"	22"	22"					9'-8"	9'-5"	283
40		7L2000	Crashwall		19		X			5'-2"	2'-6"						7'-8"	7'-6"	613
2		5P2050	Drilled Shaft		35		X			5'-6"	6"	139'-10"					4834'-7"	4834'-7"	10,085
2		5P2051	Drilled Shaft & Column		35		X			5'-6"	3"	40'-1"					2785'-1"	2785'-1"	5,810
36		5P2052	Beam		34	S	X			5'-6"							18'-1"	18'-1"	679
34		7U2005	Crashwall		5	S	X			5'-8"	3'-9"	3'-9"					13'-2"	12'-10"	892
20		7U2006	Crashwall		5	S	X			5'-8"	3'-9"	3'-9"					13'-2"	12'-10"	525
46		6U2050	Beam		53	S	X			4'-6"	7'-8"						25'-8"	25'-3"	1,745
12		6U2051	Beam		5	S	X			4'-6"	7'-8"	7'-8"					19'-10"	19'-7"	353
44		6U2052	Beam		53	S	X			4'-6"	8'-1"						26'-6"	26'-1"	1,724
12		6U2053	Beam		5	S	X			4'-6"	8'-1"	8'-1"					20'-8"	20'-5"	368
20		4U2054	Beam		5	S	X			6'-2"	18"	18"					9'-2"	9'-0"	120
44		7V2007	Crashwall		20		X			16'-2"							16'-2"	16'-2"	1,454
28		14V2050	Drilled Shaft		20		X			39'-3"							39'-3"	39'-3"	8,407
28		14V2051	Drilled Shaft		20		X			41'-3"							41'-3"	41'-3"	8,836
224		14V2052	Drilled Shaft		20		X			55'-0"							55'-0"	55'-0"	94,248
56		11V2053	Column		17		X			37'-6"							39'-1"	39'-1"	11,628
56		11V2054	Column		20		X			20'-7"							20'-7"	20'-7"	6,124
24		W5W2050	Beam		22		X			18"	$9\frac{1}{8}$"						26'-1"	26'-1"	105

Detailed JUL 2009
Checked JUL 2009

Note: This drawing is not to scale. Follow dimensions.

Sheet No. 145 of 152

BILL OF REINFORCING STEEL

s:\idot\0906601\draw_idot\cadd_sheets\structural\B_A6500_145-152_J6I0984C_145.dgn

CONTRACT NO. 76D61

F.A. ROUTE	SECTION
999	82-1B-2
FED. AID PROJECT	ILLINOIS
COUNTY	ST. CLAIR

USER NAME = jyoll1ff
PLOT SCALE = $SCALE$
PLOT DATE = 3/8/2010

DESIGNED - HNTB
CHECKED - CMT
DRAWN - CMT / HTNB
REVISED -
REVISED -
REVISED -
REVISED -

ILLINOIS APPROACH STRUCTURE
FOR NEW I-70 MISSISSIPPI RIVER BRIDGE

STATE OF ILLINOIS
DEPARTMENT OF TRANSPORTATION

MISSOURI HIGHWAYS
AND TRANSPORTATION COMMISSION

HNTB
715 KIRK DRIVE
KANSAS CITY, MO 64105
TELEPHONE (816) 472-1201
CERTIFICATE OF AUTHORITY
NO. 001270

CMT
CRAWFORD, MURPHY & TILLY, INC.
2750 WEST WASHINGTON STREET
SPRINGFIELD, IL 62702
TELEPHONE (217) 787-8050
ENGINEERING CORPORATION - 000631

BILL OF REINFORCING STEEL

NO. REQ'D.	MARK NO. SIZE	MARK NO. MARK	LOCATION	EPOXY (E)	SHAPE NO.	STIRRUP (S)	SUBSTR. (X)	VARIES (V)	NO. EACH	DIMENSIONS B	C	D	E	F	H	K	NOMINAL LENGTH	ACTUAL LENGTH	WEIGHT
										FT. IN.	FT. IN.	FT. IN.	FT. IN.	FT. IN.	FT. IN.	FT. IN.	FT. IN.	FT. IN.	LBS.
			PIER 21 WB																
11	11	H2100	Beam		20		X			39'-8"							39'-8"	39'-8"	2,318
16	8	H2101	Beam		20		X			39'-8"							39'-8"	39'-8"	1,695
16	11	H2102	Beam		18		X			39'-8"							42'-10"	42'-10"	3,641
8	6	H2103	Beam		20		X			7'-11"							7'-11"	7'-11"	95
16	6	H2104	Beam		20		X			14'-0"							14'-0"	14'-0"	336
20	6	H2105	Beam		5	S	X			6'-0"	22"	22"					9'-8"	9'-5"	283
40	7	H2106	Crashwall		20		X			14'-3"							14'-3"	14'-3"	1,165
30	7	H2107	Crashwall		20		X			18'-4"							18'-4"	18'-4"	1,124
32	7	H2109	Crashwall		20		X			26'-0"							26'-0"	26'-0"	1,701
40	7	L2100	Crashwall		19		X			5'-2"	3'-7"						8'-9"	8'-7"	702
2	5	P2100	Drilled Shaft		35		X			5'-6"	6"	129'-4"					4475'-0"	4475'-0"	9,335
2	5	P2101	Drilled Shaft & Column		35		X			5'-6"	3"	46'-1"					3195'-11"	3195'-11"	6,667
36	5	P2102	Beam		34	S	X			5'-6"							18'-1"	18'-1"	679
10	6	U2100	Beam		53	S	X			4'-6"	8'-8"						27'-8"	27'-3"	409
8	6	U2101	Beam		5	S	X			4'-6"	8'-8"	8'-8"					21'-10"	21'-7"	259
4	6	U2102	Beam		5	S	X			4'-6"	8'-4"	8'-4"					21'-2"	20'-11"	126
28	6	U2103	Beam		53	S	X			4'-6"	8'-4"						27'-0"	26'-7"	1,118
30	6	U2104	Beam		53	S	X			4'-6"	8'-0"						26'-4"	25'-11"	1,168
4	6	U2105	Beam		5	S	X			4'-6"	8'-0"	8'-0"					20'-6"	20'-3"	122
8	6	U2106	Beam		5	S	X			4'-6"	7'-8"	7'-8"					19'-10"	19'-7"	235
10	6	U2107	Beam		53	S	X			4'-6"	7'-8"						25'-8"	25'-3"	379
20	4	U2108	Beam		5	S	X			6'-2"	2'-0"	2'-0"					10'-2"	10'-0"	134
32	7	U2109	Crashwall		5	S	X			7'-4"	3'-9"	3'-9"					14'-10"	14'-6"	948
20	7	U2110	Crashwall		5	S	X			7'-4"	3'-9"	3'-9"					14'-10"	14'-6"	593
32	7	U2111	Crashwall		7		X			9'-5"	7'-4"						22'-11"	22'-11"	1,499
28	14	V2100	Drilled Shaft		20		X			28'-9"							28'-9"	28'-9"	6,158
28	14	V2101	Drilled Shaft		20		X			30'-9"							30'-9"	30'-9"	6,587
224	14	V2102	Drilled Shaft		20		X			55'-0"							55'-0"	55'-0"	94,248
56	11	V2103	Column		17		X			43'-6"							45'-1"	45'-1"	13,414
56	11	V2104	Column		20		X			23'-8"							23'-8"	23'-8"	7,041
88	7	V2108	Crashwall		20		X			14'-8"							14'-8"	14'-8"	2,638
24	W5	W2100	Beam		22		X			18"	9 1/8"						26'-1"	26'-1"	105
44	5	H2110	Crashwall		20		X			3'-8"							3'-8"	3'-8"	168
20	7	H2111	Crashwall		20		X			9'-8"							9'-8"	9'-8"	395

BILL OF REINFORCING STEEL

NO. REQ'D.	MARK NO. SIZE	MARK NO. MARK	LOCATION	EPOXY (E)	SHAPE NO.	STIRRUP (S)	SUBSTR. (X)	VARIES (V)	NO. EACH	DIMENSIONS B	C	D	E	F	H	K	NOMINAL LENGTH	ACTUAL LENGTH	WEIGHT
										FT. IN.	FT. IN.	FT. IN.	FT. IN.	FT. IN.	FT. IN.	FT. IN.	FT. IN.	FT. IN.	LBS.
			PIER 21 EB																
40	7	H2106	Crashwall		20		X			14'-3"							14'-3"	14'-3"	1,165
30	7	H2107	Crashwall		20		X			18'-4"							18'-4"	18'-4"	1,124
32	7	H2109	Crashwall		20		X			26'-0"							26'-0"	26'-0"	1,701
11	11	H2150	Beam		20		X			39'-8"							39'-8"	39'-8"	2,318
16	8	H2151	Beam		20		X			39'-8"							39'-8"	39'-8"	1,695
16	11	H2152	Beam		18		X			39'-8"							42'-10"	42'-10"	3,641
8	6	H2153	Beam		20		X			7'-11"							7'-11"	7'-11"	95
16	6	H2154	Beam		20		X			14'-0"							14'-0"	14'-0"	336
20	6	H2155	Beam		5	S	X			6'-0"	22"	22"					9'-8"	9'-5"	283
40	7	L2100	Crashwall		19		X			5'-2"	3'-7"						8'-9"	8'-7"	702
2	5	P2150	Drilled Shaft		35		X			5'-6"	6"	129'-4"					4475'-0"	4475'-0"	9,335
2	5	P2151	Drilled Shaft & Column		35		X			5'-6"	3"	45'-3"					3138'-10"	3138'-10"	6,548
36	5	P2152	Beam		34	S	X			5'-6"							18'-1"	18'-1"	679
32	7	U2109	Crashwall		5	S	X			7'-4"	3'-9"	3'-9"					14'-10"	14'-6"	948
20	7	U2110	Crashwall		5	S	X			7'-4"	3'-9"	3'-9"					14'-10"	14'-6"	593
32	7	U2111	Crashwall		7		X			9'-5"	7'-4"						22'-11"	22'-11"	1,499
10	6	U2150	Beam		53	S	X			4'-6"	8'-8"						27'-8"	27'-3"	409
8	6	U2151	Beam		5	S	X			4'-6"	8'-8"	8'-8"					21'-10"	21'-7"	259
4	6	U2152	Beam		5	S	X			4'-6"	8'-4"	8'-4"					21'-2"	20'-11"	126
28	6	U2153	Beam		53	S	X			4'-6"	8'-4"						27'-0"	26'-7"	1,118
30	6	U2154	Beam		53	S	X			4'-6"	8'-0"						26'-4"	25'-11"	1,168
4	6	U2155	Beam		5	S	X			4'-6"	8'-0"	8'-0"					20'-6"	20'-3"	122
8	6	U2156	Beam		5	S	X			4'-6"	7'-8"	7'-8"					19'-10"	19'-7"	235
10	6	U2157	Beam		53	S	X			4'-6"	7'-8"						25'-8"	25'-3"	379
20	4	U2158	Beam		5	S	X			6'-2"	2'-0"	2'-0"					10'-2"	10'-0"	134
28	14	V2150	Drilled Shaft		20		X			28'-9"							28'-9"	28'-9"	6,158
28	14	V2151	Drilled Shaft		20		X			30'-9"							30'-9"	30'-9"	6,587
88	7	V2108	Crashwall		20		X			14'-8"							14'-8"	14'-8"	2,638
224	14	V2152	Drilled Shaft		20		X			55'-0"							55'-0"	55'-0"	94,248
56	11	V2153	Column		17		X			42'-8"							44'-3"	44'-3"	13,166
56	11	V2154	Column		20		X			23'-3"							23'-3"	23'-3"	6,918
24	W5	W2150	Beam		22		X			18"	9 1/8"						26'-1"	26'-1"	105
44	5	H2110	Crashwall		20		X			3'-8"							3'-8"	3'-8"	168
20	7	H2111	Crashwall		20		X			9'-8"							9'-8"	9'-8"	395

BILL OF REINFORCING STEEL

Detailed JUL 2009
Checked JUL 2009

Note: This drawing is not to scale. Follow dimensions.

s:\idot\0906601\draw_idot\cadd_sheets\structural\B_A6500_146-152_J6I0984C_146.dgn

CONTRACT NO. 76D61

F.A. ROUTE	SECTION
999	82-1B-2
FED. AID PROJECT	ILLINOIS
COUNTY	ST. CLAIR

USER NAME = jjolliff
PLOT SCALE = $SCALE$
PLOT DATE = 3/8/2010
DESIGNED - HNTB
CHECKED - CMT
DRAWN - CMT / HTNB
REVISED -
REVISED -
REVISED -
REVISED -

ILLINOIS APPROACH STRUCTURE
FOR NEW I-70 MISSISSIPPI RIVER BRIDGE

STATE OF ILLINOIS
DEPARTMENT OF TRANSPORTATION

MISSOURI HIGHWAYS
AND TRANSPORTATION COMMISSION

HNTB
715 KIRK DRIVE
KANSAS CITY, MO 64105
TELEPHONE (816) 472-1201
CERTIFICATE OF AUTHORITY
NO. 001270

CMT
CRAWFORD, MURPHY & TILLY, INC.
2750 WEST WASHINGTON STREET
SPRINGFIELD, IL 62702
TELEPHONE (217) 787-8050
ENGINEERING CORPORATION - 000631

BILL OF REINFORCING STEEL

NO. REQ'D.	MARK NO. SIZE	MARK NO. MARK	LOCATION	EPOXY (E)	SHAPE NO.	STIRRUP (S)	SUBSTR. (X)	VARIES (V)	NO. EACH	DIMENSIONS B	C	D	E	F	H	K	NOMINAL LENGTH	ACTUAL LENGTH	WEIGHT
										FT. IN.	FT. IN.	FT. IN.	FT. IN.	FT. IN.	FT. IN.	FT. IN.	FT. IN.	FT. IN.	LBS.
			PIER 22 WB																
11	11	H2200	Beam		20		X			39'-8"							39'-8"	39'-8"	2,318
16	8	H2201	Beam		20		X			39'-8"							39'-8"	39'-8"	1,695
16	11	H2202	Beam		18		X			39'-8"							42'-10"	42'-10"	3,641
16	6	H2203	Beam		20		X			7'-11"							7'-11"	7'-11"	190
16	6	H2204	Beam		20		X			11'-5"							11'-5"	11'-5"	274
20	6	H2205	Beam		5	S	X			6'-0"	22"	22"					9'-8"	9'-5"	283
2	5	P2200	Drilled Shaft		35		X			5'-6"	6"	129'-4"					4475'-0"	4475'-0"	9,335
1	5	P2201	Drilled Shaft & Column		35		X			5'-6"	3"	47'-0"					3258'-8"	3258'-8"	3,399
1	5	P2202	Drilled Shaft & Column		35		X			5'-6"	3"	45'-7"					3161'-8"	3161'-8"	3,298
36	5	P2203	Beam		34	S	X			5'-6"							18'-1"	18'-1"	679
78	6	U2200	Beam		53	S	X			4'-6"	7'-8"						25'-8"	25'-3"	2,958
24	6	U2201	Beam		5	S	X			4'-6"	7'-8"	7'-8"					19'-10"	19'-7"	706
78	4	U2202	Beam		5	S	X			6'-2"	18"	18"					9'-2"	9'-0"	469
22	18	V2200	Drilled Shaft		20		X			28'-9"							28'-9"	28'-9"	8,602
22	18	V2201	Drilled Shaft		20		X			30'-9"							30'-9"	30'-9"	9,200
176	18	V2202	Drilled Shaft		20		X			55'-0"							55'-0"	55'-0"	131,648
22	14	V2203	Column		17		X			43'-2"							45'-5"	45'-5"	7,644
22	14	V2204	Column		17		X			42'-5"							44'-8"	44'-8"	7,517
22	14	V2205	Column		17		X			41'-9"							44'-0"	44'-0"	7,405
22	14	V2206	Column		17		X			41'-0"							43'-3"	43'-3"	7,279
24	W5	W2200	Beam		22		X			18"	9 1/8"						26'-1"	26'-1"	105
			PIER 22 EB																
11	11	H2250	Beam		20		X			39'-8"							39'-8"	39'-8"	2,318
16	8	H2251	Beam		20		X			39'-8"							39'-8"	39'-8"	1,695
16	11	H2252	Beam		18		X			39'-8"							42'-10"	42'-10"	3,641
16	6	H2253	Beam		20		X			11'-5"							11'-5"	11'-5"	274
16	6	H2254	Beam		20		X			7'-11"							7'-11"	7'-11"	190
20	6	H2255	Beam		5	S	X			6'-0"	22"	22"					9'-8"	9'-5"	283
2	5	P2250	Drilled Shaft		35		X			5'-6"	6"	129'-4"					4475'-0"	4475'-0"	9,335
1	5	P2251	Drilled Shaft & Column		35		X			5'-6"	3"	45'-6"					3155'-11"	3155'-11"	3,292
1	5	P2252	Drilled Shaft & Column		35		X			5'-6"	3"	44'-1"					3058'-11"	3058'-11"	3,190
36	5	P2253	Beam		34	S	X			5'-6"							18'-1"	18'-1"	679
78	6	U2250	Beam		53	S	X			4'-6"	7'-8"						25'-8"	25'-3"	2,958
24	6	U2251	Beam		5	S	X			4'-6"	7'-8"	7'-8"					19'-10"	19'-7"	706
78	4	U2252	Beam		5	S	X			6'-2"	18"	18"					9'-2"	9'-0"	469
22	18	V2250	Drilled Shaft		20		X			28'-9"							28'-9"	28'-9"	8,602
22	18	V2251	Drilled Shaft		20		X			30'-9"							30'-9"	30'-9"	9,200
176	18	V2252	Drilled Shaft		20		X			55'-0"							55'-0"	55'-0"	131,648
22	14	V2253	Column		17		X			41'-8"							43'-11"	43'-11"	7,391
22	14	V2254	Column		17		X			40'-11"							43'-2"	43'-2"	7,265
22	14	V2255	Column		17		X			40'-3"							42'-6"	42'-6"	7,153
22	14	V2256	Column		17		X			39'-6"							41'-9"	41'-9"	7,027
24	W5	W2250	Beam		22		X			18"	9 1/8"						26'-1"	26'-1"	105

BILL OF REINFORCING STEEL

NO. REQ'D.	MARK NO. SIZE	MARK NO. MARK	LOCATION	EPOXY (E)	SHAPE NO.	STIRRUP (S)	SUBSTR. (X)	VARIES (V)	NO. EACH	DIMENSIONS B	C	D	E	F	H	K	NOMINAL LENGTH	ACTUAL LENGTH	WEIGHT
										FT. IN.	FT. IN.	FT. IN.	FT. IN.	FT. IN.	FT. IN.	FT. IN.	FT. IN.	FT. IN.	LBS.
			PIER 23 WB																
14	11	H2300	Beam	E	20		X			43'-0"							43'-0"	43'-0"	3,198
16	8	H2301	Beam	E	20		X			43'-0"							43'-0"	43'-0"	1,837
15	11	H2302	Beam	E	18		X			43'-0"							46'-2"	46'-2"	3,679
12	6	H2303	Beam	E	20		X			11'-5"							11'-5"	11'-5"	206
6	6	H2304	Beam	E	20		X			7'-11"							7'-11"	7'-11"	71
8	6	H2305	Beam *	E	20		X			11'-3"							11'-3"	11'-3"	135
20	6	H2306	Beam	E	5	S	X			10'-4"	22"	22"					14'-0"	13'-9"	413
9	6	H2307	Beam	E	20		X			5'-6"							5'-6"	5'-6"	74
36	6	H2308	Beam	E	20		X			6'-9"							6'-9"	6'-9"	365
9	6	H2309	Beam	E	20		X			8'-10"							8'-10"	8'-10"	119
2	5	P2300	Drilled Shaft		35		X			5'-6"	6"	122'-4"					4235'-4"	4235'-4"	8,835
1	5	P2301	Drilled Shaft & Column		35		X			5'-6"	3"	51'-3"					3549'-8"	3549'-8"	3,702
1	5	P2302	Drilled Shaft & Column		35		X			5'-6"	3"	49'-11"					3458'-4"	3458'-4"	3,607
36	5	P2303	Beam	E	34	S	X			5'-6"							18'-1"	18'-1"	679
24	6	U2300	Beam	E	5	S	X			8'-4"	7'-7"	7'-7"					23'-6"	23'-3"	838
90	6	U2301	Beam	E	53	S	X			8'-4"	7'-7"						33'-2"	32'-9"	4,427
53	4	U2302	Beam	E	5	S	X			4'-3"	18"	18"					7'-3"	7'-1"	251
85	4	U2303	Beam	E	5	S	X			5'-11"	18"	18"					8'-11"	8'-9"	497
22	18	V2300	Drilled Shaft		20		X			31'-9"							31'-9"	31'-9"	9,500
22	18	V2301	Drilled Shaft		20		X			33'-9"							33'-9"	33'-9"	10,098
176	18	V2302	Drilled Shaft		20		X			50'-0"							50'-0"	50'-0"	119,680
22	14	V2303	Column	E	17		X			47'-5"							49'-8"	49'-8"	8,359
22	14	V2304	Column	E	17		X			46'-8"							48'-11"	48'-11"	8,233
22	14	V2305	Column	E	17		X			46'-1"							48'-4"	48'-4"	8,134
22	14	V2306	Column	E	17		X			45'-4"							47'-7"	47'-7"	8,008
40	W5	W2300	Beam	E	22		X			12"	9 1/8"						19'-9"	19'-9"	135
			PIER 23 EB																
14	11	H2350	Beam	E	20		X			43'-0"							43'-0"	43'-0"	3,198
16	8	H2351	Beam	E	20		X			43'-0"							43'-0"	43'-0"	1,837
15	11	H2352	Beam	E	18		X			43'-0"							46'-2"	46'-2"	3,679
12	6	H2353	Beam	E	20		X			11'-5"							11'-5"	11'-5"	206
6	6	H2354	Beam	E	20		X			7'-11"							7'-11"	7'-11"	71
6	6	H2355	Beam	E	20		X			11'-3"							11'-3"	11'-3"	101
20	6	H2356	Beam	E	5	S	X			10'-4"	22"	22"					14'-0"	13'-9"	413
9	6	H2357	Beam	E	20		X			9'-9"							9'-9"	9'-9"	132
27	6	H2358	Beam	E	20		X			8'-6"							8'-6"	8'-6"	345
9	6	H2359	Beam	E	20		X			6'-5"							6'-5"	6'-5"	87
2	5	P2350	Drilled Shaft		35		X			5'-6"	6"	122'-4"					4235'-4"	4235'-4"	8,835
1	5	P2351	Drilled Shaft & Column		35		X			5'-6"	3"	49'-9"					3446'-11"	3446'-11"	3,595
1	5	P2352	Drilled Shaft & Column		35		X			5'-6"	3"	48'-4"					3349'-11"	3349'-11"	3,494
36	5	P2353	Beam	E	34	S	X			5'-6"							18'-1"	18'-1"	679
24	6	U2350	Beam	E	5	S	X			8'-4"	7'-7"	7'-7"					23'-6"	23'-3"	838
90	6	U2351	Beam	E	53	S	X			8'-4"	7'-7"						33'-2"	32'-9"	4,427
60	4	U2352	Beam	E	5	S	X			4'-3"	18"	18"					7'-3"	7'-1"	284
84	4	U2353	Beam	E	5	S	X			5'-11"	18"	18"					8'-11"	8'-9"	491
22	18	V2350	Drilled Shaft		20		X			31'-9"							31'-9"	31'-9"	9,500
22	18	V2351	Drilled Shaft		20		X			33'-9"							33'-9"	33'-9"	10,098
176	18	V2352	Drilled Shaft		20		X			50'-0"							50'-0"	50'-0"	119,680
22	14	V2353	Column	E	17		X			45'-11"							48'-2"	48'-2"	8,106
22	14	V2354	Column	E	17		X			45'-2"							47'-5"	47'-5"	7,980
22	14	V2355	Column	E	17		X			44'-6"							46'-9"	46'-9"	7,868
22	14	V2356	Column	E	17		X			43'-9"							46'-0"	46'-0"	7,742
36	W5	W2350	Beam	E	22		X			12"	9 1/8"						19'-9"	19'-9"	119

* Two additional #6-H2305 are included in the bar bill for testing.

BILL OF REINFORCING STEEL

Detailed JUL 2009
Checked JUL 2009

Note: This drawing is not to scale. Follow dimensions.

s:\idot\0906601\draw_idot\cadd_sheets\structural\B_A6500_147-152_J6I0984C_147.dgn

CONTRACT NO. 76D61

F.A. ROUTE	SECTION
999	82-1B-2
FED. AID PROJECT	ILLINOIS
COUNTY	ST. CLAIR

USER NAME = jjolliff
PLOT SCALE = $SCALE$
PLOT DATE = 3/8/2010

DESIGNED - HNTB
CHECKED - CMT
DRAWN - CMT / HTNB
REVISED -
REVISED -
REVISED -
REVISED -

ILLINOIS APPROACH STRUCTURE
FOR NEW I-70 MISSISSIPPI RIVER BRIDGE

STATE OF ILLINOIS
DEPARTMENT OF TRANSPORTATION

MISSOURI HIGHWAYS
AND TRANSPORTATION COMMISSION

HNTB
715 KIRK DRIVE
KANSAS CITY, MO 64105
TELEPHONE (816) 472-1201
CERTIFICATE OF AUTHORITY
NO. 001270

CMT
CRAWFORD, MURPHY & TILLY, INC.
2750 WEST WASHINGTON STREET
SPRINGFIELD, IL 62702
TELEPHONE (217) 787-8050
ENGINEERING CORPORATION - 000631

BILL OF REINFORCING STEEL

NO. REQ'D.	MARK NO. SIZE	MARK NO. MARK	LOCATION	EPOXY (E)	SHAPE NO.	STIRRUP (S)	SUBSTR. (X)	VARIES (V)	NO. EACH	DIMENSIONS B	C	D	E	F	H	K	NOMINAL LENGTH	ACTUAL LENGTH	WEIGHT
										FT. IN.	FT. IN.	FT. IN.	FT. IN.	FT. IN.	FT. IN.	FT. IN.	FT. IN.	FT. IN.	LBS.
			SLAB																
4661		6S100	Slab	E	20					42'-5"							42'-5"	42'-5"	296,954
648		6S101	Slab	E	20					57'-5"							57'-5"	57'-5"	55,883
528		6S102	Slab	E	20					50'-0"							50'-0"	50'-0"	39,653
132		6S103	Slab	E	20					35'-8"							35'-8"	35'-8"	7,071
264		6S104	Slab	E	20					60'-0"							60'-0"	60'-0"	23,792
66		6S105	Slab	E	20					45'-2"							45'-2"	45'-2"	4,477
144		6S106	Slab	E	20					58'-8"							58'-8"	58'-8"	12,689
3806		5S107	Slab	E	20					4'-1"							4'-1"	4'-1"	16,209
612		6S108	Slab	E	20					56'-1"							56'-1"	56'-1"	51,553
132		6S109	Slab	E	20					25'-7"							25'-7"	25'-7"	5,072
66		6S110	Slab	E	20					34'-8"							34'-8"	34'-8"	3,437
136		6S111	Slab	E	20					57'-4"							57'-4"	57'-4"	11,712
70		6S112	Slab	E	20					5'-11"							5'-11"	5'-11"	623
70		6S113	Slab	E	23					12"	2'-5"	4'-1"	2'-10⅝"	2'-10⅝"	8½"	8½"	7'-6"	7'-6"	789
70		6S114	Slab	E	17					4'-2"							4'-10"	4'-10"	509
172		4S115	Slab	E	53	S				15"	19"						6'-5"	6'-2"	709
70		6S116	Slab	E	20					6'-3"							6'-3"	6'-3"	657
70		6S117	Slab	E	23					12"	2'-5"	4'-2⅞"	3'-0"	3'-0"	8½"	8½"	7'-8"	7'-8"	806
70		6S118	Slab	E	17					4'-4"							5'-0"	5'-0"	526
320		5S119	Slab	E	20					2'-0"							2'-0"	2'-0"	668
7748		6S200	Slab	E	20					42'-5"							42'-5"	42'-5"	493,624
1044		6S201	Slab	E	20					56'-4"							56'-4"	56'-4"	88,336
264		6S202	Slab	E	20					50'-0"							50'-0"	50'-0"	19,826
66		6S203	Slab	E	20					35'-6"							35'-6"	35'-6"	3,519
264		6S204	Slab	E	20					60'-0"							60'-0"	60'-0"	23,792
66		6S205	Slab	E	20					45'-3"							45'-3"	45'-3"	4,486
792		6S206	Slab	E	20					55'-0"							55'-0"	55'-0"	65,427
66		6S207	Slab	E	20					34'-10"							34'-10"	34'-10"	3,453
66		6S208	Slab	E	20					38'-8"							38'-8"	38'-8"	3,833
66		6S209	Slab	E	20					33'-2"							33'-2"	33'-2"	3,288
232		6S210	Slab	E	20					57'-7"							57'-7"	57'-7"	20,066
3116		5S211	Slab	E	20					4'-1"							4'-1"	4'-1"	13,271
1080		6S212	Slab	E	20					56'-9"							56'-9"	56'-9"	92,058
66		6S213	Slab	E	20					41'-2"							41'-2"	41'-2"	4,081
66		6S214	Slab	E	20					54'-6"							54'-6"	54'-6"	5,403
66		6S215	Slab	E	20					43'-9"							43'-9"	43'-9"	4,337
66		6S216	Slab	E	20					38'-3"							38'-3"	38'-3"	3,792
66		6S217	Slab	E	20					39'-8"							39'-8"	39'-8"	3,932
240		6S218	Slab	E	20					58'-1"							58'-1"	58'-1"	20,938
3252		5S219	Slab	E	20					4'-1"							4'-1"	4'-1"	13,850
70		6S220	Slab	E	20					5'-11"							5'-11"	5'-11"	623
70		6S221	Slab	E	23					12"	2'-5"	4'-1"	2'-10⅝"	2'-10⅝"	8½"	8½"	7'-6"	7'-6"	789
70		6S222	Slab	E	17					4'-2"							4'-10"	4'-10"	509
86		4S223	Slab	E	53	S				15"	19"						6'-5"	6'-2"	355
70		6S224	Slab	E	20					7'-10"							7'-10"	7'-10"	824
70		6S225	Slab	E	23					12"	2'-5"	5'-7"	3'-11⅜"	3'-11⅜"	8½"	8½"	9'-0"	9'-0"	946
70		6S226	Slab	E	17					5'-8"							6'-4"	6'-4"	666
400		5S227	Slab	E	20					2'-0"							2'-0"	2'-0"	834
86		4S228	Slab	E	53	S				15"	2'-1"						7'-5"	7'-2"	412

BILL OF REINFORCING STEEL

NO. REQ'D.	MARK NO. SIZE	MARK NO. MARK	LOCATION	EPOXY (E)	SHAPE NO.	STIRRUP (S)	SUBSTR. (X)	VARIES (V)	NO. EACH	DIMENSIONS B	C	D	E	F	H	K	NOMINAL LENGTH	ACTUAL LENGTH	WEIGHT
										FT. IN.	FT. IN.	FT. IN.	FT. IN.	FT. IN.	FT. IN.	FT. IN.	FT. IN.	FT. IN.	LBS.
			BARRIER CURB																
3996		5R100	Barrier Curb (Type D)	E	19	S				3'-4"	5"						3'-9"	3'-8"	15,282
3996		5R101	Barrier Curb (Type D)	E	12	S				3'-5"	5"				3'-4"	8"	3'-10"	3'-10"	15,977
3996		5R102	Barrier Curb (Type D)	E	19	S				22½"	9"						2'-8"	2'-6"	10,420
3996		5R103	Barrier Curb (Type D)	E	27	S				8"	14¼"	12"	9"		2¼"	14½"	3'-8"	3'-5"	14,240
48		5R104	Barrier Curb (Type D)	E	20					19'-2"							19'-2"	19'-2"	960
432		5R105	Barrier Curb (Type D)	E	20					19'-2"							19'-2"	19'-2"	8,636
1104		5R106	Barrier Curb (Type D)	E	20					19'-8"							19'-8"	19'-8"	22,646
48		5R107	Barrier Curb (Type D)	E	20					18'-9"							18'-9"	18'-9"	939
672		5R108	Barrier Curb (Type D)	E	20					19'-5"							19'-5"	19'-5"	13,609
6714		5R200	Barrier Curb (Type D)	E	19	S				3'-4"	5"						3'-9"	3'-8"	25,677
6714		5R201	Barrier Curb (Type D)	E	12	S				3'-5"	5"				3'-4"	8"	3'-10"	3'-10"	26,844
6714		5R202	Barrier Curb (Type D)	E	19	S				22½"	9"						2'-8"	2'-6"	17,507
6714		5R203	Barrier Curb (Type D)	E	27	S				8"	14¼"	12"	9"		2¼"	14½"	3'-8"	3'-5"	23,926
36		5R204	Barrier Curb (Type D)	E	20					17'-9"							17'-9"	17'-9"	666
216		5R205	Barrier Curb (Type D)	E	20					18'-8"							18'-8"	18'-8"	4,205
624		5R206	Barrier Curb (Type D)	E	20					18'-6"							18'-6"	18'-6"	12,040
744		5R207	Barrier Curb (Type D)	E	20					19'-6"							19'-6"	19'-6"	15,132
360		5R208	Barrier Curb (Type D)	E	20					18'-9"							18'-9"	18'-9"	7,040
168		5R209	Barrier Curb (Type D)	E	20					19'-4"							19'-4"	19'-4"	3,388
120		5R210	Barrier Curb (Type D)	E	20					18'-11"							18'-11"	18'-11"	2,368
12		5R211	Barrier Curb (Type D)	E	20					18'-2"							18'-2"	18'-2"	227
24		5R212	Barrier Curb (Type D)	E	20					18'-9"							18'-9"	18'-9"	469
624		5R213	Barrier Curb (Type D)	E	20					19'-8"							19'-8"	19'-8"	12,800
360		5R214	Barrier Curb (Type D)	E	20					19'-3"							19'-3"	19'-3"	7,228
168		5R215	Barrier Curb (Type D)	E	20					19'-0"							19'-0"	19'-0"	3,329
12		5R216	Barrier Curb (Type D)	E	20					17'-3"							17'-3"	17'-3"	216
168		5R217	Barrier Curb (Type D)	E	20					18'-7"							18'-7"	18'-7"	3,256
14		5R218	Barrier Curb (Type D) *	E	20					12'-9"							12'-9"	12'-9"	186
168		5R219	Barrier Curb (Type D)	E	20					19'-0"							19'-0"	19'-0"	3,329
120		5R220	Barrier Curb (Type D)	E	20					18'-5"							18'-5"	18'-5"	2,305
24		5L100	Light Pole Mounting Blisters	E	11	S					3'-2"	14"	3'-2"	6"			8'-0"	7'-6"	188
16		5L101	Light Pole Mounting Blisters	E	11	S					3'-2"	8¼"	3'-2"	6"			7'-7"	7'-0"	117
56		5L102	Light Pole Mounting Blisters	E	53	S				22½"	15½"						7'-3"	7'-0"	409
56		5L103	Light Pole Mounting Blisters	E	67	S				18"	21¼"	22½"			15"	15"	8'-5"	8'-1"	472
48		6L104	Light Pole Mounting Blisters	E	20					4'-0"							4'-0"	4'-0"	288

* Two additional #5-R218 are included in the bar bill for testing.

BILL OF REINFORCING STEEL

Detailed JUL 2009
Checked JUL 2009

Note: This drawing is not to scale. Follow dimensions.

s:\idot\0906601\draw_idot\cadd_sheets\structural\B_A6500_148-152_J6I0984C_148.dgn

CONTRACT NO. 76D61

F.A. ROUTE	SECTION
999	82-1B-2
FED. AID PROJECT	ILLINOIS
COUNTY	ST. CLAIR

USER NAME = jyoll1ff
PLOT SCALE = $SCALE$
PLOT DATE = 3/8/2010

DESIGNED - HNTB
CHECKED - CMT
DRAWN - CMT / HTNB
REVISED -
REVISED -
REVISED -
REVISED -

ILLINOIS APPROACH STRUCTURE
FOR NEW I-70 MISSISSIPPI RIVER BRIDGE

STATE OF ILLINOIS
DEPARTMENT OF TRANSPORTATION

MISSOURI HIGHWAYS
AND TRANSPORTATION COMMISSION

HNTB
715 KIRK DRIVE
KANSAS CITY, MO 64105
TELEPHONE (816) 472-1201
CERTIFICATE OF AUTHORITY
NO. 001270

CMT
CRAWFORD, MURPHY & TILLY, INC.
2750 WEST WASHINGTON STREET
SPRINGFIELD, IL 62702
TELEPHONE (217) 787-8050
ENGINEERING CORPORATION - 000631

BILL OF REINFORCING STEEL

NO. REQ'D.	MARK NO. SIZE	MARK NO. MARK	LOCATION	EPOXY (E)	SHAPE NO.	STIRRUP (S)	SUBSTR. (X)	VARIES (V)	NO. EACH	DIMENSIONS B FT. IN.	C FT. IN.	D FT. IN.	E FT. IN.	F FT. IN.	H FT. IN.	K FT. IN.	NOMINAL LENGTH FT. IN.	ACTUAL LENGTH FT. IN.	WEIGHT LBS.
			TOTALS																
		W5																	1,680
		W5		E															466
		4																	2,646
		4		E															3,317
		5																	338,607
		5		E															323,581
		6																	75,282
		6		E															1,408,595
		7																	34,966
		8																	27,582
		8		E															7,275
		9		E															3,083
		11																	342,170
		11		E															73,911
		14																	1,633,867
		14		E															64,430
		18																	893,112
			SLAB ON STEEL																
		4		E															1,476
		5		E															44,832
		6		E															1,384,751
			REINFORCING STEEL (BRIDGES)																
		W5																	1,680
		W5		E															466
		4																	2,646
		4		E															1,841
		5																	338,607
		5		E															2,716
		6																	75,282
		6		E															23,556
		7																	34,966
		8																	27,582
		8		E															7,275
		9		E															3,083
		11																	342,170
		11		E															73,911
		14																	1,633,867
		14		E															64,430
		18																	893,112
			BARRIER CURB																
		5		E															276,033
		6		E															288

BILL OF REINFORCING STEEL

NO. REQ'D.	MARK NO. SIZE	MARK NO. MARK	LOCATION	EPOXY (E)	SHAPE NO.	STIRRUP (S)	SUBSTR. (X)	VARIES (V)	NO. EACH	DIMENSIONS B FT. IN.	C FT. IN.	D FT. IN.	E FT. IN.	F FT. IN.	H FT. IN.	K FT. IN.	NOMINAL LENGTH FT. IN.	ACTUAL LENGTH FT. IN.	WEIGHT LBS.

BILL OF REINFORCING STEEL

Detailed JUL 2009
Checked JUL 2009

Note: This drawing is not to scale. Follow dimensions.

s:\idot\0906601\draw_idot\cadd_sheets\structural\B_A6500_149-152_J6I0984C_149.dgn

CONTRACT NO. 76D61

F.A. ROUTE	SECTION
999	82-1B-2
FED. AID PROJECT	ILLINOIS
COUNTY	ST. CLAIR

USER NAME = jjolliff
PLOT SCALE = $SCALE$
PLOT DATE = 3/8/2010

DESIGNED - HNTB
CHECKED - CMT
DRAWN - CMT / HTNB
REVISED -
REVISED -
REVISED -
REVISED -

ILLINOIS APPROACH STRUCTURE
FOR NEW I-70 MISSISSIPPI RIVER BRIDGE

STATE OF ILLINOIS
DEPARTMENT OF TRANSPORTATION

MISSOURI HIGHWAYS
AND TRANSPORTATION COMMISSION

HNTB
715 KIRK DRIVE
KANSAS CITY, MO 64105
TELEPHONE (816) 472-1201
CERTIFICATE OF AUTHORITY
NO. 001270

CMT
CRAWFORD, MURPHY & TILLY, INC.
2750 WEST WASHINGTON STREET
SPRINGFIELD, IL 62702
TELEPHONE (217) 787-8050
ENGINEERING CORPORATION - 000631

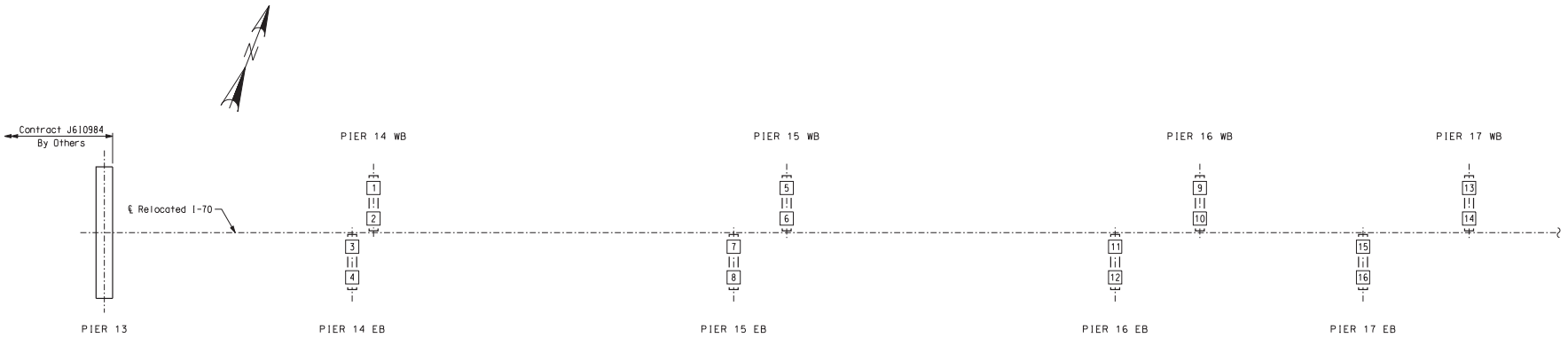

PART PLAN SHOWING DRILLED SHAFT NUMBERING FOR RECORDING "AS BUILT DRILLED SHAFT" DATA

"AS BUILT DRILLED SHAFT" DATA			
SHAFT NO.	BOTTOM OF DRILLED SHAFT (ELEV.)	BOTTOM OF ROCK SOCKET (ELEV.)	REMARKS
			Pier 14 WB
1			
2			
			Pier 14 EB
3			
4			
			Pier 15 WB
5			
6			
			Pier 15 EB
7			
8			

"AS BUILT DRILLED SHAFT" DATA			
SHAFT NO.	BOTTOM OF DRILLED SHAFT (ELEV.)	BOTTOM OF ROCK SOCKET (ELEV.)	REMARKS
			Pier 16 WB
9			
10			
			Pier 16 EB
11			
12			

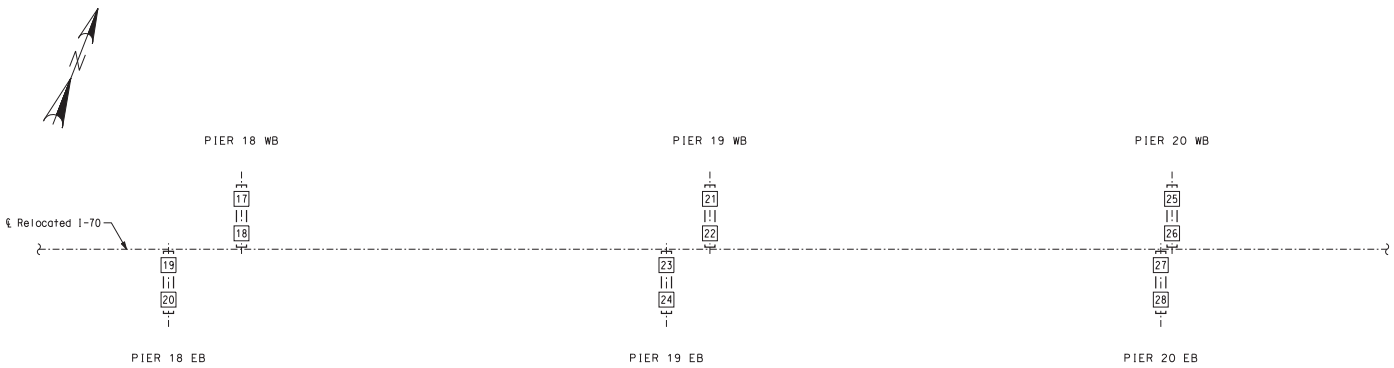

PART PLAN SHOWING DRILLED SHAFT NUMBERING FOR RECORDING "AS BUILT DRILLED SHAFT" DATA

"AS BUILT DRILLED SHAFT" DATA			
SHAFT NO.	BOTTOM OF DRILLED SHAFT (ELEV.)	BOTTOM OF ROCK SOCKET (ELEV.)	REMARKS
			Pier 18 WB
17			
18			
			Pier 18 EB
19			
20			

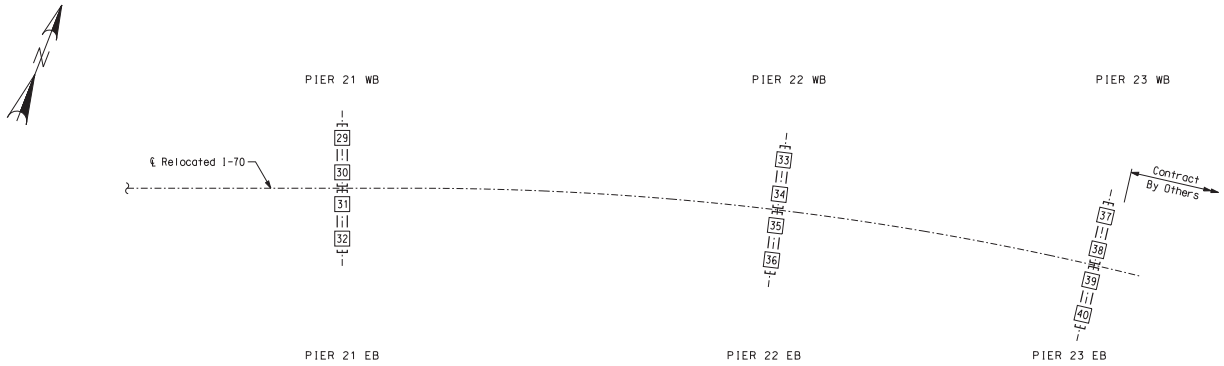

PART PLAN SHOWING DRILLED SHAFT NUMBERING FOR RECORDING "AS BUILT DRILLED SHAFT" DATA

"AS BUILT DRILLED SHAFT" DATA			
SHAFT NO.	BOTTOM OF DRILLED SHAFT (ELEV.)	BOTTOM OF ROCK SOCKET (ELEV.)	REMARKS
			Pier 21 WB
29			
30			
			Pier 21 EB
31			
32			

"AS BUILT DRILLED SHAFT" DATA			
SHAFT NO.	BOTTOM OF DRILLED SHAFT (ELEV.)	BOTTOM OF ROCK SOCKET (ELEV.)	REMARKS
			Pier 22 WB
33			
34			
			Pier 22 EB
35			
36			

"AS BUILT DRILLED SHAFT" DATA			
SHAFT NO.	BOTTOM OF DRILLED SHAFT (ELEV.)	BOTTOM OF ROCK SOCKET (ELEV.)	REMARKS
			Pier 23 WB
37			
38			
			Pier 23 EB
39			
40			

NOTE: THIS SHEET TO BE COMPLETED BY IDOT CONSTRUCTION PERSONNEL.

AS BUILT DRILLED SHAFT DATA - UNIT 2 (2 OF 2)

Detailed JUL 2009
Checked JUL 2009

Note: This drawing is not to scale. Follow dimensions.

Sheet No. 152 of 152

s:\idot\0906601\draw_idot\cadd_sheets\structural\B_A6500_152-152_J6I0984C_152.dgn

CONTRACT NO. 76D61

F.A. ROUTE	SECTION
999	82-1B-2
FED. AID PROJECT	ILLINOIS
COUNTY	ST. CLAIR

USER NAME = jjolliff
PLOT SCALE = $SCALE$
PLOT DATE = 3/8/2010

DESIGNED - HNTB
CHECKED - CMT
DRAWN - CMT / HTNB
REVISED -
REVISED -
REVISED -
REVISED -

ILLINOIS APPROACH STRUCTURE
FOR NEW I-70 MISSISSIPPI RIVER BRIDGE

STATE OF ILLINOIS
DEPARTMENT OF TRANSPORTATION

MISSOURI HIGHWAYS
AND TRANSPORTATION COMMISSION

HNTB
715 KIRK DRIVE
KANSAS CITY, MO 64105
TELEPHONE (816) 472-1201
CERTIFICATE OF AUTHORITY
NO. 001270

CMT
CRAWFORD, MURPHY & TILLY, INC.
2750 WEST WASHINGTON STREET
SPRINGFIELD, IL 62702
TELEPHONE (217) 787-8050
ENGINEERING CORPORATION - 000631

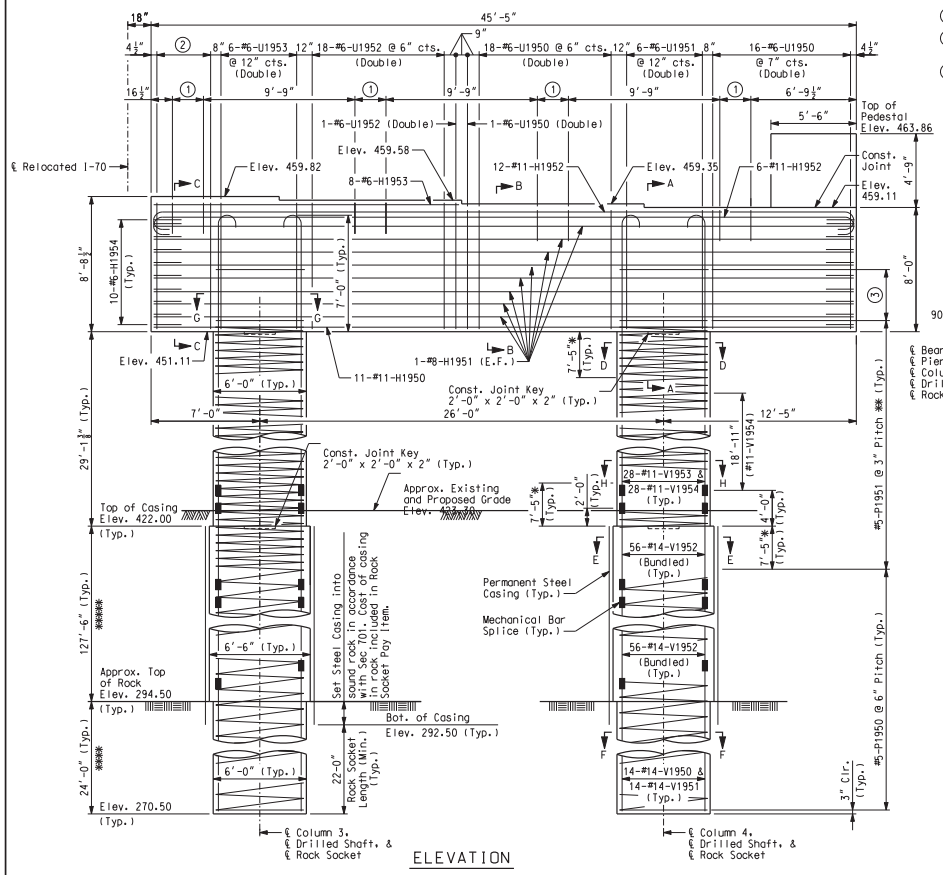

ELEVATION

① 5-#4-U1954 @ 6" cts.

② 6-#6-U1952 @ 8" cts. (Double)

③ 18-#5-P1952 @ 3" cts. (Typ.) ***

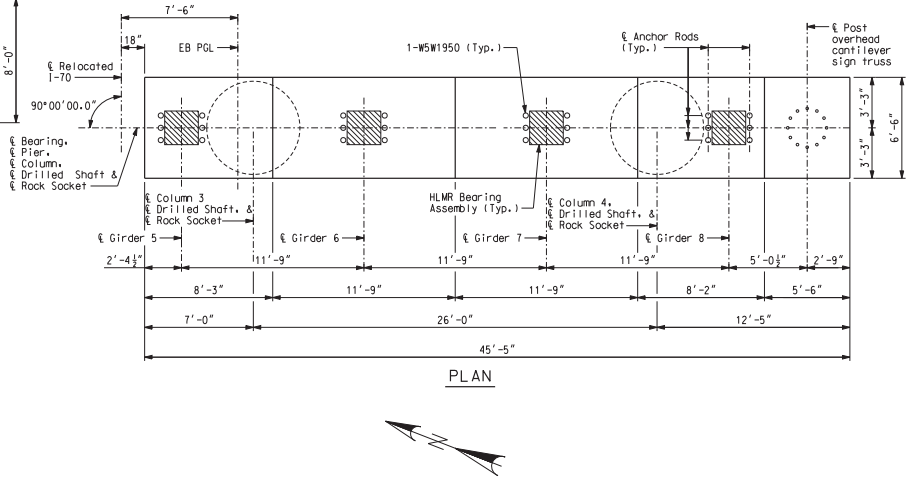

PLAN

Notes:

An additional 4 feet has been added to #5-P1950, #14-V1950 and #14-V1951 lengths for possible change in drilled shaft or rock socket depth. This excess length shall be cut off or included in the reinforcement lap if not required.

Sonic logging testing shall be performed on all drilled shafts and rock sockets.

All reinforcing bars in the tops of substructure beams or caps shall be spaced to clear anchor rod wells for bearings by at least 1/2".

The hooks of V-Bars embedded in the beam cap shall be oriented inward. Bending the hook outward, away from the column core, is not allowed.

The thickness of steel casing shall meet all the requirements of Sec 701 with minimum thickness being 3/8 inch. Thicker casing may be required for installation.

For details of HLMR Bearing Assembly, see Sheet No. 43.

For Anchor Rod Well Details and Anchor Rod Setting Plan, see Sheet No. 47.

For details of seismic stirrup bars, see Sheet No. 7.

* Lapping of spiral reinforcement in this region not permitted.

** Continue spiral bars to the bottom of the beam cap stirrup reinforcing bar.

*** Splice locations shall be staggered.

Anchorage of spiral reinforcement shall be provided by 1-1/2 extra turns of spiral bar at each end of spiral unit.

**** Pay Items Rock Socket (6 ft. 0 in. Dia.).

***** Pay Items Drilled Shaft (6 ft. 6 in. Dia.).

For Sections A-A, B-B, C-C, D-D, E-E, F-F, G-G, H-H, Detail of Cap Beam Pedestal, and Substructure Quantity Table, see Sheet No. 30.

PIER 19 EB

Detailed JUL 2009
Checked JUL 2009

Note: This drawing is not to scale. Follow dimensions.

s:\idot\0906601\draw_idot\cadd_sheets\structural\B_A6500_029-152_J6l0984C_029.dgn

CONTRACT NO. 76D61

F.A. ROUTE	SECTION
999	82-1B-2
FED. AID PROJECT	ILLINOIS
COUNTY	ST. CLAIR

USER NAME = jjollrf
PLOT SCALE = $SCALE$
PLOT DATE = 3/15/2010
DESIGNED - HNTB
CHECKED - CMT
DRAWN - CMT / HTNB
REVISED -
REVISED -
REVISED -
REVISED -

ILLINOIS APPROACH STRUCTURE FOR NEW I-70 MISSISSIPPI RIVER BRIDGE

STATE OF ILLINOIS
DEPARTMENT OF TRANSPORTATION

MISSOURI HIGHWAYS AND TRANSPORTATION COMMISSION

HNTB
715 KIRK DRIVE
KANSAS CITY, MO 64105
TELEPHONE (816) 472-1201
CERTIFICATE OF AUTHORITY NO. 001270

CMT
CRAWFORD, MURPHY & TILLY, INC.
2750 WEST WASHINGTON STREET
SPRINGFIELD, IL 62702
TELEPHONE (217) 787-8050
ENGINEERING CORPORATION - 000631

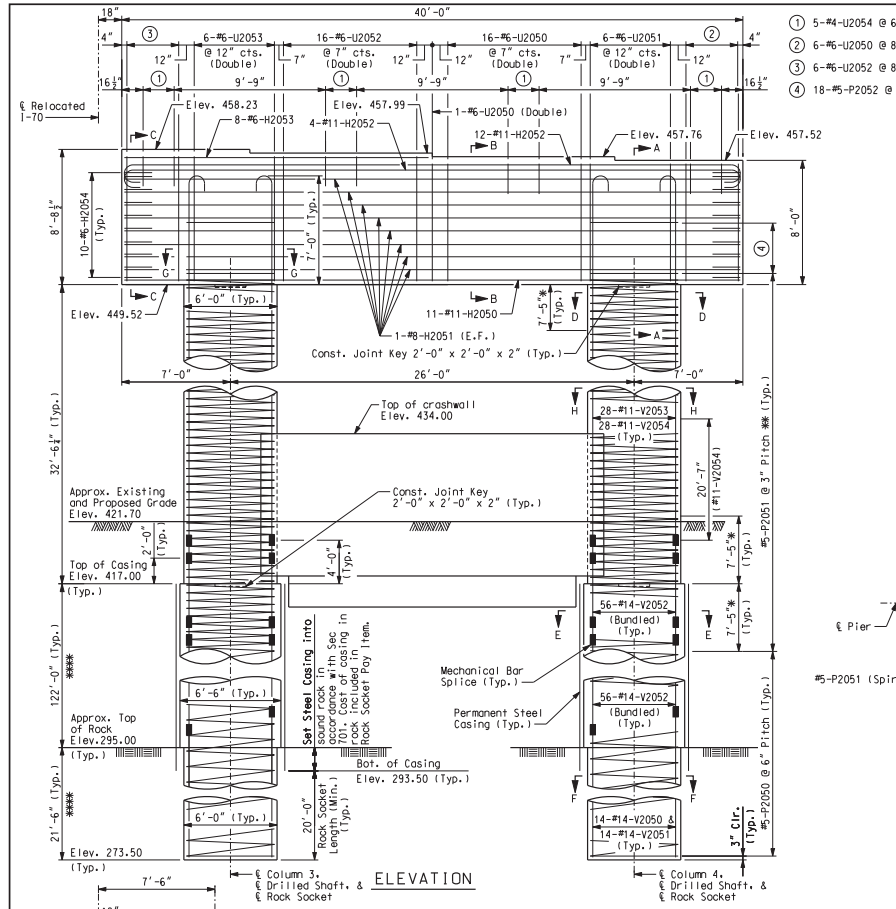

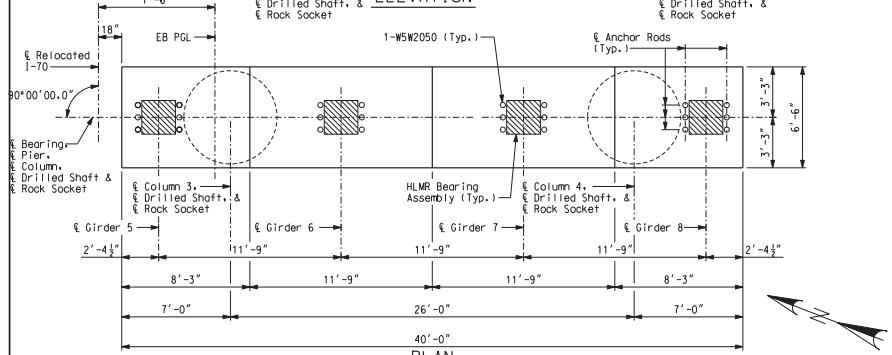

① 5-#4-U2054 @ 6" cts.
② 6-#6-U2050 @ 8" cts. (Double)
③ 6-#6-U2052 @ 8" cts. (Double)
④ 18-#5-P2052 @ 3" cts. (Typ.) ***

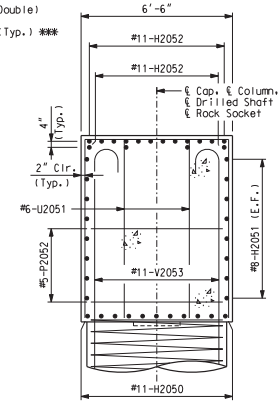

SECTION A-A

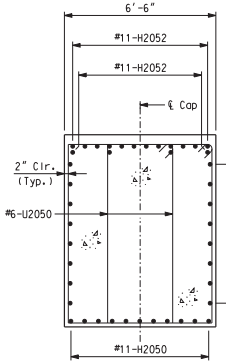

SECTION B-B

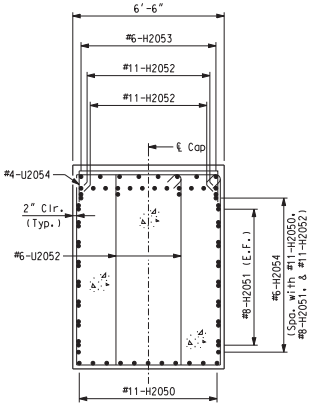

SECTION C-C

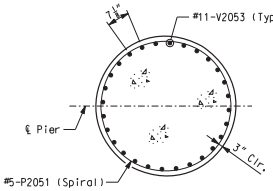

SECTION D-D
(6'-0" Diameter)

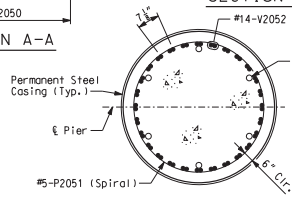

SECTION E-E
(6'-6" Diameter)

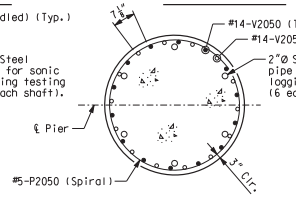

SECTION F-F
(6'-0" Diameter)

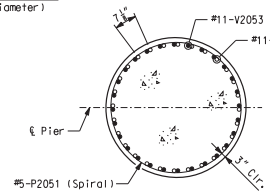

SECTION H-H
(6'-0" Diameter)

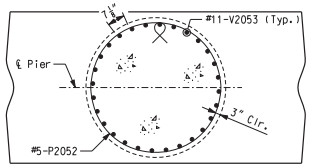

SECTION G-G
(Beam Cap reinforcement not shown)

SUBSTRUCTURE QUANTITY TABLE FOR PIER 20 EB		
Item		Quantity
Class 1 Excavation	cu. yard	10
Drilled Shafts (6 ft. 6 in. Dia.)	linear foot	244.0
Rock Sockets (6 ft. 0 in. Dia.)	linear foot	43.0
Supplementary Television Camera Inspection	each	1
Foundation Inspection Holes	linear foot	63.0
Sonic Logging Testing	each	2
Class B Concrete (Substructure)	cu. yard	234.5
Reinforcing Steel (Bridges)	pound	165,120
Mechanical Bar Splice	each	280
Non-Special Waste Disposal	cu. yard	74.0

Note:
These quantities are included in the estimated quantities table on Sheet No. 7.

Notes:
An additional 4 feet has been added to #5-P2050, #14-V2050 and #14-V2051 lengths for possible change in drilled shaft or rock socket depth. This excess length shall be cut off or included in the reinforcement lap if not required.
Required excavation to the top of the drilled shafts is included in the contract unit price for Class 1 Excavation.
Sonic logging testing shall be performed on all drilled shafts and rock sockets.
All reinforcing bars in the tops of substructure beams or caps shall be spaced to clear anchor rod wells for bearings by at least 1/2".
The hooks of V-Bars embedded in the beam cap shall be oriented inward. Bending the hook outward, away from the column core, is not allowed.
The thickness of steel casing shall meet all the requirements of Sec 701 with minimum thickness being 3/8 inch. Thicker casing may be required for installation.
For details of HLMR Bearing Assembly, see Sheet No. 43.
For Anchor Rod Details and Anchor Rod Setting Plan, see Sheet No. 47.
For details of seismic stirrup bars, see Sheet No. 7.
* Lapping of spiral reinforcement in this region not permitted.
** Continue spiral bars to the bottom of the beam cap stirrup reinforcing bar.
*** Splice locations shall be staggered.
Anchorage of spiral reinforcement shall be provided by 1-1/2 extra turns of spiral bar at each end of spiral unit.
**** Pay Items Rock Socket (6 ft. 0 in. Dia.).
***** Pay Items Drilled Shaft (6 ft. 6 in. Dia.).
For Pier Crashwall Details see Sheet No. 35.
If unsuitable material is encountered, excavation of unsuitable material and furnishing and placing of granular backfill shall be in accordance with Sec 206.

PIER 20 EB

Detailed JUL 2009
Checked JUL 2009

Note: This drawing is not to scale. Follow dimensions.

s:\idot\0906601\draw_idot\cadd_sheets\structural\B_A6500_032-152_J6I0984C_032.dgn

CONTRACT NO. 76D61

F.A. ROUTE	SECTION
999	82-1B-2
FED. AID PROJECT	ILLINOIS
COUNTY	ST. CLAIR

USER NAME = jjolliff
PLOT SCALE = $SCALE$
PLOT DATE = 3/15/2010
DESIGNED - HNTB
CHECKED - CMT
DRAWN - CMT / HTNB
REVISED -
REVISED -
REVISED -
REVISED -

ILLINOIS APPROACH STRUCTURE FOR NEW I-70 MISSISSIPPI RIVER BRIDGE

STATE OF ILLINOIS
DEPARTMENT OF TRANSPORTATION

MISSOURI HIGHWAYS AND TRANSPORTATION COMMISSION

HNTB
715 KIRK DRIVE
KANSAS CITY, MO 64105
TELEPHONE (816) 472-1201
CERTIFICATE OF AUTHORITY NO. 001270

CMT
CRAWFORD, MURPHY & TILLY, INC.
2750 WEST WASHINGTON STREET
SPRINGFIELD, IL 62702
TELEPHONE (217) 787-8050
ENGINEERING CORPORATION - 000631

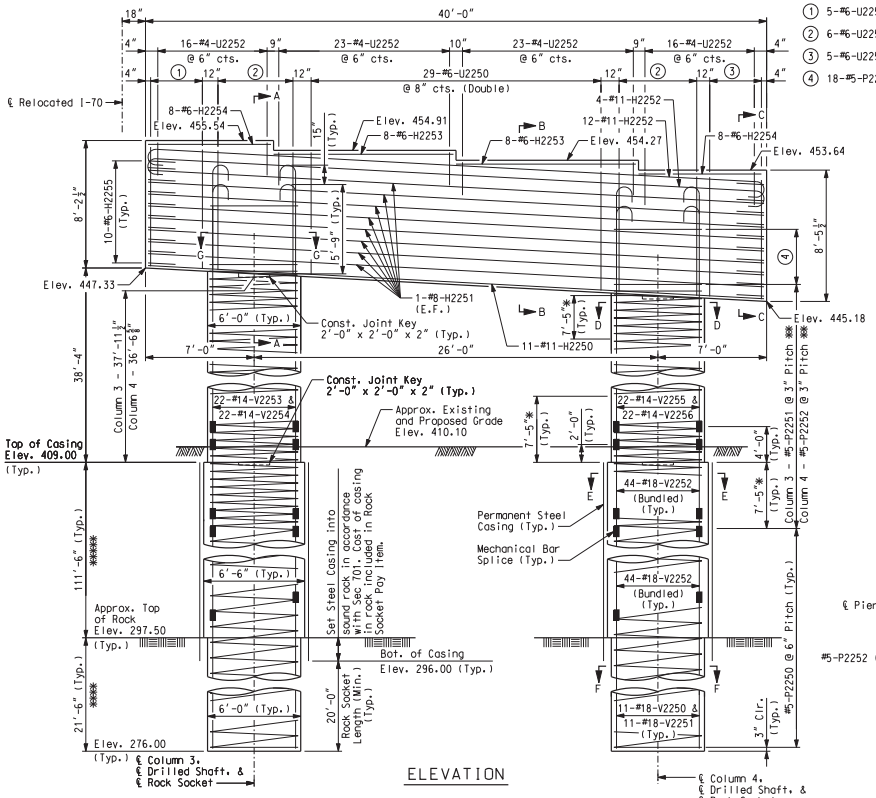

ELEVATION

① 5-#6-U2250 @ 10" cts. (Double)
② 6-#6-U2251 @ 12" cts. (Double)
③ 5-#6-U2250 @ 10" cts. (Double)
④ 18-#5-P2253 @ 3" cts. (Typ.) ***

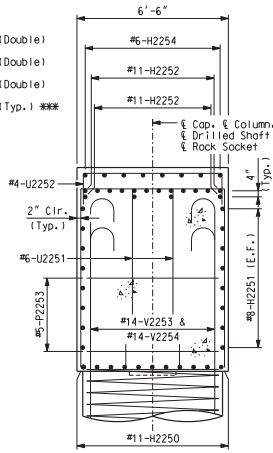

SECTION A-A

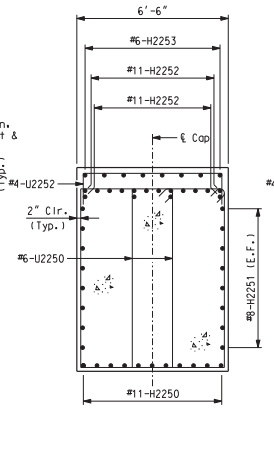

SECTION B-B

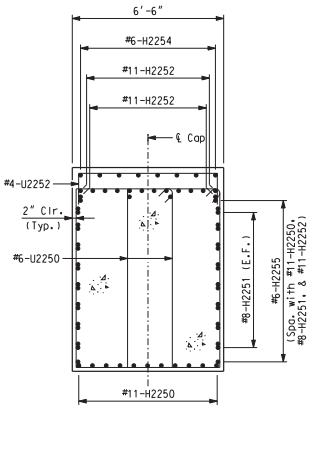

SECTION C-C

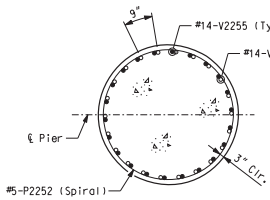

SECTION D-D
(6'-0" Diameter)

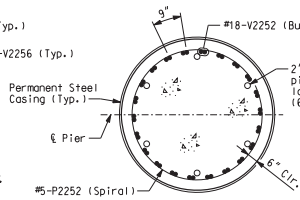

SECTION E-E
(6'-6" Diameter)

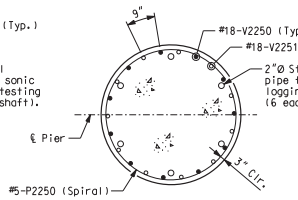

SECTION F-F
(6'-0" Diameter)

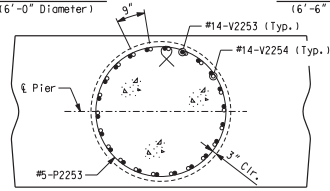

SECTION G-G
(Beam Cap reinforcement not shown)

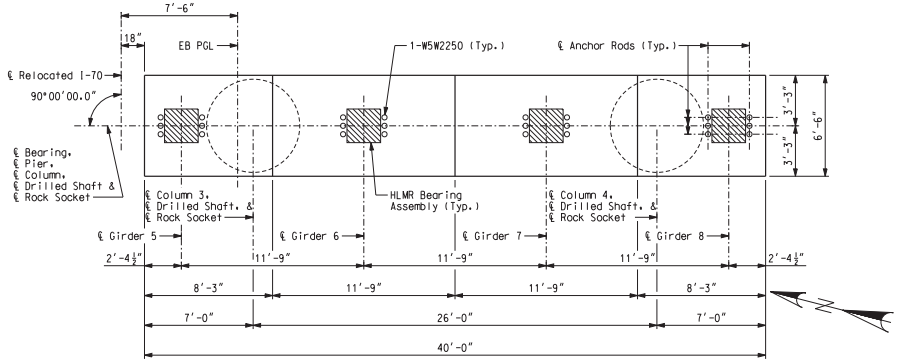

PLAN

Detailed JUL 2009
Checked JUL 2009

Note: This drawing is not to scale. Follow dimensions.

SUBSTRUCTURE QUANTITY TABLE FOR PIER 22 EB

Item		Quantity
Drilled Shafts (6 ft. 6 in. Dia.)	linear foot	223.0
Rock Sockets (6 ft. 0 in. Dia.)	linear foot	43.0
Supplementary Television Camera Inspection	each	1
Foundation Inspection Holes	linear foot	63.0
Sonic Logging Testing	each	2
Class B Concrete (Substructure)	cu. yard	158.3
Reinforcing Steel (Bridges)	pound	207,420
Mechanical Bar Splice	each	220
Non-Special Waste Disposal	cu. yard	26.2

Note:
These quantities are included in the estimated quantities table on Sheet No. 7.

Notes:
An additional 4 feet has been added to #5-P2250, #18-V2250 and #18-V2251 lengths for possible change in drilled shaft or rock socket depth. This excess length shall be cut off or included in the reinforcement lap if not required.
Sonic logging testing shall be performed on all drilled shafts and rock sockets.
All reinforcing bars in the tops of substructure beams or caps shall be spaced to clear anchor rod wells for bearings by at least 1/2".
The hooks of V-Bars embedded in the beam cap shall be oriented inward. Bending the hook outward, away from the column core, is not allowed.
The thickness of steel casing shall meet all the requirements of Sec 701 with minimum thickness being 3/8 inch. Thicker casing may be required for installation.
For details of HLMR Bearing Assembly, see Sheet No. 43.
For Anchor Rod Well Details and Anchor Rod Setting Plan, see Sheet No. 47.
For details of seismic stirrup bars, see Sheet No. 7.
* Lapping of spiral reinforcement in this region not permitted.
** Continue spiral bars to the bottom of the beam cap stirrup reinforcing bar.
*** Splice locations shall be staggered.
Anchorage of spiral reinforcement shall be provided by 1-1/2 extra turns of spiral bar at each end of spiral unit.
**** Pay Items Rock Socket (6 ft. 0 in. Dia.).
***** Pay Items Drilled Shaft (6 ft. 6 in. Dia.).

PIER 22 EB

Sheet No. 37 of 152

CONTRACT NO. 76D61

F.A. ROUTE	SECTION
999	82-1B-2
FED. AID PROJECT	ILLINOIS
COUNTY	ST. CLAIR

USER NAME = jjolliff
PLOT SCALE = $SCALE$
PLOT DATE = 3/15/2010
DESIGNED - HNTB
CHECKED - CMT
DRAWN - CMT / HTNB
REVISED -
REVISED -
REVISED -
REVISED -

ILLINOIS APPROACH STRUCTURE FOR NEW I-70 MISSISSIPPI RIVER BRIDGE

STATE OF ILLINOIS
DEPARTMENT OF TRANSPORTATION

MISSOURI HIGHWAYS AND TRANSPORTATION COMMISSION

HNTB
715 KIRK DRIVE
KANSAS CITY, MO 64105
TELEPHONE (816) 472-1201
CERTIFICATE OF AUTHORITY NO. 001270

CMT
CRAWFORD, MURPHY & TILLY, INC.
2750 WEST WASHINGTON STREET
SPRINGFIELD, IL 62702
TELEPHONE (217) 787-8050
ENGINEERING CORPORATION - 000631

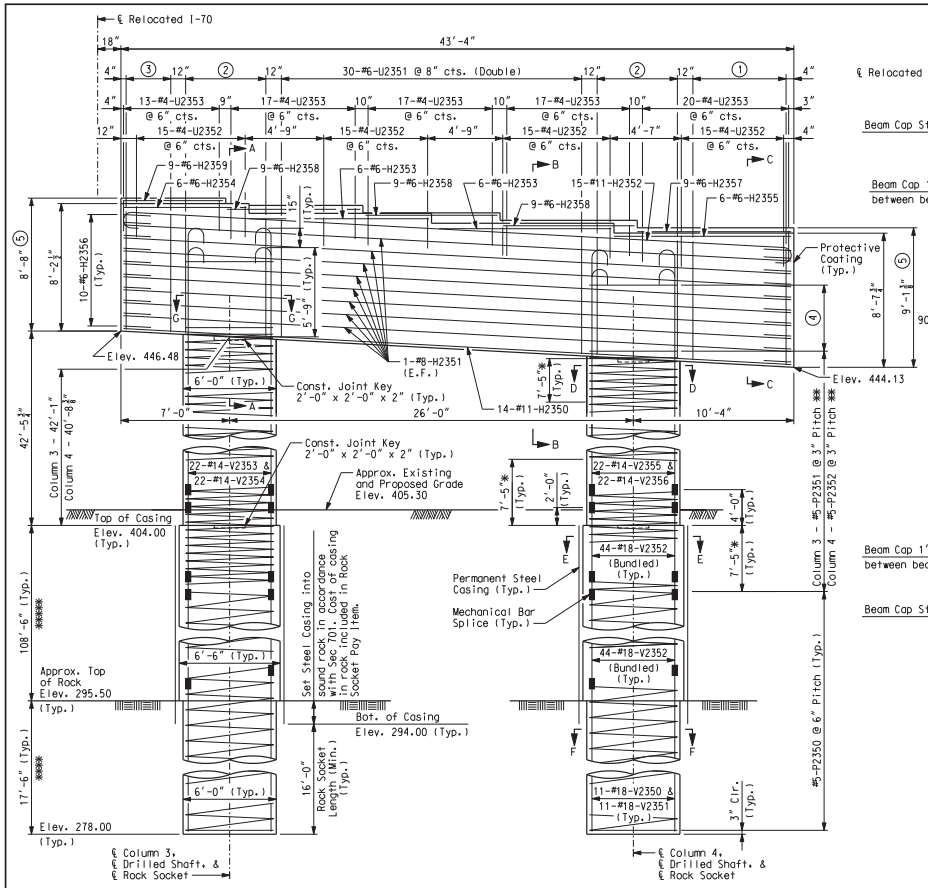

ELEVATION

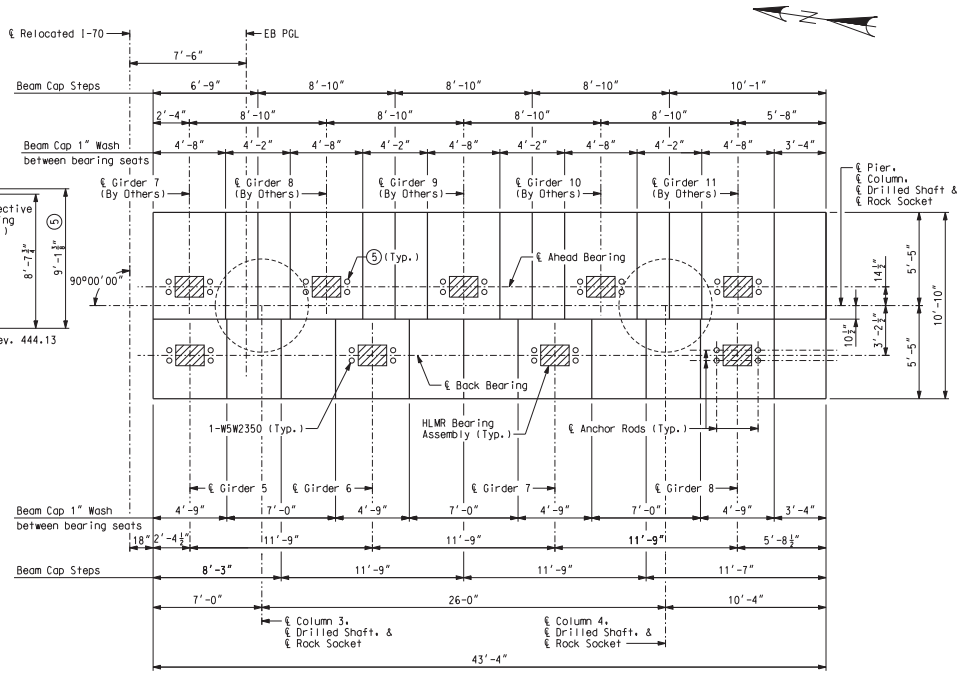

PLAN

GIRDER SEAT ELEVATIONS							
Girder No.	5	6	7	8	9	10	11
⑤ Ahead Bearing	-	-	455.15	454.68	454.20	453.72	453.24
Back Bearing	454.69	454.05	453.42	452.78	-	-	-

① 10-#6-U2351 @ abt.9" cts. (Double)

② 6-#6-U2350 @ 12" cts. (Double)

③ 5-#6-U2351 @ 9" cts. (Double)

④ 18-#5-P2353 @ 3" cts. (Typ.) ***

⑤ Ahead bearing seat elevations, anchor rod setting plan, spiral reinforcing, and dimensions indicated are subject to change under separate IDOT contract (By Others). Contractor shall coordinate with IDOT to obtain final ahead bearing details prior to construction.

Notes:

An additional 4 feet has been added to #5-P2350, #18-V2350 and #18-V2351 lengths for possible change in drilled shaft or rock socket depth. This excess length shall be cut off or included in the reinforcement lap if not required.

Sonic logging testing shall be performed on all drilled shafts and rock sockets.

All reinforcing bars in the tops of substructure beams or caps shall be spaced to clear anchor rod wells for bearings by at least 1/2".

The hooks of V-Bars embedded in the beam cap shall be oriented inward. Bending the hook outward, away from the column core, is not allowed.

The thickness of steel casing shall meet all the requirements of Sec 701 with minimum thickness being 3/8 inch. Thicker casing may be required for installation.

For details of HLMR Bearing Assembly, see Sheet No. 42.

For Anchor Rod Well Details and Back Bearing Anchor Rod Setting Plan, see Sheet No. 47.

For details of seismic stirrup bars, see Sheet No. 7.

* Lapping of spiral reinforcement in this region not permitted.

** Continue spiral bars to the bottom of the beam cap stirrup reinforcing bar.

*** Splice locations shall be staggered.

Anchorage of spiral reinforcement shall be provided by 1-1/2 extra turns of spiral bar at each end of spiral unit.

**** Pay Items Rock Socket (6 ft. 0 in. Dia.).

***** Pay Items Drilled Shaft (6 ft. 6 in. Dia.).

For Sections A-A, B-B, C-C, D-D, E-E, F-F, G-G, and Substructure Quantity Table, see Sheet No. 41.

PIER 23 EB

Detailed JUL 2009
Checked JUL 2009

Note: This drawing is not to scale. Follow dimensions.

s:\idot\0906601\draw_idot\cadd_sheets\structural\B_A6500_040-152_J6I0984C_040.dgn

CONTRACT NO. 76D61

F.A. ROUTE	SECTION
999	82-1B-2
FED. AID PROJECT	ILLINOIS
COUNTY	ST. CLAIR

USER NAME = jjolliff
PLOT SCALE = $SCALE$
PLOT DATE = 3/15/2010
DESIGNED - HNTB
CHECKED - CMT
DRAWN - CMT / HTNB
REVISED -
REVISED -
REVISED -
REVISED -

ILLINOIS APPROACH STRUCTURE FOR NEW I-70 MISSISSIPPI RIVER BRIDGE

STATE OF ILLINOIS
DEPARTMENT OF TRANSPORTATION

MISSOURI HIGHWAYS AND TRANSPORTATION COMMISSION

HNTB
715 KIRK DRIVE
KANSAS CITY, MO 64105
TELEPHONE (816) 472-1201
CERTIFICATE OF AUTHORITY NO. 001270

CMT
CRAWFORD, MURPHY & TILLY, INC.
2750 WEST WASHINGTON STREET
SPRINGFIELD, IL 62702
TELEPHONE (217) 787-8050
ENGINEERING CORPORATION - 000631

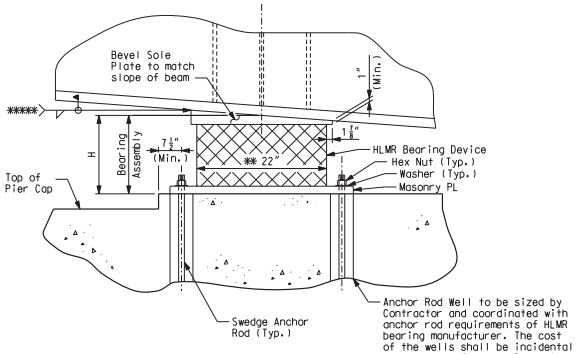

ELEVATION

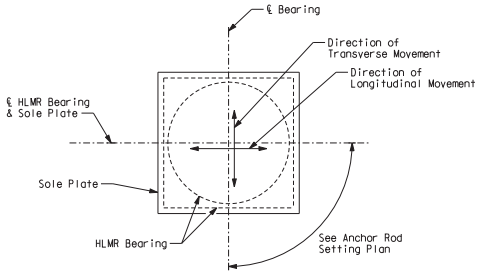

BEARING PLAN

BEARING DATA TABLE

Location				Pier 13	Pier 17	Pier 23
Fix/Exp.				Guided	Guided	Guided
Quantity. Required				8	16	8
Design load (kip)	Service limit state	Vertical	max.	347	384	410
			perm.	164	184	193
			min.	164	184	193
		Transverse		10	11	18
		Longitudinal		15	15	15
	Strength limit state	Vertical		570	617	664
		Transverse		32	36	34
		Longitudinal		20	20	20
	Extreme Event limit state	Vertical		255	275	297
		Transverse		105	74	67
		Longitudinal		32	34	37
Rotation (rad.)	Strength limit state	Transverse		0	0	0
		Longitudinal		0.014	0.020	0.020
*** One Way Longit. Movement (inch)				12	15	15
(G) Guide Clearance (inch)				¼	¼	¼
Masonry Plate	Lm					
	Wm					
	Tm					
Auxiliary Plate	La			0	0	0
	Wa			0	0	0
	Ta			0	0	0
Sole Plate	Ls					
	Ws					
	T1					
	T2					
Bearing H (inch)				8 *	8 *	8 *
Anchor Rods	d			1¼	1¼	1¼
	Rods / Brg.			4	4	4
Weld Size	W1					
	W2					

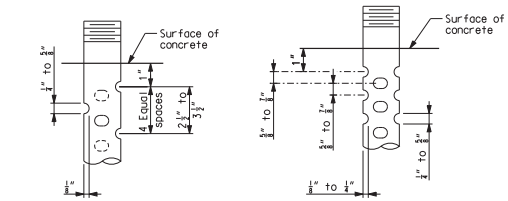

DETAIL OF 3/4"Ø THRU 2 1/2"Ø ANCHOR RODS

OPTIONAL DETAIL OF 1 3/8"Ø THRU 2 1/2"Ø ANCHOR RODS

SWEDGE ANCHOR ROD DETAILS

Notes:

T2 is upstation of T1.

* Maximum vertical dimension of the complete bearing. If the actual bearing dimension differs, adjustments shall be made in the thickness of the sole plate, masonry plate and concrete pad as needed by the contractor at no additional cost to the owner. Contractor shall submit proposed method of adjustment to Engineer for approval.

** Estimated horizontal dimension of the bearing device. If the actual dimension differs, adjust the size of the sole plate and masonry plate as needed by the contractor at no additional cost to the owner.

*** One Way Longitudinal Movement is the maximum one way movement (expansion or contraction) of the superstructure when bearings are set at 60 degrees F plus 1" tolerance.

**** At the contractor's option the anchor bolt wells may be omitted, and in lieu thereof, holes drilled into the substructure. The anchor bolt holes shall be drilled in the exact location shown, to the required depth and perpendicular to the plane of the bridge seat. The drilled holes shall be no smaller than the diameter of the holes in the steel bearing plates or castings. The contractor shall not interfere with the beam cap reinforcing steel in any manner. The reinforcing steel shall not be cut or lanced in the event that the drilling for anchor rods interferes with the bars. When the anchor bolts are set in holes or wells, the hole or well shall be clean and dry prior to grouting with an expansive mortar in accordance with Sec 1066. Excess mortar forced out of holes shall be removed.

***** The bearing device, sole plate and masonry plate shall be assembled in the shop. If the bearing assembly is field welded to the bottom flange of the steel girder, the welds shall be designed by the contractor in coordination with the bearing manufacturer for the load capacities indicated in the Bearing Data Table. The temperature of the steel adjacent to the elastomer shall be kept below 250°F. All field welding shall be in accordance with Sec 712.6. A bolted connection (designed by the contractor's Illinois licensed structural engineer) may be used in lieu of a field welded connection.

Indicates parts designed by the manufacturer.

Notes:

The bearing design shall conform to the provisions of AASHTO LRFD Bridge Design Specifications, 4th. ed. with 2008 Interims.

The contractor, in coordination with the bearing manufacturer, shall be responsible for sizing the sole plate and masonry plate, weld sizes and lengths and determining the size, number, embedment and location of anchor rods based on the load and movement capacities, indicated in the Bearing Data Table.

The contractor shall submit calculations sealed by a licensed structural engineer, registered in the State of Illinois, indicating conformance with design load and material criteria in the contract documents.

The dimension "H" in the Bearing Data Table represents the assumed total height of bearing mechanism between the sole plate and masonry plate used by the designer to establish the pedestal elevations.

The bearings shall be manufactured HLMR bearings, designed for the load and movement capacities indicated in the Bearing Data Table.

All expansion Bearings shall be guided and shall have a maximum friction coefficient of 3%.

Steel for bearings except for sole plate and masonry plates shall be ASTM A709 Grade 50W and shall be galvanized in accordance with Sec 1080.. Steel for sole plate and masonry plates shall be ASTM A709 Grade 50W. The anchor rods and welds shall have corrosion resistance and weathering characteristics compatible with the base material.

Anchor rods shall conform to ASTM F1554 Grade 55. The anchor rods shall be swedge-type, shall have a minimum diameter of 1 1/4 inches and extend a minimum of 12 inches into the concrete. Hex or Heavy Hex nuts for anchor rods shall conform to AASHTO M291 (ASTM A563) Grade C3 or DH3. Swedging shall be 1-inch less than the extension into the concrete.

Anchor rods shall be installed using a hardened steel washer at each exposed location.

Washers shall conform to ASTM F436, Type 3.

Certified mill test reports, conforming to the requirements of the specifications, for the metals of the bearing device, sole plate, masonry plate and anchor rods (including nuts and washers) shall be submitted.

The masonry plate shall be prepared per the specifications and shop-coated with one coat of inorganic zinc primer (5 mils minimum).

The sole plate shall be prepared per the specifications and shop-coated with two coats of inorganic zinc primer (5 mils minimum).

After installation of the bearings, any uncoated or damaged surfaces of the masonry and sole plates shall be prepared in accordance with the specifications and field-coated with inorganic zinc primer (5 mils minimum)

After installation of the bearings and field-applied prime coats, the surfaces of the masonry and sole plates shall be field-coated with System H intermediate and finish coat.

All bearings shall be marked prior to shipping. The marks shall include the bearing location on the bridge and a direction arrow that points up-station. All marks shall be permanent and be visible after the bearing is installed.

The bearing device, sole plate, masonry plate, anchor rods, washers, anchor rod wells and any other appurtenances included in the fabrication and installation of the bearing device shall be incidental to the pay item "POT Bearing".

Whenever jacking of the Superstructure is needed to reset the bearings, the contractor shall submit a jacking sequence for approval.

DETAILS OF HIGH LOAD MULTI-ROTATIONAL BEARING ASSEMBLY - UNI-DIRECTIONAL EXPANSION

CONTRACT NO. 76D61

F.A. ROUTE	SECTION
999	82-1B-2
FED. AID PROJECT	ILLINOIS
COUNTY	ST. CLAIR

USER NAME = jjolliff
PLOT SCALE = $SCALE$
PLOT DATE = 3/15/2010

DESIGNED - HNTB
CHECKED - CMT
DRAWN - CMT / HTNB
REVISED -
REVISED -
REVISED -
REVISED -

ILLINOIS APPROACH STRUCTURE FOR NEW I-70 MISSISSIPPI RIVER BRIDGE

STATE OF ILLINOIS
DEPARTMENT OF TRANSPORTATION

MISSOURI HIGHWAYS AND TRANSPORTATION COMMISSION

HNTB
715 KIRK DRIVE
KANSAS CITY, MO 64105
TELEPHONE (816) 472-1201
CERTIFICATE OF AUTHORITY NO. 001270

CMT
CRAWFORD, MURPHY & TILLY, INC.
2750 WEST WASHINGTON STREET
SPRINGFIELD, IL 62702
TELEPHONE (217) 787-8050
ENGINEERING CORPORATION - 000631

Detailed JUL 2009
Checked JUL 2009

Note: This drawing is not to scale. Follow dimensions.

s:\idot\0906601\draw_idot\cadd_sheets\structural\B_A6500_042-152_J6I0984C_042.dgn

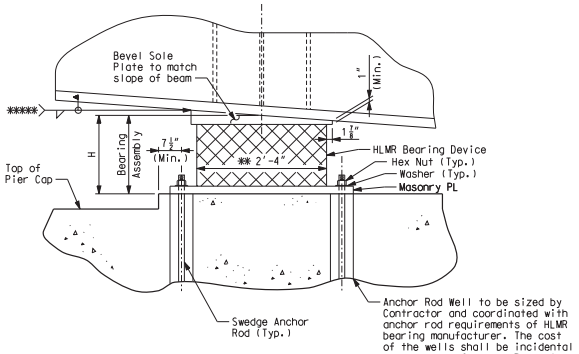

ELEVATION

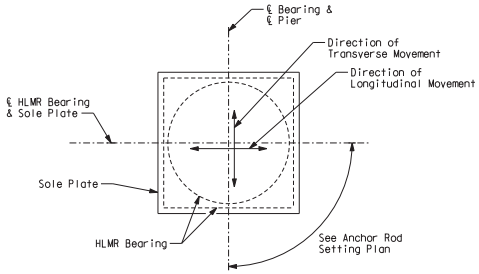

BEARING PLAN

BEARING DATA TABLE

Location				Piers 14-16	Piers 18-22
Fix/Exp.				Fixed	Fixed
Quantity Required				24	40
Design load (kip)	Service limit state	Vertical	max.	1191	1268
			perm.	812	861
			min.	812	861
		Transverse		31	32
		Longitudinal		48	97
	Strength limit state	Vertical		1871	1980
		Transverse		100	97
		Longitudinal		66	124
	Extreme Event limit state	Vertical		1148	1300
		Transverse		279	341
		Longitudinal		114	234
Rotation (rad.)	Strength limit state	Transverse		0.00	0.00
		Longitudinal		0.02	0.02
*** One Way Longit. Movement (inch)				0	0
(G) Guide Clearance (inch)				0	0
Masonry Plate	Lm				
	Wm				
	Tm				
Auxiliary Plate	La			0	0
	Wa			0	0
	Ta			0	0
Sole Plate	Ls				
	Ws				
	T1				
	T2				
Bearing H (inch)				10 *	10 *
Anchor Rods	d			2	2
	Rods / Brg.			6	6
Weld Size	W1				
	W2				

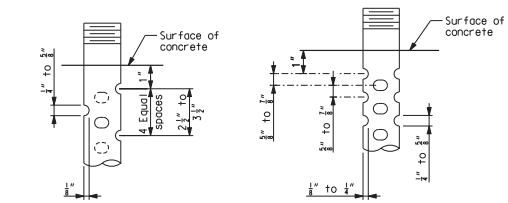

DETAIL OF 3/4"Ø THRU 2 1/2"Ø ANCHOR RODS

OPTIONAL DETAIL OF 1 3/8"Ø THRU 2 1/2"Ø ANCHOR RODS

SWEDGE ANCHOR ROD DETAILS

Notes:

T2 is upstation of T1.

* Maximum vertical dimension of the complete bearing. If the actual bearing dimension differs, adjustments shall be made in the thickness of the sole plate, masonry plate and concrete pad as needed by the contractor at no additional cost to the owner. Contractor shall submit proposed method of adjustment to Engineer for approval.

** Estimated horizontal dimension of the bearing device. If the actual dimension differs, adjust the size of the sole plate, weld sizes and lengths and masonry plate as needed by the contractor at no additional cost to the owner.

*** One Way Longitudinal Movement is the maximum one way movement (expansion or contraction) of the superstructure when bearings are set at 60 degrees F plus 1" tolerance.

**** At the contractor's option the anchor bolt wells may be omitted, and in lieu thereof, holes drilled into the substructure. The anchor bolt holes shall be drilled in the exact location shown, to the required depth and perpendicular to the plane of the bridge seat. The drilled holes shall be no smaller than the diameter of the holes in the steel bearing plates or castings. The contractor shall not interfere with the beam cap reinforcing steel in any manner. The reinforcing steel shall not be cut or lanced in the event that the drilling for anchor rods interferes with the bars. When the anchor bolts are set in holes or wells, the hole or well shall be clean and dry prior to grouting with an expansive mortar in accordance with Sec 1066. Excess mortar forced out of holes shall be removed.

***** The bearing device, sole plate and masonry plate shall be assembled in the shop. If the bearing assembly is field welded to the bottom flange of the steel girder, the welds shall be designed by the contractor in coordination with the bearing manufacturer for the load capacities indicated in the Bearing Data Table. The temperature of the steel adjacent to the elastomer shall be kept below 250°F. All field welding shall be in accordance with Sec 712.6. A bolted connection (designed by the contractor's Illinois licensed structural engineer) may be used in lieu of a field welded connection.

Indicates parts designed by the manufacturer.

Notes:

The bearing design shall conform to the provisions of AASHTO LRFD Bridge Design Specifications, 4th. ed. with 2008 Interims.

The contractor, in coordination with the bearing manufacturer, shall be responsible for sizing the sole plate and masonry plate, weld sizes and lengths and determining the size, number, embedment and location of anchor rods based on the load and movement capacities, indicated in the Bearing Data Table.

The contractor shall submit calculations sealed by a licensed structural engineer, registered in the State of Illinois, indicating conformance with design load and material criteria in the contract documents.

The dimension "H" in the Bearing Data Table represents the assumed total height of bearing mechanism between the sole plate and masonry plate used by the designer to establish the pedestal elevations.

The bearings shall be manufactured HLMR bearings, designed for the load and movement capacities indicated in the Bearing Data Table.

Steel for bearings except for sole plate and masonry plates shall be ASTM A709 Grade 50W and shall be galvanized in accordance with Sec 1080. Steel for sole plate and masonry plates shall be ASTM A709 Grade 50W. The anchor rods and welds shall have corrosion resistance and weathering characteristics compatible with the base material.

Anchor rods shall conform to ASTM F1554 Grade 55. The anchor rods shall be swedge-type, shall have a minimum diameter of 2 inches and extend a minimum of 18 inches into the concrete. Hex or Heavy Hex nuts for anchor rods shall conform to AASHTO M291 (ASTM A563) Grade C3 or DH3. Swedging shall be 1-inch less than the extension into the concrete.

Anchor rods shall be installed using a hardened steel washer at each exposed location.

Washers shall conform to ASTM F436, Type 3.

Certified mill test reports, conforming to the requirements of the specifications, for the metals of the bearing device, sole plate, masonry plate and anchor rods (including nuts and washers) shall be submitted.

The masonry plate shall be prepared per the specifications and shop-coated with one coat of inorganic zinc primer (5 mils minimum).

The sole plate shall be prepared per the specifications and shop-coated with two coats of inorganic zinc primer (5 mils minimum).

After installation of the bearings, any uncoated or damaged surfaces of the masonry and sole plates shall be prepared in accordance with the specifications and field-coated with inorganic zinc primer (5 mils minimum)

After installation of the bearings and field-applied prime coats, the surfaces of the masonry and sole plates shall be field-coated with System H intermediate and finish coat.

All bearings shall be marked prior to shipping. The marks shall include the bearing location on the bridge and a direction arrow that points up-station. All marks shall be permanent and be visible after the bearing is installed.

The bearing device, sole plate, masonry plate, anchor rods, washers, anchor rod wells and any other appurtenances included in the fabrication and installation of the bearing device shall be incidental to the pay item "POT Bearing".

Whenever jacking of the Superstructure is needed to reset the bearings, the contractor shall submit a jacking sequence for approval.

DETAILS OF HIGH LOAD MULTI-ROTATIONAL BEARING ASSEMBLY - FIXED

CONTRACT NO. 76D61

F.A. ROUTE	SECTION
999	82-1B-2
FED. AID PROJECT	ILLINOIS
COUNTY	ST. CLAIR

USER NAME = jjollrf
PLOT SCALE = $SCALE$
PLOT DATE = 3/15/2010

DESIGNED - HNTB
CHECKED - CMT
DRAWN - CMT / HTNB
REVISED -
REVISED -
REVISED -
REVISED -

ILLINOIS APPROACH STRUCTURE FOR NEW I-70 MISSISSIPPI RIVER BRIDGE

STATE OF ILLINOIS
DEPARTMENT OF TRANSPORTATION

MISSOURI HIGHWAYS AND TRANSPORTATION COMMISSION

HNTB
715 KIRK DRIVE
KANSAS CITY, MO 64105
TELEPHONE (816) 472-1201
CERTIFICATE OF AUTHORITY NO. 001270

CMT
CRAWFORD, MURPHY & TILLY, INC.
2750 WEST WASHINGTON STREET
SPRINGFIELD, IL 62702
TELEPHONE (217) 787-8050
ENGINEERING CORPORATION - 000631

Detailed JUL 2009
Checked JUL 2009

Note: This drawing is not to scale. Follow dimensions.

s:\idot\0906601\draw_idot\cadd_sheets\structural\B_A6500_043-152_J6I0984C_043.dgn

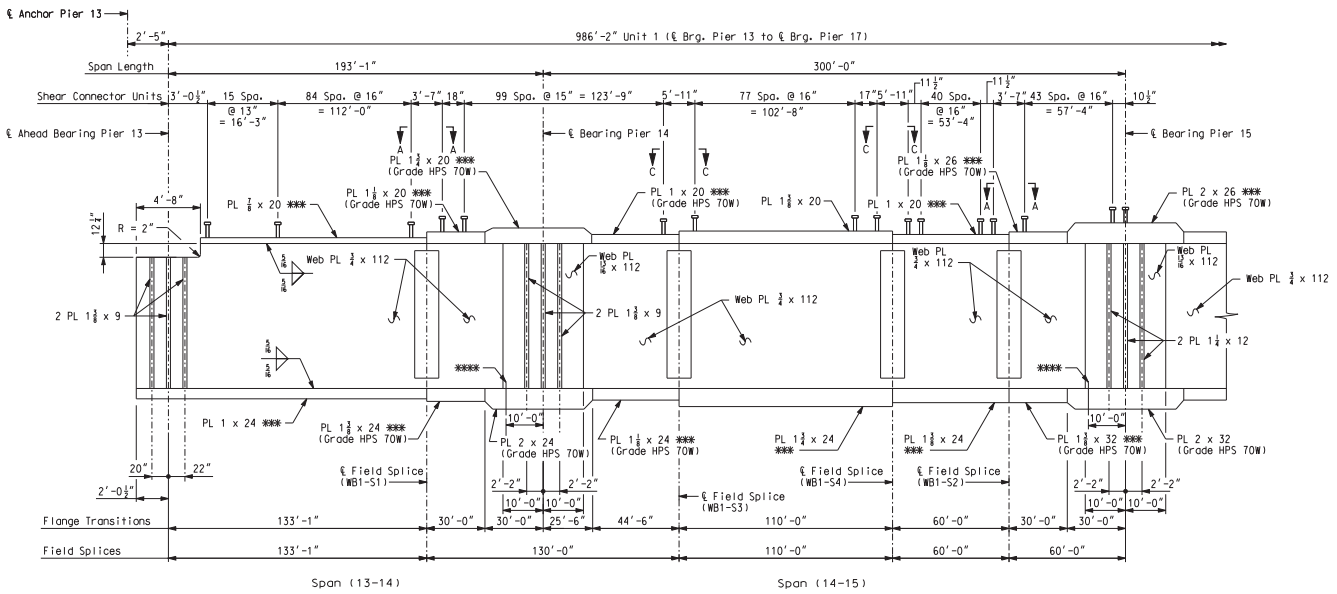

GIRDER ELEVATION
Spans (13-14) & (14-15)

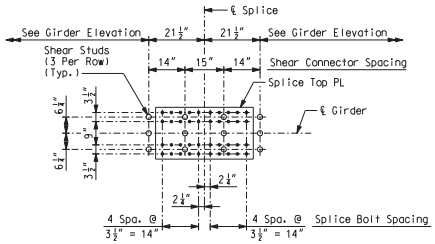

SPLICE PLATE PLAN VIEW A-A
(Field Splice Detail with Shear Studs)

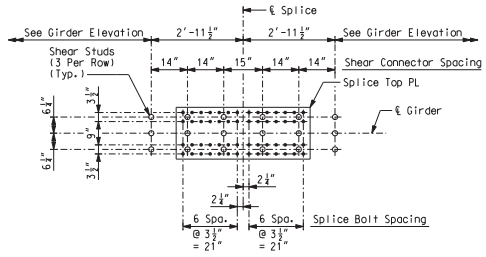

SPLICE PLATE PLAN VIEW C-C
(Field Splice Detail with Shear Studs)

Notes:
Plate girders shall be fabricated to be in accordance with the camber diagram shown on Sheet No. 66.
*** Indicates flange plates subject to notch toughness requirements. All web plates shall be subject to notch toughness requirements. All flange and web splice plates except fill plates shall be subject to notch toughness requirements.
Fabricated structural steel shall be ASTM A709 Grade 50W, except as noted.
Longitudinal dimensions are horizontal from ℄ bearing to ℄ bearing.
For Framing Plan, see Sheet No. 48.
For location of slab drain attachment holes, see slab drain details on Sheet Nos. 127 thru 130.
For detail of expansion device stiffener at Pier 13, see Sheet No. 88.
**** Drip plate, girder 1 only. See Sheet No. 88 for details.
For details of shear connectors, see Sheet No. 88.

CONTRACT NO. 76D61

F.A. ROUTE	SECTION
999	82-1B-2
FED. AID PROJECT	ILLINOIS
COUNTY	ST. CLAIR

USER NAME = jjolliff
PLOT SCALE = $SCALE$
PLOT DATE = 3/15/2010
DESIGNED - HNTB
CHECKED - CMT
DRAWN - CMT / HTNB
REVISED -
REVISED -
REVISED -
REVISED -

ILLINOIS APPROACH STRUCTURE FOR NEW I-70 MISSISSIPPI RIVER BRIDGE

STATE OF ILLINOIS
DEPARTMENT OF TRANSPORTATION

MISSOURI HIGHWAYS AND TRANSPORTATION COMMISSION

HNTB
715 KIRK DRIVE
KANSAS CITY, MO 64105
TELEPHONE (816) 472-1201
CERTIFICATE OF AUTHORITY NO. 001270

CMT
CRAWFORD, MURPHY & TILLY, INC.
2750 WEST WASHINGTON STREET
SPRINGFIELD, IL 62702
TELEPHONE (217) 787-8050
ENGINEERING CORPORATION - 000631

GIRDER ELEVATION WB - UNIT 1 (1 OF 2)

Detailed JUL 2009
Checked JUL 2009

Note: This drawing is not to scale. Follow dimensions.

s:\idot\0906601\draw_idot\cadd_sheets\structural\B_A6500_054-152_J6I0984C_054.dgn

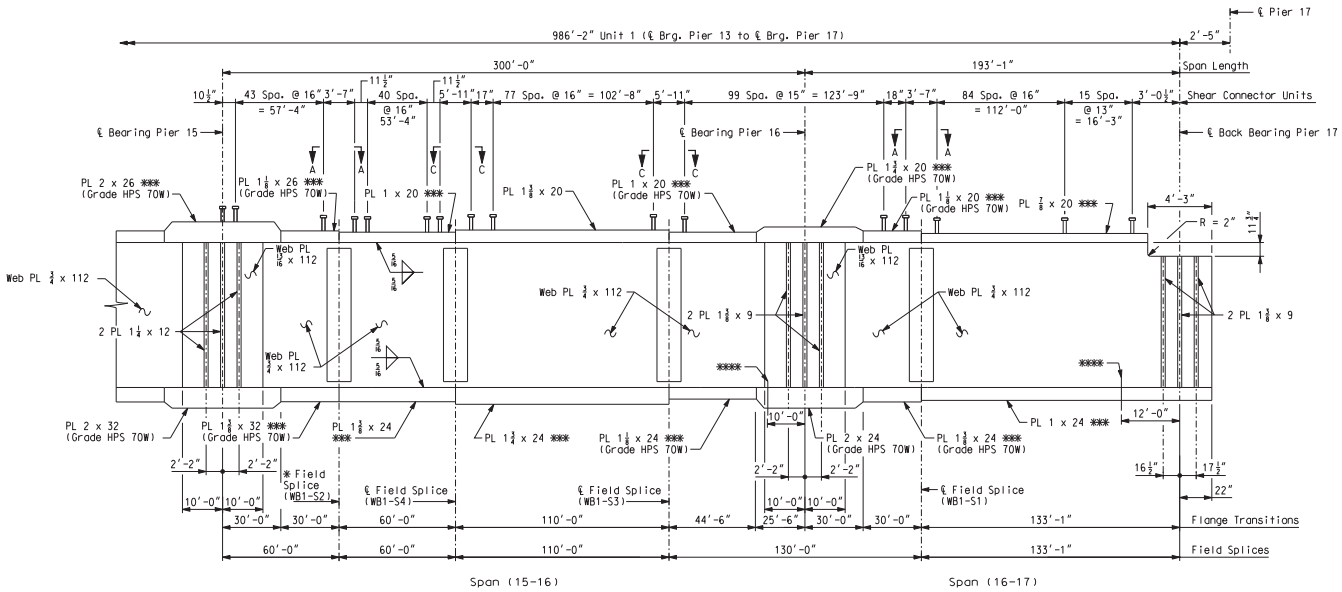

GIRDER ELEVATION
Spans (15-16) & (16-17)

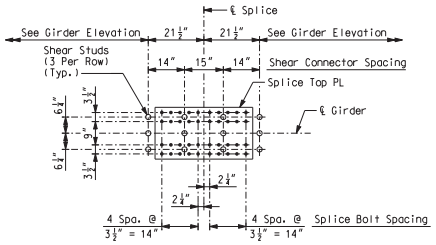

SPLICE PLATE PLAN VIEW A-A
(Field Splice Detail with Shear Studs)

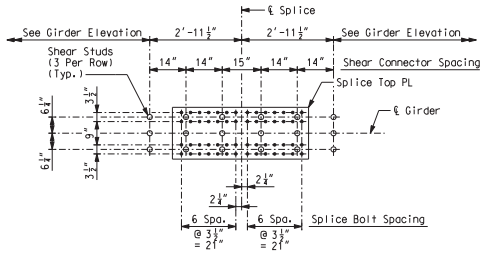

SPLICE PLATE PLAN VIEW C-C
(Field Splice Detail with Shear Studs)

Notes:
Plate girders shall be fabricated to be in accordance with the camber diagram shown on Sheet No. 67.
*** Indicates flange plates subject to notch toughness requirements. All web plates shall be subject to notch toughness requirements. All flange and web splice plates except fill plates shall be subject to notch toughness requirements.
Fabricated structural steel shall be ASTM A709 Grade 50W, except as noted.
Longitudinal dimensions are horizontal from ℄ bearing to ℄ bearing.
For Framing Plan, see Sheet No. 48.
For location of slab drain attachment holes, see slab drain details on Sheet Nos. 127 thru 130.
For detail of expansion device stiffener at Pier 17, see Sheet No. 88.
**** Drip plate, girder 1 only. See Sheet No. 88 for details.
For details of shear connectors, see Sheet No. 88.

CONTRACT NO. 76D61

F.A. ROUTE	SECTION
999	82-1B-2
FED. AID PROJECT	ILLINOIS
COUNTY	ST. CLAIR

USER NAME = jjolliff
PLOT SCALE = $SCALE$
PLOT DATE = 3/15/2010
DESIGNED - HNTB
CHECKED - CMT
DRAWN - CMT / HTNB
REVISED -
REVISED -
REVISED -
REVISED -

ILLINOIS APPROACH STRUCTURE FOR NEW I-70 MISSISSIPPI RIVER BRIDGE

STATE OF ILLINOIS
DEPARTMENT OF TRANSPORTATION

MISSOURI HIGHWAYS AND TRANSPORTATION COMMISSION

HNTB
715 KIRK DRIVE
KANSAS CITY, MO 64105
TELEPHONE (816) 472-1201
CERTIFICATE OF AUTHORITY NO. 001270

CMT
CRAWFORD, MURPHY & TILLY, INC.
2750 WEST WASHINGTON STREET
SPRINGFIELD, IL 62702
TELEPHONE (217) 787-8050
ENGINEERING CORPORATION - 000631

GIRDER ELEVATION WB - UNIT 1 (2 OF 2)

Detailed JUL 2009
Checked JUL 2009

Note: This drawing is not to scale. Follow dimensions.

s:\idot\0906601\draw_idot\cadd_sheets\structural\B_A6500_055-152_J6I0984C_055.dgn

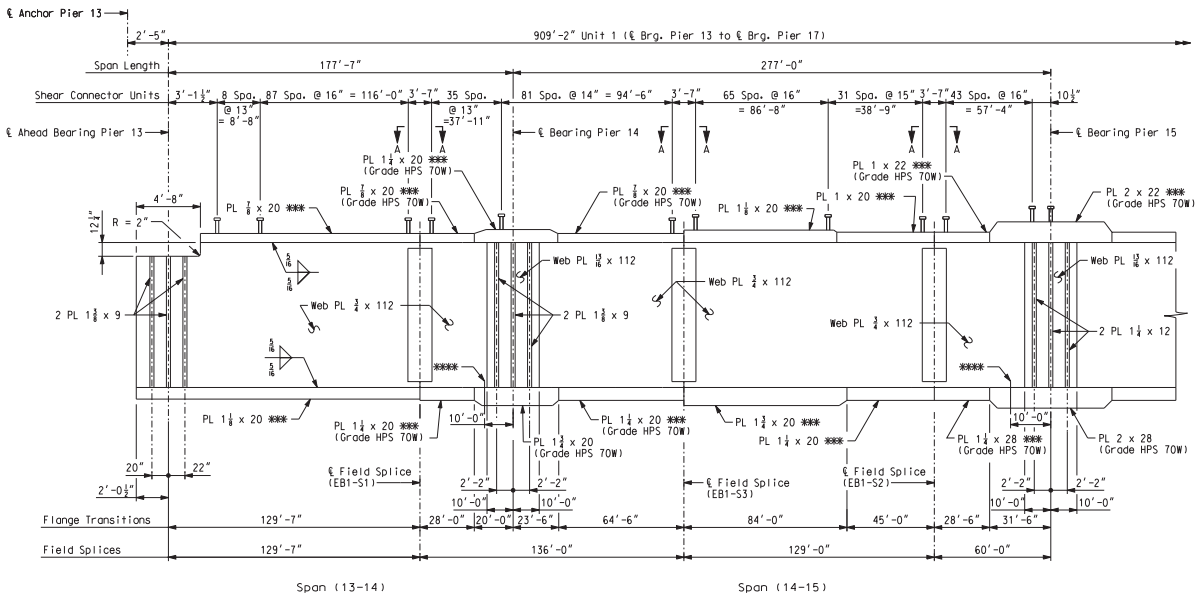

GIRDER ELEVATION
Spans (13-14) & (14-15)

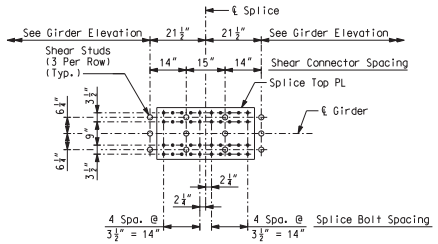

SPLICE PLATE PLAN VIEW A-A
(Field Splice Detail with Shear Studs)

Notes:
Plate girders shall be fabricated to be in accordance with the camber diagram shown on Sheet No. 68.
*** Indicates flange plates subject to notch toughness requirements.
All web plates shall be subject to notch toughness requirements.
All flange and web splice plates except fill plates shall be subject to notch toughness requirements.
Fabricated structural steel shall be ASTM A709 Grade 50W, except as noted.
Longitudinal dimensions are horizontal from ℄ bearing to ℄ bearing.
For Framing Plan, see Sheet No. 49.
For location of slab drain attachment holes, see slab drain details on Sheet Nos. 127 thru 130.
For detail of expansion device stiffener at Pier 13, see Sheet No. 88.
**** Drip plate, girder 8 only. See Sheet No. 88 for details.
For details of shear connectors, see Sheet No. 88.

CONTRACT NO. 76D61

F.A. ROUTE	SECTION
999	82-1B-2
FED. AID PROJECT	ILLINOIS
COUNTY	ST. CLAIR

USER NAME = jjolliff
PLOT SCALE = $SCALE$
PLOT DATE = 3/15/2010
DESIGNED - HNTB
CHECKED - CMT
DRAWN - CMT / HTNB
REVISED -
REVISED -
REVISED -
REVISED -

ILLINOIS APPROACH STRUCTURE FOR NEW I-70 MISSISSIPPI RIVER BRIDGE

STATE OF ILLINOIS
DEPARTMENT OF TRANSPORTATION

MISSOURI HIGHWAYS AND TRANSPORTATION COMMISSION

HNTB
715 KIRK DRIVE
KANSAS CITY, MO 64105
TELEPHONE (816) 472-1201
CERTIFICATE OF AUTHORITY NO. 001270

CMT
CRAWFORD, MURPHY & TILLY, INC.
2750 WEST WASHINGTON STREET
SPRINGFIELD, IL 62702
TELEPHONE (217) 787-8050
ENGINEERING CORPORATION - 000631

GIRDER ELEVATION EB - UNIT 1 (1 OF 2)

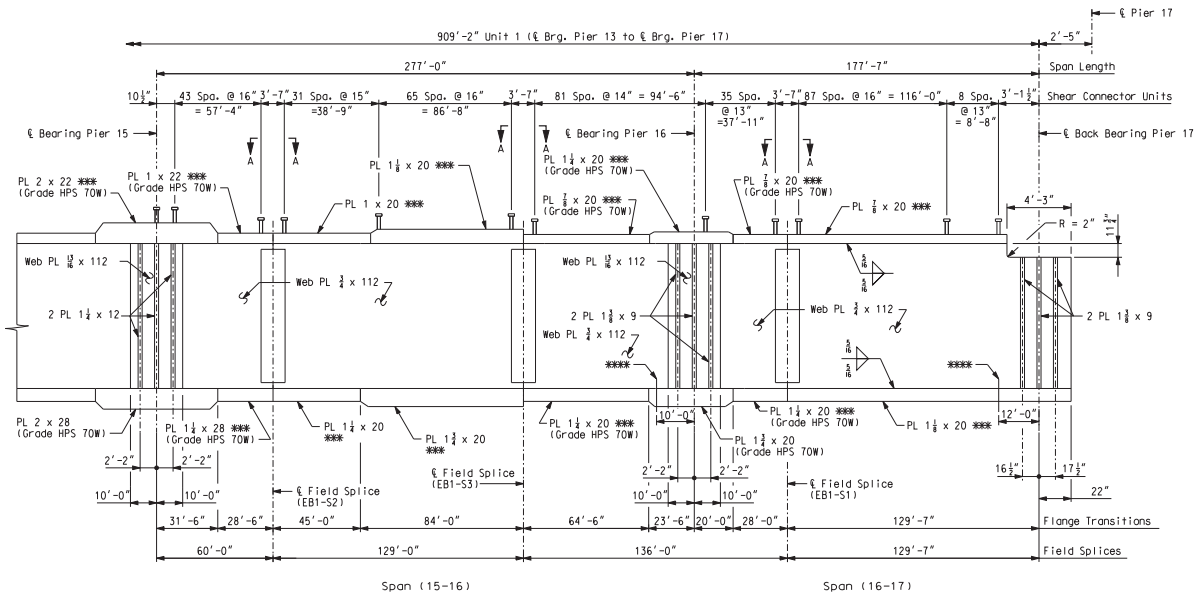

GIRDER ELEVATION
Spans (15-16) & (16-17)

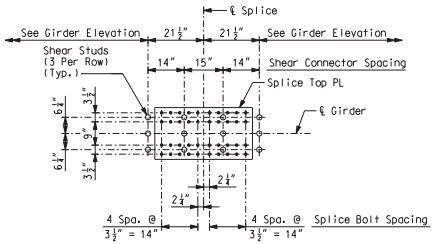

SPLICE PLATE PLAN VIEW A-A
(Field Splice Detail with Shear Studs)

Notes:
Plate girders shall be fabricated to be in accordance with the camber diagram shown on Sheet No. 69.
*** Indicates flange plates subject to notch toughness requirements. All web plates shall be subject to notch toughness requirements. All flange and web splice plates except fill plates shall be subject to notch toughness requirements.
Fabricated structural steel shall be ASTM A709 Grade 50W, except as noted.
Longitudinal dimensions are horizontal from ℄ bearing to ℄ bearing.
For Framing Plan, see Sheet No. 49.
For location of slab drain attachment holes, see slab drain details on Sheet Nos. 127 thru 130.
For detail of expansion device stiffener at Pier 17, see Sheet No. 88.
**** Drip plate, girder 8 only. See Sheet No. 88 for details.
For details of shear connectors, see Sheet No. 88.

GIRDER ELEVATION EB - UNIT 1 (2 OF 2)

Detailed JUL 2009
Checked JUL 2009

Note: This drawing is not to scale. Follow dimensions.

s:\idot\0906601\draw_idot\cadd_sheets\structural\B_A6500_057-152_J6I0984C_057.dgn

CONTRACT NO. 76D61

F.A. ROUTE	SECTION
999	82-1B-2
FED. AID PROJECT	ILLINOIS
COUNTY	ST. CLAIR

USER NAME = jjolliff
PLOT SCALE = $SCALE$
PLOT DATE = 3/15/2010
DESIGNED - HNTB
CHECKED - CMT
DRAWN - CMT / HTNB
REVISED -
REVISED -
REVISED -
REVISED -

ILLINOIS APPROACH STRUCTURE FOR NEW I-70 MISSISSIPPI RIVER BRIDGE

STATE OF ILLINOIS
DEPARTMENT OF TRANSPORTATION

MISSOURI HIGHWAYS AND TRANSPORTATION COMMISSION

HNTB
715 KIRK DRIVE
KANSAS CITY, MO 64105
TELEPHONE (816) 472-1201
CERTIFICATE OF AUTHORITY NO. 001270

CMT
CRAWFORD, MURPHY & TILLY, INC.
2750 WEST WASHINGTON STREET
SPRINGFIELD, IL 62702
TELEPHONE (217) 787-8050
ENGINEERING CORPORATION - 000631

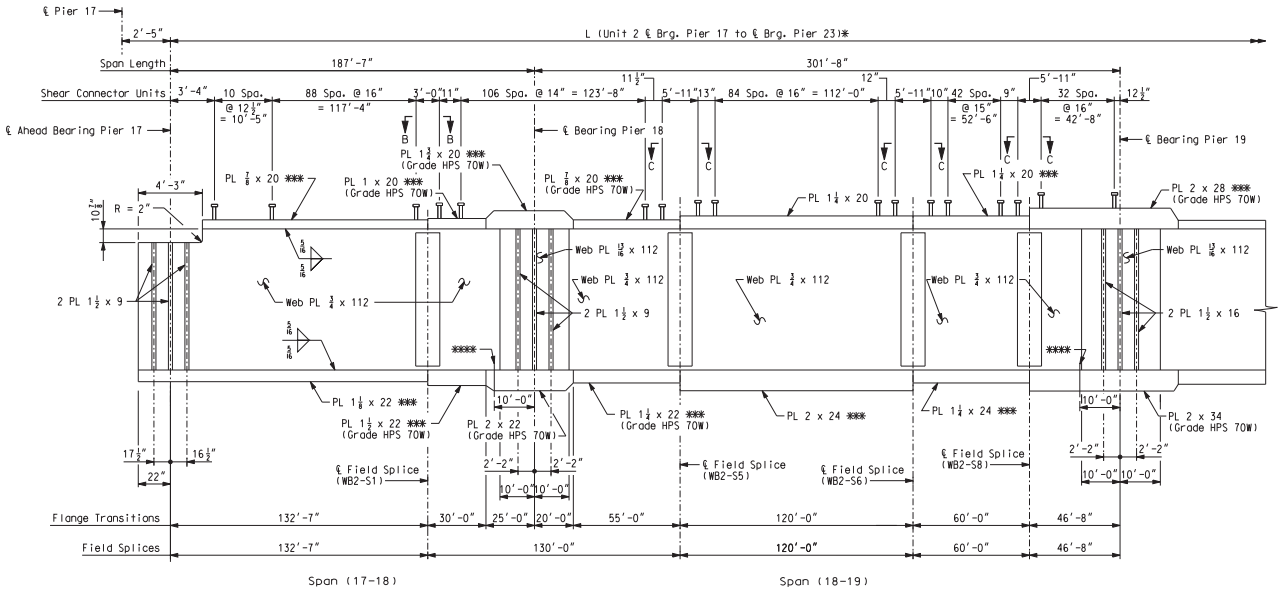

GIRDER ELEVATION
Spans (17-18) & (18-19)

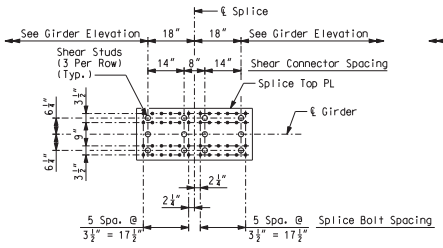

SPLICE PLATE PLAN VIEW B-B
(Field Splice Detail with Shear Studs)

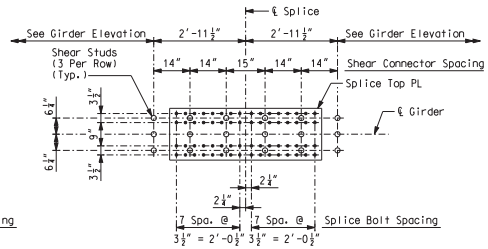

SPLICE PLATE PLAN VIEW C-C
(Field Splice Detail with Shear Studs)
(8 rows of Bolts Each Side of Splice Shown; 7 Row Configuration Similar)

Notes:
* For table of girder dimensions, see Sheet No. 51.
Plate girders shall be fabricated to be in accordance with the camber diagram shown on Sheet No. 70.
*** Indicates flange plates subject to notch toughness requirements.
All web plates shall be subject to notch toughness requirements.
All flange and web splice plates except fill plates shall be subject to notch toughness requirements.
Fabricated structural steel shall be ASTM A709 Grade 50W, except as noted.
Longitudinal dimensions are horizontal from ℄ bearing to ℄ bearing.
For Framing Plan, see Sheet No. 50.
For location of slab drain attachment holes, see slab drain details on Sheet Nos. 127 thru 130.
For detail of expansion device stiffener at Pier 17, see Sheet No. 88.
**** Drip plate, girder 1 only. See Sheet No. 88 for details.
For details of shear connectors, see Sheet No. 88.

GIRDER ELEVATION WB - UNIT 2 (1 OF 3)

Detailed JUL 2009
Checked JUL 2009

Note: This drawing is not to scale. Follow dimensions.

Sheet No. 58 of 152

s:\idot\0906601\draw_idot\cadd_sheets\structural\B_A6500_058-152_J6I0984C_058.dgn

CONTRACT NO. 76D61

F.A. ROUTE	SECTION
999	82-1B-2
FED. AID PROJECT	ILLINOIS
COUNTY	ST. CLAIR

USER NAME = jjolliff
PLOT SCALE = $SCALE$
PLOT DATE = 3/15/2010
DESIGNED - HNTB
CHECKED - CMT
DRAWN - CMT / HTNB
REVISED -
REVISED -
REVISED -
REVISED -

ILLINOIS APPROACH STRUCTURE
FOR NEW I-70 MISSISSIPPI RIVER BRIDGE

STATE OF ILLINOIS
DEPARTMENT OF TRANSPORTATION

MISSOURI HIGHWAYS
AND TRANSPORTATION COMMISSION

HNTB
715 KIRK DRIVE
KANSAS CITY, MO 64105
TELEPHONE (816) 472-1201
CERTIFICATE OF AUTHORITY
NO. 001270

CMT
CRAWFORD, MURPHY & TILLY, INC.
2750 WEST WASHINGTON STREET
SPRINGFIELD, IL 62702
TELEPHONE (217) 787-8050
ENGINEERING CORPORATION - 000631

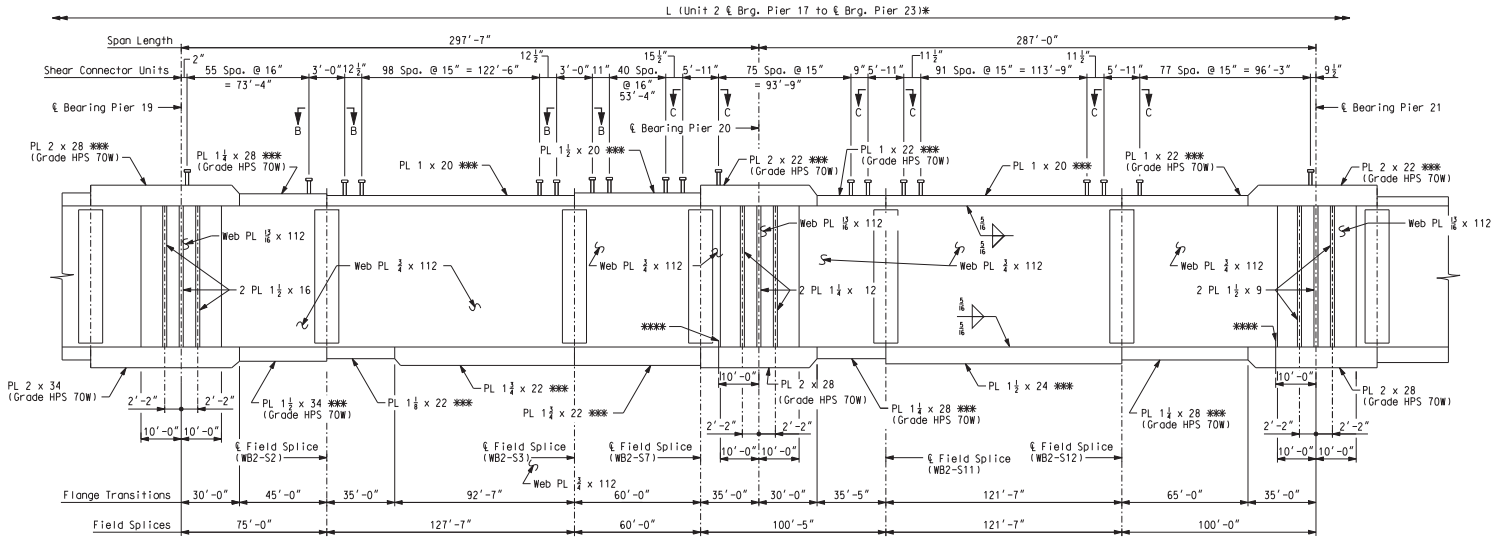

GIRDER ELEVATION
Spans (19-20) & (20-21)

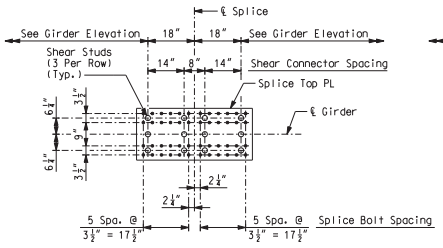

SPLICE PLATE PLAN VIEW B-B
(Field Splice Detail with Shear Studs)

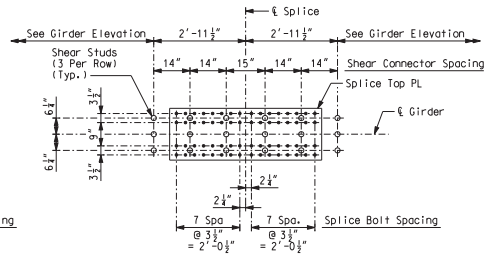

SPLICE PLATE PLAN VIEW C-C
(Field Splice Detail with Shear Studs)
(8 rows of Bolts Each Side of Splice Shown; 7 Row Configuration Similar)

Notes:
* For table of girder dimensions, see Sheet No. 51.
Plate girders shall be fabricated to be in accordance with the camber diagram shown on Sheet No. 71.
*** Indicates flange plates subject to notch toughness requirements.
All web plates shall be subject to notch toughness requirements.
All flange and web splice plates except fill plates shall be subject to notch toughness requirements.
Fabricated structural steel shall be ASTM A709 Grade 50W, except as noted.
Longitudinal dimensions are horizontal from ℄ bearing to ℄ bearing.
For Framing Plan, see Sheet No. 50.
For location of slab drain attachment holes, see slab drain details on Sheet Nos. 127 thru 130.
**** Drip plate, girder 1 only. See Sheet No. 88 for details.
For details of shear connectors, see Sheet No. 88.

CONTRACT NO. 76D61

F.A. ROUTE	SECTION
999	82-1B-2
FED. AID PROJECT	ILLINOIS
COUNTY	ST. CLAIR

USER NAME = jjolliff
PLOT SCALE = $SCALE$
PLOT DATE = 3/15/2010
DESIGNED - HNTB
CHECKED - CMT
DRAWN - CMT / HTNB
REVISED -
REVISED -
REVISED -
REVISED -

ILLINOIS APPROACH STRUCTURE FOR NEW I-70 MISSISSIPPI RIVER BRIDGE

STATE OF ILLINOIS
DEPARTMENT OF TRANSPORTATION

MISSOURI HIGHWAYS AND TRANSPORTATION COMMISSION

HNTB
715 KIRK DRIVE
KANSAS CITY, MO 64105
TELEPHONE (816) 472-1201
CERTIFICATE OF AUTHORITY NO. 001270

CMT
CRAWFORD, MURPHY & TILLY, INC.
2750 WEST WASHINGTON STREET
SPRINGFIELD, IL 62702
TELEPHONE (217) 787-8050
ENGINEERING CORPORATION - 000631

Detailed JUL 2009
Checked JUL 2009

Note: This drawing is not to scale. Follow dimensions.

GIRDER ELEVATION WB - UNIT 2 (2 OF 3)

s:\idot\0906601\draw_idot\cadd_sheets\structural\B_A6500_059-152_J6I0984C_059.dgn

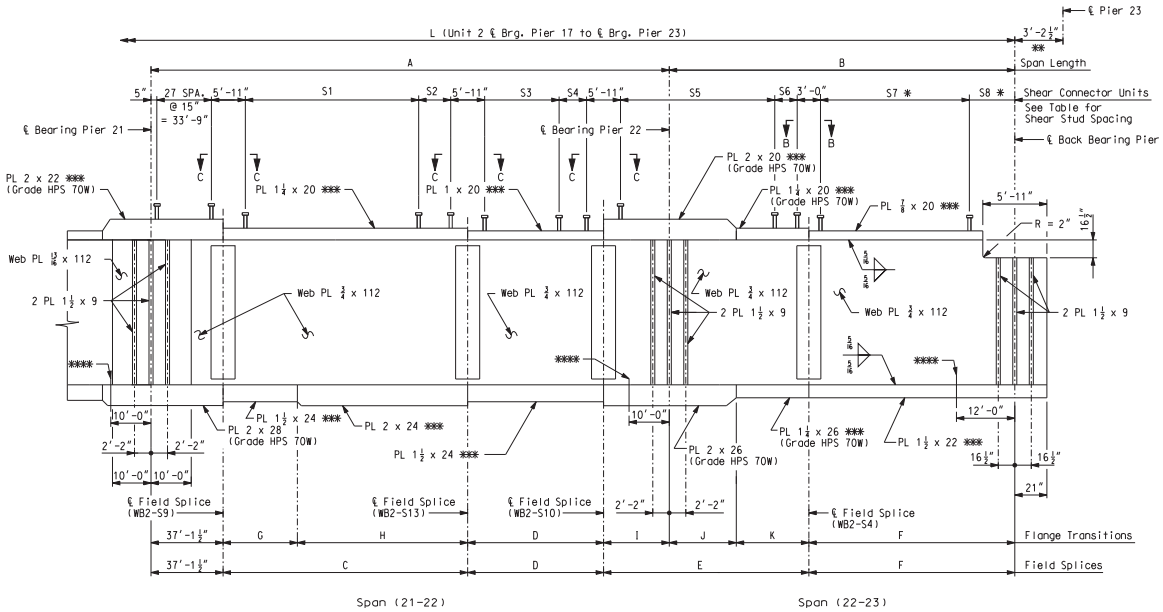

GIRDER ELEVATION
Spans (21-22) & (22-23)

SHEAR STUD SPACING								
Location	S1	S2	S3	S4	S5	S6	S7 *	S8 *
Girder 1	94 Spa. @ 16" = 125'-4"	16⅜"	48 Spa. @ 16" = 64'-0"	17⅞"	82 Spa. @ 15" = 102'-6"	11⅛"	111 Spa. @ 14" = 129'-6"	4'-5⅜"
Girder 2	94 Spa. @ 16" = 125'-4"	7"	48 Spa. @ 16" = 64'-0"	12¼"	81 Spa. @ 15" = 101'-3"	18½"	110 Spa. @ 14" = 128'-4"	4'-10⅛"
Girder 3	93 Spa. @ 16" = 124'-0"	13⅜"	48 Spa. @ 16" = 64'-0"	7¾"	81 Spa. @ 15" = 101'-3"	10⅛"	109 Spa. @ 14" = 127'-2"	5'-2¼"
Girder 4	92 Spa. @ 16" = 122'-8"	20⅛"	47 Spa. @ 16" = 62'-8"	18¾"	80 Spa. @ 15" = 100'-0"	18¼"	109 Spa. @ 14" = 127'-2"	4'-4½"

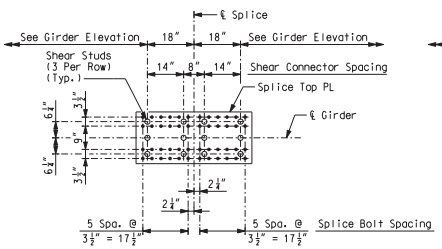

SPLICE PLATE PLAN VIEW B-B
(Field Splice Detail with Shear Studs)

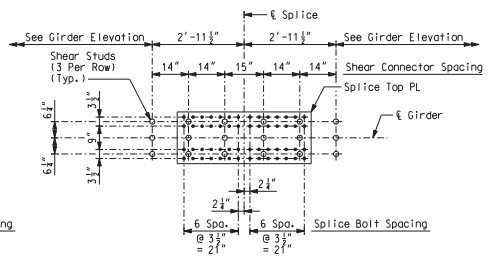

SPLICE PLATE PLAN VIEW C-C
(Field Splice Detail with Shear Studs)

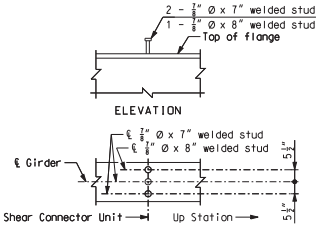

* DETAILS OF SHEAR CONNECTORS FOR S7 AND S8

For total weight of shear connectors, see Sheet No. 88.
Shear connectors shall be in accordance with Sec 712, 1037, and 1080.

Notes:
** ℄ Back Bearing is measured parallel to ℄ Pier 23.
Plate girders shall be fabricated to be in accordance with the camber diagram shown on Sheet No. 72.
*** Indicates flange plates subject to notch toughness requirements.
All web plates shall be subject to notch toughness requirements.
All flange and web splice plates except fill plates shall be subject to notch toughness requirement.
Fabricated structural steel shall be ASTM A709 Grade 50W, except as noted.
Longitudinal dimensions are horizontal arc dimensions from ℄ bearing to ℄ bearing.
For Framing Plan, see Sheet No. 51.
For location of slab drain attachment holes, see slab drain details on Sheet Nos. 127 thru 130.
For detail of expansion device stiffener at Pier 23, see Sheet No. 88.
**** Drip plate, girder 1 only. See Sheet No. 88 for details.
For table of Girder Dimensions, see Sheet No. 51.
For details of shear connectors not shown, see Sheet No. 88.

GIRDER ELEVATION WB - UNIT 2 (3 OF 3)

CONTRACT NO. 76D61

F.A. ROUTE	SECTION
999	82-1B-2
FED. AID PROJECT	ILLINOIS
COUNTY	ST. CLAIR

USER NAME = jjolliff
PLOT SCALE = $SCALE$
PLOT DATE = 3/15/2010
DESIGNED - HNTB
CHECKED - CMT
DRAWN - CMT / HTNB
REVISED -
REVISED -
REVISED -
REVISED -

ILLINOIS APPROACH STRUCTURE FOR NEW I-70 MISSISSIPPI RIVER BRIDGE

STATE OF ILLINOIS
DEPARTMENT OF TRANSPORTATION

MISSOURI HIGHWAYS AND TRANSPORTATION COMMISSION

HNTB
715 KIRK DRIVE
KANSAS CITY, MO 64105
TELEPHONE (816) 472-1201
CERTIFICATE OF AUTHORITY NO. 001270

CMT
CRAWFORD, MURPHY & TILLY, INC.
2750 WEST WASHINGTON STREET
SPRINGFIELD, IL 62702
TELEPHONE (217) 787-8050
ENGINEERING CORPORATION - 000631

Detailed JUL 2009
Checked JUL 2009

Note: This drawing is not to scale. Follow dimensions.

s:\idot\0906601\draw_idot\cadd_sheets\structural\B_A6500_060-152_J6I0984C_060.dgn

SEC/SUR 14 TWP 45N RGE 7E

U.I.P. & Rehab, Existing (125′) SIMPLE COMPOSITE PRESTRESSED CONCRETE NU-GIRDER SPAN (129′-144′-110′) CONTINUOUS COMPOSITE PRESTRESSED CONCRETE NU-GIRDER SPANS (115′-128′-128′-124′-138.25′) CONTINUOUS COMPOSITE PRESTRESSED CONCRETE NU-GIRDER SPANS

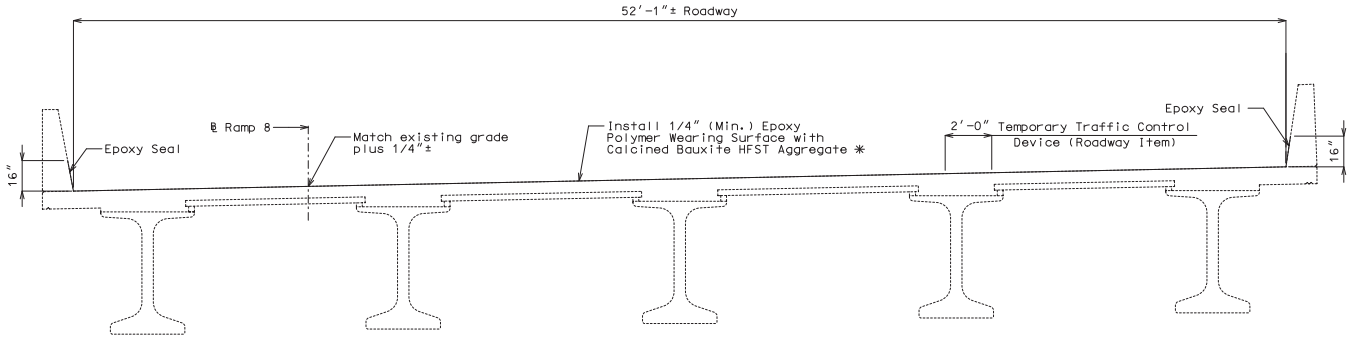

✳ See roadway special provisions for Calcined Bauxite HFST Aggregate requirements

TYPICAL SECTION THRU EXISTING DECK (MISSOURI APPROACH) (SPAN 1) (RAMP 8)

Note: Epoxy Polymer Wearing Surface with HFST shall only be applied to the Ramp 8 portion of Span 1. The wearing surface shall stop at the Bent No. 2 expansion device.

GENERAL NOTES:

Design Specifications:

2017 AASHTO LRFD Bridge Design Specifications (8th Ed.)
Bridge Deck Rating = 7

Design Loading:

HL-93 (2007) (Existing)

Traffic Handling:

Traffic to be maintained on structure during construction. See roadway plans for traffic control.

Miscellaneous:

Roadway surfacing adjacent to bridge ends shall match new bridge wearing surface (roadway item).

Outline of existing work is indicated by light dash lines. Heavy lines indicate new work.

Contractor shall verify all dimensions in field before ordering new material.

The contractor shall exercise care to ensure spillage over joint edges is prevented and that a neat line is obtained along any terminating edge of the wearing surface.

The Bridge Approach Slabs are included in the estimated quantity for Epoxy Polymer Wearing Surface.

The contractor shall grout fill the approach slab mudjack holes prior to placing the HFST/EPO.

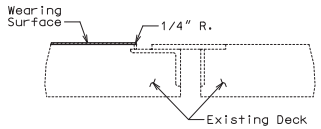

TYPICAL SECTION THRU EXPANSION JOINT AT INTERMEDIATE BENT NO. 2

Estimated Quantities	
Item	Quantity
Epoxy Polymer Wearing Surface sq. yard	911

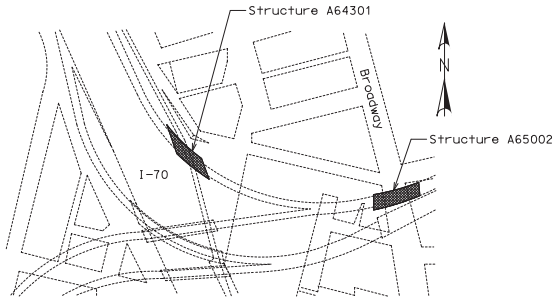

LOCATION SKETCH

REPAIRS TO BRIDGE: ROUTE I-70 OVER MISSISSIPPI RIVER, CITY STREETS, RAILROADS & ILLINOIS ROUTE 3

ROUTE I-70 FROM ROUTE I-44 TO ROUTE I-55 (ILLINOIS)
ABOUT 0.1 MILE EAST OF ROUTE I-44
STA. 63+19.23± (Match Existing) (℄ Relocated I-70)

STD. 616.10

Detailed Apr. 2020
Checked Oct. 2020

Note: This drawing is not to scale. Follow dimensions.

Sheet No. 1 of 1

STATE OF MISSOURI
TED S. KOESTER
NUMBER PE-2010000591
PROFESSIONAL ENGINEER
THIS SHEET HAS BEEN SIGNED, SEALED AND DATED ELECTRONICALLY.

DATE PREPARED 11/2/2020
ROUTE I-70 | STATE MO
DISTRICT BR | SHEET NO. 1
COUNTY ST. LOUIS CITY
JOB NO. J6P3477
CONTRACT ID.
PROJECT NO.
BRIDGE NO. A65002

DESCRIPTION | DATE

MISSOURI HIGHWAYS AND TRANSPORTATION COMMISSION
105 WEST CAPITOL
JEFFERSON CITY, MO 65102
1-888-ASK-MODOT (1-888-275-6636)

IF A SEAL IS PRESENT ON THIS SHEET IT HAS BEEN ELECTRONICALLY SEALED AND DATED.