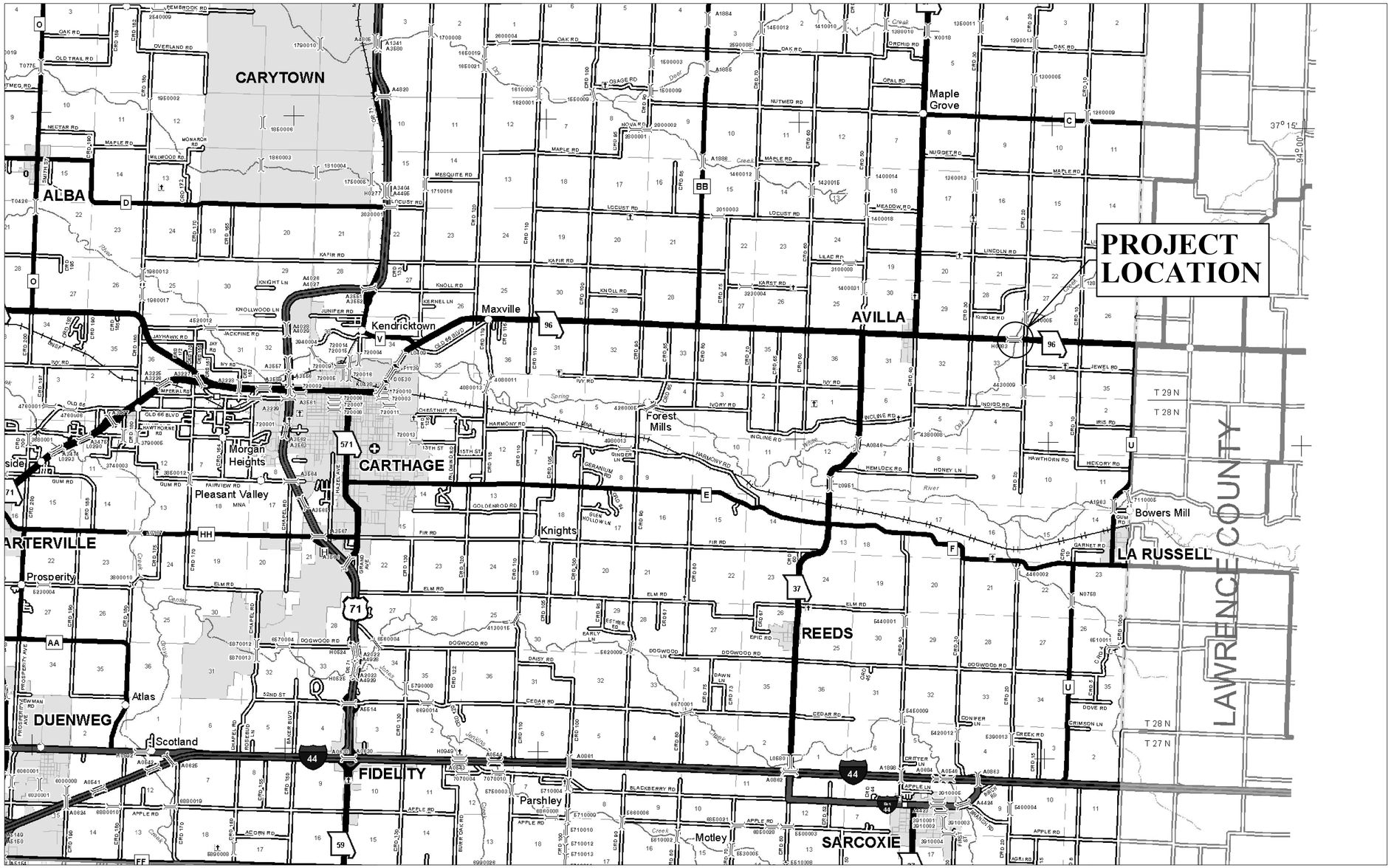

LOCATION MAP

ROUTE	STATE
96	MO
DISTRICT	SHEET NO.
SW	1

COUNTY
JASPER

JOB NO.
J7S3171

CONTRACT ID.

PROJECT NO.

BRIDGE NO.
A8873

DATE	DESCRIPTION

MISSOURI HIGHWAYS AND TRANSPORTATION COMMISSION

105 WEST CAPITOL
JEFFERSON CITY, MO 65102
1-888-ASK-MODOT (1-888-275-6636)

VEENSTRA & KIMM, INC.
P.O. Box 236
Liberty, Missouri 64069
816-781-6162
855-241-8011 (WATS)
816-781-0643 (FAX)
Certificate of Authority No. F00362673

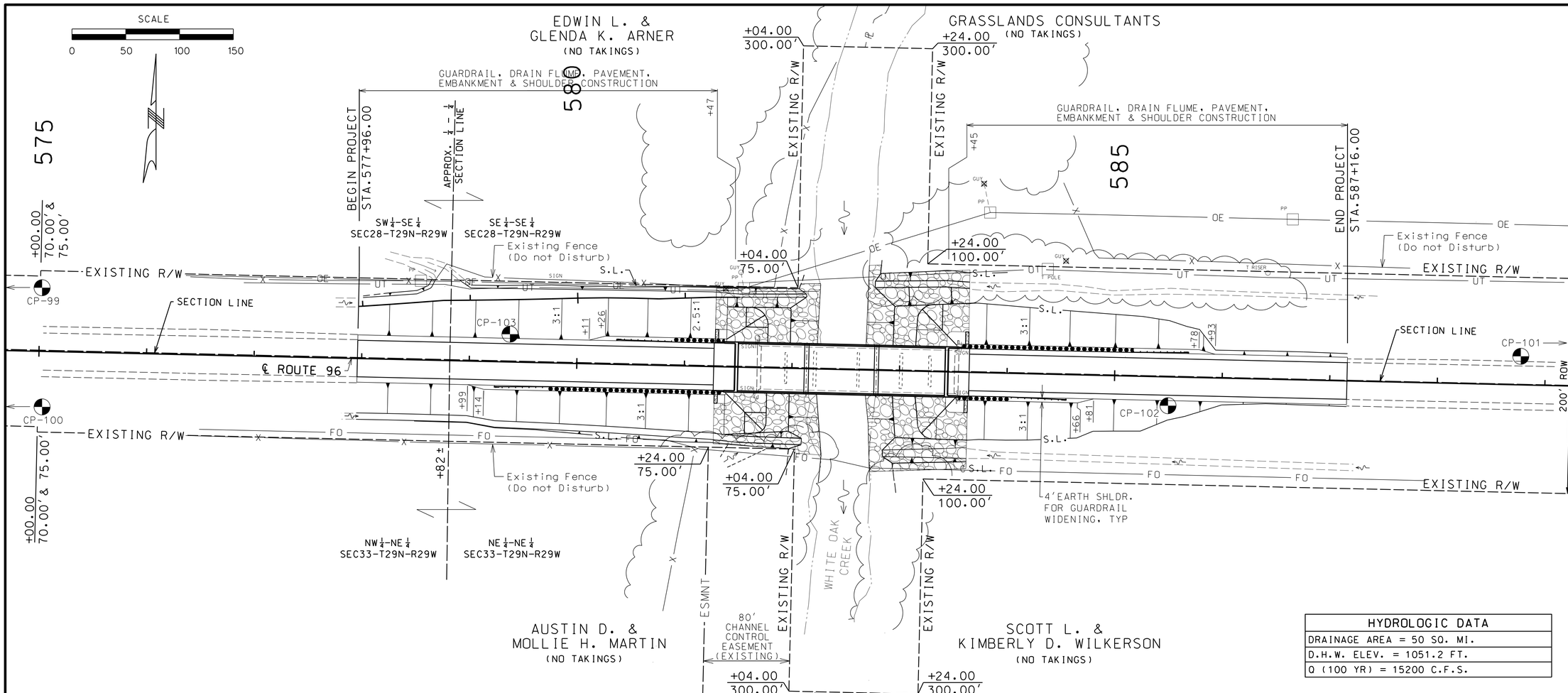

HYDROLOGIC DATA
DRAINAGE AREA = 50 SQ. MI.
D.H.W. ELEV. = 1051.2 FT.
Q (100 YR) = 15200 C.F.S.

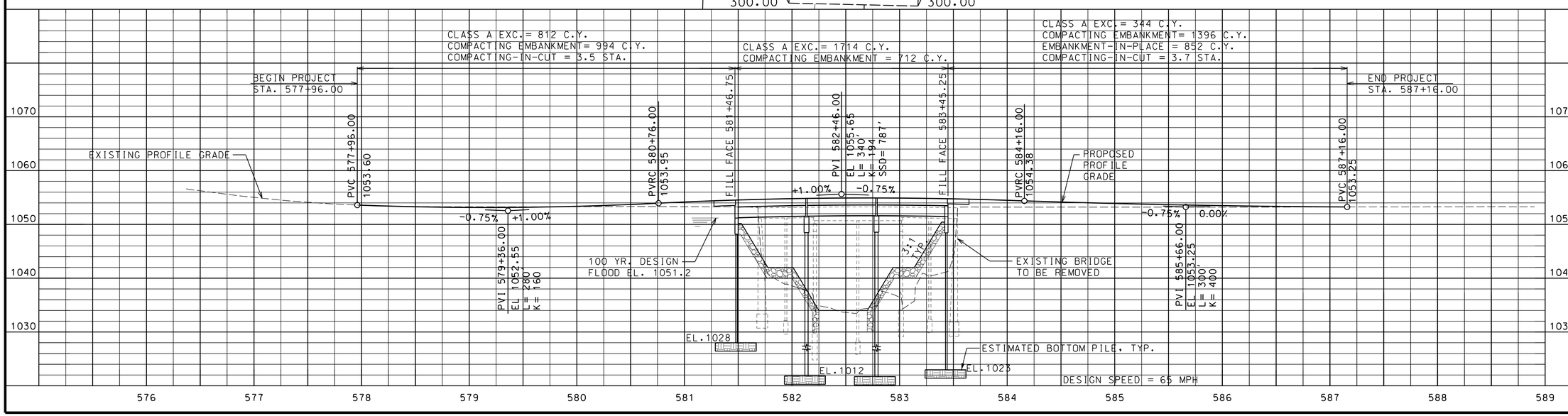

ROUTE	STATE
96	MO
DISTRICT	SHEET NO.
SW	4

COUNTY: JASPER

JOB NO.: J7S3171

CONTRACT ID.

PROJECT NO.

BRIDGE NO.: A8873

DATE	DESCRIPTION

MISSOURI HIGHWAYS AND TRANSPORTATION COMMISSION
105 WEST CAPITOL
JEFFERSON CITY, MO 65102
1-888-ASK-MODOT (1-888-275-6636)

VEENSTRA & KIMM, INC.
P.O. Box 236
Liberty, Missouri 64069
816-781-6162
855-241-8011 (WATS)
816-781-0643 (FAX)
Certificate of Authority No. F00362673

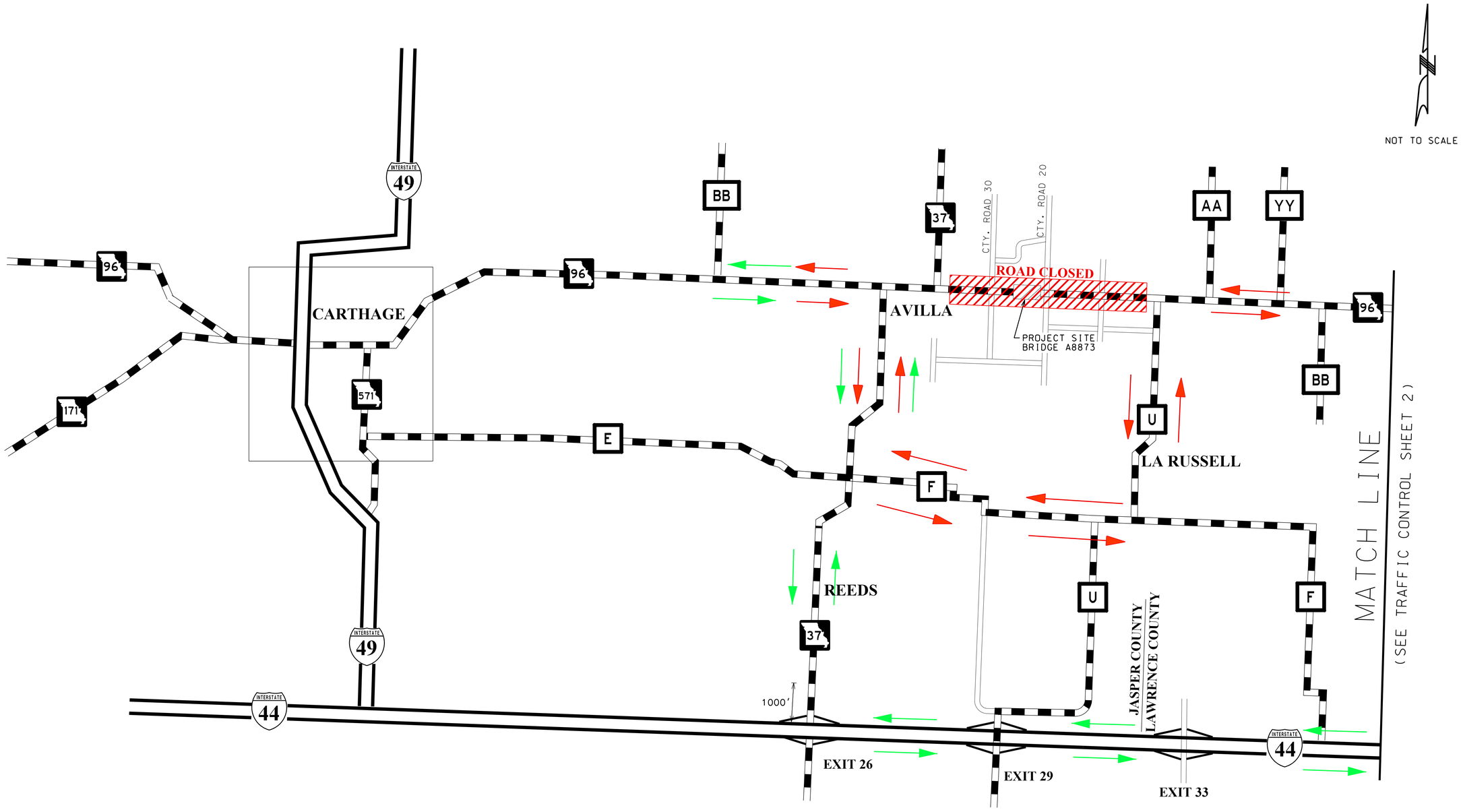

TRUCK DETOUR

CAR DETOUR

TRAFFIC CONTROL

ROUTE	STATE
96	MO
DISTRICT	SHEET NO.
SW	10

COUNTY: JASPER

JOB NO.: J7S3171

CONTRACT ID.:

PROJECT NO.:

BRIDGE NO.: A8873

DESCRIPTION	DATE

MISSOURI HIGHWAYS AND TRANSPORTATION COMMISSION

105 WEST CAPITOL
JEFFERSON CITY, MO 65102
1-888-ASK-MODOT (1-888-275-6636)

P.O. Box 236
Liberty, Missouri 64069
816-781-6162
855-241-8011 (WATS)
816-781-0643 (FAX)

VEENSTRA & KIMM, INC.

Certificate of Authority No. F00362673

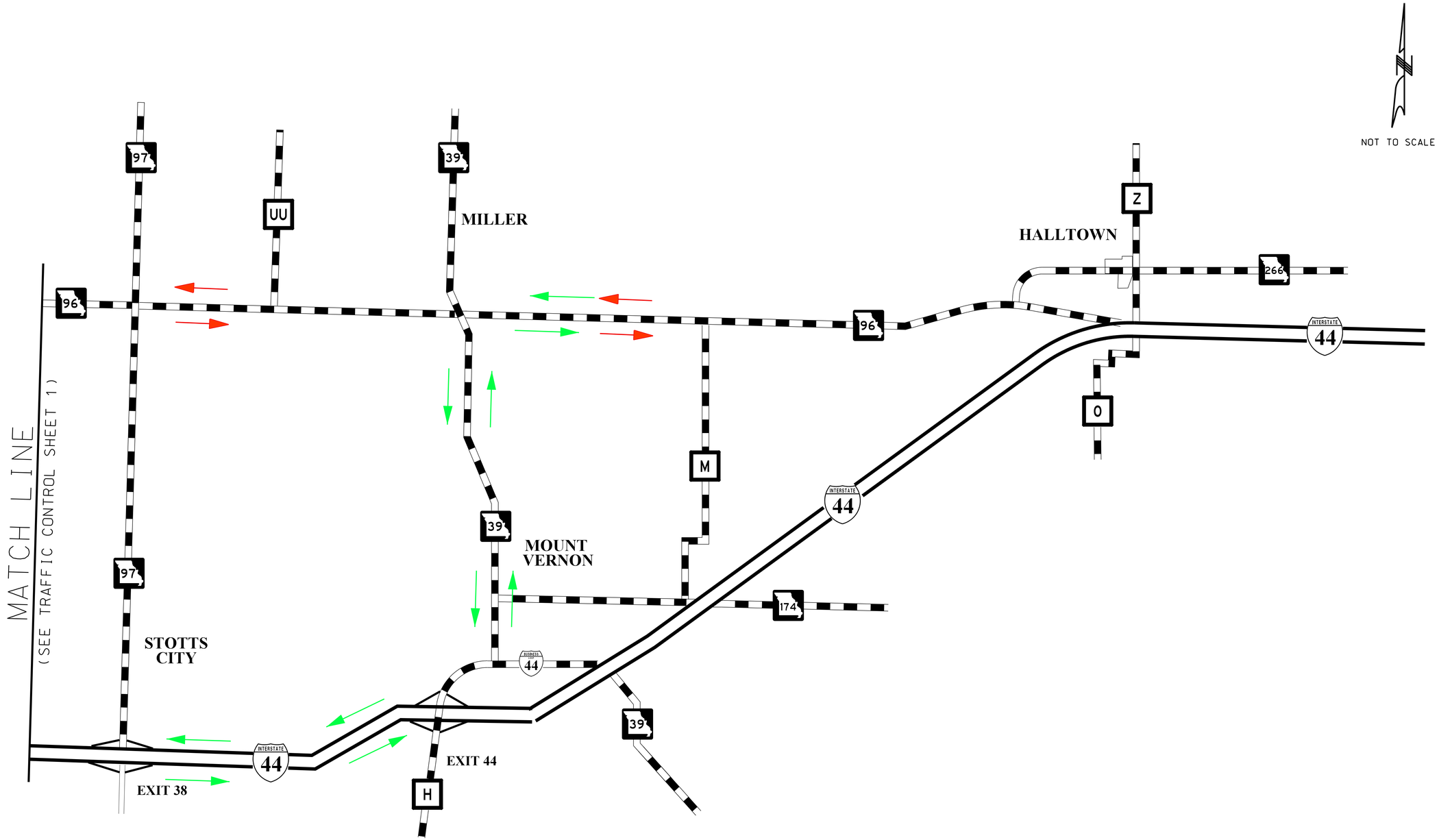

TRUCK DETOUR

CAR DETOUR

TRAFFIC CONTROL

ROUTE	STATE
96	MO
DISTRICT	SHEET NO.
SW	11

COUNTY
JASPER

JOB NO.
J7S3171

CONTRACT ID.

PROJECT NO.

BRIDGE NO.
A8873

DATE	DESCRIPTION

MISSOURI HIGHWAYS AND TRANSPORTATION COMMISSION

105 WEST CAPITOL
JEFFERSON CITY, MO 65102
1-888-ASK-MODOT (1-888-275-6636)

VEENSTRA & KIMM, INC.
P.O. Box 236
Liberty, Missouri 64069
816-781-6162
855-241-8011 (WATS)
816-781-0643 (FAX)
Certificate of Authority No. F00362673

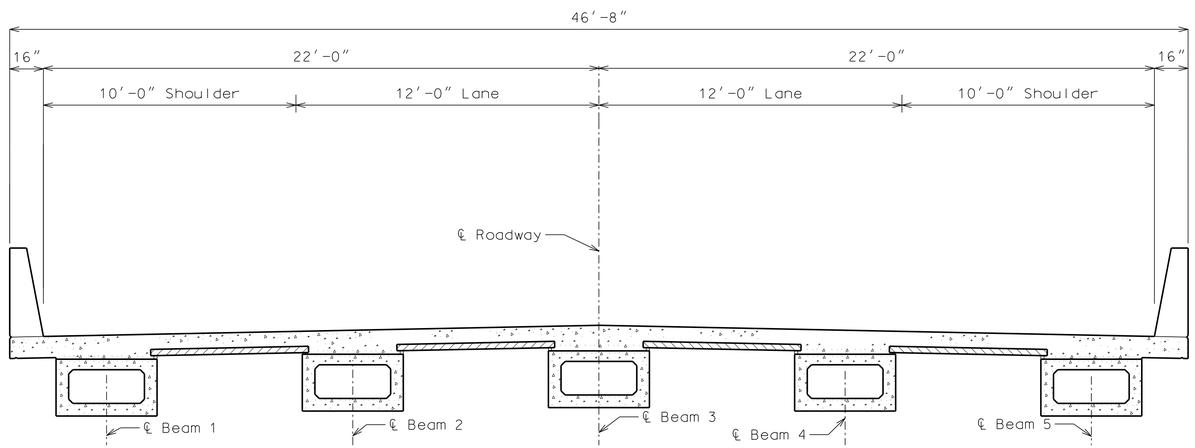

TYPICAL BRIDGE SECTION

ROUTE	STATE
96	MO
DISTRICT	SHEET NO.
BR	21

COUNTY
JASPER

JOB NO.
J7S3171

CONTRACT ID.

PROJECT NO.

BRIDGE NO.
A8873

DESCRIPTION	DATE

MISSOURI HIGHWAYS AND TRANSPORTATION COMMISSION

105 WEST CAPITOL
JEFFERSON CITY, MO 65102
1-888-ASK-MODOT (1-888-275-6636)

P.O. Box 236
Liberty, Missouri 64069
816-781-6182
855-241-8011 (WATS)
816-781-0643 (FAX)

VEENSTRA & KIMM, INC.

Certificate of Authority No. F00362673