Standard Drawing Guidance (do not show on plans):

Check that the 1 1/2"Ø holes for the diaphragms shown on the design plans will provide a minimum clearance of at least 1 1/2" to any prestressing strands. Diaphragm spacing may need to be adjusted.

For MoDOT Type 2 girder only, use shorter angle and plate 15 1/2" instead of 16" to account for depth tolerance of web. Revise bolt end clearances to 1 3/4".

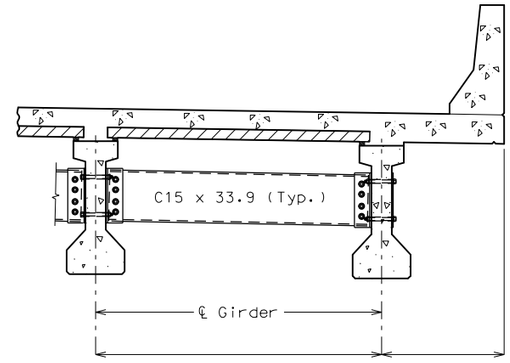

PART SECTION SHOWING INTERMEDIATE DIAPHRAGMS

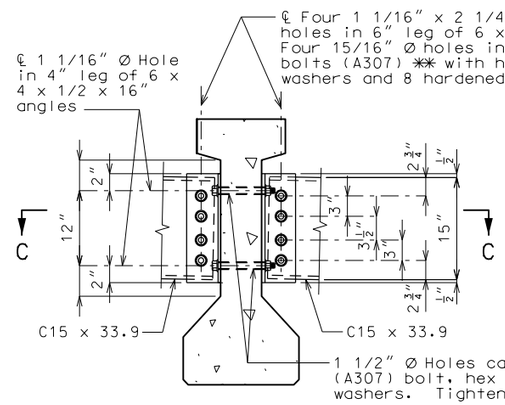

SECTION THRU INT. GIRDER AT DIAPHRAGM

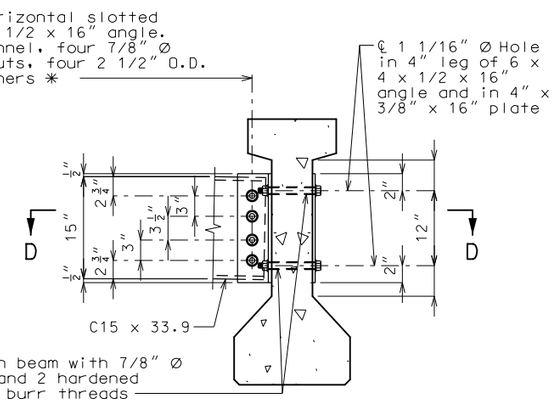

SECTION THRU EXT. GIRDER AT DIAPHRAGM

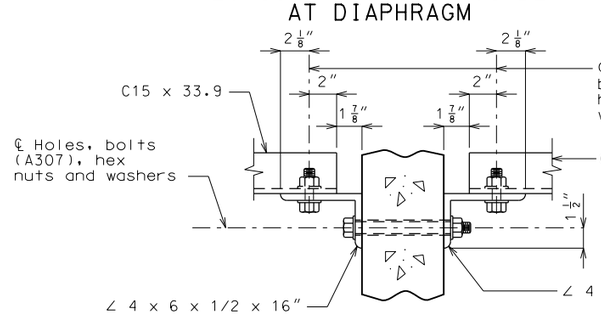

SECTION C-C

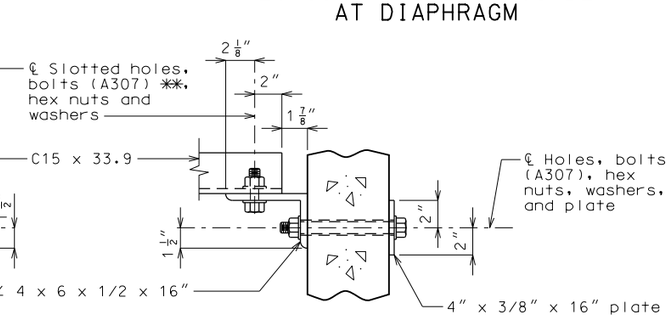

SECTION D-D

STEEL DIAPHRAGM NOTES:

✱ In lieu of 2 1/2" outside diameter washers, contractor may substitute a 3/16" (Min. thickness) plate with four 15/16" Ø holes and one hardened washer per bolt.

✱✱ Bolts shall be tightened to provide a tension of one-half that specified in Sec 712 for high strength bolt installation. A325 bolts may be substituted for and installed in accordance with the requirements for the specified A307 bolts.

All diaphragm materials including bolts, nuts, and washers shall be galvanized.

Fabricated structural steel shall be ASTM A709 Grade 36 except as noted.

Payment for furnishing and installing steel intermediate diaphragms will be considered completely covered by the contract unit price for Steel Intermediate Diaphragm for P/S Concrete Girders.

Shop drawings will not be required for steel intermediate diaphragms and angle connections.

For location of intermediate diaphragms, see Sheet No. .

STEEL INTERMEDIATE DIAPHRAGM DETAILS

Detailed
Checked

Note: This drawing is not to scale. Follow dimensions.

Sheet No. of

"THIS MEDIA SHOULD NOT BE CONSIDERED A CERTIFIED DOCUMENT."

DATE PREPARED 5/29/2015	
ROUTE ✱	STATE MO
DISTRICT BR	SHEET NO. ✱
COUNTY ✱	
JOB NO. ✱	
CONTRACT ID.	
PROJECT NO.	
BRIDGE NO. DIA 6	

DESCRIPTION | DATE

MISSOURI HIGHWAYS AND TRANSPORTATION COMMISSION
105 WEST CAPITOL
JEFFERSON CITY, MO 65102
1-888-ASK-MODOT (1-888-275-6636)

IF A SEAL IS PRESENT ON THIS SHEET IT HAS BEEN ELECTRONICALLY SEALED AND DATED.