EFFECTIVE 04-01-2005

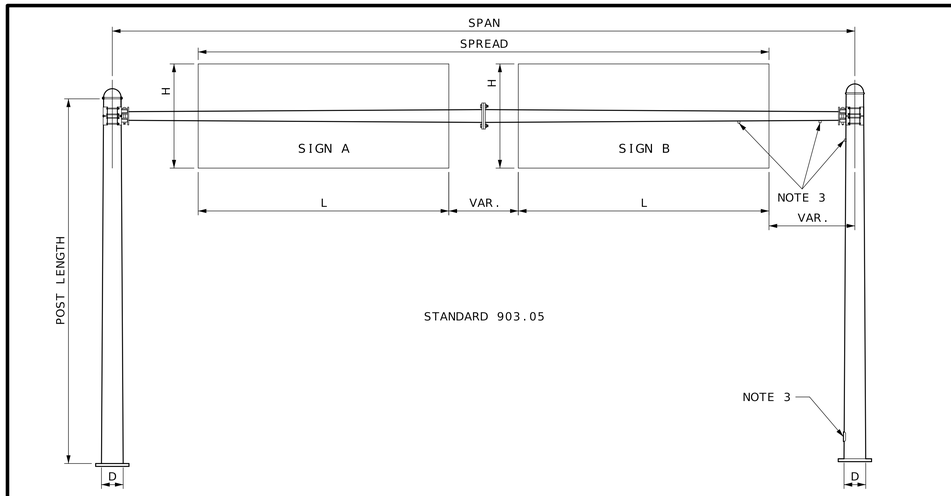

STANDARD 903.05

POST NUMBER 1

ONE TUBE - TYPE S

POST NUMBER 2

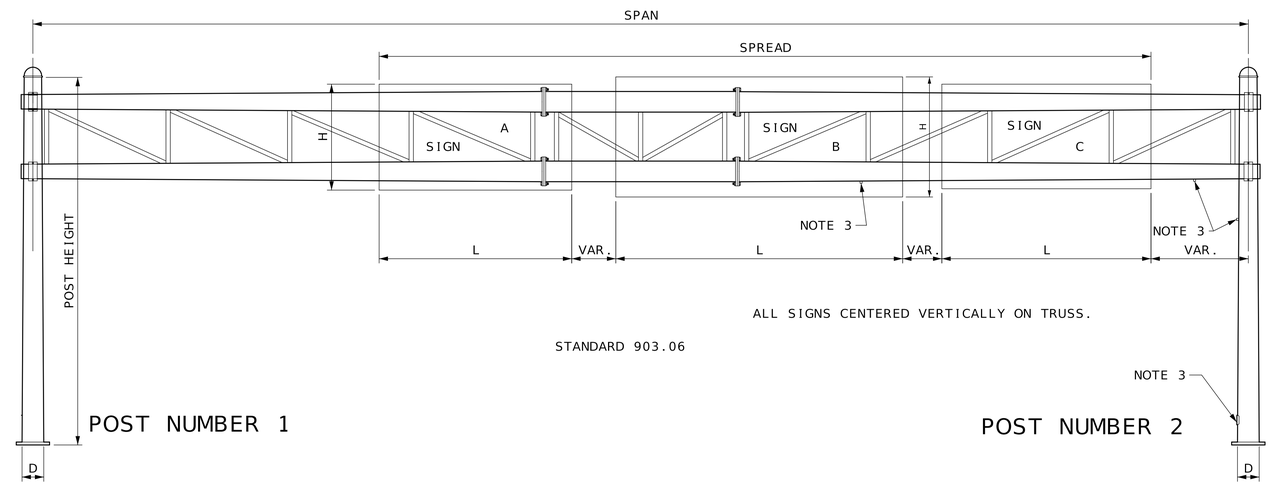

ALL SIGNS CENTERED VERTICALLY ON TRUSS.

STANDARD 903.06

POST NUMBER 1

POST NUMBER 2

TWO TUBE - TYPE S

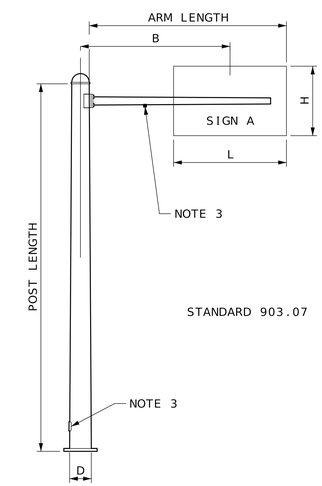

STANDARD 903.07

ONE TUBE - TYPE C

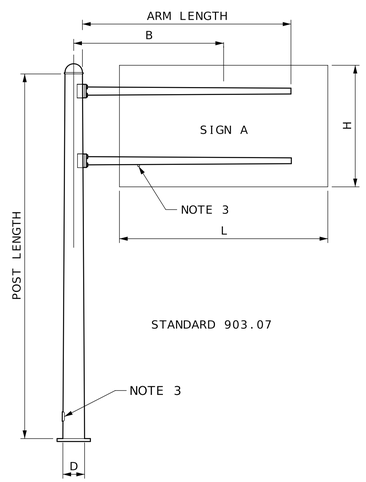

STANDARD 903.07

TWO TUBE - TYPE C

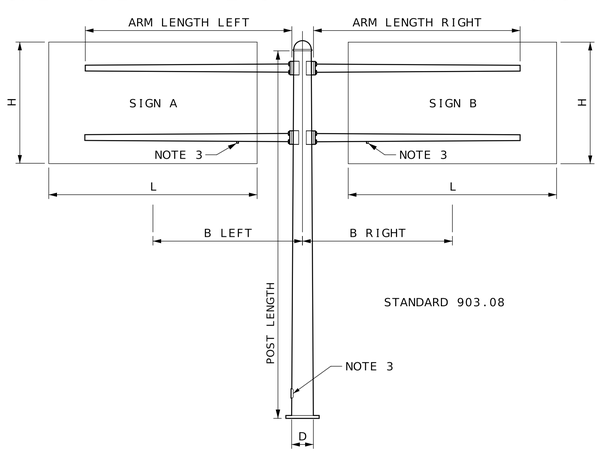

STANDARD 903.08

TWO TUBE - TYPE B

TUBULAR STEEL SUPPORT NUMBERING SYSTEM

THE FIRST SYMBOL (LETTER) INDICATES TYPE AS, C FOR CANTILEVER, B FOR BUTTERFLY, S FOR SPAN TYPE.

THE SECOND SYMBOL (NUMBER) INDICATES SINGLE (1) OR DOUBLE (2) MAST ARMS OR TRUSS.

THE THIRD SYMBOL (NUMBER) INDICATES GAGE - POST
7 = 7 GAUGE (.1793") 77 = 7 + 7 GAUGE (.3586")
3 = 3 GAUGE (.2500") 33 = 3 + 3 GAUGE (.5000")
0 = 0 GAUGE (.3125") 00 = 0 + 0 GAUGE (.6250")

THE FOURTH SYMBOL (NUMBER) INDICATES DIAMETER IN INCHES OF THE POST BASE.

THE FIFTH SYMBOL (NUMBER) INDICATES LENGTH IN FEET OF ARM OR SPAN.

EXAMPLE: DESIGN NUMBER B-20018-24 INDICATES BUTTERFLY TYPE, TWO ARMS, 2-PLY, O-GAUGE, 18" DIAMETER AT BASE OF POST & 24' MAST ARMS.

NOTES

1. ALL POSTS, BEAMS, MAST ARMS, ANGLES, BRACKETS & ETC. SHALL BE HOT DIP GALVANIZED AFTER FABRICATION.
2. SHOP DRAWINGS ARE NOT REQUIRED.
3. HANDHOLES AND 1¼" BLIND HALF COUPLINGS REQUIRED ON DESIGNATED POSTS. HANDHOLES SHALL BE PLACED ON RIGHT HAND SHOULDER SIDE OF TRUSSES.
4. STRUCTURES DESIGNED FOR TOTAL SIGN AREA COMMENSURATE WITH HEIGHT OF SIGN AND REQUIRED VERTICAL CEARANCE.
5. DESIGN SPECIFICATIONS: AASHTO STANDARD SPECIFICATIONS FOR STRUCTURAL SUPPORTS FOR HIGHWAY SIGNS, LUMINAIRES, AND TRAFFIC SIGNALS - 1985.

TUBULAR STEEL SUPPORT DESIGN DATA STANDARDS 903.05 THRU 903.08

SIGN NUMBER	STATION	LOCATION	STANDARD NUMBER	TYPE	SPAN OR ARM	B LENGTH	POST LENGTH		CONCRETE FOOTINGS	SIGN DATA																	
							NO. 1	NO. 2		SPREAD	SIGN A		SPACE	SIGN B		SPACE	SIGN C		SPACE	SIGN D		SPACE	SIGN E		SPACE	TOTAL
											L	H		L	H		L	H		L	H		L	H		
					FT-IN.	FT-IN.	FT	FT	CU YDS	FT-IN.	FT-IN.	FT-IN.	FT-IN.	FT-IN.	FT-IN.	FT-IN.	FT-IN.	FT-IN.	FT-IN.	FT-IN.	FT-IN.	FT-IN.	FT-IN.	FT-IN.	FT-IN.	SQ FT

DATE PREPARED 12/5/2022

ROUTE | STATE MO

DISTRICT | SHEET NO. X

COUNTY

JOB NO.

CONTRACT ID.

PROJECT NO.

BRIDGE NO.

DESCRIPTION

DATE

MISSOURI HIGHWAYS AND TRANSPORTATION COMMISSION
105 WEST CAPITOL
JEFFERSON CITY, MO 65102
1-888-ASK-MODOT (1-888-275-6636)

IF A SEAL IS PRESENT ON THIS SHEET IT HAS BEEN ELECTRONICALLY SEALED AND DATED.