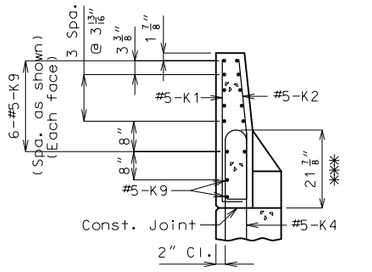

SECTION A-A

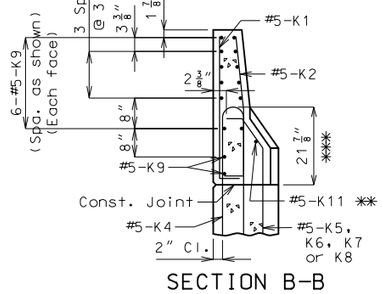

SECTION B-B

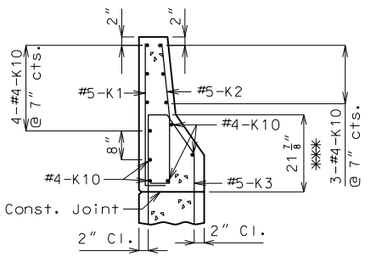

SECTION C-C

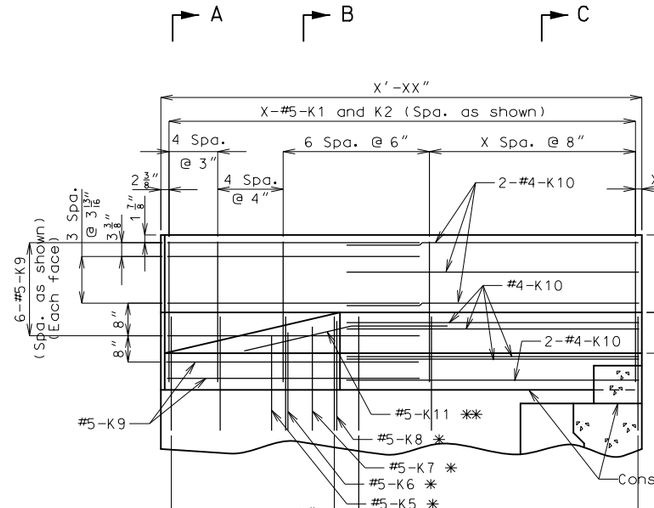

ELEVATION

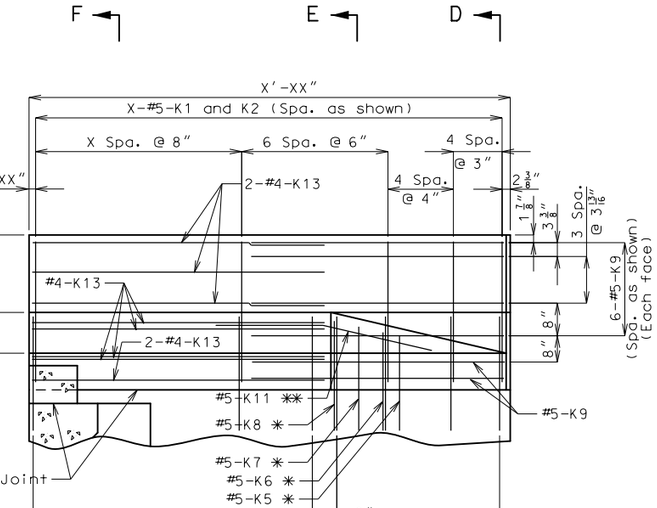

ELEVATION

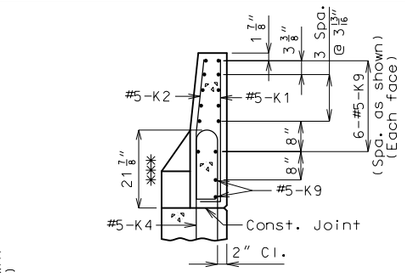

SECTION D-D

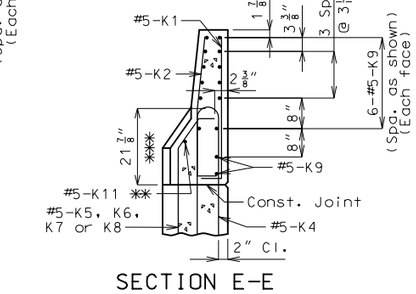

SECTION E-E

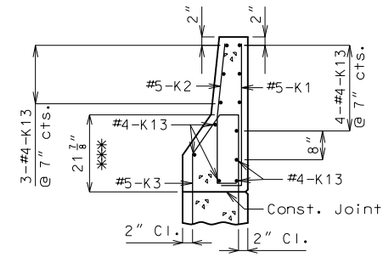

SECTION F-F

* Spaced with #5-K4 bars and embed 27" into end bent.

** Fit bar to follow transition face of barrier.

*** To top of bar

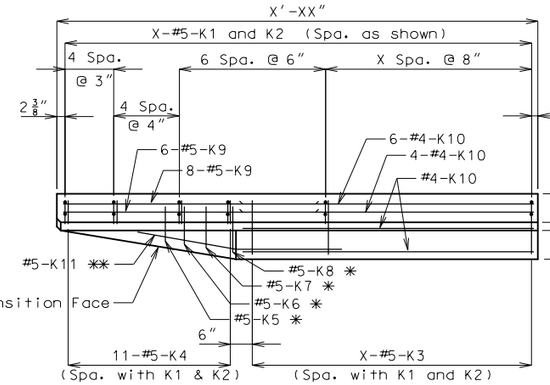

PLAN

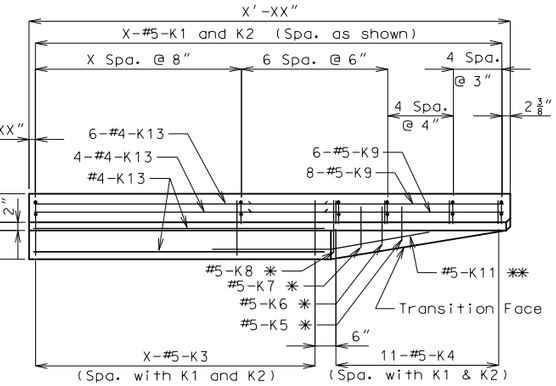

PLAN

Standard Drawing Guidance:
(do not show on plans)

① Dimensions are based on a 2.0% sloped deck. Subtract 1/8" for a 3/16" per foot sloped deck.

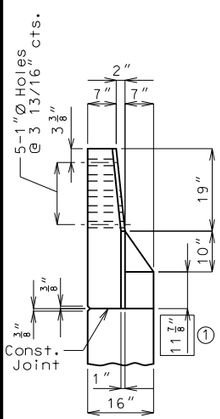

ELEVATION G-G

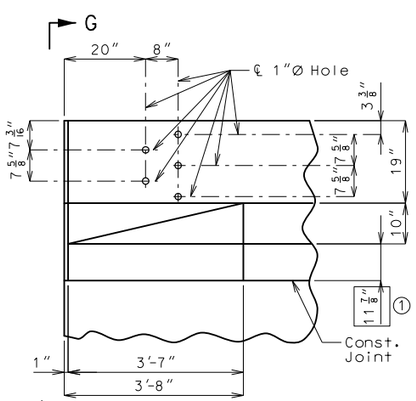

ELEVATION

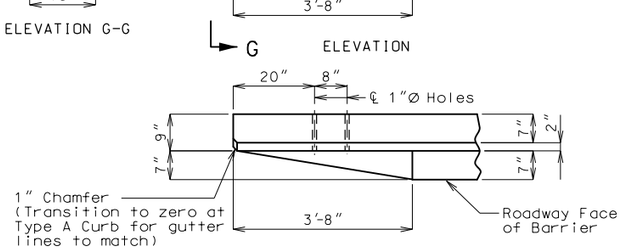

PLAN

DETAILS OF GUARD RAIL ATTACHMENT

General Notes:

Concrete traffic barrier delineators shall be placed on top of the barrier as shown on Missouri Standard Plan 617.10 and in accordance with Sec 617. Delineators on bridges with two-lane, two-way traffic shall have retroreflective sheeting on both sides. Concrete traffic barrier delineators will be considered completely covered by the contract unit price for Type B Barrier.

Reinforcing Steel:

Minimum clearance to reinforcing steel shall be 1 1/2" except as shown for bars embedded into end bent.

Use a minimum lap of 2'-7" between K9 and K10 or K13 bars.

TYPE B BARRIER AT END BENTS

(Left barrier shown, right barrier similar)

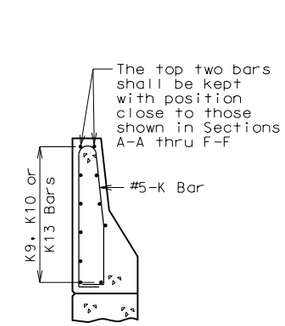

K1-K2 BAR PERMISSIBLE ALTERNATE SHAPE

(K3 or K4 thru K8 bars not shown for clarity)

The K1-K2 bar combination may be furnished as one bar as shown, at the contractor's option.

"THIS MEDIA SHOULD NOT BE CONSIDERED A CERTIFIED DOCUMENT."

DATE PREPARED	
4/29/2020	
ROUTE	STATE
*	MO
DISTRICT	SHEET NO.
BR	*
COUNTY	
*	
JOB NO.	
*	
CONTRACT ID.	
PROJECT NO.	
BRIDGE NO.	
BAC05	

DATE	DESCRIPTION

MISSOURI HIGHWAYS AND TRANSPORTATION COMMISSION
105 WEST CAPITOL
JEFFERSON CITY, MO 65102
1-888-ASK-MODOT (1-888-275-6636)

IF A SEAL IS PRESENT ON THIS SHEET IT HAS BEEN ELECTRONICALLY SEALED AND DATED.

Detailed
Checked

Note: This drawing is not to scale. Follow dimensions.

Sheet No. of

REV.