MISSOURI HIGHWAYS AND TRANSPORTATION COMMISSION

SEC/SUR 22 TWP 21N RGE 32W

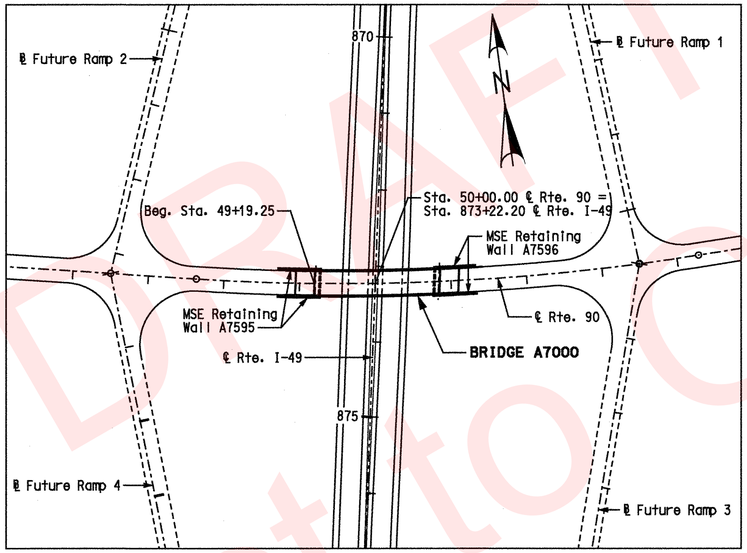

INDEX OF DRAWINGS

1 Title Sheet
2 General Plan and Elevation
3 General Notes and Estimated Quantities
4 Boring Data
5 Boring Data
6 Substructure Layout
7 End Bent 1
8 End Bent 1 Details
9 Bent 2
10 Bent 2 Details
11 End Bent 3
12 End Bent 3 Details
13 Vertical Drain at End Bents
14 Framing Plan and Steel Intermediate Diaphragm Details
15 Girder Details - Span (1-2)
16 Girder Details - Span (2-3)
17 Bent 2 Diaphragm Details
18 Slab Plan
19 Theoretical Slab Haunching Diagram & Slab Pouring Sequence
20 Details of Precast Prestressed Panels
21 Bottom of Slab Elevations and Slab Curve Ordinates
22 Slab Drain Details
23 Safety Barrier Curb Details
24 Optional Slip-Form Bridge Safety Barrier Curb
25 Bill of Reinforcing Steel
26 Bill of Reinforcing Steel
27 As-Built Pile Data

Draft Subject to Change

BRIDGE: RTE. 90 OVER RTE. I-49

STATE ROAD FROM RTE. H TO STATE LINE
ABOUT 8.0 MILES EAST OF RTE. 59
STA. 49+19.25 (RTE. 90)

STD. 609.00
STD. 617.10
STD. 706.35

Designed JUL 2009
Detailed JUL 2009
Checked AUG 2009

Note: This drawing is not to scale. Follow Dimensions.

STATE OF MISSOURI
GINA D. HORNER
NUMBER E-30413
REGISTERED PROFESSIONAL ENGINEER
3-9-10

DATE PREPARED	
07/31/09	
ROUTE I-49	STATE MO
DISTRICT BR	SHEET NO. 1
COUNTY McDONALD	
JOB NO. J7P0601	
CONTRACT ID.	
PROJECT NO.	
BRIDGE NO. A7000	

DATE	DESCRIPTION

IF A SFAI IS PRESENT ON THIS SHEET IT HAS BEEN ELECTRONICALLY SEALED AND DATED.

MISSOURI HIGHWAYS AND TRANSPORTATION COMMISSION
105 WEST CAPITOL
JEFFERSON CITY, MO 65102
1-888-ASK-MODOT (1-888-275-6636)

HNTB
715 KIRK DRIVE
KANSAS CITY, MO 64105-1310
TELEPHONE (816) 472-1201
CERTIFICATE OF AUTHORITY
NO. 001270

REV.

USER: TThompson
PLOTTED: 08-MAR-2010 15:13 \\kcow00\Jobs\49259\Bridges\Plans\CDtoMoDotA7000_03-05-10\J7P0601\A7000-dgn\ZPLOT_B01.dgn

(79′-84′) PRESTRESSED CONCRETE I-GIRDER SPANS

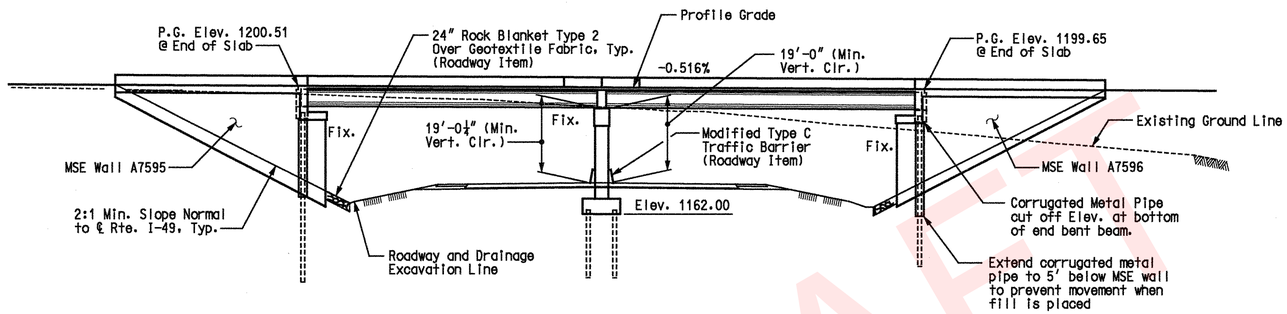

ELEVATION

Note:
Galvanized corrugated metal pipe to provide sleeving for piles which penetrate through the mechanically stabilized earth wall fill. See Special Provisions. Galvanized Corrugated Metal Culvert Pipe in accordance with Sec 1020.

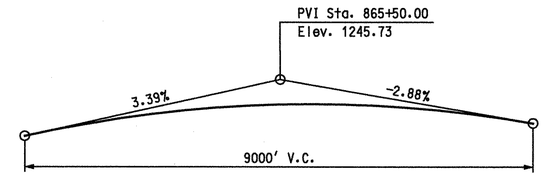

PROFILE GRADE - RTE. I-49

Notice and disclaimer regarding Boring Log Data:
The locations of all subsurface borings for this structure are shown on the bridge plan sheets for this structure. Boring data for the numbered locations is shown on Sheets No. 4 thru 5. The boring data for all locations indicated, as well as any other boring logs or other factual records of subsurface data and investigations performed by the department for the design of the project, will be provided in the bridge electronic deliverable file or will be available from the Project Contact upon written request. No greater significance or weight should be given to the boring data depicted on the plan sheets than is subsurface data available from the district or elsewhere.

The Commission does not represent or warrant that any such boring data accurately depicts the conditions to be encountered in constructing this project. A contractor assumes all risks it may encounter in basing its bid prices, time or schedule of performance on the boring data depicted here or those available from the district, or on any other documentation not expressly warranted, which the contractor may obtain from the Commission.

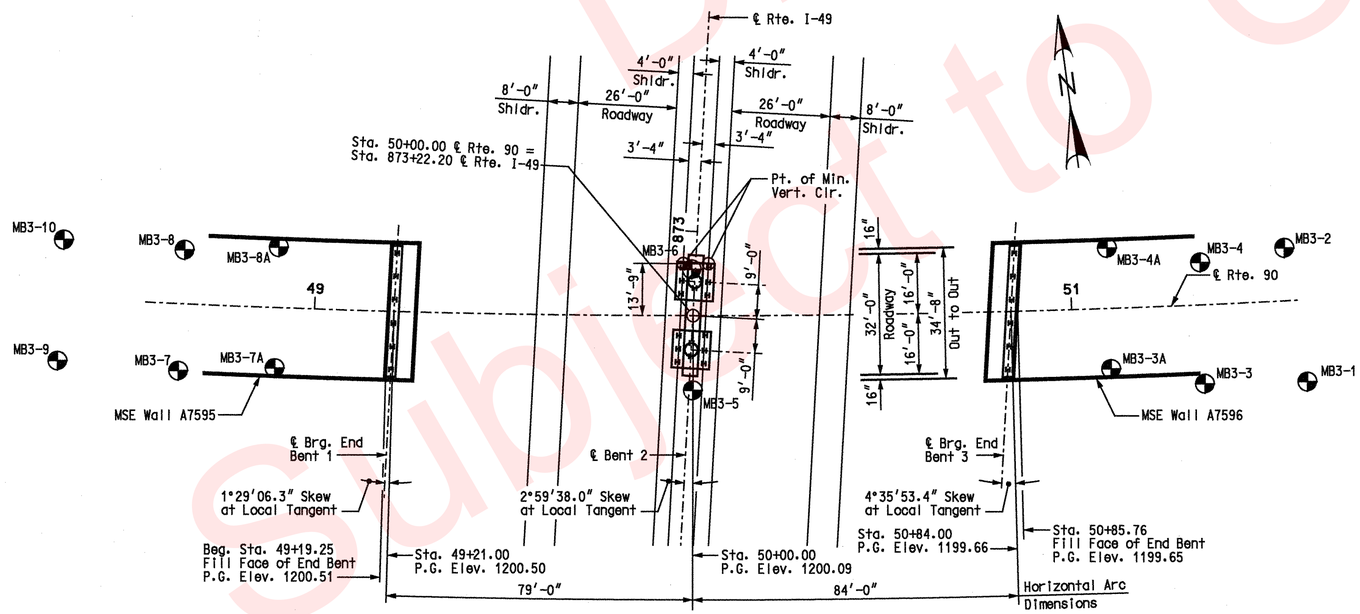

PLAN

CURVE DATA - ROUTE 90

P.I. Sta. = 50+97.57
△ = 12°42′24.7″ (Lt.)
D = 1°54′35.5″
L = 665.33′
T = 334.04′
R = 3000.00′
SE = 3.7%

Notes:
◔ Denotes boring location.
For pile locations, see Sheets No. 7, 9 and 11.

BENCHMARKS

BM-49-01-10 R.R. Spike 0.8′ above ground, East side of a 14″ red oak @ the NW quadrant of RTE 90 and SW 90-21 Elev. 1206.10

BM-49-01-11 1½″ Aluminum disk set in concrete, concrete flush with ground, 4.6′ from edge of county road 9′(+/-) south of 16″ black-jack oak, east side of county road SW 90-21, 60′(+/-) south of Don/Fern mail box #102, 0.3 miles(+/-) south of Rt. 90. Elev. 1123.70

GENERAL PLAN AND ELEVATION

Detailed Jul 2009
Checked Jul 2009

Note: This drawing is not to scale. Follow Dimensions.

STATE OF MISSOURI
GINA D. HORNER
NUMBER E-30413
REGISTERED PROFESSIONAL ENGINEER
3-4-10

DATE PREPARED	07/28/09
ROUTE	I-49
STATE	MO
DISTRICT	BR
SHEET NO.	2
COUNTY	McDONALD
JOB NO.	J7P0601
CONTRACT ID.	
PROJECT NO.	
BRIDGE NO.	A7000

DATE	DESCRIPTION

MISSOURI HIGHWAYS AND TRANSPORTATION COMMISSION
105 WEST CAPITOL
JEFFERSON CITY, MO 65102
1-888-ASK-MODOT (1-888-275-6636)

HNTB
715 KIRK DRIVE
KANSAS CITY, MO 64105-1310
TELEPHONE (816) 472-1201
CERTIFICATE OF AUTHORITY
NO. 001270

IF A SEAL IS PRESENT ON THIS SHEET IT HAS BEEN ELECTRONICALLY SEALED AND DATED.

REV.

DRAFT
Subject to Change

ESTIMATED QUANTITIES

ITEM		SUBSTR.	SUPERSTR.	TOTAL
Class 1 Excavation	cu. yard	164	——	164
Structural Steel Piles (12 in.)	linear foot	826	——	826
Pre-Bore for Piling	linear foot	176	——	176
Pile Point Reinforcement	each	30	——	30
Class B Concrete (Substructure)	cu. yard	88.4	——	88.4
Slab on Concrete I-Girder	sq. yard	——	637	637
* Safety Barrier Curb	linear foot	——	331	331
Type 6 (54 in.) Prestressed Concrete I-Girder	linear foot	——	652	652
Reinforcing Steel (Bridges)	pound	8,400	——	8,400
Reinforcing Steel (Epoxy Coated)	pound	3,570	——	3,570
Steel Intermediate Diaphragm for P/S Concrete Girders	each	——	6	6
Slab Drain	each	——	6	6
Vertical Drain at End Bents	each	2	——	2
Laminated Neoprene Bearing Pad	each	——	16	16
Corrugated Metal Pipe Pile Spacers	each	14	——	14

Notes:
The cost of furnishing, fabricating and installing Neoprene Bearing Pads , complete-in-place, will be paid for at the contract unit price for Laminated Neoprene Bearing Pad per each.
* Safety barrier curb shall be cast-in-place option or slip-form option.
All reinforcement in the end bents is included in the Estimated Quantities for Slab on Concrete I-Girder.
All reinforcement in the intermediate bent concrete diaphragms except reinforcement embedded in the beam cap is included in the Estimated Quantities for Slab on Concrete I-Girder.
All concrete above the intermediate bent cap is included in the Estimated Quantites for Slab on Concrete I-Girder.
All concrete above the construction joint in the end bents is included in the Estimated Quantities for Slab on Concrete I-Girder.

PILE AND FOOTING DATA

BENT NO.			1	2	3
Bearing Pile	Type		Foundation	Foundation	Foundation
	Kind		HP12x53	HP12x53	HP12x53
	Number		7	16	7
	Approximate Length	Ft.	44	14	42
	Pile Driving Verification Method		Dynamic Bearing Formula	Dynamic Bearing Formula	Dynamic Bearing Formula
	Pre-bore Elevation		———	1151.0	———
	Design Bearing	Kips	124	140	124
	Hammer Energy Required	Lb-Ft	13950	16875	13950

Notes:
Minimum energy requirement of hammer is based on plan length and design bearing value of piles.
Prebore to elevations shown in data table.
Manufactured pile point reinforcement shall be used on all piles in this structure.

ESTIMATED QUANTITIES FOR SLAB ON CONCRETE I-GIRDER

ITEM		TOTAL
Class B-2 Concrete	cu. yard	164.5
Reinforcing Steel	pound	4,180
Reinforcing Steel (Epoxy Coated)	pound	36,230

Notes:
The table of Estimated Quantities for Slab on Concrete I-Girder represents the quantities used by the State in preparing the cost estimate for concrete slabs. The area of the concrete slab will be measured to the nearest square yard with the horizontal dimensions as shown on the plan of slab. Payment for prestressed panels, stay-in-place forms, conventional forms, all concrete and coated and uncoated reinforcing steel will be considered completely covered by the contract unit price for the slab. Variations may be encountered in these estimated quantities but the variations cannot be used for adjustment in the contract unit price.
Method of forming the slab shall be as shown on the plans and in accordance with Sec 703. All hardware for forming the slab left in place as a permanent part of the structure shall be coated in accordance with ASTM A123 or ASTM B633 with a thickness class SC 4 and a finish type I, II or III.
Class B-2 Concrete quantity is based on minimum top flange thickness and minimum joint material thickness.
The prestressed panel quantities are not included in the table of Estimated Quantities for Slab on Concrete I-Girder.
Slab shall be cast-in-place with conventional and precast prestressed panel forming. Stay-in-place corrugated metal forms will not be permitted.

GENERAL NOTES:

DESIGN SPECIFICATIONS:
2007 - AASHTO LRFD 4th Edition (Superstructure)
Load and Resistance Factor Design
Seismic Design Category = A
Seismic Peak Horizontal Ground Acceleration = 0.04

2002 - AASHTO 17th Edition (Substructure)
Load Factor Design
Seismic Performance Category A
Acceleration Coefficient = 0.04

DESIGN LOADINGS:
HL-93 (LRFD Superstructure, LFD Substructure)
35#/Sq. Ft. Future Wearing Surface.
Defense Transporter Erector Loading
Earth 120#/Cu. Ft., Equivalent Fluid Pressure = 45#/Cu. Ft.
Superstructure: Simply-Supported, non-composite for dead load.
Continuous composite for live load.

DESIGN UNIT STRESSES:
Class B Concrete (Substructure) f'c = 3,000 psi.
Class B-1 Concrete (Safety Barrier) f'c = 4,000 psi
Class B-2 Concrete (Superstructure, except Prestressed Girders and Safety Barrier) f'c = 4,000 psi.
Reinforcing Steel Grade 60 Fy = 60,000 psi.
Structural Carbon Steel (ASTM A709 Grade 36) fy = 36,000 psi.
Steel Pile (ASTM A709 Grade 50) fb = 9,000 psi fy=50,000 psi.
For precast prestressed panel stresses, see Sheet No. 20.
For prestressed girder stresses, see Sheets No. 15 & 16.

NEOPRENE PADS:
Neoprene Elastomeric Pads shall be 60 durometer.
Laminated Neoprene Bearing Pads shall be in accordance with Sec 716.

JOINT FILLER:
All joint filler shall be in accordance with Sec 1057 for preformed sponge rubber expansion and partition joint filler, except as noted.

REINFORCING STEEL:
Minimum clearance to the reinforcing steel shall be 1-1/2", unless otherwise shown.

MISCELLANEOUS:
"Sec" refers to the sections in the standard and supplemental specifications unless specified otherwise.

PILES:
The piles for Bent 2 shall be placed in prebored holes. Driving and backfill shall be in accordance with Section 702.

STATE OF MISSOURI
GINA D. HORNER
NUMBER E-30413
REGISTERED PROFESSIONAL ENGINEER
3-9-10

DATE PREPARED	
7/28/09	
ROUTE I-49	STATE MO
DISTRICT BR	SHEET NO. 3
COUNTY McDONALD	
JOB NO. J7P0601	
CONTRACT ID.	
PROJECT NO.	
BRIDGE NO. A7000	

DATE	DESCRIPTION

MISSOURI HIGHWAYS AND TRANSPORTATION COMMISSION
105 WEST CAPITOL
JEFFERSON CITY, MO 65102
1-888-ASK-MODOT (1-888-275-6636)

HNTB
715 KIRK DRIVE
KANSAS CITY, MO 64105-1310
TELEPHONE (816) 472-1201
CERTIFICATE OF AUTHORITY
NO. 001270

IF A SEAL IS PRESENT ON THIS SHEET IT HAS BEEN ELECTRONICALLY SEALED AND DATED.

GENERAL NOTES AND
ESTIMATED QUANTITIES

Detailed JUL 2009
Checked AUG 2009

Note: This drawing is not to scale. Follow Dimensions.

DRAFT
Subject to Change

QU(TSF) P-Penet. E-Equiv. L-Labor.	STANDARD PENETRATION TEST DEPTH	BLOWS/6"	
			ELEV. 1199.7
1.0P	3.5	6-7-8	LEAN CLAY, with sand and gravel, red, medium stiff, moist
	8.5	20-15-15	ELEV. 1191.2
	13.5	10-9-8	
	18.5	10-8-6	SANDY CHERT GRAVEL, with clay seams, red and white, medium dense, moist
	23.5	6-6-7	
1.0P	28.5	8-4-6	ELEV. 1171.2
0.5P	33.5	2-2-2	LEAN CLAY, with to abundant gravel, red, soft to medium stiff, moist to wet
	38.5	5-2-50/1"	ELEV. 1160.2

ROCK CORE DEPTH	REC%	RQD%	
46.0	90	84	LIMESTONE, stratified, with chert seams and inclusions, light gray and gray, very fine to fine grained, thick bedded, fresh, hard, solid
51.0	100	84	ELEV. 1148.7

Boring Number MB3-7
End Bent 1 (Core)

QU(TSF) P-Penet. E-Equiv. L-Labor.	STANDARD PENETRATION TEST DEPTH	BLOWS/6"	
			ELEV. 1199.3
			LEAN CLAY, with organics, dark brown, moist ELEV. 1198.3
4.0P	3	8-13-10	
4.25+P	8	11-23-40	FAT CLAY, with chert gravel and sand, red, very stiff to hard, moist
2.0P	13	7-11-9	
			ELEV. 1183.8
3.25P	18	15-14-11	
2.5P	23	10-8-7	
			LEAN CLAY, with chert gravel, red and white, very stiff to hard, moist
3.0P	28	8-9-11	
4.25+P	33	7-21-19	
			ELEV. 1161.3

Auger refusal on Limestone at 38.0'

Boring Number MB3-7A
End Bent 1

QU(TSF) P-Penet. E-Equiv. L-Labor.	STANDARD PENETRATION TEST DEPTH	BLOWS/6"	
			ELEV. 1198.7
			LEAN CLAY, with organics, dark brown, moist ELEV. 1198.2
4.25+P	3	5-7-8	
			LEAN CLAY, light brown, moist ELEV. 1196.2
			FAT CLAY, trace chert gravel, red, hard, moist ELEV. 1192.7
3.25P	8	49-17-17	
			LEAN CLAY, with chert gravel and sand, red and white, hard to stiff, moist
1.75P	13.5	11-12-13	
			ELEV. 1182.2
	18.5	17-18-12	
	23.5	8-13-14	
			SANDY CHERT GRAVEL, with clay seams, red and white, dense to medium dense, moist
	28.5	7-9-13	
	33.5	6-11-10	
1.75P	38.5	9-8-6	ELEV. 1161.2
1.25P	43.5	8-21-5	LEAN CLAY, with chert gravel, red, brown, stiff, moist
	48.5	8-50/3"	ELEV. 1149.4

Auger refusal on apparent Limestone at 49.3'

Boring Number MB3-8A
End Bent 1

TYPICAL BORING

QU(TSF) P-Penet. E-Equiv. L-Labor. | STANDARD PENETRATION TEST DEPTH | BLOWS/6" | ELEV. 902.2 — Ground surface elevation

Unconfined Compressive Strength in tons per square foot as determined by P- Pocket Penetrometer, E- Equivalent or L- Laboratory Unconfined Compression Test. Depth of sample is indicated at top of the sampling interval.

657.6 L

Standard Penetration Test Results. The number of blows of a 140 lb. hammer falling 30" required to drive a 1-3/8" I.D., 2" O.D. split barrel sampler 6". Penetration of less than 6" is shown as 50/3"-Blows/penteration in inches. Depth of sample is indicated at top of the sample interval.

Interval of bedrock that was sampled with double tube core barrel. Depth of sample is indicated at the bottom of the sample interval.

Core Run (REC%)- Core Recovery in per cent for the indicated interval.

DEPTH	BLOWS/6"
2.0	3-2-3
3.5	
7.0	50/3"

ROCK CORE

DEPTH	REC%	RQD%
15.0	82	0

ELEV. 892.2 — Elevation of Material Change

ELEV. 887.2

Interval of Undistubed Sample (Thin Walled Tube). Depth of sample is indicated at top of the sample interval.

Ground Water Level as measured at hours indicated after completion of boring. WD indicates water level as measured while drilling.

Stratum Line-Material Change

RQD-(Rock Quality Designation) a modified core recovery in per cent used as an index to rock quality.

RQD(%)	Rock Quality Designation
0-25	Very Poor
25-50	Poor
50-75	Fair
75-90	Good
90-100	Excellent

Boring No. B-4 — Boring No.

Substructure Unit Number — Bent 2

GENERAL NOTES:

The borings shown on this drawing were drilled for the Missouri Department of Transportation, between May 20 and 30, 2003 and on May 3, 2006, by Terracon, Inc. under the direction of HNTB.

For boring locations in plan, see Sheet No. 2.

The ground water levels shown were recorded during time of drilling. Porosity of soil strata, weather conditions, seasonal changes, site topography, etc., may cause changes in the water levels reported.

The boring information shown on this drawing is abbreviated. A complete copy of boring logs and test results are available upon request to the Department.

For notice and disclaimer regarding boring log data, see Sheet No. 2.

BORING DATA

DRAFT Subject to Change

STATE OF MISSOURI GINA D. HORNER NUMBER E-30413 REGISTERED PROFESSIONAL ENGINEER 3-9-10

DATE PREPARED	
04/13/09	
ROUTE I-49	STATE MO
DISTRICT BR	SHEET NO. 4
COUNTY McDONALD	
JOB NO. J7P0601	
CONTRACT ID.	
PROJECT NO.	
BRIDGE NO. A7000	

DESCRIPTION | DATE

MISSOURI HIGHWAYS AND TRANSPORTATION COMMISSION
105 WEST CAPITOL
JEFFERSON CITY, MO 65102
1-888-ASK-MODOT (1-888-275-6636)

HNTB
715 KIRK DRIVE
KANSAS CITY, MO 64105-1310
TELEPHONE (816) 472-1201
CERTIFICATE OF AUTHORITY NO. 001270

IF A SEAL IS PRESENT ON THIS SHEET IT HAS BEEN ELECTRONICALLY SEALED AND DATED.

REV.

USER: TThompson
PLOTTED: 08-MAR-2010 15:13 \\kcow00\Jobs\49259\Bridges\Plans\CDtoMoDotA7000_03-05-10\J7P0601\A7000-dgn\ZPLOT_B04.dgn

Detailed JUL 2009
Checked JUL 2009

Note: This drawing is not to scale. Follow Dimensions.

\\kcow00\Jobs\49259\Bridges\Plans\CDtoMoDotA7000_03-05-10\J7P0601\A7000-dgn\ZPLOT_B04.dgn 08-MAR-2010 15:13

QU(TSF) P-Penet. E-Equiv. L-Labor.	STANDARD PENETRATION TEST DEPTH	BLOWS/6"	
			ELEV. 1194.6
1.0P	3.5	6-8-12	FAT CLAY, trace chert seams, red, stiff, moist
2.0P	8.5	11-7-12	ELEV. 1186.1
	13.5	21-14-7	LEAN CLAY, trace to abundant chert seams, red and white, very stiff, moist
3.0P	18.5	16-12-45	
3.0P	23.5	12-7-7	ELEV. 1171.1
	28.5	12-14-16	FAT CLAY, abundant chert seams, red, very stiff, moist ELEV. 1166.1
	33.5	6-11-4	SANDY GRAVEL, abundant clay seams, red and white, medium dense, moist
	38.5	50/0"	ELEV. 1154.6 CHERT, light gray and gray, very fine to fine grained, thick bedded, weathered, hard, trace vugs

WD

ROCK CORE DEPTH	REC%	RQD%
45.0	83	53
50.0	92	89
54.3	100	97

ELEV. 1153.6
APPARENT CLAY LAYER, no recovery
ELEV. 1151.6
CHERT, stratified, with limetone seams, light gray and gray, very fine to fine grained, thick bedded, weathered, hard, trace vugs
ELEV. 1140.3

Boring Number MB3-5
Bent 2 (Core)

QU(TSF) P-Penet. E-Equiv. L-Labor.	STANDARD PENETRATION TEST DEPTH	BLOWS/6"	
			ELEV. 1195.4
	3.5	12-17-13	GRAVEL, scattered clay seams, red and white, dense, moist
	8.5	35-25-15	
	13.5	20-13-8	ELEV. 1181.9 FAT CLAY, abundant gravel, red, stiff to very stiff, moist
	18.5	19-18-50	ELEV. 1176.9 LEAN CLAY, abundant gravel, red, hard, moist
	23.5	12-12-12	ELEV. 1171.9
	28.5	14-13-13	SANDY GRAVEL, with clay, red and white, medium dense to dense, moist
	33.5	18-15-15	
			ELEV. 1157.4

Auger refusal on apparent Chert at 38.0'

Boring Number MB3-6
Bent 2

QU(TSF) P-Penet. E-Equiv. L-Labor.	STANDARD PENETRATION TEST DEPTH	BLOWS/6"	
			ELEV. 1188.7
3.5P	3.5	13-14-15	LEAN CLAY, with organics, dark brown, brown, moist ELEV. 1187.7
2.25P	8.5	10-12-14	
2.5P	13.5	10-11-9	LEAN CLAY, with chert gravel and sand, red, very stiff to stiff, moist
1.75P	18.5	10-15-14	
1.75P	23.5	8-8-8	
1.25P	28.5	8-9-7	
			ELEV. 1156.7
			LEAN CLAY, with chert gravel, red, brown, stiff, moist ELEV. 1155.2

Auger refusal on Limestone at 33.5'

Boring Number MB3-4A
End Bent 3

QU(TSF) P-Penet. E-Equiv. L-Labor.	STANDARD PENETRATION TEST DEPTH	BLOWS/6"	
			ELEV. 1185.5
			LEAN CLAY, with organics, dark brown, moist ELEV. 1184.5
3.25P	3.5	11-12-27	LEAN CLAY, with chert gravel and sand, red, very stiff, moist ELEV. 1178.5
	8.5	40-34-30	SANDY CHERT GRAVEL, trace clay seams, red and white, very dense, moist ELEV. 1173.5
3.25P	13.5	9-12-12	
3.75P	18.5	8-11-9	LEAN CLAY, with chert gravel, red, very stiff to stiff, moist
1.5P	23.5	11-14-16	
1.0P	28.5	4-6-6	

WD

ELEV. 1154.5

Auger refusal on Limestone at 31.0'

Boring Number MB3-3A
End Bent 3

QU(TSF) P-Penet. E-Equiv. L-Labor.	STANDARD PENETRATION TEST DEPTH	BLOWS/6"	
			ELEV. 1186.1
	3.5	12-10-10	LEAN CLAY, abundant sand, with to abundant gravel, red, very stiff, moist
2.0P	8.5	10-12-8	
	13.5	22-16-16	ELEV. 1172.6
	18.5	9-11-11	SANDY GRAVEL, with clay seams, red and white, medium dense to dense, moist
1.0P	23.5	6-8-8	ELEV. 1162.6
	28.5	50/0"	LEAN CLAY, abundant gravel, red and white, medium stiff, moist

ROCK CORE DEPTH	REC%	RQD%
31.0	91	80
38.5	100	85
39.0	100	68

ELEV. 1157.1
LIMESTONE, stratified, trace chert seams and inclusions, light gray and gray, medium to thick bedded, fine grained, slightly weathered to fresh, hard, solid.
ELEV. 1147.1

Boring Number MB3-4
End Bent 3 (Core)

NOTE:
For Typical Boring and General Notes, see Sheet No. 4.

BORING DATA

DRAFT
Subject to Change

STATE OF MISSOURI
GINA D. HORNER
NUMBER E-30413
REGISTERED PROFESSIONAL ENGINEER
3-9-10

DATE PREPARED 04/13/09
ROUTE I-49 | STATE MO
DISTRICT BR | SHEET NO. 5
COUNTY McDONALD
JOB NO. J7P0601
CONTRACT ID.
PROJECT NO.
BRIDGE NO. A7000

DESCRIPTION | DATE

MISSOURI HIGHWAYS AND TRANSPORTATION COMMISSION
105 WEST CAPITOL
JEFFERSON CITY, MO 65102
1-888-ASK-MODOT (1-888-275-6636)

HNTB
715 KIRK DRIVE
KANSAS CITY, MO 64105-1310
TELEPHONE (816) 472-1201
CERTIFICATE OF AUTHORITY NO. 001270

IF A SEAL IS PRESENT ON THIS SHEET IT HAS BEEN ELECTRONICALLY SEALED AND DATED.

USER: TThompson
PLOTTED: 08-MAR-2010 15:13 \\kcow00\Jobs\49259\Bridges\Plans\CDtoMoDotA7000_03-05-10\J7P0601\A7000-dgn\ZPLOT_B05.dgn

Detailed JUL 2009
Checked JUL 2009

Note: This drawing is not to scale. Follow Dimensions.

REV.

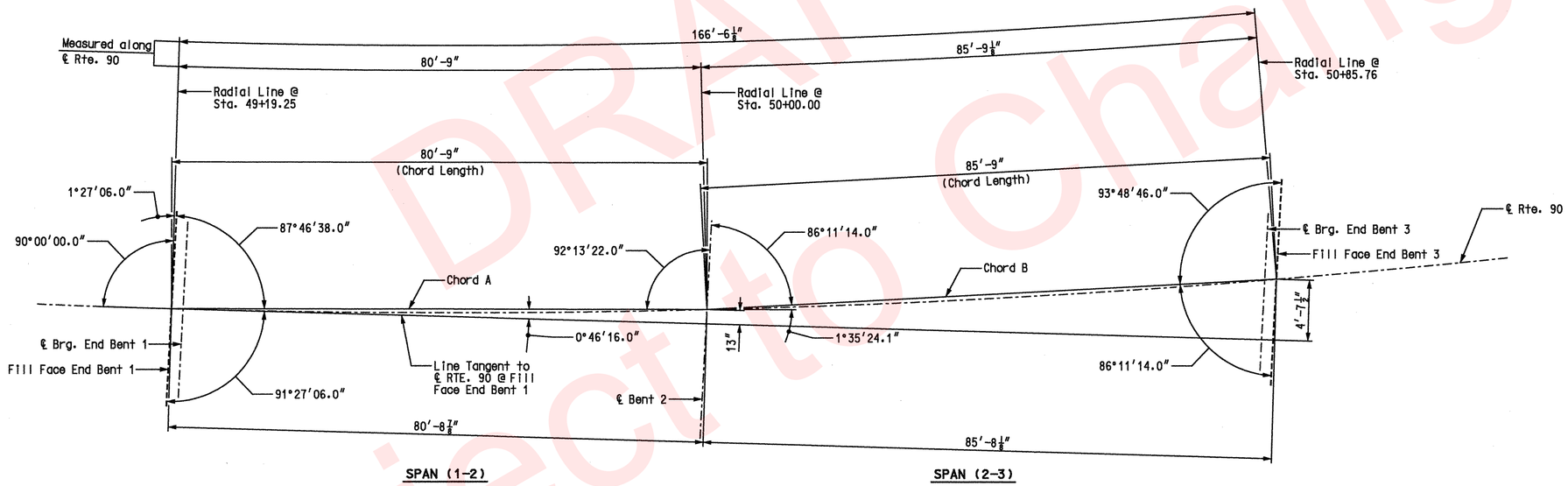

SUBSTRUCTURE LAYOUT

DRAFT
Subject to Change

STATE OF MISSOURI
GINA D. HORNER
NUMBER E-30413
REGISTERED PROFESSIONAL ENGINEER
3-9-10

DATE PREPARED	4/13/09
ROUTE	I-49
STATE	MO
DISTRICT	BR
SHEET NO.	6
COUNTY	McDONALD
JOB NO.	J7P0601
CONTRACT ID.	
PROJECT NO.	
BRIDGE NO.	A7000

DATE	DESCRIPTION

IF A SFAI IS PRESENT ON THIS SHEET IT HAS BEEN FILED ELECTRONICALLY SEALED AND DATED.

MISSOURI HIGHWAYS AND TRANSPORTATION COMMISSION
105 WEST CAPITOL
JEFFERSON CITY, MO 65102
1-888-ASK-MODOT (1-888-275-6636)

HNTB
715 KIRK DRIVE
KANSAS CITY, MO 64105-1310
TELEPHONE (816) 472-1201
CERTIFICATE OF AUTHORITY
NO. 001270

USER: TThompson
PLOTTED: 08-MAR-2010 15:14 \\kcow00\Jobs\49259\Bridges\Plans\CDtoMoDotA7000_03-05-10\J7P0601\A7000-dgn\ZPLOT_B06.dgn

Detailed APR 2009
Checked APR 2009

Note: This drawing is not to scale. Follow Dimensions.

Sheet No. 6 of 27

REV.

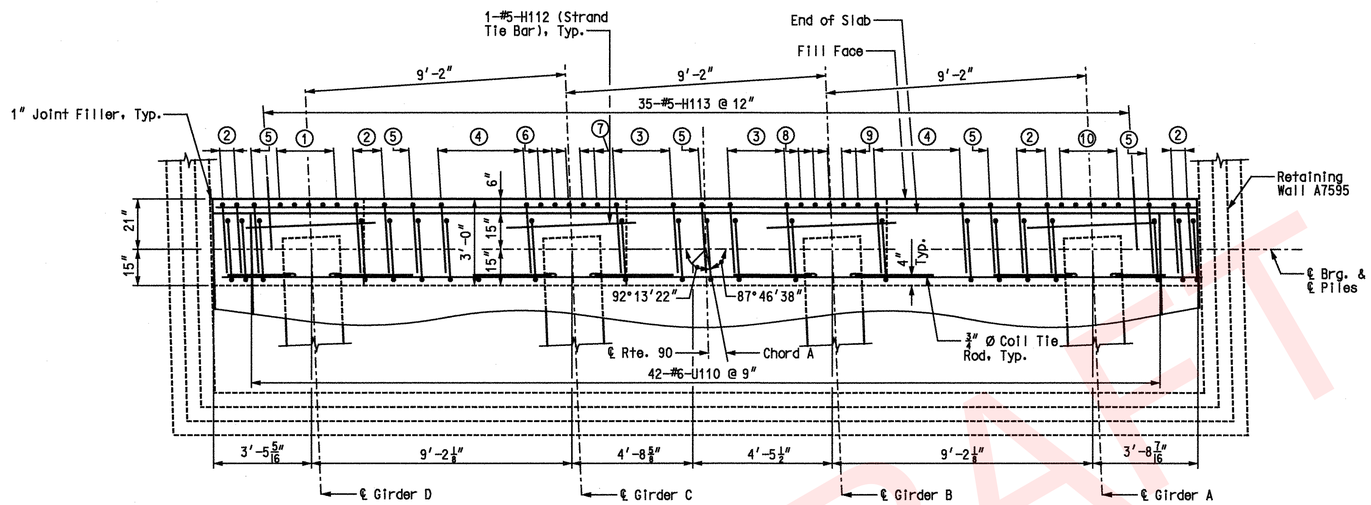

PLAN

① 5-#6-V102 to match #4-U107
② 2-#5-U108 & 2-#6-U109 to match #5-U101
③ 3-#5-U108 & 3-#6-U109 to match #5-U101
④ 4-#5-U108 & 4-#6-U109 to match #5-U101
⑤ 1-#5-U108 & 1-#6-U109 to match #5-V101
⑥ 1-#6-V102 to match #4-U106
⑦ 1-#6-V102 to match #4-U105
⑧ 1-#6-V102 to match #4-U104
⑨ 1-#6-V102 to match #4-U103
⑩ 5-#6-V102 to match #4-U102

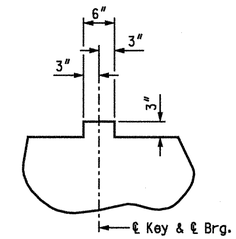

TYPICAL SECTION THRU KEY

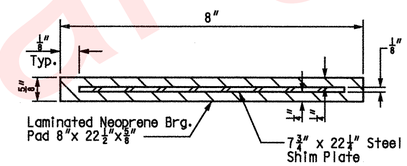

DETAIL OF LAMINATED NEOPRENE BEARING PAD

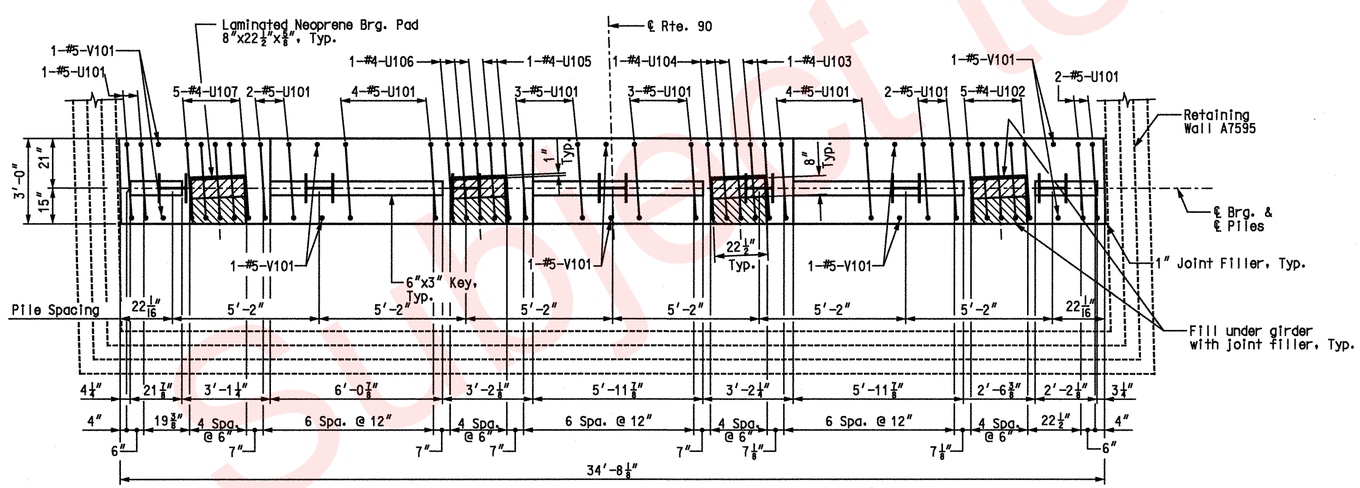

PLAN OF BEAM

Notes:
All piles shall be HP12x53.
All vertical reinforcing bars in the substructure beams or caps shall be field adjusted to clear piles by at least 1 1/2".
Provide a minimum of 9" Cl. from outside edge of pile to face of beam.
All concrete in the end bent above top of beam and below top of slab shall be Class B-2.
For details of Retaining Wall A7595, see Retaining Wall plans.

SUBSTRUCTURE QUANTITY TABLE FOR END BENT 1		
ITEM		QUANTITY
Structural Steel Piles (12 in.)	linear foot	308
Pile Point Reinforcement	each	7
Class B Concrete (Substructure)	cu. yard	13.3
Corrugated Metal Pipe Pile Spacers	each	7

Note:
These quantities are included in the Estimated Quantities table on Sheet No. 3.

END BENT 1

STATE OF MISSOURI
GINA D. HORNER
NUMBER E-30413
REGISTERED PROFESSIONAL ENGINEER
3-9-10

DATE PREPARED	
07/22/09	
ROUTE I-49	STATE MO
DISTRICT BR	SHEET NO. 7
COUNTY McDONALD	
JOB NO. J7P0601	
CONTRACT ID.	
PROJECT NO.	
BRIDGE NO. A7000	

DATE	DESCRIPTION

IF A SFAI IS PRESENT ON THIS SHEET IT HAS BEEN ELECTRONICALLY SEALED AND DATED.

MISSOURI HIGHWAYS AND TRANSPORTATION COMMISSION
105 WEST CAPITOL
JEFFERSON CITY, MO 65102
1-888-ASK-MODOT (1-888-275-6636)

HNTB
715 KIRK DRIVE
KANSAS CITY, MO 64105-1310
TELEPHONE (816) 472-1201
CERTIFICATE OF AUTHORITY NO. 001270

REV.

DRAFT Subject to Change

USER: TThompson
PLOTTED: 08-MAR-2010 15:14 \\kcow00\Jobs\49259\Bridges\Plans\CDtoMoDotA7000_03-05-10\J7P0601\A7000-dgn\ZPLOT_B07.dgn

Detailed JUL 2009
Checked JUL 2009

Note: This drawing is not to scale. Follow Dimensions.

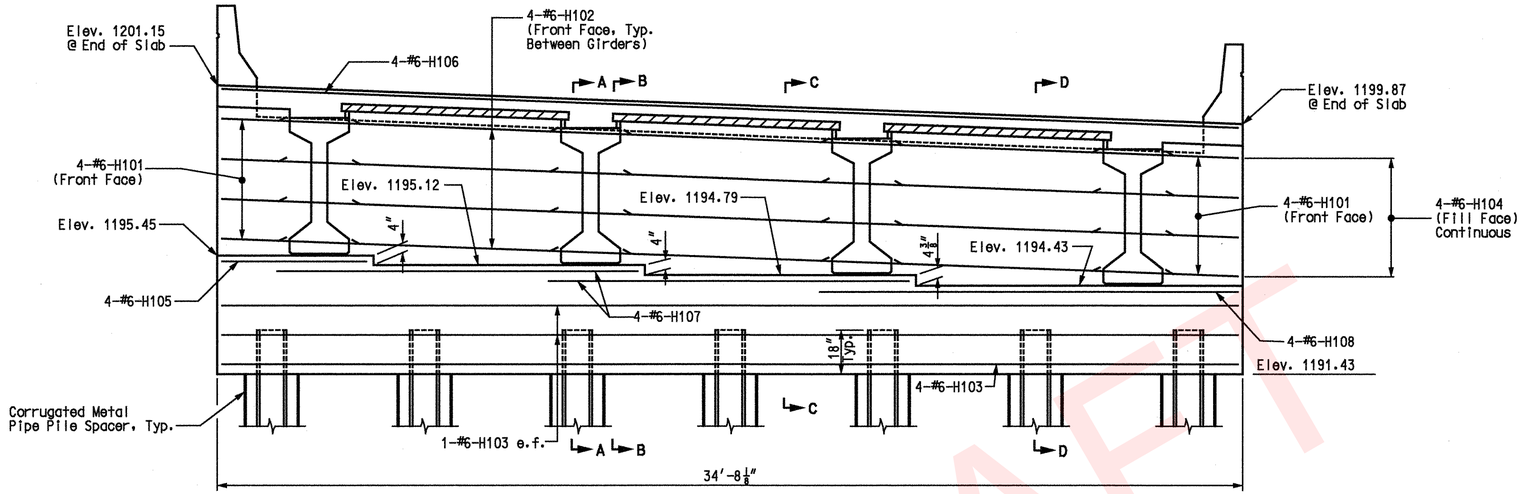

ELEVATION

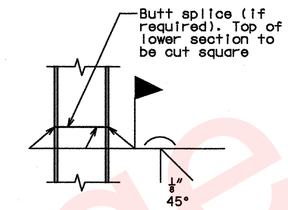

DETAIL OF STEEL
PILE SPLICE

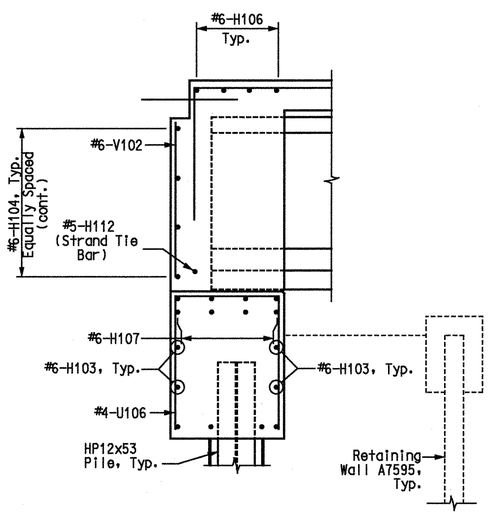

SECTION A-A

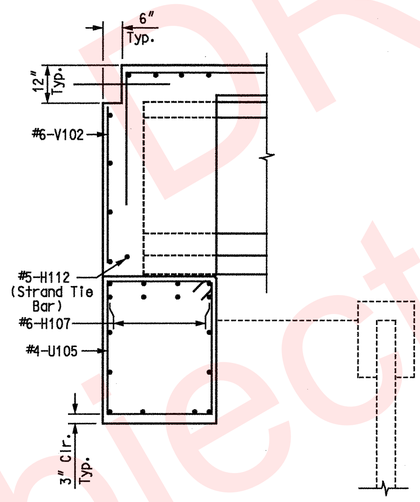

SECTION B-B

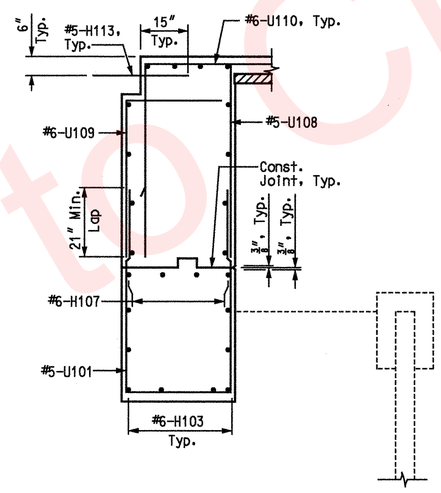

SECTION C-C

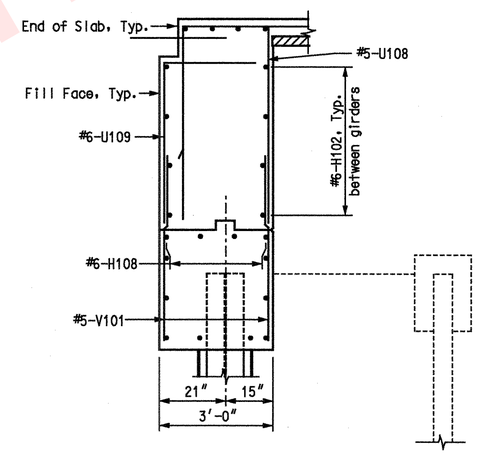

SECTION D-D

Notes:
e.f. denotes each face.
For additional notes and details, see Sheet No. 7.

END BENT 1 DETAILS

DRAFT
Subject to Change

STATE OF MISSOURI
GINA D. HORNER
NUMBER E-30413
REGISTERED PROFESSIONAL ENGINEER
3-9-10

DATE PREPARED	07/22/09
ROUTE	I-49
STATE	MO
DISTRICT	BR
SHEET NO.	8
COUNTY	McDONALD
JOB NO.	J7P0601
CONTRACT ID.	
PROJECT NO.	
BRIDGE NO.	A7000

DESCRIPTION | DATE

MISSOURI HIGHWAYS AND TRANSPORTATION COMMISSION
105 WEST CAPITOL
JEFFERSON CITY, MO 65102
1-888-ASK-MODOT (1-888-275-6636)

HNTB
715 KIRK DRIVE
KANSAS CITY, MO 64105-1310
TELEPHONE (816) 472-1201
CERTIFICATE OF AUTHORITY
NO. 001270

IF A SFAI IS PRESENT ON THIS SHEET IT HAS BEEN ELECTRONICALLY SEALED AND DATED.

REV.

USER: TThompson
PLOTTED: 08-MAR-2010 15:14 \\kcow00\Jobs\49259\Bridges\Plans\CDtoMoDotA7000_03-05-10\J7P0601\A7000-dgn\ZPLOT_B08.dgn

Detailed JUL 2009
Checked JUL 2009

Note: This drawing is not to scale. Follow Dimensions.

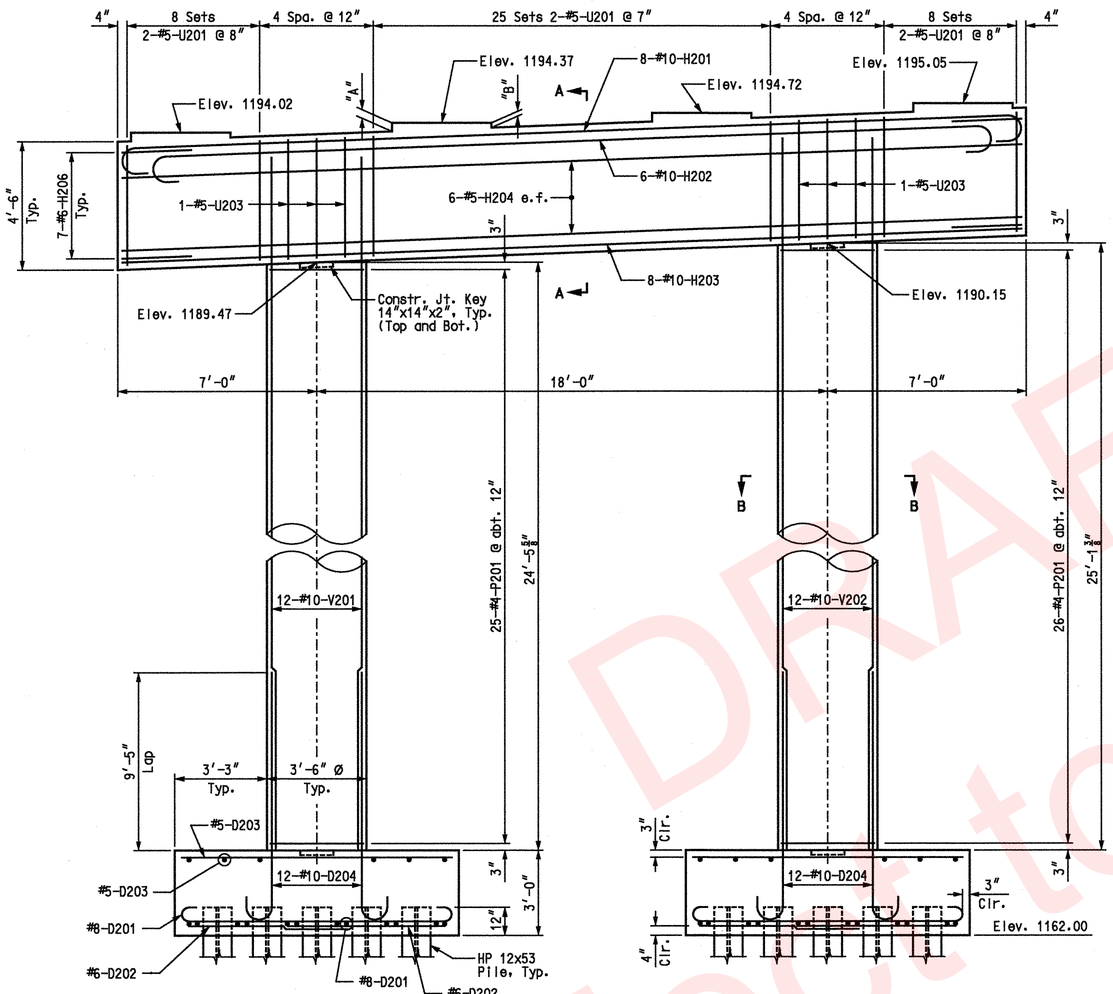

ELEVATION

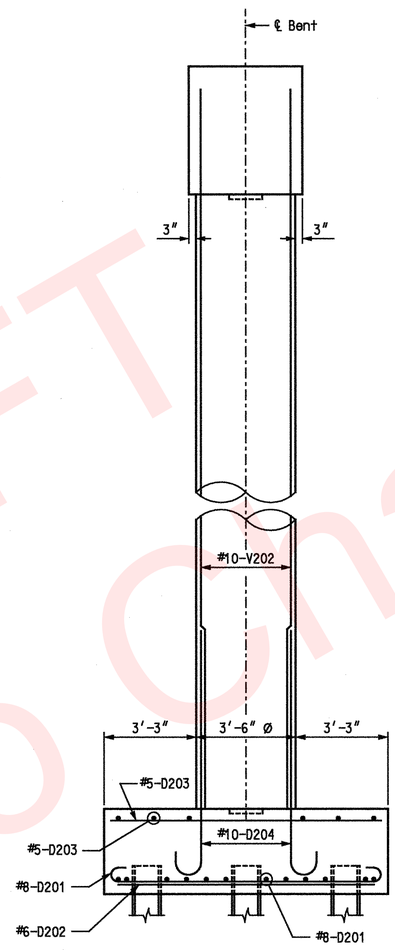

END VIEW

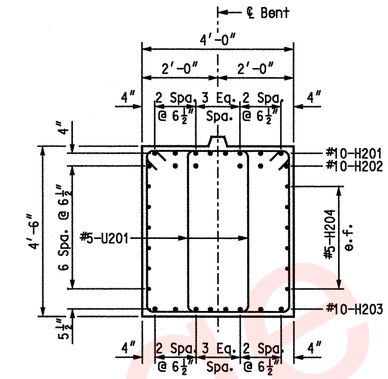

SECTION A-A

Scale: 1/2"=1'-0"

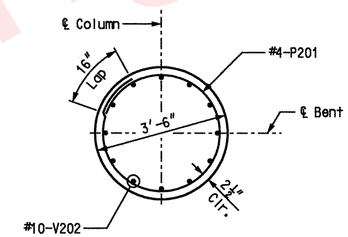

SECTION B-B

Scale: 1/2"=1'-0"

BEARING PAD HEIGHT		
GIRDER	DIMENSION	
	"A"	"B"
A	3 1/2"	2"
B	3 1/2"	2"
C	3 1/2"	2"
D	3 3/8"	1 7/8"

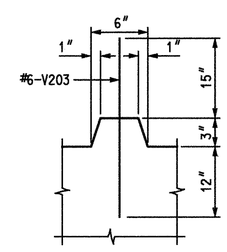

DETAIL OF KEY

Scale: 1 1/2"=1'-0"

Notes:
For details of Laminated Neoprene Bearings, see Sheet No. 10.
For Footing Details, see Sheet No. 10.

BENT 2

DRAFT
Subject to change

STATE OF MISSOURI
GINA D. HORNER
NUMBER E-30413
REGISTERED PROFESSIONAL ENGINEER
3-9-10

DATE PREPARED	4/17/09
ROUTE	I-49
STATE	MO
DISTRICT	BR
SHEET NO.	9
COUNTY	McDONALD
JOB NO.	J7P0601
CONTRACT ID.	
PROJECT NO.	
BRIDGE NO.	A7000

DESCRIPTION

DATE

MISSOURI HIGHWAYS AND TRANSPORTATION COMMISSION
105 WEST CAPITOL
JEFFERSON CITY, MO 65102
1-888-ASK-MODOT (1-888-275-6636)

HNTB
715 KIRK DRIVE
KANSAS CITY, MO 64105-1310
TELEPHONE (816) 472-1201
CERTIFICATE OF AUTHORITY
NO. 001270

IF A SFAI IS PRESENT ON THIS SHEET IT HAS BEEN ELECTRONICALLY SEALED AND DATED.

REV.

USER: TThompson
PLOTTED: 08-MAR-2010 15:14 \\kcow00\Jobs\49259\Bridges\Plans\CDtoMoDotA7000_03-05-10\J7P0601\A7000-dgn\ZPLOT_B09.dgn

Detailed APR 2009
Checked APR 2009

Note: This drawing is not to scale. Follow Dimensions.

\\kcow00\Jobs\49259\Bridges\Plans\CDtoMoDotA7000_03-05-10\J7P0601\A7000-dgn\ZPLOT_B09.dgn 08-MAR-2010 15:14

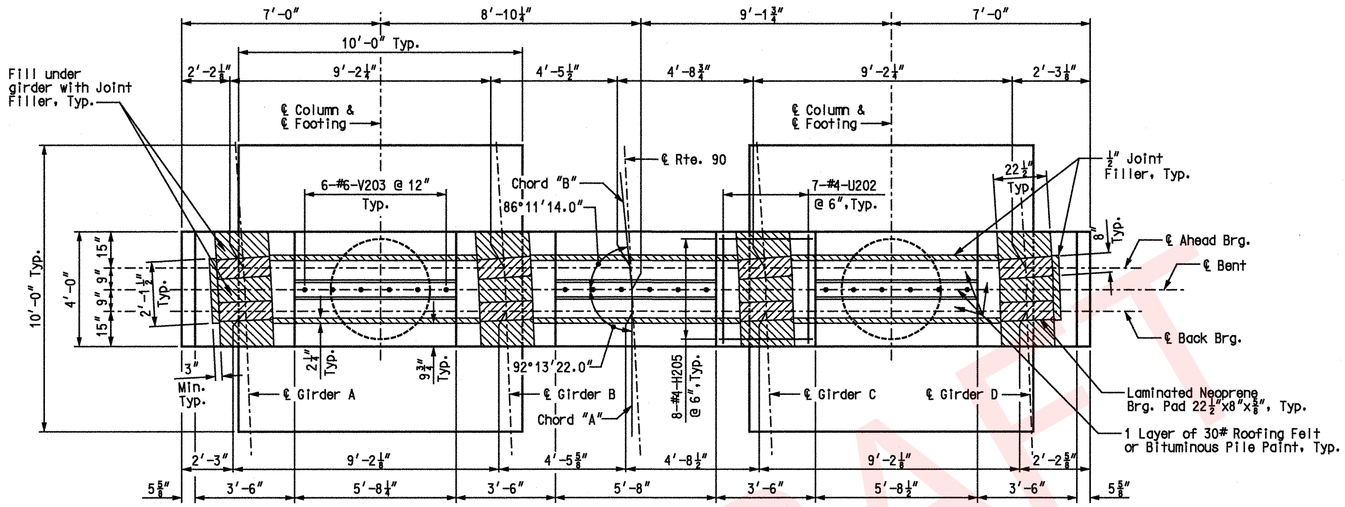

PLAN

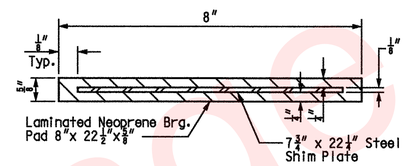

DETAIL OF LAMINATED NEOPRENE BEARING PAD

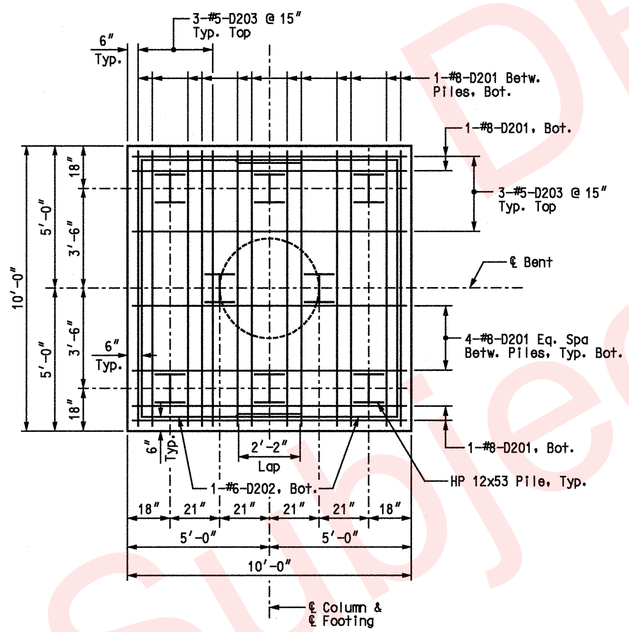

FOOTING PLAN

SUBSTRUCTURE QUANTITY TABLE FOR BENT 2		
ITEM		QUANTITY
Class 1 Excavation	cu. yard	164
Structural Steel Piles (12 in.)	linear foot	224
Pre-Bore for Piling	linear foot	176
Pile Point Reinforcement	each	16
Class B Concrete (Substructure)	cu. yard	61.8
Reinforcing Steel (Bridges)	pound	8,350
Reinforcing Steel (Epoxy Coated)	pound	3,580

Note:
The Substructure Quantities are included in the Estimated Quantities table on Sheet No. 3.

Notes:
For additional details and notes, see Sheet No. 9.
For detail of steel pile splice, see Sheet No. 8.
For steps 2" or more, use 2¼" x ½" joint filler up vertical face.

BENT 2 DETAILS

DRAFT
Subject to Change

STATE OF MISSOURI
GINA D. HORNER
NUMBER E-30413
REGISTERED PROFESSIONAL ENGINEER
3-9-10

DATE PREPARED	4/21/09
ROUTE	I-49
STATE	MO
DISTRICT	BR
SHEET NO.	10
COUNTY	McDONALD
JOB NO.	J7P0601
CONTRACT ID.	
PROJECT NO.	
BRIDGE NO.	A7000

DESCRIPTION

DATE

MISSOURI HIGHWAYS AND TRANSPORTATION COMMISSION
105 WEST CAPITOL
JEFFERSON CITY, MO 65102
1-888-ASK-MODOT (1-888-275-6636)

HNTB
715 KIRK DRIVE
KANSAS CITY, MO 64105-1310
TELEPHONE (816) 472-1201
CERTIFICATE OF AUTHORITY NO. 001270

IF A SFAI IS PRESENT ON THIS SHEET IT HAS BEEN ELECTRONICALLY SEALED AND DATED.

REV.

USER: TThompson
PLOTTED: 08-MAR-2010 15:14 \\kcow00\Jobs\49259\Bridges\Plans\CDtoMoDotA7000_03-05-10\J7P0601\A7000-dgn\ZPLOT_B10.dgn

Detailed APR 2009
Checked APR 2009

Note: This drawing is not to scale. Follow Dimensions.

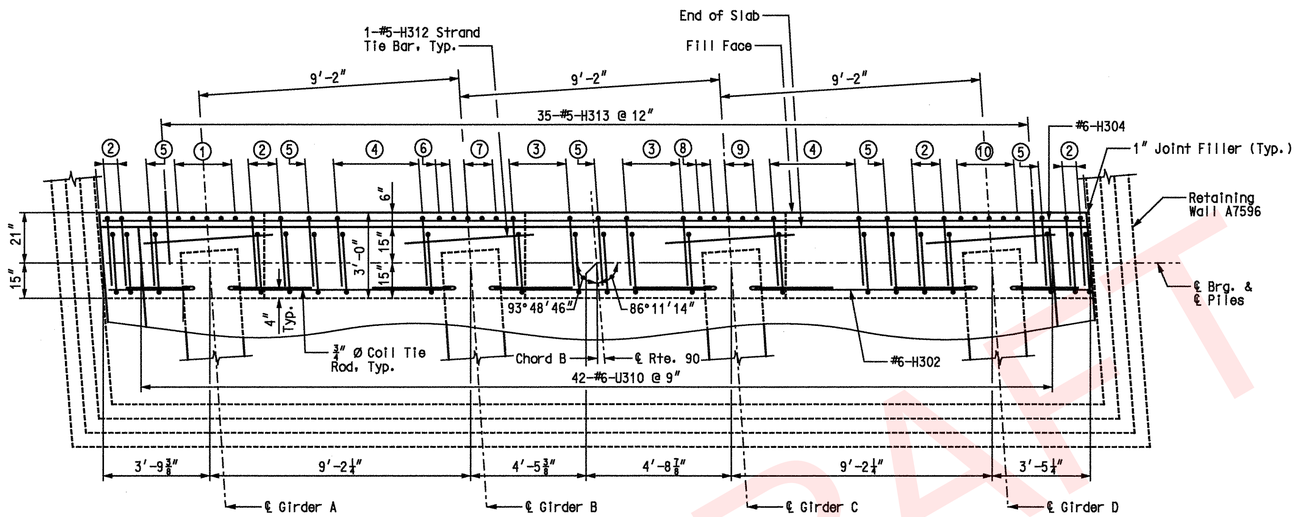

PLAN

① 5-#6-V302 to match #4-U302
② 2-#5-U308 & 2-#6-U309 to match #5-U301
③ 3-#5-U308 & 3-#6-U309 to match #5-U301
④ 4-#5-U308 & 4-#6-U309 to match #5-U301
⑤ 1-#5-U308 & 1-#6-U309 to match #5-V301
⑥ 1-#6-V302 to match #4-U303
⑦ 3-#6-V302 to match #4-U304
⑧ 1-#6-V302 to match #4-U305
⑨ 3-#6-V302 to match #4-U306
⑩ 5-#6-V302 to match #4-U307

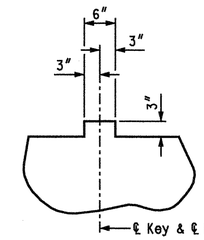

TYPICAL SECTION THRU KEY

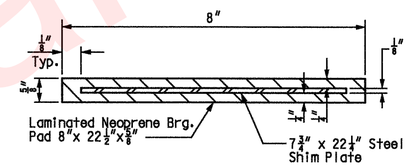

DETAIL OF LAMINATED NEOPRENE BEARING PAD

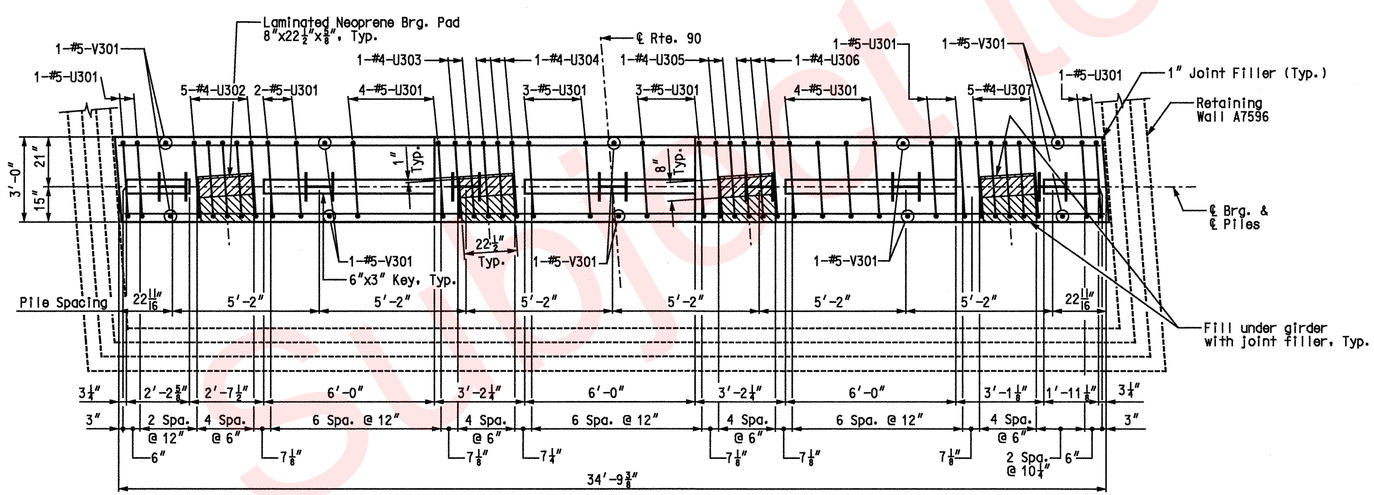

PLAN OF BEAM

Notes:
All piles shall be HP12x53.
All vertical reinforcing bars in the substructure beams or caps shall be field adjusted to clear piles by at least 1 1/2".
Provide a minimum of 9" Cl. from outside edge of pile to face of beam.
All concrete in the end bent above top of beam and below top of slab shall be Class B-2.
For details of Retaining Wall A7596, see Retaining Wall plans.
For detail of steel pile splice, see Sheet No. 8.

SUBSTRUCTURE QUANTITY TABLE FOR END BENT 3

ITEM		QUANTITY
Structural Steel Piles (12 In.)	linear foot	294
Pile Point Reinforcement	each	7
Class B Concrete (Substructure)	cu. yard	13.4
Corrugated Metal Pipe Pile Spacers	each	7

Note:
These quantities are included in the Estimated Quantities table on Sheet No. 3.

END BENT 3

STATE OF MISSOURI
GINA D. HORNER
NUMBER E-30413
REGISTERED PROFESSIONAL ENGINEER
3-9-10

DATE PREPARED	
07/22/08	
ROUTE I-49	STATE MO
DISTRICT BR	SHEET NO. 11
COUNTY McDONALD	
JOB NO. J7P0601	
CONTRACT ID.	
PROJECT NO.	
BRIDGE NO. A7000	

DATE	DESCRIPTION

MISSOURI HIGHWAYS AND TRANSPORTATION COMMISSION
105 WEST CAPITOL
JEFFERSON CITY, MO 65102
1-888-ASK-MODOT (1-888-275-6636)

HNTB
715 KIRK DRIVE
KANSAS CITY, MO 64105-1310
TELEPHONE (816) 472-1201
CERTIFICATE OF AUTHORITY NO. 001270

IF A SEAL IS PRESENT ON THIS SHEET IT HAS BEEN ELECTRONICALLY SEALED AND DATED.

REV.

Detailed JUL 2009
Checked JUL 2009

Note: This drawing is not to scale. Follow Dimensions.

DRAFT Subject to Change

USER: TThompson
PLOTTED: 08-MAR-2010 15:14 \\kcow00\Jobs\49259\Bridges\Plans\CDtoMoDotA7000_03-05-10\J7P0601\A7000-dgn\ZPLOT_B11.dgn
\\kcow00\Jobs\49259\Bridges\Plans\CDtoMoDotA7000_03-05-10\J7P0601\A7000-dgn\ZPLOT_B11.dgn 08-MAR-2010 15:14

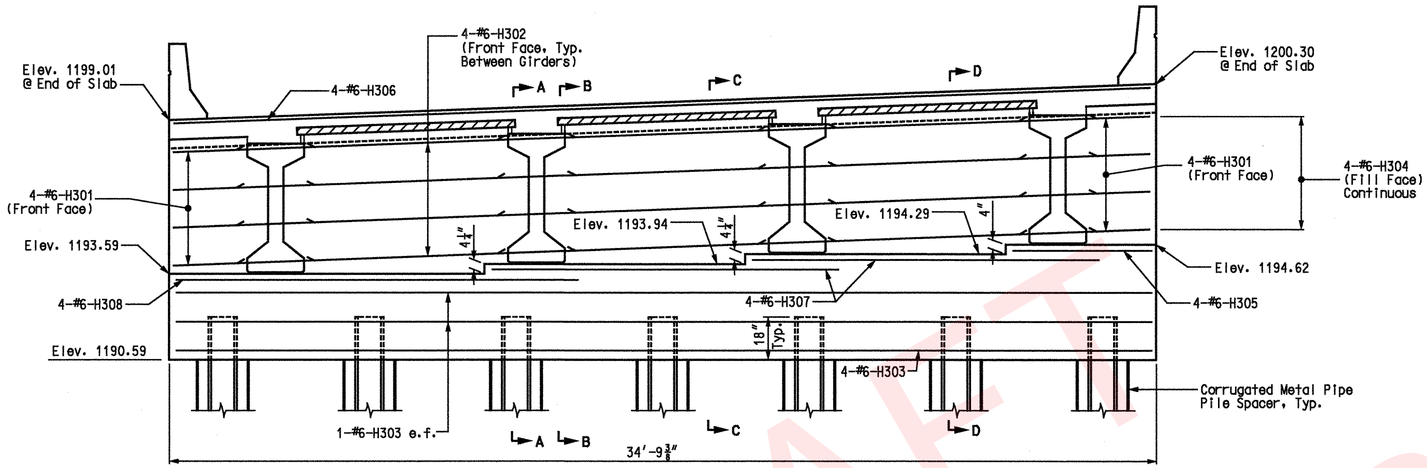

ELEVATION

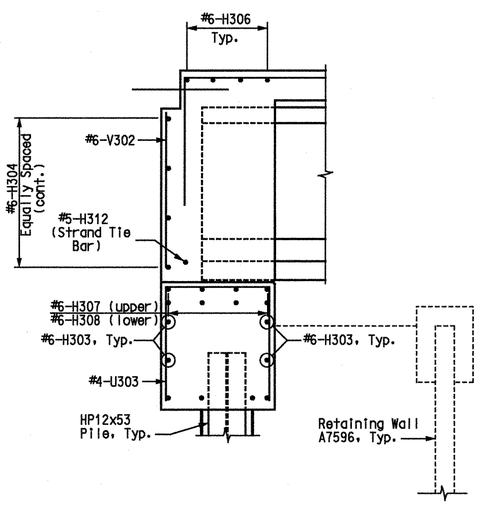

SECTION A-A

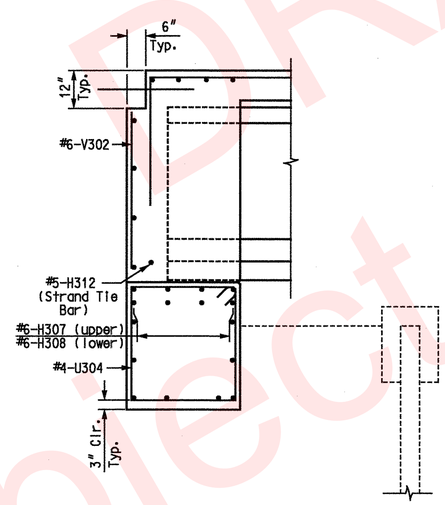

SECTION B-B

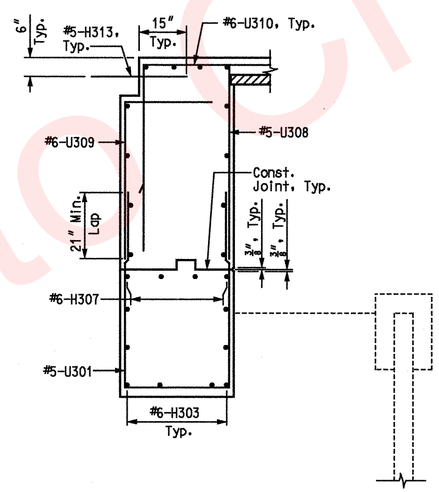

SECTION C-C

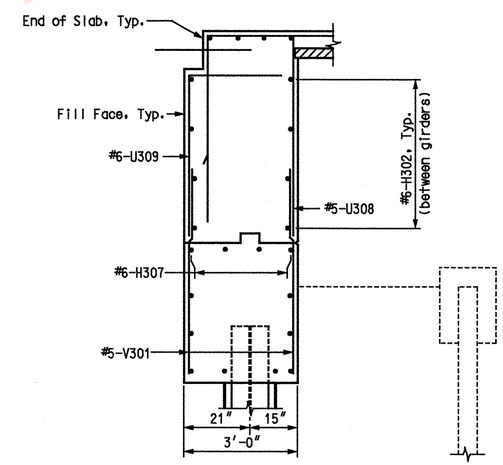

SECTION D-D

Notes:
e.f. denotes each face.
For additional notes and details, see Sheet No. 11.

END BENT 3 DETAILS

Detailed JUL 2009
Checked JUL 2009

Note: This drawing is not to scale. Follow Dimensions.

DRAFT
Subject to change

STATE OF MISSOURI
GINA D. HORNER
NUMBER E-30413
REGISTERED PROFESSIONAL ENGINEER
3-9-10

DATE PREPARED	07/22/09
ROUTE	I-49
STATE	MO
DISTRICT	BR
SHEET NO.	12
COUNTY	McDONALD
JOB NO.	J7P0601
CONTRACT ID.	
PROJECT NO.	
BRIDGE NO.	A7000

DATE	DESCRIPTION

MISSOURI HIGHWAYS AND TRANSPORTATION COMMISSION
105 WEST CAPITOL
JEFFERSON CITY, MO 65102
1-888-ASK-MODOT (1-888-275-6636)

HNTB
715 KIRK DRIVE
KANSAS CITY, MO 64105-1310
TELEPHONE (816) 472-1201
CERTIFICATE OF AUTHORITY
NO. 001270

IF A SFAI IS PRESENT ON THIS SHEET IT HAS BEEN ELECTRONICALLY SEALED AND DATED.

REV.

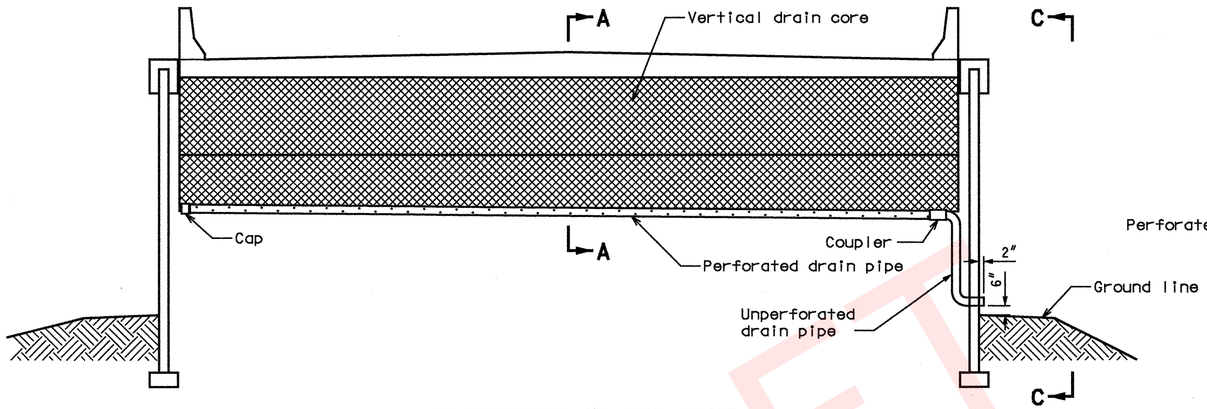

ELEVATION AT END BENT

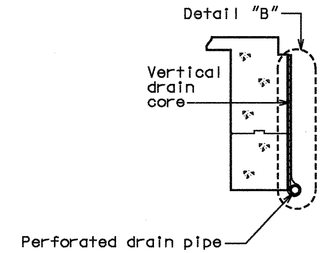

SECTION A-A

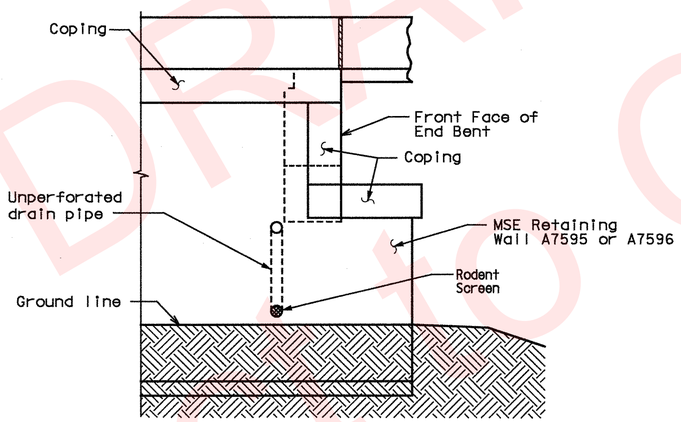

VIEW C-C

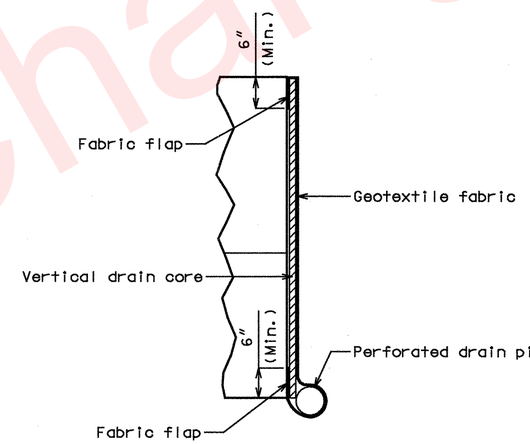

DETAIL "B"

Note:
Drain pipe may be either 6" diameter corrugated metallic-coated steel pipe underdrain, 4" diameter corrugated polyvinyl chloride (PVC) drain pipe, or 4" diameter corrugated polyethylene (PE) drain pipe.

Place drain pipe at fill face of end bent and slope to lowest grade of ground line. (See elevation at end bent.)

Perforated pipe shall be placed at fill face side at the bottom of end bent and plain pipe shall be used where the vertical drain ends to the exit.

VERTICAL DRAIN AT END BENTS

DRAFT
Subject to Change

STATE OF MISSOURI
GINA D. HORNER
NUMBER E-30413
REGISTERED PROFESSIONAL ENGINEER
3-9-10

DATE PREPARED	04/23/09
ROUTE	I-49
STATE	MO
DISTRICT	BR
SHEET NO.	13
COUNTY	McDONALD
JOB NO.	J7P0601
CONTRACT ID.	
PROJECT NO.	
BRIDGE NO.	A7000

DATE	DESCRIPTION

IF A SFAI IS PRESENT ON THIS SHEET IT HAS BEEN ELECTRONICALLY SEALED AND DATED.

MISSOURI HIGHWAYS AND TRANSPORTATION COMMISSION
105 WEST CAPITOL
JEFFERSON CITY, MO 65102
1-888-ASK-MODOT (1-888-275-6636)

HNTB
715 KIRK DRIVE
KANSAS CITY, MO 64105-1310
TELEPHONE (816) 472-1201
CERTIFICATE OF AUTHORITY
NO. 001270

REV.

USER: TThompson
PLOTTED: 08-MAR-2010 15:14 \\kcow00\Jobs\49259\Bridges\Plans\CDtoMoDotA7000_03-05-10\J7P0601\A7000-dgn\ZPLOT_B13.dgn

Detailed APR 2009
Checked APR 2009

Note: This drawing is not to scale. Follow Dimensions.

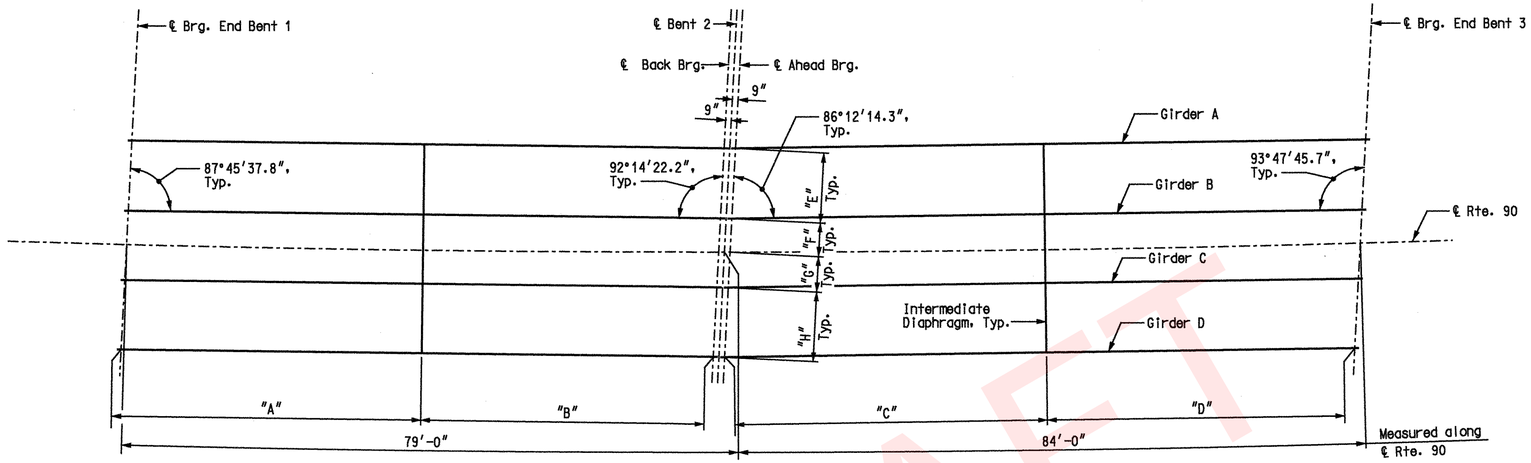

FRAMING PLAN

TABLE OF DIMENSIONS				
DIMENSION	BRG. END BENT 1	BK. BRG. BENT 2	AHD. BRG. BENT 2	BRG. END BENT 3
"E"	9'-2 1/8"	9'-2 1/8"	9'-2 1/4"	9'-2 1/4"
"F"	4'-5 1/2"	4'-5 5/8"	4'-5 1/2"	4'-5 3/8"
"G"	4'-8 5/8"	4'-8 1/2"	4'-8 3/4"	4'-8 7/8"
"H"	9'-2 1/8"	9'-2 1/8"	9'-2 1/4"	9'-2 1/4"

TABLE OF INTERMEDIATE DIAPHRAGM SPACING				
GIRDER	"A"	"B"	"C"	"D"
A	38'-7"	39'-8"	40'-8 1/2"	42'-6 1/2"
B	38'-11 3/8"	39'-3 5/8"	41'-3 7/8"	41'-11 1/8"
C	39'-3 5/8"	38'-11 3/8"	41'-11 1/8"	41'-3 7/8"
D	39'-8"	38'-7"	42'-6 1/2"	40'-8 1/2"

Notes:
Longitudinal dimensions are horizontal.
For Girder Details, see Sheets No. 15 and 16.

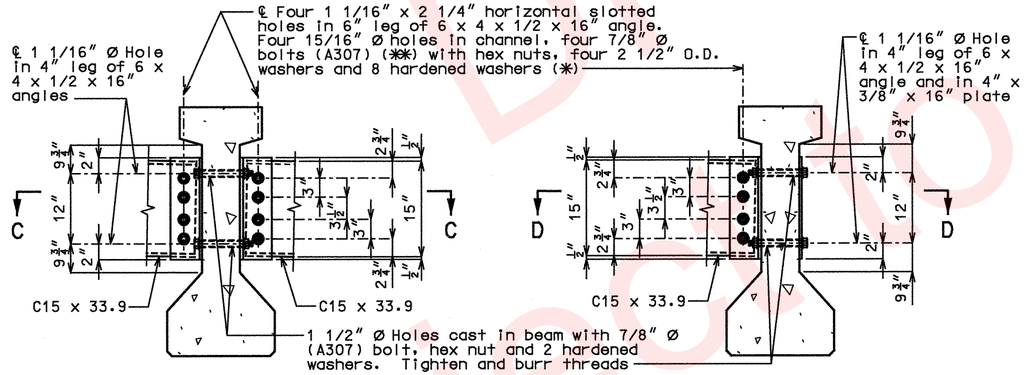

DETAIL "A" DETAIL "B"

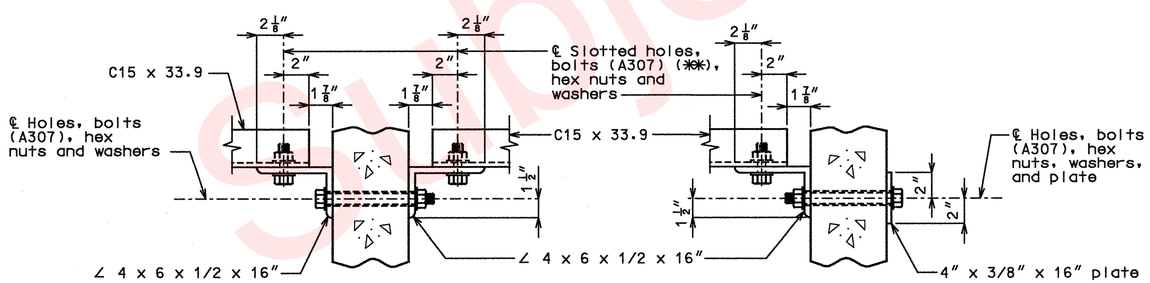

SECTION C-C SECTION D-D

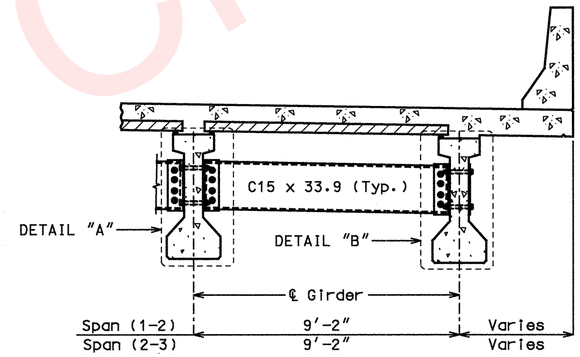

PART SECTION SHOWING INTERMEDIATE DIAPHRAGMS

STEEL DIAPHRAGM NOTES:

(✱) In lieu of 2 1/2" outside diameter washers, contractor may substitute a 3/16" (Min. thickness) plate with four 15/16" Ø holes and one hardened washer per bolt.

(✱✱) Bolts shall be tightened to provide a tension of one-half that specified in Sec 712 for high strength bolt installation. A325 bolts may be substituted for and installed in accordance with the requirements for the specified A307 bolts.

All diaphragm materials including bolts, nuts, and washers shall be galvanized.

Fabricated structural steel shall be ASTM A709 Grade 36 except as noted.

Payment for furnishing and installing steel intermediate diaphragms will be considered completely covered by the contract unit price for Steel Intermediate Diaphragm for P/S Concrete Girders.

Shop drawings will not be required for steel intermediate diaphragms and angle connections.

FRAMING PLAN AND
STEEL INTERMEDIATE DIAPHRAGM DETAILS

Detailed APR 2009
Checked APR 2009

Note: This drawing is not to scale. Follow Dimensions.

STATE OF MISSOURI
GINA D. HORNER
NUMBER E-30413
RESTRICTED TO THE PROJECT SPECIFIED
PROFESSIONAL ENGINEER
3-9-10

DATE PREPARED 4/14/09
ROUTE I-49 STATE MO
DISTRICT BR SHEET NO. 14
COUNTY McDONALD
JOB NO. J7P0601
CONTRACT ID.
PROJECT NO.
BRIDGE NO. A7000

DESCRIPTION	DATE

MISSOURI HIGHWAYS AND TRANSPORTATION COMMISSION
105 WEST CAPITOL
JEFFERSON CITY, MO 65102
1-888-ASK-MODOT (1-888-275-6636)

HNTB
715 KIRK DRIVE
KANSAS CITY, MO 64105-1310
TELEPHONE (816) 472-1201
CERTIFICATE OF AUTHORITY NO. 001270

IF A SEAL IS PRESENT ON THIS SHEET IT HAS BEEN ELECTRONICALLY SEALED AND DATED.

REV.

DRAFT
Subject to Change

Concrete for prestressed girders shall be Class A-1 with f'c = 6,000 psi and f'ci = 4,500 psi.

(+) indicates prestressing strand.

Use 28 strands with an initial prestress force of 867.5 kips.

Prestressing tendons shall be uncoated, seven-wire, low-relaxation strands, 1/2 inch diameter in accordance with AASHTO M 203, Grade 270. Pretensioned members shall be in accordance with Sec 1029.

✱✱ At the contractor's option the location for bent-up strands may be varied from that shown. The total number of bent-up strands shall not be changed. One strand tie bar is required for each layer of bent-up strands except at end bents which require one bar on the bottom layer of strands only. No additional payment will be made if additional strand tie bars are required.

✱✱✱ At contractor's option a 1 1/2" to 1 3/4" smooth finish strip is permitted to facilitate placement of preformed fiber expansion joint material or expanded or extruded polystyrene bedding material for the prestressed panels.

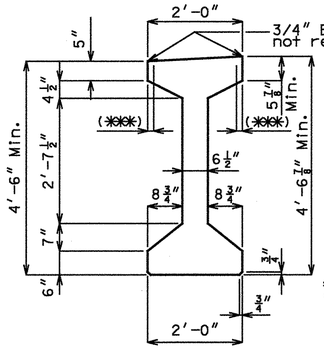

GIRDER DIMENSIONS

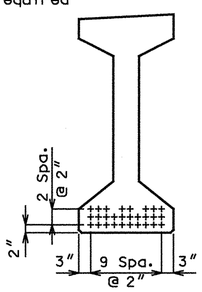

℄ GIRDER

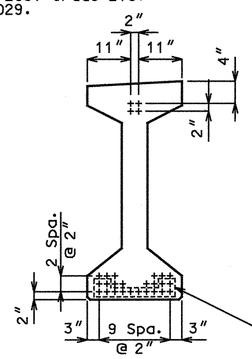

END OF GIRDER

STRAND ARRANGEMENTS

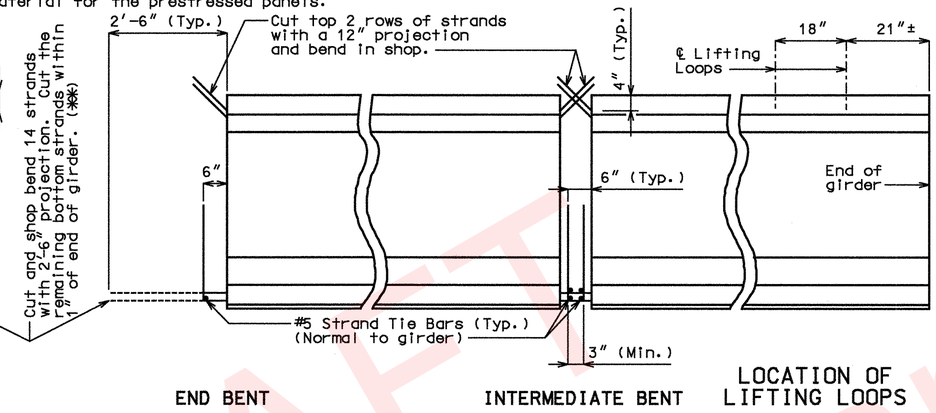

END BENT

INTERMEDIATE BENT

LOCATION OF LIFTING LOOPS

STRAND DETAILS AT GIRDER ENDS

BILL OF REINFORCING STEEL - EACH GIRDER			
NO.	SIZE & MARK	ACTUAL LENGTH	SHAPE
4	6 A1	40'-11"	20
194	4 B1	6'-0"	11
16	6 B2	5'-5"	11
20	4 B3	6'-1"	11
115	4 C1	2'-2"	10
230	4 D1	3'-0"	9

BENDING DIAGRAM

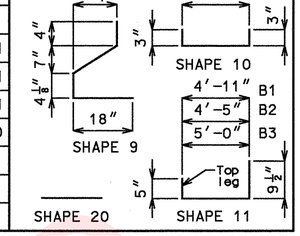

All dimensions are out to out.

Hooks and bends shall be in accordance with the CRSI Manual of Standard Practice for Detailing Reinforced Concrete Structures, Stirrup and Tie Dimensions.

Actual lengths are measured along centerline of bar to the nearest inch.

Minimum clearance to reinforcing shall be 1".

All reinforcement shall be Grade 60.

The two D1 bars may be furnished as one bar at the fabricator's option.

All B1 bars shall be epoxy coated.

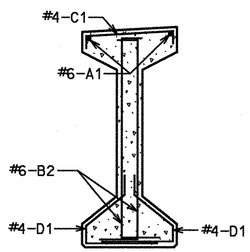

SECTION A-A

Strands not shown for clarity.

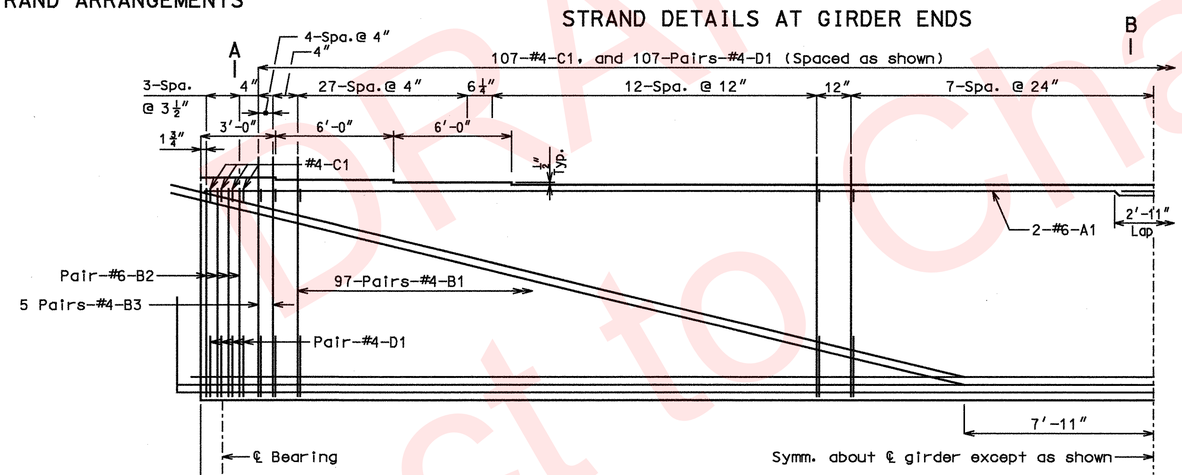

HALF ELEVATION OF GIRDER

Exterior and interior girders are the same, except for coil ties.

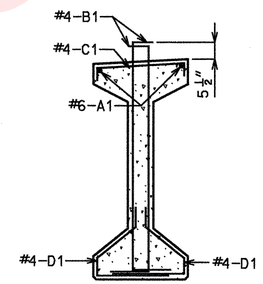

SECTION B-B

Strands not shown for clarity.

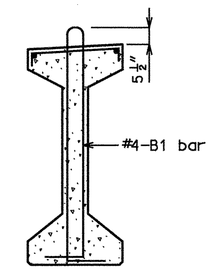

B1 BAR PERMISSIBLE ALTERNATE SHAPE

Cost of 3/4" Ø coil tie rods placed in diaphragms will be considered completely covered by the contract unit price for Prestressed Concrete I-Girder.

Coil ties shall be held in place in the forms by slotted wire-setting-studs projecting through forms. Studs are to be left in place or replaced with temporary plugs until girders are erected, then replaced by coil tie rods.

For location of coil inserts at slab drains, see Sheet No. 22.

For location of coil ties, see Sheets No. 7 & 17.

The 1 1/2" Ø holes shall be cast in the web for steel intermediate diaphragms. Drilling is not allowed.

For details of diaphragms, see Sheets No. 14 & 17.

For Girder Camber Diagram, see Sheet No. 19.

✱ Length of coil tie rods at exterior girders at end bents = 2'-0".

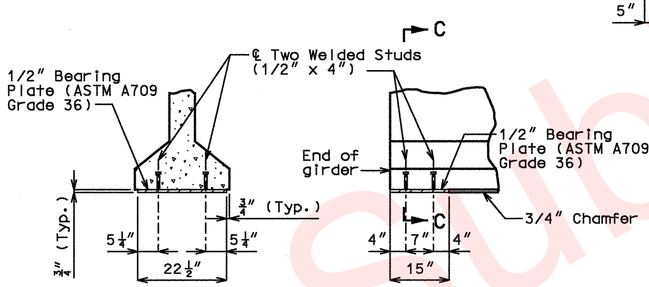

SECTION C-C

PART ELEVATION AT END OF GIRDER

BEARING PLATE DETAILS

Galvanize the 1/2" bearing plate (ASTM A709 Grade 36) in accordance with ASTM A123.

Cost of furnishing, galvanizing, and installing the 1/2" bearing plate (ASTM A709 Grade 36) and welded studs in the prestressed girder will be considered completely covered by the contract unit price for Prestressed Concrete I-Girder.

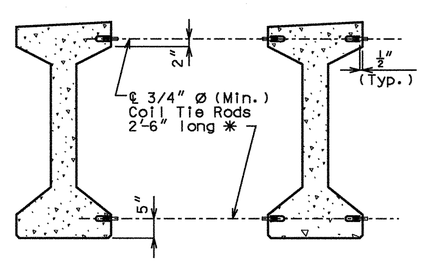

EXTERIOR GIRDERS AT INT. BENTS

EXTERIOR GIRDERS AT END BENTS INTERIOR GIRDERS AT ALL BENTS

DETAILS OF COIL TIES

GIRDER DETAILS - SPAN (1-2)

STATE OF MISSOURI GINA D. HORNER NUMBER E-30413 REGISTERED PROFESSIONAL ENGINEER 3-9-10

DATE PREPARED	
7/20/09	
ROUTE	STATE
I-49	MO
DISTRICT	SHEET NO.
BR	15
COUNTY	
McDONALD	
JOB NO.	
J7P0601	
CONTRACT ID.	
PROJECT NO.	
BRIDGE NO.	
A7000	

DESCRIPTION

DATE

MISSOURI HIGHWAYS AND TRANSPORTATION COMMISSION

105 WEST CAPITOL JEFFERSON CITY, MO 65102 1-888-ASK-MODOT (1-888-275-6636)

HNTB 715 KIRK DRIVE KANSAS CITY, MO 64105-1310 TELEPHONE (816) 472-1201 CERTIFICATE OF AUTHORITY NO. 001270

IF A SEAL IS PRESENT ON THIS SHEET IT HAS BEEN ELECTRONICALLY SEALED AND DATED.

REV.

DRAFT Subject to Change

Detailed JUL 2009
Checked JUL 2009

Note: This drawing is not to scale. Follow Dimensions.

Concrete for prestressed girders shall be Class A-1 with f'c = 6,000 psi and f'ci = 4,500 psi.

(+) indicates prestressing strand.

Use 28 strands with an initial prestress force of 867.5 kips.

Prestressing tendons shall be uncoated, seven-wire, low-relaxation strands, 1/2 inch diameter in accordance with AASHTO M 203, Grade 270. Pretensioned members shall be in accordance with Sec 1029.

✱✱ At the contractor's option the location for bent-up strands may be varied from that shown. The total number of bent-up strands shall not be changed. One strand tie bar is required for each layer of bent-up strands except at end bents which require one bar on the bottom layer of strands only. No additional payment will be made if additional strand tie bars are required.

✱✱✱ At contractor's option a 1 1/2" to 1 3/4" smooth finish strip is permitted to facilitate placement of preformed fiber expansion joint material or expanded or extruded polystyrene bedding material for the prestressed panels.

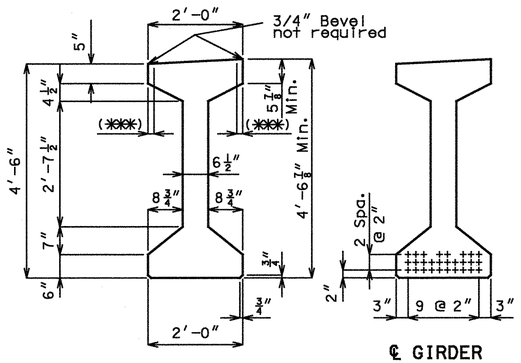

GIRDER DIMENSIONS

℄ GIRDER

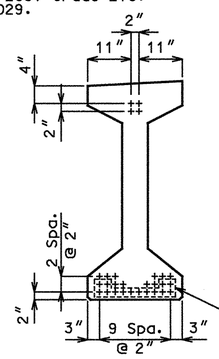

END OF GIRDER

STRAND ARRANGEMENTS

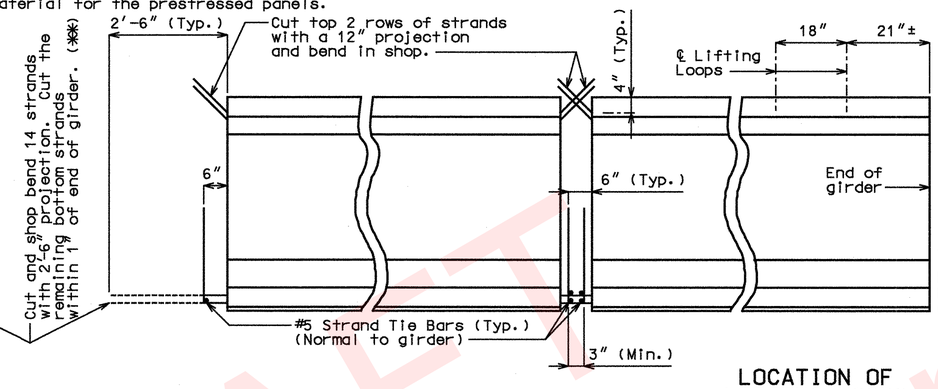

END BENT

INTERMEDIATE BENT

LOCATION OF LIFTING LOOPS

STRAND DETAILS AT GIRDER ENDS

BILL OF REINFORCING STEEL - EACH GIRDER			
NO.	SIZE & MARK	ACTUAL LENGTH	SHAPE
4	6 A1	43'-5"	20
202	4 B1	6'-0"	11
16	6 B2	5'-5"	11
20	4 B3	6'-1"	11
119	4 C1	2'-2"	10
238	4 D1	3'-0"	9

BENDING DIAGRAM

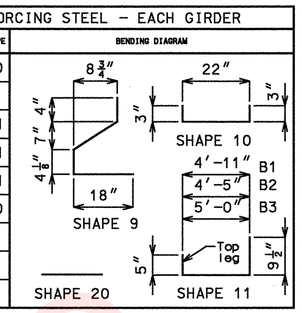

All dimensions are out to out.

Hooks and bends shall be in accordance with the CRSI Manual of Standard Practice for Detailing Reinforced Concrete Structures, Stirrup and Tie Dimensions.

Actual lengths are measured along centerline of bar to the nearest inch.

Minimum clearance to reinforcing shall be 1".

All reinforcement shall be Grade 60.

The two D1 bars may be furnished as one bar at the fabricator's option.

All B1 bars shall be epoxy coated.

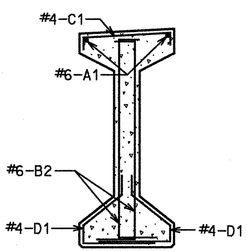

SECTION A-A

Strands not shown for clarity.

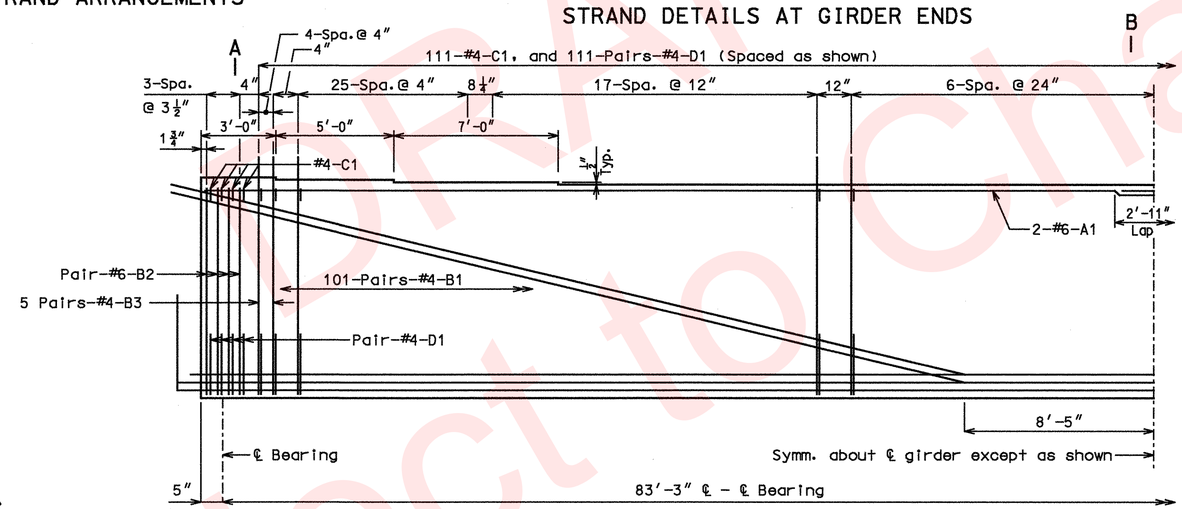

HALF ELEVATION OF GIRDER

Exterior and interior girders are the same, except for coil ties.

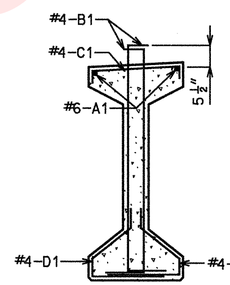

SECTION B-B

Strands not shown for clarity.

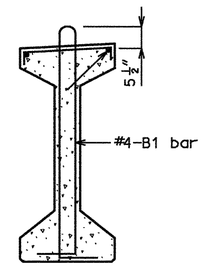

B1 BAR PERMISSIBLE ALTERNATE SHAPE

Cost of 3/4" Ø coil tie rods placed in diaphragms will be considered completely covered by the contract unit price for Prestressed Concrete I-Girder.

Coil ties shall be held in place in the forms by slotted wire-setting-studs projecting through forms. Studs are to be left in place or replaced with temporary plugs until girders are erected, then replaced by coil tie rods.

For location of coil inserts at slab drains, see Sheet No. 22.

For location of coil ties, see Sheets No. 11 & 17.

The 1 1/2" Ø holes shall be cast in the web for steel intermediate diaphragms. Drilling is not allowed.

For details of diaphragms, see Sheets No. 14 & 17.

For Girder Camber Diagram, see Sheet No. 19.

✱ Length of coil tie rods at exterior girders at end bents = 2'-0".

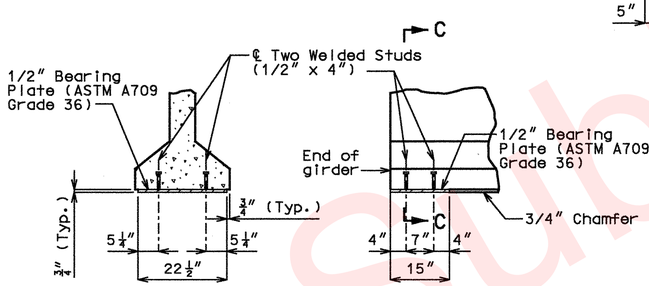

SECTION C-C

PART ELEVATION AT END OF GIRDER

BEARING PLATE DETAILS

Galvanize the 1/2" bearing plate (ASTM A709 Grade 36) in accordance with ASTM A123.

Cost of furnishing, galvanizing, and installing the 1/2" bearing plate (ASTM A709 Grade 36) and welded studs in the prestressed girder will be considered completely covered by the contract unit price for Prestressed Concrete I-Girder.

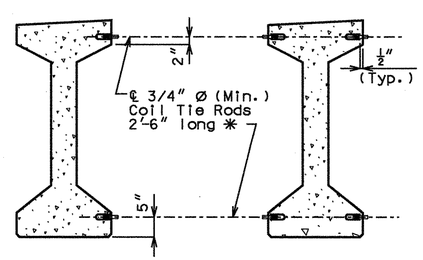

EXTERIOR GIRDERS AT INT. BENTS

EXTERIOR GIRDERS AT END BENTS INTERIOR GIRDERS AT ALL BENTS

DETAILS OF COIL TIES

GIRDER DETAILS - SPAN (2-3)

DRAFT Subject to Change

STATE OF MISSOURI GINA D. HORNER NUMBER E-30413 REGISTERED PROFESSIONAL ENGINEER 3-9-10

DATE PREPARED	
7/20/09	
ROUTE I-49	STATE MO
DISTRICT BR	SHEET NO. 16
COUNTY McDONALD	
JOB NO. J7P0601	
CONTRACT ID.	
PROJECT NO.	
BRIDGE NO. A7000	

DATE | DESCRIPTION

MISSOURI HIGHWAYS AND TRANSPORTATION COMMISSION
105 WEST CAPITOL
JEFFERSON CITY, MO 65102
1-888-ASK-MODOT (1-888-275-6636)

HNTB
715 KIRK DRIVE
KANSAS CITY, MO 64105-1310
TELEPHONE (816) 472-1201
CERTIFICATE OF AUTHORITY NO. 001270

IF A SEAL IS PRESENT ON THIS SHEET IT HAS BEEN ELECTRONICALLY SEALED AND DATED.

USER: TThompson
PLOTTED: 08-MAR-2010 15:14 \\kcow00\Jobs\49259\Bridges\Plans\CDtoMoDotA7000_03-05-10\J7P0601\A7000-dgn\ZPLOT_B16.dgn

Detailed JUL 2009
Checked JUL 2009

Note: This drawing is not to scale. Follow Dimensions.

REV.

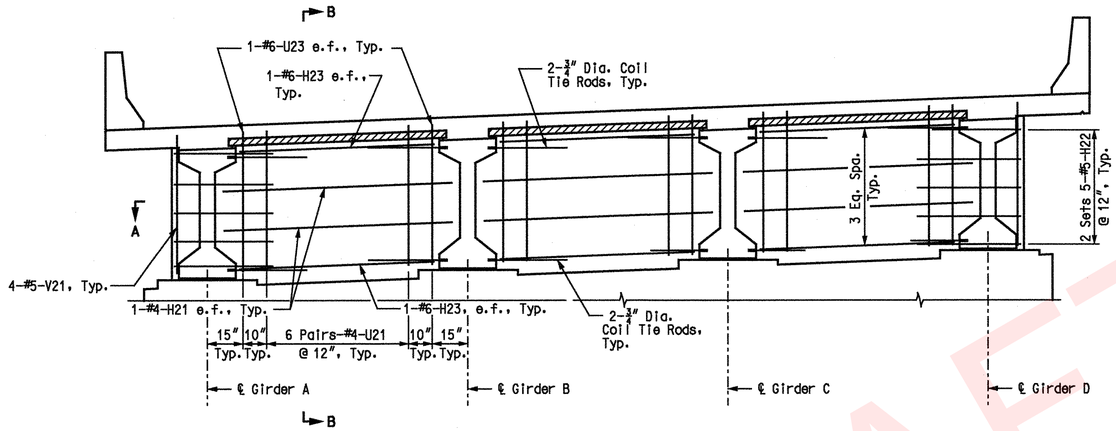

SECTION NEAR INTERMEDIATE BENT

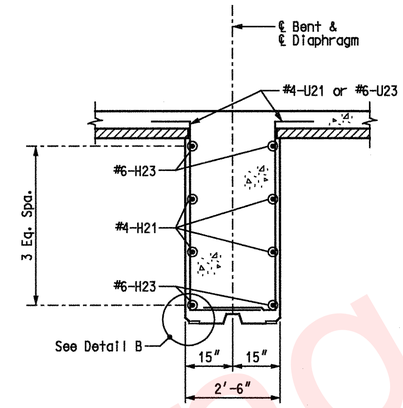

SECTION B-B

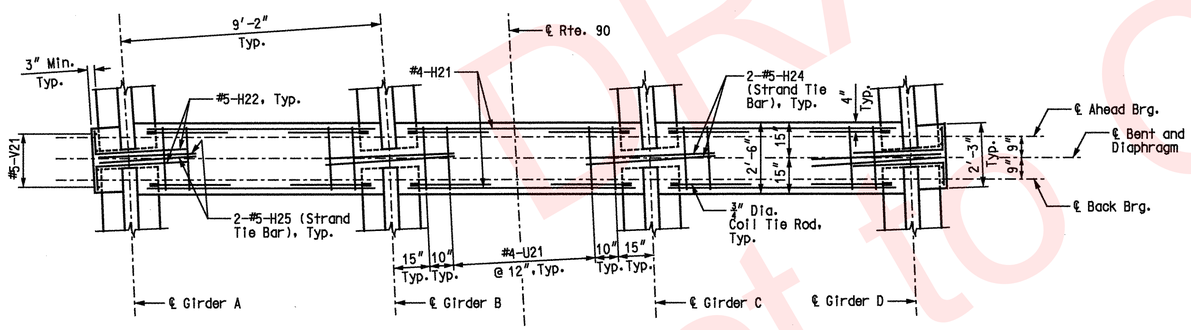

SECTION A-A

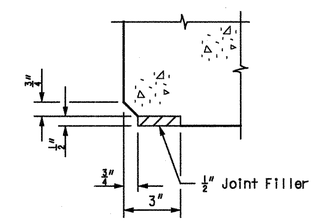

DETAIL B

Note:
Diaphragm shall be built vertical.

BENT 2 DIAPHRAGM DETAILS

DRAFT Subject to Change

STATE OF MISSOURI
GINA D. HORNER
NUMBER E-30413
REGISTERED PROFESSIONAL ENGINEER
3-9-10

DATE PREPARED	4/21/09
ROUTE	I-49
STATE	MO
DISTRICT	BR
SHEET NO.	17
COUNTY	McDONALD
JOB NO.	J7P0601
CONTRACT ID.	
PROJECT NO.	
BRIDGE NO.	A7000

DESCRIPTION | DATE

MISSOURI HIGHWAYS AND TRANSPORTATION COMMISSION
105 WEST CAPITOL
JEFFERSON CITY, MO 65102
1-888-ASK-MODOT (1-888-275-6636)

HNTB
715 KIRK DRIVE
KANSAS CITY, MO 64105-1310
TELEPHONE (816) 472-1201
CERTIFICATE OF AUTHORITY NO. 001270

IF A SEAL IS PRESENT ON THIS SHEET IT HAS BEEN ELECTRONICALLY SEALED AND DATED.

REV.

USER: TThompson
PLOTTED: 08-MAR-2010 15:15 \\kcow00\Jobs\49259\Bridges\Plans\CDtoMoDotA7000_03-05-10\J7P0601\A7000-dgn\ZPLOT_B18.dgn

Detailed APR 2009
Checked Jul 2009

Note: This drawing is not to scale. Follow Dimensions.

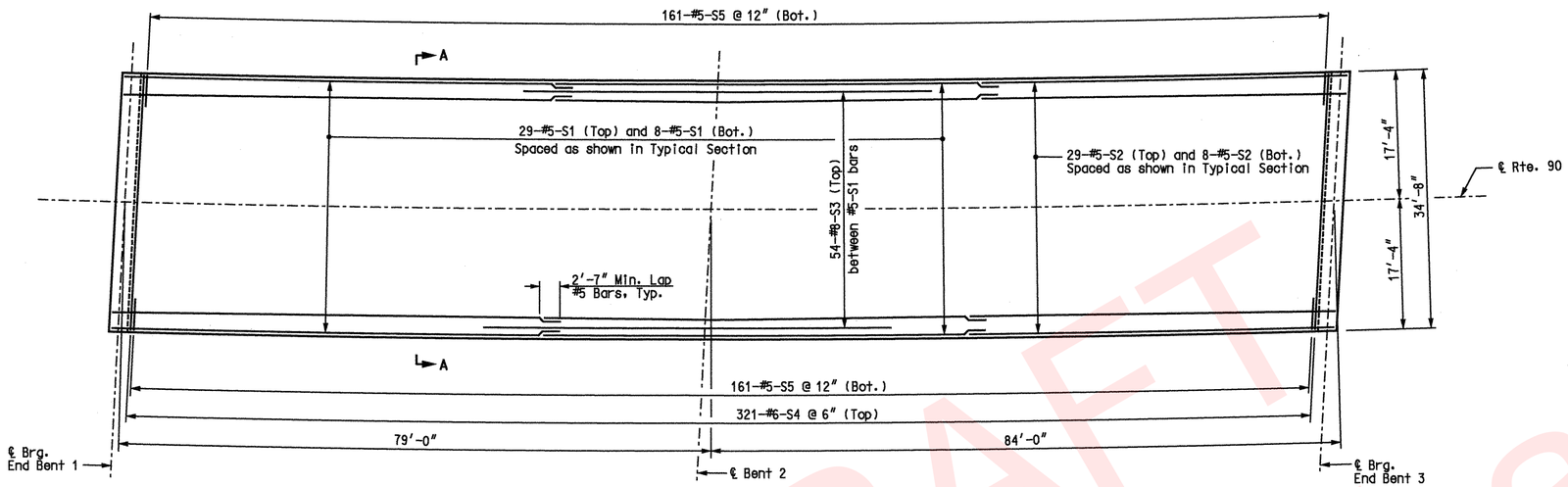

SLAB PLAN

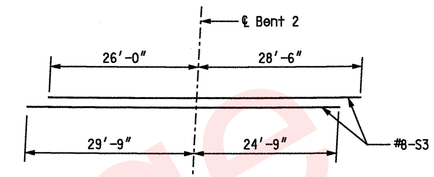

DETAIL OF NEGATIVE MOMENT STEEL STAGGER

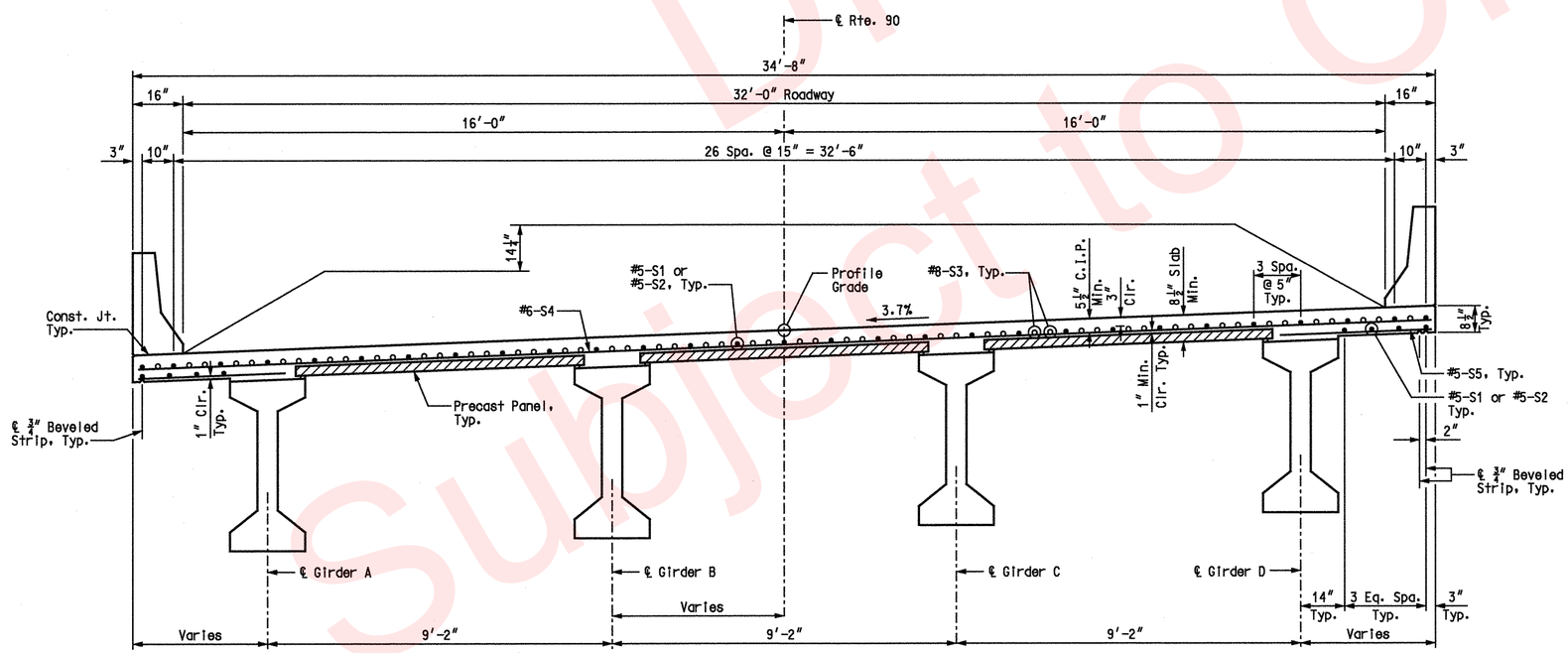

SECTION A-A

Notes:

Longitudinal dimensions shown are horizontal arc dimensions along ℄ Rte. 90.

Transverse reinforcing shall be placed parallel to bents and spaced along the right fascia.

For Location of Slab Drains, see Sheet No. 22.

For details and reinforcing of the Safety Barrier Curbs, see Sheet No. 23 and 24.

For Slab Pouring Sequence and Theoretical Slab Haunching Diagram, see Sheet No. 19.

For Framing Plan, see Sheet No. 14.

For Precast Panel Details, see Sheet No. 20.

For Bottom of Slab Elevations and Slab Curve Ordinates, see Sheet No. 21.

SLAB PLAN

DRAFT
Subject to Change

STATE OF MISSOURI
GINA D. HORNER
NUMBER E-30413
REGISTERED PROFESSIONAL ENGINEER
3-9-10

DATE PREPARED	4/9/09
ROUTE	I-49
STATE	MO
DISTRICT	BR
SHEET NO.	18
COUNTY	McDONALD
JOB NO.	J7P0601
CONTRACT ID.	
PROJECT NO.	
BRIDGE NO.	A7000

DATE	DESCRIPTION

MISSOURI HIGHWAYS AND TRANSPORTATION COMMISSION
105 WEST CAPITOL
JEFFERSON CITY, MO 65102
1-888-ASK-MODOT (1-888-275-6636)

HNTB
715 KIRK DRIVE
KANSAS CITY, MO 64105-1310
TELEPHONE (816) 472-1201
CERTIFICATE OF AUTHORITY
NO. 001270

IF A SEAL IS PRESENT ON THIS SHEET IT HAS BEEN ELECTRONICALLY SEALED AND DATED.

REV.

USER: TThompson
PLOTTED: 08-MAR-2010 15:15 \\kcow00\Jobs\49259\Bridges\Plans\CDtoMoDotA7000_03-05-10\J7P0601\A7000-dgn\ZPLOT_B20.dgn

Detailed APR 2009
Checked APR 2009

Note: This drawing is not to scale. Follow Dimensions.

Girder A	$2\frac{3}{16}$	2	$2\frac{3}{8}$	$1\frac{7}{8}$	$1\frac{9}{16}$	$1\frac{1}{2}$	$1\frac{5}{8}$	$1\frac{15}{16}$	$2\frac{7}{16}$	$2\frac{1}{16}$	$2\frac{1}{4}$
Girder B	2	$1\frac{7}{8}$	$2\frac{1}{4}$	$1\frac{13}{16}$	$1\frac{9}{16}$	$1\frac{7}{16}$	$1\frac{9}{16}$	$1\frac{7}{8}$	$2\frac{5}{16}$	$1\frac{5}{16}$	$2\frac{1}{8}$
Girder C	$2\frac{1}{16}$	$1\frac{7}{8}$	$2\frac{5}{16}$	$1\frac{13}{16}$	$1\frac{9}{16}$	$1\frac{7}{16}$	$1\frac{9}{16}$	$1\frac{13}{16}$	$2\frac{5}{16}$	$1\frac{7}{8}$	$2\frac{1}{16}$
Girder D	$2\frac{3}{16}$	$1\frac{15}{16}$	$2\frac{3}{8}$	$1\frac{7}{8}$	$1\frac{9}{16}$	$1\frac{7}{16}$	$1\frac{9}{16}$	$1\frac{7}{8}$	$2\frac{3}{8}$	2	$2\frac{3}{16}$

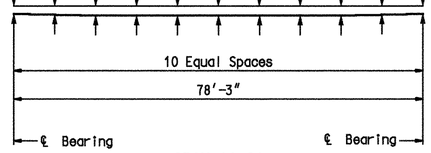

SPAN (1-2)

$2\frac{1}{8}$	$2\frac{7}{16}$	$2\frac{5}{16}$	$1\frac{13}{16}$	$1\frac{1}{2}$	$1\frac{7}{16}$	$1\frac{9}{16}$	$1\frac{13}{16}$	$2\frac{5}{16}$	$2\frac{7}{16}$	$2\frac{1}{8}$
$2\frac{1}{16}$	$2\frac{3}{8}$	$2\frac{5}{16}$	$1\frac{7}{8}$	$1\frac{9}{16}$	$1\frac{7}{16}$	$1\frac{9}{16}$	$1\frac{13}{16}$	$2\frac{1}{4}$	$2\frac{3}{8}$	2
2	$2\frac{3}{8}$	$2\frac{1}{4}$	$1\frac{13}{16}$	$1\frac{9}{16}$	$1\frac{7}{16}$	$1\frac{1}{2}$	$1\frac{13}{16}$	$2\frac{1}{4}$	$2\frac{3}{8}$	2
$2\frac{1}{8}$	$2\frac{7}{16}$	$2\frac{5}{16}$	$1\frac{13}{16}$	$1\frac{9}{16}$	$1\frac{7}{16}$	$1\frac{1}{2}$	$1\frac{13}{16}$	$2\frac{5}{16}$	$2\frac{7}{16}$	$2\frac{1}{8}$

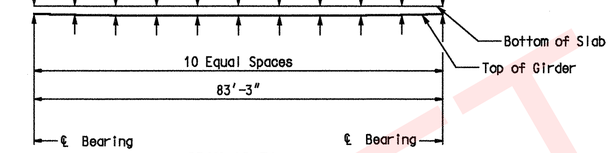

SPAN (2-3)

THEORETICAL SLAB HAUNCHING DIAGRAM

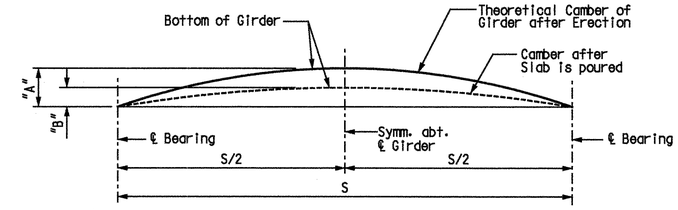

GIRDER CAMBER DIAGRAM

GIRDER	SPAN (1-2)		SPAN (2-3)	
	"A"	"B"	"A"	"B"
A	$2\frac{13}{16}$"	$2\frac{1}{8}$"	3"	$2\frac{1}{16}$"
B	$2\frac{13}{16}$"	2"	1"	$1\frac{15}{16}$"
C	$2\frac{13}{16}$"	2"	1"	$1\frac{15}{16}$"
D	$2\frac{13}{16}$"	$2\frac{1}{8}$"	3"	$2\frac{1}{16}$"

Conversion Factors for Girder Camber
0.1 PT.=0.314 x 0.5 PT.
0.2 PT.=0.593 x 0.5 PT.
0.3 PT.=0.813 x 0.5 PT.
0.4 PT.=0.952 x 0.5 PT.

Notes:
If Girder Camber is different from that shown in the Camber Diagram, it shall be necessary to adjust the slab haunches. Increase the slab thickness or raise the grade uniformly throughout the structure. No payment will be made for additional labor or materials required for variation in haunching, slab thickness or grade adjustment.
Concrete in the slab haunches is included in the Estimated Quantities for Slab on Concrete I-Girder.
Slab haunching values are given in inches.

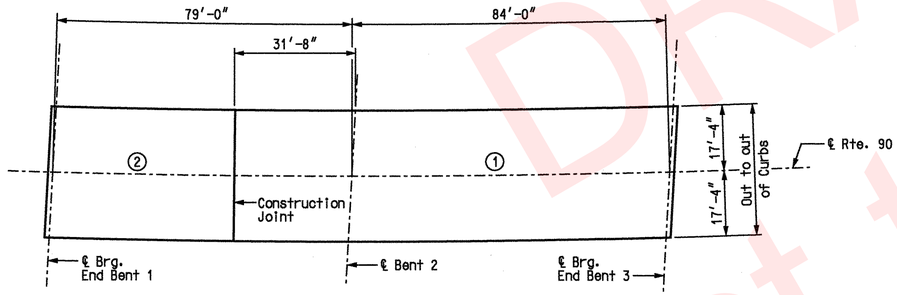

SPAN (1-2) SPAN (2-3)

	Sequence of Pours		Min. rate of pour cu. yds./hr.
	Direction		With retarder
Basic sequence	1	2	25
	End to 2	1 to end	
Alternate pours to the basic sequence are subject to the approval of the engineer in accordance with Section 703.3.12.4 of Missouri Standard Specifications.			
Alternate "A" pours	1 + 2		34
	End to end		

SLAB POURING SEQUENCE

Note: The contractor shall furnish an approved retarder to retard the set of the concrete to 2.5 hours, and shall pour and satisfactorily finish the slab pours at the rate given.

The concrete diaphragm at the intermediate bents and integral end bents shall be poured a minimum of 30 minutes and a maximum of 2 hours before the slab is poured.

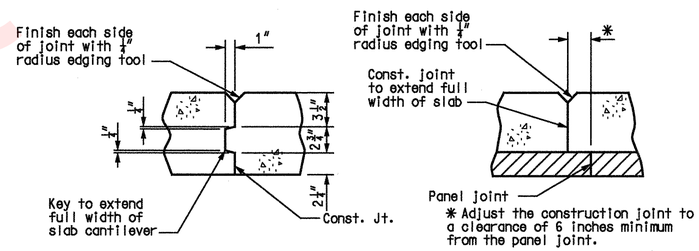

SLAB WITHOUT PRECAST PANELS SLAB ON PRECAST PANELS

SLAB CONSTRUCTION JOINT DETAILS

DRAFT
Subject to Change

STATE OF MISSOURI
GINA D. HORNER
NUMBER E-30413
REGISTERED PROFESSIONAL ENGINEER
3-9-10

DATE PREPARED	7/24/09
ROUTE I-49	STATE MO
DISTRICT BR	SHEET NO. 19
COUNTY McDONALD	
JOB NO. J7P0601	
CONTRACT ID.	
PROJECT NO.	
BRIDGE NO. A7000	

DESCRIPTION DATE

IF A SFAI IS PRESENT ON THIS SHEET IT HAS BEEN ELECTRONICALLY SEALED AND DATED.

MISSOURI HIGHWAYS AND TRANSPORTATION COMMISSION
105 WEST CAPITOL
JEFFERSON CITY, MO 65102
1-888-ASK-MODOT (1-888-275-6636)

HNTB
715 KIRK DRIVE
KANSAS CITY, MO 64105-1310
TELEPHONE (816) 472-1201
CERTIFICATE OF AUTHORITY NO. 001270

THEORETICAL SLAB HAUNCHING DIAGRAM & SLAB POURING SEQUENCE

Detailed JUL 2009
Checked AUG 2009

Note: This drawing is not to scale. Follow Dimensions.

REV.

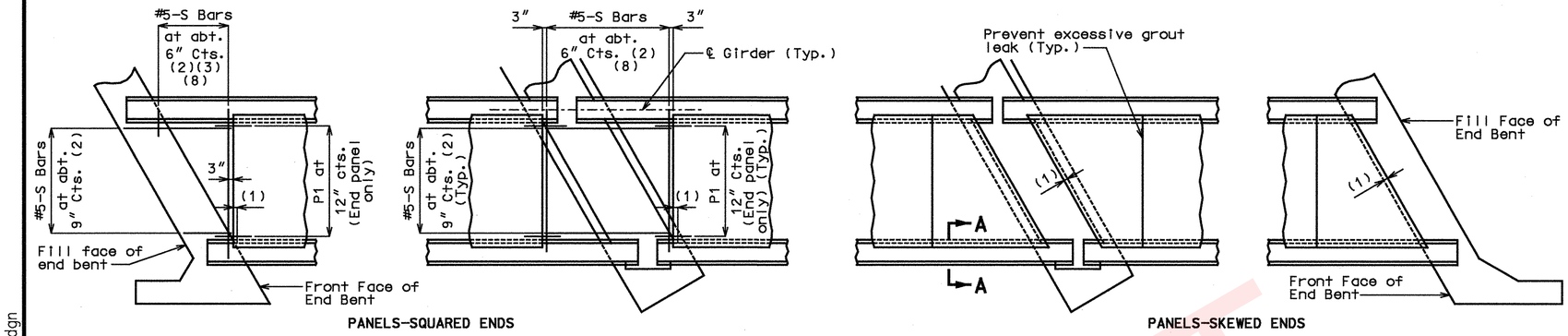

PANELS-SQUARED ENDS

PANELS-SKEWED ENDS

PLAN OF PRECAST PRESTRESSED PANELS PLACEMENT

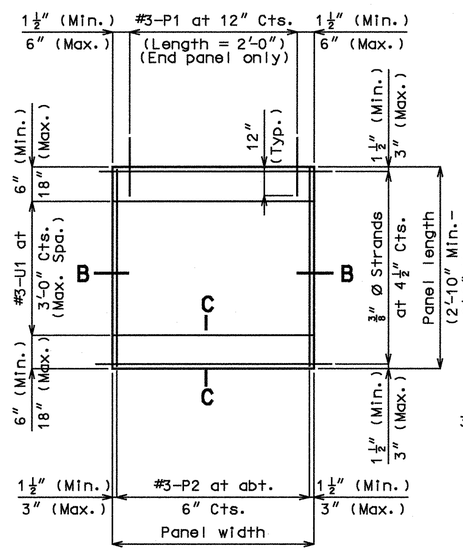

PLAN OF PRECAST PRESTRESSED PANEL

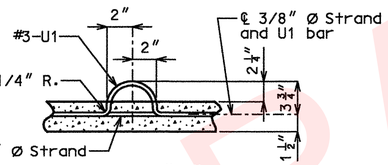

DETAIL "A"

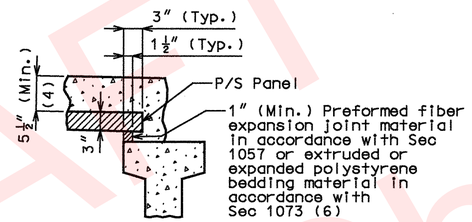

SECTION A-A

Note: Use slab haunching diagram on Sheet No. 19 for determining thickness of preformed fiber expansion joint material or polystyrene bedding material within the limits noted in general notes.

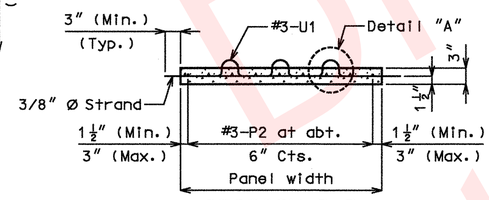

SECTION B-B

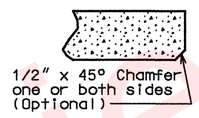

SECTION C-C

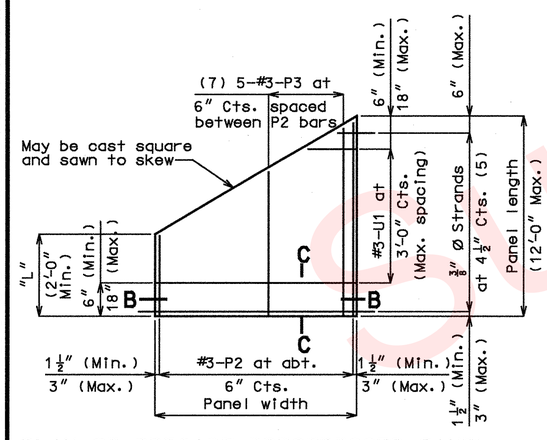

PLAN OF PRECAST PRESTRESSED PANEL
(SKEWED END-OPTIONAL)

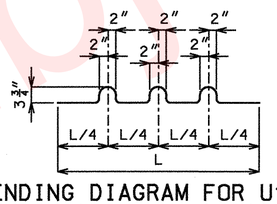

BENDING DIAGRAM FOR U1 BAR
(U1 Bars may be oriented at right angles to location and spacing shown. U1 Bars shall be placed between P1 bars).

NOTES:

Welded wire fabric or welded deformed bar mats providing a minimum area of reinforcing perpendicular to strands of 0.22 sq. in./ft., with spacing parallel to strands sufficient to insure proper handling, may be used in lieu of the #3-P2 bars shown. Wire or bar diameter shall not be larger than 0.375 inches. The above alternative reinforcement criteria may be used in lieu of the #3-P3 bars, when required, and placed over a width not less than 2 feet.

The reinforcing steel shall be tied securely to the 3/8"Ø strands with the following maximum spacing in each direction:
#3-P2 bars at 16 inches.
Welded wire fabric or welded deformed bar mats at 2'-0".

Tie the #3-U1 bars to the #3-P2 bars, to the welded wire fabric or the welded deformed bar mats at about 3'-0" centers.

All reinforcement other than prestressing strands shall be epoxy coated.

Precast panels may be in contact with stirrup reinforcing in diaphragms.

Cost of S-bars will be considered completely covered by the contract unit price for the slab.

S-bars are not listed in the bill of reinforcing.

(1) End panels shall be dimensioned 1" min. to 1 1/2" max. from the inside face of diaphragm.

(2) S-bars shown are bottom steel in slab between panels and used with squared end panels only.

(3) Extend S-Bars 18 inches beyond the front face of end bents only.

(4) In order to maintain minimum slab thickness, it may be necessary to raise the grade uniformly throughout the structure. No payment will be made for additional labor or materials required for necessary grade adjustment.

(5) Any strand 2'-0" or shorter shall have a #4 reinforcing bar on each side of it, centered between strands. Strands 2'-0" or shorter may then be debonded at the fabricator's option.

(6) All panel support pads shall be glued to the girder. When support thickness exceeds 1 1/2 inches, the pads shall be glued top and bottom. The glue used shall be the type recommended by the panel support pads manufacturer.

(7) Use #3-P3 bars if panel is skewed 45° or greater.

(8) Minimum reinforcement steel length shall be 2'-0".

GENERAL NOTES:

PRESTRESSED PANELS:
Concrete for prestressed panels shall be Class A-1 with f'c = 6,000 psi, f'ci = 4,000 psi.

The top surface of all panels shall receive a scored finish with a depth of scoring of 1/8" perpendicular to the prestressing strands in the panels.

Prestressing tendons shall be high-tensile strength uncoated seven-wire, low-relaxation strands for prestressed concrete in accordance with AASHTO M 203 Grade 270, with nominal diameter of strand = 3/8" and nominal area = 0.085 sq. in.and minimum ultimate strength = 22.95 kips (270 ksi). Larger strands may be used with the same spacing and initial tension.

Initial prestressing force = 17.2 kips/strand.

The method and sequence of releasing the strands shall be shown on the shop drawings.

Suitable anchorage devices for lifting panels may be cast in panels, provided the devices are shown on the shop drawings and approved by the engineer. Panel lengths shall be determined by the contractor and shown on the shop drawings.

When square end panels are used at skewed bents, the skewed portion shall be cast full depth. No separate payment will be made for additional concrete and reinforcing required.

Support from diaphragm forms is required under the optional skewed end until cast-in-place concrete has reached 3,000 psi compressive strength.

Minimum preformed fiber expansion joint material or polystyrene bedding material thickness shall be 1 inch. Thicker material may be used on one or both sides of the girder to reduce cast-in-place concrete thickness, to within tolerances. No more than 2 inches total thickness shall be used.

The same thickness of preformed fiber expansion joint material shall be used under any one edge of any panel except at locations where top flange thickness may be stepped. The maximum change in thickness between adjacent panels shall be 1/4 inch. The polystyrene bedding material may be cut with a transition to match haunch height above top of flange.

Slab thickness over prestressed panels varies due to girder camber.

At the contractor's option, the variation in slab thickness over prestressed panels may be eliminated or reduced by increasing and varying the girder top flange thickness. Dimensions shall be shown on the shop drawings.

REINFORCING STEEL:
All dimensions are out to out.

Minimum clearance to reinforcing steel shall be 1 1/2", unless otherwise shown.

Hooks and bends shall be in accordance with the CRSI Manual of Standard Practice for Detailing Reinforced Concrete Structures, Stirrup and Tie Dimensions.

Actual lengths are measured along centerline of bar to the nearest inch.

The prestressed panel quantities are not included in the table of estimated quantities for slab.

If U1 bars interfere with placement of slab steel, U1 loops may be bent over, as necessary, to clear slab steel.

DETAILS OF PRECAST PRESTRESSED PANELS

STATE OF MISSOURI GINA D. HORNER NUMBER E-30413 REGISTERED PROFESSIONAL ENGINEER 3-9-10

DATE PREPARED	2/28/09
ROUTE	I-49
STATE	MO
DISTRICT	BR
SHEET NO.	20
COUNTY	McDONALD
JOB NO.	J7P0601
CONTRACT ID.	
PROJECT NO.	
BRIDGE NO.	A7000

DATE | DESCRIPTION

MISSOURI HIGHWAYS AND TRANSPORTATION COMMISSION
105 WEST CAPITOL
JEFFERSON CITY, MO 65102
1-888-ASK-MODOT (1-888-275-6636)

HNTB
715 KIRK DRIVE
KANSAS CITY, MO 64105-1310
TELEPHONE (816) 472-1201
CERTIFICATE OF AUTHORITY NO. 001270

IF A SEAL IS PRESENT ON THIS SHEET IT HAS BEEN ELECTRONICALLY SEALED AND DATED.

DRAFT Change Subject

USER: TThompson
PLOTTED: 08-MAR-2010 15:15 \\kcow00\Jobs\49259\Bridges\Plans\CDtoMoDotA7000_03-05-10\J7P0601\A7000-dgn\ZPLOT_B22.dgn

Detailed FEB 2009
Checked JUL 2009

Note: This drawing is not to scale. Follow Dimensions.

REV.

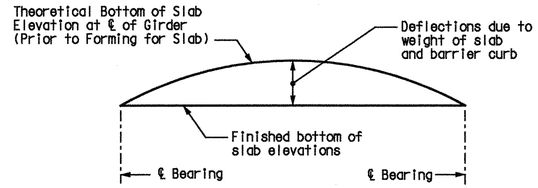

TYPICAL SLAB ELEVATIONS DIAGRAM

Theoretical Bottom of Slab Elevations at CL of Girder (Prior to Forming for Slab) ✱✱

	Span (1-2)											Span (2-3)										
	℄ brg.	.10	.20	.30	.40	.50	.60	.70	.80	.90	℄ brg.	℄ brg.	.10	.20	.30	.40	.50	.60	.70	.80	.90	℄ brg.
Girder A	1199.29	1199.25	1199.20	1199.16	1199.12	1199.08	1199.04	1199.00	1198.96	1198.92	1198.88	1198.88	1198.83	1198.78	1198.74	1198.69	1198.65	1198.61	1198.56	1198.52	1198.48	1198.44
Girder B	1199.63	1199.59	1199.54	1199.50	1199.46	1199.42	1199.38	1199.34	1199.30	1199.26	1199.22	1199.22	1199.17	1199.12	1199.08	1199.04	1198.99	1198.95	1198.91	1198.87	1198.83	1198.79
Girder C	1199.97	1199.93	1199.88	1199.84	1199.80	1199.76	1199.72	1199.68	1199.64	1199.60	1199.57	1199.56	1199.51	1199.47	1199.42	1199.38	1199.33	1199.29	1199.25	1199.21	1199.17	1199.13
Girder D	1200.31	1200.27	1200.22	1200.18	1200.14	1200.10	1200.06	1200.02	1199.98	1199.94	1199.91	1199.90	1199.85	1199.81	1199.76	1199.72	1199.68	1199.63	1199.59	1199.55	1199.51	1199.47

✱✱ Elevations are based on a constant slab thickness of $8\frac{1}{2}''$ and include allowance for theoretical dead load deflections due to weight of slab and barrier curb.

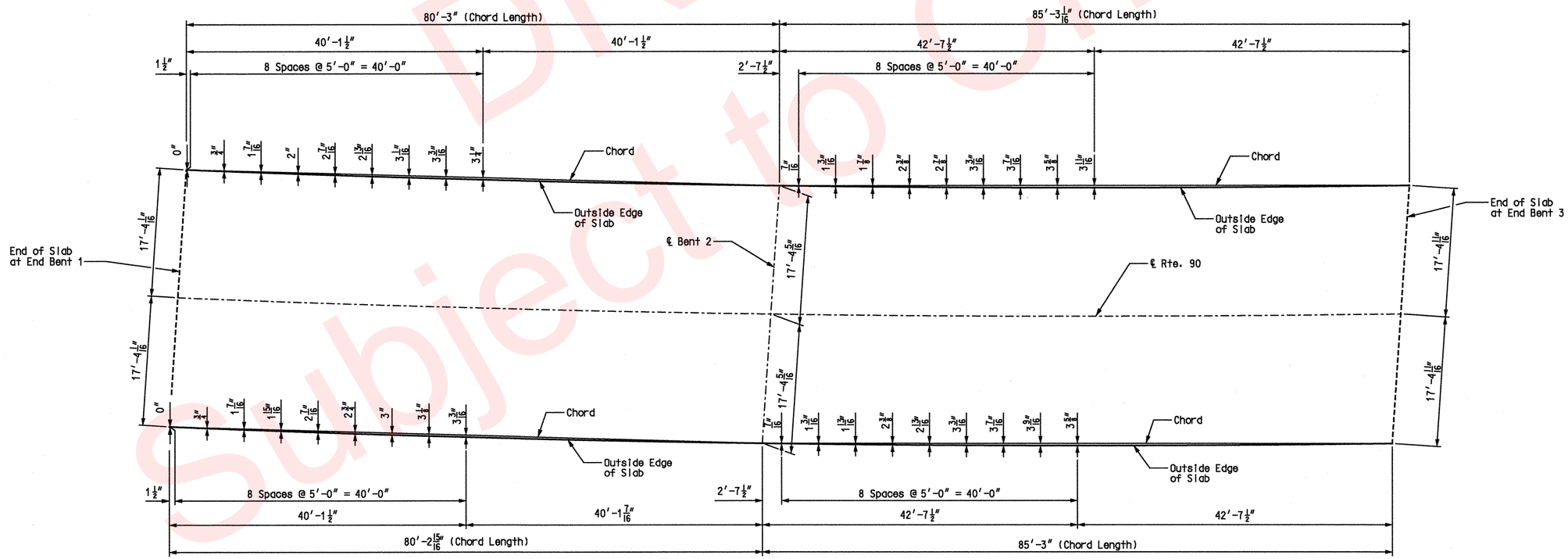

BOTTOM OF SLAB ELEVATIONS AND SLAB CURVE ORDINATES

DRAFT Subject to Change

Detailed JUL 2009
Checked AUG 2009

Note: This drawing is not to scale. Follow Dimensions.

STATE OF MISSOURI
GINA D. HORNER
NUMBER E-30413
REGISTERED PROFESSIONAL ENGINEER
3-9-10

DATE PREPARED	08/04/09
ROUTE	I-49
STATE	MO
DISTRICT	BR
SHEET NO.	21
COUNTY	McDONALD
JOB NO.	J7P0601
CONTRACT ID.	
PROJECT NO.	
BRIDGE NO.	A7000

DATE	DESCRIPTION

MISSOURI HIGHWAYS AND TRANSPORTATION COMMISSION
105 WEST CAPITOL
JEFFERSON CITY, MO 65102
1-888-ASK-MODOT (1-888-275-6636)

HNTB
715 KIRK DRIVE
KANSAS CITY, MO 64105-1310
TELEPHONE (816) 472-1201
CERTIFICATE OF AUTHORITY
NO. 001270

IF A SFAI IS PRESENT ON THIS SHEET IT HAS BEEN ELECTRONICALLY SEALED AND DATED.

REV.

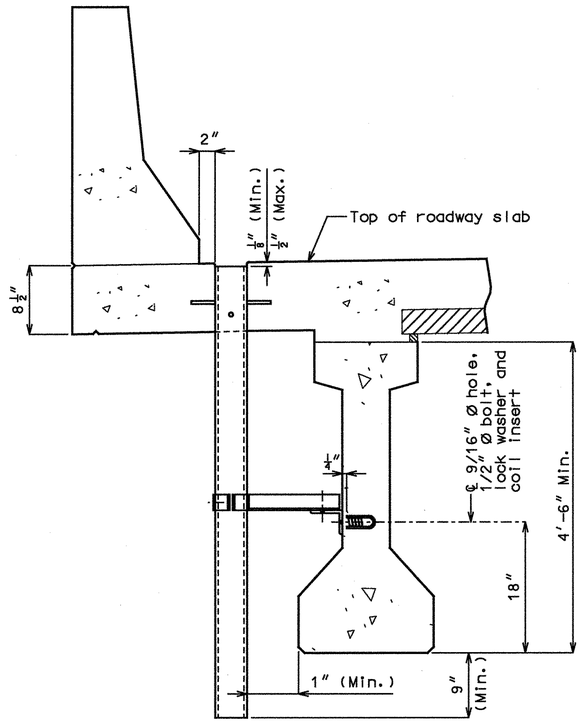

PART SECTION NEAR DRAIN

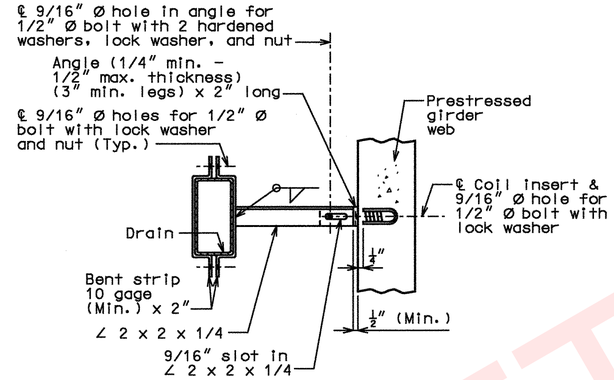

PART SECTION SHOWING BRACKET ASSEMBLY

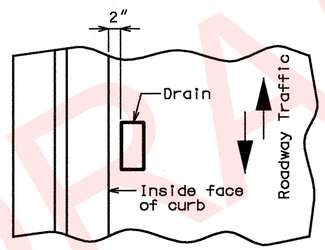

PART PLAN OF SLAB AT DRAIN

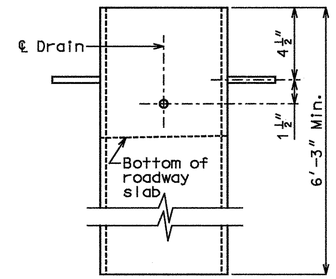

ELEVATION OF DRAIN

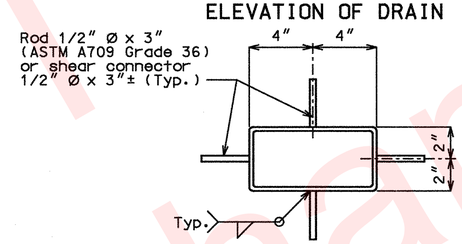

PLAN OF DRAIN

DETAILS OF DRAINS PARALLEL TO ROADWAY

Notes:

Slab drains may be fabricated of either 1/4" welded sheets of ASTM A709 Grade 36 steel or from 1/4" structural steel tubing ASTM A500 or A501.

Slab drain bracket assembly shall be ASTM A709 Grade 36 steel.

Outside dimensions of drains are 8" x 4".

Locate drains in slab by dimensions shown in Part Section Near Drain.

Shift reinforcing steel in field where necessary to clear drains.

The drains, coil inserts and bracket assembly shall be galvanized in accordance with ASTM A123.

All bolts, hardened washers, lock washers and nuts shall be galvanized in accordance with ASTM A153.

The coil insert required for the bracket assembly attachment shall be located on the Prestressed I-Girder shop drawings.

Shop drawings will not be required for the slab drains and the bracket assembly.

Coil inserts shall have a concrete pull-out strength (ultimate load) of at least 2,500 pounds in 5,000 psi concrete.

The bolt required to attach the slab drain bracket assembly to the prestressed girder web shall be supplied by the prestressed I-Girder fabricator.

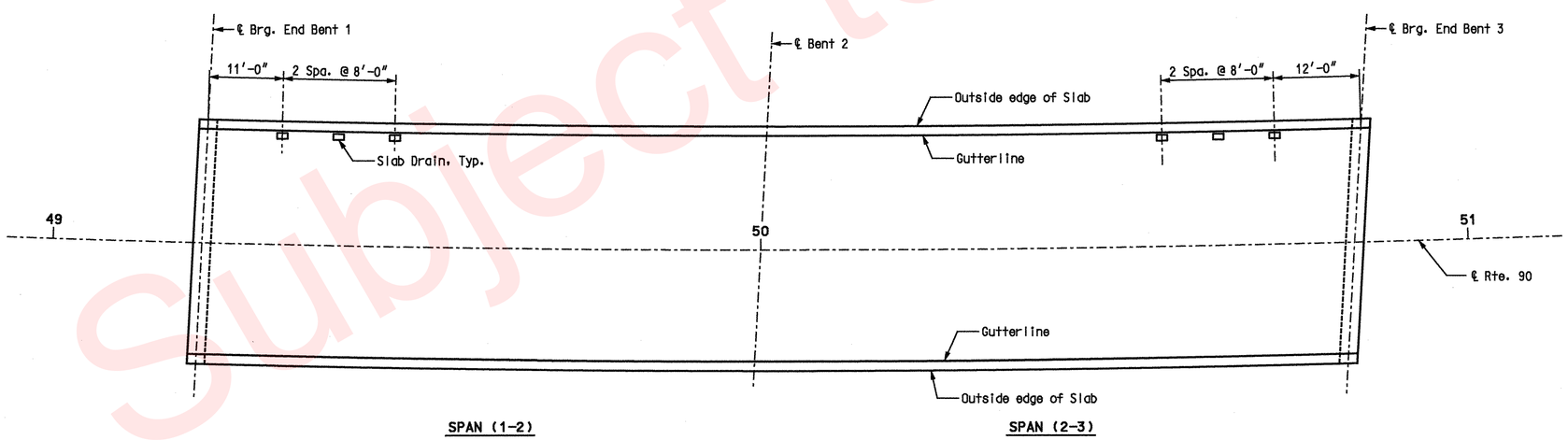

PLAN

Notes:
All longitudinal dimensions shown are horizontal arc dimensions along gutterline.

SLAB DRAIN DETAILS

DRAFT Subject to Change

STATE OF MISSOURI
GINA D. HORNER
NUMBER E-30413
REGISTERED PROFESSIONAL ENGINEER
3-9-10

DATE PREPARED	4/13/09
ROUTE I-49	STATE MO
DISTRICT BR	SHEET NO. 22
COUNTY McDONALD	
JOB NO. J7P0601	
CONTRACT ID.	
PROJECT NO.	
BRIDGE NO. A7000	

DESCRIPTION | DATE

MISSOURI HIGHWAYS AND TRANSPORTATION COMMISSION
105 WEST CAPITOL
JEFFERSON CITY, MO 65102
1-888-ASK-MODOT (1-888-275-6636)

HNTB
715 KIRK DRIVE
KANSAS CITY, MO 64105-1310
TELEPHONE (816) 472-1201
CERTIFICATE OF AUTHORITY NO. 001270

IF A SEAL IS PRESENT ON THIS SHEET IT HAS BEEN ELECTRONICALLY SEALED AND DATED.

REV.

USER: TThompson
PLOTTED: 08-MAR-2010 15:15 \\kcow00\Jobs\49259\Bridges\Plans\CDtoMoDotA7000_03-05-10\J7P0601\A7000-dgn\ZPLOT_B24.dgn

Detailed APR 2009
Checked APR 2009

Note: This drawing is not to scale. Follow Dimensions.

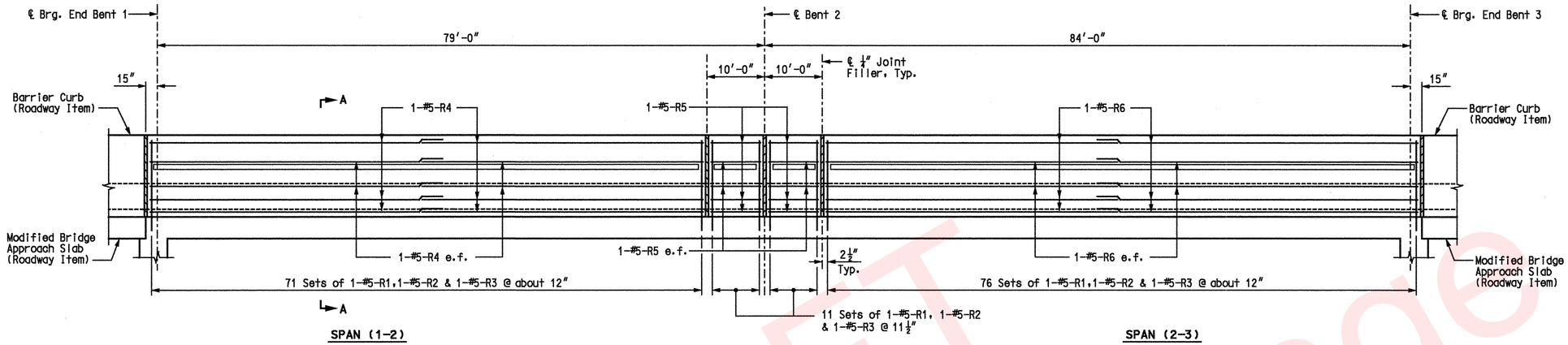

ELEVATION

Note:
Right barrier curb shown, left barrier curb similar.

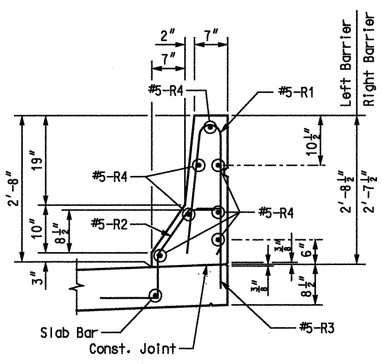

SECTION A-A

Scale: ¾"=1'-0"

Notes:
The cross sectional area above slab = 2.28 sq. ft. Left Barrier and 2.25 sq. ft. Right Barrier

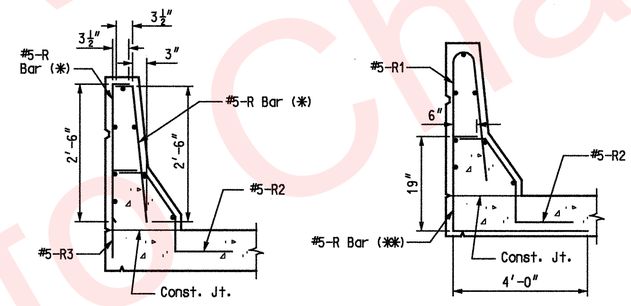

R-BAR PERMISSIBLE ALTERNATE SHAPE

(✱) The R1 bar may be seperated into two bars as shown, at the contractor's option, only when slip forming is not used. (All dimensioins are out to out.)

(✱✱) The R3 bar and #5 bottom transverse slab bar in cantilever (P/S panels only) combination may be furnished as one bar as shown, at the contractor's option.

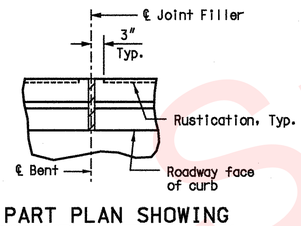

PART PLAN SHOWING SAFETY BARRIER CURB JOINT

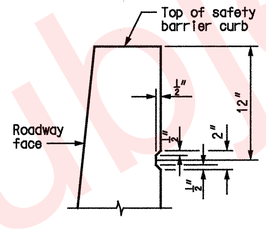

PART SECTION SHOWING RUSTICATION DETAIL

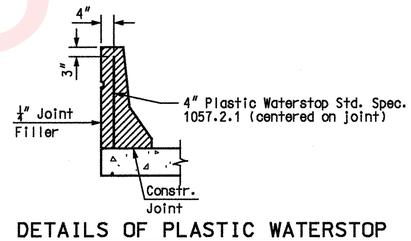

DETAILS OF PLASTIC WATERSTOP

Notes:
Plastic waterstop shall be placed in all safety barrier curb filled joints except structures with superelevation, use on all lower safety barrier curb joints only.
Cost of plastic waterstop complete in place will be considered completely covered by the contract unit price for Safety Barrier Curb.

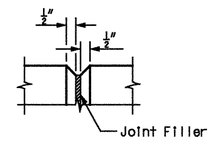

FILLED JOINT DETAIL

Notes:
e.f. denotes each face.
(L.B.) denotes Left Barrier.
(R.B.) denotes Right Barrier.
Use a minimum lap of 2'-11" for #5 horizontal barrier curb bars.
Top of safety barrier curb shall be built parallel to grade with barrier curb joints (except at end bents) normal to grade.
All exposed edges of safety barrier curb shall have either a ½" radius or a ¾" bevel, unless otherwise noted.
Payment for all concrete and reinforcement, complete-in-place, will be considered completely covered by the contract unit price for safety barrier curb per linear foot.
Concrete in the safety barrier curb shall be Class B-1.
Measurement of safety barrier curb is to the nearest linear foot for each structure, measured along the outside top of slab from end of curb to end of curb.
Concrete traffic barrier delineators shall be placed on top of safety barrier curb as shown on Missouri Standard Plans 617.10 and in accordance with Sec 617. Concrete traffic barrier delineators will be considered completely covered by the contract unit price for "Safety Barrier Curb (Type C)".
The curb shall be cured by application of Type 1-D or Type 2 Liquid Membrane-Forming Compound in accordance with Sec 1055. Surface sealing for concrete in accordance with Sec 703 is not required. Application of linseed oil at the contractor's expense is permitted.

SAFETY BARRIER CURB DETAILS

Detailed APR 2009
Checked APR 2009

Note: This drawing is not to scale. Follow Dimensions.

DRAFT Subject to Change

STATE OF MISSOURI
GINA D. HORNER
NUMBER E-30413
REGISTERED PROFESSIONAL ENGINEER
7-9-10

DATE PREPARED	
4/13/09	
ROUTE I-49	STATE MO
DISTRICT BR	SHEET NO. 23
COUNTY McDONALD	
JOB NO. J7P0601	
CONTRACT ID.	
PROJECT NO.	
BRIDGE NO. A7000	

DESCRIPTION	DATE

IF A SEAL IS PRESENT ON THIS SHEET IT HAS BEEN ELECTRONICALLY SEALED AND DATED.

MISSOURI HIGHWAYS AND TRANSPORTATION COMMISSION
105 WEST CAPITOL
JEFFERSON CITY, MO 65102
1-888-ASK-MODOT (1-888-275-6636)

HNTB
715 KIRK DRIVE
KANSAS CITY, MO 64105-1310
TELEPHONE (816) 472-1201
CERTIFICATE OF AUTHORITY NO. 001270

REV.

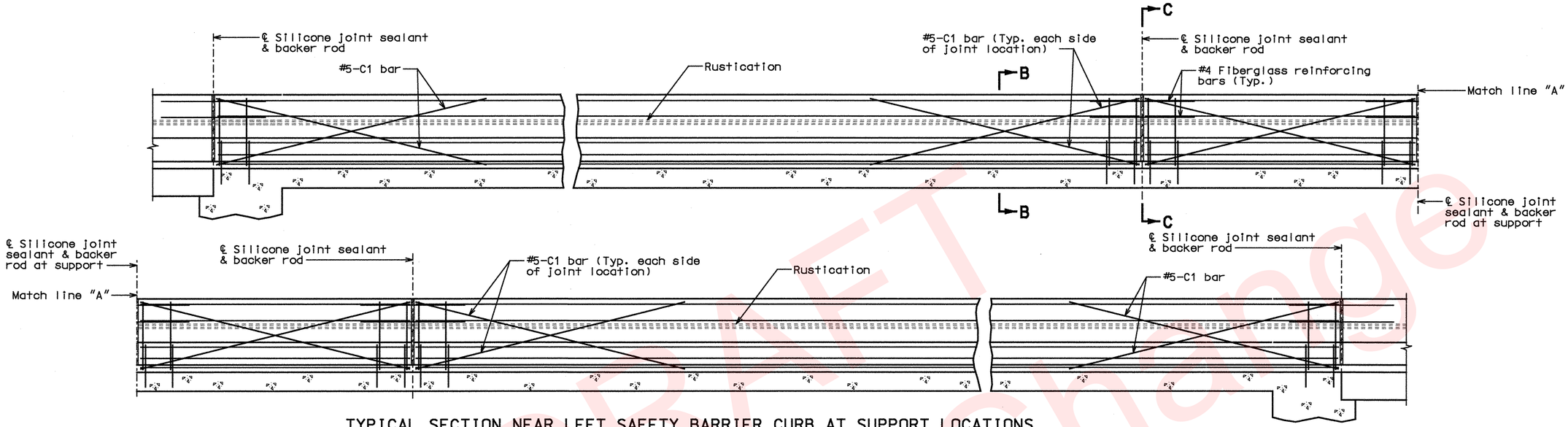

TYPICAL SECTION NEAR LEFT SAFETY BARRIER CURB AT SUPPORT LOCATIONS (OPTIONAL SLIP-FORM BRIDGE SAFETY BARRIER CURB)

Note:
Left barrier curb shown, right barrier curb similar.

Notes:

Top of safety barrier curb shall be built parallel to grade with barrier curb joints (except at end bents) normal to grade.

Payment for all concrete and reinforcement, complete-in-place, will be considered completely covered by the contract unit price for safety barrier curb per linear foot.

Concrete in the safety barrier curb shall be Class B-1.

Measurement of safety barrier curb is to the nearest linear foot for each structure, measured along the outside top of slab from end of curb to end of curb.

The curb shall be cured by application of Type 1-D or Type 2 Liquid Membrane-Forming Compound in accordance with Sec 1055. Surface sealing for concrete in accordance with Sec 703 is not required. Application of linseed oil at the contractor's expense is permitted.

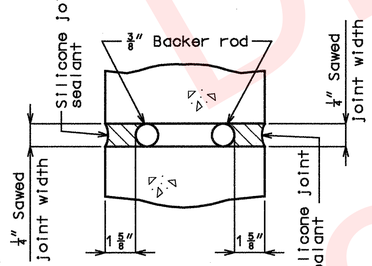

SECTION A-A

Notes:

Joint sealant and backer rods shall be used on all slip-form barrier curbs instead of joint filler and shall be in accordance with Sec 717 for silicone joint sealant for saw cut and formed joints.

Plastic waterstop shall not be used with slip-form option.

C Bars (Slip-form option only) shall be used in addition to cast-in-place conventional forming reinforcement for bridge safety barrier curb.

For Slip-Form option, all sides of the safety barrier curb shall have a vertically broomed finish and the curb top shall have a transversely broomed finish.

Concrete traffic barrier delineators shall be placed on top of the safety barrier curb (Type C) as shown on Missouri Standard Plans 617.10 and in accordance with Sec 617. Concrete traffic barrier delineators will be considered completely covered by the contract unit price for "Safety Barrier Curb (Type C)".

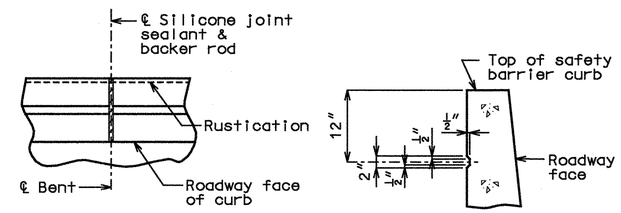

PART PLAN SHOWING SAFETY BARRIER CURB JOINT

PART SECTION SHOWING RUSTICATION DETAILS

RUSTICATION DETAIL

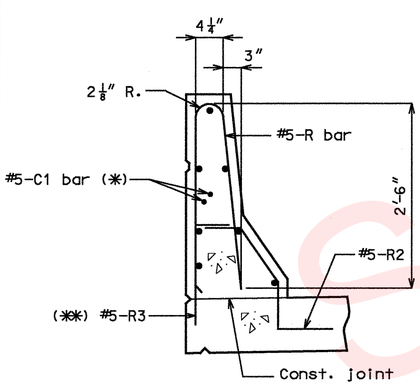

PART SECTION B-B

Notes:
(✱) Each side of joint location.

(✱✱) The R3 bar and #5 bottom transverse slab bar in cantilever (P/S panels only) combination may be furnished as one bar at the contractor's option.

Note:
Cost of silicone joint sealant and backer rod, complete-in-place, will be considered completely covered by the contract unit price for Safety Barrier Curb.

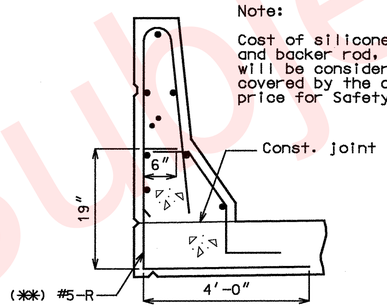

PART SECTION B-B
(Optional #5-R bar shown)

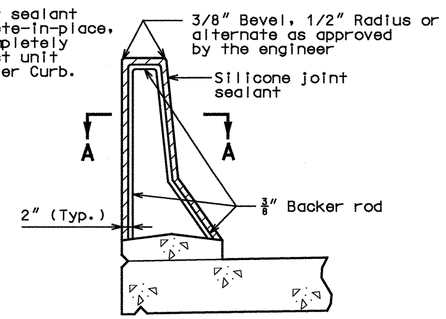

SECTION THRU JOINT

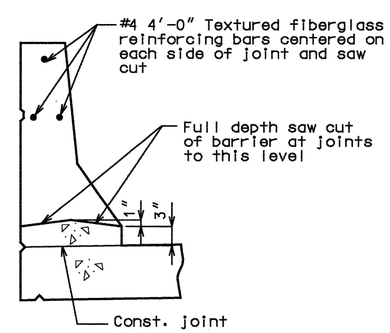

PART SECTION C-C

OPTIONAL SLIP-FORM BRIDGE SAFETY BARRIER CURB

Detailed APR 2009
Checked APR 2009

Note: This drawing is not to scale. Follow Dimensions.

DRAFT Subject to Change

STATE OF MISSOURI GINA D. HORNER NUMBER E-30413 REGISTERED PROFESSIONAL ENGINEER
3-9-10

DATE PREPARED	
4/13/09	
ROUTE I-49	STATE MO
DISTRICT BR	SHEET NO. 24
COUNTY McDONALD	
JOB NO. J7P0601	
CONTRACT ID.	
PROJECT NO.	
BRIDGE NO. A7000	

DESCRIPTION | DATE

IF A SFAI IS PRESENT ON THIS SHEET IT HAS BEEN ELECTRONICALLY SEALED AND DATED.

MISSOURI HIGHWAYS AND TRANSPORTATION COMMISSION
105 WEST CAPITOL
JEFFERSON CITY, MO 65102
1-888-ASK-MODOT (1-888-275-6636)

HNTB
715 KIRK DRIVE
KANSAS CITY, MO 64105-1310
TELEPHONE (816) 472-1201
CERTIFICATE OF AUTHORITY NO. 001270

REV.

BILL OF REINFORCING STEEL

NO. REQ'D.	MARK NO. SIZE	MARK NO. MARK	LOCATION	EPOXY (E)	SHAPE NO.	STIRRUP (S)	SUBSTR. (X)	VARIES (V)	NO. EACH	B FT. IN.	C FT. IN.	D FT. IN.	E FT. IN.	F FT. IN.	H FT. IN.	K FT. IN.	NOMINAL LENGTH FT. IN.	ACTUAL LENGTH FT. IN.	WEIGHT LBS.
			SUBSTRUCTURE																
			BENT 2																
48	8D201		Footing		18		X			9'-6"							11'-4"	11'-4"	1,452
4	6D202		Footing		5		X			9'-0"	5'-7"	5'-7"					20'-2"	19'-11"	120
24	5D203		Footing		20		X			9'-6"							9'-6"	9'-6"	238
24	10D204		Footing		17		X			11'-11"							13'-4"	13'-4"	1,377
							X												
8	10H201		Beam		18		X			31'-6"							34'-4"	34'-4"	1,182
6	10H202		Beam		18		X			29'-6"							32'-4"	32'-4"	835
8	10H203		Beam		20		X			31'-6"							31'-6"	31'-6"	1,084
12	5H204		Beam		20		X			31'-6"							31'-6"	31'-6"	394
32	4H205		Beam Seat		20		X			3'-0"							3'-0"	3'-0"	64
14	6H206		Beam		5	S	X			3'-7"	2'-5"	2'-5"					8'-5"	8'-2"	172
51	4P201		Column	E	16		X			3'-1"	16"						11'-1"	11'-1"	378
82	5U201		Beam		53	S	X			2'-8"	4'-3"						14'-9"	14'-6"	1,240
28	4U202		Beam Seat		5	S	X			3'-6"	12"	12"					5'-6"	5'-4"	100
6	5U203		Beam		5	S	X			3'-9"	4'-3"	4'-3"					12'-3"	12'-1"	76
14	10V201		Column	E	20		X			28'-3"							28'-3"	28'-3"	1,702
12	10V202		Column	E	20		X			28'-10"							28'-10"	28'-10"	1,489
18	6V203		Beam		20		X			2'-6"							2'-6"	2'-6"	68
			SUPERSTRUCTURE																
			END BENT 1																
8	6H101		Diaphragm		20					23"							23"	23"	23
12	6H102		Diaphragm		20					6'-8"							6'-8"	6'-8"	120
8	6H103		Beam		20					34'-2"							34'-2"	34'-2"	411
4	6H104		Diaphragm		20					34'-4"							34'-4"	34'-4"	206
4	6H105		Beam		20					4'-11"							4'-11"	4'-11"	30
4	6H106		Diaphragm	E	20					34'-5"							34'-5"	34'-5"	207
8	6H107		Beam		20					12'-2"							12'-2"	12'-2"	146
4	6H108		Beam		20					14'-2"							14'-2"	14'-2"	85
4	5H112		Diaphragm		20					4'-6"							4'-6"	4'-6"	19
35	5H113		Diaphragm	E	20					2'-6"							2'-6"	2'-6"	91
22	5U101		Beam		5	S				2'-8"	5'-1"	5'-1"					12'-10"	12'-7"	289
5	4U102		Beam		53	S				2'-8"	2'-8"						11'-5"	11'-2"	37
2	4U103		Beam		5	S				2'-8"	3'-0"	3'-0"					8'-8"	8'-6"	11
3	4U104		Beam		53	S				2'-8"	3'-0"						12'-1"	11'-10"	24
2	4U105		Beam		53	S				2'-8"	3'-4"						12'-9"	12'-6"	17
3	4U106		Beam		5	S				2'-8"	3'-4"	3'-4"					9'-4"	9'-2"	18
5	4U107		Beam		53	S				2'-8"	3'-8"						13'-5"	13'-2"	44
27	5U108		Diaphragm	E	5	S				2'-2"	5'-2"	4'-11"					12'-3"	12'-0"	338
27	6U109		Diaphragm		19	S				4'-1"	2'-4"						6'-5"	6'-4"	257
42	6U110		Diaphragm	E	19	S				3'-4"	12'-6"						15'-10"	15'-9"	994
10	5V101		Beam		20					5'-5"							5'-5"	5'-5"	56
20	6V102		Diaphragm		20					4'-1"							4'-1"	4'-1"	123

Note:
Two additional #10-V201 are included in the Bill of Reinforcing Steel for testing.

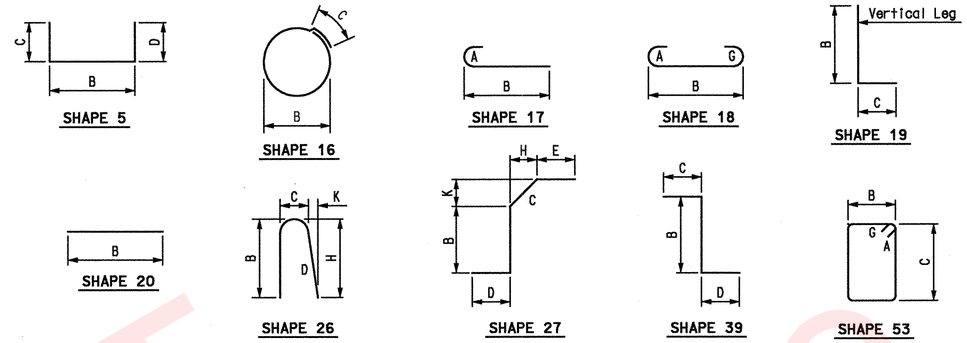

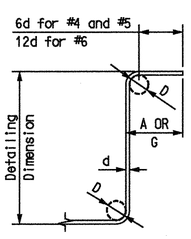

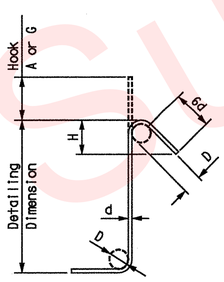

STIRRUP HOOK DIMENSIONS

GRADES 40 - 50 - 60 KSI				
BAR SIZE	D (IN.)	90° HOOK: HOOK A OR G	135° HOOK: HOOK A OR G	135° HOOK: APPROX. H
#4	2"	4½"	4½"	3"
#5	2½"	6"	5½"	3¾"
#6	4½"	12"	8"	4½"

Note:
Unless otherwise noted, diameter "D" is the same for all bends and hooks on a bar.

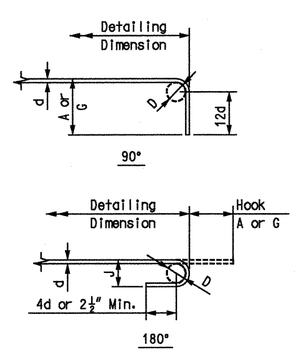

END HOOK DIMENSIONS

BAR SIZE	D (IN.)	ALL GRADES: 180° HOOKS: HOOK A OR G	ALL GRADES: 180° HOOKS: J	ALL GRADES: 90° HOOKS: HOOK A OR G
#3	2¼"	5"	3"	6"
#4	3"	6"	4"	8"
#5	3¾"	7"	5"	10"
#6	4½"	8"	6"	12"
#7	5¼"	10"	7"	14"
#8	6"	11"	8"	16"
#9	9½"	15"	11¾"	19"
#10	10¾"	17"	13¼"	22"
#11	12"	19"	14¾"	2'-0"
#14	18¼"	2'-3"	21¾"	2'-7"

Notes:
All standard hooks and bends other than 180 degree are to be bent with the same procedure as for 90 degree standard hooks.
Hooks and bends shall be in accordance with the procedures as shown on this sheet.
E = Epoxy coated reinforcement.
S = Stirrup.
X = Bar is included in substructure quantities.
V = Bar dimensions vary in equal increments between dimensions shown on this line and the following line.
No. Each = Number of bars of each length.
Nominal lengths are based on out to out dimensions shown in bending diagrams and are listed for fabricators use. (Nearest inch)
Actual lengths are measured along centerline bar to the nearest inch.
Payweights are based on actual lengths.
Reinforcing Steel (Grade 60) fy = 60,000 psi.

BILL OF REINFORCING STEEL

Detailed AUG 2009
Checked AUG 2009

Note: This drawing is not to scale. Follow Dimensions.

Subject to Change
DRAFT

STATE OF MISSOURI
GINA D. HORNER
NUMBER E-30413
REGISTERED PROFESSIONAL ENGINEER
3-9-10

DATE PREPARED

ROUTE	STATE
I-49	MO
DISTRICT	SHEET NO.
BR	25

COUNTY: McDONALD
JOB NO.: J7P0601
CONTRACT ID.
PROJECT NO.
BRIDGE NO.: A7000

DATE	DESCRIPTION

IF A SEAL IS PRESENT ON THIS SHEET IT HAS BEEN ELECTRONICALLY SEALED AND DATED.

MISSOURI HIGHWAYS AND TRANSPORTATION COMMISSION
105 WEST CAPITOL
JEFFERSON CITY, MO 65102
1-888-ASK-MODOT (1-888-275-6636)

HNTB
715 KIRK DRIVE
KANSAS CITY, MO 64105-1310
TELEPHONE (816) 472-1201
CERTIFICATE OF AUTHORITY NO. 001270

REV.

BILL OF REINFORCING STEEL

NO. REQ'D.	MARK NO. (SIZE MARK)	LOCATION	EPOXY (E)	SHAPE NO.	STIRRUP (S)	SUBSTR. (X)	VARIES (V)	NO. EACH	B (FT. IN.)	C (FT. IN.)	D (FT. IN.)	E (FT. IN.)	F (FT. IN.)	H (FT. IN.)	K (FT. IN.)	NOMINAL LENGTH (FT. IN.)	ACTUAL LENGTH (FT. IN.)	WEIGHT (LBS.)
		END BENT 3																
8	6H301	Diaphragm		20					2′-3″							2′-3″	2′-3″	27
12	6H302	Diaphragm		20					6′-8″							6′-8″	6′-8″	120
8	6H303	Beam		20					34′-4″							34′-4″	34′-4″	413
4	6H304	Diaphragm		20					34′-5″							34′-5″	34′-5″	207
4	6H305	Beam		20					4′-11″							4′-11″	4′-11″	30
4	6H306	Diaphragm	E	20					34′-7″							34′-7″	34′-7″	208
8	6H307	Beam		20					12′-2″							12′-2″	12′-2″	146
4	6H308	Beam		20					14′-2″							14′-2″	14′-2″	85
4	5H312	Diaphragm		20					4′-6″							4′-6″	4′-6″	19
35	5H313	Diaphragm	E	20					2′-6″							2′-6″	2′-6″	91
22	5U301	Beam		5	S				2′-8″	5′-2″	5′-2″					13′-0″	12′-9″	293
5	4U302	Beam		53	S				2′-8″	2′-8″						11′-5″	11′-2″	37
2	4U303	Beam		5	S				2′-8″	3′-0″	3′-0″					8′-8″	8′-6″	11
3	4U304	Beam		53	S				2′-8″	3′-0″						12′-1″	11′-10″	24
2	4U305	Beam		53	S				2′-8″	3′-4″						12′-9″	12′-6″	17
3	4U306	Beam		5	S				2′-8″	3′-4″	3′-4″					9′-4″	9′-2″	18
5	4U307	Beam		53	S				2′-8″	3′-8″						13′-5″	13′-2″	44
27	5U308	Diaphragm	E	5	S				2′-2″	5′-3″	4′-11″					12′-4″	12′-1″	340
27	6U309	Diaphragm		19	S				4′-2″	2′-4″						6′-6″	6′-5″	260
44	6U310	Diaphragm	E	19	S				3′-4″	12′-6″						15′-10″	15′-9″	1,041
10	5V301	Beam		20					5′-5″							5′-5″	5′-5″	56
20	6V302	Diaphragm		20					4′-1″							4′-1″	4′-1″	123
		BENT 2 DIAPH.																
12	4H21	Diaphragm		20					8′-4″							8′-4″	8′-4″	67
20	5H22	Diaphragm		19	S				3′-2″	9″						3′-11″	3′-10″	80
12	6H23	Diaphragm		20					6′-10″							6′-10″	6′-10″	123
8	5H24	Strand Tie Bar		20					4′-6″							4′-6″	4′-6″	38
8	5H25	Strand Tie Bar		20					3′-3″							3′-3″	3′-3″	27
38	4U21	Diaphragm	E	39	S				5′-0″	12″	22″					7′-10″	7′-8″	195
12	6U23	Diaphragm	E	39	S				5′-0″	18″	22″					8′-4″	8′-1″	146
8	5V21	Diaphragm	E	20					5′-0″							5′-0″	5′-0″	42
		SLAB																
74	5S1	Slab, Top & Bot.	E	20					60′-0″							60′-0″	60′-0″	4,631
37	5S2	Slab, Top & Bot.	E	20					52′-5″							52′-5″	52′-5″	2,023
56	8S3	Slab, Top	E	20					54′-6″							54′-6″	54′-6″	8,149
321	6S4	Slab, Top	E	20					34′-0″							34′-0″	34′-0″	16,393
322	5S5	Slab, Bottom	E	20					4′-0″							4′-0″	4′-0″	1,343
		BARRIER																
24	5C1	Slip Form	E	20					10′-0″							10′-0″	10′-0″	250
338	5R1	Barrier Curb	E	26	S				2′-6″	4¼″	2′-6⅛″			2′-6″	3″	5′-2″	5′-2″	1,821
338	5R2	Barrier Curb	E	27	S				7″	11¼″	12″	6″		6⅜″	9¼″	3′-1″	2′-9″	969
338	5R3	Barrier Curb	E	19	S				17″	6″						23″	22″	646
28	5R4	Barrier Curb	E	20					36′-6″							36′-6″	36′-6″	1,066
30	5R5	Barrier Curb	E	20					9′-8″							9′-8″	9′-8″	302
28	5R6	Barrier Curb	E	20					39′-0″							39′-0″	39′-0″	1,139

BILL OF REINFORCING STEEL

NO. REQ'D.	MARK NO. (SIZE MARK)	LOCATION	EPOXY (E)	SHAPE NO.	STIRRUP (S)	SUBSTR. (X)	VARIES (V)	NO. EACH	B (FT. IN.)	C (FT. IN.)	D (FT. IN.)	E (FT. IN.)	F (FT. IN.)	H (FT. IN.)	K (FT. IN.)	NOMINAL LENGTH (FT. IN.)	ACTUAL LENGTH (FT. IN.)	WEIGHT (LBS.)
		TOTALS																
	4																	533
	4		E															573
	5																	2,825
	5		E															15,092
	6																	3,295
	6		E															18,989
	8																	1,452
	8		E															8,149
	10																	4,478
	10		E															3,191
		TOTAL																12,583
		TOTAL E																45,994
		SLAB ON CONCRETE I-GIRDER																
	4																	369
	4		E															195
	5																	877
	5		E															8,899
	6																	2,935
	6		E															18,989
	8		E															8,149
		TOTAL																4,181
		TOTAL E																36,232
		REINFORCING STEEL (BRIDGES)																
	4																	164
	4		E															378
	5																	1,948
	6																	360
	8																	1,452
	10																	4,478
	10		E															3,191
		TOTAL																8,402
		TOTAL E																3,569
		BARRIER CURB																
	5		E															5,943
		SLIP FORM OPTION																
	5		E															250

Notes:
For Bar Bending Diagrams, see Sheet 25.
Two additional #4-U21, #5-R5, #6-U310, and #8-S3 are included in the Bill of Reinforcing Steel for testing.

BILL OF REINFORCING STEEL

Detailed AUG 2009
Checked AUG 2009

Note: This drawing is not to scale. Follow Dimensions.

STATE OF MISSOURI
GINA D. HORNER
NUMBER E-30413
REGISTERED PROFESSIONAL ENGINEER
3-9-10

DATE PREPARED: 08/06/09
ROUTE: I-49 | STATE: MO
DISTRICT: BR | SHEET NO.: 26
COUNTY: McDONALD
JOB NO.: J7P0601
CONTRACT ID.:
PROJECT NO.:
BRIDGE NO.: A7000

DESCRIPTION | DATE

MISSOURI HIGHWAYS AND TRANSPORTATION COMMISSION
105 WEST CAPITOL
JEFFERSON CITY, MO 65102
1-888-ASK-MODOT (1-888-275-6636)

HNTB
715 KIRK DRIVE
KANSAS CITY, MO 64105-1310
TELEPHONE (816) 472-1201
CERTIFICATE OF AUTHORITY NO. 001270

IF A SEAL IS PRESENT ON THIS SHEET IT HAS BEEN ELECTRONICALLY SEALED AND DATED.

REV.

Submitted for Review
DRAFT
Not for Construction

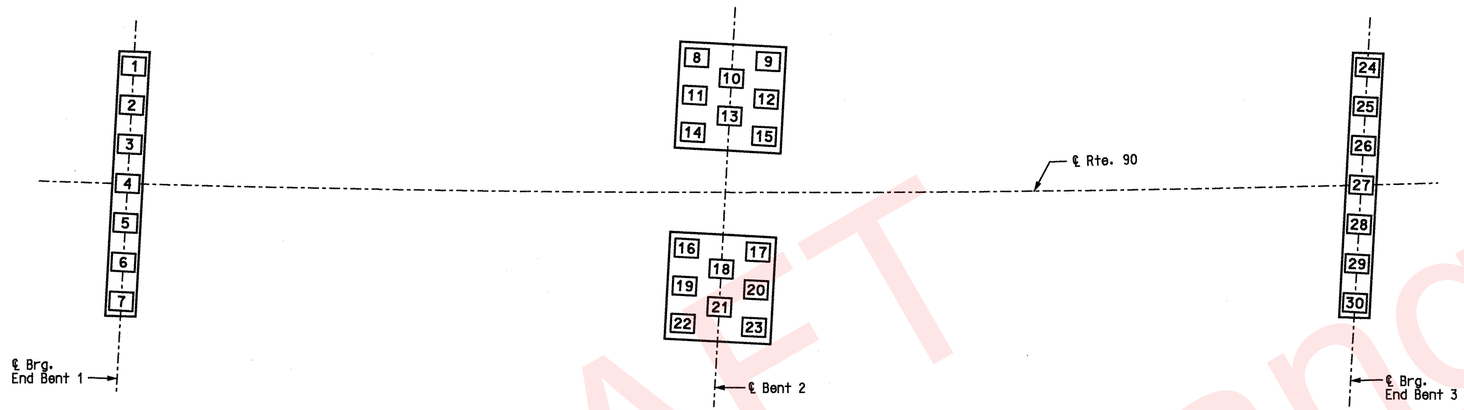

"AS BUILT PILE" DATA

PILE NO.	LENGTH IN PLACE (FT.)	COMPUTED BEARING (KIPS)	REMARKS
END BENT 1			
1			
2			
3			
4			
5			
6			
7			
BENT 2			
8			
9			
10			
11			
12			
13			
14			
15			
16			
17			
18			
19			
20			
21			
22			
23			
END BENT 3			
24			
25			
26			
27			
28			
29			
30			

Notes:
Indicate in the remarks column:
A. If pilings were driven to practical refusal.
B. If pile batter is other than shown on the Bent Detail Sheet.
C. Type of piling used.

NOTE:
THIS SHEET TO BE COMPLETED BY MoDOT CONSTRUCTION PERSONNEL.

AS-BUILT PILE DATA

DRAFT
Subject to Change

STATE OF MISSOURI
GINA D. HORNER
NUMBER E-30413
REGISTERED PROFESSIONAL ENGINEER
3-9-10

DATE PREPARED	4/14/09
ROUTE	I-49
STATE	MO
DISTRICT	BR
SHEET NO.	27
COUNTY	McDONALD
JOB NO.	J7P0601
CONTRACT ID.	
PROJECT NO.	
BRIDGE NO.	A7000

DATE	DESCRIPTION

MISSOURI HIGHWAYS AND TRANSPORTATION COMMISSION
105 WEST CAPITOL
JEFFERSON CITY, MO 65102
1-888-ASK-MODOT (1-888-275-6636)

HNTB
715 KIRK DRIVE
KANSAS CITY, MO 64105-1310
TELEPHONE (816) 472-1201
CERTIFICATE OF AUTHORITY
NO. 001270

IF A SEAL IS PRESENT ON THIS SHEET IT HAS BEEN ELECTRONICALLY SEALED AND DATED.

REV.

Detailed APR 2009
Checked APR 2009

Note: This drawing is not to scale. Follow Dimensions.

USER: TThompson
PLOTTED: 08-MAR-2010 15:15 \\kcow00\Jobs\49259\Bridges\Plans\CDtoMoDotA7000_03-05-10\J7P0601\A7000-dgn\ZPLOT_B33.dgn
\\kcow00\Jobs\49259\Bridges\Plans\CDtoMoDotA7000_03-05-10\J7P0601\A7000-dgn\ZPLOT_B33.dgn 08-MAR-2010 15:15