Standard Drawing Guidance (do not show on plans):

See Structural Project Manager or Liaison for preference on revising details as follows to specify staged construction.

① Show & call out any required staged construction joints. — Staged Const. Jt.

② Show any required construction joints and show and call out any mechanical bar splices. — Mechanical Bar Splice (Typ.)

③ When mechanical bar splices are required due to staged construction, add the following after the indicated note:

(Estimated ___ splices per slab)

Input the estimated number of required mechanical bar splices including those in the sleeper slab.

④ See Notes K1.11 and K1.12 in EPG 751.50 for wording of notes when semi-deep abutments are used.

⑤ If the end of a wing wall extends beyond the end of the bridge approach slab, it will be necessary to revise the length of the sleeper slab shown and to redirect the perforated drain pipe adjacent to the sleeper slab to go under the sleeper slab and then turn to daylight. This should be nonperforated drain pipe at this point.

ALTERNATE DETAILS FOR TYPE B BARRIER (SBC)

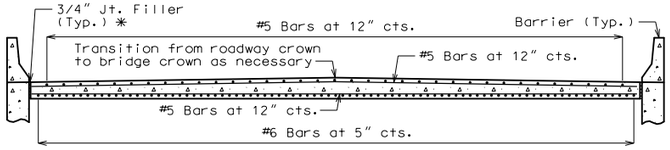

SECTION A-A

APP05_major_sq_i Effective: Apr. 2020 Supersedes: Jan. 2020 (BAS05)

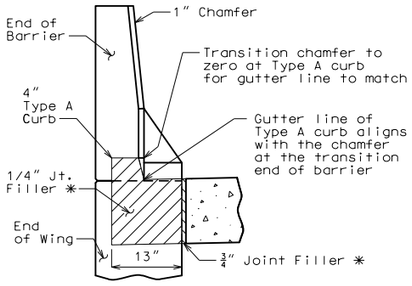

SECTION BETWEEN BARRIER AND CURB

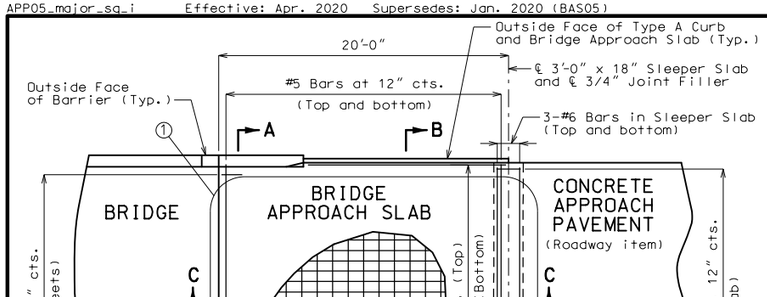

PART PLAN SHOWING REINFORCEMENT

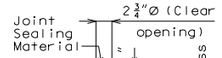

UNDERSEAL ACCESS HOLE DETAIL

(If required)

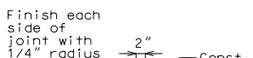

CONSTRUCTION JOINT DETAIL

General Notes:

All concrete for the bridge approach slab and sleeper slab shall be in accordance with Sec 503 (f'c = 4,000 psi).

The reinforcing steel in the bridge approach slab and the sleeper slab shall be epoxy coated Grade 60 with fy = 60,000 psi.

Drain pipe may be either 6" diameter corrugated metallic-coated pipe underdrain, 4" diameter corrugated polyvinyl chloride (PVC) drain pipe, or 4" diameter corrugated polyethylene (PE) drain pipe.

Minimum clearance to reinforcing steel shall be 1 1/2", unless otherwise shown.

The reinforcing steel in the bridge approach slab and the sleeper slab shall be continuous. The transverse reinforcing steel may be made continuous by lap splicing the #5 bars 29" or by mechanical bar splice.

Mechanical bar splices shall be in accordance with Sec 710. ③

All joint filler shall be in accordance with Sec 1057 for preformed fiber expansion joint filler except as noted.

The contractor shall pour and satisfactorily finish the bridge slab before placing the bridge approach slab.

Longitudinal construction joints in approach slab and sleeper slab shall be aligned with longitudinal construction joints in bridge slab. ④

For concrete approach pavement details, see roadway plans.

See Missouri Standard Plan 609.00 for details of Type A curb.

Payment for furnishing all materials, labor and excavation necessary to construct the approach slab, including the timber header, sleeper slab, underdrain, Type 5 aggregate base, joint filler and all other appurtenances and incidental work as shown on this sheet, complete in place, will be considered completely covered by the contract unit price for Bridge Approach Slab (Major Road) per square yard.

✱ Seal joint between vertical face of approach slab and wing with sealant in accordance with Sec 717 for silicone joint sealant for saw cut and formed joints.

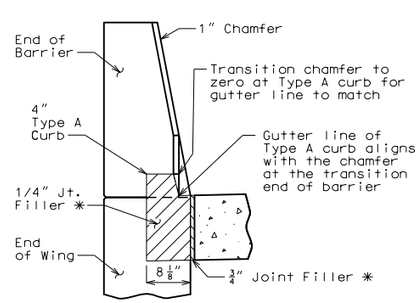

SECTION BETWEEN CURB AND BARRIER

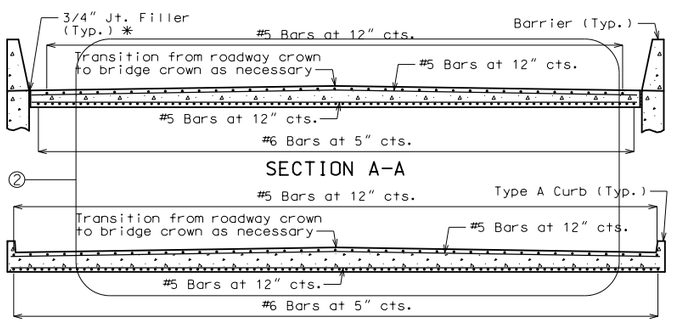

SECTION B-B

With the approval of the engineer, the contractor may crown the bottom of the approach slab to match the crown of the roadway surface.

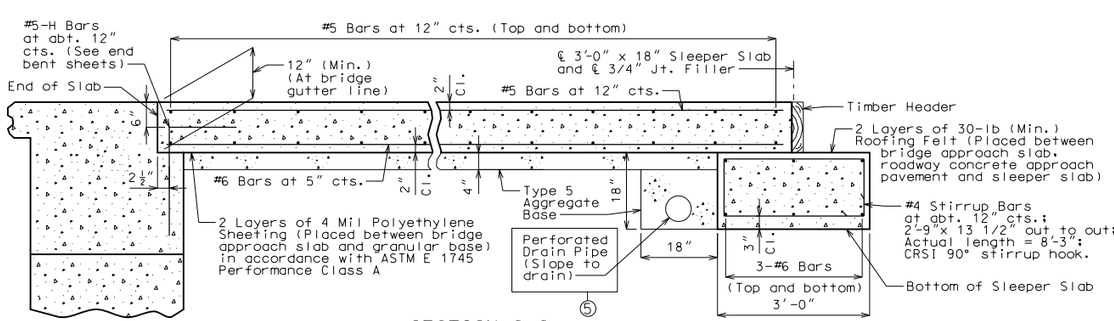

SECTION C-C

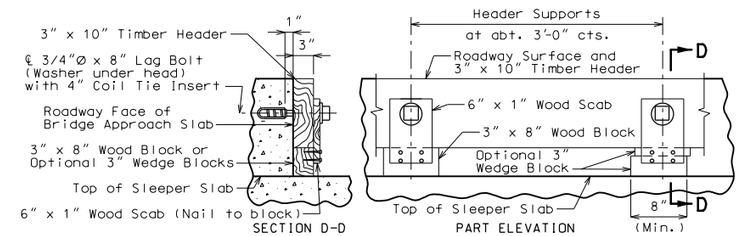

SECTION D-D PART ELEVATION

DETAILS OF TIMBER HEADER

Remove timber header when concrete pavement is placed.

BRIDGE APPROACH SLAB (MAJOR ROAD)

Detailed
Checked

Note: This drawing is not to scale. Follow dimensions. Sheet No. of

"THIS MEDIA SHOULD NOT BE CONSIDERED A CERTIFIED DOCUMENT."

DATE PREPARED	
5/14/2020	
ROUTE	STATE
✱	MO
DISTRICT	SHEET NO.
BR	✱
COUNTY	
✱	
JOB NO.	
✱	
CONTRACT ID.	
PROJECT NO.	
BRIDGE NO.	
APP05	

DESCRIPTION DATE

MISSOURI HIGHWAYS AND TRANSPORTATION COMMISSION
105 WEST CAPITOL
JEFFERSON CITY, MO 65102
1-888-ASK-MODOT (1-888-275-6636)

IF A SEAL IS PRESENT ON THIS SHEET IT HAS BEEN ELECTRONICALLY SEALED AND DATED