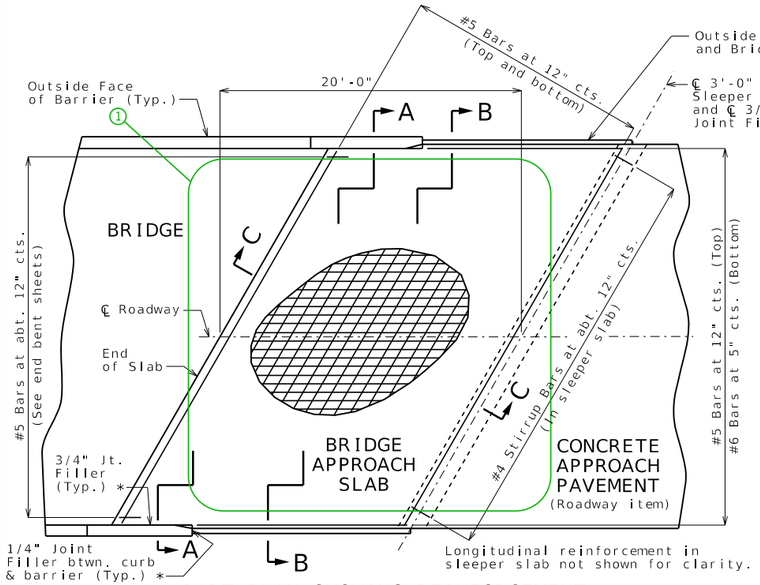

PART PLAN SHOWING REINFORCEMENT

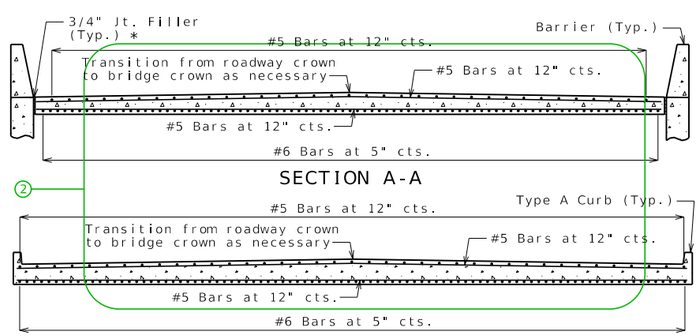

SECTION A-A

SECTION B-B

With the approval of the engineer, the contractor may crown the bottom of the approach slab to match the crown of the roadway surface.

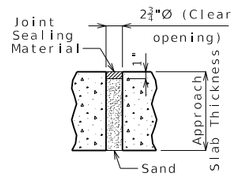

UNDERSEAL ACCESS HOLE DETAIL

(If required)

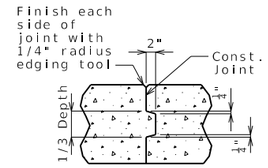

CONSTRUCTION JOINT DETAIL

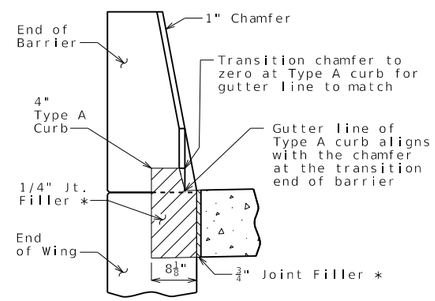

SECTION BETWEEN CURB AND BARRIER

General Notes:

All concrete for the bridge approach slab and sleeper slab shall be in accordance with Sec 503 (f'c = 4,000 psi).

The reinforcing steel in the bridge approach slab and the sleeper slab shall be epoxy coated Grade 60 with fy = 60,000 psi.

Drain pipe may be either 6" diameter corrugated metallic-coated pipe underdrain, 4" diameter corrugated polyvinyl chloride (PVC) drain pipe, or 4" diameter corrugated polyethylene (PE) drain pipe.

Minimum clearance to reinforcing steel shall be 1 1/2", unless otherwise shown.

The reinforcing steel in the bridge approach slab and the sleeper slab shall be continuous. The transverse reinforcing steel may be made continuous by providing a minimum lap splice of 24 inches for #5 bars and 40 inches for #6 bars, or by mechanical bar splice.

Mechanical bar splices shall be in accordance with Sec 710. (3)

All joint filler shall be in accordance with Sec 1057 for preformed fiber expansion joint filler except as noted.

The contractor shall pour and satisfactorily finish the bridge slab before placing the bridge approach slab.

Longitudinal construction joints in approach slab and sleeper slab shall be aligned with longitudinal construction joints in bridge slab. (4)

For concrete approach pavement details, see roadway plans.

See Missouri Standard Plan 609.00 for details of Type A curb.

Payment for furnishing all materials, labor and excavation necessary to construct the approach slab, including the timber header, sleeper slab, underdrain, Type 5 aggregate base, joint filler and all other appurtenances and incidental work as shown on this sheet, complete in place, will be considered completely covered by the contract unit price for Bridge Approach Slab (Major) per square yard.

* Seal joint between vertical face of approach slab and wing with sealant in accordance with Sec 717 for silicone joint sealant for saw cut and formed joints.

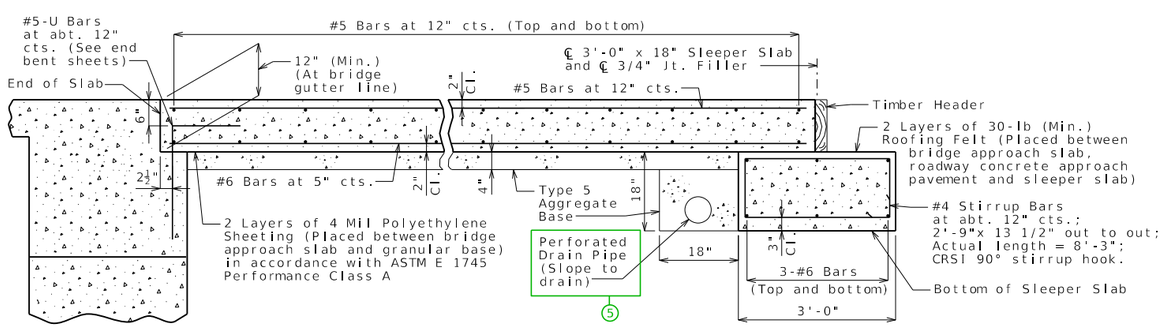

SECTION C-C

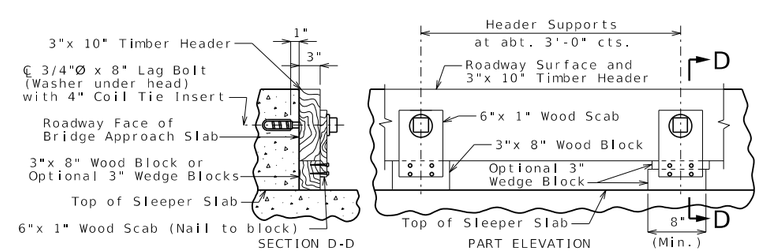

DETAILS OF TIMBER HEADER

Remove timber header when concrete pavement is placed.

BRIDGE APPROACH SLAB (MAJOR)

Detailed
Checked

Note: This drawing is not to scale. Follow dimensions.

Sheet No. of

DATE PREPARED	
4/21/2025	
ROUTE	STATE MO
DISTRICT	SHEET NO. 000
COUNTY	
JOB NO.	
CONTRACT ID.	
PROJECT NO.	
BRIDGE NO.	

DATE	DESCRIPTION

MISSOURI HIGHWAYS AND TRANSPORTATION COMMISSION
105 WEST CAPITOL
JEFFERSON CITY, MO 65102
1-888-ASK-MODOT (1-888-275-6636)

APP01_major_la_i Guidance & Alternate Details

Standard Drawing Guidance (do not show on plans):

See Structural Project Manager or Liaison for preference on revising details as follows to specify staged construction.

1. Show & call out any required staged construction joints.

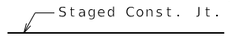

2. Show any required construction joints and show and call out any mechanical bar splices.

3. When mechanical bar splices are required due to staged construction, add the following after the indicated note:

(Estimated ___ splices per slab)

Input the estimated number of required mechanical bar splices including those in the sleeper slab.

4. See Notes K1.11 and K1.12 in EPG 751.50 for wording of notes when semi-deep abutments are used.

5. If the end of a wing wall extends beyond the end of the bridge approach slab, it will be necessary to revise the length of the sleeper slab shown and to redirect the perforated drain pipe adjacent to the sleeper slab to go under the sleeper slab and then turn to daylight. This should be nonperforated drain pipe at this point.

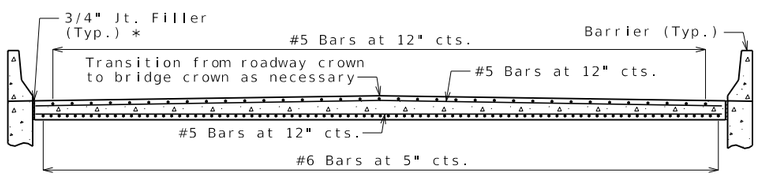

SECTION A-A

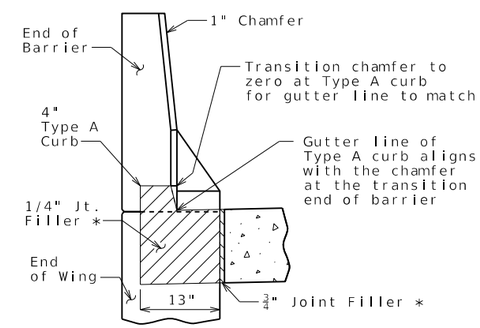

SECTION BETWEEN
BARRIER AND CURB

ALTERNATE DETAILS FOR TYPE B BARRIER (SBC)

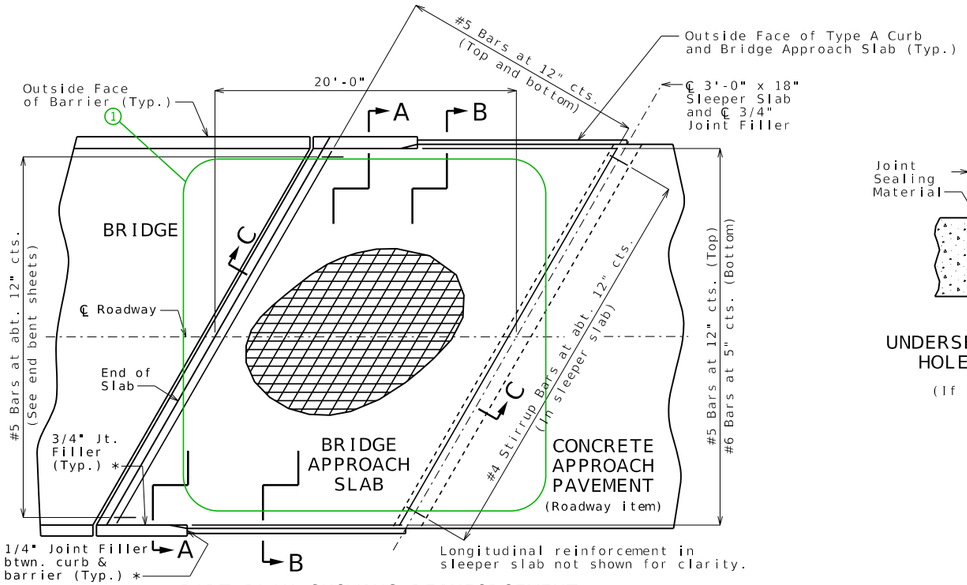

PART PLAN SHOWING REINFORCEMENT

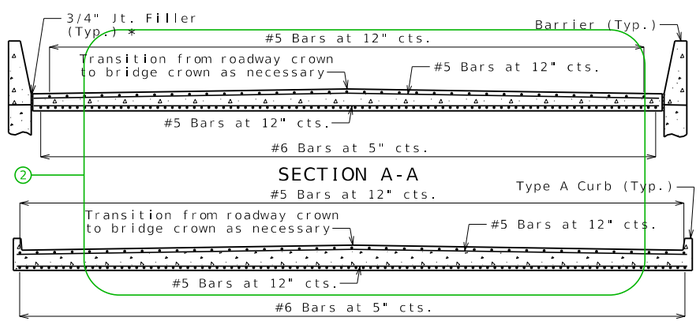

SECTION A-A

SECTION B-B

With the approval of the engineer, the contractor may crown the bottom of the approach slab to match the crown of the roadway surface.

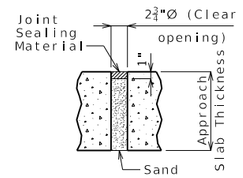

UNDERSEAL ACCESS HOLE DETAIL

(If required)

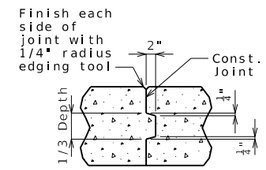

CONSTRUCTION JOINT DETAIL

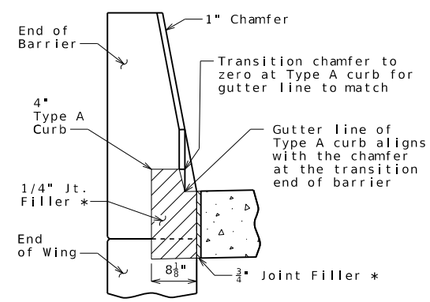

SECTION BETWEEN CURB AND BARRIER

General Notes:

All concrete for the bridge approach slab and sleeper slab shall be in accordance with Sec 503 (f'c = 4,000 psi).

The reinforcing steel in the bridge approach slab and the sleeper slab shall be epoxy coated Grade 60 with fy = 60,000 psi.

Drain pipe may be either 6" diameter corrugated metallic-coated pipe underdrain, 4" diameter corrugated polyvinyl chloride (PVC) drain pipe, or 4" diameter corrugated polyethylene (PE) drain pipe.

Minimum clearance to reinforcing steel shall be 1 1/2", unless otherwise shown.

The reinforcing steel in the bridge approach slab and the sleeper slab shall be continuous. The transverse reinforcing steel may be made continuous by providing a minimum lap splice of 24 inches for #5 bars and 40 inches for #6 bars, or by mechanical bar splice.

Mechanical bar splices shall be in accordance with Sec 710. (3)

All joint filler shall be in accordance with Sec 1057 for preformed fiber expansion joint filler except as noted.

The contractor shall pour and satisfactorily finish the bridge slab before placing the bridge approach slab.

Longitudinal construction joints in approach slab and sleeper slab shall be aligned with longitudinal construction joints in bridge slab. (4)

For concrete approach pavement details, see roadway plans.

See Missouri Standard Plan 609.00 for details of Type A curb.

Payment for furnishing all materials, labor and excavation necessary to construct the approach slab, including the timber header, sleeper slab, underdrain, Type 5 aggregate base, joint filler and all other appurtenances and incidental work as shown on this sheet, complete in place, will be considered completely covered by the contract unit price for Bridge Approach Slab (Major) per square yard.

* Seal joint between vertical face of approach slab and wing with sealant in accordance with Sec 717 for silicone joint sealant for saw cut and formed joints.

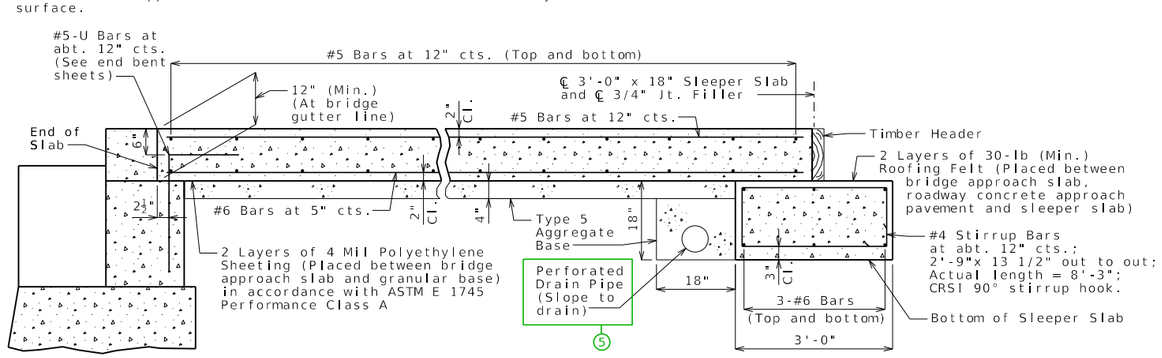

SECTION C-C

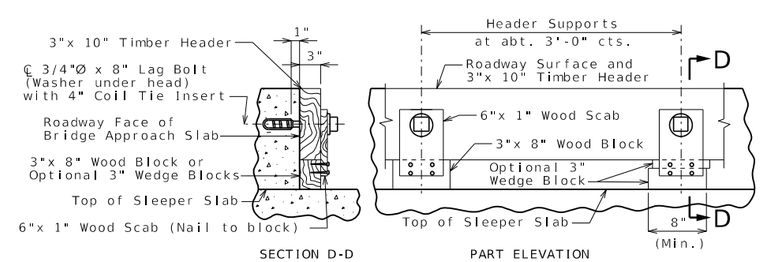

SECTION D-D

PART ELEVATION

DETAILS OF TIMBER HEADER

Remove timber header when concrete pavement is placed.

BRIDGE APPROACH SLAB (MAJOR)

Detailed
Checked

Note: This drawing is not to scale. Follow dimensions.

Sheet No. of

DATE PREPARED	
4/21/2025	
ROUTE	STATE MO
DISTRICT	SHEET NO. 2
COUNTY	
JOB NO.	
CONTRACT ID.	
PROJECT NO.	
BRIDGE NO.	

DESCRIPTION

DATE

MISSOURI HIGHWAYS AND TRANSPORTATION COMMISSION

105 WEST CAPITOL
JEFFERSON CITY, MO 65102
1-888-ASK-MODOT (1-888-275-6636)

APP02_major_la_n Guidance & Alternate Details

Standard Drawing Guidance (do not show on plans):

See Structural Project Manager or Liaison for preference on revising details as follows to specify staged construction.

1. Show & call out any required staged construction joints.

2. Show any required construction joints and show and call out any mechanical bar splices.

3. When mechanical bar splices are required due to staged construction, add the following after the indicated note:

(Estimated ___ splices per slab)

Input the estimated number of required mechanical bar splices including those in the sleeper slab.

4. See Notes K1.11 and K1.12 in EPG 751.50 for wording of notes when semi-deep abutments are used.

5. If the end of a wing wall extends beyond the end of the bridge approach slab, it will be necessary to revise the length of the sleeper slab shown and to redirect the perforated drain pipe adjacent to the sleeper slab to go under the sleeper slab and then turn to daylight. This should be nonperforated drain pipe at this point.

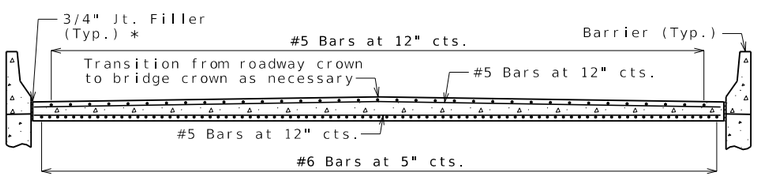

SECTION A-A

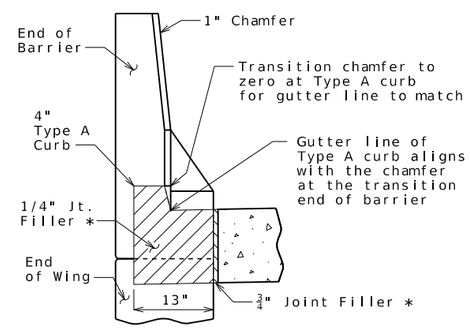

SECTION BETWEEN
BARRIER AND CURB

ALTERNATE DETAILS FOR TYPE B BARRIER (SBC)

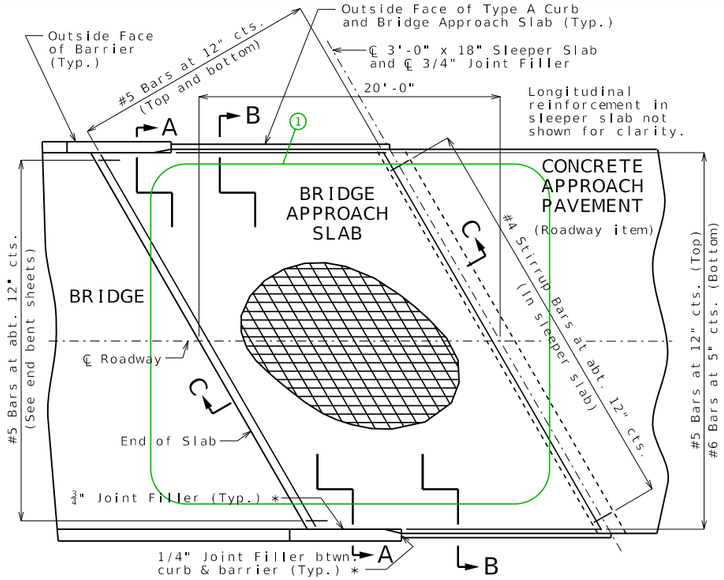

PART PLAN SHOWING REINFORCEMENT

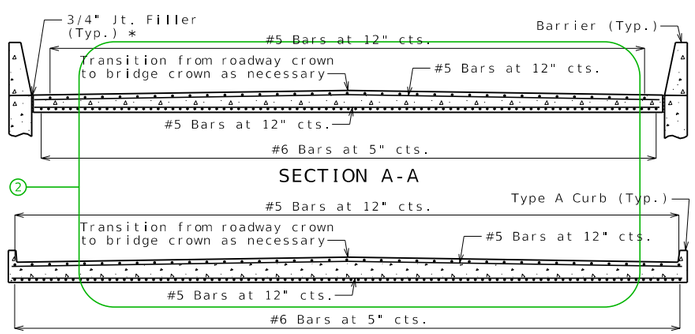

SECTION A-A

SECTION B-B

With the approval of the engineer, the contractor may crown the bottom of the approach slab to match the crown of the roadway surface.

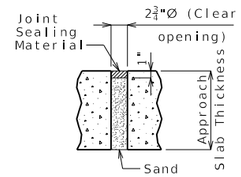

UNDERSEAL ACCESS HOLE DETAIL

(If required)

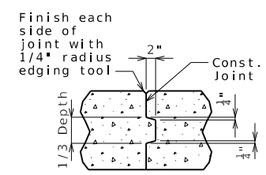

CONSTRUCTION JOINT DETAIL

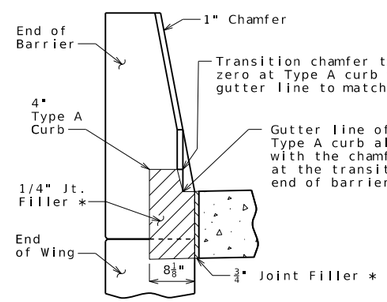

SECTION BETWEEN CURB AND BARRIER

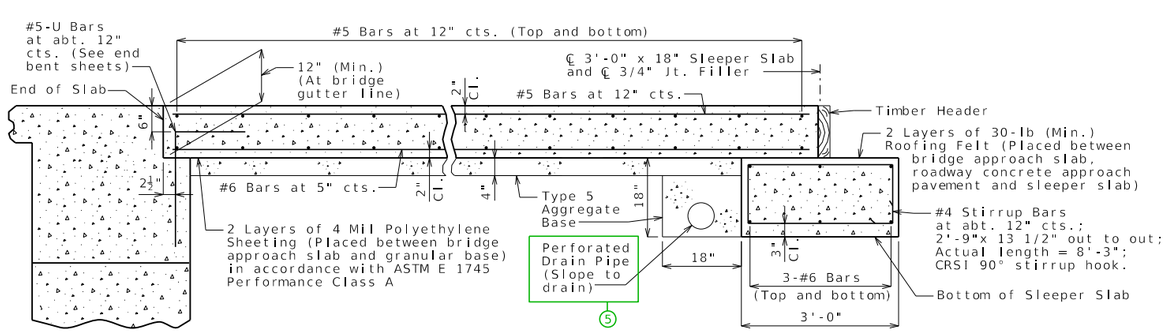

SECTION C-C

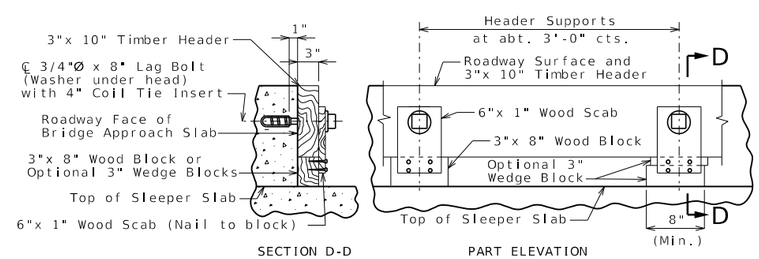

SECTION D-D

PART ELEVATION

DETAILS OF TIMBER HEADER

Remove timber header when concrete pavement is placed.

General Notes:

All concrete for the bridge approach slab and sleeper slab shall be in accordance with Sec 503 (f'c = 4,000 psi).

The reinforcing steel in the bridge approach slab and the sleeper slab shall be epoxy coated Grade 60 with fy = 60,000 psi.

Drain pipe may be either 6" diameter corrugated metallic-coated pipe underdrain, 4" diameter corrugated polyvinyl chloride (PVC) drain pipe, or 4" diameter corrugated polyethylene (PE) drain pipe.

Minimum clearance to reinforcing steel shall be 1 1/2", unless otherwise shown.

The reinforcing steel in the bridge approach slab and the sleeper slab shall be continuous. The transverse reinforcing steel may be made continuous by providing a minimum lap splice of 24 inches for #5 bars and 40 inches for #6 bars, or by mechanical bar splice.

Mechanical bar splices shall be in accordance with Sec 710. 3

All joint filler shall be in accordance with Sec 1057 for preformed fiber expansion joint filler except as noted.

The contractor shall pour and satisfactorily finish the bridge slab before placing the bridge approach slab.

Longitudinal construction joints in approach slab and sleeper slab shall be aligned with longitudinal construction joints in bridge slab. 4

For concrete approach pavement details, see roadway plans.

See Missouri Standard Plan 609.00 for details of Type A curb.

Payment for furnishing all materials, labor and excavation necessary to construct the approach slab, including the timber header, sleeper slab, underdrain, Type 5 aggregate base, joint filler and all other appurtenances and incidental work as shown on this sheet, complete in place, will be considered completely covered by the contract unit price for Bridge Approach Slab (Major) per square yard.

* Seal joint between vertical face of approach slab and wing with sealant in accordance with Sec 717 for silicone joint sealant for saw cut and formed joints.

DATE PREPARED 4/21/2025

ROUTE	STATE MO
DISTRICT	SHEET NO. 3

COUNTY

JOB NO.

CONTRACT ID.

PROJECT NO.

BRIDGE NO.

DESCRIPTION

DATE

MISSOURI HIGHWAYS AND TRANSPORTATION COMMISSION

105 WEST CAPITOL
JEFFERSON CITY, MO 65102
1-888-ASK-MODOT (1-888-275-6636)

BRIDGE APPROACH SLAB (MAJOR)

Detailed
Checked

Note: This drawing is not to scale. Follow dimensions.

Sheet No. of

APP03_major_ra_i Guidance & Alternate Details

Standard Drawing Guidance (do not show on plans):

See Structural Project Manager or Liaison for preference on revising details as follows to specify staged construction.

1. Show & call out any required staged construction joints.

2. Show any required construction joints and show and call out any mechanical bar splices.

3. When mechanical bar splices are required due to staged construction, add the following after the indicated note:

(Estimated ___ splices per slab)

Input the estimated number of required mechanical bar splices including those in the sleeper slab.

4. See Notes K1.11 and K1.12 in EPG 751.50 for wording of notes when semi-deep abutments are used.

5. If the end of a wing wall extends beyond the end of the bridge approach slab, it will be necessary to revise the length of the sleeper slab shown and to redirect the perforated drain pipe adjacent to the sleeper slab to go under the sleeper slab and then turn to daylight. This should be nonperforated drain pipe at this point.

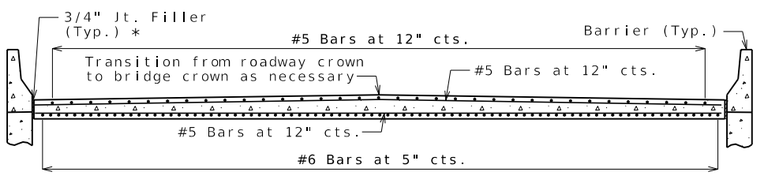

SECTION A-A

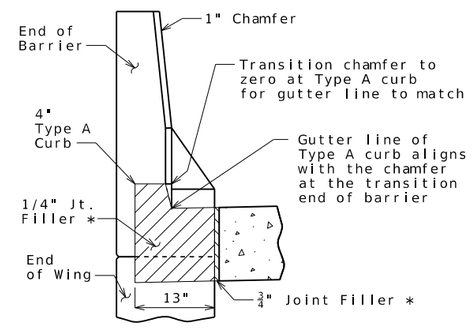

SECTION BETWEEN
BARRIER AND CURB

ALTERNATE DETAILS FOR TYPE B BARRIER (SBC)

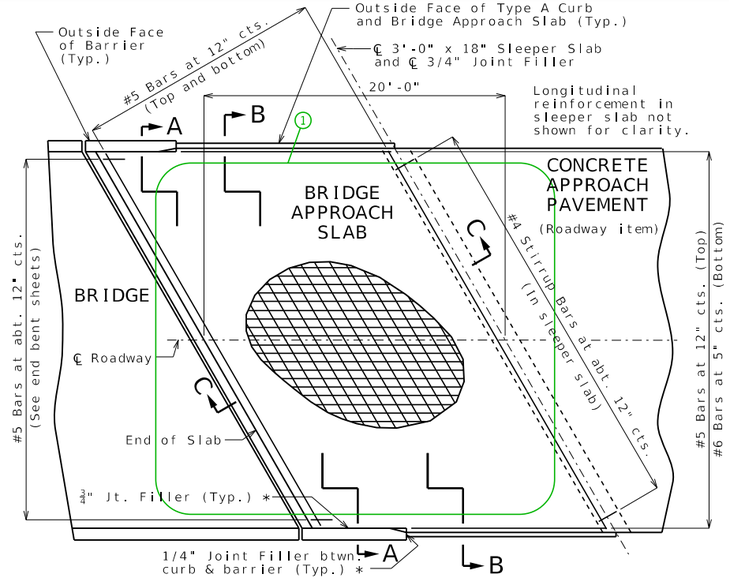

PART PLAN SHOWING REINFORCEMENT

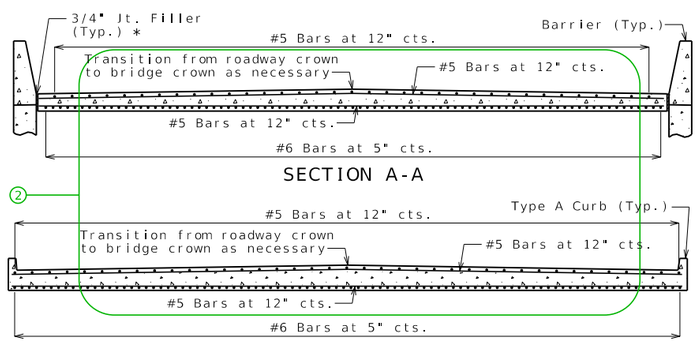

SECTION A-A

SECTION B-B

With the approval of the engineer, the contractor may crown the bottom of the approach slab to match the crown of the roadway surface.

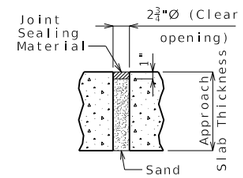

UNDERSEAL ACCESS HOLE DETAIL

(If required)

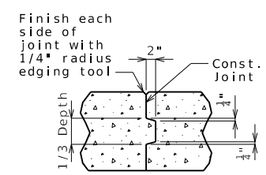

CONSTRUCTION JOINT DETAIL

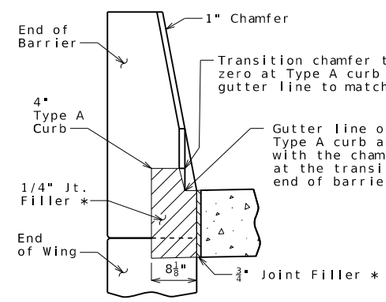

SECTION BETWEEN CURB AND BARRIER

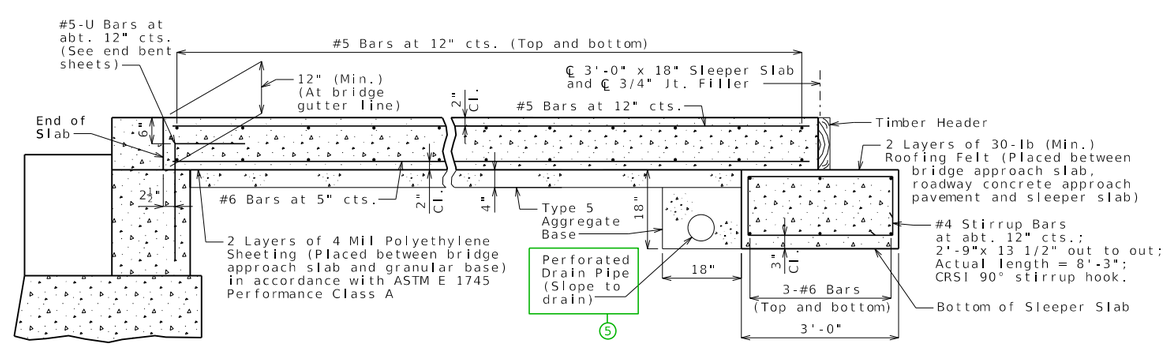

SECTION C-C

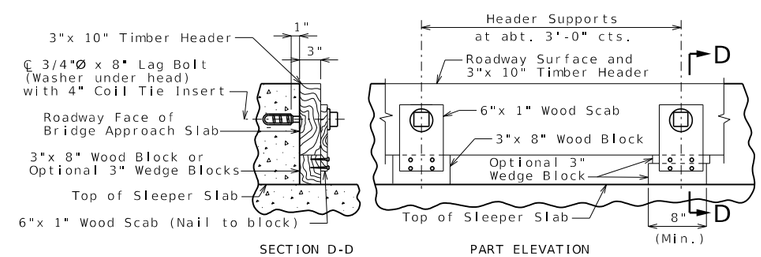

SECTION D-D PART ELEVATION

DETAILS OF TIMBER HEADER

Remove timber header when concrete pavement is placed.

General Notes:

All concrete for the bridge approach slab and sleeper slab shall be in accordance with Sec 503 (f'c = 4,000 psi).

The reinforcing steel in the bridge approach slab and the sleeper slab shall be epoxy coated Grade 60 with fy = 60,000 psi.

Drain pipe may be either 6" diameter corrugated metallic-coated pipe underdrain, 4" diameter corrugated polyvinyl chloride (PVC) drain pipe, or 4" diameter corrugated polyethylene (PE) drain pipe.

Minimum clearance to reinforcing steel shall be 1 1/2", unless otherwise shown.

The reinforcing steel in the bridge approach slab and the sleeper slab shall be continuous. The transverse reinforcing steel may be made continuous by providing a minimum lap splice of 24 inches for #5 bars and 40 inches for #6 bars, or by mechanical bar splice.

Mechanical bar splices shall be in accordance with Sec 710. 3

All joint filler shall be in accordance with Sec 1057 for preformed fiber expansion joint filler except as noted.

The contractor shall pour and satisfactorily finish the bridge slab before placing the bridge approach slab.

Longitudinal construction joints in approach slab and sleeper slab shall be aligned with longitudinal construction joints in bridge slab. 4

For concrete approach pavement details, see roadway plans.

See Missouri Standard Plan 609.00 for details of Type A curb.

Payment for furnishing all materials, labor and excavation necessary to construct the approach slab, including the timber header, sleeper slab, underdrain, Type 5 aggregate base, joint filler and all other appurtenances and incidental work as shown on this sheet, complete in place, will be considered completely covered by the contract unit price for Bridge Approach Slab (Major) per square yard.

* Seal joint between vertical face of approach slab and wing with sealant in accordance with Sec 717 for silicone joint sealant for saw cut and formed joints.

DATE PREPARED	
4/21/2025	
ROUTE	STATE MO
DISTRICT	SHEET NO. 4
COUNTY	
JOB NO.	
CONTRACT ID.	
PROJECT NO.	
BRIDGE NO.	

DATE	DESCRIPTION

MISSOURI HIGHWAYS AND TRANSPORTATION COMMISSION
105 WEST CAPITOL
JEFFERSON CITY, MO 65102
1-888-ASK-MODOT (1-888-275-6636)

BRIDGE APPROACH SLAB (MAJOR)

Detailed
Checked

Note: This drawing is not to scale. Follow dimensions. Sheet No. of

APP04_major_ra_n Guidance & Alternate Details

Standard Drawing Guidance (do not show on plans):

See Structural Project Manager or Liaison for preference on revising details as follows to specify staged construction.

1. Show & call out any required staged construction joints.

Staged Const. Jt.

2. Show any required construction joints and show and call out any mechanical bar splices.

Mechnical Bar Splice (Typ.)

3. When mechanical bar splices are required due to staged construction, add the following after the indicated note:

(Estimated ___ splices per slab)

Input the estimated number of required mechanical bar splices including those in the sleeper slab.

4. See Notes K1.11 and K1.12 in EPG 751.50 for wording of notes when semi-deep abutments are used.

5. If the end of a wing wall extends beyond the end of the bridge approach slab, it will be necessary to revise the length of the sleeper slab shown and to redirect the perforated drain pipe adjacent to the sleeper slab to go under the sleeper slab and then turn to daylight. This should be nonperforated drain pipe at this point.

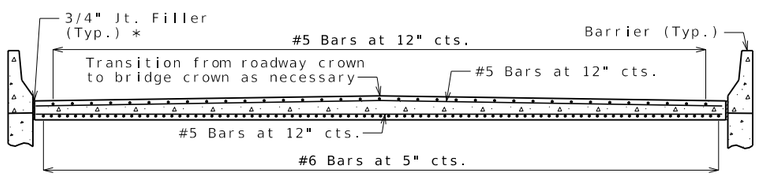

SECTION A-A

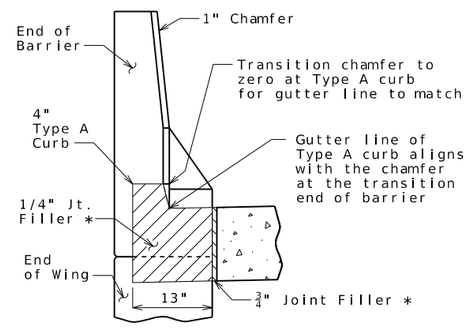

SECTION BETWEEN BARRIER AND CURB

ALTERNATE DETAILS FOR TYPE B BARRIER (SBC)

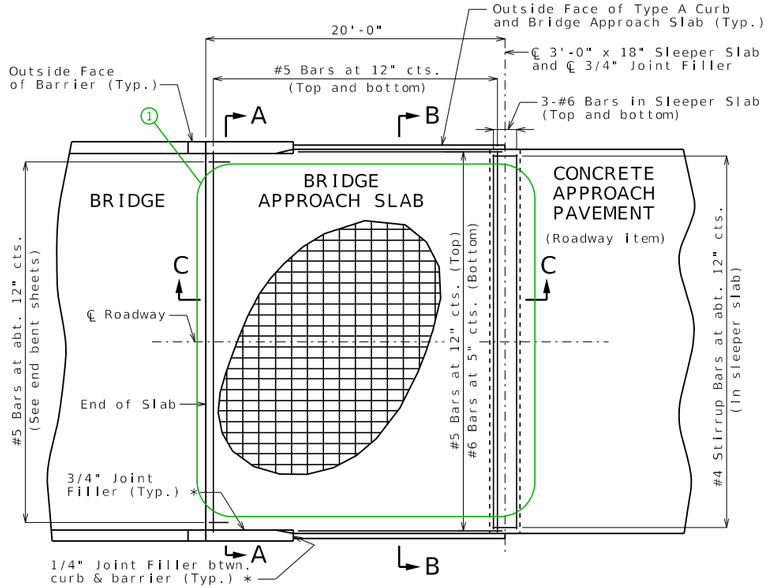

PART PLAN SHOWING REINFORCEMENT

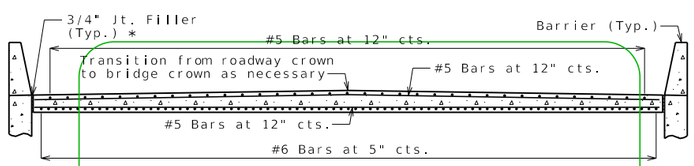

SECTION A-A

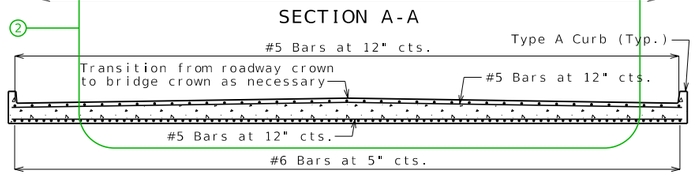

SECTION B-B

With the approval of the engineer, the contractor may crown the bottom of the approach slab to match the crown of the roadway surface.

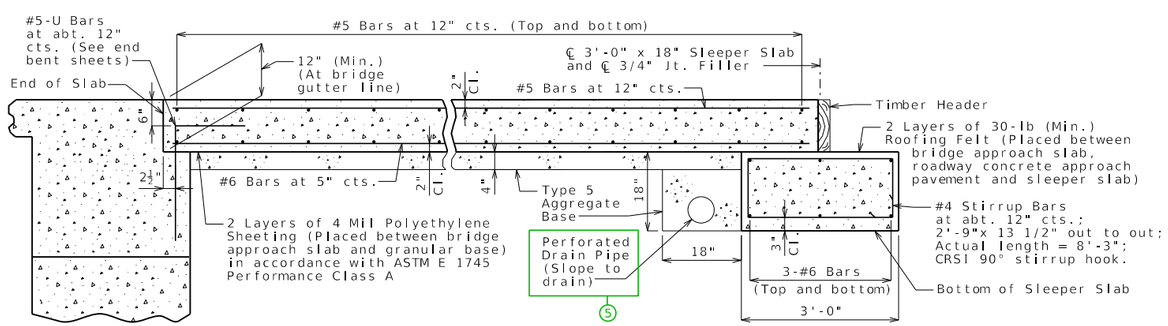

SECTION C-C

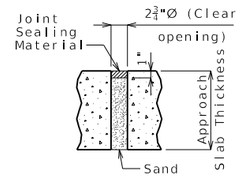

UNDERSEAL ACCESS HOLE DETAIL

(If required)

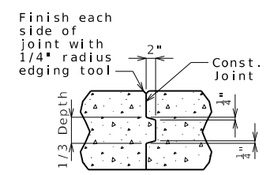

CONSTRUCTION JOINT DETAIL

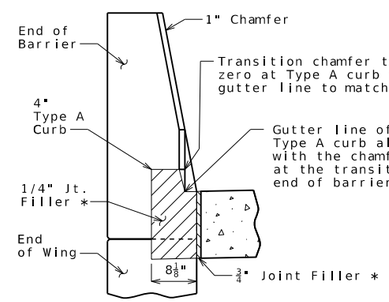

SECTION BETWEEN CURB AND BARRIER

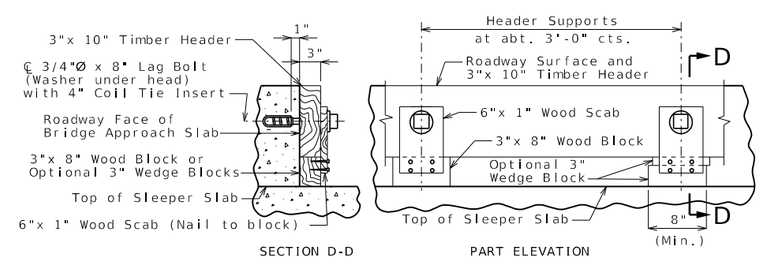

SECTION D-D PART ELEVATION

DETAILS OF TIMBER HEADER

Remove timber header when concrete pavement is placed.

General Notes:

All concrete for the bridge approach slab and sleeper slab shall be in accordance with Sec 503 (f'c = 4,000 psi).

The reinforcing steel in the bridge approach slab and the sleeper slab shall be epoxy coated Grade 60 with fy = 60,000 psi.

Drain pipe may be either 6" diameter corrugated metallic-coated pipe underdrain, 4" diameter corrugated polyvinyl chloride (PVC) drain pipe, or 4" diameter corrugated polyethylene (PE) drain pipe.

Minimum clearance to reinforcing steel shall be 1 1/2", unless otherwise shown.

The reinforcing steel in the bridge approach slab and the sleeper slab shall be continuous. The transverse reinforcing steel may be made continuous by providing a minimum lap splice of 24 inches for #5 bars and 40 inches for #6 bars, or by mechanical bar splice.

Mechanical bar splices shall be in accordance with Sec 710. 3

All joint filler shall be in accordance with Sec 1057 for preformed fiber expansion joint filler except as noted.

The contractor shall pour and satisfactorily finish the bridge slab before placing the bridge approach slab.

Longitudinal construction joints in approach slab and sleeper slab shall be aligned with longitudinal construction joints in bridge slab. 4

For concrete approach pavement details, see roadway plans.

See Missouri Standard Plan 609.00 for details of Type A curb.

Payment for furnishing all materials, labor and excavation necessary to construct the approach slab, including the timber header, sleeper slab, underdrain, Type 5 aggregate base, joint filler and all other appurtenances and incidental work as shown on this sheet, complete in place, will be considered completely covered by the contract unit price for Bridge Approach Slab (Major) per square yard.

* Seal joint between vertical face of approach slab and wing with sealant in accordance with Sec 717 for silicone joint sealant for saw cut and formed joints.

DATE PREPARED	4/21/2025
ROUTE	STATE MO
DISTRICT	SHEET NO. 5
COUNTY	
JOB NO.	
CONTRACT ID.	
PROJECT NO.	
BRIDGE NO.	

DESCRIPTION

DATE

MISSOURI HIGHWAYS AND TRANSPORTATION COMMISSION
105 WEST CAPITOL
JEFFERSON CITY, MO 65102
1-888-ASK-MODOT (1-888-275-6636)

BRIDGE APPROACH SLAB (MAJOR)

Detailed
Checked

Note: This drawing is not to scale. Follow dimensions.

Sheet No. of

APP05_major_sq_i Guidance & Alternate Details

Standard Drawing Guidance (do not show on plans):

See Structural Project Manager or Liaison for preference on revising details as follows to specify staged construction.

1. Show & call out any required staged construction joints.

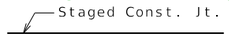

2. Show any required construction joints and show and call out any mechanical bar splices.

3. When mechanical bar splices are required due to staged construction, add the following after the indicated note:

(Estimated ___ splices per slab)

Input the estimated number of required mechanical bar splices including those in the sleeper slab.

4. See Notes K1.11 and K1.12 in EPG 751.50 for wording of notes when semi-deep abutments are used.

5. If the end of a wing wall extends beyond the end of the bridge approach slab, it will be necessary to revise the length of the sleeper slab shown and to redirect the perforated drain pipe adjacent to the sleeper slab to go under the sleeper slab and then turn to daylight. This should be nonperforated drain pipe at this point.

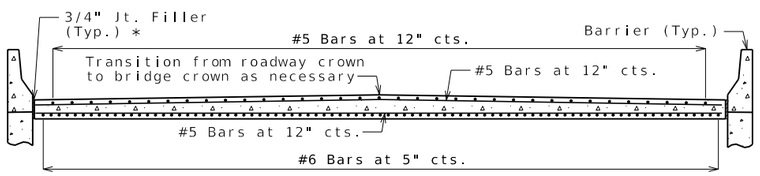

SECTION A-A

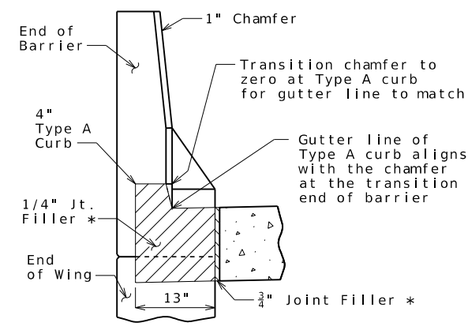

SECTION BETWEEN
BARRIER AND CURB

ALTERNATE DETAILS FOR TYPE B BARRIER (SBC)

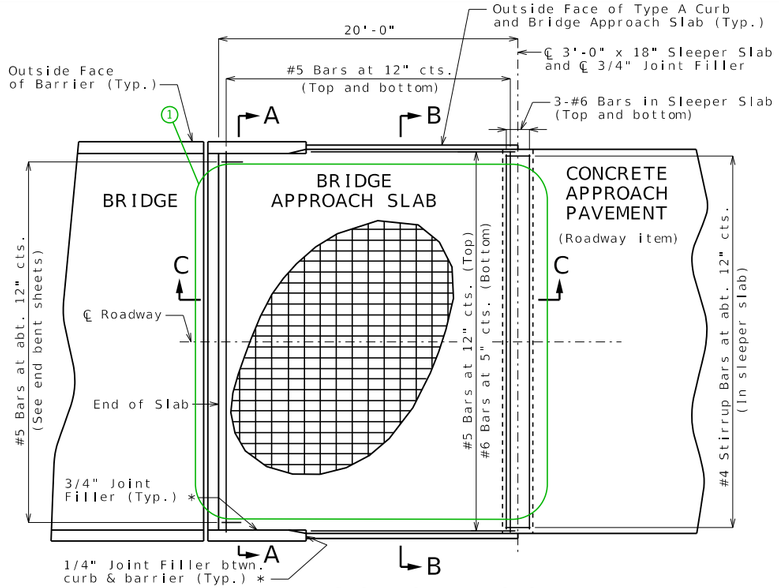

PART PLAN SHOWING REINFORCEMENT

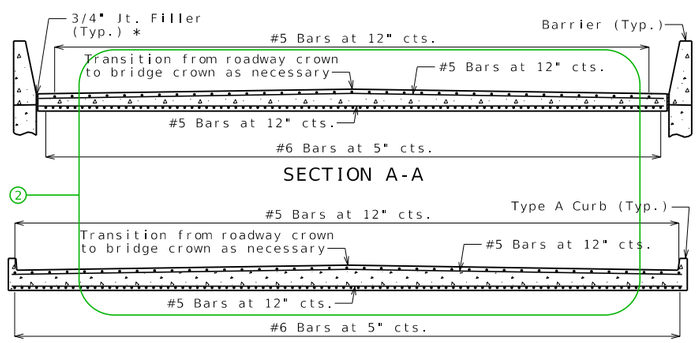

SECTION A-A

SECTION B-B

With the approval of the engineer, the contractor may crown the bottom of the approach slab to match the crown of the roadway surface.

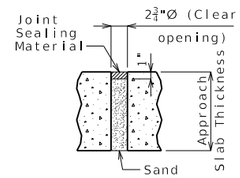

UNDERSEAL ACCESS HOLE DETAIL

(If required)

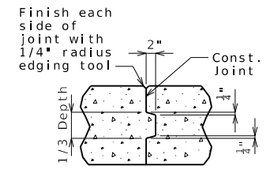

CONSTRUCTION JOINT DETAIL

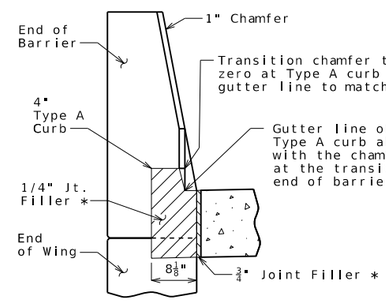

SECTION BETWEEN CURB AND BARRIER

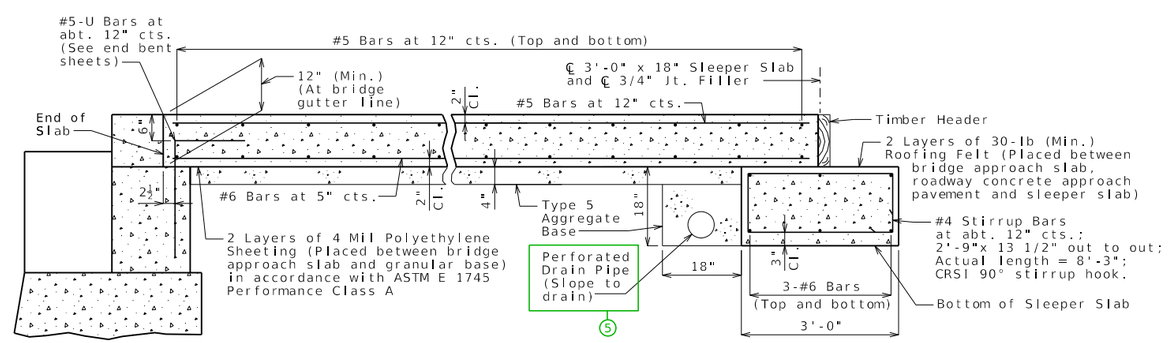

SECTION C-C

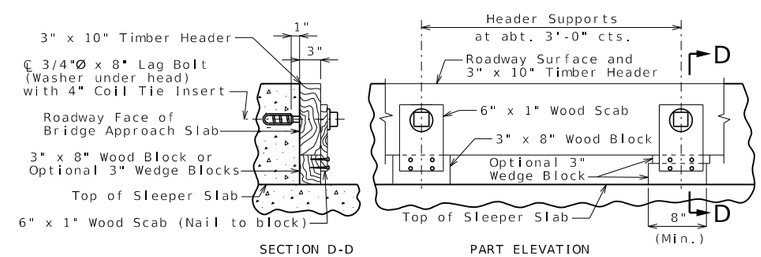

SECTION D-D

PART ELEVATION

DETAILS OF TIMBER HEADER

Remove timber header when concrete pavement is placed.

General Notes:

All concrete for the bridge approach slab and sleeper slab shall be in accordance with Sec 503 (f'c = 4,000 psi).

The reinforcing steel in the bridge approach slab and the sleeper slab shall be epoxy coated Grade 60 with fy = 60,000 psi.

Drain pipe may be either 6" diameter corrugated metallic-coated pipe underdrain, 4" diameter corrugated polyvinyl chloride (PVC) drain pipe, or 4" diameter corrugated polyethylene (PE) drain pipe.

Minimum clearance to reinforcing steel shall be 1 1/2", unless otherwise shown.

The reinforcing steel in the bridge approach slab and the sleeper slab shall be continuous. The transverse reinforcing steel may be made continuous by providing a minimum lap splice of 24 inches for #5 bars and 40 inches for #6 bars, or by mechanical bar splice.

Mechanical bar splices shall be in accordance with Sec 710. 3

All joint filler shall be in accordance with Sec 1057 for preformed fiber expansion joint filler except as noted.

The contractor shall pour and satisfactorily finish the bridge slab before placing the bridge approach slab.

Longitudinal construction joints in approach slab and sleeper slab shall be aligned with longitudinal construction joints in bridge slab. 4

For concrete approach pavement details, see roadway plans.

See Missouri Standard Plan 609.00 for details of Type A curb.

Payment for furnishing all materials, labor and excavation necessary to construct the approach slab, including the timber header, sleeper slab, underdrain, Type 5 aggregate base, joint filler and all other appurtenances and incidental work as shown on this sheet, complete in place, will be considered completely covered by the contract unit price for Bridge Approach Slab (Major) per square yard.

* Seal joint between vertical face of approach slab and wing with sealant in accordance with Sec 717 for silicone joint sealant for saw cut and formed joints.

DATE PREPARED	
4/21/2025	
ROUTE	STATE MO
DISTRICT	SHEET NO. 6
COUNTY	
JOB NO.	
CONTRACT ID.	
PROJECT NO.	
BRIDGE NO.	

DATE	DESCRIPTION

MISSOURI HIGHWAYS AND TRANSPORTATION COMMISSION
105 WEST CAPITOL
JEFFERSON CITY, MO 65102
1-888-ASK-MODOT (1-888-275-6636)

BRIDGE APPROACH SLAB (MAJOR)

Detailed
Checked

Note: This drawing is not to scale. Follow dimensions.

Sheet No. of

APP06_major_sq_n Guidance and Alternate Details

Standard Drawing Guidance (do not show on plans):

See Structural Project Manager or Liaison for preference on revising details as follows to specify staged construction.

1. Show & call out any required staged construction joints.

Staged Const. Jt.

2. Show any required construction joints and show and call out any mechanical bar splices.

Mechnical Bar Splice (Typ.)

3. When mechanical bar splices are required due to staged construction, add the following after the indicated note:

(Estimated ___ splices per slab)

Input the estimated number of required mechanical bar splices including those in the sleeper slab.

4. See Notes K1.11 and K1.12 in EPG 751.50 for wording of notes when semi-deep abutments are used.

5. If the end of a wing wall extends beyond the end of the bridge approach slab, it will be necessary to revise the length of the sleeper slab shown and to redirect the perforated drain pipe adjacent to the sleeper slab to go under the sleeper slab and then turn to daylight. This should be nonperforated drain pipe at this point.

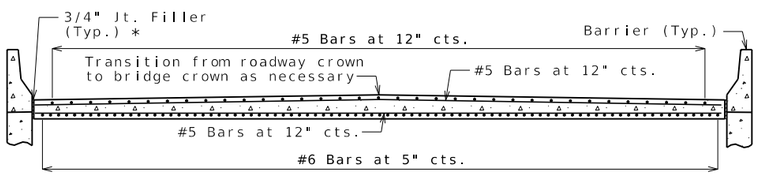

SECTION A-A

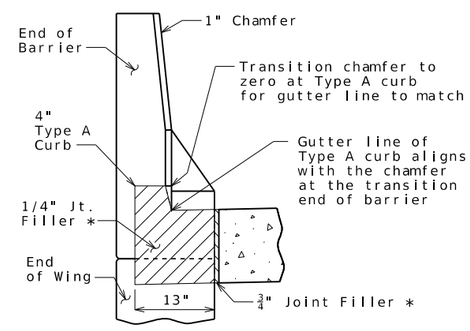

SECTION BETWEEN BARRIER AND CURB

ALTERNATE DETAILS FOR TYPE B BARRIER (SBC)

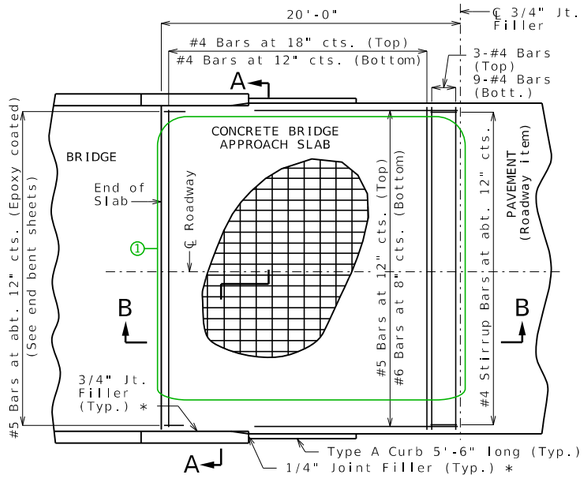

PART PLAN OF SQUARED STRUCTURE
(Skewed structure similar)

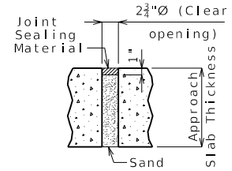

UNDERSEAL ACCESS HOLE DETAIL
(If required)

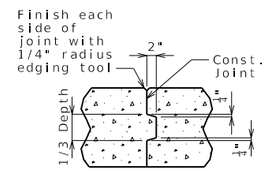

CONSTRUCTION JOINT DETAIL

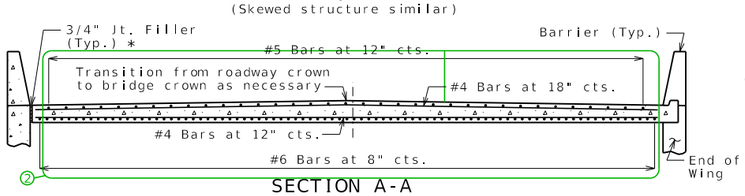

SECTION A-A
With the approval of the engineer, the contractor may crown the bottom of the approach slab to match the crown of the roadway surface.

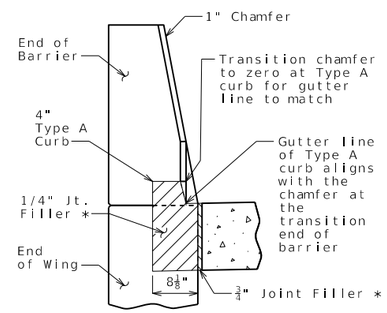

SECTION BETWEEN CURB AND BARRIER

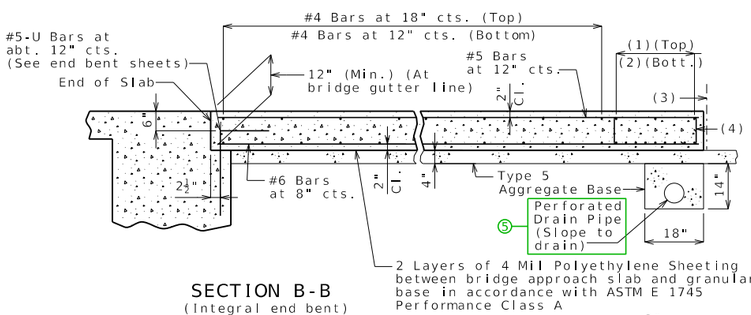

(1) 3-#4 Bars
(2) 9-#4 Bars
(3) ℄ 3/4" Jt. Filler
(4) #4 Stirrup Bars at abt. 12" cts.; 2'-0"x 8" (Min.) out to out; Actual length = 5'-10" (Min.); 90° stirrup hook at bottom; Stirrup height (8") and actual length vary due to crown.

SECTION B-B
(Integral end bent)

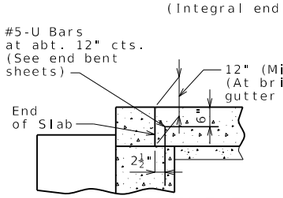

PART SECTION B-B
(Non-integral end bent)

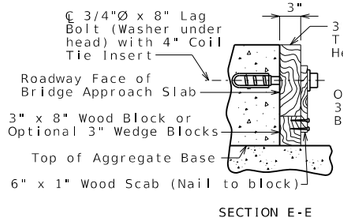

SECTION E-E

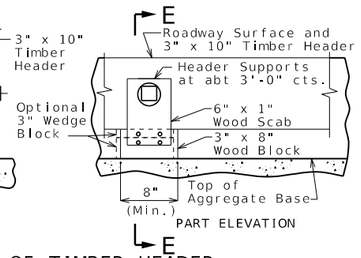

PART ELEVATION

DETAILS OF TIMBER HEADER
Remove timber header when concrete pavement is placed.

OPTIONAL CONCRETE SLAB

Notes For Concrete Slab Only:

All concrete for the bridge approach slab shall be in accordance with Sec 503 (f'c = 4,000 psi).

The reinforcing steel in the bridge approach slab shall be epoxy coated Grade 60 with fy = 60,000 psi.

Longitudinal construction joints in bridge approach slab shall be aligned with longitudinal construction joints in bridge slab.

Minimum clearance to reinforcing steel shall be 1 1/2", unless otherwise shown.

The reinforcing steel in the bridge approach slab shall be continuous. The transverse reinforcing steel may be made continuous by providing a minimum lap splice of 26 inches for #4 bars, or by mechanical bar splice.

③ Mechanical bar splices shall be in accordance with Sec 710.

All joint filler shall be in accordance with Sec 1057 for preformed fiber expansion joint filler except as noted.

Payment for furnishing all materials, labor and excavation necessary to construct the concrete bridge approach slab, including the timber header, underdrain, Type 5 aggregate base, joint filler, and all other appurtenances and incidental work as shown on this sheet, complete in place, will be considered completely covered by the contract unit price for Bridge Approach Slab (Minor) per square yard.

See Missouri Standard Plan 609.00 for details of Type A curb.

Drain pipe may be either 6" diameter corrugated metallic-coated pipe underdrain, 4" diameter corrugated polyvinyl chloride (PVC) drain pipe, or 4" diameter corrugated polyethylene (PE) drain pipe.

* Seal joint between vertical face of approach slab and wing with sealant in accordance with Sec 717 for silicone joint sealant for saw cut and formed joints.

General Notes:

Contractor shall have the option to construct either slab except as noted.

④ The contractor shall pour and satisfactorily finish the bridge slab before placing the bridge approach slab.

MoDOT Construction personnel will indicate the bridge approach slab used for this structure:

☐ Concrete Bridge Approach Slab
☐ Asphalt Bridge Approach Slab

Notes For Asphalt Slab Only:

Payment for furnishing all materials, labor and excavation necessary to construct the asphalt bridge approach slab, including tack, curb, and Type 5 aggregate base within the pay limits shown, complete in place, will be considered completely covered by the contract unit price for Bridge Approach Slab (Minor) per square yard.

Application of tack is required between lifts per Sec 403.

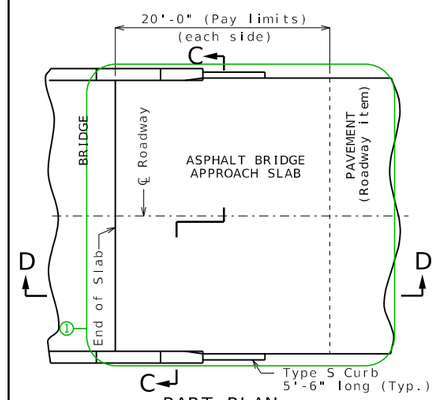

PART PLAN
(Squared structure shown, skewed structure similar)

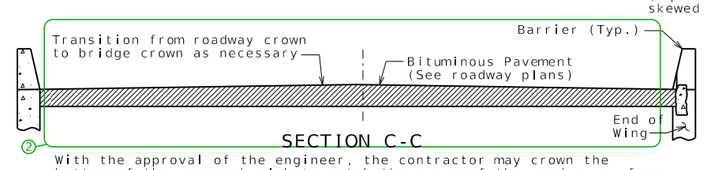

SECTION C-C
With the approval of the engineer, the contractor may crown the bottom of the approach slab to match the crown of the roadway surface.

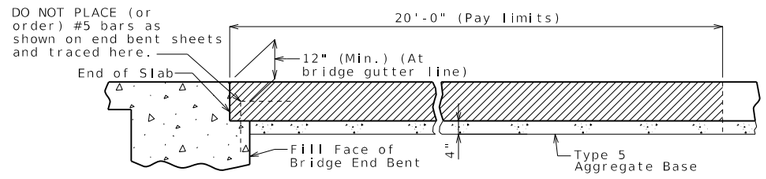

SECTION D-D

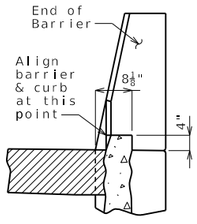

4" TYPE S CURB
See Missouri Standard Plan 609.00 for details of Type S curb.

OPTIONAL ASPHALT SLAB (NOT ALLOWED WITH CONCRETE PAVEMENT)

BRIDGE APPROACH SLAB (MINOR)

Integral end bents shown, non-integral end bent similar.

Detailed
Checked

Note: This drawing is not to scale. Follow dimensions.

Sheet No. of

DATE PREPARED	4/21/2025
ROUTE	STATE MO
DISTRICT	SHEET NO. 7
COUNTY	
JOB NO.	
CONTRACT ID.	
PROJECT NO.	
BRIDGE NO.	

DESCRIPTION | DATE

MISSOURI HIGHWAYS AND TRANSPORTATION COMMISSION
105 WEST CAPITOL
JEFFERSON CITY, MO 65102
1-888-ASK-MODOT (1-888-275-6636)

APP07_minor Guidance and Alternate Details

Standard Drawing Guidance
(do not show on plans):

Asphalt approach slab should not be used for rehabilitation projects unless a vertical drain system is installed or is in place at end bent fill face.

Roadway drainage should be addressed by the core team & the consensus decision noted on the Bridge Memorandum. For roadway drainage options for Bridge Approach Slab (Minor), see EPG 503 Bridge Approach Slab.

See Project Manager or Liaison for preference on revising details as follows to specify staged construction.

1. Show & call out any required staged construction joints.

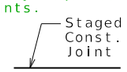

2. Show any required construction joints and show and call out any mechanical bar splices.

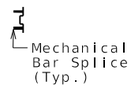

3. When mechanical bar splices are required due to staged construction, add the following after note:

(Estimated ___ splices per slab)

Input estimated number of required mechanical bar splices.

4. See Notes K1.11 & K1.12 in EPG 751.50 for wording of notes when semi-deep abutments are used.

5. If the end of a wing wall extends beyond the end of the bridge approach slab, it will be necessary to redirect the perforated drain pipe at the end of the bridge approach slab to turn to daylight. This should be nonperforated drain pipe at this point.

If either slab option is not required, either delete or cross out the option not used and delete or modify the first general note.

All wing lengths should have the curbs extended beyond their ends as shown to assist with directing bridge end drainage away from bridge ends. The standard drawing will work for most bridges with average wing lengths. For long wings, adjustments to the length of curbs may be necessary when the length of wings would prevent extending a full 5'-6" of curb length from the end of the wing to the end of the bridge approach slab. It may be necessary to extend the curb beyond the end of the bridge approach slab integral with concrete pavement or adjacent to asphalt pavement. Work any adjustments to the curb lengths with the details as shown on Standard Plan 609.40 & modify those details as necessary by either a note or detail.

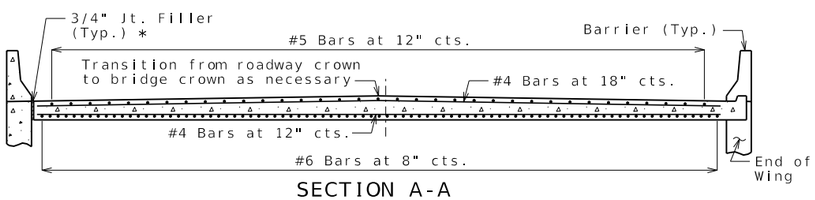

SECTION A-A

CONCRETE OPTION

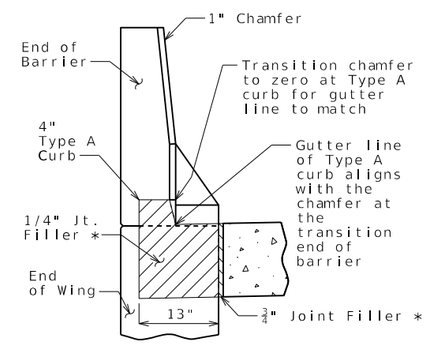

SECTION BETWEEN
BARRIER AND CURB

CONCRETE OPTION

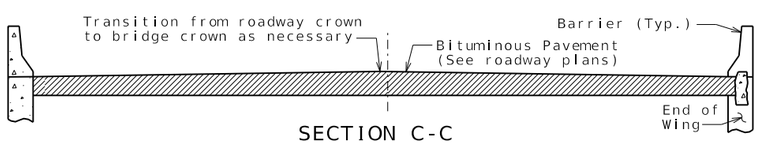

SECTION C-C

ASPHALT OPTION

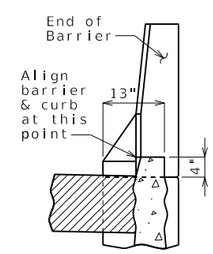

4" TYPE S CURB

ASPHALT OPTION

ALTERNATE DETAILS FOR TYPE B BARRIER (SBC)

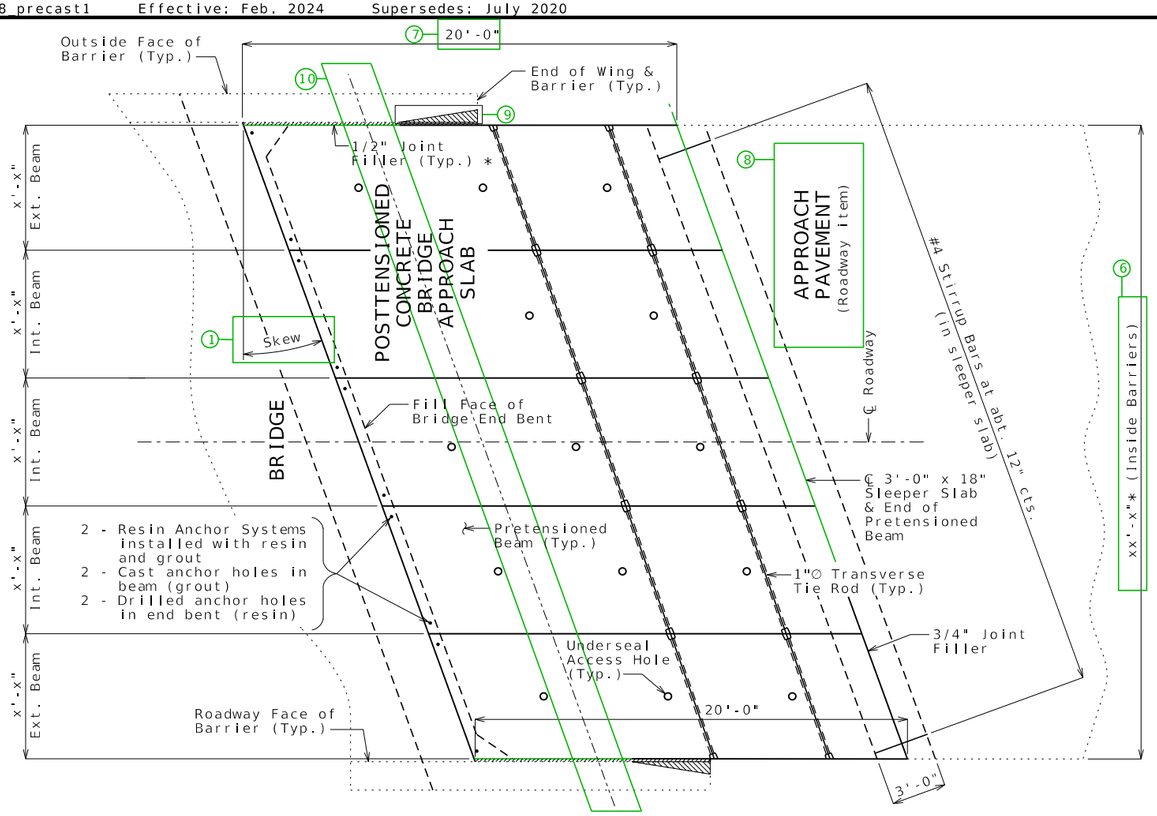

PART PLAN OF POSTTENSIONED BRIDGE APPROACH SLAB

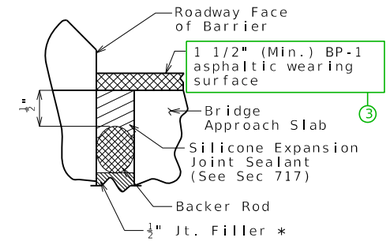

SECTION THRU JOINT BETWEEN WING AND APPROACH SLAB

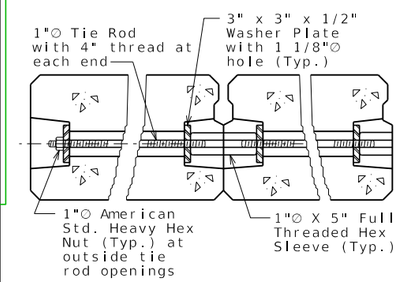

PART SECTION SHOWING 1"∅ TRANSVERSE TIE ROD

Fill outside tie rod opening with non-shrink grout after all tie rods are tightened to final tension.

General Notes (Posttensioned Slab):

Contractor shall verify all dimensions in field before finalizing the shop drawings.

Concrete for the sleeper slab shall be in accordance with Sec 503 (f'c = 4,000 psi).

Reinforcing steel in the sleeper slab shall be epoxy coated Grade 60 with fy = 60,000 psi.

Tie rod plates shall be ASTM A709 Grade 36.

Sleeves, nuts and 1 inch diameter tie rods shall be A307.

All tie rods, plates, sleeves, and nuts shall be galvanized in accordance with AASHTO M 232 (ASTM A153), Class C.

Minimum clearance to reinforcing steel shall be 1 1/2 inch, unless otherwise shown.

Hooks and bends shall be in accordance with the CRSI Manual of Standard Practice for Detailing Reinforced Concrete Structures, Stirrup and Tie Dimensions.

All joint filler shall be in accordance with Sec 1057 for preformed fiber expansion joint filler, except as noted.

Drain pipe may be either 6 inch diameter corrugated metallic-coated pipe underdrain, 4 inch diameter corrugated polyvinyl chloride (PVC) drain pipe, or 4 inch diameter corrugated polyethylene (PE) drain pipe.

Resin Anchor System: An epoxy coated #6 Grade 60 reinforcing bar 17 inches long shall be substituted for the 3/4-inch diameter threaded rod.
When moving pretensioned beams, the roadway (top) face shall be kept face-up at all times. Beams shall be supported within 12 inches of the ends only.

Use non-shrink grout for filling the keyways.

For approach pavement details, see roadway plans. 8

Payment for furnishing all materials, labor and excavation necessary to construct the prestressed approach slab,including the sleeper slab, underdrain, asphaltic wearing surface, joint filler and all other appurtenances and incidental work as shown on this sheet, complete in place, will be considered completely covered by the contract unit price for Prestressed Bridge Approach Slab per square yard.

* Contractor may adjust dimensions based on actual field measurements with approval of the engineer.

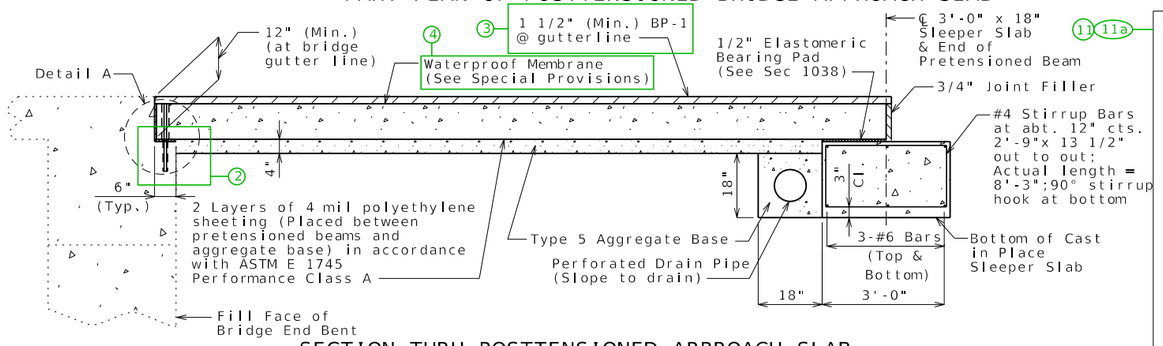

SECTION THRU POSTTENSIONED APPROACH SLAB

Tie Rods not shown for clarity.

Placement and Partial Width Posttensioning Instructions:

Top of aggregate base shall be made flush with top of bridge approach notch and top of sleeper slab, and uniformly graded at all points in between.

Place first exterior beam ***

Place adjacent interior beam ***

Place partial width tie rods through both beams and connect to hex sleeve.

Tighten all tie rods in the beam to about one-half of the specified tension before proceeding with the final tensioning. Begin with most centered tie rod in span.

Fill keyway with grout. See "Longitudinal Joint Between Pretensioned Beams". (Fill tie rod openings.)

Tie rod nuts shall be tightened to provide a final tension of one-half that specified for ASTM F3125 Grade A325 bolts in Section 712.7.3 of the Missouri Standard Specifications.

Place the next adjacent beam and partial width tie rod and connect to hex sleeve, following same sequence, until last exterior beam is placed and tightened.

Grout outside tie rod openings.

*** Apply Silicone Joint Sealant to the entire beam end at bent and trowel uniformly for complete seal just before placing the beam.

** 9" Embedment

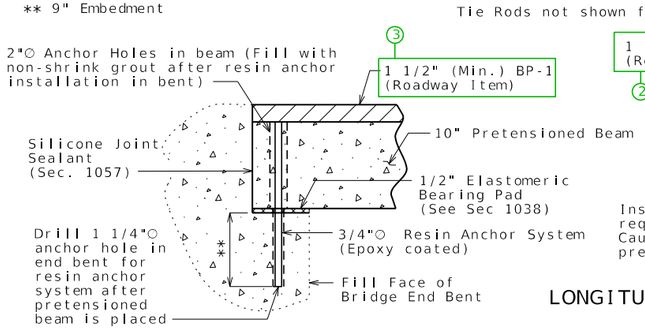

DETAIL A

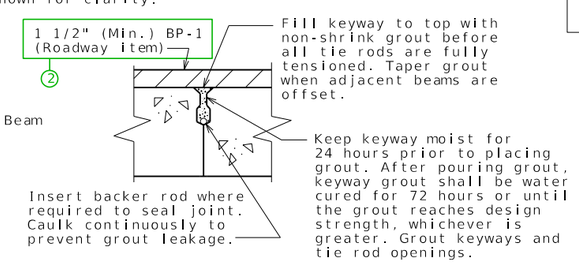

LONGITUDINAL JOINT BETWEEN PRETENSIONED BEAMS

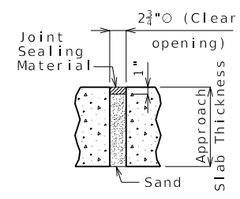

TYPICAL UNDERSEAL ACCESS HOLE DETAIL

Access Hole Notes:

12 Voids Under Completed Prestressed Concrete Approach Slabs:
Prior to acceptance of the work, all underseal access holes shall be opened by the the contractor to permit investigation by the engineer. Any voids or cavities found shall be filled by the contractor using an approved method. Care shall be taken during pumping operations to avoid raising the approach slab either individual beams or as a whole.

Filling Holes:
At the completion of the investigation or underseal pumping, the holes shall be filled with sand to within one inch of the top and the remainder filled with joint sealing material.

No direct payment will be made for investigating void conditions under the completed slab or for filling any voids found for prestressed bridge approach slabs.

PRESTRESSED BRIDGE APPROACH SLAB (20 FEET) 7

Detailed
Checked

Note: This drawing is not to scale. Follow dimensions.

Sheet No. of

DATE PREPARED	
3/7/2024	
ROUTE	STATE MO
DISTRICT	SHEET NO. 8
COUNTY	
JOB NO.	
CONTRACT ID.	
PROJECT NO.	
BRIDGE NO.	

DATE	DESCRIPTION

MISSOURI HIGHWAYS AND TRANSPORTATION COMMISSION
105 WEST CAPITOL
JEFFERSON CITY, MO 65102
1-888-ASK-MODOT (1-888-275-6636)

USE ONLY WITH APPROVAL OF ASSISTANT STATE BRIDGE ENGINEER

APP08_precast1 Guidance

Standard Drawing Guidance (do not show on plans):

Turn off Bridge-Guidance level to hide all guidance.

Prestressed bridge approach slab is to be used for approach slab replacement only.

Roadway drainage should be addressed by the core team and the consensus noted on the Bridge Memorandum and the Standard Drawing. For roadway drainage options for Prestressed Bridge Approach Slab, see EPG 503 Bridge Approach Slab.

1. Replace "Skew" with actual skew angle.
2. Top of approach notch must be flat or uniformly sloped (no crown) and sleeper slab must be parallel in elevation to top of approach notch.
3. Identify asphalt overlay and thickness. Coordinate with district if better to make a roadway item and then note accordingly and revise pay item note.
4. Waterproof membrane is required when slab is overlaid with asphalt. Omit "Special Provisions" as needed.
5. Timber Header will not normally be needed, since prestressed beams will be used for replacements only. Use only if requested by District RE to protect ends of beams during construction.
6. Request field measurements between wings at end of slab and end of wings before dimensioning width of approach slab and determining beam widths to be used.
7. The 20'-0" slab dimension can be changed to 25'-0", the title can then be changed from (20 FEET) to (25 FEET).
8. Modify or remove based on actual conditions of the job.
9. Fill with asphalt or seal.
10. Number of tie rods: Ideally, install 3 tie rods at midpoint and quater points; one will have to go through wing wall; drill hole in wing, install, grout and seal. Realistically, install 2 tie rods as shown. (Only 2 tie rods were used successfully with favorable results in the correlated research.)
11. For "Placement and Full Width Posttensioning Instructions:", see Development Section. Partial width posttensioning is preferred.

11a. Tie rods shall be placed along skew since shifting the beams longitudinally relative to each other during the tightening operation is prevented due to the anchorage of the beams to the end bent and the development of friction at the beam/aggregate interface.

12. Unlike conventional bridge approach slabs, prestressed concrete bridge approach slabs still require formed access holes for required investigation as specified prior to 2018 Standard Specifications.

5

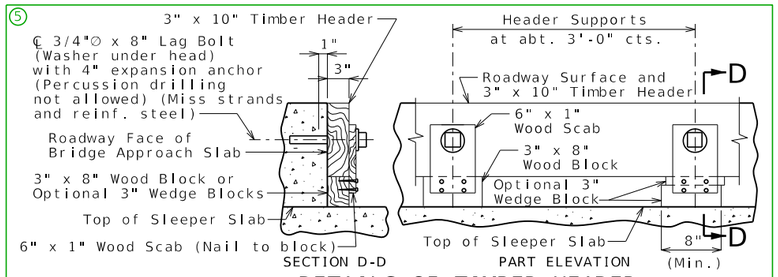

DETAILS OF TIMBER HEADER

Remove timber header when approach pavement is placed.

USE ONLY WITH APPROVAL OF ASSISTANT STATE BRIDGE ENGINEER

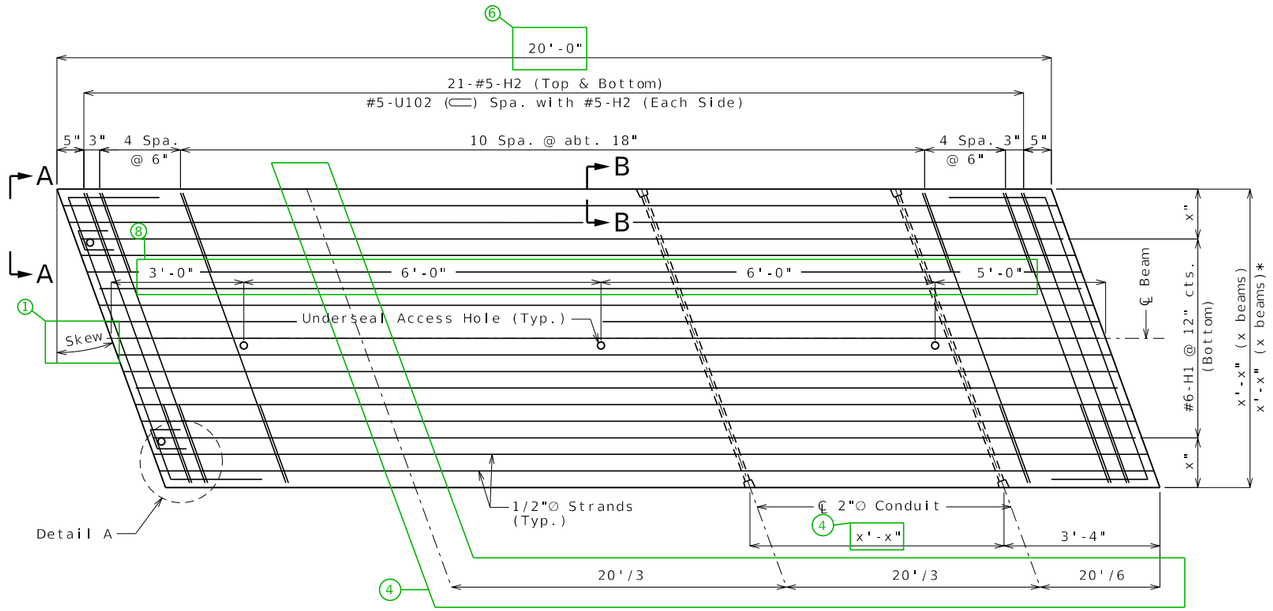

PLAN OF PRETENSIONED BEAM SHOWING REINFORCEMENT

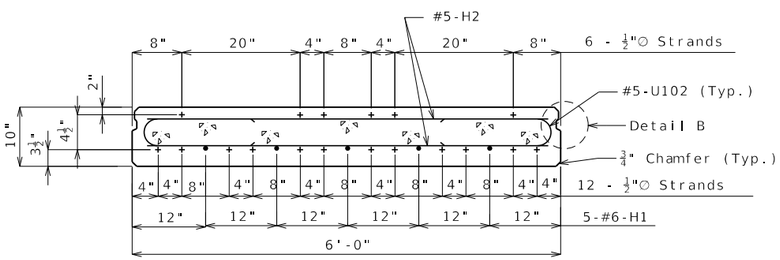

SECTION THRU PRETENSIONED BEAM - 6 FEET 3 3a

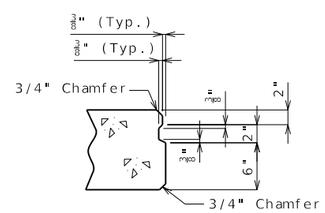

DETAIL B

(Both sides of interior beams and inside of exterior beams)

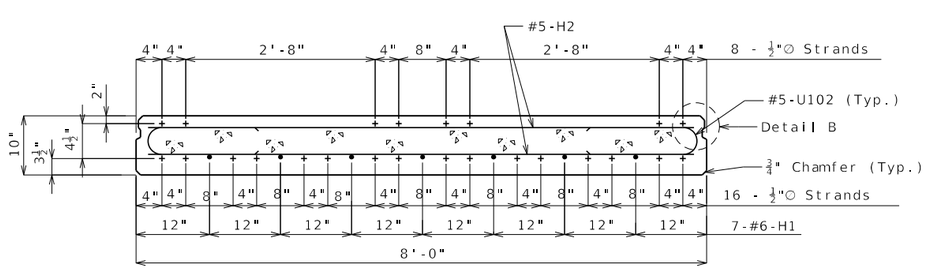

SECTION THRU PRETENSIONED BEAM - 8 FEET 3 3a

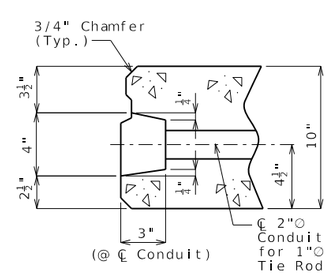

SECTION B-B

Place 2"∅ conduit on top of bottom strands.

Bill of Reinforcing Steel - Each Beam

No.	Size & Mark	Actual Length	Shape
x'-x" Beam			
x	#6-H1	6 19'-8"	20
42	#5-H2	x'-x"	20
4	#5-U100	x'-x"	21
4	#4-U101	x'-x"	21
42	#5-U102	x'-x"	7
x'-x" Beam			
x	#6-H1	6 19'-8"	20
42	#5-H2	x'-x"	20
4	#5-U100	x'-x"	21
4	#4-U101	x'-x"	21
42	#5-U102	x'-x"	7

Bending Diagram

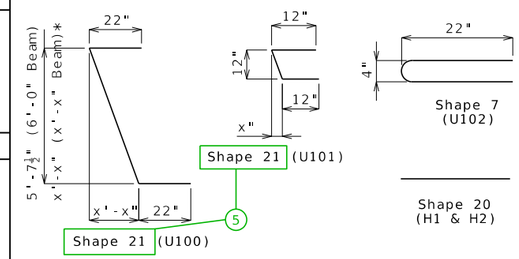

All dimensions are out to out.

Hooks and bends shall be in accordance with the CRSI Manual of Standard Practice for Detailing Reinforced Concrete Structures, Stirrup and Tie Dimensions.

Actual lengths are measured along centerline of bar to the nearest inch.

Minimum clearance to reinforcing steel shall be 1 1/2" unless otherwise shown.

All reinforcement shall be epoxy coated Grade 60 with fy = 60,000.

General Notes (Pretensioned Beams):

Concrete for pretensioned beams shall be Class A-1 with f'c = 6,000 psi, f'ci = 3,500 psi.

(+) indicates pretensioning strand.

Initial prestressing force = 31 kips/strand.

Pretensioning tendons shall be uncoated seven-wire low-relaxation strands for prestressed concrete in accordance with AASHTO M 203 Grade 270, with nominal diameter of strand = 1/2", nominal area = 0.153 sq. in. and minimum ultimate strength = 46.31 kips (270 ksi). Larger strands may be used with the same spacing and initial tension.

The method and sequence of releasing the strands shall be shown on the shop drawings.

Prestressing strands at ends of beams shall be trimmed to within 1/8" of concrete. Ends of beams shall be given 2 coats of an approved bituminous paint.

Lifting devices may be cast in beams. The device shall be shown on the shop drawings and approved by the engineer.

The top surface of all beams shall receive a smooth finish. 2

All holes in beams shall be cast. Drilling is not allowed.

Keyway surface shall be cleaned to remove form oil or other bond breaking material prior to shipment of the prestressed concrete approach slab. Cleaning shall be done by sandblasting the keyway areas between top of the beam and the bottom edge of the key.

Three 2 3/4-inch diameter (clear opening) underseal access holes shall be cast into each beam near the centerline of beam, clearing pretensioning strands and 2-inch diameter conduit by at least 1 1/2 inches. Shift reinforcement as needed to clear access holes by 1 1/2 inches minimum. Drilling is not allowed.

* Contractor may adjust dimensions based on actual field measurements with approval of the engineer.

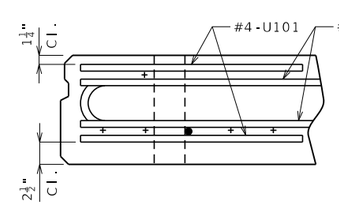

SECTION A-A

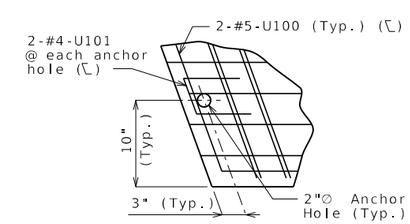

DETAIL A

PRESTRESSED BRIDGE APPROACH SLAB (20 FEET) 6

Detailed
Checked

Note: This drawing is not to scale. Follow dimensions.

Sheet No. of

DATE PREPARED	10/12/2023
ROUTE	STATE MO
DISTRICT	SHEET NO. 9
COUNTY	
JOB NO.	
CONTRACT ID.	
PROJECT NO.	
BRIDGE NO.	

DESCRIPTION

DATE

MISSOURI HIGHWAYS AND TRANSPORTATION COMMISSION
105 WEST CAPITOL
JEFFERSON CITY, MO 65102
1-888-ASK-MODOT (1-888-275-6636)

USE ONLY WITH APPROVAL OF ASSISTANT STATE BRIDGE ENGINEER

APP09_precast2 Guidance

Standard Drawing Guidance (do not show on plans):

Turn off level "Bridge-Guidance" to hide.

1. Replace "Skew" with actual skew angle.
2. Use "smooth finish" if slab is to be overlaid with membrane and asphalt. When slab is to be overlaid with concrete wearing surface, use "surface finish in accordance with Sec 1029.6.16."
3. Standard beam widths are 6' and 8', and should be used wherever possible. The 8' beam is the fabricator's preferred width. However, beam widths may be reduced up to 6" to get them to fit with 1/2" clearance to wing wall. Use same strands and reinforcing steel and adjust spacing.

3a. A beam width that is less than the standard beam widths should be shown with adjusted spacing.

4. Calculate dimension using guidelines shown here (8'-0" Max.):

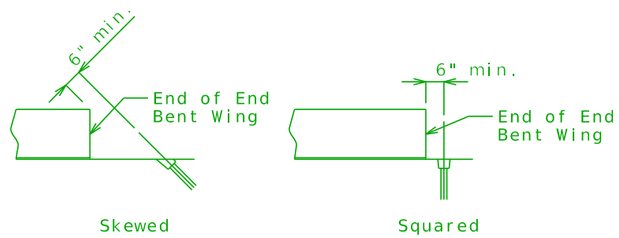

5. For squared structures, use Shape 10.
6. The 20'-0" slab dimension can be changed to 25'-0", the title can be changed from (20 FEET) to (25 FEET) and the "Bill of Reinforcing Steel" dimensions shall be changed accordingly.
7. Number of tie rods: Ideally, install 3 tie rods at midpoint and quater points; one will have to go through wing wall; drill hole in wing, install, grout and seal. Realistically, install 2 tie rods as shown. (Only 2 tie rods were used successfully with favorable results in the correlated research.)
8. For 25-foot prestressed bridge approach slab, use four access holes at spacings of 3'-0" - 6'-0" - 6'-0" - 6'-0" - 4'-0".

USE ONLY WITH
APPROVAL OF
ASSISTANT STATE
BRIDGE ENGINEER

ELEVATION OF BARRIER

(Left barrier shown, right barrier similar)

Longitudinal dimensions are horizontal.

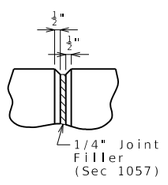

PART ELEVATION AT FORMED JOINT

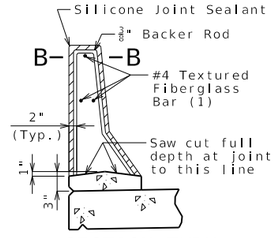

SECTION THRU SAW CUT JOINT

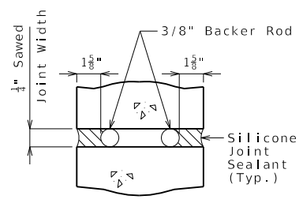

SECTION B-B

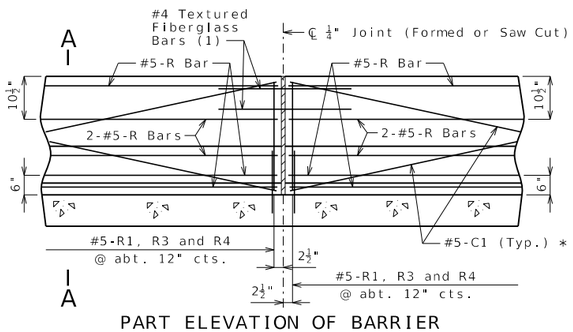

PART ELEVATION OF BARRIER

(1) Four feet long, centered on joint, slip-formed option only

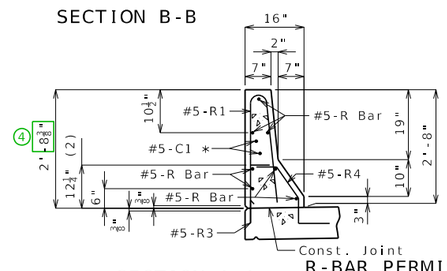

SECTION A-A

Use a minimum lap of 2'-6" for #5 horizontal barrier bars.

The cross-sectional area above the slab is 2.27 square feet.

(2) To top of bar

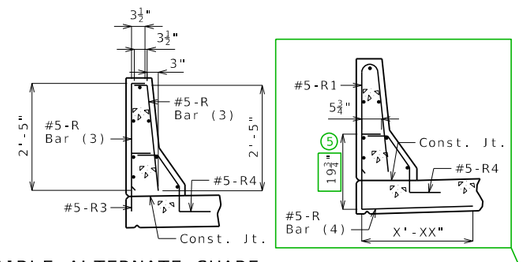

R-BAR PERMISSIBLE ALTERNATE SHAPE

(3) The R1 bar may be separated into two bars as shown, at the contractor's option, only when slip forming is not used. (All dimensions are out to out.)

(4) The R3 bar and #5 bottom transverse slab bar in cantilever (prestressed panels only) combination may be furnished as one bar as shown, at the contractor's option.

General Notes:

* Slip-formed option only.

Conventional forming or slip forming may be used. Saw cut joints may be used with conventional forming.

Top of barrier shall be built parallel to grade with barrier joints (except at end bents) normal to grade. 1

All exposed edges of barrier shall have either a 1/2-inch radius or a 3/8-inch bevel, unless otherwise noted.

Payment for all concrete and reinforcement, complete in place, will be considered completely covered by the contract unit price for Type B Barrier per linear foot.

Concrete in the barrier shall be Class B-1.

Measurement of barrier is to the nearest linear foot for each structure, measured along the outside top of slab from end of wing to end of wing. 1

Concrete traffic barrier delineators shall be placed on top of the barrier as shown on Missouri Standard Plan 617.10 and in accordance with Sec 617. Delineators on bridges with two-lane, two-way traffic shall have retroreflective sheeting on both sides. Concrete traffic barrier delineators will be considered completely covered by the contract unit price for Type B Barrier.

Joint sealant and backer rods shall be in accordance with Sec 717 for silicone joint sealant for saw cut and formed joints.

For slip-formed option, both sides of barrier shall have a vertically broomed finish and the top shall have a transversely broomed finish.

2 Plastic waterstop shall not be used with saw cut joints.

TYPE B BARRIER

Detailed
Checked

Note: This drawing is not to scale. Follow dimensions.

Sheet No. of

DATE PREPARED	4/18/2025
ROUTE	STATE MO
DISTRICT	SHEET NO. 000
COUNTY	
JOB NO.	
CONTRACT ID.	
PROJECT NO.	
BRIDGE NO.	

DESCRIPTION	DATE

MISSOURI HIGHWAYS AND TRANSPORTATION COMMISSION
105 WEST CAPITOL
JEFFERSON CITY, MO 65102
1-888-ASK-MODOT (1-888-275-6636)

BAC01_elev Guidance & Alternate Details

Standard Drawing Guidance (do not show on plans):

In the available space, draw the elevation of the left barrier showing:
- Span ranges.
- All horizontal #5-R bars in each span with all specified by bar marks.
- First & last vertical #5-R bars dimensioned with total number in barrier.
- All joints (as joint-filler joints) and centerlines with one centerline labeled as:

  ℄ ¼" Joint (Barrier only) (Typ.)

If slip forming is allowed then add the following two items:
- All #5-C bars in each span with all specified by bar marks (include asterisk)
- All fiberglass bars with bars at one location labeled as:

  #4 Textured Fiberglass Bars (Typ.) *

Adjust longitudinal dimensions note under elevation title as necessary.

If right barrier differs from left (typical with curved bridges), show both Elevation of Left Barrier and Elevation of Right Barrier. The longitudinal dimensions note can be relocated as the first note under the General Notes.

Dimensions are based on a 2.0%-sloped deck. Modify accordingly the outside dimensions in R-Bar Permissible Alternate Shape and Section A-A, and the 2.27 sq. ft. area in Section A-A for superelevated decks.

If conduit is required, indicate left or right or both barriers in a note.

(1) For barrier ending at end of slab:

Exclude "(except at end bents)"

Revise measurement to "end of slab to end of slab".

(2) Plastic waterstop detail and notes are required for all grade separations except over railroads and county roads. Remove if not required.

(3) List C bars in the Bill of Reinforcing Steel and note that bars are for the slip-formed option only.

Refer to EPG 751.12.1.2.1 for lengths of C bars.

(4) Subtract 1/8" for a 3/16"-per-foot sloped deck.

(5) Based on 8½" slab. Adjust for different slab thickness.

(6) Remove for CIP slab.

EXAMPLE (SINGLE SPAN)

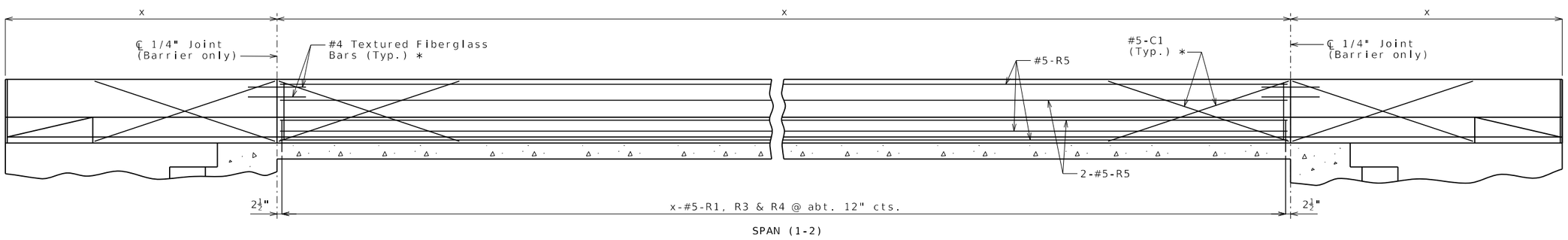

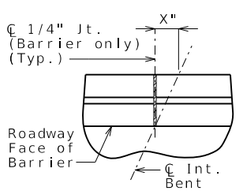

PART PLAN SHOWING JOINT LOCATION

Left Advance

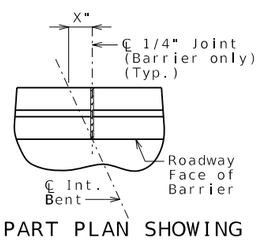

PART PLAN SHOWING JOINT LOCATION

Right Advance

(Skewed bridges only)

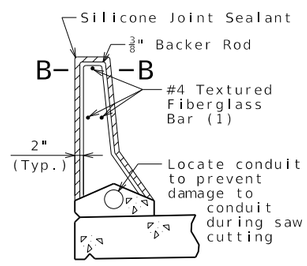

SECTION THRU SAW CUT JOINT

(Use when conduit is required)

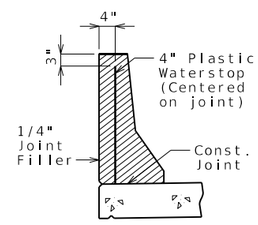

WATERSTOP DETAIL

Plastic waterstop shall be placed in all formed joints, except structures with superelevation, use on lower joints only.

Cost of plastic waterstop, complete in place, will be considered completely covered by the contract unit price for Type B Barrier.

(Use for grade separations)

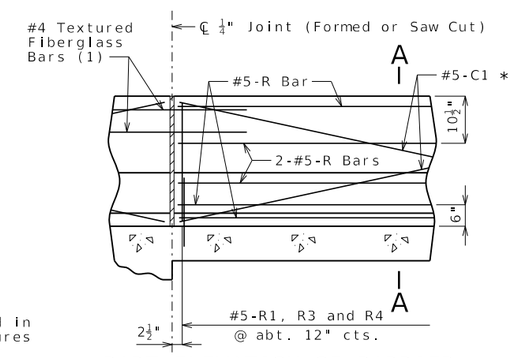

PART ELEVATION OF BARRIER

ALTERNATE DETAIL FOR SINGLE SPAN

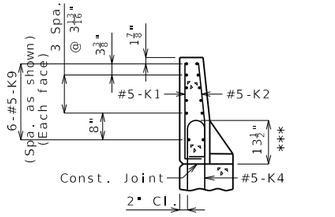

SECTION A-A

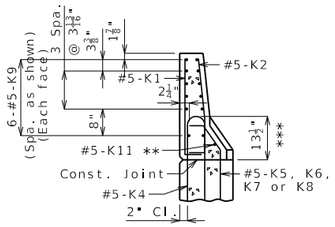

SECTION B-B

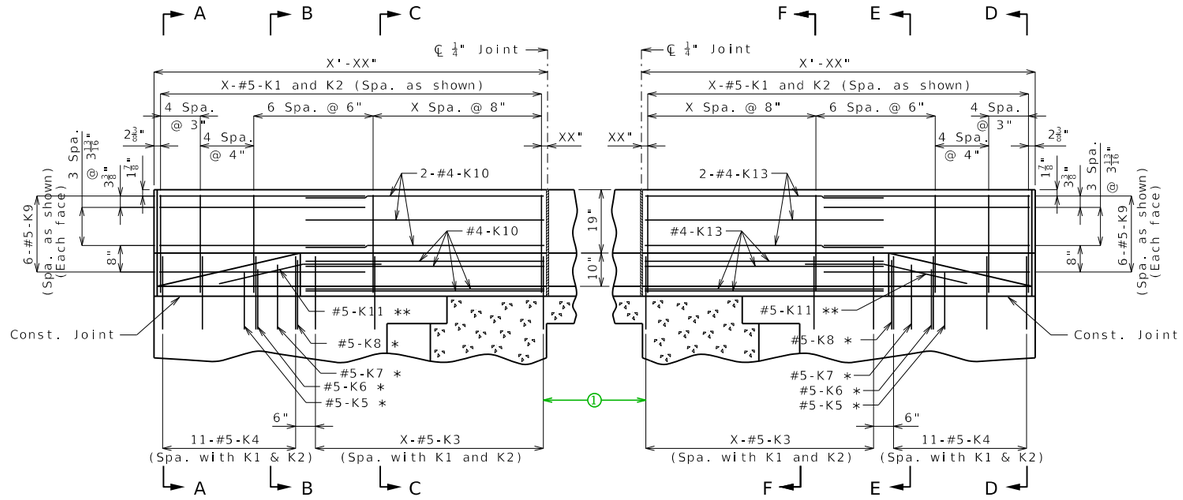

ELEVATION

ELEVATION

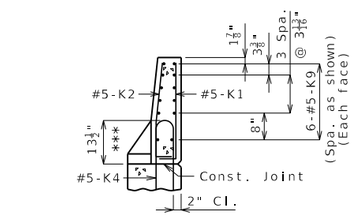

SECTION D-D

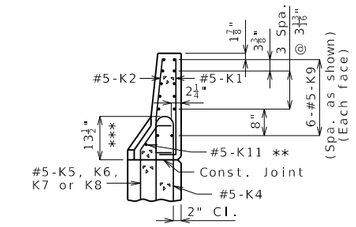

SECTION E-E

* Spaced with #5-K4 bars and embed 24" into end bent.

** Fit bar to follow transition face of barrier.

*** To top of bar

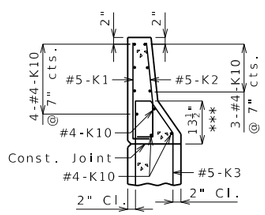

SECTION C-C

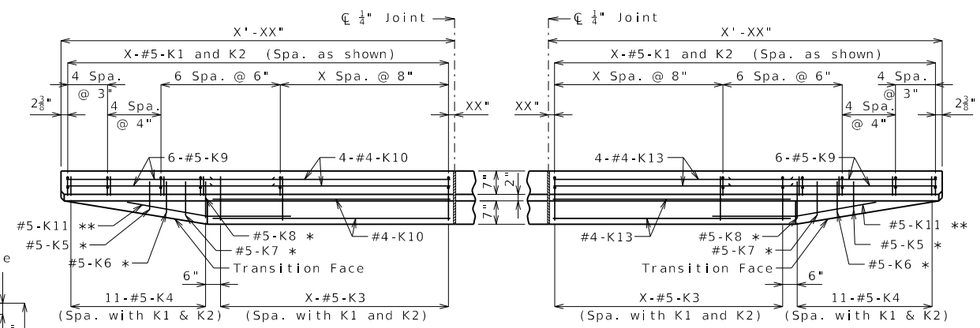

PLAN

PLAN

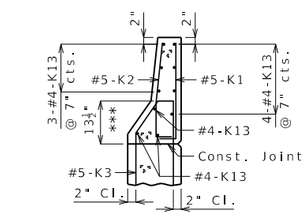

SECTION F-F

Standard Drawing Guidance:
(do not show on plans)

① For skews greater than 3 degrees, use standard drawing BAC4a, which substitutes a K12 bar for the end K3 bar.

② Dimensions are based on a 2.0% sloped deck. Subtract 1/8" for a 3/16" per foot sloped deck.

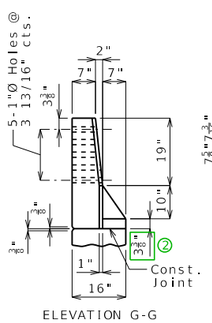

ELEVATION G-G

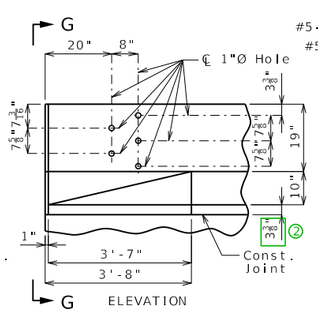

ELEVATION

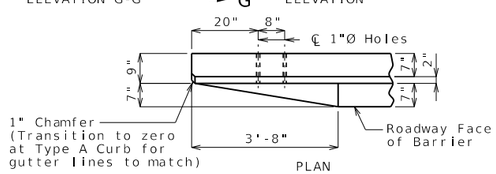

PLAN

DETAILS OF GUARD RAIL ATTACHMENT

General Notes:

Reinforcing Steel:

Concrete traffic barrier delineators shall be placed on top of the barrier as shown on Missouri Standard Plan 617.10 and in accordance with Sec 617. Delineators on bridges with two-lane, two-way traffic shall have retroreflective sheeting on both sides. Concrete traffic barrier delineators will be considered completely covered by the contract unit price for Type B Barrier.

Minimum clearance to reinforcing steel shall be 1 1/2" except as shown for bars embedded into end bent.

Use a minimum lap of 2'-7" between K9 and K10 or K13 bars.

TYPE B BARRIER AT END BENTS

(Left barrier shown, right barrier similar)

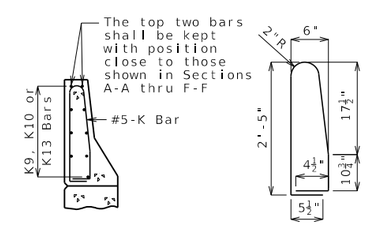

K1-K2 BAR PERMISSIBLE ALTERNATE SHAPE

(K3 or K4 thru K8 bars not shown for clarity)

The K1-K2 bar combination may be furnished as one bar as shown, at the contractor's option.

All dimensions are out to out.

DATE PREPARED	4/18/2025
ROUTE	STATE MO
DISTRICT	SHEET NO. 2
COUNTY	
JOB NO.	
CONTRACT ID.	
PROJECT NO.	
BRIDGE NO.	

DESCRIPTION

DATE

MISSOURI HIGHWAYS AND TRANSPORTATION COMMISSION
105 WEST CAPITOL
JEFFERSON CITY, MO 65102
1-888-ASK-MODOT (1-888-275-6636)

Detailed
Checked

Note: This drawing is not to scale. Follow dimensions. Sheet No. of

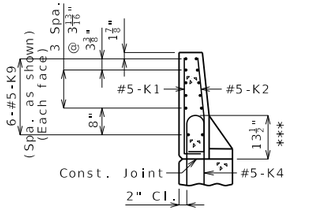

SECTION A-A

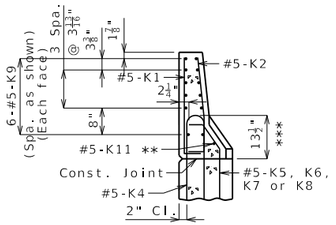

SECTION B-B

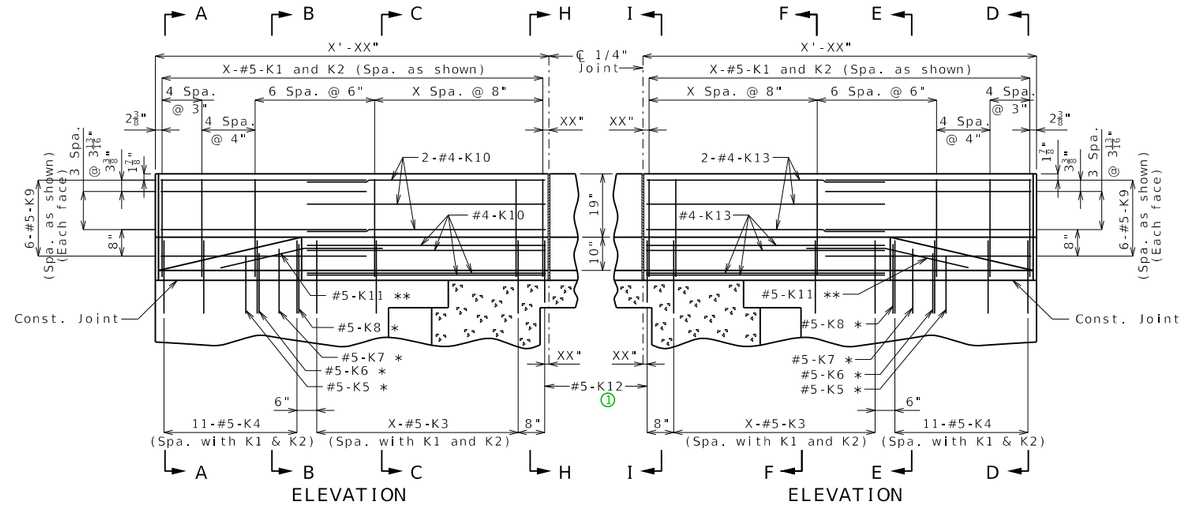

ELEVATION ELEVATION

* Spaced with #5-K4 bars and embed 24" into end bent.

** Fit bar to follow transition face of barrier.

*** To top of bar

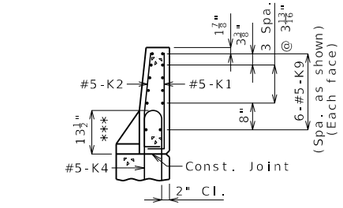

SECTION D-D

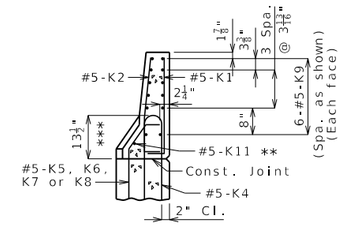

SECTION E-E

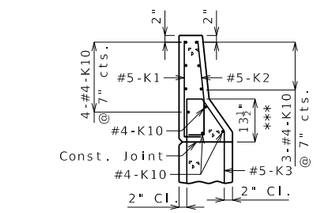

SECTION C-C

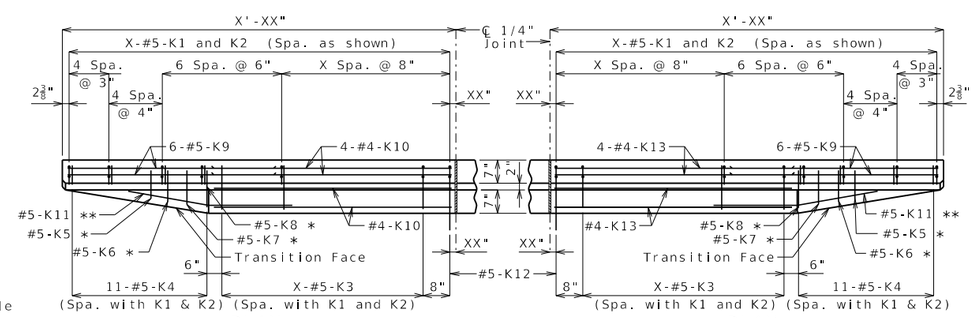

PLAN PLAN

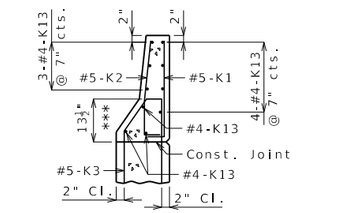

SECTION F-F

Standard Drawing Guidance:
(do not show on plans)

1. Use this drawing for skews greater than 3 degrees. For skews greater than 41 degrees, two K12 bars are required.
2. Dimensions are based on a 2.0% sloped deck. Subtract 1/8" for a 3/16" per foot sloped deck.

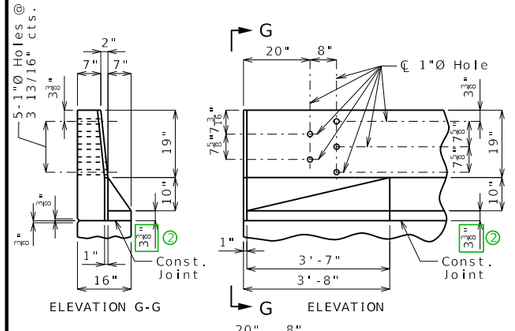

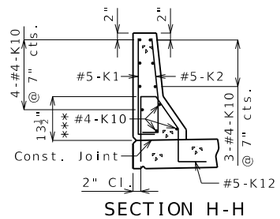

SECTION H-H

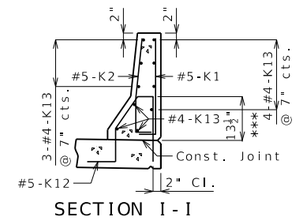

SECTION I-I

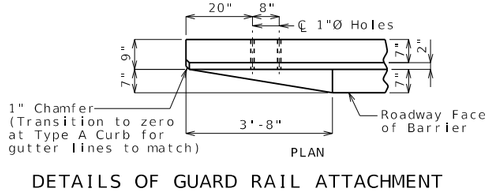

DETAILS OF GUARD RAIL ATTACHMENT

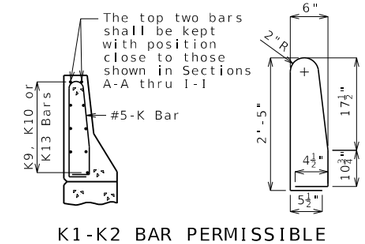

K1-K2 BAR PERMISSIBLE ALTERNATE SHAPE

(K3 or K4 thru K8 bars not shown for clarity)

The K1-K2 bar combination may be furnished as one bar as shown, at the contractor's option.

All dimensions are out to out.

General Notes:

Concrete traffic barrier delineators shall be placed on top of the barrier as shown on Missouri Standard Plan 617.10 and in accordance with Sec 617. Delineators on bridges with two-lane, two-way traffic shall have retroreflective sheeting on both sides. Concrete traffic barrier delineators will be considered completely covered by the contract unit price for Type B Barrier.

Reinforcing Steel:

Minimum clearance to reinforcing steel shall be 1 1/2" except as shown for bars embedded into end bent.

Use a minimum lap of 2'-7" between K9 and K10 or K13 bars.

TYPE B BARRIER AT END BENTS

(Left barrier shown, right barrier similar)

DATE PREPARED	4/18/2025
ROUTE	STATE MO
DISTRICT	SHEET NO. 3
COUNTY	
JOB NO.	
CONTRACT ID.	
PROJECT NO.	
BRIDGE NO.	

DATE	DESCRIPTION

MISSOURI HIGHWAYS AND TRANSPORTATION COMMISSION
105 WEST CAPITOL
JEFFERSON CITY, MO 65102
1-888-ASK-MODOT (1-888-275-6636)

Detailed
Checked

Note: This drawing is not to scale. Follow dimensions. Sheet No. of

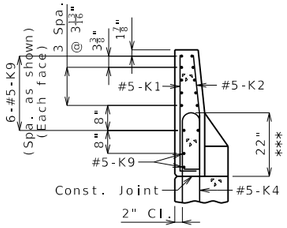

SECTION A-A

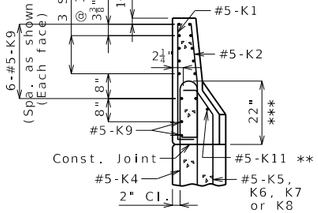

SECTION B-B

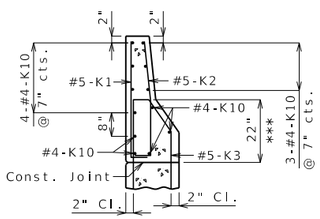

SECTION C-C

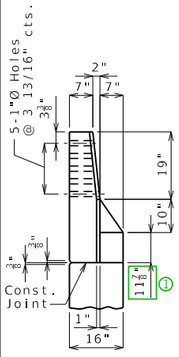

ELEVATION G-G

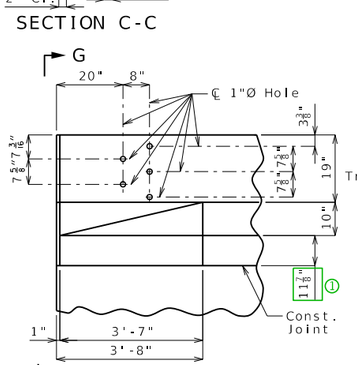

ELEVATION

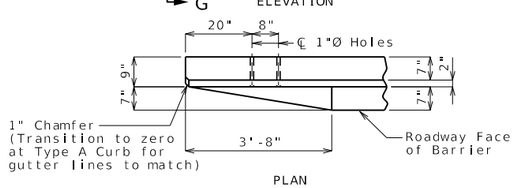

PLAN

DETAILS OF GUARD RAIL ATTACHMENT

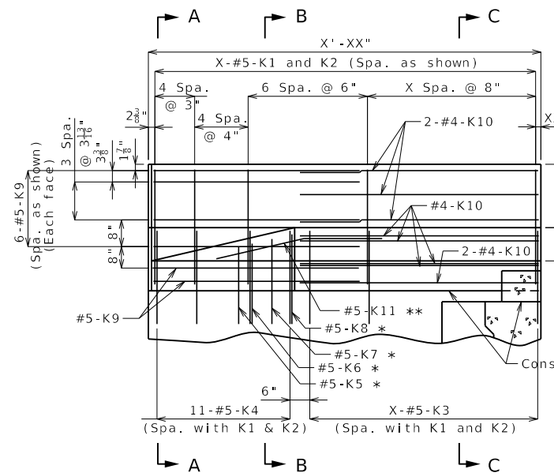

ELEVATION

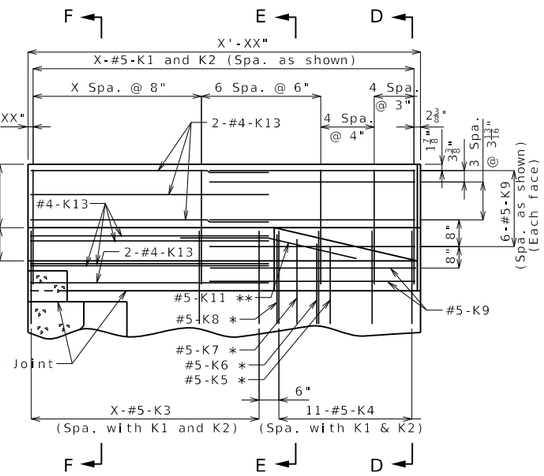

ELEVATION

* Spaced with #5-K4 bars and embed 27" into end bent.

** Fit bar to follow transition face of barrier.

*** To top of bar

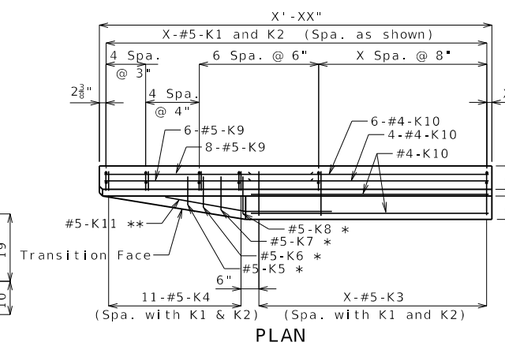

PLAN

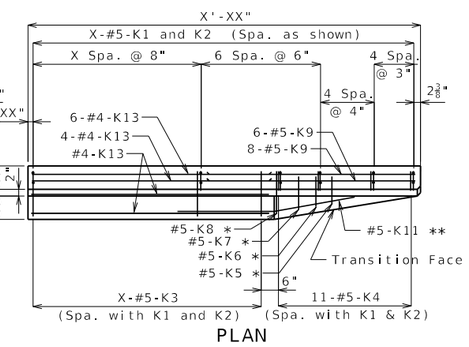

PLAN

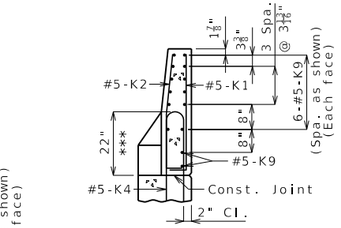

SECTION D-D

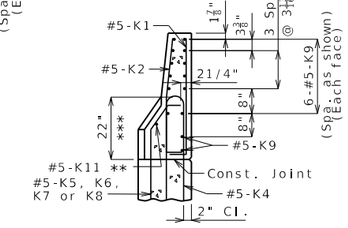

SECTION E-E

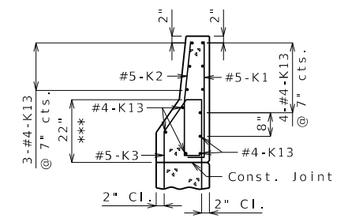

SECTION F-F

Standard Drawing Guidance:
(do not show on plans)

① Dimensions are based on a 2.0% sloped deck. Subtract 1/8" for a 3/16" per foot sloped deck.

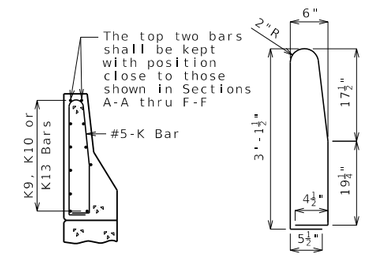

K1-K2 BAR PERMISSIBLE ALTERNATE SHAPE

(K3 or K4 thru K8 bars not shown for clarity)

The K1-K2 bar combination may be furnished as one bar as shown, at the contractor's option.

All dimensions are out to out.

General Notes:

Concrete traffic barrier delineators shall be placed on top of the barrier as shown on Missouri Standard Plan 617.10 and in accordance with Sec 617. Delineators on bridges with two-lane, two-way traffic shall have retroreflective sheeting on both sides. Concrete traffic barrier delineators will be considered completely covered by the contract unit price for Type B Barrier.

Reinforcing Steel:

Minimum clearance to reinforcing steel shall be 1 1/2" except as shown for bars embedded into end bent.

Use a minimum lap of 2'-7" between K9 and K10 or K13 bars.

TYPE B BARRIER AT END BENTS

(Left barrier shown, right barrier similar)

Detailed
Checked

Note: This drawing is not to scale. Follow dimensions. Sheet No. of

DATE PREPARED	10/12/2023
ROUTE	STATE MO
DISTRICT	SHEET NO. 4
COUNTY	
JOB NO.	
CONTRACT ID.	
PROJECT NO.	
BRIDGE NO.	

DATE	DESCRIPTION

MISSOURI HIGHWAYS AND TRANSPORTATION COMMISSION
105 WEST CAPITOL
JEFFERSON CITY, MO 65102
1-888-ASK-MODOT (1-888-275-6636)

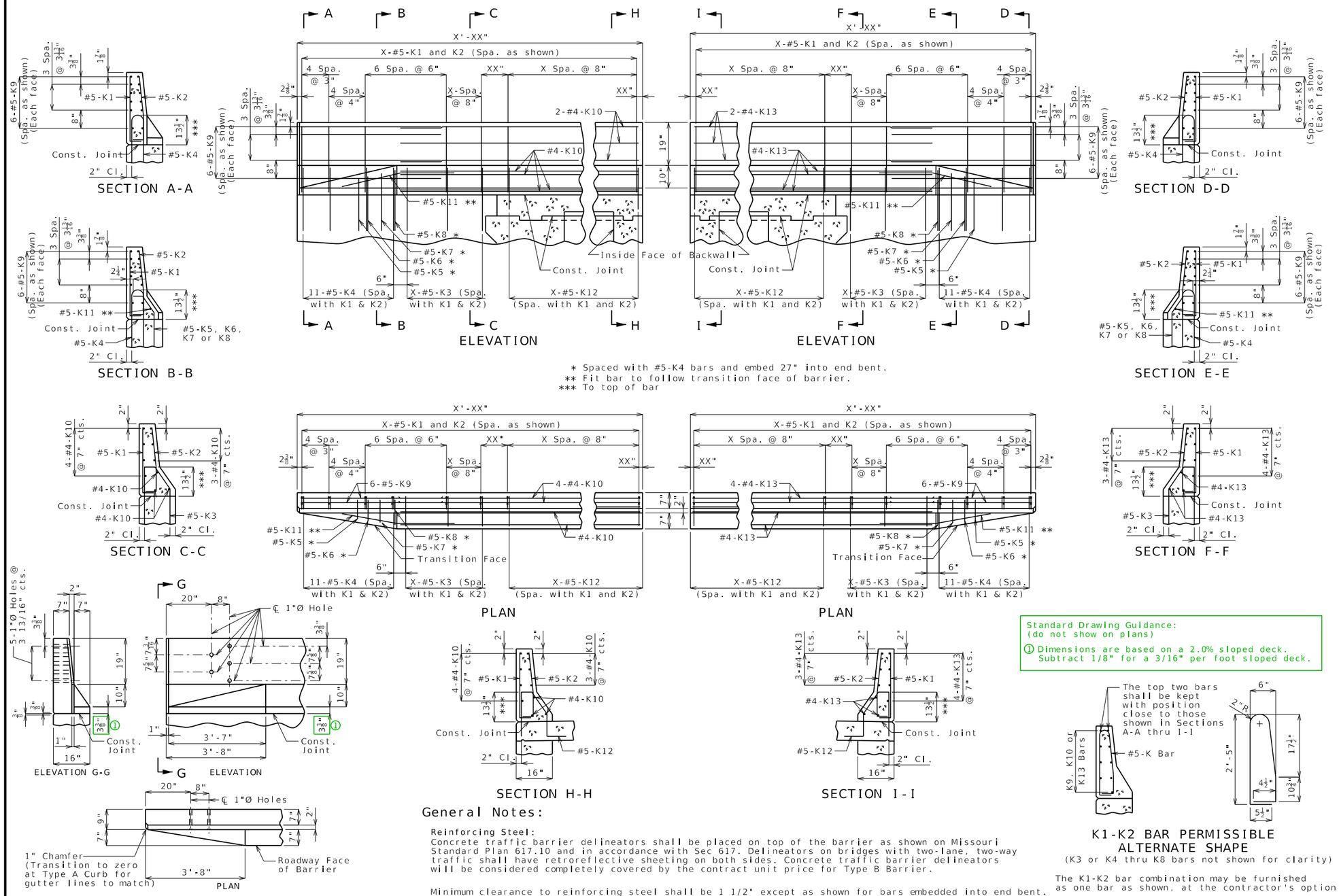

Standard Drawing Guidance:
(do not show on plans)

① Dimensions are based on a 2.0% sloped deck. Subtract 1/8" for a 3/16" per foot sloped deck.

K1-K2 BAR PERMISSIBLE ALTERNATE SHAPE
(K3 or K4 thru K8 bars not shown for clarity)

The K1-K2 bar combination may be furnished as one bar as shown, at the contractor's option.

All dimensions are out to out.

General Notes:

Reinforcing Steel:
Concrete traffic barrier delineators shall be placed on top of the barrier as shown on Missouri Standard Plan 617.10 and in accordance with Sec 617. Delineators on bridges with two-lane, two-way traffic shall have retroreflective sheeting on both sides. Concrete traffic barrier delineators will be considered completely covered by the contract unit price for Type B Barrier.

Minimum clearance to reinforcing steel shall be 1 1/2" except as shown for bars embedded into end bent.

Use a minimum lap of 2'-7" between K9 and K10 or K13 bars.

TYPE B BARRIER AT ABUTMENTS

(Left barrier shown, right barrier similar)

Detailed
Checked

Note: This drawing is not to scale. Follow dimensions. Sheet No. of

DATE PREPARED	10/12/2023
ROUTE	STATE MO
DISTRICT	SHEET NO. 5
COUNTY	
JOB NO.	
CONTRACT ID.	
PROJECT NO.	
BRIDGE NO.	

DESCRIPTION

DATE

MISSOURI HIGHWAYS AND TRANSPORTATION COMMISSION

105 WEST CAPITOL
JEFFERSON CITY, MO 65102
1-888-ASK-MODOT (1-888-275-6636)

ELEVATION OF BARRIER

(Left barrier shown, right barrier similar)

Longitudinal dimensions are horizontal.

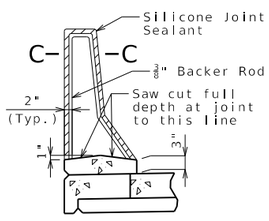

SECTION THRU SAW CUT JOINT

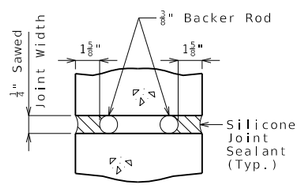

SECTION C-C

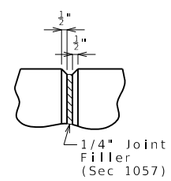

PART ELEVATION AT FORMED JOINT

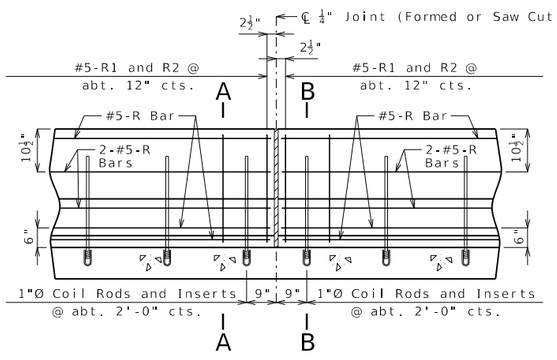

PART ELEVATION OF BARRIER

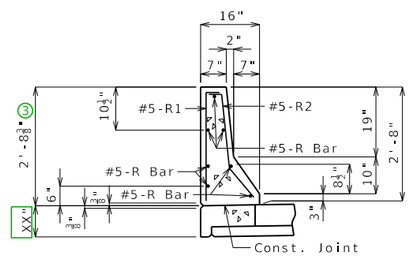

SECTION A-A

Use a minimum lap of 2'-6" for #5 horizontal barrier bars.

The cross-sectional area above the slab is 2.27 square feet.

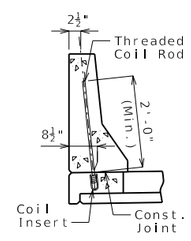

PART SECTION B-B

General Notes:

Conventional forming shall be used, and saw cut joints may be used.

Top of barrier shall be built parallel to grade with barrier curb joints (except at end bents) normal to grade. (1)

All exposed edges of barrier shall have either a 1/2-inch radius or a 3/8-inch bevel, unless otherwise noted.

Payment for all concrete and reinforcement, complete in place, will be considered completely covered by the contract unit price for Type B Barrier per liner foot.

Concrete in the barrier shall be Class B-1.

Measurement of barrier is to the nearest linear foot for each structure, measured along the outside top of slab from end of wing to end of wing. (1)

Concrete traffic barrier delineators shall be placed on top of the barrier as shown on Missouri Standard Plan 617.10 and in accordance with Sec 617. Delineators on bridges with two-lane, two-way traffic shall have retroreflective sheeting on both sides. Concrete traffic barrier delineators will be considered completely covered by the contract unit price for Type B Barrier.

Joint sealant and backer rods shall be in accordance with Sec 717 for silicone joint sealant for saw cut and formed joints.

Plastic waterstop shall not be used with saw cut joints. (2)

Coil inserts shall have a concrete ultimate pullout strength of not less than 36,000 pounds in 5,000 psi concrete and an ultimate tensile strength of not less than 36,000 pounds.

Threaded coil rods shall have an ultimate capacity of 36,000 pounds. All coil inserts and threaded coil rods shall be galvanized in accordance with AASHTO M 232 (ASTM A153), Class C.

Payment for furnishing and installing coil inserts and threaded coil rods will be considered completely covered by the contract unit price for Type B Barrier.

TYPE B BARRIER

Detailed
Checked

Note: This drawing is not to scale. Follow dimensions. Sheet No. of

DATE PREPARED	4/18/2025
ROUTE	STATE MO
DISTRICT	SHEET NO. 6
COUNTY	
JOB NO.	
CONTRACT ID.	
PROJECT NO.	
BRIDGE NO.	

DESCRIPTION	DATE

MISSOURI HIGHWAYS AND TRANSPORTATION COMMISSION
105 WEST CAPITOL
JEFFERSON CITY, MO 65102
1-888-ASK-MODOT (1-888-275-6636)

BAC07_elev_dblt Guidance & Alternate Details

Standard Drawing Guidance (do not show on plans):

In the available space, draw the elevation of the left barrier showing:
- Span ranges.
- All horizontal #5-R bars in each span with all specified by bar marks.
- First & last vertical #5-R bars dimensioned with total number in barrier.
- All joints (as joint-filler joints) and centerlines with one centerline labeled as:

℄ $\frac{1}{4}$" Joint (Barrier only) (Typ.)

Adjust longitudinal dimensions note under elevation title as necessary.

If right barrier differs from left (typical with curved bridges), show both Elevation of Left Barrier and Elevation of Right Barrier. The longitudinal dimensions note can be relocated as the first note under the General Notes.

Dimensions are based on a 2.0%-sloped deck. Modify accordingly in Section A-A and the 2.27 sq. ft. area in Section A-A for superelevated decks.

If conduit is required, indicate left or right or both barriers in a note.

① For barrier ending at end of slab:

Exclude "(except at end bents)" in first note.

Revise measurement to "end of slab to end of slab" in second note.

② Plastic waterstop detail and notes are required for all grade separations

③ Subtract $\frac{1}{8}$" for a $\frac{3}{16}$"-per-foot sloped deck.

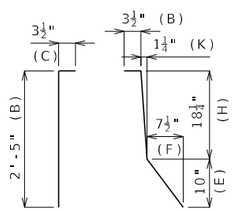

Shape 19
R1 Bar

Shape 33
R2 Bar

Reinforcing Bar Dimensions

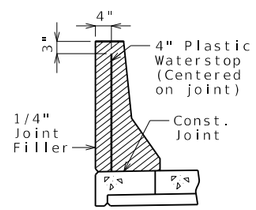

WATERSTOP DETAIL

Plastic waterstop shall be placed in all formed joints, except structures with superelevation, use on lower joints only.

Cost of plastic waterstop, complete in place, will be considered completely covered by the contract unit price for Type B Barrier.

(Use for grade separations)

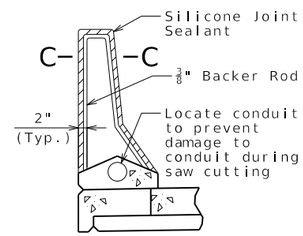

SECTION THRU SAW CUT JOINT

(Use when conduit is required)

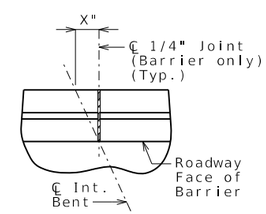

PART PLAN SHOWING JOINT LOCATION

Right Advance

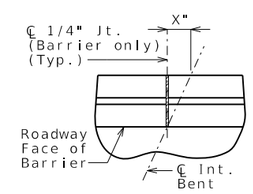

PART PLAN SHOWING JOINT LOCATION

Left Advance

(Skewed bridges only)

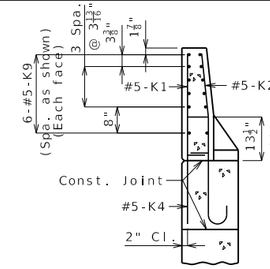

SECTION A-A

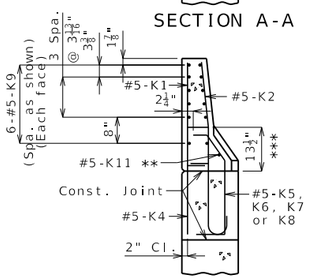

SECTION B-B

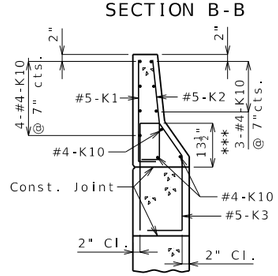

SECTION C-C

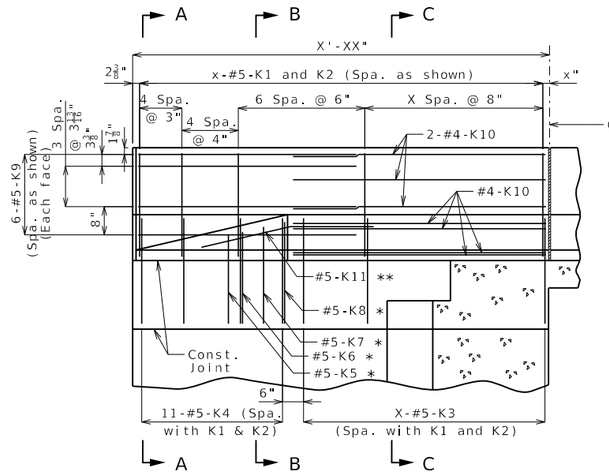

ELEVATION

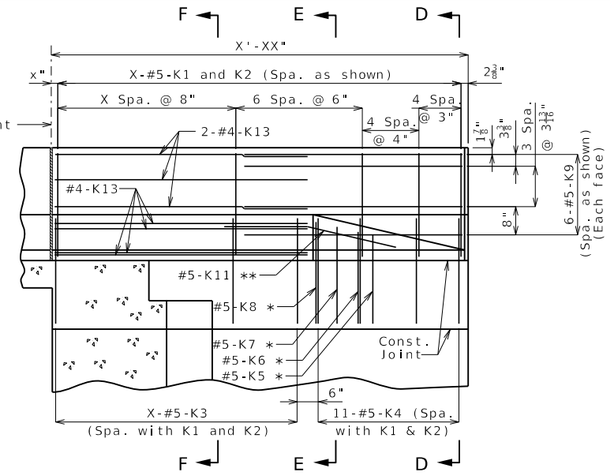

ELEVATION

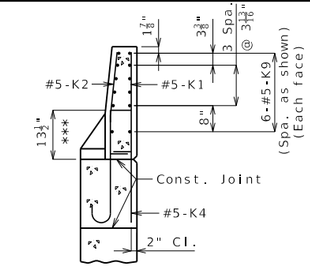

SECTION D-D

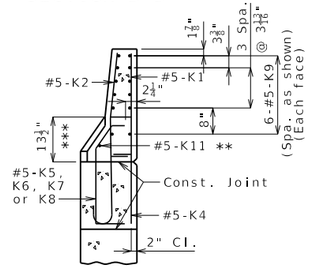

SECTION E-E

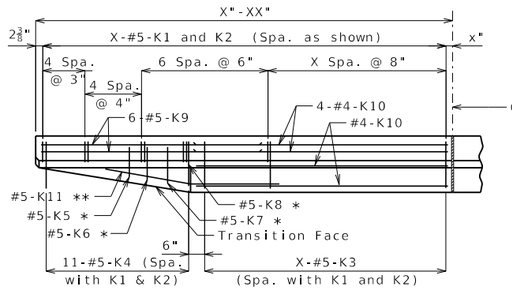

PLAN

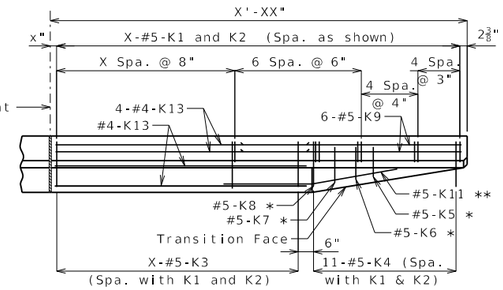

PLAN

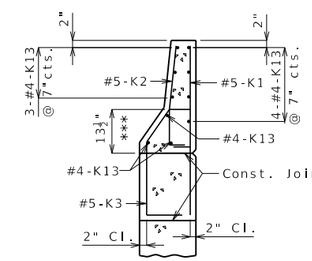

SECTION F-F

Use when distance between upper and lower construction joint in wings is less than 25 1/2".

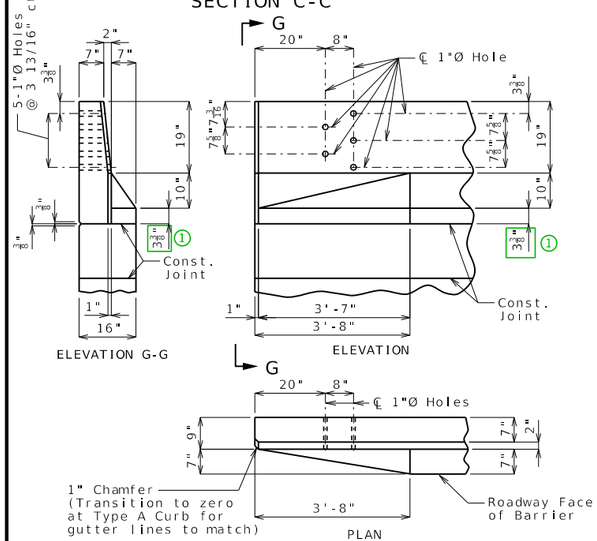

DETAILS OF GUARD RAIL ATTACHMENT

* Space with #5-K4 bars and embed into end bent same depth.

** Fit #5-K11 bar to follow transition face of barrier.

*** To top of bar

General Notes:

Concrete traffic barrier delineators shall be placed on top of the barrier as shown on Missouri Standard Plan 617.10 and in accordance with Sec 617. Delineators on bridges with two-lane, two-way traffic shall have retroreflective sheeting on both sides. Concrete traffic barrier delineators will be considered completely covered by the contract unit price for Type B Barrier.

Reinforcing Steel:

Minimum clearance to reinforcing steel shall be 1 1/2" except as shown for bars embedded into end bent.

Use a minimum lap of 2'-7" between K9 and K10 or K13 bars.

TYPE B BARRIER AT END BENTS

(Left barrier shown, right barrier similar)

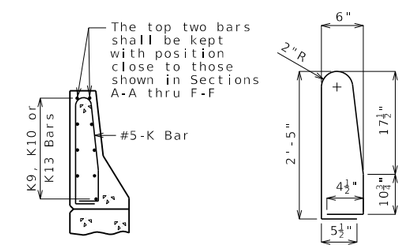

K1-K2 BAR PERMISSIBLE ALTERNATE SHAPE

(K3 or K4 thru K8 bars not shown for clarity)

The K1-K2 bar combination may be furnished as one bar as shown, at the contractor's option.

All dimensions are out to out.

DATE PREPARED	4/18/2025
ROUTE	STATE MO
DISTRICT	SHEET NO. 7
COUNTY	
JOB NO.	
CONTRACT ID.	
PROJECT NO.	
BRIDGE NO.	

DESCRIPTION

DATE

MISSOURI HIGHWAYS AND TRANSPORTATION COMMISSION

105 WEST CAPITOL
JEFFERSON CITY, MO 65102
1-888-ASK-MODOT (1-888-275-6636)

Detailed
Checked

Note: This drawing is not to scale. Follow dimensions. Sheet No. of

BAC11_end_si Guidance & Alternate Details

Standard Drawing Guidance: (do not show on plans)

For skews greater than 3 degrees, use alternate details above, which substitutes a K3 bar for the end K2 bar. For skews greater than 41 degrees, two K3 bars are required.

① Dimensions are based on a 2.0% sloped deck. Subtract 1/8" for a 3/16" per foot sloped deck.

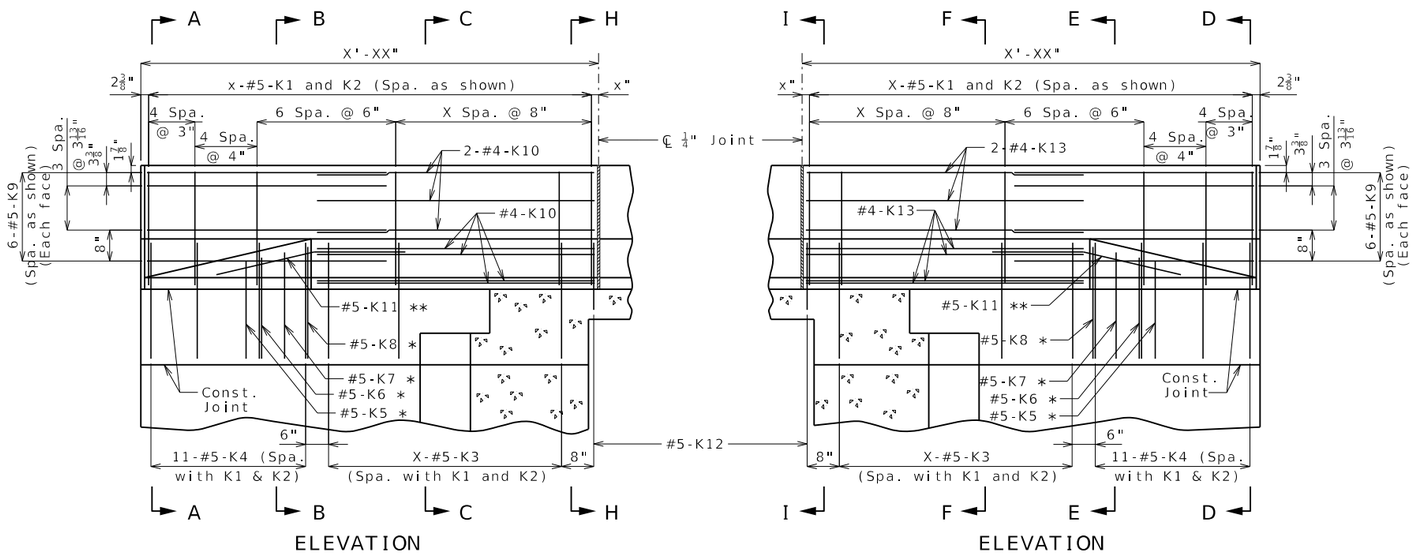

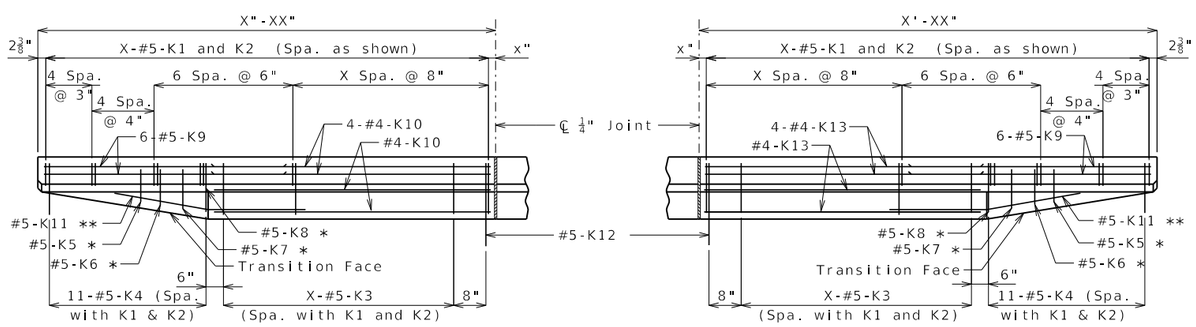

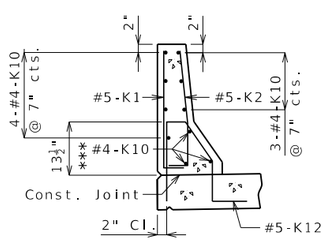

SECTION H-H

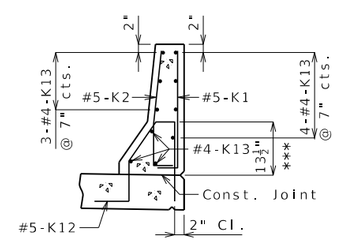

SECTION I-I

ALTERNATE DETAILS FOR SKEWED BRIDGES REQUIRING K3 BARS

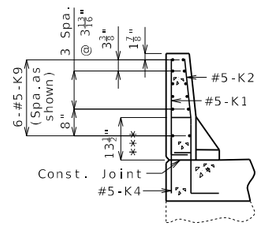

SECTION A-A

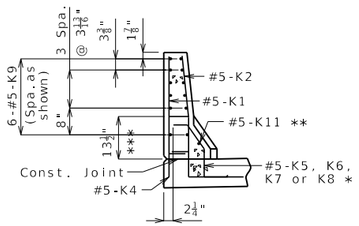

SECTION B-B

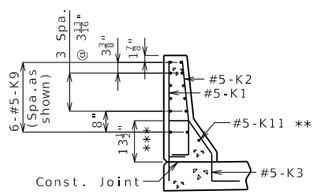

SECTION C-C

(#5-R6 Bars not shown for clarity)

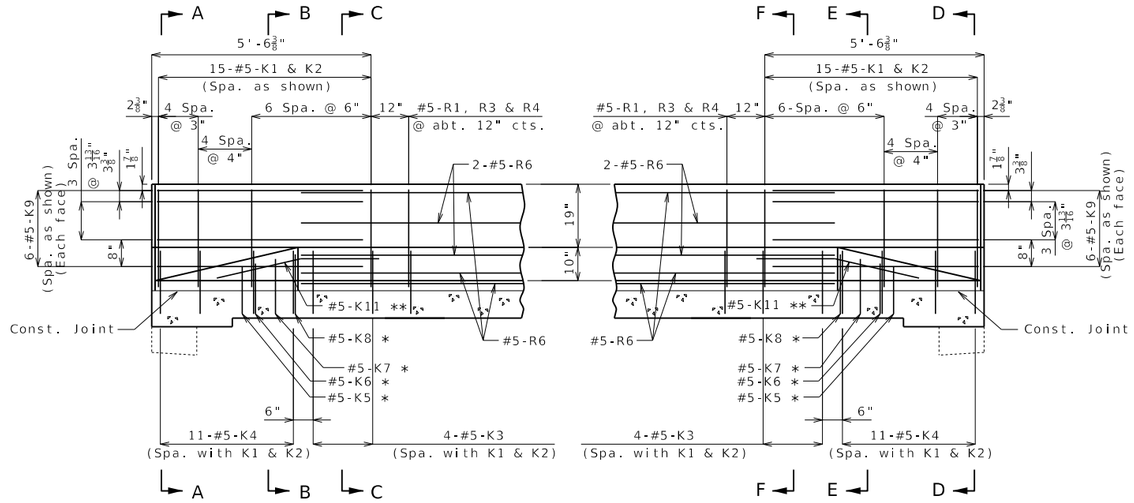

ELEVATION

ELEVATION

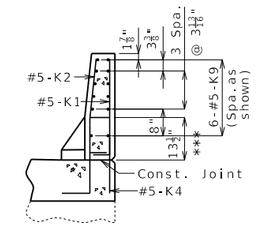

SECTION D-D

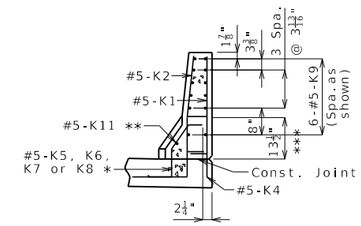

SECTION E-E

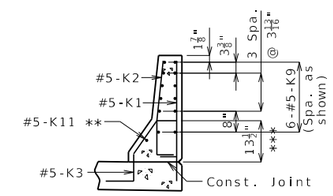

SECTION F-F

(#5-R6 Bars not shown for clarity)

* Spaced with #5-K4 bars with bottom leg at same elevation as the bottom leg of K4 bars.

** Fit bar to follow transition face of barrier.

*** To top of bar

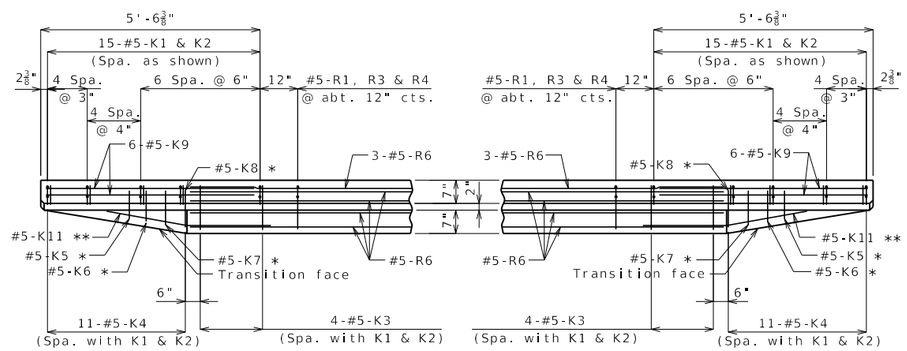

PLAN

PLAN

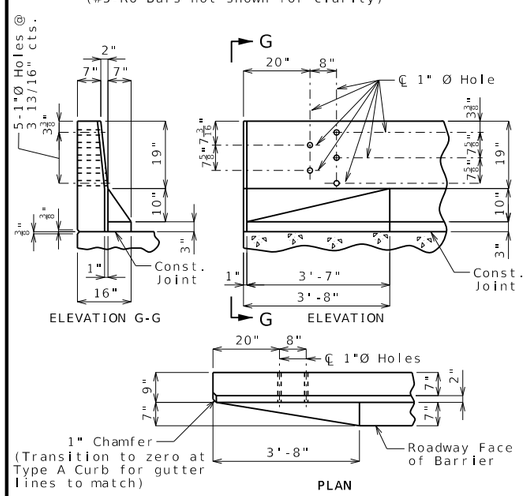

DETAILS OF GUARD RAIL ATTACHMENT

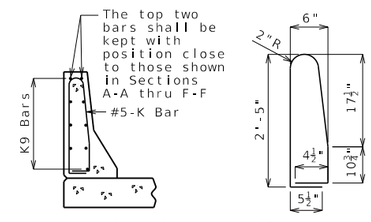

K1-K2 BAR PERMISSIBLE ALTERNATE SHAPE

(K3 or K4 thru K8 bars not shown for clarity)

The K1-K2 bar combination may be furnished as one bar as shown, at the contractor's option.

All dimensions are out to out.

Notes: Use a minimum lap of 2'-6" between K9 and R6 bars.

Concrete traffic barrier delineators shall be placed on top of the barrier as shown on Missouri Standard Plan 617.10 and in accordance with Sec 617. Delineators on bridges with two-lane, two-way traffic shall have retroreflective sheeting on both sides. Concrete traffic barrier delineators will be considered completely covered by the contract unit price for Type B Barrier.

TYPE B BARRIER AT END BENTS

(Left barrier shown, right barrier similar)

Detailed
Checked

Note: This drawing is not to scale. Follow dimensions. Sheet No. of

DATE PREPARED	
4/18/2025	
ROUTE	STATE MO
DISTRICT	SHEET NO. 8
COUNTY	
JOB NO.	
CONTRACT ID.	
PROJECT NO.	
BRIDGE NO.	

DATE	DESCRIPTION

MISSOURI HIGHWAYS AND TRANSPORTATION COMMISSION
105 WEST CAPITOL
JEFFERSON CITY, MO 65102
1-888-ASK-MODOT (1-888-275-6636)

BAC14_end Guidance

Add Standard Note H9.1a, or H9.1b or H10.7.1 depending upon the use of guardrail or barrier system.

Use the following formulas for determining bar dimensions. These formulas work for all cross slopes.

K3 BARS

B = SLAB (t) + W.S. (t) + $10\frac{1}{2}$"

E = SLAB (t) + W.S. (t) - $\frac{3}{4}$"

K4 BARS

C = SLAB (t) + W.S. (t) + 10"

K5, K6, K7 & K8 BARS

E = SLAB (t) + W.S. (t) + $\frac{1}{2}$"

R3 BARS

B = SLAB (t) + W.S. (t) + $9\frac{1}{4}$"

R4 BARS

E = SLAB (t) + W.S. (t) - $\frac{3}{4}$"

Standard Drawing Guidance (do not show on plans):

In the available space, draw the elevation of the left barrier showing:
- Span ranges.
- All horizontal #5-R bars in each span with all specified by bar marks.
- First & last vertical #5-R bars dimensioned with total number in barrier.
- All joints (as joint-filler joints) and centerlines with one centerline labeled as:

  ℄ ¼" Joint (Barrier only) (Typ.)

If slip forming is allowed then add the following two items:
- All #5-C bars in each span with all specified by bar marks (include asterisk)
- All fiberglass bars with bars at one location labeled as:

  #4 Textured Fiberglass Bars (Typ.) *

Adjust longitudinal dimensions note under elevation title as necessary.

If right barrier differs from left (typical with curved bridges), show both Elevation of Left Barrier and Elevation of Right Barrier. The longitudinal dimensions note can be relocated as the first note under the General Notes.

Dimensions are based on a 2.0%-sloped deck. Modify accordingly the outside dimensions in R-Bar Permissible Alternate Shape and Section A-A, and the 3.52 sq. ft. area in Section A-A for superelevated decks.

If conduit is required, indicate left or right or both barriers in a note.

1. For barrier ending at end of slab:

   Exclude "(except at end bents)" in first note.

   Revise measurement to "end of slab to end of slab" in second note.
2. Plastic waterstop detail and notes are required for all grade separations except over railroads and county roads. Remove if not required.
3. List C bars in the Bill of Reinforcing Steel and note that bars are for the slip-formed option only.

   Refer to EPG 751.12.1.2.1 for lengths of C bars.
4. Subtract 1/8" for a 3/16"-per-foot sloped deck.
5. Based on 8 1/2" slab. Adjust for different slab thickness.
6. Remove for CIP slab.

ELEVATION OF BARRIER

(Left barrier shown, right barrier similar)

Longitudinal dimensions are horizontal.

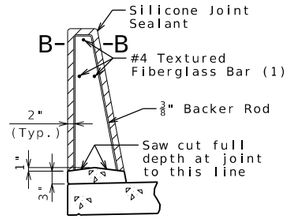

SECTION THRU SAW CUT JOINT

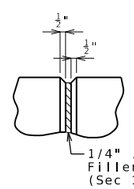

PART ELEVATION AT FORMED JOINT

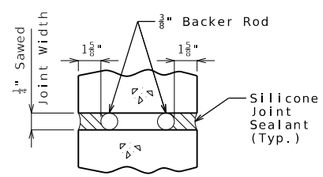

SECTION B-B

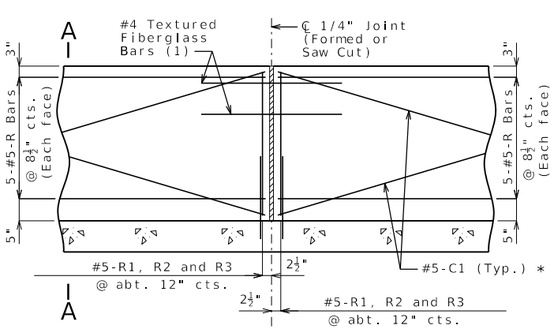

PART ELEVATION OF BARRIER

(1) Four feet long, centered on joint, slip-formed option only

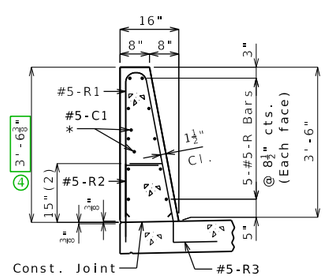

SECTION A-A

Use a minimum lap of 2'-6" for #5 horizontal barrier bars.

The cross-sectional area above the slab is 3.52 square feet.

(2) To top of bar

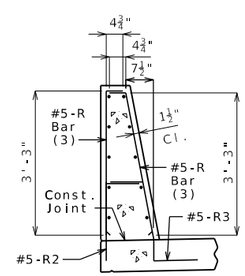

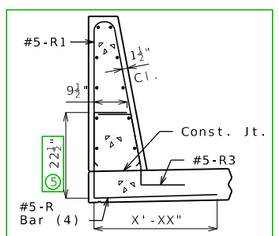

R-BAR PERMISSIBLE ALTERNATE SHAPE

(3) The R1 bar may be separated into two bars as shown, at the contractor's option, only when slip forming is not used. (All dimensions are out to out.)

(4) The R2 bar and #5 bottom transverse slab bar in cantilever (prestressed panels only) combination may be furnished as one bar as shown, at the contractor's option.

General Notes:

* Slip-formed option only.

Conventional forming or slip forming may be used. Saw cut joints may be used with conventional forming.

Top of barrier shall be built parallel to grade and barrier joints (except at end bents) normal to grade. (1)

All exposed edges of barrier shall have either a 1/2-inch radius or a 3/8-inch bevel, unless otherwise noted.

Payment for all concrete and reinforcement, complete in place, will be considered completely covered by the contract unit price for Type D Barrier per linear foot.

Concrete in barrier shall be Class B-1.

Measurement of barrier is to the nearest linear foot for each structure, measured along the outside top of slab from end of wing to end of wing. (1)

Concrete traffic barrier delineators shall be placed on top of the barrier as shown on Missouri Standard Plan 617.10 and in accordance with Sec 617. Delineators on bridges with two-lane, two-way traffic shall have retroreflective sheeting on both sides. Concrete traffic barrier delineators will be considered completely covered by the contract unit price for Type D Barrier.

Joint sealant and backer rods shall be in accordance with Sec 717 for silicone joint sealant for saw cut and formed joints.

For slip-formed option, both sides of barrier shall have a vertically broomed finish and the top shall have a transversely broomed finish.

Plastic waterstop shall not be used with saw cut joints. (2)

TYPE D BARRIER

Detailed
Checked

Note: This drawing is not to scale. Follow dimensions.

Sheet No. of

DATE PREPARED	4/18/2025
ROUTE	STATE MO
DISTRICT	SHEET NO. 000
COUNTY	
JOB NO.	
CONTRACT ID.	
PROJECT NO.	
BRIDGE NO.	

DATE	DESCRIPTION

MISSOURI HIGHWAYS AND TRANSPORTATION COMMISSION
105 WEST CAPITOL
JEFFERSON CITY, MO 65102
1-888-ASK-MODOT (1-888-275-6636)

BAR01_D_elev Alternate Details

EXAMPLE - REDECK

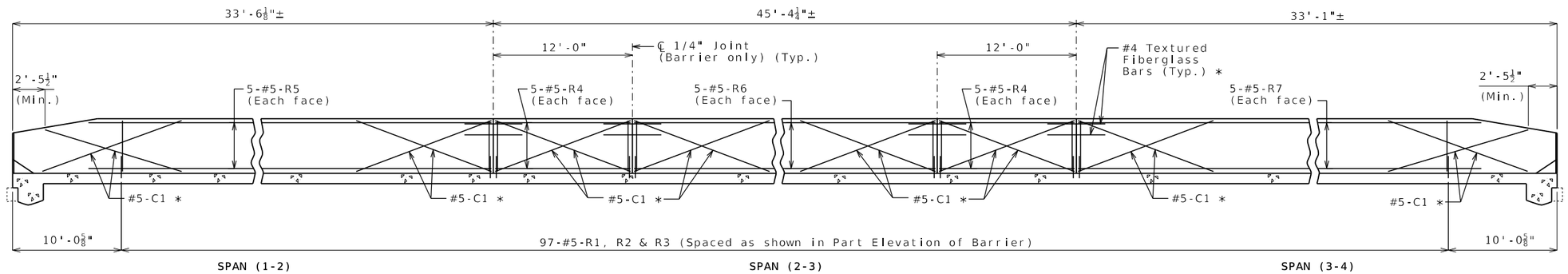

EXAMPLE - NEW BRIDGE

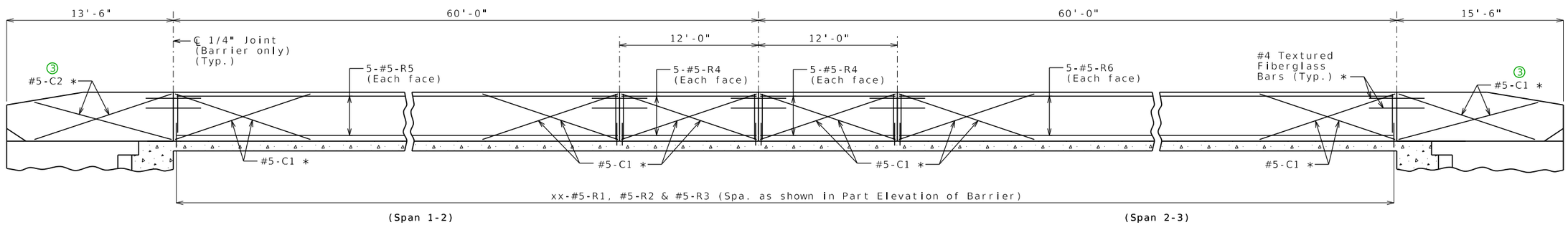

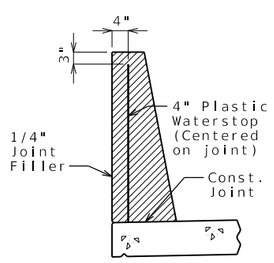

WATERSTOP DETAIL

Plastic waterstop shall be placed in all formed joints, except structures with superelevation, use on lower joints only.

Cost of plastic waterstop, complete in place, will be considered completely covered by the contract unit price for Type D Barrier.

(Use for grade separation)

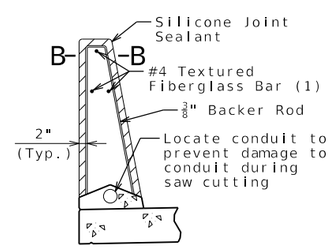

SECTION THRU SAW CUT JOINT

(Use when conduit is required)

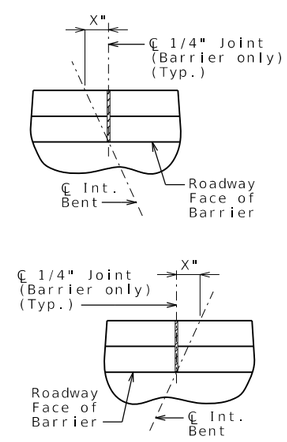

PART PLAN SHOWING JOINT LOCATION

(For skewed structures only)

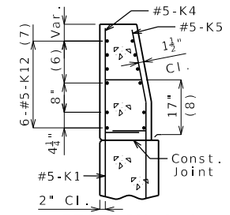

SECTION A-A

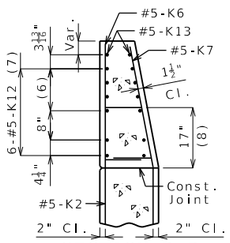

SECTION B-B

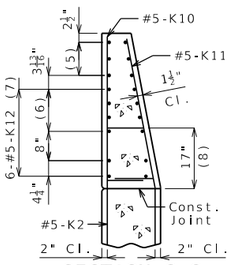

SECTION C-C

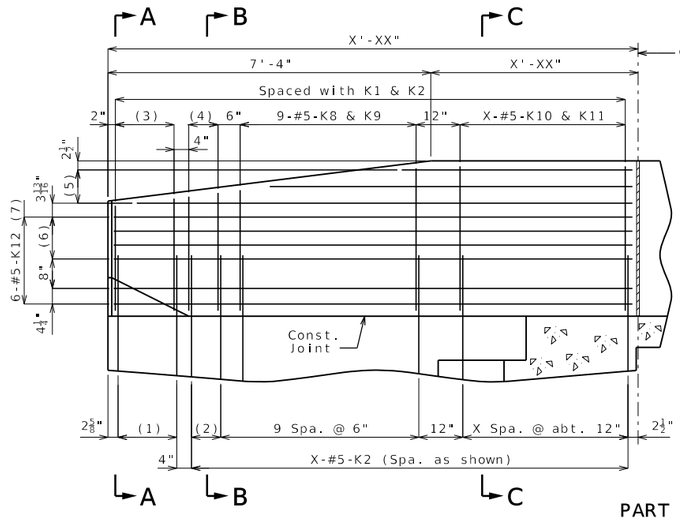

PART ELEVATION

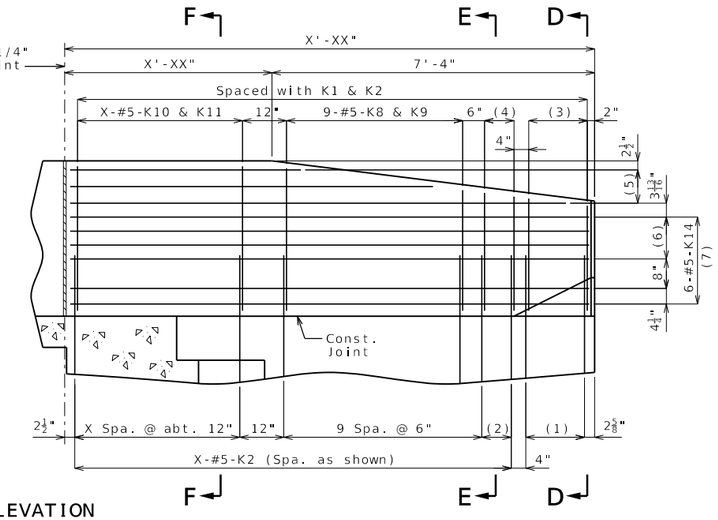

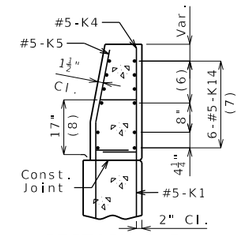

SECTION D-D

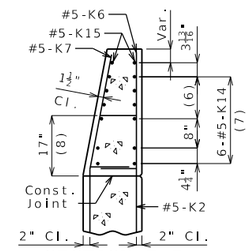

SECTION E-E

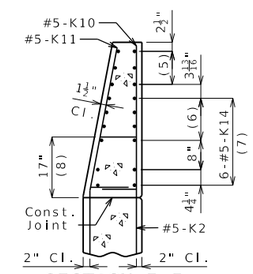

SECTION F-F

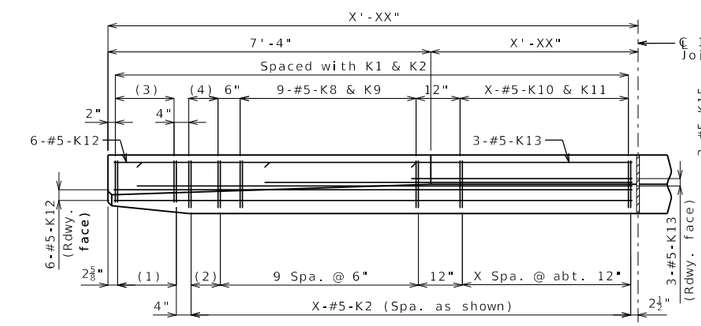

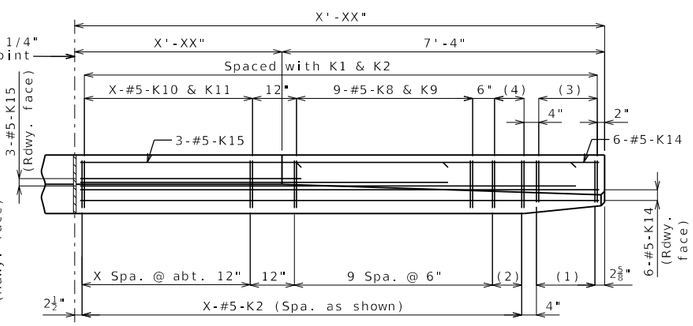

PART PLAN

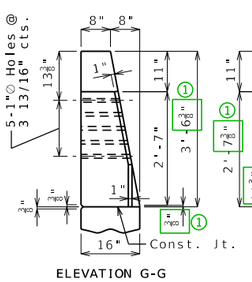

ELEVATION G-G

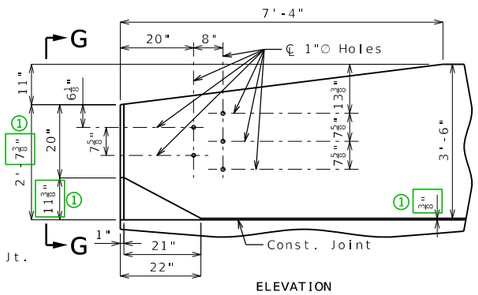

ELEVATION

(1) 5-#5-K1 @ 4" cts.

(2) 2 spaces @ 4"

(3) 5-#5-K4 & K5

(4) 3-#5-K6 & K7

(5) 3-#5-K13 or K15 @ 4½" cts., each face

(6) 3 spaces @ 3 13/16"

(7) Spaced as shown, each face

(8) To top of bar

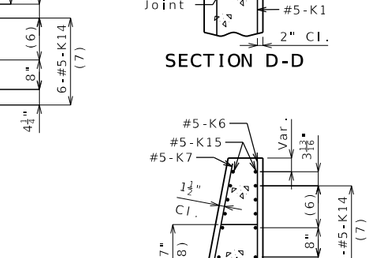

K10-K11 BAR PERMISSIBLE ALTERNATE SHAPE

(Other K bars not shown for clarity)

The K10-K11 bar combination may be furnished as one bar as shown, at the contractor's option.

All dimensions are out to out.

* Transition to zero at Type A curb for gutter lines to match.

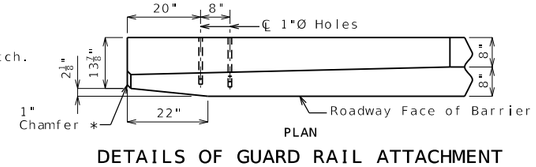

PLAN

DETAILS OF GUARD RAIL ATTACHMENT

General Notes:

Concrete traffic barrier delineators shall be placed on top of the barrier as shown on Missouri Standard Plan 617.10 and in accordance with Sec 617. Delineators on bridges with two-lane, two-way traffic shall have retroreflective sheeting on both sides. Concrete traffic barrier delineators will be considered completely covered by the contract unit price for Type D Barrier.

Reinforcing Steel:
Minimum clearance to reinforcing steel shall be 1 1/2" except as shown for bars embedded into end bent.

TYPE D BARRIER AT END BENTS

(Left barrier shown, right barrier similar)

Detailed
Checked

Note: This drawing is not to scale. Follow dimensions. Sheet No. of

DATE PREPARED	10/13/2023
ROUTE	STATE MO
DISTRICT	SHEET NO. 1
COUNTY	
JOB NO.	
CONTRACT ID.	
PROJECT NO.	
BRIDGE NO.	

DESCRIPTION

DATE

MISSOURI HIGHWAYS AND TRANSPORTATION COMMISSION
105 WEST CAPITOL
JEFFERSON CITY, MO 65102
1-888-ASK-MODOT (1-888-275-6636)

BAR02_D_end_i Guidance & Alternate Details

Standard Drawing Guidance: (do not show on plans)

For skews greater than 3 degrees, use alternate details, which substitute a K3 bar for the end K2 bar. For skews greater than 41 degrees, two K3 bars are required.

① Dimensions are based on a 2.0% sloped deck. Subtract 1/8" for a 3/16" per foot sloped deck.

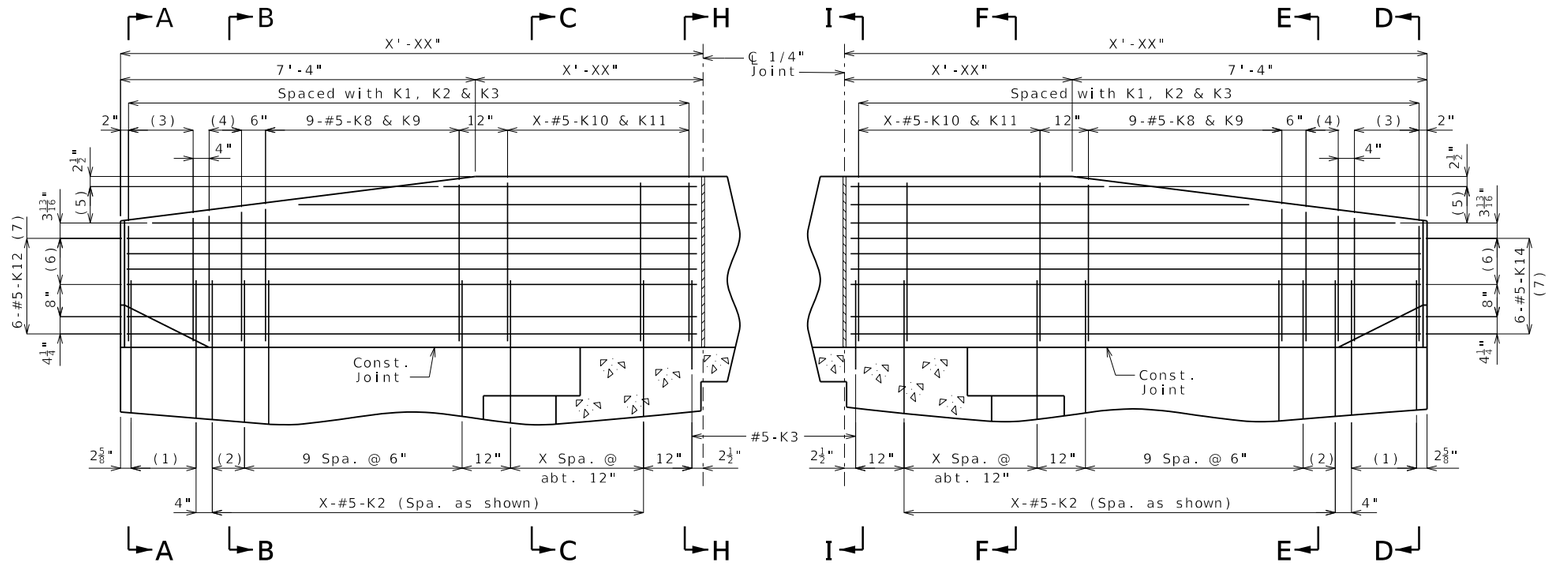

PART ELEVATION

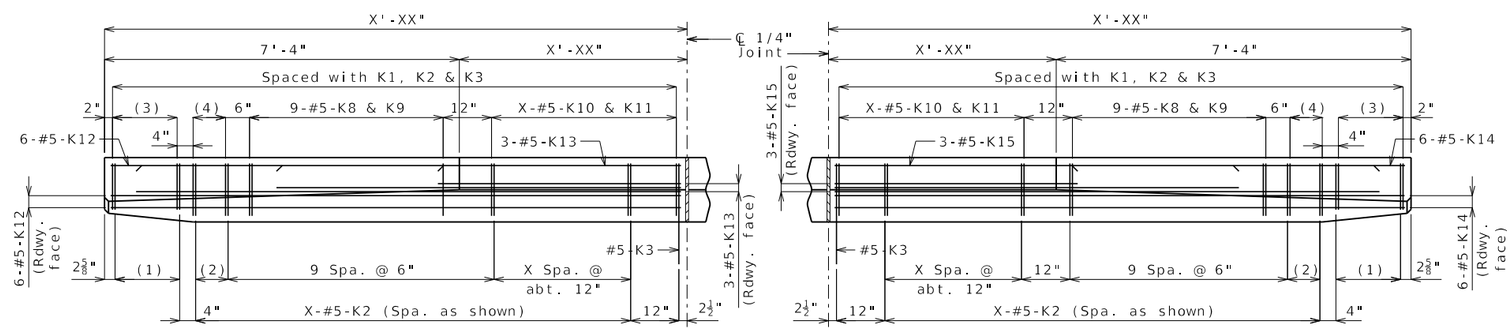

PART PLAN

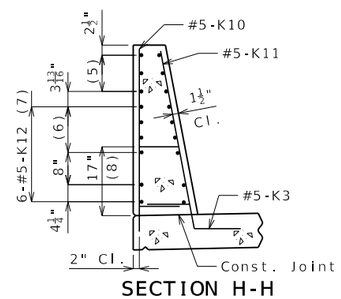

SECTION H-H

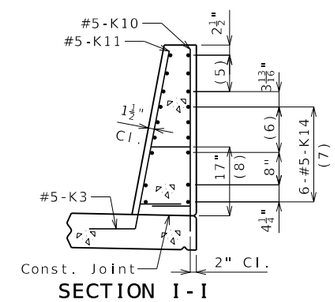

SECTION I-I

Alternate Details for Skewed Bridges Requiring K3 Bars

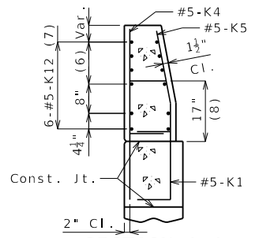

SECTION A-A

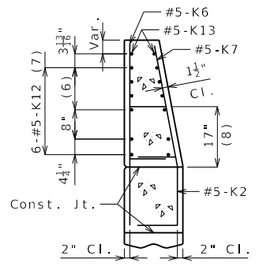

SECTION B-B

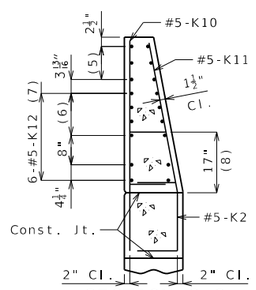

SECTION C-C

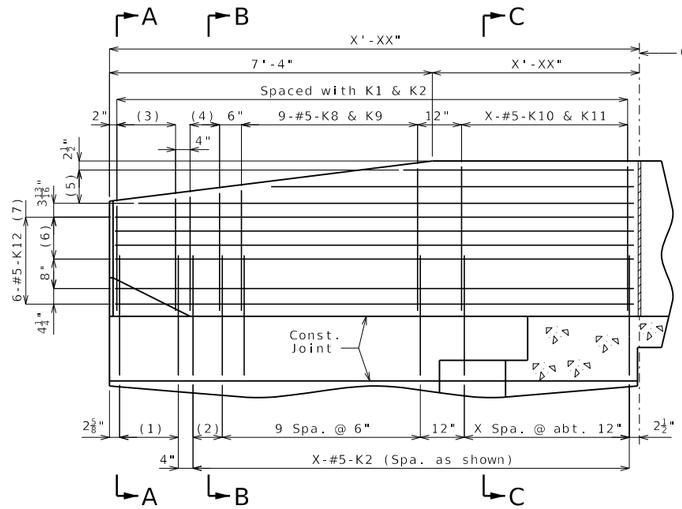

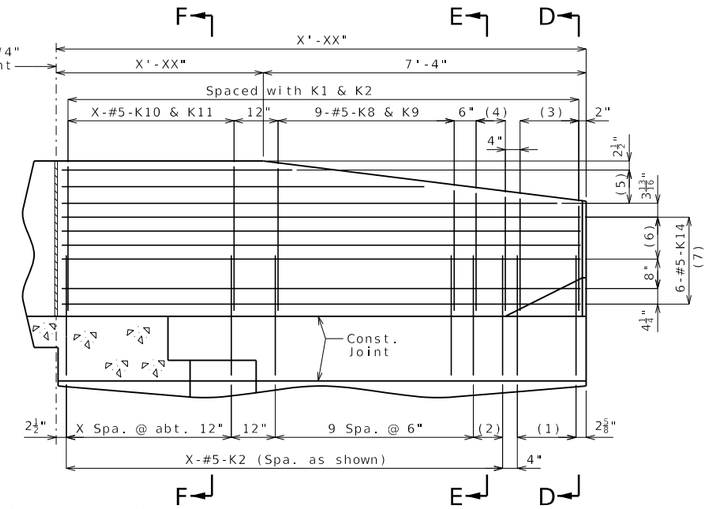

PART ELEVATION

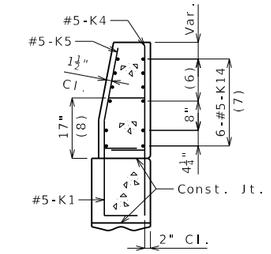

SECTION D-D

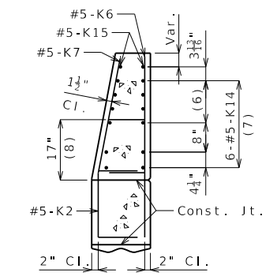

SECTION E-E

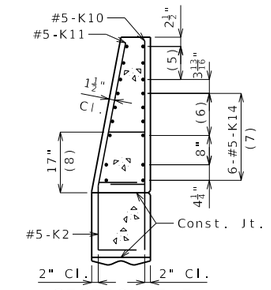

SECTION F-F

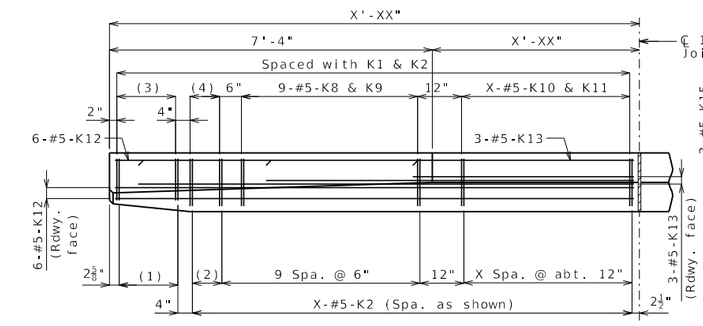

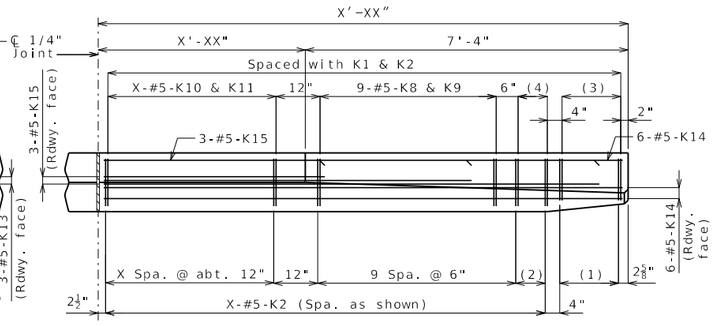

PART PLAN

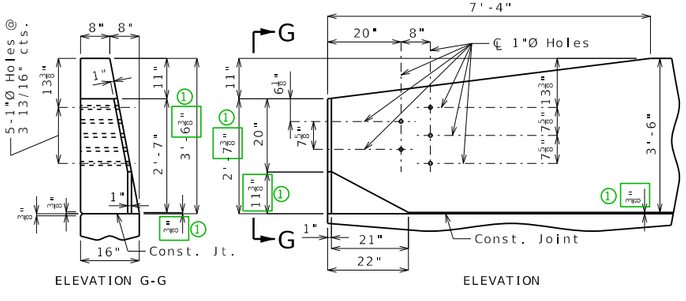

ELEVATION G-G

ELEVATION

(1) 5-#5-K1 @ 4" cts.

(2) 2 spaces @ 4"

(3) 5-#5-K4 & K5

(4) 3-#5-K6 & K7

(5) 3-#5-K13 or K15 @ 4 1/2" cts., each face

(6) 3 spaces @ 3 13/16"

(7) Spaced as shown, each face

(8) To top of bar

Integral End Bent with Shallow Superstructure

Use when distance between upper and lower construction joints in wings is less than 25 1/2 inches.

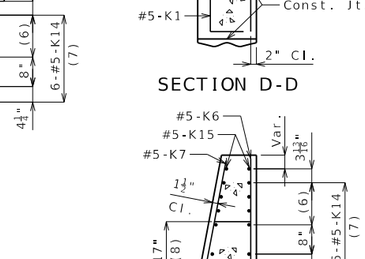

K10-K11 BAR PERMISSIBLE ALTERNATE SHAPE

(Other K bars not shown for clarity)

The K10-K11 bar combination may be furnished as one bar as shown, at the contractor's option.

All dimensions are out to out.

* Transition to zero at Type A curb for gutter lines to match.

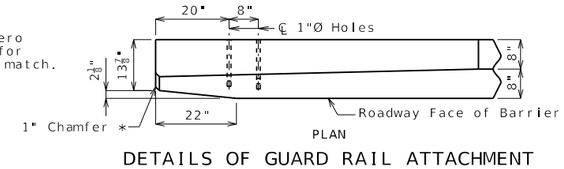

PLAN

DETAILS OF GUARD RAIL ATTACHMENT

General Notes:

Reinforcing Steel:

Concrete traffic barrier delineators shall be placed on top of the barrier as shown on Missouri Standard Plan 617.10 and in accordance with Sec 617. Delineators on bridges with two-lane, two-way traffic shall have retroreflective sheeting on both sides. Concrete traffic barrier delineators will be considered completely covered by the contract unit price for Type D Barrier.

Minimum clearance to reinforcing steel shall be 1 1/2" except as shown for bars embedded into end bent.

TYPE D BARRIER AT END BENTS

(Left barrier shown, right barrier similar)

Detailed
Checked

Note: This drawing is not to scale. Follow dimensions. Sheet No. of

DATE PREPARED	4/18/2025
ROUTE	STATE MO
DISTRICT	SHEET NO. 2
COUNTY	
JOB NO.	
CONTRACT ID.	
PROJECT NO.	
BRIDGE NO.	

DATE	DESCRIPTION

MISSOURI HIGHWAYS AND TRANSPORTATION COMMISSION

105 WEST CAPITOL
JEFFERSON CITY, MO 65102
1-888-ASK-MODOT (1-888-275-6636)

BAR03_D_end_si Guidance & Alternate Details

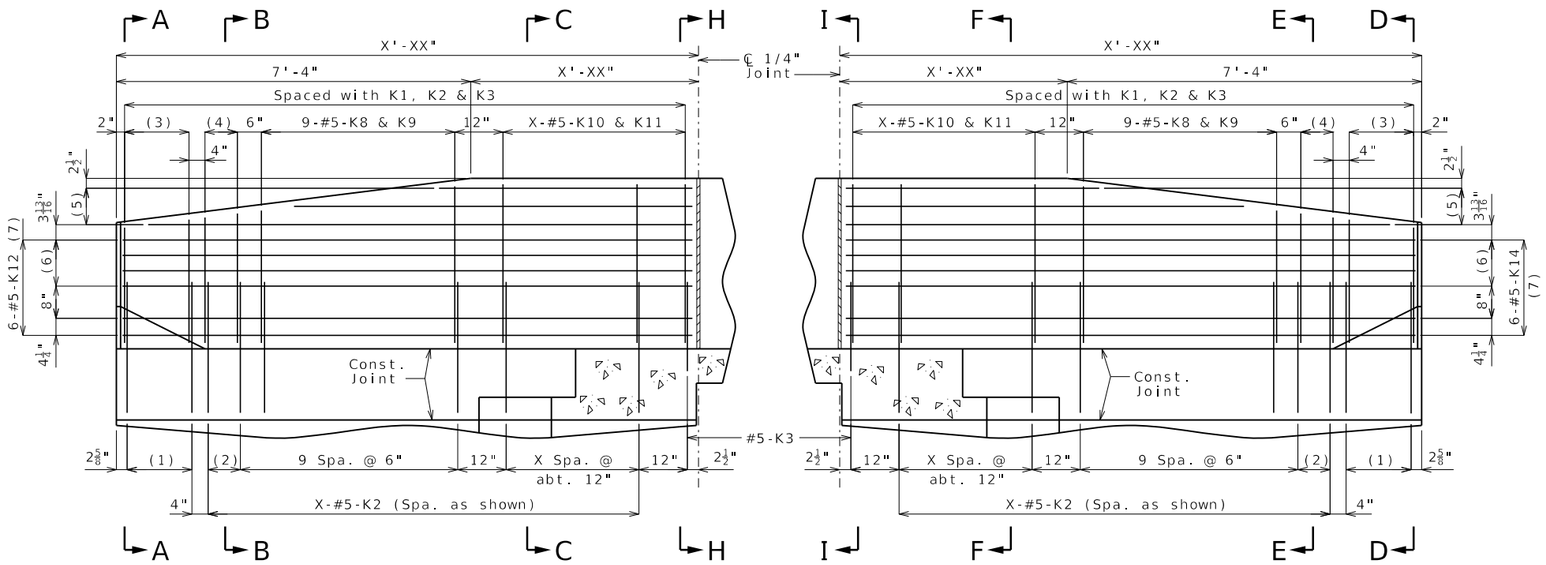

PART ELEVATION

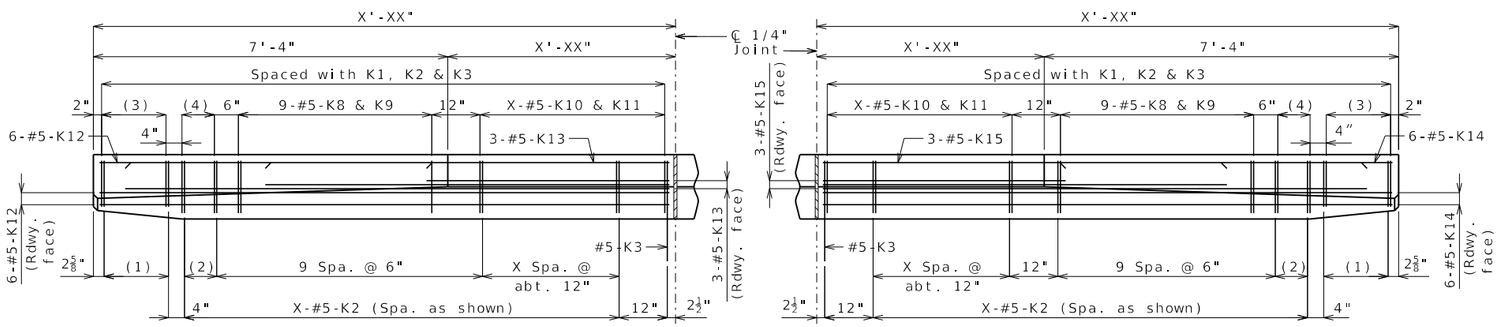

PART PLAN

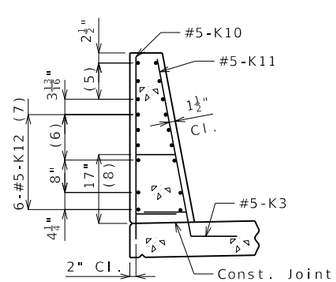

SECTION H-H

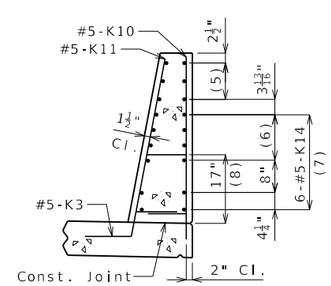

SECTION I-I

Standard Drawing Guidance: (do not show on plans)

For skews greater than 3 degrees, use alternate details above, which substitutes a K3 bar for the end K2 bar. For skews greater than 41 degrees, two K3 bars are required.

① Dimensions are based on a 2.0% sloped deck. Subtract 1/8" for a 3/16" per foot sloped deck.

ALTERNATE DETAILS FOR SKEWED BRIDGES REQUIRING K3 BARS

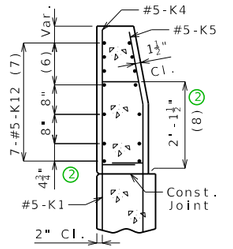

SECTION A-A

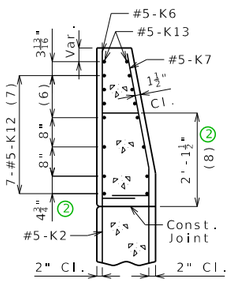

SECTION B-B

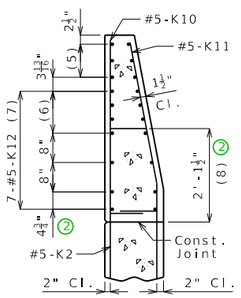

SECTION C-C

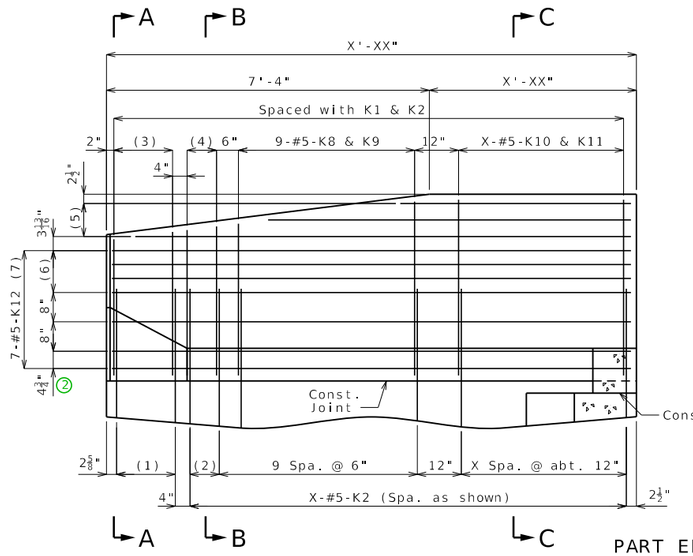

PART ELEVATION

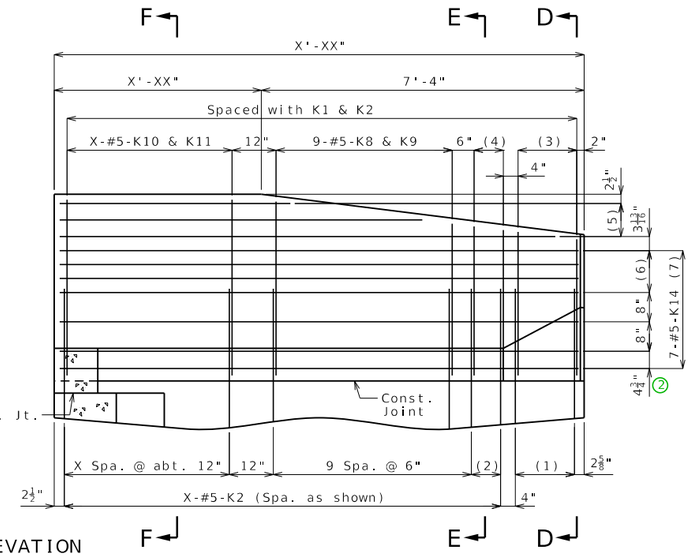

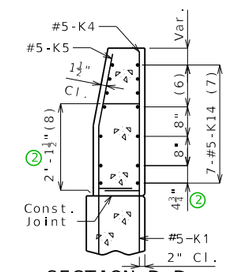

SECTION D-D

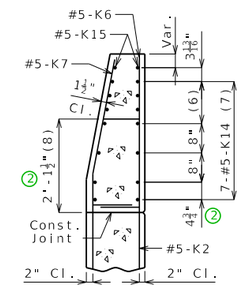

SECTION E-E

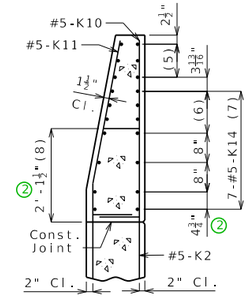

SECTION F-F

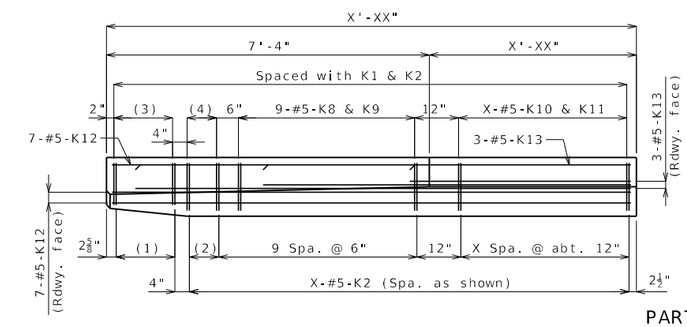

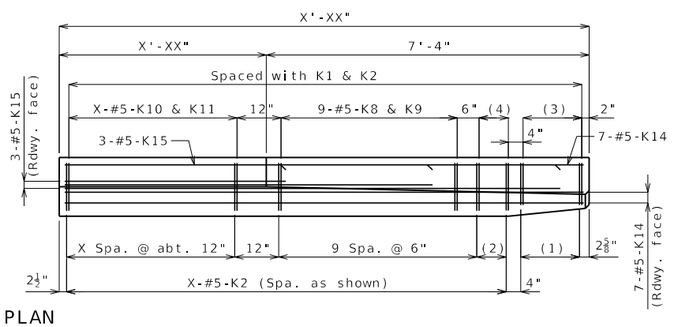

PART PLAN

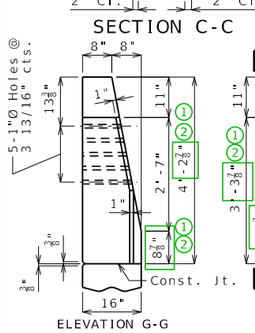

ELEVATION G-G

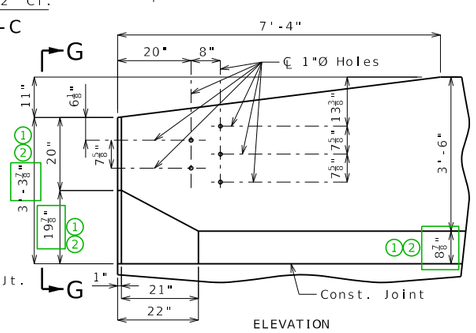

ELEVATION

* Transition to zero at Type A curb for gutter lines to match.

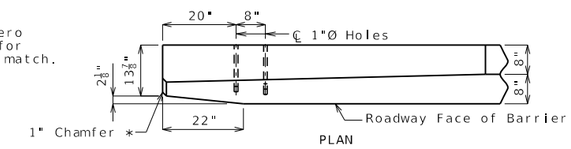

PLAN

DETAILS OF GUARD RAIL ATTACHMENT

(1) 5-#5-K1 @ 4" cts.

(2) 2 spaces @ 4"

(3) 5-#5-K4 & K5

(4) 3-#5-K6 & K7

(5) 3-#5-K13 or K15 @ 4 1/2" cts., each face

(6) 3 Spaces @ 3 13/16"

(7) Spaced as shown, each face

(8) To top of bar

Standard Drawing Guidance: (do not show on plans)

1 Dimensions are based on a 2.0% sloped deck. Subtract 1/8" for a 3/16" per foot sloped deck.

2 Based on 8 1/2" slab. Adjust for different slab thickness.

General Notes:

Reinforcing Steel:

Concrete traffic barrier delineators shall be placed on top of the barrier as shown on Missouri Standard Plan 617.10 and in accordance with Sec 617. Delineators on bridges with two-lane, two-way traffic shall have retroreflective sheeting on both sides. Concrete traffic barrier delineators will be considered completely covered by the contract unit price for Type D Barrier.

Minimum clearance to reinforcing steel shall be 1 1/2" except as shown for bars embedded into end bent.

TYPE D BARRIER AT END BENTS

(Left barrier shown, right barrier similar)

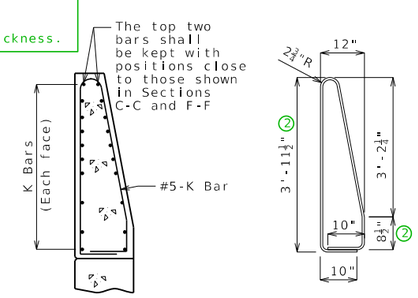

K10-K11 BAR PERMISSIBLE ALTERNATE SHAPE

(Other K bars not shown for clarity)

The K10-K11 bar combination may be furnished as one bar as shown, at the contractor's option.

All dimensions are out to out.

DATE PREPARED	10/13/2023
ROUTE	STATE MO
DISTRICT	SHEET NO. 3
COUNTY	
JOB NO.	
CONTRACT ID.	
PROJECT NO.	
BRIDGE NO.	

DESCRIPTION

DATE

MISSOURI HIGHWAYS AND TRANSPORTATION COMMISSION
105 WEST CAPITOL
JEFFERSON CITY, MO 65102
1-888-ASK-MODOT (1-888-275-6636)

Detailed
Checked

Note: This drawing is not to scale. Follow dimensions. Sheet No. of

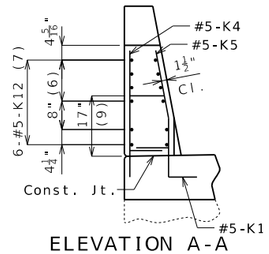

ELEVATION A-A

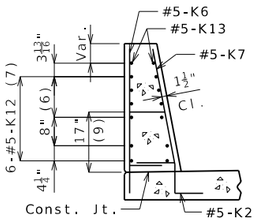

SECTION B-B

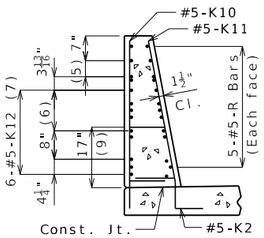

SECTION C-C

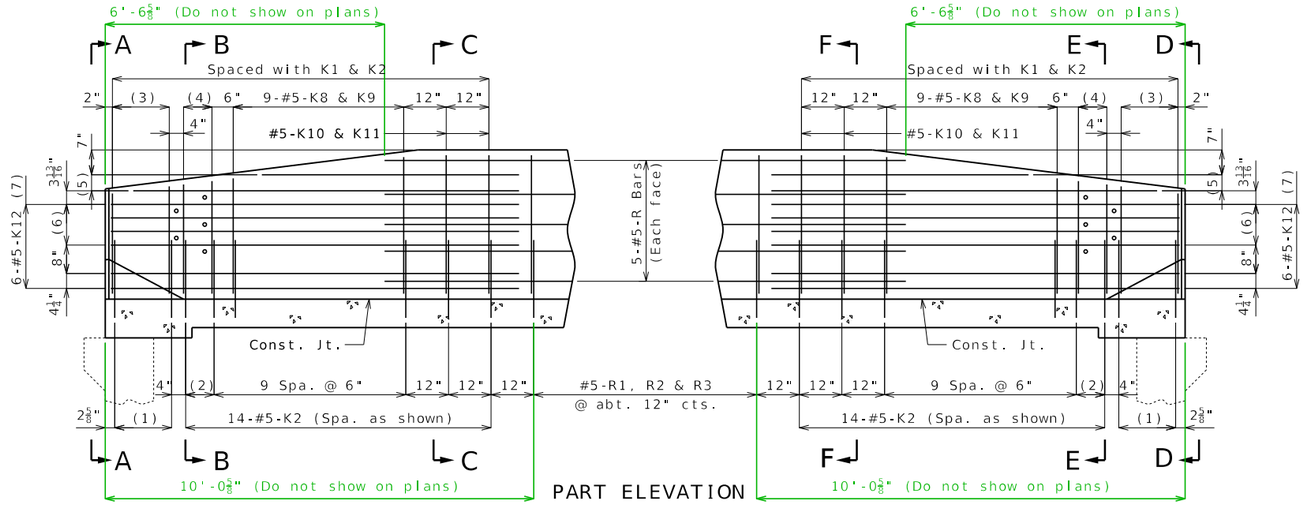

PART ELEVATION

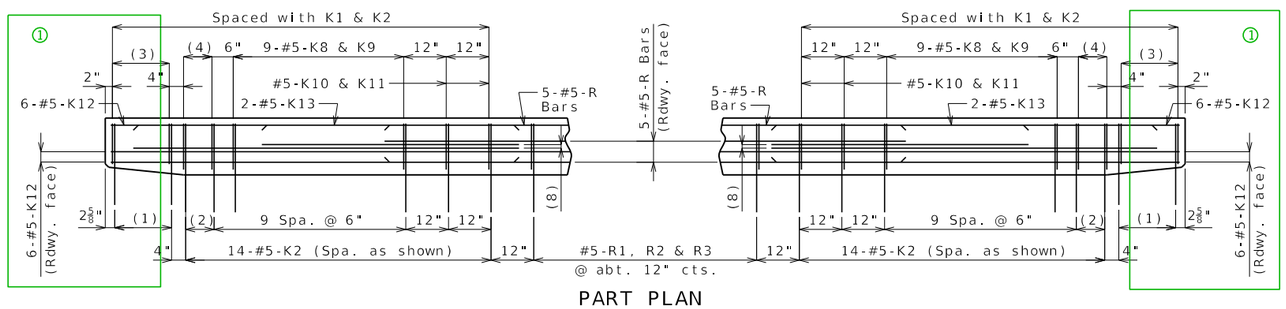

PART PLAN

(Top of barrier not shown for clarity.)

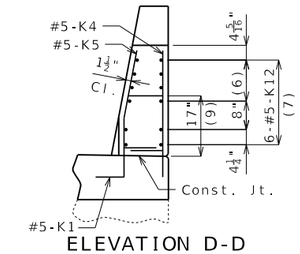

ELEVATION D-D

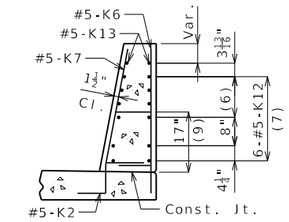

SECTION E-E

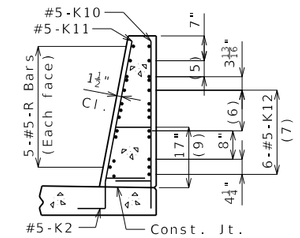

SECTION F-F

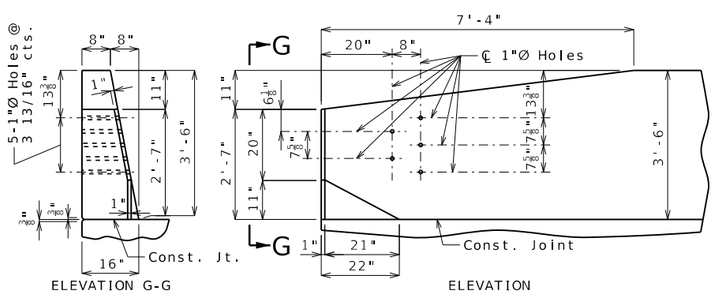

(1) 5-#5-K1 @ 4" cts.

(2) 2 spaces @ 4"

(3) 5-#5-K4 & K5

(4) 3-#5-K6 & K7

(5) 2-#5-K13 @ 4½" cts., each face

(6) 3 spaces @ 3 13/16"

(7) Spaced as shown, each face

(8) 2-#5-K13 (Roadway face)

(9) To top of bar

General Notes:

Concrete traffic barrier delineators shall be placed on top of the barrier as shown on Missouri Standard Plan 617.10 and in accordance with Sec 617. Delineators on bridges with two-lane, two-way traffic shall have retroreflective sheeting on both sides. Concrete traffic barrier delineators will be considered completely covered by the contract unit price for Type D Barrier.

Reinforcing Steel:

Minimum clearance to reinforcing steel shall be 1 1/2".

Use a minimum lap of 2'-6" between horizontal K bars and R bars.

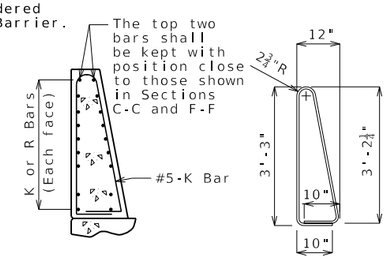

K10-K11 BAR PERMISSIBLE ALTERNATE SHAPE

(Other K bars not shown for clarity)

The K10-K11 bar combination may be furnished as one bar as shown, at the contractor's option.

All dimensions are out to out.

* Transition to zero at Type A curb for gutter lines to match.

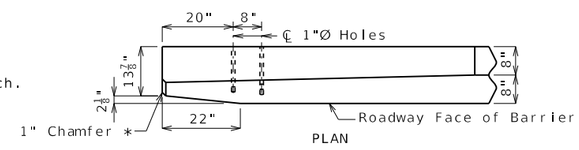

DETAILS OF GUARD RAIL ATTACHMENT

Standard Drawing Guidance: (Do not show on plans)

① Show part of existing end bent.

TYPE D BARRIER AT END BENTS

(Left barrier shown, right barrier similar)

Detailed
Checked

Note: This drawing is not to scale. Follow dimensions. Sheet No. of

DATE PREPARED	
9/17/2025	
ROUTE	STATE MO
DISTRICT	SHEET NO. 4
COUNTY	
JOB NO.	
CONTRACT ID.	
PROJECT NO.	
BRIDGE NO.	

DATE	DESCRIPTION

MISSOURI HIGHWAYS AND TRANSPORTATION COMMISSION
105 WEST CAPITOL
JEFFERSON CITY, MO 65102
1-888-ASK-MODOT (1-888-275-6636)

BAR05 Alternate Details

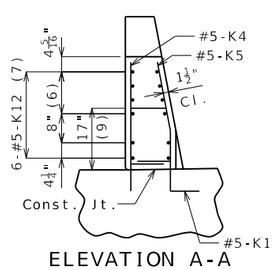

ELEVATION A-A

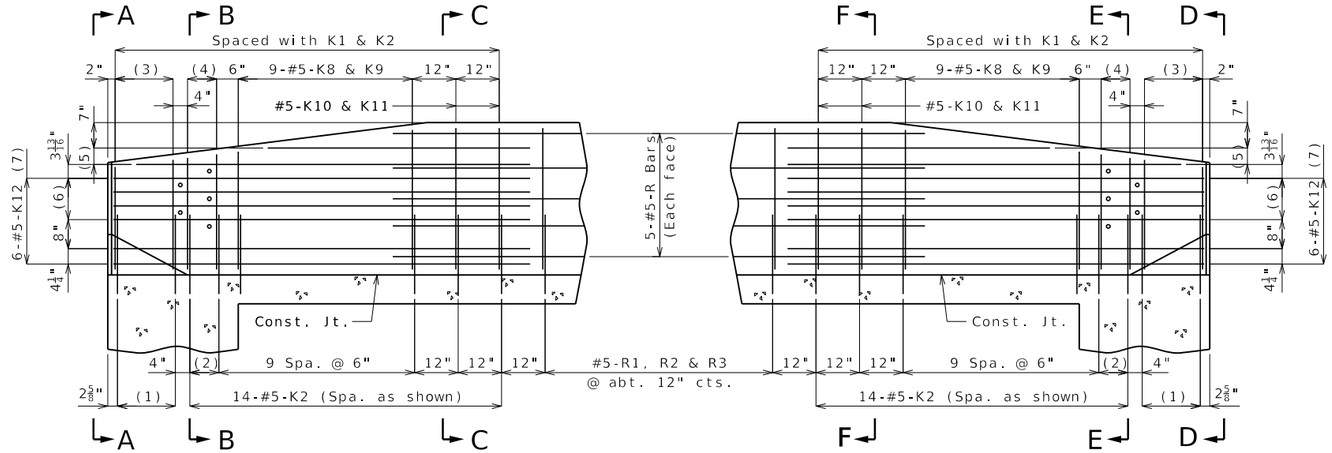

PART ELEVATION

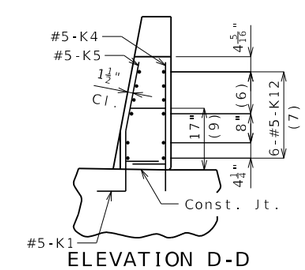

ELEVATION D-D

New Bridge

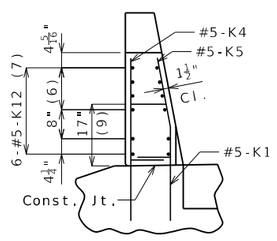

ELEVATION A-A

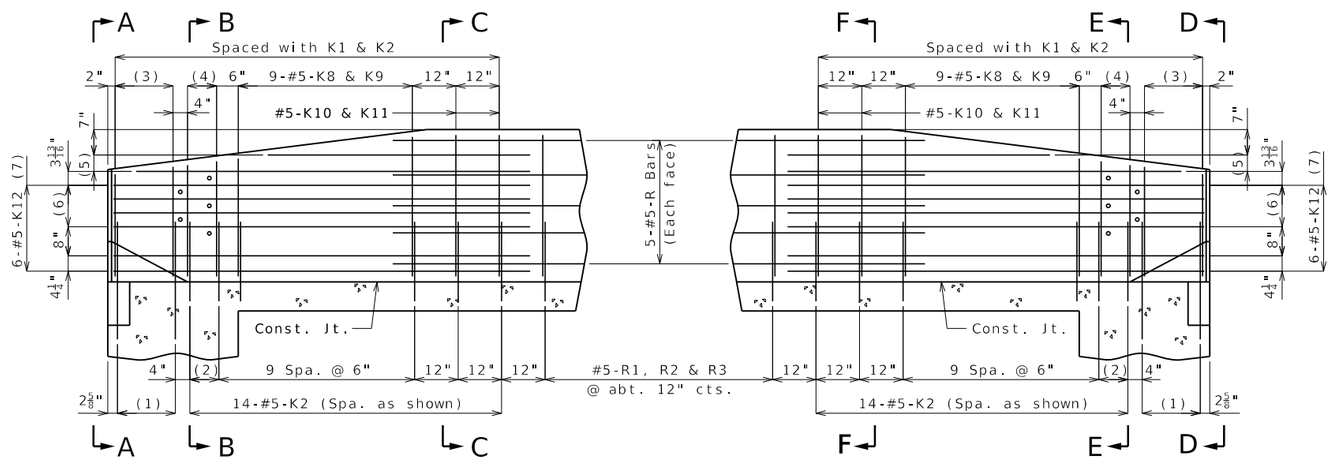

PART ELEVATION

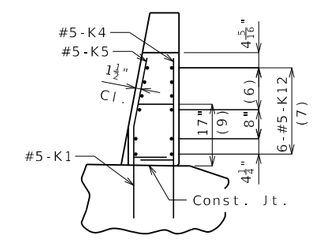

ELEVATION D-D

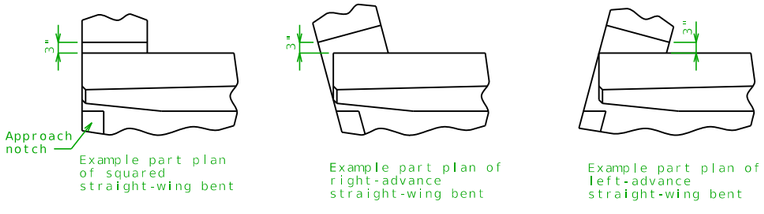

For K1 bars, use dimensions for integral end bent.

End Bents with straight wings (elephant ear)

Standard Drawing Guidance (do not show on plans):

In the available space, draw the elevation of the left barrier showing:
- Span ranges.
- All horizontal #5-R bars in each span with all specified by bar marks.
- First & last vertical #5-R bars dimensioned with total number in barrier.
- All joints (as joint-filler joints) and centerlines with one centerline labeled as:

  ℄ ¼" Joint (Barrier only) (Typ.)

If slip forming is allowed then add the following two items:
- All #5-C bars in each span with all specified by bar marks (include asterisk)
- All fiberglass bars with bars at one location labeled as:

  #4 Textured Fiberglass Bars (Typ.) *

Adjust longitudinal dimensions note under elevation title as necessary.

If right barrier differs from left (typical with curved bridges), show both Elevation of Left Barrier and Elevation of Right Barrier. The longitudinal dimensions note can be relocated as the first note under the General Notes.

Dimensions are based on a 2.0%-sloped deck. Modify accordingly the outside dimensions in R-Bar Permissible Alternate Shape and Section A-A, and the 2.89 sq. ft. area in Section A-A for superelevated decks.

If conduit is required, indicate left or right or both barriers in a note.

① For barrier ending at end of slab:

  Exclude "(except at end bents)" in first note.

  Revise measurement to "end of slab to end of slab" in second note.

② Plastic waterstop detail and notes are required for all grade separations except over railroads and county roads. Remove if not required.

③ List C bars in the Bill of Reinforcing Steel and note that bars are for the slip-formed option only.

  Refer to EPG 751.12.1.2.1 for lengths of C bars.

④ Subtract 1/8" for a 3/16"-per-foot sloped deck.

⑤ Based on 8 1/2" slab. Adjust for different slab thickness.

⑥ Remove for CIP slab.

ELEVATION OF BARRIER

(Left barrier shown, right barrier similar)

Longitudinal dimensions are horizontal.

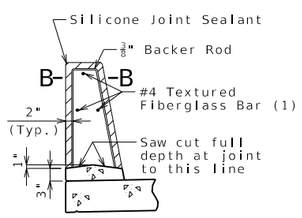

SECTION THRU SAW CUT JOINT

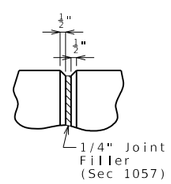

PART ELEVATION AT FORMED JOINT

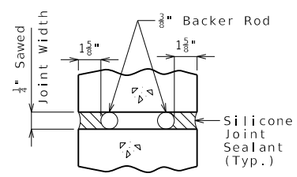

SECTION B-B

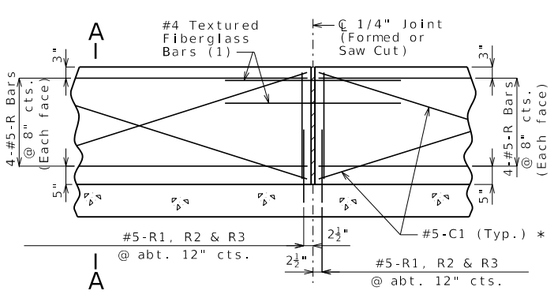

PART ELEVATION OF BARRIER

(1) Four feet long, centered on joint, slip-formed option only

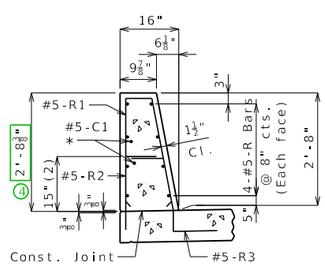

SECTION A-A

Use a minimum lap of 2'-6" for #5 horizontal barrier bars.

The cross-sectional area above the slab is 2.89 square feet.

(2) To top of bar

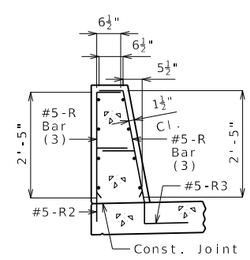

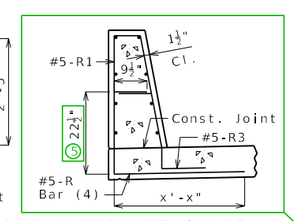

R-BAR PERMISSIBLE ALTERNATE SHAPE

(3) The R1 bar may be separated into two bars as shown, at the contractor's option, only when slip forming is not used. (All dimensions are out to out.)

(4) The R2 bar and #5 bottom transverse slab bar in cantilever (prestressed panels only) combination may be furnished as one bar as shown, at the contractor's option.

General Notes:

* Slip-formed option only.

Conventional forming or slip forming may be used. Saw cut joints may be used with conventional forming.

① Top of barrier shall be built parallel to grade and barrier joints (except at end bents) normal to grade.

All exposed edges of barrier shall have either a 1/2-inch radius or a 3/8-inch bevel, unless otherwise noted.

Payment for all concrete and reinforcement, complete in place, will be considered completely covered by the contract unit price for Type H Barrier per linear foot.

Concrete in barrier shall be Class B-1.

① Measurement of barrier is to the nearest linear foot for each structure, measured along the outside top of slab from end of wing to end of wing.

Concrete traffic barrier delineators shall be placed on top of the barrier as shown on Missouri Standard Plan 617.10 and in accordance with Sec 617. Delineators on bridges with two-lane, two-way traffic shall have retroreflective sheeting on both sides. Concrete traffic barrier delineators will be considered completely covered by the contract unit price for Type H Barrier.

Joint sealant and backer rods shall be in accordance with Sec 717 for silicone joint sealant for saw cut and formed joints.

For slip-formed option, both sides of barrier shall have a vertically broomed finish and the top shall have a transversely broomed finish.

② Plastic waterstop shall not be used with saw cut joints.

TYPE H BARRIER

Detailed
Checked

Note: This drawing is not to scale. Follow dimensions.

Sheet No. of

DATE PREPARED	
4/18/2025	
ROUTE	STATE MO
DISTRICT	SHEET NO. 5
COUNTY	
JOB NO.	
CONTRACT ID.	
PROJECT NO.	
BRIDGE NO.	

DESCRIPTION	DATE

MISSOURI HIGHWAYS AND TRANSPORTATION COMMISSION
105 WEST CAPITOL
JEFFERSON CITY, MO 65102
1-888-ASK-MODOT (1-888-275-6636)

EXAMPLE ELEVATION

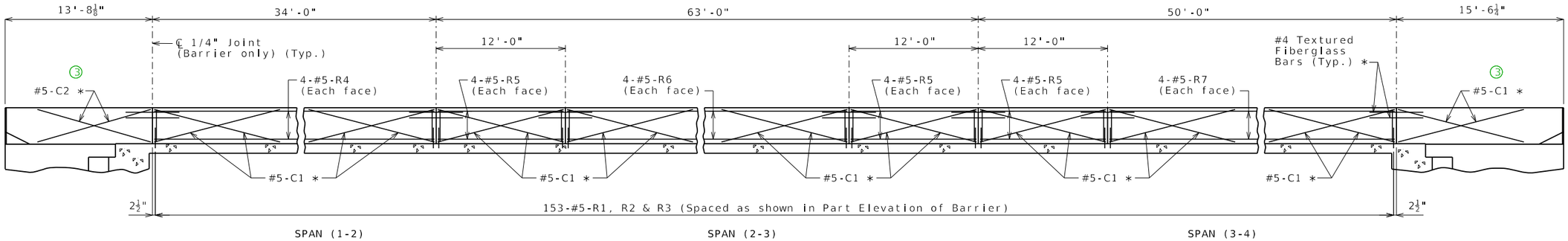

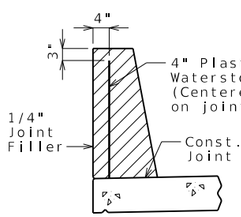

WATERSTOP DETAIL

Plastic waterstop shall be placed in all formed joints, except structures with superelevation, use on lower joints only.

Cost of plastic waterstop, complete in place, will be considered completely covered by the contract unit price for Type H Barrier.

(Use for grade separation)

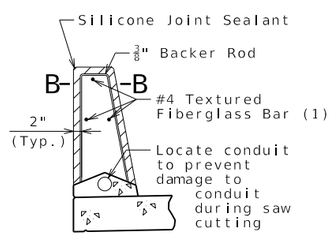

SECTION THRU SAW CUT JOINT

(Use when conduit is required)

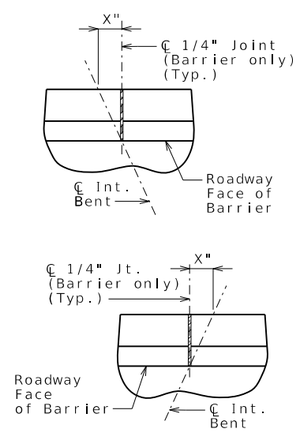

PART PLAN SHOWING JOINT LOCATION

(For skewed structures only)

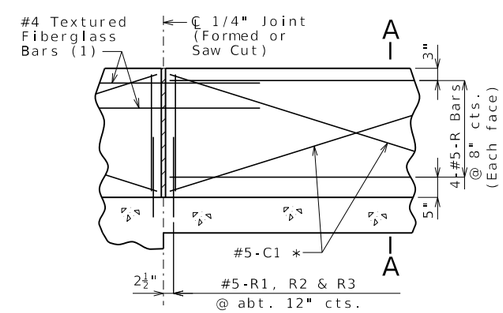

PART ELEVATION OF BARRIER

(1) Four feet long, centered on joint, slip-formed option only

ALTERNATE DETAIL FOR SINGLE SPAN

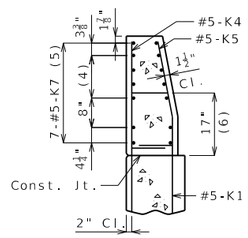

SECTION A-A

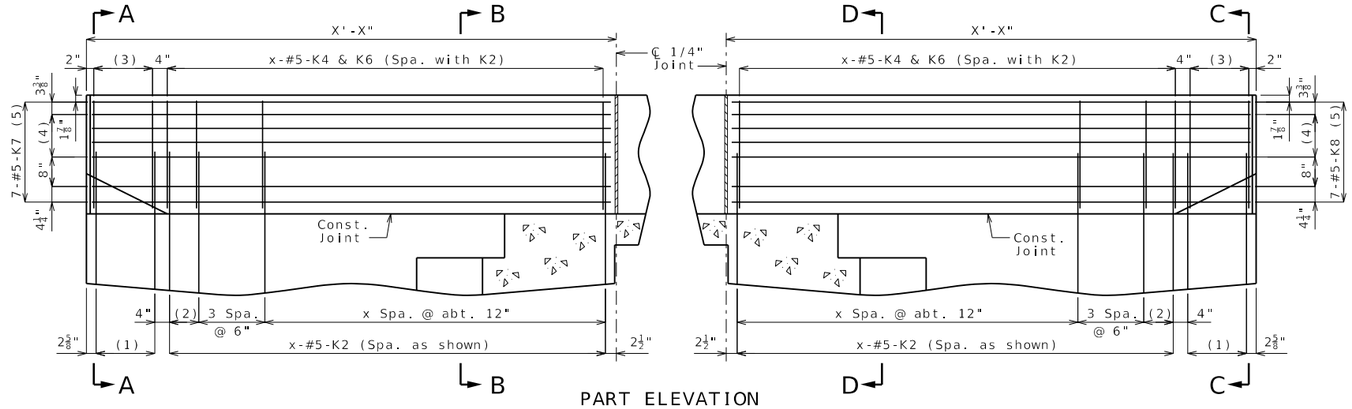

PART ELEVATION

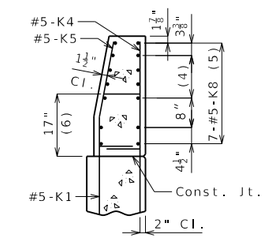

SECTION C-C

(1) 5-#5-K1 @ 4" cts.

(2) 2 Spaces @ 4"

(3) 5-#5-K4 and 5-#5-K5, spaced with K1

(4) 3 Spaces @ $3\frac{13}{16}$"

(5) Spaced as shown, each face

(6) To top of bar

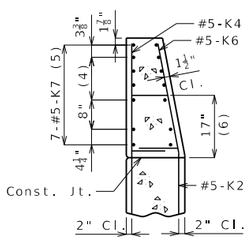

SECTION B-B

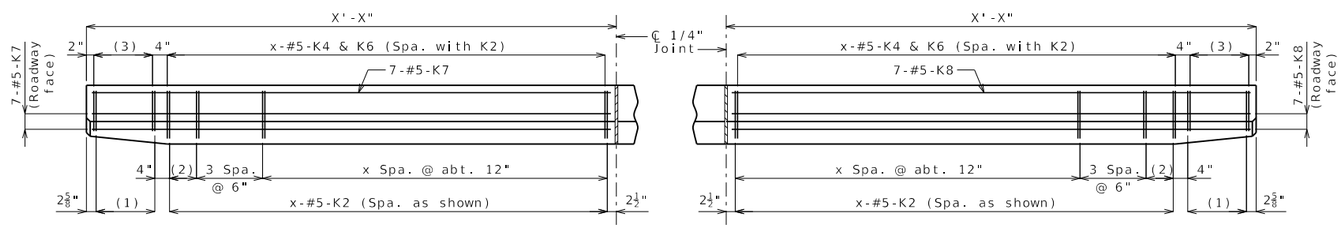

PART PLAN

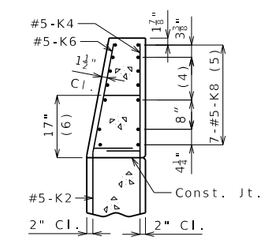

SECTION D-D

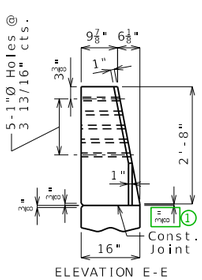

ELEVATION E-E

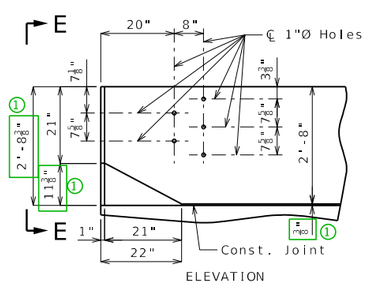

ELEVATION

* Transition to zero at Type A curb for gutter lines to match.

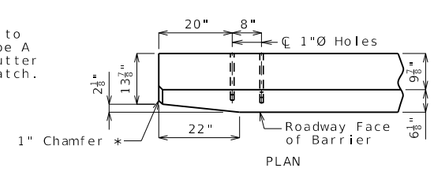

PLAN

DETAILS OF GUARD RAIL ATTACHMENT

General Notes:

Concrete traffic barrier delineators shall be placed on top of the barrier as shown on Missouri Standard Plan 617.10 and in accordance with Sec 617. Delineators on bridges with two-lane, two-way traffic shall have retroreflective sheeting on both sides. Concrete traffic barrier delineators will be considered completely covered by the contract unit price for Type H Barrier.

Reinforcing Steel:

Minimum clearance to reinforcing steel shall be 1 1/2" except as shown for bars embedded into end bent.

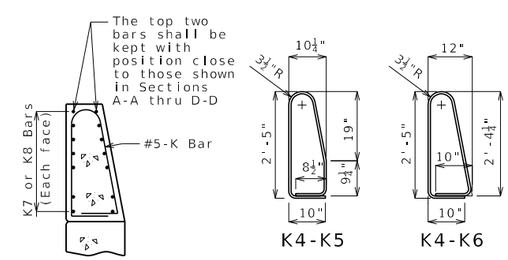

PERMISSIBLE ALTERNATE SHAPES

(Other K bars not shown for clarity)

The K4-K5 and K4-K6 bar combination may be furnished as one bar as shown, at the contractor's option.

All dimensions are out to out.

TYPE H BARRIER AT END BENTS

(Left barrier shown, right barrier similar)

Detailed
Checked

Note: This drawing is not to scale. Follow dimensions.

Sheet No. of

DATE PREPARED	10/13/2023
ROUTE	STATE MO
DISTRICT	SHEET NO. 6
COUNTY	
JOB NO.	
CONTRACT ID.	
PROJECT NO.	
BRIDGE NO.	

DESCRIPTION

DATE

MISSOURI HIGHWAYS AND TRANSPORTATION COMMISSION
105 WEST CAPITOL
JEFFERSON CITY, MO 65102
1-888-ASK-MODOT (1-888-275-6636)

BAR07_H_end_i Guidance & Alternate Details

Standard Drawing Guidance: (do not show on plans)

For skews greater than 3 degrees, use alternate details above, which substitutes a K3 bar for the end K2 bar. For skews greater than 41 degrees, two K3 bars are required.

① Dimensions are based on a 2.0% sloped deck. Subtract 1/8" for a 3/16" per foot sloped deck.

② Based on 8 1/2" slab. Adjust for different slab thickness.

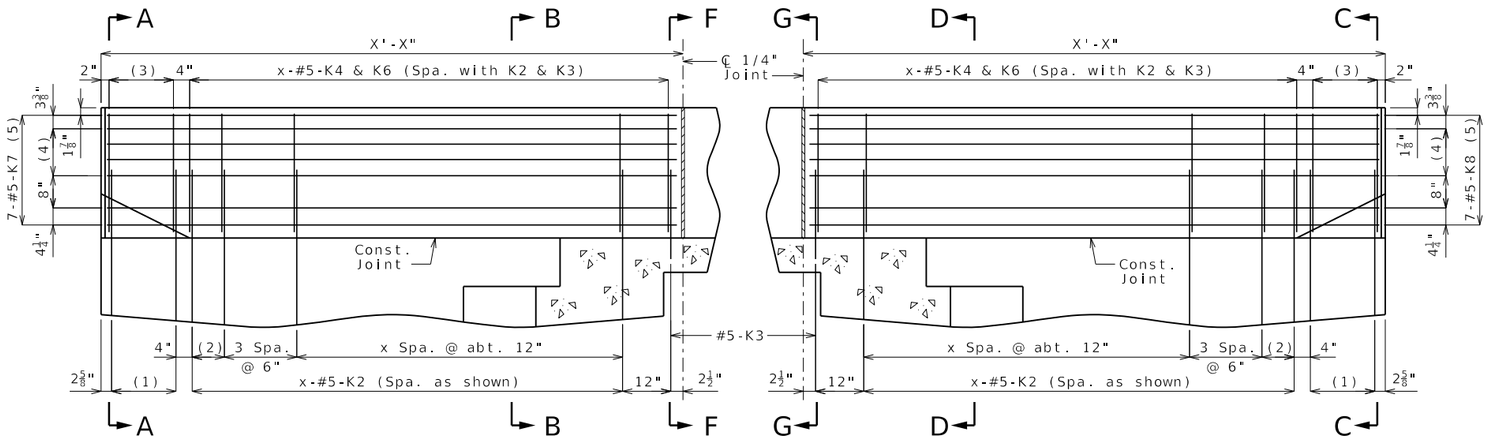

PART ELEVATION

(1) 5-#5-K1 @ 4" cts.

(2) 2 Spaces @ 4"

(3) 5-#5-K4 and 5-#5-K5, spaced with K1

(4) 3 Spaces @ 3 13/16"

(5) Spaced as shown, each face

(6) To top of bar

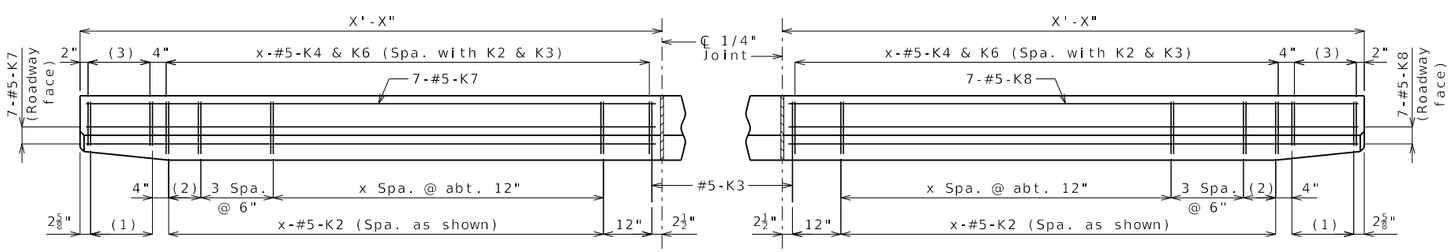

PART PLAN

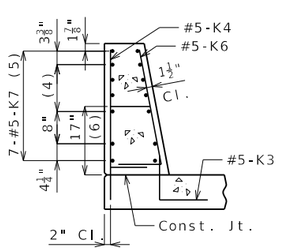

SECTION F-F

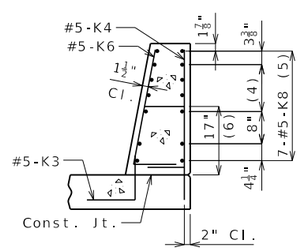

SECTION G-G

Alternate Details for Skewed Bridges Requiring K3 Bars

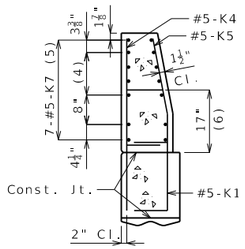

SECTION A-A

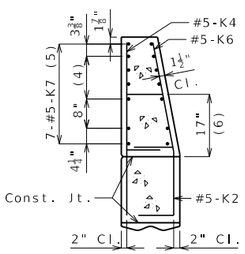

SECTION B-B

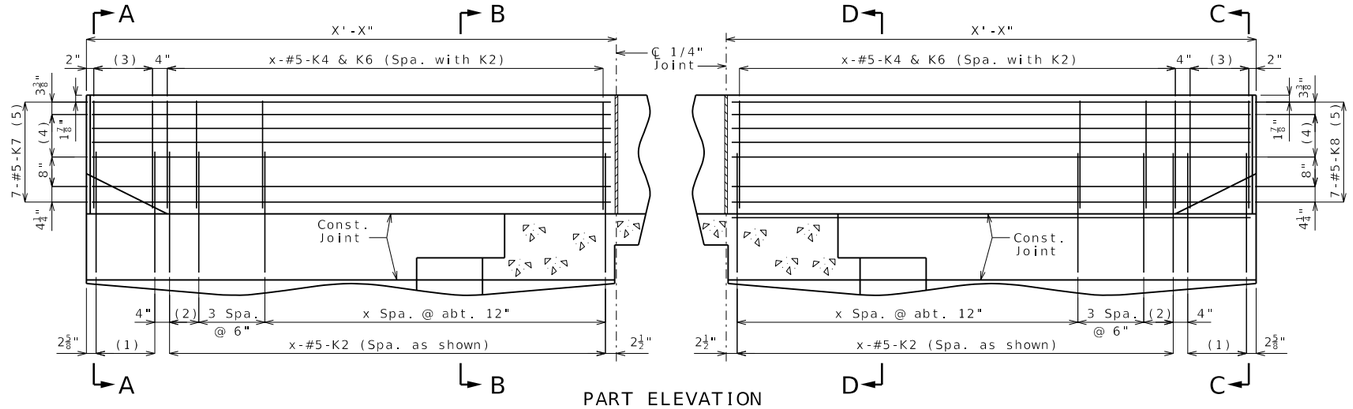

PART ELEVATION

(1) 5-#5-K1 @ 4" cts.

(2) 2 Spaces @ 4"

(3) 5-#5-K4 and 5-#5-K5, spaced with K1

(4) 3 Spaces @ $3\frac{13}{16}$"

(5) Spaced as shown, each face

(6) To top of bar

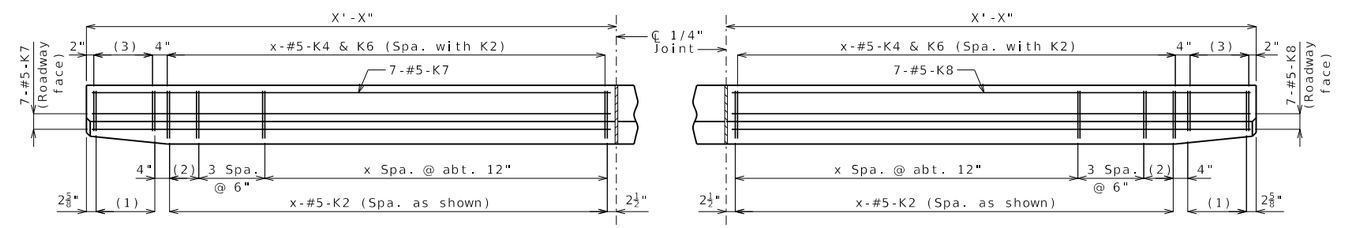

PART PLAN

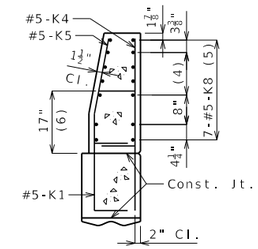

SECTION C-C

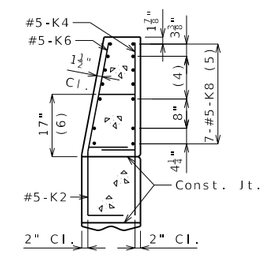

SECTION D-D

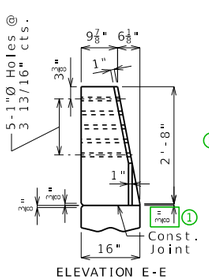

ELEVATION E-E

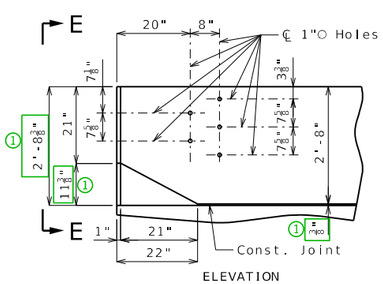

ELEVATION

Integral End Bent with Shallow Superstructure

Use when distance between upper and lower construction joints in wings is less than 25 1/2 inches.

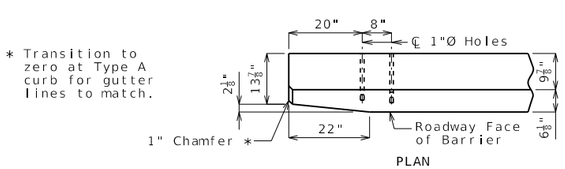

PLAN

* Transition to zero at Type A curb for gutter lines to match.

DETAILS OF GUARD RAIL ATTACHMENT

General Notes:

Concrete traffic barrier delineators shall be placed on top of the barrier as shown on Missouri Standard Plan 617.10 and in accordance with Sec 617. Delineators on bridges with two-lane, two-way traffic shall have retroreflective sheeting on both sides. Concrete traffic barrier delineators will be considered completely covered by the contract unit price for Type H Barrier.

Reinforcing Steel:

Minimum clearance to reinforcing steel shall be 1 1/2" except as shown for bars embedded into end bent.

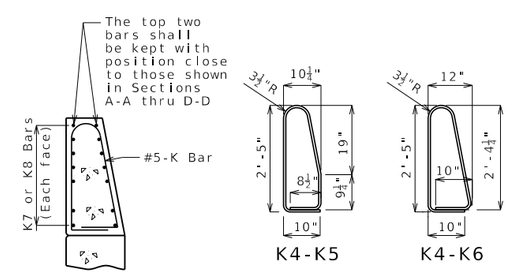

PERMISSIBLE ALTERNATE SHAPES

(Other K bars not shown for clarity)

The K4-K5 and K4-K6 bar combination may be furnished as one bar as shown, at the contractor's option.

All dimensions are out to out.

TYPE H BARRIER AT END BENTS

(Left barrier shown, right barrier similar)

Detailed
Checked

Note: This drawing is not to scale. Follow dimensions.

Sheet No. of

DATE PREPARED	
4/18/2025	
ROUTE	STATE MO
DISTRICT	SHEET NO. 7
COUNTY	
JOB NO.	
CONTRACT ID.	
PROJECT NO.	
BRIDGE NO.	

DATE	DESCRIPTION

MISSOURI HIGHWAYS AND TRANSPORTATION COMMISSION
105 WEST CAPITOL
JEFFERSON CITY, MO 65102
1-888-ASK-MODOT (1-888-275-6636)

BAR08_H_end_si Guidance & Alternate Details

Standard Drawing Guidance: (do not show on plans)

For skews greater than 3 degrees, use alternate details above, which substitutes a K3 bar for the end K2 bar. For skews greater than 41 degrees, two K3 bars are required.

(1) Dimensions are based on a 2.0% sloped deck. Subtract 1/8" for a 3/16" per foot sloped deck.

(2) Based on 8 1/2" slab. Adjust for different slab thickness.

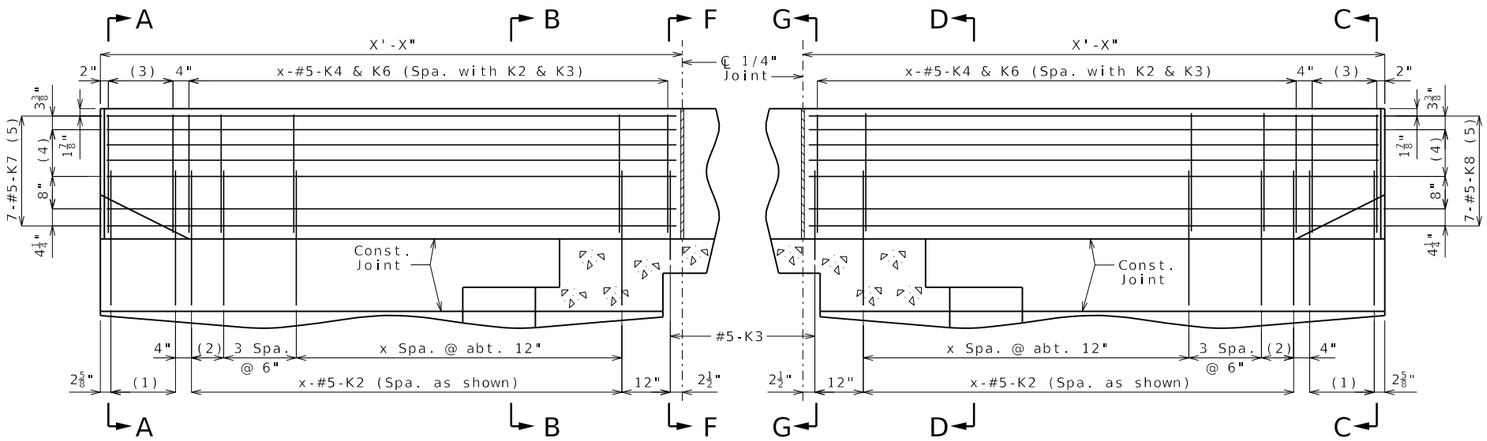

PART ELEVATION

(1) 5-#5-K1 @ 4" cts.

(2) 2 Spaces @ 4"

(3) 5-#5-K4 and 5-#5-K5, spaced with K1

(4) 3 Spaces @ $3\frac{13}{16}$"

(5) Spaced as shown, each face

(6) To top of bar

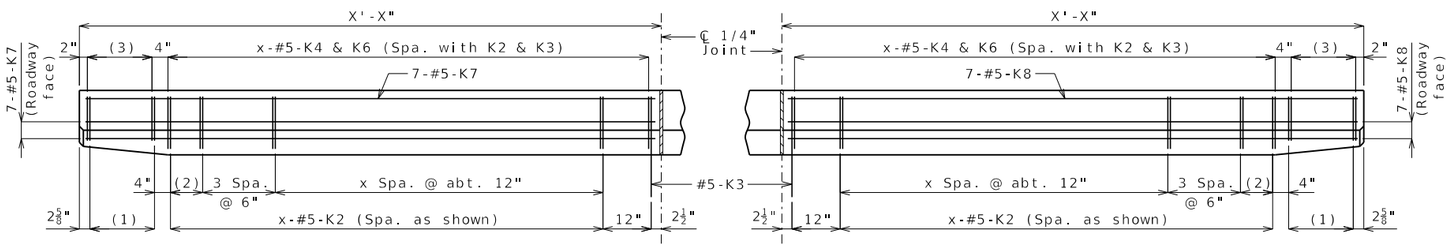

PART PLAN

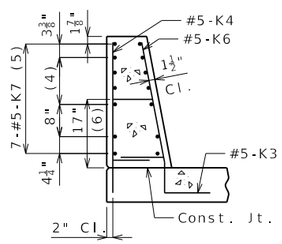

SECTION F-F

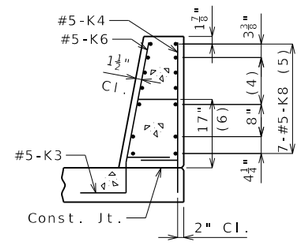

SECTION G-G

Alternate Details for Skewed Bridges Requiring K3 Bars

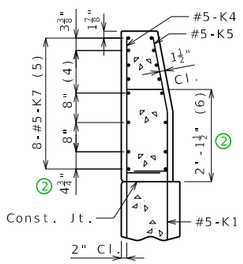

SECTION A-A

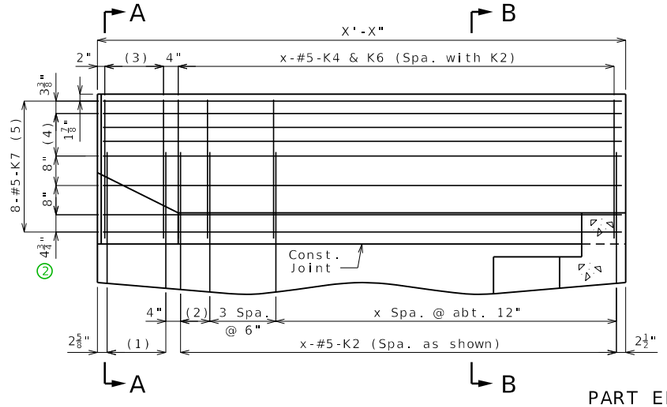

PART ELEVATION

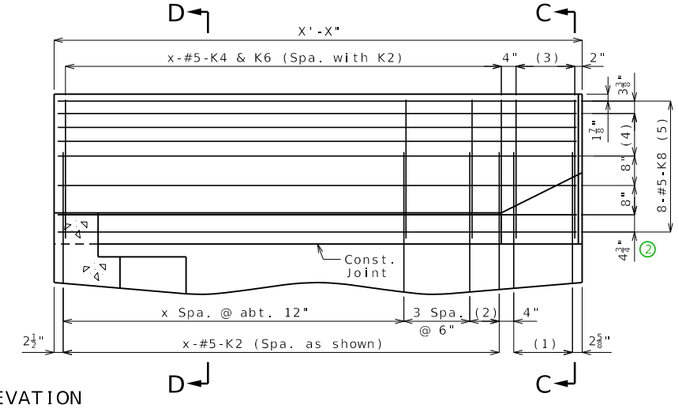

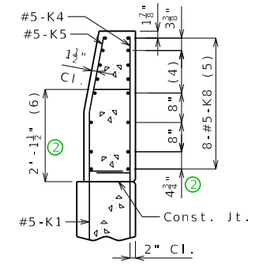

SECTION C-C

(1) 5-#5-K1 @ 4" cts.

(2) 2 Spaces @ 4"

(3) 5-#5-K4 and 5-#5-K5, spaced with K1

(4) 3 Spaces @ $3\frac{13}{16}$"

(5) Spaced as shown, each face

(6) To top of bar

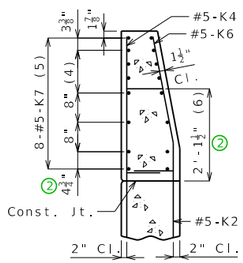

SECTION B-B

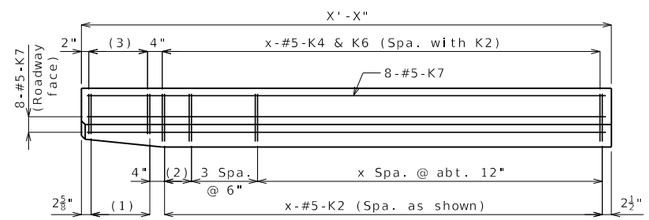

PART PLAN

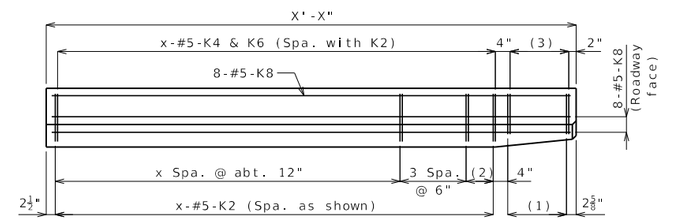

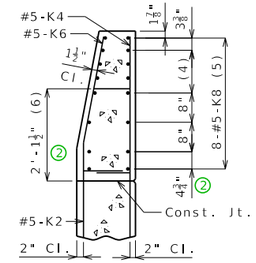

SECTION D-D

Standard Drawing Guidance: (Do not show on plans)

1 Dimensions are based on a 2.0% sloped deck. Subtract 1/8" for a 3/16" per foot sloped deck.

2 Based on 8 1/2" slab. Adjust for different slab thickness.

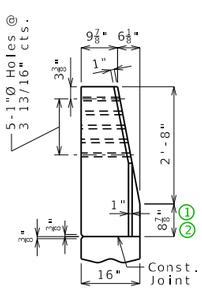

ELEVATION E-E

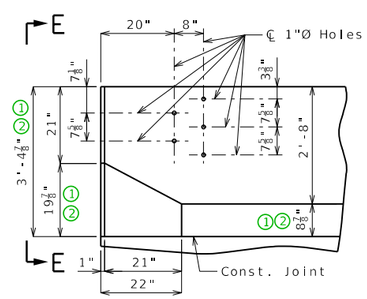

ELEVATION

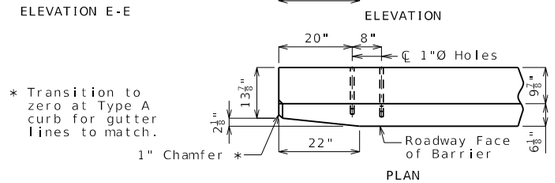

PLAN

* Transition to zero at Type A curb for gutter lines to match.

DETAILS OF GUARD RAIL ATTACHMENT

General Notes:

Concrete traffic barrier delineators shall be placed on top of the barrier as shown on Missouri Standard Plan 617.10 and in accordance with Sec 617. Delineators on bridges with two-lane, two-way traffic shall have retroreflective sheeting on both sides. Concrete traffic barrier delineators will be considered completely covered by the contract unit price for Type H Barrier.

Reinforcing Steel:

Minimum clearance to reinforcing steel shall be 1 1/2" except as shown for bars embedded into end bent.

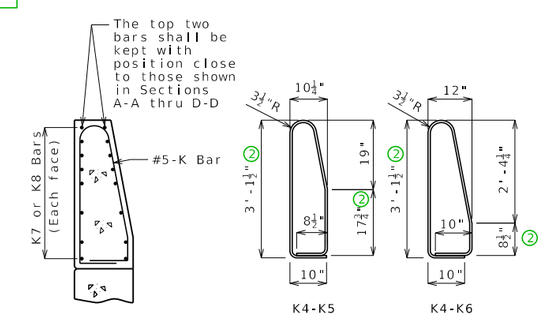

PERMISSIBLE ALTERNATE SHAPES

(Other K bars not shown for clarity)

The K4-K5 and K4-K6 bar combination may be furnished as one bar as shown, at the contractor's option.

All dimensions are out to out.

TYPE H BARRIER AT END BENTS

(Left barrier shown, right barrier similar)

Detailed
Checked

Note: This drawing is not to scale. Follow dimensions.

Sheet No. of

DATE PREPARED	
10/13/2023	
ROUTE	STATE MO
DISTRICT	SHEET NO. 8
COUNTY	
JOB NO.	
CONTRACT ID.	
PROJECT NO.	
BRIDGE NO.	

DATE	DESCRIPTION

MISSOURI HIGHWAYS AND TRANSPORTATION COMMISSION
105 WEST CAPITOL
JEFFERSON CITY, MO 65102
1-888-ASK-MODOT (1-888-275-6636)

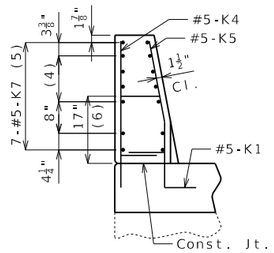

ELEVATION A-A

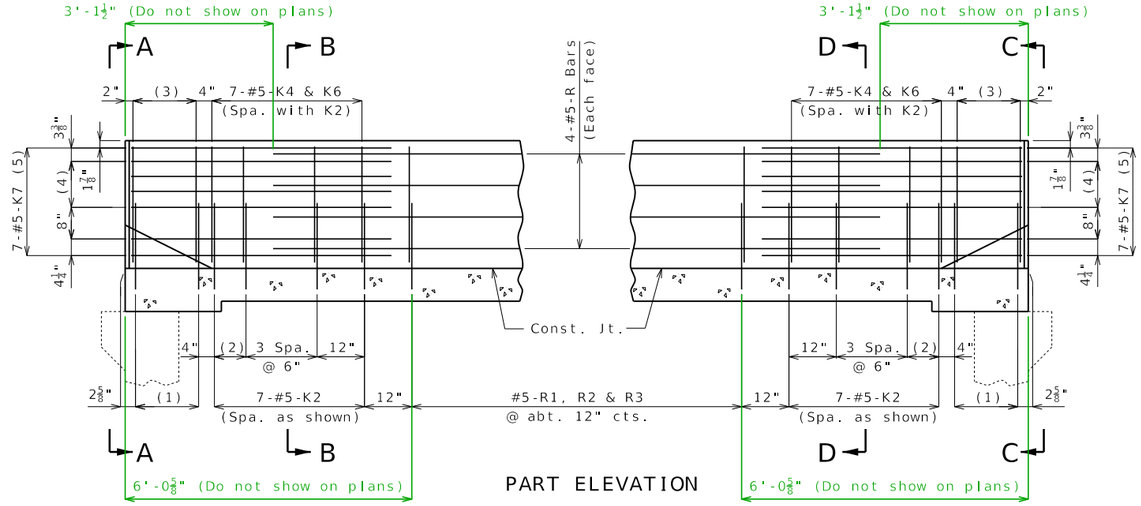

PART ELEVATION

(1) 5-#5-K1 @ 4" cts.

(2) 2 Spaces @ 4"

(3) 5-#5-K4 and 5-#5-K5, spaced with K1

(4) 3 Spaces @ 3 13/16"

(5) Spaced as shown, each face

(6) To top of bar

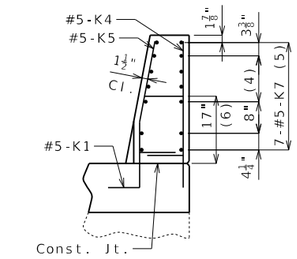

ELEVATION C-C

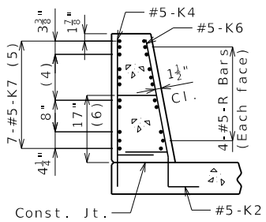

SECTION B-B

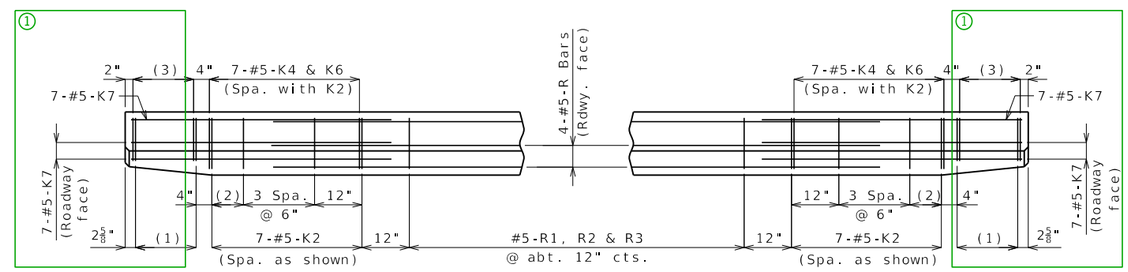

PART PLAN

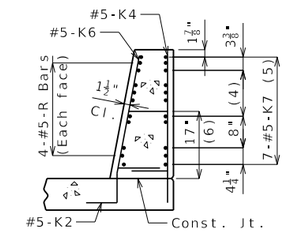

SECTION D-D

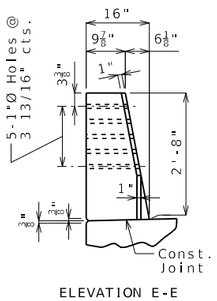

ELEVATION E-E

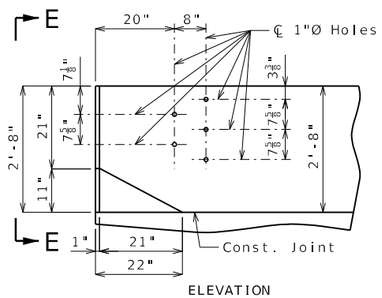

ELEVATION

Standard Drawing Guidance: (Do not show on plans)

1 Show part of existing end bent.

* Transition to zero at Type A curb for gutter lines to match.

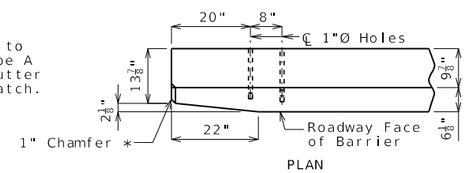

PLAN

DETAILS OF GUARD RAIL ATTACHMENT

General Notes:

Concrete traffic barrier delineators shall be placed on top of the barrier as shown on Missouri Standard Plan 617.10 and in accordance with Sec 617. Delineators on bridges with two-lane, two-way traffic shall have retroreflective sheeting on both sides. Concrete traffic barrier delineators will be considered completely covered by the contract unit price for Type H Barrier.

Reinforcing Steel:

Minimum clearance to reinforcing steel shall be 1 1/2".

Use a minimum lap of 2'-6" between K7 bars and R bars.

TYPE H BARRIER AT END BENTS

(Left barrier shown, right barrier similar)

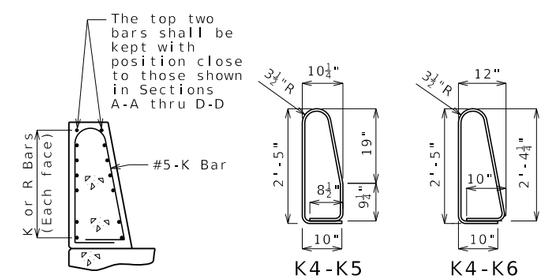

PERMISSIBLE ALTERNATE SHAPES

(Other K bars not shown for clarity)

The K4-K5 and K4-K6 bar combination may be furnished as one bar as shown, at the contractor's option.

All dimensions are out to out.

DATE PREPARED	8/18/2025
ROUTE	STATE MO
DISTRICT	SHEET NO. BAR10
COUNTY	
JOB NO.	
CONTRACT ID.	
PROJECT NO.	
BRIDGE NO.	

DESCRIPTION

DATE

MISSOURI HIGHWAYS AND TRANSPORTATION COMMISSION

105 WEST CAPITOL
JEFFERSON CITY, MO 65102
1-888-ASK-MODOT (1-888-275-6636)

Detailed
Checked

Note: This drawing is not to scale. Follow dimensions.

Sheet No. of

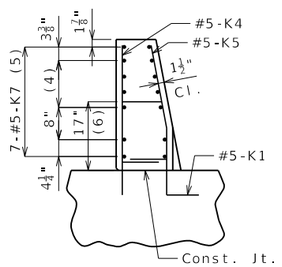

ELEVATION A-A

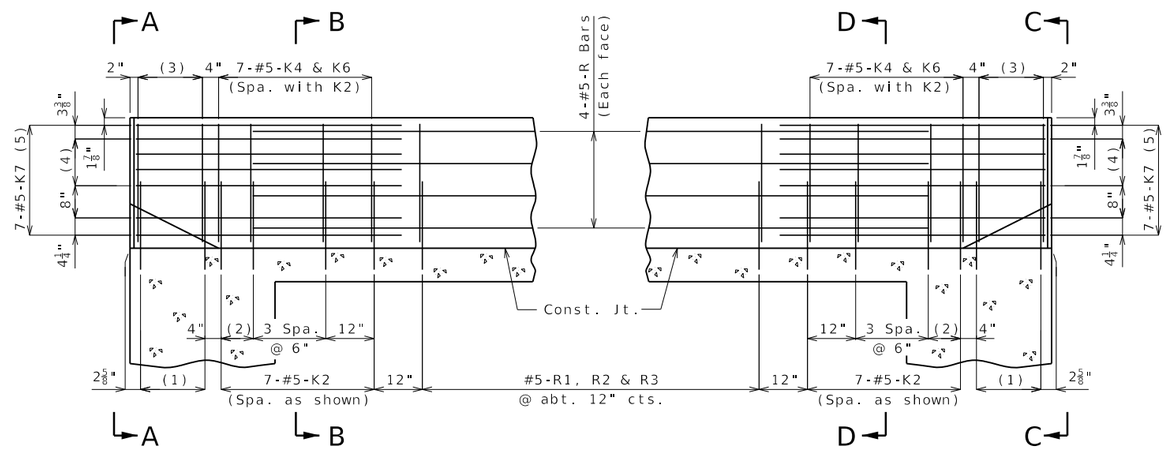

PART ELEVATION

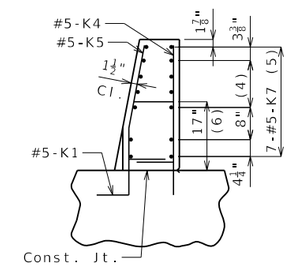

ELEVATION C-C

New bridge

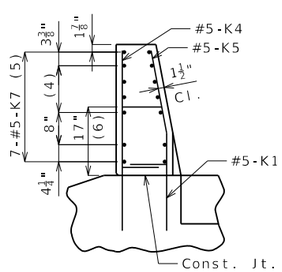

ELEVATION A-A

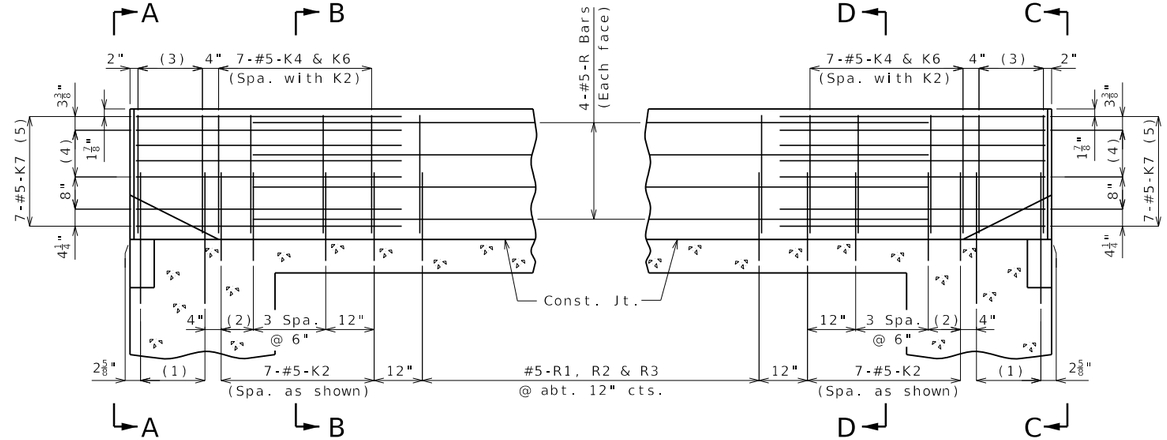

PART ELEVATION

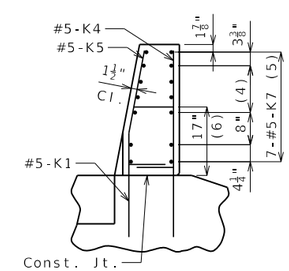

ELEVATION C-C

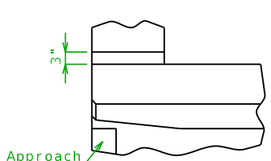

Example part plan of squared straight-wing bent

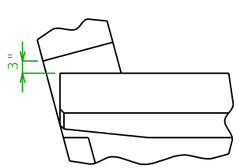

Example part plan of right-advance straight-wing bent

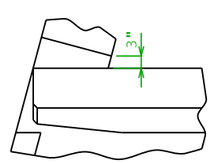

Example part plan of left-advance straight-wing bent

For K1 bars, use dimensions for integral end bent.

End bents with straight wings (elephant ear)

Standard Drawing Guidance (do not show on plans):

In the available space, draw the elevation of the left barrier showing:
- Span ranges.
- All horizontal #5-R bars in each span with all specified by bar marks.
- First & last vertical #5-R bars dimensioned with total number in barrier.
- All joints (as joint-filler joints) and centerlines with one centerline labeled as:

  ℄ $\frac{1}{4}$" Joint (Barrier only) (Typ.)

If slip forming is allowed then add the following two items:
- All #5-C bars in each span with all specified by bar marks (include asterisk)
- All fiberglass bars with bars at one location labeled as:

  #4 Textured Fiberglass Bars (Typ.) *

Adjust longitudinal dimensions note under elevation title as necessary.

List C bars in the Bill of Reinforcing Steel and note that bars are for the slip-formed option only.

Length of C1 bars is 12'-0".

Do not include #5 bars for resin anchors in the bar bill.

ELEVATION OF BARRIER

Longitudinal dimensions are horizontal.

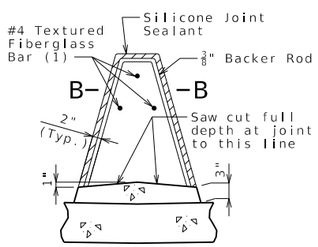

SECTION THRU SAW CUT JOINT

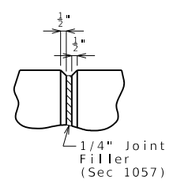

PART ELEVATION AT FORMED JOINT

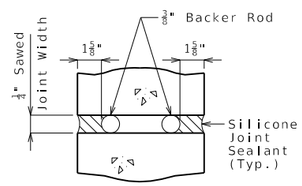

SECTION B-B

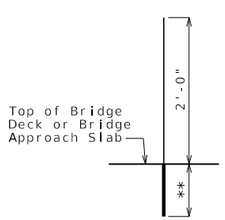

RESIN ANCHOR SYSTEM

(__ required)

** Manufacturer's embedment length (5" minimum)

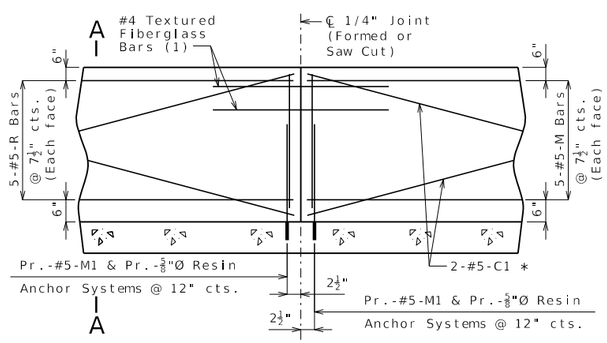

PART ELEVATION OF BARRIER

(1) Four feet long, centered on joint, slip-formed option only

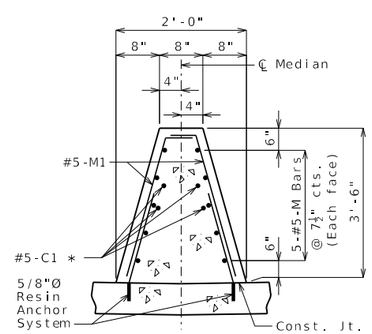

SECTION A-A

Use a minimum lap of 2'-6" for #5 horizontal barrier bars.

The cross-sectional area above the slab is 4.69 square feet.

General Notes:

* Slip-formed option only.

Conventional forming or slip forming may be used. Saw cut joints may be used with conventional forming.

Top of barrier shall be built parallel to grade with barrier joints normal to grade.

All exposed edges of barrier shall have either a 1/2-inch radius or a 3/8-inch bevel, unless otherwise noted.

Payment for all concrete and reinforcement, complete in place, will be completely covered by the contract unit price for Type C Barrier per linear foot.

Concrete in the barrier shall be Class B-1.

Measurement of barrier is to the nearest linear foot, measured along the top of slab at centerline median from end of bridge approach slab to end of bridge approach slab.

Concrete traffic barrier delineators shall be placed on top of the barrier as shown on Missouri Standard Plan 617.10 and in accordance with Sec 617. Delineators shall have retroreflective sheeting on both sides. Concrete traffic barrier delineators will be considered completely covered by the contract unit price for Type C Barrier.

Joint sealant and backer rods shall be in accordance with Sec 717 for silicone joint sealant for saw cut and formed joints.

For slip-formed option, both sides of barrier shall have a vertically broomed finish and the top shall have a transversely broomed finish.

The contractor shall use one of the qualified resin anchor systems in accordance with 1039.

Cost of furnishing and installing the resin anchor system, complete in place, will be considered completely covered by the contract unit price for Type C Barrier.

The minimum embedment depth in concrete with f'c = 4,000 psi for the resin anchor system shall be that required to meet the minimum ultimate pullout strength in accordance with Sec 1039 but shall not be less than 5 inches.

An epoxy coated #5 Grade 60 reinforcing bar shall be substituted for the 5/8-inch diameter threaded rod.

DATE PREPARED	
4/18/2025	
ROUTE	STATE MO
DISTRICT	SHEET NO. 10
COUNTY	
JOB NO.	
CONTRACT ID.	
PROJECT NO.	
BRIDGE NO.	

DATE	DESCRIPTION

MISSOURI HIGHWAYS AND TRANSPORTATION COMMISSION
105 WEST CAPITOL
JEFFERSON CITY, MO 65102
1-888-ASK-MODOT (1-888-275-6636)

TYPE C BARRIER

Detailed
Checked

Note: This drawing is not to scale. Follow dimensions.

Sheet No. of

BAR11_C_elev Alternate Details

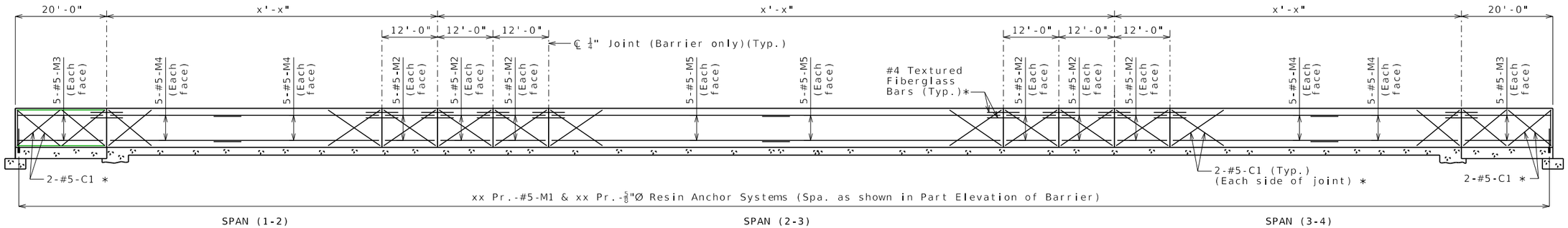

EXAMPLE ELEVATION

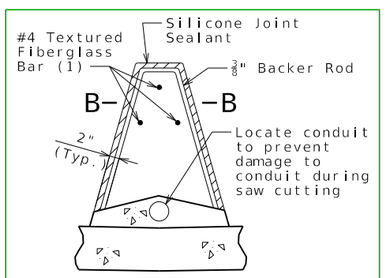

SECTION THRU SAW CUT JOINT

(Use when conduit is required)

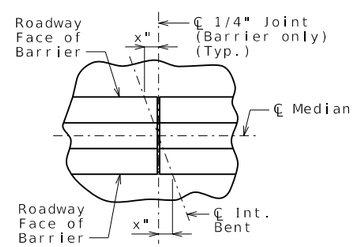

PART PLAN SHOWING JOINT LOCATION

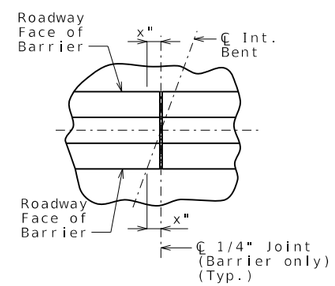

PART PLAN SHOWING JOINT LOCATION

(For skewed structures only)

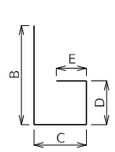

SHAPE 6
or 6S

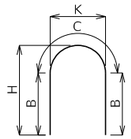

SHAPE 7

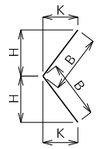

SHAPE 8
or 8S

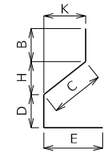

SHAPE 9
or 9S

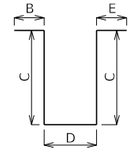

SHAPE 10
or 10S

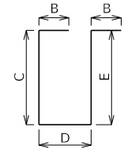

SHAPE 11
or 11S

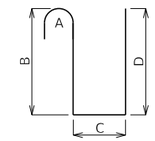

SHAPE 12

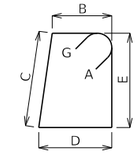

SHAPE 13S

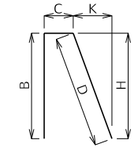

SHAPE 14
or 14S

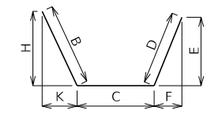

SHAPE 15
or 15S

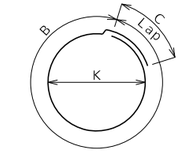

SHAPE 16

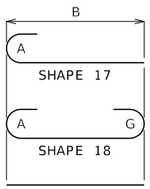

SHAPE 17
SHAPE 18
SHAPE 20

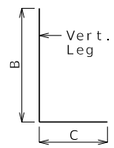

SHAPE 19
or 19S

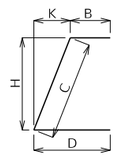

SHAPE 21
or 21S

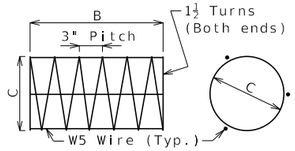

SHAPE 22

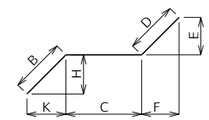

SHAPE 23
or 23S

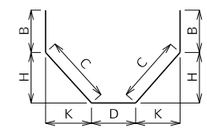

SHAPE 24
or 24S

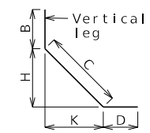

SHAPE 25
or 25S

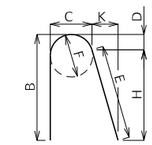

SHAPE 26

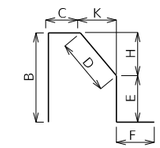

SHAPE 27S

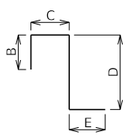

SHAPE 28
or 28S

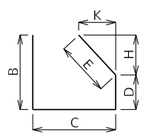

SHAPE 29
or 29S

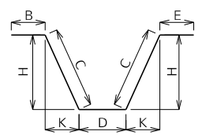

SHAPE 30
or 30S

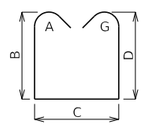

SHAPE 31S

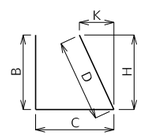

SHAPE 32
or 32S

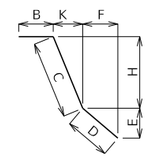

SHAPE 33
or 33S

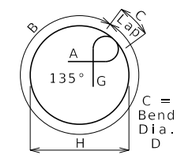

SHAPE 34S

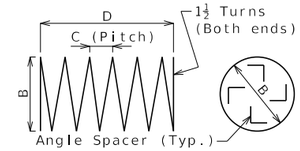

SHAPE 35 (1)

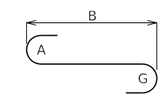

SHAPE 36

Finished Bend Diameters D and Hook Dimensions

Standard Pin Bend Shapes

Size	Case	D	A or G 90°	A or G 180°	J 180°
#4	1	3"	8"	6"	4"
#5	1	3¾"	10"	7"	5"
#6	1	4½"	12"	8¼"	6"
#7	2	5¼"	14"	9¾"	7"
	3	7"	15"	11½"	8¾"
#8	2	6"	16"	11"	8"
	3	8"	17"	13¼"	10"
#9	1	9½"	19½"	15½"	11¾"
#10	1	10¾"	22"	17½"	13¼"
#11	1	12"	24½"	19½"	14⅞"
#14	1	18¼"	31¼"	27½"	21⅝"
#18	1	24"	41½"	36¼"	28½"

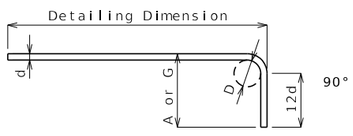

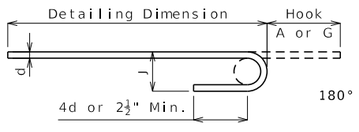

Stirrup Pin Bend Shapes (S)

Size	Case	D	A or G 90°	A or G 135°	A or G 180°	H 135°	J 180°
#4	2	2"	4½"	4½"	5"	2⅝"	3"
	3	3"	5"	5¼"	6"	3"	4"
#5	2	2½"	5¾"	5¾"	5¾"	3⅝"	3¾"
	3	3¾"	6¼"	6½"	7"	3⅞"	5"
#6	1	4½"	12"	7¾"	8¼"	4⅜"	6"

Applicable for all grades of steel.

Case 1 applies to all reinforcement. Case 2 applies to all reinforcement except for galvanized bars. Case 3 applies to galvanized bars only.

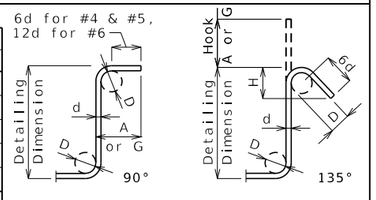

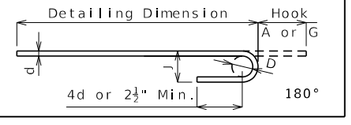

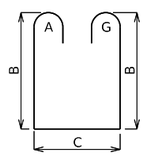

SHAPE 37S

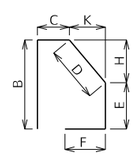

SHAPE 38S

BENDING DIAGRAMS

All dimensions are out to out.

Shapes ending with an S shall be bent in accordance with stirrup pin bend shapes.

Unless otherwise noted, finished bending diameter D is the same for all bends of a shape.

(1) Shall be a deformed or plain spiral bar or wire.

Four angle or channel spacers are required for each column spiral. Spacers are to be placed on inside of spirals. Length and weight of column spirals do not include splices or spacers.

DATE PREPARED	11/13/2024
ROUTE	
STATE	MO
DISTRICT	
SHEET NO.	1
COUNTY	
JOB NO.	
CONTRACT ID.	
PROJECT NO.	
BRIDGE NO.	

DESCRIPTION

DATE

MISSOURI HIGHWAYS AND TRANSPORTATION COMMISSION
105 WEST CAPITOL
JEFFERSON CITY, MO 65102
1-888-ASK-MODOT (1-888-275-6636)

BENDING DIAGRAMS AND REINFORCING STEEL TOTALS

Detailed
Checked

Note: This drawing is not to scale. Follow dimensions.

Sheet No. of

	Reinforcing Steel Totals (Pounds)								
		Substructure		Superstructure				Entire Bridge	
				Slab			Slip		
	Size	Plain	Galv.	Plain	Galv.	Barrier	Form	Plain	Galv.
By Size	W5	0	0	0	0	0	0	0	0
	4	0	0	0	0	0	0	0	0
	5	0	0	0	0	0	0	0	0
	6	0	0	0	0	0	0	0	0
	7	0	0	0	0	0	0	0	0
	8	0	0	0	0	0	0	0	0
	9	0	0	0	0	0	0	0	0
	10	0	0	0	0	0	0	0	0
	11	0	0	0	0	0	0	0	0
	14	0	0	0	0	0	0	0	0
	18	0	0	0	0	0	0	0	0
By Type		0	0	0	0	0	0	0	0

All superstructure reinforcing steel shall be galvanized unless otherwise specified.

Products used to repair damaged zinc coating shall not contain aluminum.

Galvanized Reinforcement

	Reinforcing Steel Totals (Pounds)								
		Substructure		Superstructure				Entire Bridge	
				Slab			Slip		
	Size	Plain	Epoxy	Plain	Epoxy	Barrier	Form	Plain	Epoxy
By Size	W5	0	0	0	0	0	0	0	0
	4	0	0	0	0	0	0	0	0
	5	0	0	0	0	0	0	0	0
	6	0	0	0	0	0	0	0	0
	7	0	0	0	0	0	0	0	0
	8	0	0	0	0	0	0	0	0
	9	0	0	0	0	0	0	0	0
	10	0	0	0	0	0	0	0	0
	11	0	0	0	0	0	0	0	0
	14	0	0	0	0	0	0	0	0
	18	0	0	0	0	0	0	0	0
By Type		0	0	0	0	0	0	0	0

All superstructure reinforcing steel shall be epoxy coated unless otherwise specified.

Epoxy Coated Reinforcement

Bill of Reinforcing Steel

No. Req.	Size/ Mark	Location	Codes C	Codes SH	Codes V	Dimensions B ft in.	C ft in.	D ft in.	E ft in.	F ft in.	H ft in.	K ft in.	Nom. Length ft in.	Actual Length ft in.	Weight lb

Bill of Reinforcing Steel

No. Req.	Size/ Mark	Location	Codes C	Codes SH	Codes V	Dimensions B ft in.	C ft in.	D ft in.	E ft in.	F ft in.	H ft in.	K ft in.	Nom. Length ft in.	Actual Length ft in.	Weight lb

Standard Drawing Guidance (Do not show on plans)

Delete unused borders (Geometry, Models, and Saved Views).

For bar lists with 17 or fewer lines of text, standard drawing *BILL04_ShortBarbill* may be used in place of *BILL01* & *BILL02*.

1 Use ASTM A706 for *new* bridges in seismic design categories B, C and D. Use ASTM A615 for all other structures, and for new bridges in seismic design category A.

Move or delete this guidance box before placing barbill data.

Nominal lengths are based on out to out dimensions shown in bending diagrams and are listed to the nearest inch for fabricator's use. Actual lengths are measured along centerline bar to the nearest inch. Weights are based on actual lengths.

For bending diagrams and steel reinforcing totals, see Sheet No. _.

Detailed
Checked

Reinforcing steel (ASTM A615 A706 Grade 60) fy = 60,000 psi
1

BILL OF REINFORCING STEEL

Note: This drawing is not to scale. Follow dimensions. Sheet No. of

Codes: C = Required coatings, where E = Epoxy Coated and G = Galvanized.

SH = Required shape, see bending diagrams.

V = Sets of varied bars and number of bars of each length. Bar dimensions vary in equal increments between dimensions shown on this line and the following line and the actual length dimension shown on this line and the following line vary by the specified increment.

DATE PREPARED 12/1/2025

ROUTE	STATE MO
DISTRICT	SHEET NO. 2

COUNTY

JOB NO.

CONTRACT ID.

PROJECT NO.

BRIDGE NO.

DESCRIPTION	DATE

MISSOURI HIGHWAYS AND TRANSPORTATION COMMISSION
105 WEST CAPITOL
JEFFERSON CITY, MO 65102
1-888-ASK-MODOT (1-888-275-6636)

Bill of Reinforcing Steel

No. Req.	Size/ Mark	Location	Codes C	Codes SH	Codes V	Dimensions B ft in.	C ft in.	D ft in.	E ft in.	F ft in.	H ft in.	K ft in.	Nom. Length ft in.	Actual Length ft in.	Weight lb

Bill of Reinforcing Steel

No. Req.	Size/ Mark	Location	Codes C	Codes SH	Codes V	Dimensions B ft in.	C ft in.	D ft in.	E ft in.	F ft in.	H ft in.	K ft in.	Nom. Length ft in.	Actual Length ft in.	Weight lb

Nominal lengths are based on out to out dimensions shown in bending diagrams and are listed to the nearest inch for fabricator's use. Actual lengths are measured along centerline bar to the nearest inch. Weights are based on actual lengths.

For bending diagrams and steel reinforcing totals, see Sheet No. _.

Detailed
Checked

Reinforcing steel (ASTM A615 A706 Grade 60) fy = 60,000 psi

(Use ASTM A706 for new bridges in seismic design categories B, C and D. Use ASTM A615 for all other structures, and for new bridges in seismic design category A.)

BILL OF REINFORCING STEEL

Note: This drawing is not to scale. Follow dimensions.

Sheet No. of

Codes: C = Required coatings, where E = Epoxy Coated and G = Galvanized.

SH = Required shape, see bending diagrams.

V = Sets of varied bars and number of bars of each length. Bar dimensions vary in equal increments between dimensions shown on this line and the following line and the actual length dimension shown on this line and the following line vary by the specified increment.

DATE PREPARED
12/1/2025

ROUTE	STATE
	MO
DISTRICT	SHEET NO.
	2

COUNTY

JOB NO.

CONTRACT ID.

PROJECT NO.

BRIDGE NO.

DESCRIPTION	DATE

MISSOURI HIGHWAYS AND TRANSPORTATION COMMISSION
105 WEST CAPITOL
JEFFERSON CITY, MO 65102
1-888-ASK-MODOT (1-888-275-6636)

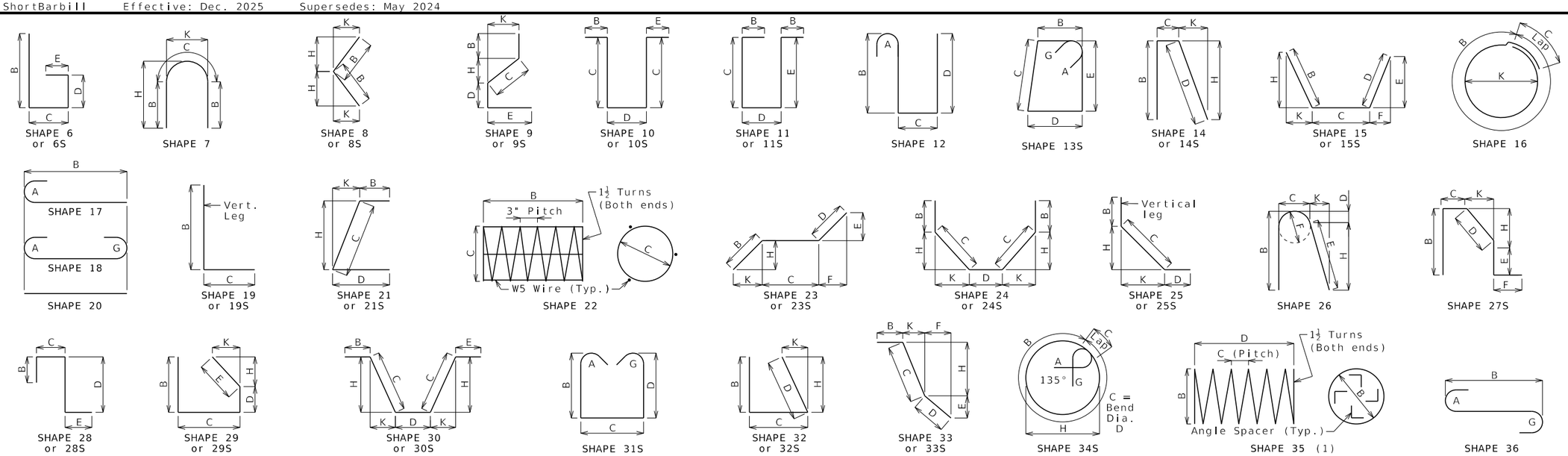

Finished Bend Diameters D and Hook Dimensions

Standard Pin Bend Shapes

Size	Case	D	A or G 90°	A or G 180°	J 180°
#4	1	3"	8"	6"	4"
#5	1	3¾"	10"	7"	5"
#6	1	4½"	12"	8¼"	6"
#7	2	5¼"	14"	9¾"	7"
	3	7"	15"	11½"	8¾"
#8	2	6"	16"	11"	8"
	3	8"	17"	13¼"	10"
#9	1	9½"	19½"	15½"	11¾"
#10	1	10¾"	22"	17½"	13¼"
#11	1	12"	24½"	19½"	14⅞"
#14	1	18¼"	31¼"	27¼"	21⅝"
#18	1	24"	41½"	36¼"	28½"

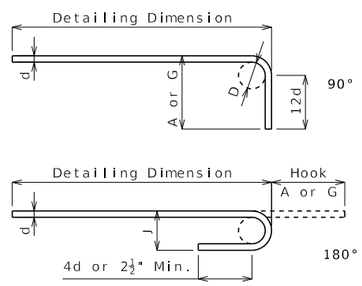

Stirrup Pin Bend Shapes (S)

Size	Case	D	A or G 90°	A or G 135°	A or G 180°	H 135°	J 180°
#4	2	2"	4½"	4½"	5"	2⅞"	3"
	3	3"	5"	5¼"	6"	3"	4"
#5	2	2½"	5¾"	5¾"	5¾"	3⅝"	3¾"
	3	3¾"	6¼"	6½"	7"	3⅞"	5"
#6	1	4½"	12"	7¾"	8¼"	4⅜"	6"

Applicable for all grades of steel.

Case 1 applies to all reinforcement. Case 2 applies to all reinforcement except for galvanized bars. Case 3 applies to galvanized bars only.

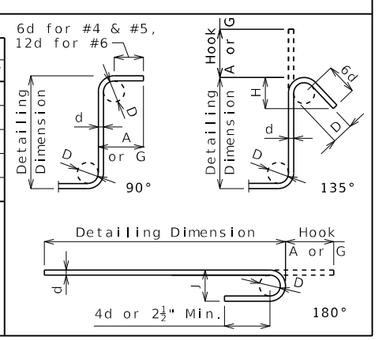

BENDING DIAGRAMS

Nominal lengths are based on out to out dimensions shown in bending diagrams and are listed to the nearest inch for fabricator's use. Actual lengths are measured along centerline bar to the nearest inch. Weights are based on actual lengths.

Reinforcing steel (ASTM A615 ① A706 Grade 60) fy = 60,000 psi

Codes: C = Required coatings, where E = Epoxy Coated and G = Galvanized.

SH = Required shape, see bending diagrams.

V = Sets of varied bars and number of bars of each length. Bar dimensions vary in equal increments between dimensions shown on this line and the following line and the actual length dimension shown on this line and the following line vary by the specified increment.

All dimensions are out to out.

Shapes ending with an S shall be bent in accordance with stirrup pin bend shapes.

Unless otherwise noted, finished bending diameter D is the same for all bends of a shape.

(1) Shall be a deformed or plain spiral bar or wire.

Four angle or channel spacers are required for each column spiral. Spacers are to be placed on inside of spirals. Length and weight of column spirals do not include splices or spacers.

Modify as needed. Sizes with 0 could be removed.

Reinforcing Steel Totals (Pounds)

	Size	Substructure Plain	Substructure Epoxy	Superstructure Slab	Superstructure Barrier	Superstructure Slip Form	Entire Bridge Plain	Entire Bridge Epoxy
By Size	W5	0	0	0	0	0	0	0
	4	0	0	0	0	0	0	0
	5	0	0	0	0	0	0	0
	6	0	0	0	0	0	0	0
	7	0	0	0	0	0	0	0
By Type		0	0	0	0	0	0	0

All superstructure reinforcing steel shall be epoxy coated unless otherwise specified.

Bill of Reinforcing Steel

No. Req.	Size/ Mark	Location	Codes C	Codes SH	Codes V	B ft in.	C ft in.	D ft in.	E ft in.	F ft in.	H ft in.	K ft in.	Nom. Length ft in.	Actual Length ft in.	Weight lb

Guidance (Do not show on plans):

Paste the Barbill program outputs out to the side, drop them, and copy and paste and/or modify as needed.

① Use ASTM A706 for *new* bridges in seismic design categories B, C and D. Use ASTM A615 for all other structures, and for new bridges in seismic design category A.

BILL OF REINFORCING STEEL

Detailed
Checked

Note: This drawing is not to scale. Follow dimensions.

Sheet No. of

DATE PREPARED	12/1/2025
ROUTE	STATE MO
DISTRICT	SHEET NO. 000
COUNTY	
JOB NO.	
CONTRACT ID.	
PROJECT NO.	
BRIDGE NO.	

DESCRIPTION

DATE

MISSOURI HIGHWAYS AND TRANSPORTATION COMMISSION
105 WEST CAPITOL
JEFFERSON CITY, MO 65102
1-888-ASK-MODOT (1-888-275-6636)

SEC/SUR x TWP x RGE x

U.I.P. & REHABILITATE EXISTING (x', x') X SPANS

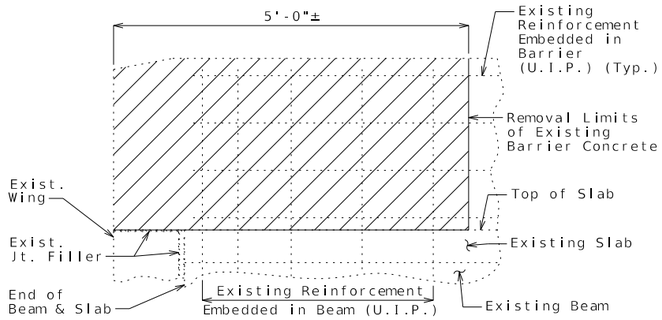

PART ELEVATION SHOWING CONCRETE REMOVAL

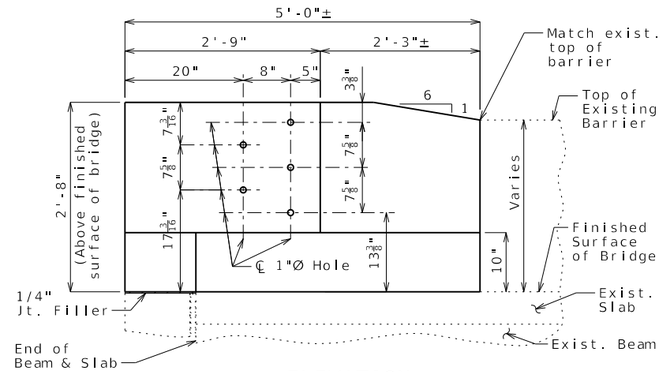

ELEVATION

No Wearing Surface

Guidance: (Do not show on plans.)

Substitute alternate Plan for skewed structures.

Modify details as needed to suit your structure.

Use with BEM01-2 & BEM01-3 (Bill of Reinforcing Steel).

Estimated Quantities

Item		Total
Barrier End Modification	each	4

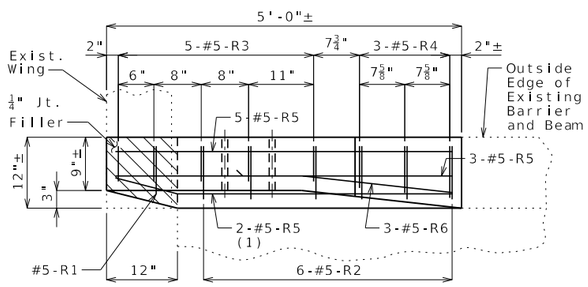

PLAN (3)

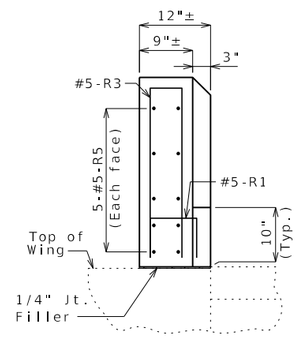

ELEVATION A-A

(1) Bend in field.

(2) 2 Spa. @ 4½"

(3) Existing reinforcement not shown for clarity.

(4) Existing longitudinal reinforcement not shown for clarity.

(5) Existing reinforcement embedded in beam (U.I.P.) (Bend in field as needed) (Typ.)

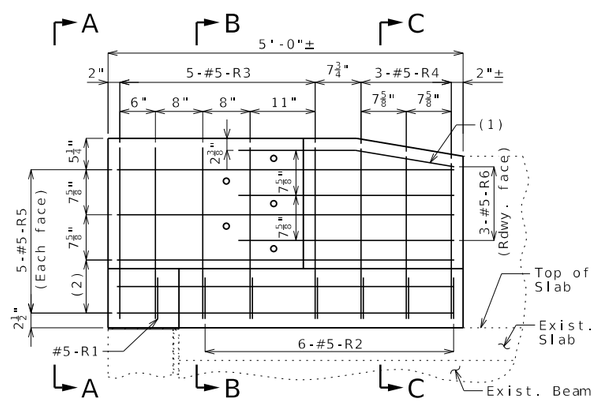

ELEVATION SHOWING REINFORCEMENT (3)

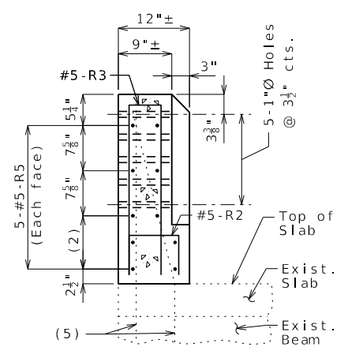

SECTION B-B (4)

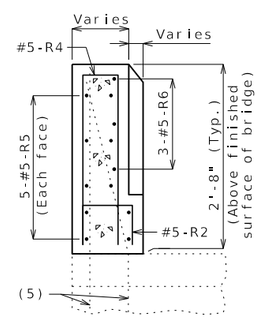

SECTION C-C (4)

General Notes:

Design Specifications:
2002 AASHTO LFD (17th Ed.) Standard Specifications

Design Unit Stresses:
Class B-1 Concrete f'c = 4,000 psi
Reinforcing Steel (Grade 60) fy = 60,000 psi

Reinforcing Steel:
Minimum clearance to reinforcing steel shall be 1 1/2", unless otherwise shown.

Miscellaneous:
One lane of traffic shall remain open during construction. See roadway plans for traffic control.

All exposed edges of barrier shall have either a 1/2-inch radius or a 3/8-inch bevel, unless otherwise shown.

Outline of existing work is indicated by light dashed lines. Heavy lines indicate new work.

All reinforcement in barrier end modification shall be epoxy coated.

Bars bonded in existing concrete not removed shall be cleanly stripped and embedded into new concrete where possible. If length is available, existing bars shall extend into new concrete at least 40 diameters for plain bars and 30 diameters for deformed bars, unless otherwise noted.

The area exposed by the removal of concrete and not covered with new concrete shall be coated with a qualified special mortar in accordance with Sec 704.

Cost of removing existing barrier concrete, and cost of furnishing and installing new concrete, new reinforcing steel, and any other work incidental to the barrier end modification, complete in place, will be considered completely covered by the contract unit price for Barrier End Modification.

BARRIER MODIFICATION FOR GUARDRAIL ATTACHMENT

REPAIRS TO BRIDGE:
ROUTE _ OVER
ROUTE _ FROM ROUTE _ TO ROUTE _
ABOUT _ MILES _ OF ROUTE _
BEGINNING STATION x+x.x± (MATCH EXISTING)

DATE PREPARED	
5/7/2024	
ROUTE	STATE MO
DISTRICT	SHEET NO. 000
COUNTY	
JOB NO.	
CONTRACT ID.	
PROJECT NO.	
BRIDGE NO.	

DATE	DESCRIPTION

MISSOURI HIGHWAYS AND TRANSPORTATION COMMISSION
105 WEST CAPITOL
JEFFERSON CITY, MO 65102
1-888-ASK-MODOT (1-888-275-6636)

Detailed
Checked

Note: This drawing is not to scale. Follow dimensions.

BEM01-1_EndMod_NoWS Alternate Details

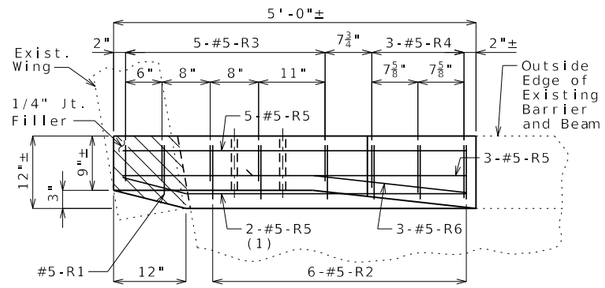

Skewed Plan

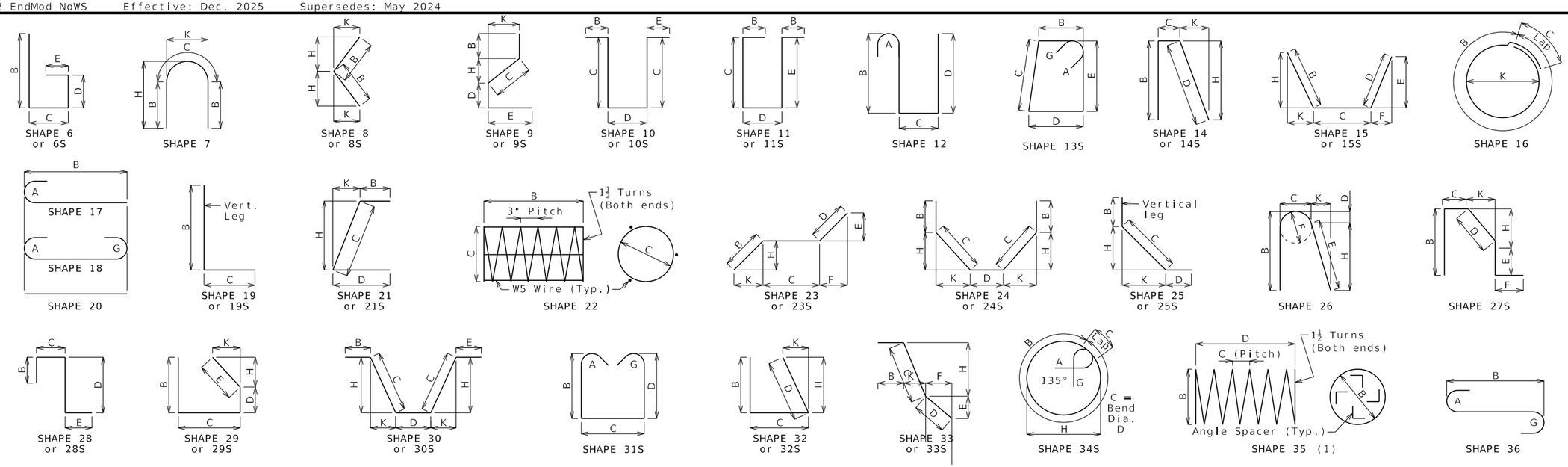

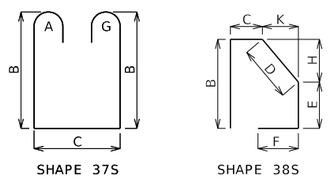

Finished Bend Diameters D and Hook Dimensions

Standard Pin Bend Shapes

Size	Case	D	A or G 90°	A or G 180°	J 180°
#4	1	3"	8"	6"	4"
#5	1	3¾"	10"	7"	5"
#6	1	4½"	12"	8¼"	6"
#7	2	5¼"	14"	9¾"	7"
	3	7"	15"	11½"	8¾"
#8	2	6"	16"	11"	8"
	3	8"	17"	13¼"	10"
#9	1	9½"	19½"	15½"	11¾"
#10	1	10¾"	22"	17½"	13¼"
#11	1	12"	24½"	19½"	14⅞"
#14	1	18¼"	31¼"	27½"	21⅝"
#18	1	24"	41½"	36¼"	28½"

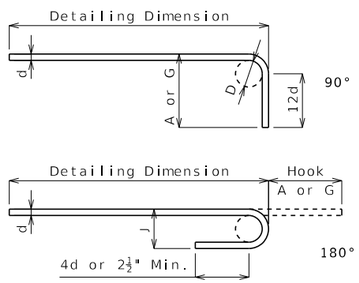

Stirrup Pin Bend Shapes (S)

Size	Case	D	A or G 90°	A or G 135°	A or G 180°	H 135°	J 180°
#4	2	2"	4½"	4½"	5"	2⅞"	3"
	3	3"	5"	5¼"	6"	3"	4"
#5	2	2½"	5¾"	5¾"	5¾"	3⅝"	3¾"
	3	3¾"	6¼"	6½"	7"	3⅞"	5"
#6	1	4½"	12"	7¾"	8¼"	4⅝"	6"

Applicable for all grades of steel.

Case 1 applies to all reinforcement. Case 2 applies to all reinforcement except for galvanized bars. Case 3 applies to galvanized bars only.

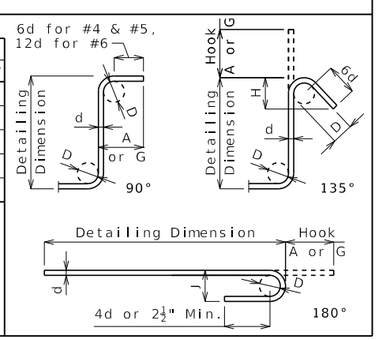

BENDING DIAGRAMS

Nominal lengths are based on out to out dimensions shown in bending diagrams and are listed to the nearest inch for fabricator's use. Actual lengths are measured along centerline bar to the nearest inch. Weights are based on actual lengths.

Reinforcing steel (ASTM A615 Grade 60) fy = 60,000 psi

Codes: C = Required coatings, where E = Epoxy Coated and G = Galvanized.

SH = Required shape, see bending diagrams.

V = Sets of varied bars and number of bars of each length. Bar dimensions vary in equal increments between dimensions shown on this line and the following line and the actual length dimension shown on this line and the following line vary by the specified increment.

All dimensions are out to out.

Shapes ending with an S shall be bent in accordance with stirrup pin bend shapes.

Unless otherwise noted, finished bending diameter D is the same for all bends of a shape.

(1) Shall be a deformed or plain spiral bar or wire.

Four angle or channel spacers are required for each column spiral. Spacers are to be placed on inside of spirals. Length and weight of column spirals do not include splices or spacers.

Reinforcing Steel Totals (Pounds)

	Size	Substructure Plain	Substructure Epoxy	Superstructure Slab	Superstructure Barrier	Superstructure Slip Form	Entire Bridge Plain	Entire Bridge Epoxy
By Size	4	0	0	0	0	0	0	0
	5	0	0	0	453	0	0	453
	6	0	0	0	0	0	0	0
	7	0	0	0	0	0	0	0
	8	0	0	0	0	0	0	0
By Type		0	0	0	453	0	0	453

All superstructure reinforcing steel shall be epoxy coated unless otherwise specified.

Bill of Reinforcing Steel

No. Req.	Size/ Mark	Location	Codes C	Codes SH	Codes V	Dimensions B ft in.	C ft in.	D ft in.	E ft in.	F ft in.	H ft in.	K ft in.	Nom. Length ft in.	Actual Length ft in.	Weight lb
		End Post Mod.													
4	5 R1	MODIFIED END	E	10S			7.00	8.00					1 10	1 7	7
24	5 R2	MODIFIED END	E	10S			7.00	9.00					1 11	1 8	42
20	5 R3	MODIFIED END	E	10S			2 5.00	6.00					5 4	5 1	106
12	5 R4	MODIFIED END	E	10S	4		2 4.75	7.00					5 5	5 2	
		Incr. = 2.000"					2 2.25	8.50					5 1	4 10	63
40	5 R5	MODIFIED END	E	20		4 9.00							4 9	4 9	198
12	5 R6	MODIFIED END	E	15S		11.25	2 1.50				1.25	11.25	3 1	2 11	37

BENDING DIAGRAMS AND REINFORCING STEEL TOTALS

Detailed
Checked

Note: This drawing is not to scale. Follow dimensions.

DATE PREPARED 12/1/2025
ROUTE | STATE MO
DISTRICT | SHEET NO. 000
COUNTY
JOB NO.
CONTRACT ID.
PROJECT NO.
BRIDGE NO.

DESCRIPTION | DATE

MISSOURI HIGHWAYS AND TRANSPORTATION COMMISSION
105 WEST CAPITOL
JEFFERSON CITY, MO 65102
1-888-ASK-MODOT (1-888-275-6636)

SEC/SUR x TWP x RGE x

U.I.P. & REHABILITATE EXISTING (x', x') X SPANS

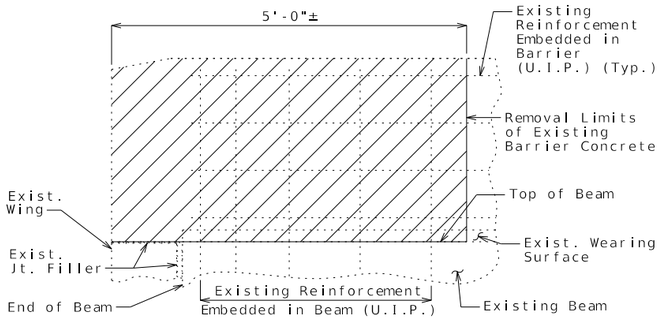

PART ELEVATION SHOWING CONCRETE REMOVAL

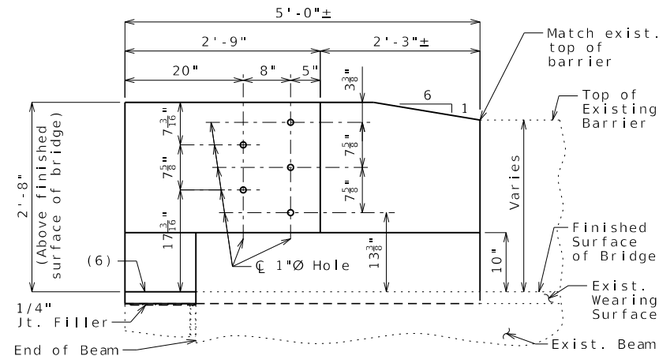

ELEVATION

Existing Wearing Surface

Guidance: (Do not show on plans.)

Substitute alternate Plan for skewed structures.

Modify details as needed to suit your structure.

Use with BEM02-2 & BEM02-3 (Bill of Reinforcing Steel).

Estimated Quantities

Item		Total
Barrier End Modification	each	4

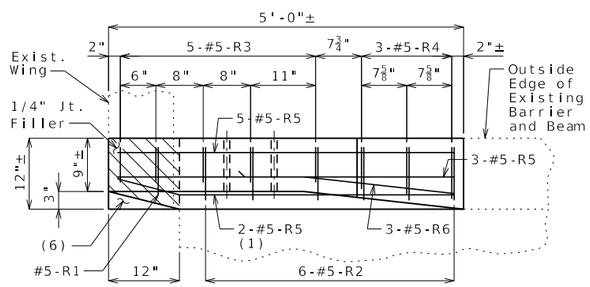

PLAN (3)

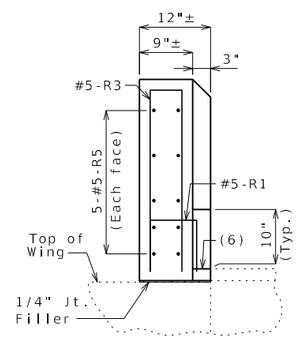

ELEVATION A-A

(1) Bend in field.

(2) 2 Spa. @ 4½"

(3) Existing reinforcement not shown for clarity.

(4) Existing longitudinal reinforcement not shown for clarity.

(5) Existing reinforcement embedded in beam (U.I.P.) (Bend in field as needed) (Typ.)

(6) Fill with mortar or concrete.

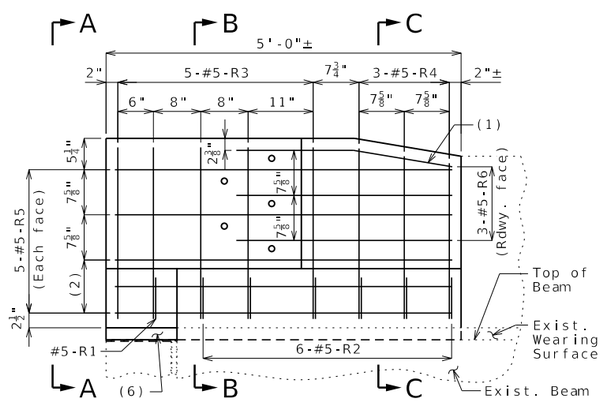

ELEVATION SHOWING REINFORCEMENT (3)

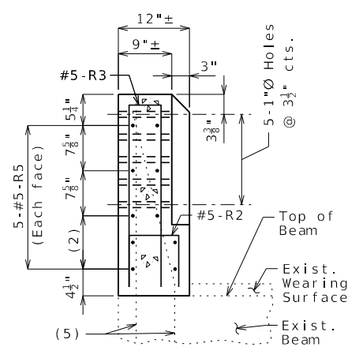

SECTION B-B (4)

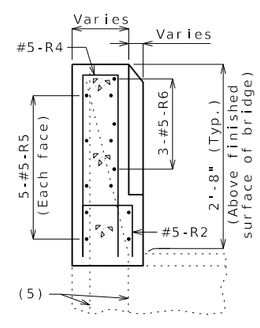

SECTION C-C (4)

General Notes:

Design Specifications:
2002 AASHTO LFD (17th Ed.) Standard Specifications

Design Unit Stresses:
Class B-1 Concrete f'c = 4,000 psi
Reinforcing Steel (Grade 60) fy = 60,000 psi

Reinforcing Steel:
Minimum clearance to reinforcing steel shall be 1 1/2", unless otherwise shown.

Miscellaneous:
One lane of traffic shall remain open during construction. See roadway plans for traffic control.

All exposed edges of barrier shall have either a 1/2-inch radius or a 3/8-inch bevel, unless otherwise shown.

Outline of existing work is indicated by light dashed lines. Heavy lines indicate new work.

All reinforcement in barrier end modification shall be epoxy coated.

Bars bonded in existing concrete not removed shall be cleanly stripped and embedded into new concrete where possible. If length is available, existing bars shall extend into new concrete at least 40 diameters for plain bars and 30 diameters for deformed bars, unless otherwise noted.

The area exposed by the removal of concrete and not covered with new concrete shall be coated with a qualified special mortar in accordance with Sec 704.

Cost of removing existing barrier concrete, and cost of furnishing and installing new concrete, new reinforcing steel, and any other work incidental to the barrier end modification, complete in place, will be considered completely covered by the contract unit price for Barrier End Modification.

BARRIER MODIFICATION FOR GUARDRAIL ATTACHMENT

REPAIRS TO BRIDGE:
ROUTE _ OVER
ROUTE _ FROM ROUTE _ TO ROUTE _
ABOUT _ MILES _ OF ROUTE _
BEGINNING STATION x+x.x± (MATCH EXISTING)

DATE PREPARED	5/7/2024
ROUTE	STATE MO
DISTRICT	SHEET NO. 000
COUNTY	
JOB NO.	
CONTRACT ID.	
PROJECT NO.	
BRIDGE NO.	

DESCRIPTION

DATE

MISSOURI HIGHWAYS AND TRANSPORTATION COMMISSION
105 WEST CAPITOL
JEFFERSON CITY, MO 65102
1-888-ASK-MODOT (1-888-275-6636)

Detailed
Checked

Note: This drawing is not to scale. Follow dimensions.

BEM02-1_EndMod_WS Alternate Details

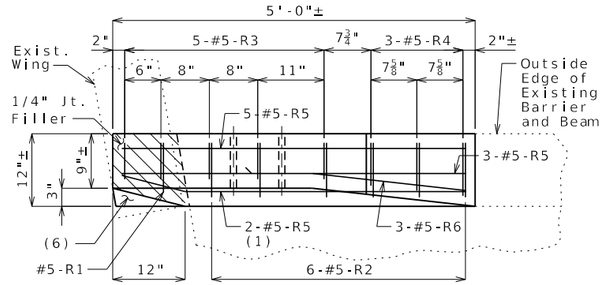

PLAN (3)

Skewed Plan

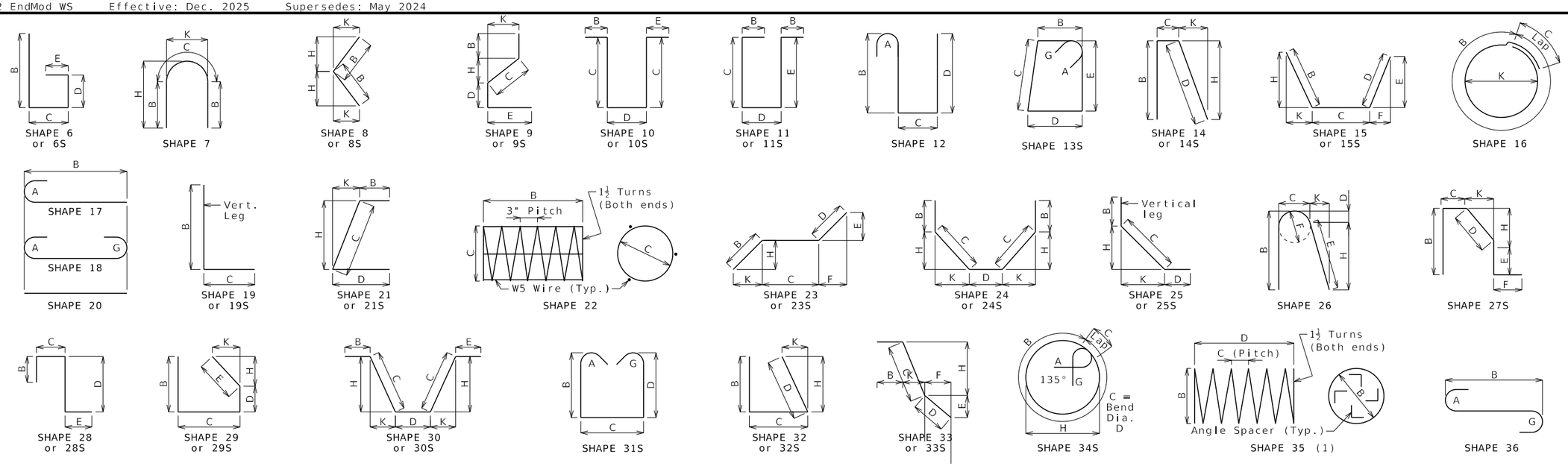

Finished Bend Diameters D and Hook Dimensions

Standard Pin Bend Shapes

Size	Case	D	A or G 90°	A or G 180°	J 180°
#4	1	3"	8"	6"	4"
#5	1	3¾"	10"	7"	5"
#6	1	4½"	12"	8¼"	6"
#7	2	5¼"	14"	9¾"	7"
	3	7"	15"	11½"	8¾"
#8	2	6"	16"	11"	8"
	3	8"	17"	13¼"	10"
#9	1	9½"	19½"	15½"	11¾"
#10	1	10¾"	22"	17½"	13¼"
#11	1	12"	24½"	19½"	14⅞"
#14	1	18¼"	31¼"	27½"	21⅝"
#18	1	24"	41½"	36¼"	28½"

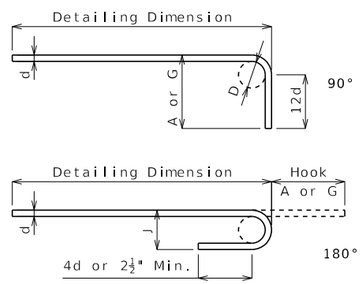

Stirrup Pin Bend Shapes (S)

Size	Case	D	A or G 90°	A or G 135°	A or G 180°	H 135°	J 180°
#4	2	2"	4½"	4½"	5"	2⅞"	3"
	3	3"	5"	5¼"	6"	3"	4"
#5	2	2½"	5¾"	5¾"	5¾"	3⅝"	3¾"
	3	3¾"	6¼"	6½"	7"	3⅞"	5"
#6	1	4½"	12"	7¾"	8¼"	4⅝"	6"

Applicable for all grades of steel.

Case 1 applies to all reinforcement. Case 2 applies to all reinforcement except for galvanized bars. Case 3 applies to galvanized bars only.

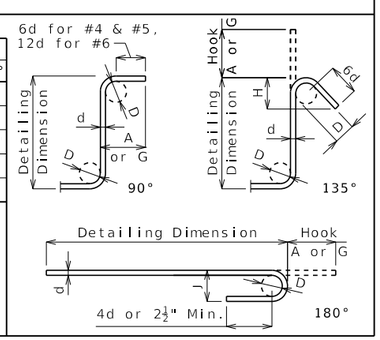

BENDING DIAGRAMS

Nominal lengths are based on out to out dimensions shown in bending diagrams and are listed to the nearest inch for fabricator's use. Actual lengths are measured along centerline bar to the nearest inch. Weights are based on actual lengths.

Reinforcing steel (ASTM A615 Grade 60) fy = 60,000 psi

Codes: C = Required coatings, where E = Epoxy Coated and G = Galvanized.

SH = Required shape, see bending diagrams.

V = Sets of varied bars and number of bars of each length. Bar dimensions vary in equal increments between dimensions shown on this line and the following line and the actual length dimension shown on this line and the following line vary by the specified increment.

All dimensions are out to out.

Shapes ending with an S shall be bent in accordance with stirrup pin bend shapes.

Unless otherwise noted, finished bending diameter D is the same for all bends of a shape.

(1) Shall be a deformed or plain spiral bar or wire.

Four angle or channel spacers are required for each column spiral. Spacers are to be placed on inside of spirals. Length and weight of column spirals do not include splices or spacers.

Reinforcing Steel Totals (Pounds)

	Size	Substructure Plain	Substructure Epoxy	Superstructure Slab	Superstructure Barrier	Superstructure Slip Form	Entire Bridge Plain	Entire Bridge Epoxy
By Size	4	0	0	0	0	0	0	0
	5	0	0	0	473	0	0	473
	6	0	0	0	0	0	0	0
	7	0	0	0	0	0	0	0
	8	0	0	0	0	0	0	0
By Type		0	0	0	473	0	0	473

All superstructure reinforcing steel shall be epoxy coated unless otherwise specified.

Bill of Reinforcing Steel

No. Req.	Size/ Mark	Location	Codes C	Codes SH	Codes V	Dimensions B ft in.	C ft in.	D ft in.	E ft in.	F ft in.	H ft in.	K ft in.	Nom. Length ft in.	Actual Length ft in.	Weight lb
		End Post Mod.													
4	5 R1	MODIFIED END	E	10S			9.00	8.00					2 2	1 11	8
24	5 R2	MODIFIED END	E	10S			9.00	9.00					2 3	2 0	50
20	5 R3	MODIFIED END	E	10S			2 7.00	6.00					5 8	5 5	113
12	5 R4	MODIFIED END	E	10S	4		2 6.75	7.00					5 9	5 6	
		Incr. = 2.000"					2 4.25	8.50					5 5	5 2	67
40	5 R5	MODIFIED END	E	20		4 9.00							4 9	4 9	198
12	5 R6	MODIFIED END	E	15S		11.25	2 1.50				1.25	11.25	3 1	2 11	37

BENDING DIAGRAMS AND REINFORCING STEEL TOTALS

Detailed
Checked

Note: This drawing is not to scale. Follow dimensions.

DATE PREPARED	
12/1/2025	
ROUTE	STATE MO
DISTRICT	SHEET NO. 000
COUNTY	
JOB NO.	
CONTRACT ID.	
PROJECT NO.	
BRIDGE NO.	

DESCRIPTION | DATE

MISSOURI HIGHWAYS AND TRANSPORTATION COMMISSION
105 WEST CAPITOL
JEFFERSON CITY, MO 65102
1-888-ASK-MODOT (1-888-275-6636)

Standard Drawing Guidance:
(Do not show on plans)

See Technician Info/TipsAndHelp/
AttachBoringPDFsToBridgePlans
on Development Section Sharepoint page for
instructions for attaching PDFs as rasters.

For one 11x17 Geotechnical Data sheet, snap
to top left corner of left guidance box and
snap anywhere for other corner, filling
as much of the available space as possible.
Delete boxes or turn off Constructions level.

"THIS MEDIA SHOULD NOT BE CONSIDERED A CERTIFIED DOCUMENT."

DATE PREPARED 4/1/2021	
ROUTE *	STATE MO
DISTRICT BR	SHEET NO. *
COUNTY *	
JOB NO. *	
CONTRACT ID.	
PROJECT NO.	
BRIDGE NO. BOR01	

DATE	DESCRIPTION

MISSOURI HIGHWAYS AND TRANSPORTATION COMMISSION
105 WEST CAPITOL
JEFFERSON CITY, MO 65102
1-888-ASK-MODOT (1-888-275-6636)

IF A SEAL IS PRESENT ON THIS SHEET IT HAS BEEN ELECTRONICALLY SEALED AND DATED.

BORING DATA

Note: For locations of borings, see Sheet No. 1.

Detailed
Checked

Note: This drawing is not to scale. Follow dimensions. Sheet No. of

2('x ') CONCRETE BOX CULVERT

SEC/SUR * TWP * RGE *

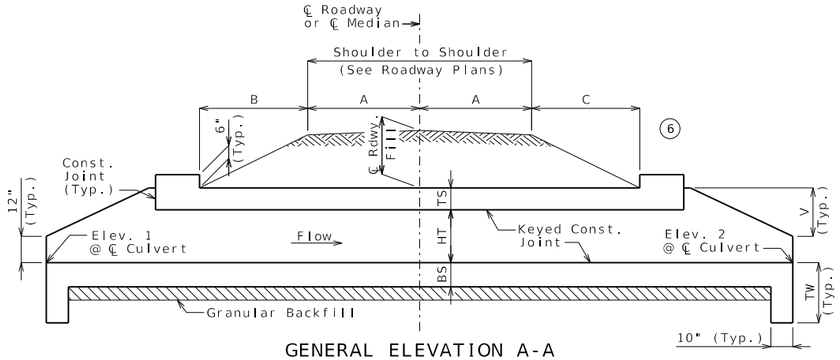

GENERAL ELEVATION A-A

Construction joint key not shown for clarity, see standard plans for details.

If any part of the barrel is exposed, the roadway fill shall be warped to provide 12 inches minimum cover. (Roadway Item)

If unsuitable material is encountered, excavation of unsuitable material and furnishing and placing of granular backfill shall be in accordance with Sec 206.

(b) Layout Dimensions

Var.	Equation	Dim.	Var.	Equation	Dim.	Var.	Equation	Dim.
S	- - -	x	TI	- - -	x	F	2S + 2TX + TI (b)	x
HT	- - -	x	A	- - -	x	G	2V	x
(b) TS	- - -	x	B	- - -	x	V	HT + TS - 12"	x
BS	- - -	x	C	- - -	x	W	2A + B + C + 2E	x
TX	- - -	x	E	G + 23"	x	TW	Max{3'-4" or (BS + 12")}	x

Hydrologic Data

Drainage Area = ___ mi^2
Design Flood Frequency = ___ years
Design Flood Discharge = ___ cfs
Design Flood (D.F.) Elevation = _____
Base Flood (100-year)
Base Flood Elevation = _____
Base Flood Discharge = ___ cfs
Estimated Backwater = __ ft
Outlet Velocity = __ ft/s
Roadway Overtopping
Overtopping Flood Discharge = ___ cfs
Overtopping Flood Frequency = ___ years
_____ Flood Elevation = _____

Elevations

Upstream (Elev. 1) =
Downstream (Elev. 2) =
Pr. Gr. at Tie Sta. =

(6) Fill Heights

℄ Rdwy at ℄ Culvert =	ft
Design (All units) =	ft

Dimensions are based on end units.
Fill heights are measured from the top of top slab to the top of earth fill or roadway. (a)

Estimated Quantities

			Final
Class 4 Excavation	cu. yard	x	
Removal of Bridges	lump sum	1	
Class B-1 Concrete (Culverts-Bridge)	cu. yard	x	
Reinforcing Steel (Culverts-Bridge)	pound	x	

(2)

(3)

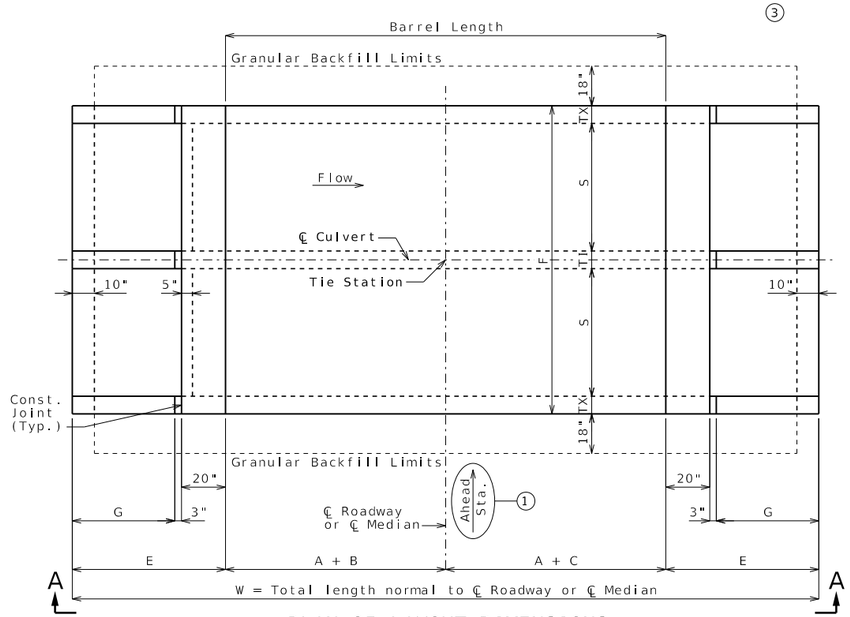

PLAN OF LAYOUT DIMENSIONS

LOCATION SKETCH

General Notes:

Design Specifications:
2010 AASHTO LRFD Bridge Design Specifications and 2010 Interim Revisions

Design Loading:
Vehicular = HL-93 minus lane load, Earth = 120 lb/cf
Equivalent Fluid Pressure = 30 lb/cf (min.), 60 lb/cf (max.)

Design Unit Stresses:
Class B-1 Concrete (Box Culvert) f'c = 4,000 psi
Reinforcing Steel (ASTM A615 Grade 60) fy = 60,000 psi

Standard Plans:
703.37, 703.40, 703.46, 703.47 (4)

Miscellaneous:
MoDOT Construction personnel will indicate the type of box culvert constructed:
☐ Precast Concrete Box used
☐ Cast-in-Place Concrete Box used

When alternate precast concrete box sections are used, the minimum distance from inside face of headwalls to precast sections measured along the shortest wall shall be 3 feet. Reinforcement and dimensions for wings and headwalls shall be in accordance with Missouri Standard Plans.

Channel bottom shall be graded within the right of way for transition of channel bed to culvert openings. Channel banks shall be tapered to match culvert openings. (Roadway Item)

Traffic Handling:
Structure to be closed during construction. Traffic to be maintained on during construction. See roadway plans for traffic control.

B.M.

CULVERT-BRIDGE: ROUTE * OVER *
ROUTE * FROM * TO *
ABOUT * MILES * OF *
TIE STA. _____

Designed
Detailed
Checked

Note: This drawing is not to scale. Follow dimensions.

Sheet No. 1 of

DATE PREPARED	12/18/2024
ROUTE	STATE MO
DISTRICT	SHEET NO. 1
COUNTY	
JOB NO.	
CONTRACT ID.	
PROJECT NO.	
BRIDGE NO.	

DESCRIPTION

DATE

MISSOURI HIGHWAYS AND TRANSPORTATION COMMISSION
105 WEST CAPITOL
JEFFERSON CITY, MO 65102
1-888-ASK-MODOT (1-888-275-6636)

BXC01_dbl_sq_str Guidance & Alternate Details (1 of 2)

Pipes With Same Diameter

XX" Pipe Inlet Data		
Station	Offset	F.L. Elev.
xx+xx.xx	xx.xx' XX	xxx.xx
xx+xx.xx	xx.xx' XX	xxx.xx
xx+xx.xx	xx.xx' XX	xxx.xx

Inlets Sized for Elevation A-A
(Pipe Diameter/Culvert HT)

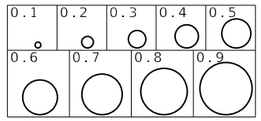

Ex: Use 0.5 detail for 36" pipe into a 6' tall culvert.

Pipes With Different Diameters

Pipe Inlet Data			
Station	Offset	Dia.	F.L. Elev.
xx+xx.xx	xx.xx' XX	xx"	xxx.xx
xx+xx.xx	xx.xx' XX	xx"	xxx.xx
xx+xx.xx	xx.xx' XX	xx"	xxx.xx

Supplemental Pipe Inlet Details (4)

Supplemental Reinforcement Table (Nonstandard culverts with only one design fill height) (5)

Top Slab Reinforcement												Bottom Slab Reinforcement									Wall Reinforcement				
A1 Bars		J3 Bars				H1 Bars			H2 Bars			A2 Bars		J4 Bars				H3 Bars			B1 Bars		B2 Bars		
Sz.	Spa.	Sz.	Spa.	C1	K2	Sz.	Spa.	C5	Sz.	Spa.	C6	Sz.	Spa.	Sz.	Spa.	C4	K3	Sz.	Spa.	C7	Sz.	Spa.	Sz.	Spa.	G1
x	x	x	x	x	x	x	x	x	x	x	x	x	x	x	x	x	x	x	x	x	x	x	x	x	x

Substitute table for tables shown on Standard Plan 703.47

Standard Drawing Guidance
(Do not show on plans. Turn off the Bridge Construction level to hide)

Some details have been grouped together to allow easy substitution with alternate details. To edit grouped details, select them and press <Ctrl> U.

(1) Ahead station is shown for streams flowing left to right. Arrow must be flipped for streams that flow right to left.

(2) Modify Estimated Quantities as required. Don't leave blank rows but leave space between Estimated Quantities and General Notes for at least one pay item to be added during construction. See Alternate Details for culvert extensions, or if five items are required.

(3) Add any required transverse joints proportionally spaced along the barrel. Lable units and add actual lengths of units along the barrel.

(4) Insert STD 703.60 when pipe inlets are required. Add pipe inlets to Plan of Layout Dimensions at appropriate locations and to Elevation A-A if visible from elevation. Add inlet data using notes where space allows, or use tables.

(5) For nonstandard culverts with only one design fill height, add supplemental reinforcement table.

(6) No need to revise General Elevation A-A for dual roadways. In Fill Heights table add a lane designation after ℄ Rdwy and insert another row for the other lane.

*** VARIABLE DESIGN FILL HEIGHTS ***

(a) Select and delete the details grouped with the Fill Heights table. Select and move the alternate grouped details to drawing.

(b) Place "See Member Thickness table" in the Equation column and place "Varies" in the Dim. column. If Dimension F varies, place "Varies" in the Dim. column.

(c) Remove blank rows. End units may have different design fill heights but both units need to have the same member thicknesses.

(d) This portion of table required when design fill height exceeds limits of the standard plans or when culvert cell height or span is not standard. If only a portion of the units are nonstandard, fill out entire table using the values from the standard table where applicable. Omit if not required.

Alternate Plan of Transverse Joints

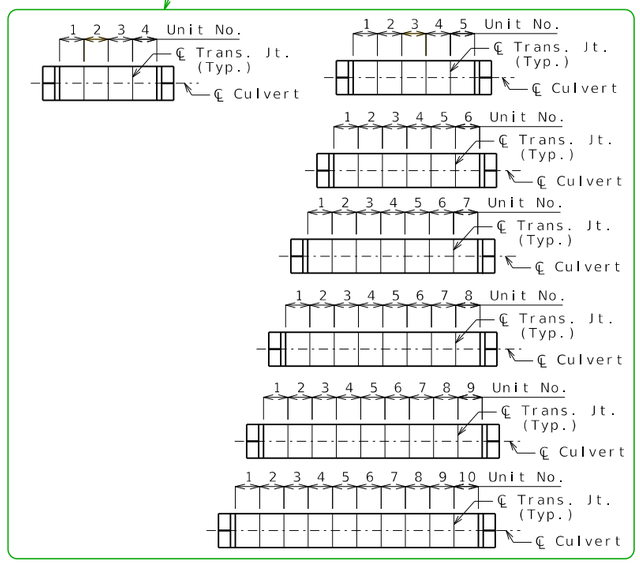

If any part of the barrel is exposed, the roadway fill shall be warped to provide 12 inches minimum cover. (Roadway Item)

Construction joint key not shown for clarity, see standard plans for details.

If unsuitable material is encountered, excavation of unsuitable material and furnishing and placing of granular backfill shall be in accordance with Sec 206.

BXC01_dbl_sq_str Guidance & Alternate Details (2 of 2)

Corresponds to the border of the standard drawing for ease in moving alternate details (Snap to corner)

Alternate Details for Multiple Design Fill Heights (a)

Fill Heights	
℄ Rdwy at ℄ Culvert =	ft
Design (Units 1 &) =	ft
Design (Units &) =	ft
Design (Units &) =	ft

Dimensions are based on end units, except AA is based on Unit . Fill heights are measured from the top of top slab to the top of earth fill or roadway.

Estimated Quantities			Final
Class 4 Excavation	cu. yard	x	
Temporary Shoring	lump sum	1	
Partial Removal of Culvert-Bridge Concrete	lump sum	1	
Class B-1 Concrete (Culverts-Bridge)	cu. yard	x	
Reinforcing Steel (Culverts-Bridge)	pound	x	

(2)

Alternate Estimated Quantities for Culvert Extensions or when Five Items are Required

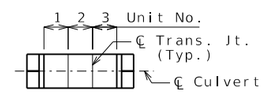

PLAN OF TRANSVERSE JOINTS AND STAGE CONSTRUCTION

Remove if not applicable.

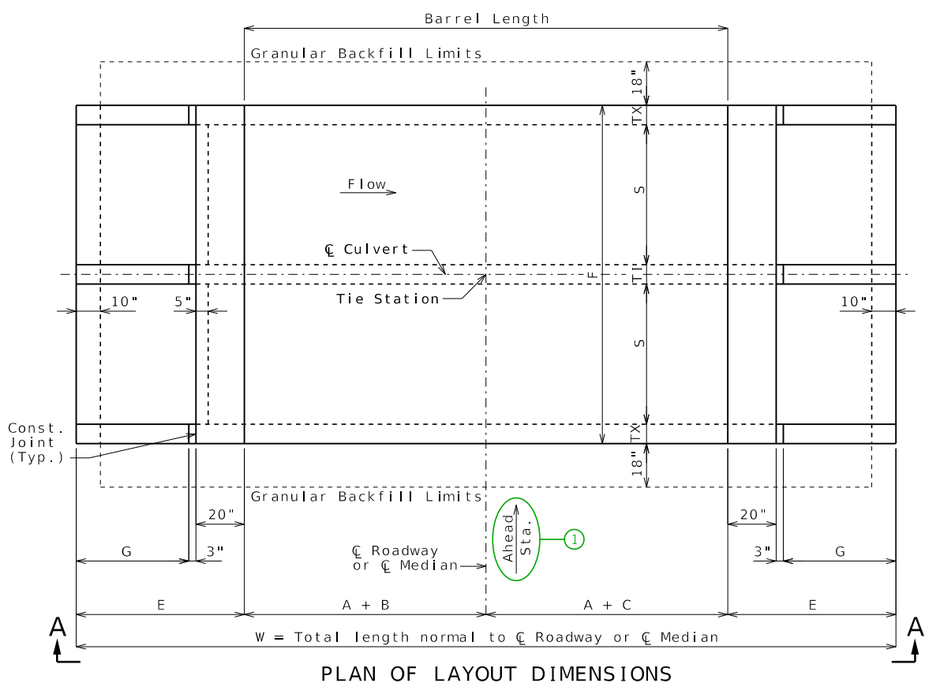

PLAN OF LAYOUT DIMENSIONS

(c) (d)

Unit No.	Unit Length	Member Thickness					Top Slab Reinforcement												Bottom Slab Reinforcement									Wall Reinforcement				
							A1 Bars		J3 Bars				H1 Bars			H2 Bars			A2 Bars		J4 Bars				H3 Bars			B1 Bars		B2 Bars		
		TS	BS	TX	TI	F	Sz.	Spa.	Sz.	Spa.	C1	K2	Sz.	Spa.	C5	Sz.	Spa.	C6	Sz.	Spa.	Sz.	Spa.	C4	K3	Sz.	Spa.	C7	Sz.	Spa.	Sz.	Spa.	G1
x	x	x	x	x	x	'- "	x	x	x	x	x	x	x	x	x	x	x	x	x	x	x	x	x	x	x	x	x	x	x	x	x	x
x	x	x	x	x	x	'- "	x	x	x	x	x	x	x	x	x	x	x	x	x	x	x	x	x	x	x	x	x	x	x	x	x	x
x	x	x	x	x	x	'- "	x	x	x	x	x	x	x	x	x	x	x	x	x	x	x	x	x	x	x	x	x	x	x	x	x	x

Substitute table for tables shown on Standard Plan 703.47

2('x ') CONCRETE BOX CULVERT

SEC/SUR * TWP * RGE *

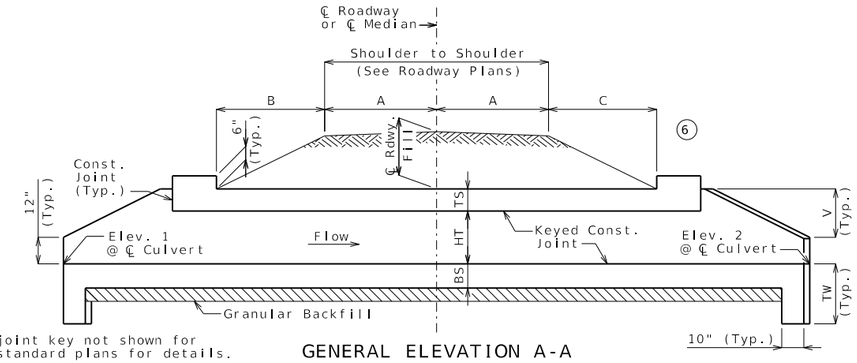

GENERAL ELEVATION A-A

Construction joint key not shown for clarity, see standard plans for details.

If any part of the barrel is exposed, the roadway fill shall be warped to provide 12 inches minimum cover. (Roadway Item)

If unsuitable material is encountered, excavation of unsuitable material and furnishing and placing of granular backfill shall be in accordance with Sec 206.

Layout Dimensions

Var.	Equation	Dim.	Var.	Equation	Dim.	Var.	Equation	Dim.
S	- - -	x	F	2S + 2TX + TI (b)	x	W	2A + B + C + 2E	x
HT	- - -	x	G	2V	x	X	3" + TX(tan Z)	x
TS	- - -	x	H	(A + C + E)(tan Z)	x	Z	Skew Angle	x
BS	- - -	x	I	3"(cos Z)	x	BB	(A + B)(sec Z)	x
TX	- - -	x	J	(A + B + E)(tan Z)	x	CC	(A + C)(sec Z)	x
TI	- - -	x	K	(S + TI/2)(sec Z)	x	EE	E(sec Z)	x
A	- - -	x	L	2EE + BB + CC	x	HH	20"(sec Z)	x
B	- - -	x	O	I + YY	x	QQ	TX(cos Z)	x
C	- - -	x	T	G(sec Z)	x	YY	TX(sin Z)	x
E	G + O + 20"	x	V	HT + TS - 12"	x	TW	Max{3'-4" or (BS + 12")}	x

(b) HT, TS, BS

Hydrologic Data

Drainage Area = ___ mi^2
Design Flood Frequency = ___ years
Design Flood Discharge = ___ cfs
Design Flood (D.F.) Elevation = _____
Base Flood (100-year)
Base Flood Elevation = _____
Base Flood Discharge = ___ cfs
Estimated Backwater = __ ft
Outlet Velocity = __ ft/s
Roadway Overtopping
Overtopping Flood Discharge = ___ cfs
Overtopping Flood Frequency = ___ years
_____ Flood Elevation = _____

Elevations

Upstream (Elev. 1) =
Downstream (Elev. 2) =
Pr. Gr. at Tie Sta. =

(6) Fill Heights

℄ Rdwy at ℄ Culvert =	ft
Design (All units) =	ft

Dimensions are based on end units.
Fill heights are measured from the top of top slab to the top of earth fill or roadway. (a)

Estimated Quantities

			Final
Class 4 Excavation	cu. yard	x	
Removal of Bridges	lump sum	1	
Class B-1 Concrete (Culverts-Bridge)	cu. yard	x	
Reinforcing Steel (Culverts-Bridge)	pound	x	

(2)

DETAIL A

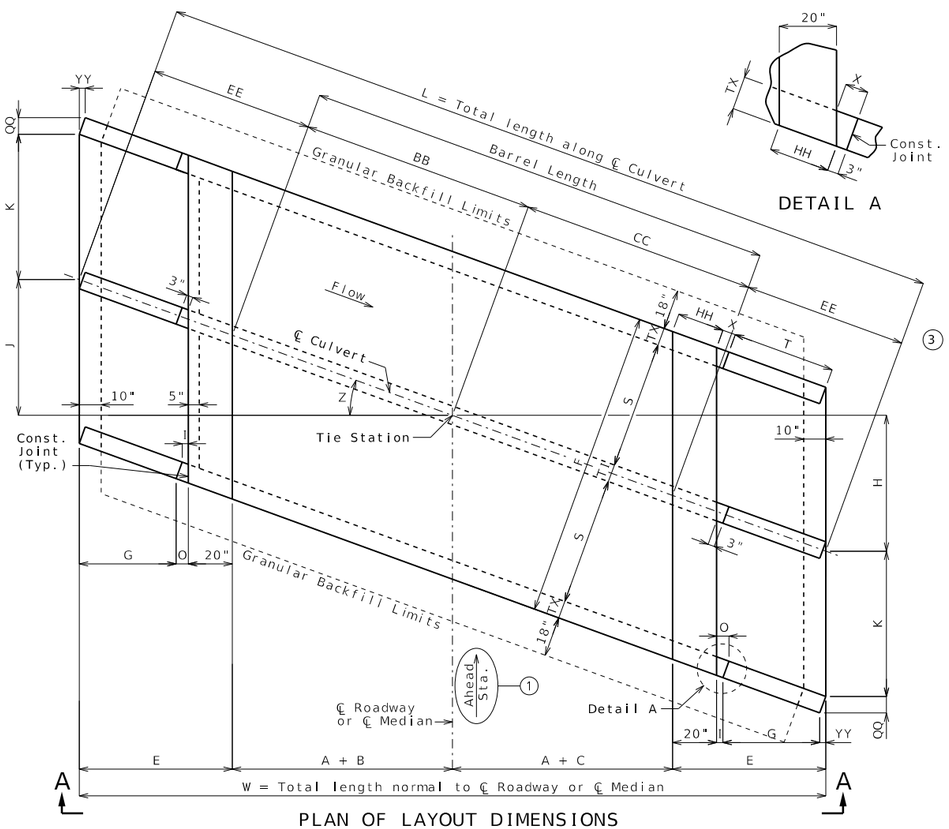

PLAN OF LAYOUT DIMENSIONS

(3)

LOCATION SKETCH

General Notes:

Design Specifications:
2010 AASHTO LRFD Bridge Design Specifications and 2010 Interim Revisions

Design Loading:
Vehicular = HL-93 minus lane load, Earth = 120 lb/cf
Equivalent Fluid Pressure = 30 lb/cf (min.), 60 lb/cf (max.)

Design Unit Stresses:
Class B-1 Concrete (Box Culvert) f'c = 4,000 psi
Reinforcing Steel (ASTM A615 Grade 60) fy = 60,000 psi

Standard Plans:
703.37, 703.42, 703.46, 703.47 (4)

Miscellaneous:
MoDOT Construction personnel will indicate the type of box culvert constructed:
☐ Precast Concrete Box used
☐ Cast-in-Place Concrete Box used

When alternate precast concrete box sections are used, the minimum distance from inside face of headwalls to precast sections measured along the shortest wall shall be 3 feet. Reinforcement and dimensions for wings and headwalls shall be in accordance with Missouri Standard Plans.

Channel bottom shall be graded within the right of way for transition of channel bed to culvert openings. Channel banks shall be tapered to match culvert openings. (Roadway Item)

Traffic Handling:
Structure to be closed during construction. Traffic to be maintained on during construction. See roadway plans for traffic control.

B.M.

CULVERT-BRIDGE: ROUTE * OVER *
ROUTE * FROM * TO *
ABOUT * MILES * OF *
TIE STA. _____

DATE PREPARED	
12/18/2024	
ROUTE	STATE MO
DISTRICT	SHEET NO. 2
COUNTY	
JOB NO.	
CONTRACT ID.	
PROJECT NO.	
BRIDGE NO.	

DATE	DESCRIPTION

MISSOURI HIGHWAYS AND TRANSPORTATION COMMISSION
105 WEST CAPITOL
JEFFERSON CITY, MO 65102
1-888-ASK-MODOT (1-888-275-6636)

Designed
Detailed
Checked

Note: This drawing is not to scale. Follow dimensions.

BXC02_dbl_la_str Guidance and Alternate Details (1 of 2)

Pipes With Same Diameter

XX" Pipe Inlet Data		
Station	Offset	F.L. Elev.
xx+xx.xx	xx.xx' XX	xxx.xx
xx+xx.xx	xx.xx' XX	xxx.xx
xx+xx.xx	xx.xx' XX	xxx.xx

Inlets Sized for Elevation A-A
(Pipe Diameter/Culvert HT)

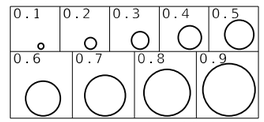

Ex: Use 0.5 detail for 36" pipe into a 6' tall culvert.

Pipes With Different Diameters

Pipe Inlet Data			
Station	Offset	Dia.	F.L. Elev.
xx+xx.xx	xx.xx' XX	xx"	xxx.xx
xx+xx.xx	xx.xx' XX	xx"	xxx.xx
xx+xx.xx	xx.xx' XX	xx"	xxx.xx

Supplemental Pipe Inlet Details (4)

Supplemental Reinforcement Table (Nonstandard culverts with only one design fill height) (5)

Top Slab Reinforcement												Bottom Slab Reinforcement									Wall Reinforcement				
A1 Bars		J3 Bars				H1 Bars			H2 Bars			A2 Bars		J4 Bars				H3 Bars			B1 Bars		B2 Bars		
Sz.	Spa.	Sz.	Spa.	C1	K2	Sz.	Spa.	C5	Sz.	Spa.	C6	Sz.	Spa.	Sz.	Spa.	C4	K3	Sz.	Spa.	C7	Sz.	Spa.	Sz.	Spa.	G1
x	x	x	x	x	x	x	x	x	x	x	x	x	x	x	x	x	x	x	x	x	x	x	x	x	x

Substitute table for tables shown on Standard Plan 703.47

Standard Drawing Guidance
(Do not show on plans. Turn off the Bridge Construction level to hide)

Some details have been grouped together to allow easy substitution with alternate details. To edit grouped details, select them and press <Ctrl> U.

(1) Ahead station is shown for streams flowing left to right. Arrow must be flipped for streams that flow right to left.

(2) Modify Estimated Quantities as required. Don't leave blank rows but leave space between Estimated Quantities and General Notes for at least one pay item to be added during construction. See Alternate Details for culvert extensions, or if five items are required.

(3) Add any required transverse joints proportionally spaced along the barrel. Label units and add actual lengths of the units along the barrel.

(4) Insert STD 703.60 when pipe inlets are required. Add pipe inlets to Plan of Layout Dimensions at appropriate locations and to Elevation A-A if visible from elevation. Add inlet data using notes where space allows, or use tables.

(5) For nonstandard culverts with only one design fill height, add supplemental reinforcement table.

(6) No need to revise General Elevation A-A for dual roadways. In Fill Heights table add a lane designation after ℄ Rdwy and insert another row for the other lane.

*** VARIABLE DESIGN FILL HEIGHTS ***

(a) Select and delete the details grouped with the Fill Heights table. Select and move the alternate grouped details to drawing.

(b) Place "See Member Thickness table" in the Equation column and place "Varies" in the Dim. column. If Dimension F varies, place "Varies" in the Dim. column.

(c) Remove blank rows. End units may have different design fill heights but both units need to have the same member thicknesses.

(d) This portion of table required when design fill height exceeds limits of the standard plans or when culvert cell height or span is not standard. If only a portion of the units are nonstandard, fill out entire table using the values from the standard table where applicable. Omit if not required.

Alternate Plan of Transverse Joints

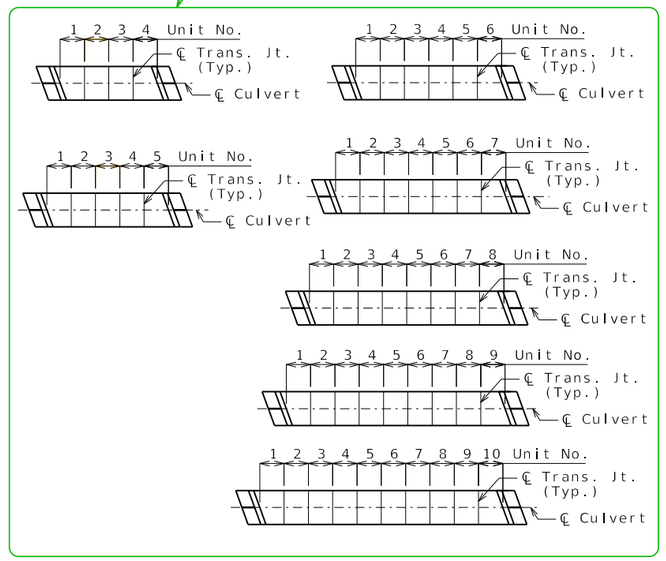

If any part of the barrel is exposed, the roadway fill shall be warped to provide 12 inches minimum cover. (Roadway Item)

Construction joint key not shown for clarity, see standard plans for details.

If unsuitable material is encountered, excavation of unsuitable material and furnishing and placing of granular backfill shall be in accordance with Sec 206.

BXC02_dbl_la_str Guidance and Alternate Details (2 of 2)

Corresponds to the border of the standard drawing for ease in moving alternate details (Snap to corner)

Alternate Details for Multiple Design Fill Heights (a)

Fill Heights	
℄ Rdwy at ℄ Culvert =	ft
Design (Units 1 &) =	ft
Design (Units &) =	ft
Design (Units &) =	ft

Dimensions are based on end units, except AA is based on Unit . Fill heights are measured from the top of top slab to the top of earth fill or roadway.

Estimated Quantities			Final
Class 4 Excavation	cu. yard	x	
Temporary Shoring	lump sum	1	
Partial Removal of Culvert-Bridge Concrete	lump sum	1	
Class B-1 Concrete (Culverts-Bridge)	cu. yard	x	
Reinforcing Steel (Culverts-Bridge)	pound	x	

(2)

Alternate Estimated Quantities for Culvert Extensions or when Five Items are Required

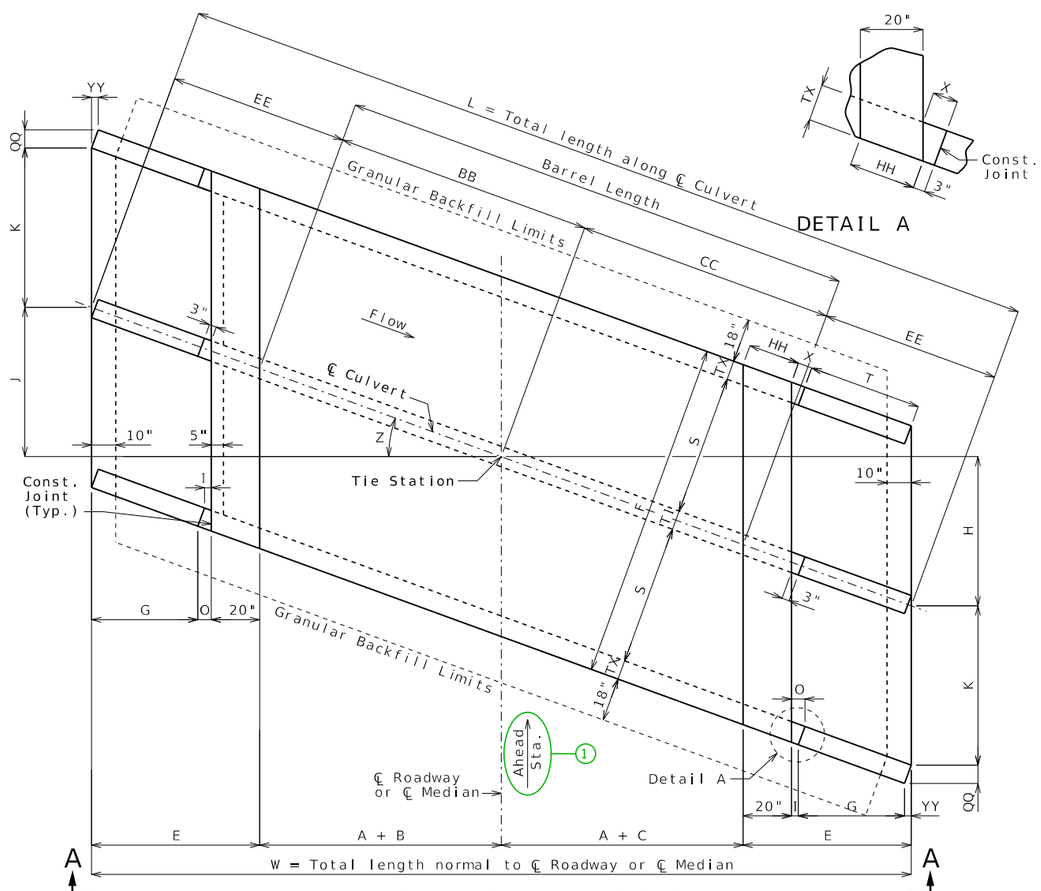

PLAN OF LAYOUT DIMENSIONS

DETAIL A

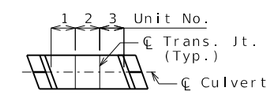

PLAN OF TRANSVERSE JOINTS AND STAGE CONSTRUCTION

Remove if not applicable.

(c) (d)

Unit No.	Unit Length	Member Thickness					Top Slab Reinforcement												Bottom Slab Reinforcement									Wall Reinforcement				
							A1 Bars		J3 Bars				H1 Bars			H2 Bars			A2 Bars		J4 Bars				H3 Bars			B1 Bars		B2 Bars		
		TS	BS	TX	TI	F	Sz.	Spa.	Sz.	Spa.	C1	K2	Sz.	Spa.	C5	Sz.	Spa.	C6	Sz.	Spa.	Sz.	Spa.	C4	K3	Sz.	Spa.	C7	Sz.	Spa.	Sz.	Spa.	G1
x	x	x	x	x	x	'-	x	x	x	x	x	x	x	x	x	x	x	x	x	x	x	x	x	x	x	x	x	x	x	x	x	x
x	x	x	x	x	x	'-	x	x	x	x	x	x	x	x	x	x	x	x	x	x	x	x	x	x	x	x	x	x	x	x	x	x
x	x	x	x	x	x	'-	x	x	x	x	x	x	x	x	x	x	x	x	x	x	x	x	x	x	x	x	x	x	x	x	x	x

Substitute table for tables shown on Standard Plan 703.47

2('x ') CONCRETE BOX CULVERT

SEC/SUR * TWP * RGE *

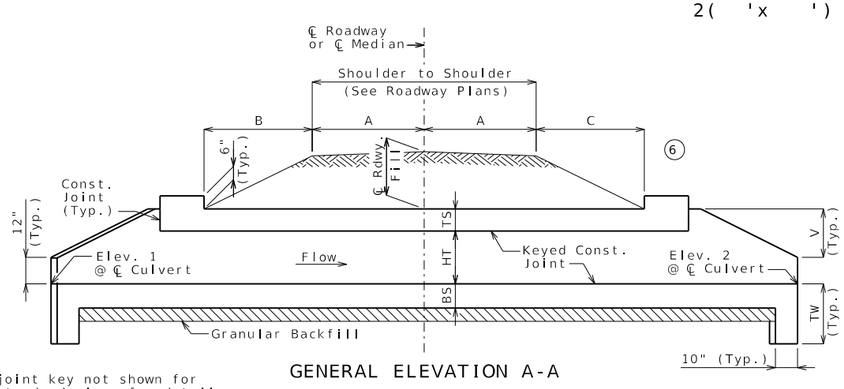

GENERAL ELEVATION A-A

Construction joint key not shown for clarity, see standard plans for details.

If any part of the barrel is exposed, the roadway fill shall be warped to provide 12 inches minimum cover. (Roadway Item)

If unsuitable material is encountered, excavation of unsuitable material and furnishing and placing of granular backfill shall be in accordance with Sec 206.

DETAIL A

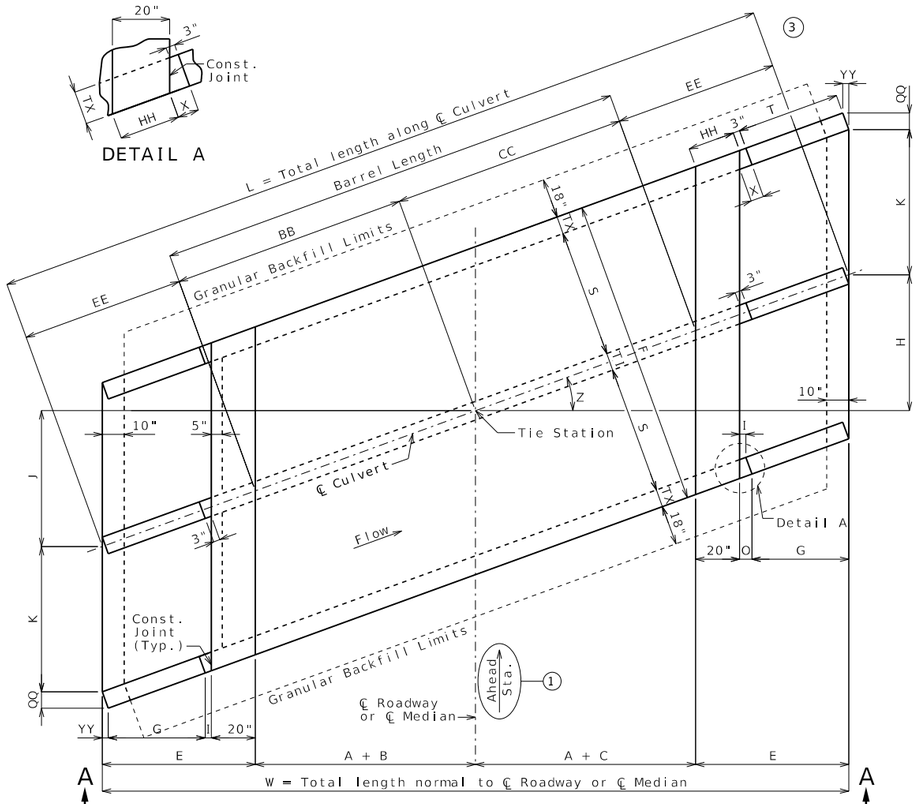

PLAN OF LAYOUT DIMENSIONS

Layout Dimensions

Var.	Equation	Dim.	Var.	Equation	Dim.	Var.	Equation	Dim.
S	- - -	x	F	2S + 2TX + TI	x	W	2A + B + C + 2E	x
HT	- - -	x	G	2V	x	X	3" + TX(tan Z)	x
TS	- - -	x	H	(A + C + E)(tan Z)	x	Z	Skew Angle	x
BS	- - -	x	I	3"(cos Z)	x	BB	(A + B)(sec Z)	x
TX	- - -	x	J	(A + B + E)(tan Z)	x	CC	(A + C)(sec Z)	x
TI	- - -	x	K	(S + TI/2)(sec Z)	x	EE	E(sec Z)	x
A	- - -	x	L	2EE + BB + CC	x	HH	20"(sec Z)	x
B	- - -	x	O	I + YY	x	QQ	TX(cos Z)	x
C	- - -	x	T	G(sec Z)	x	YY	TX(sin Z)	x
E	G + O + 20"	x	V	HT + TS - 12"	x	TW	Max{3'-4" or (BS + 12")}	x

Hydrologic Data

Drainage Area = ___ mi^2

Design Flood Frequency = ___ years

Design Flood Discharge = ___ cfs

Design Flood (D.F.) Elevation = _____

Base Flood (100-year)

Base Flood Elevation = _____

Base Flood Discharge = ___ cfs

Estimated Backwater = __ ft

Outlet Velocity = __ ft/s

Roadway Overtopping

Overtopping Flood Discharge = ___ cfs

Overtopping Flood Frequency = ___ years

_____ Flood Elevation = _____

Elevations

Upstream (Elev. 1) =

Downstream (Elev. 2) =

Pr. Gr. at Tie Sta. =

Fill Heights

℄ Rdwy at ℄ Culvert = ft

Design (All units) = ft

Dimensions are based on end units.
Fill heights are measured from the top of top slab to the top of earth fill or roadway.

Estimated Quantities

			Final
Class 4 Excavation	cu. yard	x	
Removal of Bridges	lump sum	1	
Class B-1 Concrete (Culverts-Bridge)	cu. yard	x	
Reinforcing Steel (Culverts-Bridge)	pound	x	

LOCATION SKETCH

General Notes:

Design Specifications:
2010 AASHTO LRFD Bridge Design Specifications and 2010 Interim Revisions

Design Loading:
Vehicular = HL-93 minus lane load, Earth = 120 lb/cf
Equivalent Fluid Pressure = 30 lb/cf (min.), 60 lb/cf (max.)

Design Unit Stresses:
Class B-1 Concrete (Box Culvert) f'c = 4,000 psi
Reinforcing Steel (ASTM A615 Grade 60) fy = 60,000 psi

Standard Plans:
703.37, 703.44, 703.46, 703.47

Miscellaneous:
MoDOT Construction personnel will indicate the type of box culvert constructed:
☐ Precast Concrete Box used
☐ Cast-in-Place Concrete Box used

When alternate precast concrete box sections are used, the minimum distance from inside face of headwalls to precast sections measured along the shortest wall shall be 3 feet. Reinforcement and dimensions for wings and headwalls shall be in accordance with Missouri Standard Plans.

Channel bottom shall be graded within the right of way for transition of channel bed to culvert openings. Channel banks shall be tapered to match culvert openings. (Roadway Item)

Traffic Handling:
Structure to be closed during construction. Traffic to be maintained on during construction. See roadway plans for traffic control.

B.M.

CULVERT-BRIDGE: ROUTE * OVER *
ROUTE * FROM * TO *
ABOUT * MILES * OF *
TIE STA. _____

Designed
Detailed
Checked

Note: This drawing is not to scale. Follow dimensions.

Sheet No. 1 of

DATE PREPARED 12/18/2024
ROUTE | STATE MO
DISTRICT | SHEET NO. 3
COUNTY
JOB NO.
CONTRACT ID.
PROJECT NO.
BRIDGE NO.

DESCRIPTION | DATE

MISSOURI HIGHWAYS AND TRANSPORTATION COMMISSION
105 WEST CAPITOL
JEFFERSON CITY, MO 65102
1-888-ASK-MODOT (1-888-275-6636)

BXC03_dbl_ra_str Guidance & Alternate Details (1 of 2)

Pipes With Same Diameter

XX" Pipe Inlet Data		
Station	Offset	F.L. Elev.
xx+xx.xx	xx.xx' XX	xxx.xx
xx+xx.xx	xx.xx' XX	xxx.xx
xx+xx.xx	xx.xx' XX	xxx.xx

Pipes With Different Diameters

Pipe Inlet Data			
Station	Offset	Dia.	F.L. Elev.
xx+xx.xx	xx.xx' XX	xx"	xxx.xx
xx+xx.xx	xx.xx' XX	xx"	xxx.xx
xx+xx.xx	xx.xx' XX	xx"	xxx.xx

Inlets Sized for Elevation A-A
(Pipe Diameter/Culvert HT)

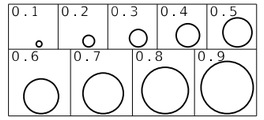

Ex: Use 0.5 detail for 36" pipe into a 6' tall culvert.

Supplemental Pipe Inlet Details (4)

Supplemental Reinforcement Table (Nonstandard culverts with only one design fill height) (5)

Top Slab Reinforcement												Bottom Slab Reinforcement									Wall Reinforcement				
A1 Bars		J3 Bars				H1 Bars			H2 Bars			A2 Bars		J4 Bars				H3 Bars			B1 Bars		B2 Bars		
Sz.	Spa.	Sz.	Spa.	C1	K2	Sz.	Spa.	C5	Sz.	Spa.	C6	Sz.	Spa.	Sz.	Spa.	C4	K3	Sz.	Spa.	C7	Sz.	Spa.	Sz.	Spa.	G1
x	x	x	x	x	x	x	x	x	x	x	x	x	x	x	x	x	x	x	x	x	x	x	x	x	x

Substitute table for tables shown on Standard Plan 703.47

Standard Drawing Guidance
(Do not show on plans. Turn off the Bridge Construction level to hide)

Some details have been grouped together to allow easy substitution with alternate details. To edit grouped details, select them and press <Ctrl> U.

(1) Ahead station is shown for streams flowing left to right. Arrow must be flipped for streams that flow right to left.

(2) Modify Estimated Quantities as required. Don't leave blank rows but leave space between Estimated Quantities and General Notes for at least one pay item to be added during construction. See Alternate Details for culvert extensions, or if five items are required.

(3) Add any required transverse joints proportionally spaced along barrel. Label units and add actual lengths of units along the barrel.

(4) Insert STD 703.60 when pipe inlets are required. Add pipe inlets to Plan of Layout Dimensions at appropriate locations and to Elevation A-A if visible from elevation. Add inlet data using notes where space allows, or use tables.

(5) For nonstandard culverts with only one design fill height, add supplemental reinforcement table.

(6) No need to revise General Elevation A-A for dual roadways. In Fill Heights table add a lane designation after ℄ Rdwy and insert another row for the other lane.

*** VARIABLE DESIGN FILL HEIGHTS ***

(a) Select and delete the details grouped with the Fill Heights table. Select and move the alternate grouped details to drawing.

(b) Place "See Member Thickness table" in the Equation column and place "Varies" in the Dim. column. If Dimension F varies, place "Varies" in the Dim. column.

(c) Remove blank rows. End units may have different design fill heights but both units need to have the same member thicknesses.

(d) This portion of table required when design fill height exceeds limits of the standard plans or when culvert cell height or span is not standard. If only a portion of the units are nonstandard, fill out entire table using the values from the standard table where applicable. Omit if not required.

Alternate Plan of Transverse Joints

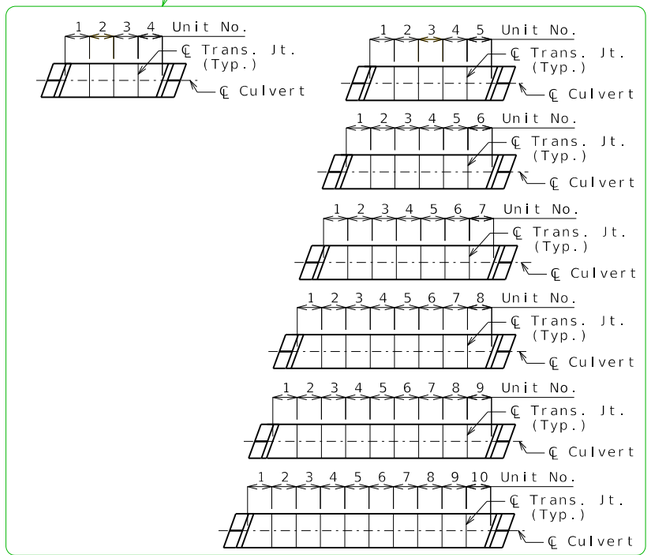

If any part of the barrel is exposed, the roadway fill shall be warped to provide 12 inches minimum cover. (Roadway Item)

Construction joint key not shown for clarity, see standard plans for details.

If unsuitable material is encountered, excavation of unsuitable material and furnishing and placing of granular backfill shall be in accordance with Sec 206.

BXC03_dbl_ra_str Guidance & Alternate Details (2 of 2)

Corresponds to the border of the standard drawing for ease in moving alternate details (Snap to corner)

Alternate Details for Multiple Design Fill Heights (a)

Fill Heights	
℄ Rdwy at ℄ Culvert =	ft
Design (Units 1 &) =	ft
Design (Units &) =	ft
Design (Units &) =	ft

Dimensions are based on end units, except AA is based on Unit . Fill heights are measured from the top of top slab to the top of earth fill or roadway.

Estimated Quantities			Final
Class 4 Excavation	cu. yard	x	
Temporary Shoring	lump sum	1	
Partial Removal of Culvert-Bridge Concrete	lump sum	1	
Class B-1 Concrete (Culverts-Bridge)	cu. yard	x	
Reinforcing Steel (Culverts-Bridge)	pound	x	

(2)

Alternate Estimated Quantities for Culvert Extensions or when Five Items are Required

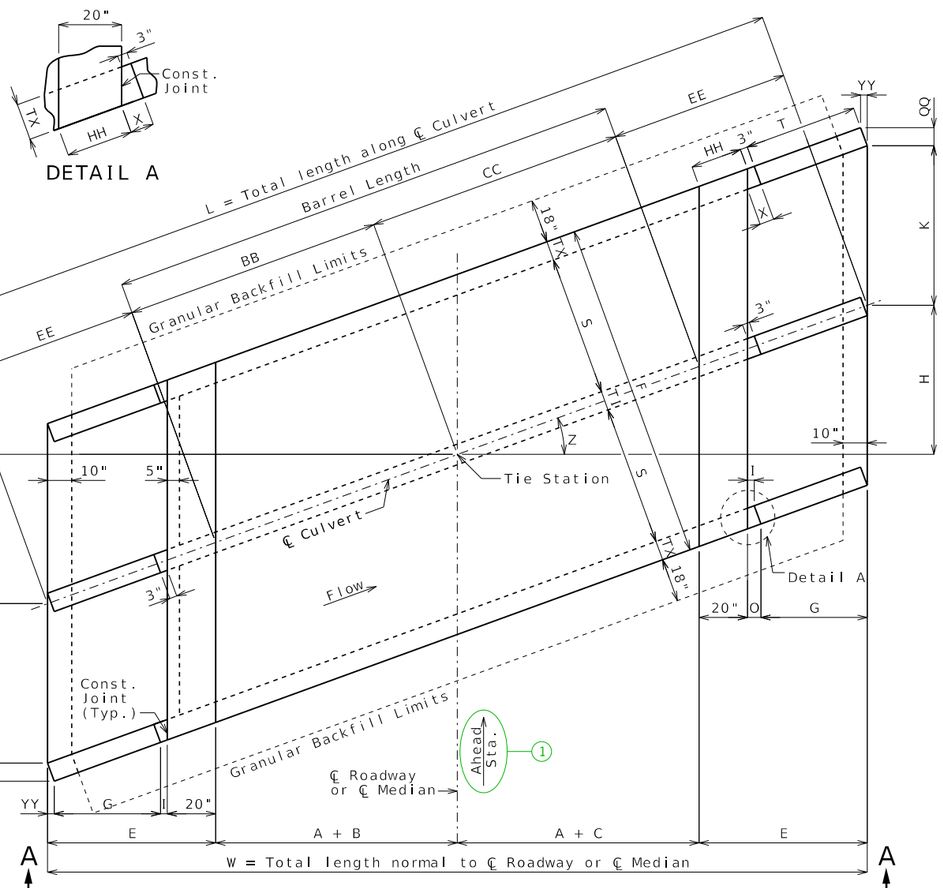

PLAN OF LAYOUT DIMENSIONS

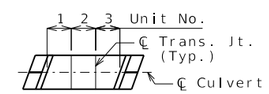

PLAN OF TRANSVERSE JOINTS AND STAGE CONSTRUCTION

Remove if not applicable.

(c) (d)

Unit No.	Unit Length	Member Thickness					Top Slab Reinforcement												Bottom Slab Reinforcement									Wall Reinforcement				
							A1 Bars		J3 Bars				H1 Bars			H2 Bars			A2 Bars		J4 Bars				H3 Bars			B1 Bars		B2 Bars		
		TS	BS	TX	TI	F	Sz.	Spa.	Sz.	Spa.	C1	K2	Sz.	Spa.	C5	Sz.	Spa.	C6	Sz.	Spa.	Sz.	Spa.	C4	K3	Sz.	Spa.	C7	Sz.	Spa.	Sz.	Spa.	G1
x	x	x	x	x	x	'- "	x	x	x	x	x	x	x	x	x	x	x	x	x	x	x	x	x	x	x	x	x	x	x	x	x	x
x	x	x	x	x	x	'- "	x	x	x	x	x	x	x	x	x	x	x	x	x	x	x	x	x	x	x	x	x	x	x	x	x	x
x	x	x	x	x	x	'- "	x	x	x	x	x	x	x	x	x	x	x	x	x	x	x	x	x	x	x	x	x	x	x	x	x	x

Substitute table for tables shown on Standard Plan 703.47

2('x ') CONCRETE BOX CULVERT

SEC/SUR * TWP * RGE *

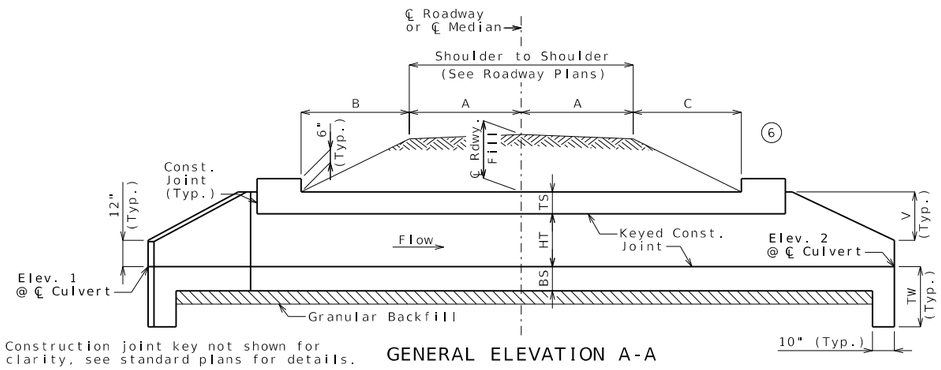

Construction joint key not shown for clarity, see standard plans for details.

GENERAL ELEVATION A-A

If any part of the barrel is exposed, the roadway fill shall be warped to provide 12 inches minimum cover. (Roadway Item)

If unsuitable material is encountered, excavation of unsuitable material and furnishing and placing of granular backfill shall be in accordance with Sec 206.

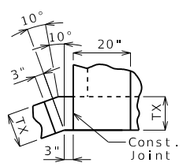

DETAIL A

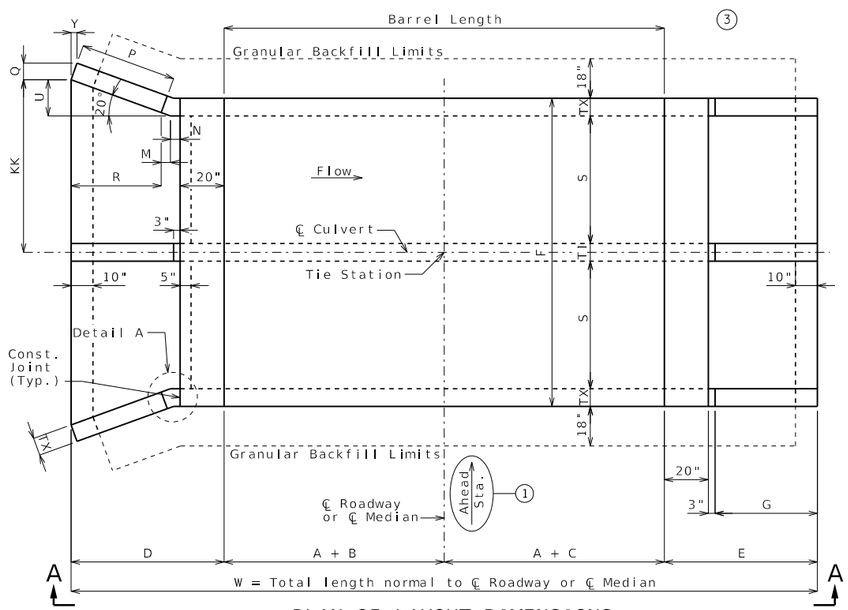

PLAN OF LAYOUT DIMENSIONS

Layout Dimensions

Var.	Equation	Dim.	Var.	Equation	Dim.	Var.	Equation	Dim.
S	- - -	x	C	- - -	x	Q	TX(cos 20°)	x
HT	- - -	x	D	R + M + N + 20"	x	R	P(cos 20°)	x
TS	- - -	x	E	G + 23"	x	U	(R + M)(tan 20°)	x
BS	- - -	x	F	2S + 2TX + TI (b)	x	V	HT + TS - 12"	x
TX	- - -	x	G	2V	x	W	2A + B + C + D + E	x
TI	- - -	x	M	N(cos 20°)	x	Y	TX(sin 20°)	x
A	- - -	x	N	3" + TX(tan 10°)	x	KK	S + TI/2 + U	x
B	- - -	x	P	2V(sec 20°)	x	TW	Max{3'-4" or (BS + 12")}	x

(b)

Hydrologic Data

Drainage Area = ___ mi^2
Design Flood Frequency = ___ years
Design Flood Discharge = ___ cfs
Design Flood (D.F.) Elevation = _____

Base Flood (100-year)

Base Flood Elevation = _____
Base Flood Discharge = ___ cfs
Estimated Backwater = __ ft
Outlet Velocity = __ ft/s

Roadway Overtopping

Overtopping Flood Discharge = ___ cfs
Overtopping Flood Frequency = ___ years
_____ Flood Elevation = _____

Elevations

Upstream (Elev. 1) =
Downstream (Elev. 2) =
Pr. Gr. at Tie Sta. =

Fill Heights

(6) ℄ Rdwy at ℄ Culvert = ft
Design (All units) = ft

Dimensions are based on end units.
Fill heights are measured from the top of top slab to the top of earth roadway. (a)

Estimated Quantities

			Final
Class 4 Excavation	cu. yard	x	
Removal of Bridges	lump sum	1	
Class B-1 Concrete (Culverts-Bridge)	cu. yard	x	
Reinforcing Steel (Culverts-Bridge)	pound	x	

(2)

LOCATION SKETCH

General Notes:

Design Specifications:
2010 AASHTO LRFD Bridge Design Specifications and 2010 Interim Revisions

Design Loading:
Vehicular = HL-93 minus lane load, Earth = 120 lb/cf
Equivalent Fluid Pressure = 30 lb/cf (min.), 60 lb/cf (max.)

Design Unit Stresses:
Class B-1 Concrete (Box Culvert) f'c = 4,000 psi
Reinforcing Steel (ASTM A615 Grade 60) fy = 60,000 psi

Standard Plans:
703.37, 703.41, 703.46, 703.47 (4)

Miscellaneous:
MoDOT Construction personnel will indicate the type of box culvert constructed:
☐ Precast Concrete Box used
☐ Cast-in-Place Concrete Box used

When alternate precast concrete box sections are used, the minimum distance from inside face of headwalls to precast sections measured along the shortest wall shall be 3 feet. Reinforcement and dimensions for wings and headwalls shall be in accordance with Missouri Standard Plans.

Channel bottom shall be graded within the right of way for transition of channel bed to culvert openings. Channel banks shall be tapered to match culvert openings. (Roadway Item)

Traffic Handling:
Structure to be closed during construction. Traffic to be maintained on during construction. See roadway plans for traffic control.

B.M.

CULVERT-BRIDGE: ROUTE * OVER *
ROUTE * FROM * TO *
ABOUT * MILES * OF *
TIE STA. _____

DATE PREPARED	
12/18/2024	
ROUTE	STATE MO
DISTRICT	SHEET NO. 4
COUNTY	
JOB NO.	
CONTRACT ID.	
PROJECT NO.	
BRIDGE NO.	

DESCRIPTION	DATE

MISSOURI HIGHWAYS AND TRANSPORTATION COMMISSION
105 WEST CAPITOL
JEFFERSON CITY, MO 65102
1-888-ASK-MODOT (1-888-275-6636)

Designed
Detailed
Checked

Note: This drawing is not to scale. Follow dimensions.

BXC04_dbl_sq_fla Guidance & Alternate Details (1 of 2)

Pipes With Same Diameter

XX" Pipe Inlet Data		
Station	Offset	F.L. Elev.
xx+xx.xx	xx.xx' XX	xxx.xx
xx+xx.xx	xx.xx' XX	xxx.xx
xx+xx.xx	xx.xx' XX	xxx.xx

Inlets Sized for Elevation A-A
(Pipe Diameter/Culvert HT)

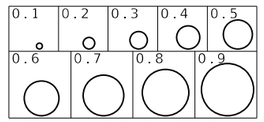

Ex: Use 0.5 detail for 36" pipe into a 6' tall culvert.

Pipes With Different Diameters

Pipe Inlet Data			
Station	Offset	Dia.	F.L. Elev.
xx+xx.xx	xx.xx' XX	xx"	xxx.xx
xx+xx.xx	xx.xx' XX	xx"	xxx.xx
xx+xx.xx	xx.xx' XX	xx"	xxx.xx

Supplemental Pipe Inlet Details (4)

Supplemental Reinforcement Table (Nonstandard culverts with only one design fill height) (5)

Top Slab Reinforcement												Bottom Slab Reinforcement									Wall Reinforcement				
A1 Bars		J3 Bars				H1 Bars			H2 Bars			A2 Bars		J4 Bars				H3 Bars			B1 Bars		B2 Bars		
Sz.	Spa.	Sz.	Spa.	C1	K2	Sz.	Spa.	C5	Sz.	Spa.	C6	Sz.	Spa.	Sz.	Spa.	C4	K3	Sz.	Spa.	C7	Sz.	Spa.	Sz.	Spa.	G1
x	x	x	x	x	x	x	x	x	x	x	x	x	x	x	x	x	x	x	x	x	x	x	x	x	x

Substitute table for tables shown on Standard Plan 703.47

Standard Drawing Guidance
(Do not show on plans. Turn off the Bridge Construction level to hide)

Some details have been grouped together to allow easy substitution with alternate details. To edit grouped details, select them and press <Ctrl> U.

(1) Ahead station is shown for streams flowing left to right. Arrow must be flipped for streams that flow right to left.

(2) Modify Estimated Quantities as required. Don't leave blank rows but leave space between Estimated Quantities and General Notes for at least one pay item to be added during construction. See Alternate Details for culvert extensions, or if five items are required.

(3) Add any required transverse joints proportionally spaced along the barrel. Label units and add actual lengths of units along the barrel.

(4) Insert STD 703.60 when pipe inlets are required. Add pipe inlets to Plan of Layout Dimensions at appropriate locations and to Elevation A-A if visible from elevation. Add inlet data using notes where space allows, or use tables.

(5) For nonstandard culverts with only one design fill height, add supplemental reinforcement table.

(6) No need to revise General Elevation A-A for dual roadways. In Fill Heights table add a lane designation after ℄ Rdwy and insert another row for the other lane.

*** VARIABLE DESIGN FILL HEIGHTS ***

(a) Select and delete the details grouped with the Fill Heights table. Select and move the alternate grouped details to drawing.

(b) Place "See Member Thickness table" in the Equation column and place "Varies" in the Dim. column. If Dimension F varies, place "Varies" in the Dim. column.

(c) Remove blank rows. End units may have different design fill heights but both units need to have the same member thicknesses.

(d) This portion of table required when design fill height exceeds limits of the standard plans or when culvert cell height or span is not standard. If only a portion of the units are nonstandard, fill out entire table using the values from the standard table where applicable. Omit if not required.

Alternate Plan of Transverse Joints

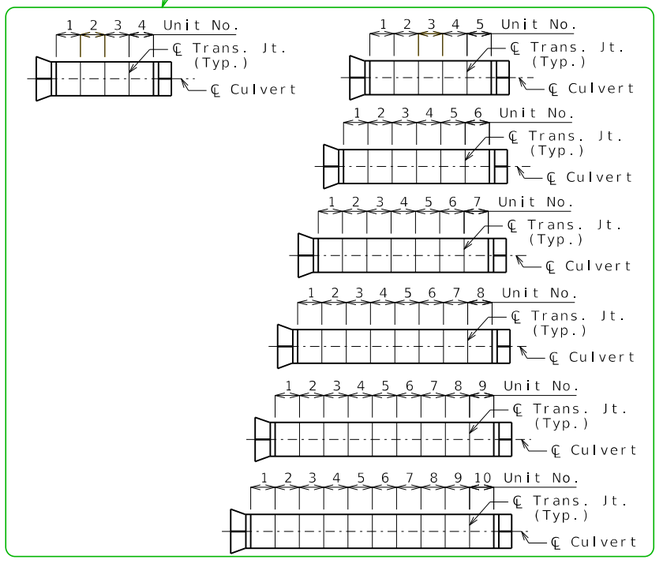

If any part of the barrel is exposed, the roadway fill shall be warped to provide 12 inches minimum cover. (Roadway Item)

Construction joint key not shown for clarity, see standard plans for details.

If unsuitable material is encountered, excavation of unsuitable material and furnishing and placing of granular backfill shall be in accordance with Sec 206.

BXC04_dbl_sq_fla Guidance & Alternate Details (2 of 2)

Corresponds to the border of the standard drawing for ease in moving alternate details (Snap to corner)

Alternate Details for Multiple Design Fill Heights (a)

Fill Heights	
℄ Rdwy at ℄ Culvert =	ft
Design (Units 1 &) =	ft
Design (Units &) =	ft
Design (Units &) =	ft

Dimensions are based on end units, except AA is based on Unit . Fill heights are measured from the top of top slab to the top of earth fill or roadway.

Estimated Quantities			Final
Class 4 Excavation	cu. yard	x	
Temporary Shoring	lump sum	1	
Partial Removal of Culvert-Bridge Concrete	lump sum	1	
Class B-1 Concrete (Culverts-Bridge)	cu. yard	x	
Reinforcing Steel (Culverts-Bridge)	pound	x	

(2)

Alternate Estimated Quantities for Culvert Extensions or when Five Items are Required

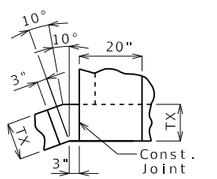

DETAIL A

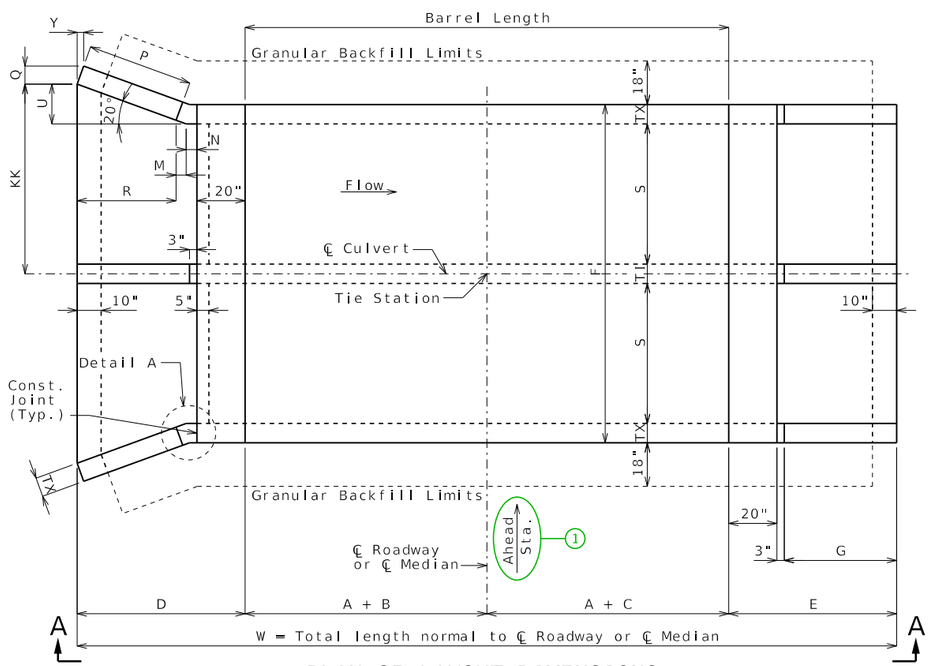

PLAN OF LAYOUT DIMENSIONS

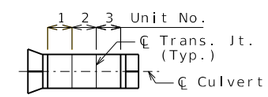

PLAN OF TRANSVERSE JOINTS AND STAGE CONSTRUCTION

Remove if not applicable.

(c) (d)

Unit No.	Unit Length	Member Thickness					Top Slab Reinforcement												Bottom Slab Reinforcement									Wall Reinforcement				
							A1 Bars		J3 Bars				H1 Bars			H2 Bars			A2 Bars		J4 Bars				H3 Bars			B1 Bars		B2 Bars		
		TS	BS	TX	TI	F	Sz.	Spa.	Sz.	Spa.	C1	K2	Sz.	Spa.	C5	Sz.	Spa.	C6	Sz.	Spa.	Sz.	Spa.	C4	K3	Sz.	Spa.	C7	Sz.	Spa.	Sz.	Spa.	G1
x	x	x	x	x	x	'- "	x	x	x	x	x	x	x	x	x	x	x	x	x	x	x	x	x	x	x	x	x	x	x	x	x	x
x	x	x	x	x	x	'- "	x	x	x	x	x	x	x	x	x	x	x	x	x	x	x	x	x	x	x	x	x	x	x	x	x	x
x	x	x	x	x	x	'- "	x	x	x	x	x	x	x	x	x	x	x	x	x	x	x	x	x	x	x	x	x	x	x	x	x	x

Substitute table for tables shown on Standard Plan 703.47

2('x ') CONCRETE BOX CULVERT

SEC/SUR * TWP * RGE *

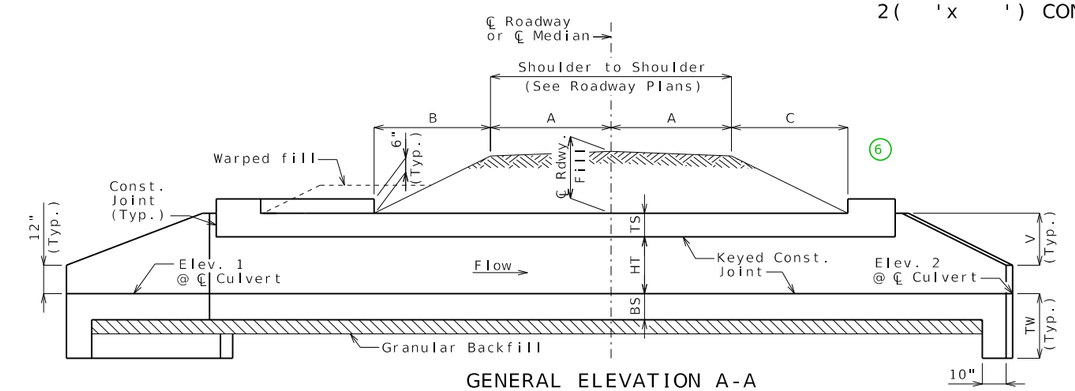

GENERAL ELEVATION A-A

Construction joint key not shown for clarity, see standard plans for details.

If any part of the barrel is exposed, the roadway fill shall be warped to provide 12 inches minimum cover. (Roadway Item)

If unsuitable material is encountered, excavation of unsuitable material and furnishing and placing of granular backfill shall be in accordance with Sec 206.

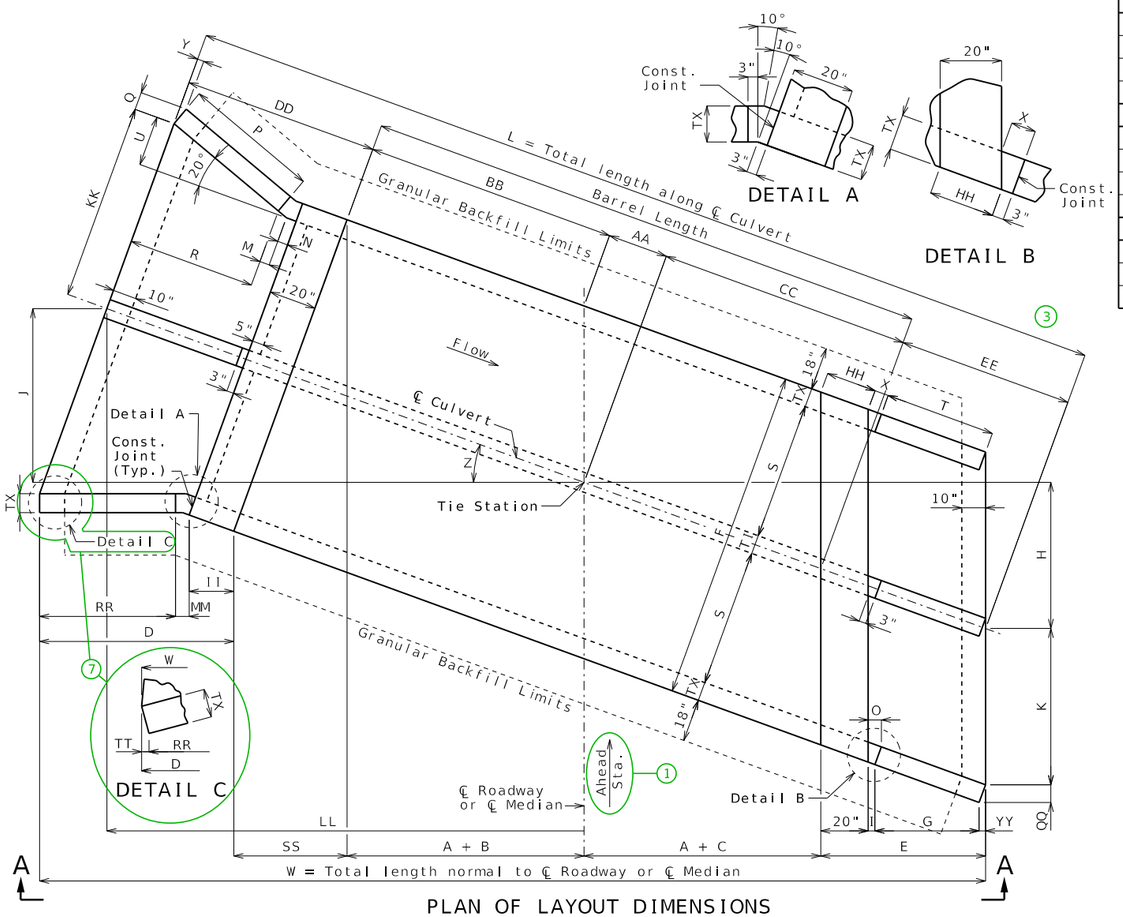

PLAN OF LAYOUT DIMENSIONS

Layout Dimensions

Var.	Equation	Dim.	Var.	Equation	Dim.	Var.	Equation	Dim.
S	- - -	x	K	(S + TI/2)(sec Z)	x	BB	(A + B)(sec Z)	x
HT	- - -	x	L	AA + BB + CC + DD + EE	x	CC	(A + C)(sec Z)	x
TS	- - -	x	M	N(cos 20°)	x	DD	R + M + N + 20"	x
BS	- - -	x	N	3" + TX(tan 10°)	x	EE	E(sec Z)	x
TX	- - -	x	O	I + YY	x	HH	20"(sec Z)	x
TI	- - -	x	P	2V[sec(Z + 20°)]	x	II	20"(cos Z)	x
A	- - -	x	Q	TX(cos 20°)	x	KK	S + TI/2 + U	x
B	- - -	x	R	P(cos 20°)	x	LL	(AA + BB + DD)(cos Z)	x
C	- - -	x	T	G(sec Z)	x	MM	3"[cos Z + cos(Z - 20°)]	x
D	II + MM + RR + TT (7)	x	U	(R + M)(tan 20°)	x	QQ	TX(cos Z)	x
E	G + O + 20"	x	V	HT + TS - 12"	x	RR	P[cos(Z - 20°)]	x
F	2S + 2TX + TI (b)	x	W	2A + B + C + D + E + SS	x	SS	F(sin Z)	x
G	2V	x	X	3" + TX(tan Z)	x	TT	TX[sin(20°- Z)] (7)	x
H	(A + C + E)(tan Z)	x	Y	TX(sin 20°)	x	YY	TX(sin Z)	x
I	3"(cos Z)	x	Z	Skew Angle	x	TW	Max{3'-4" or (BS + 12")}	x
J	(AA + BB + DD)(sin Z)	x	AA	F(tan Z)/2	x			

Hydrologic Data

Drainage Area = ___ mi^2
Design Flood Frequency = ___ years
Design Flood Discharge = ___ cfs
Design Flood (D.F.) Elevation = _____
Base Flood (100-year)
Base Flood Elevation = _____
Base Flood Discharge = ___ cfs
Estimated Backwater = __ ft
Outlet Velocity = __ ft/s
Roadway Overtopping
Overtopping Flood Discharge = ___ cfs
Overtopping Flood Frequency = ___ years
_____ Flood Elevation = _____

Elevations

Upstream (Elev. 1) =
Downstream (Elev. 2) =
Pr. Gr. at Tie Sta. =

Fill Heights

℄ Rdwy at ℄ Culvert =	ft
Design (All units) =	ft

Dimensions are based on end units.
Fill heights are measured from the top of top slab to the top of earth fill or roadway. (a)

Estimated Quantities

			Final
Class 4 Excavation	cu. yard	x	
Removal of Bridges	lump sum	1	
Class B-1 Concrete (Culverts-Bridge)	cu. yard	x	
Reinforcing Steel (Culverts-Bridge)	pound	x	

(2)

LOCATION SKETCH

General Notes:

Design Specifications:
2010 AASHTO LRFD Bridge Design Specifications and 2010 Interim Revisions

Design Loading:
Vehicular = HL-93 minus lane load, Earth = 120 lb/cf
Equivalent Fluid Pressure = 30 lb/cf (min.), 60 lb/cf (max.)

Design Unit Stresses:
Class B-1 Concrete (Box Culvert) f'c = 4,000 psi
Reinforcing Steel (ASTM A615 Grade 60) fy = 60,000 psi

Standard Plans:
703.37, 703.43, 703.46, 703.47 (4)

Miscellaneous:
MoDOT Construction personnel will indicate the type of box culvert constructed:
☐ Precast Concrete Box used
☐ Cast-in-Place Concrete Box used

When alternate precast concrete box sections are used, the minimum distance from inside face of headwalls to precast sections measured along the shortest wall shall be 3 feet. Reinforcement and dimensions for wings and headwalls shall be in accordance with Missouri Standard Plans.

Channel bottom shall be graded within the right of way for transition of channel bed to culvert openings. Channel banks shall be tapered to match culvert openings. (Roadway Item)

Traffic Handling:
Structure to be closed during construction. Traffic to be maintained on during construction. See roadway plans for traffic control.

B.M.

CULVERT-BRIDGE: ROUTE * OVER *
ROUTE * FROM * TO *
ABOUT * MILES * OF *
TIE STA. _____

DATE PREPARED	6/2/2025
ROUTE	STATE MO
DISTRICT	SHEET NO. 5
COUNTY	
JOB NO.	
CONTRACT ID.	
PROJECT NO.	
BRIDGE NO.	

DESCRIPTION

DATE

MISSOURI HIGHWAYS AND TRANSPORTATION COMMISSION
105 WEST CAPITOL
JEFFERSON CITY, MO 65102
1-888-ASK-MODOT (1-888-275-6636)

Designed
Detailed
Checked

Note: This drawing is not to scale. Follow dimensions.

BXC05_dbl_sq_fla Guidance & Alternate Details (1 of 2)

Pipes With Same Diameter

XX" Pipe Inlet Data		
Station	Offset	F.L. Elev.
xx+xx.xx	xx.xx' XX	xxx.xx
xx+xx.xx	xx.xx' XX	xxx.xx
xx+xx.xx	xx.xx' XX	xxx.xx

Pipes With Different Diameters

Pipe Inlet Data			
Station	Offset	Dia.	F.L. Elev.
xx+xx.xx	xx.xx' XX	xx"	xxx.xx
xx+xx.xx	xx.xx' XX	xx"	xxx.xx
xx+xx.xx	xx.xx' XX	xx"	xxx.xx

Inlets Sized for Elevation A-A
(Pipe Diameter/Culvert HT)

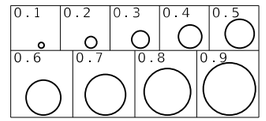

Ex: Use 0.5 detail for 36" pipe into a 6' tall culvert.

Supplemental Pipe Inlet Details (4)

Supplemental Reinforcement Table (Nonstandard culverts with only one design fill height) (5)

Top Slab Reinforcement												Bottom Slab Reinforcement									Wall Reinforcement				
A1 Bars		J3 Bars				H1 Bars			H2 Bars			A2 Bars		J4 Bars				H3 Bars			B1 Bars		B2 Bars		
Sz.	Spa.	Sz.	Spa.	C1	K2	Sz.	Spa.	C5	Sz.	Spa.	C6	Sz.	Spa.	Sz.	Spa.	C4	K3	Sz.	Spa.	C7	Sz.	Spa.	Sz.	Spa.	G1
x	x	x	x	x	x	x	x	x	x	x	x	x	x	x	x	x	x	x	x	x	x	x	x	x	x

Substitute table for tables shown on Standard Plan 703.47

Standard Drawing Guidance
(Do not show on plans. Turn off the Bridge Construction level to hide)

Some details have been grouped together to allow easy substitution with alternate details. To edit grouped details, select them and press <Ctrl> U.

(1) Ahead station is shown for streams flowing left to right. Arrow must be flipped for streams that flow right to left.

(2) Modify Estimated Quantities as required. Don't leave blank rows but leave space between Estimated Quantities and General Notes for at least one pay item to be added during construction. See Alternate Details for culvert extensions, or if five items are required.

(3) Add any required transverse joints proportionally spaced along the barrel. Label units and add actual lengths of units along the barrel.

(4) Insert STD 703.60 when pipe inlets are required. Add pipe inlets to Plan of Layout Dimensions at appropriate locations and to Elevation A-A if visible from elevation. Add inlet data using notes where space allows, or use tables.

(5) For nonstandard culverts with only one design fill height, add supplemental reinforcement table.

(6) No need to revise General Elevation A-A for dual roadways. In Fill Heights table add a lane designation after ℄ Rdwy and insert another row for the other lane.

(7) For skews 20° or more, remove Detail C, remove TT from the equation for D and place "N/A" in the Dim. column for Dim. TT. Will first need to drop Detail C from group by selecting it, then pressing <Ctrl> U.

*** VARIABLE DESIGN FILL HEIGHTS ***

(a) Select and delete the details grouped with the Fill Heights table. Select and move the alternate grouped details to drawing.

(b) Place "See Member Thickness table" in the Equation column and place "Varies" in the Dim. column. If Dimension F varies, place "Varies" in the Dim. column.

(c) Remove blank rows. End units may have different design fill heights but both units need to have the same member thicknesses.

(d) This portion of table required when design fill height exceeds limits of the standard plans or when culvert cell height or span is not standard. If only a portion of the units are nonstandard, fill out entire table using the values from the standard table where applicable. Omit if not required.

Alternate Plan of Transverse Joints

(e)

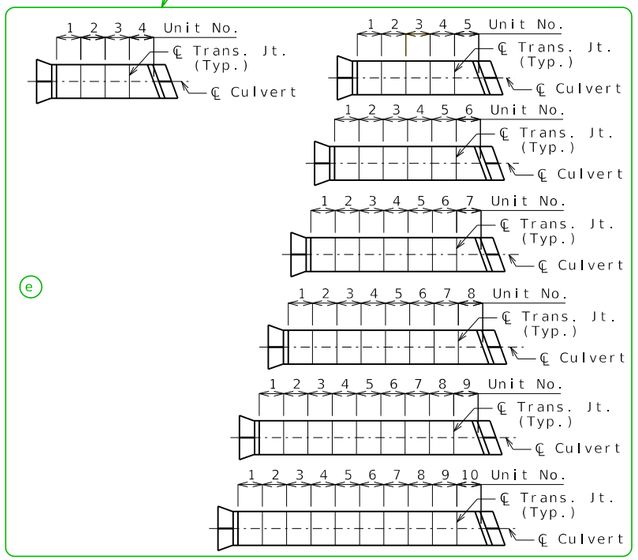

If any part of the barrel is exposed, the roadway fill shall be warped to provide 12 inches minimum cover. (Roadway Item)

Construction joint key not shown for clarity, see standard plans for details.

If unsuitable material is encountered, excavation of unsuitable material and furnishing and placing of granular backfill shall be in accordance with Sec 206.

BXC05_dbl_sq_fla Guidance & Alternate Details (2 of 2)

Corresponds to the border of the standard drawing for ease in moving alternate details (Snap to corner)

Alternate Details for Multiple Design Fill Heights (a)

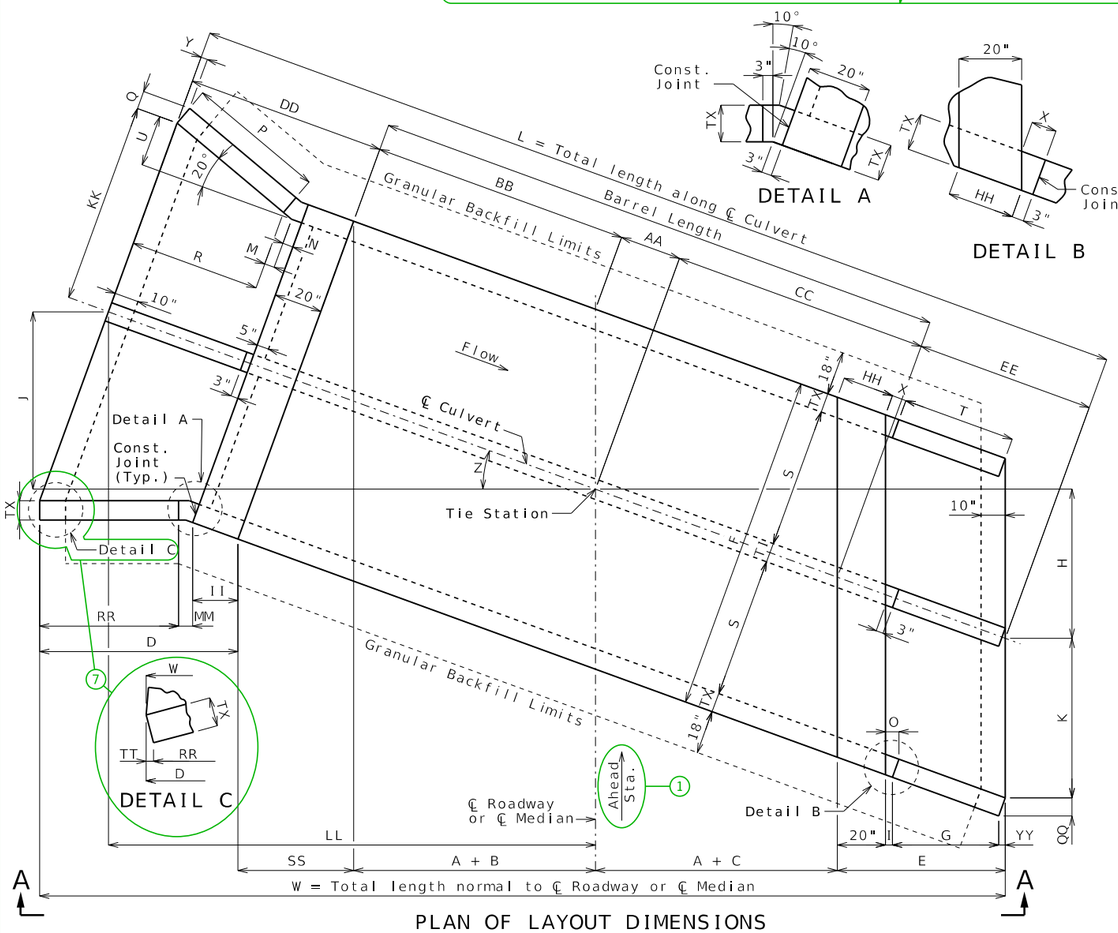

PLAN OF LAYOUT DIMENSIONS

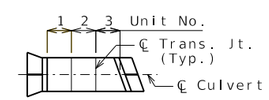

PLAN OF TRANSVERSE JOINTS AND STAGE CONSTRUCTION

Remove if not applicable.

Fill Heights	
℄ Rdwy at ℄ Culvert =	ft
Design (Units 1 &) =	ft
Design (Units &) =	ft
Design (Units &) =	ft

Dimensions are based on end units, except AA is based on Unit . Fill heights are measured from the top of top slab to the top of earth fill or roadway.

Estimated Quantities			Final
Class 4 Excavation	cu. yard	x	
Temporary Shoring	lump sum	1	
Partial Removal of Culvert-Bridge Concrete	lump sum	1	
Class B-1 Concrete (Culverts-Bridge)	cu. yard	x	
Reinforcing Steel (Culverts-Bridge)	pound	x	

(2)

Alternate Estimated Quantities for Culvert Extensions or when Five Items are Required

(c) (d)

Unit No.	Unit Length	Member Thickness					Top Slab Reinforcement												Bottom Slab Reinforcement									Wall Reinforcement				
							A1 Bars		J3 Bars				H1 Bars			H2 Bars			A2 Bars		J4 Bars				H3 Bars			B1 Bars		B2 Bars		
		TS	BS	TX	TI	F	Sz.	Spa.	Sz.	Spa.	C1	K2	Sz.	Spa.	C5	Sz.	Spa.	C6	Sz.	Spa.	Sz.	Spa.	C4	K3	Sz.	Spa.	C7	Sz.	Spa.	Sz.	Spa.	G1
x	x	x	x	x	x	'-	x	x	x	x	x	x	x	x	x	x	x	x	x	x	x	x	x	x	x	x	x	x	x	x	x	x
x	x	x	x	x	x	'-	x	x	x	x	x	x	x	x	x	x	x	x	x	x	x	x	x	x	x	x	x	x	x	x	x	x
x	x	x	x	x	x	'-	x	x	x	x	x	x	x	x	x	x	x	x	x	x	x	x	x	x	x	x	x	x	x	x	x	x

Substitute table for tables shown on Standard Plan 703.47

2('x ') CONCRETE BOX CULVERT

SEC/SUR * TWP * RGE *

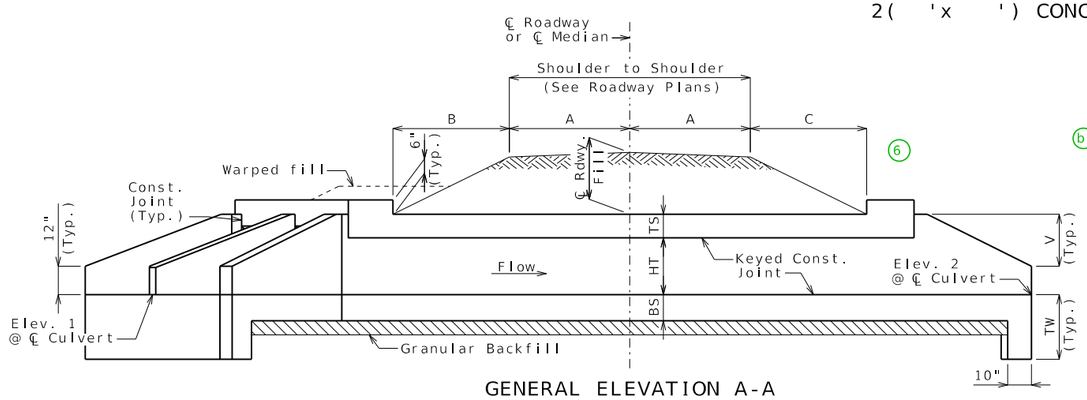

GENERAL ELEVATION A-A

Construction joint key not shown for clarity, see standard plans for details.

If any part of the barrel is exposed, the roadway fill shall be warped to provide 12 inches minimum cover. (Roadway Item)

If unsuitable material is encountered, excavation of unsuitable material and furnishing and placing of granular backfill shall be in accordance with Sec 206.

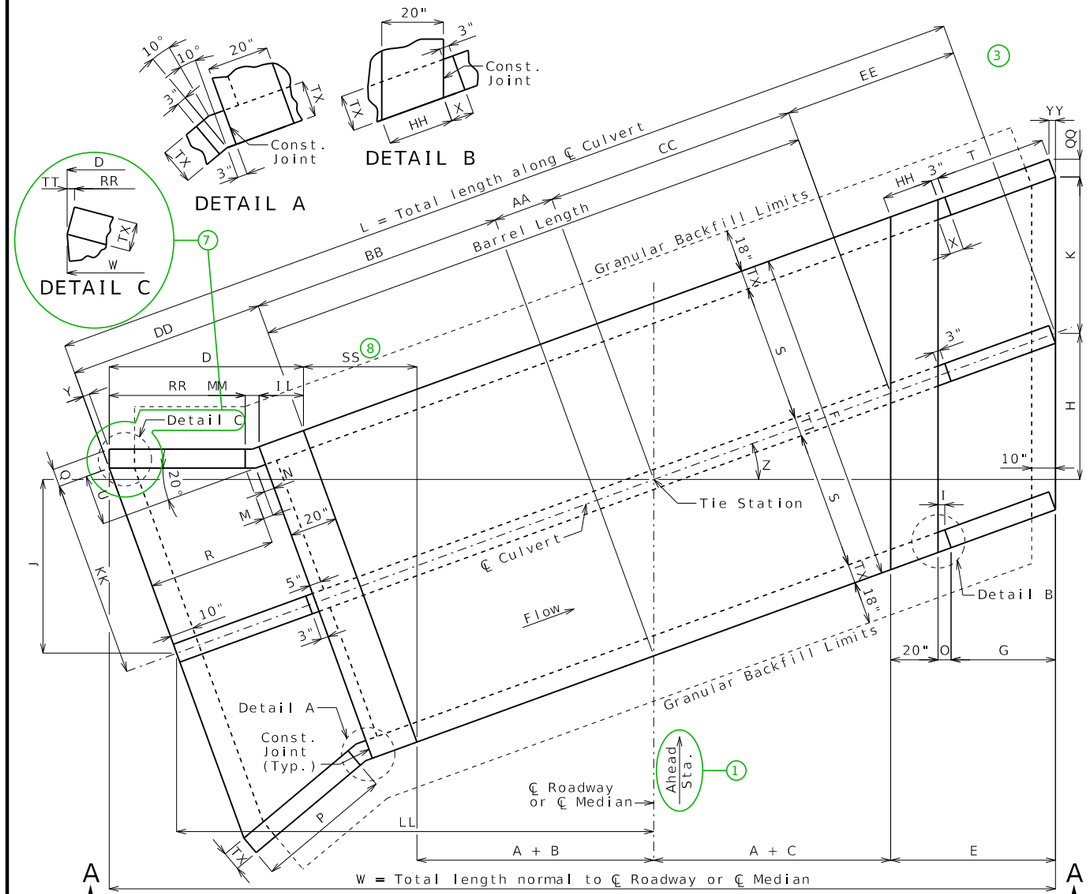

PLAN OF LAYOUT DIMENSIONS

Layout Dimensions

Var.	Equation	Dim.	Var.	Equation	Dim.	Var.	Equation	Dim.
S	- - -	x	K	(S + TI/2)(sec Z)	x	BB	(A + B)(sec Z)	x
HT	- - -	x	L	AA + BB + CC + DD + EE	x	CC	(A + C)(sec Z)	x
TS	- - -	x	M	N(cos 20°)	x	DD	R + M + N + 20"	x
BS	- - -	x	N	3" + TX(tan 10°)	x	EE	E(sec Z)	x
TX	- - -	x	O	I + YY	x	HH	20"(sec Z)	x
TI	- - -	x	P	2V[sec(Z + 20°)]	x	II	20"(cos Z)	x
A	- - -	x	Q	TX(cos 20°)	x	KK	S + TI/2 + U	x
B	- - -	x	R	P(cos 20°)	x	LL	(AA + BB + DD)(cos Z)	x
C	- - -	x	T	G(sec Z)	x	MM	3"[cos Z + cos(Z - 20°)]	x
D	II + MM + RR + TT (7)	x	U	(R + M)(tan 20°)	x	QQ	TX(cos Z)	x
E	G + O + 20"	x	V	HT + TS - 12"	x	RR	P[cos(Z - 20°)]	x
F	2S + 2TX + TI (b)	x (b)	W	2A + B + C + D + E + SS	x	SS	F(sin Z)	x
G	2V	x	X	3" + TX(tan Z)	x	TT	TX[sin(20° - Z)] (7)	x (7)
H	(A + C + E)(tan Z)	x	Y	TX(sin 20°)	x	YY	TX(sin Z)	x
I	3"(cos Z)	x	Z	Skew Angle	x	TW	Max{3'-4" or (BS + 12")}	x
J	(AA + BB + DD)(sin Z)	x	AA	F(tan Z)/2	x			

Hydrologic Data

Drainage Area = ___ mi^2
Design Flood Frequency = ___ years
Design Flood Discharge = ___ cfs
Design Flood (D.F.) Elevation = _____

Base Flood (100-year)

Base Flood Elevation = _____
Base Flood Discharge = ___ cfs
Estimated Backwater = __ ft
Outlet Velocity = __ ft/s

Roadway Overtopping

Overtopping Flood Discharge = ___ cfs
Overtopping Flood Frequency = ___ years
_____ Flood Elevation = _____

Elevations

Upstream (Elev. 1) =
Downstream (Elev. 2) =
Pr. Gr. at Tie Sta. =

Fill Heights

(6) ℄ Rdwy at ℄ Culvert = ft
Design (All units) = ft

Dimensions are based on end units.
Fill heights are measured from the top of top slab to the top of earth fill or roadway. (a)

Estimated Quantities

			Final
Class 4 Excavation	cu. yard	x	
Removal of Bridges	lump sum	1	
Class B-1 Concrete (Culverts-Bridge)	cu. yard	x	
Reinforcing Steel (Culverts-Bridge)	pound	x	

(2)

General Notes:

Design Specifications:
2010 AASHTO LRFD Bridge Design Specifications and 2010 Interim Revisions

Design Loading:
Vehicular = HL-93 minus lane load, Earth = 120 lb/cf
Equivalent Fluid Pressure = 30 lb/cf (min.), 60 lb/cf (max.)

Design Unit Stresses:
Class B-1 Concrete (Box Culvert) f'c = 4,000 psi
Reinforcing Steel (ASTM A615 Grade 60) fy = 60,000 psi

Standard Plans:
703.37, 703.45, 703.46, 703.47 (4)

Miscellaneous:
MoDOT Construction personnel will indicate the type of box culvert constructed:
☐ Precast Concrete Box used
☐ Cast-in-Place Concrete Box used

When alternate precast concrete box sections are used, the minimum distance from inside face of headwalls to precast sections measured along the shortest wall shall be 3 feet. Reinforcement and dimensions for wings and headwalls shall be in accordance with Missouri Standard Plans.

Channel bottom shall be graded within the right of way for transition of channel bed to culvert openings. Channel banks shall be tapered to match culvert openings. (Roadway Item)

Traffic Handling:
Structure to be closed during construction. Traffic to be maintained on during construction. See roadway plans for traffic control.

B.M.

LOCATION SKETCH

CULVERT-BRIDGE: ROUTE * OVER *

ROUTE * FROM * TO *
ABOUT * MILES * OF *
TIE STA. _____

Designed
Detailed
Checked

Note: This drawing is not to scale. Follow dimensions.

Sheet No. 1 of

DATE PREPARED	6/2/2025
ROUTE	STATE MO
DISTRICT	SHEET NO. 6
COUNTY	
JOB NO.	
CONTRACT ID.	
PROJECT NO.	
BRIDGE NO.	

DESCRIPTION

DATE

MISSOURI HIGHWAYS AND TRANSPORTATION COMMISSION
105 WEST CAPITOL
JEFFERSON CITY, MO 65102
1-888-ASK-MODOT (1-888-275-6636)

BXC06_dbl_ra_fla Guidance & Alternate Details (1 of 2)

Pipes With Same Diameter

XX" Pipe Inlet Data		
Station	Offset	F.L. Elev.
xx+xx.xx	xx.xx' XX	xxx.xx
xx+xx.xx	xx.xx' XX	xxx.xx
xx+xx.xx	xx.xx' XX	xxx.xx

Pipes With Different Diameters

Pipe Inlet Data			
Station	Offset	Dia.	F.L. Elev.
xx+xx.xx	xx.xx' XX	xx"	xxx.xx
xx+xx.xx	xx.xx' XX	xx"	xxx.xx
xx+xx.xx	xx.xx' XX	xx"	xxx.xx

Inlets Sized for Elevation A-A
(Pipe Diameter/Culvert HT)

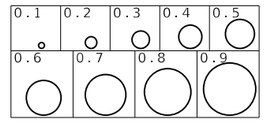

Ex: Use 0.5 detail for 36" pipe into a 6' tall culvert.

Supplemental Pipe Inlet Details (4)

Supplemental Reinforcement Table (Nonstandard culverts with only one design fill height) (5)

Top Slab Reinforcement												Bottom Slab Reinforcement									Wall Reinforcement				
A1 Bars		J3 Bars				H1 Bars			H2 Bars			A2 Bars		J4 Bars				H3 Bars			B1 Bars		B2 Bars		
Sz.	Spa.	Sz.	Spa.	C1	K2	Sz.	Spa.	C5	Sz.	Spa.	C6	Sz.	Spa.	Sz.	Spa.	C4	K3	Sz.	Spa.	C7	Sz.	Spa.	Sz.	Spa.	G1
x	x	x	x	x	x	x	x	x	x	x	x	x	x	x	x	x	x	x	x	x	x	x	x	x	x

Substitute table for tables shown on Standard Plan 703.47

Standard Drawing Guidance
(Do not show on plans. Turn off the Bridge Construction level to hide)

Some details have been grouped together to allow easy substitution with alternate details. To edit grouped details, select them and press <Ctrl> U.

(1) Ahead station is shown for streams flowing left to right. Arrow must be flipped for streams that flow right to left.

(2) Modify Estimated Quantities as required. Don't leave blank rows but leave space between Estimated Quantities and General Notes for at least one pay item to be added during construction. See Alternate Details for culvert extensions, or if five items are required.

(3) Add any required transverse joints proportionally spaced along the barrel. Label units and add actual lengths of units along the barrel.

(4) Insert STD 703.60 when pipe inlets are required. Add pipe inlets to Plan of Layout Dimensions at appropriate locations and to Elevation A-A if visible from elevation. Add inlet data using notes where space allows, or use tables.

(5) For nonstandard culverts with only one design fill height, add supplemental reinforcement table.

(6) No need to revise General Elevation A-A for dual roadways. In Fill Heights table add a lane designation after ℄ Rdwy and insert another row for the other lane.

(7) For skews 20° or more, remove Detail C, remove TT from the equation for D and place "N/A" in the Dim. column for Dim. TT. Will first need to drop Detail C from group by selecting it, then pressing <Ctrl> U.

(8) Dimension SS is perpedicular to downstream headwall, not parallel to flared wing.

*** VARIABLE DESIGN FILL HEIGHTS ***

(a) Select and delete the details grouped with the Fill Heights table. Select and move the alternate grouped details to drawing.

(b) Place "See Member Thickness table" in the Equation column and place "Varies" in the Dim. column. If Dimension F varies, place "Varies" in the Dim. column.

(c) Remove blank rows. End units may have different design fill heights but both units need to have the same member thicknesses.

(d) This portion of table required when design fill height exceeds limits of the standard plans or when culvert cell height or span is not standard. If only a portion of the units are nonstandard, fill out entire table using the values from the standard table where applicable. Omit if not required.

Alternate Plan of Transverse Joints

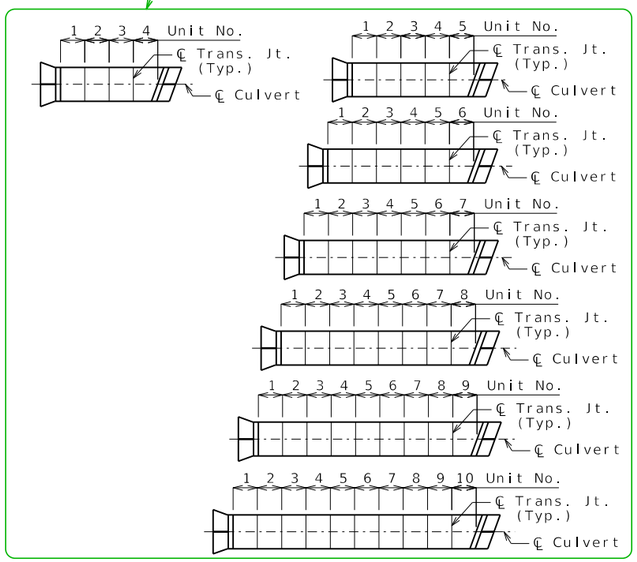

If any part of the barrel is exposed, the roadway fill shall be warped to provide 12 inches minimum cover. (Roadway Item)

Construction joint key not shown for clarity, see standard plans for details.

If unsuitable material is encountered, excavation of unsuitable material and furnishing and placing of granular backfill shall be in accordance with Sec 206.

BXC06_dbl_ra_fla Guidance & Alternate Details (2 of 2)

Corresponds to the border of the standard drawing for ease in moving alternate details (Snap to corner)

Alternate Details for Multiple Design Fill Heights (a)

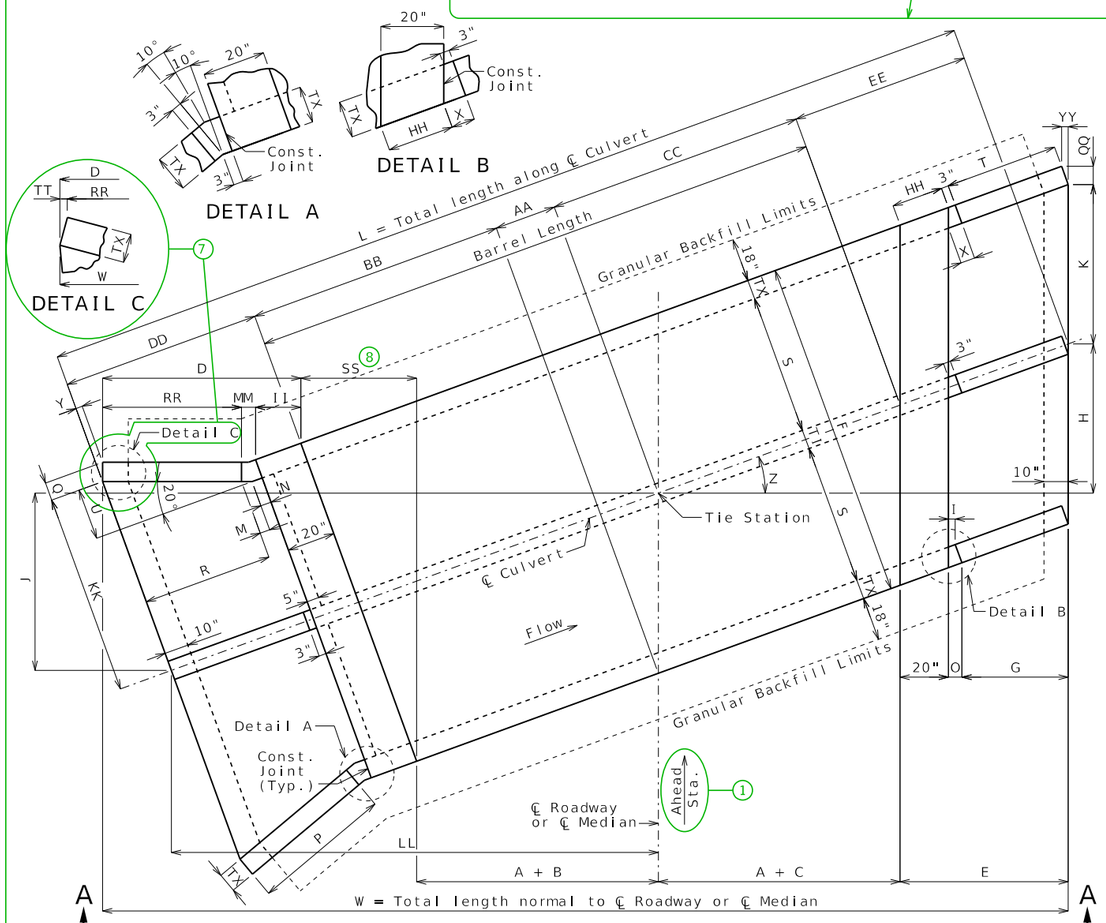

PLAN OF LAYOUT DIMENSIONS

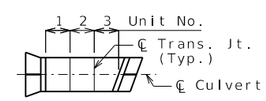

PLAN OF TRANSVERSE JOINTS AND STAGE CONSTRUCTION

Remove if not applicable.

Fill Heights	
℄ Rdwy at ℄ Culvert =	ft
Design (Units 1 &) =	ft
Design (Units &) =	ft
Design (Units &) =	ft

Dimensions are based on end units, except AA is based on Unit . Fill heights are measured from the top of top slab to the top of earth fill or roadway.

Estimated Quantities			Final
Class 4 Excavation	cu. yard	x	
Temporary Shoring	lump sum	1	
Partial Removal of Culvert-Bridge Concrete	lump sum	1	
Class B-1 Concrete (Culverts-Bridge)	cu. yard	x	
Reinforcing Steel (Culverts-Bridge)	pound	x	

(2)

Alternate Estimated Quantities for Culvert Extensions or when Five Items are Required

LOCATION SKETCH

(c)

Unit No.	Unit Length	Member Thickness				
		TS	BS	TX	TI	F
x	x	x	x	x	x	'- "
x	x	x	x	x	x	'- "
x	x	x	x	x	x	'- "

(d)

Top Slab Reinforcement																															
A1 Bars		J3 Bars						H1 Bars			H2 Bars			A2 Bars		J4 Bars				H3 Bars			B1 Bars		B2 Bars		
Sz.	Spa.	Sz.	Spa.	C1	K2	Sz.	Spa.	C5	Sz.	Spa.	C6	Sz.	Spa.	C7	Sz.	Spa.	C4	K3	Sz.	Spa.	C7	Sz.	Spa.	Sz.	Spa.	G1
x	x	x	x	x	x	x	x	x	x	x	x	x	x	x	x	x	x	x	x	x	x	x	x	x	x	x
x	x	x	x	x	x	x	x	x	x	x	x	x	x	x	x	x	x	x	x	x	x	x	x	x	x	x
x	x	x	x	x	x	x	x	x	x	x	x	x	x	x	x	x	x	x	x	x	x	x	x	x	x	x

Substitute table for tables shown on Standard Plan 703.47

3('x ') CONCRETE BOX CULVERT

SEC/SUR * TWP * RGE *

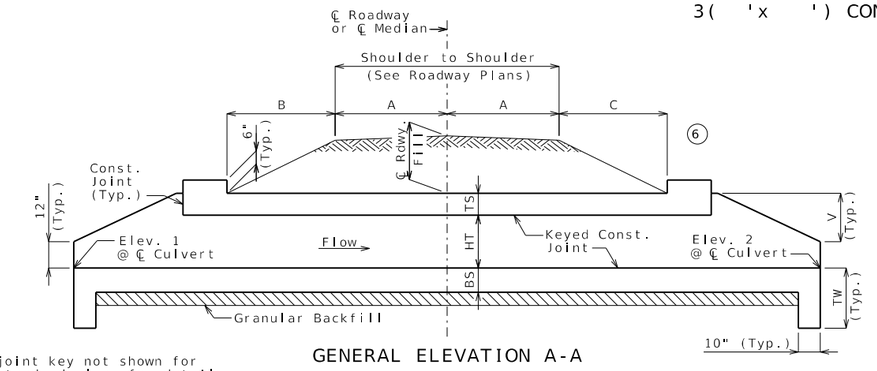

GENERAL ELEVATION A-A

Construction joint key not shown for clarity, see standard plans for details.

If any part of the barrel is exposed, the roadway fill shall be warped to provide 12 inches minimum cover. (Roadway Item)

If unsuitable material is encountered, excavation of unsuitable material and furnishing and placing of granular backfill shall be in accordance with Sec 206.

(b) Layout Dimensions

Var.	Equation	Dim.	Var.	Equation	Dim.	Var.	Equation	Dim.
S	- - -	x	TI	- - -	x	F	3S + 2TX + 2TI (b)	x
HT	- - -	x	A	- - -	x	G	2V	x
(b) TS	- - -	x	B	- - -	x	V	HT + TS - 12"	x
BS	- - -	x	C	- - -	x	W	2A + B + C + 2E	x
TX	- - -	x	E	G + 23"	x	TW	Max{3'-4" or (BS + 12")}	x

Hydrologic Data

Drainage Area = ___ mi^2
Design Flood Frequency = ___ years
Design Flood Discharge = ___ cfs
Design Flood (D.F.) Elevation = _____
Base Flood (100-year)
Base Flood Elevation = _____
Base Flood Discharge = ___ cfs
Estimated Backwater = __ ft
Outlet Velocity = __ ft/s
Roadway Overtopping
Overtopping Flood Discharge = ___ cfs
Overtopping Flood Frequency = ___ years
_____ Flood Elevation = _____

Elevations

Upstream (Elev. 1) =
Downstream (Elev. 2) =
Pr. Gr. at Tie Sta. =

(6) Fill Heights

℄ Rdwy at ℄ Culvert =	ft
Design (All units) =	ft

Dimensions are based on end units.
Fill heights are measured from the top of top slab to the top of earth fill or roadway. (a)

Estimated Quantities

			Final
Class 4 Excavation	cu. yard	x	
Removal of Bridges	lump sum	1	
Class B-1 Concrete (Culverts-Bridge)	cu. yard	x	
Reinforcing Steel (Culverts-Bridge)	pound	x	

(2)

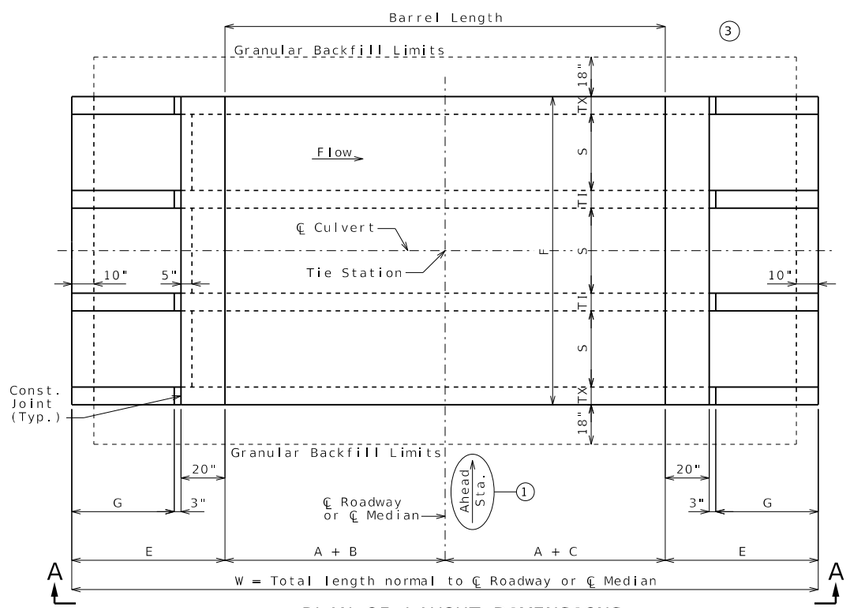

PLAN OF LAYOUT DIMENSIONS

LOCATION SKETCH

General Notes:

Design Specifications:
2010 AASHTO LRFD Bridge Design Specifications and 2010 Interim Revisions

Design Loading:
Vehicular = HL-93 minus lane load, Earth = 120 lb/cf
Equivalent Fluid Pressure = 30 lb/cf (min.), 60 lb/cf (max.)

Design Unit Stresses:
Class B-1 Concrete (Box Culvert) f'c = 4,000 psi
Reinforcing Steel (ASTM A615 Grade 60) fy = 60,000 psi

Standard Plans:
703.37, 703.80, 703.86, 703.87 (4)

Miscellaneous:
MoDOT Construction personnel will indicate the type of box culvert constructed:
☐ Precast Concrete Box used
☐ Cast-in-Place Concrete Box used

When alternate precast concrete box sections are used, the minimum distance from inside face of headwalls to precast sections measured along the shortest wall shall be 3 feet. Reinforcement and dimensions for wings and headwalls shall be in accordance with Missouri Standard Plans.

Channel bottom shall be graded within the right of way for transition of channel bed to culvert openings. Channel banks shall be tapered to match culvert openings. (Roadway Item)

Traffic Handling:
Structure to be closed during construction. Traffic to be maintained on during construction. See roadway plans for traffic control.

B.M.

CULVERT-BRIDGE: ROUTE * OVER *
ROUTE * FROM * TO *
ABOUT * MILES * OF *
TIE STA. _____

DATE PREPARED	12/18/2024
ROUTE	STATE MO
DISTRICT	SHEET NO. 7
COUNTY	
JOB NO.	
CONTRACT ID.	
PROJECT NO.	
BRIDGE NO.	

DESCRIPTION	DATE

MISSOURI HIGHWAYS AND TRANSPORTATION COMMISSION
105 WEST CAPITOL
JEFFERSON CITY, MO 65102
1-888-ASK-MODOT (1-888-275-6636)

Designed
Detailed
Checked

Note: This drawing is not to scale. Follow dimensions.

Pipes With Same Diameter

XX" Pipe Inlet Data		
Station	Offset	F.L. Elev.
xx+xx.xx	xx.xx' XX	xxx.xx
xx+xx.xx	xx.xx' XX	xxx.xx
xx+xx.xx	xx.xx' XX	xxx.xx

Inlets Sized for Elevation A-A
(Pipe Diameter/Culvert HT)

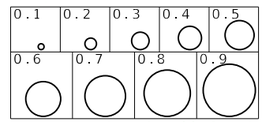

Ex: Use 0.5 detail for 36" pipe into a 6' tall culvert.

Pipes With Different Diameters

Pipe Inlet Data			
Station	Offset	Dia.	F.L. Elev.
xx+xx.xx	xx.xx' XX	xx"	xxx.xx
xx+xx.xx	xx.xx' XX	xx"	xxx.xx
xx+xx.xx	xx.xx' XX	xx"	xxx.xx

Supplemental Pipe Inlet Details (4)

Supplemental Reinforcement Table (Nonstandard culverts with only one design fill height) (5)

Top Slab Reinforcement														Bottom Slab Reinforcement										Wall Reinforcement				
A1 Bars		J3 Bars				H1 Bars				H2 Bars				A2 Bars		J4 Bars				H3 Bars				B1 Bars		B2 Bars		
Sz.	Spa.	Sz.	Spa.	C1	K2	Sz.	Spa.	C5	Q8	Sz.	Spa.	C6	Q9	Sz.	Spa.	Sz.	Spa.	C4	K3	Sz.	Spa.	C7	Q10	Sz.	Spa.	Sz.	Spa.	G1
x	x	x	x	x	x	x	x	x	x	x	x	x	x	x	x	x	x	x	x	x	x	x	x	x	x	x	x	x

Substitute table for tables shown on Standard Plan 703.87

Standard Drawing Guidance
(Do not show on plans. Turn off the Bridge Construction level to hide)

Some details have been grouped together to allow easy substitution with alternate details. To edit grouped details, select them and press <Ctrl> U.

(1) Ahead station is shown for streams flowing left to right. Arrow must be flipped for streams that flow right to left.

(2) Modify Estimated Quantities as required. Don't leave blank rows but leave space between Estimated Quantities and General Notes for at least one pay item to be added during construction. See Alternate Details for culvert extensions, or if five items are required.

(3) Add any required transverse joints proportionally spaced along the barrel. Label units and add actual lengths of units along the barrel.

(4) Insert STD 703.60 when pipe inlets are required. Add pipe inlets to Plan of Layout Dimensions at appropriate locations and to Elevation A-A if visible from elevation. Add inlet data using notes where space allows, or use tables.

(5) For nonstandard culverts with only one design fill height, add supplemental reinforcement table.

(6) No need to revise General Elevation A-A for dual roadways. In Fill Heights table add a lane designation after ℄ Rdwy and insert another row for the other lane.

*** VARIABLE DESIGN FILL HEIGHTS ***

(a) Select and delete the details grouped with the Fill Heights table. Select and move the alternate grouped details to drawing.

(b) Place "See Member Thickness table" in the Equation column and place "Varies" in the Dim. column. If Dimension F varies, place "Varies" in the Dim. column.

(c) Remove blank rows. End units may have different design fill heights but both units need to have the same member thicknesses.

(d) This portion of table required when design fill height exceeds limits of the standard plans or when culvert cell height or span is not standard. If only a portion of the units are nonstandard, fill out entire table using the values from the standard table where applicable. Omit if not required.

Alternate Plan of Transverse Joints

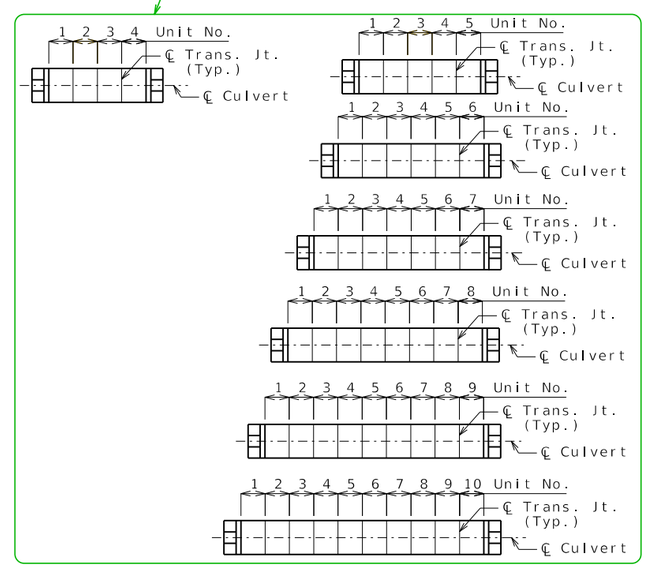

If any part of the barrel is exposed, the roadway fill shall be warped to provide 12 inches minimum cover. (Roadway Item)

Construction joint key not shown for clarity, see standard plans for details.

If unsuitable material is encountered, excavation of unsuitable material and furnishing and placing of granular backfill shall be in accordance with Sec 206.

BXC07_tri_sq_str Guidance & Alternate Details (2 of 2)

Corresponds to the border of the standard drawing for ease in moving alternate details (Snap to corner)

Alternate Details for Multiple Design Fill Heights (a)

Fill Heights	
℄ Rdwy at ℄ Culvert =	ft
Design (Units 1 &) =	ft
Design (Units &) =	ft
Design (Units &) =	ft

Dimensions are based on end units, except AA is based on Unit . Fill heights are measured from the top of top slab to the top of earth fill or roadway.

Estimated Quantities			Final
Class 4 Excavation	cu. yard	x	
Temporary Shoring	lump sum	1	
Partial Removal of Culvert-Bridge Concrete	lump sum	1	
Class B-1 Concrete (Culverts-Bridge)	cu. yard	x	
Reinforcing Steel (Culverts-Bridge)	pound	x	

(2)

Alternate Estimated Quantities for Culvert Extensions or when Five Items are Required

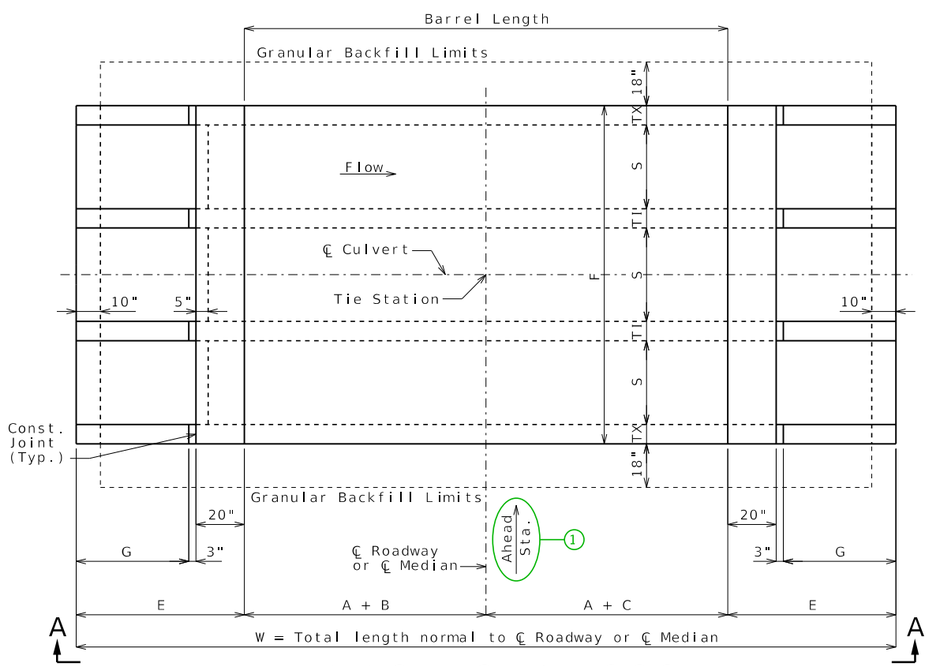

PLAN OF LAYOUT DIMENSIONS

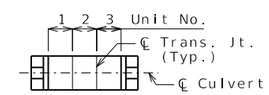

PLAN OF TRANSVERSE JOINTS AND STAGE CONSTRUCTION

Remove if not applicable.

(c) (d)

Unit No.	Unit Length	Member Thickness					Top Slab Reinforcement														Bottom Slab Reinforcement										Wall Reinforcement				
							A1 Bars		J3 Bars				H1 Bars				H2 Bars				A2 Bars		J4 Bars				H3 Bars				B1 Bars		B2 Bars		
		TS	BS	TX	TI	F	Sz.	Spa.	Sz.	Spa.	C1	K2	Sz.	Spa.	C5	Q8	Sz.	Spa.	C6	Q9	Sz.	Spa.	Sz.	Spa.	C4	K3	Sz.	Spa.	C7	Q10	Sz.	Spa.	Sz.	Spa.	G1
x	x	x	x	x	x	'- "	x	x	x	x	x	x	x	x	x	x	x	x	x	x	x	x	x	x	x	x	x	x	x	x	x	x	x	x	x
x	x	x	x	x	x	'- "	x	x	x	x	x	x	x	x	x	x	x	x	x	x	x	x	x	x	x	x	x	x	x	x	x	x	x	x	x
x	x	x	x	x	x	'- "	x	x	x	x	x	x	x	x	x	x	x	x	x	x	x	x	x	x	x	x	x	x	x	x	x	x	x	x	x

Substitute table for tables shown on Standard Plan 703.87

3('x ') CONCRETE BOX CULVERT

SEC/SUR * TWP * RGE *

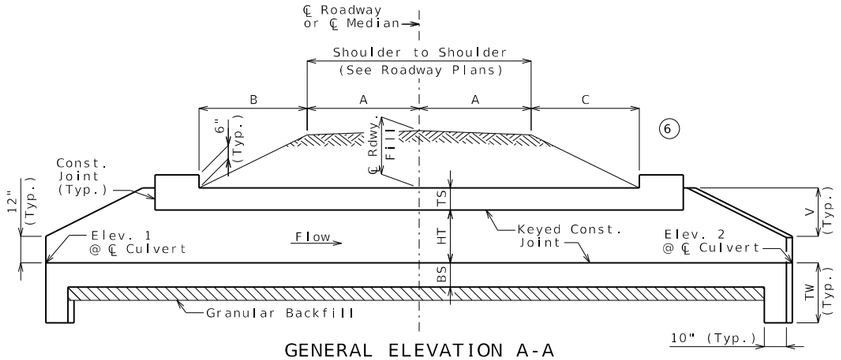

GENERAL ELEVATION A-A

Construction joint key not shown for clarity, see standard plans for details.

If any part of the barrel is exposed, the roadway fill shall be warped to provide 12 inches minimum cover. (Roadway Item)

If unsuitable material is encountered, excavation of unsuitable material and furnishing and placing of granular backfill shall be in accordance with Sec 206.

DETAIL A

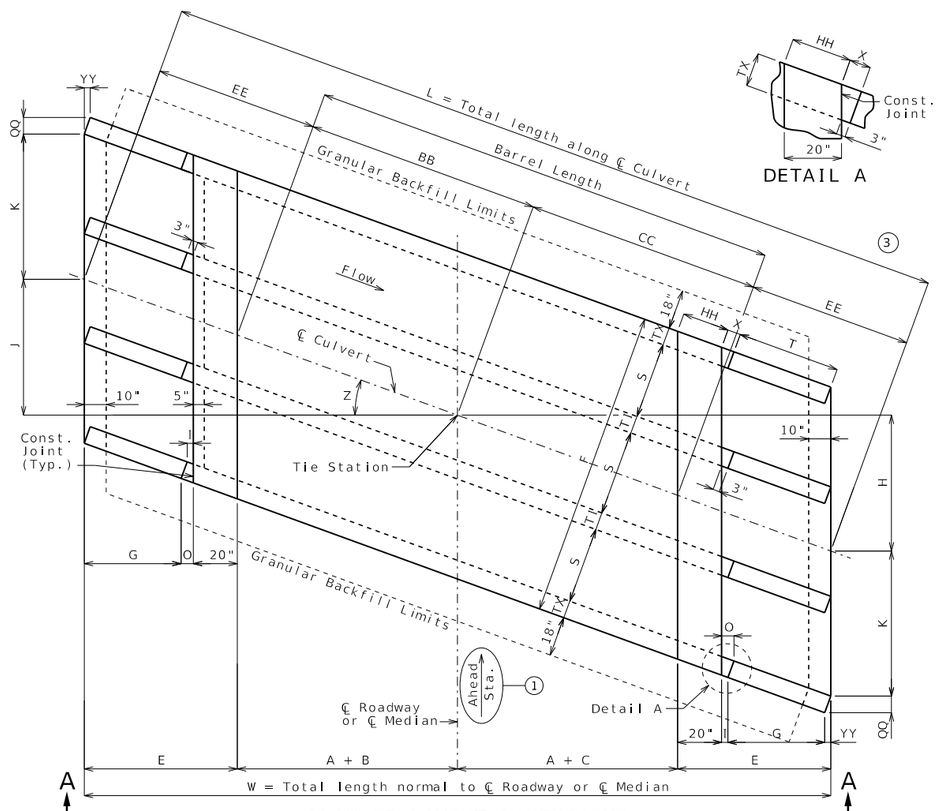

PLAN OF LAYOUT DIMENSIONS

Layout Dimensions

Var.	Equation	Dim.	Var.	Equation	Dim.	Var.	Equation	Dim.
S	- - -	x	F	3S + 2TX + 2TI	x	W	2A + B + C + 2E	x
HT	- - -	x	G	2V	x	X	3" + TX(tan Z)	x
TS	- - -	x	H	(A + C + E)(tan Z)	x	Z	Skew Angle	x
BS	- - -	x	I	3"(cos Z)	x	BB	(A + B)(sec Z)	x
TX	- - -	x	J	(A + B + E)(tan Z)	x	CC	(A + C)(sec Z)	x
TI	- - -	x	K	(3S/2 + TI)(sec Z)	x	EE	E(sec Z)	x
A	- - -	x	L	2EE + BB + CC	x	HH	20"(sec Z)	x
B	- - -	x	O	I + YY	x	QQ	TX(cos Z)	x
C	- - -	x	T	G(sec Z)	x	YY	TX(sin Z)	x
E	G + O + 20"	x	V	HT + TS - 12"	x	TW	Max{3'-4" or (BS + 12")}	x

Hydrologic Data

Drainage Area = ___ mi^2

Design Flood Frequency = ___ years

Design Flood Discharge = ___ cfs

Design Flood (D.F.) Elevation = _____

Base Flood (100-year)

Base Flood Elevation = _____

Base Flood Discharge = ___ cfs

Estimated Backwater = __ ft

Outlet Velocity = __ ft/s

Roadway Overtopping

Overtopping Flood Discharge = ___ cfs

Overtopping Flood Frequency = ___ years

_____ Flood Elevation = _____

Elevations

Upstream (Elev. 1) =

Downstream (Elev. 2) =

Pr. Gr. at Tie Sta. =

Fill Heights

℄ Rdwy at ℄ Culvert = ft

Design (All units) = ft

Dimensions are based on end units.
Fill heights are measured from the top of top slab to the top of earth fill or roadway.

Estimated Quantities

			Final
Class 4 Excavation	cu. yard	x	
Removal of Bridges	lump sum	1	
Class B-1 Concrete (Culverts-Bridge)	cu. yard	x	
Reinforcing Steel (Culverts-Bridge)	pound	x	

LOCATION SKETCH

General Notes:

Design Specifications:
2010 AASHTO LRFD Bridge Design Specifications and 2010 Interim Revisions

Design Loading:
Vehicular = HL-93 minus lane load, Earth = 120 lb/cf
Equivalent Fluid Pressure = 30 lb/cf (min.), 60 lb/cf (max.)

Design Unit Stresses:
Class B-1 Concrete (Box Culvert) f'c = 4,000 psi
Reinforcing Steel (ASTM A615 Grade 60) fy = 60,000 psi

Standard Plans:
703.37, 703.82 703.86, 703.87

Miscellaneous:
MoDOT Construction personnel will indicate the type of box culvert constructed:
☐ Precast Concrete Box used
☐ Cast-in-Place Concrete Box used

When alternate precast concrete box sections are used, the minimum distance from inside face of headwalls to precast sections measured along the shortest wall shall be 3 feet. Reinforcement and dimensions for wings and headwalls shall be in accordance with Missouri Standard Plans.

Channel bottom shall be graded within the right of way for transition of channel bed to culvert openings. Channel banks shall be tapered to match culvert openings. (Roadway Item)

Traffic Handling:
Structure to be closed during construction. Traffic to be maintained on during construction. See roadway plans for traffic control.

B.M.

CULVERT-BRIDGE: ROUTE * OVER *

ROUTE * FROM * TO *

ABOUT * MILES * OF *

TIE STA. _____

DATE PREPARED 12/18/2024

ROUTE | STATE MO

DISTRICT | SHEET NO. 8

COUNTY

JOB NO.

CONTRACT ID.

PROJECT NO.

BRIDGE NO.

DESCRIPTION | DATE

MISSOURI HIGHWAYS AND TRANSPORTATION COMMISSION

105 WEST CAPITOL
JEFFERSON CITY, MO 65102
1-888-ASK-MODOT (1-888-275-6636)

Designed
Detailed
Checked

Note: This drawing is not to scale. Follow dimensions.

BXC08_tri_la_str Guidance & Alternate Details (1 of 2)

Pipes With Same Diameter

XX" Pipe Inlet Data		
Station	Offset	F.L. Elev.
xx+xx.xx	xx.xx' XX	xxx.xx
xx+xx.xx	xx.xx' XX	xxx.xx
xx+xx.xx	xx.xx' XX	xxx.xx

Inlets Sized for Elevation A-A
(Pipe Diameter/Culvert HT)

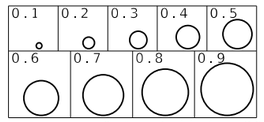

Ex: Use 0.5 detail for 36" pipe into a 6' tall culvert.

Pipes With Different Diameters

Pipe Inlet Data			
Station	Offset	Dia.	F.L. Elev.
xx+xx.xx	xx.xx' XX	xx"	xxx.xx
xx+xx.xx	xx.xx' XX	xx"	xxx.xx
xx+xx.xx	xx.xx' XX	xx"	xxx.xx

Supplemental Pipe Inlet Details (4)

Supplemental Reinforcement Table (Nonstandard culverts with only one design fill height) (5)

Top Slab Reinforcement														Bottom Slab Reinforcement										Wall Reinforcement				
A1 Bars		J3 Bars				H1 Bars				H2 Bars				A2 Bars		J4 Bars				H3 Bars				B1 Bars		B2 Bars		
Sz.	Spa.	Sz.	Spa.	C1	K2	Sz.	Spa.	C5	Q8	Sz.	Spa.	C6	Q9	Sz.	Spa.	Sz.	Spa.	C4	K3	Sz.	Spa.	C7	Q10	Sz.	Spa.	Sz.	Spa.	G1
x	x	x	x	x	x	x	x	x	x	x	x	x	x	x	x	x	x	x	x	x	x	x	x	x	x	x	x	x
Substitute table for tables shown on Standard Plan 703.87																												

Standard Drawing Guidance
(Do not show on plans. Turn off the Bridge Construction level to hide)

Some details have been grouped together to allow easy substitution with alternate details. To edit grouped details, select them and press <Ctrl> U.

(1) Ahead station is shown for streams flowing left to right. Arrow must be flipped for streams that flow right to left.

(2) Modify Estimated Quantities as required. Don't leave blank rows but leave space between Estimated Quantities and General Notes for at least one pay item to be added during construction. See Alternate Details for culvert extensions, or if five items are required.

(3) Add any required transverse joints proportionally spaced along the barrel. Label units and add actual lengths of units along the barrel.

(4) Insert STD 703.60 when pipe inlets are required. Add pipe inlets to Plan of Layout Dimensions at appropriate locations and to Elevation A-A if visible from elevation. Add inlet data using notes where space allows, or use tables.

(5) For nonstandard culverts with only one design fill height, add supplemental reinforcement table.

(6) No need to revise General Elevation A-A for dual roadways. In Fill Heights table add a lane designation after ℄ Rdwy and insert another row for the other lane.

*** VARIABLE DESIGN FILL HEIGHTS ***

(a) Select and delete the details grouped with the Fill Heights table. Select and move the alternate grouped details to drawing.

(b) Place "See Member Thickness table" in the Equation column and place "Varies" in the Dim. column. If Dimension F varies, place "Varies" in the Dim. column.

(c) Remove blank rows. End units may have different design fill heights but both units need to have the same member thicknesses.

(d) This portion of table required when design fill height exceeds limits of the standard plans or when culvert cell height or span is not standard. If only a portion of the units are nonstandard, fill out entire table using the values from the standard table where applicable. Omit if not required.

Alternate Plan of Transverse Joints

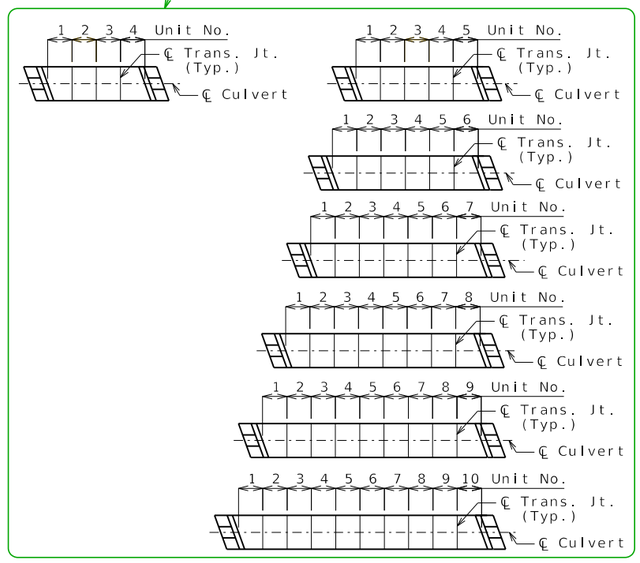

If any part of the barrel is exposed, the roadway fill shall be warped to provide 12 inches minimum cover. (Roadway Item)

Construction joint key not shown for clarity, see standard plans for details.

If unsuitable material is encountered, excavation of unsuitable material and furnishing and placing of granular backfill shall be in accordance with Sec 206.

BXC08_tri_la_str Guidance & Alternate Details (2 of 2)

Corresponds to the border of the standard drawing for ease in moving alternate details (Snap to corner)

Alternate Details for Multiple Design Fill Heights (a)

Fill Heights	
℄ Rdwy at ℄ Culvert =	ft
Design (Units 1 &) =	ft
Design (Units &) =	ft
Design (Units &) =	ft

Dimensions are based on end units, except AA is based on Unit . Fill heights are measured from the top of top slab to the top of earth fill or roadway.

Estimated Quantities			Final
Class 4 Excavation	cu. yard	x	
Temporary Shoring	lump sum	1	
Partial Removal of Culvert-Bridge Concrete	lump sum	1	
Class B-1 Concrete (Culverts-Bridge)	cu. yard	x	
Reinforcing Steel (Culverts-Bridge)	pound	x	

(2)

Alternate Estimated Quantities for Culvert Extensions or when Five Items are Required

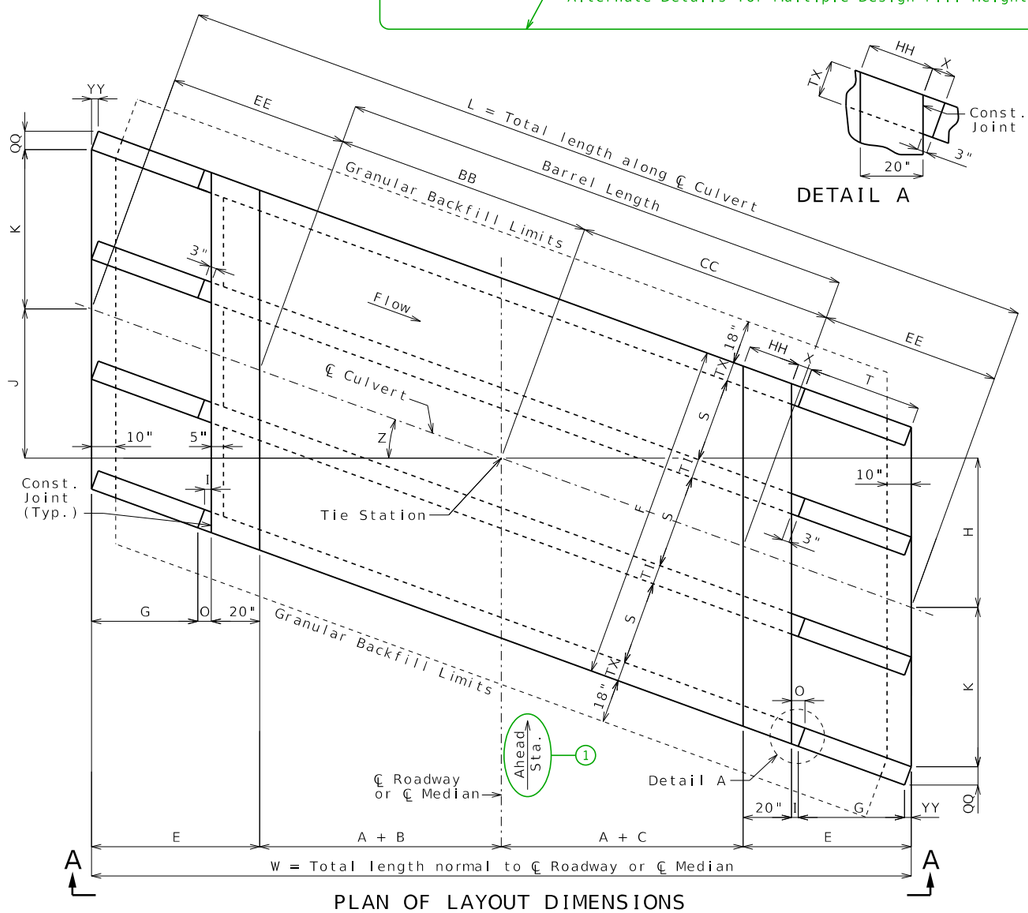

PLAN OF LAYOUT DIMENSIONS

DETAIL A

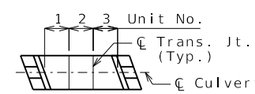

PLAN OF TRANSVERSE JOINTS AND STAGE CONSTRUCTION

Remove if not applicable.

(c) (d)

Unit No.	Unit Length	Member Thickness					Top Slab Reinforcement														Bottom Slab Reinforcement										Wall Reinforcement				
							A1 Bars		J3 Bars				H1 Bars				H2 Bars				A2 Bars		J4 Bars				H3 Bars				B1 Bars		B2 Bars		
		TS	BS	TX	TI	F	Sz.	Spa.	Sz.	Spa.	C1	K2	Sz.	Spa.	C5	Q8	Sz.	Spa.	C6	Q9	Sz.	Spa.	Sz.	Spa.	C4	K3	Sz.	Spa.	C7	Q10	Sz.	Spa.	Sz.	Spa.	G1
x	x	x	x	x	x	'- "	x	x	x	x	x	x	x	x	x	x	x	x	x	x	x	x	x	x	x	x	x	x	x	x	x	x	x	x	x
x	x	x	x	x	x	'- "	x	x	x	x	x	x	x	x	x	x	x	x	x	x	x	x	x	x	x	x	x	x	x	x	x	x	x	x	x
x	x	x	x	x	x	'- "	x	x	x	x	x	x	x	x	x	x	x	x	x	x	x	x	x	x	x	x	x	x	x	x	x	x	x	x	x

Substitute table for tables shown on Standard Plan 703.87

3('x ') CONCRETE BOX CULVERT

SEC/SUR * TWP * RGE *

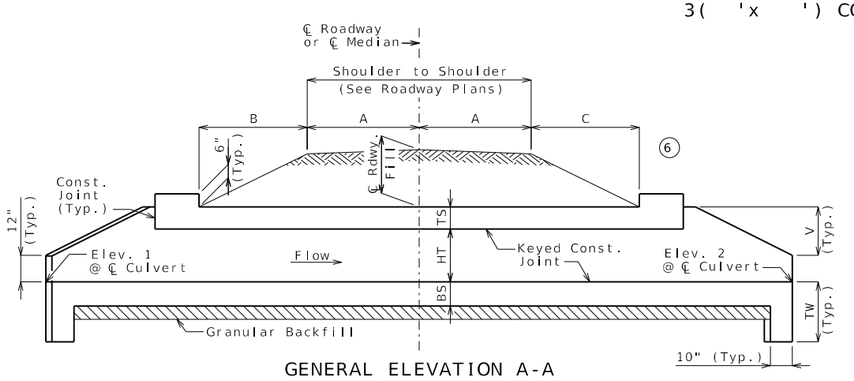

GENERAL ELEVATION A-A

Construction joint key not shown for clarity, see standard plans for details.

If any part of the barrel is exposed, the roadway fill shall be warped to provide 12 inches minimum cover. (Roadway Item)

If unsuitable material is encountered, excavation of unsuitable material and furnishing and placing of granular backfill shall be in accordance with Sec 206.

DETAIL A

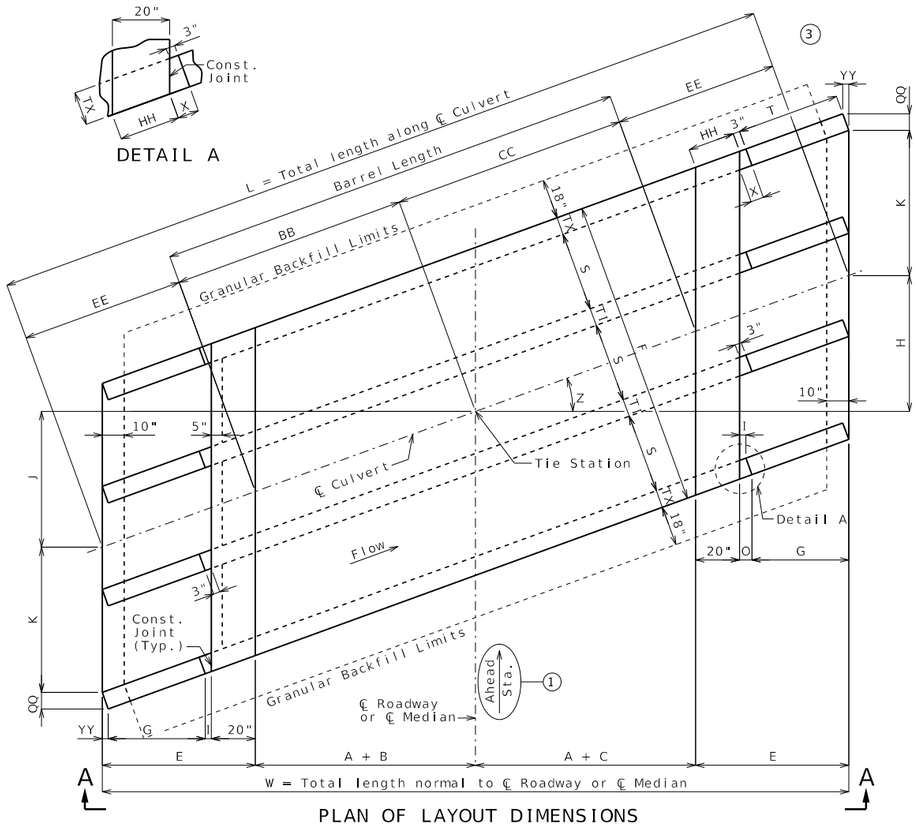

PLAN OF LAYOUT DIMENSIONS

Layout Dimensions

Var.	Equation	Dim.	Var.	Equation	Dim.	Var.	Equation	Dim.
S	- - -	x	F	3S + 2TX + 2TI	x	W	2A + B + C + 2E	x
HT	- - -	x	G	2V	x	X	3" + TX(tan Z)	x
TS	- - -	x	H	(A + C + E)(tan Z)	x	Z	Skew Angle	x
BS	- - -	x	I	3"(cos Z)	x	BB	(A + B)(sec Z)	x
TX	- - -	x	J	(A + B + E)(tan Z)	x	CC	(A + C)(sec Z)	x
TI	- - -	x	K	(3S/2 + TI)(sec Z)	x	EE	E(sec Z)	x
A	- - -	x	L	2EE + BB + CC	x	HH	20"(sec Z)	x
B	- - -	x	O	I + YY	x	QQ	TX(cos Z)	x
C	- - -	x	T	G(sec Z)	x	YY	TX(sin Z)	x
E	G + O + 20"	x	V	HT + TS - 12"	x	TW	Max{3'-4" or (BS + 12")}	x

Hydrologic Data

Drainage Area = ___ mi^2

Design Flood Frequency = ___ years

Design Flood Discharge = ___ cfs

Design Flood (D.F.) Elevation = _____

Base Flood (100-year)

Base Flood Elevation = _____

Base Flood Discharge = ___ cfs

Estimated Backwater = __ ft

Outlet Velocity = __ ft/s

Roadway Overtopping

Overtopping Flood Discharge = ___ cfs

Overtopping Flood Frequency = ___ years

_____ Flood Elevation = _____

Elevations

Upstream (Elev. 1) =

Downstream (Elev. 2) =

Pr. Gr. at Tie Sta. =

Fill Heights

℄ Rdwy at ℄ Culvert = ft

Design (All units) = ft

Dimensions are based on end units.
Fill heights are measured from the top of top slab to the top of earth fill or roadway.

Estimated Quantities

			Final
Class 4 Excavation	cu. yard	x	
Removal of Bridges	lump sum	1	
Class B-1 Concrete (Culverts-Bridge)	cu. yard	x	
Reinforcing Steel (Culverts-Bridge)	pound	x	

LOCATION SKETCH

General Notes:

Design Specifications:
2010 AASHTO LRFD Bridge Design Specifications and 2010 Interim Revisions

Design Loading:
Vehicular = HL-93 minus lane load, Earth = 120 lb/cf
Equivalent Fluid Pressure = 30 lb/cf (min.), 60 lb/cf (max.)

Design Unit Stresses:
Class B-1 Concrete (Box Culvert) f'c = 4,000 psi
Reinforcing Steel (ASTM A615 Grade 60) fy = 60,000 psi

Standard Plans:
703.37, 703.84, 703.86, 703.87

Miscellaneous:
MoDOT Construction personnel will indicate the type of box culvert constructed:
☐ Precast Concrete Box used
☐ Cast-in-Place Concrete Box used

When alternate precast concrete box sections are used, the minimum distance from inside face of headwalls to precast sections measured along the shortest wall shall be 3 feet. Reinforcement and dimensions for wings and headwalls shall be in accordance with Missouri Standard Plans.

Channel bottom shall be graded within the right of way for transition of channel bed to culvert openings. Channel banks shall be tapered to match culvert openings. (Roadway Item)

Traffic Handling:
Structure to be closed during construction. Traffic to be maintained on during construction. See roadway plans for traffic control.

B.M.

CULVERT-BRIDGE: ROUTE * OVER *

ROUTE * FROM * TO *

ABOUT * MILES * OF *

TIE STA. _____

DATE PREPARED 12/18/2024
ROUTE STATE MO
DISTRICT SHEET NO. 9
COUNTY
JOB NO.
CONTRACT ID.
PROJECT NO.
BRIDGE NO.

DESCRIPTION | DATE

MISSOURI HIGHWAYS AND TRANSPORTATION COMMISSION
105 WEST CAPITOL
JEFFERSON CITY, MO 65102
1-888-ASK-MODOT (1-888-275-6636)

Designed
Detailed
Checked

Note: This drawing is not to scale. Follow dimensions.

Sheet No. 1 of

BXC09_tri_ra_str Guidance & Alternate Details (1 of 2)

Pipes With Same Diameter

XX" Pipe Inlet Data		
Station	Offset	F.L. Elev.
xx+xx.xx	xx.xx' XX	xxx.xx
xx+xx.xx	xx.xx' XX	xxx.xx
xx+xx.xx	xx.xx' XX	xxx.xx

Inlets Sized for Elevation A-A
(Pipe Diameter/Culvert HT)

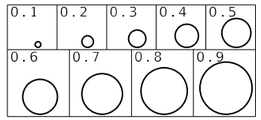

Ex: Use 0.5 detail for 36" pipe into a 6' tall culvert.

Pipes With Different Diameters

Pipe Inlet Data			
Station	Offset	Dia.	F.L. Elev.
xx+xx.xx	xx.xx' XX	xx"	xxx.xx
xx+xx.xx	xx.xx' XX	xx"	xxx.xx
xx+xx.xx	xx.xx' XX	xx"	xxx.xx

Supplemental Pipe Inlet Details (4)

Supplemental Reinforcement Table (Nonstandard culverts with only one design fill height) (5)

Top Slab Reinforcement														Bottom Slab Reinforcement										Wall Reinforcement				
A1 Bars		J3 Bars				H1 Bars				H2 Bars				A2 Bars		J4 Bars				H3 Bars				B1 Bars		B2 Bars		
Sz.	Spa.	Sz.	Spa.	C1	K2	Sz.	Spa.	C5	Q8	Sz.	Spa.	C6	Q9	Sz.	Spa.	Sz.	Spa.	C4	K3	Sz.	Spa.	C7	Q10	Sz.	Spa.	Sz.	Spa.	G1
x	x	x	x	x	x	x	x	x	x	x	x	x	x	x	x	x	x	x	x	x	x	x	x	x	x	x	x	x

Substitute table for tables shown on Standard Plan 703.87

Standard Drawing Guidance
(Do not show on plans. Turn off the Bridge Construction level to hide)

Some details have been grouped together to allow easy substitution with alternate details. To edit grouped details, select them and press <Ctrl> U.

(1) Ahead station is shown for streams flowing left to right. Arrow must be flipped for streams that flow right to left.

(2) Modify Estimated Quantities as required. Don't leave blank rows but leave space between Estimated Quantities and General Notes for at least one pay item to be added during construction. See Alternate Details for culvert extensions, or if five items are required.

(3) Add any required transverse joints proportionally spaced along the barrel. Label units and add actual lengths of units along the barrel.

(4) Insert STD 703.60 when pipe inlets are required. Add pipe inlets to Plan of Layout Dimensions at appropriate locations and to Elevation A-A if visible from elevation. Add inlet data using notes where space allows, or use tables.

(5) For nonstandard culverts with only one design fill height, add supplemental reinforcement table.

(6) No need to revise General Elevation A-A for dual roadways. In Fill Heights table add a lane designation after ℄ Rdwy and insert another row for the other lane.

*** VARIABLE DESIGN FILL HEIGHTS ***

(a) Select and delete the details grouped with the Fill Heights table. Select and move the alternate grouped details to drawing.

(b) Place "See Member Thickness table" in the Equation column and place "Varies" in the Dim. column. If Dimension F varies, place "Varies" in the Dim. column.

(c) Remove blank rows. End units may have different design fill heights but both units need to have the same member thicknesses.

(d) This portion of table required when design fill height exceeds limits of the standard plans or when culvert cell height or span is not standard. If only a portion of the units are nonstandard, fill out entire table using the values from the standard table where applicable. Omit if not required.

Alternate Plan of Transverse Joints

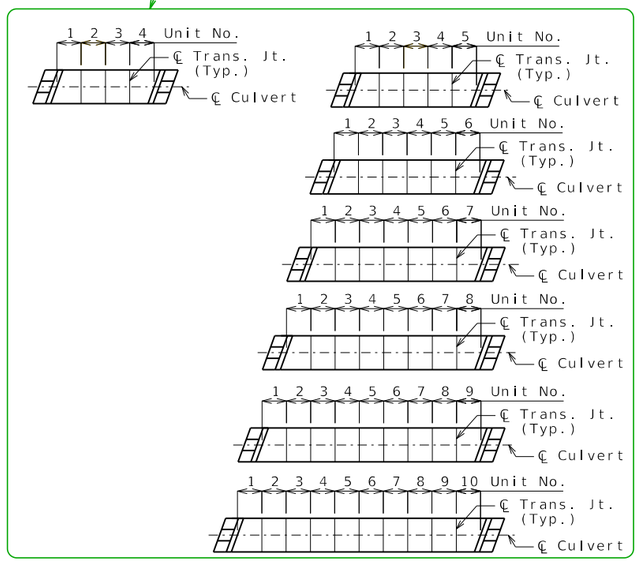

If any part of the barrel is exposed, the roadway fill shall be warped to provide 12 inches minimum cover. (Roadway Item)

Construction joint key not shown for clarity, see standard plans for details.

If unsuitable material is encountered, excavation of unsuitable material and furnishing and placing of granular backfill shall be in accordance with Sec 206.

BXC09_tri_ra_str Guidance & Alternate Details (2 of 2)

Corresponds to the border of the standard drawing for ease in moving alternate details (Snap to corner)

Alternate Details for Multiple Design Fill Heights (a)

Fill Heights	
℄ Rdwy at ℄ Culvert =	ft
Design (Units 1 &) =	ft
Design (Units &) =	ft
Design (Units &) =	ft

Dimensions are based on end units, except AA is based on Unit . Fill heights are measured from the top of top slab to the top of earth fill or roadway.

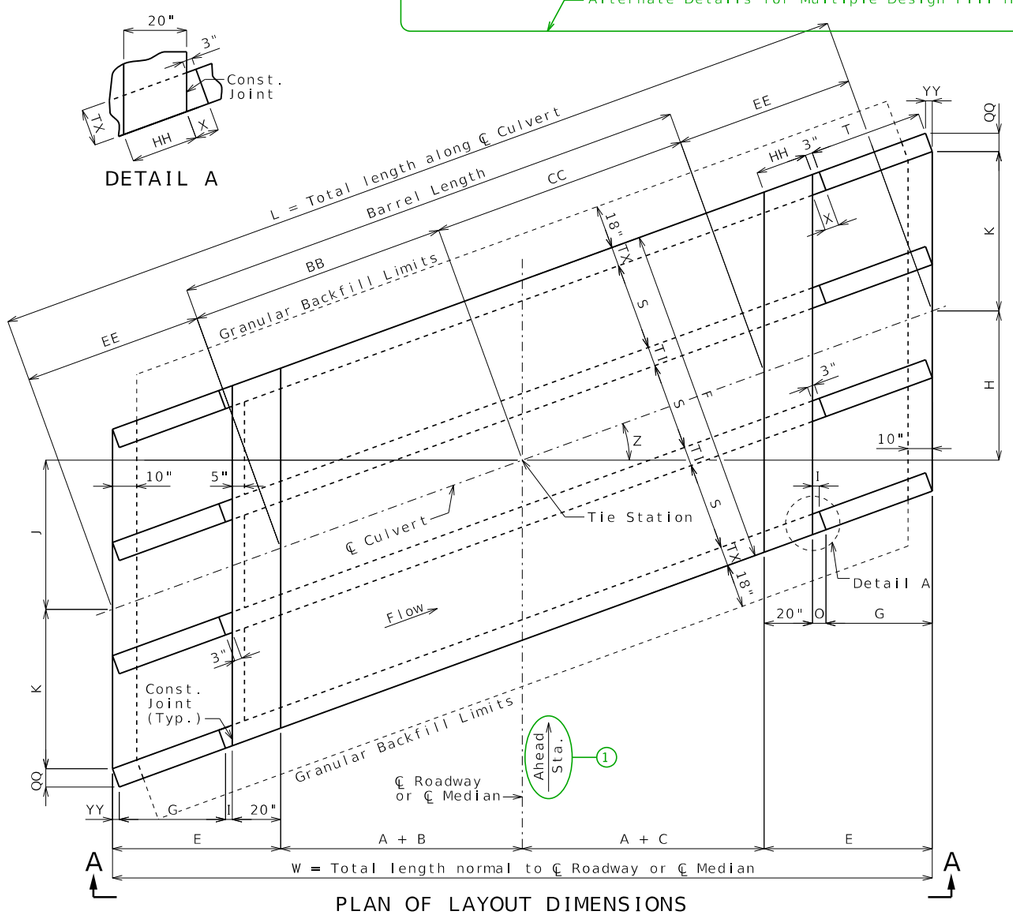

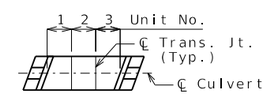

PLAN OF TRANSVERSE JOINTS AND STAGE CONSTRUCTION

Remove if not applicable.

Estimated Quantities			Final
Class 4 Excavation	cu. yard	x	
Temporary Shoring	lump sum	1	
Partial Removal of Culvert-Bridge Concrete	lump sum	1	
Class B-1 Concrete (Culverts-Bridge)	cu. yard	x	
Reinforcing Steel (Culverts-Bridge)	pound	x	

(2)

Alternate Estimated Quantities for Culvert Extensions or when Five Items are Required

(c) (d)

Unit No.	Unit Length	Member Thickness					Top Slab Reinforcement														Bottom Slab Reinforcement										Wall Reinforcement				
							A1 Bars		J3 Bars				H1 Bars				H2 Bars				A2 Bars		J4 Bars				H3 Bars				B1 Bars		B2 Bars		
		TS	BS	TX	TI	F	Sz.	Spa.	Sz.	Spa.	C1	K2	Sz.	Spa.	C5	Q8	Sz.	Spa.	C6	Q9	Sz.	Spa.	Sz.	Spa.	C4	K3	Sz.	Spa.	C7	Q10	Sz.	Spa.	Sz.	Spa.	G1
x	x	x	x	x	x	'-	x	x	x	x	x	x	x	x	x	x	x	x	x	x	x	x	x	x	x	x	x	x	x	x	x	x	x	x	x
x	x	x	x	x	x	'-	x	x	x	x	x	x	x	x	x	x	x	x	x	x	x	x	x	x	x	x	x	x	x	x	x	x	x	x	x
x	x	x	x	x	x	'-	x	x	x	x	x	x	x	x	x	x	x	x	x	x	x	x	x	x	x	x	x	x	x	x	x	x	x	x	x

Substitute table for tables shown on Standard Plan 703.87

3('x ') CONCRETE BOX CULVERT

SEC/SUR * TWP * RGE *

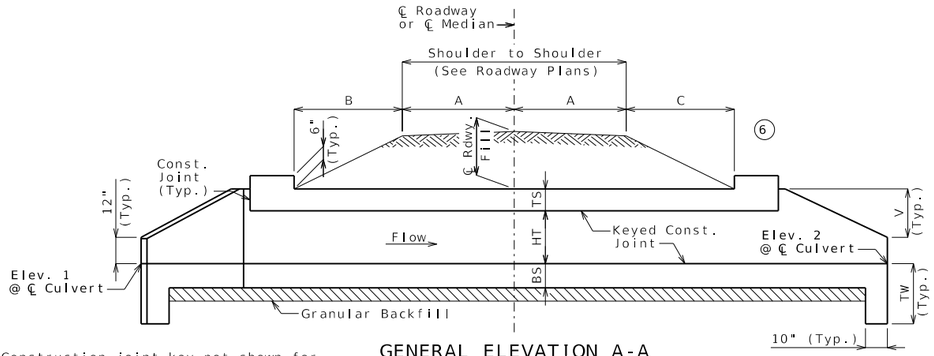

GENERAL ELEVATION A-A

Construction joint key not shown for clarity, see standard plans for details.

If any part of the barrel is exposed, the roadway fill shall be warped to provide 12 inches minimum cover. (Roadway Item)

If unsuitable material is encountered, excavation of unsuitable material and furnishing and placing of granular backfill shall be in accordance with Sec 206.

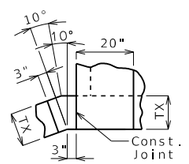

DETAIL A

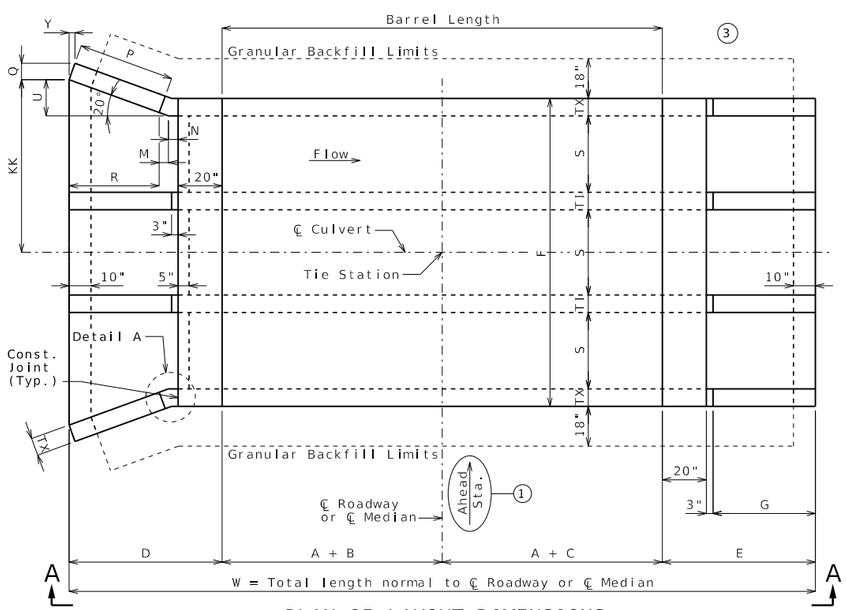

PLAN OF LAYOUT DIMENSIONS

LOCATION SKETCH

Layout Dimensions

Var.	Equation	Dim.	Var.	Equation	Dim.	Var.	Equation	Dim.
S	- - -	x	C	- - -	x	Q	TX(cos 20°)	x
HT	- - -	x	D	R + M + N + 20"	x	R	P(cos 20°)	x
TS	- - -	x	E	G + 23"	x	U	(R + M)(tan 20°)	x
BS	- - -	x	F	3S + 2TX + 2TI (b)	x	V	HT + TS - 12"	x
TX	- - -	x	G	2V	x	W	2A + B + C + D + E	x
TI	- - -	x	M	N(cos 20°)	x	Y	TX(sin 20°)	x
A	- - -	x	N	3" + TX(tan 10°)	x	KK	3S/2 + TI + U	x
B	- - -	x	P	2V(sec 20°)	x	TW	Max{3'-4" or (BS + 12")}	x

(b)

Hydrologic Data

Drainage Area = ___ mi^2

Design Flood Frequency = ___ years

Design Flood Discharge = ___ cfs

Design Flood (D.F.) Elevation = _____

Base Flood (100-year)

Base Flood Elevation = _____

Base Flood Discharge = ___ cfs

Estimated Backwater = __ ft

Outlet Velocity = __ ft/s

Roadway Overtopping

Overtopping Flood Discharge = ___ cfs

Overtopping Flood Frequency = ___ years

_____ Flood Elevation = _____

Elevations

Upstream (Elev. 1) =

Downstream (Elev. 2) =

Pr. Gr. at Tie Sta. =

Fill Heights

(6) ℄ Rdwy at ℄ Culvert = ft

Design (All units) = ft

Dimensions are based on end units.
Fill heights are measured from the top of top slab to the top of earth fill or roadway. (a)

Estimated Quantities

			Final
Class 4 Excavation	cu. yard	x	
Removal of Bridges	lump sum	1	
Class B-1 Concrete (Culverts-Bridge)	cu. yard	x	
Reinforcing Steel (Culverts-Bridge)	pound	x	

(2)

General Notes:

Design Specifications:
2010 AASHTO LRFD Bridge Design Specifications and 2010 Interim Revisions

Design Loading:
Vehicular = HL-93 minus lane load, Earth = 120 lb/cf
Equivalent Fluid Pressure = 30 lb/cf (min.), 60 lb/cf (max.)

Design Unit Stresses:
Class B-1 Concrete (Box Culvert) f'c = 4,000 psi
Reinforcing Steel (ASTM A615 Grade 60) fy = 60,000 psi

Standard Plans:
703.37, 703.81, 703.86, 703.87 (4)

Miscellaneous:
MoDOT Construction personnel will indicate the type of box culvert constructed:
☐ Precast Concrete Box used
☐ Cast-in-Place Concrete Box used

When alternate precast concrete box sections are used, the minimum distance from inside face of headwalls to precast sections measured along the shortest wall shall be 3 feet. Reinforcement and dimensions for wings and headwalls shall be in accordance with Missouri Standard Plans.

Channel bottom shall be graded within the right of way for transition of channel bed to culvert openings. Channel banks shall be tapered to match culvert openings. (Roadway Item)

Traffic Handling:
Structure to be closed during construction. Traffic to be maintained on during construction. See roadway plans for traffic control.

B.M.

CULVERT-BRIDGE: ROUTE * OVER *

ROUTE * FROM * TO *

ABOUT * MILES * OF *

TIE STA. _____

DATE PREPARED 12/18/2024
ROUTE STATE MO
DISTRICT SHEET NO. 10
COUNTY
JOB NO.
CONTRACT ID.
PROJECT NO.
BRIDGE NO.

DESCRIPTION | DATE

MISSOURI HIGHWAYS AND TRANSPORTATION COMMISSION
105 WEST CAPITOL
JEFFERSON CITY, MO 65102
1-888-ASK-MODOT (1-888-275-6636)

Designed
Detailed
Checked

Note: This drawing is not to scale. Follow dimensions.

BXC10_tri_sq_fla Guidance & Alternate Details (1 of 2)

Pipes With Same Diameter

XX" Pipe Inlet Data		
Station	Offset	F.L. Elev.
xx+xx.xx	xx.xx' XX	xxx.xx
xx+xx.xx	xx.xx' XX	xxx.xx
xx+xx.xx	xx.xx' XX	xxx.xx

Inlets Sized for Elevation A-A
(Pipe Diameter/Culvert HT)

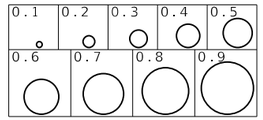

Ex: Use 0.5 detail for 36" pipe into a 6' tall culvert.

Pipes With Different Diameters

Pipe Inlet Data			
Station	Offset	Dia.	F.L. Elev.
xx+xx.xx	xx.xx' XX	xx"	xxx.xx
xx+xx.xx	xx.xx' XX	xx"	xxx.xx
xx+xx.xx	xx.xx' XX	xx"	xxx.xx

Supplemental Pipe Inlet Details (4)

Supplemental Reinforcement Table (Nonstandard culverts with only one design fill height) (5)

Top Slab Reinforcement														Bottom Slab Reinforcement										Wall Reinforcement				
A1 Bars		J3 Bars				H1 Bars				H2 Bars				A2 Bars		J4 Bars				H3 Bars				B1 Bars		B2 Bars		
Sz.	Spa.	Sz.	Spa.	C1	K2	Sz.	Spa.	C5	Q8	Sz.	Spa.	C6	Q9	Sz.	Spa.	Sz.	Spa.	C4	K3	Sz.	Spa.	C7	Q10	Sz.	Spa.	Sz.	Spa.	G1
x	x	x	x	x	x	x	x	x	x	x	x	x	x	x	x	x	x	x	x	x	x	x	x	x	x	x	x	x

Substitute table for tables shown on Standard Plan 703.87

Standard Drawing Guidance
(Do not show on plans. Turn off the Bridge Construction level to hide)

Some details have been grouped together to allow easy substitution with alternate details. To edit grouped details, select them and press <Ctrl> U.

(1) Ahead station is shown for streams flowing left to right. Arrow must be flipped for streams that flow right to left.

(2) Modify Estimated Quantities as required. Don't leave blank rows but leave space between Estimated Quantities and General Notes for at least one pay item to be added during construction. See Alternate Details for culvert extensions, or if five items are required.

(3) Add any required transverse joints proportionally spaced along the barrel. Label units and add actual lengths of units along the barrel.

(4) Insert STD 703.60 when pipe inlets are required. Add pipe inlets to Plan of Layout Dimensions at appropriate locations and to Elevation A-A if visible from elevation. Add inlet data using notes where space allows, or use tables.

(5) For nonstandard culverts with only one design fill height, add supplemental reinforcement table.

(6) No need to revise General Elevation A-A for dual roadways. In Fill Heights table add a lane designation after ℄ Rdwy and insert another row for the other lane.

*** VARIABLE DESIGN FILL HEIGHTS ***

(a) Select and delete the details grouped with the Fill Heights table. Select and move the alternate grouped details to drawing.

(b) Place "See Member Thickness table" in the Equation column and place "Varies" in the Dim. column. If Dimension F varies, place "Varies" in the Dim. column.

(c) Remove blank rows. End units may have different design fill heights but both units need to have the same member thicknesses.

(d) This portion of table required when design fill height exceeds limits of the standard plans or when culvert cell height or span is not standard. If only a portion of the units are nonstandard, fill out entire table using the values from the standard table where applicable. Omit if not required.

Alternate Plan of Transverse Joints

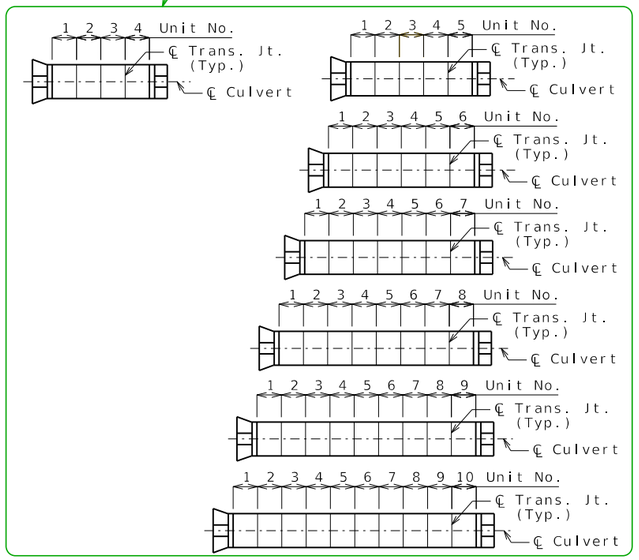

If any part of the barrel is exposed, the roadway fill shall be warped to provide 12 inches minimum cover. (Roadway Item)

Construction joint key not shown for clarity, see standard plans for details.

If unsuitable material is encountered, excavation of unsuitable material and furnishing and placing of granular backfill shall be in accordance with Sec 206.

BXC10_tri_sq_fla Guidance & Alternate Details (2 of 2)

Corresponds to the border of the standard drawing for ease in moving alternate details (Snap to corner)

Alternate Details for Multiple Design Fill Heights (a)

Fill Heights	
℄ Rdwy at ℄ Culvert =	ft
Design (Units 1 &) =	ft
Design (Units &) =	ft
Design (Units &) =	ft

Dimensions are based on end units, except AA is based on Unit . Fill heights are measured from the top of top slab to the top of earth fill or roadway.

Estimated Quantities			Final
Class 4 Excavation	cu. yard	x	
Temporary Shoring	lump sum	1	
Partial Removal of Culvert-Bridge Concrete	lump sum	1	
Class B-1 Concrete (Culverts-Bridge)	cu. yard	x	
Reinforcing Steel (Culverts-Bridge)	pound	x	

(2)

Alternate Estimated Quantities for Culvert Extensions or when Five Items are Required

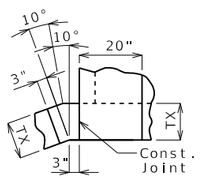

DETAIL A

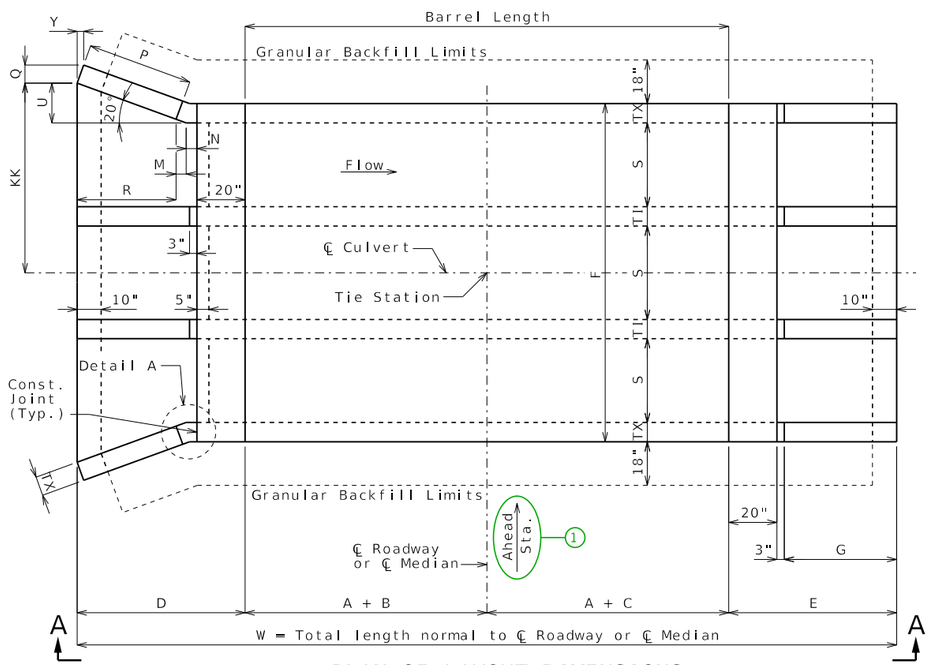

PLAN OF LAYOUT DIMENSIONS

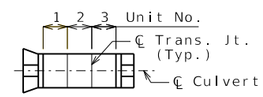

PLAN OF TRANSVERSE JOINTS AND STAGE CONSTRUCTION

Remove if not applicable.

(c) (d)

Unit No.	Unit Length	Member Thickness					Top Slab Reinforcement														Bottom Slab Reinforcement										Wall Reinforcement				
							A1 Bars		J3 Bars				H1 Bars				H2 Bars				A2 Bars		J4 Bars				H3 Bars				B1 Bars		B2 Bars		
		TS	BS	TX	TI	F	Sz.	Spa.	Sz.	Spa.	C1	K2	Sz.	Spa.	C5	Q8	Sz.	Spa.	C6	Q9	Sz.	Spa.	Sz.	Spa.	C4	K3	Sz.	Spa.	C7	Q10	Sz.	Spa.	Sz.	Spa.	G1
x	x	x	x	x	x	'- "	x	x	x	x	x	x	x	x	x	x	x	x	x	x	x	x	x	x	x	x	x	x	x	x	x	x	x	x	x
x	x	x	x	x	x	'- "	x	x	x	x	x	x	x	x	x	x	x	x	x	x	x	x	x	x	x	x	x	x	x	x	x	x	x	x	x
x	x	x	x	x	x	'- "	x	x	x	x	x	x	x	x	x	x	x	x	x	x	x	x	x	x	x	x	x	x	x	x	x	x	x	x	x

Substitute table for tables shown on Standard Plan 703.87

3('x ') CONCRETE BOX CULVERT

SEC/SUR * TWP * RGE *

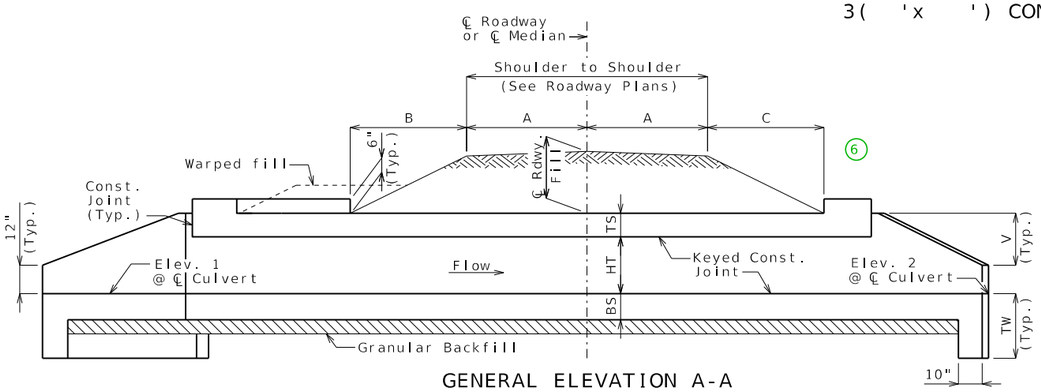

GENERAL ELEVATION A-A

Construction joint key not shown for clarity, see standard plans for details.

If any part of the barrel is exposed, the roadway fill shall be warped to provide 12 inches minimum cover. (Roadway Item)

If unsuitable material is encountered, excavation of unsuitable material and furnishing and placing of granular backfill shall be in accordance with Sec 206.

Layout Dimensions

Var.	Equation	Dim.	Var.	Equation	Dim.	Var.	Equation	Dim.
S	- - -	x	K	(3S/2 + TI)(sec Z)	x	BB	(A + B)(sec Z)	x
HT	- - -	x	L	AA + BB + CC + DD + EE	x	CC	(A + C)(sec Z)	x
TS	- - -	x	M	N(cos 20°)	x	DD	R + M + N + 20"	x
BS	- - -	x	N	3" + TX(tan 10°)	x	EE	E(sec Z)	x
TX	- - -	x	O	I + YY	x	HH	20"(sec Z)	x
TI	- - -	x	P	2V[sec(Z + 20°)]	x	II	20"(cos Z)	x
A	- - -	x	Q	TX(cos 20°)	x	KK	3S/2 + TI + U	x
B	- - -	x	R	P(cos 20°)	x	LL	(AA + BB + DD)(cos Z)	x
C	- - -	x	T	G(sec Z)	x	MM	3"[cos Z + cos(Z - 20°)]	x
D	II + MM + RR + TT (7)	x	U	(R + M)(tan 20°)	x	QQ	TX(cos Z)	x
E	G + O + 20"	x	V	HT + TS - 12"	x	RR	P[cos(Z - 20°)]	x
F	3S + 2TX + 2TI (b)	x	W	2A + B + C + D + E + SS	x	SS	F(sin Z)	x
G	2V	x	X	3" + TX(tan Z)	x	TT	TX[sin(20°- Z)] (7)	x
H	(A + C + E)(tan Z)	x	Y	TX(sin 20°)	x	YY	TX(sin Z)	x
I	3"(cos Z)	x	Z	Skew Angle	x	TW	Max{3'-4" or (BS + 12")}	x
J	(AA + BB + DD)(sin Z)	x	AA	F(tan Z)/2	x			

Hydrologic Data

Drainage Area = ___ mi^2
Design Flood Frequency = ___ years
Design Flood Discharge = ___ cfs
Design Flood (D.F.) Elevation = _____
Base Flood (100-year)
Base Flood Elevation = _____
Base Flood Discharge = ___ cfs
Estimated Backwater = __ ft
Outlet Velocity = __ ft/s
Roadway Overtopping
Overtopping Flood Discharge = ___ cfs
Overtopping Flood Frequency = ___ years
_____ Flood Elevation = _____

Elevations

Upstream (Elev. 1) =
Downstream (Elev. 2) =
Pr. Gr. at Tie Sta. =

Fill Heights

(6) ℄ Rdwy at ℄ Culvert =	ft
Design (All units) =	ft

Dimensions are based on end units.
Fill heights are measured from the top of top slab to the top of earth fill or roadway. (a)

Estimated Quantities

			Final
Class 4 Excavation	cu. yard	x	
Removal of Bridges	lump sum	1	
Class B-1 Concrete (Culverts-Bridge)	cu. yard	x	
Reinforcing Steel (Culverts-Bridge)	pound	x	

(2)

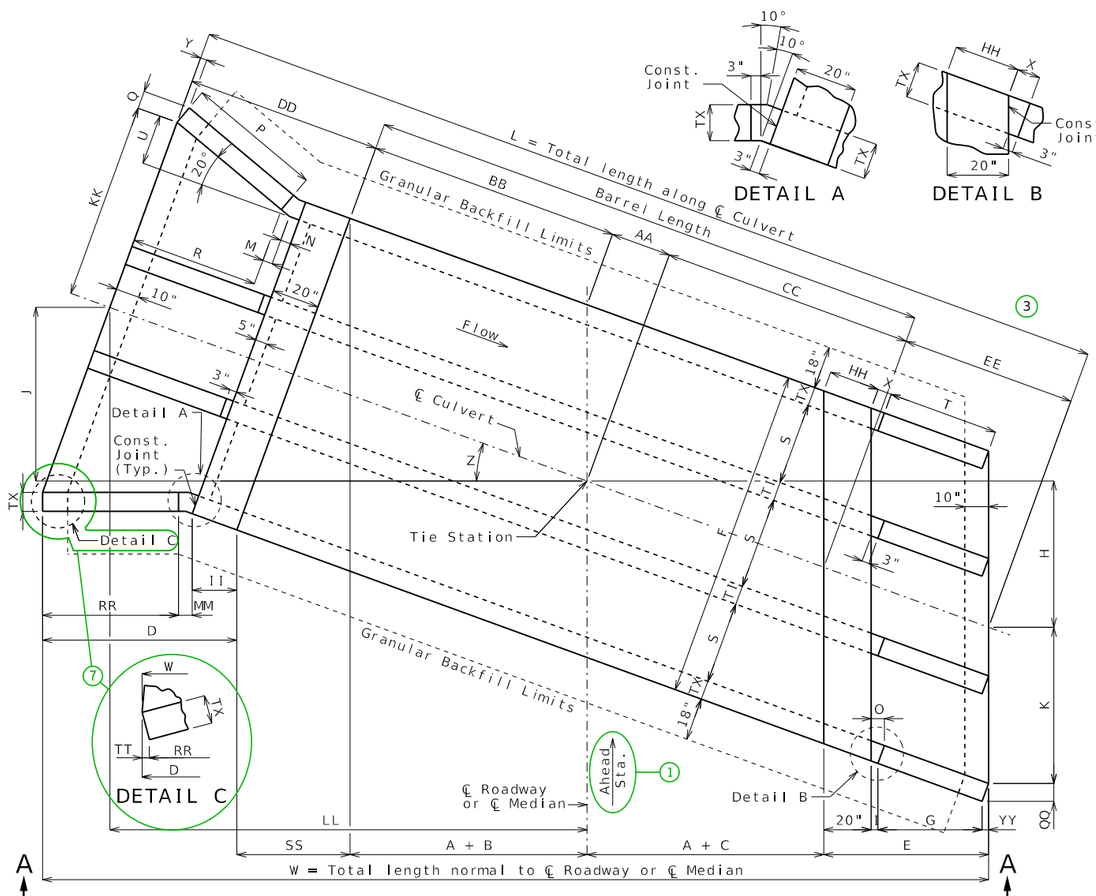

PLAN OF LAYOUT DIMENSIONS

LOCATION SKETCH

General Notes:

Design Specifications:
2010 AASHTO LRFD Bridge Design Specifications and 2010 Interim Revisions

Design Loading:
Vehicular = HL-93 minus lane load, Earth = 120 lb/cf
Equivalent Fluid Pressure = 30 lb/cf (min.), 60 lb/cf (max.)

Design Unit Stresses:
Class B-1 Concrete (Box Culvert) f'c = 4,000 psi
Reinforcing Steel (ASTM A615 Grade 60) fy = 60,000 psi

Standard Plans:
703.37, 703.83, 703.86, 703.87 (4)

Miscellaneous:
MoDOT Construction personnel will indicate the type of box culvert constructed:
☐ Precast Concrete Box used
☐ Cast-in-Place Concrete Box used

When alternate precast concrete box sections are used, the minimum distance from inside face of headwalls to precast sections measured along the shortest wall shall be 3 feet. Reinforcement and dimensions for wings and headwalls shall be in accordance with Missouri Standard Plans.

Channel bottom shall be graded within the right of way for transition of channel bed to culvert openings. Channel banks shall be tapered to match culvert openings. (Roadway Item)

Traffic Handling:
Structure to be closed during construction. Traffic to be maintained on during construction. See roadway plans for traffic control.

B.M.

CULVERT-BRIDGE: ROUTE * OVER *

ROUTE * FROM * TO *
ABOUT * MILES * OF *
TIE STA. _____

Designed
Detailed
Checked

Note: This drawing is not to scale. Follow dimensions.

Sheet No. 1 of

DATE PREPARED	6/2/2025
ROUTE	STATE MO
DISTRICT	SHEET NO. 11
COUNTY	
JOB NO.	
CONTRACT ID.	
PROJECT NO.	
BRIDGE NO.	

DESCRIPTION

DATE

MISSOURI HIGHWAYS AND TRANSPORTATION COMMISSION
105 WEST CAPITOL
JEFFERSON CITY, MO 65102
1-888-ASK-MODOT (1-888-275-6636)

BXC11_tri_la_fla Guidance & Alternate Details (1 of 2)

Pipes With Same Diameter

XX" Pipe Inlet Data		
Station	Offset	F.L. Elev.
xx+xx.xx	xx.xx' XX	xxx.xx
xx+xx.xx	xx.xx' XX	xxx.xx
xx+xx.xx	xx.xx' XX	xxx.xx

Pipes With Different Diameters

Pipe Inlet Data			
Station	Offset	Dia.	F.L. Elev.
xx+xx.xx	xx.xx' XX	xx"	xxx.xx
xx+xx.xx	xx.xx' XX	xx"	xxx.xx
xx+xx.xx	xx.xx' XX	xx"	xxx.xx

Inlets Sized for Elevation A-A
(Pipe Diameter/Culvert HT)

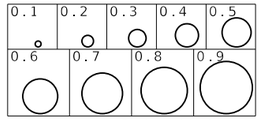

Ex: Use 0.5 detail for 36" pipe into a 6' tall culvert.

Supplemental Pipe Inlet Details (4)

Supplemental Reinforcement Table (Nonstandard culverts with only one design fill height) (5)

Top Slab Reinforcement														Bottom Slab Reinforcement										Wall Reinforcement				
A1 Bars		J3 Bars				H1 Bars				H2 Bars				A2 Bars		J4 Bars				H3 Bars				B1 Bars		B2 Bars		
Sz.	Spa.	Sz.	Spa.	C1	K2	Sz.	Spa.	C5	Q8	Sz.	Spa.	C6	Q9	Sz.	Spa.	Sz.	Spa.	C4	K3	Sz.	Spa.	C7	Q10	Sz.	Spa.	Sz.	Spa.	G1
x	x	x	x	x	x	x	x	x	x	x	x	x	x	x	x	x	x	x	x	x	x	x	x	x	x	x	x	x

Substitute table for tables shown on Standard Plan 703.87

Standard Drawing Guidance
(Do not show on plans. Turn off the Bridge Construction level to hide)

Some details have been grouped together to allow easy substitution with alternate details. To edit grouped details, select them and press <Ctrl> U.

(1) Ahead station is shown for streams flowing left to right. Arrow must be flipped for streams that flow right to left.

(2) Modify Estimated Quantities as required. Don't leave blank rows but leave space between Estimated Quantities and General Notes for at least one pay item to be added during construction. See Alternate Details for culvert extensions, or if five items are required.

(3) Add any required transverse joints proportionally spaced along the barrel. Label units and add actual lengths of units along the barrel.

(4) Insert STD 703.60 when pipe inlets are required. Add pipe inlets to Plan of Layout Dimensions at appropriate locations and to Elevation A-A if visible from elevation. Add inlet data using notes where space allows, or use tables.

(5) For nonstandard culverts with only one design fill height, add supplemental reinforcement table.

(6) No need to revise General Elevation A-A for dual roadways. In Fill Heights table add a lane designation after ℄ Rdwy and insert another row for the other lane.

(7) For skews 20 degrees or more, remove Detail C, remove TT from equation for D and place "N/A" in the Dim. column of Dimension TT. Will first need to separate Detail C from Plan by selecting and pressing <Ctrl> U.

*** VARIABLE DESIGN FILL HEIGHTS ***

(a) Select and delete the details grouped with the Fill Heights table. Select and move the alternate grouped details to drawing.

(b) Place "See Member Thickness table" in the Equation column and place "Varies" in the Dim. column. If Dimension F varies, place "Varies" in the Dim. column.

(c) Remove blank rows. End units may have different design fill heights but both units need to have the same member thicknesses.

(d) This portion of table required when design fill height exceeds limits of the standard plans or when culvert cell height or span is not standard. If only a portion of the units are nonstandard, fill out entire table using the values from the standard table where applicable. Omit if not required.

Alternate Plan of Transverse Joints

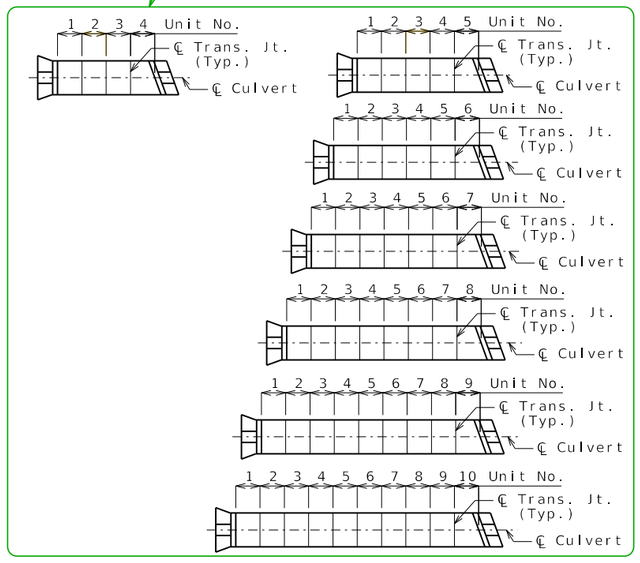

If any part of the barrel is exposed, the roadway fill shall be warped to provide 12 inches minimum cover. (Roadway Item)

Construction joint key not shown for clarity, see standard plans for details.

If unsuitable material is encountered, excavation of unsuitable material and furnishing and placing of granular backfill shall be in accordance with Sec 206.

BXC11_tri_la_fla Guidance & Alternate Details (2 of 2)

Corresponds to the border of the standard drawing for ease in moving alternate details (Snap to corner)

Alternate Details for Multiple Design Fill Heights (a)

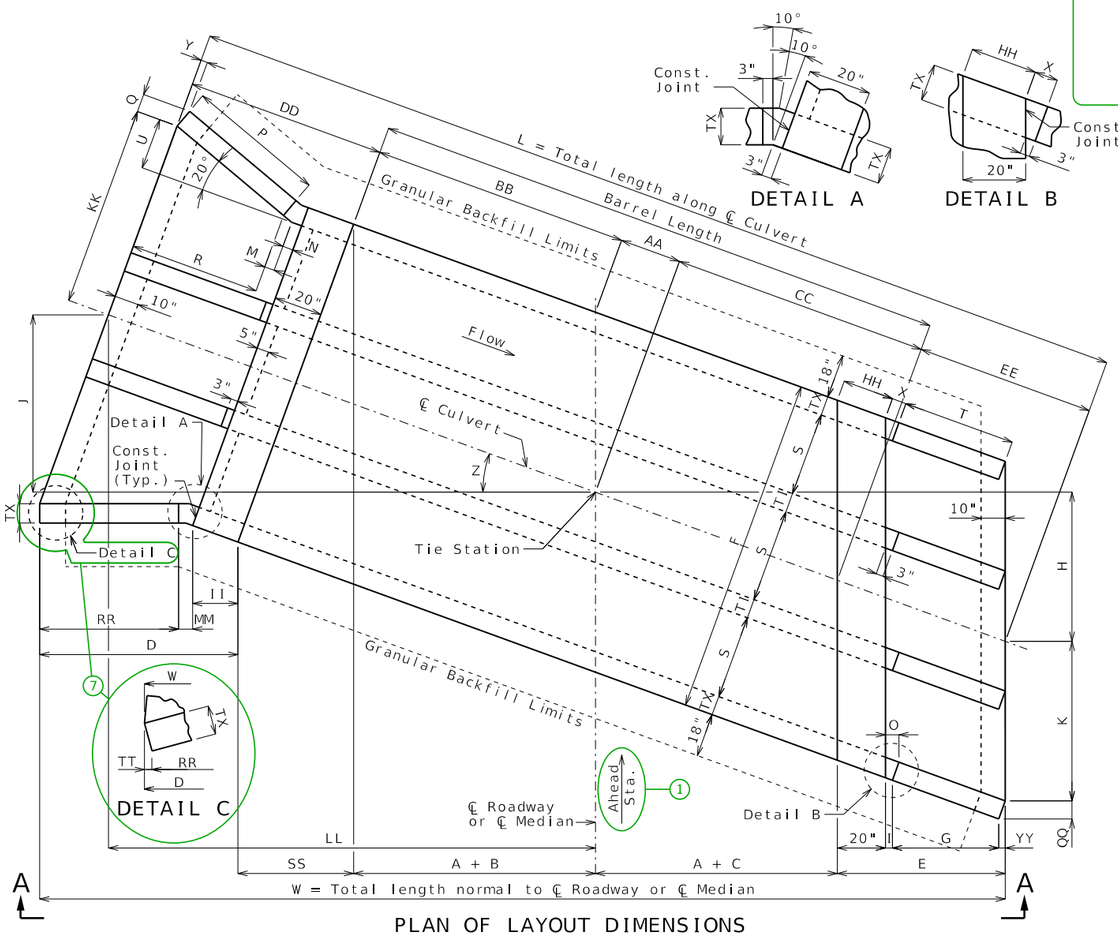

PLAN OF LAYOUT DIMENSIONS

Fill Heights	
℄ Rdwy at ℄ Culvert =	ft
Design (Units 1 &) =	ft
Design (Units &) =	ft
Design (Units &) =	ft

Dimensions are based on end units, except AA is based on Unit . Fill heights are measured from the top of top slab to the top of earth fill or roadway.

Estimated Quantities			Final
Class 4 Excavation	cu. yard	x	
Temporary Shoring	lump sum	1	
Partial Removal of Culvert-Bridge Concrete	lump sum	1	
Class B-1 Concrete (Culverts-Bridge)	cu. yard	x	
Reinforcing Steel (Culverts-Bridge)	pound	x	

(2)

Alternate Estimated Quantities for Culvert Extensions or when Five Items are Required

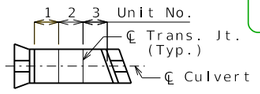

PLAN OF TRANSVERSE JOINTS AND STAGE CONSTRUCTION

Remove if not applicable.

LOCATION SKETCH

Unit No.	Unit Length	Member Thickness					Top Slab Reinforcement														Bottom Slab Reinforcement										Wall Reinforcement				
							A1 Bars		J3 Bars				H1 Bars				H2 Bars				A2 Bars		J4 Bars				H3 Bars				B1 Bars		B2 Bars		
		TS	BS	TX	TI	F	Sz.	Spa.	Sz.	Spa.	C1	K2	Sz.	Spa.	C5	Q8	Sz.	Spa.	C6	Q9	Sz.	Spa.	Sz.	Spa.	C4	K3	Sz.	Spa.	C7	Q10	Sz.	Spa.	Sz.	Spa.	G1
x	x	x	x	x	x	'- "	x	x	x	x	x	x	x	x	x	x	x	x	x	x	x	x	x	x	x	x	x	x	x	x	x	x	x	x	x
x	x	x	x	x	x	'- "	x	x	x	x	x	x	x	x	x	x	x	x	x	x	x	x	x	x	x	x	x	x	x	x	x	x	x	x	x
x	x	x	x	x	x	'- "	x	x	x	x	x	x	x	x	x	x	x	x	x	x	x	x	x	x	x	x	x	x	x	x	x	x	x	x	x

Substitute table for tables shown on Standard Plan 703.87

3('x ') CONCRETE BOX CULVERT

SEC/SUR * TWP * RGE *

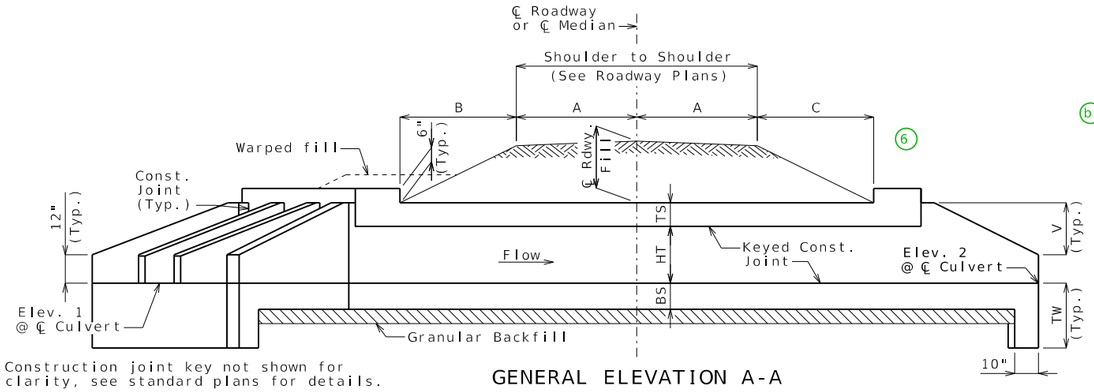

GENERAL ELEVATION A-A

Construction joint key not shown for clarity, see standard plans for details.

If any part of the barrel is exposed, the roadway fill shall be warped to provide 12 inches minimum cover. (Roadway Item)

If unsuitable material is encountered, excavation of unsuitable material and furnishing and placing of granular backfill shall be in accordance with Sec 206.

Layout Dimensions

Var.	Equation	Dim.	Var.	Equation	Dim.	Var.	Equation	Dim.
S	- - -	x	K	(3S/2 + TI)(sec Z)	x	BB	(A + B)(sec Z)	x
HT	- - -	x	L	AA + BB + CC + DD + EE	x	CC	(A + C)(sec Z)	x
TS	- - -	x	M	N(cos 20°)	x	DD	R + M + N + 20"	x
BS	- - -	x	N	3" + TX(tan 10°)	x	EE	E(sec Z)	x
TX	- - -	x	O	I + YY	x	HH	20"(sec Z)	x
TI	- - -	x	P	2V[sec(Z + 20°)]	x	II	20"(cos Z)	x
A	- - -	x	Q	TX(cos 20°)	x	KK	3S/2 + TI + U	x
B	- - -	x	R	P(cos 20°)	x	LL	(AA + BB + DD)(cos Z)	x
C	- - -	x	T	G(sec Z)	x	MM	3"[cos Z + cos(Z - 20°)]	x
D	II + MM + RR + TT (7)	x	U	(R + M)(tan 20°)	x	QQ	TX(cos Z)	x
E	G + O + 20"	x	V	HT + TS - 12"	x	RR	P[cos(Z - 20°)]	x
F	3S + 2TX + 2TI (b)	x	W	2A + B + C + D + E + SS	x	SS	F(sin Z)	x
G	2V	x	X	3" + TX(tan Z)	x	TT	TX[sin(20° - Z)] (7)	x
H	(A + C + E)(tan Z)	x	Y	TX(sin 20°)	x	YY	TX(sin Z)	x
I	3"(cos Z)	x	Z	Skew Angle	x	TW	Max{3'-4" or (BS + 12")}	x
J	(AA + BB + DD)(sin Z)	x	AA	F(tan Z)/2	x			

Hydrologic Data

Drainage Area = ___ mi^2
Design Flood Frequency = ___ years
Design Flood Discharge = ___ cfs
Design Flood (D.F.) Elevation = _____

Base Flood (100-year)

Base Flood Elevation = _____
Base Flood Discharge = ___ cfs
Estimated Backwater = __ ft
Outlet Velocity = __ ft/s

Roadway Overtopping

Overtopping Flood Discharge = ___ cfs
Overtopping Flood Frequency = ___ years
_____ Flood Elevation = _____

Elevations

Upstream (Elev. 1) =
Downstream (Elev. 2) =
Pr. Gr. at Tie Sta. =

Fill Heights

(6) ℄ Rdwy at ℄ Culvert = ft
Design (All units) = ft

Dimensions are based on end units.
Fill heights are measured from the top of top slab to the top of earth fill or roadway. (a)

Estimated Quantities

			Final
Class 4 Excavation	cu. yard	x	
Removal of Bridges	lump sum	1	
Class B-1 Concrete (Culverts-Bridge)	cu. yard	x	
Reinforcing Steel (Culverts-Bridge)	pound	x	

(2)

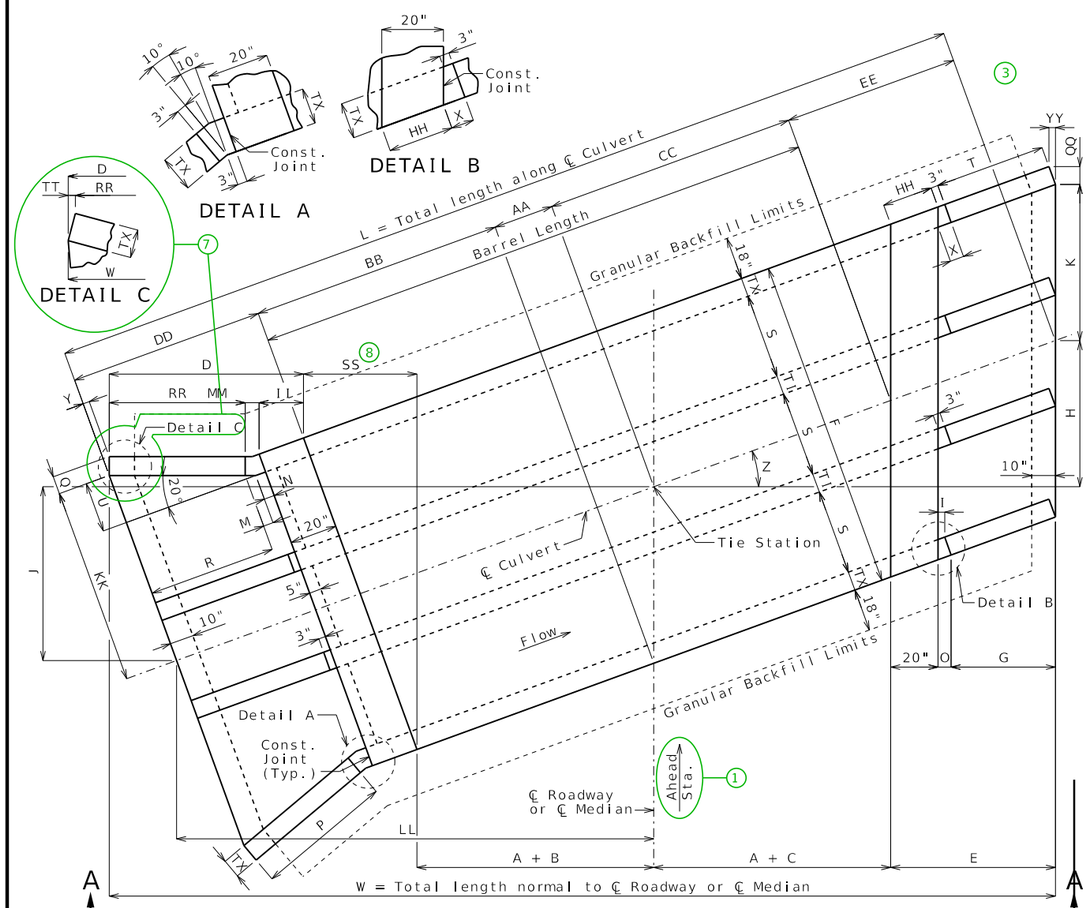

PLAN OF LAYOUT DIMENSIONS

LOCATION SKETCH

General Notes:

Design Specifications:
2010 AASHTO LRFD Bridge Design Specifications and 2010 Interim Revisions

Design Loading:
Vehicular = HL-93 minus lane load, Earth = 120 lb/cf
Equivalent Fluid Pressure = 30 lb/cf (min.), 60 lb/cf (max.)

Design Unit Stresses:
Class B-1 Concrete (Box Culvert) f'c = 4,000 psi
Reinforcing Steel (ASTM A615 Grade 60) fy = 60,000 psi

Standard Plans:
703.37, 703.85, 703.86, 703.87 (4)

Miscellaneous:
MoDOT Construction personnel will indicate the type of box culvert constructed:
☐ Precast Concrete Box used
☐ Cast-in-Place Concrete Box used

When alternate precast concrete box sections are used, the minimum distance from inside face of headwalls to precast sections measured along the shortest wall shall be 3 feet. Reinforcement and dimensions for wings and headwalls shall be in accordance with Missouri Standard Plans.

Channel bottom shall be graded within the right of way for transition of channel bed to culvert openings. Channel banks shall be tapered to match culvert openings. (Roadway Item)

Traffic Handling:
Structure to be closed during construction. Traffic to be maintained on during construction. See roadway plans for traffic control.

B.M.

CULVERT-BRIDGE: ROUTE * OVER *

ROUTE * FROM * TO *
ABOUT * MILES * OF *
TIE STA. _____

Designed
Detailed
Checked

Note: This drawing is not to scale. Follow dimensions.

Sheet No. 1 of

DATE PREPARED	6/2/2025
ROUTE	
STATE	MO
DISTRICT	
SHEET NO.	12
COUNTY	
JOB NO.	
CONTRACT ID.	
PROJECT NO.	
BRIDGE NO.	

DESCRIPTION

DATE

MISSOURI HIGHWAYS AND TRANSPORTATION COMMISSION
105 WEST CAPITOL
JEFFERSON CITY, MO 65102
1-888-ASK-MODOT (1-888-275-6636)

BXC12_tri_ra_fla Guidance & Alternate Details (1 of 2)

Pipes With Same Diameter

XX" Pipe Inlet Data		
Station	Offset	F.L. Elev.
xx+xx.xx	xx.xx' XX	xxx.xx
xx+xx.xx	xx.xx' XX	xxx.xx
xx+xx.xx	xx.xx' XX	xxx.xx

Pipes With Different Diameters

Pipe Inlet Data			
Station	Offset	Dia.	F.L. Elev.
xx+xx.xx	xx.xx' XX	xx"	xxx.xx
xx+xx.xx	xx.xx' XX	xx"	xxx.xx
xx+xx.xx	xx.xx' XX	xx"	xxx.xx

Inlets Sized for Elevation A-A
(Pipe Diameter/Culvert HT)

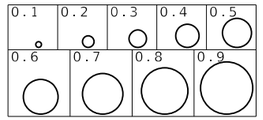

Ex: Use 0.5 detail for 36" pipe into a 6' tall culvert.

Supplemental Pipe Inlet Details (4)

Supplemental Reinforcement Table (Nonstandard culverts with only one design fill height) (5)

Top Slab Reinforcement														Bottom Slab Reinforcement										Wall Reinforcement				
A1 Bars		J3 Bars				H1 Bars				H2 Bars				A2 Bars		J4 Bars				H3 Bars				B1 Bars		B2 Bars		
Sz.	Spa.	Sz.	Spa.	C1	K2	Sz.	Spa.	C5	Q8	Sz.	Spa.	C6	Q9	Sz.	Spa.	Sz.	Spa.	C4	K3	Sz.	Spa.	C7	Q10	Sz.	Spa.	Sz.	Spa.	G1
x	x	x	x	x	x	x	x	x	x	x	x	x	x	x	x	x	x	x	x	x	x	x	x	x	x	x	x	x

Substitute table for tables shown on Standard Plan 703.87

Standard Drawing Guidance
(Do not show on plans. Turn off the Bridge Construction level to hide)

Some details have been grouped together to allow easy substitution with alternate details. To edit grouped details, select them and press <Ctrl> U.

(1) Ahead station is shown for streams flowing left to right. Arrow must be flipped for streams that flow right to left.

(2) Modify Estimated Quantities as required. Don't leave blank rows but leave space between Estimated Quantities and General Notes for at least one pay item to be added during construction. See Alternate Details for culvert extensions, or if five items are required.

(3) Add any required transverse joints proportionally spaced along the barrel. Label units and add actual lengths of units along the barrel.

(4) Insert STD 703.60 when pipe inlets are required. Add pipe inlets to Plan of Layout Dimensions at appropriate locations and to Elevation A-A if visible from elevation. Add inlet data using notes where space allows, or use tables.

(5) For nonstandard culverts with only one design fill height, add supplemental reinforcement table.

(6) No need to revise General Elevation A-A for dual roadways. In Fill Heights table add a lane designation after ℄ Rdwy and insert another row for the other lane.

(7) For skews 20 degrees or more, remove Detail C, remove TT from equation for D and place "N/A" in the Dim. column of Dimension TT. Will first need to separate Detail C from Plan by selecting and pressing <Ctrl> U.

(8) Dimension SS is perpedicular to downstream headwall, not parallel to flared wing.

*** VARIABLE DESIGN FILL HEIGHTS ***

(a) Select and delete the details grouped with the Fill Heights table. Select and move the alternate grouped details to drawing.

(b) Place "See Member Thickness table" in the Equation column and place "Varies" in the Dim. column. If Dimension F varies, place "Varies" in the Dim. column.

(c) Remove blank rows. End units may have different design fill heights but both units need to have the same member thicknesses.

(d) This portion of table required when design fill height exceeds limits of the standard plans or when culvert cell height or span is not standard. If only a portion of the units are nonstandard, fill out entire table using the values from the standard table where applicable. Omit if not required.

Alternate Plan of Transverse Joints

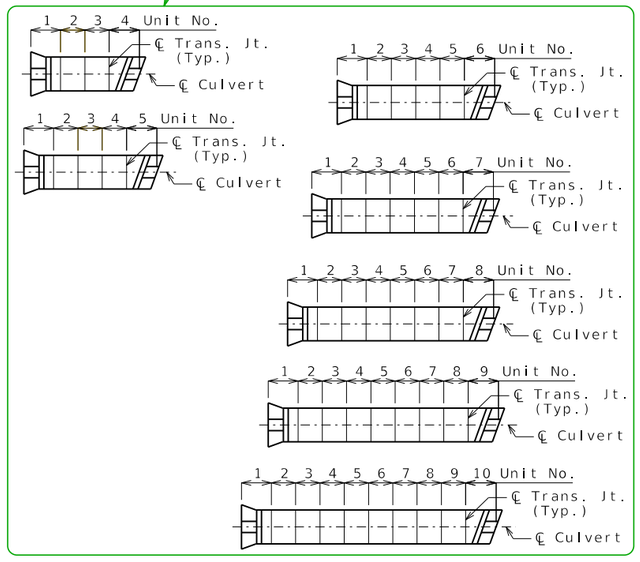

If any part of the barrel is exposed, the roadway fill shall be warped to provide 12 inches minimum cover. (Roadway Item)

Construction joint key not shown for clarity, see standard plans for details.

If unsuitable material is encountered, excavation of unsuitable material and furnishing and placing of granular backfill shall be in accordance with Sec 206.

BXC12_tri_ra_fla Guidance & Alternate Details (2 of 2)

Corresponds to the border of the standard drawing for ease in moving alternate details (Snap to corner)

Alternate Details for Multiple Design Fill Heights (a)

Fill Heights	
℄ Rdwy at ℄ Culvert =	ft
Design (Units 1 &) =	ft
Design (Units &) =	ft
Design (Units &) =	ft

Dimensions are based on end units, except AA is based on Unit . Fill heights are measured from the top of top slab to the top of earth fill or roadway.

Estimated Quantities			Final
Class 4 Excavation	cu. yard	x	
Temporary Shoring	lump sum	1	
Partial Removal of Culvert-Bridge Concrete	lump sum	1	
Class B-1 Concrete (Culverts-Bridge)	cu. yard	x	
Reinforcing Steel (Culverts-Bridge)	pound	x	

(2)

Alternate Estimated Quantities for Culvert Extensions or Required

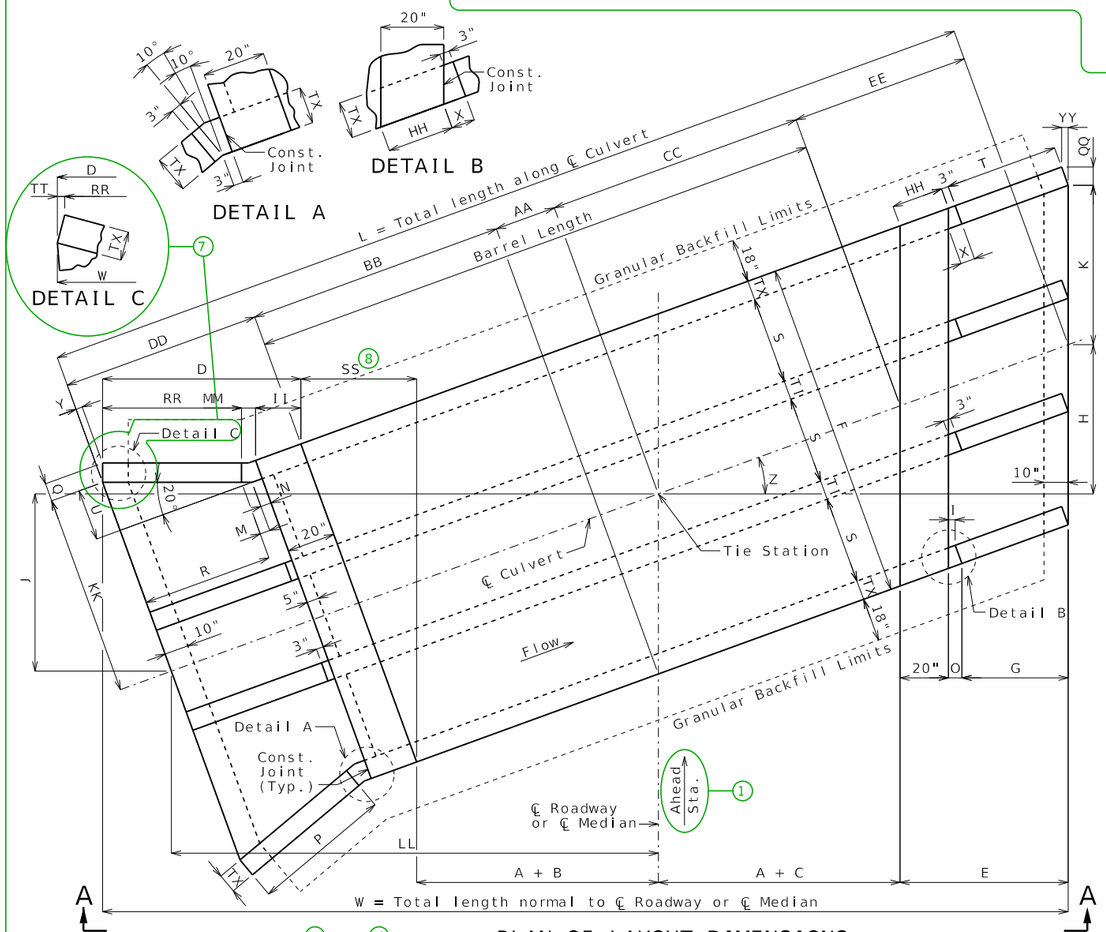

PLAN OF LAYOUT DIMENSIONS

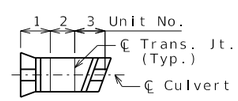

PLAN OF TRANSVERSE JOINTS AND STAGE CONSTRUCTION

Remove if not applicable.

LOCATION SKETCH

(c) (d)

Unit No.	Unit Length	Member Thickness					Top Slab Reinforcement														Bottom Slab Reinforcement										Wall Reinforcement				
							A1 Bars		J3 Bars				H1 Bars				H2 Bars				A2 Bars		J4 Bars				H3 Bars				B1 Bars		B2 Bars		
		TS	BS	TX	TI	F	Sz.	Spa.	Sz.	Spa.	C1	K2	Sz.	Spa.	C5	Q8	Sz.	Spa.	C6	Q9	Sz.	Spa.	Sz.	Spa.	C4	K3	Sz.	Spa.	C7	Q10	Sz.	Spa.	Sz.	Spa.	G1
x	x	x	x	x	x	'- "	x	x	x	x	x	x	x	x	x	x	x	x	x	x	x	x	x	x	x	x	x	x	x	x	x	x	x	x	x
x	x	x	x	x	x	'- "	x	x	x	x	x	x	x	x	x	x	x	x	x	x	x	x	x	x	x	x	x	x	x	x	x	x	x	x	x
x	x	x	x	x	x	'- "	x	x	x	x	x	x	x	x	x	x	x	x	x	x	x	x	x	x	x	x	x	x	x	x	x	x	x	x	x

Substitute table for tables shown on Standard Plan 703.87

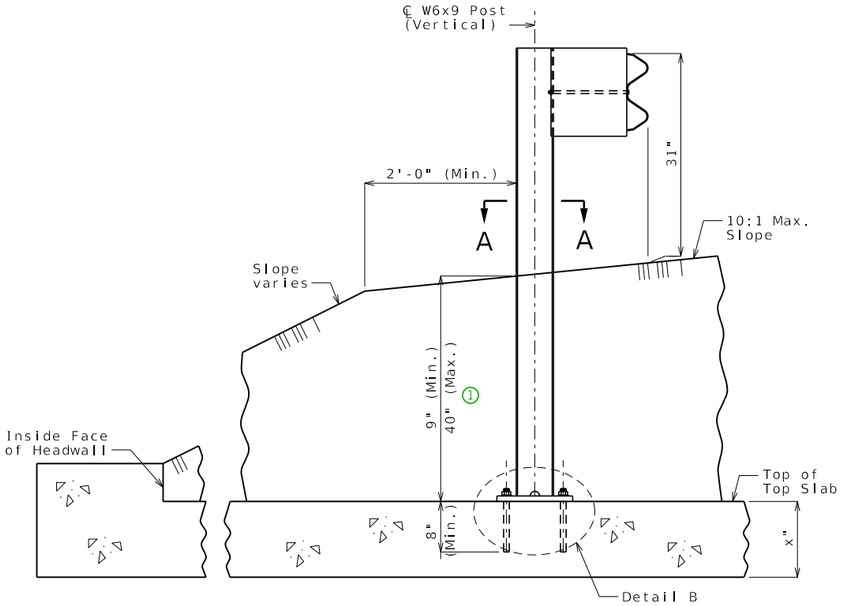

PART SECTION THRU TOP SLAB
SHOWING RAIL POST ATTACHMENT
(Far from headwall)

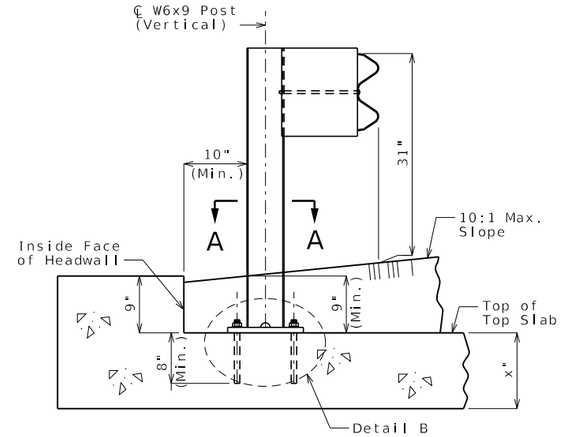

PART SECTION THRU TOP SLAB
SHOWING RAIL POST ATTACHMENT
(Close to headwall)

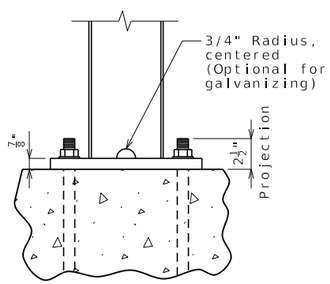

DETAIL B

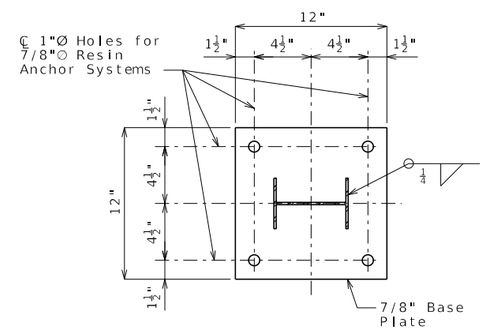

SECTION A-A

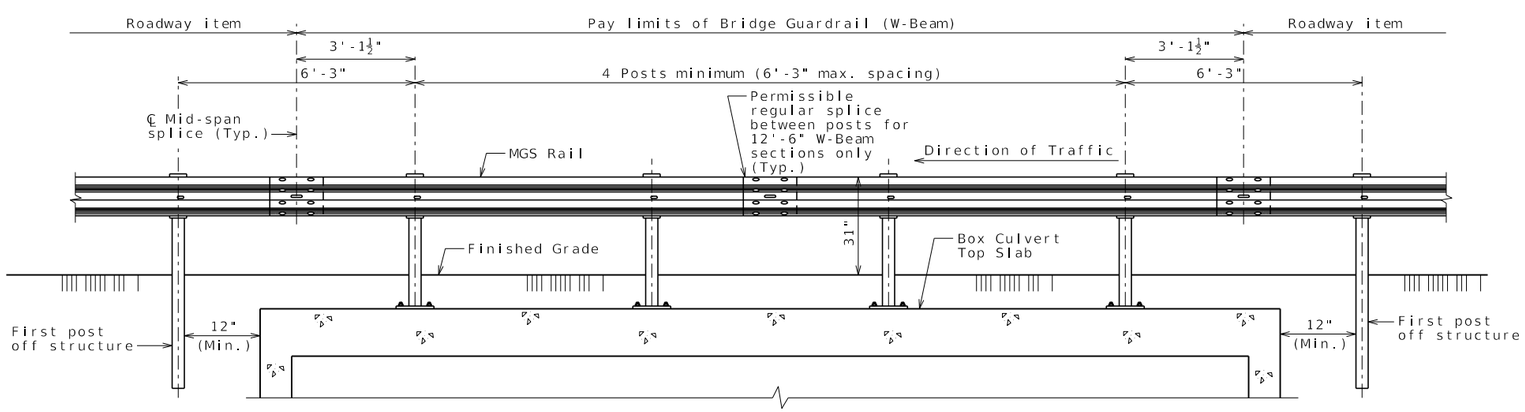

TYPICAL ELEVATION

General Notes:

Furnishing and installing posts and guardrail on culvert as shown on this sheet will be considered completely covered by the contract unit price for Bridge Guardrail (W-Beam).

Furnishing and installing posts and guardrail on culvert shall be in accordance with Sec 606 except as shown.

Rail posts shall be seated on 1/16-inch elastomeric pads having the same dimensions as the post base plate. Such pads may be any elastomeric material, plain or fibered, having hardness (durometer) of 50 or above, as certified by the manufacturer. Additional pads or half pads may be used in shimming for alignment. Post heights shown will increase by the thickness of the pad.

Posts and base plates shall be fabricated from ASTM A709 Grade 36 steel and galvanized.

Fabrication of structural steel shall be in accordance with Sec 1080.

The contractor shall use one of the qualified resin anchor systems in accordance with Sec 1039.

Cost of furnishing and installing the resin anchor systems, complete in place, will be considered completely covered by the contract unit price for Bridge Guardrail (W-beam).

The minimum embedment depth in concrete with f'c = 4,000 psi for the resin anchor systems shall be that required to meet the minimum ultimate pullout strength in accordance with Sec 1039 but shall not be less than 8 inches.

See Missouri Standard Plans drawing 606.50 for details not shown.

Standard Drawing Guidance (Do not show on plans):

Use these details when required to connect rail posts to culvert slabs 10 inches or greater in thickness, where culvert walls interfere with bolting through slab, or when other factors make bolting thru top slab impractical.

1 Culvert attachment is not required for fills over 40 inches. Instead, posts may be driven per Std. Plans 606.50.

DATE PREPARED	5/17/2024
ROUTE	STATE MO
DISTRICT	SHEET NO. 000
COUNTY	
JOB NO.	
CONTRACT ID.	
PROJECT NO.	
BRIDGE NO.	

DESCRIPTION

DATE

MISSOURI HIGHWAYS AND TRANSPORTATION COMMISSION
105 WEST CAPITOL
JEFFERSON CITY, MO 65102
1-888-ASK-MODOT (1-888-275-6636)

MIDWEST GUARDRAIL SYSTEM (MGS) ON BOX CULVERT

Detailed
Checked

Note: This drawing is not to scale. Follow dimensions.

Sheet No. of

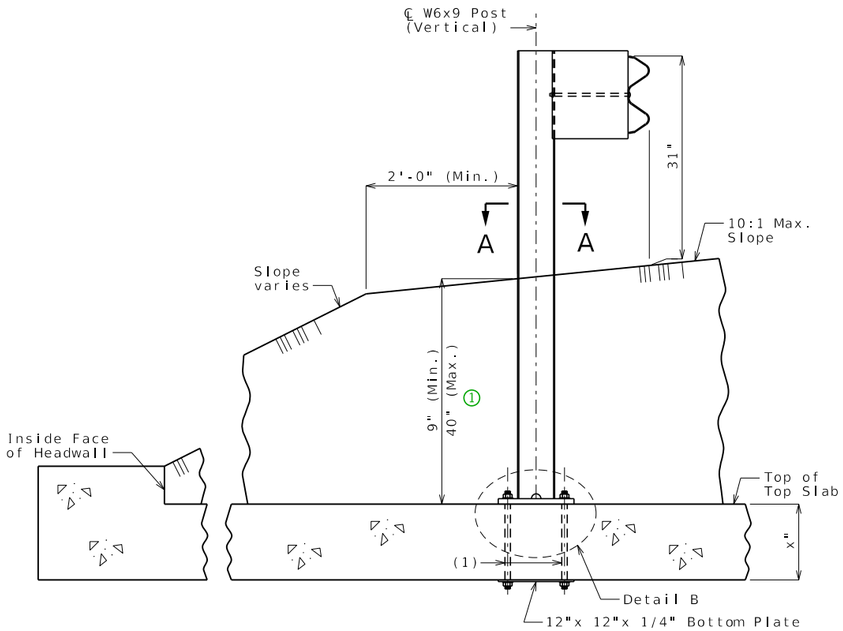

PART SECTION THRU TOP SLAB
SHOWING RAIL POST ATTACHMENT
(Far from headwall)

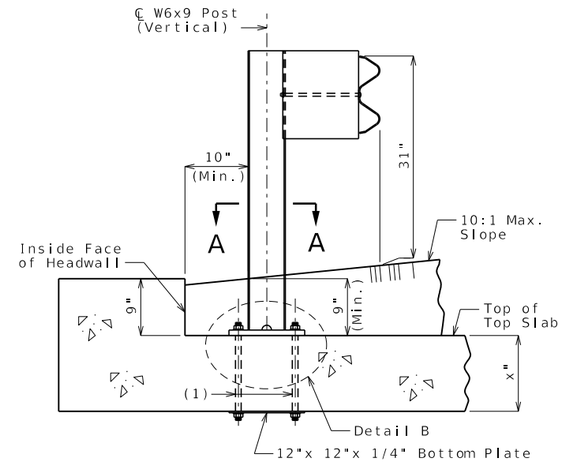

PART SECTION THRU TOP SLAB
SHOWING RAIL POST ATTACHMENT
(Close to headwall)

(1) Two 7/8-inch diameter ASTM A307 bolts with ASTM A563 Grade A hex nuts and ASTM F436 hardened washers.

General Notes:

Furnishing and installing posts and guardrail on culvert as shown on this sheet will be considered completely covered by the contract unit price for Bridge Guardrail (W-Beam).

Furnishing and installing posts and guardrail on culvert shall be in accordance with Sec 606 except as shown.

Rail posts shall be seated on 1/16-inch elastomeric pads having the same dimensions as the post base plate. Such pads may be any elastomeric material, plain or fibered, having hardness (durometer) of 50 or above, as certified by the manufacturer. Additional pads or half pads may be used in shimming for alignment. Post heights shown will increase by the thickness of the pad.

Posts, base plates, and bottom plates shall be fabricated from ASTM A709 Grade 36 steel and galvanized.

Fabrication of structural steel shall be in accordance with Sec 1080.

Holes for ASTM A307 bolts may be drilled into the culvert.

See Missouri Standard Plans drawing 606.50 for details not shown.

Standard Drawing Guidance (Do not show on plans):

Use these details when required to connect rail posts to culvert slabs less than 10 inches in thickness.

① Culvert attachment is not required for fills over 40 inches. Instead, posts may be driven per Std. Plans 606.50.

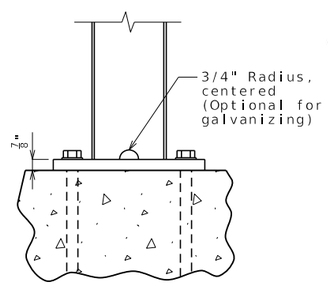

DETAIL B

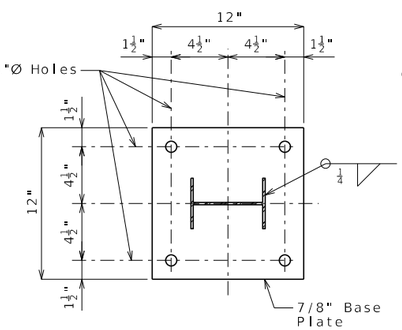

SECTION A-A

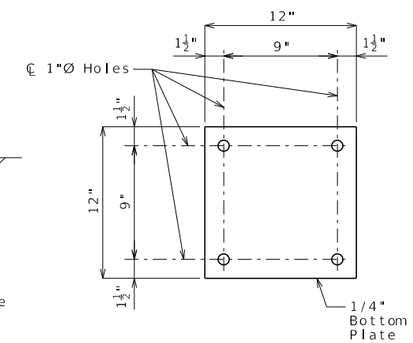

BOTTOM PLATE DETAIL

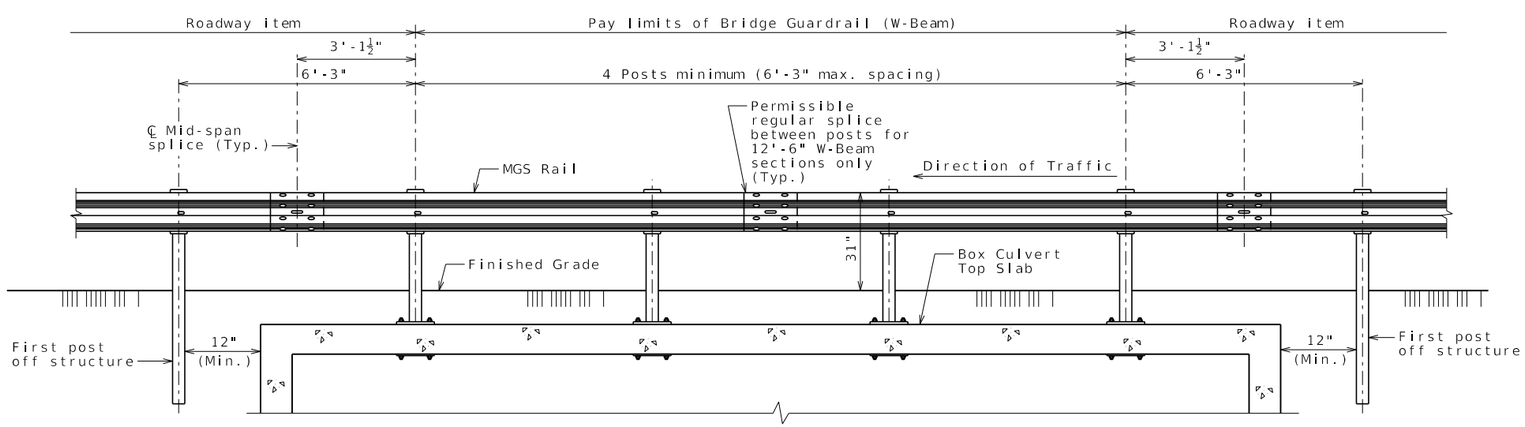

TYPICAL ELEVATION

MIDWEST GUARDRAIL SYSTEM (MGS) ON BOX CULVERT

Detailed
Checked

Note: This drawing is not to scale. Follow dimensions.

Sheet No. of

DATE PREPARED	5/17/2024
ROUTE	STATE MO
DISTRICT	SHEET NO. 2
COUNTY	
JOB NO.	
CONTRACT ID.	
PROJECT NO.	
BRIDGE NO.	

DESCRIPTION | DATE

MISSOURI HIGHWAYS AND TRANSPORTATION COMMISSION
105 WEST CAPITOL
JEFFERSON CITY, MO 65102
1-888-ASK-MODOT (1-888-275-6636)

Standard Drawing Guidance (do not show on plans):

Remove all details shown that are not applicable to project.

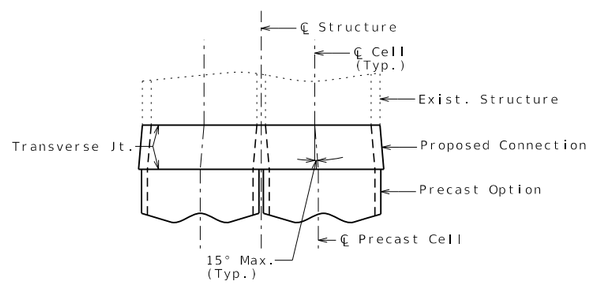

PLAN OF PRECAST BOX CULVERT OPTION

Note:
If precast concrete box culvert option is selected by the contractor, the centerline of existing cell from centerline of precast cell shall not be more than 15 degrees offset in plan view.

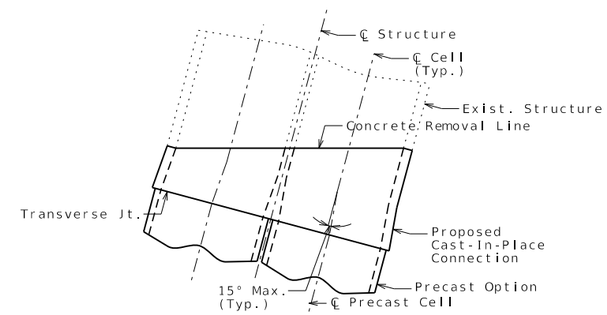

PLAN OF PRECAST BOX CULVERT OPTION

Note:
If precast concrete box culvert option is selected by the contractor, the centerline of existing cell from centerline of precast cell shall not be more than 15 degrees offset in plan view.

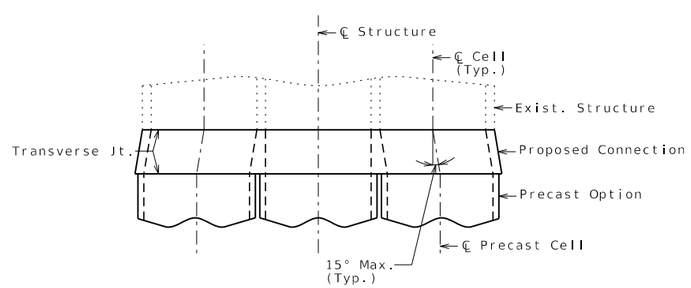

PLAN OF PRECAST BOX CULVERT OPTION

Note:
If precast concrete box culvert option is selected by the contractor, the centerline of existing cell from centerline of precast cell shall not be more than 15 degrees offset in plan view.

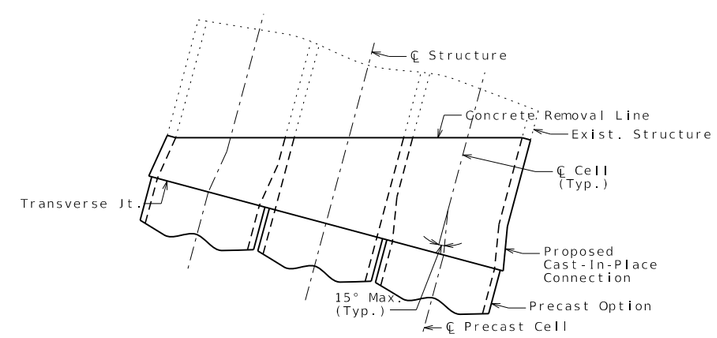

PLAN OF PRECAST BOX CULVERT OPTION

Note:
If precast concrete box culvert option is selected by the contractor, the centerline of existing cell from centerline of precast cell shall not be more than 15 degrees offset in plan view.

Detailed
Checked

Note: This drawing is not to scale. Follow dimensions.

Sheet No. of

DATE PREPARED	10/13/2023
ROUTE	STATE MO
DISTRICT	SHEET NO. 15
COUNTY	
JOB NO.	
CONTRACT ID.	
PROJECT NO.	
BRIDGE NO.	

DESCRIPTION	DATE

MISSOURI HIGHWAYS AND TRANSPORTATION COMMISSION
105 WEST CAPITOL
JEFFERSON CITY, MO 65102
1-888-ASK-MODOT (1-888-275-6636)

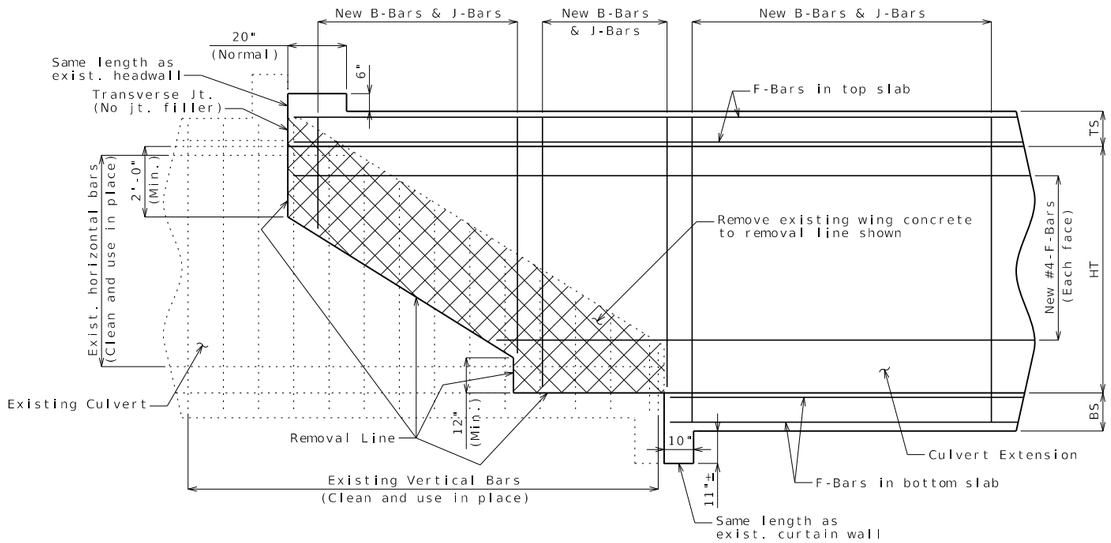

ELEVATION OF EXTERIOR WING
SHOWING OPTIONAL CONCRETE REMOVAL

(Interior wings similar)

A-Bars, D-Bars, H-Bars & R-Bars not shown for clarity.

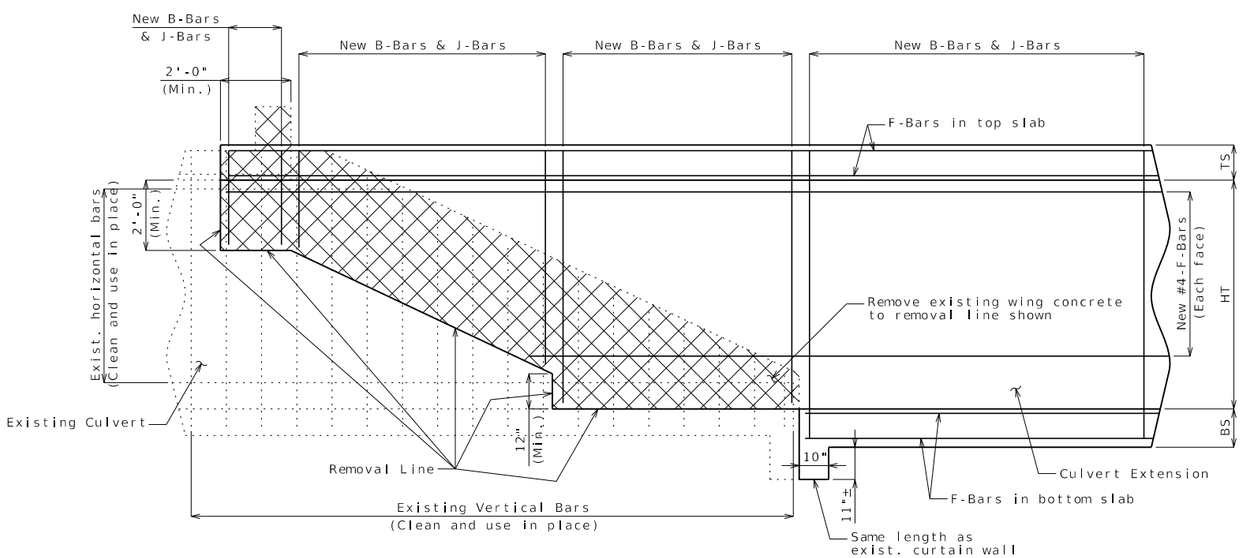

ELEVATION OF EXTERIOR WING
SHOWING OPTIONAL CONCRETE REMOVAL

(Interior wings similar)

A-Bars & H-Bars not shown for clarity.

Standard Drawing Guidance (do not show on plans):

Check wall thickness to see if existing and new matches. If different, see SPM.

SPM to have design checked before using details.

SPM could use wing beam design to possibly eliminate all removals.

General Notes:

For details of Transverse Joint, see Missouri Standard Plans.

When the headwall is removed, the top slab A-bars and F-bars shall lap the existing bars a minimum of 2'-0".

DATE PREPARED	10/13/2023
ROUTE	STATE MO
DISTRICT	SHEET NO. 16
COUNTY	
JOB NO.	
CONTRACT ID.	
PROJECT NO.	
BRIDGE NO.	

DESCRIPTION

DATE

MISSOURI HIGHWAYS AND TRANSPORTATION COMMISSION

105 WEST CAPITOL
JEFFERSON CITY, MO 65102
1-888-ASK-MODOT (1-888-275-6636)

Detailed
Checked

Note: This drawing is not to scale. Follow dimensions.

Sheet No. of

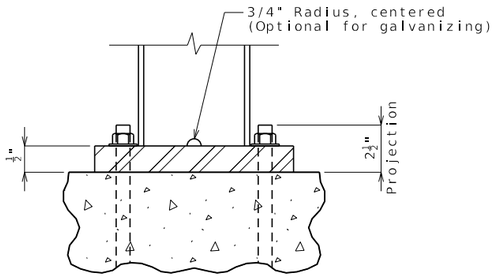

DETAIL B

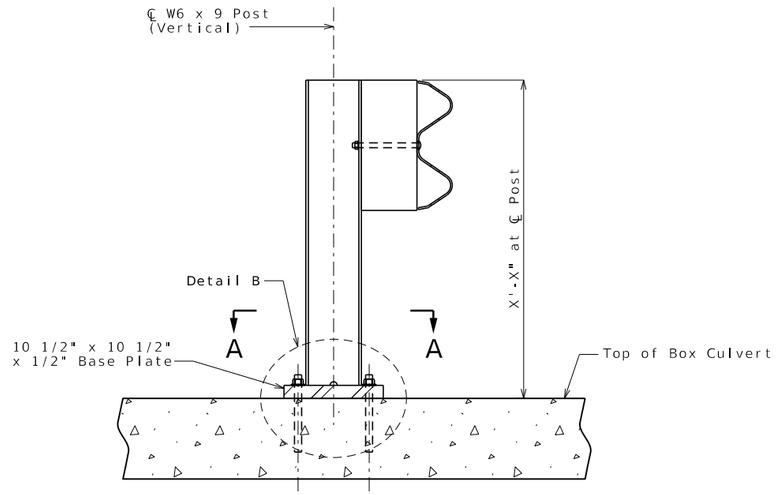

PART SECTION AT RAIL POST

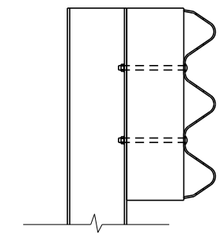

THRIE BEAM
OPTION

Standard Drawing Guidance (do not show on plans):

- Designed for AASHTO LFD.
- Not designed for AASHTO LRFD.
- Not crash tested.
- Comparable to TL-2 (NCHRP 350) deck-mounted (top) post and rail system: Texas T101, Texas Type 6.

Unchecked LRFD analysis shows;

- 0' Fill
  - Guardrail (W-Beam):Design Requirements for TL-2
    - 5'-0" post spacing max
    - Single Rail
    - Grade 50 post and plate
  - Thrie-Beam: Design Requirements for TL-2
    - 6'-9" post spacing max
    - Single Rail
    - Grade 50 post and Plate
- 2' Fill
  - Guardrail (W-Beam): Design Requirements for TL-2
    - 4'-0" post spacing max
    - Double Nested
    - Grade 50 post and plate
  - Thrie-Beam: Design Requirements for TL-2
    - 6'-0"post spacing max
    - Double Nested
    - Grade 50 post and Plate

Use this detail when required to connect rail post to culvert slabs greater than 9" thick, where culvert walls interfere with bolting through slab, or when other factors make bolting thru top slab impractical.

This sheet shows details for connecting guardrail post to culvert slab only.

Work with districts on type of guardrail required.

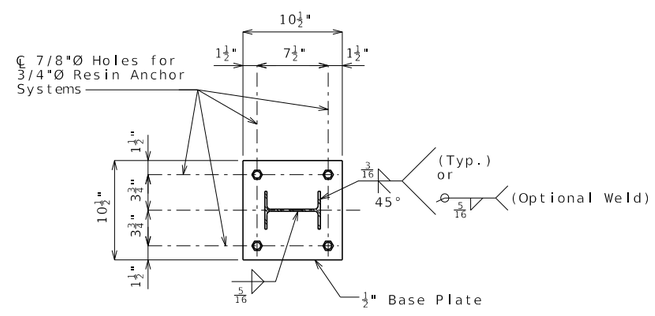

SECTION A-A

General Notes:

Furnishing and installing posts and guardrail on culvert as shown on this sheet will be considered completely covered by the contract unit price for Bridge Guardrail (W-Beam) Bridge Guardrail (Thrie Beam) other items.

Furnishing and installing posts and guardrail on culvert shall be in accordance with Sec 606 except as shown.

Rail posts shall be seated on elastomeric pads having the same dimensions as the post base plate and 1/16" thickness. Such pads may be any elastomeric material, plain or fibered, having a hardness (Durometer) of 50 or above, as certified by the manufacturer. Additional pads or half pads may be used in shimming for alignment. Post heights shown will increase by the thickness of the pad.

Posts and base plates shall be fabricated from ASTM A709 Grade 36 steel and galvanized.

Fabrication of structural steel shall be in accordance with Sec 1080.

The contractor shall use one of the qualified resin anchor systems in accordance with Sec 1039.

Cost of furnishing and installing the resin anchor systems, complete in place, will be considered completely covered by the contract unit price for _____.

The minimum embedment depth in concrete with f'c = 4,000 psi for the resin anchor systems shall be that required to meet the minimum ultimate pullout strength in accordance with Sec 1039 but shall not be less than 5".

See slab sheet for rail post spacing.

See Missouri Standard Plans drawing 606.00 for details not shown.

DATE PREPARED	5/17/2024
ROUTE	STATE MO
DISTRICT	SHEET NO. 3
COUNTY	
JOB NO.	
CONTRACT ID.	
PROJECT NO.	
BRIDGE NO.	

DESCRIPTION	DATE

MISSOURI HIGHWAYS AND TRANSPORTATION COMMISSION
105 WEST CAPITOL
JEFFERSON CITY, MO 65102
1-888-ASK-MODOT (1-888-275-6636)

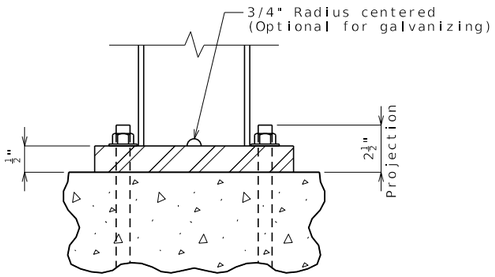

DETAIL B

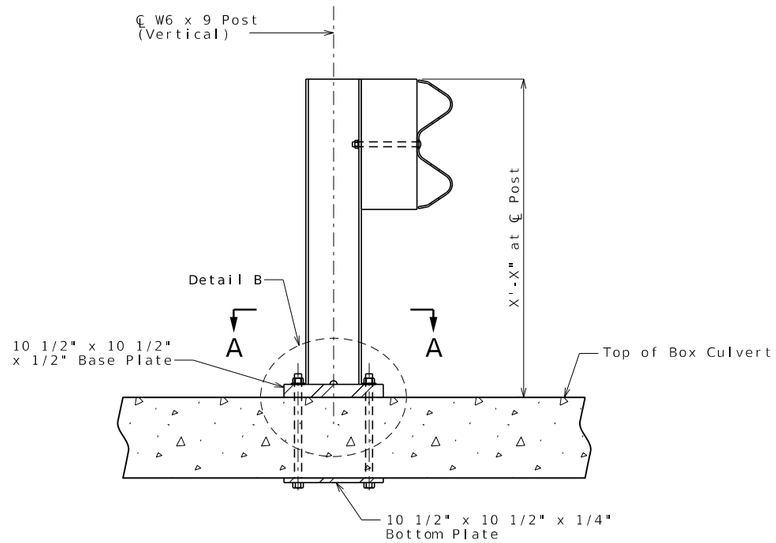

PART SECTION AT RAIL POST

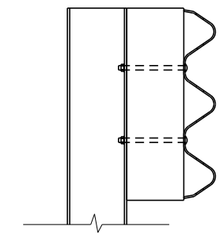

THRIE BEAM
OPTION

Standard Drawing Guidance (do not show on plans):

- Designed for AASHTO LFD.
- Not designed for AASHTO LRFD.
- Not crash tested.
- Comparable to TL-2 (NCHRP 350) deck-mounted (top) post and rail system: Texas T101, Texas Type 6.

Unchecked LRFD analysis shows;

- 0' Fill
  - Guardrail (W-Beam):Design Requirements for TL-2
    - 5'-0" post spacing max
    - Single Rail
    - Grade 50 post and plate
  - Thrie-Beam: Design Requirements for TL-2
    - 6'-9" post spacing max
    - Single Rail
    - Grade 50 post and Plate
- 2' Fill
  - Guardrail (W-Beam): Design Requirements for TL-2
    - 4'-0" post spacing max
    - Double Nested
    - Grade 50 post and plate
  - Thrie-Beam; Design Requirements for TL-2
    - 6'-0"post spacing max
    - Double Nested
    - Grade 50 post and Plate

Use this detail when required to connect rail post to culvert slabs less than or equal to 9" thick.

This sheet shows details for connecting guardrail post to culvert slab only.

Work with districts on type of guardrail required.

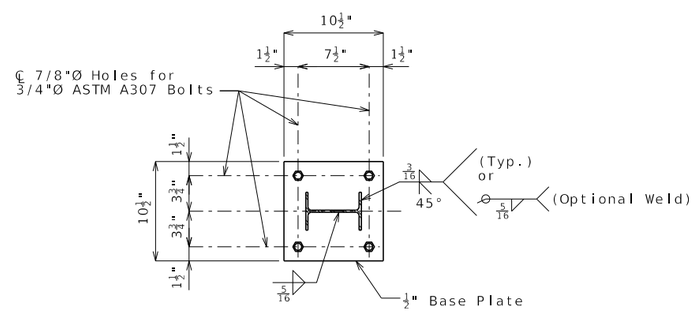

SECTION A-A

General Notes:

Furnishing and installing posts and guardrail on culvert as shown on this sheet will be considered completely covered by the contract unit price for Bridge Guardrail (W-Beam) Bridge Guardrail (Thrie Beam) other items.

Furnishing and installing posts and guardrail on culvert shall be in accordance with Sec 606 except as shown.

Rail posts shall be seated on elastomeric pads having the same dimensions as the post base plate and 1/16" thickness. Such pads may be any elastomeric material, plain or fibered, having a hardness (Durometer) of 50 or above, as certified by the manufacturer. Additional pads or half pads may be used in shimming for alignment. Post heights shown will increase by the thickness of the pad.

Posts and base plates shall be fabricated from ASTM A709 Grade 36 steel and galvanized.

Fabrication of structural steel shall be in accordance with Sec 1080.

Holes for ASTM A307 bolts may be drilled into the culvert.

See slab sheet for rail post spacing.

See Missouri Standard Plans drawing 606.00 for details not shown.

DATE PREPARED	5/17/2024
ROUTE	STATE MO
DISTRICT	SHEET NO. 4
COUNTY	
JOB NO.	
CONTRACT ID.	
PROJECT NO.	
BRIDGE NO.	

DESCRIPTION

DATE

MISSOURI HIGHWAYS AND TRANSPORTATION COMMISSION
105 WEST CAPITOL
JEFFERSON CITY, MO 65102
1-888-ASK-MODOT (1-888-275-6636)

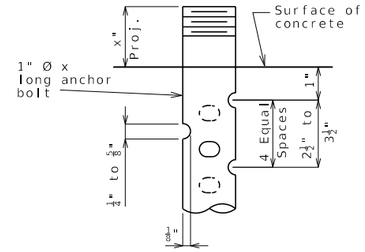

SWEDGE ANCHOR BOLT DETAIL

GENERAL NOTES:

Anchor bolts for Type C bearings shall be 1"Ø ASTM F1554 Grade 55 swedged bolts, with no heads or nuts and shall extend 10" into the concrete. Swedging shall be 1" less than the extension into the concrete. Anchor bolts shall be set in the drilling holes or in the anchor bolt wells and grouted prior to the erection of steel. The top of anchor bolts shall be set approximately 1/4" below the top of bearing.

Anchor bolts shall be coated with a minimum of two coats of inorganic zinc primer to provide a total dry thickness of 4 mils minimum, 6 mils maximum, or galvanized in accordance with ASTM F2329.

Weight of the anchor bolts for bearings are included in the weight of the Fabricated Structural Steel.

Indicates machine finish surface.

Shop drawings are not required for the lead plates and the preformed fabric pads.

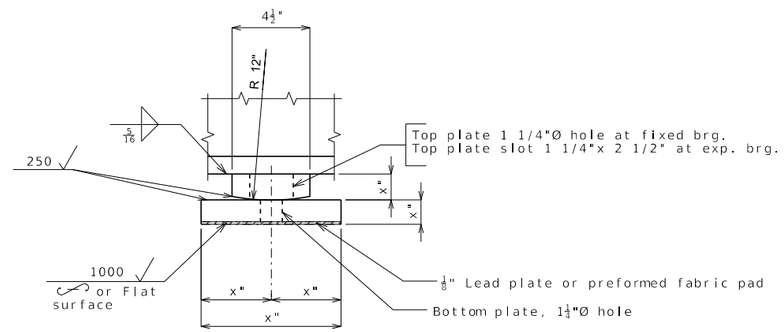

SIDE VIEW

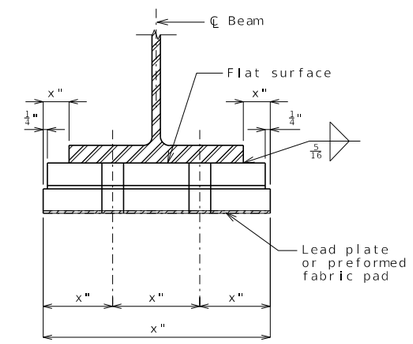

END VIEW

TYPE C BEARINGS

(Estimated Weight pounds)

DATE PREPARED	5/12/2026
ROUTE	STATE MO
DISTRICT	SHEET NO. 1
COUNTY	
JOB NO.	
CONTRACT ID.	
PROJECT NO.	
BRIDGE NO.	

DATE	DESCRIPTION

MISSOURI HIGHWAYS AND TRANSPORTATION COMMISSION
105 WEST CAPITOL
JEFFERSON CITY, MO 65102
1-888-ASK-MODOT (1-888-275-6636)

Detailed
Checked

Note: This drawing is not to scale. Follow dimensions.

Sheet No. of

GENERAL NOTES:

Anchor bolts for Type D bearings shall be Ø ASTM F1554 Grade 55 swedged bolts and shall extend into the concrete with ASTM A563 Grade A Heavy Hex nuts. Actual manufacturer's certified mill test reports (chemical and mechanical) shall be provided. Use ASTM F436 hardened washers for the fixed bearings and no heavy hex nuts or hardened washers for the expansion bearings. Swedging shall be 1" less than extension into the concrete.

Anchor bolts, hardened washers and heavy hex nuts shall be coated with a minimum of two coats of inorganic zinc primer to provide a total dry film thickness of 4 mils minimum, 6 mils maximum, or galvanized in accordance with ASTM F2329.

Weight of the anchor bolts, hardened washers and heavy hex nuts for bearings are incuded in the weight of the Fabricated Structural Steel.

Indicates machine finish surface.

Shop drawings are not required for the lead plates and the preformed fabric pads.

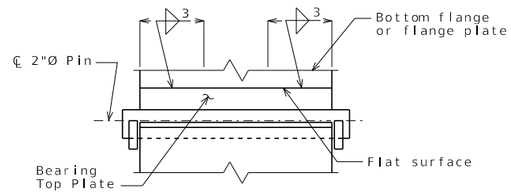

WELDING DETAILS

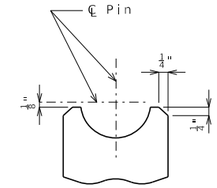

END VIEW OF WEB

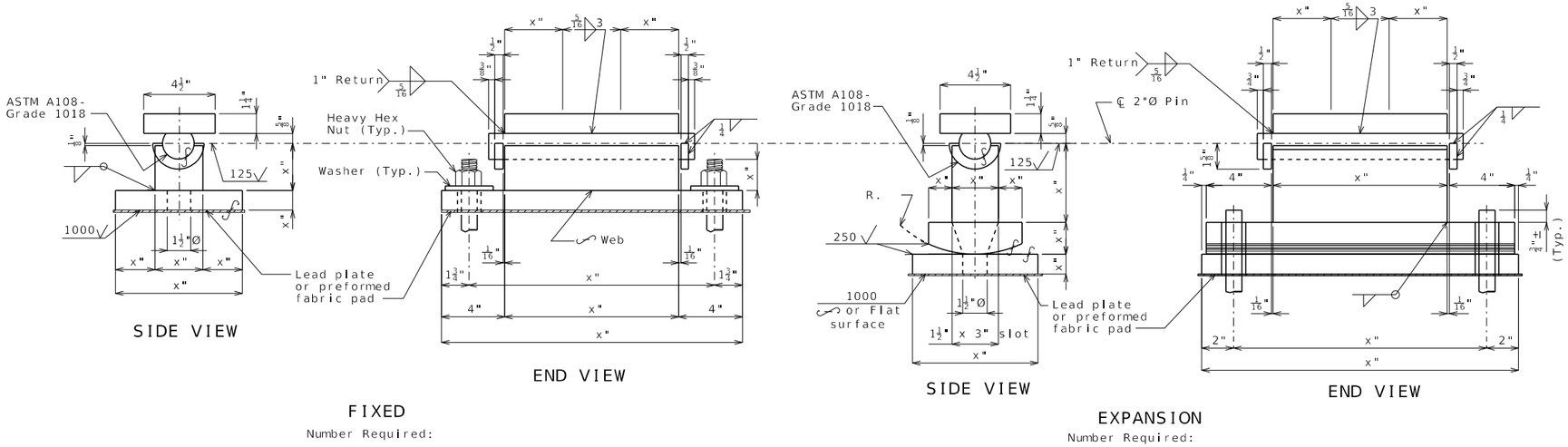

TYPE D BEARINGS

(Estimated Weight pounds)

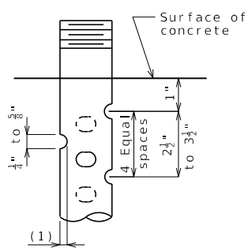

DETAIL FOR 3/8"Ø
THRU 2 1/2"Ø ANCHOR BOLTS

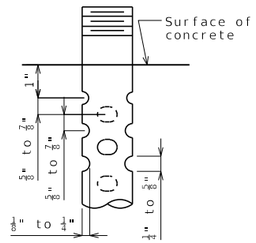

OPTIONAL DETAIL FOR 1 3/8"Ø
THRU 2 1/2"Ø ANCHOR BOLTS

SWEDGE ANCHOR BOLTS DETAILS

(1) $\frac{1}{8}$" for $\frac{3}{4}$"Ø thru $1\frac{1}{4}$"Ø anchor bolts

$\frac{1}{8}$" to $\frac{1}{4}$" for $1\frac{3}{8}$"Ø thru $2\frac{1}{2}$"Ø anchor bolts

Detailed
Checked

Note: This drawing is not to scale. Follow dimensions.

Sheet No. of

DATE PREPARED	5/12/2026
ROUTE	STATE MO
DISTRICT	SHEET NO. 2
COUNTY	
JOB NO.	
CONTRACT ID.	
PROJECT NO.	
BRIDGE NO.	

DESCRIPTION

DATE

MISSOURI HIGHWAYS AND TRANSPORTATION COMMISSION

105 WEST CAPITOL
JEFFERSON CITY, MO 65102
1-888-ASK-MODOT (1-888-275-6636)

GENERAL NOTES:

Anchor bolts for Type E bearings shall be Ø ASTM F1554 Grade 55 swedged bolts and shall extend into the concrete with ASTM A563 Grade A Heavy Hex nuts. Actual manufacturer's certified mill test reports (chemical and mechanical) shall be provided. Use ASTM F436 hardened washers for the fixed bearings and no heavy hex nuts or hardened washers for the expansion bearings. Swedging shall be 1" less than extension into the concrete.

Anchor bolts, hardened washers and heavy hex nuts shall be coated with a minimum of two coats of inorganic zinc primer to provide a total dry film thickness of 4 mils minimum, 6 mils maximum, or galvanized in accordance with ASTM F2329.

Weight of the anchor bolts, hardened washers and heavy hex nuts for bearings are included in the weight of the Fabricated Structural Steel.

Indicates machine finish surface.

A lubricant coating shall be applied in the shop to both mating surfaces of the bearing assembly. The lubricant, method of cleaning, and application shall meet the requirements of MIL-L-23398 and MIL-L-46147. The coated areas shall be protected for shipping and erection.

Shop drawings are not required for the lead plates and the preformed fabric pads.

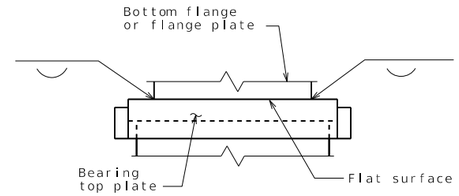

WELDING DETAILS

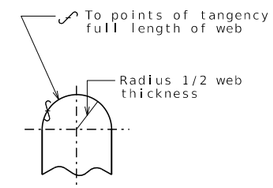

END VIEW OF WEB

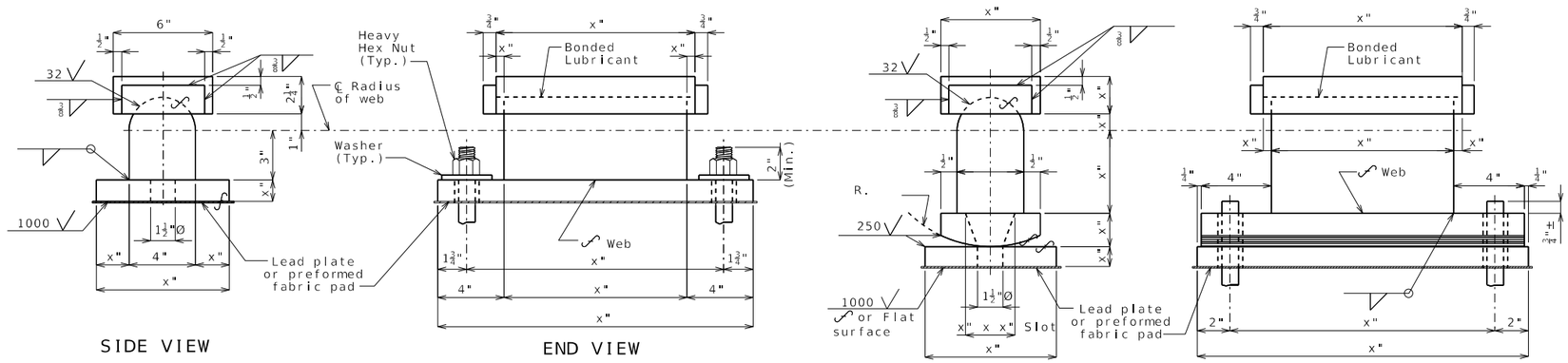

FIXED

Number Required:

EXPANSION

Number Required:

TYPE E BEARINGS

(Estimated Weight pounds)

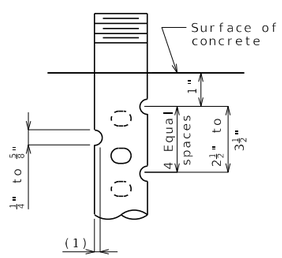

DETAIL FOR 3/4"Ø
THRU 2 1/2"Ø ANCHOR BOLTS

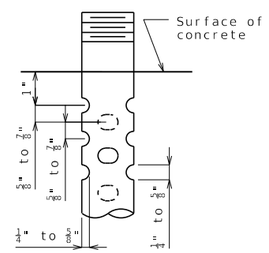

OPTIONAL DETAIL FOR 1 3/8"Ø
THRU 2 1/2"Ø ANCHOR BOLTS

SWEDGE ANCHOR BOLT DETAILS

(1) $\frac{1}{8}$" for $\frac{3}{4}$"Ø thru $1\frac{1}{4}$"Ø anchor bolts

$\frac{1}{8}$" to $\frac{1}{4}$" for $1\frac{3}{8}$"Ø thru $2\frac{1}{2}$"Ø anchor bolts

Detailed
Checked

Note: This drawing is not to scale. Follow dimensions.

Sheet No. of

DATE PREPARED	5/12/2026
ROUTE	STATE MO
DISTRICT	SHEET NO. 3
COUNTY	
JOB NO.	
CONTRACT ID.	
PROJECT NO.	
BRIDGE NO.	

DESCRIPTION

DATE

MISSOURI HIGHWAYS AND TRANSPORTATION COMMISSION
105 WEST CAPITOL
JEFFERSON CITY, MO 65102
1-888-ASK-MODOT (1-888-275-6636)

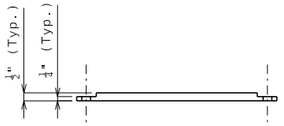

ELEVATION OF GALVANIZED STEEL STOPPER PLATE

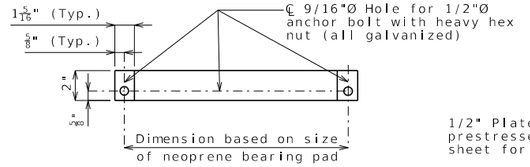

PLAN OF GALVANIZED STEEL STOPPER PLATE

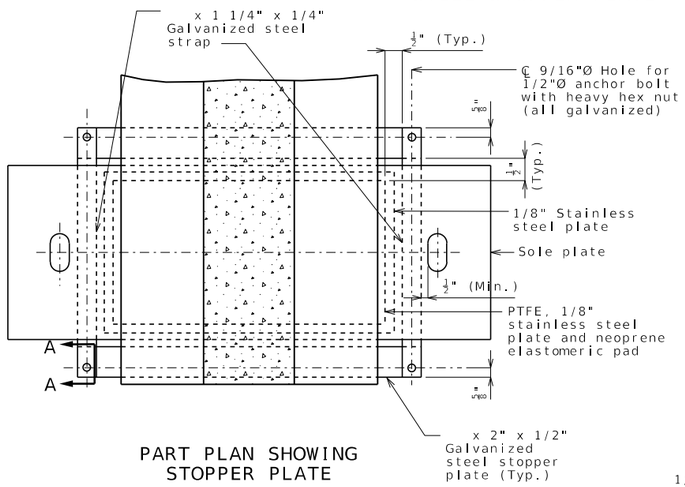

PART PLAN SHOWING STOPPER PLATE

Stopper plates and straps shall be provided to prevent loss of support due to creeping of PTFE bearings. Payment for fabricating and installing the stopper plates and straps will be considered completely covered by the contract unit price for Type N PTFE Bearing.

The bottom face of the 1/8" stainless steel plate that is welded to the sole plate shall be lubricated with a lubricant that is approved by the bearing manufacturer.

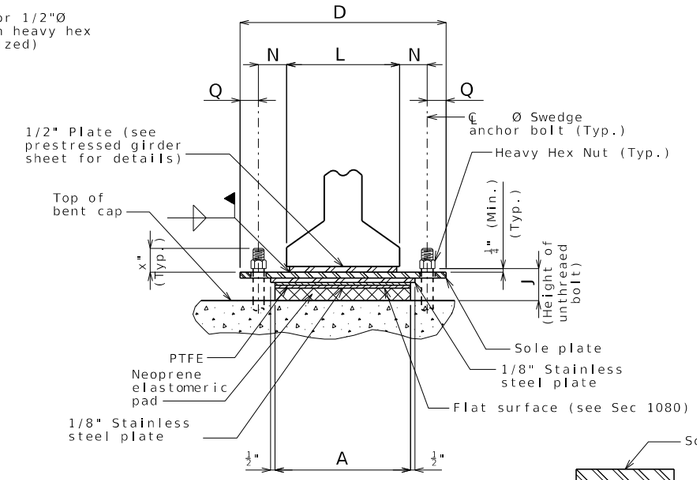

END VIEW

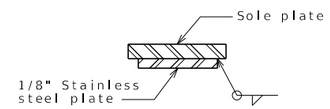

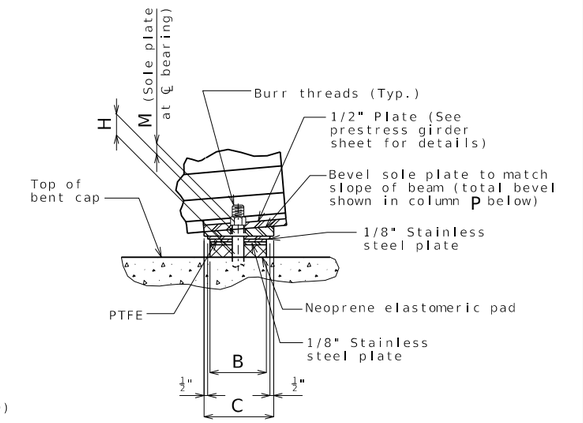

SIDE VIEW

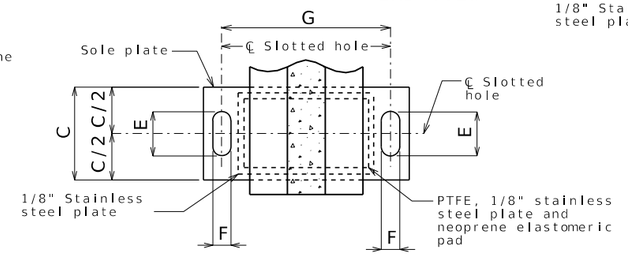

PART PLAN

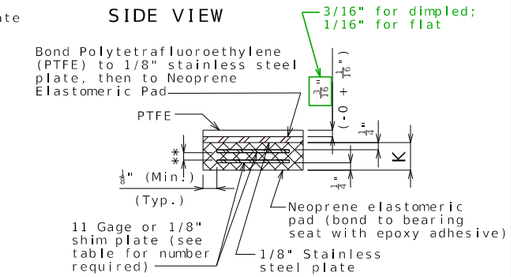

NEOPRENE ELASTOMERIC PAD

** Layers of 1/2" elastomeric pad alternating with 11 gage or 1/8" shim plate

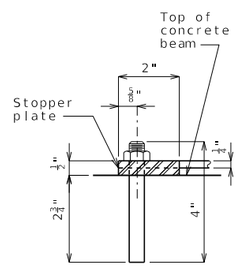

SECTION A-A

PTFE SLIDING BEARINGS																		
BENT NO.	A	B	C	D	E	F	G	H	J	K	L	M	N	P	Q	R	NUMBER OF SHIM PLATES *	NUMBER REQUIRED
																	TOTAL BEARINGS	

* The required shim plate shall be placed between layers of elastomer and molded together to form an integral unit.

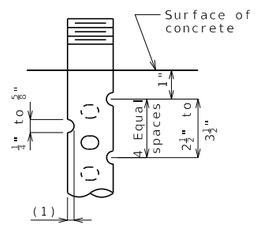

DETAIL FOR 3/4"Ø THRU 2 1/2"Ø ANCHOR BOLTS

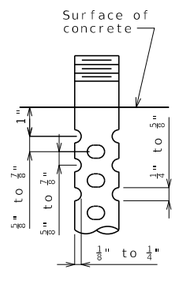

OPTIONAL DETAIL FOR 1 3/8"Ø THRU 2 1/2"Ø ANCHOR BOLTS

SWEDGE ANCHOR BOLT DETAILS

(1) 1/8" for 3/4"Ø thru 1 1/4"Ø anchor bolts

1/8" to 1/4" for 1 3/8"Ø thru 2 1/2"Ø anchor bolts

GENERAL NOTES:

Design coefficient of friction equals .

Anchor bolts shall be Ø ASTM F1554 Grade 55 105 swedged bolts and shall extend into the concrete with ASTM A563 Grade A DH Heavy Hex nuts. Actual manufacturer's certified mill test reports (chemical and mechanical) shall be provided. Swedging shall be 1" less than extension into the concrete.

Anchor bolt shall be at the centerline of slotted hole at 60°F. Bearing position shall be adjusted R for each 10° fall or rise in temperature at installation.

Anchor bolts and heavy hex nuts shall be coated with a minimum of two coats of inorganic zinc primer to provide a total dry film thickness of 4 mils minimum, 6 mils maximum, or galvanized in accordance with ASTM F2329.

Neoprene Elastomeric Pads shall be 70 Durometer.

Structural steel for sole plate shall be ASTM A709 Grade and shall be coated with a minimum of two coats of inorganic zinc primer to provide a total dry film thickness of 4 mils minimum, 6 mils maximum. The stainless steel plate shall be protected from any coating.

Type N PTFE Bearings shall be in accordance with Sec 716.

PTFE surface shall be fabricated as a single piece. Splicing will not be permitted.

The PTFE surface shall be flat dimpled.

The depth of the dimples shall be at least 0.08 inch but less than one-half the PTFE thickness and the diameter shall be no more than 0.32 inch. Dimples shall be uniformly distributed and cover greater than 20% but less than 30% of the entire PTFE surface area. Dimples shall not be placed to intersect the edge of the PTFE surface.

Dimpled PTFE surfaces shall be lubricated with silicone grease meeting the Society of Automotive Engineers Specification SAE-AS8660.

Std. Dwg. Guidance (Do not show on plans): Remove these notes if PTFE surface is flat.

TYPE N PTFE BEARINGS

Detailed
Checked

Note: This drawing is not to scale. Follow dimensions.

Sheet No. of

DATE PREPARED	
5/12/2026	
ROUTE	STATE MO
DISTRICT BR	SHEET NO. 4
COUNTY	
JOB NO.	
CONTRACT ID.	
PROJECT NO.	
BRIDGE NO.	

DESCRIPTION

DATE

MISSOURI HIGHWAYS AND TRANSPORTATION COMMISSION
105 WEST CAPITOL
JEFFERSON CITY, MO 65102
1-888-ASK-MODOT (1-888-275-6636)

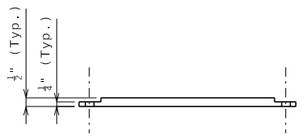

ELEVATION OF GALVANIZED STEEL STOPPER PLATE

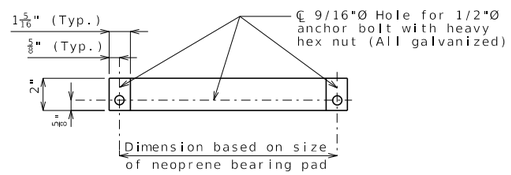

PLAN OF GALVANIZED STEEL STOPPER PLATE

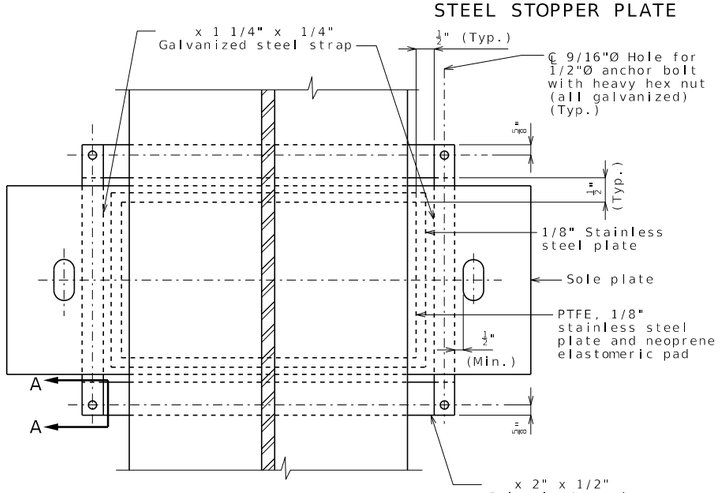

PART PLAN SHOWING STOPPER PLATE

Stopper plates and straps shall be provided to prevent loss of support due to creeping of PTFE bearings. Payment for fabricating and installing the stopper plates and straps will be considered completely covered by the contract unit price for Type N PTFE Bearing.

The bottom face of the 1/8" stainless steel plate that is welded to the sole plate shall be lubricated with a lubricant that is approved by the bearing manufacturer.

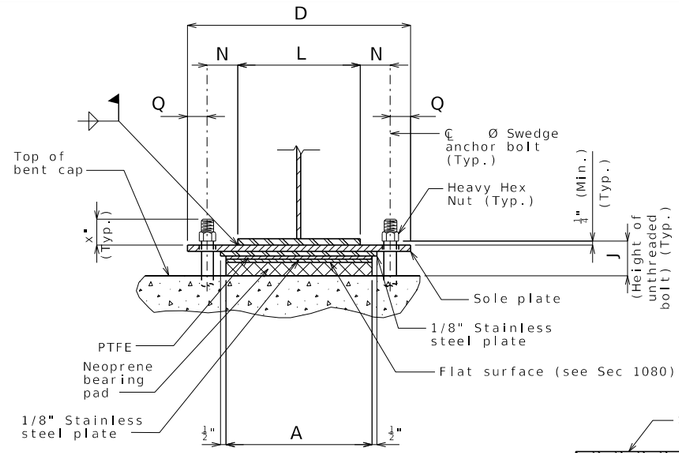

END VIEW

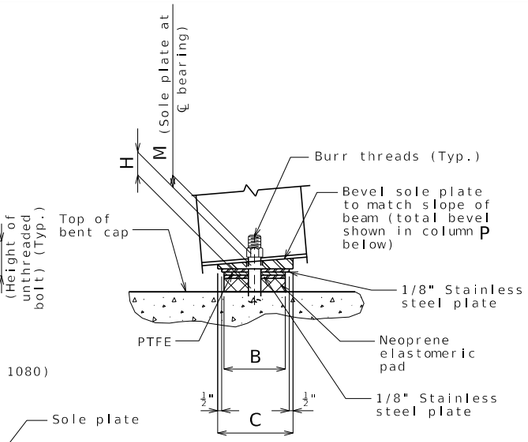

SIDE VIEW

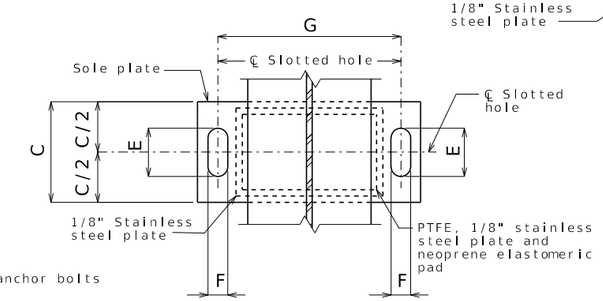

PART PLAN

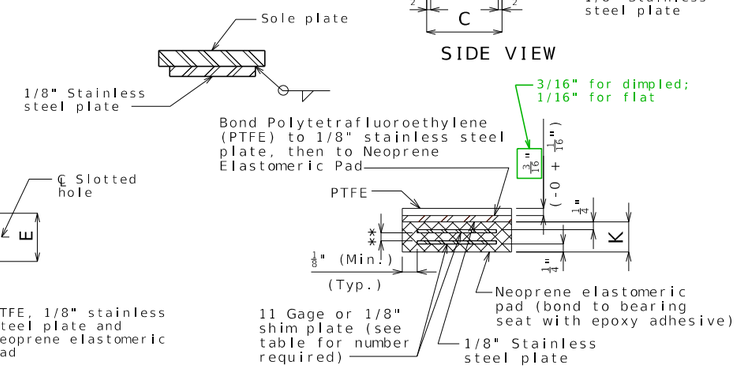

NEOPRENE ELASTOMERIC PAD

** Layers of 1/2" elastomeric pad alternating with 11 gage or 1/8" shim plate

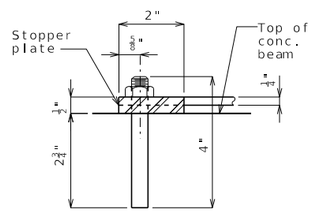

SECTION A-A

(1) 1/8" for 3/4"Ø thru 1 1/4"Ø anchor bolts

1/8" to 1/4" for 1 3/8"Ø thru 2 1/2"Ø anchor bolts

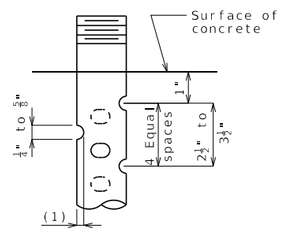

DETAIL FOR 3/4"Ø THRU 2 1/2"Ø ANCHOR BOLTS

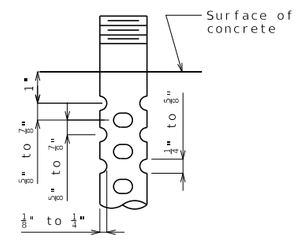

OPTIONAL DETAIL FOR 1 3/8"Ø THRU 2 1/2"Ø ANCHOR BOLTS

SWEDGE ANCHOR BOLT DETAILS

GENERAL NOTES:

Design coefficient of friction equals .

Anchor bolts shall be Ø ASTM F1554 Grade 55 105 swedged bolts and shall extend into the concrete with ASTM A563 Grade A DH Heavy Hex nuts. Actual manufacturer's certified mill test reports (chemical and mechanical) shall be provided. Swedging shall be 1" less than extension into the concrete.

Anchor bolts shall be at the centerline of slotted hole at 60°F. Bearing position shall be adjusted R for each 10° fall or rise in temperature at installation.

2 Anchor bolts and heavy hex nuts shall be coated with a minimum of two coats of inorganic zinc primer to provide a total dry film thickness of 4 mils minimum, 6 mils maximum, or galvanized in accordance with ASTM F2329.

Neoprene Elastomeric Pads shall be 70 Durometer.

1 Structural steel for sole plate shall be ASTM A709 Grade and shall be coated with a minimum of two coats of inorganic zinc primer to provide a total dry film thickness of 4 mils minimum, 6 mils maximum. The stainless steel plate shall be protected from any coating.

Type N PTFE Bearings shall be in accordance with Sec 716.

PTFE surface shall be fabricated as a single piece. Splicing will not be permitted.

The PTFE surface shall be flat dimpled.

3 The depth of the dimples shall be at least 0.08 inch but less than one-half the PTFE thickness and the diameter shall be no more than 0.32 inch. Dimples shall be uniformly distributed and cover greater than 20% but less than 30% of the entire PTFE surface area. Dimples shall not be placed to intersect the edge of the PTFE surface.

Dimpled PTFE surfaces shall be lubricated with silicone grease meeting the Society of Automotive Engineers Specification SAE-AS8660.

PTFE SLIDING BEARINGS

BENT NO.	A	B	C	D	E	F	G	H	J	K	L	M	N	P	Q	R	NUMBER OF SHIM PLATES *	NUMBER REQUIRED
																	TOTAL BEARINGS	

* The required shim plate shall be placed between layers of elastomer and molded together to form an integral unit.

TYPE N PTFE BEARINGS

DATE PREPARED	5/12/2026
ROUTE	STATE MO
DISTRICT BR	SHEET NO. 5
COUNTY	
JOB NO.	
CONTRACT ID.	
PROJECT NO.	
BRIDGE NO.	

DESCRIPTION

DATE

MISSOURI HIGHWAYS AND TRANSPORTATION COMMISSION

105 WEST CAPITOL
JEFFERSON CITY, MO 65102
1-888-ASK-MODOT (1-888-275-6636)

Detailed
Checked

Note: This drawing is not to scale. Follow dimensions.

Sheet No. of

BRG07 ptfe stl 4stp Guidance

1. Use note H3.29.1 with Grade 50W steel.
   Use note H3.29.2 when steel superstructure is galvanized.
   (H3.29 shown)

2. Remove underlined portion when steel superstructure is galvanized.

3. Remove these notes if PTFE surface is flat.

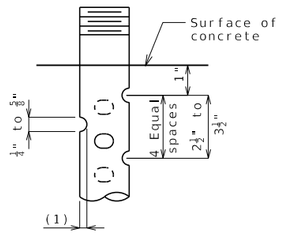

DETAIL FOR 3/4"Ø THRU 2 1/2"Ø ANCHOR BOLTS

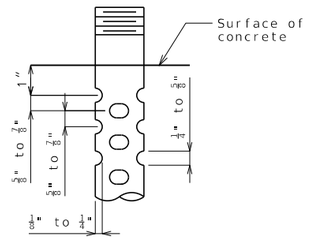

OPTIONAL DETAIL FOR 1 3/8"Ø THRU 2 1/2"Ø ANCHOR BOLTS

SWEDGE ANCHOR BOLT DETAILS

(1) 1/8" for 3/4"Ø thru 1 1/4"Ø anchor bolts

1/8" to 1/4" for 1 3/8"Ø thru 2 1/2"Ø anchor bolts

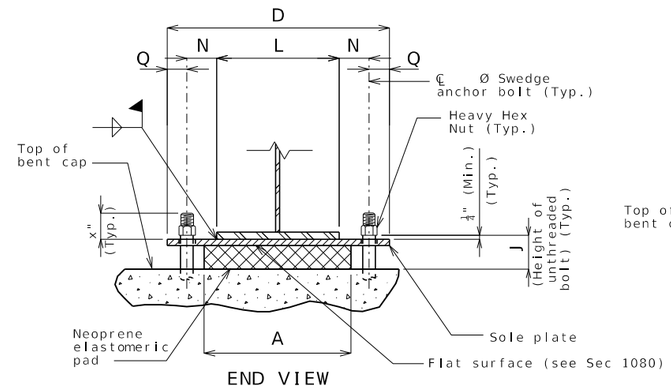

END VIEW

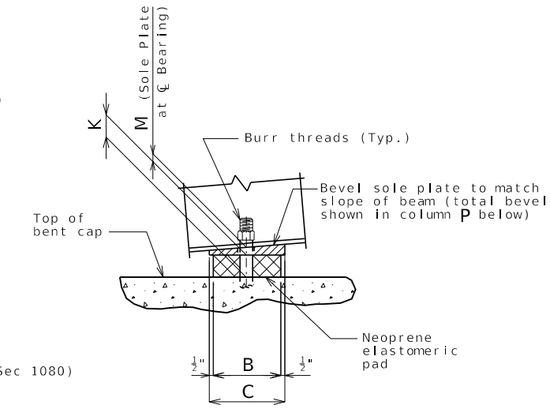

SIDE VIEW

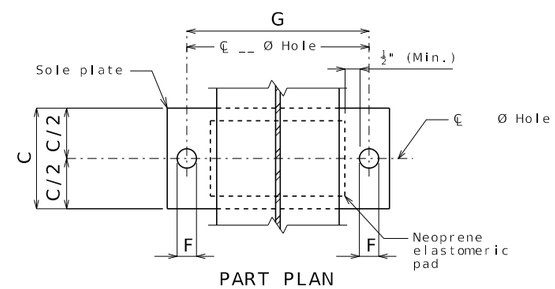

PART PLAN

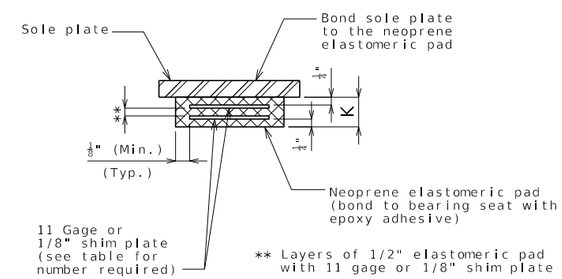

NEOPRENE ELASTOMERIC PAD

Standard Drawing Guidance:
(do not show on plans.)

1 Use note H3.49.1 with Grade 50W steel.
Use note H3.49.2 when steel superstructure is galvanized.
(H3.49 shown)

2 Remove underlined portion when steel superstructure is galvanized.

GENERAL NOTES:

Anchor bolts shall be Ø ASTM F1554 Grade 55 105 swedged bolts and shall extend into the concrete with ASTM A563 Grade A DH Heavy Hex nuts. Actual manufacturer's certified mill test reports (chemical and mechanical) shall be provided. Swedging shall be 1" less than extension into the concrete.

2 Anchor bolts and heavy hex nuts shall be coated with a minimum of two coats of inorganic zinc primer to provide a total dry film thickness of 4 mils minimum, 6 mils maximum, or galvanized in accordance with ASTM F2329.

Neoprene Elastomeric Pads shall be Durometer.

1 Structural steel for sole plate shall be ASTM A709 Grade and shall be coated with a minimum of two coats of inorganic zinc primer to provide a total dry film thickness of 4 mils minimum, 6 mils maximum.

Laminated Neoprene Bearing Pad Assembly shall be in accordance with Sec 716.

FIXED BEARINGS

BENT NO.	A	B	C	D	F	G	J	K	L	M	N	P	Q	NUMBER OF SHIM PLATES *	NUMBER REQUIRED
														TOTAL BEARINGS	

* The required shim plate shall be placed between layers of elastomer and molded together to form an integral unit.

LAMINATED NEOPRENE BEARING PAD ASSEMBLY

Detailed
Checked

Note: This drawing is not to scale. Follow dimensions.

Sheet No. of

DATE PREPARED	5/12/2026
ROUTE	STATE MO
DISTRICT	SHEET NO. 6
COUNTY	
JOB NO.	
CONTRACT ID.	
PROJECT NO.	
BRIDGE NO.	

DESCRIPTION

DATE

MISSOURI HIGHWAYS AND TRANSPORTATION COMMISSION
105 WEST CAPITOL
JEFFERSON CITY, MO 65102
1-888-ASK-MODOT (1-888-275-6636)

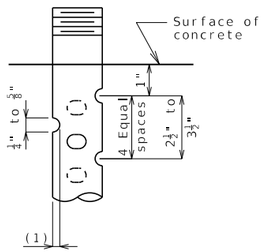

DETAIL FOR 3/4"Ø THRU 2 1/2"Ø ANCHOR BOLTS

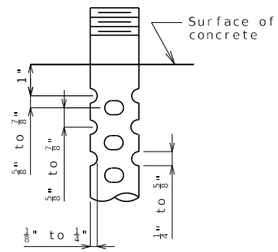

OPTIONAL DETAIL FOR 1 3/8"Ø THRU 2 1/2"Ø ANCHOR BOLTS

SWEDGE ANCHOR BOLT DETAILS

(1) 1/8" for 3/4"Ø thru 1 1/4"Ø anchor bolts

1/8" to 1/4" for 1 3/8"Ø thru 2 1/2"Ø anchor bolts

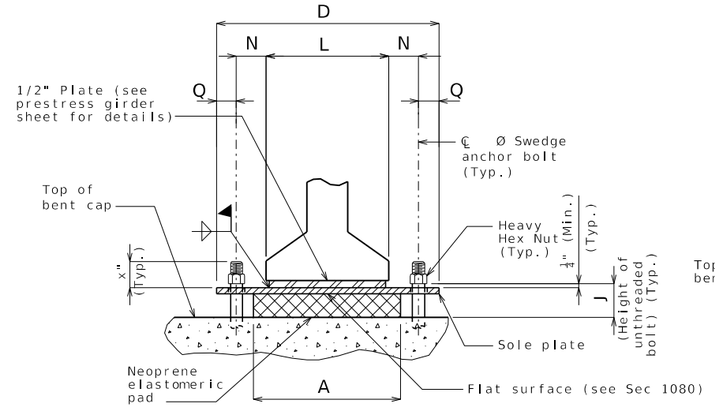

END VIEW

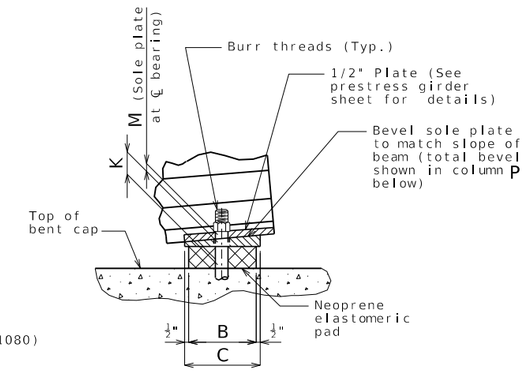

SIDE VIEW

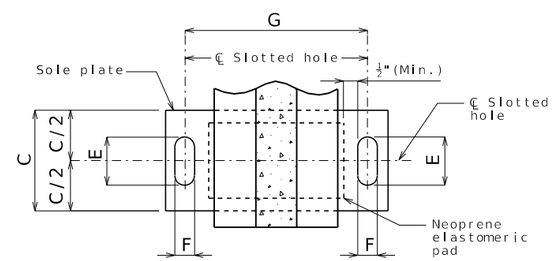

PART PLAN VIEW

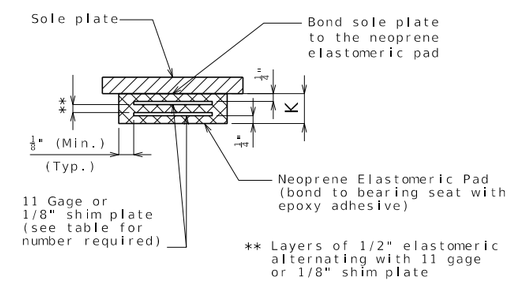

NEOPRENE ELASTOMERIC PAD

EXPANSION BEARINGS																	
BENT NO.	A	B	C	D	E	F	G	J	K	L	M	N	P	Q	R	NUMBER OF SHIM PLATES *	NUMBER REQUIRED
																TOTAL BEARINGS	

* The required shim plate shall be placed between layers of elastomeric and molded together to form an integral unit.

GENERAL NOTES:

Anchor bolts shall be Ø ASTM F1554 Grade 55 105 swedged bolts and shall extend into the concrete with ASTM A563 Grade A DH Heavy Hex nuts. Actual manufacturer's certified mill test reports (chemical and mechanical) shall be provided. Swedging shall be 1" less than extension into the concrete.

Anchor bolt shall be at the centerline of slotted hole at 60°F. Bearing position shall be adjusted R for each 10° fall or rise in temperature at installation.

Anchor bolts and heavy hex nuts shall be coated with a minimum of two coats of inorganic zinc primer to provide a total dry film thickness of 4 mils minimum, 6 mils maximum, or galvanized in accordance with with ASTM F2329.

Neoprene Elastomeric Pads shall be Durometer.

Structural steel for sole plate shall be ASTM A709 Grade and shall be coated with a minimum of two coats of inorganic zinc primer to provide a total dry film thickness of 4 mils mimimum, 6 mils maximum.

Laminated Neoprene Bearing Pad Assembly shall be in accordance with Sec 716.

LAMINATED NEOPRENE BEARING PAD ASSEMBLY

Detailed
Checked

Note: This drawing is not to scale. Follow dimensions.

Sheet No. of

DATE PREPARED	
5/12/2026	
ROUTE	STATE MO
DISTRICT	SHEET NO. 7
COUNTY	
JOB NO.	
CONTRACT ID.	
PROJECT NO.	
BRIDGE NO.	

DESCRIPTION

DATE

MISSOURI HIGHWAYS AND TRANSPORTATION COMMISSION
105 WEST CAPITOL
JEFFERSON CITY, MO 65102
1-888-ASK-MODOT (1-888-275-6636)

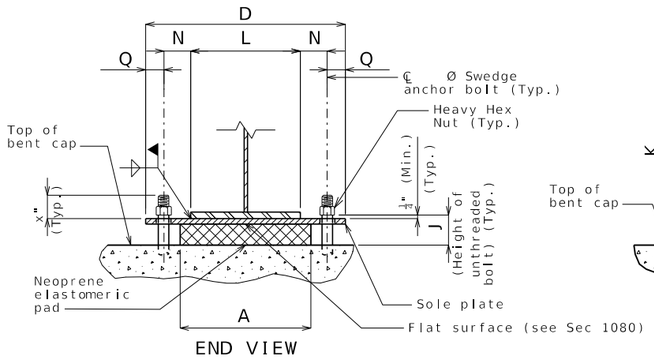

END VIEW

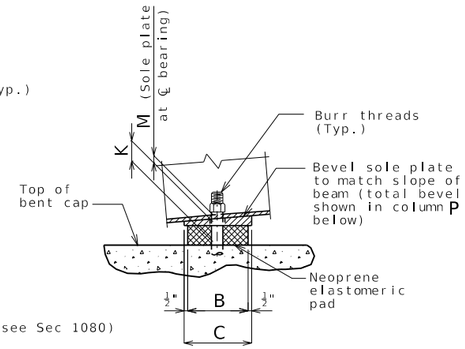

SIDE VIEW

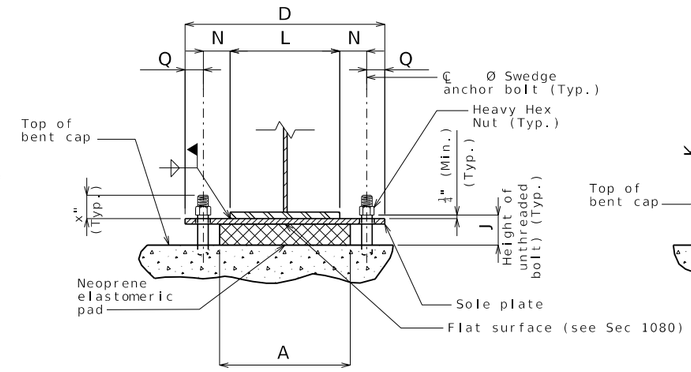

END VIEW

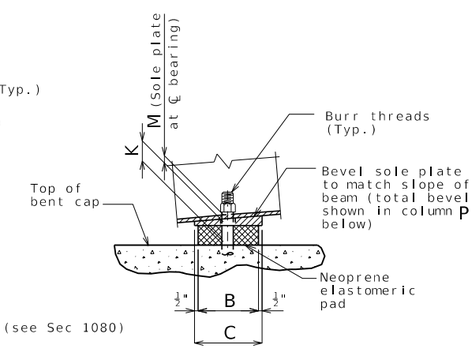

SIDE VIEW

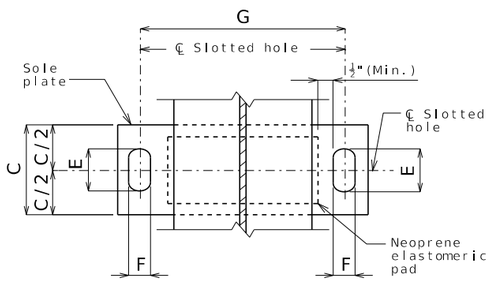

PART PLAN

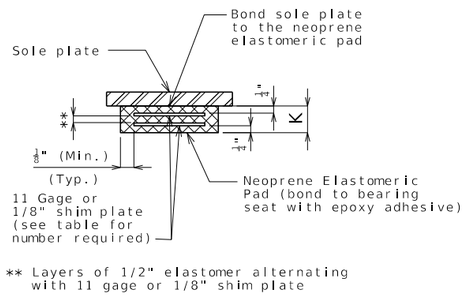

NEOPRENE ELASTOMERIC PAD

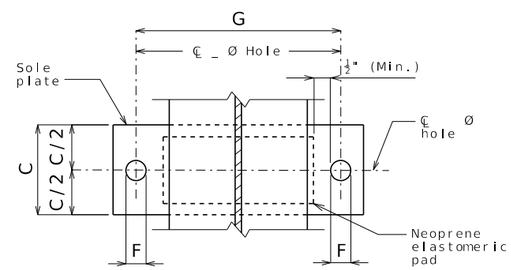

PART PLAN

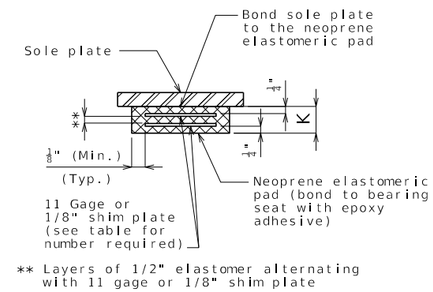

NEOPRENE ELASTOMERIC PAD

EXPANSION BEARINGS																	
BENT NO.	A	B	C	D	E	F	G	J	K	L	M	N	P	Q	R	NUMBER OF SHIM PLATES *	NUMBER REQUIRED
																TOTAL BEARINGS	

* The required shim plate shall be placed between layers of elastomer and molded together to form an integral unit.

FIXED BEARINGS																	
BENT NO.	A	B	C	D	F	G	J	K	L	M	N	P	Q			NUMBER OF SHIM PLATES *	NUMBER REQUIRED
																TOTAL BEARINGS	

* The required shim plate shall be placed between layers of elastomer and molded together to form an integral unit.

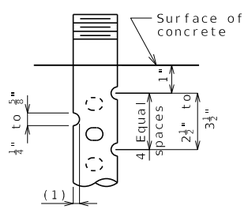

DETAIL OF 3/4"Ø THRU 2 1/2"Ø ANCHOR BOLTS

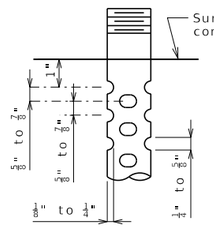

OPTIONAL DETAIL OF 1 3/8"Ø THRU 2 1/2"Ø ANCHOR BOLTS

SWEDGE ANCHOR BOLT DETAILS

(1) 1/8" for 3/4"Ø thru 1 1/4"Ø anchor bolts

1/8" to 1/4" for 1 3/8"Ø thru 2 1/2"Ø anchor bolts

Standard Drawing Guidance:
(do not show on plans.)

① Use note H3.49.1 with Grade 50W steel.
Use note H3.49.2 when steel superstructure is galvanized.
(H3.49 shown)

② Remove underlined portion when steel superstructure is galvanized.

GENERAL NOTES:

Anchor bolts shall be Ø ASTM F1554 Grade 55 105 swedged bolts and shall extend into the concrete with ASTM A563 Grade A DH Heavy Hex nuts. Actual manufacturer's certified mill test reports (chemical and mechanical) shall be provided. Swedging shall be 1" less than extension into the concrete.

Anchor bolt shall be at the centerline of slotted hole at 60°F. Bearing position shall be adjusted R for each 10° fall or rise in temperature at installation.

② Anchor bolts and heavy hex nuts shall be coated with a minimum of two coats of inorganic zinc primer to provide a total dry film thickness of 4 mils minimum, 6 mils maximum, or galvanized in accordance with ASTM F2329.

Neoprene Elastomeric Pads shall be Durometer.

① Structural steel for sole plate shall be ASTM A709 Grade and shall be coated with a minimum of two coats of inorganic zinc primer to provide a total dry film thickness of 4 mils minimum, 6 mils maximum.

Laminated Neoprene Bearing Pad Assembly shall be in accordance with Sec 716.

LAMINATED NEOPRENE BEARING PAD ASSEMBLY

Detailed
Checked

Note: This drawing is not to scale. Follow dimensions.

Sheet No. of

DATE PREPARED	
5/12/2026	
ROUTE	STATE MO
DISTRICT	SHEET NO. 8
COUNTY	
JOB NO.	
CONTRACT ID.	
PROJECT NO.	
BRIDGE NO.	

DESCRIPTION

DATE

MISSOURI HIGHWAYS AND TRANSPORTATION COMMISSION

105 WEST CAPITOL
JEFFERSON CITY, MO 65102
1-888-ASK-MODOT (1-888-275-6636)

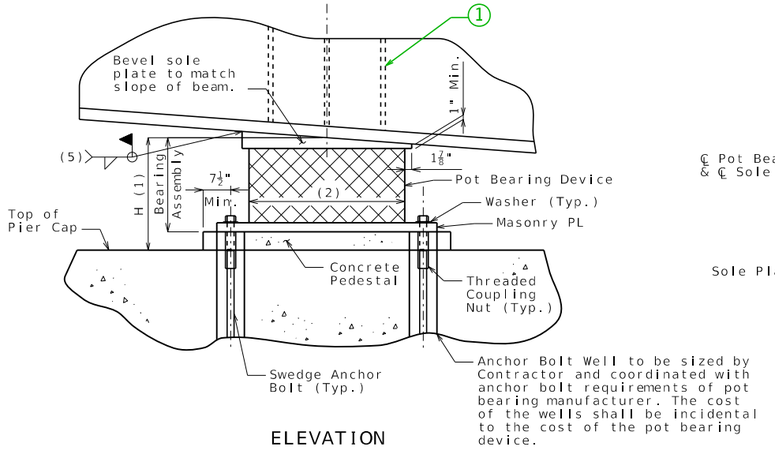

ELEVATION

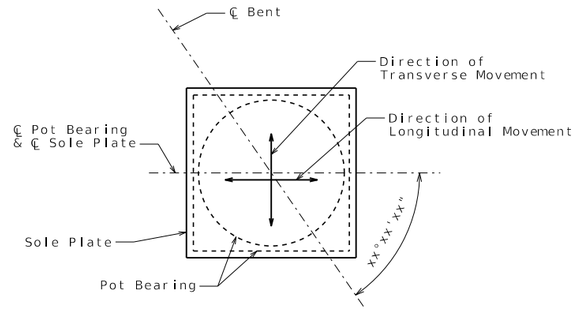

POT BEARING PLAN

BEARING DATA TABLE				
Location				
Fix/Exp.				
Quan. Req'd.				
Design load (kip)	Service limit state	Vertical	max.	
			perm.	
			min.	
		Transverse		
		Longitudinal		
	Strength limit state	Vertical		
		Transverse		
		Longitudinal		
Translation	Service limit state	Transverse		
		Longitudinal		
	Strength limit state	Transverse		
		Longitudinal		
Rotation (rad.)	Service limit state	Transverse		
		Longitudinal		
One Way Longit. Movement (3)				
(G) Guide Clearance (4)				
Masonry Plate	Lm			
	Wm			
	Tm			
Auxilliary Plate	La			
	Wa			
	Ta			
Sole Plate	Ls			
	Ws			
	T1			
	T2			
Bearing H				
Anchor Bolts	d			
	Bolts / Brg.			
Weld Size	W1			
	W2			

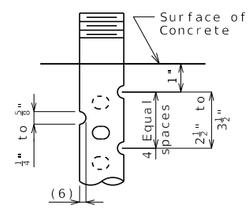

DETAIL OF 3/4"Ø THRU 2 1/2"Ø ANCHOR BOLTS

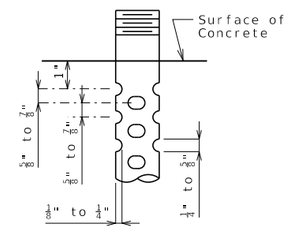

OPTIONAL DETAIL OF 1 3/8"Ø THRU 2 1/2"Ø ANCHOR BOLTS

SWEDGE ANCHOR BOLT DETAILS

(6) ⅛" for ¾"Ø thru 1¼"Ø anchor bolts

⅛" to ¼" for 1⅜"Ø thru 2½"Ø anchor bolts

Notes:

T2 is upstation of T1.

(3) One Way Longitudinal Movement is the maximum one way movement (expansion or contraction) of the superstructure when bearings are set at 70 degrees F plus 1" tolerance.

(4) On wide structures and on curved structures provisions shall be made for limited lateral movement.

Indicates parts designed by the manufacturer.

Standard Drawing Guidance (do not show on plans:

1 Note to detailer, minimum of three stiffeners centered above bearing.

POT BEARING PAD ASSEMBLY

GENERAL NOTES:

The bearing design shall conform to the provisions of the latest edition of AASHTO LRFD Bridge Design Specifications.

The contractor, in coordination with the bearing manufacturer, shall be responsible for sizing the sole plate and masonry plate and determining the size, number, and location of anchor bolts based on the load and movement capacities, indicated in the Bearing Data.

The contractor shall submit calculations sealed by a Professional Engineer, licensed in the state of Missouri, indicating conformance with design load and material criteria in the contract documents.

(1) Maximum vertical dimension of the complete bearing. If the actual bearing dimension differs, adjustments shall be made in the thickness of the sole plate, masonry plate and concrete pad as needed by the contractor at no additional cost to the owner. Contractor shall submit proposed method of adjustment to Engineer for approval.

(2) Estimated horizontal dimension of the pot bearing device. If the actual dimension differs, adjust the size of the sole plate and masonry plate as needed by the contractor at no additional cost to the owner.

(5) The temperature of the steel adjacent to the elastomeric should be kept below 250°F.

The Dimension H in the Bearing Data Table represents the assumed total height of bearing mechanism between the sole plate and masonry plate used by the designer to establish the pedestal elevations.

The bearings shall be manufactured pot bearings, designed for the load and movement capacities indicated in the Bearing Data Table.

All expansion bearings shall have maximum friction coefficient of 3%.

Steel for pot bearings shall be AASHTO M270 Grade 50 and shall be galvanized. Steel for sole plate and masonry plates shall be AASHTO M270 Grade 50.

Anchor bolts shall conform to ASTM F1554 Grade 55. The anchor bolts shall be the swedge-type and shall have a minimum diameter of 1 1/2 inches and extend a minimum of inches into the concrete. Swedging shall be 1 inch less than the extension into the concrete.

Anchor bolts shall be installed using a hardened steel washer at each exposed location.

Washers shall conform to ASTM F463.

Anchor bolts and hardened washers shall be coated with a minimum of two coats of inorganic zinc primer to provide a total dry film thickness of 4 mils minimum, 6 mils maximum, or galvanized in accordance with ASTM F2329.

Certified mill test reports, conforming to the requirements of the specifications, for the metals of the pot bearing device, sole plate, masonry plate and anchor bolts shall be submitted.

The masonry plate shall be prepared per the specifications and shop-coated with two coats of inorganic zinc primer to provide a total dry film thickness of 4 mils minimum, 6 mils maximum.

The sole plate shall be prepared per the specifications and shop-coated with two coats of inorganic zinc primer to provide a total dry film thickness of 4 mils minimum, 6 mils maximum.

The bearing device, sole plate and masonry plate shall be assembled in the shop and the bearing assembly shall be field welded to the bottom flange of the steel cap beam. The welds shall be designed for the load capacities indicated in the Bearing Data Table.

After installation of the bearings, any uncoated or damaged surfaces of the masonry and sole plates shall be prepared in accordance with the specifications and field-coated with inorganic zinc primer to provide a total dry film thickness of 4 mils minimum, 6 mils maximum.

After installation of the bearings and field-applied prime coats, the surfaces of the masonry and sole plates shall be field-coated with System G intermediate and finish coat.

All bearings shall be marked prior to shipping. The marks shall include the bearing location on the bridge and a direction arrow that points up-station. All marks shall be permanent and be visible after the bearing is installed.

The pot bearing device, sole plate, masonry plate, anchor bolts, washers, anchor bolts wells and any other appurtenances included in the fabrication and installation of the pot bearing device shall be incidental to the pay item Pot Bearings.

Whenever jacking of the superstructure is needed to reset the bearings, the contractor shall submit a jacking sequence for approval.

DATE PREPARED	
5/12/2026	
ROUTE	STATE MO
DISTRICT	SHEET NO. 9
COUNTY	
JOB NO.	
CONTRACT ID.	
PROJECT NO.	
BRIDGE NO.	

DESCRIPTION

DATE

MISSOURI HIGHWAYS AND TRANSPORTATION COMMISSION
105 WEST CAPITOL
JEFFERSON CITY, MO 65102
1-888-ASK-MODOT (1-888-275-6636)

Detailed
Checked

Note: This drawing is not to scale. Follow dimensions.

Sheet No. of

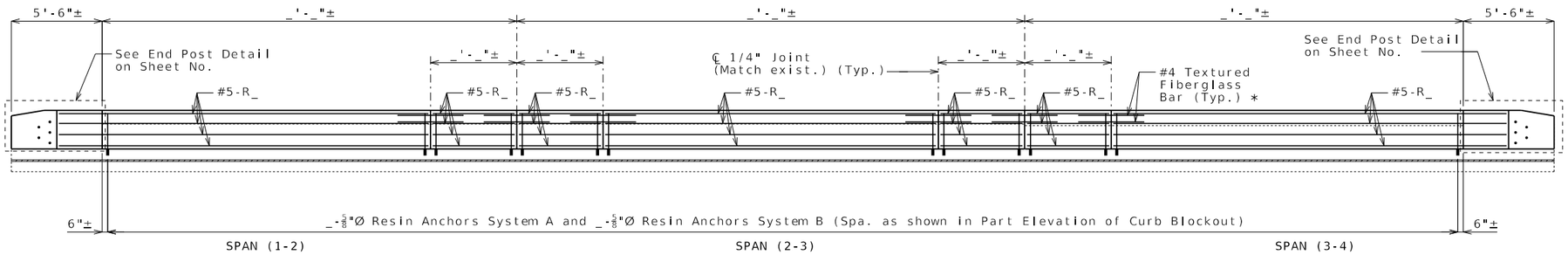

ELEVATION OF LEFT CURB BLOCKOUT

(Right curb blockout similar)

Longitudinal dimensions are along grade and are taken at top outside edge of parapet.

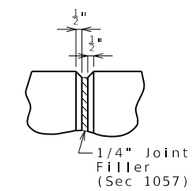

PART ELEVATION AT FORMED JOINT

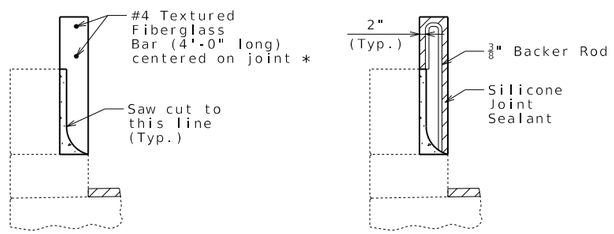

SECTION THRU SAW CUT JOINT

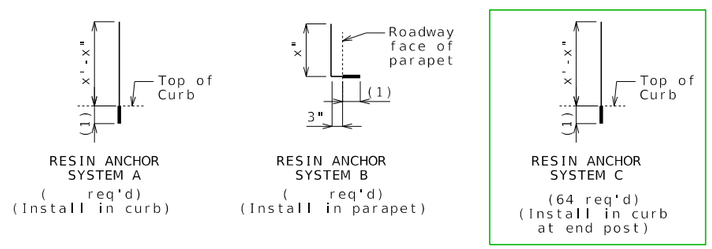

(1) Use manufacturer's embedment length (5" minimum embedment).

DETAILS OF RESIN ANCHORS

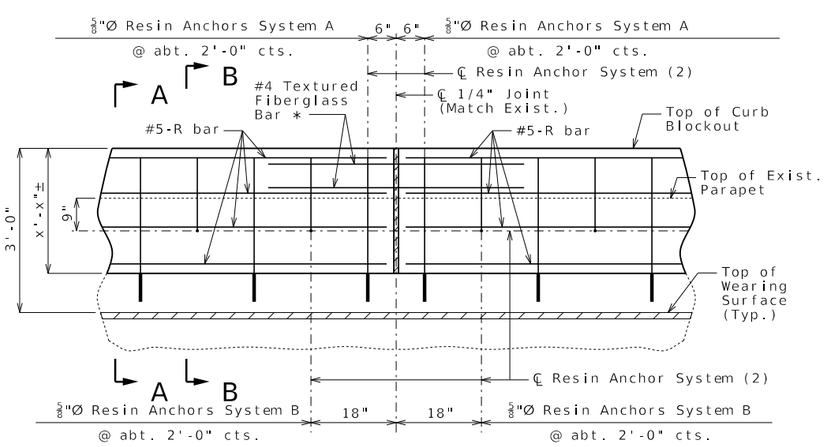

PART ELEVATION OF CURB BLOCKOUT

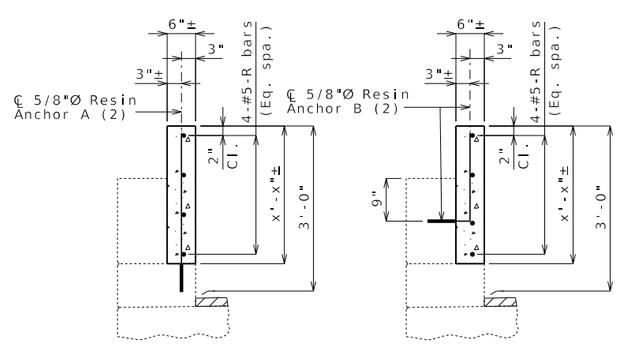

SECTION A-A SECTION B-B

Notes:

* Slip-formed option only.

Conventional forming or slip forming may be used. Saw cut joints may be used with conventional forming.

Bridge rail not shown for clarity.

Concrete in curb blockout shall be Class B-1.

Measurement of curb blockout is to the nearest linear foot, measured at the top outside edge of parapet. (Match existing curb and parapet)

All exposed edges of curb blockout shall have either a 1/2-inch radius or 3/8-inch bevel, unless otherwise noted.

Payment for concrete, reinforcement, resin anchor systems and any other work incidental to the curb blockout, complete in place, will be considered completely covered by the contract unit price for Curb Blockout per linear foot.

Cost of any concrete curb or parapet repair will be considered completely covered by the contract unit price for Curb Blockout.

All curb blockout reinforcement shall be epoxy coated.

(2) Shift resin anchors where necessary to clear existing anchor bolts for bridge rail, miss curb outlets (if present) and clear existing reinforcement.

Use a minimum lap of 3'-1" for #5 horizontal curb blockout bars.

Concrete traffic barrier delineators shall be placed on top of the curb blockout similarly as shown on Missouri Standard Plans 617.10 and in accordance with Sec 617. Delineators on bridges with two-lane, two-way traffic shall have retroflective sheeting on both sides. Concrete traffic barrier delineators will be considered completely covered by the contract unit price for Curb Blockout.

The contractor shall use one of the qualified resin anchor systems in accordance with Sec 1039.

The minimum embedment depth in concrete with f'c = 4,000 psi for the resin anchor system shall be that required to meet the minimum ultimate pullout strength in accordance with Sec 1039 but shall not be less than 5 inches.

An epoxy coated #5 Grade 60 reinforcing bar shall be substituted for the 5/8"Ø threaded rod.

For slip-formed option, both sides of the curb blockout shall have a vertically broomed finish and the top shall have a transversely broomed finish.

DATE PREPARED	
1/31/2025	
ROUTE	STATE MO
DISTRICT	SHEET NO. 1
COUNTY	
JOB NO.	
CONTRACT ID.	
PROJECT NO.	
BRIDGE NO.	

DESCRIPTION

DATE

MISSOURI HIGHWAYS AND TRANSPORTATION COMMISSION
105 WEST CAPITOL
JEFFERSON CITY, MO 65102
1-888-ASK-MODOT (1-888-275-6636)

CURB BLOCKOUT

Detailed
Checked

Note: This drawing is not to scale. Follow dimensions.

Sheet No. of

CBO_01-CurbPara-Elev Alternate Details

2'-8" BLOCKOUT

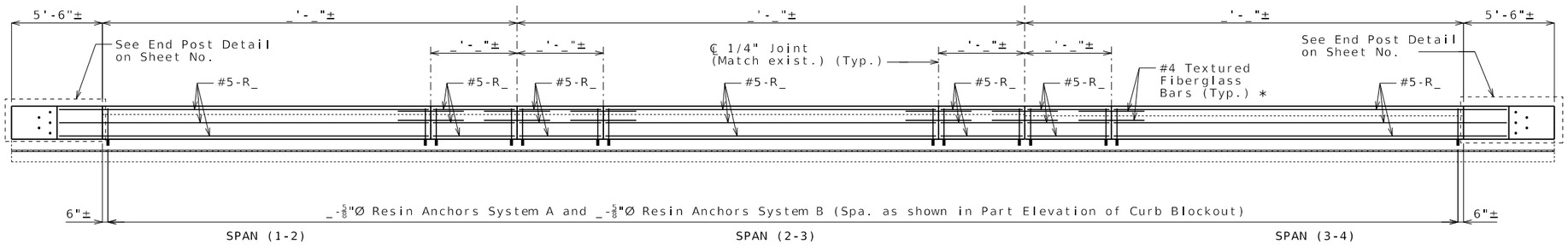

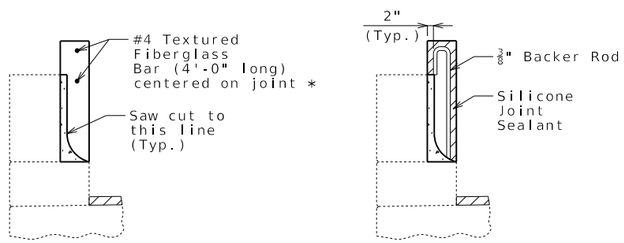

SECTION THRU SAW CUT JOINT

Include this note (I1.62) on plans when asbestos is present between rail posts and top of parapet:

Asbestos (Friability Category II NF) has been detected in the insulation compound between the top of the existing concrete parapet and the base of the existing handrail posts. The contractor has the option to remove the handrail and posts or leave in place. Should the contractor elect to remove the handrail and posts, the contractor will be required to use a licensed abatement contractor during the removal. No direct payment will be made for removal of the handrail and posts, or for asbestos abatement. The described work will be considered completely covered by the contract unit price for other items in the contract.

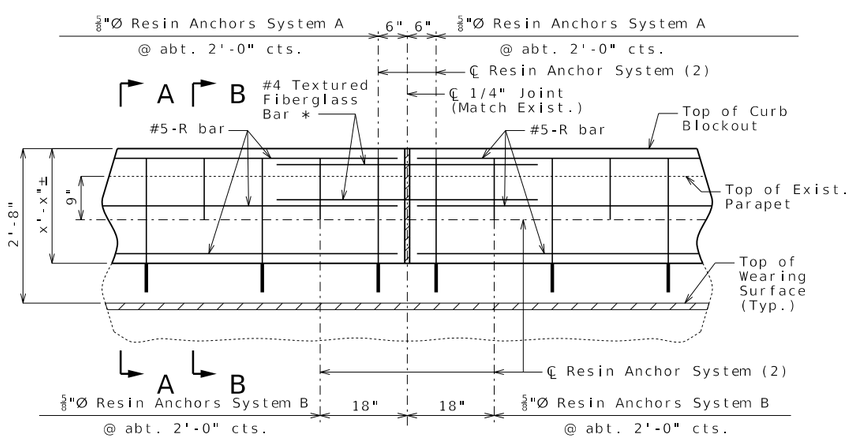

PART ELEVATION OF CURB BLOCKOUT

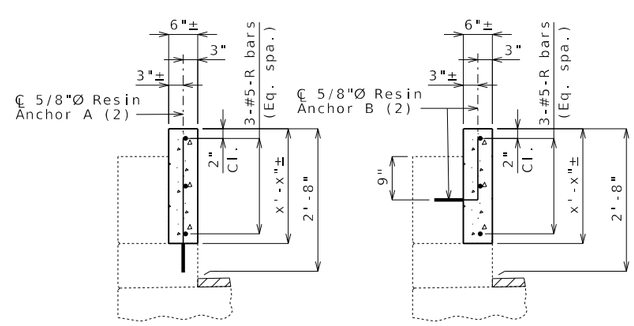

SECTION A-A SECTION B-B

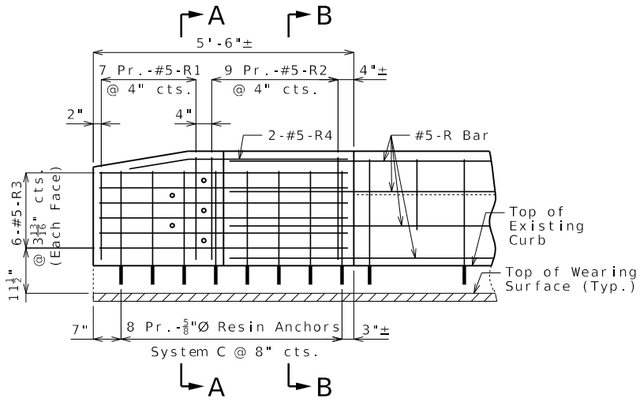

ELEVATION SHOWING REINFORCEMENT

(Right End Post at End Bent No. similar)

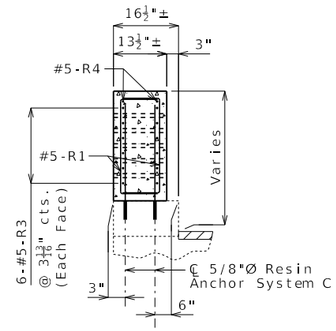

SECTION A-A

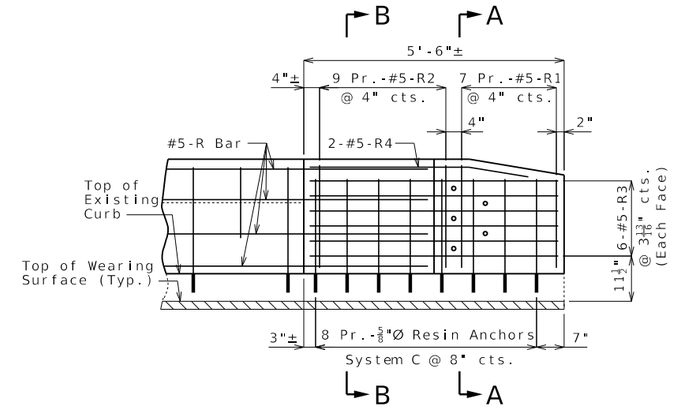

ELEVATION SHOWING REINFORCEMENT

(Right End Post at End Bent No. 1 similar)

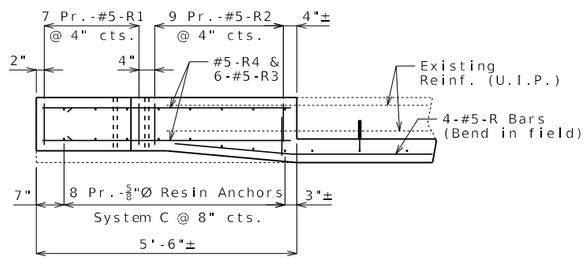

PLAN SHOWING REINFORCEMENT

LEFT END POST AT END BENT NO. 1

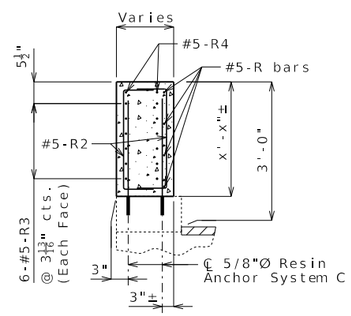

SECTION B-B

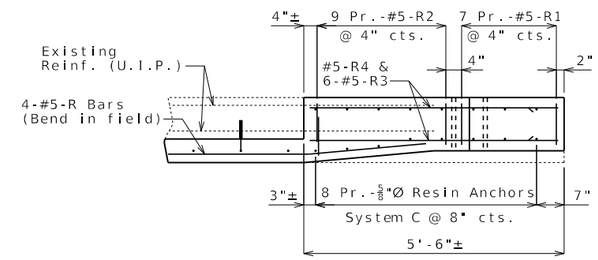

PLAN SHOWING REINFORCEMENT

LEFT END POST AT END BENT NO.

3'-0" Curb Blockout

These details are meant to be used as a starting point only. Modify as needed.

① Taper front face as gradually as possible, while maintaining 6" minimum thickness of blockout at the end of the existing parapet. 2'-9" maximum taper length.

② Holes may be shifted 12" closer to the end (8" instead of 20") to avoid attaching a rail post to the top of backwall. All other dimensions and reinforcement remain the same.

Longitudinal R bars shall extend 2'-7" minimum into new end post.

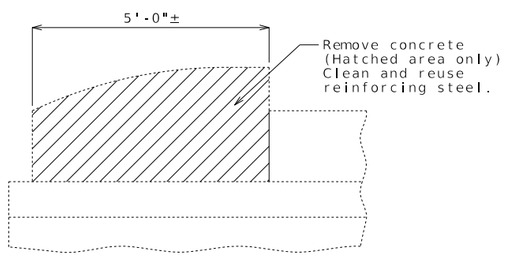

PART ELEVATION SHOWING END POST CONCRETE REMOVAL

Cost of removing existing end posts will be considered completely covered by the contract unit price for Curb Blockout.

Notes:

Work this sheet with Sheet No. _.

For details of resin anchors, see Sheet No. .

Resin anchors shall be shifted or bent in field to clear one-inch diameter holes by at least 1/2 inch.

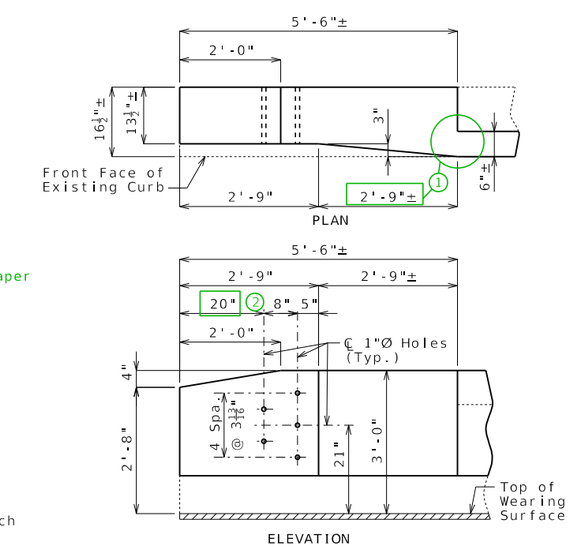

DETAILS OF END POST AND GUARD RAIL ATTACHMENT

CURB BLOCKOUT AT END BENTS

Detailed
Checked

Note: This drawing is not to scale. Follow dimensions.

Sheet No. of

DATE PREPARED	12/30/2024
ROUTE	STATE MO
DISTRICT	SHEET NO. 2
COUNTY	
JOB NO.	
CONTRACT ID.	
PROJECT NO.	
BRIDGE NO.	

DESCRIPTION

DATE

MISSOURI HIGHWAYS AND TRANSPORTATION COMMISSION
105 WEST CAPITOL
JEFFERSON CITY, MO 65102
1-888-ASK-MODOT (1-888-275-6636)

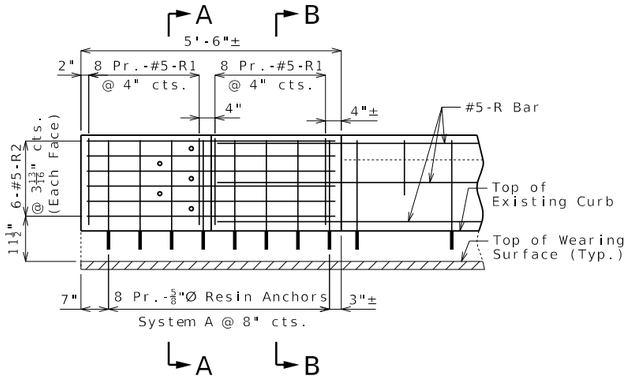

ELEVATION SHOWING REINFORCEMENT

(Right End Post at End Bent No. similar)

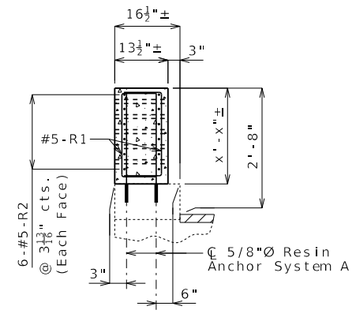

SECTION A-A

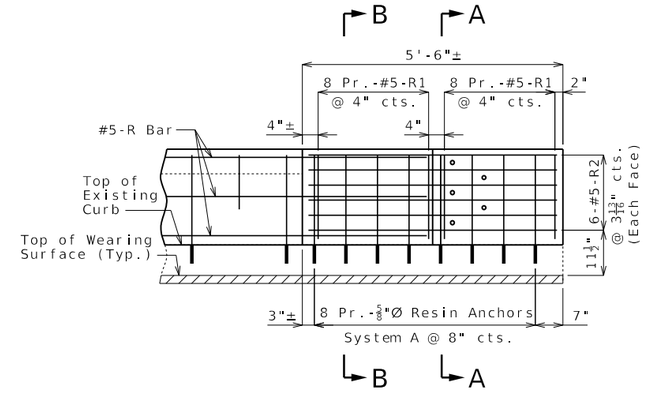

ELEVATION SHOWING REINFORCEMENT

(Right End Post at End Bent No. 1 similar)

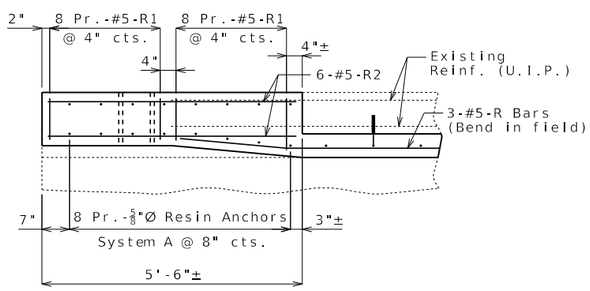

PLAN SHOWING REINFORCEMENT

LEFT END POST AT END BENT NO. 1

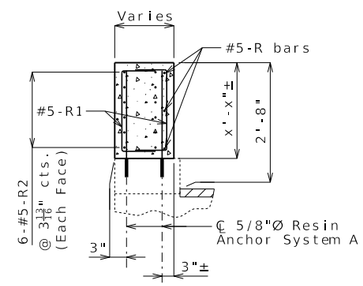

SECTION B-B

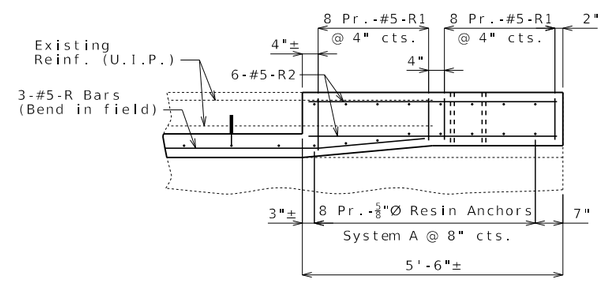

PLAN SHOWING REINFORCEMENT

LEFT END POST AT END BENT NO.

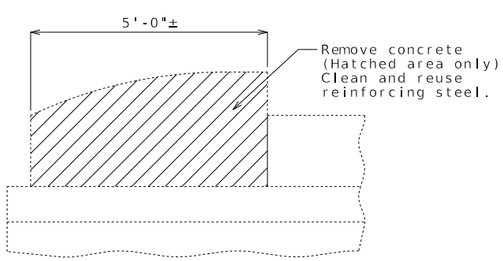

PART ELEVATION SHOWING END POST
CONCRETE REMOVAL

Cost of removing existing end posts will be considered completely covered by the contract unit price for Curb Blockout.

2'-8" Curb Blockout

These details are meant to be used as a starting point only. Modify as needed.

① Taper front face as gradually as possible, while maintaining 6" minimum thickness of blockout at the end of the existing parapet. 2'-9" maximum taper length.

② Holes may be shifted 12" closer to the end (8" instead of 20") to avoid attaching a rail post to the top of backwall. All other dimensions and reinforcement remain the same.

Longitudinal R bars shall extend 2'-7" minimum into new end post.

Detach unused border reference file before PDF request.

Notes:

Work this sheet with Sheet No. _.

For details of resin anchors, see Sheet No. .

Resin anchors shall be shifted or bent in field to clear one-inch diameter holes by at least 1/2 inch.

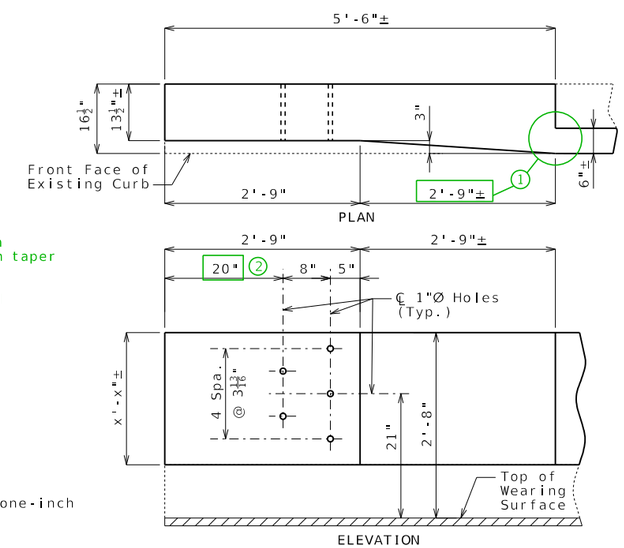

DETAILS OF END POST AND
GUARD RAIL ATTACHMENT

CURB BLOCKOUT AT END BENTS

Detailed
Checked

Note: This drawing is not to scale. Follow dimensions.

Sheet No. of

DATE PREPARED	12/30/2024
ROUTE	STATE MO
DISTRICT	SHEET NO. 3
COUNTY	
JOB NO.	
CONTRACT ID.	
PROJECT NO.	
BRIDGE NO.	

DESCRIPTION

DATE

MISSOURI HIGHWAYS AND TRANSPORTATION COMMISSION
105 WEST CAPITOL
JEFFERSON CITY, MO 65102
1-888-ASK-MODOT (1-888-275-6636)

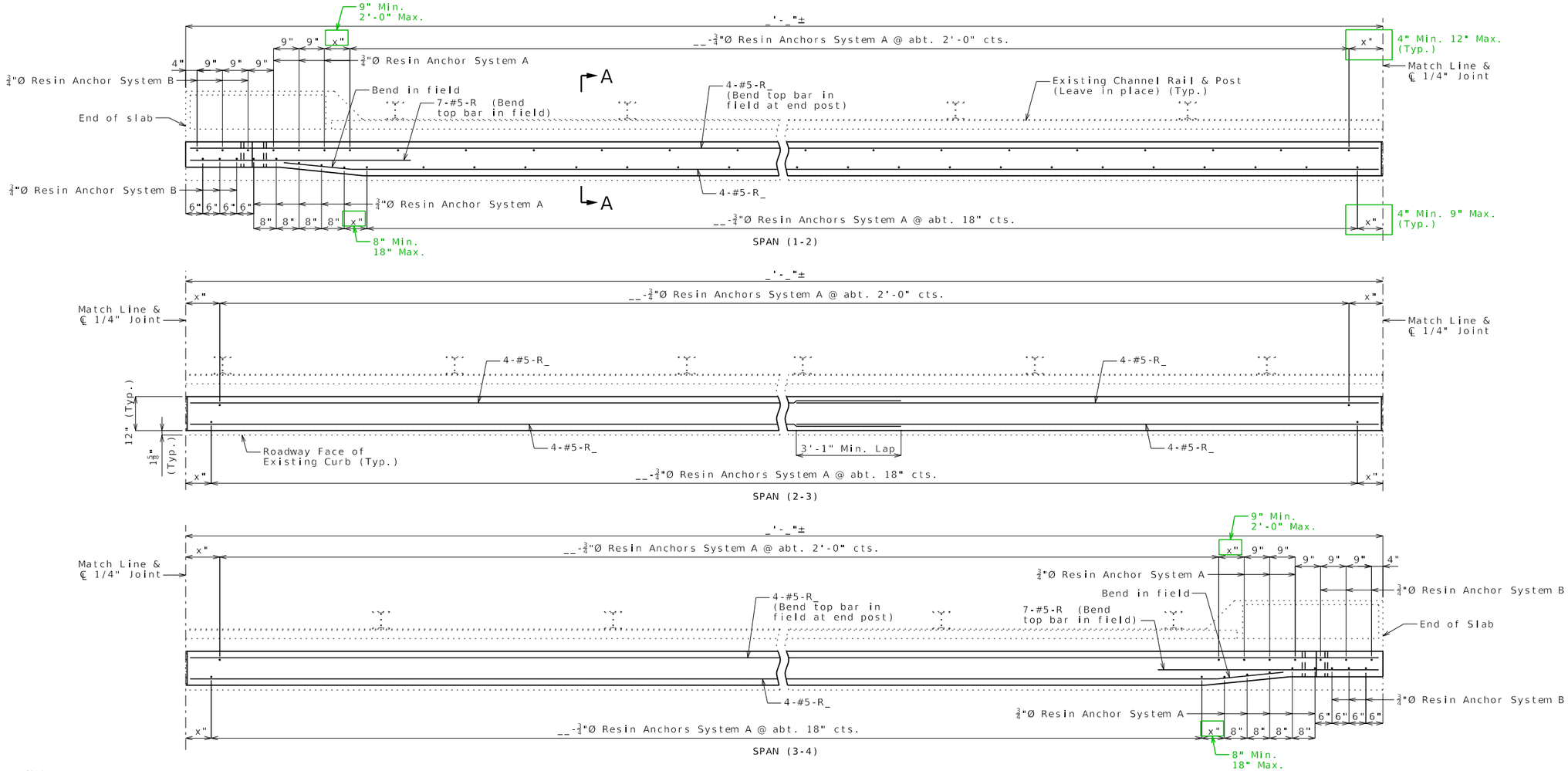

PLAN OF LEFT CURB BLOCKOUT

(Right curb blockout similar)

Notes:

Longitudinal dimensions are along grade and are taken at top outside edge of curb.

Top of curb blockout shall be built parallel to grade with curb blockout joints (except at end bents) normal to grade.

Concrete in the curb blockout shall be Class B-1.

All exposed edges of curb blockout shall have either a 1/2-inch radius or a 3/8-inch bevel, unless otherwise noted.

Payment for concrete, reinforcement, resin anchor systems and any other work incidental to the curb blockout, complete in place, will be considered completely covered by the contract unit price for Curb Blockout per linear foot.

Measurement of curb blockout is to the nearest linear foot for each structure, measured along the inside edge of curb from end of slab to end of slab.

Concrete traffic barrier delineators shall be placed on top of the curb blockout similarly as shown on Missouri Standard Plans 617.10 and in accordance with Sec 617. Delineators on bridges with two-lane, two-way traffic shall have retroreflective sheeting on both sides. Concrete traffic barrier delineators will be considered completely covered by the contract unit price for Curb Blockout.

Cost of any concrete curb repair will be considered completely covered by the contract unit price for Curb Blockout.

The 1/4-inch joints may be either formed joints with joint filler or saw-cut joints.

Joint sealant and backer rods shall be in accordance with Sec 717 for Silicone Joint Sealant for Saw Cut and Formed Joints.

For details of optional saw-cut joint, see Sheet No. .

For additional details of end of blockout, see Sheet No. _.

Work this sheet with Sheets No. & .

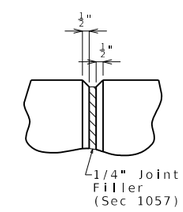

PART ELEVATION
AT FORMED JOINT

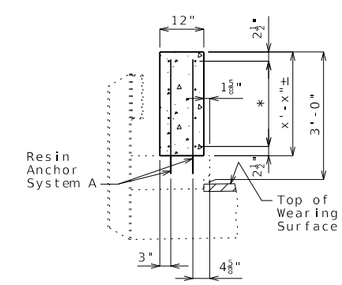

SECTION A-A

* 4-#5-R bars (Each face) (Equally spaced)

CURB BLOCKOUT

Detailed
Checked

Note: This drawing is not to scale. Follow dimensions.

Sheet No. of

DATE PREPARED	10/13/2023
ROUTE	STATE MO
DISTRICT	SHEET NO. 4
COUNTY	
JOB NO.	
CONTRACT ID.	
PROJECT NO.	
BRIDGE NO.	

DESCRIPTION

DATE

MISSOURI HIGHWAYS AND TRANSPORTATION COMMISSION

105 WEST CAPITOL
JEFFERSON CITY, MO 65102
1-888-ASK-MODOT (1-888-275-6636)

CBO_03-CurbRail-plan-free Guidance & Alternate Details

These details are meant to be used as a starting point only. Modify as needed.

If slip-form option is not allowed, include saw-cut joint details,
or allow joint filler only (with SPM approval).

Longitudinal R bars in front face shall lap 3'-1" minimum with horizontal R
bars in end post.

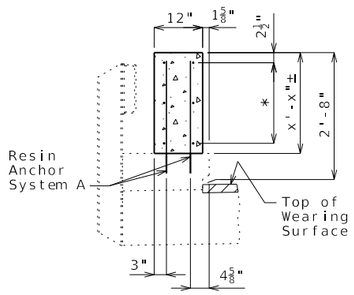

SECTION A-A

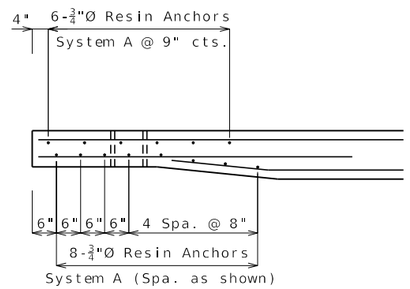

* 3-#5-R bars (Each face) (Equally spaced)

Change to 3-#5 R bars in Plan (top bar not bent in field) and remove line that
indicates the sloped top. Use resin anchor System A for all. 6 R bars in end
post at front face (top bar not bent in field).

ALTERNATE DETAILS FOR 2'-8" BLOCKOUT

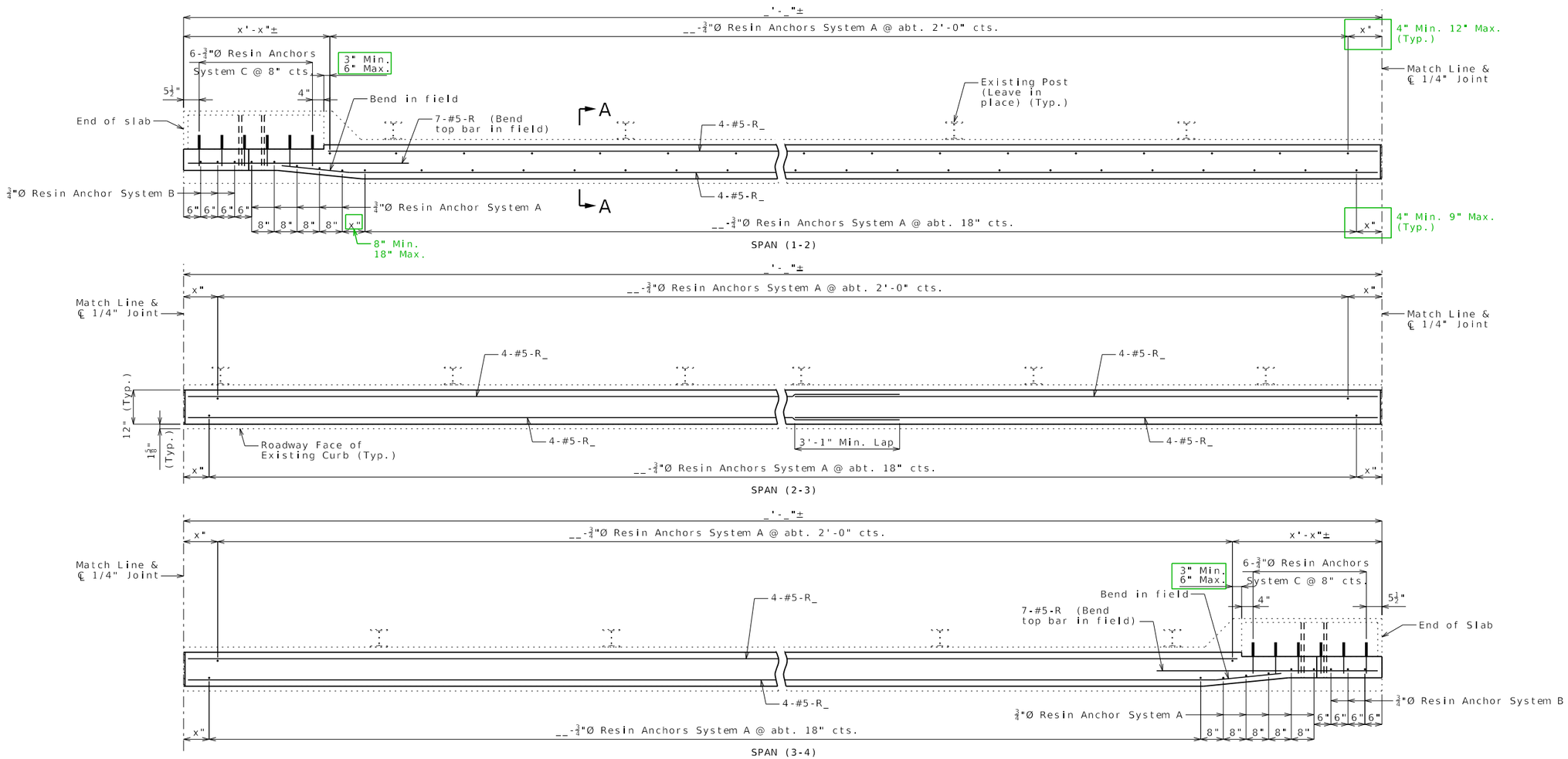

PLAN OF LEFT CURB BLOCKOUT

(Right curb blockout similar)

Notes:

Longitudinal dimensions are along grade and are taken at top outside edge of curb.

Top of curb blockout shall be built parallel to grade with curb blockout joints (except at end bents) normal to grade.

Concrete in the curb blockout shall be Class B-1.

All exposed edges of curb blockout shall have either a 1/2-inch radius or a 3/8-inch bevel, unless otherwise noted.

Payment for concrete, reinforcement, resin anchor systems and any other work incidental to the curb blockout, complete in place, will be considered completely covered by the contract unit price for Curb Blockout per linear foot.

Measurement of curb blockout is to the nearest linear foot for each structure, measured along the inside edge of curb from end of slab to end of slab.

Concrete traffic barrier delineators shall be placed on top of the curb blockout similarly as shown on Missouri Standard Plans 617.10 and in accordance with Sec 617. Delineators on bridges with two-lane, two-way traffic shall have retroreflective sheeting on both sides. Concrete traffic barrier delineators will be considered completely covered by the contract unit price for Curb Blockout.

Cost of any concrete curb repair will be considered completely covered by the contract unit price for Curb Blockout.

The 1/4-inch joints may be either formed joints with joint filler or saw-cut joints.

Joint sealant and backer rods shall be in accordance with Sec 717 for Silicone Joint Sealant for Saw Cut and Formed Joints.

For details of optional saw-cut joint, see Sheet No. .

For additional details of end of blockout, see Sheet No. _.

Work this sheet with Sheets No. & .

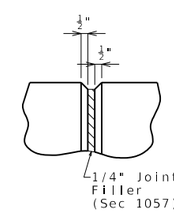

PART ELEVATION AT FORMED JOINT

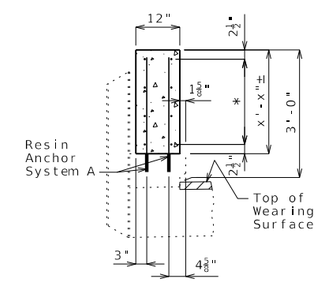

SECTION A-A

* 4-#5-R bars (Each face) (Equally spaced)

CURB BLOCKOUT

Detailed
Checked

Note: This drawing is not to scale. Follow dimensions.

Sheet No. of

DATE PREPARED	10/13/2023
ROUTE	STATE MO
DISTRICT	SHEET NO. 5
COUNTY	
JOB NO.	
CONTRACT ID.	
PROJECT NO.	
BRIDGE NO.	

DESCRIPTION	DATE

MISSOURI HIGHWAYS AND TRANSPORTATION COMMISSION
105 WEST CAPITOL
JEFFERSON CITY, MO 65102
1-888-ASK-MODOT (1-888-275-6636)

CBO_04-CurbRail-plan-attached Guidance & Alternate Details

These details are meant to be used as a starting point only. Modify as needed.

If slip-form option is not allowed, include saw-cut joint details, or allow joint filler only (with SPM approval).

Longitudinal R bars in front face shall lap 3'-1" minimum with horizontal R bars in end post.

Change to 3-#5 R bars in Plan and remove line that indicates the sloped top. Use resin anchor System A for all anchors in curb; Resin Anchor C becomes B. 6 R bars in end post at front face (top bar not bent in field).

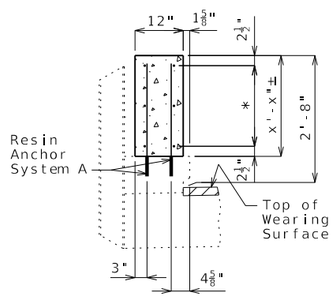

SECTION A-A

* 3-#5-R bars (Each face) (Equally spaced)

ALTERNATE DETAILS FOR 2'-8" BLOCKOUT

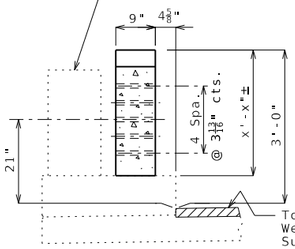

PART SECTION THRU END OF BLOCKOUT

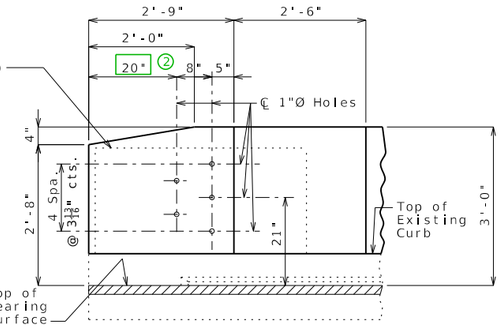

PART ELEVATION SHOWING END OF BLOCKOUT

FREE FROM EXISTING END POST (3'-0")

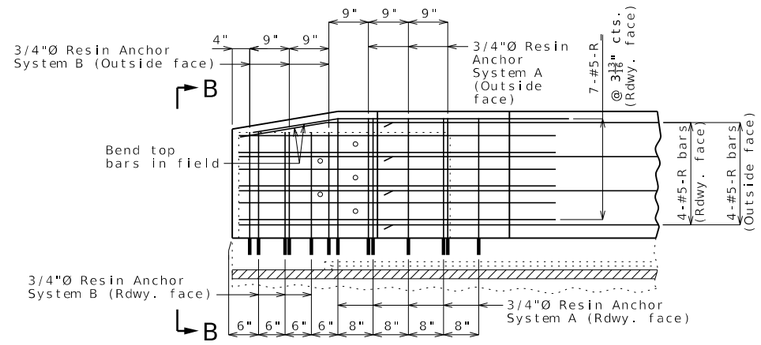

PART ELEVATION OF END OF BLOCKOUT SHOWING REINFORCEMENT

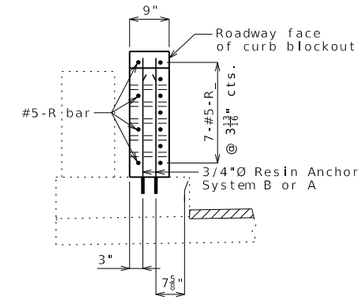

ELEVATION B-B

FREE STANDING

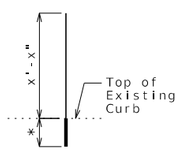

System A
(required)

(Omit for 2'-8" blockout)

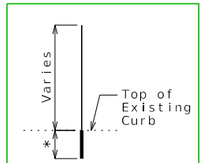

System B
(24 required)

(OMIT FOR FREE-STANDING END POST)

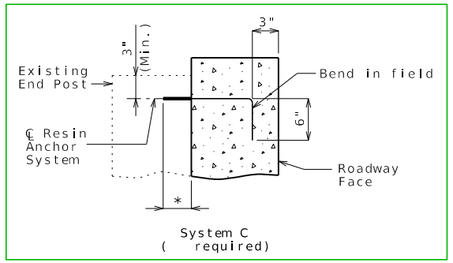

System C
(required)

DETAILS OF RESIN ANCHORS

* Manufacturer's recommended embedment length (5" min.)

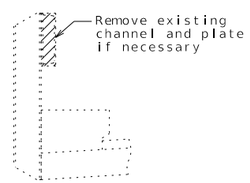

TYPICAL SECTION THRU RAILING SHOWING CHANNEL REMOVAL

Cost of channel removal will be considered completely covered by the contract unit price for Curb Blockout.

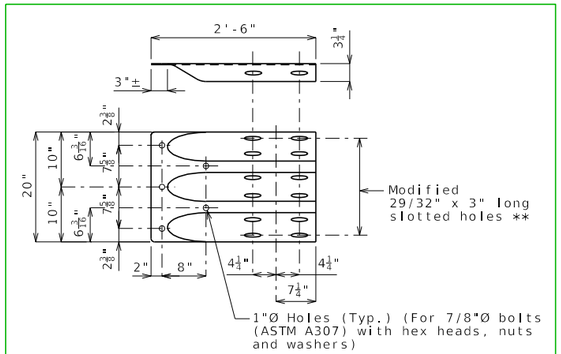

** Tighten bolts, back off 1/2 turn and burr threads Allow for sliding between Modified Bridge Anchor Section (Thrie Beam) and End Post.

MODIFIED TERMINAL CONNECTION AT ABUTMENTS (ROADWAY ITEM)

USE ONLY IF THERE IS AN EXPANSION GAP (ANY SIZE) BETWEEN THE END POST AND THE FIRST RAIL POST OFF THE BRIDGE

Notes:

Work this sheet with Sheets No. & .

All curb blockout reinforcement shall be epoxy coated.

The contractor shall use one of the qualified resin anchor systems in accordance with Sec 1039.

The minimum embedment depth in concrete with f'c = 4,000 psi for the resin anchor system shall be that required to meet the minimum ultimate pullout strength in accordance with Sec 1039 but shall not be less than 5 inches.

An epoxy coated #6 Grade 60 reinforcing bar shall be substituted for the 3/4-inch diameter threaded rod.

Resin anchors shall be shifted or bent in field to clear one-inch diameter holes by at least 1/2 inch.

CURB BLOCKOUT

Detailed
Checked

Note: This drawing is not to scale. Follow dimensions.

Sheet No. of

DATE PREPARED	
10/13/2023	
ROUTE	STATE MO
DISTRICT	SHEET NO. 6
COUNTY	
JOB NO.	
CONTRACT ID.	
PROJECT NO.	
BRIDGE NO.	

DATE	DESCRIPTION

MISSOURI HIGHWAYS AND TRANSPORTATION COMMISSION
105 WEST CAPITOL
JEFFERSON CITY, MO 65102
1-888-ASK-MODOT (1-888-275-6636)

CBO_05-CurbRail-details Guidance & Alternate Details 1 of 2

Standard Drawing Guidance (Do not show on plans):

1. May use 2'-8" if curb blockout is on a non-NHS route and sight distance or weight is an issue.
2. Holes may be shifted 12" closer to the end (8" instead of 20") to avoid attaching a rail post to the top of backwall. All other dimensions and reinforcement remain the same.

Use this sheet with CBO_03 or 04, & CBO_05.

Longitudinal R bars in front face shall lap 3'-1" minimum with horizontal R bars in end post.

These details may not cover all situations, and are intended as a starting point only. Modify as necessary.

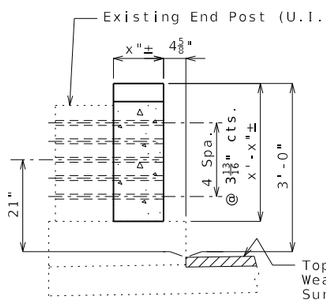

PART SECTION
THRU END OF BLOCKOUT

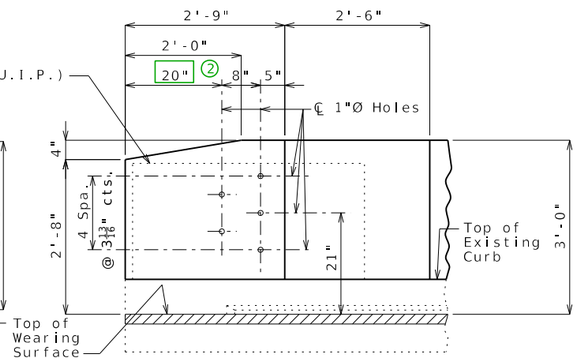

PART ELEVATION SHOWING
END OF BLOCKOUT

ATTACH TO EXISTING END POST (3'-0")

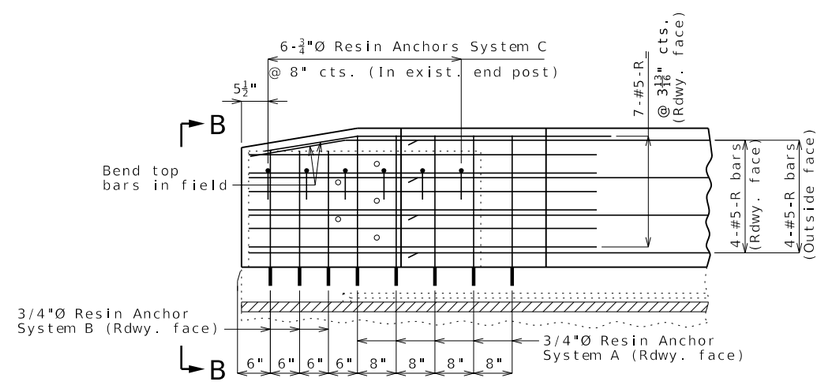

PART ELEVATION OF END OF BLOCKOUT
SHOWING REINFORCEMENT

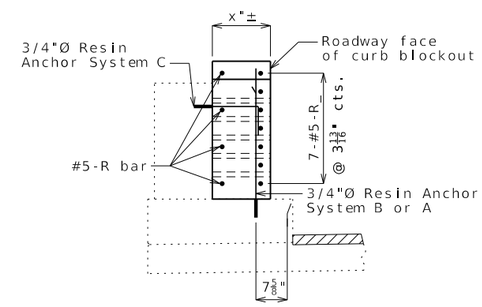

ELEVATION B-B

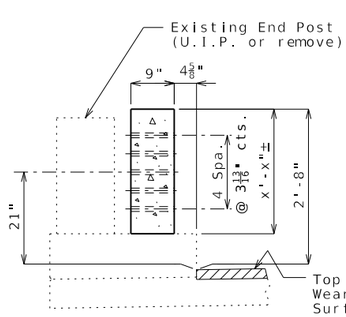

PART SECTION
THRU END OF BLOCKOUT

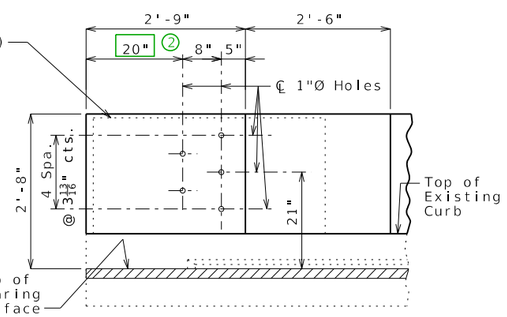

PART ELEVATION SHOWING
END OF BLOCKOUT

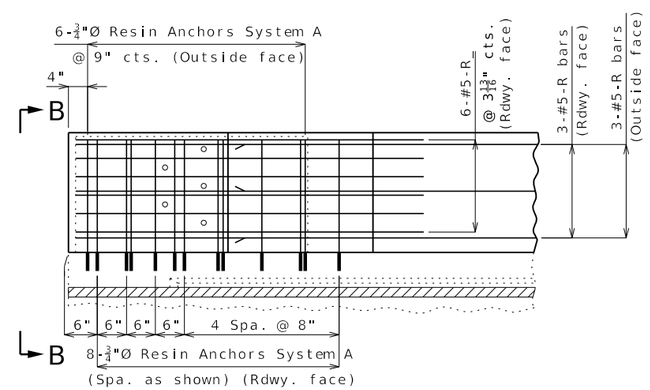

PART ELEVATION OF END OF BLOCKOUT
SHOWING REINFORCEMENT

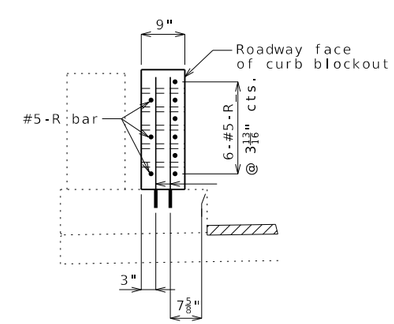

ELEVATION B-B

FREE FROM EXISTING END POST (2'-8") ①

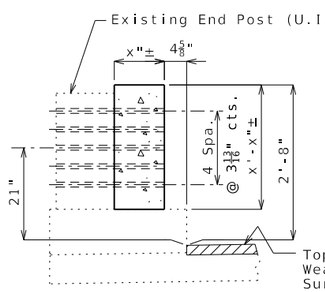

PART SECTION
THRU END OF BLOCKOUT

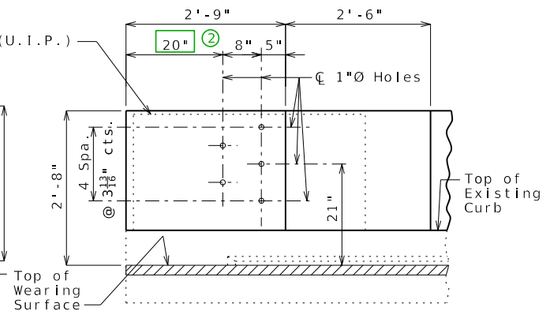

PART ELEVATION SHOWING
END OF BLOCKOUT

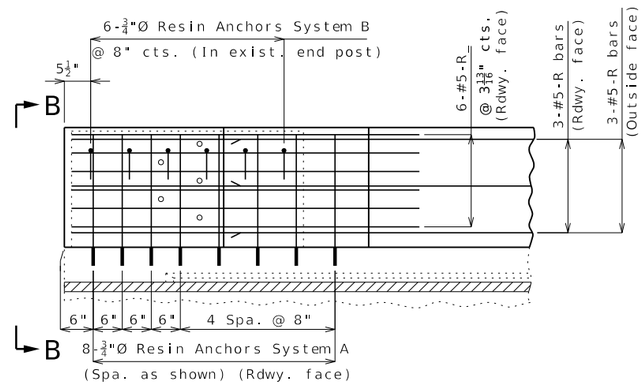

PART ELEVATION OF END OF BLOCKOUT
SHOWING REINFORCEMENT

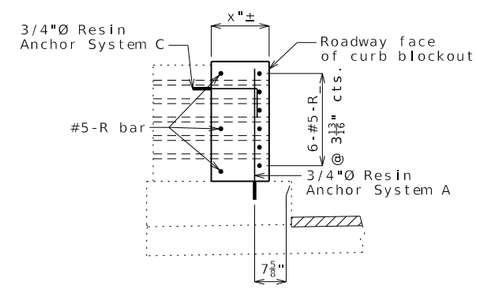

ELEVATION B-B

ATTACH TO EXISTING END POST (2'-8") ①

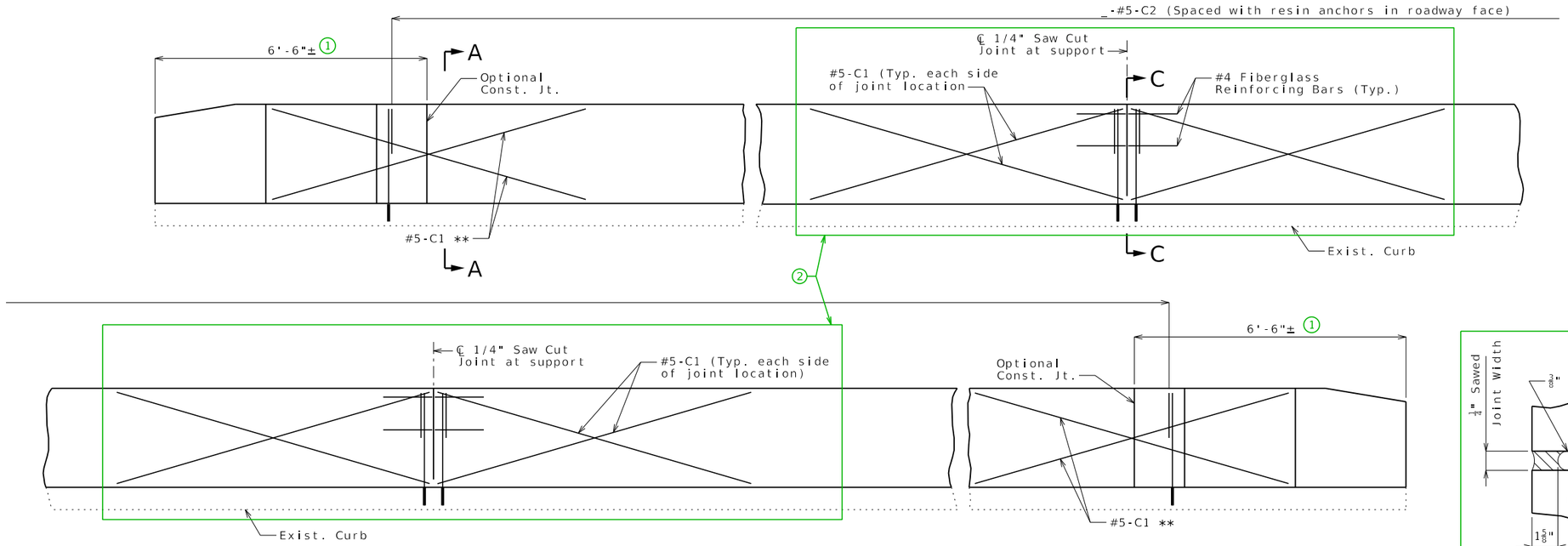

TYPICAL ELEVATION OF CURB BLOCKOUT AT SUPPORT LOCATIONS

2 Horizontal R bars and rail attachment holes not shown for clarity. C bars and textured fiberglass bars shall be used in addition to reinforcement shown for conventional forming.

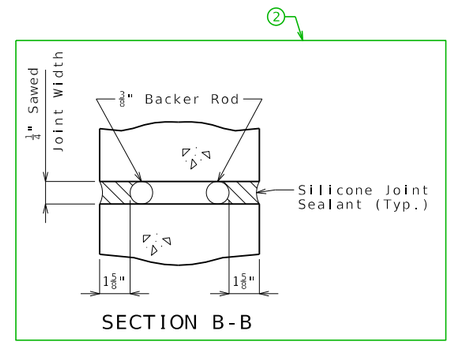

SECTION B-B

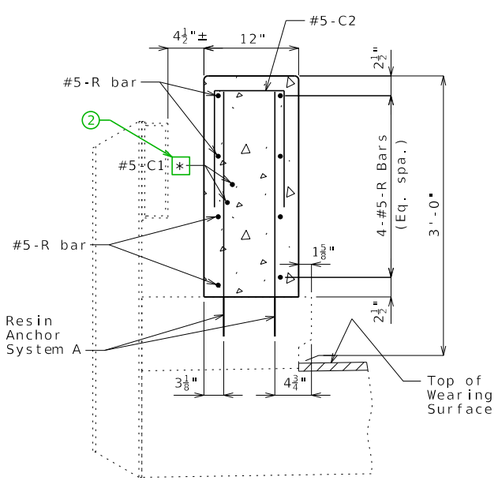

SECTION A-A

2 * Each side of joint location.

Note: C2 bars spaced with resin anchor systems in roadway face of 12" wide curb blockout.

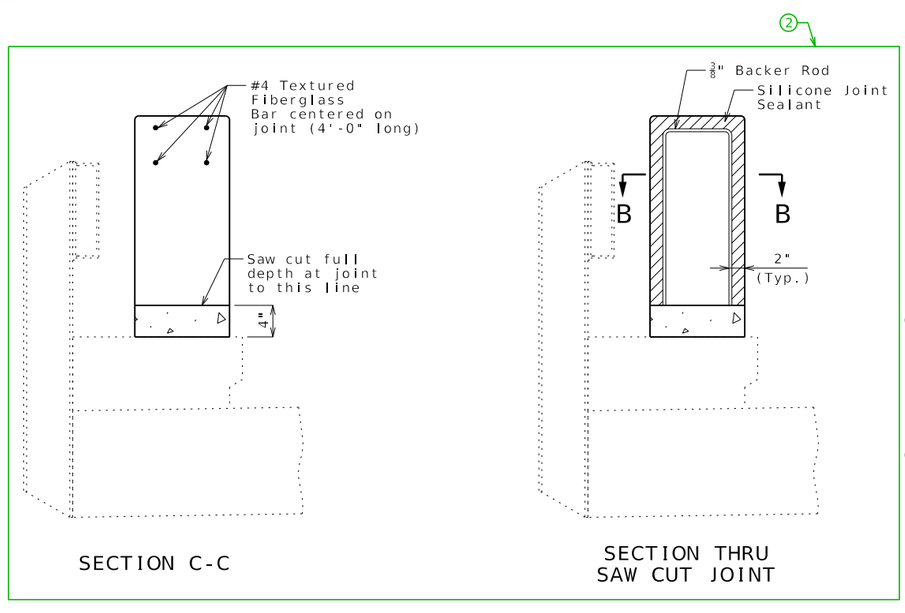

SECTION C-C

SECTION THRU
SAW CUT JOINT

Standard Drawing Guidance
(Do not show on plans):

1 Optional construction joint 1 1/2" (min.) past end of the 7-#5-R bars.

2 Omit for single span bridges.

Notes:

** When optional construction joint is used, #5-C1 bars may be shifted or omitted.

Work this sheet with Sheets No. _ & _.

2 Joint sealant and backer rods shall be in accordance with Sec 717 for silicone joint sealant for saw cut and formed joints.

For slip-formed option, both sides of the curb blockout shall have a vertically broomed finish and the top shall have a transversely broomed finish.

2 Cost of silicone joint sealant and backer rod, complete in place, will be considered completely covered by the contract unit price for Curb Blockout.

General notes shown for conventionally formed curb blockouts also apply to slip-formed curb blockouts.

Channel, posts and concrete end posts shall be removed if necessary for slip forming. Removal cost will be considered completely covered by the contract unit price for Curb Blockout.

OPTIONAL SLIP-FORMED CURB BLOCKOUT

Detailed
Checked

Note: This drawing is not to scale. Follow dimensions.

Sheet No. of

DATE PREPARED	8/22/2024
ROUTE	STATE MO
DISTRICT	SHEET NO. 7
COUNTY	
JOB NO.	
CONTRACT ID.	
PROJECT NO.	
BRIDGE NO.	

DESCRIPTION

DATE

MISSOURI HIGHWAYS AND TRANSPORTATION COMMISSION
105 WEST CAPITOL
JEFFERSON CITY, MO 65102
1-888-ASK-MODOT (1-888-275-6636)

CBO_06-CurbRail-slip Alternate Details

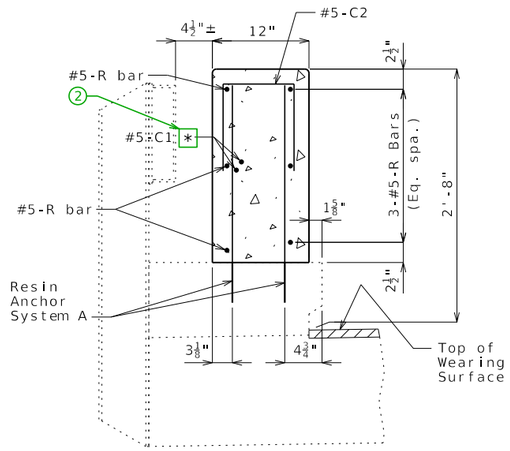

SECTION A-A

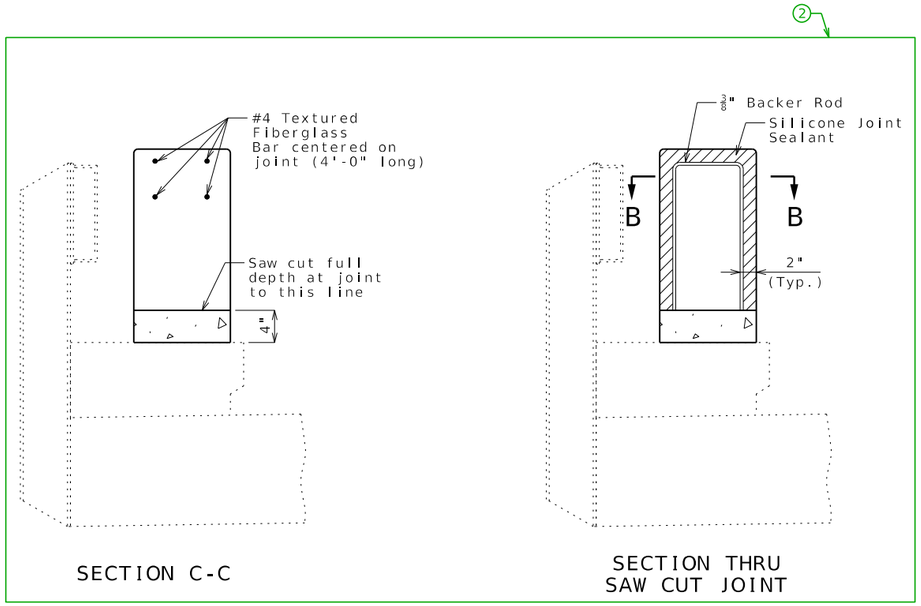

SECTION C-C

SECTION THRU
SAW CUT JOINT

Guidance: Remove top slopes from ends in Elevation for 2'-8" blockout.

Alternate details for 2'-8" blockout

Standard Drawing Guidance (do not show on plans):

Check that the 1 1/2"Ø holes for the diaphragms shown on the design plans will provide a minimum clearance of at least 1 1/2" to any prestressing strands. Diaphragm spacing may need to be adjusted.

For MoDOT Type 2 girder only, use shorter angle and plate 15 1/2" instead of 16" to account for depth tolerance of web. Revise bolt end clearances to 1 3/4".

Delete panels for CIP slab.

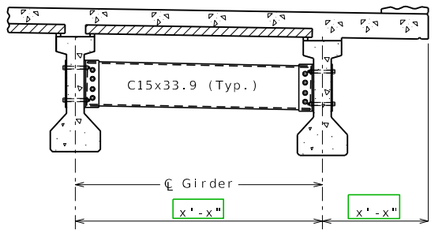

PART SECTION SHOWING
INTERMEDIATE DIAPHRAGMS

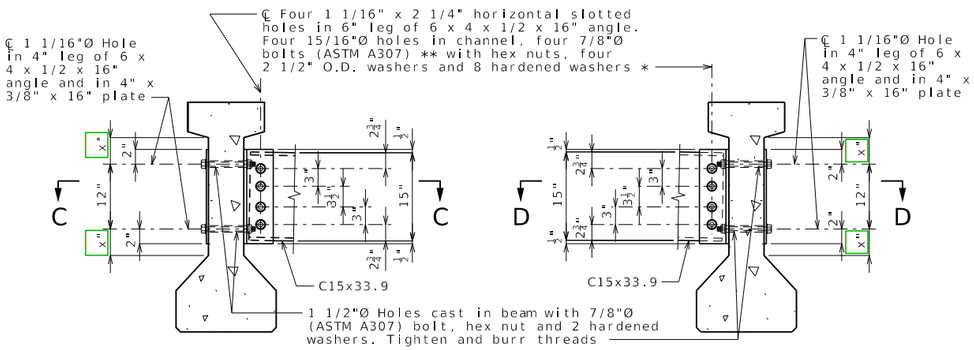

SECTION THRU INT. GIRDER
AT DIAPHRAGM

SECTION THRU EXT. GIRDER
AT DIAPHRAGM

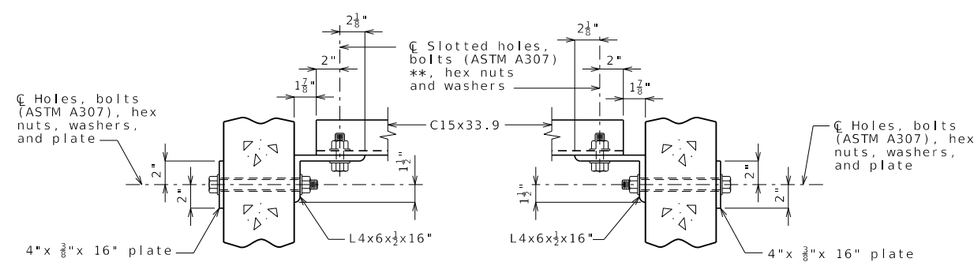

SECTION C-C

SECTION D-D

STEEL DIAPHRAGM NOTES:

* In lieu of 2 1/2" outside diameter washers, contractor may substitute a 3/16" (Min. thickness) plate with four 15/16"Ø holes and one hardened washer per bolt.

** Bolts shall be tightened to provide a tension of one-half that specified in Sec 712 for high strength bolt installation. ASTM F3125 Grade A325 Type 1 bolts may be substituted for and installed in accordance with the requirements for the specified ASTM A307 bolts.

All diaphragm materials including bolts, nuts, and washers shall be galvanized.

Fabricated structural steel shall be ASTM A709 Grade 36 except as noted.

Payment for furnishing and installing steel intermediate diaphragms will be considered completely covered by the contract unit price for Steel Intermediate Diaphragm for P/S Concrete Girders.

Shop drawings will not be required for steel intermediate diaphragms and angle connections.

For location of intermediate diaphragms, see Sheet No. .

STEEL INTERMEDIATE DIAPHRAGMS

Detailed
Checked

Note: This drawing is not to scale. Follow dimensions.

Sheet No. of

DATE PREPARED 10/13/2023	
ROUTE	STATE MO
DISTRICT	SHEET NO. 1
COUNTY	
JOB NO.	
CONTRACT ID.	
PROJECT NO.	
BRIDGE NO.	

DESCRIPTION

DATE

MISSOURI HIGHWAYS AND TRANSPORTATION COMMISSION
105 WEST CAPITOL
JEFFERSON CITY, MO 65102
1-888-ASK-MODOT (1-888-275-6636)

Standard Drawing Guidance (do not show on plans):

Check that the 1 1/2"Ø holes for the diaphragms shown on the design plans will provide a minimum clearance of at least 1 1/2" to any prestressing strands. Diaphragm spacing may need to be adjusted.

For MoDOT Type 2 girder only, use shorter angle and plate 15 1/2" instead of 16" to account for depth tolerance of web. Revise bolt end clearances to 1 3/4".

Delete panels for CIP slab.

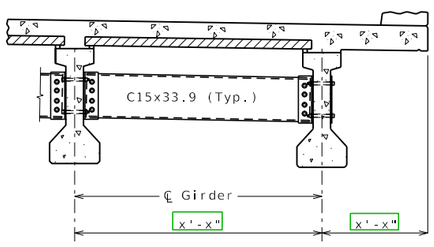

PART SECTION SHOWING
INTERMEDIATE DIAPHRAGMS

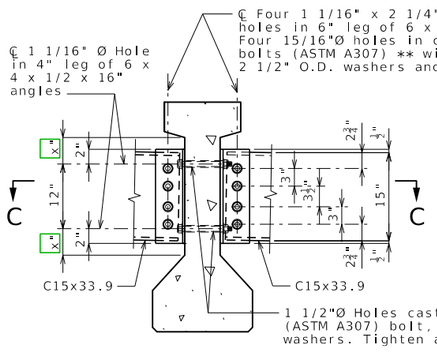

SECTION THRU INT. GIRDER
AT DIAPHRAGM

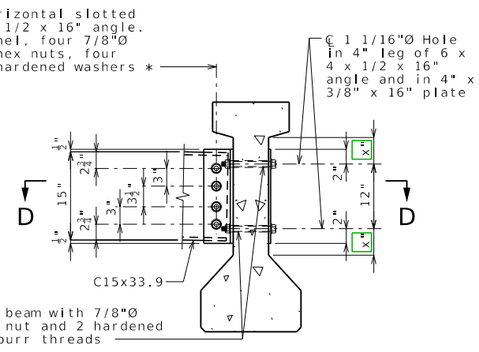

SECTION THRU EXT. GIRDER
AT DIAPHRAGM

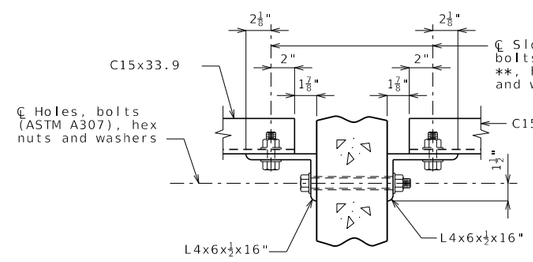

SECTION C-C

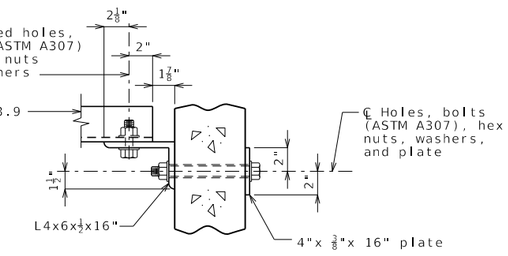

SECTION D-D

STEEL DIAPHRAGM NOTES:

* In lieu of 2 1/2" outside diameter washers, contractor may substitute a 3/16" (Min. thickness) plate with four 15/16" Ø holes and one hardened washer per bolt.

** Bolts shall be tightened to provide a tension of one-half that specified in Sec 712 for high strength bolt installation. ASTM F3125 Grade A325 Type 1 bolts may be substituted for and installed in accordance with the requirements for the specified ASTM A307 bolts.

All diaphragm materials including bolts, nuts, and washers shall be galvanized.

Fabricated structural steel shall be ASTM A709 Grade 36 except as noted.

Payment for furnishing and installing steel intermediate diaphragms will be considered completely covered by the contract unit price for Steel Intermediate Diaphragm for P/S Concrete Girders.

Shop drawings will not be required for steel intermediate diaphragms and angle connections.

For location of intermediate diaphragms, see Sheet No. .

STEEL INTERMEDIATE DIAPHRAGMS

Detailed
Checked

Note: This drawing is not to scale. Follow dimensions. Sheet No. of

DATE PREPARED 10/13/2023	
ROUTE	STATE MO
DISTRICT	SHEET NO. 2
COUNTY	
JOB NO.	
CONTRACT ID.	
PROJECT NO.	
BRIDGE NO.	

DESCRIPTION	DATE

MISSOURI HIGHWAYS AND TRANSPORTATION COMMISSION
105 WEST CAPITOL
JEFFERSON CITY, MO 65102
1-888-ASK-MODOT (1-888-275-6636)

Standard Drawing Guidance (Do not show on plans):

Check that the 1 1/2"Ø holes for the diaphragms shown on the design plans will provide a minimum clearance of at least 1 1/2" to any prestressing strands. Diaphragm spacing may need to be adjusted.

Delete panels for CIP slab.

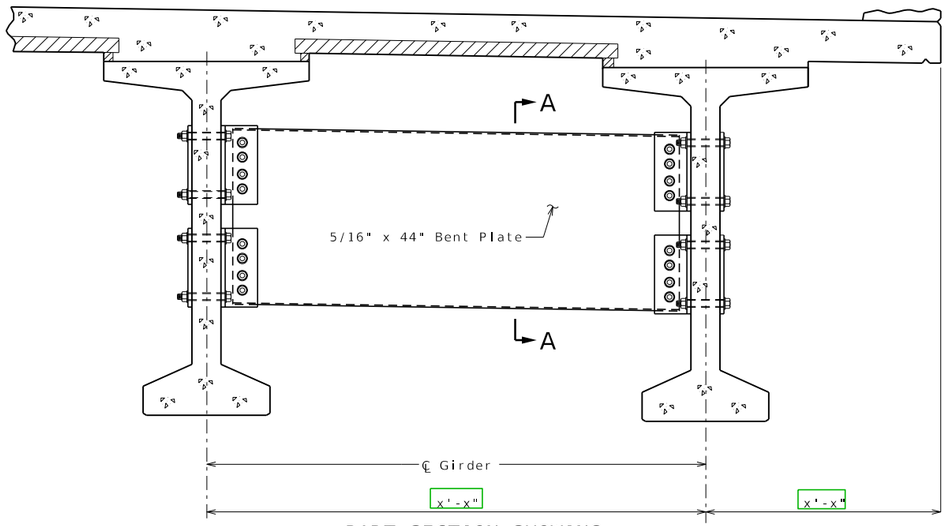

PART SECTION SHOWING
INTERMEDIATE DIAPHRAGMS

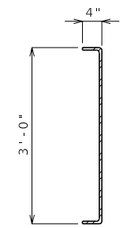

SECTION A-A

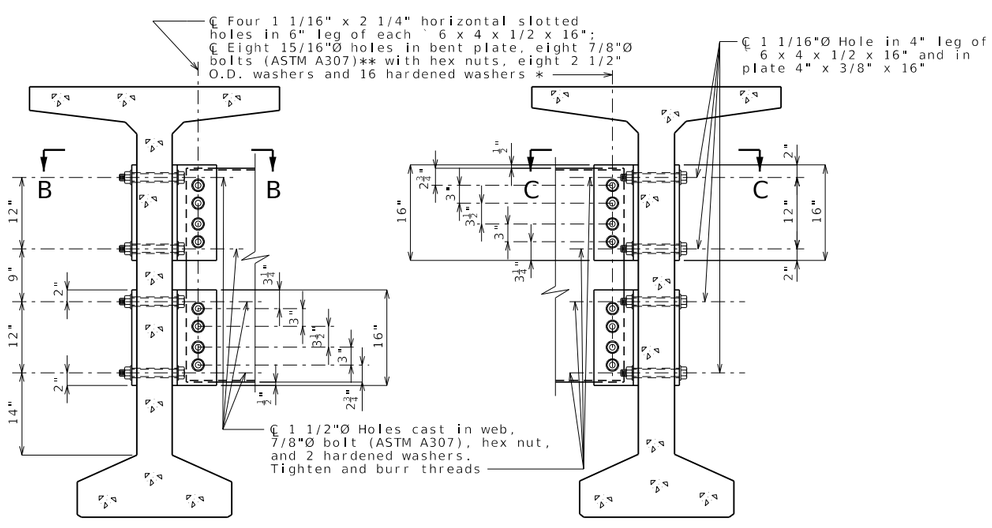

SECTION THRU INT. GIRDER
AT DIAPHRAGM

SECTION THRU EXT. GIRDER
AT DIAPHRAGM

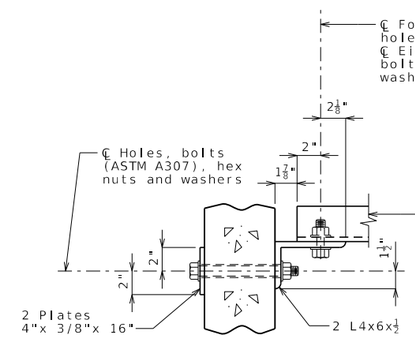

SECTION B-B

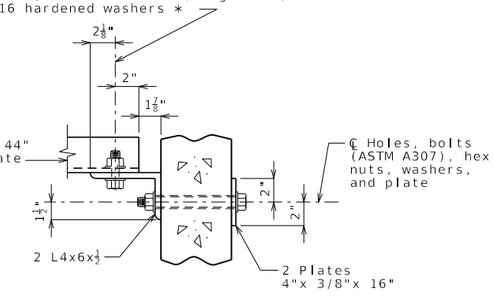

SECTION C-C

STEEL DIAPHRAGM NOTES:

* In lieu of 2 1/2" outside diameter washers, contractor may substitute a 3/16" (Min. thickness) plate with four 15/16" Ø holes and one hardened washer per bolt.

** Bolts shall be tightened to provide a tension of one-half that specified in Sec 712 for high strength bolt installation. ASTM F3125 Grade A325 Type 1 bolts may be substituted for and installed in accordance with the requirements for the specified ASTM A307 bolts.

All diaphragm materials including bolts, nuts, and washers shall be galvanized.

Fabricated structural steel shall be ASTM A709 Grade 36 except as noted.

Payment for furnishing and installing steel intermediate diaphragms will be considered completely covered by the contract unit price for Steel Intermediate Diaphragm for P/S Concrete Girders.

Shop drawings will not be required for steel intermediate diaphragms and angle connections.

For location of intermediate diaphragms, see Sheet No. .

STEEL INTERMEDIATE DIAPHRAGMS

Detailed
Checked

Note: This drawing is not to scale. Follow dimensions.

DATE PREPARED	10/13/2023
ROUTE	STATE MO
DISTRICT	SHEET NO. 3
COUNTY	
JOB NO.	
CONTRACT ID.	
PROJECT NO.	
BRIDGE NO.	

DESCRIPTION	DATE

MISSOURI HIGHWAYS AND TRANSPORTATION COMMISSION
105 WEST CAPITOL
JEFFERSON CITY, MO 65102
1-888-ASK-MODOT (1-888-275-6636)

Standard Drawing Guidance (Do not show on plans):

Check that the 1½"Ø holes for the diaphragms shown on the design plans will provide a minimum clearance of at least 1½" to any prestressing strands. Diaphragm spacing may need to be adjusted.

Delete panels for CIP slab.

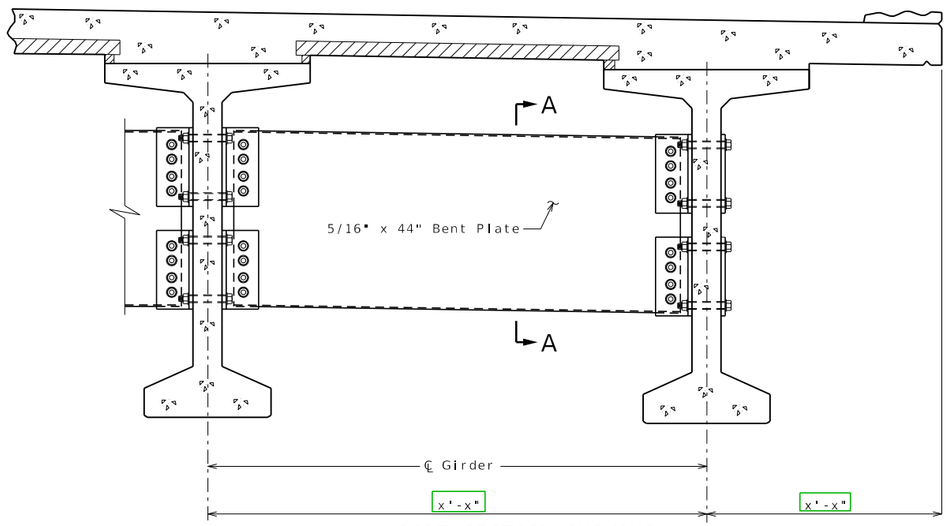

PART SECTION SHOWING
INTERMEDIATE DIAPHRAGMS

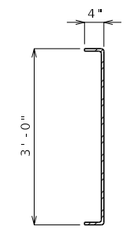

SECTION A-A

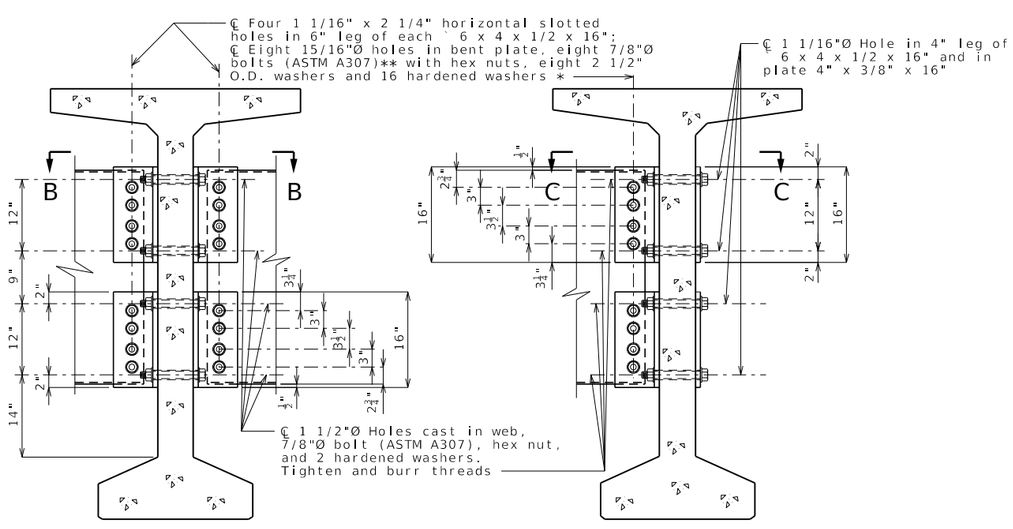

SECTION THRU INT. GIRDER
AT DIAPHRAGM

SECTION THRU EXT. GIRDER
AT DIAPHRAGM

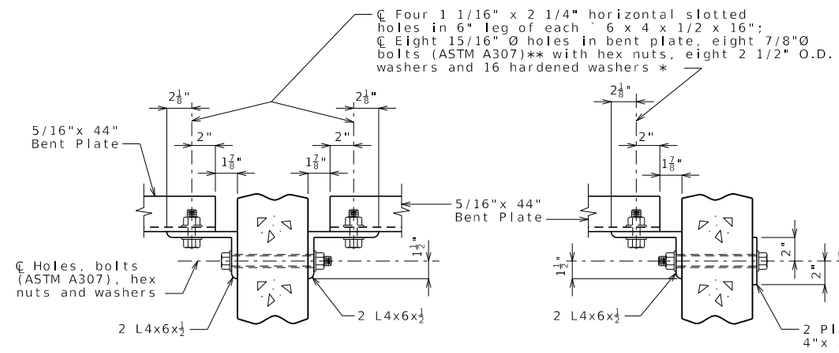

SECTION B-B

SECTION C-C

STEEL DIAPHRAGM NOTES:

* In lieu of 2 1/2" outside diameter washers, contractor may substitute a 3/16" (Min. thickness) plate with four 15/16" Ø holes and one hardened washer per bolt.

** Bolts shall be tightened to provide a tension of one-half that specified in Sec 712 for high strength bolt installation. ASTM F3125 Grade A325 Type 1 bolts may be substituted for and installed in accordance with the requirements for the specified ASTM A307 bolts.

All diaphragm materials including bolts, nuts, and washers shall be galvanized.

Fabricated structural steel shall be ASTM A709 Grade 36 except as noted.

Payment for furnishing and installing steel intermediate diaphragms will be considered completely covered by the contract unit price for Steel Intermediate Diaphragm for P/S Concrete Girders.

Shop drawings will not be required for steel intermediate diaphragms and angle connections.

For location of intermediate diaphragms, see Sheet No. .

STEEL INTERMEDIATE DIAPHRAGMS

Detailed
Checked

Note: This drawing is not to scale. Follow dimensions.

DATE PREPARED	10/13/2023
ROUTE	STATE MO
DISTRICT	SHEET NO. 4
COUNTY	
JOB NO.	
CONTRACT ID.	
PROJECT NO.	
BRIDGE NO.	

DESCRIPTION

DATE

MISSOURI HIGHWAYS AND TRANSPORTATION COMMISSION
105 WEST CAPITOL
JEFFERSON CITY, MO 65102
1-888-ASK-MODOT (1-888-275-6636)

Standard Drawing Guidance (do not show on plans):

Check that the 1 1/2"Ø holes for the diaphragms shown on the design plans will provide a minimum clearance of at least 1 1/2" to any prestressing strands. Diaphragm spacing may need to be adjusted.

Delete panels for CIP slab.

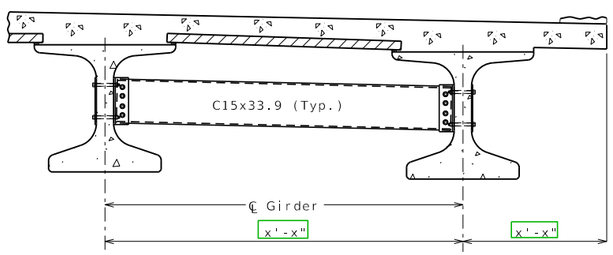

PART SECTION SHOWING
INTERMEDIATE DIAPHRAGMS

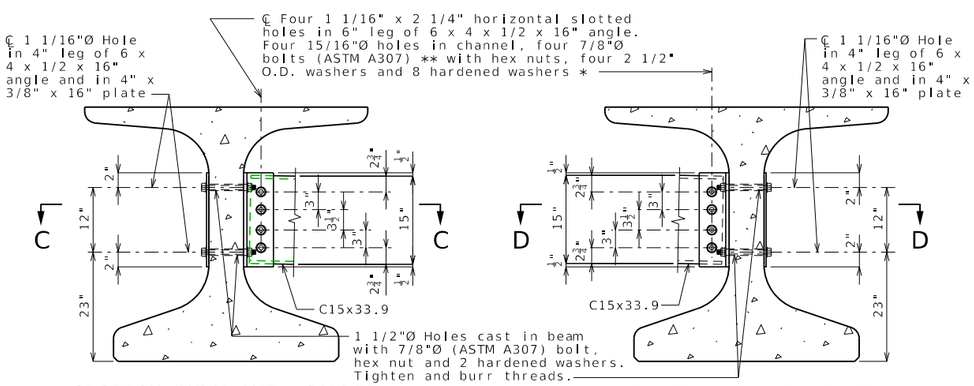

SECTION THRU INT. GIRDER
AT DIAPHRAGM

SECTION THRU EXT.GIRDER
AT DIAPHRAGM

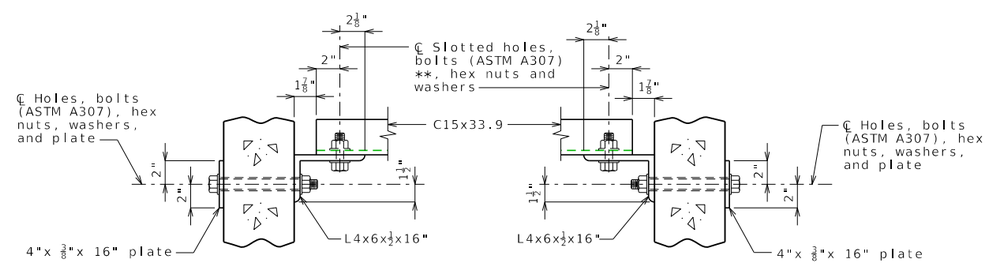

SECTION C-C

SECTION D-D

STEEL DIAPHRAGM NOTES:

* In lieu of 2 1/2" outside diameter washers, contractor may substitute a 3/16" (Min. thickness) plate with four 15/16" Ø holes and one hardened washer per bolt.

** Bolts shall be tightened to provide a tension of one-half that specified in Sec 712 for high strength bolt installation. ASTM F3125 Grade A325 Type 1 bolts may be substituted for and installed in accordance with the requirements for the specified ASTM A307 bolts.

All diaphragm materials including bolts, nuts, and washers shall be galvanized.

Fabricated structural steel shall be ASTM A709 Grade 36 except as noted.

Payment for furnishing and installing steel intermediate diaphragms will be considered completely covered by the contract unit price for Steel Intermediate Diaphragm for P/S Concrete Girders.

Shop drawings will not be required for steel intermediate diaphragms and angle connections.

For location of intermediate diaphragms, see Sheet No. .

STEEL INTERMEDIATE DIAPHRAGMS

Detailed
Checked

Note: This drawing is not to scale. Follow dimensions.

Sheet No. of

DATE PREPARED 10/13/2023	
ROUTE	STATE MO
DISTRICT	SHEET NO. 5
COUNTY	
JOB NO.	
CONTRACT ID.	
PROJECT NO.	
BRIDGE NO.	

DATE	DESCRIPTION

MISSOURI HIGHWAYS AND TRANSPORTATION COMMISSION
105 WEST CAPITOL
JEFFERSON CITY, MO 65102
1-888-ASK-MODOT (1-888-275-6636)

Standard Drawing Guidance (do not show on plans):

Check that the 1 1/2"Ø holes for the diaphragms shown on the design plans will provide a minimum clearance of at least 1 1/2" to any prestressing strands. Diaphragm spacing may need to be adjusted.

Delete panels for CIP slab.

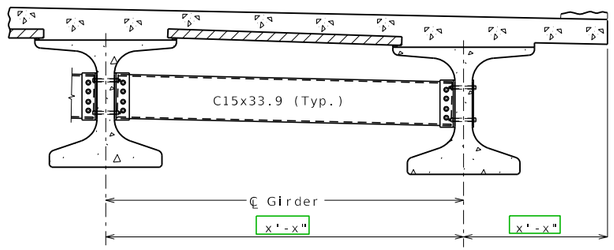

PART SECTION SHOWING INTERMEDIATE DIAPHRAGMS

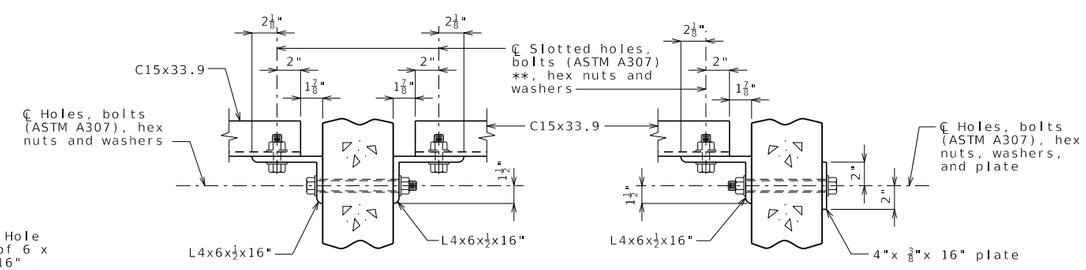

SECTION C-C SECTION D-D

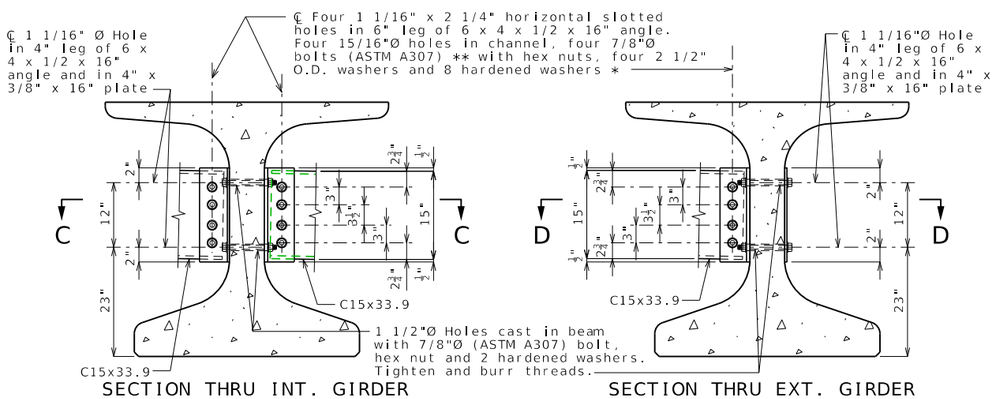

SECTION THRU INT. GIRDER AT DIAPHRAGM SECTION THRU EXT. GIRDER AT DIAPHRAGM

STEEL DIAPHRAGM NOTES:

* In lieu of 2 1/2" outside diameter washers, contractor may substitute a 3/16" (Min. thickness) plate with four 15/16" Ø holes and one hardened washer per bolt.

** Bolts shall be tightened to provide a tension of one-half that specified in Sec 712 for high strength bolt installation. ASTM F3125 Grade A325 Type 1 bolts may be substituted for and installed in accordance with the requirements for the specified ASTM A307 bolts.

All diaphragm materials including bolts, nuts, and washers shall be galvanized.

Fabricated structural steel shall be ASTM A709 Grade 36 except as noted.

Payment for furnishing and installing steel intermediate diaphragms will be considered completely covered by the contract unit price for Steel Intermediate Diaphragm for P/S Concrete Girders.

Shop drawings will not be required for steel intermediate diaphragms and angle connections.

For location of intermediate diaphragms, see Sheet No. .

STEEL INTERMEDIATE DIAPHRAGMS

Detailed
Checked

Note: This drawing is not to scale. Follow dimensions. Sheet No. of

DATE PREPARED 10/13/2023	
ROUTE	STATE MO
DISTRICT	SHEET NO. 6
COUNTY	
JOB NO.	
CONTRACT ID.	
PROJECT NO.	
BRIDGE NO.	

DESCRIPTION	DATE

MISSOURI HIGHWAYS AND TRANSPORTATION COMMISSION
105 WEST CAPITOL
JEFFERSON CITY, MO 65102
1-888-ASK-MODOT (1-888-275-6636)

Standard Drawing Guidance (Do not show on plans):

Check that the 1 1/2"∅ holes for the diaphragms shown on the design plans will provide a minimum clearance of at least 1½" to any prestressing strands. Diaphragm spacing may need to be adjusted.

Delete panels for CIP slab.

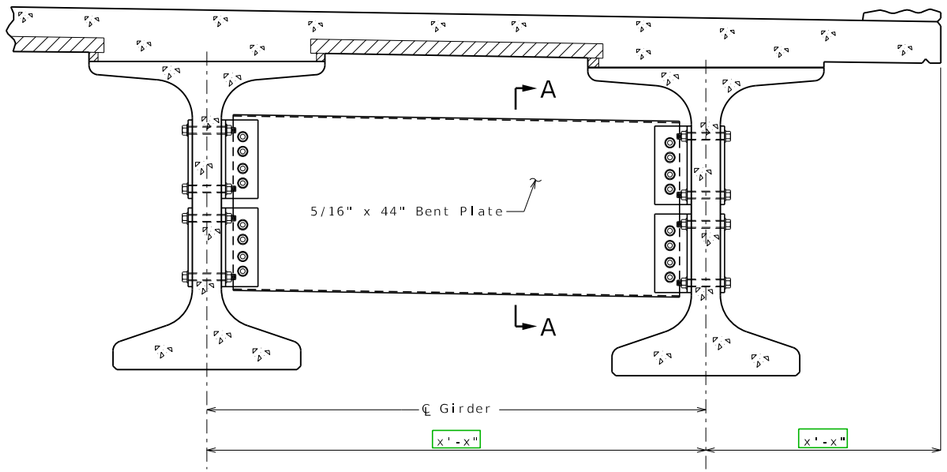

PART SECTION SHOWING
INTERMEDIATE DIAPHRAGMS

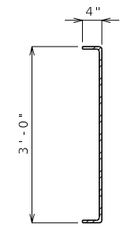

SECTION A-A

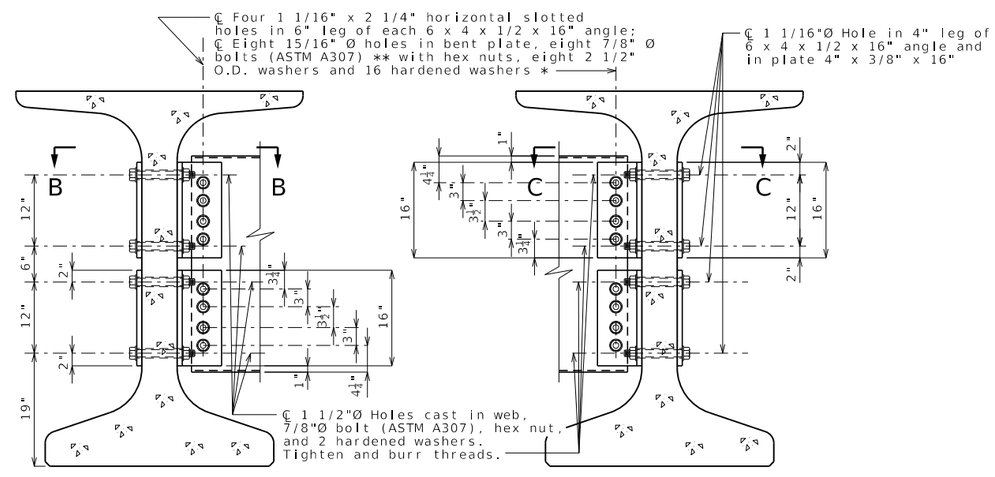

SECTION THRU INT. GIRDER
AT DIAPHRAGM

SECTION THRU EXT. GIRDER
AT DIAPHRAGM

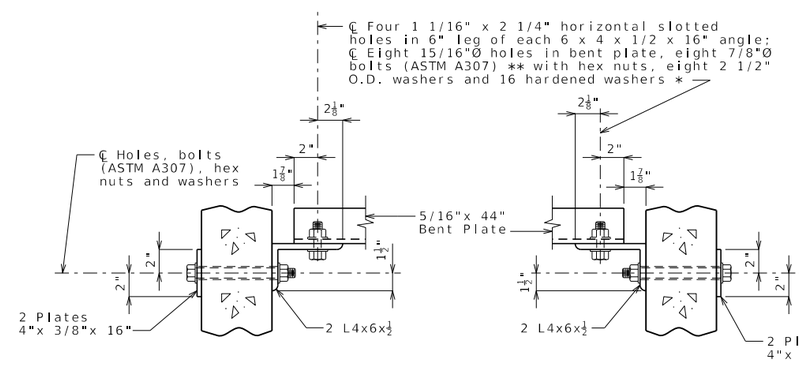

SECTION B-B

SECTION C-C

STEEL DIAPHRAGM NOTES:

* In lieu of 2 1/2" outside diameter washers, contractor may substitute a 3/16" (Min. thickness) plate with four 15/16" Ø holes and one hardened washer per bolt.

** Bolts shall be tightened to provide a tension of one-half that specified in Sec 712 for high strength bolt installation. ASTM F3125 Grade A325 Type 1 bolts may be substituted for and installed in accordance with the requirements for the specified ASTM A307 bolts.

All diaphragm materials including bolts, nuts, and washers shall be galvanized.

Fabricated structural steel shall be ASTM A709 Grade 36 except as noted.

Payment for furnishing and installing steel intermediate diaphragms will be considered completely covered by the contract unit price for Steel Intermediate Diaphragm for P/S Concrete Girders.

Shop drawings will not be required for steel intermediate diaphragms and angle connections.

For location of intermediate diaphragms, see Sheet No. .

STEEL INTERMEDIATE DIAPHRAGMS

Detailed
Checked

Note: This drawing is not to scale. Follow dimensions.

Sheet No. of

DATE PREPARED	10/13/2023
ROUTE	STATE MO
DISTRICT	SHEET NO. 7
COUNTY	
JOB NO.	
CONTRACT ID.	
PROJECT NO.	
BRIDGE NO.	

DESCRIPTION | DATE

MISSOURI HIGHWAYS AND TRANSPORTATION COMMISSION
105 WEST CAPITOL
JEFFERSON CITY, MO 65102
1-888-ASK-MODOT (1-888-275-6636)

Standard Drawing Guidance (Do not show on plans):

Check that the 1 1/2"Ø holes for the diaphragms shown on the design plans will provide a minimum clearance of at least 1½" to any prestressing strands. Diaphragm spacing may need to be adjusted.

Delete panels for CIP slab.

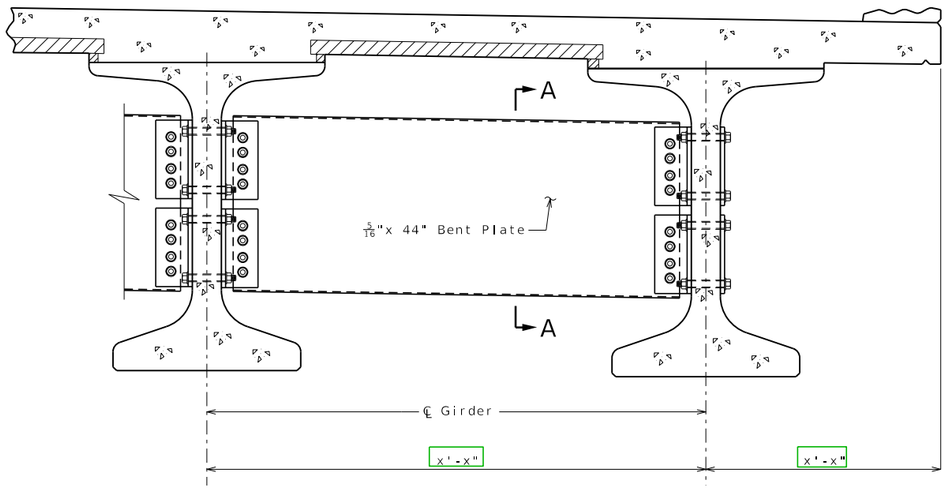

PART SECTION SHOWING
INTERMEDIATE DIAPHRAGMS

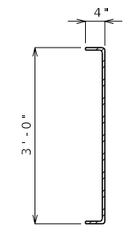

SECTION A-A

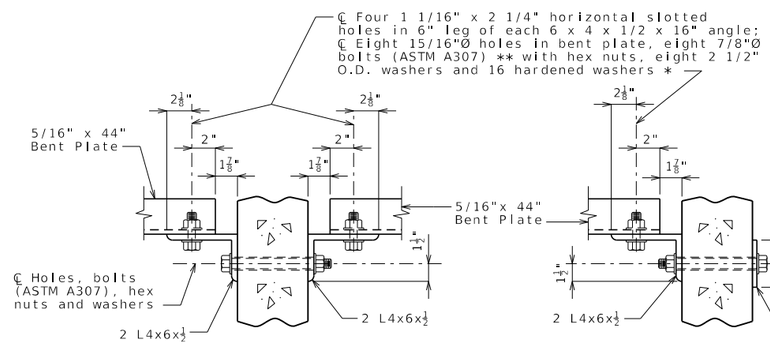

SECTION B-B

SECTION C-C

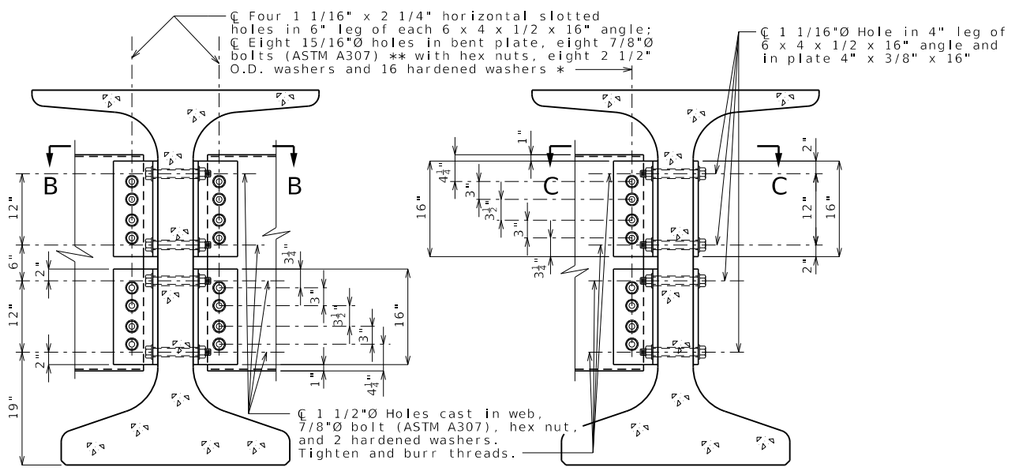

SECTION THRU INT. GIRDER
AT DIAPHRAGM

SECTION THRU EXT. GIRDER
AT DIAPHRAGM

STEEL DIAPHRAGM NOTES:

* In lieu of 2 1/2" outside diameter washers, contractor may substitute a 3/16" (Min. thickness) plate with four 15/16"Ø holes and one hardened washer per bolt.

** Bolts shall be tightened to provide a tension of one-half that specified in Sec 712 for high strength bolt installation. ASTM F3125 Grade A325 Type 1 bolts may be substituted for and installed in accordance with the requirement s for the specified ASTM A307 bolts.

All diaphragm materials including bolts, nuts, and washers shall be galvanized.

Fabricated structural steel shall be ASTM A709 Grade 36 except as noted.

Payment for furnishing and installing steel intermediate diaphragms will be considered completely covered by the contract unit price for Steel Intermediate Diaphragm for P/S Concrete Girders.

Shop drawings will not be required for steel intermediate diaphragms and angle connections.

For location of intermediate diaphragms, see Sheet No. .

STEEL INTERMEDIATE DIAPHRAGMS

Detailed
Checked

Note: This drawing is not to scale. Follow dimensions.

Sheet No. of

DATE PREPARED	10/13/2023
ROUTE	STATE MO
DISTRICT	SHEET NO. 8
COUNTY	
JOB NO.	
CONTRACT ID.	
PROJECT NO.	
BRIDGE NO.	

DESCRIPTION

DATE

MISSOURI HIGHWAYS AND TRANSPORTATION COMMISSION
105 WEST CAPITOL
JEFFERSON CITY, MO 65102
1-888-ASK-MODOT (1-888-275-6636)

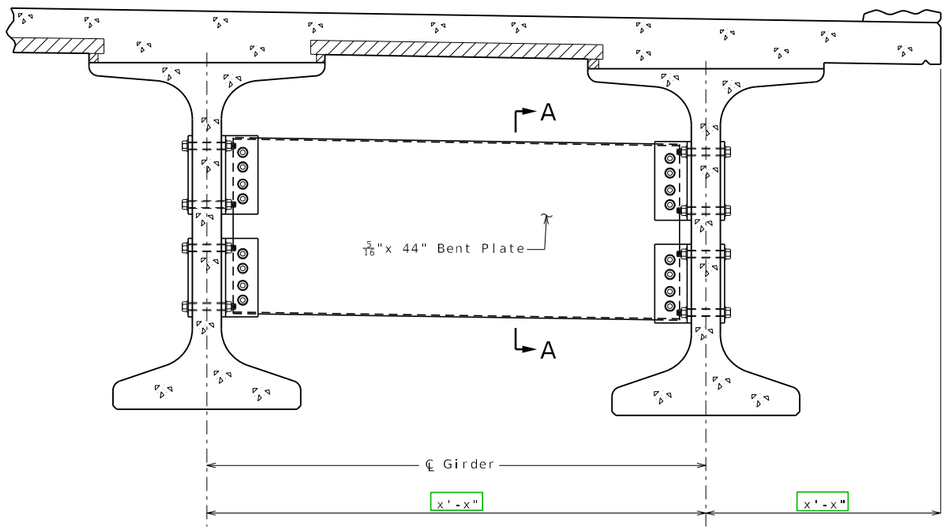

PART SECTION SHOWING
INTERMEDIATE DIAPHRAGMS

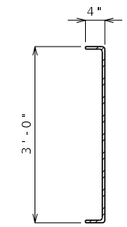

SECTION A-A

Standard Drawing Guidance (Do not show on plans):

Check that the 1 1/2"Ø holes for the diaphragms shown on the design plans will provide a minimum clearance of at least 1 1/2" to any prestressing strands. Diaphragm spacing may need to be adjusted.

(1) Use 2'-4" for NU 78 girders

Delete panels for CIP slab.

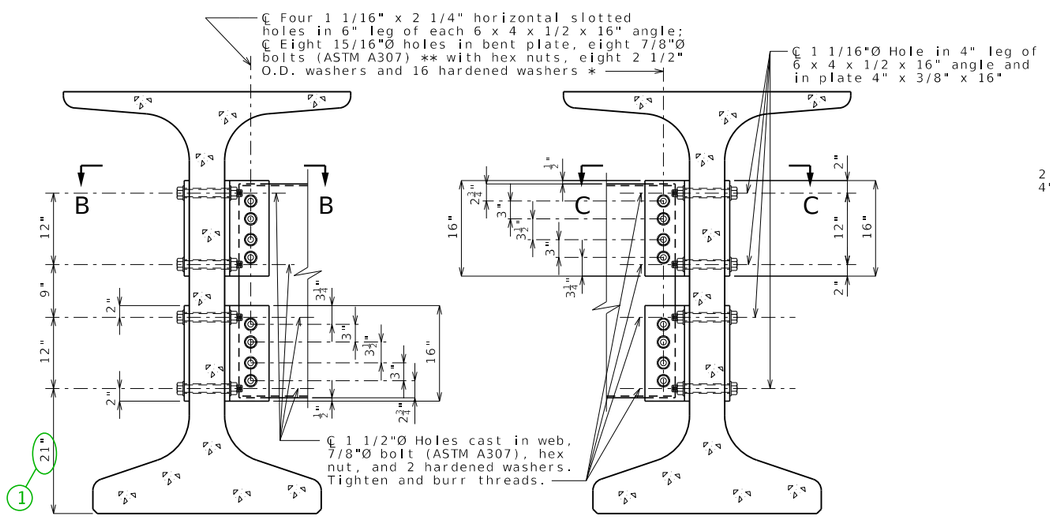

SECTION THRU INT. GIRDER
AT DIAPHRAGM

SECTION THRU EXT. GIRDER
AT DIAPHRAGM

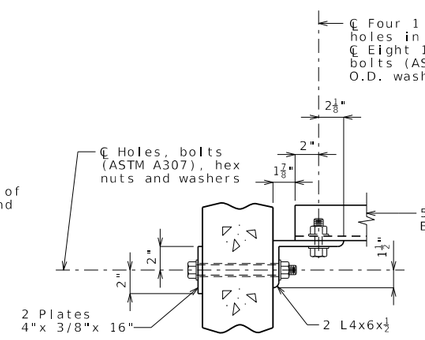

SECTION B-B

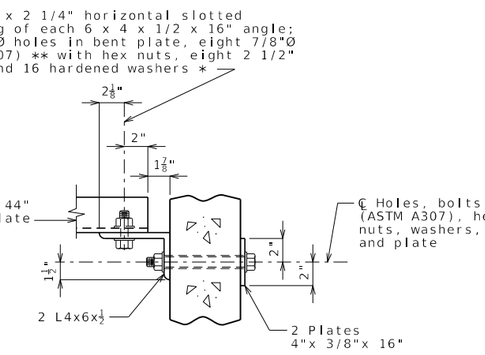

SECTION C-C

STEEL DIAPHRAGM NOTES:

* In lieu of 2 1/2" outside diameter washers, contractor may substitute a 3/16" (Min. thickness) plate with four 15/16" Ø holes and one hardened washer per bolt.

** Bolts shall be tightened to provide a tension of one-half that specified in Sec 712 for high strength bolt installation. ASTM F3125 Grade A325 Type 1 bolts may be substituted for and installed in accordance with the requirements for the specified ASTM A307 bolts.

All diaphragm materials including bolts, nuts, and washers shall be galvanized.

Fabricated structural steel shall be ASTM A709 Grade 36 except as noted.

Payment for furnishing and installing steel intermediate diaphragms will be considered completely covered by the contract unit price for Steel Intermediate Diaphragm for P/S Concrete Girders.

Shop drawings will not be required for steel intermediate diaphragms and angle connections.

For location of intermediate diaphragms, see Sheet No. .

STEEL INTERMEDIATE DIAPHRAGMS

Detailed
Checked

Note: This drawing is not to scale. Follow dimensions.

Sheet No. of

DATE PREPARED	10/13/2023
ROUTE	STATE MO
DISTRICT	SHEET NO. 9
COUNTY	
JOB NO.	
CONTRACT ID.	
PROJECT NO.	
BRIDGE NO.	

DESCRIPTION	DATE

MISSOURI HIGHWAYS AND TRANSPORTATION COMMISSION
105 WEST CAPITOL
JEFFERSON CITY, MO 65102
1-888-ASK-MODOT (1-888-275-6636)

Standard Drawing Guidance (Do not show on plans):

Check that the 1 1/2"Ø holes for the diaphragms shown on the design plans will provide a minimum clearance of at least 1 1/2" to any prestressing strands. Diaphragm spacing may need to be adjusted.

(1) Use 2'-4" for NU 78 girders

Delete panels for CIP slab.

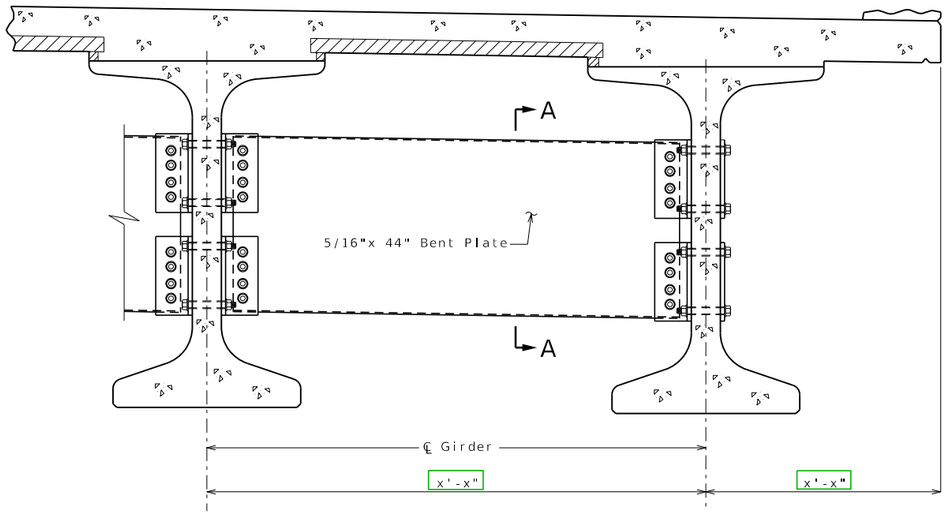

PART SECTION SHOWING
INTERMEDIATE DIAPHRAGMS

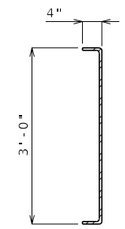

SECTION A-A

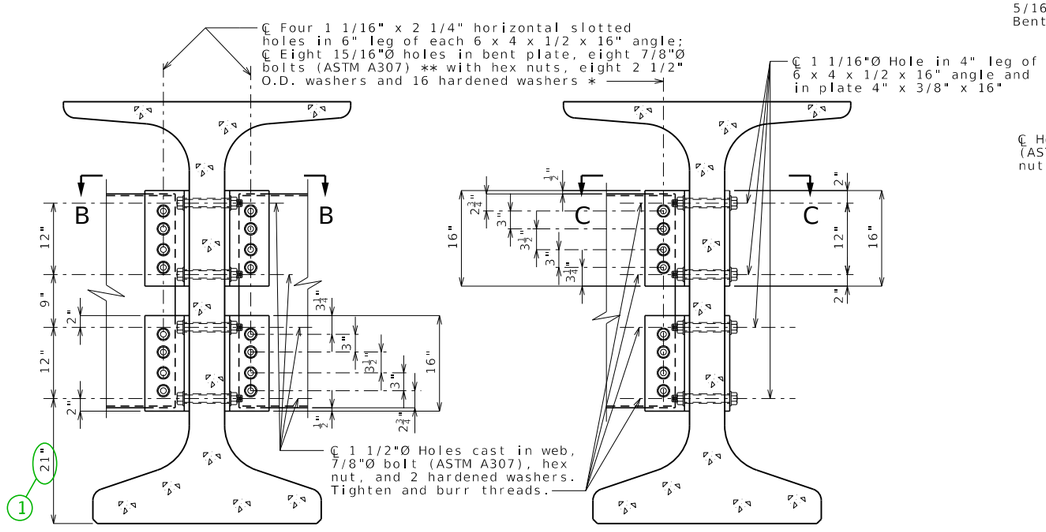

SECTION THRU INT. GIRDER
AT DIAPHRAGM

SECTION THRU EXT. GIRDER
AT DIAPHRAGM

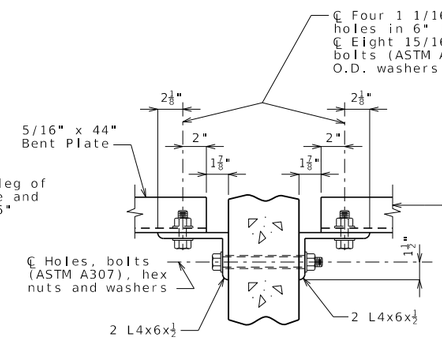

SECTION B-B

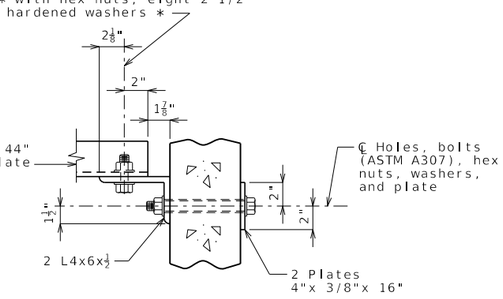

SECTION C-C

STEEL DIAPHRAGM NOTES:

* In lieu of 2 1/2" outside diameter washers, contractor may substitute a 3/16" (Min. thickness) plate with four 15/16"Ø holes and one hardened washer per bolt.

** Bolts shall be tightened to provide a tension of one-half that specified in Sec 712 for high strength bolt installation. ASTM F3125 Grade A325 Type 1 bolts may be substituted for and installed in accordance with the requirements for the specified ASTM A307 bolts.

All diaphragm materials including bolts, nuts, and washers shall be galvanized.

Fabricated structural steel shall be ASTM A709 Grade 36 except as noted.

Payment for furnishing and installing steel intermediate diaphragms will be considered completely covered by the contract unit price for Steel Intermediate Diaphragm for P/S Concrete Girders.

Shop drawings will not be required for steel intermediate diaphragms and angle connections.

For location of intermediate diaphragms, see Sheet No. .

STEEL INTERMEDIATE DIAPHRAGMS

Detailed
Checked

Note: This drawing is not to scale. Follow dimensions.

DATE PREPARED	10/13/2023
ROUTE	STATE MO
DISTRICT	SHEET NO. 10
COUNTY	
JOB NO.	
CONTRACT ID.	
PROJECT NO.	
BRIDGE NO.	

DESCRIPTION

DATE

MISSOURI HIGHWAYS AND TRANSPORTATION COMMISSION
105 WEST CAPITOL
JEFFERSON CITY, MO 65102
1-888-ASK-MODOT (1-888-275-6636)

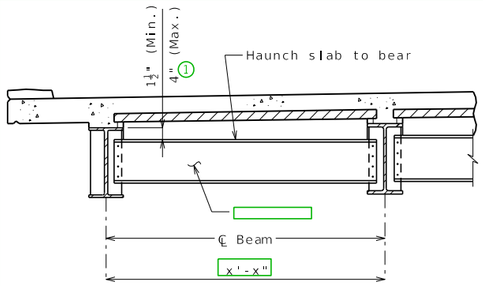

TYPICAL PART SECTION SHOWING
END DIAPHRAGMS

(W21 thru W24) Omit this detail if End Diaphragms (slab haunched to bear) are not used.

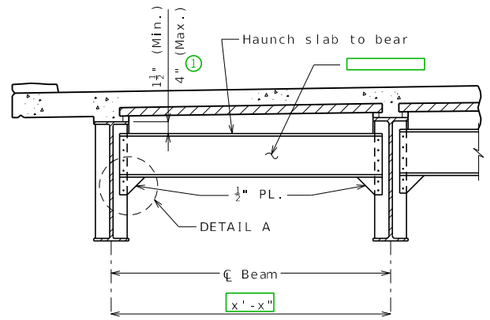

TYPICAL PART SECTION SHOWING
END DIAPHRAGMS

(W27 thru W40) Omit these details if End Diaphragms (slab haunched to bear) are not used.

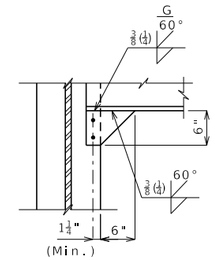

DETAIL A

Standard Drawing Guidance (do not show on plans):

Angle size should be shown without inch (") marks on the plans.

Do not show fillet weld size unless by design and size of weld exceeds Sec 1080.

Show specialty welds information as given unless by design.

Delete panels for CIP slab.

① Modify if necessary in accordance with EPG 751.14.5.3.

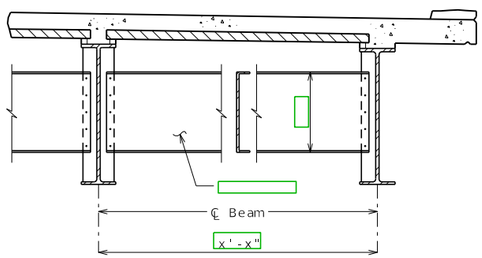

TYPICAL PART SECTION SHOWING
CROSS FRAMES AND
INTERMEDIATE DIAPHRAGMS

Replace this detail with alternate details if flange connection angle is required by design.

DATE PREPARED	10/13/2023
ROUTE	STATE MO
DISTRICT	SHEET NO. 11
COUNTY	
JOB NO.	
CONTRACT ID.	
PROJECT NO.	
BRIDGE NO.	

DESCRIPTION	DATE

MISSOURI HIGHWAYS AND TRANSPORTATION COMMISSION
105 WEST CAPITOL
JEFFERSON CITY, MO 65102
1-888-ASK-MODOT (1-888-275-6636)

STEEL DIAPHRAGMS

Detailed
Checked

Note: This drawing is not to scale. Follow dimensions.

Sheet No. of

DIA11_WF Guidance & Alternate Details

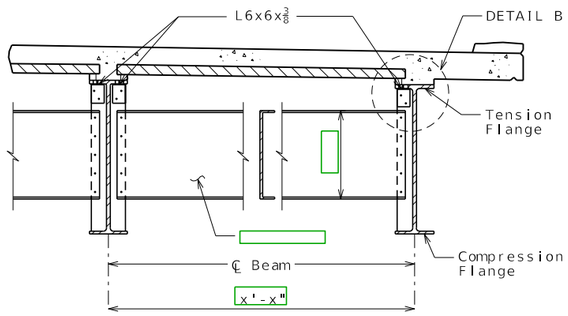

TYPICAL PART SECTION SHOWING
CROSS FRAMES AND
INTERMEDIATE DIAPHRAGMS
TOP FLANGE IN TENSION

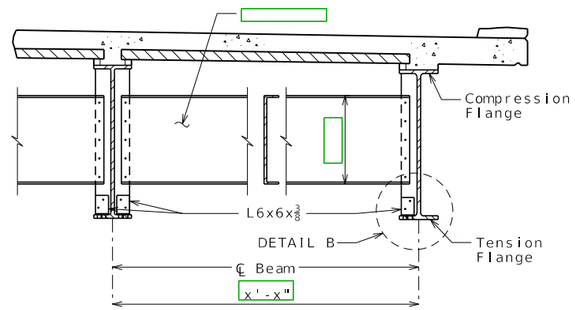

TYPICAL PART SECTION SHOWING
INTERMEDIATE DIAPHRAGMS
BOTTOM FLANGE IN TENSION

Use these alternate details if Flange Connection Angle is required by design.

② Use Type 3 for weathering steel bolted connections and Type 1 for painted or galvanized steel connections.

③ Verify clearance for cross slope.

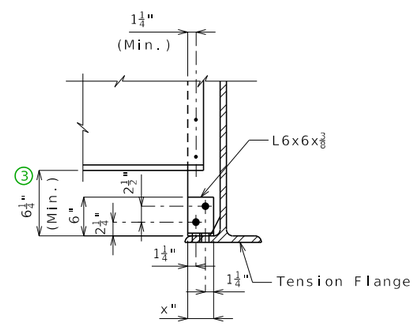

DETAIL B

(Bottom flange shown,
top flange similar.)

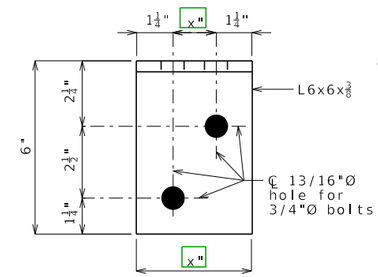

ELEVATION

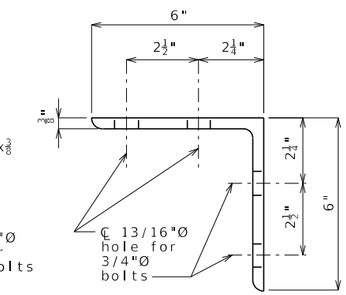

SIDE VIEW

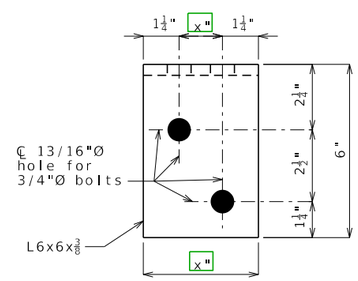

PLAN

Note: Bolts shall be 3/4-inch diameter ASTM F3125 Grade A325 Type 1 Type 3 that connect the 6 x 6 x 3/8 angle to the top flange and placed so the nut is on the inside of flange (toward the web). ②

DETAIL OF FLANGE CONNECTION ANGLE

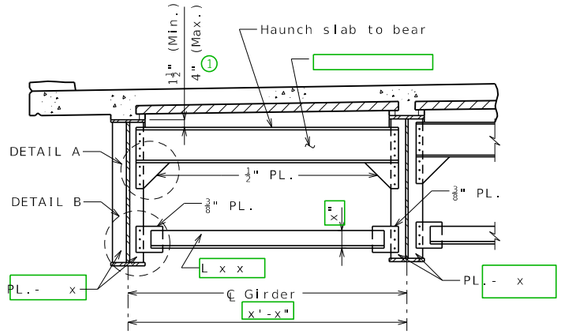

TYPICAL PART SECTION SHOWING
END DIAPHRAGMS

(42" thru 48" webs) Omit this detail and Details A & B if End Diaphragms (slab haunched to bear) are not used.

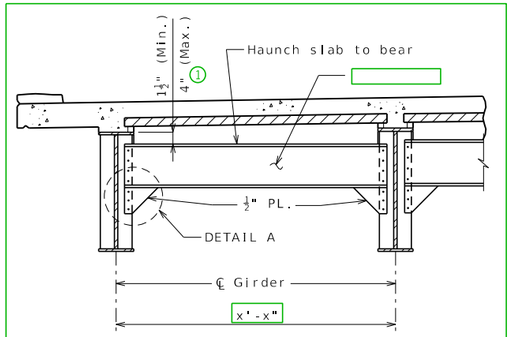

TYPICAL PART SECTION SHOWING
END DIAPHRAGMS

(36" thru 40" webs) Omit this detail and Detail A if End Diaphragms (slab haunched to bear) are not used.

Standard Drawing Guidance (do not show on plans):

Angle size should be shown without inch (") marks on the plans.

Do not show fillet weld size unless by design and size of weld exceeds Sec 1080.

Show specialty welds information as given unless by design.

Delete panels for CIP slab.

① Modify if necessary in accordance with EPG 751.14.5.4.

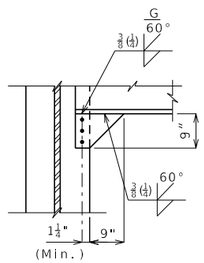

DETAIL A

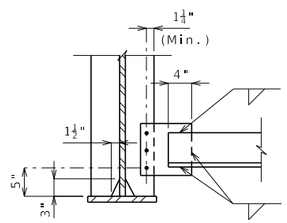

DETAIL B

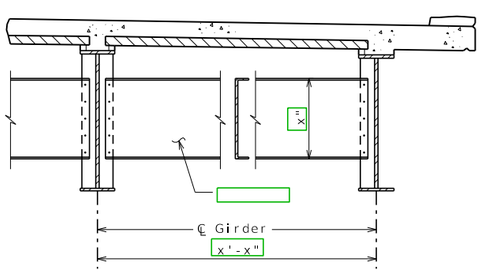

TYPICAL PART SECTION SHOWING
CROSS FRAMES AND
INTERMEDIATE DIAPHRAGMS

Replace this detail with alternate details if flange connection angle is required by design.

STEEL DIAPHRAGMS

Detailed
Checked

Note: This drawing is not to scale. Follow dimensions.

Sheet No. of

DATE PREPARED	10/13/2023
ROUTE	STATE MO
DISTRICT	SHEET NO. 12
COUNTY	
JOB NO.	
CONTRACT ID.	
PROJECT NO.	
BRIDGE NO.	

DESCRIPTION

DATE

MISSOURI HIGHWAYS AND TRANSPORTATION COMMISSION

105 WEST CAPITOL
JEFFERSON CITY, MO 65102
1-888-ASK-MODOT (1-888-275-6636)

Use these alternate details if Flange Connection Angle is required by design.

② Use Type 3 for weathering steel bolted connections and Type 1 for painted or galvanized steel connections.

③ Verify clearance for cross-slope.

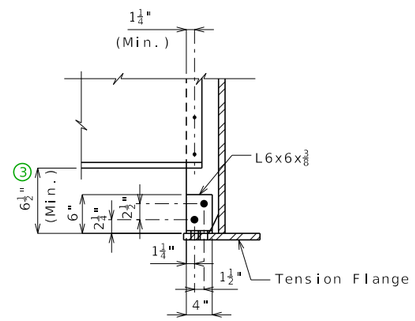

DETAIL C

(Bottom flange shown, top flange similar.)

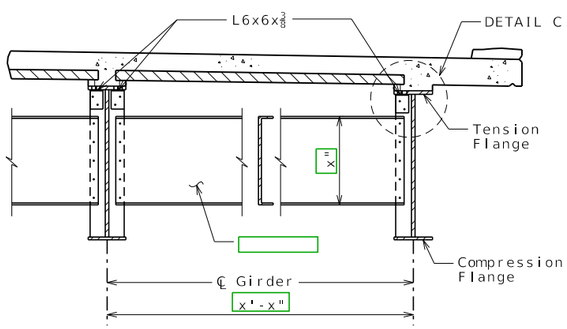

TYPICAL PART SECTION SHOWING
CROSS FRAMES AND
INTERMEDIATE DIAPHRAGMS
TOP FLANGE IN TENSION

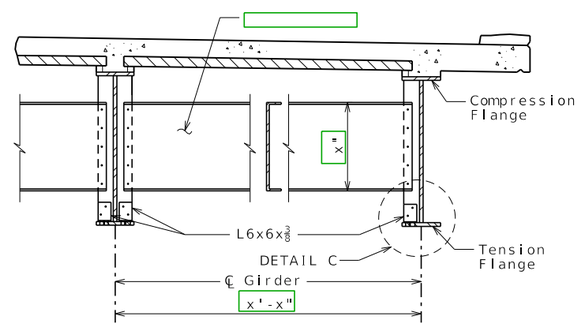

TYPICAL PART SECTION SHOWING
INTERMEDIATE DIAPHRAGMS
BOTTOM FLANGE IN TENSION

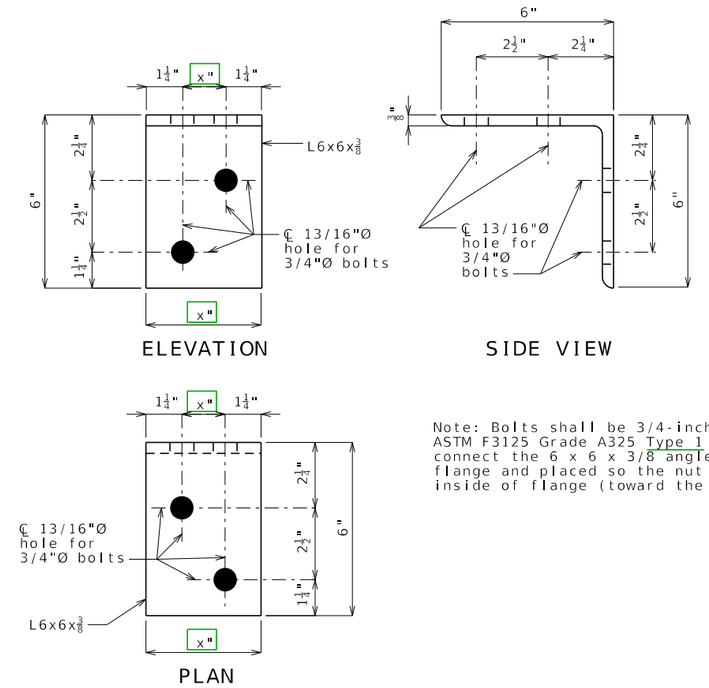

Note: Bolts shall be 3/4-inch diameter ASTM F3125 Grade A325 Type 1 Type 3 that ② connect the 6 x 6 x 3/8 angle to the top flange and placed so the nut is on the inside of flange (toward the web).

DETAIL OF FLANGE CONNECTION ANGLE

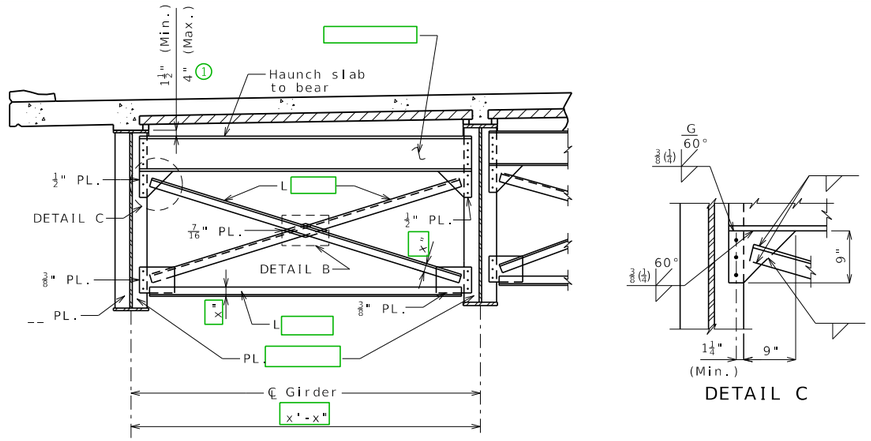

TYPICAL PART SECTION SHOWING END DIAPHRAGMS

Omit these details if End Diaphragms (slab haunched to bear) are not used.

DETAIL C

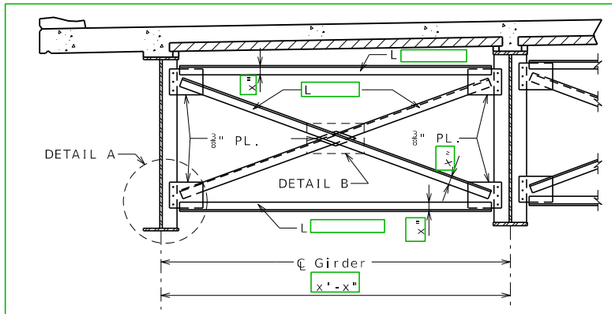

TYPICAL PART SECTION SHOWING CROSS FRAMES AND INTERMEDIATE DIAPHRAGMS

Replace these details with alternate details if flange connection angle is required by design.

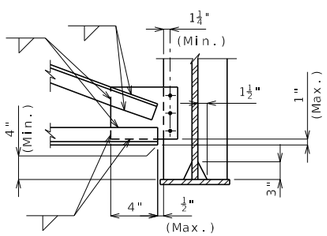

DETAIL A

(Bottom flange shown, top flange similar.)

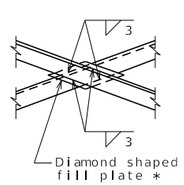

DETAIL B

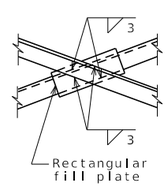

OPTIONAL DETAIL B

* At the contractor's option, rectangular fill plates may be used in lieu of diamond fill plates as shown in Optional Detail B.

Standard Drawing Guidance (do not show on plans):

Angle size should be shown without inch (") marks on the plans.

Do not show fillet weld size unless by design and size of weld exceeds Sec 1080.

Show specialty welds information as given unless by design.

Delete panels for CIP slab.

① Modify if necessary in accordance with EPG 751.14.5.4.

STEEL DIAPHRAGMS

Detailed
Checked

Note: This drawing is not to scale. Follow dimensions.

Sheet No. of

DATE PREPARED	10/13/2023
ROUTE	STATE MO
DISTRICT	SHEET NO. 13
COUNTY	
JOB NO.	
CONTRACT ID.	
PROJECT NO.	
BRIDGE NO.	

DATE	DESCRIPTION

MISSOURI HIGHWAYS AND TRANSPORTATION COMMISSION
105 WEST CAPITOL
JEFFERSON CITY, MO 65102
1-888-ASK-MODOT (1-888-275-6636)

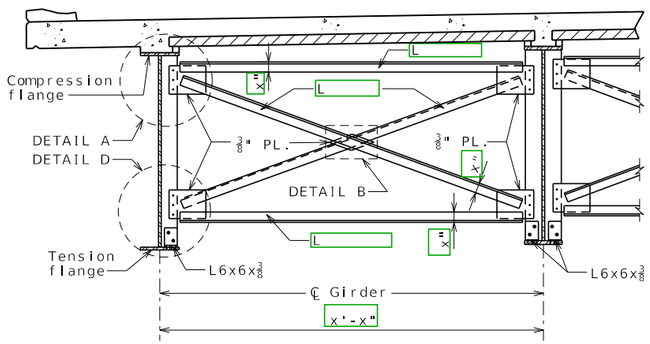

TYPICAL PART SECTION SHOWING
INTERMEDIATE DIAPHRAGMS
BOTTOM FLANGE IN TENSION

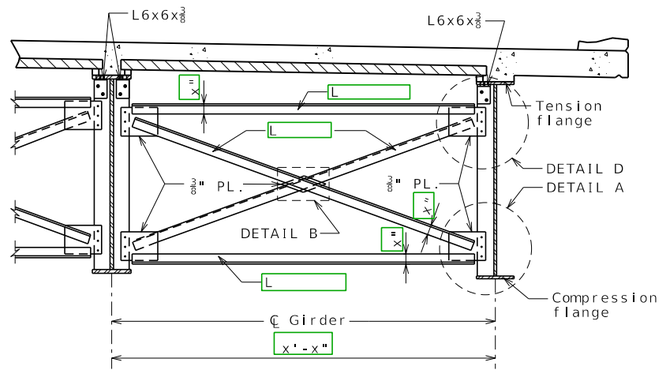

TYPICAL PART SECTION SHOWING
CROSS FRAMES AND
INTERMEDIATE DIAPHRAGMS
TOP FLANGE IN TENSION

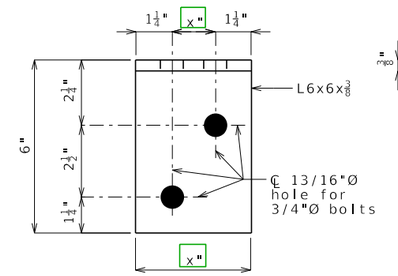

ELEVATION

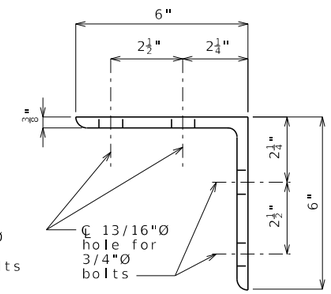

SIDE VIEW

Use these alternate details if Flange Connection Angle is required by design

② Use Type 3 for weathering steel bolted connections and Type 1 for painted or galvanized steel connections.

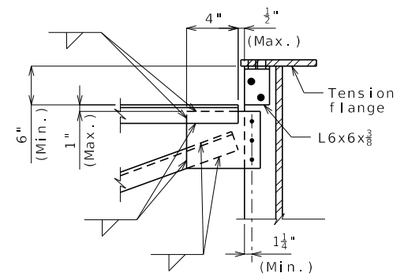

DETAIL D

(Top flange shown,
bottom flange similar.)

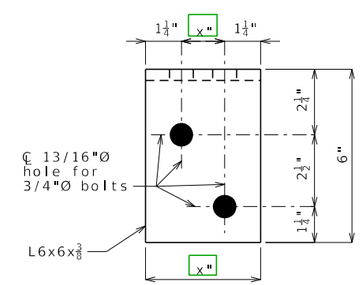

PLAN

Note: Bolts shall be 3/4-inch diameter ASTM F3125 Grade A325
② Type 1 Type 3 that connect the 6 x 6 x 3/8 angle to the top flange and placed so the nut is on the inside of flange (toward the web).

DETAIL OF FLANGE CONNECTION ANGLE

CONSTRUCTION SEQUENCE:

Construct end bent with anchor tees in place.

Construct deadman with anchor tees in place.

Machine compact fill up to elevation of __"Ø rod and turnbuckle.

Install __"Ø rod, clevis and turnbuckle assembly.

Tighten turnbuckle until snug.

Hand compact fill for 12" (Min.) over __"Ø rod and turnbuckle.

Machine compact remaining fill.

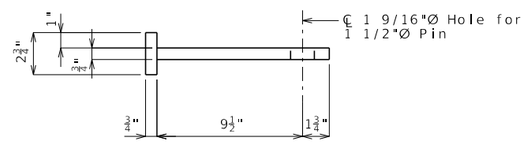

ELEVATION

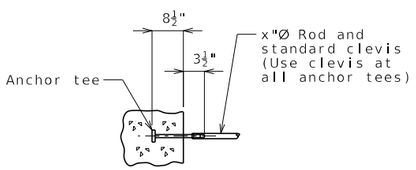

DETAIL B

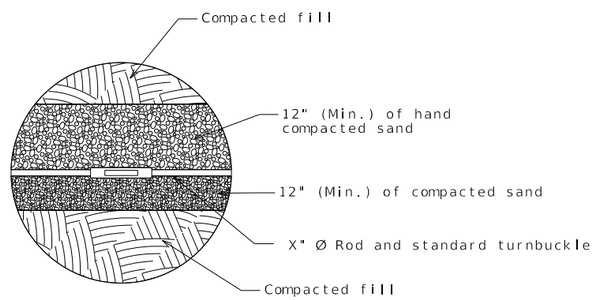

DETAIL C

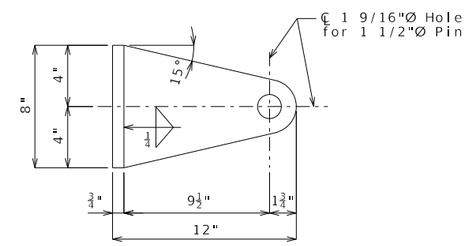

PLAN
DETAIL OF ANCHOR TEE

BILL OF REINFORCING STEEL EACH DEADMAN		
NUMBER	SIZE & MARK	LENGTH

Reinforcing steel lengths are based on nominal lengths, out to out.

All anchor tees, rods, clevises, turnbuckles, etc. shall be fabricated from ASTM A709 Grade 36, ASTM A668 Class F or equivalent steel and galvanized in accordance with Sec 1081. Shop drawings will not be required. All concrete shall be Class B. All reinforcing steel shall be Grade 60.

All metal members of the anchorage system not embedded in concrete shall be cleaned and receive a heavy coating of an approved bituminous paint.

Fine aggregate shall be in accordance with Sec 1005 and shall be placed below and above the rod and turnbuckles.

Payment for all materials, excavation, backfill and any other incidental work necessary to complete the Deadman Anchorage Assembly will be considered completely covered by the contract unit price per each.

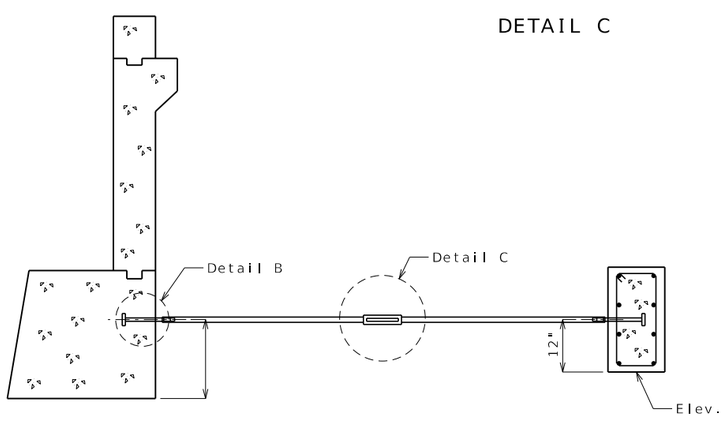

LOCATION OF ANCHOR TEES

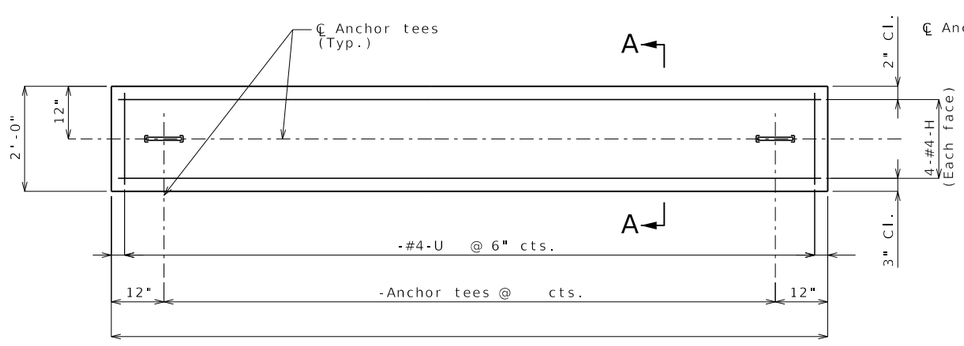

ELEVATION OF DEADMAN

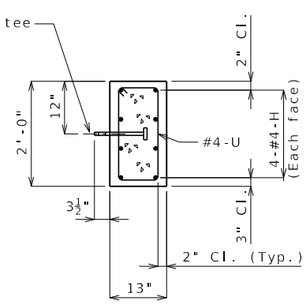

SECTION A-A

DETAILS OF DEADMAN ANCHORAGE SYSTEM

Detailed
Checked

Note: This drawing is not to scale. Follow dimensions.

Sheet No. of

DATE PREPARED	10/13/2023
ROUTE	STATE MO
DISTRICT	SHEET NO. 000
COUNTY	
JOB NO.	
CONTRACT ID.	
PROJECT NO.	
BRIDGE NO.	

DESCRIPTION | DATE

MISSOURI HIGHWAYS AND TRANSPORTATION COMMISSION
105 WEST CAPITOL
JEFFERSON CITY, MO 65102
1-888-ASK-MODOT (1-888-275-6636)

Standard Drawing Guidance (do not show on plans):

See EPG 751.14.5.9.1

Modify as required.

(1) Drip bars should be located between 5 feet from center of expansion device and 1 foot short of the end of the partial coating limit.

Details shown are for plate girder. For wide flange beam, change "Girder" to "Beam" (5 places).

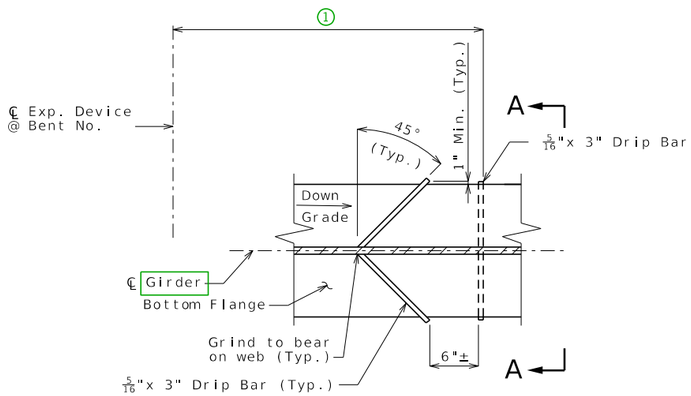

DRIP BAR DETAIL NEAR EXPANSION DEVICE

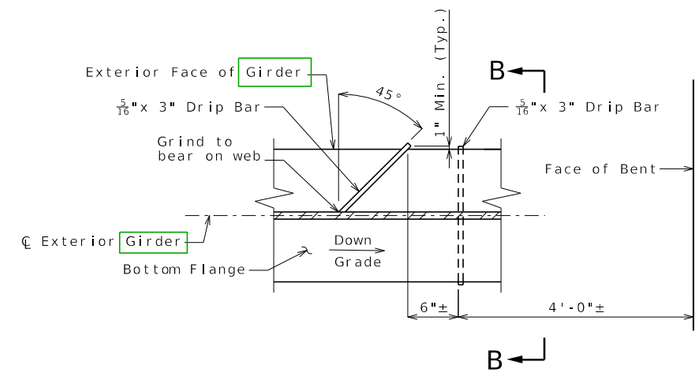

DRIP BAR DETAIL NEAR BENTS

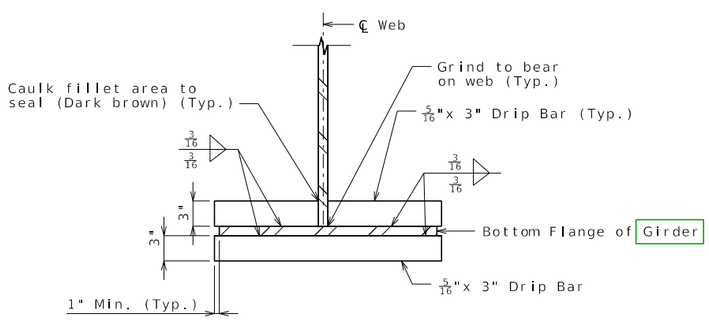

SECTION A-A

Standard Drawing Guidance (do not show on plans):

Use this detail near expansion device to deflect water away from girder.

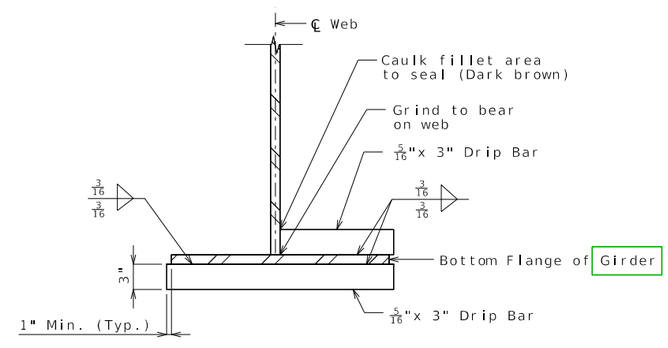

SECTION B-B

Standard Drawing Guidance (do not show on plans):

Use this detail near bent, on outside of exterior girder only, to deflect water away from bent.

Note:
Steel for drip bars shall be same grade as bottom flange.

Detailed
Checked

Note: This drawing is not to scale. Follow dimensions.

Sheet No. of

DATE PREPARED	10/13/2023
ROUTE	STATE MO
DISTRICT	SHEET NO. 1
COUNTY	
JOB NO.	
CONTRACT ID.	
PROJECT NO.	
BRIDGE NO.	

DESCRIPTION

DATE

MISSOURI HIGHWAYS AND TRANSPORTATION COMMISSION

105 WEST CAPITOL
JEFFERSON CITY, MO 65102
1-888-ASK-MODOT (1-888-275-6636)

Standard Drawing Guidance (do not show on plans):

Modify as required.

Bolted drip angles should only be used when welded drip bars cannot be used.

① Drip angles should be located between 5 feet from center of expansion device and 1 foot less from the end of the partial coating limit.

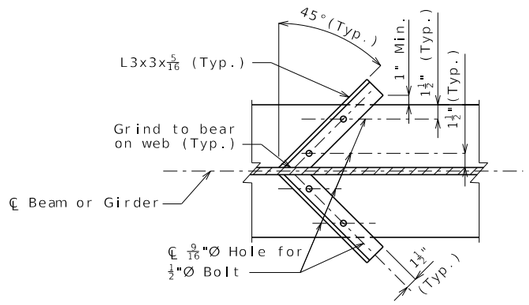

SECTION A-A

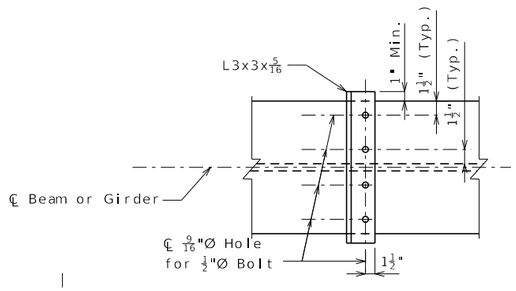

SECTION B-B

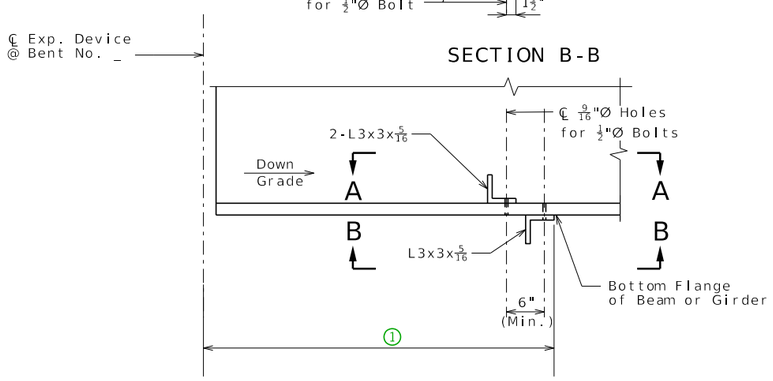

DRIP ANGLES DETAIL ____

Standard Drawing Guidance (do not show on plans):

Use this detail near expansion device.

Use this detail as shown to deflect water from girder.

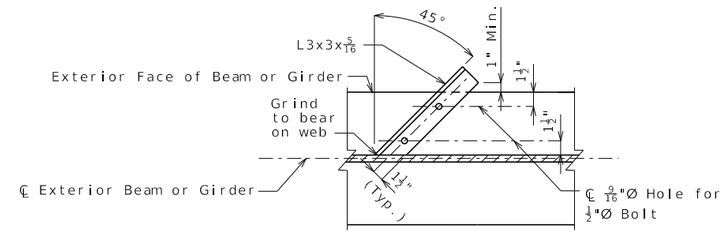

SECTION C-C

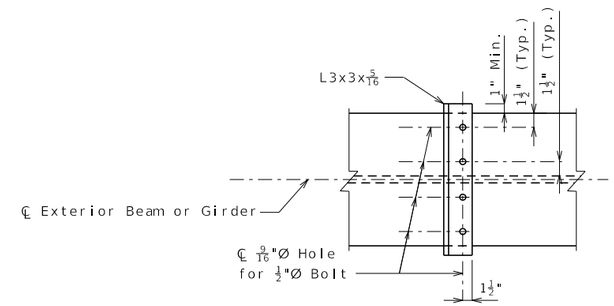

SECTION D-D

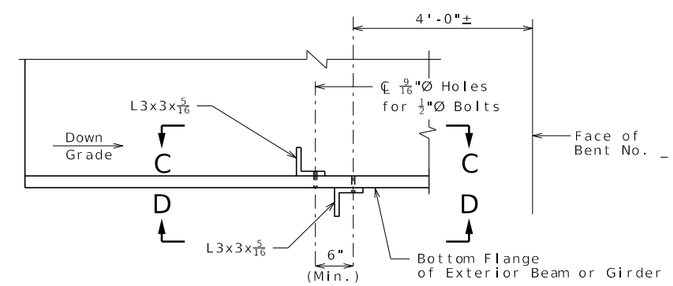

DRIP ANGLES DETAIL ____

Standard Drawing Guidance (do not show on plans):

Use this detail near bent.

Use this detail as shown to deflect water away from bent for exterior girder only.

Note:

Drip angles shall be caulked with dark brown caulking against flange, web and fillet welds.

Drip angles shall be same grade as bottom flange.

Use 1/2-inch diameter ASTM F3125 Grade A325 Type 3 for bolted connection.

DATE PREPARED	10/13/2023
ROUTE	STATE MO
DISTRICT	SHEET NO. 2
COUNTY	
JOB NO.	
CONTRACT ID.	
PROJECT NO.	
BRIDGE NO.	

DESCRIPTION

DATE

MISSOURI HIGHWAYS AND TRANSPORTATION COMMISSION

105 WEST CAPITOL
JEFFERSON CITY, MO 65102
1-888-ASK-MODOT (1-888-275-6636)

Detailed
Checked

Note: This drawing is not to scale. Follow dimensions.

Sheet No. of

Standard Drawing Guidance (do not show on plans):

Draw layout and provide numbering of shafts.

Combine with As-Built Pile Data if both piles and drilled shafts are shown on same sheet.

PART PLAN SHOWING DRILLED SHAFT NUMBERING FOR RECORDING AS-BUILT DRILLED SHAFT DATA

As-Built Drilled Shaft Data

Shaft No.	Top of Sound Rock (Elev.)	Tip of Casing (Elev.)	Bottom of Rock Socket (Elev.)	Remarks

Note:

This sheet to be completed by MoDOT construction personnel.

AS-BUILT DRILLED SHAFT DATA

Detailed
Checked

Note: This drawing is not to scale. Follow dimensions.

Sheet No. of

DATE PREPARED 10/16/2023

ROUTE | STATE MO

DISTRICT | SHEET NO. 000

COUNTY

JOB NO.

CONTRACT ID.

PROJECT NO.

BRIDGE NO.

DESCRIPTION

DATE

MISSOURI HIGHWAYS AND TRANSPORTATION COMMISSION

105 WEST CAPITOL
JEFFERSON CITY, MO 65102
1-888-ASK-MODOT (1-888-275-6636)

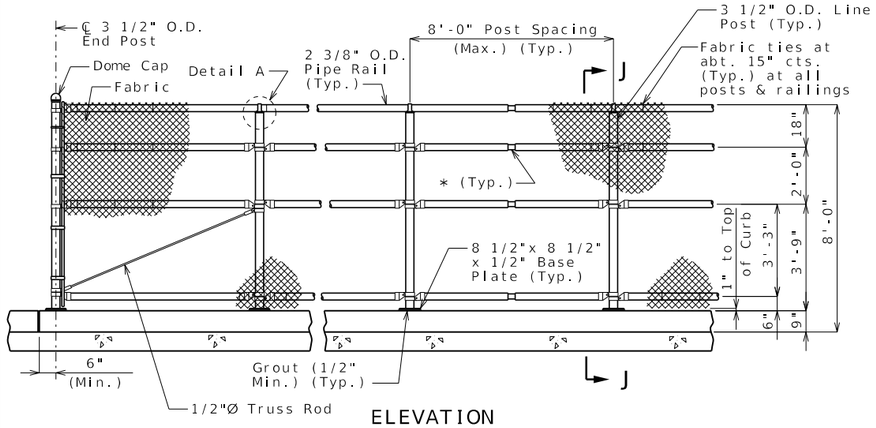

ELEVATION

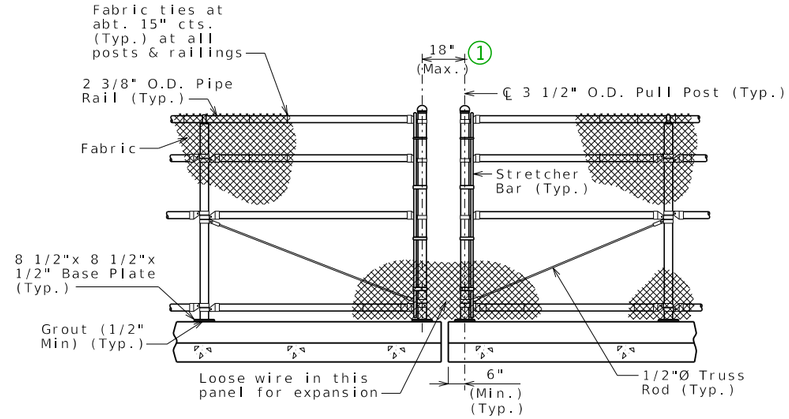

ELEVATION AT EXPANSION GAP

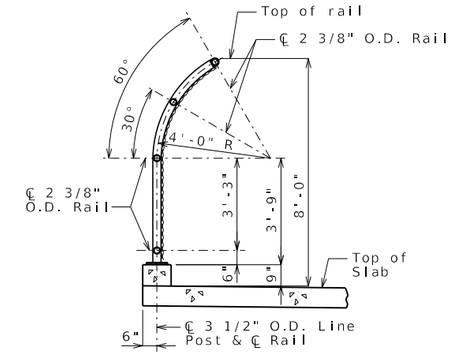

SECTION J-J

* 3/8" Gap for splice at about 30'-0" centers with at least one splice gap between pull or end posts.

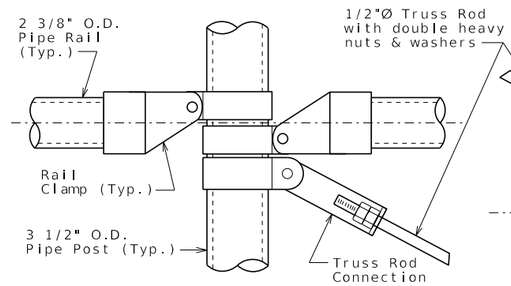

UPPER TRUSS ROD CONNECTION DETAIL

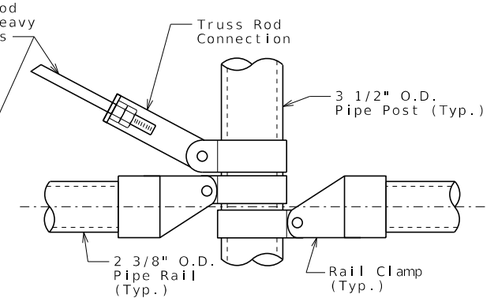

LOWER TRUSS ROD CONNECTION DETAIL

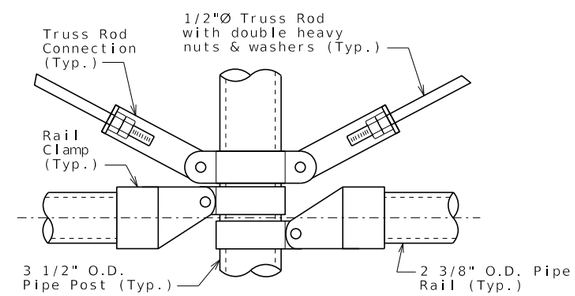

DUAL LOWER TRUSS ROD CONNECTION DETAIL

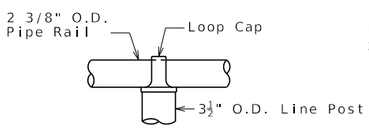

DETAIL A

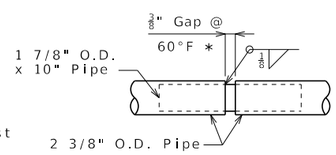

TYPICAL RAIL DETAIL AT SPLICE GAP

Note: At the contractor's option, manufacturer-approved expansion coupling may be used in lieu of detail shown. No additional payment will be made for this substitution.

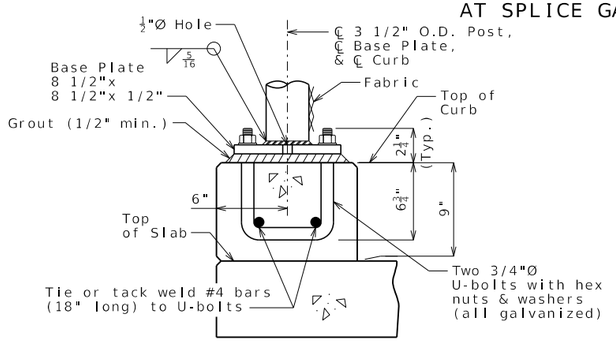

POST CONNECTION (TYPICAL)

Note: Base plate shall be welded to the post prior to galvanizing the post with base plate.

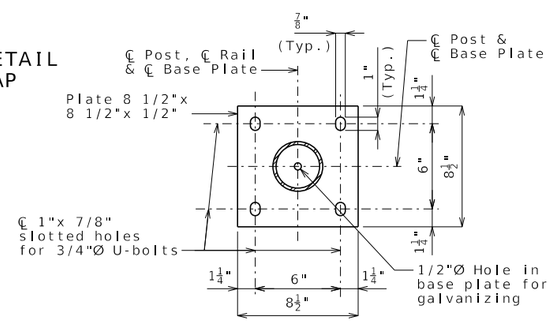

PLAN OF BASE PLATE

GENERAL NOTES:

Pedestrian chain link fence shall be in accordance with Sec 1043 except all fabric shall have the top and bottom edges knuckled and pipe members shall be in accordance with ASTM F1043, high strength grade (minimum yield = 50 ksi) heavy industrial steel pipe Group 1A.

All posts shall be vertical. Grout shall be placed under the post base plates in accordance with Sec 1066.

Payment for furnishing, galvanizing and erecting the fence and frame complete in place will be considered completely covered by the contract unit price for (120 in.) (96 in.) Curved Top Pedestrian Fence (Structures) per linear foot.

Dimensions of pedestrian chain link fence are measured horizontally.

The maximum spacing allowed between pull posts and end posts is 100 feet. Post brace and 1/2-inch diameter truss rod are required for panels adjacent to pull post and end posts only. Connect the lower end of truss rod to bottom of pull posts and end posts to which the stretcher bar is attached.

Rail clamps, dome cap, bands, tie wires, stretcher bars and truss rod connections shall be in accordance with the manufacturer's recommendations. The truss rod and truss rod connections shall have a minimum capacity of 2000 pounds. Dome cap shall fit tightly.

Expansion joints shall be placed in the horizontal pieces at not more than 30-foot centers and at all joint filler locations in the curb with a minimum gap of 3/8 inch at 60 degrees F.

Steel for truss rods shall be ASTM A709 Grade 36. Steel for base plates shall be ASTM A709 Grade 50.

(120 in.) (96 in.) Curved Top Pedestrian Fence (Structures) will be measured to the nearest linear foot for each structure, measured along the centerline fence from end of fence to end of fence.

Contractor shall submit complete detailed shop drawings in accordance with Sec 1080.

All base plates, U-bolts, hex nuts and washers shall be galvanized in accordance with ASTM A123 and Sec 1081.

U-bolts shall be ASTM F1554 Grade 36.

Chain link wire fabric shall be 9 gage minimum, 2-inch diamond mesh.

For details of pedestrian curb, see Sheet No. _.

The chain link fence shall be built in accordance with Sec 607 & Sec 1043.

PEDESTRIAN CHAIN LINK FENCE ON PEDESTRIAN CURB

DATE PREPARED	1/24/2025
ROUTE	STATE MO
DISTRICT	SHEET NO. 000
COUNTY	
JOB NO.	
CONTRACT ID.	
PROJECT NO.	
BRIDGE NO.	

DESCRIPTION | DATE

MISSOURI HIGHWAYS AND TRANSPORTATION COMMISSION
105 WEST CAPITOL
JEFFERSON CITY, MO 65102
1-888-ASK-MODOT (1-888-275-6636)

Detailed
Checked

Note: This drawing is not to scale. Follow dimensions.

Sheet No. of

Guidance and alternate details FEN01 (1 of 2)

Standard Drawing Guidance (Do not show on plans.):

Also include FEN03 (pedestrian curb) in plans.

1. For gaps more than 18" between posts, use the alternate detail, with expansion rails and 3' between posts & Detail B. This may conflict with any proposed expansion device; consult structural project manager.

2. For greater expansion length, consult the SPM and use alternate details.

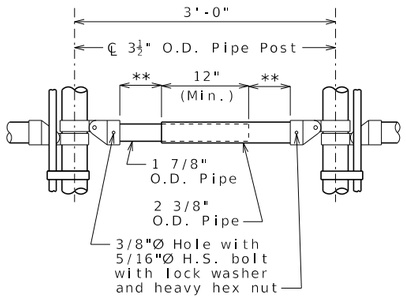

DETAIL B

** 3" min. gap at 60°F

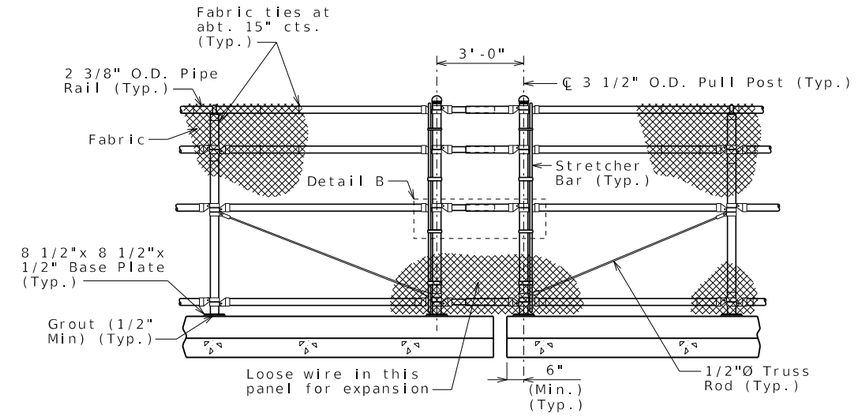

ELEVATION AT EXPANSION GAP

(CURVE-TOP)

Use for expansion length ≤ 125 feet for steel structure or ≤ 175 feet for concrete structure. 2

Alternate details FEN01 (2 of 2)

120 in. straight fence on pedestrian curb

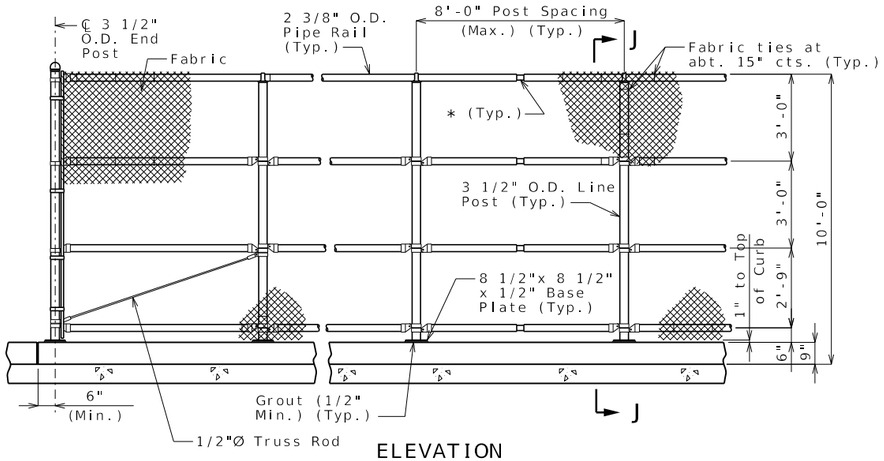

ELEVATION

* 3/8" Gap for splice at about 30'-0" centers with at least one splice gap between pull or end posts.

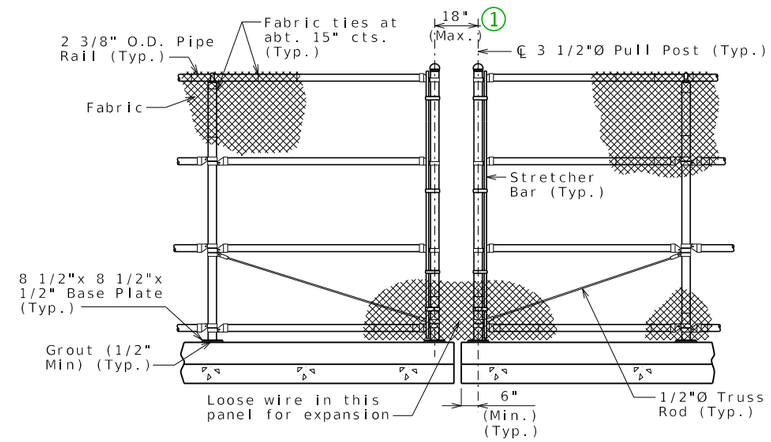

ELEVATION AT EXPANSION GAP

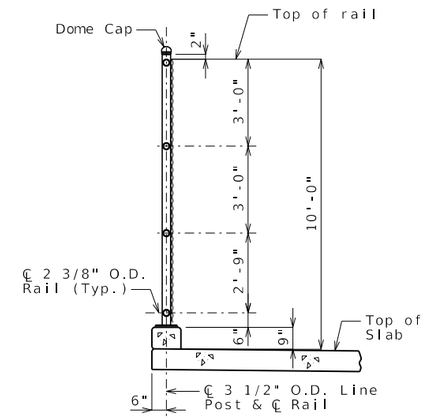

SECTION J-J

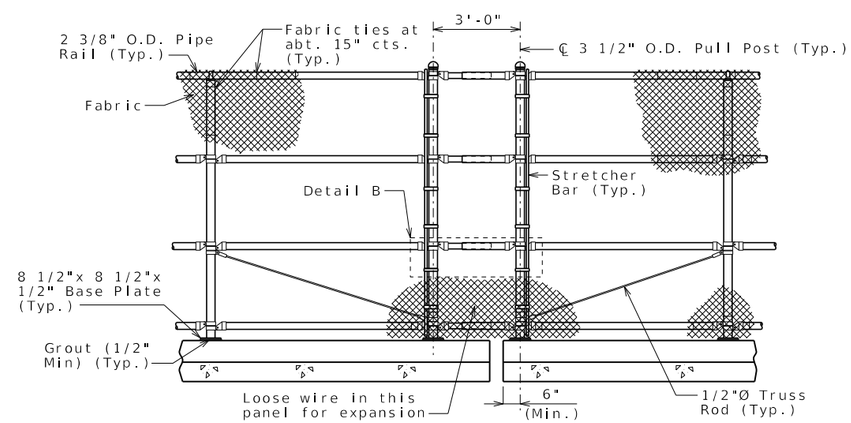

ELEVATION AT EXPANSION GAP

Use for expansion length ≤ 125 feet for steel structure or ≤ 175 feet for concrete structure. ②

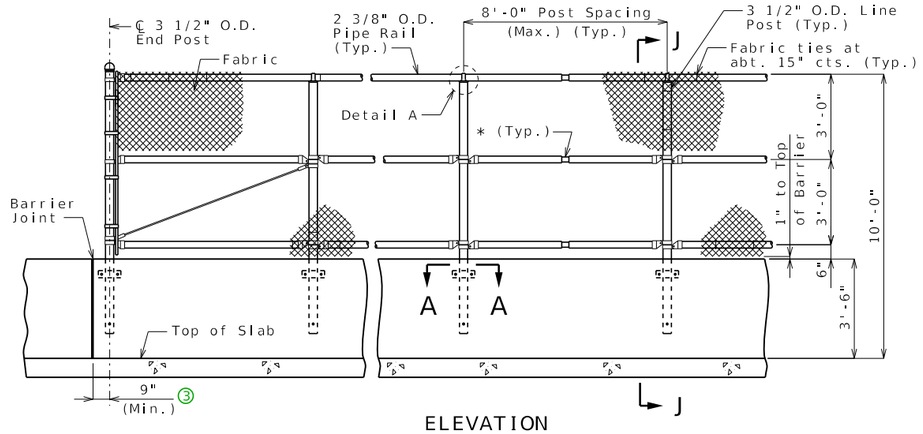

ELEVATION

* 3/8" Gap for splice at about 30'-0" centers with at least one splice gap between pull or end posts.

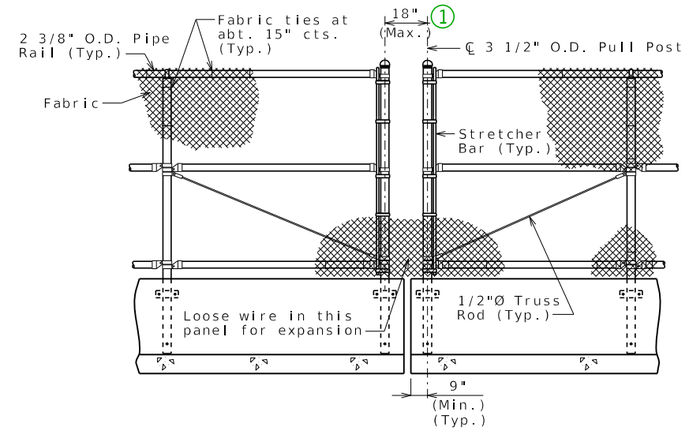

ELEVATION AT EXPANSION GAP

(Type H barrier shown, Type D barrier similar)

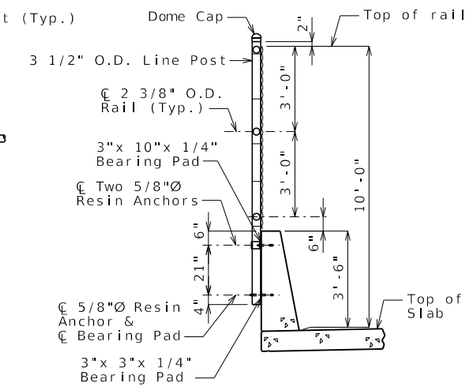

SECTION J-J
(TYPE D BARRIER)

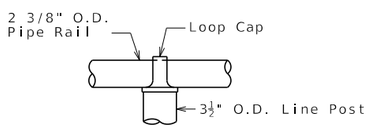

DETAIL A

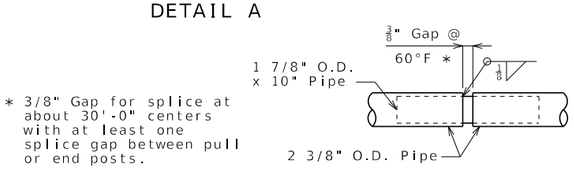

* 3/8" Gap for splice at about 30'-0" centers with at least one splice gap between pull or end posts.

TYPICAL RAIL DETAIL
AT SPLICE GAP

Note: At the contractor's option, manufacturer-approved expansion coupling may be used in lieu of detail shown. No additional payment will be made for this substitution.

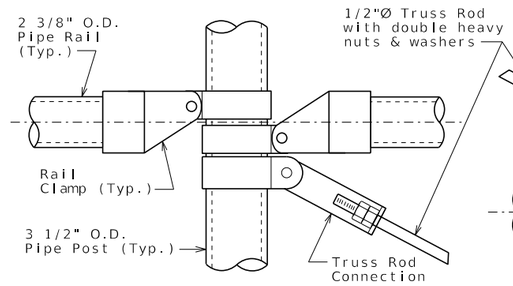

UPPER TRUSS ROD
CONNECTION DETAIL

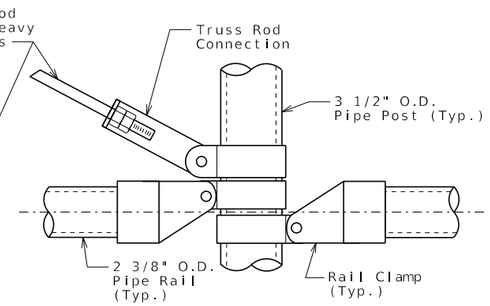

LOWER TRUSS ROD
CONNECTION DETAIL

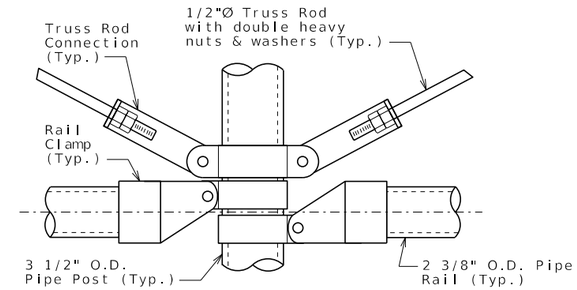

DUAL LOWER TRUSS ROD
CONNECTION DETAIL

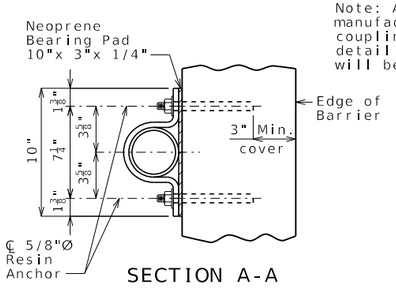

SECTION A-A

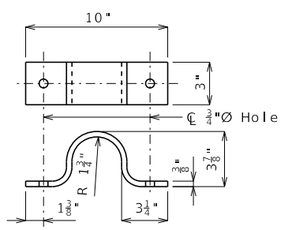

STRAP DETAIL

GENERAL NOTES:

Pedestrian chain link fence shall be in accordance with Sec 1043 except all fabric shall have the top and bottom edges knuckled and pipe members shall be in accordance with ASTM F1043, high strength grade (minimum yield = 50 ksi) heavy industrial steel pipe Group 1A.

All posts shall be vertical.

Payment for furnishing, galvanizing and erecting the fence and frame complete in place will be considered completely covered by the contract unit price for (120 in.) Pedestrian Fence (Structures) per linear foot.

Dimensions of pedestrian chain link fence are measured horizontally.

The maximum spacing allowed between pull posts and end posts is 100 feet. Post brace and 1/2-inch diameter truss rod are required for panels adjacent to pull post and end posts only. Connect the lower end of truss rod to bottom of pull posts and end posts to which the stretcher bar is attached.

Rail clamps, dome cap, bands, tie wires, stretcher bars and truss rod connections shall be in accordance with the manufacturer's recommendations. The truss rod and truss rod connections shall have a minimum capacity of 2000 pounds. Dome cap shall fit tightly.

Expansion joints shall be placed in the horizontal pieces at not more than 30-foot centers and at all joint filler locations in the barrier with a minimum gap of 3/8 inch at 60 degrees F.

Steel for truss rods shall be ASTM A709 Grade 36. Steel for post straps shall be ASTM A709 Grade 50. Neoprene bearing pads shall be 50 durometer and shall be in accordance with Sec 716.

Contractor shall submit complete detailed shop drawings in accordance with Sec 1080.

All straps, resin anchors, hex nuts and washers shall be galvanized in accordance with ASTM A123 and Sec 1081.

Resin anchors shall be ASTM F1554 Grade 36.

The contractor shall use one of the qualified resin anchor systems in accordance with Sec 1039.

Cost of furnishing and installing the resin anchor systems, complete in place, will be considered completely covered by the contract unit price for (120 in.) Pedestrian Fence (Structures).

The minimum embedment depth in concrete with f'c = 4,000 psi for the resin anchor systems shall be that required to meet the minimum ultimate pullout strength in accordance with Sec 1039 but shall not be less than 5 inches.

(120 in.) Pedestrian Fence (Structures) will be measured to the nearest linear foot for each structure, measured along the centerline fence from end of fence to end of fence.

Chain link wire fabric shall be 9 gage minimum, 2-inch diamond mesh.

The chain link fence shall be built in accordance with Sec 607 and Sec 1043.

For details of barrier, see Sheet No. __.

PEDESTRIAN CHAIN LINK FENCE ON FACE OF BARRIER

Detailed
Checked

Note: This drawing is not to scale. Follow dimensions. Sheet No. of

DATE PREPARED	1/24/2025
ROUTE	STATE MO
DISTRICT	SHEET NO. 000
COUNTY	
JOB NO.	
CONTRACT ID.	
PROJECT NO.	
BRIDGE NO.	

DESCRIPTION

DATE

MISSOURI HIGHWAYS AND TRANSPORTATION COMMISSION
105 WEST CAPITOL
JEFFERSON CITY, MO 65102
1-888-ASK-MODOT (1-888-275-6636)

Guidance & Alternate details FEN02 (1 of 1)

Standard Drawing Guidance (Do not show on plans.):

1. For gaps more than 18" between posts, use the alternate detail, with expansion rails and 3' between posts & Detail B. This may conflict with any proposed expansion device; consult structural project manager.
2. For greater expansion length, consult the SPM and use alternate details.
3. 9" min. from barrier joint. 4'-0" min. from end of Type H barrier; 8'-0" min. from end of Type D barrier. If a shorter distance is needed, details may need to be modified to clear guardrail attachment anchors.

Include these notes on the barrier sheet:

For details of pedestrian chain link fence, see Sheet No. __.

Reinforcing steel shall be shifted in the field to clear resin anchors for chain link fence.

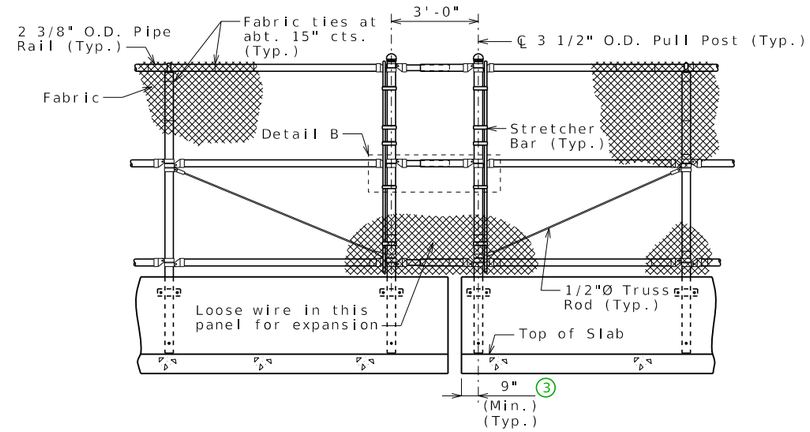

ELEVATION AT EXPANSION GAP②

(Type H barrier shown, Type D barrier similar)

Use for expansion length ≤ 125 feet for steel structure or ≤ 175 feet for concrete structure.

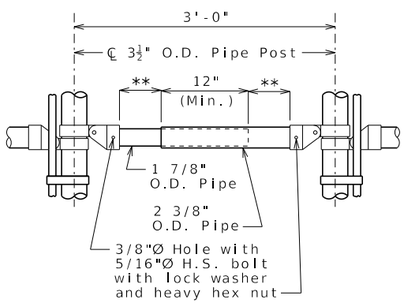

DETAIL B

** 3" Min. gap at 60°F

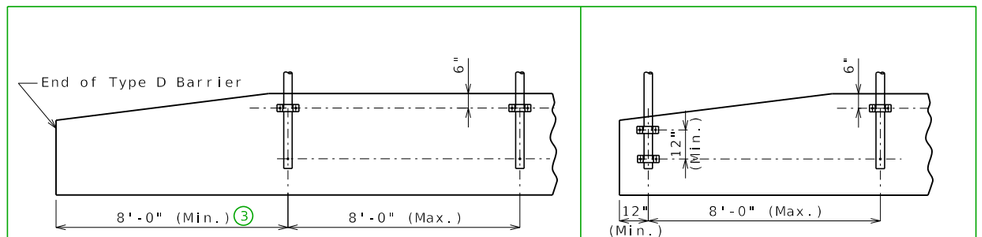

TYPE D BARRIER END (PREFERRED)

TYPE D BARRIER END

Alternate details for Type H Barrier

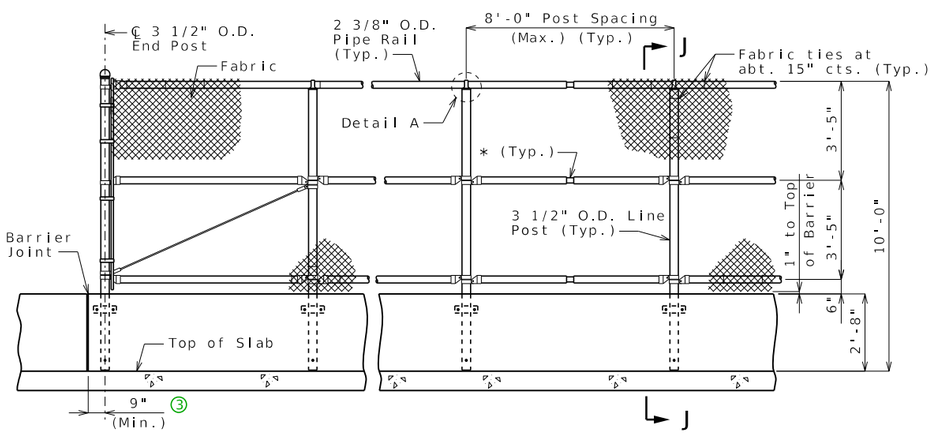

ELEVATION

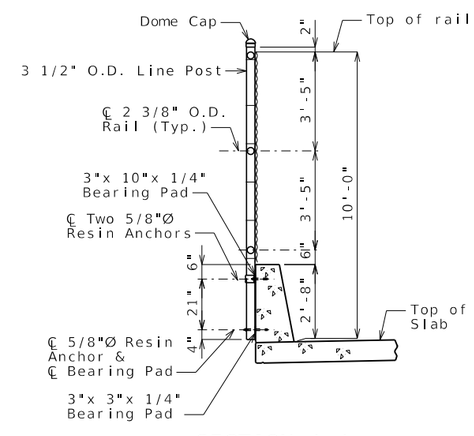

SECTION J-J
(TYPE H BARRIER)

In the available space, draw the plan of the left barrier showing:
- Span ranges.
- Provide joints similar to those used in barriers.
- All horizontal #4-R bars in each span, with bar marks.
- First & last #4-R stirrup bars @ about 12" centers, dimensioned with total number in curb.
- Ends of slab
- Fence post spacing "per manufacturer". (6" min. from joints and ends.)
- All joints and centerlines with one centerline labeled as:

℄ ¼" Joint (Curb only) (Typ.)

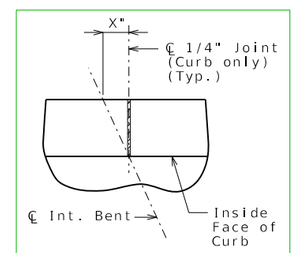

PART PLAN SHOWING JOINT LOCATION

For skewed structures only. Remove for squared bridges.

Optional: Show this dimension on Plan and remove this detail.

PLAN SHOWING PEDESTRIAN CURB

Left side shown, right side similar

Longitudinal dimensions are horizontal.

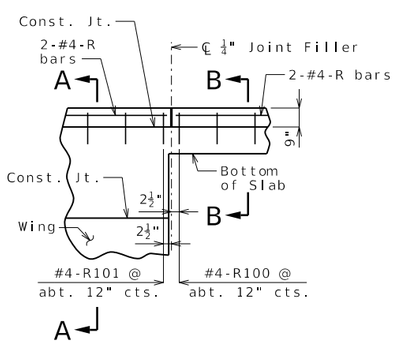

PART ELEVATION OF PEDESTRIAN CURB AT END BENT

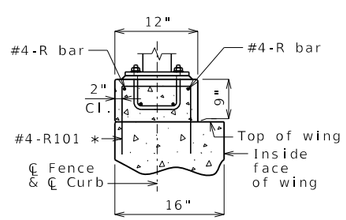

SECTION A-A

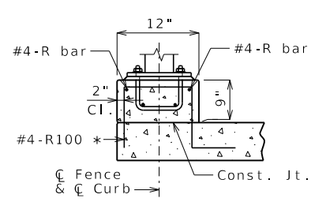

SECTION B-B

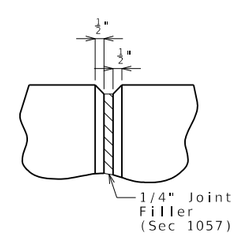

PART ELEVATION AT CURB JOINT

* Shift in field to clear U-bolts.

Notes:

Top of curb shall be built parallel to grade and curb joints (except at end bents) normal to grade.

All exposed edges of curb shall have either a 1/2-inch radius or a 3/8-inch bevel, unless otherwise noted.

Payment for all concrete and reinforcement, complete in place, will be considered completely covered by the contract unit price for Pedestrian Curb per linear foot.

Concrete in curb shall be Class B-1.

Measurement of pedestrian curb is to the nearest linear foot for each structure, measured along the outside top of curb from end of curb to end of curb.

Center of posts shall clear curb joints or ends by at least 6 inches.

Minimum lap for longitudinal R-bars is 2'-7".

Slab reinforcement not shown for clarity.

For details of pedestrian chain link decorative pedestrian fence, see Sheet No. .

PEDESTRIAN CURB

Detailed
Checked

Note: This drawing is not to scale. Follow dimensions.

Sheet No. of

DATE PREPARED 1/24/2025

ROUTE	STATE MO
DISTRICT	SHEET NO. 2

COUNTY

JOB NO.

CONTRACT ID.

PROJECT NO.

BRIDGE NO.

DESCRIPTION	DATE

MISSOURI HIGHWAYS AND TRANSPORTATION COMMISSION
105 WEST CAPITOL
JEFFERSON CITY, MO 65102
1-888-ASK-MODOT (1-888-275-6636)

Notes:

These details are a general representation of a Decorative Pedestrian Fence. The actual fence components and component positions may be different than what is shown.

Fence shall have a gloss black finish (Federal Standard #17038). See special provisions.

Base plate shall be ASTM A709, Grade 50.

All base plates, U-bolts, hex nuts and washers shall be galvanized in accordance with ASTM A123 and Sec 1081.

Measurement of decorative pedestrian fence will be made horizontally and to the nearest linear foot along centerline fence.

Payment for furnishing and erecting the fence complete in place will be considered completely covered by the contract unit price for (in.) Decorative Pedestrian Fence (Structures).

All fence posts shall be vertical.

Grout shall be placed under the post base plates in accordance with Sec 1066.

Decorative pedestrian fencing shall be in accordance with 2020-AASHTO LRFD Bridge Design Specifications, 9th Ed.

Shop drawings and structural calculations will not be required for the decorative pedestrian fences on the Bridge Pre-qualified Products List.

All materials used in fabrication and construction of the decorative pedestrian fencing shall be in accordance with the manufacturer's specifications, except as modified in the contract documents.

Decorative pedestrian fencing system shall be supplied by only one manufacturer. Decorative pedestrian fencing system shall include all components except the U-bolts, hardware, and #4 bars welded to the U-bolts. The assembly of the pickets to the rails and the rails to the posts shall be the same as the style mentioned for the manufacturer.

See Bridge Pre-qualified Products List (BPPL) for a list of approved manufacturers.

Substitution for the U-bolt cages will not be permitted.

U-bolts shall be ASTM F1554 Grade 36.

For details of pedestrian curb, see Sheet No. .

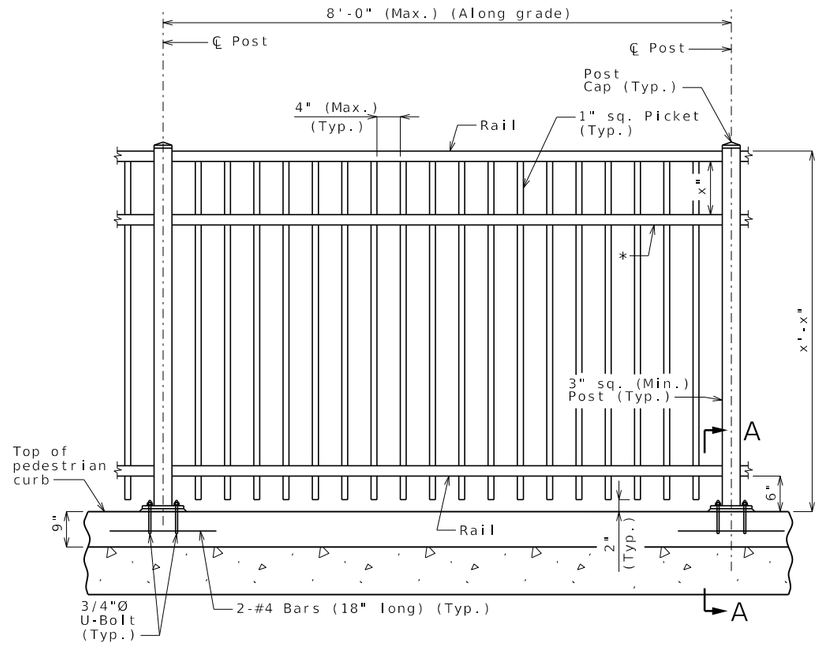

TYPICAL PART ELEVATION

* Optional rail. Need is based on design computations performed by the manufacturer and approved by MoDOT, or may be added for aesthetics.

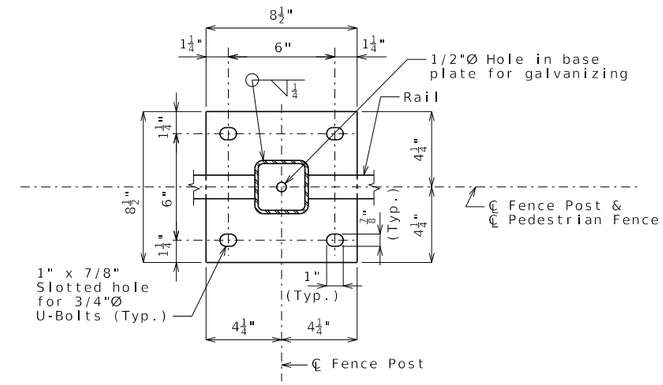

PART PLAN SHOWING BASE PLATE

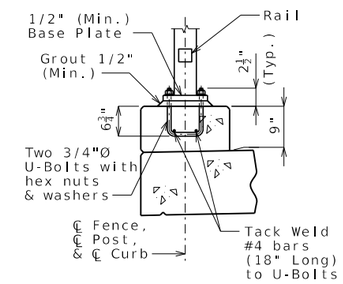

SECTION A-A

1/2-inch diameter hole in base plate not shown for clarity.

Standard Drawing Guidance:

(Do not show on plans.)

Note on plans that longitudinal dimensions of fence are horizontal.

Modify detail and notes as necessary per project requirements. Details are shown for decorative fence on pedestrian curb. Use alternate details for decorative fence on Type H barrier.

DATE PREPARED	1/24/2025
ROUTE	STATE MO
DISTRICT	SHEET NO. 3
COUNTY	
JOB NO.	
CONTRACT ID.	
PROJECT NO.	
BRIDGE NO.	

DESCRIPTION

DATE

MISSOURI HIGHWAYS AND TRANSPORTATION COMMISSION

105 WEST CAPITOL
JEFFERSON CITY, MO 65102
1-888-ASK-MODOT (1-888-275-6636)

DECORATIVE PEDESTRIAN FENCE WITH U-BOLTS

Detailed
Checked

Note: This drawing is not to scale. Follow dimensions.

Sheet No. of

FEN04 Alternate Details

On Type H Barrier

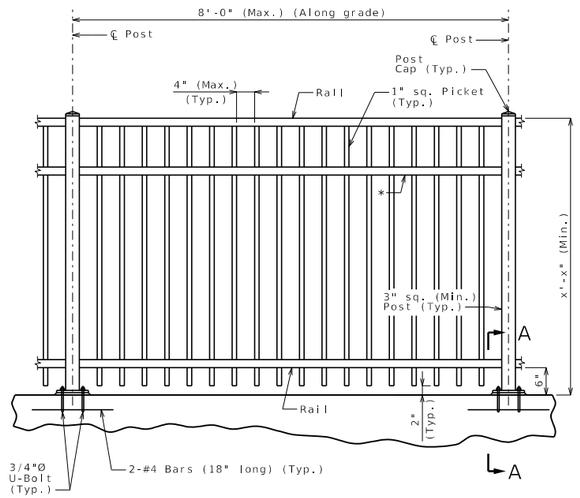

TYPICAL PART ELEVATION

* Optional rail. Need is based on design computations performed by the manufacturer and approved by MoDOT, or may be added for aesthetics.

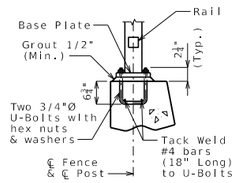

SECTION A-A

1/2-inch diameter hole in base plate not shown for clarity.

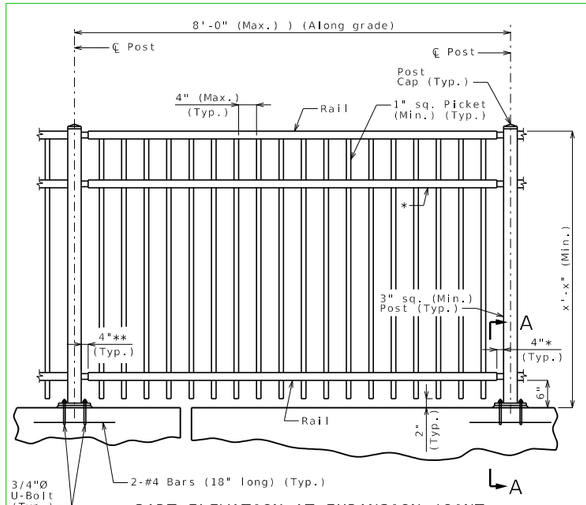

PART ELEVATION AT EXPANSION JOINT SHOWING EXPANSION PANEL

* Optional rail. Need is based on design computations performed by the manufacturer and approved by MoDOT, or may be added for aesthetics.

** Connection shall allow 4" movement.

Use this detail when an expansion joint is used.

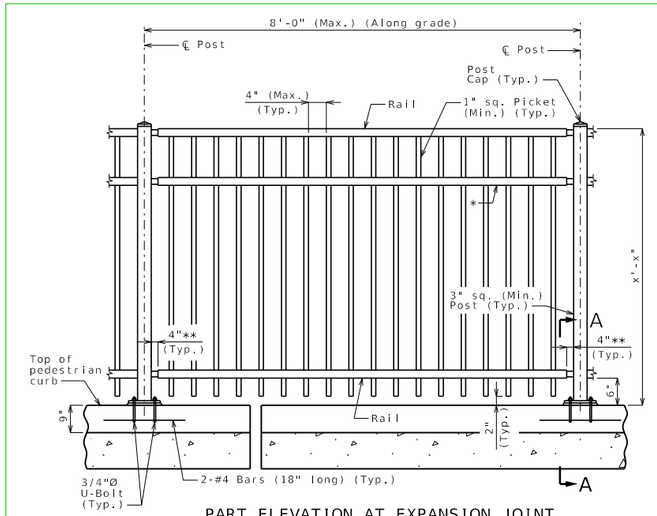

PART ELEVATION AT EXPANSION JOINT SHOWING EXPANSION PANEL

* Optional rail. Need is based on design computations performed by the manufacturer and approved by MoDOT, or may be added for aesthetics.

** Connection shall allow 4" movement.

Include this detail when an expansion joint is used (on curb).

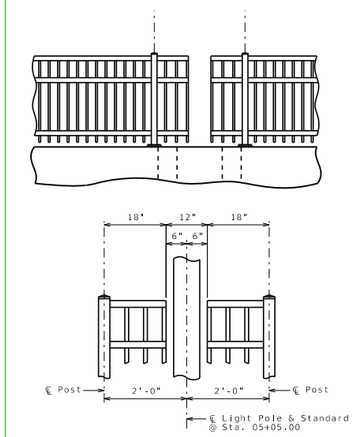

TYPICAL DETAIL OF FENCE AT LIGHT STANDARDS

LIGHT STANDARDS

Notes:

These details are a general representation of a Decorative Pedestrian Fence. The actual fence components and component positions may be different than what is shown.

Fence shall have a gloss black finish (Federal Standard #17038). See special provisions.

Connection angle shall be ASTM A709, Grade 50.

All connection angles, resin anchors, hex nuts and washers shall be galvanized in accordance with ASTM A123 and Sec 1081.

Measurement of decorative pedestrian fence will be made horizontally and to the nearest linear foot along centerline fence.

Payment for furnishing and erecting the fence complete in place will be considered completely covered by the contract unit price for (in.) Decorative Pedestrian Fence (Structures).

All fence posts shall be vertical.

Grout shall be placed under the post connection angles (horizontal leg) in accordance with Sec 1066.

Decorative pedestrian fencing shall be in accordance with 2020-AASHTO LRFD Bridge Design Specifications, 9th Ed.

Shop drawings and structural calculations will not be required for the decorative pedestrian fences on the Bridge Pre-qualified Products List.

All materials used in fabrication and construction of the decorative pedestrian fencing shall be in accordance with the manufacturer's specifications, except as modified in the contract documents.

Decorative pedestrian fencing system shall be supplied by only one manufacturer. Decorative pedestrian fencing system shall include all components except the resin anchors and hardware. The assembly of the pickets to the rails and the rails to the posts shall be the same as the style mentioned for the manufacturer.

See Bridge Pre-qualified Products List (BPPL) for a list of approved manufacturers.

For details of barrier, see Sheet No. .

Resin Anchor Notes:

Resin anchors shall be ASTM F1554 Grade 36.

The contractor shall use one of the qualified resin anchor systems in accordance with Sec 1039.

Cost of furnishing and installing the resin anchor systems, complete in place, will be considered completely covered by the contract unit price for Decorative Pedestrian Fence.

The minimum embedment depth in concrete with f'c = 4,000 psi for the resin anchor systems shall be that required to meet the minimum ultimate pullout strength in accordance with Sec 1039 but shall not be less than 5 inches.

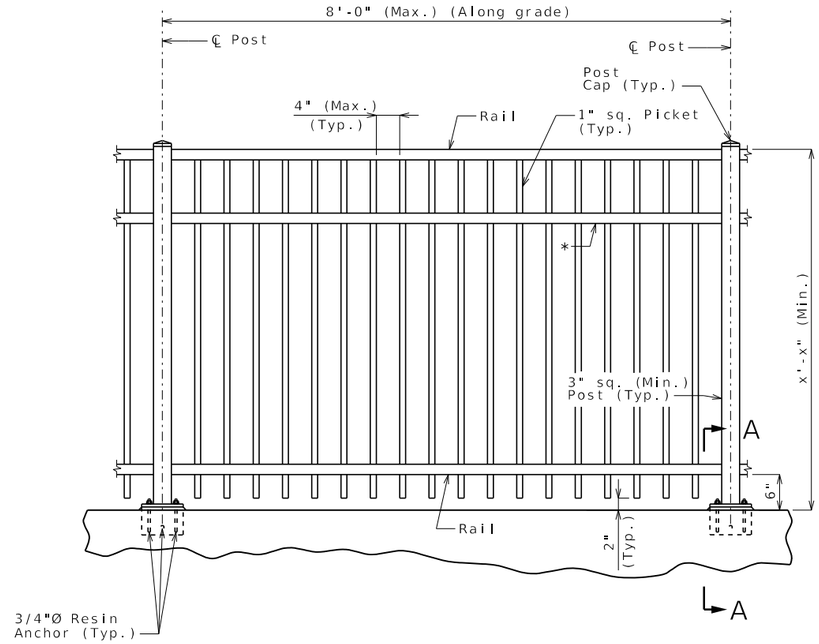

TYPICAL PART ELEVATION

* Optional rail. Need is based on design computations performed by the manufacturer and approved by MoDOT, or may be added for aesthetics.

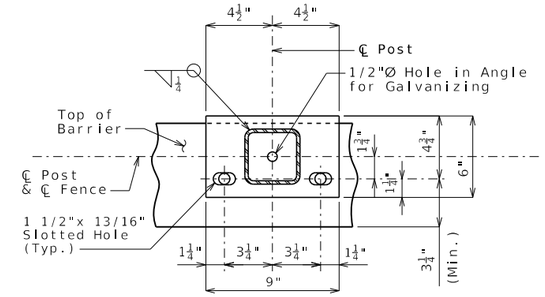

PART PLAN SHOWING CONNECTION ANGLE

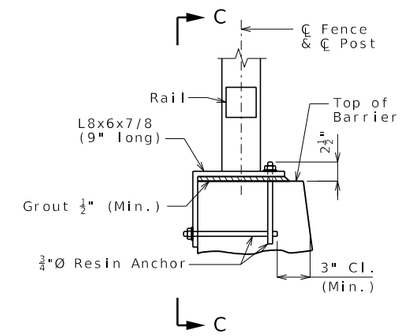

SECTION A-A

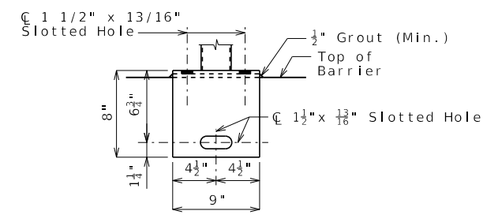

ELEVATION C-C

1/2-inch diameter hole in connection angle not shown for clarity.

Standard Drawing Guidance:

(Do not show on plans.)

Note on plans that longitudinal dimensions of fence are horizontal.

Modify detail and notes as necessary per project requirements.

Include these notes on the barrier sheet:

For details of decorative pedestrian fence, see sheet No. _.

Reinforcing steel shall be shifted in the field to clear resin anchors for decorative fence.

DATE PREPARED	11/14/2025
ROUTE	STATE MO
DISTRICT	SHEET NO. 3
COUNTY	
JOB NO.	
CONTRACT ID.	
PROJECT NO.	
BRIDGE NO.	

DESCRIPTION

DATE

MISSOURI HIGHWAYS AND TRANSPORTATION COMMISSION

105 WEST CAPITOL
JEFFERSON CITY, MO 65102
1-888-ASK-MODOT (1-888-275-6636)

DECORATIVE PEDESTRIAN FENCE WITH RESIN ANCHORS

Detailed
Checked

Note: This drawing is not to scale. Follow dimensions.

Sheet No. of

FEN05 Alternate Details

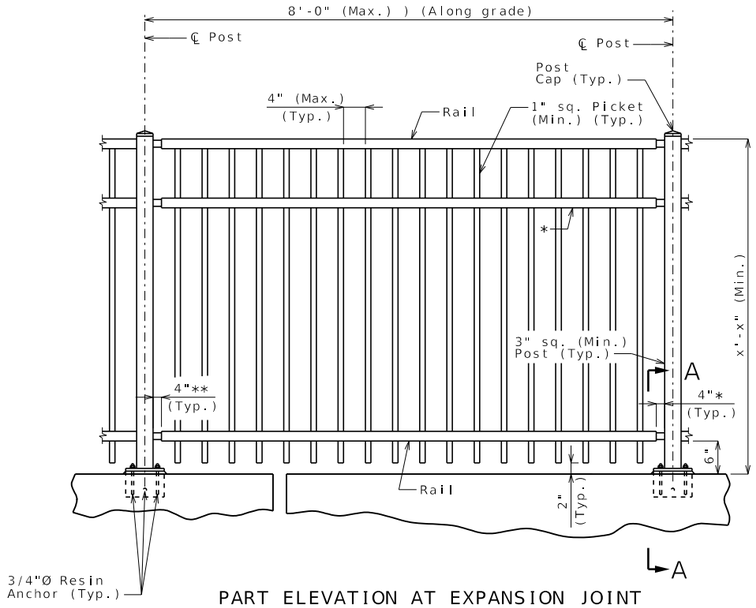

PART ELEVATION AT EXPANSION JOINT
SHOWING EXPANSION PANEL

* Optional rail. Need is based on design computations performed by the manufacturer and approved by MoDOT, or may be added for aesthetics.

** Connection shall allow 4" movement.

Use this detail when an expansion joint is used.

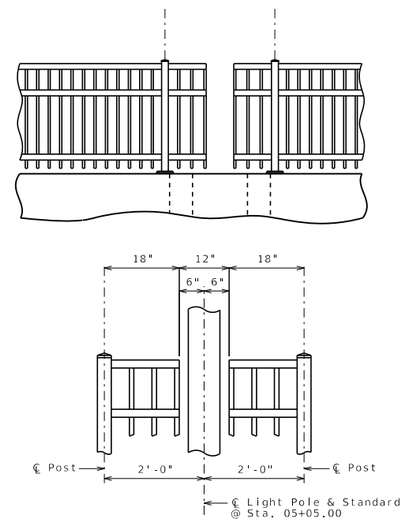

TYPICAL DETAIL OF FENCE
AT LIGHT STANDARDS

LIGHT STANDARDS

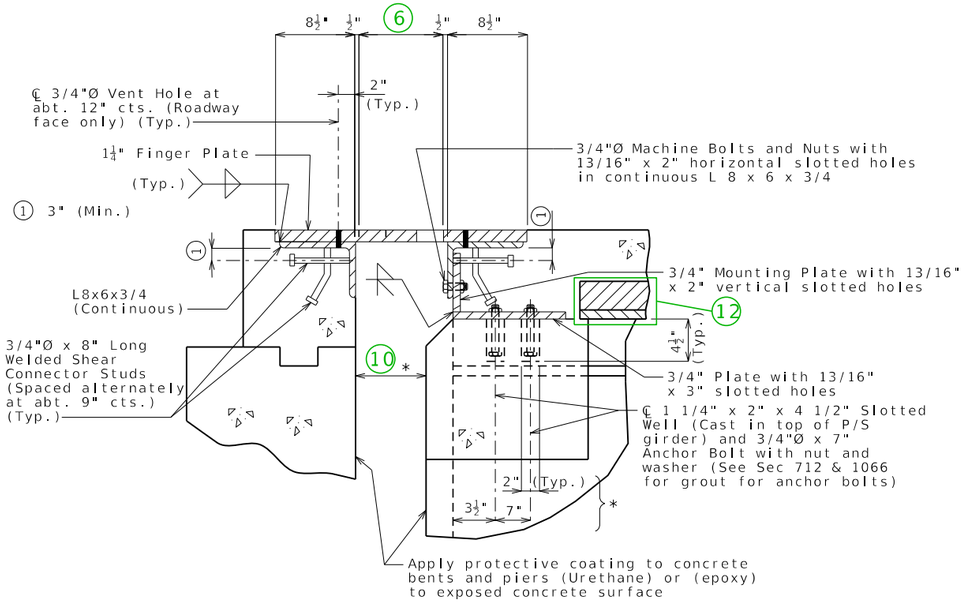

SECTION THRU DEVICE

* Dimensions along ℄ Girder

Note:
Concrete shall be forced under and around finger plate supporting hardware, anchors, angles and bars. Proper consolidation shall be achieved by localized internal vibration.

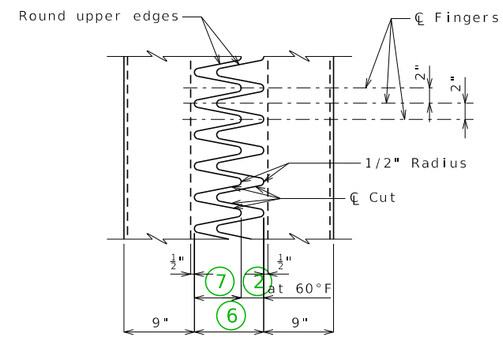

PART PLAN OF FINGER PLATE

GENERAL NOTES:

Finger plate shall be cut with a machine guided gas torch from one plate. The plate from which fingers are cut may be spliced before fingers are cut. The surface of cut shall be perpendicular to the surface of the plate. The cut shall not exceed 1/8" in width. The centerline of cut shall not deviate more than 1/16" from the position of centerline of cut shown. No splicing of finger plate or finger plate assembly will be allowed after fingers are cut. The expansion device shall be fabricated and installed to the crown and grade of the roadway.

Plan dimensions are based on installation at 60°F. The expansion gap and other dimensions shall be increased or decreased [ ] for each 10° fall or rise in temperature at installation. 4

Material for the expansion device shall be ASTM A709 Grade 36 structural steel. Anchors for the expansion device shall be in accordance with Sec 1037.

Structural steel for the expansion device and barrier plate shall be coated with a minimum of two coats of inorganic zinc primer to provide a total dry film thickness of 4 mils minimum, 6 mils maximum, or galvanized in accordance with ASTM A123. Anchors need not be protected from overspray.

Payment for furnishing, coating or galvanizing and installing the structural steel for the expansion device will be considered completely covered by the contract unit price for Expansion Device (Finger Plate) per linear foot.

Longitudinal reinforcing steel shall be placed so that ends shall not be more than ±1" from the 3/4" vertical mounting plate at the expansion device.

Complete joint penetration welds utilized in the fabrication of the expansion device shall be nondestructively tested by an approved method.

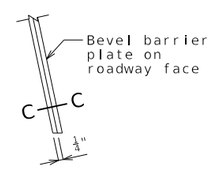

PART ELEVATION AT END OF BARRIER PLATE

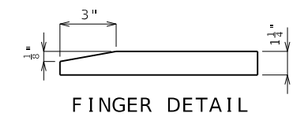

FINGER DETAIL

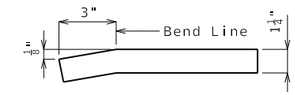

OPTIONAL FINGER DETAIL

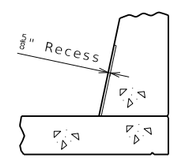

SECTION B-B

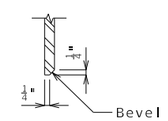

SECTION C-C

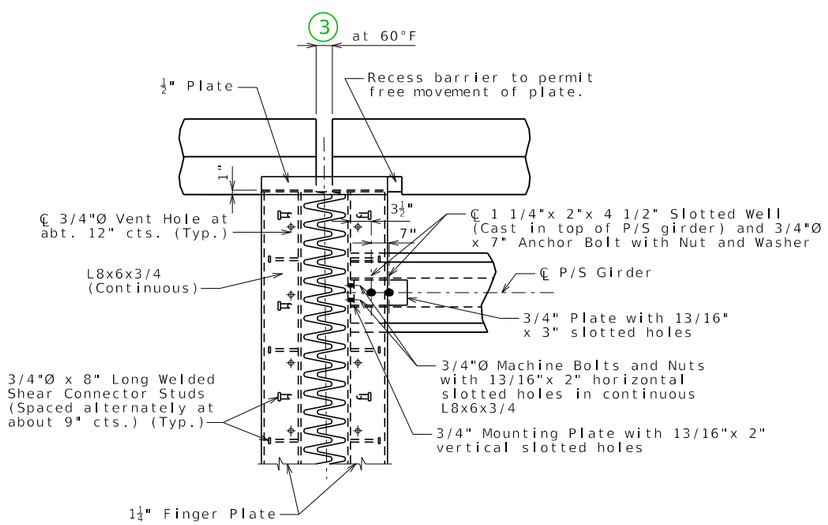

PART PLAN OF DEVICE

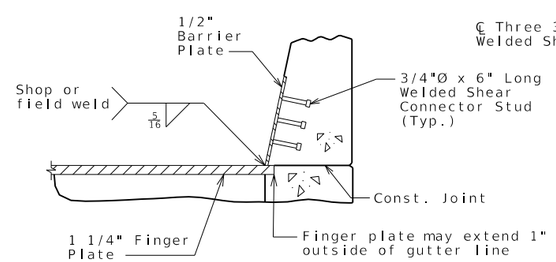

SECTION A-A

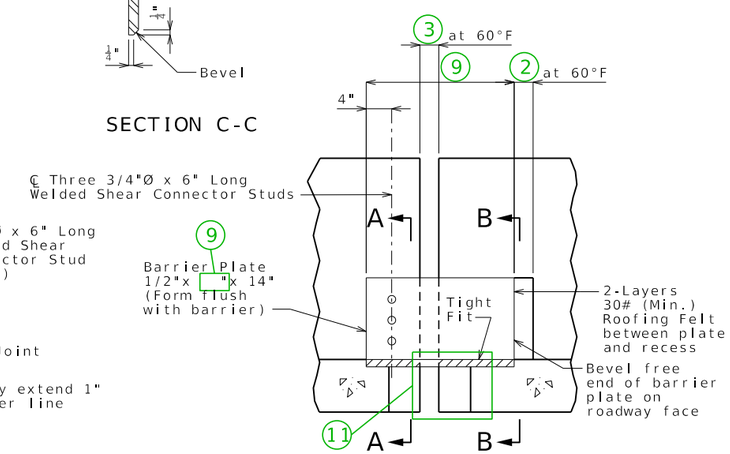

ELEVATION OF BARRIER

FINGER PLATE EXPANSION DEVICE AT END BENT NO.

Detailed
Checked

Note: This drawing is not to scale. Follow dimensions.

Sheet No. of

DATE PREPARED	10/16/2023
ROUTE	STATE MO
DISTRICT	SHEET NO. 1
COUNTY	
JOB NO.	
CONTRACT ID.	
PROJECT NO.	
BRIDGE NO.	

DESCRIPTION	DATE

MISSOURI HIGHWAYS AND TRANSPORTATION COMMISSION
105 WEST CAPITOL
JEFFERSON CITY, MO 65102
1-888-ASK-MODOT (1-888-275-6636)

FING01_psi_end Guidance & Alternate Details (1 of 2)

STANDARD DRAWING GUIDANCE (do not show on plans):
(For all finger plate drawings. Some notes may not apply to this sheet.)

1. Not a guidance note. Do not replace.
2. Gap between fingers, barrier recess gap and, for intermediate bents, gap in barrier.
3. For end bents: 2 + 1/2"/cos(skew)
4. Gap adjustment for temperature: along bridge longitudinal axis
5. Transverse gap between fingers
6. Maximum gap between fingers normal to joint @ 60°F.
7. Finger length.
8. Transverse gap between fingers: not the same as 5 for skewed joints.
9. Plate length = (18"+ 6)/cos(skew)
10. Gap between girder or between girder and end bent.
11. Include details of slab projection beyond ℄ W-beam under barrier on plan of slab detail sheet. Consider similarly projection beyond front face of angle under barrier at end bents.
12. Delete panel for CIP slab.

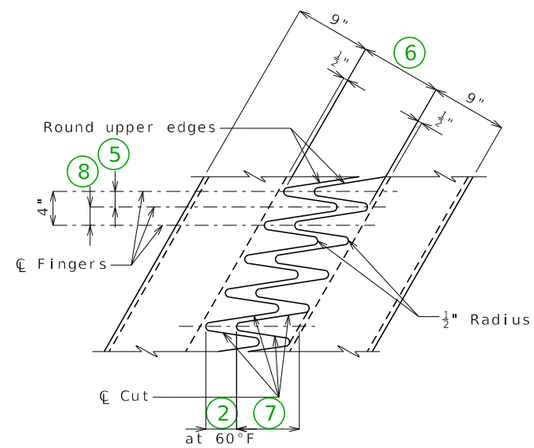

PART PLAN OF FINGER PLATE

LA

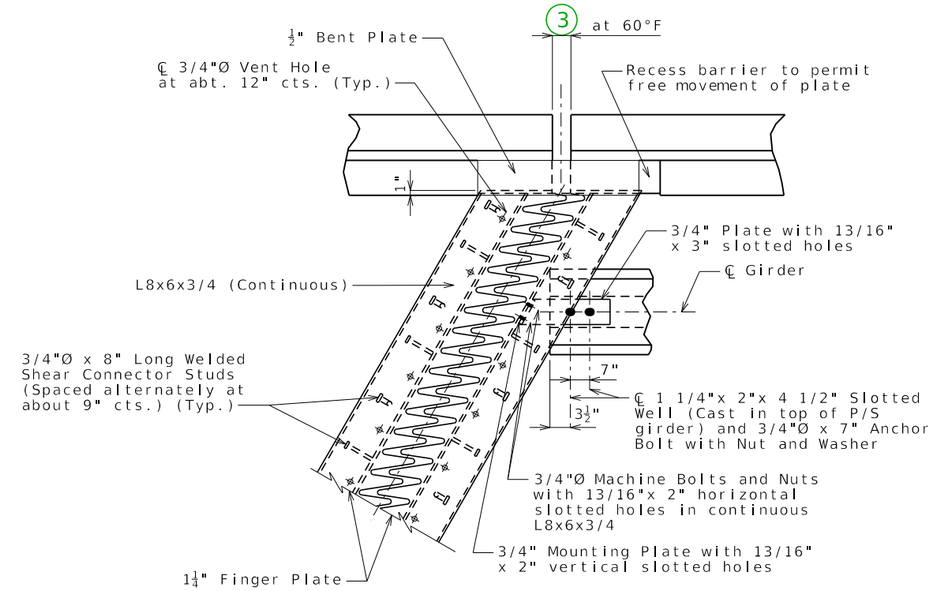

PART PLAN OF DEVICE

LA TYPE B BARRIER (SBC)

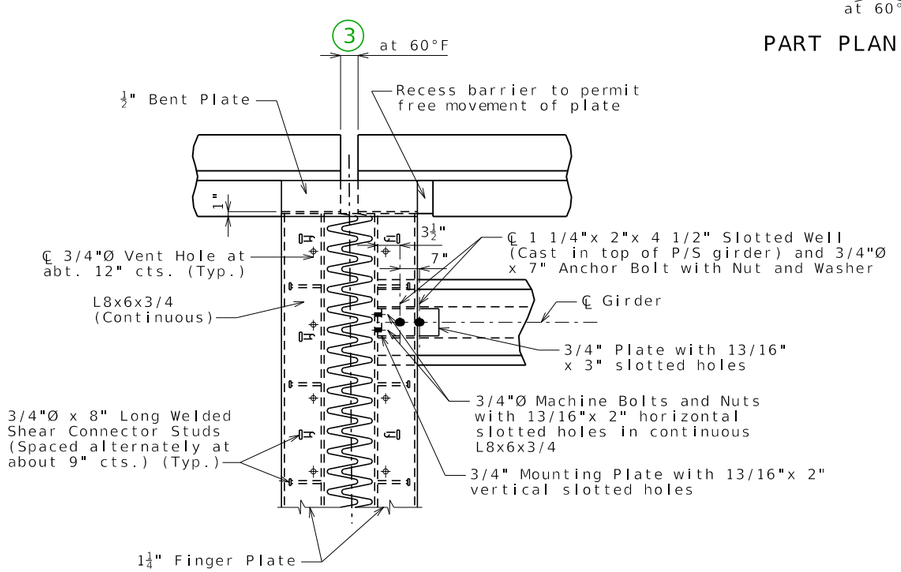

PART PLAN OF DEVICE

SQ TYPE B BARRIER (SBC)

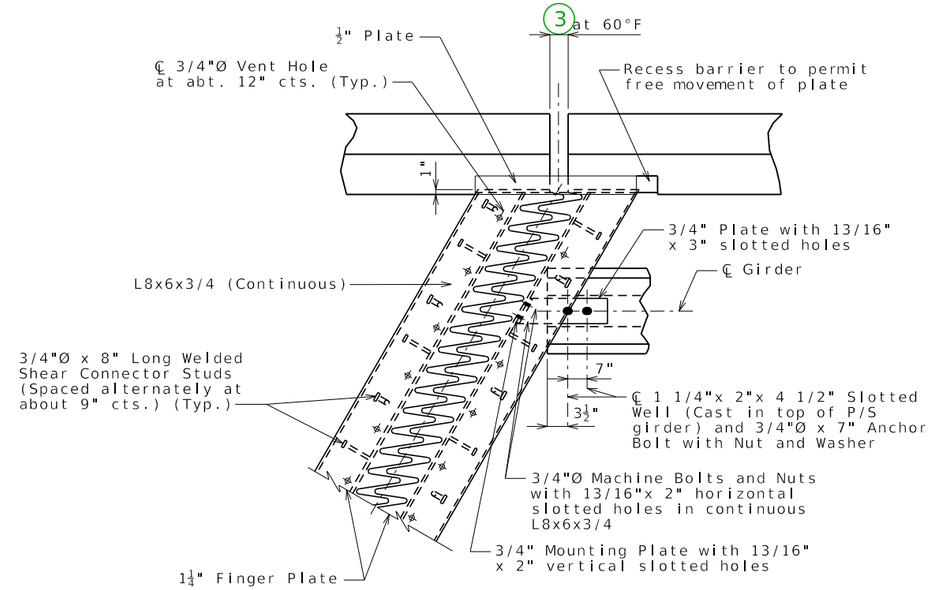

PART PLAN OF DEVICE

LA TYPE D BARRIER

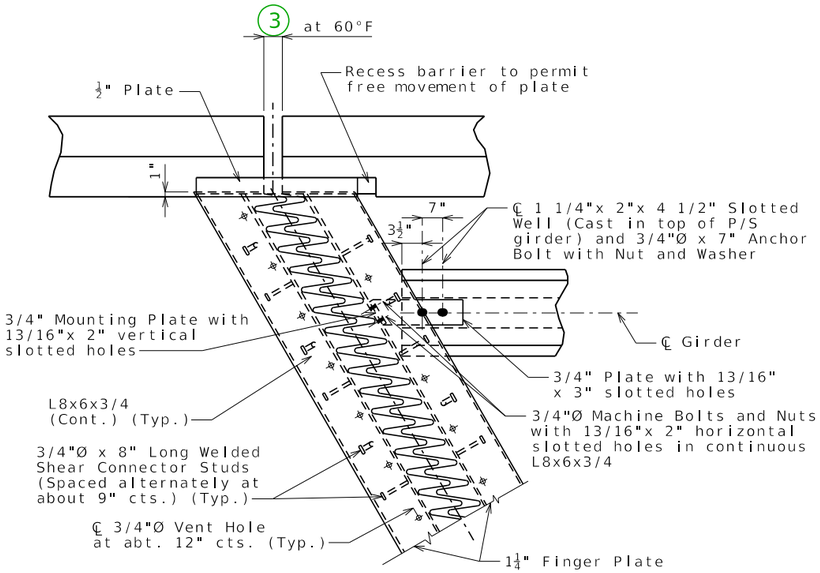

PART PLAN OF DEVICE

RA TYPE D BARRIER

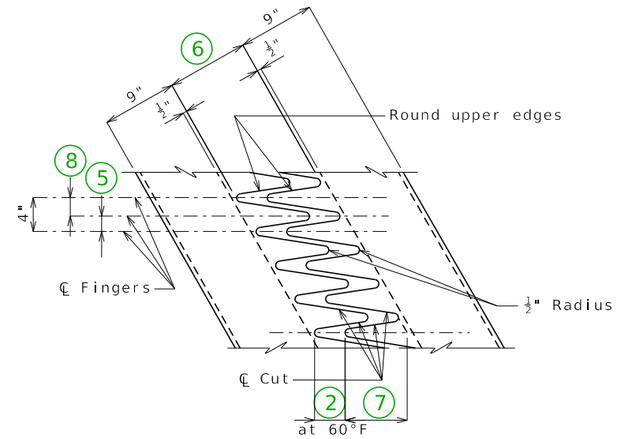

PART PLAN OF FINGER PLATE

RA

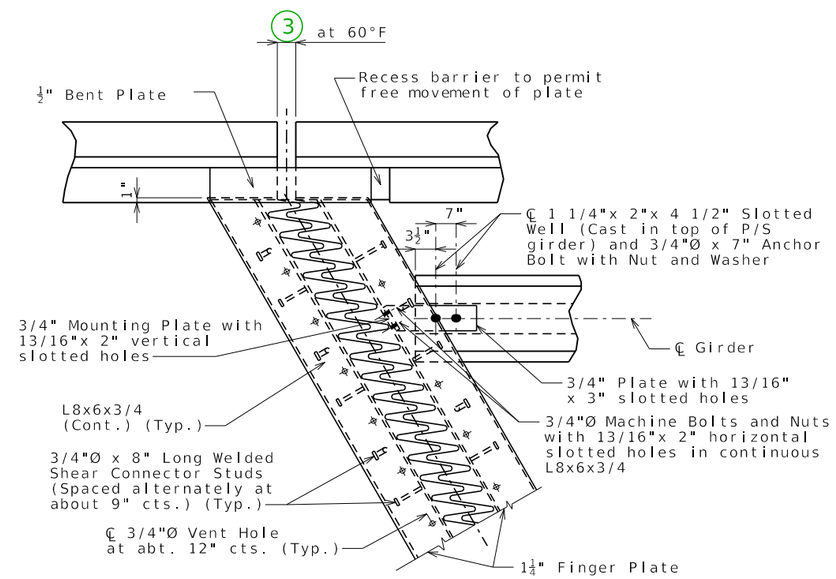

PART PLAN OF DEVICE

RA TYPE B BARRIER (SBC)

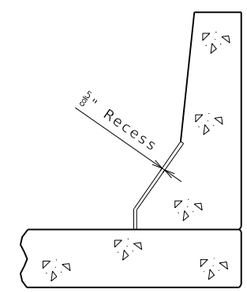

SECTION B-B

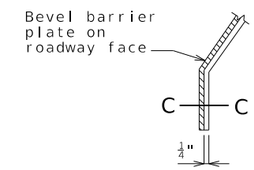

PART ELEVATION AT END OF BENT BARRIER PLATE

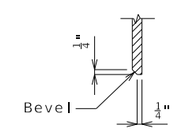

SECTION C-C

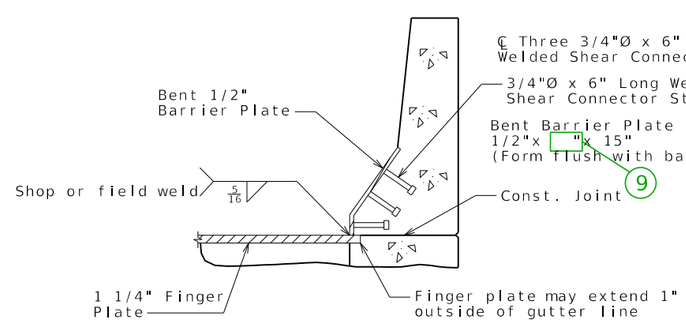

SECTION A-A

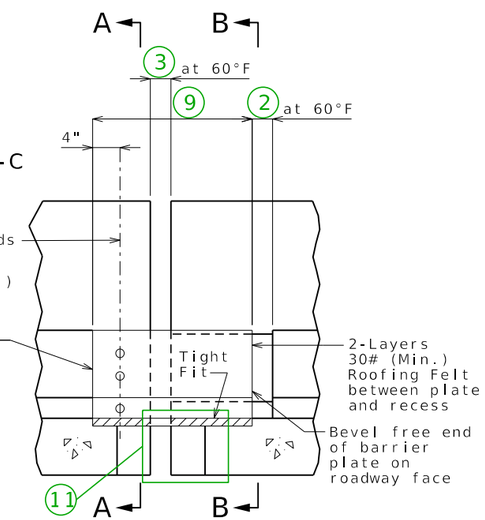

ELEVATION OF BARRIER

TYPE B BARRIER (SBC)(ALL SKEWS)

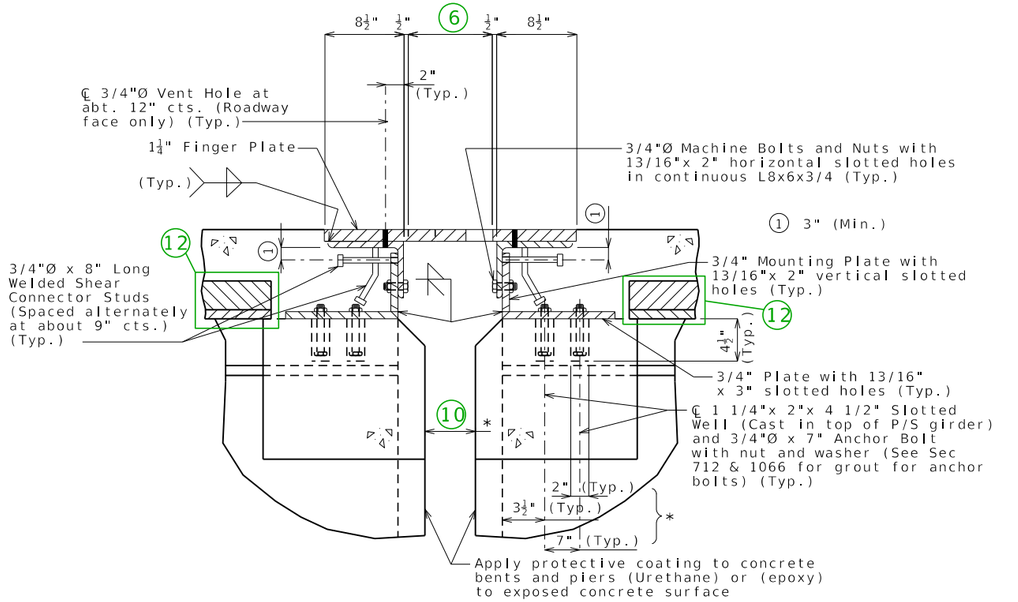

SECTION THRU DEVICE

∗ Dimensions along ℄ Girder

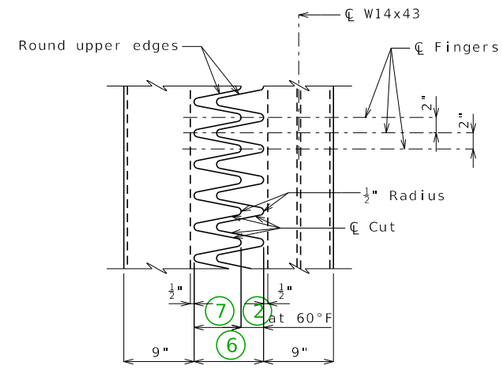

PART PLAN OF FINGER PLATE

GENERAL NOTES:

Finger plate shall be cut with a machine guided gas torch from one plate. The plate from which fingers are cut may be spliced before fingers are cut. The surface of cut shall be perpendicular to the surface of the plate. The cut shall not exceed 1/8" in width. The centerline of cut shall not deviate more than 1/16" from the position of centerline of cut shown. No splicing of finger plate or finger plate assembly will be allowed after fingers are cut. The expansion device shall be fabricated and installed to the crown and grade of the roadway.

Plan dimensions are based on installation at 60°F. The expansion gap and other dimensions shall be increased or decreased [ ]" for each 10° fall or rise in temperature at installation. 4

Material for the expansion device shall be ASTM A709 Grade 36 structural steel. Anchors for the expansion device shall be in accordance with Sec 1037.

Structural steel for the expansion device and barrier plate shall be coated with a minimum of two coats of inorganic zinc primer to provide a total dry film thickness of 4 mils minimum, 6 mils maximum, or galvanized in accordance with ASTM A123. Anchors need not be protected from overspray.

Payment for furnishing, coating or galvanizing and installing the structural steel for the expansion device will be considered completely covered by the contract unit price for Expansion Device (Finger Plate) per linear foot.

Longitudinal reinforcing steel shall be placed so that ends shall not be more than ±1" from the 3/4" vertical mounting plate at the expansion device.

Complete joint penetration welds utilized in the fabrication of the expansion device shall be nondestructively tested by an approved method.

Note:
Concrete shall be forced under and around finger plate supporting hardware, anchors, angles and bars. Proper consolidation shall be achieved by localized internal vibration.

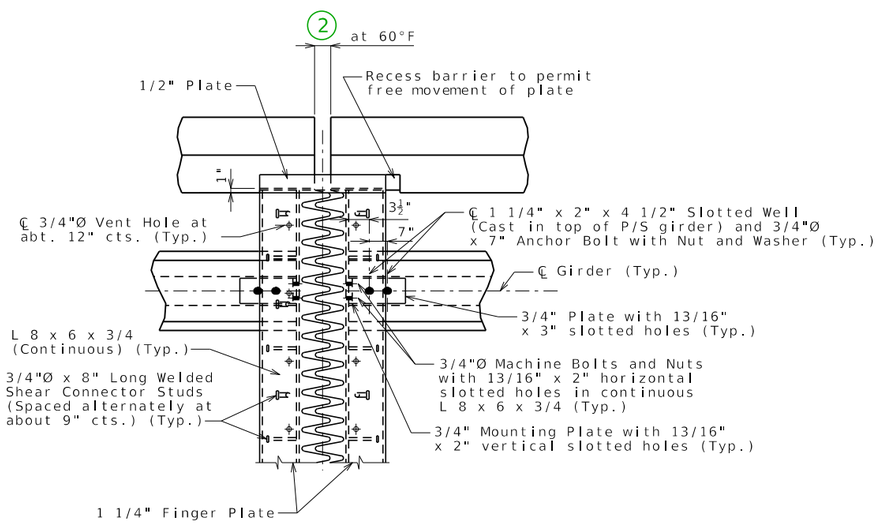

PART PLAN OF DEVICE

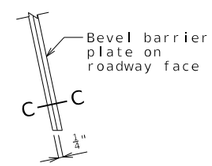

PART ELEVATION AT END OF BARRIER PLATE

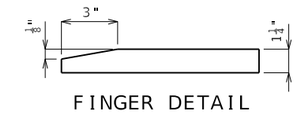

FINGER DETAIL

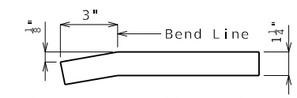

OPTIONAL FINGER DETAIL

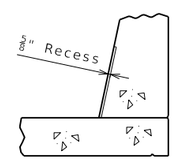

SECTION B-B

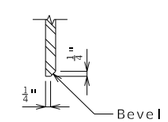

SECTION C-C

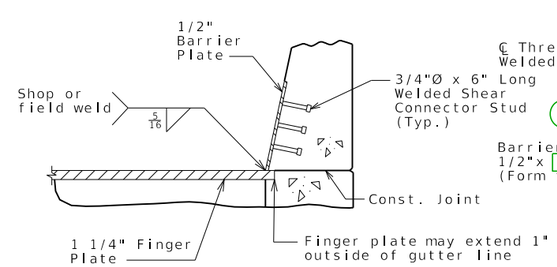

SECTION A-A

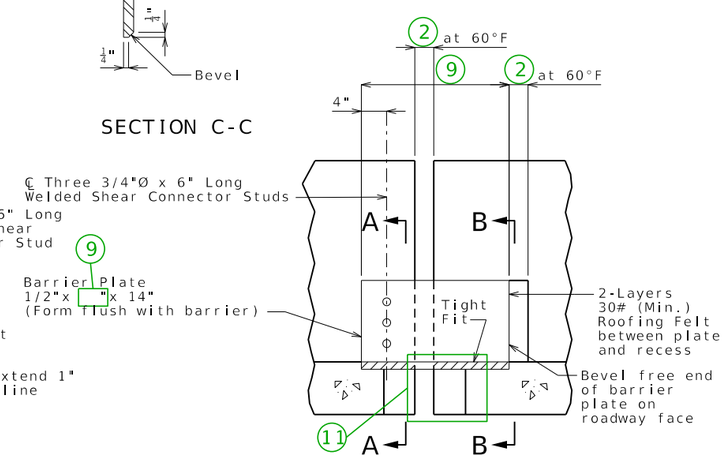

ELEVATION OF BARRIER

FINGER PLATE EXPANSION DEVICE AT INT. BENT NO. _

DATE PREPARED	10/16/2023
ROUTE	STATE MO
DISTRICT	SHEET NO. 2
COUNTY	
JOB NO.	
CONTRACT ID.	
PROJECT NO.	
BRIDGE NO.	

DESCRIPTION

DATE

MISSOURI HIGHWAYS AND TRANSPORTATION COMMISSION
105 WEST CAPITOL
JEFFERSON CITY, MO 65102
1-888-ASK-MODOT (1-888-275-6636)

Detailed
Checked

Note: This drawing is not to scale. Follow dimensions.

Sheet No. of

FING02_psi_int Guidance & Alternate Details (1 of 2)

STANDARD DRAWING GUIDANCE (do not show on plans):
(For all finger plate drawings. Some notes may not apply to this sheet.)

1. Not a guidance note. Do not replace.
2. Gap between fingers, barrier recess gap and, for intermediate bents, gap in barrier.
3. For end bents: 2 + 1/2"/cos(skew)
4. Gap adjustment for temperature: along bridge longitudinal axis
5. Transverse gap between fingers
6. Maximum gap between fingers normal to joint @ 60°F.
7. Finger length.
8. Transverse gap between fingers: not the same as 5 for skewed joints.
9. Plate length = (18"+ 6)/cos(skew)
10. Gap between girder or between girder and end bent.
11. Include details of slab projection beyond ℄ W-beam under barrier on plan of slab detail sheet. Consider similarly projection beyond front face of angle under barrier at end bents.
12. Delete panel for CIP slab.

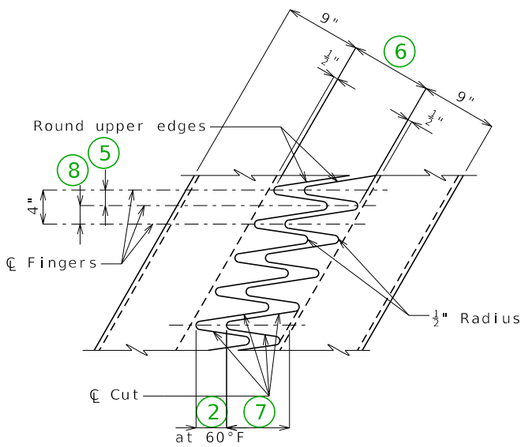

PART PLAN OF FINGER PLATE

LA

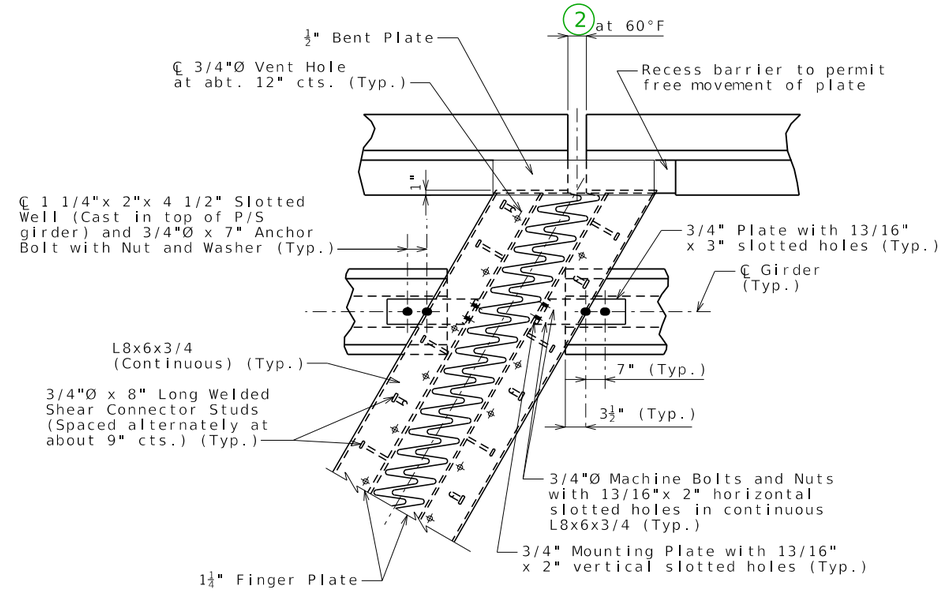

PART PLAN OF DEVICE

LA TYPE B BARRIER (SBC)

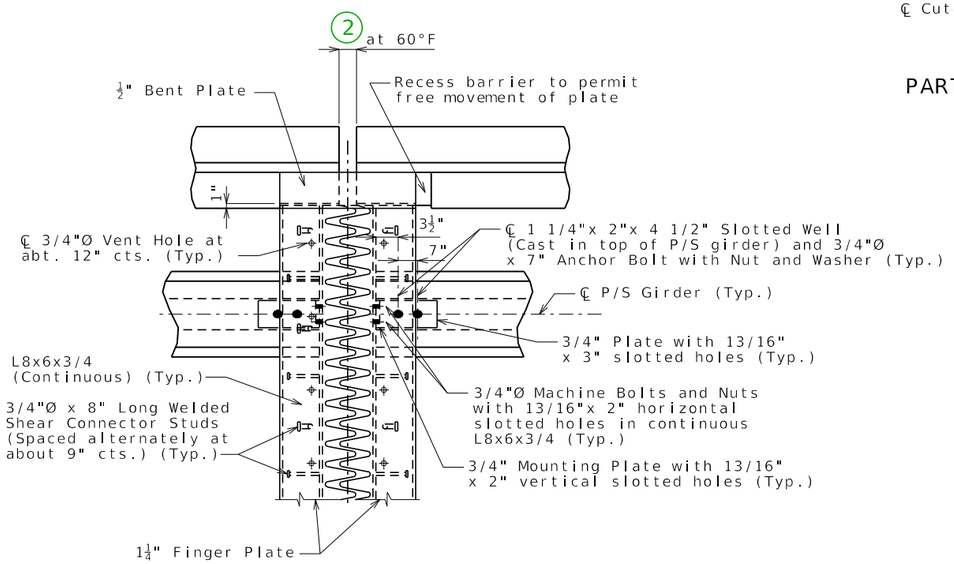

PART PLAN OF DEVICE

SQ TYPE B BARRIER (SBC)

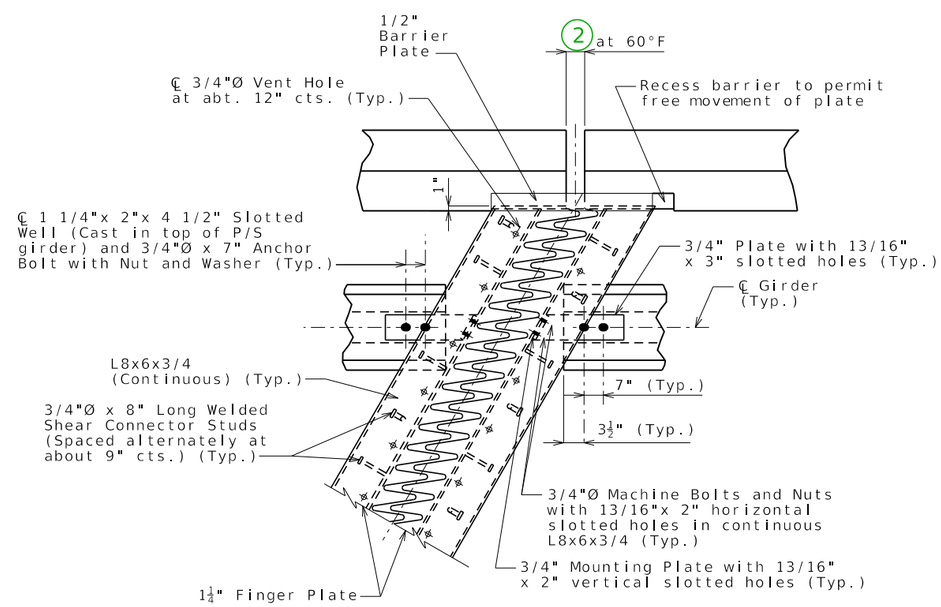

PART PLAN OF DEVICE

LA TYPE D BARRIER

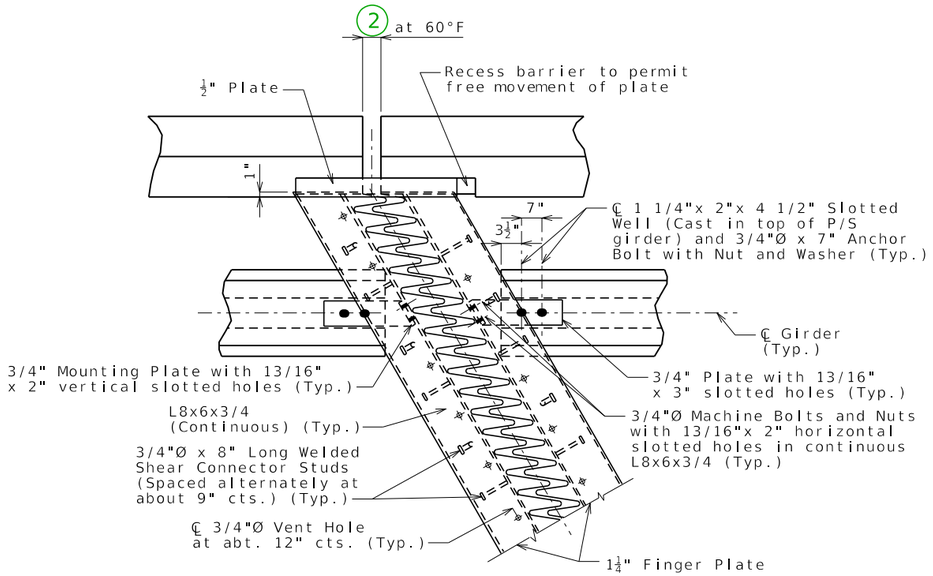

PART PLAN OF DEVICE

RA TYPE D BARRIER

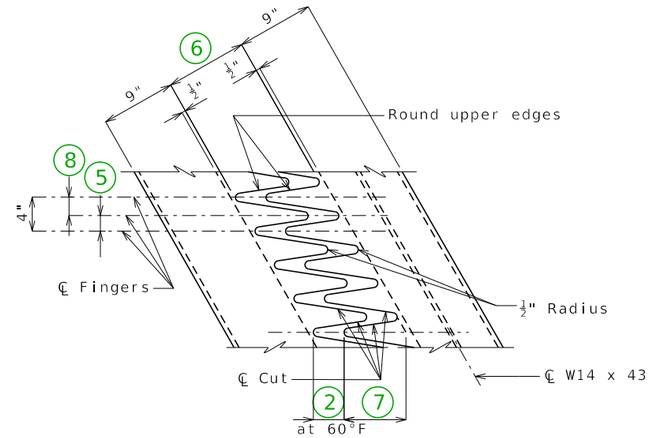

PART PLAN OF FINGER PLATE

RA

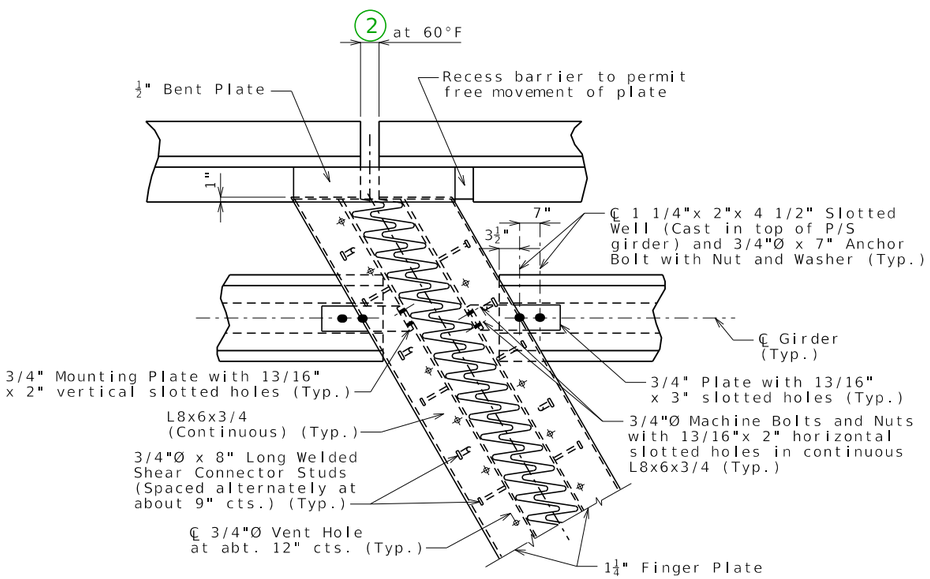

PART PLAN OF DEVICE

RA TYPE B BARRIER (SBC)

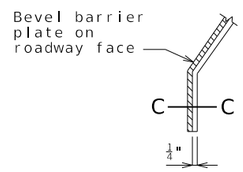

PART ELEVATION AT END OF BENT BARRIER PLATE

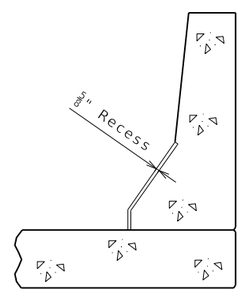

SECTION B-B

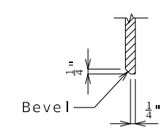

SECTION C-C

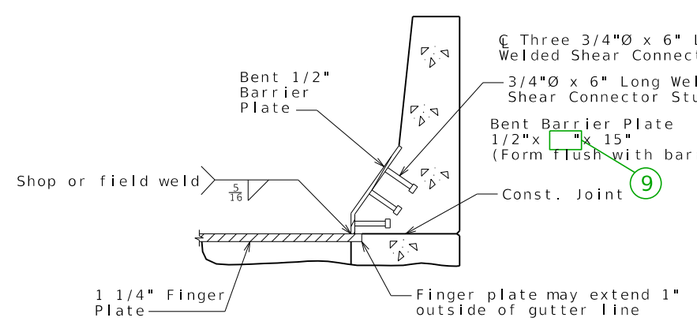

SECTION A-A

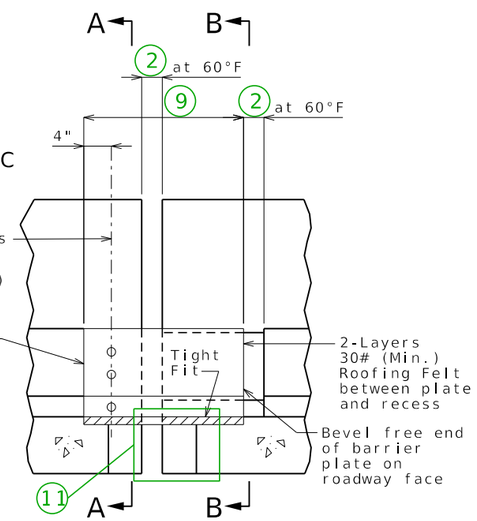

ELEVATION OF BARRIER

TYPE B BARRIER (SBC)(ALL SKEWS)

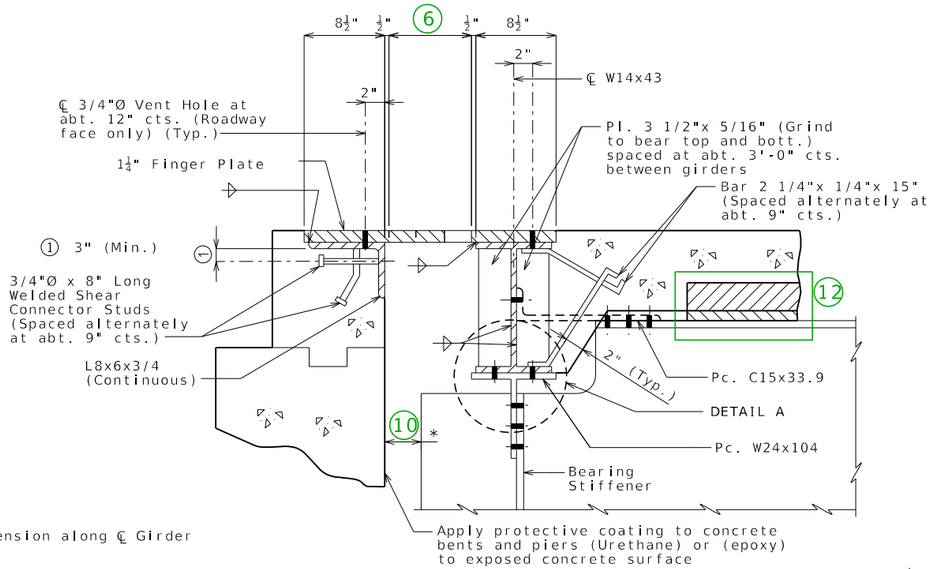

* Dimension along ℄ Girder

SECTION THRU DEVICE

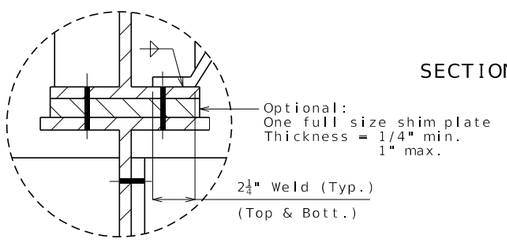

DETAIL A

Note:
Concrete shall be forced under and around finger plate supporting hardware, anchors, angles and bars. Proper consolidation shall be achieved by localized internal vibration.

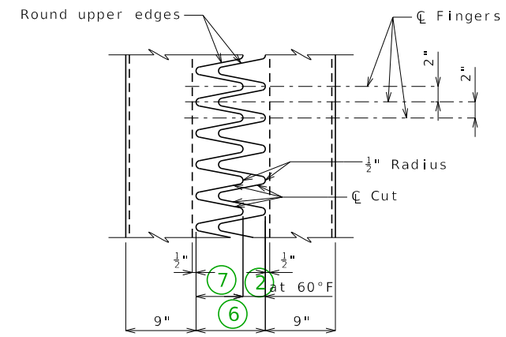

PART PLAN OF FINGER PLATE

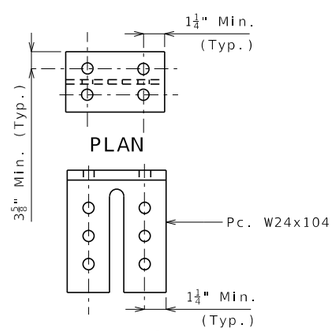

ELEVATION
Pc. W24x104

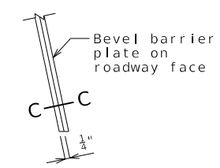

PART ELEVATION
AT END OF
BARRIER PLATE

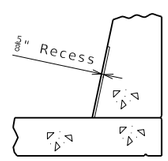

SECTION B-B

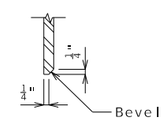

SECTION C-C

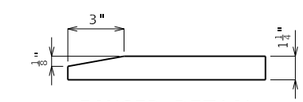

FINGER DETAIL

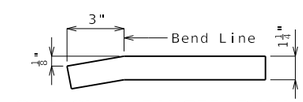

OPTIONAL FINGER DETAIL

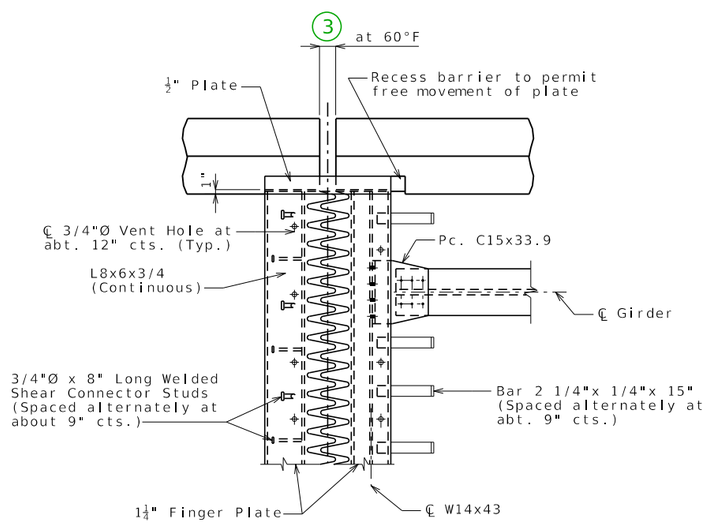

PART PLAN OF DEVICE

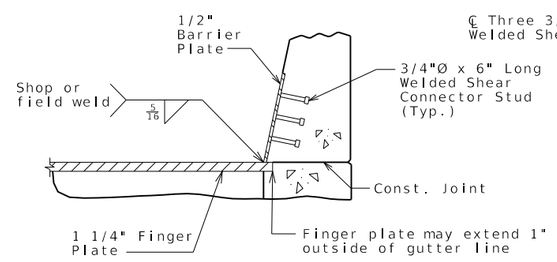

SECTION A-A

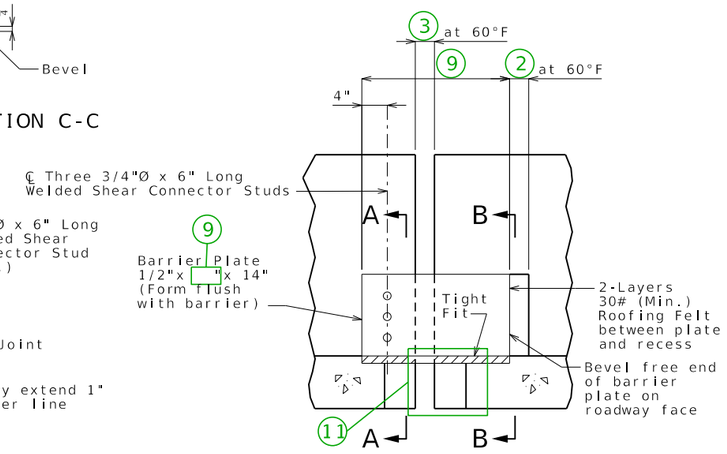

ELEVATION OF BARRIER

GENERAL NOTES:

Finger plate shall be cut with a machine guided gas torch from one plate. The plate from which fingers are cut may be spliced before fingers are cut. The surface of cut shall be perpendicular to the surface of the plate. The cut shall not exceed 1/8" in width. The centerline of cut shall not deviate more than 1/16" from the position of centerline of cut shown. No splicing of finger plate or finger plate assembly will be allowed after fingers are cut. The expansion device shall be fabricated and installed to the crown and grade of the roadway.

Plan dimensions are based on installation at 60°F. The expansion gap and other dimensions shall be increased or decreased " for each 10° fall or rise in temperature at installation. 4

Material for the expansion device shall be ASTM A709 Grade 36 structural steel. Anchors for the expansion device shall be in accordance with Sec 1037.

Structural steel for the expansion device and barrier plate shall be coated with a minimum of two coats of inorganic zinc primer to provide a total dry film thickness of 4 mils minimum, 6 mils maximum, or galvanized in accordance with ASTM A123. Anchors need not be protected from overspray.

Payment for furnishing, coating or galvanizing and installing the structural steel for the expansion device will be considered completely covered by the contract unit price for Expansion Device (Finger Plate) per linear foot.

All holes shown for connections shall be subpunched 11/16-inch diameter (shop or field drill) and reamed to 13/16-inch diameter in field, except holes in members that will be used as templates and holes for the drainage trough may be drilled to 13/16-inch diameter in the shop. For multi-piece connections, only the holes in the template member may be drilled to 13/16-inch diameter in the shop.

Longitudinal reinforcing steel shall be placed so that ends shall not be more than ±1" from the web of W14 x 43 at the expansion device.

Complete joint penetration welds utilized in the fabrication of the expansion device shall be nondestructively tested by an approved method.

DATE PREPARED	10/16/2023
ROUTE	STATE MO
DISTRICT	SHEET NO. 3
COUNTY	
JOB NO.	
CONTRACT ID.	
PROJECT NO.	
BRIDGE NO.	

DESCRIPTION

DATE

MISSOURI HIGHWAYS AND TRANSPORTATION COMMISSION
105 WEST CAPITOL
JEFFERSON CITY, MO 65102
1-888-ASK-MODOT (1-888-275-6636)

FINGER PLATE EXPANSION DEVICE AT END BENT NO. _

Detailed
Checked

Note: This drawing is not to scale. Follow dimensions.

Sheet No. of

FING03_stl_end Guidance & Alternate Details (1 of 2)

STANDARD DRAWING GUIDANCE (do not show on plans):
(For all finger plate drawings. Some notes may not apply to this sheet.)

1. Not a guidance note. Do not replace.
2. Gap between fingers, barrier recess gap and, for intermediate bents, gap in barrier.
3. For end bents: 2 + 1/2"/cos(skew)
4. Gap adjustment for temperature: along bridge longitudinal axis
5. Transverse gap between fingers
6. Maximum gap between fingers normal to joint @ 60°F.
7. Finger length.
8. Transverse gap between fingers: not the same as 5 for skewed joints.
9. Plate length = (18"+ 6)/cos(skew)
10. Gap between girder or between girder and end bent.
11. Include details of slab projection beyond ℄ W-beam under barrier on plan of slab detail sheet. Consider similarly projection beyond front face of angle under barrier at end bents.
12. Delete panel for CIP slab.

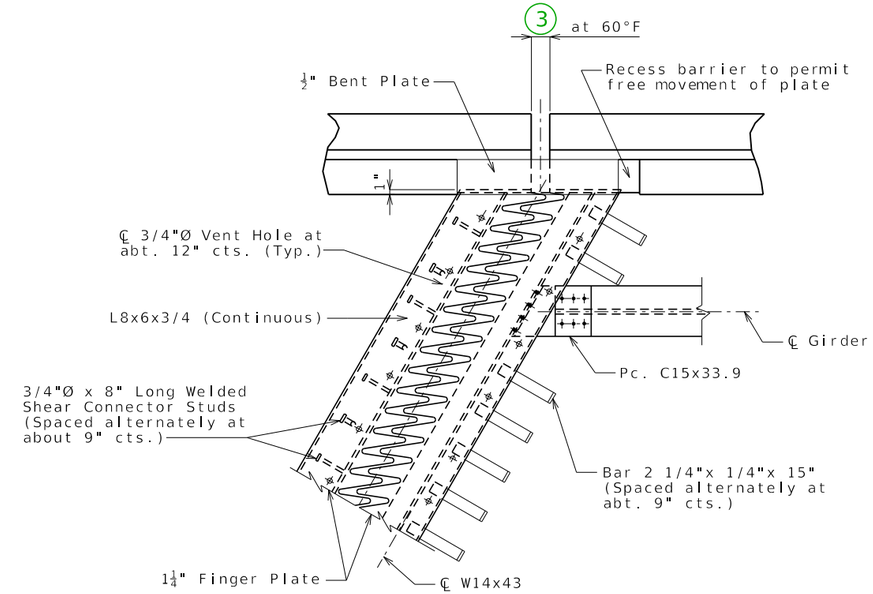

PART PLAN OF DEVICE

LA TYPE B BARRIER (SBC)

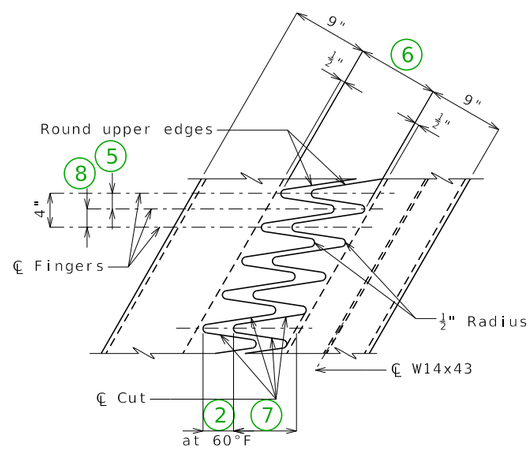

PART PLAN OF FINGER PLATE

LA

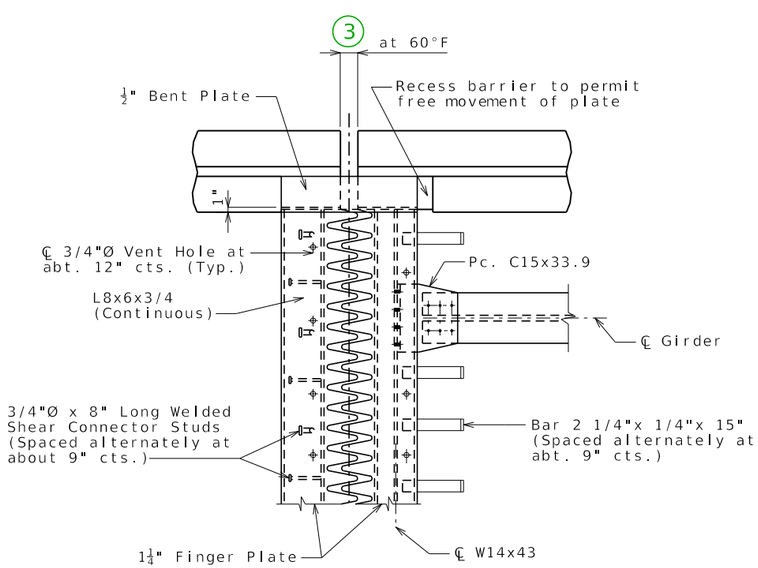

PART PLAN OF DEVICE

SQ TYPE B BARRIER (SBC)

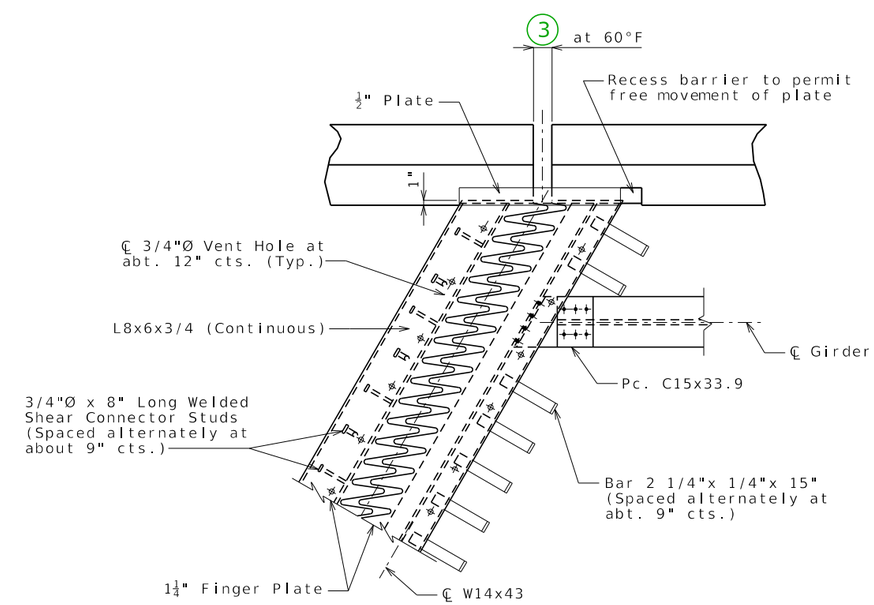

PART PLAN OF DEVICE

LA TYPE D BARRIER

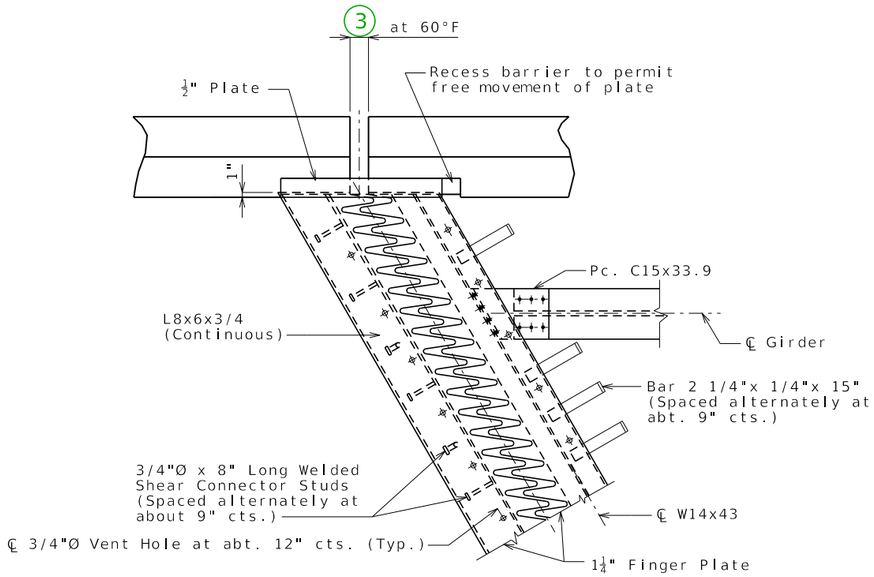

PART PLAN OF DEVICE

RA TYPE D BARRIER

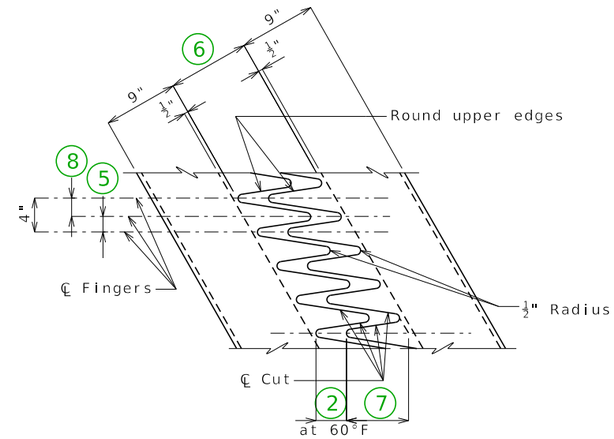

PART PLAN OF FINGER PLATE

RA

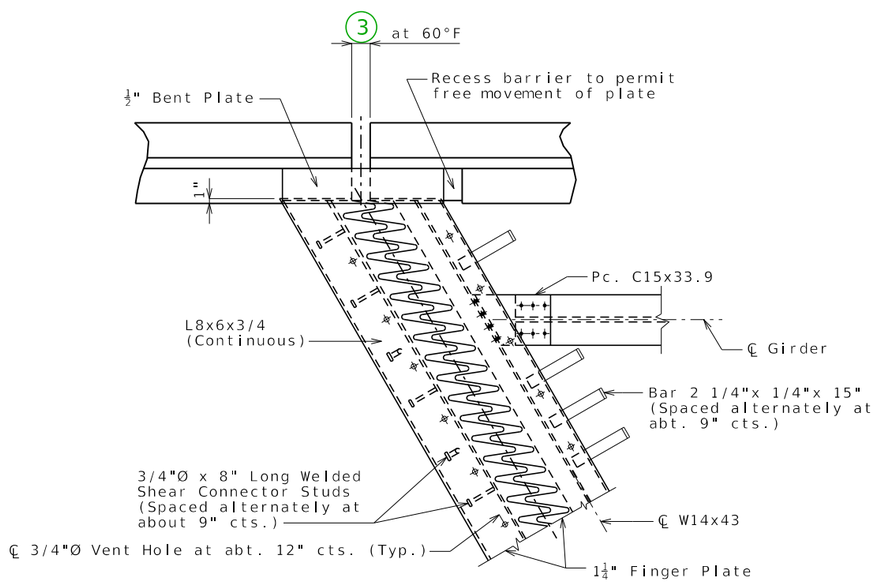

PART PLAN OF DEVICE

RA TYPE B BARRIER (SBC)

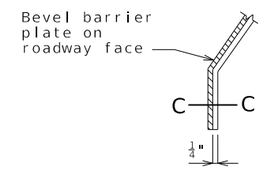

PART ELEVATION AT END OF BENT BARRIER PLATE

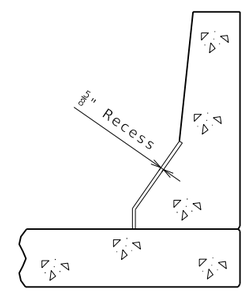

SECTION B-B

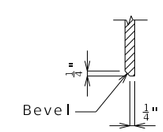

SECTION C-C

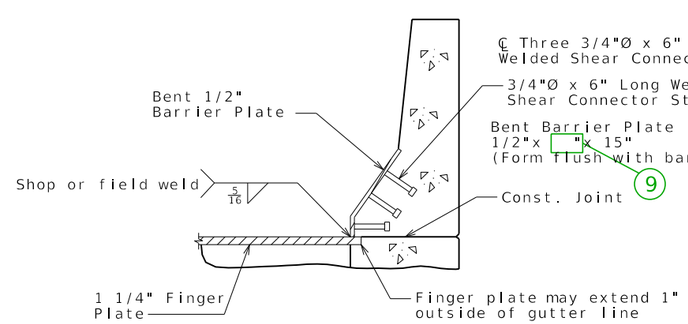

SECTION A-A

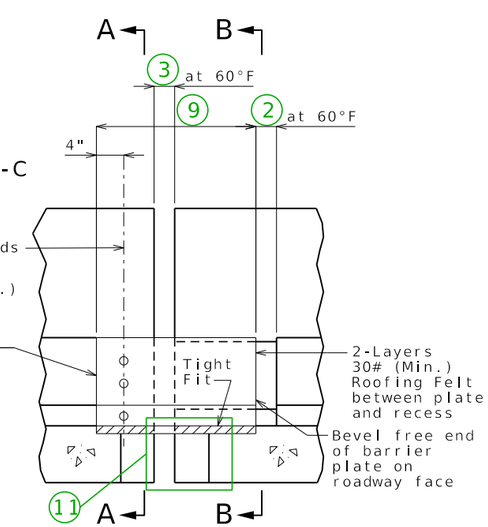

ELEVATION OF BARRIER

TYPE B BARRIER (SBC)(ALL)

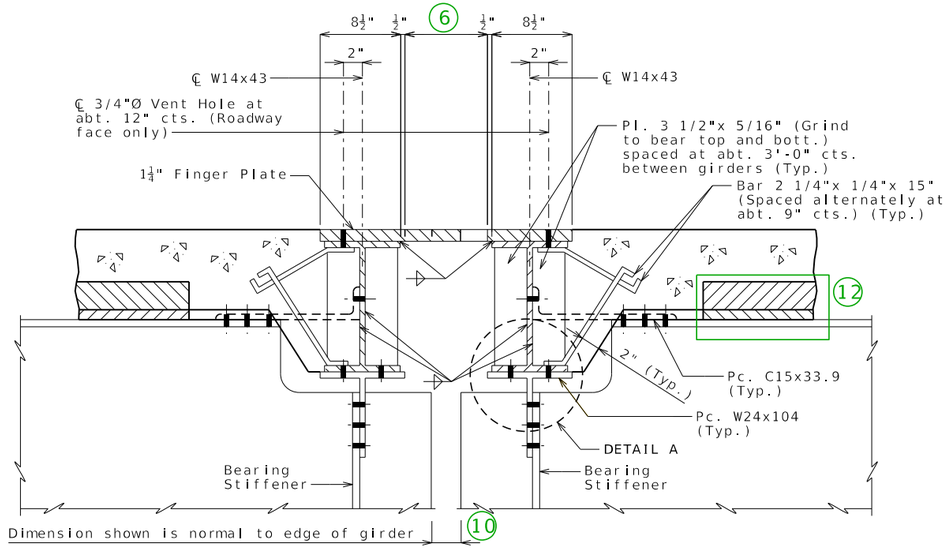

SECTION THRU DEVICE

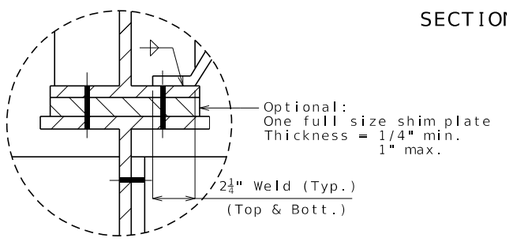

DETAIL A

Note:
Concrete shall be forced under and around finger plate supporting hardware, anchors, angles and bars. Proper consolidation shall be achieved by localized internal vibration.

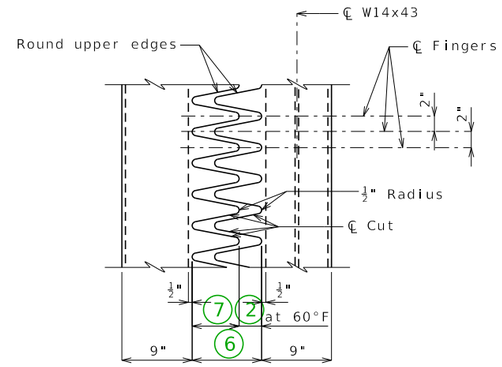

PART PLAN OF FINGER PLATE

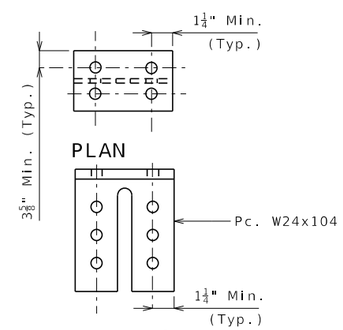

ELEVATION
Pc. W24x104

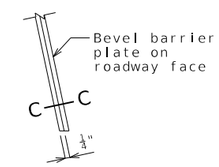

PART ELEVATION
AT END OF
BARRIER PLATE

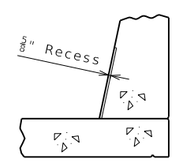

SECTION B-B

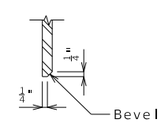

SECTION C-C

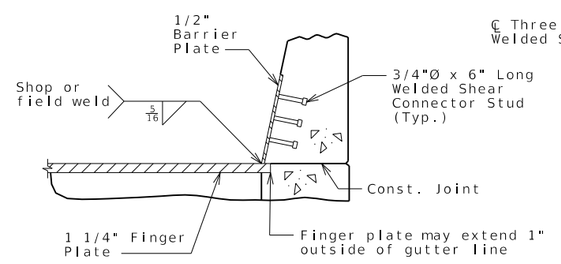

SECTION A-A

GENERAL NOTES:

Finger plate shall be cut with a machine guided gas torch from one plate. The plate from which fingers are cut may be spliced before fingers are cut. The surface of cut shall be perpendicular to the surface of the plate. The cut shall not exceed 1/8" in width. The centerline of cut shall not deviate more than 1/16" from the position of centerline of cut shown. No splicing of finger plate or finger plate assembly will be allowed after fingers are cut. The expansion device shall be fabricated and installed to the crown and grade of the roadway.

Plan dimensions are based on installation at 60°F. The expansion gap and other dimensions shall be increased or decreased [ ] " for each 10° fall or rise in temperature at installation. 4

Material for the expansion device shall be ASTM A709 Grade 36 structural steel. Anchors for the expansion device shall be in accordance with Sec 1037.

Structural steel for the expansion device and barrier plate shall be coated with a minimum of two coats of inorganic zinc primer to provide a total dry film thickness of 4 mils minimum, 6 mils maximum, or galvanized in accordance with ASTM A123. Anchors need not be protected from overspray.

Payment for furnishing, coating or galvanizing and installing the structural steel for the expansion device will be considered completely covered by the contract unit price for Expansion Device (Finger Plate) per linear foot.

All holes shown for connections shall be subpunched 11/16-inch diameter (shop or field drill) and reamed to 13/16-inch diameter in field, except holes in members that will be used as templates and holes for the drainage trough may be drilled to 13/16-inch diameter in the shop. For multi-piece connections, only the holes in the template member may be drilled to 13/16-inch diameter in the shop.

Longitudinal reinforcing steel shall be placed so that ends shall not be more than ±1" from the web of W14 x 43 at the expansion device.

Complete joint penetration welds utilized in the fabrication of the expansion device shall be nondestructively tested by an approved method.

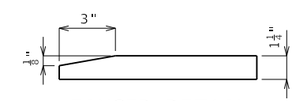

FINGER DETAIL

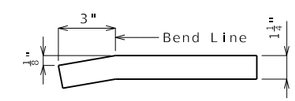

OPTIONAL FINGER DETAIL

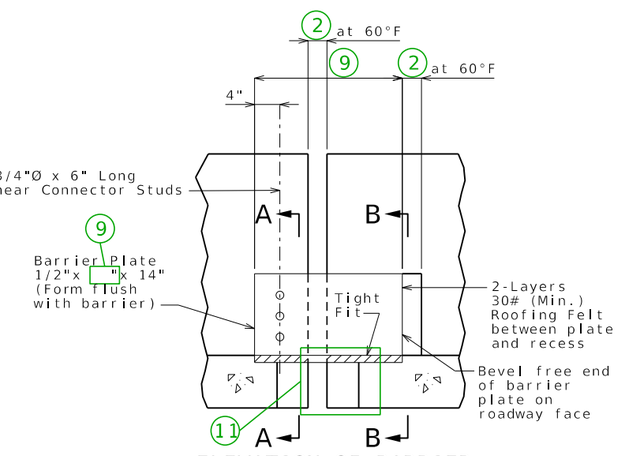

ELEVATION OF BARRIER

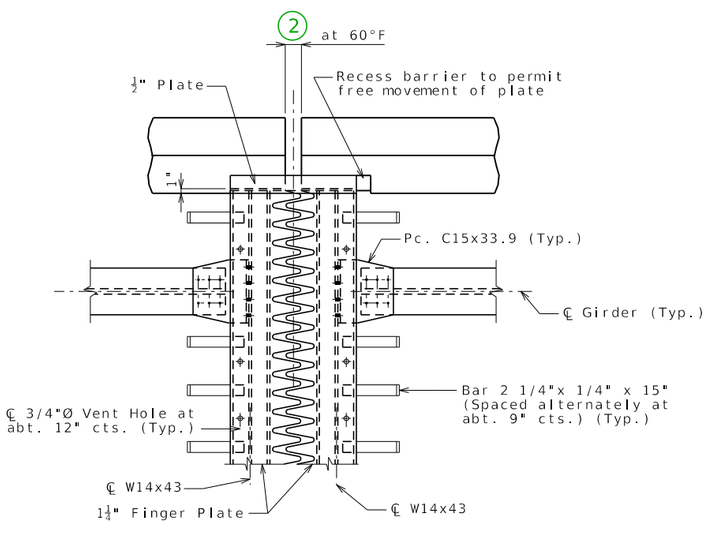

PART PLAN OF DEVICE

FINGER PLATE EXPANSION DEVICE AT INT. BENT NO. _

Note: This drawing is not to scale. Follow dimensions.

Sheet No. of

Detailed
Checked

DATE PREPARED	10/16/2023
ROUTE	STATE MO
DISTRICT	SHEET NO. 4
COUNTY	
JOB NO.	
CONTRACT ID.	
PROJECT NO.	
BRIDGE NO.	

DATE	DESCRIPTION

MISSOURI HIGHWAYS AND TRANSPORTATION COMMISSION
105 WEST CAPITOL
JEFFERSON CITY, MO 65102
1-888-ASK-MODOT (1-888-275-6636)

FING04_stl_int Guidance & Alternate Details (1 of 2)

STANDARD DRAWING GUIDANCE (do not show on plans):
(For all finger plate drawings. Some notes may not apply to this sheet.)

1. Not a guidance note. Do not replace.
2. Gap between fingers, barrier recess gap and, for intermediate bents, gap in barrier.
3. For end bents: 2 + 1/2"/cos(skew)
4. Gap adjustment for temperature: along bridge longitudinal axis
5. Transverse gap between fingers
6. Maximum gap between fingers normal to joint @ 60°F.
7. Finger length.
8. Transverse gap between fingers: not the same as 5 for skewed joints.
9. Plate length = (18"+ 6)/cos(skew)
10. Gap between girder or between girder and end bent.
11. Include details of slab projection beyond ℄ W-beam under barrier on plan of slab detail sheet. Consider similarly projection beyond front face of angle under barrier at end bents.
12. Delete panel for CIP slab.

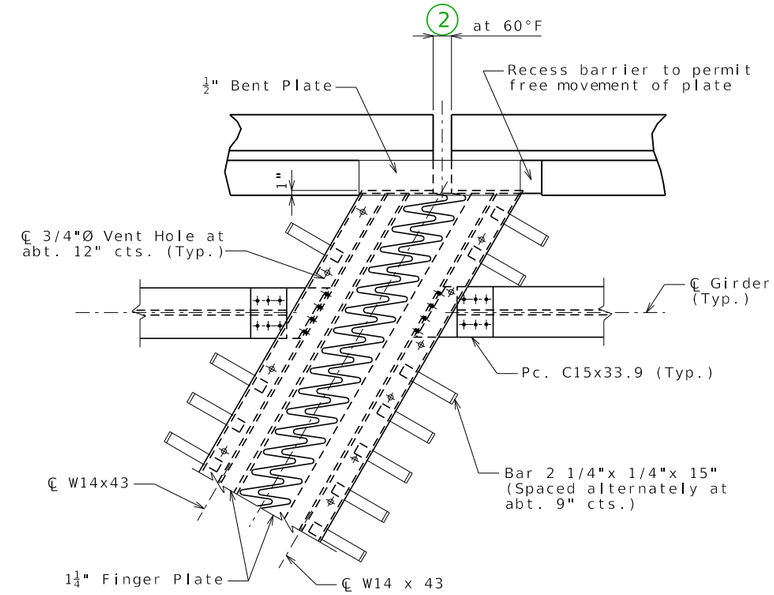

PART PLAN OF DEVICE

LA TYPE B BARRIER (SBC)

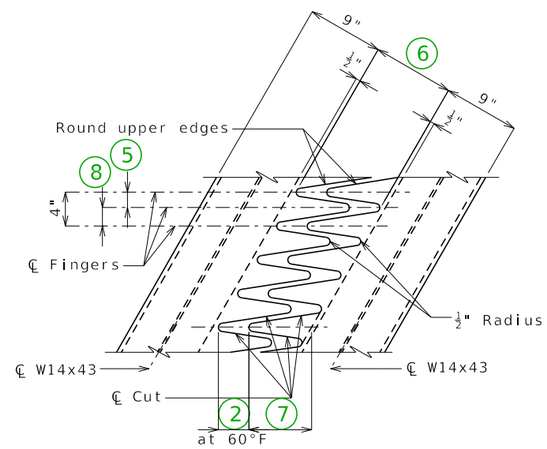

PART PLAN OF FINGER PLATE

LA

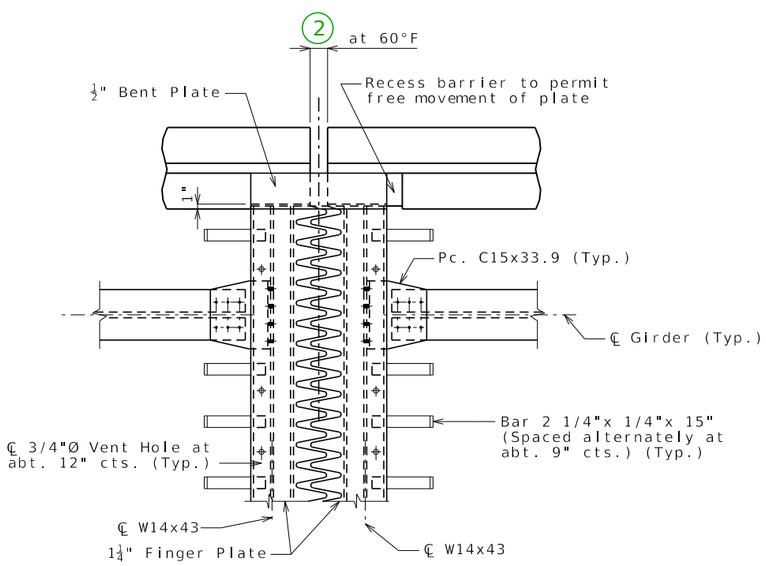

PART PLAN OF DEVICE

SQ TYPE B BARRIER (SBC)

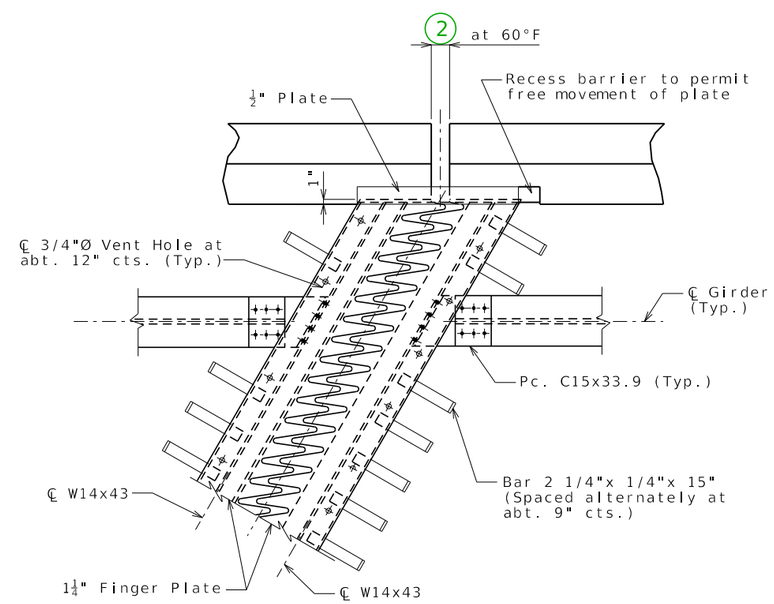

PART PLAN OF DEVICE

LA TYPE D BARRIER

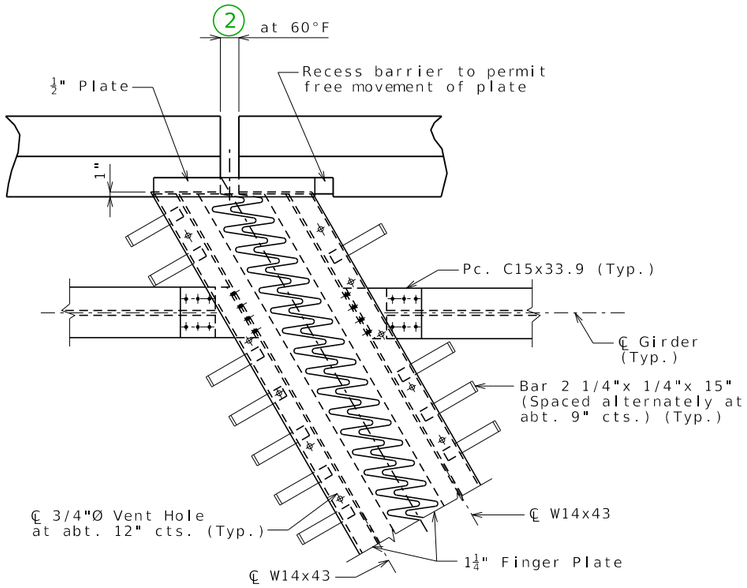

PART PLAN OF DEVICE

RA TYPE D BARRIER

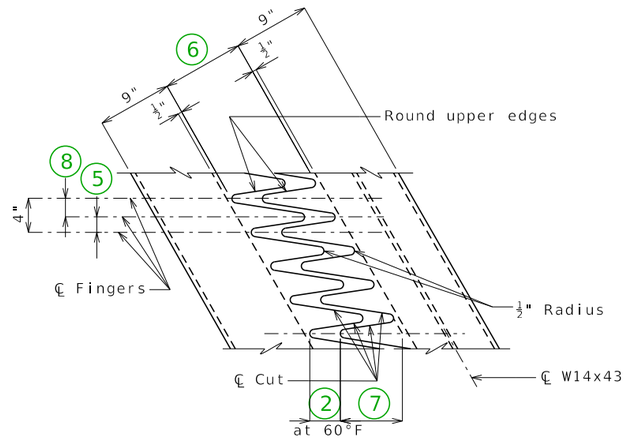

PART PLAN OF FINGER PLATE

RA

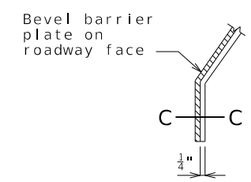

PART ELEVATION AT END OF BENT BARRIER PLATE

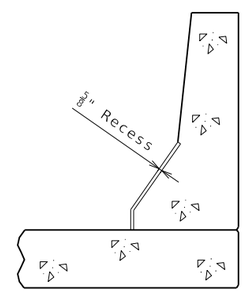

SECTION B-B

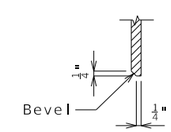

SECTION C-C

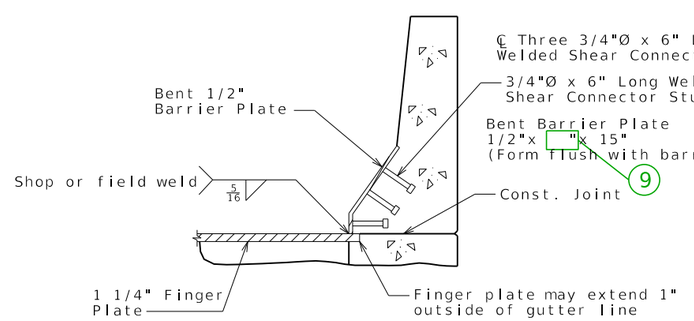

SECTION A-A

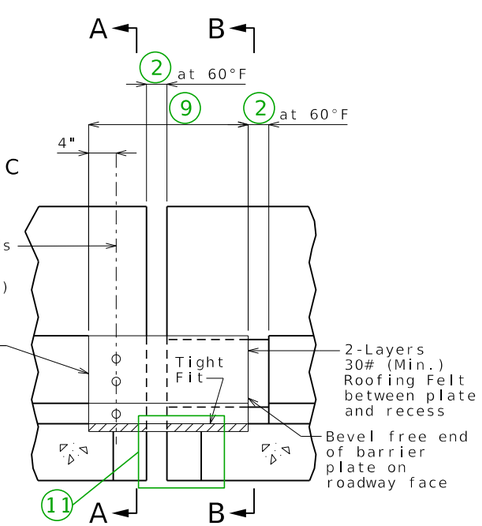

ELEVATION OF BARRIER

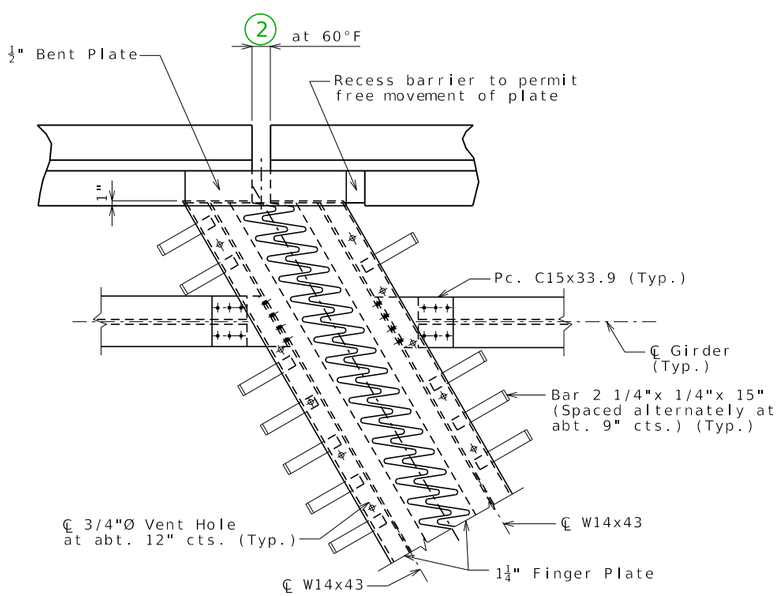

PART PLAN OF DEVICE

RA TYPE B BARRIER (SBC)

TYPE B BARRIER (SBC)(ALL SKEWS)

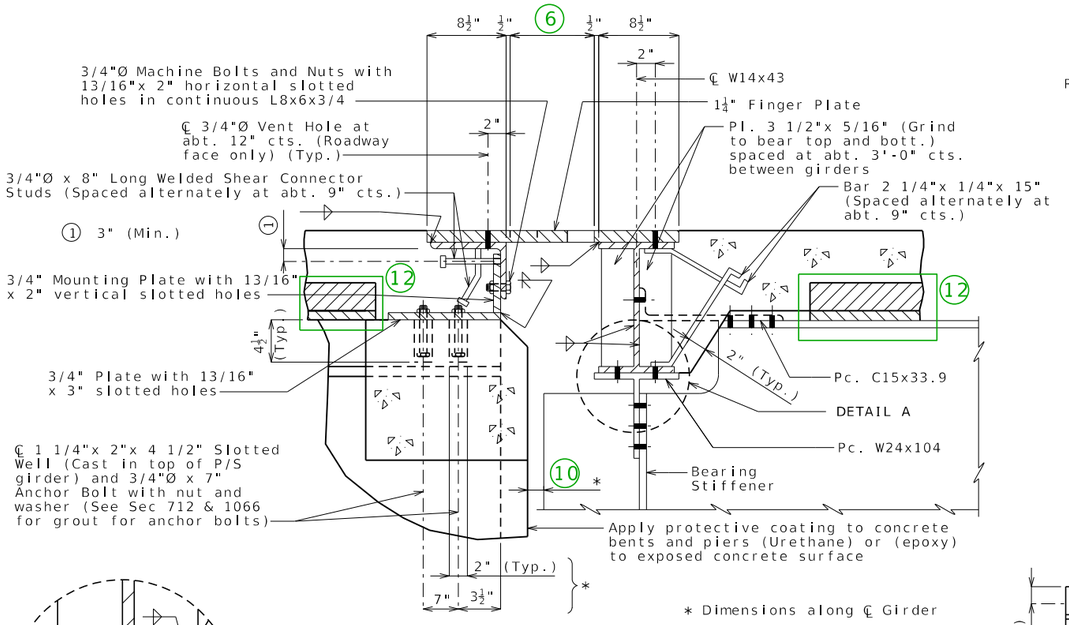

SECTION THRU DEVICE

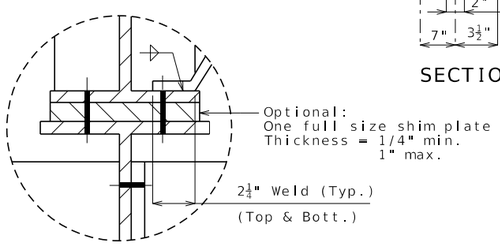

DETAIL A

Note:
Concrete shall be forced under and around finger plate supporting hardware, anchors, angles and bars. Proper consolidation shall be achieved by localized internal vibration.

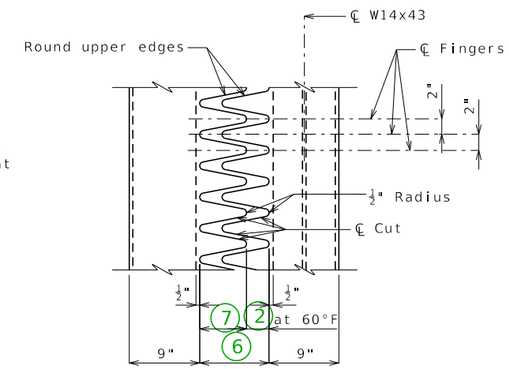

PART PLAN OF FINGER PLATE

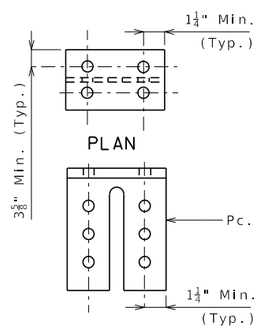

ELEVATION
Pc. W24x104

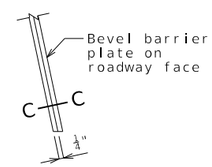

PART ELEVATION
AT END OF
BARRIER PLATE

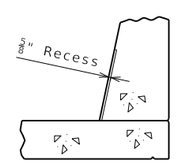

SECTION B-B

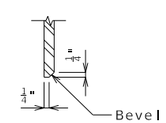

SECTION C-C

GENERAL NOTES:

Finger plate shall be cut with a machine guided gas torch from one plate. The plate from which fingers are cut may be spliced before fingers are cut. The surface of cut shall be perpendicular to the surface of the plate. The cut shall not exceed 1/8" in width. The centerline of cut shall not deviate more than 1/16" from the position of centerline of cut shown. No splicing of finger plate or finger plate assembly will be allowed after fingers are cut. The expansion device shall be fabricated and installed to the crown and grade of the roadway.

Plan dimensions are based on installation at 60°F. The expansion gap and other dimensions shall be increased or decreased [ ]" for each 10° fall or rise in temperature at installation. (4)

Material for the expansion device shall be ASTM A709 Grade 36 structural steel. Anchors for the expansion device shall be in accordance with Sec 1037.

Structural steel for the expansion device and barrier plate shall be coated with a minimum of two coats of inorganic zinc primer to provide a total dry film thickness of 4 mils minimum, 6 mils maximum, or galvanized in accordance with ASTM A123. Anchors need not be protected from overspray.

Payment for furnishing, coating or galvanizing and installing the structural steel for the expansion device will be considered completely covered by the contract unit price for Expansion Device (Finger Plate) per linear foot.

All holes shown for connections shall be subpunched 11/16-inch diameter (shop or field drill) and reamed to 13/16-inch diameter in field, except holes in members that will be used as templates and holes for the drainage trough may be drilled to 13/16-inch diameter in the shop. For multi-piece connections, only the holes in the template member may be drilled to 13/16-inch diameter in the shop.

Longitudinal reinforcing steel shall be placed so that ends shall not be more than ±1" from the 3/4" vertical mounting plate and the web of W14 x 43 at the expansion device.

Complete joint penetration welds utilized in the fabrication of the expansion device shall be nondestructively tested by an approved method.

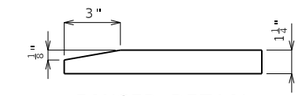

FINGER DETAIL

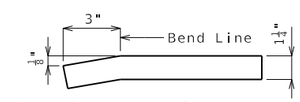

OPTIONAL FINGER DETAIL

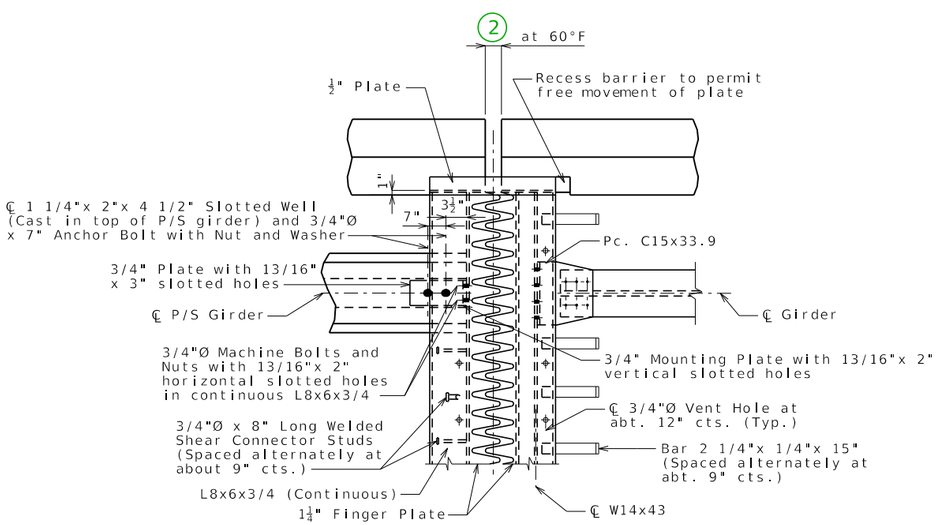

PART PLAN OF DEVICE

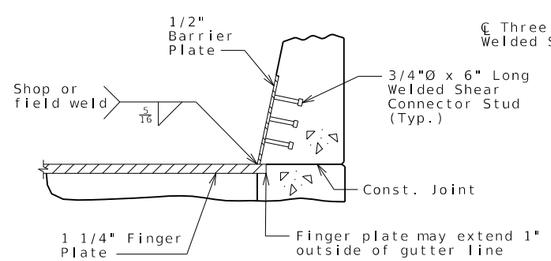

SECTION A-A

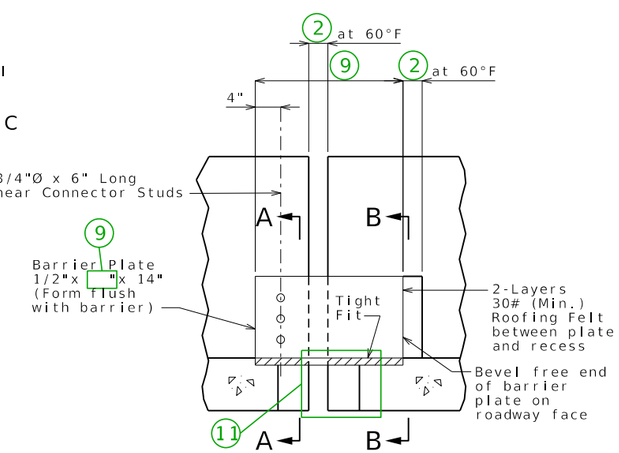

ELEVATION OF BARRIER

FINGER PLATE EXPANSION DEVICE AT INT. BENT NO. _

Detailed
Checked

Note: This drawing is not to scale. Follow dimensions.

Sheet No. of

DATE PREPARED	10/16/2023
ROUTE	STATE MO
DISTRICT	SHEET NO. 5
COUNTY	
JOB NO.	
CONTRACT ID.	
PROJECT NO.	
BRIDGE NO.	

DESCRIPTION	DATE

MISSOURI HIGHWAYS AND TRANSPORTATION COMMISSION
105 WEST CAPITOL
JEFFERSON CITY, MO 65102
1-888-ASK-MODOT (1-888-275-6636)

FING05_psi_to_stl Guidance & Alternate Details (1 of 2)

STANDARD DRAWING GUIDANCE (do not show on plans):
(For all finger plate drawings. Some notes may not apply to this sheet.)

1. Not a guidance note. Do not replace.
2. Gap between fingers, barrier recess gap and, for intermediate bents, gap in barrier.
3. For end bents: 2 + 1/2"/cos(skew)
4. Gap adjustment for temperature: along bridge longitudinal axis
5. Transverse gap between fingers
6. Maximum gap between fingers normal to joint @ 60°F.
7. Finger length.
8. Transverse gap between fingers: not the same as 5 for skewed joints.
9. Plate length = (18"+ 6)/cos(skew)
10. Gap between girder or between girder and end bent.
11. Include details of slab projection beyond ℄ W-beam under barrier on plan of slab detail sheet. Consider similarly projection beyond front face of angle under barrier at end bents.
12. Delete panel for CIP slab.

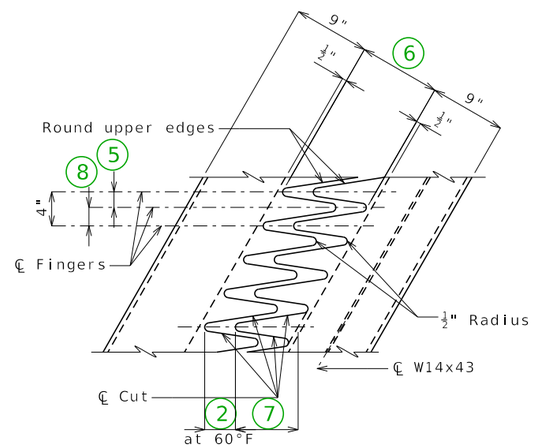

PART PLAN OF FINGER PLATE

LA

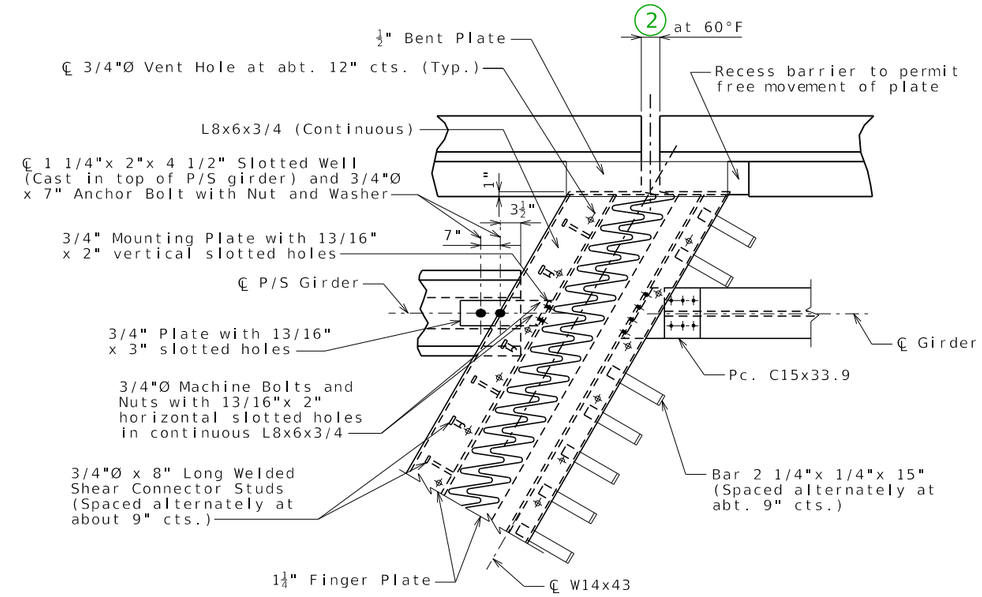

PART PLAN OF DEVICE

LA TYPE B BARRIER (SBC)

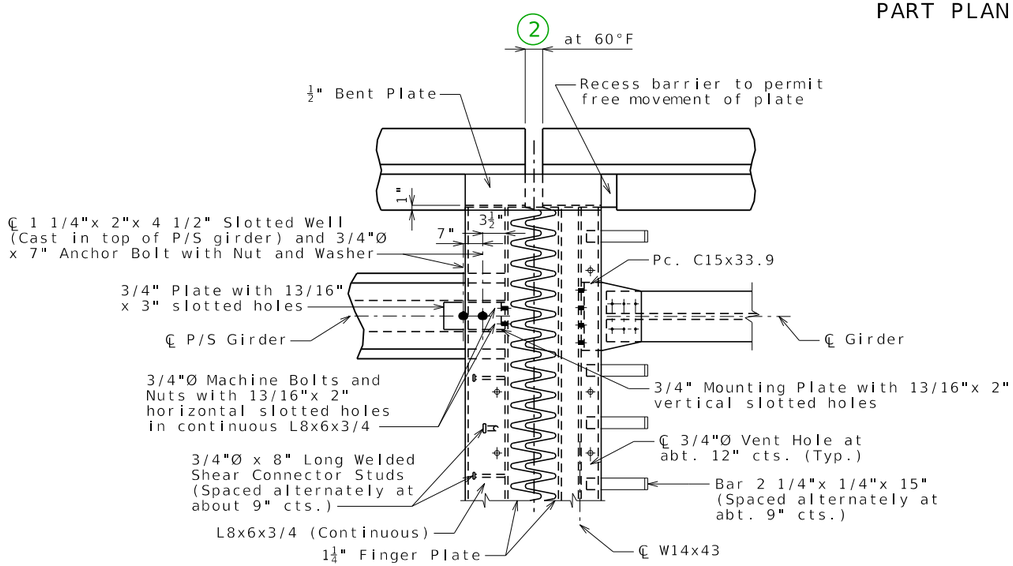

PART PLAN OF DEVICE

SQ TYPE B BARRIER (SBC)

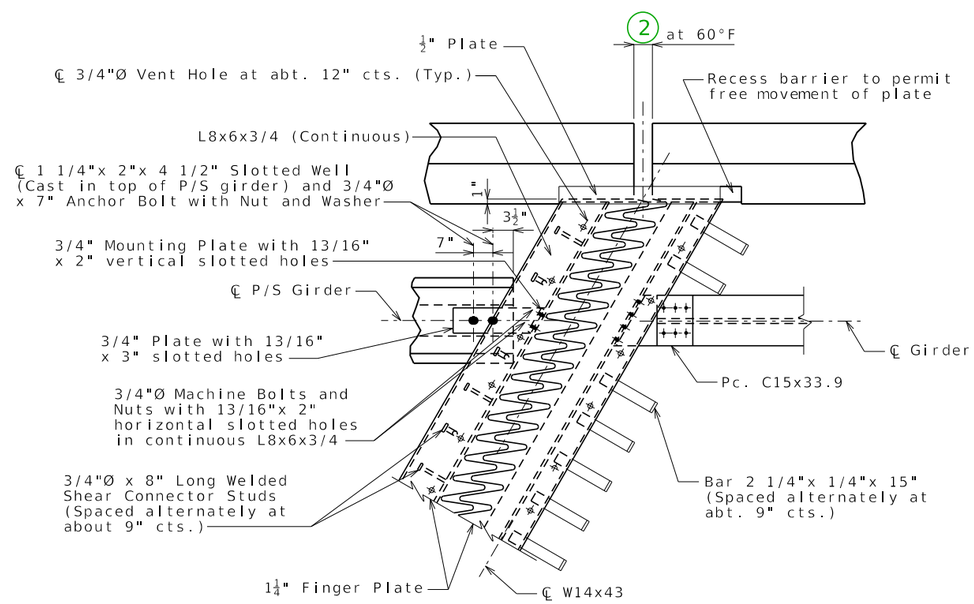

PART PLAN OF DEVICE

LA TYPE D BARRIER

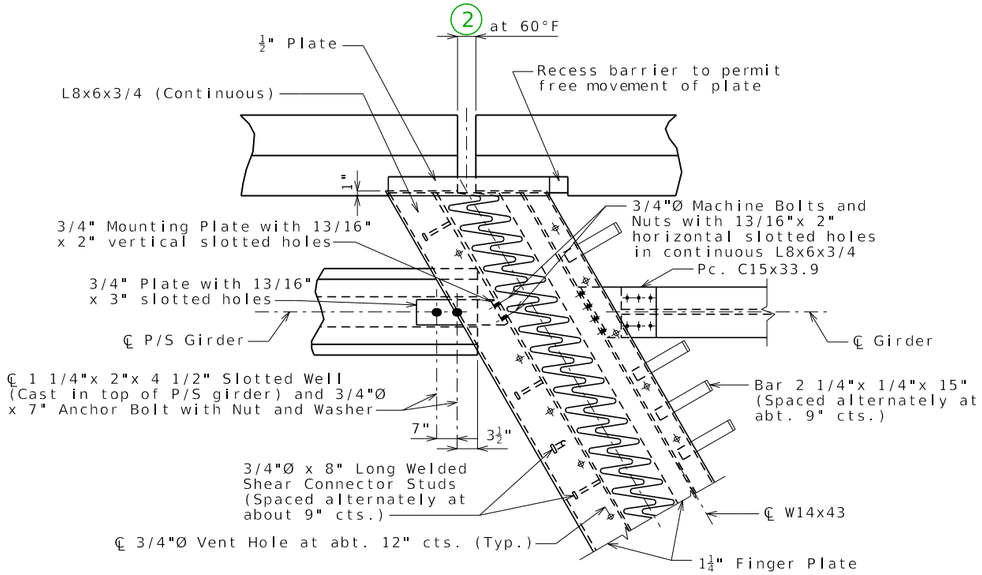

PART PLAN OF DEVICE

RA TYPE D BARRIER

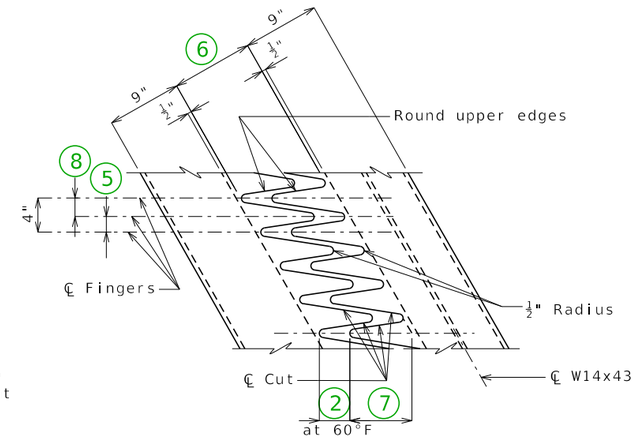

PART PLAN OF FINGER PLATE

RA

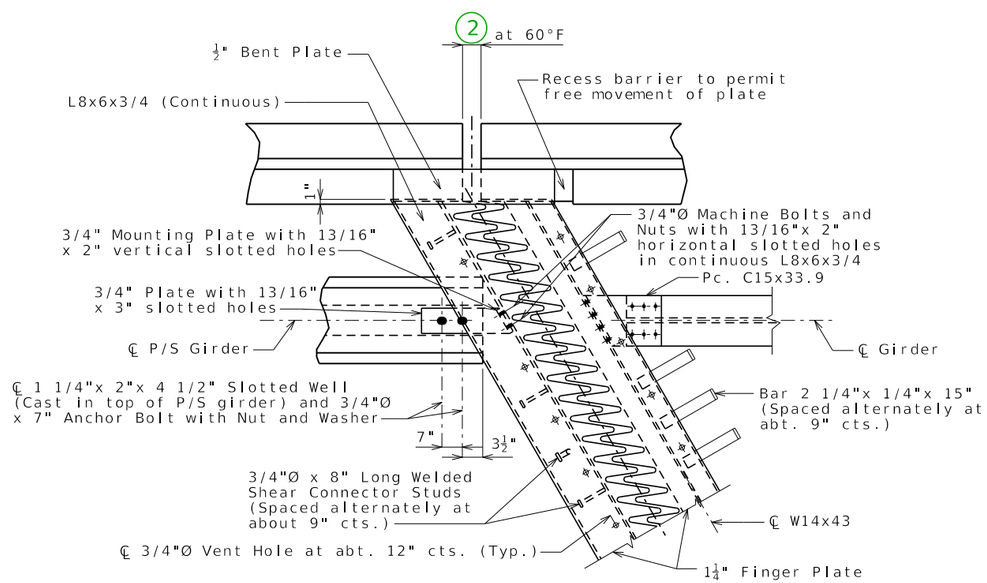

PART PLAN OF DEVICE

RA TYPE B BARRIER (SBC)

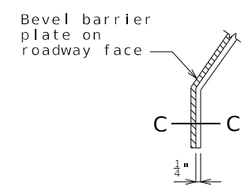

PART ELEVATION AT END OF BENT BARRIER PLATE

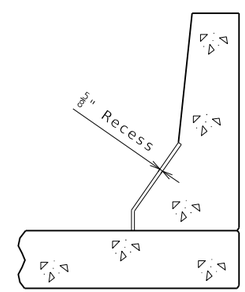

SECTION B-B

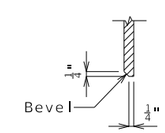

SECTION C-C

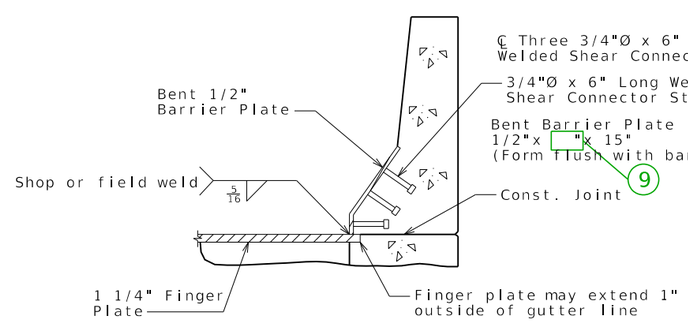

SECTION A-A

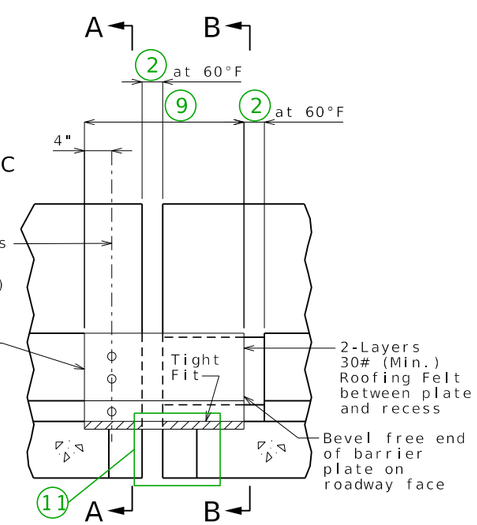

ELEVATION OF BARRIER

TYPE B BARRIER (SBC)(ALL SKEWS)

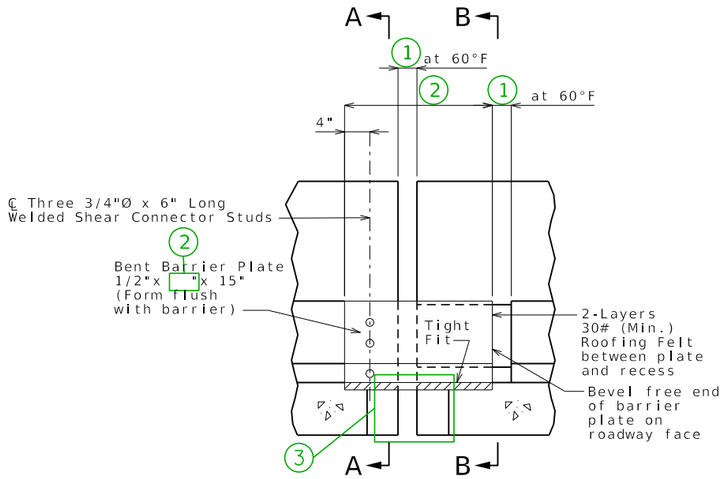

ELEVATION OF BARRIER

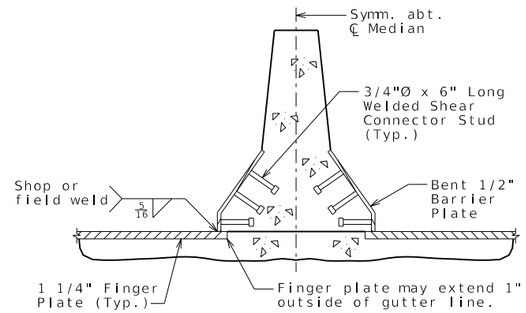

SECTION A-A

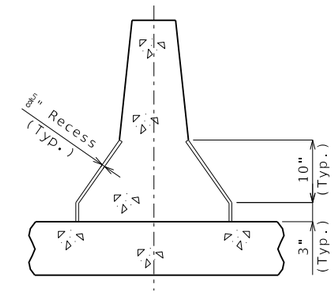

SECTION B-B

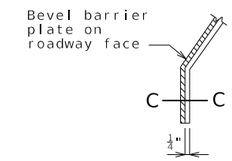

PART ELEVATION
AT END OF BENT
BARRIER PLATE

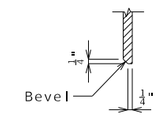

SECTION C-C

ALTERNATE DETAILS FOR TYPE B BARRIER (SBC)

STANDARD DRAWING GUIDANCE (do not show on plans):

1. Gap in barrier and barrier recess gap

   For gap in barrier at end bents: add 1/2"/cos(skew)

2. Barrier plate length.

3. Include details of slab projection beyond ℄ W-beam under barrier on plan of slab detail sheet. Consider similar projection beyond front face of angle under barrier at end bents.

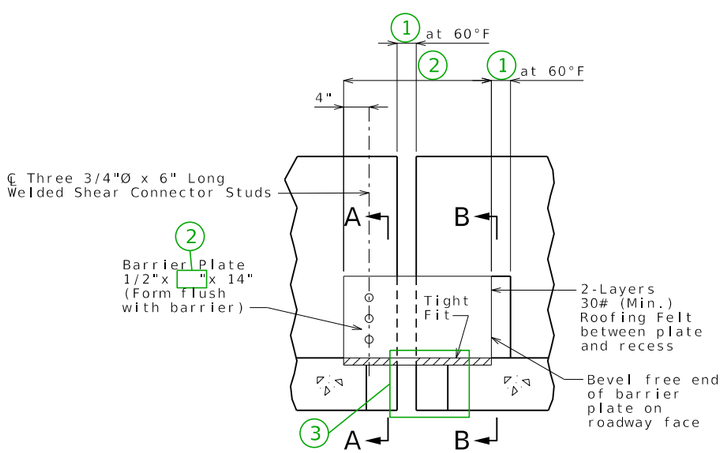

ELEVATION OF BARRIER

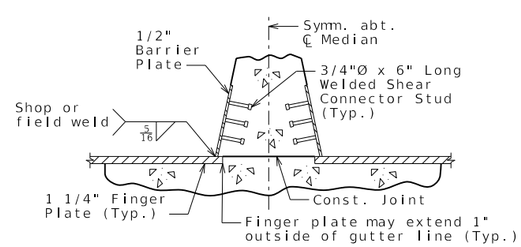

SECTION A-A

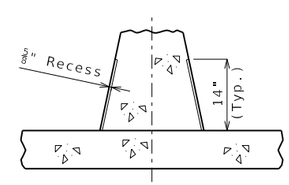

SECTION B-B

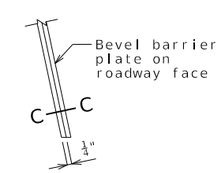

PART ELEVATION
AT END OF
BARRIER PLATE

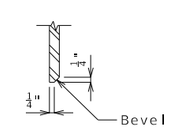

SECTION C-C

FINGER PLATE EXPANSION DEVICE AT MEDIAN

Detailed
Checked

Note: This drawing is not to scale. Follow dimensions.

Sheet No. of

DATE PREPARED	10/16/2023
ROUTE	STATE MO
DISTRICT	SHEET NO. 6
COUNTY	
JOB NO.	
CONTRACT ID.	
PROJECT NO.	
BRIDGE NO.	

DESCRIPTION	DATE

MISSOURI HIGHWAYS AND TRANSPORTATION COMMISSION
105 WEST CAPITOL
JEFFERSON CITY, MO 65102
1-888-ASK-MODOT (1-888-275-6636)

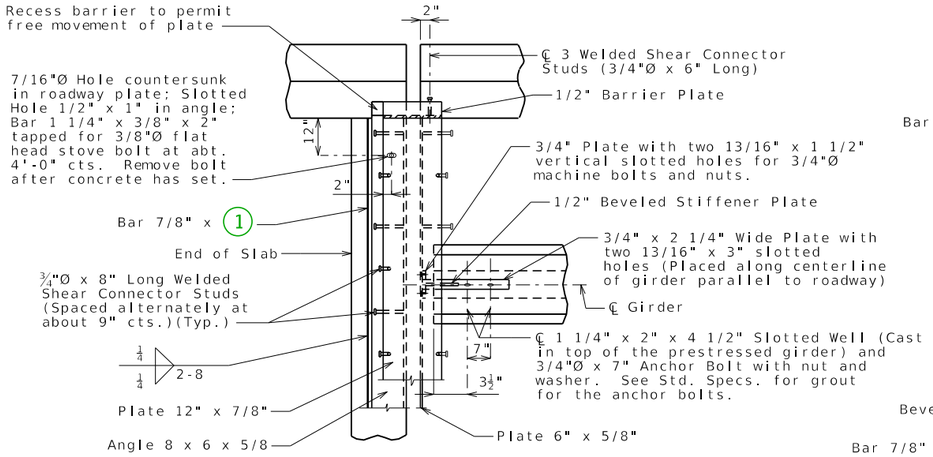

PART PLAN

Note: Concrete vent holes not shown for clarity.

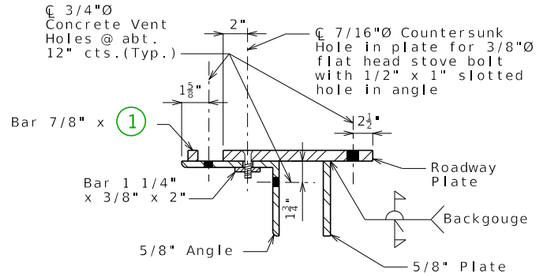

SECTION THRU DEVICE

(GRADE LESS THAN 3%)

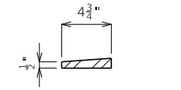

TYPICAL BEVELED PLATE

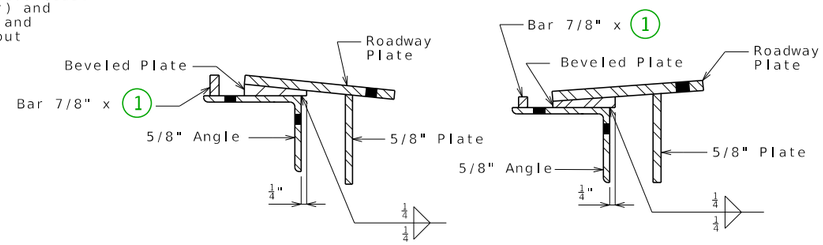

SECTIONS THRU DEVICE

(GRADE 3% OF MORE)

GENERAL NOTES:

Expansion device shall be fabricated in one section, except for stage construction and when the length is over 50 feet. A complete joint penetration groove weld splice shall be required. Welds shall be ground flush to provide a smooth surface. The expansion device shall be fabricated and installed to the crown and grade of the roadway.

Plan dimensions are based on installation at 60°F. The expansion gap and other dimensions shall be increased or decreased [ ]" for each 10° fall or rise in temperature at installation. 5

Material for the expansion device shall be ASTM A709 Grade 36 structural steel. Anchors for the expansion device shall be in accordance with Sec 1037.

Structural steel for the expansion device and barrier plate shall be coated with a minimum of two coats of inorganic zinc primer to provide a total dry film thickness of 4 mils minimum, 6 mils maximum, or galvanized in accordance with ASTM A123. Anchors need not be protected from overspray.

Payment for furnishing, coating or galvanizing and installing the structural steel for the expansion device will be considered completely covered by the contract unit price for Expansion Device (Flat Plate) per linear foot.

Concrete shall be forced under and around flat plate, anchors and angles. Proper consolidation shall be achieved by localized internal vibration. Finishing of the concrete shall be achieved by hand finishing within one foot of the expansion device. The vertical and horizontal concrete vent holes shall be offset from each other. Do not alternate holes at the 12" spacing.

Longitudinal reinforcing steel shall be placed so that ends shall not be more than ±1" from vertical plate and the vertical leg of the angle at the expansion device.

Complete joint penetration welds utilized in the fabrication of the expansion device shall be nondestructively tested by an approved method.

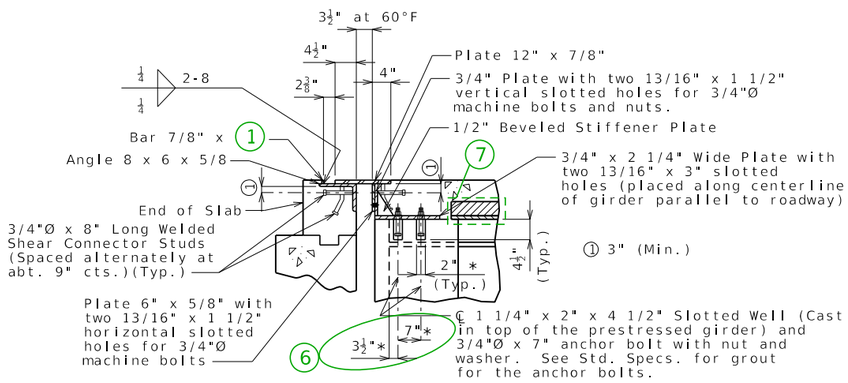

SECTION AT END BENT

* Dimension along ℄ Girder

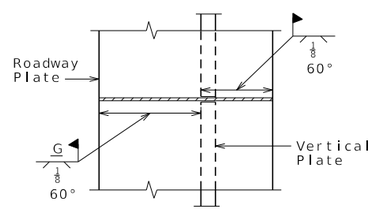

PART PLAN SHOWING ROADWAY PLATE AND VERTICAL PLATE

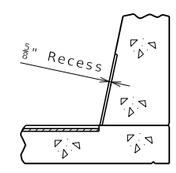

SECTION B-B

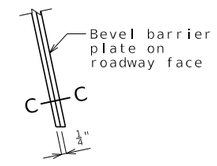

PART ELEVATION AT END OF BARRIER PLATE

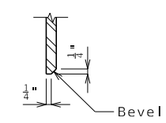

SECTION C-C

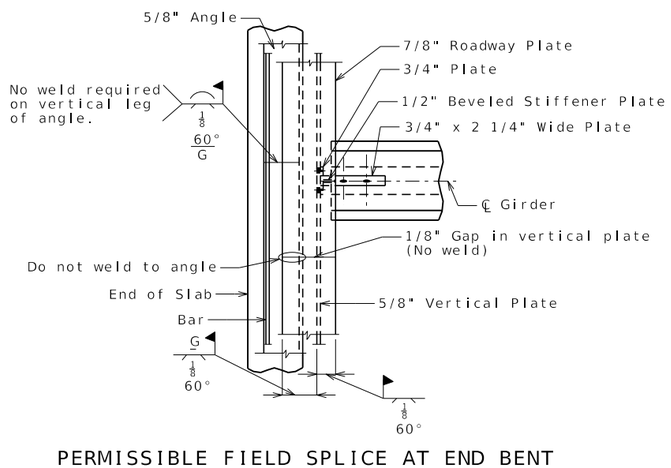

PERMISSIBLE FIELD SPLICE AT END BENT

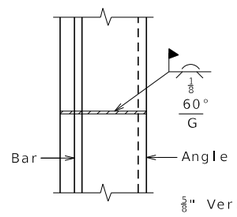

PART PLAN OF ANGLE AND BAR

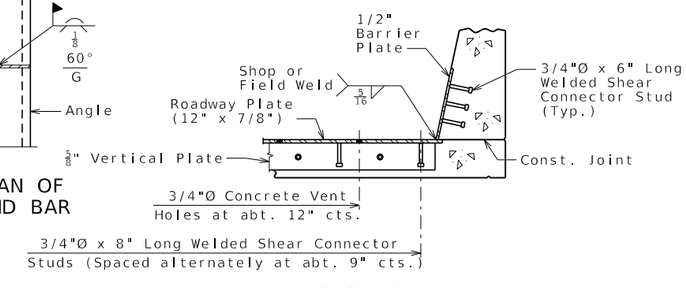

SECTION A-A

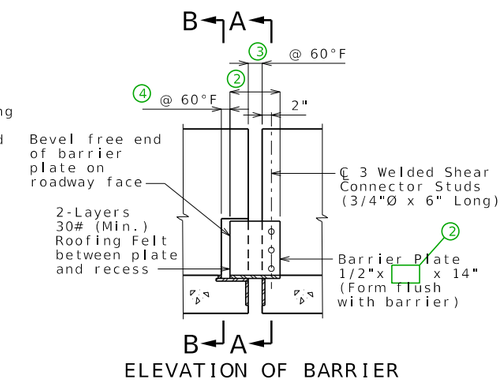

ELEVATION OF BARRIER

FLAT PLATE EXPANSION DEVICE AT END BENT NO.

Detailed
Checked

Note: This drawing is not to scale. Follow dimensions.

Sheet No. of

DATE PREPARED	10/16/2023
ROUTE	STATE MO
DISTRICT	SHEET NO. 1
COUNTY	
JOB NO.	
CONTRACT ID.	
PROJECT NO.	
BRIDGE NO.	

DESCRIPTION

DATE

MISSOURI HIGHWAYS AND TRANSPORTATION COMMISSION
105 WEST CAPITOL
JEFFERSON CITY, MO 65102
1-888-ASK-MODOT (1-888-275-6636)

FLAT01_psi_end Guidance & Alternate Details (1 of 2)

STANDARD DRAWING GUIDANCE (do not show on plans):

1. Bar height.
2. Plate length = 12"/cos(skew) [12" for 0° skew]
3. Barrier gap = $3\frac{1}{2}$"/cos(skew) [$3\frac{1}{2}$" for 0° skew]
4. Barrier recess gap = $2\frac{3}{8}$"/cos(skew) [$2\frac{3}{8}$" for 0° skew]. Assume recess ends at front edge of bar.
5. Installation gap adjustment for temperature: normal to joint.
6. Check and revise locations of slotted wells to clear girder end section reinforcement.
7. Delete panel for CIP slab.

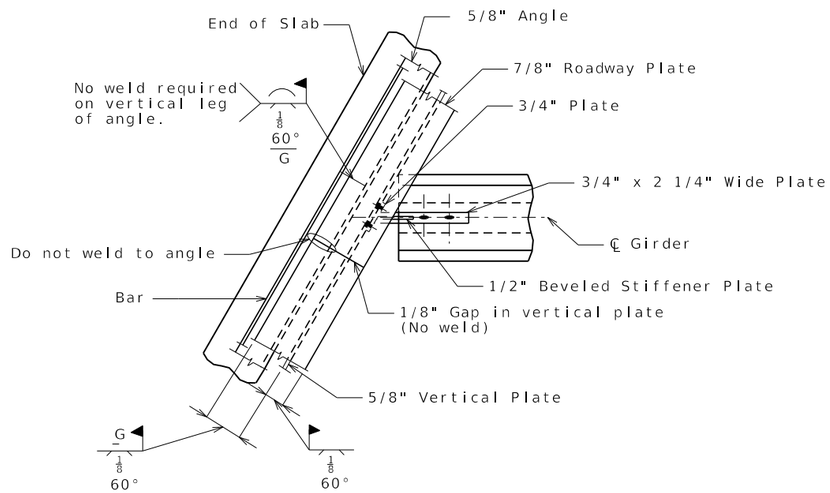

PERMISSIBLE FIELD SPLICE AT END BENT

LA

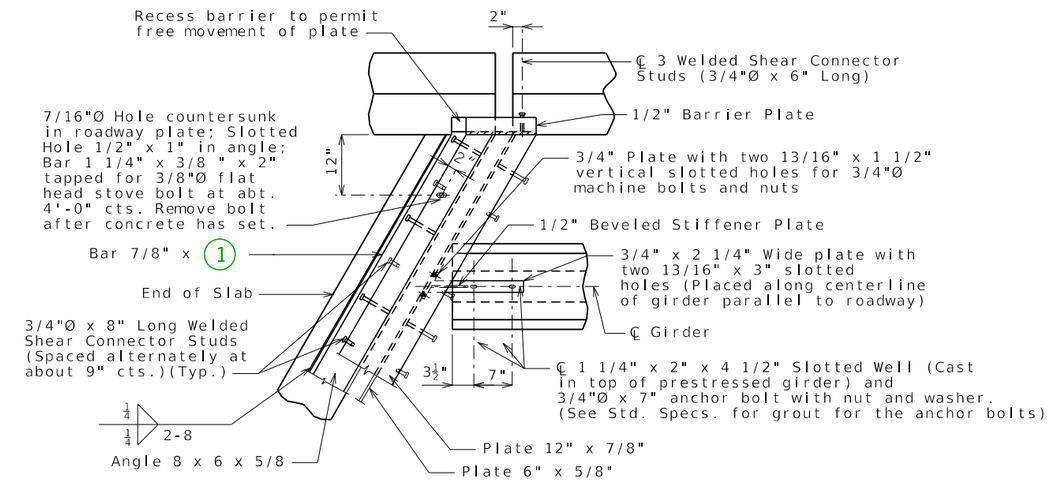

PART PLAN

Note: Concrete vent holes not shown for clarity.

LA TYPE D BARRIER

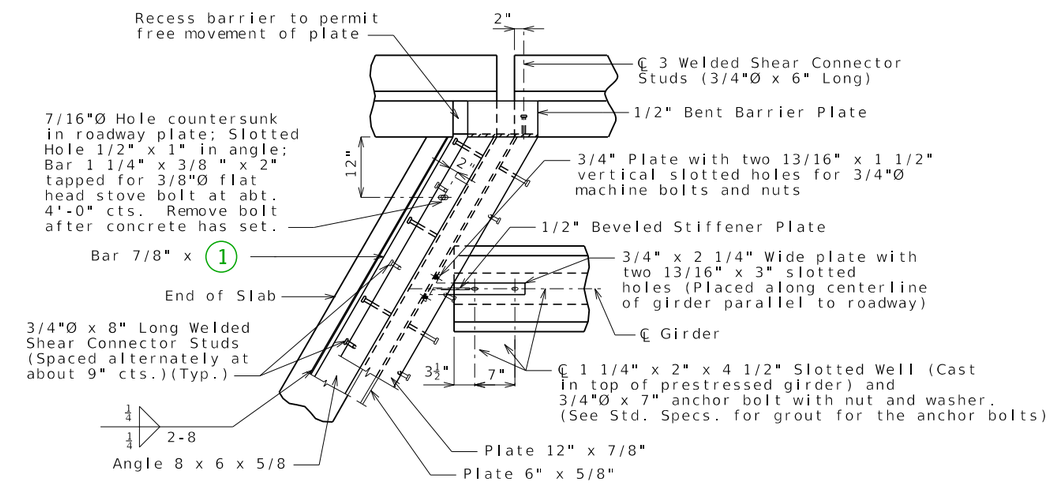

PART PLAN

Note: Concrete vent holes not shown for clarity.

LA TYPE B BARRIER (SBC)

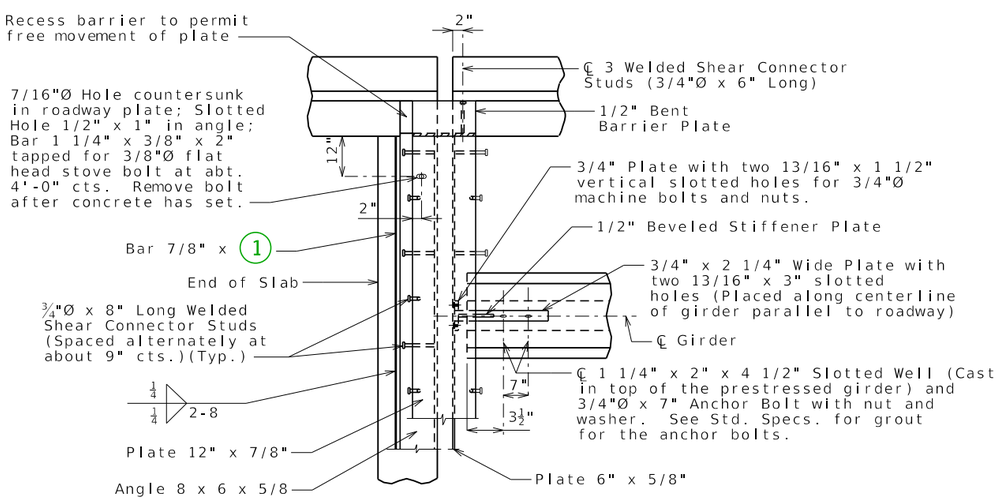

PART PLAN

Note: Concrete vent holes not shown for clarity.

SQ TYPE B BARRIER (SBC)

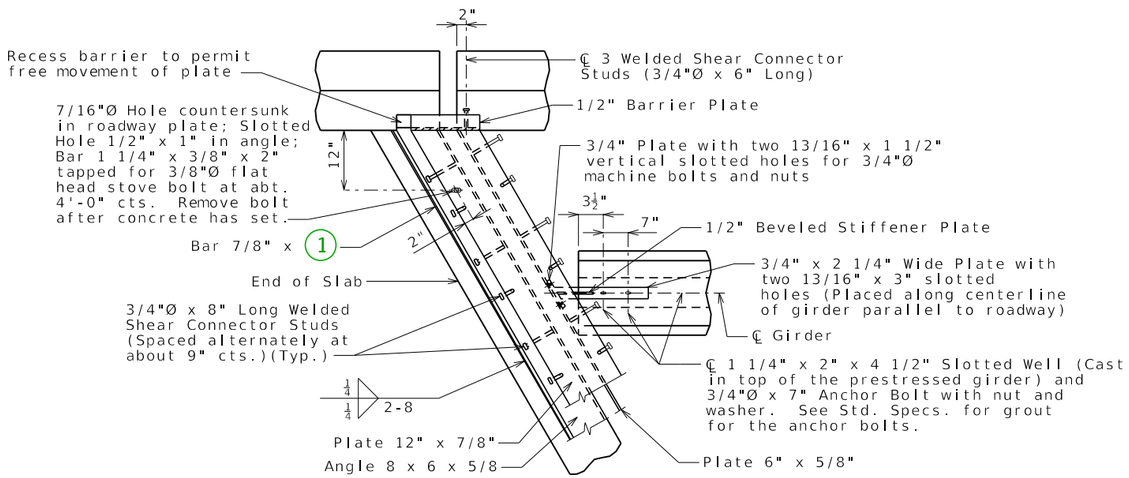

PART PLAN

Note: Concrete vent holes not shown for clarity.

RA TYPE D BARRIER

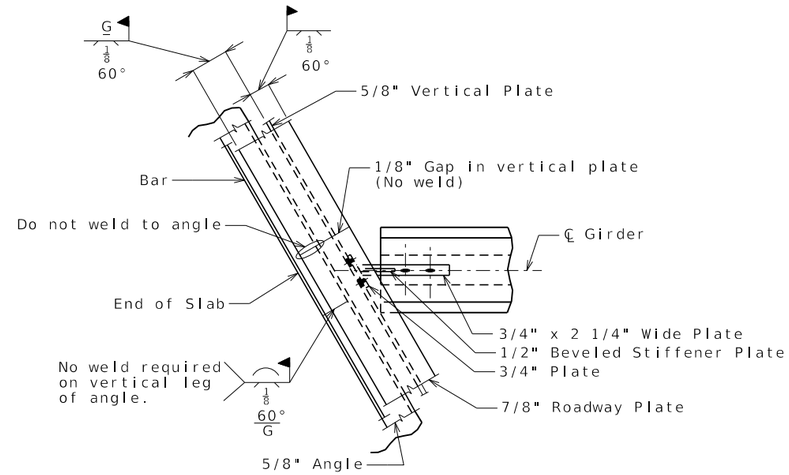

PERMISSIBLE FIELD SPLICE AT END BENT

RA

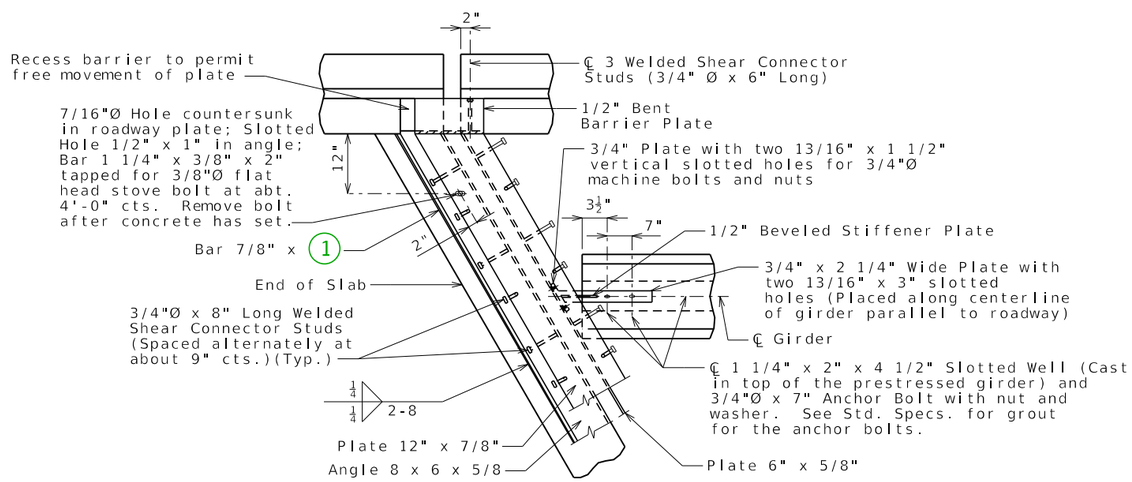

PART PLAN

Note: Concrete vent holes not shown for clarity.

RA TYPE B BARRIER (SBC)

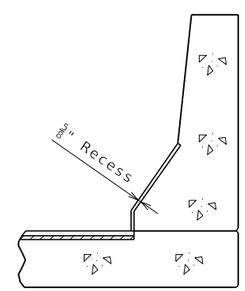

SECTION B-B

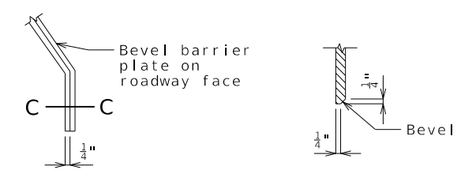

PART ELEVATION AT END OF BENT BARRIER PLATE

SECTION C-C

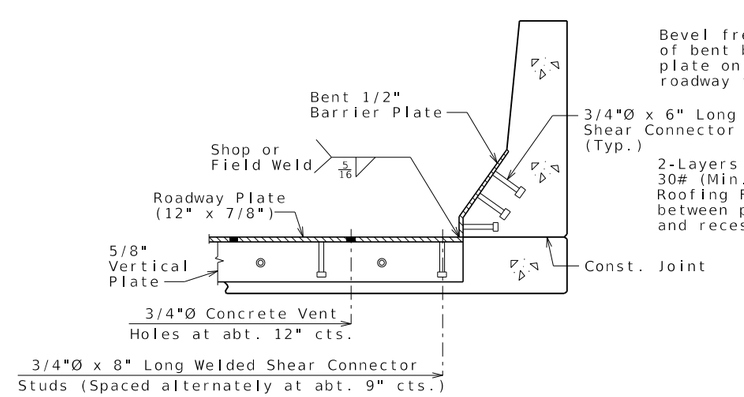

SECTION A-A

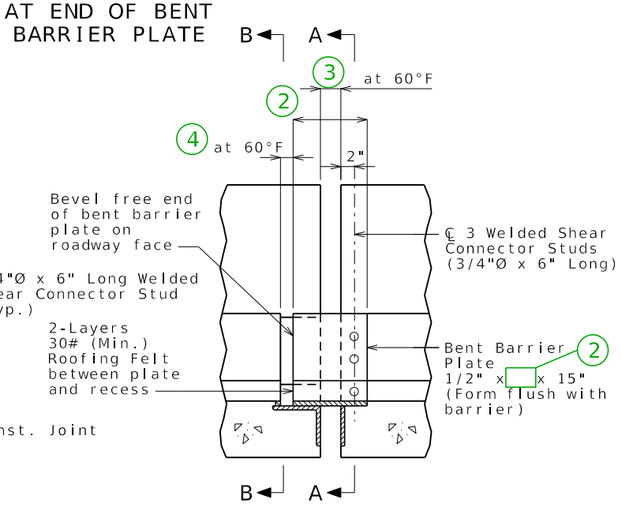

ELEVATION OF BARRIER

TYPE B BARRIER (SBC)(ALL)

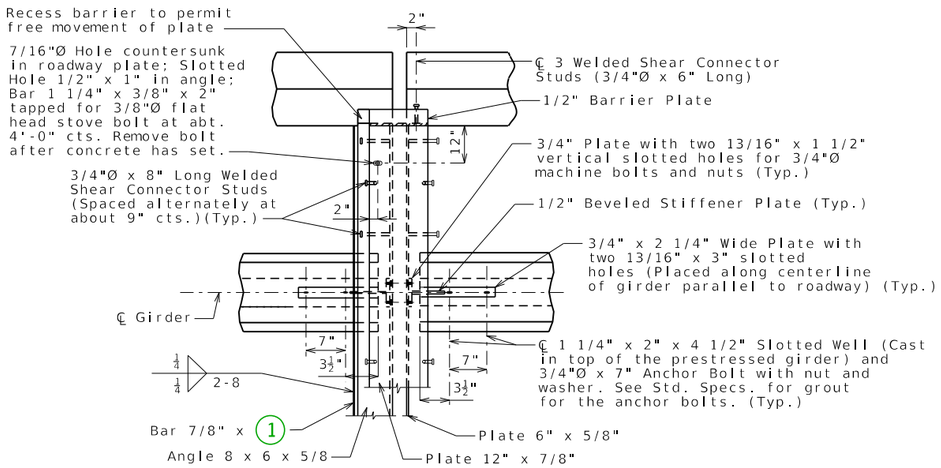

PART PLAN

Note: Concrete vent holes not shown for clarity.

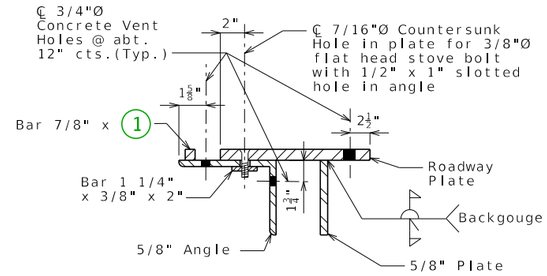

SECTION THRU DEVICE

GENERAL NOTES:

Expansion device shall be fabricated in one section, except for stage construction and when the length is over 50 feet. A complete joint penetration groove weld splice shall be required. Welds shall be ground flush to provide a smooth surface. The expansion device shall be fabricated and installed to the crown and grade of the roadway.

Plan dimensions are based on installation at 60°F. The expansion gap and other dimensions shall be increased or decreased [ ]" for each 10° fall or rise in temperature at installation. 5

Material for the expansion device shall be ASTM A709 Grade 36 structural steel. Anchors for the expansion device shall be in accordance with Sec 1037.

Structural steel for the expansion device and barrier plate shall be coated with a minimum of two coats of inorganic zinc primer to provide a total dry film thickness of 4 mils minimum, 6 mils maximum, or galvanized in accordance with ASTM A123. Anchors need not be protected from overspray.

Payment for furnishing, coating or galvanizing and installing the structural steel for the expansion device will be considered completely covered by the contract unit price for Expansion Device (Flat Plate) per linear foot.

Concrete shall be forced under and around flat plate, anchors and angles. Proper consolidation shall be achieved by localized internal vibration. Finishing of the concrete shall be achieved by hand finishing within one foot of the expansion device. The vertical and horizontal concrete vent holes shall be offset from each other. Do not alternate holes at the 12" spacing.

Longitudinal reinforcing steel shall be placed so that ends shall not be more than ±1" from vertical plate and the vertical leg of the angle at the expansion device.

Complete joint penetration welds utilized in the fabrication of the expansion device shall be nondestructively tested by an approved method.

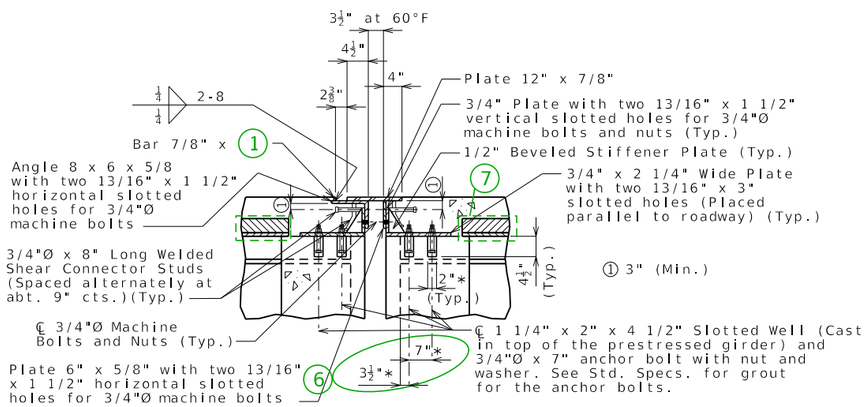

SECTION AT INTERMEDIATE BENT

* Dimension along ℄ Girder

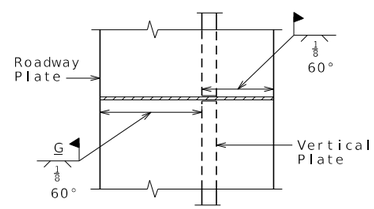

PART PLAN SHOWING ROADWAY PLATE AND VERTICAL PLATE

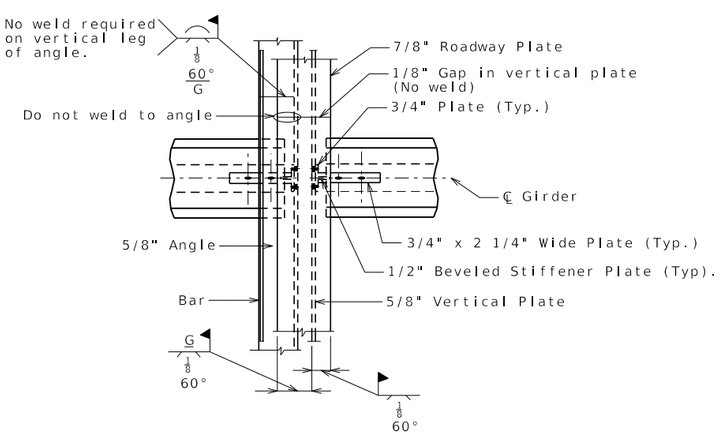

PERMISSIBLE FIELD SPLICE AT INT. BENT

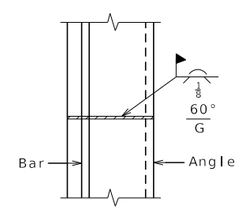

PART PLAN OF ANGLE AND BAR

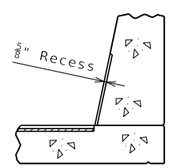

SECTION B-B

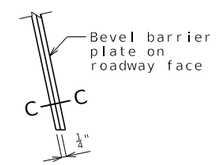

PART ELEVATION AT END OF BARRIER PLATE

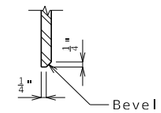

SECTION C-C

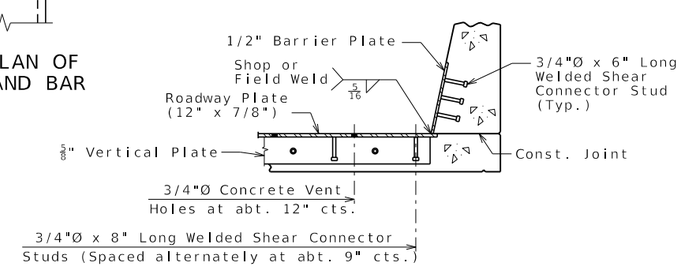

SECTION A-A

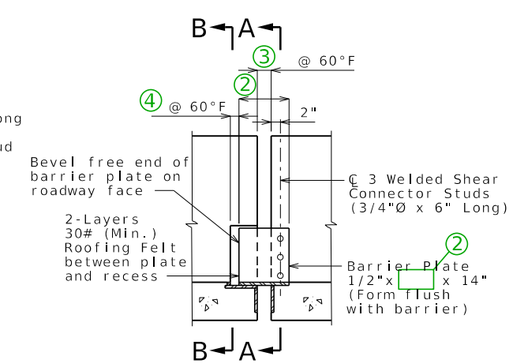

ELEVATION OF BARRIER

FLAT PLATE EXPANSION DEVICE AT INT. BENT NO.

DATE PREPARED	10/16/2023
ROUTE	STATE MO
DISTRICT	SHEET NO. 2
COUNTY	
JOB NO.	
CONTRACT ID.	
PROJECT NO.	
BRIDGE NO.	

DESCRIPTION

DATE

MISSOURI HIGHWAYS AND TRANSPORTATION COMMISSION
105 WEST CAPITOL
JEFFERSON CITY, MO 65102
1-888-ASK-MODOT (1-888-275-6636)

Detailed
Checked

Note: This drawing is not to scale. Follow dimensions.

Sheet No. of

FLAT02_psi_int Guidance & Alternate Details (1 of 2)

STANDARD DRAWING GUIDANCE (do not show on plans):

1. Bar height.
2. Plate length = 12"/cos(skew) [12" for 0° skew]
3. Barrier gap = $3\frac{1}{2}$"/cos(skew) [$3\frac{1}{2}$" for 0° skew]
4. Barrier recess gap = $2\frac{3}{8}$"/cos(skew) [$2\frac{3}{8}$" for 0° skew]. Assume recess ends at front edge of bar.
5. Installation gap adjustment for temperature: normal to joint.
6. Check and revise locations of slotted wells to clear girder end section reinforcement.
7. Delete panel for CIP slab.

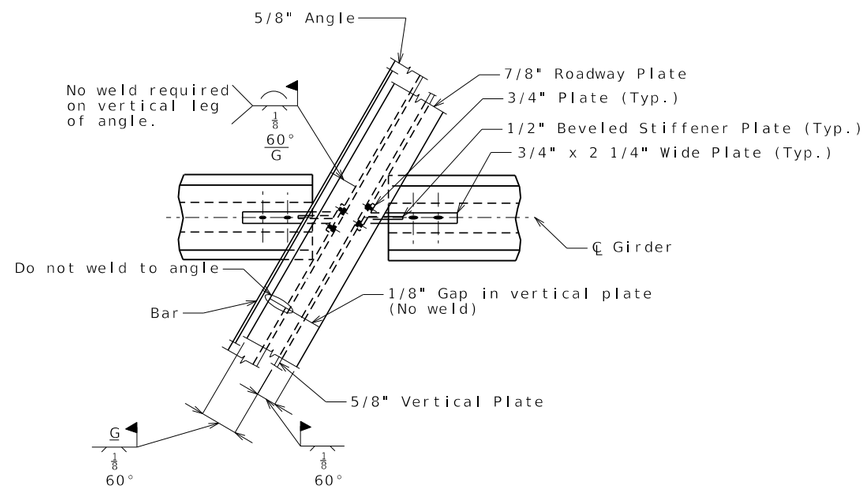

PERMISSIBLE FIELD SPLICE AT INT. BENT

LA

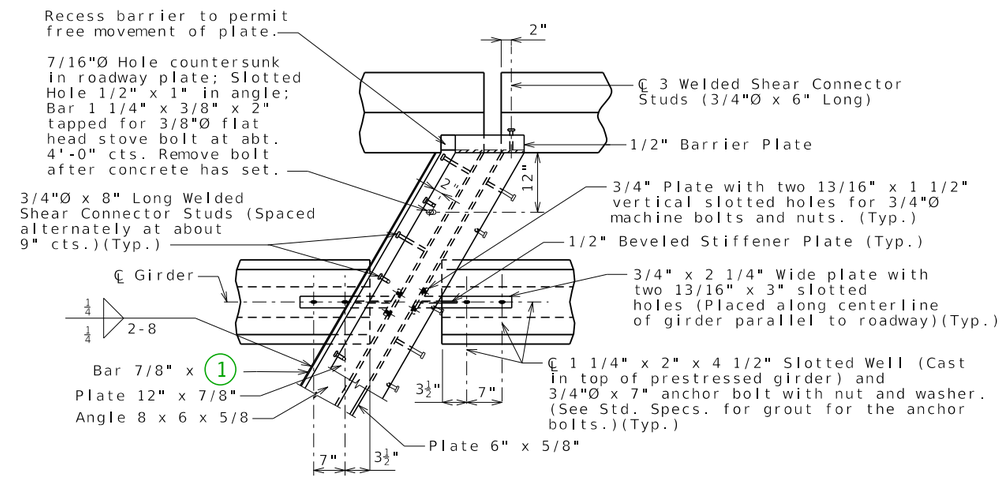

PART PLAN

Note: Concrete vent holes not shown for clarity.

LA TYPE D BARRIER

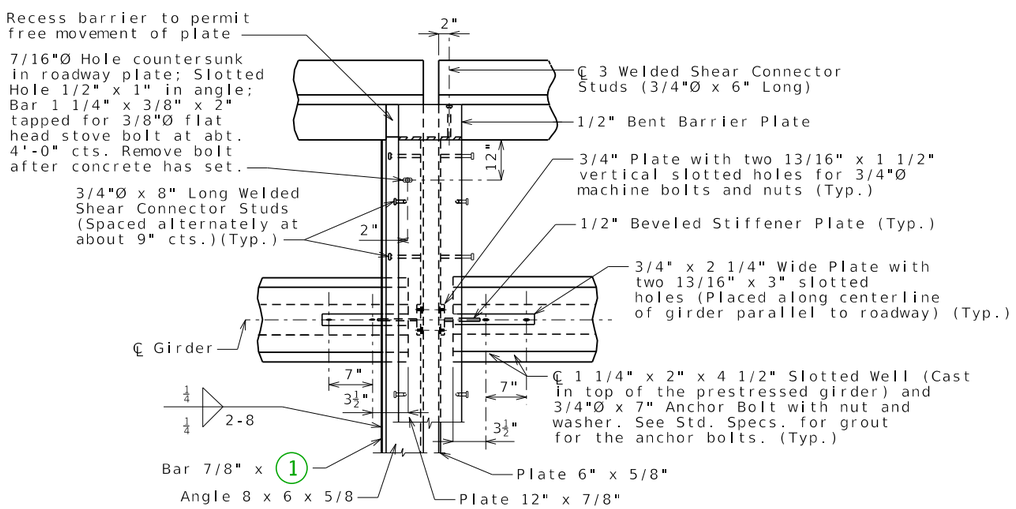

PART PLAN

Note: Concrete vent holes not shown for clarity.

SQ TYPE B BARRIER (SBC)

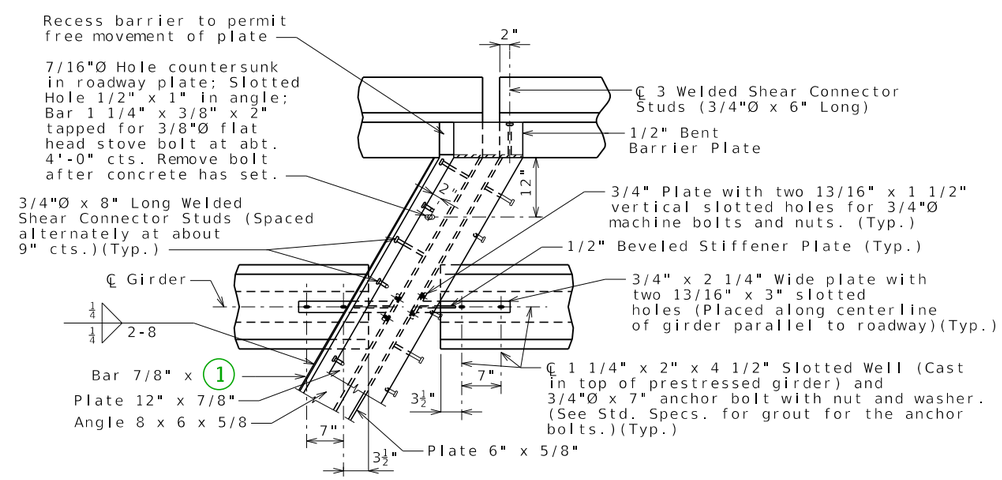

PART PLAN

Note: Concrete vent holes not shown for clarity.

LA TYPE B BARRIER (SBC)

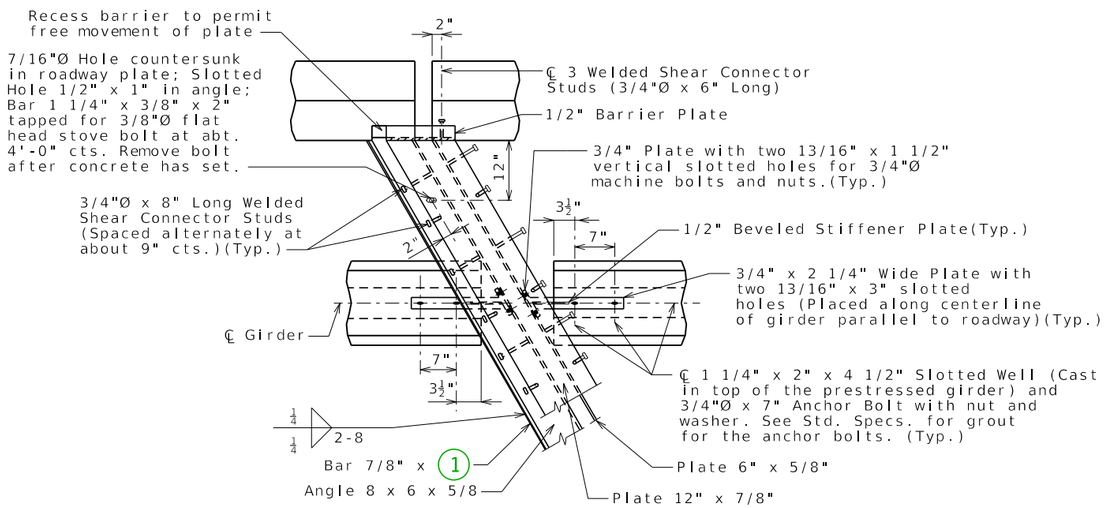

PART PLAN

Note: Concrete vent holes not shown for clarity.

RA TYPE D BARRIER

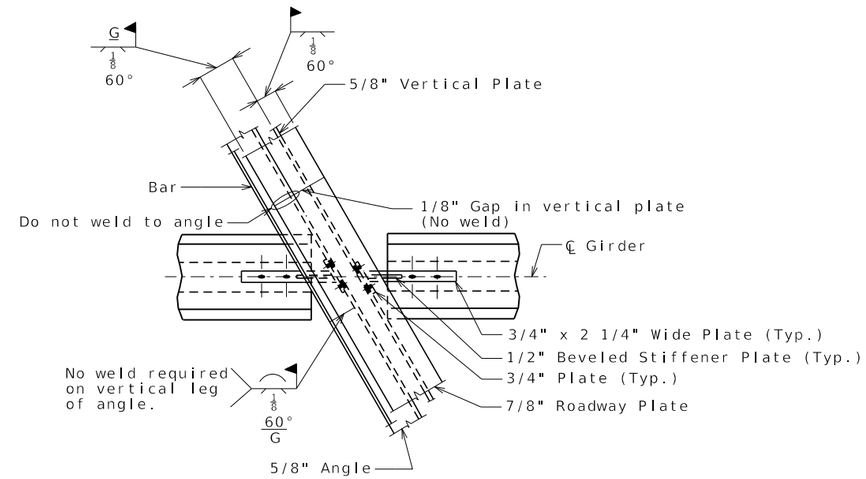

PERMISSIBLE FIELD SPLICE AT INT. BENT

RA

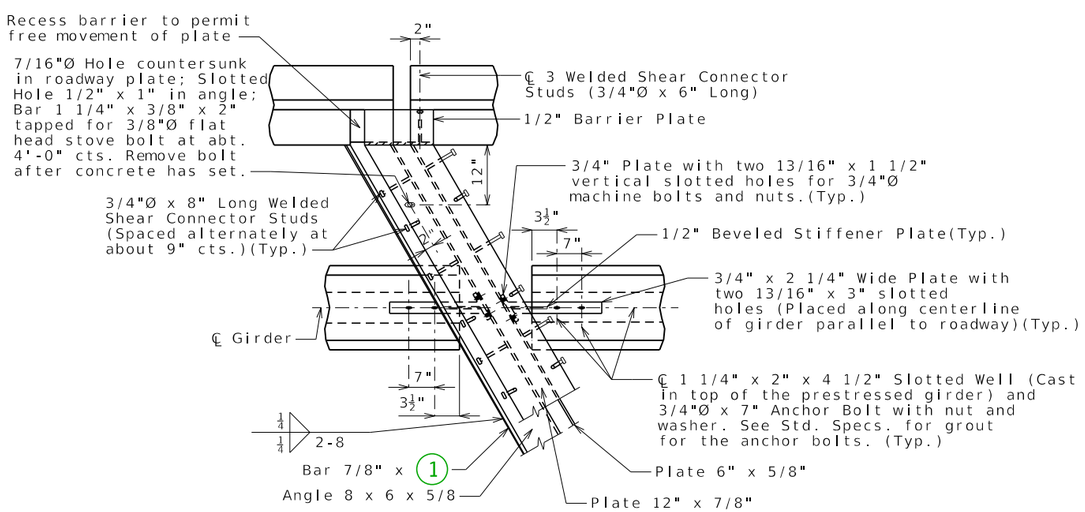

PART PLAN

Note: Concrete vent holes not shown for clarity.

RA TYPE B BARRIER (SBC)

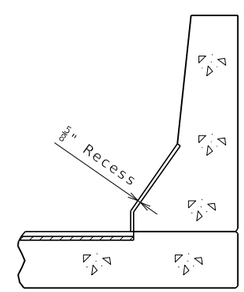

SECTION B-B

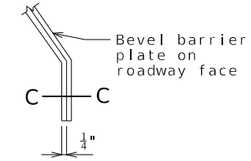

PART ELEVATION AT END OF BENT BARRIER PLATE

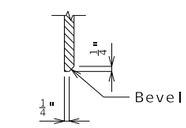

SECTION C-C

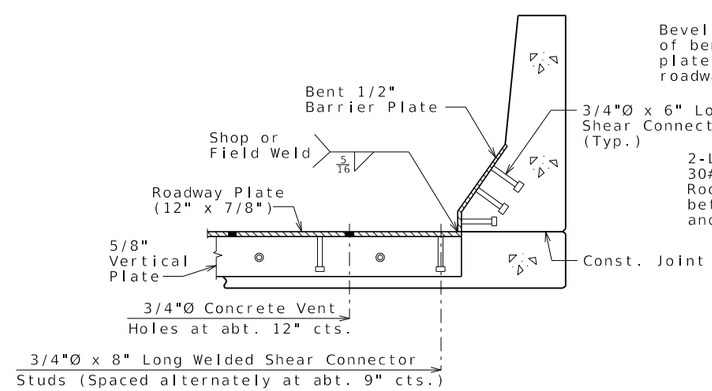

SECTION A-A

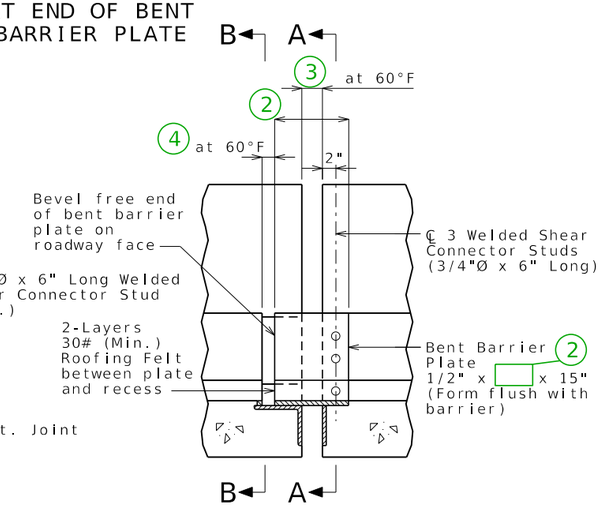

ELEVATION OF BARRIER

TYPE B BARRIER (SBC)(ALL)

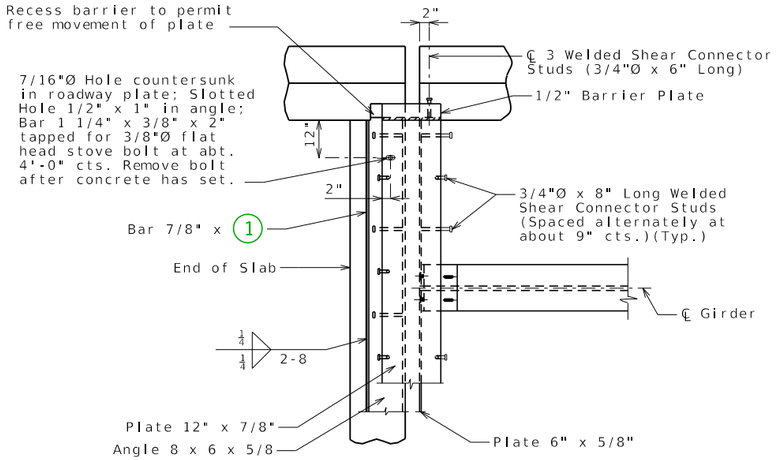

PART PLAN

Note: Concrete vent holes not shown for clarity.

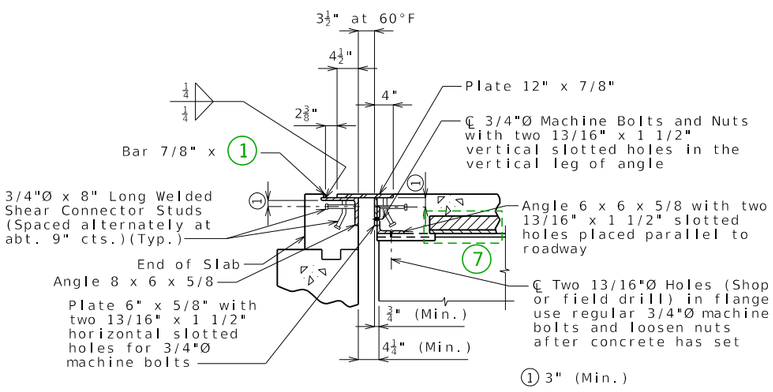

SECTION AT END BENT

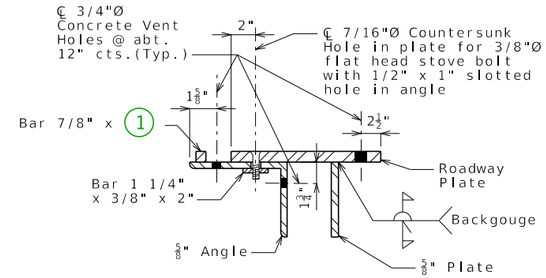

SECTION THRU DEVICE

(GRADE LESS THAN 3%)

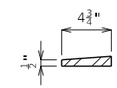

TYPICAL BEVELED PLATE

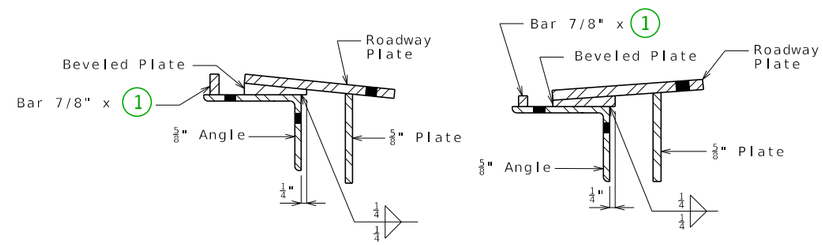

SECTIONS THRU DEVICE

(GRADE 3% OR MORE)

GENERAL NOTES:

Expansion device shall be fabricated in one section, except for stage construction and when the length is over 50 feet. A complete joint penetration groove weld splice shall be required. Welds shall be ground flush to provide a smooth surface. The expansion device shall be fabricated and installed to the crown and grade of the roadway.

Plan dimensions are based on installation at 60°F. The expansion gap and other dimensions shall be increased or decreased [ ]" for each 10° fall or rise in temperature at installation. 5

Material for the expansion device shall be ASTM A709 Grade 36 structural steel. Anchors for the expansion device shall be in accordance with Sec 1037.

Structural steel for the expansion device and barrier plate shall be coated with a minimum of two coats of inorganic zinc primer to provide a total dry film thickness of 4 mils minimum, 6 mils maximum, or galvanized in accordance with ASTM A123. Anchors need not be protected from overspray.

Payment for furnishing, coating or galvanizing and installing the structural steel for the expansion device will be considered completely covered by the contract unit price for Expansion Device (Flat Plate) per linear foot.

Concrete shall be forced under and around flat plate, anchors and angles. Proper consolidation shall be achieved by localized internal vibration. Finishing of the concrete shall be achieved by hand finishing within one foot of the expansion device. The vertical and horizontal concrete vent holes shall be offset from each other. Do not alternate holes at the 12" spacing.

Longitudinal reinforcing steel shall be placed so that ends shall not be more than ±1" from vertical plate and the vertical leg of the angle at the expansion device.

Complete joint penetration welds utilized in the fabrication of the expansion device shall be nondestructively tested by an approved method.

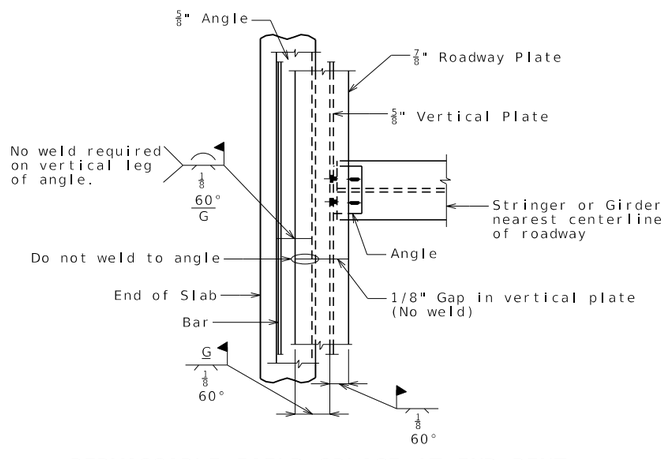

PERMISSIBLE FIELD SPLICE AT END BENT

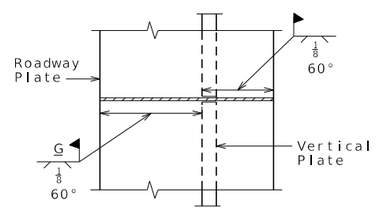

PART PLAN SHOWING ROADWAY PLATE AND VERTICAL PLATE

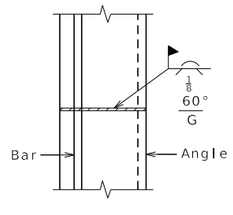

PART PLAN OF ANGLE AND BAR

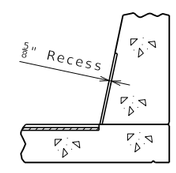

SECTION B-B

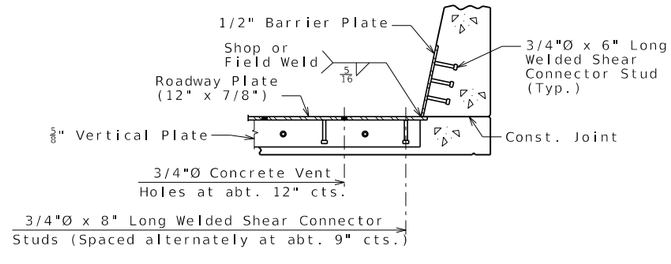

SECTION A-A

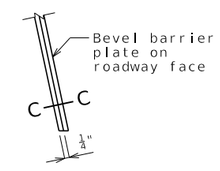

PART ELEVATION AT END OF BARRIER PLATE

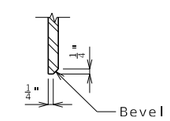

SECTION C-C

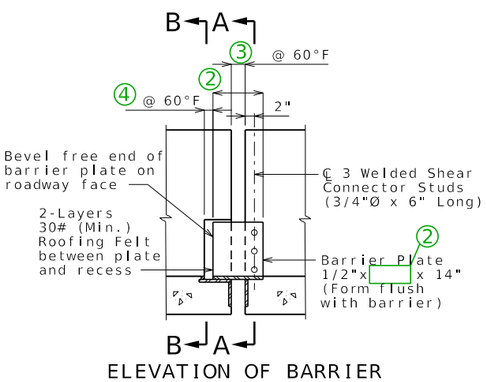

ELEVATION OF BARRIER

FLAT PLATE EXPANSION DEVICE AT END BENT NO.

Detailed
Checked

Note: This drawing is not to scale. Follow dimensions.

Sheet No. of

DATE PREPARED	10/16/2023
ROUTE	STATE MO
DISTRICT	SHEET NO. 3
COUNTY	
JOB NO.	
CONTRACT ID.	
PROJECT NO.	
BRIDGE NO.	

DESCRIPTION

DATE

MISSOURI HIGHWAYS AND TRANSPORTATION COMMISSION
105 WEST CAPITOL
JEFFERSON CITY, MO 65102
1-888-ASK-MODOT (1-888-275-6636)

FLAT03_stl_end Guidance & Alternate Details (1 of 2)

STANDARD DRAWING GUIDANCE (do not show on plans):

1. Bar height.
2. Plate length = 12"/cos(skew) [12" for 0° skew]
3. Barrier gap = $3\frac{1}{2}$"/cos(skew) [$3\frac{1}{2}$" for 0° skew]
4. Barrier recess gap = $2\frac{3}{8}$"/cos(skew) [$2\frac{3}{8}$" for 0° skew]. Assume recess ends at front edge of bar.
5. Installation gap adjustment for temperature: normal to joint.
6. Check and revise locations of slotted wells to clear girder end section reinforcement.
7. Delete panel for CIP slab.

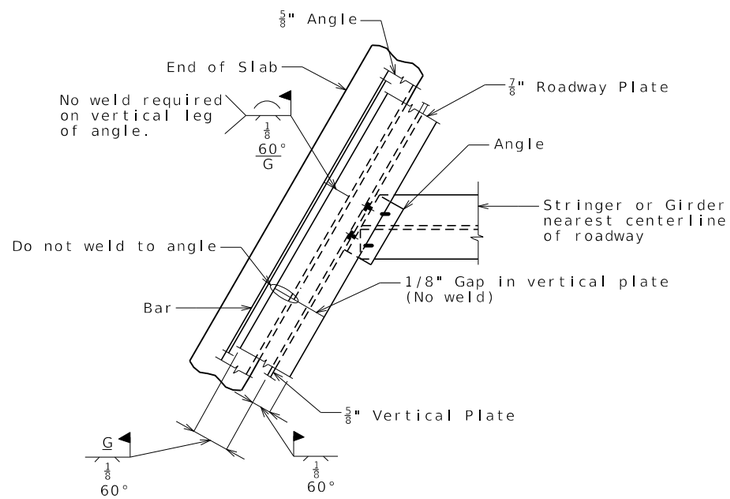

PERMISSIBLE FIELD SPLICE AT END BENT

LA

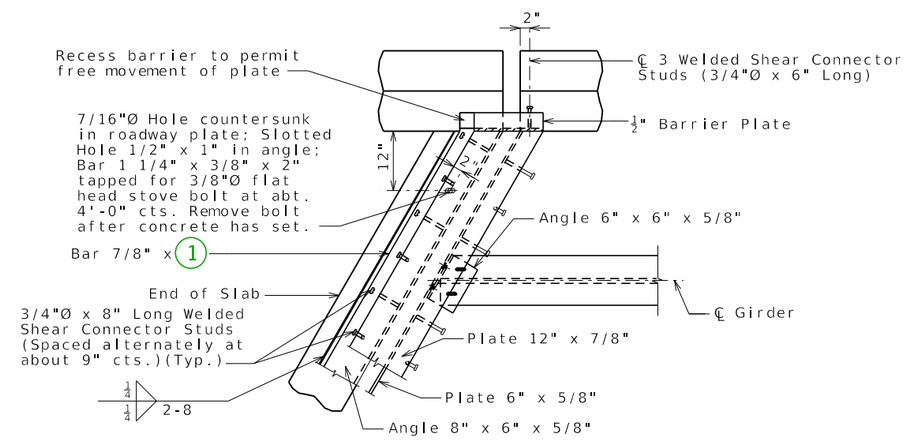

PART PLAN

Note: Concrete vent holes not shown for clarity.

LA TYPE D BARRIER

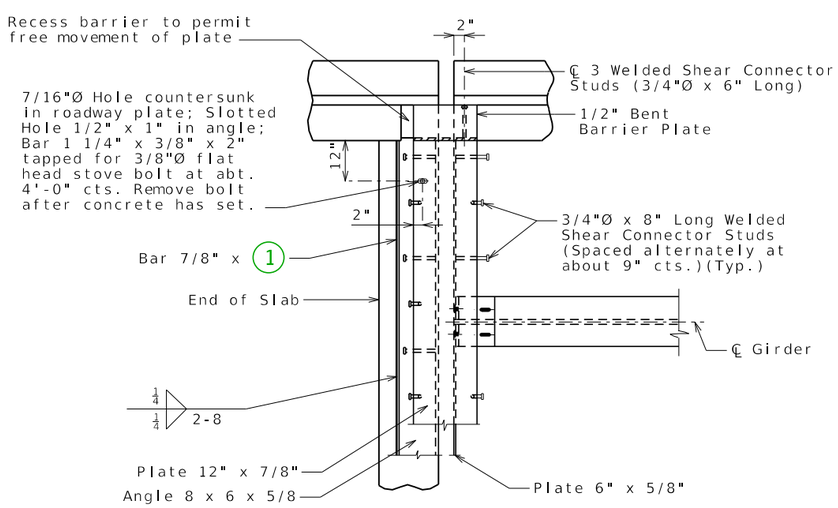

PART PLAN

Note: Concrete vent holes not shown for clarity.

SQ TYPE B BARRIER (SBC)

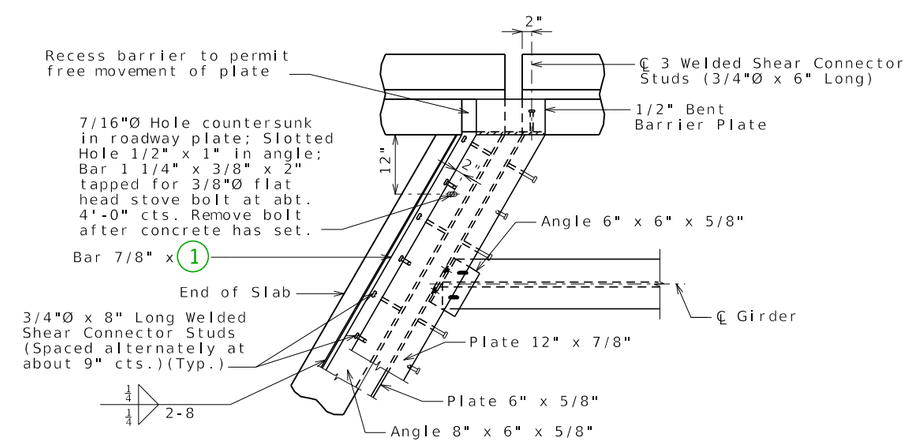

PART PLAN

Note: Concrete vent holes not shown for clarity.

1. 3" (Min.)

LA TYPE B BARRIER (SBC)

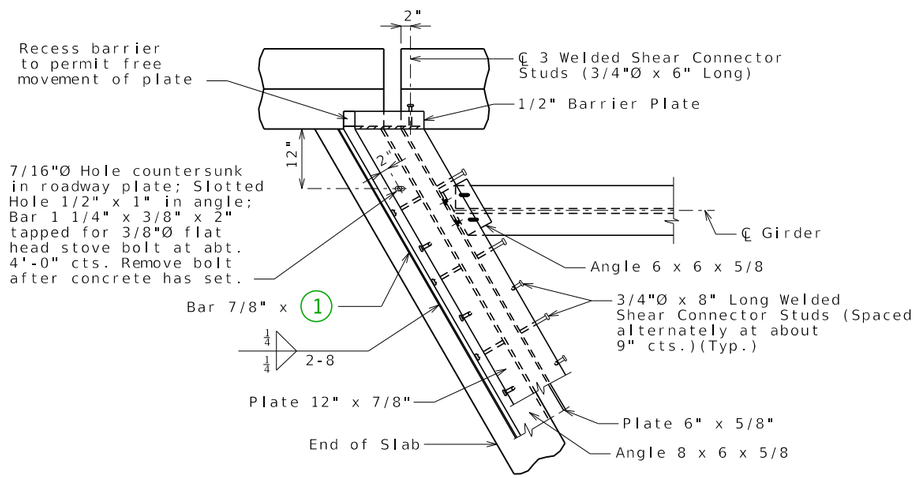

PART PLAN

Note: Concrete vent holes not shown for clarity.

RA TYPE D BARRIER

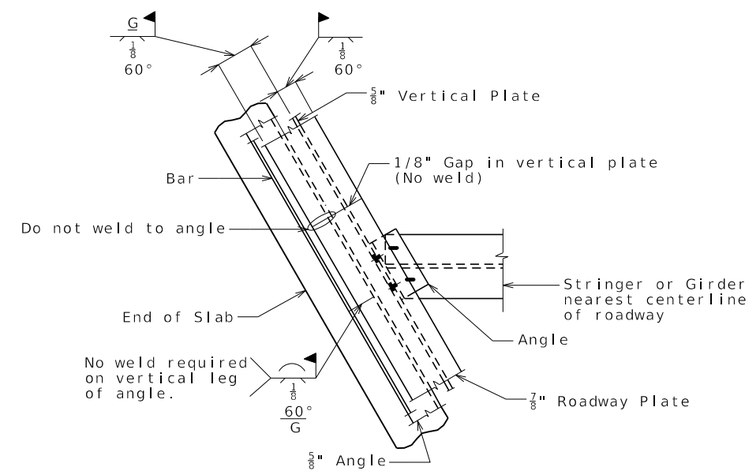

PERMISSIBLE FIELD SPLICE AT END BENT

RA

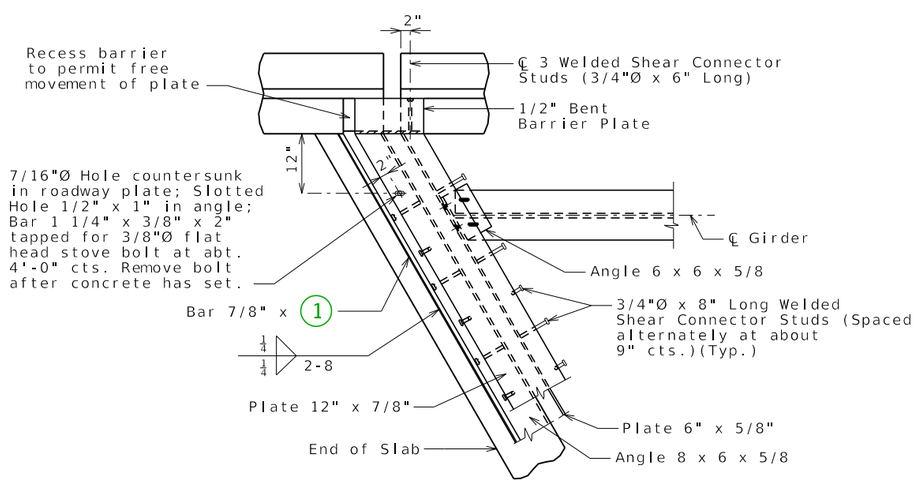

PART PLAN

Note: Concrete vent holes not shown for clarity.

RA TYPE B BARRIER (SBC)

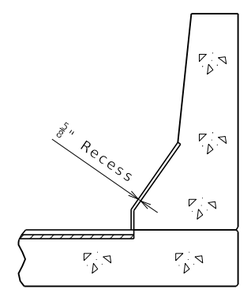

SECTION B-B

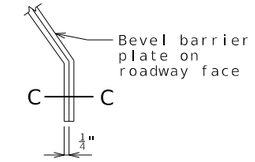

PART ELEVATION AT END OF BENT BARRIER PLATE

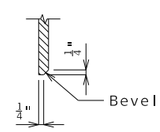

SECTION C-C

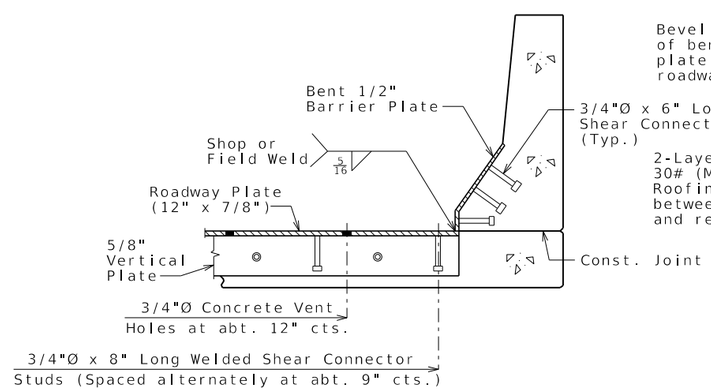

SECTION A-A

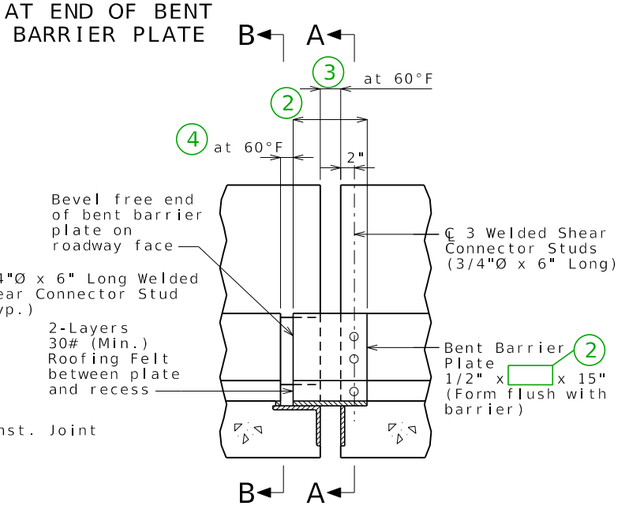

ELEVATION OF BARRIER

TYPE B BARRIER (SBC)(ALL)

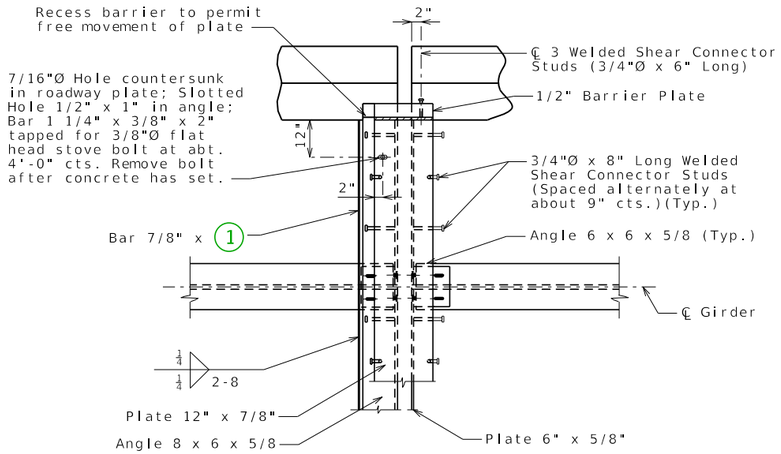

PART PLAN

Note: Concrete vent holes not shown for clarity.

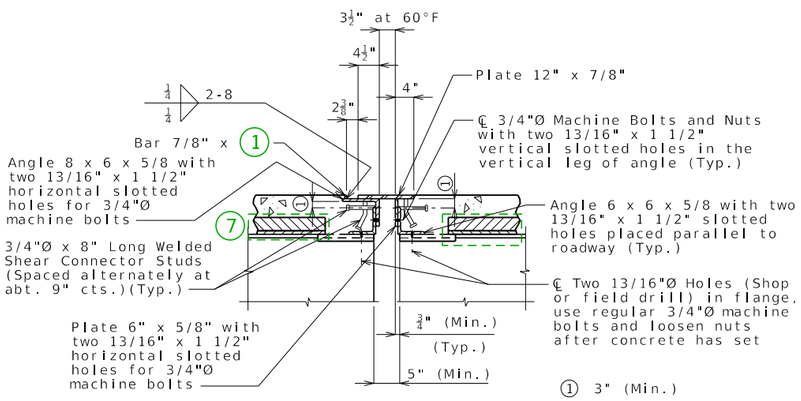

SECTION AT INTERMEDIATE BENT

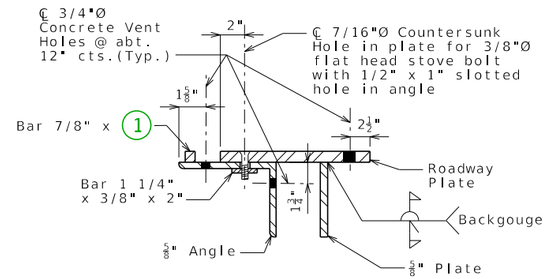

SECTION THRU DEVICE

GENERAL NOTES:

Expansion device shall be fabricated in one section, except for stage construction and when the length is over 50 feet. A complete joint penetration groove weld splice shall be required. Welds shall be ground flush to provide a smooth surface. The expansion device shall be fabricated and installed to the crown and grade of the roadway.

Plan dimensions are based on installation at 60°F. The expansion gap and other dimensions shall be increased or decreased [ ]" for each 10° fall or rise in temperature at installation. 5

Material for the expansion device shall be ASTM A709 Grade 36 structural steel. Anchors for the expansion device shall be in accordance with Sec 1037.

Structural steel for the expansion device and barrier plate shall be coated with a minimum of two coats of inorganic zinc primer to provide a total dry film thickness of 4 mils minimum, 6 mils maximum, or galvanized in accordance with ASTM A123. Anchors need not be protected from overspray.

Payment for furnishing, coating or galvanizing and installing the structural steel for the expansion device will be considered completely covered by the contract unit price for Expansion Device (Flat Plate) per linear foot.

Concrete shall be forced under and around flat plate, anchors and angles. Proper consolidation shall be achieved by localized internal vibration. Finishing of the concrete shall be achieved by hand finishing within one foot of the expansion device. The vertical and horizontal concrete vent holes shall be offset from each other. Do not alternate holes at the 12" spacing.

Longitudinal reinforcing steel shall be placed so that ends shall not be more than ±1" from vertical plate and the vertical leg of the angle at the expansion device.

Complete joint penetration welds utilized in the fabrication of the expansion device shall be nondestructively tested by an approved method.

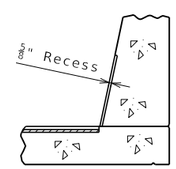

SECTION B-B

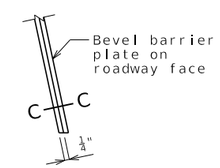

PART ELEVATION AT END OF BARRIER PLATE

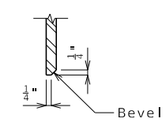

SECTION C-C

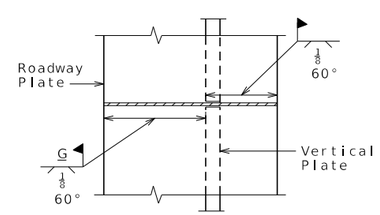

PART PLAN SHOWING ROADWAY PLATE AND VERTICAL PLATE

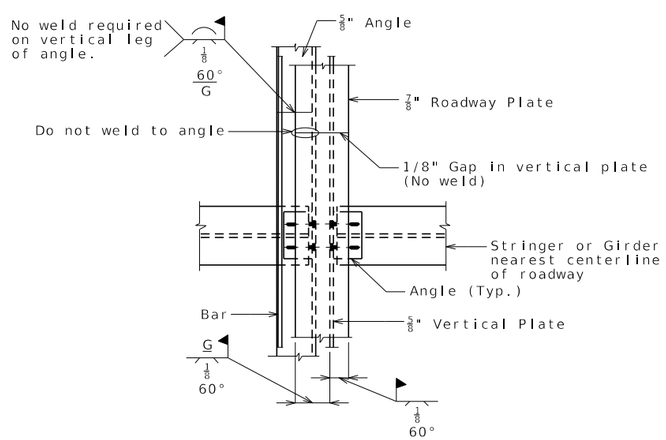

PERMISSIBLE FIELD SPLICE AT INT. BENT

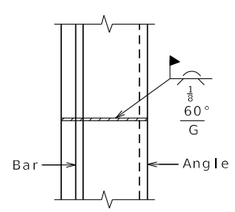

PART PLAN OF ANGLE AND BAR

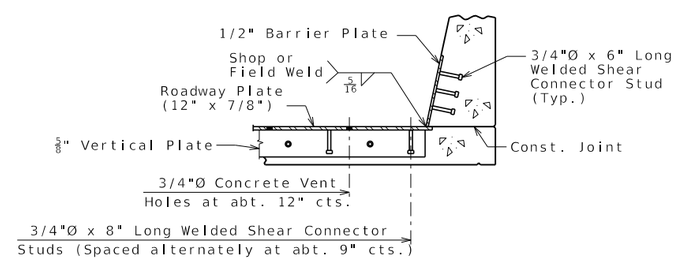

SECTION A-A

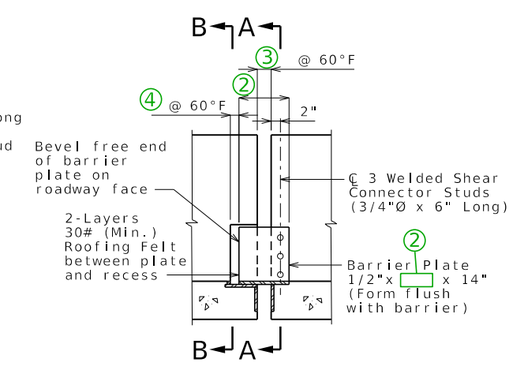

ELEVATION OF BARRIER

FLAT PLATE EXPANSION DEVICE AT INT. BENT NO.

Detailed
Checked

Note: This drawing is not to scale. Follow dimensions.

Sheet No. of

DATE PREPARED	10/16/2023
ROUTE	STATE MO
DISTRICT	SHEET NO. 4
COUNTY	
JOB NO.	
CONTRACT ID.	
PROJECT NO.	
BRIDGE NO.	

DESCRIPTION	DATE

MISSOURI HIGHWAYS AND TRANSPORTATION COMMISSION
105 WEST CAPITOL
JEFFERSON CITY, MO 65102
1-888-ASK-MODOT (1-888-275-6636)

FLAT04_stl_int Guidance & Alternate Details (1 of 2)

STANDARD DRAWING GUIDANCE (do not show on plans):

1. Bar height.
2. Plate length = 12"/cos(skew) [12" for 0° skew]
3. Barrier gap = $3\frac{1}{2}$"/cos(skew) [$3\frac{1}{2}$" for 0° skew]
4. Barrier recess gap = $2\frac{3}{8}$"/cos(skew) [$2\frac{3}{8}$" for 0° skew]. Assume recess ends at front edge of bar.
5. Installation gap adjustment for temperature: normal to joint.
6. Check and revise locations of slotted wells to clear girder end section reinforcement.
7. Delete panel for CIP slab.

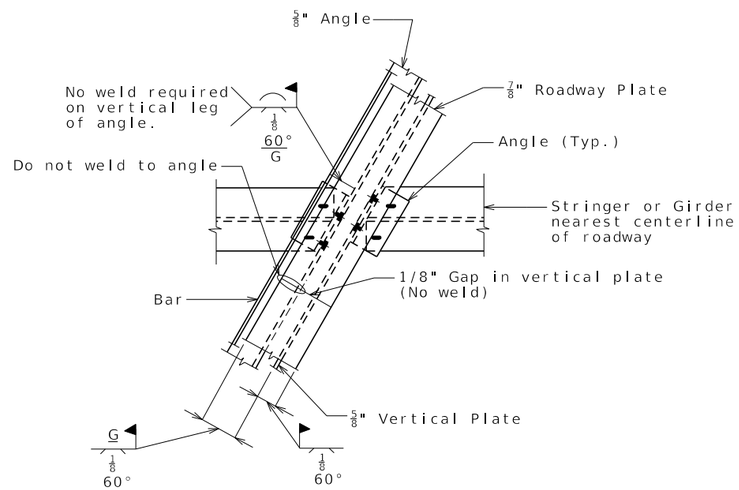

PERMISSIBLE FIELD SPLICE AT INT. BENT

LA

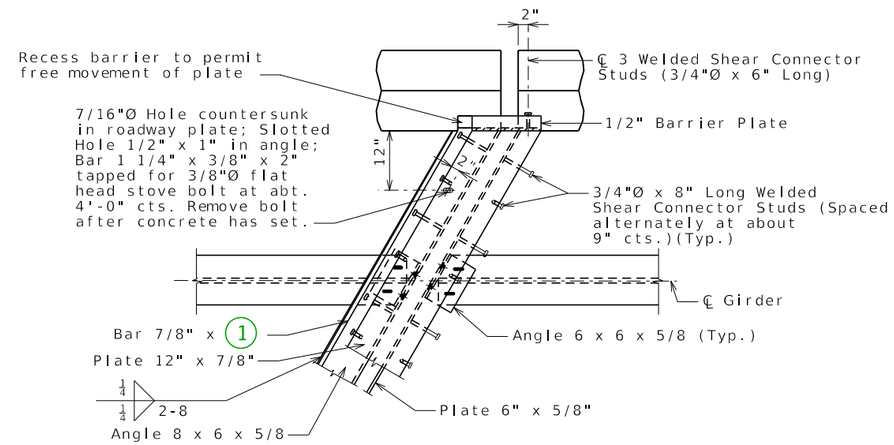

PART PLAN

Note: Concrete vent holes not shown for clarity.

LA TYPE D BARRIER

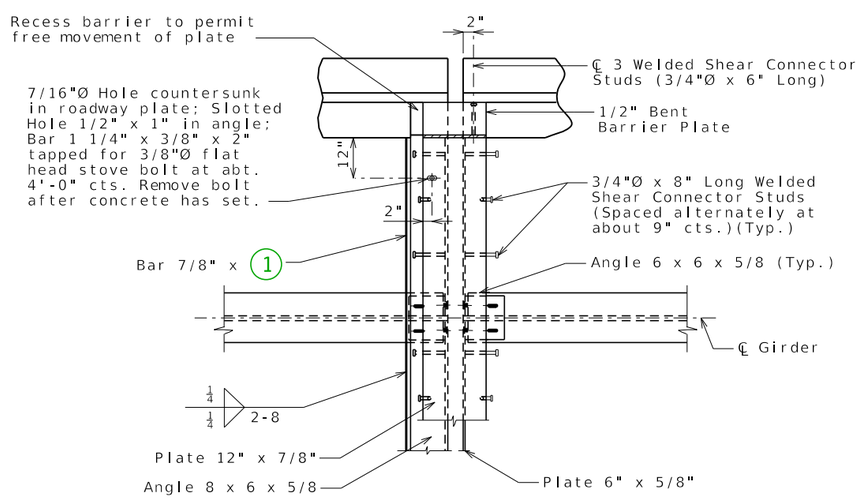

PART PLAN

Note: Concrete vent holes not shown for clarity.

SQ TYPE B BARRIER (SBC)

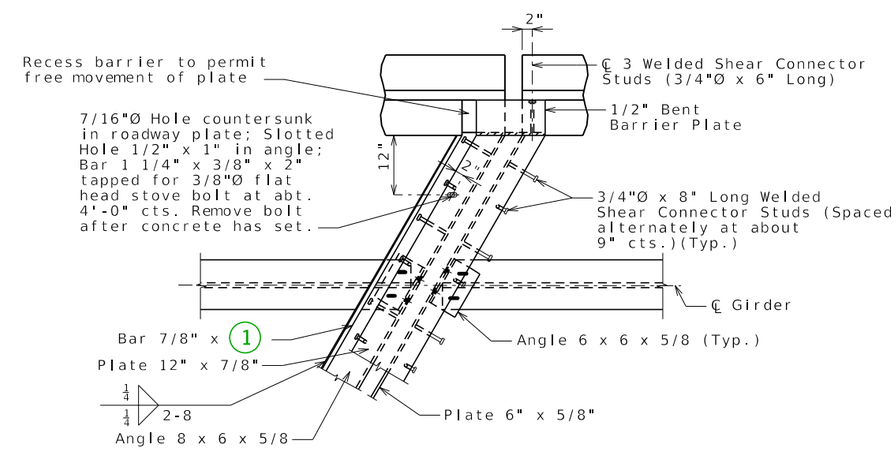

PART PLAN

Note: Concrete vent holes not shown for clarity.

1. 3" (Min.)

LA TYPE B BARRIER (SBC)

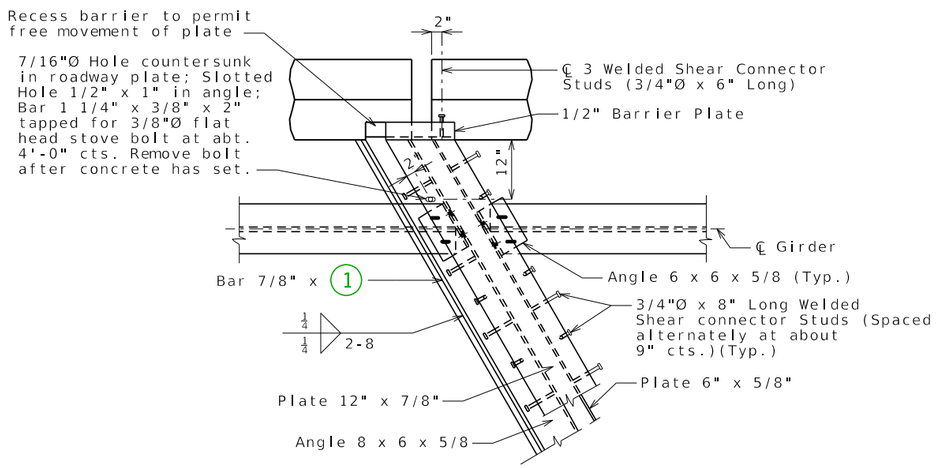

PART PLAN

Note: Concrete vent holes not shown for clarity.

RA TYPE D BARRIER

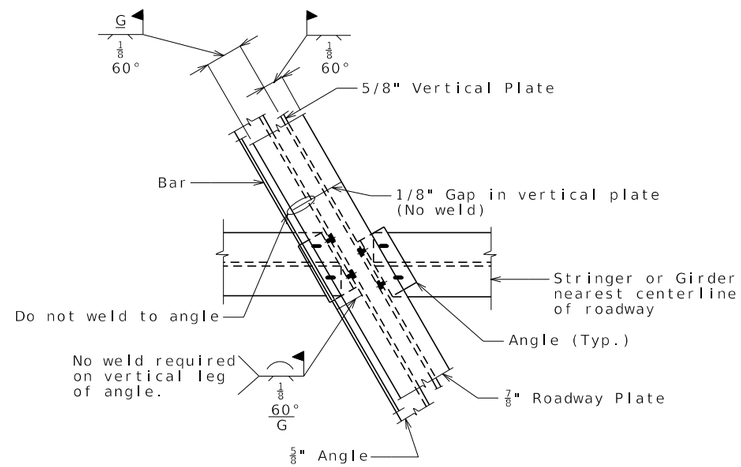

PERMISSIBLE FIELD SPLICE AT INT. BENT

RA

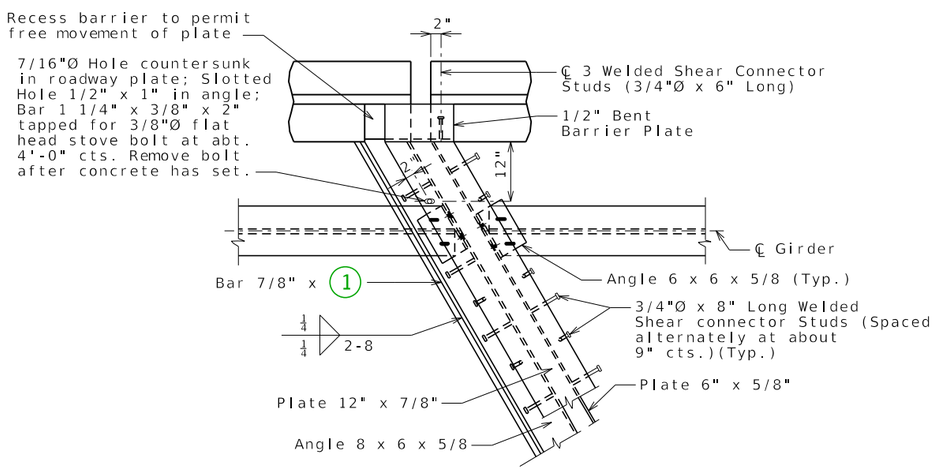

PART PLAN

Note: Concrete vent holes not shown for clarity.

RA TYPE B BARRIER (SBC)

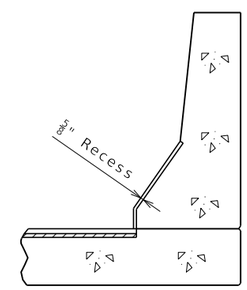

SECTION B-B

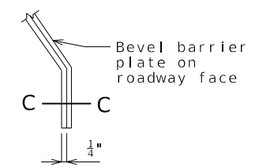

PART ELEVATION AT END OF BENT BARRIER PLATE

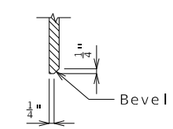

SECTION C-C

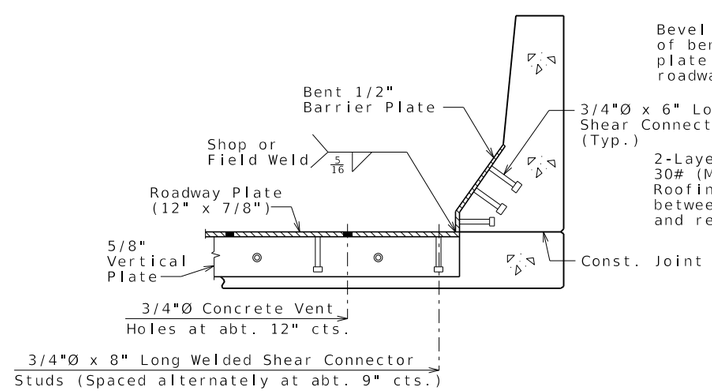

SECTION A-A

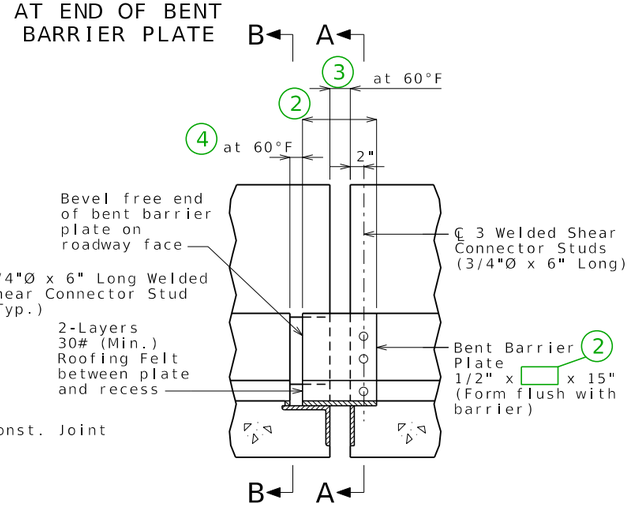

ELEVATION OF BARRIER

TYPE B BARRIER (SBC)(ALL)

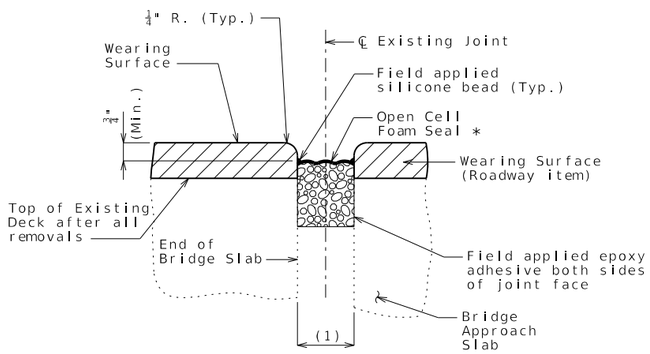

SECTION THRU JOINT AT ABUTMENT NO. _

SKEW = __°

* Manufacturer's recommended size

Extend seal 3" past edges of slab.

General Notes:

Open cell foam joint seal size (width and depth) shall be determined by the manufacturer. Manufacturer recommended seal size shall meet the movement and installation gap requirements and skew effect.

The open cell foam joint seal shall be installed according to the manufacturer's recommendations.

The installation temperature shall be taken as the actual air temperature averaged over the 24-hour period immediately preceding installation.

(1) Allowed installation gap (±) normal to joint at roadway surface (see table)

Standard Drawing Guidance (do not show on plans):

Revise notes and details per project as necessary.

Use standard detailing notes H5.31, H5.33 thru H5.36 (EPG 751.50) when new armor is to be used. Modify note H5.33 for open cell foam joint seal.

Use standard detailing note H5.55 when polymer concrete wearing surface is used with an open cell foam joint seal.

When new steel armor is to be installed, use armor information from P_COM standard drawing and modify as needed.

Omit "±" when not applicable.

Movement Parallel to Rdwy	Movement Normal to Joint	Min. Jt. Width (Normal to Joint)	Max. Jt. Width (Normal to Joint)	(1) Allowed Installation Gap (±) Normal to Joint at Roadway Surface at Air/Surface Temperature				Manufacturer	Seal Name
				@ 40°F	@ 50°F	@ 60°F	@ 70°F		
XXX	XXX	XXX	XXX	XXX	XXX	XXX	XXX		

MoDOT construction personnel will record the manufacturer and seal name that was used.

OPEN CELL FOAM JOINT SEAL

Detailed
Checked

Note: This drawing is not to scale. Follow dimensions.

Sheet No. of

DATE PREPARED 10/16/2023

ROUTE	STATE MO
DISTRICT	SHEET NO. 1

COUNTY

JOB NO.

CONTRACT ID.

PROJECT NO.

BRIDGE NO.

DESCRIPTION	DATE

MISSOURI HIGHWAYS AND TRANSPORTATION COMMISSION
105 WEST CAPITOL
JEFFERSON CITY, MO 65102
1-888-ASK-MODOT (1-888-275-6636)

SEAL01_OCF Alternate Details

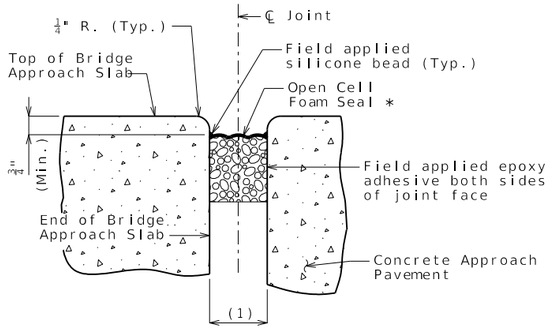

SECTION THRU JOINT AT END OF BRIDGE APPROACH SLAB

SKEW = __°

* Manufacturer's recommended size

Extend seal full width of approach slab.

Between bridge approach slab and concrete approach pavement (Use only with approval of SPM or SLE)

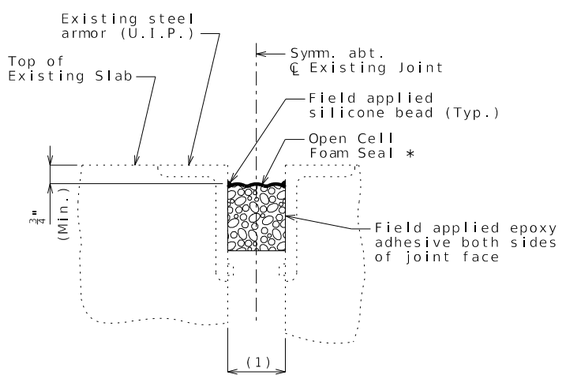

SECTION THRU JOINT AT ____ NO. _

SKEW = __°

* Manufacturer's recommended size

Extend seal 3" past edges of slab.

With existing steel armor

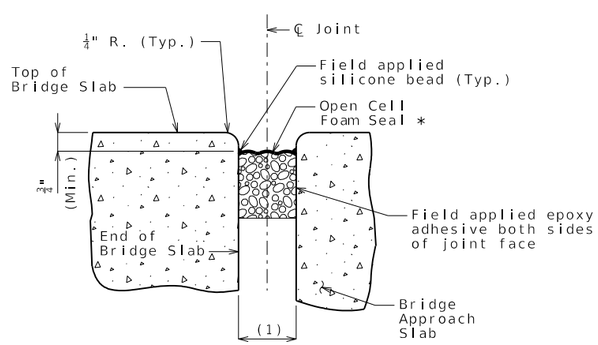

SECTION THRU JOINT AT ABUTMENT NO. _

SKEW = __°

* Manufacturer's recommended size

Extend seal 3" past edges of slab.

Between slab and approach slab

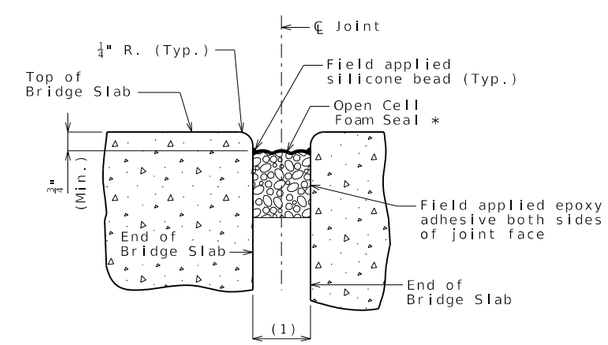

SECTION THRU JOINT AT BENT NO.

SKEW = __°

* Manufacturer's recommended size

Extend seal 3" past edges of slab.

Use for locations other than approach slab

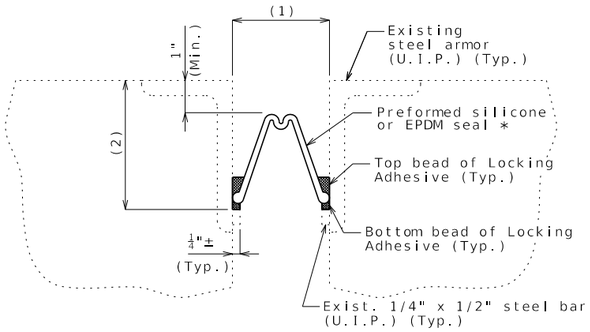

SECTION THRU JOINT AT ____ NO._

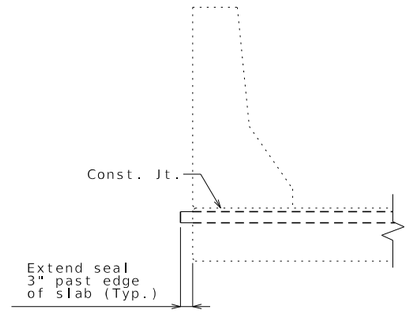

SECTION THRU EDGE OF SLAB NEAR JOINT

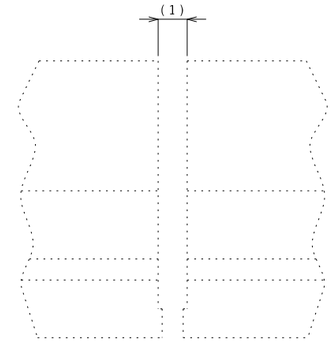

PART ELEVATION OF BARRIER

Preformed silicone or EPDM seal not shown for clarity. Seal installation between barriers in-place is required.

General Notes:

The seal shall be installed in joints in one continuous piece without field splices. Factory splicing will be permitted for joints in excess of 53 feet.

The installation temperature shall be taken as the actual air temperature averaged over the 24-hour period immediately preceding installation.

(1) Allowed installation gap (±) normal to joint at roadway surface (see table)

(2) Installation depth (±) per manufacturer's recommendation

DETAIL OF SEAL

* Double hump seal shown in figure. Actual shape of seal may be double or single hump as per manufacturer.

Standard Drawing Guidance (do not show on plans):

Remove non-applicable rows in table.

Revise notes and details per project as necessary.

Use standard detailing notes H5.31, H5.33 thru H5.36 (EPG 751.50) when new armor is to be used. Modify note H5.33 for preformed silicone or EPDM joint seal.

When new steel armor is to be installed, use armor information from P COM standard drawing and modify as needed.

Omit "±" when not applicable.

Allowed Transverse Preformed Silicone or EPDM Joint Seals

Manufacturer	Seal Name	Movement Parallel to Roadway	(1) Allowed Installation Gap Normal to Joint at Roadway Surface at Air/Surface Temperature				Type Used (✓)
			@ 40°F	@ 50°F	@ 60°F	@ 70°F	
R J Watson (Silicoflex Joint Seal)	Silicoflex SF150	XXX	XXX	XXX	XXX	XXX	☐
R J Watson (Silicoflex Joint Seal)	Silicoflex SF225	XXX	XXX	XXX	XXX	XXX	☐
R J Watson (Silicoflex Joint Seal)	Silicoflex SF400	XXX	XXX	XXX	XXX	XXX	☐
Watson Bowman Acme Wabo (Preformed Silicone Joint Seal)	Wabo SPS-225	XXX	XXX	XXX	XXX	XXX	☐
Watson Bowman Acme Wabo (Preformed Silicone Joint Seal)	Wabo SPS-400	XXX	XXX	XXX	XXX	XXX	☐
D S Brown (EPDM Joint Seal)	V-Seal V-300	XXX	XXX	XXX	XXX	XXX	☐
D S Brown (EPDM Joint Seal)	V-Seal V-400	XXX	XXX	XXX	XXX	XXX	☐

MoDOT Construction personnel will indicate the type of seal used.

PREFORMED SILICONE OR EPDM JOINT SEAL

Detailed
Checked

Note: This drawing is not to scale. Follow dimensions.

Sheet No. of

DATE PREPARED	10/16/2023
ROUTE	STATE MO
DISTRICT	SHEET NO. 2
COUNTY	
JOB NO.	
CONTRACT ID.	
PROJECT NO.	
BRIDGE NO.	

DESCRIPTION

DATE

MISSOURI HIGHWAYS AND TRANSPORTATION COMMISSION

105 WEST CAPITOL
JEFFERSON CITY, MO 65102
1-888-ASK-MODOT (1-888-275-6636)

SEAL02_P_SIL_EPDM Alternate Details

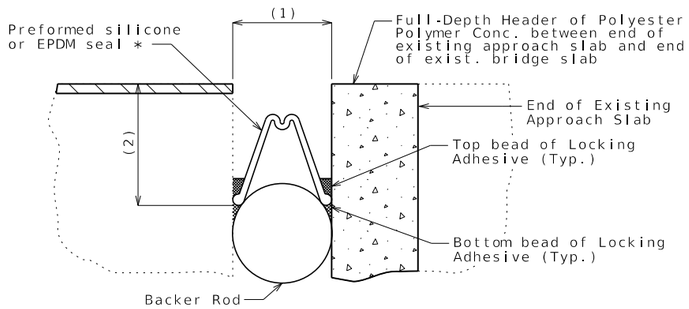

SECTION THRU JOINT AT ____ NO. _

Polymer concrete shall be in accordance with Sec 623.

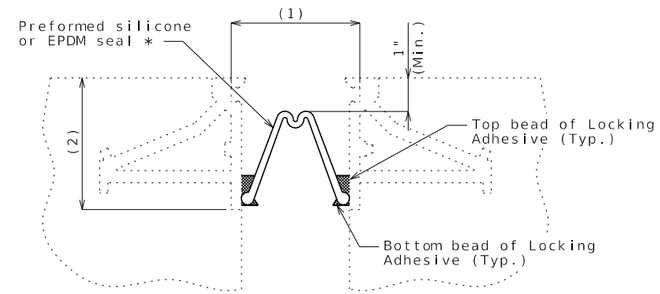

SECTION THRU JOINT AT ____ NO. _

Joint gap (opening) wider than 3" during installation may require use of backer rod to keep seal in place while adhesive is curing.

X' MECHANICALLY STABILIZED EARTH (MSE) RETAINING WALL SYSTEM

SEC/SUR * TWP * RGE *

Indicates location of borings.

Notice and Disclaimer Regarding Boring Log Data

The locations of all subsurface borings for this structure are shown on the plan sheet(s) for this structure. The boring data for all locations indicated, as well as any other boring logs or other factual records of subsurface data and investigations performed by the department for the design of the project, are shown on Sheet(s) No. __ and may be included in the Electronic Bridge Deliverables. They will also be available from the Project Contact upon written request. No greater significance or weight should be given to the boring data depicted on the plan sheets than is given to the subsurface data available from the district or elsewhere.

The Commission does not represent or warrant that any such boring data accurately depicts the conditions to be encountered in constructing this project. A contractor assumes all risks it may encounter in basing its bid prices, time or schedule of performance on the boring data depicted here or those available from the district, or on any other documentation not expressly warranted, which the contractor may obtain from the Commission.

PLAN 4

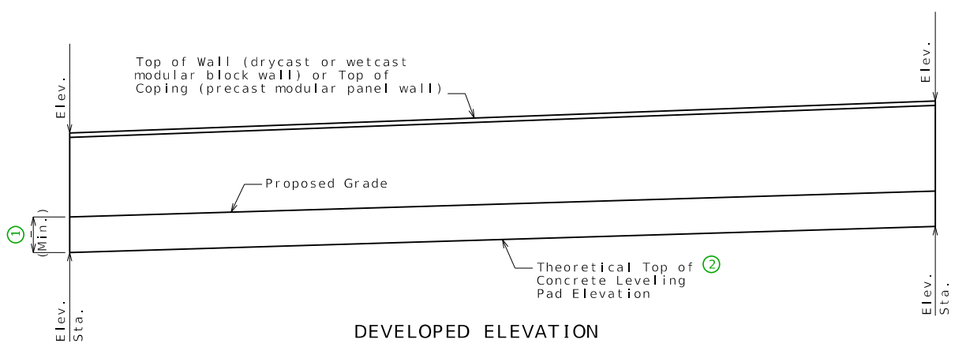

DEVELOPED ELEVATION

Concrete Leveling pad not shown for clarity.

Wall contractor shall show the following items on the design drawings and/or on the fabricator shop drawings.

1. Leveling pad horizontal.
2. Leveling pad length and step elevations shall be based on wall manufacturer's recommendation. Top of leveling pad elevations shall not be higher than theoretical top of leveling pad elevations shown on these plans.

Estimated Quantities	
Item	Total
Mechanically Stabilized Earth Wall Systems sq. foot	

MSE Wall Systems Data Table					
Proprietary Wall Systems		Combination Wall Systems			
Manufacturer	System	Facing Unit Manufacturer	Facing Unit	Geogrid Manufacturer	Geogrid

MSE Wall Systems Data Table is to be completed by MoDOT construction personnel to record the manufacturer of the proprietary wall system or the manufacturers of the combination wall system that was used for constructing the MSE wall.

DETAILS OF GROUND IMPROVEMENTS 3

LOCATION SKETCH

B.M.

RETAINING WALL ALONG *

ROUTE * FROM * TO *
ABOUT * MILES * OF *
* STATION *

Designed
Detailed
Checked

Note: This drawing is not to scale. Follow dimensions.

Sheet No. 1 of

DATE PREPARED	
7/26/2024	
ROUTE	STATE MO
DISTRICT BR	SHEET NO. 000
COUNTY	
JOB NO.	
CONTRACT ID.	
PROJECT NO.	
BRIDGE NO.	

DESCRIPTION	DATE

MISSOURI HIGHWAYS AND TRANSPORTATION COMMISSION
105 WEST CAPITOL
JEFFERSON CITY, MO 65102
1-888-ASK-MODOT (1-888-275-6636)

MSEW_01_LRFD1_Front Guidance & Alternate Details

Standard Drawing Guidance (do not shown on plans):

Revise notes and details per project as necessary.

Proposed grade & theoretical top of leveling pad elevation shall be shown in constant slope. Slope line shall be adjusted per project. Top of wall or coping elevation & stationing shall be shown in the developed elevation per project. Sample wall shown. Draw actual wall in elevation and plan per project.

1. Show the minimum embedment = maximum (2 feet; embedment based on Geotechnical Report and global stability requirements; and FHWA-NHI-10-024, Table 2-2); or according to Geotechnical Report if it shows that rock is known to exist.

2. Show theoretical top of leveling pad elevation on the plan based on minimum embedment requirements. Minimum embedment shall be provided in accordance with FHWA-NHI-10-024, Table 2-2; and Geotechnical Report.

3. The nominal bearing resistance, resistance factor for the strength event limit state(s), and an angle of internal friction, Φf, for unimproved and improved ground where wall is to bear as determined by the Geotechnical Section and reported on the Foundation Investigation Geotechnical Report (FIGR) shall be shown on the plans. Show areas and locations of ground improvement along the wall where required, for example, using stationing or using changes in wall height. Provide cross-section of ground improvement based on FIGR. Provide any other geotechnical requirements in FIGR on plans.

4. Show all boring locations on Plan.

NOTES TO ROADWAY AND BRIDGE DESIGNERS:

Excavation classes, quantities and pay items are the responsibility of District Design Division for including on the roadway 2B quantity sheets which is noted on the MSEW plans and required in accordance with Sec 720. All other quantities are the responsibility of the division responsible for the MSE wall plans.

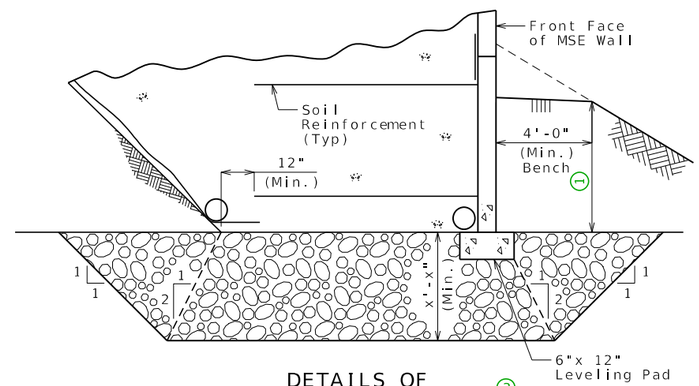

DETAILS OF
GROUND IMPROVEMENTS 3

Note: This detail is just one possible scenario.
Modify details to reflect actual conditions.

General Notes:

Design Specifications:

2020 AASHTO LRFD Bridge Design Specifications (9th Ed.)
2023 AASHTO Guide Specifications for LRFD Seismic Bridge Design (3rd Ed.)

Choose one
- Seismic Design Category = A (Seismic Zone - 1)
- Seismic Design Category = B (Seismic Zone - 2) (Seismic Analysis No Seismic Analysis)
- Seismic Design Category = C (Seismic Zone - 3) (Seismic Analysis No Seismic Analysis)
- Seismic Design Category = D (Seismic Zone - 4) (Seismic Analysis)

Design earthquake response spectral acceleration coefficient at 1.0 second period, S_{D1} <0.15 = _
(13) Acceleration Coefficient (effective peak ground acceleration coefficient), A_S = _

Design Loading:

For strength limit state and extreme event limit state, the wall designer to confirm that the minimum Capacity to Demand Ratio (CDR) for bearing, sliding, overturning, eccentricity, and internal stability is greater than or equal to 1.0. MSE wall designer shall include this note on shop drawings.

For Extreme Event I limit state, the wall designer shall design wall for γ_{EQ} = 0.5

Φ_b = ° and Unit weight, γ_b = pcf for retained backfill material to be retained by the mechanically stabilized earth wall system.

(3)
- Φ_f = ° for unimproved foundation ground where wall is to bear.
- Φ_f = ° for improved foundation ground where wall is to bear.

For unimproved foundation ground, factored bearing resistance is ___ ksf for strength limit state and factored bearing resistance is ___ ksf for extreme event limit state.

For improved foundation ground, factored bearing resistance is ___ ksf for strength limit state and factored bearing resistance is ___ ksf for extreme event limit state.

The maximum applied factored bearing stress for the strength and extreme event limit state(s) at the foundation level shall be shown on the shop drawings and shall be less than the factored bearing resistance.

(3) Factored bearing resistance and limits of improved foundation ground shall be used as shown on the plans. No adjustments are allowed.

Contractor shall include design Φ_f (actual $\Phi_f \geq 34°$) and the total unit weight, γ_f, for the select granular backfill (reinforced backfill and wedge area backfill) for structural systems on shop drawings. Contractor shall identify source of select granular backfill material, submit proctor in accordance with AASHTO T 99 (ASTM D698) and gradation with the shop drawings. When backfill material is too coarse to develop a proctor curve the contractor shall determine the maximum dry density (relative density) in accordance with ASTM D4253 and ASTM D4254 and assume percent passing the 200 sieve for optimum water content.

Total unit weight, γ_f = (95% compaction) x (maximum dry density) x (1 + optimum water content)

Design Φ_f = 34°for the select granular backfill (reinforced backfill) for structural systems.

(7) Seismic analysis provisions shall not be ignored for MSE wall design.

(8) No-Seismic-Analysis provisions may be considered for MSE wall design in accordance with LRFD 11.5.4.2.

(4) Use default values for the pullout friction factor, F^*, in accordance with LRFD figure 11.10.6.3.2-2 and default value for scale effect correction factor, α, in accordance with LRFD table 11.10.6.3.2-1. For approved steel strips not shown in LRFD figure 11.10.6.3.2-2, use $F^* \leq 2.0$ at zero depth and $F^* \leq \tan \Phi_f$ at 20 feet depth and Φ_f design = 34°. F^* and α values shall be shown on the shop drawings.

Design Unit Stresses:

All concrete for leveling pad and coping shall be Class B or B-1 with f'c = 4000 psi.

The minimum compressive strength of concrete for precast modular panel precast modular (drycast and wetcast) block shall be 4,000 psi in accordance with Sec 1052.

Excavation:

Excavation quantities and pay items are given on the roadway plans. Excavation quantities are based on a soil reinforcement length of (2) ft. The soil reinforcement length may vary based upon the wall design selected by the contractor. Plan excavation quantities will be paid regardless of any actual quantities removed based on the soil reinforcement length and design selected.

(9) The MSE wall system shall be built vertical.

The MSE wall system shall be built in accordance with Sec 720.

The MSE wall system shall be a drycast modular block or wetcast modular block precast modular panel wall system.

(11) The cost of joint filler and joint seal, complete in place, will be considered completely covered by the contract unit price for Concrete Traffic Barrier (Type B D). See Roadway Plans.

Precast modular panel, drycast modular block, wetcast modular block and coping (or capstone) reinforcement shall be epoxy coated.

A filter cloth meeting the requirements for a Separation Geotextile material shall be placed between the select granular backfill for structural systems and the backfill being retained by the mechanically stabilized earth wall system.

(4) Coping shall be required on this structure. When CIP coping sections extend beyond the limits of a single panel, bond breaker (roofing felt or other approved alternate) between wall panel and coping is required. Coping joints shall use 3/4-inch chamfers and shall be sealed with 3/4-inch joint filler. Coping reinforcement shall terminate 1 1/2-inch minimum from face of coping joint.

(10) The top and bottom elevations are given for a vertical wall. The height of the wall shall be adjusted as necessary to fit the ground slope and the concrete leveling pad shall be adjusted as necessary to account for the wall batter. If a fence is built on an extended gutter, then the height of the wall shall be adjusted further.

The baseline of the wall shown is for a vertical wall. This baseline shall correspond to Elevation _____.

The contractor shall be solely responsible to coordinate construction of the wall with bridge and roadway construction and ensure that the bridge and roadway construction, resulting or existing obstructions, shall not impact the construction or performance of the wall. Soil reinforcement shall be designed and placed to avoid damage by pile driving, guardrail post installation, utility and sign foundations. (See Roadway and Bridge plans.)

(4) Minimum 18" wide geotextile strips shall be centered at vertical and horizontal joints of panel. Geotextile material shall be adhered to back face of panel using an adhesive compound supplied by the manufacturer. All edges of each fabric strip shall provide a positive seal. A minimum 12" overlap shall be provided between spliced filter fabric.

Aluminized soil reinforcement shall have edges coated with coating material per manufacturer.

Soil reinforcement shall be spaced to avoid roadway drop inlet behind wall.

(1) Upper two layers of soil reinforcement shall be extended 3 feet beyond the lower layers when wall height is greater than or equal to 10 feet.

(5) All steel soil reinforcements shall be separated from other metallic elements by at least 3 inches.

(6)
- The splay angle should be less than 15° and tensile capacity of splayed reinforcement shall be reduced by the cosine of the splay angle. Soil reinforcement shall clear the obstruction by at least 3 inches.
- No reinforcement shall be left unconnected to the wall face or arbitrarily cut/bent in the field to avoid the obstruction.
- Where interference between the vertical obstruction and the soil reinforcement is unavoidable, the design of the wall near the obstruction may be modified using one of the alternatives in FHWA-NHI-10-024, Section 5.4.2. Show detail layout on the drawings. For wall designs with horizontal obstructions in reinforced soil mass, see FHWA-NHI-10-024, Section 5.4.3.

(12) Contractor shall be responsible for the internal stability, external stability, compound stability, and overall global stability of the temporary MSE wall structure. The soil parameters assumed for the temporary MSE wall design shall be those shown on the plan details for the MSE Wall and shown in the foundation report. The contractor shall submit the proposed method of temporary MSE wall construction to the engineer prior to beginning work. See special provisions.

DATE PREPARED	7/26/2024
ROUTE	STATE MO
DISTRICT BR	SHEET NO. 000
COUNTY	
JOB NO.	
CONTRACT ID.	
PROJECT NO.	
BRIDGE NO.	

DESCRIPTION | DATE

MISSOURI HIGHWAYS AND TRANSPORTATION COMMISSION
105 WEST CAPITOL
JEFFERSON CITY, MO 65102
1-888-ASK-MODOT (1-888-275-6636)

Detailed
Checked

Note: This drawing is not to scale. Follow dimensions.

Sheet No. of

MSEW_02_LRFD2_Notes Guidance

Standard Drawing Guidance (do not shown on plans):

Revise notes and details per project as necessary.

1. Use for MSE walls in seismic design categories B, C & D (seismic zones 2, 3 & 4).

2. Minimum soil reinforcement length shall be based on the following cases in accordance with EPG 751.6.2.17:

   Maximum (0.7H, or 8 ft, or FIGR) for a non-seismic design.

   Maximum (0.8H, or 8 ft, or FIGR, seismic loading requirement) for a seismic design.

   Maximum (0.8H, or 8 ft, or FIGR) for a sloping backfill surcharge case.

   Soil reinforcement length shall be greater than or equal to as required for a stable feature wall for strong/stable rock case.

   Where,

   H = Height of the wall as measured from the top of the leveling pad to the top of the wall.

   FIGR = Foundation Investigation Geotechnical Report

3. The nominal bearing resistance, resistance factor for the strength event limit state(s), and an angle of internal friction, Φ_f, for unimproved and improved ground where wall is to bear as determined by the Geotechnical Section and reported on the Foundation Investigation Geotechnical Report (FIGR) shall be shown on the plans. Show areas and locations of ground improvement along the wall where required, for example, using stationing or using changes in wall height. Provide cross-section of ground improvement based on FIGR. Provide any other geotechnical requirements in FIGR on plans.

   Use the underlined portion from note EPG 751.50 J1.2 when limits of improved foundation ground is required by Geotechnical Section.

   Strenght Limit States:
   Factored bearing resistance = Nominal bearing resistance from Geotech report x Minimum Resistance Factor (0.65, Geotech report) LRFD Table 11.5.7-1.

   Extreme Event Limit State:
   Factored bearing resistance = Nominal bearing resistance from Geotech report x Resistance factor. Resistance factor = 0.9 LRFD 11.8.6.1

4. Use for all precast modular panel walls.

5. Use for MSE walls when there may be contact between dissimilar metals.

6. Use for MSE walls when there may be vertical and/or horizontal obstructions in reinforced soil mass.

7. (BRIDGE DESIGNER) Use for MSE walls that support another structure foundation (i.e. support abutment fill, building or Bridge MSE wall) in SDC B, or C (seismic zone 2 or 3). Use for all MSE walls in SDC D.

8. (ROADWAY DESIGNER) Use for MSE walls that do not support another structure foundation (i.e. Not supporting abutment fill or building (District MSE wall) in SDC B or C (seismic zone 2 or 3)) and only if Geotechnical report allows, otherwise use note J1.4 (EPG 751.50). Use note J1.4 for all MSE walls in SDC D.

9. Use for all precast modular panel walls. Use for drycast or wetcast modular block walls if applicable.

10. Use for drycast or wetcast modular block walls unless either wall is to be built vertical.

11. Use for MSE walls when traffic barrier is provided in front of the MSE wall.

12. For staged bridge construction with MSE walls at the abutments, show this note on plan details when temporary MSE wall is required.

13. Use value for A_S per Geotech Report/Design Layout, or N/A if not reported in GeoTech Report/Design Layout. If $A_S > 0.75$ then show $A_S = 0.75$.

NOTES TO ROADWAY AND BRIDGE DESIGNERS:

Excavation classes, quantities and pay items are the responsibility of District Design Division for including on the roadway 2B quantity sheets which is noted on the MSEW plans and required in accordance with Sec 720. All other quantities are the responsibility of the division responsible for the MSE wall plans.

If rock is not known to exist from a geotechnical report or study, place the following note on the plans:

"If rock is encountered in the proposed reinforced backfill area or wedge area of the MSE wall before or during excavation, the contractor shall immediately cease excavating and notify the engineer."

Otherwise, if rock is known to exist and it is to be excavated, then do not place above note on plans and determine the excavation class and estimate a rock quantity. For all Bridge Division MSE walls, Bridge Division and District Design Division shall coordinate in estimating excavation quantities when rock is known to exist from the geotechnical report and if rock is to be used as part of the wall backfill or excavated for MSE wall construction.

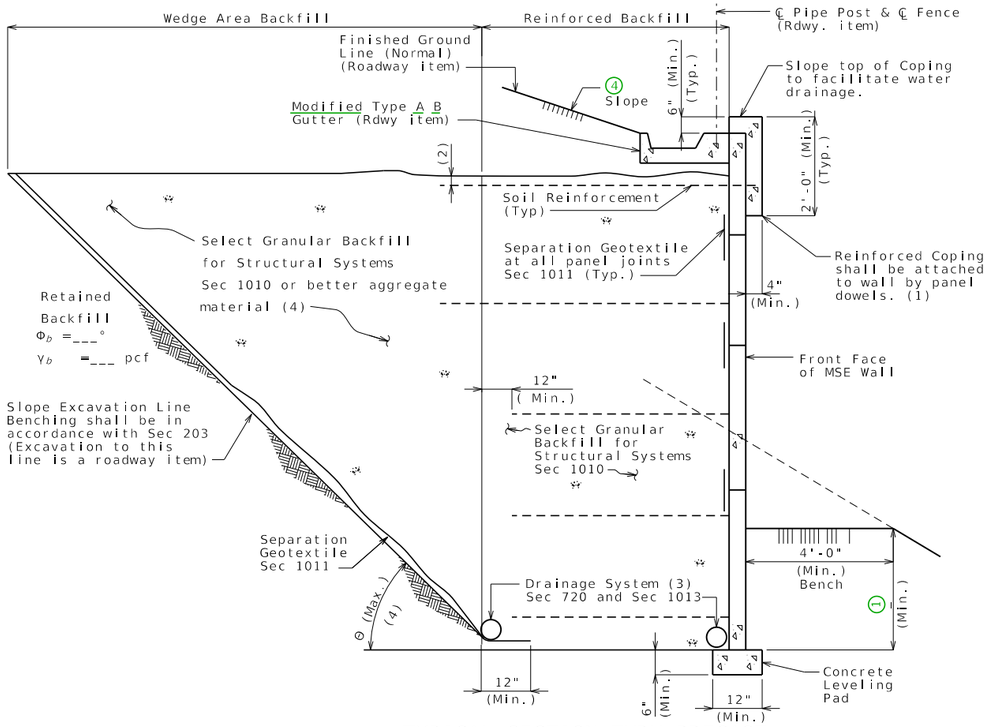

TYPICAL SECTION THRU PRECAST MODULAR PANEL WALL (GENERAL)

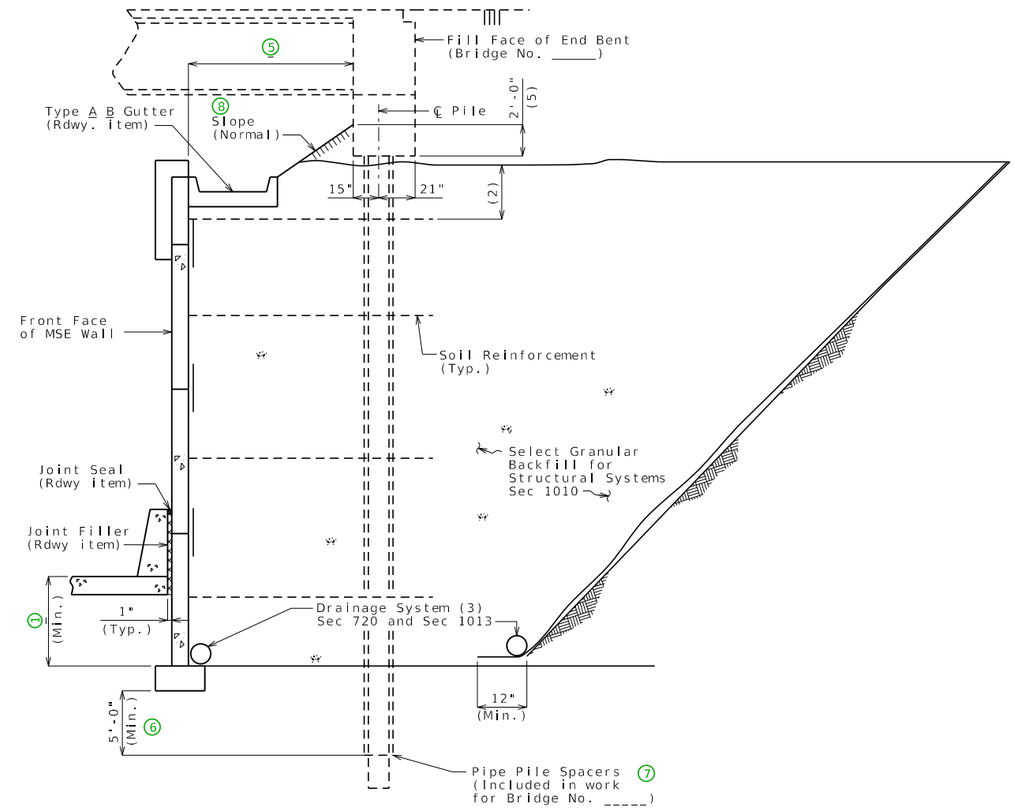

TYPICAL SECTION THRU PRECAST MODULAR PANEL WALL UNDER BRIDGE

Note: For additional information, see Typical Section Thru Precast Modular Panel Wall (General).

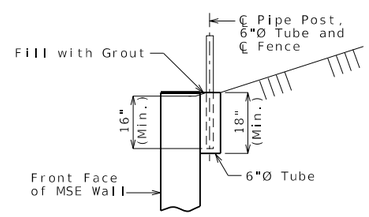

FENCE POST CONNECTION BEHIND WALL (WITHOUT GUTTER)

(4) Select granular backfill shall extend a minimum of 12" beyond the end of all soil reinforcement. Where the angle, Θ, between the retained backfill excavation/fill line and the horizontal is less than 90°, the wedge area backfill between Θ and 90° shall be filled with select granular backfill for structural systems meeting the requirements of Section 1010.

- For 45° < Θ ≤ 90°, properties for retained backfill shall be used for active force computations.

- For Θ ≤ 45°, contractor shall have the option to use select granular backfill, Φ_r, or better aggregate material for active force computations in the wedge area backfill. For active force computations, the angle of internal friction for wedge area backfill material, Φ_r, shall be limited to 34° unless determined otherwise in accordance with Section 1010. If Φ_r > 34° is desired for wedge area backfill then test report shall be submitted with manufacturer's design plans. Φ_r shall not be greater than 40°. Final configuration of this option shall be sent to Geotechnical Section for a new overall global stability analysis. Design Φ_r° shall be shown on manufacturer's plans if used.

The slope excavation line shall be benched and separation geotextile shall be placed between the retained backfill and either select granular backfill or better aggregate material, and between the select granular backfill and better aggregate material.

Show range of acceptable theta (Θ) angle on shop drawings which must be consistent with design computations and proposed construction of wall. Show active force computation properties ($\Phi° = \Phi_r°$ and $\gamma = \gamma_r$ or $\Phi° = \Phi_b°$ and $\gamma = \gamma_b$) on shop drawings and in design computations. Coordination between wall designer (manufacturer) and contractor is required before shop drawing submittal.

3

Material Properties Used in Design						
Reinf. Fill/Select Granular Backfill			Active Force Computations			Foundation
Φ_r°	γ_r (pcf)		Φ°	γ (pcf)		Φ_f°

MSE Wall designer shall include table on shop drawings and provide values used in the design computations. Effects of cohesion shall be ignored unless approved by the engineer.

(1) Inverted U-shape reinforced capstone may be used in lieu of coping. Panel dowels for level-up concrete shall be required, and provided by manufacturer. The dowels shall be field trimmed to clear the capstone by a minumum of 1 1/2 inches and a maximum of 2 1/2 inches.

(2) Topmost layer of reinforcement shall be fully covered with select granular backfill for structural systems, as approved by the wall manufacturer, before placement of the Separation Geotextile.

(3) Minimum 2 diameter perforated PVC or PE pipe.

Manufacturer shall show drain details on design plans to be submitted as shown on MoDOT MSE wall plans and/or roadway plans.

Contractor shall modify the drain details as shown if it will improve flow as may be the case for stepped leveling pad, and for an uneven ground line (approval of the engineer required).

(5) See bridge plans.

DETAILS FOR GENERIC MSE WALL

Detailed
Checked

Note: This drawing is not to scale. Follow dimensions.

Sheet No. of

DATE PREPARED	
7/26/2024	
ROUTE	STATE MO
DISTRICT BR	SHEET NO. 000
COUNTY	
JOB NO.	
CONTRACT ID.	
PROJECT NO.	
BRIDGE NO.	

DESCRIPTION

DATE

MISSOURI HIGHWAYS AND TRANSPORTATION COMMISSION
105 WEST CAPITOL
JEFFERSON CITY, MO 65102
1-888-ASK-MODOT (1-888-275-6636)

Standard Drawing Guidance (do not show on plans):

Revise notes and details per project as necessary.

For Modified Type A and Type B Gutter and Fence Post Connection details, see Missouri Standard Plans No. 607.11.

For Type A & Type B Gutter information, see Missouri Standard Plans No. 609.00.

See EPG 751.24.2.1 for drainage guidance.

1. Show the minimum embedment = maximum (2 feet; embedment based on Geotechnical Report and global stability requirements; and FHWA-NHI-10-024, Table 2-2); or according to Geotechnical Report if it shows that rock is known to exist.

2. District Design Division to verify 6" diameter pipe or increase diameter. Minimum pipe diameter shall be 6".

3. Do not show values in the plan details. MSE wall designer shall include this table on shop drawings and provide values used in the design computations.

4. Show H:V fill slope or "Varies"

5. For bridge lengths less than or equal to 200 feet, use 4'-6" minimum setback which is based on the use of 18" inside diameter pipe pile spacers and FHWA-NHI-10-024, Figure 5-17C. For larger than 18" diameter pipe pile spacers, increase clear space between MSE wall & front face of the end bent beam such that no soil reinforcement is skewed more than 15°.
   For bridge lengths greater than 200 feet, use 5'-6" minimum setback which is based on the use of 24" inside diameter pipe pile spacers.

6. When rock is anticipated within 5 feet below the MSE wall leveling pad, embed pipe pile spacers at least 12" into rock and bear pile on the rock.

7. For bridge length less than or equal to 200 feet, add "(See special provisions)".
   For bridge length greater than 200 feet, add pipe diameter.

8. For walls parallel to abutment, provide actual slope H:V. Otherwise, replace leadered note with "Varies (5)".

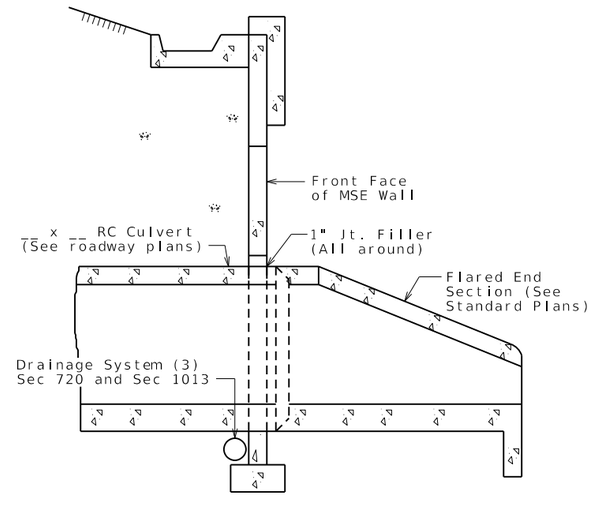

TYPICAL SECTION THRU PRECAST MODULAR PANEL WALL AT CULVERT

Vertical joint in MSE wall shall be located at each exterior culvert wall.

(New Culvert)

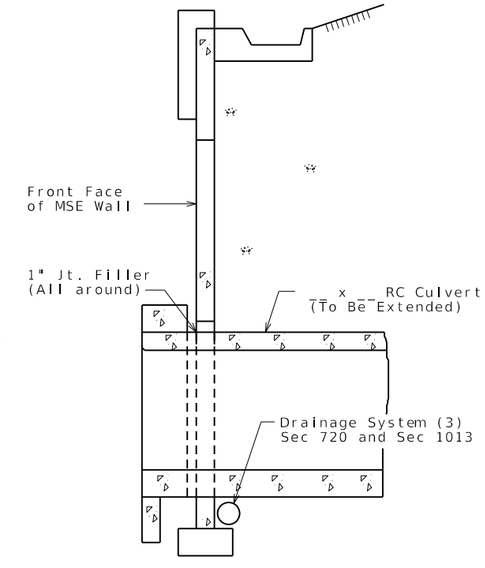

TYPICAL SECTION THRU PRECAST MODULAR PANEL WALL AT CULVERT

Note: Vertical joint in MSE wall shall be located at each exterior culvert wall.

(Culvert Extension)

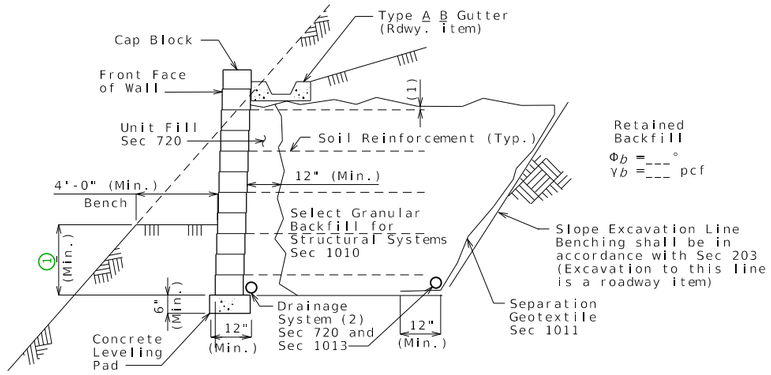

TYPICAL SECTION THRU DRYCAST OR WETCAST MODULAR BLOCK WALL

Note: Upper two layers of soil reinforcement shall be extended 3 feet beyond the lower layers when wall height is greater than 10 feet. (3)

Standard Drawing Guidance (do not show on plans):

Revise notes and details per project as necessary.

See EPG 751.24.2.1 for drainage guidance.

(1) Show the minimum embedment = maximum (2 feet; embedment based on Geotechnical Report and global stability requirements; and FHWA-NHI-10-024, Table 2-2); or according to Geotechnical Report if it shows that rock is known to exist.

(2) District Design Division to verify 6" diameter pipe or increase diameter. Minimum pipe diameter shall be 6".

(3) Use for MSE Walls in seismic design categories B, C & D (seismic zones 2, 3 & 4)

DRYCAST OR WETCAST MODULAR BLOCK WALL

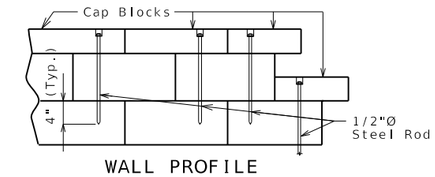

WALL PROFILE

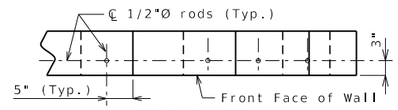

WALL PLAN

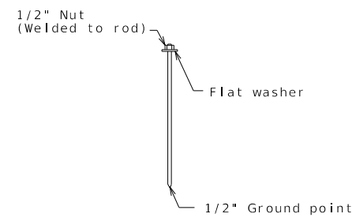

DETAILS OF 1/2" THREADED ROD OR REINFORCING ROD

Notes for Drycast or Wetcast Modular Block Walls:

(1) Topmost layer of reinforcement shall be fully covered with select granular backfill for structural systems, as approved by the wall manufacturer, before placement of the Separation Geotextile.

(2) Minimum (2) diameter perforated PVC or PE pipe.

Manufacturer shall show drain details on design plans to be submitted as shown on MoDOT MSE wall plans and/or roadway plans.

Contractor shall modify the drain details as shown if it will improve flow as may be the case for stepped leveling pad, and for an uneven ground line (approval of the engineer required).

Holes shall be 5/8-inch round and extended 4 inches into the third layer of blocks, recessed 2 inches deep by 1 1/2 inches round.

Rods or reinforcing bars shall be secured by an approved resin anchor system in accordance with Sec 1039.

Recess hole shall be backfilled with non-shrink cement grout.

Permanent shims will be sparingly allowed to maintain horizontal and vertical control. The preferable shim shall be made of a plastic material that will not rust, stain, rot or leach onto the concrete and has a minimum compressive strength equal to block wall unit. Steel or wood shims will not be allowed. Shims shall not exceed 3/16 inch in thickness and shall distribute load in order to not induce stress into block wall units. No shim shall be used between the concrete leveling pad and the base course of the block wall.

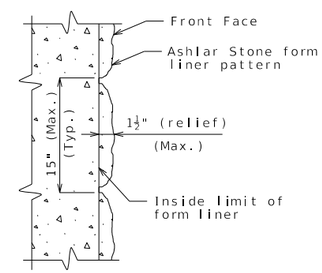

FORM LINER DETAIL
(PRECAST MODULAR PANEL WALL)

Notes for Form Liners:

The cost of form liners for MSE wall systems, complete in place, will be considered completely covered by the contract unit price for Mechanically Stabilized Earth Wall System.

Form liner shall be constructed in accordance with Special Provisions.

The following is a list of form liner manufacturers and types which may be used. Depth of relief for all form liner patterns shall vary up to 1 1/2". The height of any single 'stone' shall be 15" maximum.

- Scott System, Inc.: Form liner pattern #167 "Ashlar Stone"
- Fitzgerald Formliners: Form liner pattern #16986 "Ashlar Stone"
- Greenstreak: Form liner pattern #330 "Ashlar Stone"
- Spec Formliners: Form liner pattern #1515 "Ashlar Stone"
- Customrock: Form liner pattern #12020 "Tollway Ashlar"
- An approved equal

DETAILS FOR GENERIC MSE WALL

Detailed
Checked

Note: This drawing is not to scale. Follow dimensions.

Sheet No. of

DATE PREPARED	
7/26/2024	
ROUTE	STATE MO
DISTRICT BR	SHEET NO. 000
COUNTY	
JOB NO.	
CONTRACT ID.	
PROJECT NO.	
BRIDGE NO.	

DATE	DESCRIPTION

MISSOURI HIGHWAYS AND TRANSPORTATION COMMISSION
105 WEST CAPITOL
JEFFERSON CITY, MO 65102
1-888-ASK-MODOT (1-888-275-6636)

X' MECHANICALLY STABILIZED EARTH (MSE) RETAINING WALL SYSTEM

Indicates location of borings.

Notice and Disclaimer Regarding Boring Log Data

The locations of all subsurface borings for this structure are shown on the plan sheet(s) for this structure. The boring data for all locations indicated, as well as any other boring logs or other factual records of subsurface data and investigations performed by the department for the design of the project, are shown on Sheet(s) No. __ and may be included in the Electronic Bridge Deliverables. They will also be available from the Project Contact upon written request. No greater significance or weight should be given to the boring data depicted on the plan sheets than is given to the subsurface data available from the district or elsewhere.

The Commission does not represent or warrant that any such boring data accurately depicts the conditions to be encountered in constructing this project. A contractor assumes all risks it may encounter in basing its bid prices, time or schedule of performance on the boring data depicted here or those available from the district, or on any other documentation not expressly warranted, which the contractor may obtain from the Commission.

PLAN 4

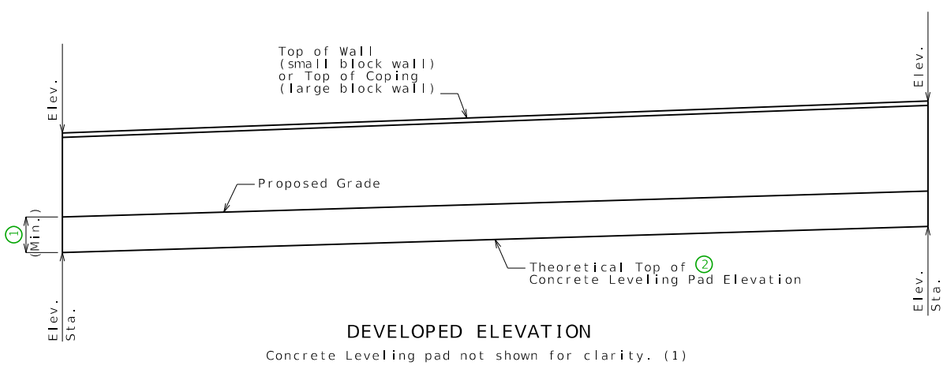

DEVELOPED ELEVATION

Concrete Leveling pad not shown for clarity. (1)

DETAILS OF 3 GROUND IMPROVEMENTS

LOCATION SKETCH

(1) Wall contractor shall show the following items on the design drawings and/or on the fabricator shop drawings.

- Leveling pad horizontal.
- Leveling pad length and step elevations shall be based on wall manufacturer's recommendation.Top of leveling pad elevations shall not be higher than theoretical top of leveling pad elevations shown on these plans.

Estimated Quantities	
Item	Total
Mechanically Stabilized Earth Wall Systems sq. foot	

MSE Wall Systems Data Table					
Proprietary Wall Systems		Combination Wall Systems			
Manufacturer	System	Facing Unit Manufacturer	Facing Unit	Geogrid Manufacturer	Geogrid

MSE Wall Systems Data Table is to be completed by MoDOT construction personnel to record the manufacturer of the proprietary wall system or the manufacturers of the combination wall system that was used for constructing the MSE wall.

Designed
Detailed
Checked

Note: This drawing is not to scale. Follow dimensions.

Sheet No. 1 of

General Notes:

SEC/SUR * TWP * RGE *

Design Specifications:

2002 AASHTO LFD (17th Ed.) Standard Specifications (Section 5 ASD Design)
Seismic Performance Category =
Acceleration Coefficient =

Design Loading:

Φ_b = ° and Unit weight, γ_b = pcf for retained backfill material to be retained by the mechanically stabilized earth wall system.

3 Φ_f = ° for unimproved foundation ground where wall is to bear.
Φ_f = ° for improved foundation ground where wall is to bear.

For unimproved foundation ground, the allowable bearing pressure is____ ksf.
For improved foundation ground, the allowable bearing pressure is_____ ksf.

The maximum applied bearing pressure for the controlling design case at the foundation level shall be shown on the shop drawings and shall be less than the allowable bearing pressure for foundation ground provided herein. For seismic design the maximum applied bearing pressure shall be less than two times the allowable bearing pressure.

Allowable bearing pressure and limits of improved foundation ground 3 shall not be adjusted from that as shown on the plans.

Contractor shall include design Φ_f (actual $\Phi_f \geq 34°$) and the total unit weight, γ_f, for the select granular backfill (reinforced backfill and wedge area backfill) for structural systems on shop drawings. Contractor shall identify source of select granular backfill material, submit proctor in accordance with AASHTO T 99 (ASTM D698) and gradation with the shop drawings. When backfill material is too coarse to develop a proctor curve the contractor shall determine the maximum dry density (relative density) in accordance with ASTM D4253 and ASTM D4254 and assume percent passing the 200 sieve for optimum water content.

Total unit weight, γ_f = (95% compaction) x (maximum dry density) x (1 + optimum water content)

Design Φ_f = 34°for the select granular backfill (reinforced backfill) only for structural systems.

Factor of safety shall be 2.0 for overturning and 1.5 for sliding.

For seismic design the factor of safety shall be 1.5 for overturning and 1.1 for sliding.

5 Use default values for the pullout friction factor, F^*, in accordance with AASHTO figure 5.8.5.2A and default value for scale effect correction factor, α, in accordance with AASHTO table 5.8.5.2A. For approved steel strips not shown in AASHTO figure 5.8.5.2A, use $F^* \leq 2.0$ at zero depth and $F^* \leq \text{Tan}\ \Phi_f$ at 20 feet depth and Φ_f design = 34°. F^* and α values shall be shown on the shop drawings.

Design Unit Stresses:

All concrete for leveling pad and coping shall be Class B or B-1 with f'c = 4000 psi.

The minimum compressive strength of concrete for precast panel precast concrete block shall be 4,000 psi in accordance with Sec 1052.

Miscellaneous:

6 The MSE wall system shall be built vertical.

The MSE wall system shall be built in accordance with Sec 720.

The MSE wall system shall be a small large block wall system.

The cost of joint filler and joint seal, complete in place, will be considered completely covered by the contract unit price for Concrete Traffic Barrier (Type A D). See Roadway Plans.

Panel, concrete block and coping (or capstone) reinforcement shall be epoxy coated.

A filter cloth meeting the requirements for a Separation Geotextile material shall be placed between the select granular backfill for structural systems and the backfill being retained by the mechanically stabilized earth wall system.

5 Coping shall be required on this structure. When CIP coping sections extend beyond the limits of a single panel, bond breaker (roofing felt or other approved alternate) between wall panel and coping is required. Coping joints shall use 3/4-inch chamfers and shall be sealed with 3/4-inch joint filler. Coping reinforcement shall terminate 1 1/2-inch minimum from face of coping joint.

7 The top and bottom elevations are given for a vertical wall. The height of the wall shall be adjusted as necessary to fit the ground slope and the concrete leveling pad shall be adjusted as necessary to account for the wall batter. If a fence is built on an extended gutter, then the height of the wall shall be adjusted further.

The baseline of the wall shown is for a vertical wall. This baseline shall correspond to Elevation _____.

The contractor shall be solely responsible to coordinate construction of the wall with bridge and roadway construction and ensure that the bridge and roadway construction, resulting or existing obstructions, shall not impact the construction or performance of the wall. Soil reinforcement shall be designed and placed to avoid damage by pile driving, guardrail post installation, utility and sign foundations. (See Roadway and Bridge plans.)

B.M.

RETAINING WALL ALONG *

ROUTE * FROM * TO *
ABOUT * MILES * OF *
* STATION *

DATE PREPARED	
7/26/2024	
ROUTE	STATE MO
DISTRICT BR	SHEET NO. 000
COUNTY	
JOB NO.	
CONTRACT ID.	
PROJECT NO.	
BRIDGE NO.	

DESCRIPTION	DATE

MISSOURI HIGHWAYS AND TRANSPORTATION COMMISSION
105 WEST CAPITOL
JEFFERSON CITY, MO 65102
1-888-ASK-MODOT (1-888-275-6636)

MSEW_05_LFD1 Guidance

Standard Drawing Guidance (do not shown on plans):

Revise notes and details per project as necessary.

Proposed grade & theoretical top of leveling pad elevation shall be shown in constant slope. Slope line shall be adjusted per project. Top of wall or coping elevation & stationing shall be shown in the developed elevation per project. Sample wall shown. Draw actual wall in elevation and plan per project.

1. Show the minimum embedment = maximum (2 feet; embedment based on Geotechnical Report and global stability requirements; and FHWA-NHI-10-024, Table 2-2).

2. Show theoretical top of leveling pad elevation on the plan based on minimum embedment requirements. Minimum embedment shall be provided in accordance with FHWA-NHI-10-024, Table 2-2, and Geotechnical Report.

3. The allowable bearing pressure and an angle of internal friction, Φ_f, for unimproved and improved ground where wall is to bear as determined by the Geotechnical Section and reported on the Foundation Investigation Geotechnical Report (FIGR) shall be shown on the plans. Show areas and locations of ground improvement along the wall where required, for example, using stationing or using changes in wall height. Provide cross-section of ground improvement based on FIGR. Provide any other geotechnical requirements in FIGR on plans.

   Use the underlined portion from note EPG 751.50 J1.25a when limits of improved foundation ground is required by Geotechnical Section.

4. Show all boring locations on Plan.

5. Use for all large block MSE walls.

6. Use for all large block walls. Use for small block walls if applicable.

7. Use for small block walls unless the small block wall is to be built vertical.

NOTES TO ROADWAY AND BRIDGE DESIGNERS:

Excavation classes, quantities and pay items are the responsibility of District Design Division for including on the roadway 2B quantity sheets which is noted on the MSEW plans and required in accordance with Sec 720. All other quantities are the responsibility of the division responsible for the MSE wall plans.

If rock is not known to exist from a geotechnical report or study, place the following note on the plans:

"If rock is encountered in the proposed reinforced backfill area or wedge area of the MSE wall before or during excavation, the contractor shall immediately cease excavating and notify the engineer."

Otherwise, if rock is known to exist and it is to be excavated, then do not place above note on plans and
determine the excavation class and estimate a rock quantity. For all Bridge Division MSE walls, Bridge Division and District Design Division shall coordinate in estimating excavation quantities when rock is known to exist from the geotechnical report and if rock is to
be used as part of the wall backfill or excavated for MSE wall construction.

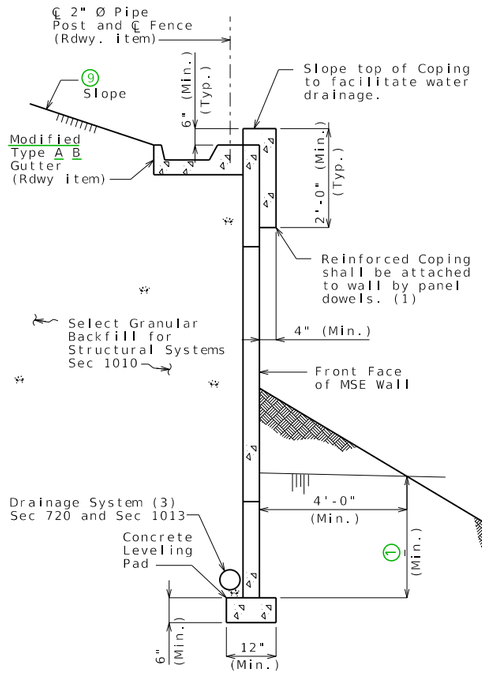

TYPICAL SECTION THRU
LARGE BLOCK WALL

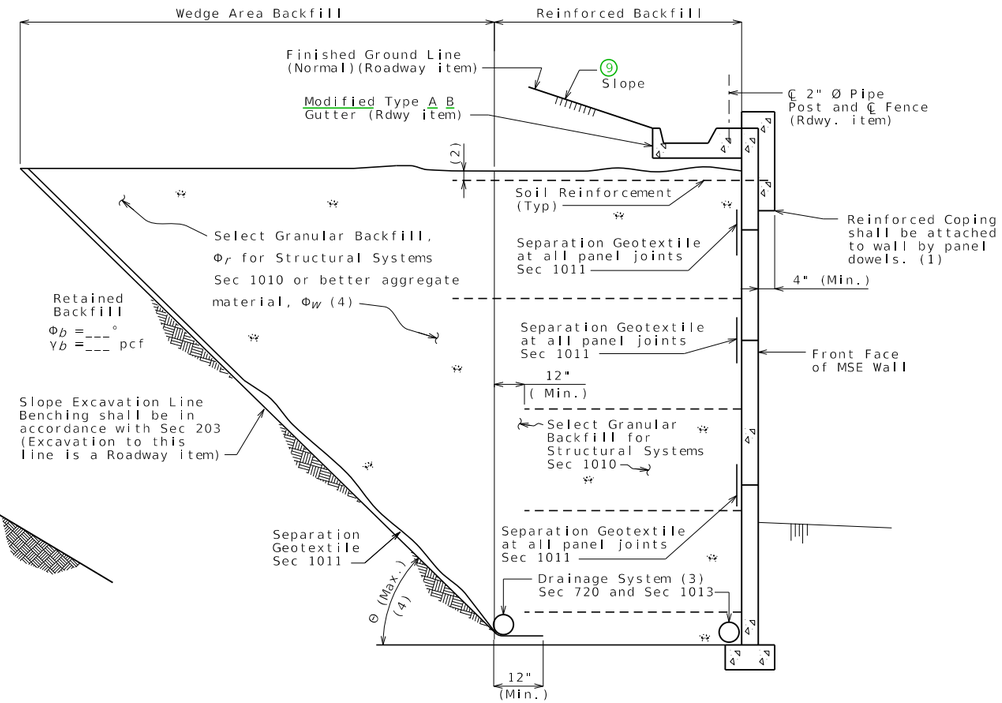

TYPICAL SECTION THRU
LARGE BLOCK WALL SHOWING FILTER CLOTH

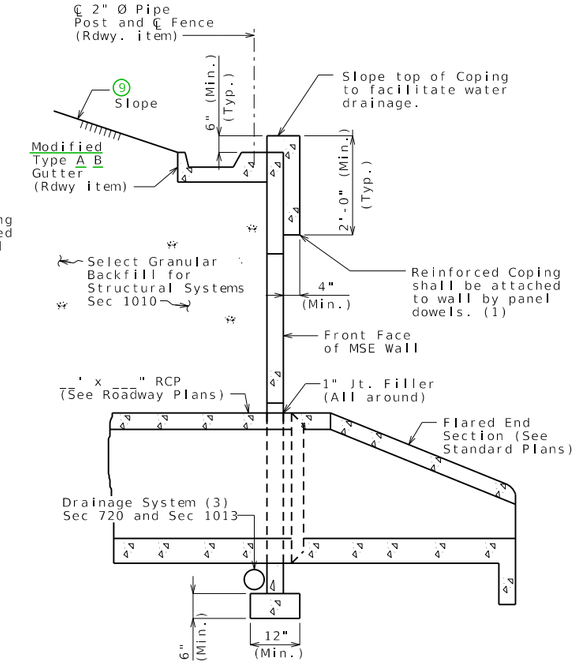

TYPICAL SECTION THRU
LARGE BLOCK WALL AT CULVERT

Vertical joint in MSE wall shall be located at each exterior culvert wall.

General Notes Cont.:

(7) Minimum 18" wide Geotextile strips shall be centered at vertical and horizontal joints of panel. Geotextile material shall be adhered to back face of panel using an adhesive compound supplied by the manufacturer. All edges of each fabric strip shall provide a positive seal. A minimum 18" overlap shall be provided between spliced filter fabric.

Aluminized soil reinforcement shall have edges coated with coating material per manufacturer.

Soil reinforcement shall be spaced to avoid roadway drop inlet behind wall.

(3) Upper two layers of soil reinforcement shall be extended 3 feet beyond the lower layers when wall height is greater than or equal to 10 feet.

(5) All steel soil reinforcements shall be separated from other metallic elements by at least 3 inches.

(6) The splay angle should be less than 15° and tensile capacity of splayed reinforcement shall be reduced by the cosine of the splay angle. Soil reinforcement shall clear the obstruction by at least 3 inches.

No reinforcement shall be left unconnected to the wall face or arbitrarily cut/bent in the field to avoid the obstruction.

Where interference between the vertical obstruction and the soil reinforcement is unavoidable, the design of the wall near the obstruction may be modified using one of the alternatives in FHWA-NHI-10-24, Section 5.4.2. Show detail layout on the drawings. For wall designs with horizontal obstructions in reinforced soil mass, see FHWA-NHI-10-024, Section 5.4.3.

Excavation:
Excavation quantities and pay items are given on the roadway plans. Excavation quantities are based on a soil reinforcement length of (2) ft. The soil reinforcement length may vary based upon the wall design selected by the contractor. Plan excavation quantities will be paid regardless of any actual quantities removed based on the soil reinforcement length and design selected.

(1) Inverted U-shape reinforced capstone may be used in lieu of coping. Panel dowels for level-up concrete shall be required and provided by manufacturer. The dowels shall be field trimmed to clear the capstone by a minimum of 1 1/2 inches and a maximum of 2 1/2 inches.

(2) Topmost layer of reinforcement shall be fully covered with select granular backfill for structural systems, as approved by the wall manufacturer, before placement of the Separation Geotextile.

(3) Minimum (4) diameter perforated PVC or PE pipe.

Manufacturer shall show drain details on design plans to be submitted as shown on MoDOT MSE wall plans and/or roadway plans.

Contractor shall modify the drain details as shown if it will improve flow as may be the case for stepped leveling pad, and for an uneven ground line (approval of the engineer required).

(4) Select granular backfill shall extend a minimum of 12" beyond the end of all soil reinforcement. Where the angle, Θ, between the retained backfill excavation/fill line and the horizontal is less than 90°, the wedge area backfill between Θ and 90° shall be filled with select granular backfill for structural systems meeting the requirements of Section 1010.

- For $(45° + \Phi_b/3) < \Theta \leq 90°$, properties for retained backfill shall be used for active force computations.

- For $\Theta \leq (45° + \Phi_b/3)$, contractor shall have the option to use select granular backfill, Φ_f, or better aggregate material, Φ_w for active force computations in the wedge area backfill. For active force computations, the angle of internal friction for wedge area backfill material, Φ_f or Φ_w, shall be limited to 34° unless determined otherwise in accordance with Section 1010. If Φ_f or $\Phi_w > 34°$ is desired for wedge area backfill then test report shall be submitted with shop drawings. Φ_f or Φ_w shall not be greater than 40° for computations. Final configuration of this option shall be sent to Geotechnical Section for a new overall global stability analysis. Design Φ_w shall be shown on the shop drawings if used.

(8)

Material Properties Used in Design				
Reinf. Fill/Select Granular Backfill		Active Force Computations		Foundation
Φ°	γ (pcf)	Φ°	γ (pcf)	Φ°

Note: MSE Wall designer shall include table on shop drawings and provide values used in the design computations. Effects of cohesion shall be ignored unless approved by the engineer.

The slope excavation line shall be benched and separation geotextile shall be placed between the retained backfill and either select granular backfill or better aggregate material, and between the select granular backfill and better aggregate material.

Show range of acceptable theta (Θ) angle on shop drawings which must be consistent with design computations and proposed construction of wall. Show active force computation properties on shop drawings and in design computations. Coordination between wall designer (manufacturer) and contractor is required before shop drawing submittal.

DETAILS FOR GENERIC MSE WALL

Detailed
Checked

Note: This drawing is not to scale. Follow dimensions.

Sheet No. of

DATE PREPARED	7/26/2024
ROUTE	STATE MO
DISTRICT BR	SHEET NO. 000
COUNTY	
JOB NO.	
CONTRACT ID.	
PROJECT NO.	
BRIDGE NO.	

DESCRIPTION

DATE

MISSOURI HIGHWAYS AND TRANSPORTATION COMMISSION
105 WEST CAPITOL
JEFFERSON CITY, MO 65102
1-888-ASK-MODOT (1-888-275-6636)

MSEW_06_LFD2 Guidance

Standard Drawing Guidance (do not show on plans):

Revise notes and details per project as necessary.

For Modified Type A and Type B Gutter and Fence Post Connection details, see Missouri Standard Plans No. 607.11.

For Type A & Type B Gutter information, see Missouri Standard Plans No. 609.00.

See EPG 751.24.2.1 for drainage guidance.

1. Show the minimum embedment = maximum (2 feet; embedment based on Geotechnical Report and global stability requirements; and FHWA-NHI-10-024, Table 2-2).

2. Minimum soil reinforcement length shall be based on the following cases in accordance with EPG 751.6.2.17:

   Maximum (0.7H, 8 ft, or FIGR) for a non-seismic design.

   Maximum (0.7H, 8 ft, or FIGR, seismic loading requirement) for a seismic design.

   Maximum (0.8H, 8 ft, or FIGR) for a sloping backfill surcharge case.

   Soil reinforcement length shall be greater than or equal to as required for a stable feature wall for strong/stable rock case.

   Where,

   H = Height of the wall as measured from the top of the leveling pad to the top of the wall.

   FIGR = Foundation Investigation Geotechnical Report

3. Use for MSE walls in Seismic Categories B, C & D.

4. District Design Division to verify 6" diameter pipe or increase diameter. Minimum pipe diameter shall be 6".

5. Use for MSE Walls when there may be contact between dissimilar metals.

6. Use for MSE Walls when there may be vertical and/or horizontal obstructions in reinforced soil mass.

7. Use for all large block MSE walls.

8. Do not show values in the plan details. MSE wall designer shall include this table on shop drawings and provide values used in the design computations.

9. Show H:V spill slope or "Varies"

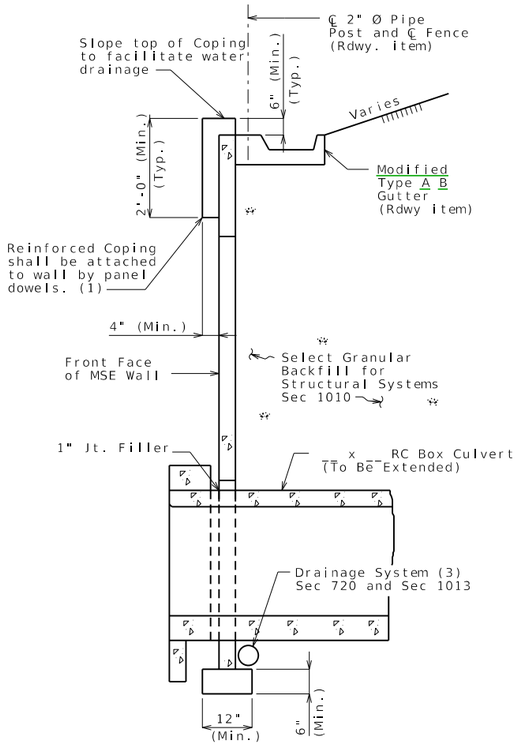

TYPICAL SECTION THRU
LARGE BLOCK WALL AT CULVERT

Notes: Vertical joint in MSE wall shall be located at each exterior culvert wall.

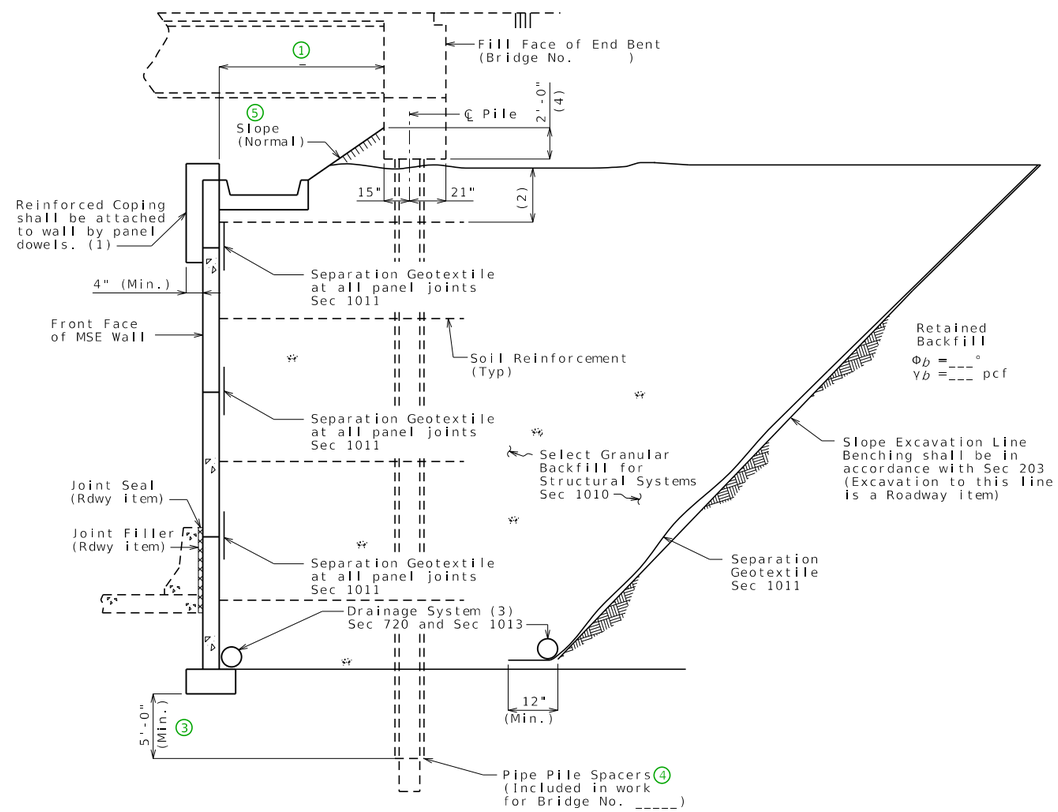

TYPICAL SECTION THRU
LARGE BLOCK WALL UNDER BRIDGE

Note: For additional information, see "TYPICAL SECTION THRU LARGE BLOCK WALL SHOWING FILTER CLOTH".

(1) Inverted U-shape reinforced capstone may be used in lieu of coping. Panel dowels for level-up concrete shall be required and provided by manufacturer. The dowels shall be field trimmed to clear the capstone by a minimum of 1 1/2 inches and a maximum of 2 1/2 inches.

(2) Topmost layer of reinforcement shall be fully covered with select granular backfill for structural systems, as approved by the wall manufacturer, before placement of the Separation Geotextile.

(3) Minimum 2 diameter perforated PVC or PE pipe.

Manufacturer shall show drain details on design plans to be submitted as shown on MoDOT MSE wall plans and/or roadway plans.

Contractor shall modify the drain details as shown if it will improve flow as may be the case for stepped leveling pad, and for an uneven ground line (approval of the engineer required).

(4) See bridge plans.

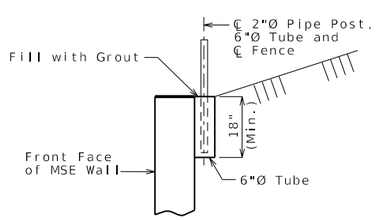

FENCE POST CONNECTION
BEHIND WALL
(WITHOUT GUTTER)

Standard Drawing Guidance (do not show on plans):

Revise notes and details per project as necessary.

Gutter type should be selected at core team meeting.

For Modified Type A and Modified Type B Gutter and Fence Post Connection Details, see Missouri Standard Plans No. 607.11.

For Type A and Type B Gutter information, see Missouri Standard Plans No. 609.00.

See EPG 751.24.2.1 for drainage guidance.

1 For bridge lengths less than or equal to 200 feet, use 4'-6" minimum setback which is based on the use of 18" inside diameter pipe pile spacers and FHWA-NHI-10-024, Figure 5-17C. For larger than 18" diameter pipe pile spacers, increase clear space between MSE wall & front face of the end bent beam such that no soil reinforcement is skewed more than 15°.
For bridge lengths greater than 200 feet, use 5'-6" minimum setback which is based on the use of 24" inside diameter pipe pile spacers.

2 District Design Division to verify 6" diameter pipe or increase diameter. Minimum pipe diameter shall be 6".

3 When rock is anticipated within 5 feet below the MSE wall leveling pad, embed pipe pile spacers at least 12" into rock and bear pile on the rock.

4 For bridge length less than or equal to 200 feet, add "(See special provisions)".
For bridge length greater than 200 feet, add pipe diameter.

5 For walls parallel to abutment, provide actual slope H:V. Otherwise, replace leadered note with "Varies (4)".

DETAILS FOR GENERIC MSE WALL

Detailed
Checked

Note: This drawing is not to scale. Follow dimensions.

Sheet No. of

DATE PREPARED	
7/26/2024	
ROUTE	STATE MO
DISTRICT BR	SHEET NO. 000
COUNTY	
JOB NO.	
CONTRACT ID.	
PROJECT NO.	
BRIDGE NO.	

DATE	DESCRIPTION

MISSOURI HIGHWAYS AND TRANSPORTATION COMMISSION
105 WEST CAPITOL
JEFFERSON CITY, MO 65102
1-888-ASK-MODOT (1-888-275-6636)

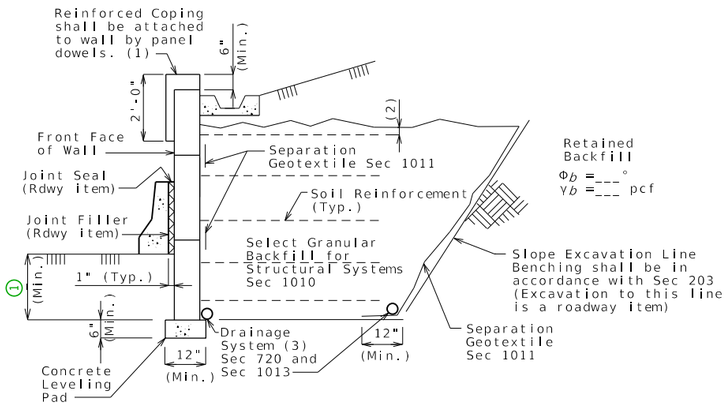

TYPICAL SECTION THRU LARGE BLOCK WALL

Note: For additional information, see "TYPICAL SECTION THRU LARGE BLOCK WALL SHOWING FILTER CLOTH".

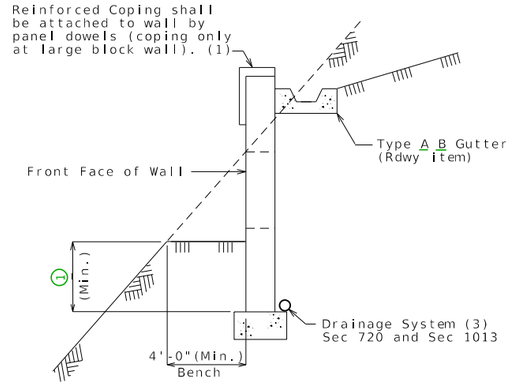

TYPICAL SECTION THRU MSE WALL FOUNDED ON SLOPE

Note:
A minimum horizontal bench 4'-0" wide shall be provided in front of the wall

Note:

Holes shall be 5/8" round and extended 4" into the third layer of blocks, recessed 2" deep by 1 1/2" round.

Rods or reinforcing bars shall be secured by an approved resin anchor system in accordance with Sec 1039.

Recess hole shall be backfilled with non-shrink cement grout.

(1) Inverted U-shape reinforced capstone may be used in lieu of coping. Panel dowels for level-up concrete shall be required and provided by manufacturer. The dowels shall be field trimmed to clear the capstone by a minimum of 1 1/2 inches and a maximum of 2 1/2 inches.

(2) Topmost layer of reinforcement shall be fully covered with select granular backfill for structural systems, as approved by the wall manufacturer, before placement of the Separation Geotextile.

(3) Minimum (2) diameter perforated PVC or PE pipe.

Manufacturer shall show drain details on design plans to be submitted as shown on MoDOT MSE wall plans and/or roadway plans.

Contractor shall modify the drain details as shown if it will improve flow as may be the case for stepped leveling pad, and for an uneven ground line (approval of the engineer required).

Permanent shims for Small block MSE wall:
Shims will be sparingly allowed to maintain horizontal and vertical control. The preferable shim shall be made of a plastic material that will not rust, stain, rot or leach onto the concrete and has a minimum compressive strength equal to block wall unit. Steel or wood shims will not be allowed. Shims shall not exceed 3/16" in thickness and shall distribute load in order to not induce stress into block wall units. No shim shall be used between the concrete leveling pad and the base course of the block wall.

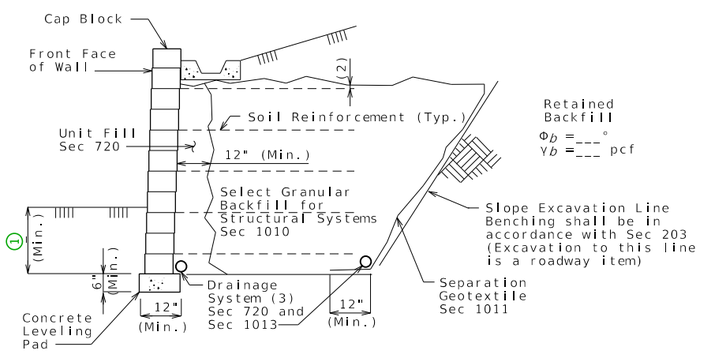

TYPICAL SECTION THRU SMALL BLOCK WALL

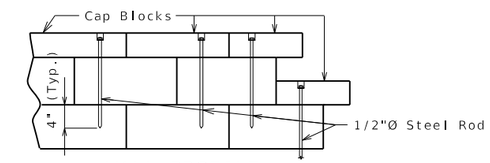

WALL PROFILE

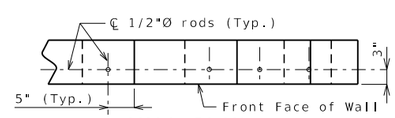

WALL PLAN

(Small Block Wall)

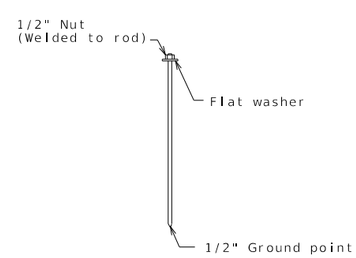

DETAILS OF 1/2" THREADED ROD OR REINFORCING ROD

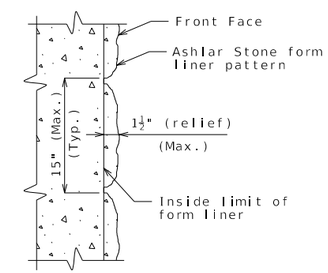

FORM LINER DETAIL
(Large Block Wall)

Notes:

The cost of form liners for MSE wall systems, complete in place, will be considered completely covered by the contract unit price for Mechanically Stabilized Earth Wall System.

Form liner shall be constructed in accordance with Special Provisions.

The following is a list of form liner manufacturers and types which may be used. Depth of relief for all form liner pattern's shall vary up to 1 1/2". The height of any single 'stone' shall be 15" maximum.

- Scott System, Inc.: Form liner pattern #167 "Ashlar Stone"
- Fitzgerald Formliners: Form liner pattern #16986 "Ashlar Stone"
- Greenstreak: Form liner pattern #330 "Ashlar Stone"
- Spec Formliners: Form liner pattern #1515 "Ashlar Stone"
- Customrock: Form liner pattern #12020 "Tollway Ashlar"
- An approved equal

Standard Drawing Guidance (do not show on plans):

Revise notes and details per project as necessary.

Note (1) does not apply to Small Block Walls.

See EPG 751.24.2.1 for drainage guidance.

(1) Show the minimum embedment = maximum (2 feet; embedment based on Geotechnical Report and global stability requirements; and FHWA-NHI-10-024, Table 2-2).

(2) District Design Division to verify 6" diameter pipe or increase diameter. Minimum pipe diameter shall be 6".

DETAILS FOR GENERIC MSE WALL

Detailed
Checked

Note: This drawing is not to scale. Follow dimensions.

Sheet No. of

DATE PREPARED	
7/26/2024	
ROUTE	STATE MO
DISTRICT BR	SHEET NO. 000
COUNTY	
JOB NO.	
CONTRACT ID.	
PROJECT NO.	
BRIDGE NO.	

DESCRIPTION	DATE

MISSOURI HIGHWAYS AND TRANSPORTATION COMMISSION
105 WEST CAPITOL
JEFFERSON CITY, MO 65102
1-888-ASK-MODOT (1-888-275-6636)

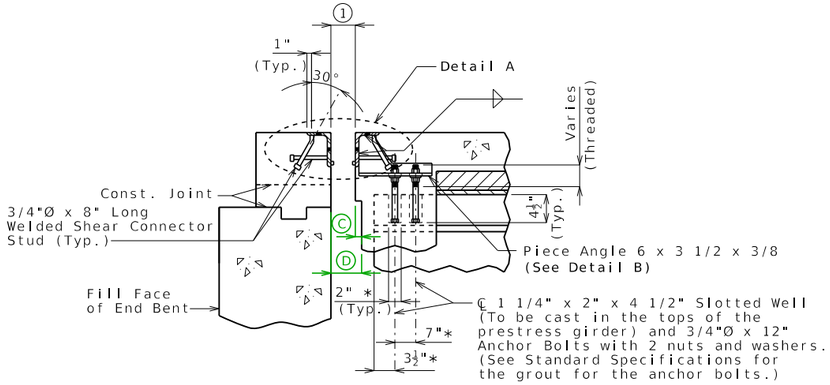

PART SECTION A-A

* Dimension along ℄ Girder

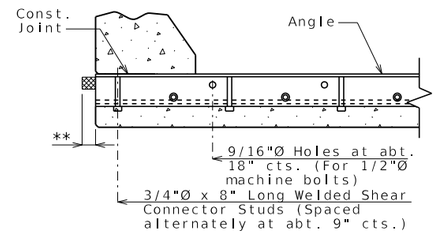

PART SECTION B-B

** Extend preformed compression seal 3" past the edge of slab (Typ.)

GENERAL NOTES:

Expansion joint system shall be fabricated in one section, except for staged construction and when the length is over 50 feet. A complete joint penetration groove welded splice shall be required. Welds shall be ground flush to provide a smooth surface. The expansion joint system shall be fabricated and installed to the crown and grade of the roadway.

Structural steel for the expansion joint system shall be ASTM A709 Grade 36. Anchors for the expansion joint system shall be in accordance with Sec 1037. Preformed compression seal expansion joint system shall be in accordance with Sec 717.

Structural steel for the expansion joint system shall be coated with a minimum of two coats of inorganic zinc primer to provide a total dry film thickness of 4 mils minimum, 6 mils maximum, or galvanized in accordance with ASTM A123. Anchors need not be protected from overspray.

Concrete shall be forced under armor angle and around anchors. Proper consolidation of the concrete shall be achieved by localized internal vibration.

Longitudinal reinforcing steel shall be placed so that ends shall be 1" from the vertical leg of the angle at the expansion joint system.

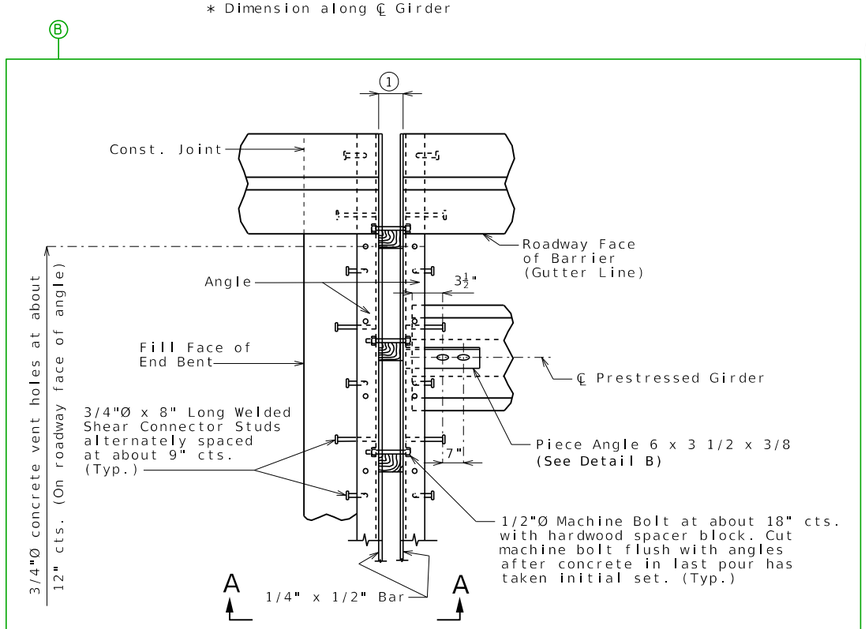

PART PLAN

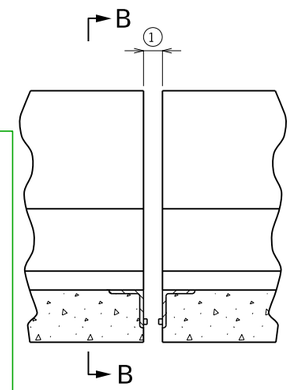

PART ELEVATION OF BARRIER

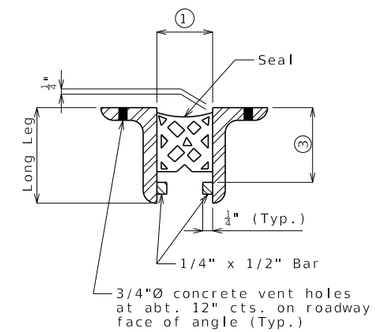

SECTION THRU DEVICE

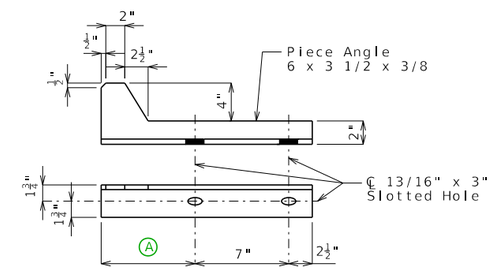

DETAIL B

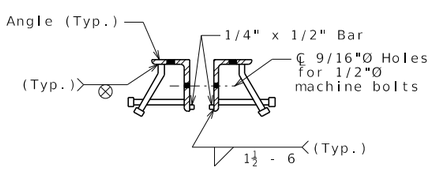

DETAIL A

Table of Transverse Preformed Compression Seal Expansion Joint System Dimensions

Seal Width Perpendicular to Joint	Height ③	Movement Capacity (Normal to Joint)	Min. Joint Width (Normal to Joint)	Max. Joint Width (Normal to Joint)	Allowed Installation Gap Normal to Joint at RDWY Surface @ Air/Surface Temperature ② ①				Manufacturer	Seal Name
					@ 40°F	@ 50°F	@ 60°F	@ 70°F		
2.25"	Manufacturer's Recommended Height	0.85"	1.06"	1.91"	XXX	XXX	XXX	XXX		
2.5"	Manufacturer's Recommended Height	1.00"	1.13"	2.13"	XXX	XXX	XXX	XXX		
3.0"	Manufacturer's Recommended Height	1.30"	1.25"	2.55"	XXX	XXX	XXX	XXX		
3.5"	Manufacturer's Recommended Height	1.60"	1.38"	2.98"	XXX	XXX	XXX	XXX		
4.0"	Manufacturer's Recommended Height	1.83"	1.57"	3.40"	XXX	XXX	XXX	XXX		
4.5"	Manufacturer's Recommended Height	2.27"	1.56"	3.83"	XXX	XXX	XXX	XXX		

Note: Depth of seal shall not be less than width of seal.

Size of armor angle:
Vertical leg of angle shall be a minimum of Manufacturer's Recommended Height ③ + 3/4". Horizontal leg of angle shall be a minimum of 3". Minimum thickness of angle shall be 1/2".

② The installation temperature shall be taken as the actual air temperature averaged over the 24-hour period immediately preceding installation.

MoDOT Construction personnel will record the manufacturer and seal name that was used.

DATE PREPARED	2/11/2026
ROUTE	STATE MO
DISTRICT	SHEET NO. 000
COUNTY	
JOB NO.	
CONTRACT ID.	
PROJECT NO.	
BRIDGE NO.	

DESCRIPTION

DATE

MISSOURI HIGHWAYS AND TRANSPORTATION COMMISSION
105 WEST CAPITOL
JEFFERSON CITY, MO 65102
1-888-ASK-MODOT (1-888-275-6636)

PREFORMED COMPRESSION SEAL EXPANSION JOINT SYSTEM AT END BENT NO. _

Detailed
Checked

Note: This drawing is not to scale. Follow dimensions.

Sheet No. of

P_COM01_psi_end Guidance & Alternate Details

STANDARD DRAWING GUIDANCE (do not show on plans):

For slab thickness < 8 1/2", check shear connector stud length for clearance to flange or diaphragm and adjust length as necessary. See Structural Project Manager.

Use standard detailing note H5.55 when polymer concrete wearing surface is used with a preformed compression seal.

Remove non-applicable rows in table.

Ⓐ Piece angle length to center of first slotted hole.

Ⓑ Use squared, left advanced or right advanced Part Plan as needed.

Ⓒ = 3/4" (Min.) @ 60°. Verify only.

Ⓓ = ① @ 60°+ 3/4" (Min.). Verify only.

Delete panels for CIP slab.

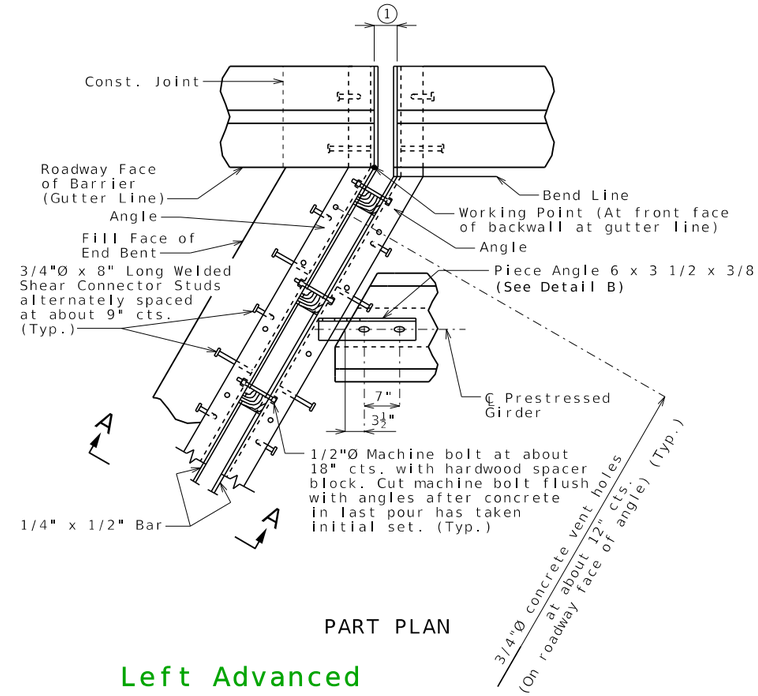

PART PLAN

Left Advanced

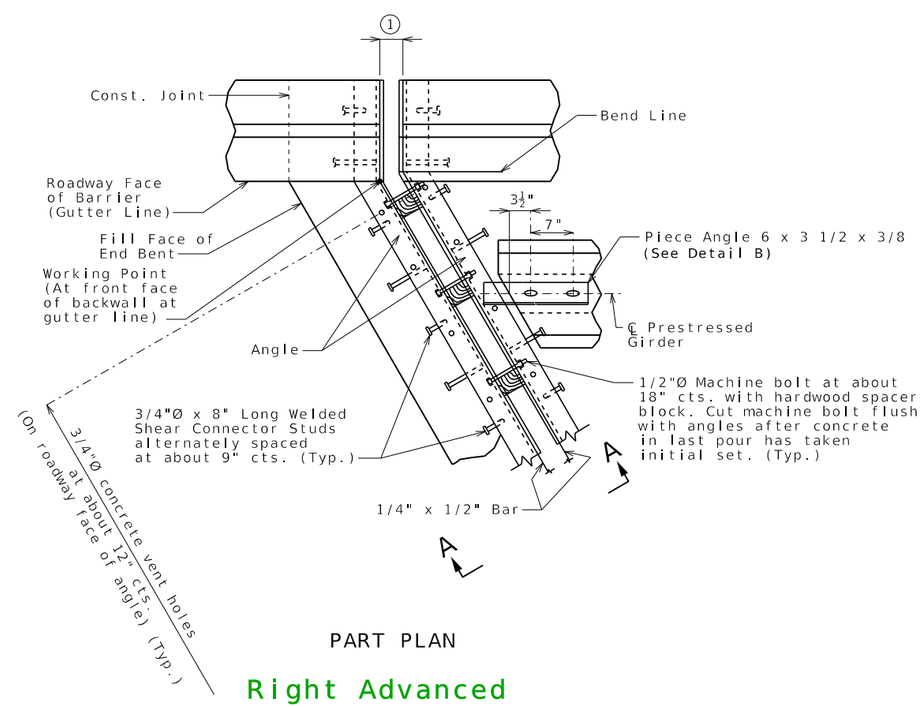

PART PLAN

Right Advanced

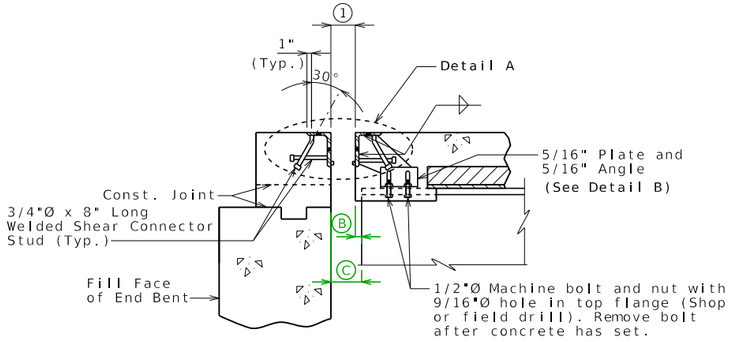

PART SECTION A-A

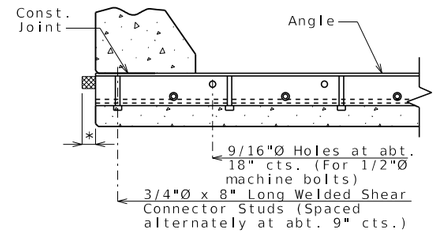

PART SECTION B-B

* Extend preformed compression seal 3" past the edge of slab (Typ.)

GENERAL NOTES:

Expansion joint system shall be fabricated in one section, except for staged construction and when the length is over 50 feet. A complete joint penetration groove welded splice shall be required. Welds shall be ground flush to provide a smooth surface. The expansion joint system shall be fabricated and installed to the crown and grade of the roadway.

Structural steel for the expansion joint system shall be ASTM A709 Grade 36. Anchors for the expansion joint system shall be in accordance with Sec 1037. Preformed compression seal expansion joint system shall be in accordance with Sec 717.

Structural steel for the expansion joint system shall be coated with a minimum of two coats of inorganic zinc primer to provide a total dry film thickness of 4 mils minimum, 6 mils maximum, or galvanized in accordance with ASTM A123. Anchors need not be protected from overspray.

Concrete shall be forced under armor angle and around anchors. Proper consolidation of the concrete shall be achieved by localized internal vibration.

Longitudinal reinforcing steel shall be placed so that ends shall be 1" from the vertical leg of the angle at the expansion joint system.

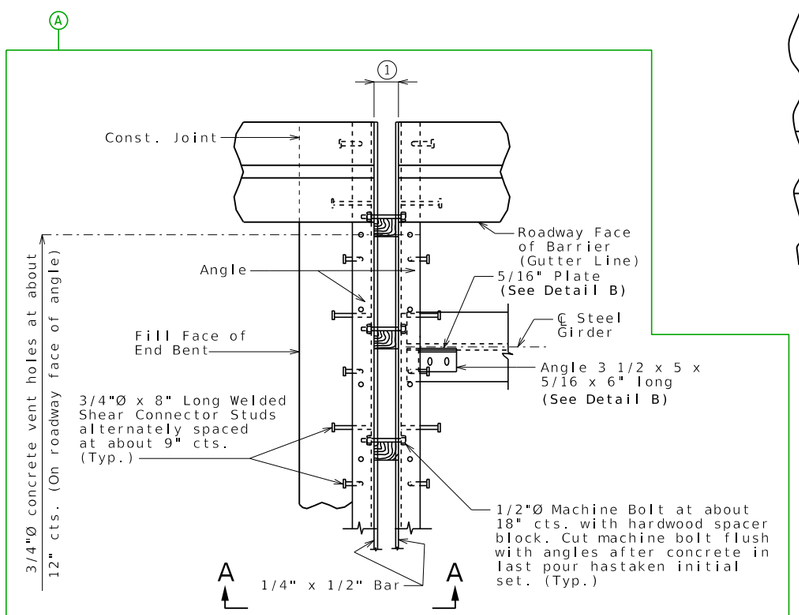

PART PLAN

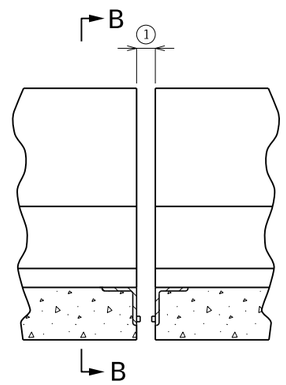

PART ELEVATION
OF BARRIER

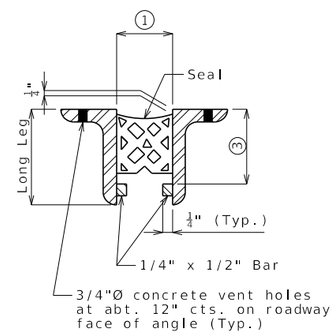

SECTION THRU DEVICE

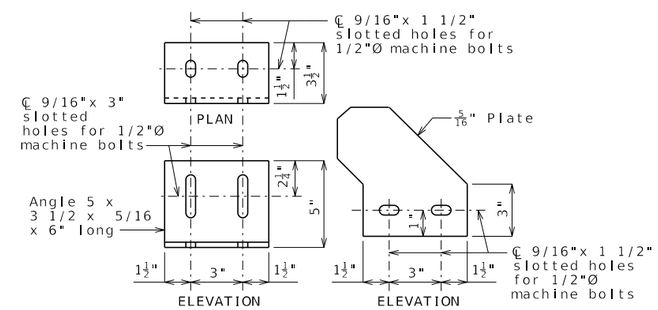

DETAIL B

Table of Transverse Preformed Compression Seal Expansion Joint System Dimensions										
Seal Width Perpendicular to Joint	Height ③	Movement Capacity (Normal to Joint)	Min. Joint Width (Normal to Joint)	Max. Joint Width (Normal to Joint)	Allowed Installation Gap Normal to Joint at RDWY Surface @ Air/Surface Temperature ② ①				Manufacturer	Seal Name
					@ 40°F	@ 50°F	@ 60°F	@ 70°F		
2.25"	Manufacturer's Recommended Height	0.85"	1.06"	1.91"	XXX	XXX	XXX	XXX		
2.5"	Manufacturer's Recommended Height	1.00"	1.13"	2.13"	XXX	XXX	XXX	XXX		
3.0"	Manufacturer's Recommended Height	1.30"	1.25"	2.55"	XXX	XXX	XXX	XXX		
3.5"	Manufacturer's Recommended Height	1.60"	1.38"	2.98"	XXX	XXX	XXX	XXX		
4.0"	Manufacturer's Recommended Height	1.83"	1.57"	3.40"	XXX	XXX	XXX	XXX		
4.5"	Manufacturer's Recommended Height	2.27"	1.56"	3.83"	XXX	XXX	XXX	XXX		

Note: Depth of seal shall not be less than width of seal.

Size of armor angle:
Vertical leg of angle shall be a minimum of Manufacturer's Recommended Height ③ + 3/4". Horizontal leg of angle shall be a minimum of 3". Minimum thickness of angle shall be 1/2".

② The installation temperature shall be taken as the actual air temperature averaged over the 24-hour period immediately preceding installation.

MoDOT Construction personnel will record the manufacturer and seal name that was used.

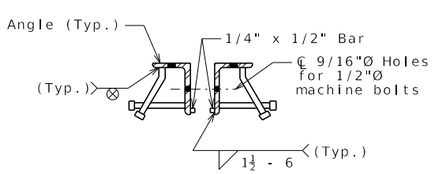

DETAIL A

PREFORMED COMPRESSION SEAL EXPANSION JOINT SYSTEM AT END BENT NO. _

Detailed
Checked

Note: This drawing is not to scale. Follow dimensions.

Sheet No. of

DATE PREPARED	2/11/2026
ROUTE	STATE MO
DISTRICT	SHEET NO. 000
COUNTY	
JOB NO.	
CONTRACT ID.	
PROJECT NO.	
BRIDGE NO.	

DESCRIPTION

DATE

MISSOURI HIGHWAYS AND TRANSPORTATION COMMISSION
105 WEST CAPITOL
JEFFERSON CITY, MO 65102
1-888-ASK-MODOT (1-888-275-6636)

P_COM02_stl_end Guidance & Alternate Details

STANDARD DRAWING GUIDANCE (do not show on plans):

For slab thickness < 8 1/2", check shear connector stud length for clearance to flange or diaphragm and adjust length as necessary. See Structural Project Manager.

Use standard detailing note H5.55 when polymer concrete wearing surface is used with a preformed compression seal.

Remove non-applicable rows in table.

Ⓐ Use squared, left advanced or right advanced Part Plan as needed.

Ⓑ = 3/4" (Min.) @ 60°. Verify only.

Ⓒ = ① @ 60°+ 3/4" (Min.). Verify only.

Delete panels for CIP slab.

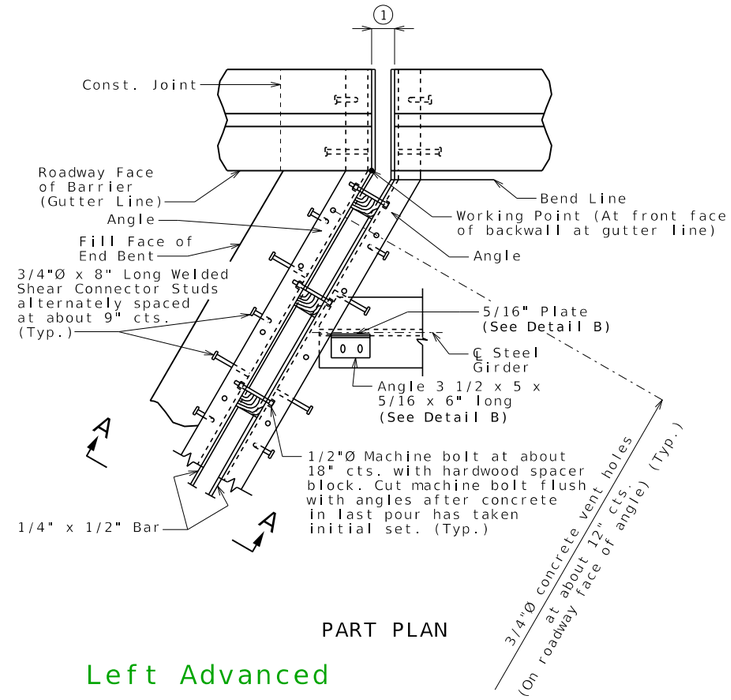

PART PLAN

Left Advanced

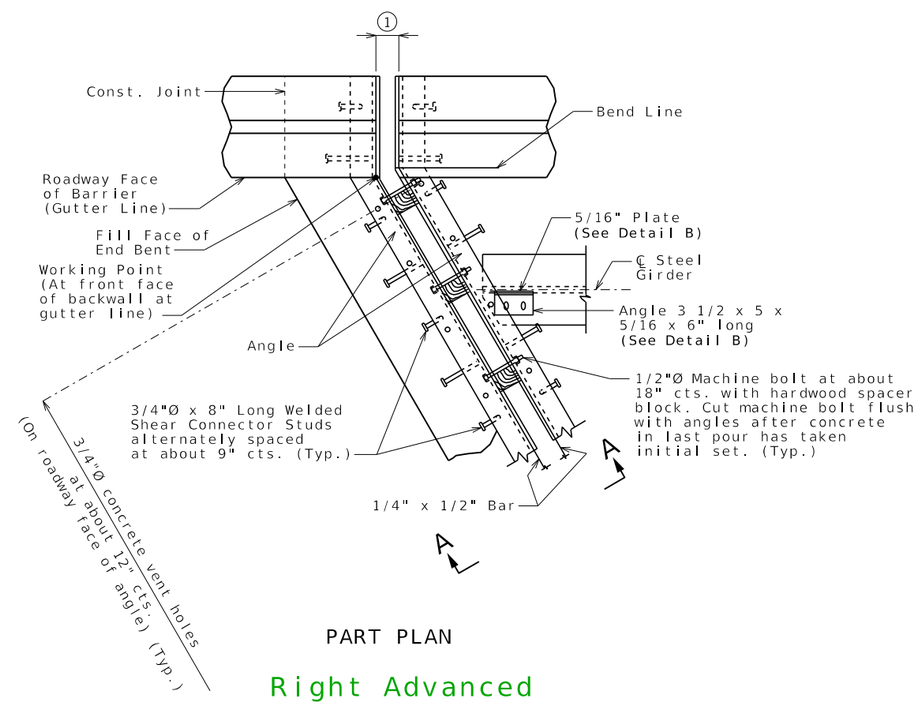

PART PLAN

Right Advanced

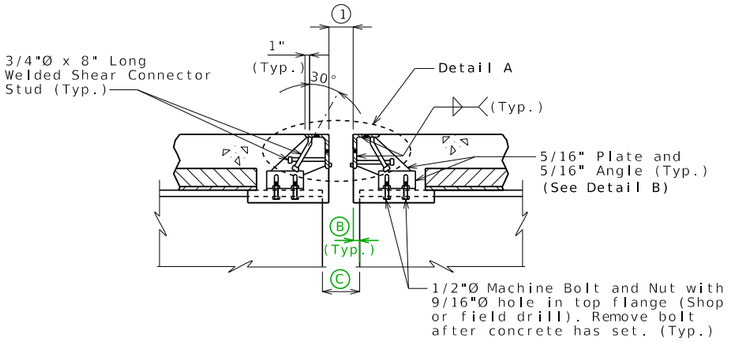

PART SECTION A-A

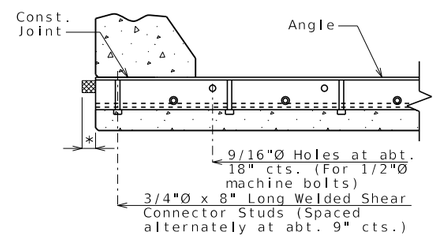

PART SECTION B-B

* Extend preformed compression seal 3" past the edge of slab (Typ.)

GENERAL NOTES:

Expansion joint system shall be fabricated in one section, except for staged construction and when the length is over 50 feet. A complete joint penetration groove welded splice shall be required. Welds shall be ground flush to provide a smooth surface. The expansion joint system shall be fabricated and installed to the crown and grade of the roadway.

Structural steel for the expansion joint system shall be ASTM A709 Grade 36. Anchors for the expansion joint system shall be in accordance with Sec 1037. Preformed compression seal expansion joint system shall be in accordance with Sec 717.

Structural steel for the expansion joint system shall be coated with a minimum of two coats of inorganic zinc primer to provide a total dry film thickness of 4 mils minimum, 6 mils maximum, or galvanized in accordance with ASTM A123. Anchors need not be protected from overspray.

Concrete shall be forced under armor angle and around anchors. Proper consolidation of the concrete shall be achieved by localized internal vibration.

Longitudinal reinforcing steel shall be placed so that ends shall be 1" from the vertical leg of the angle at the expansion joint system.

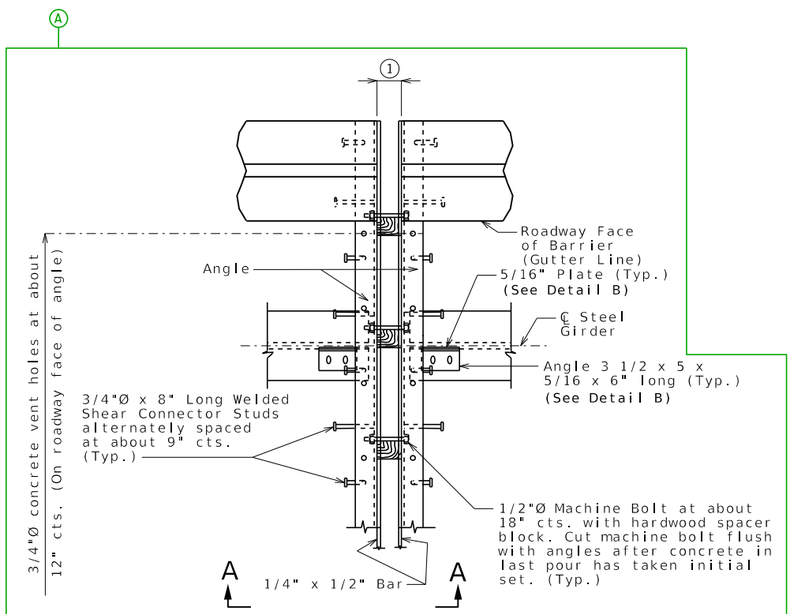

PART PLAN

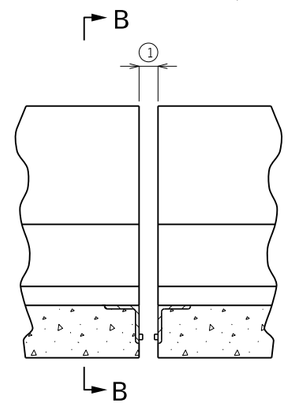

PART ELEVATION OF BARRIER

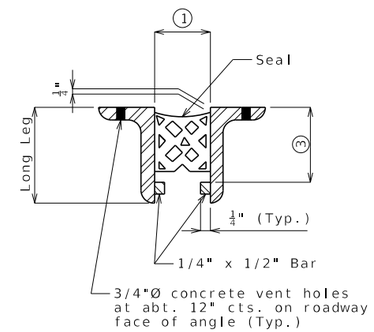

SECTION THRU DEVICE

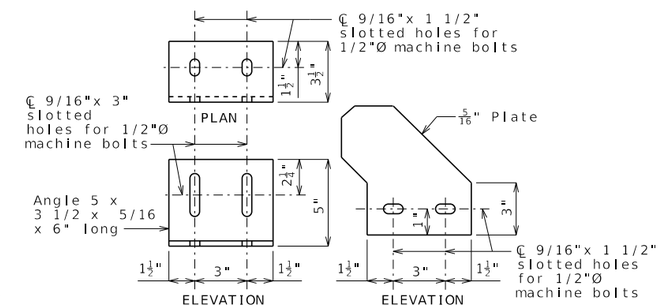

DETAIL B

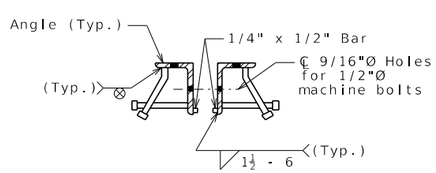

DETAIL A

Table of Transverse Preformed Compression Seal Expansion Joint System Dimensions

Seal Width Perpendicular to Joint	Height ③	Movement Capacity (Normal to Joint)	Min. Joint Width (Normal to Joint)	Max. Joint Width (Normal to Joint)	Allowed Installation Gap Normal to Joint at RDWY Surface @ Air/Surface Temperature ② ①				Manufacturer	Seal Name
					@ 40°F	@ 50°F	@ 60°F	@ 70°F		
2.25"	Manufacturer's Recommended Height	0.85"	1.06"	1.91"	XXX	XXX	XXX	XXX		
2.5"	Manufacturer's Recommended Height	1.00"	1.13"	2.13"	XXX	XXX	XXX	XXX		
3.0"	Manufacturer's Recommended Height	1.30"	1.25"	2.55"	XXX	XXX	XXX	XXX		
3.5"	Manufacturer's Recommended Height	1.60"	1.38"	2.98"	XXX	XXX	XXX	XXX		
4.0"	Manufacturer's Recommended Height	1.83"	1.57"	3.40"	XXX	XXX	XXX	XXX		
4.5"	Manufacturer's Recommended Height	2.27"	1.56"	3.83"	XXX	XXX	XXX	XXX		

Note: Depth of seal shall not be less than width of seal.

Size of armor angle:
Vertical leg of angle shall be a minimum of Manufacturer's Recommended Height ③ + 3/4". Horizontal leg of angle shall be a minimum of 3". Minimum thickness of angle shall be 1/2".

② The installation temperature shall be taken as the actual air temperature averaged over the 24-hour period immediately preceding installation.

MoDOT Construction personnel will record the manufacturer and seal name that was used.

DATE PREPARED	2/11/2026
ROUTE	STATE MO
DISTRICT	SHEET NO. 000
COUNTY	
JOB NO.	
CONTRACT ID.	
PROJECT NO.	
BRIDGE NO.	

DESCRIPTION

DATE

MISSOURI HIGHWAYS AND TRANSPORTATION COMMISSION
105 WEST CAPITOL
JEFFERSON CITY, MO 65102
1-888-ASK-MODOT (1-888-275-6636)

PREFORMED COMPRESSION SEAL EXPANSION JOINT SYSTEM AT INTERMEDIATE BENT NO. _

Note: This drawing is not to scale. Follow dimensions.

Detailed
Checked

P_COM03_stl_int Guidance & Alternate Details

STANDARD DRAWING GUIDANCE (do not show on plans):

For slab thickness < 8 1/2", check shear connector stud length for clearance to flange or diaphragm and adjust length as necessary. See Structural Project Manager.

Use standard detailing note H5.55 when polymer concrete wearing surface is used with a preformed compression seal.

Remove non-applicable rows in table.

Ⓐ Use squared, left advanced or right advanced Part Plan as needed.

Ⓑ = 3/4" (Min.) @ 60° Verify only.

Ⓒ = ① @ 60°+ 3/4" (Min.) Verify only.

Delete panels for CIP slab.

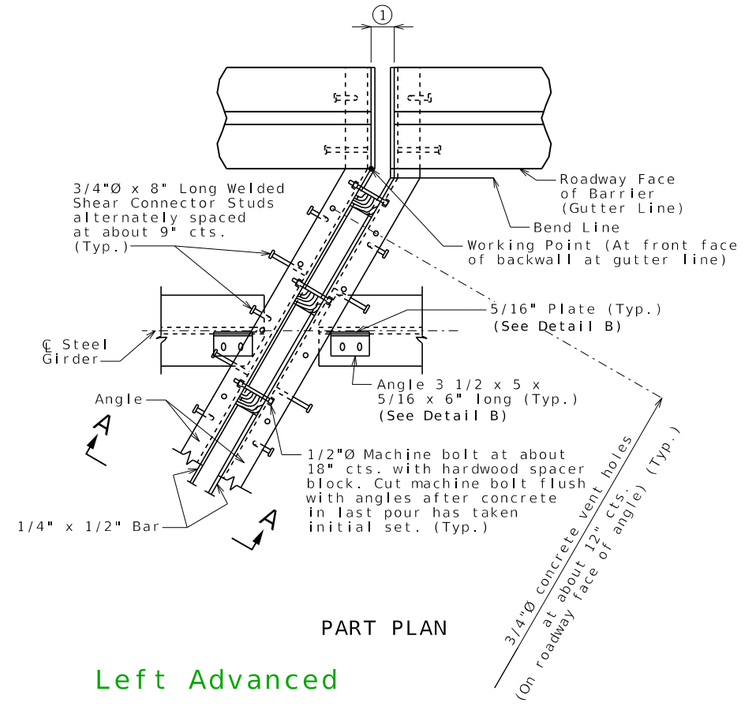

PART PLAN

Left Advanced

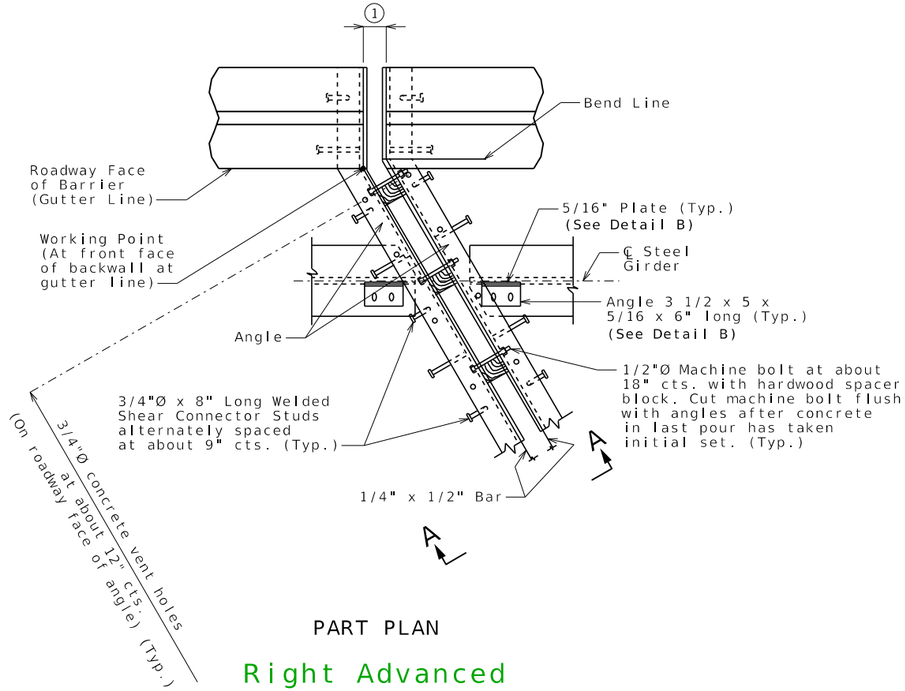

PART PLAN

Right Advanced

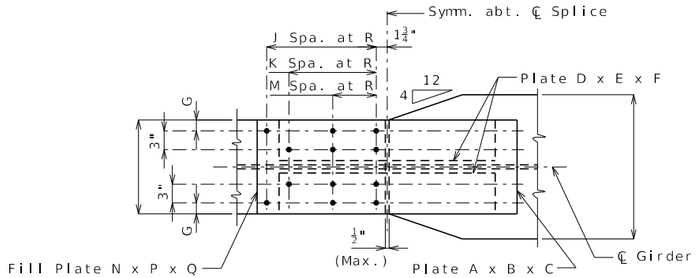

PLAN OF FLANGE
S ( )

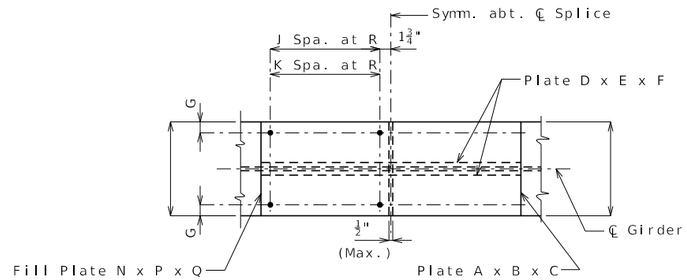

PLAN OF FLANGE
S ( )

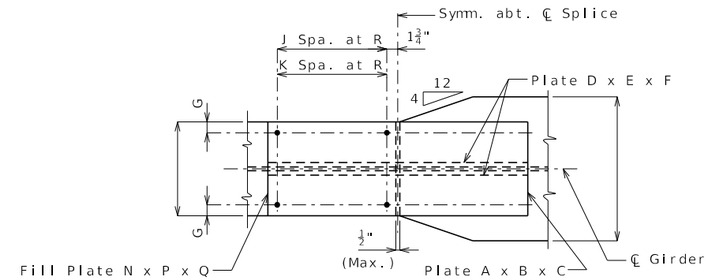

PLAN OF FLANGE
S ( )

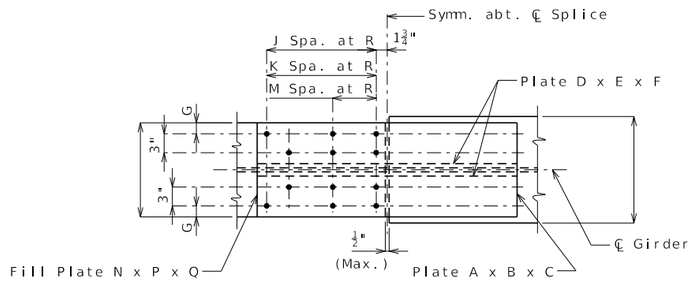

PLAN OF FLANGE
S ( )

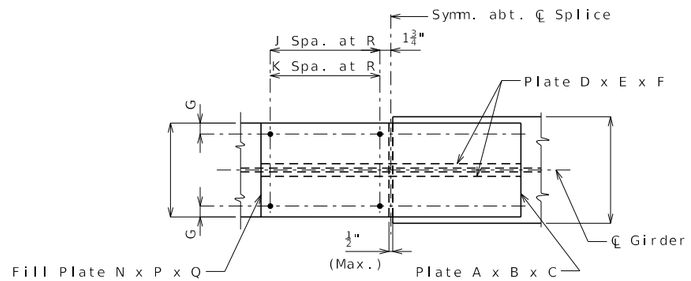

PLAN OF FLANGE
S ( )

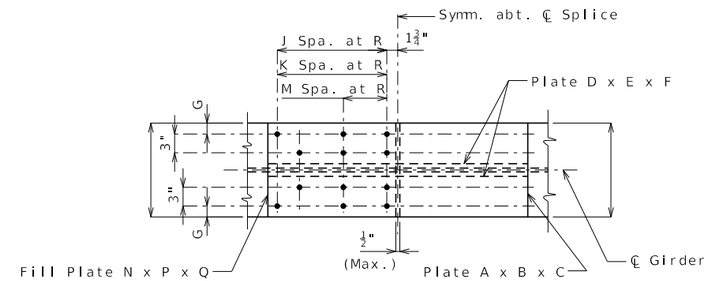

PLAN OF FLANGE
S ( )

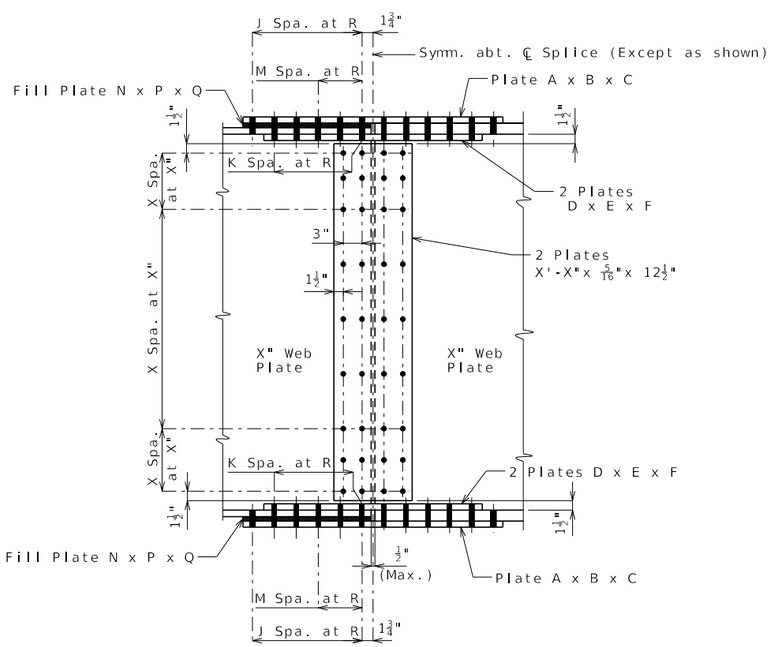

DETAIL OF BOLTED FIELD SPLICE

Bolts shall be 7/8-inch diameter ASTM F3125 Grade A325
① Type 1 Type 3 in 15/16-inch diameter holes.

Contact surfaces shall be in accordance with Sec 1081 for surface preparation.

Standard Drawing Guidance (do not show on plans):

① Use Type 3 for weathering steel bolted connections and Type 1 for painted or galvanized steel bolted connections.

TABLE OF DIMENSIONS - FIELD SPLICE

LOCATION	A	B	C	D	E	F	G	J	K	M	N	P	Q	R
*	*	*	*	*	*	*	*	*	*	*	*	*	*	*

Detailed
Checked

Note: This drawing is not to scale. Follow dimensions.

Sheet No. of

DATE PREPARED
10/16/2023

ROUTE	STATE
	MO
DISTRICT	SHEET NO.
BR	PGS01

COUNTY

JOB NO.

CONTRACT ID.

PROJECT NO.

BRIDGE NO.

DESCRIPTION

DATE

MISSOURI HIGHWAYS AND TRANSPORTATION COMMISSION
105 WEST CAPITOL
JEFFERSON CITY, MO 65102
1-888-ASK-MODOT (1-888-275-6636)

Standard Drawing Guidance (do not show on plans):

Choose the appropriate Plan of Flange.

Detail of Bolted Field Splice shown is for flange splices with a uniform hole pattern only, detail will need to be modified to accommodate flange splices with a staggered hole pattern (14" & 15" flanges).

① Use Type 3 for weathering steel bolted connections and Type 1 for painted or galvanized steel bolted connections.

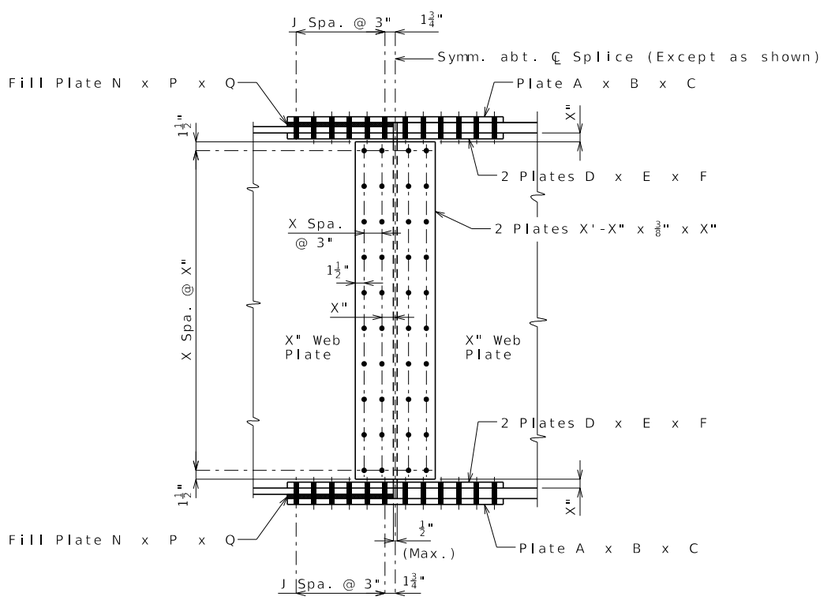

DETAIL OF BOLTED FIELD SPLICE

Bolts shall be 7/8-inch diameter ASTM F3125 Grade A325 ① Type 1 Type 3 in 15/16-inch diameter holes.

Contact surfaces shall be in accordance with Sec 1081 for surface preparation.

TABLE OF DIMENSIONS - FIELD SPLICE													
LOCATION	A	B	C	D	E	F	G	I	J	L	N	P	Q
*	*	*	*	*	*	*	*	*	*	*	*	*	*

DATE PREPARED 10/16/2023

ROUTE	STATE MO
DISTRICT BR	SHEET NO. PGS02

COUNTY

JOB NO.

CONTRACT ID.

PROJECT NO.

BRIDGE NO.

DESCRIPTION	DATE

MISSOURI HIGHWAYS AND TRANSPORTATION COMMISSION
105 WEST CAPITOL
JEFFERSON CITY, MO 65102
1-888-ASK-MODOT (1-888-275-6636)

Detailed
Checked

Note: This drawing is not to scale. Follow dimensions.

Sheet No. of

PGS02 Alternate Details

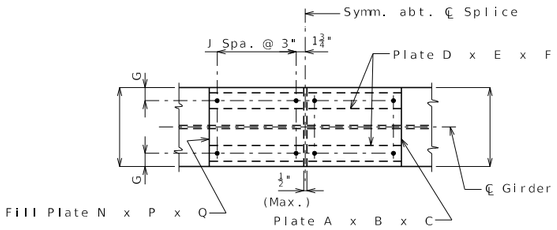

PLAN OF FLANGE
S ( )

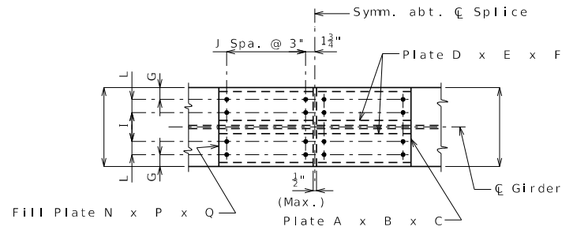

PLAN OF FLANGE
S ( )

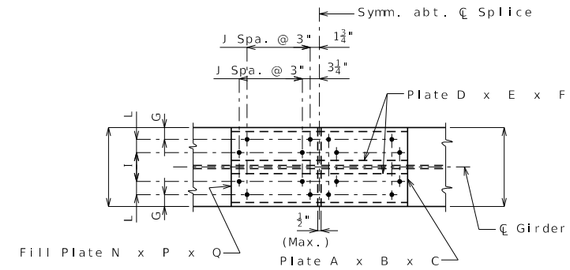

PLAN OF FLANGE
S ( )

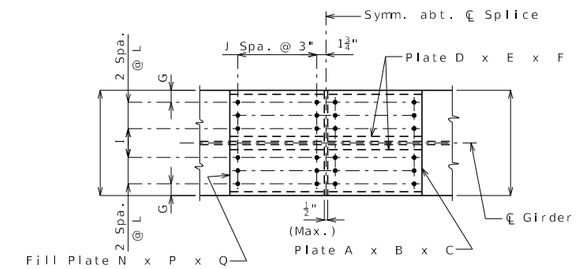

PLAN OF FLANGE
S ( )

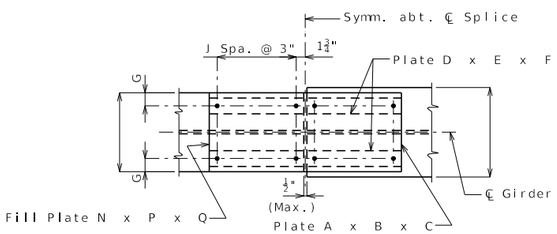

PLAN OF FLANGE
S ( )

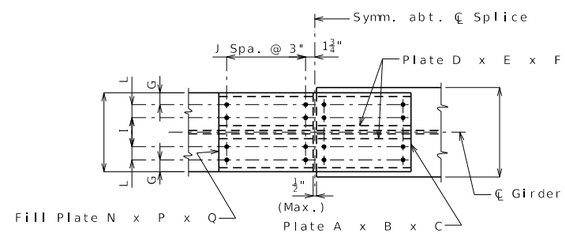

PLAN OF FLANGE
S ( )

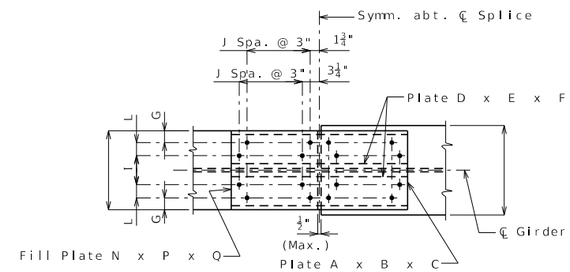

PLAN OF FLANGE
S ( )

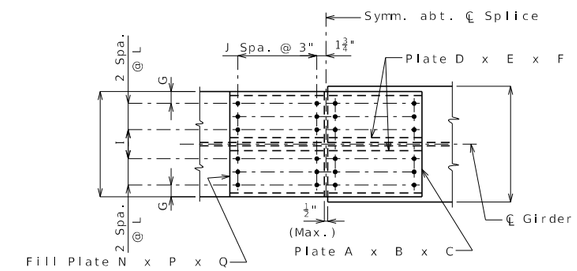

PLAN OF FLANGE
S ( )

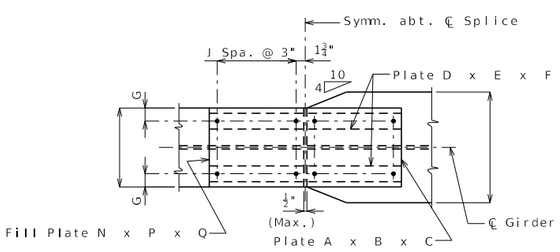

PLAN OF FLANGE
S ( )

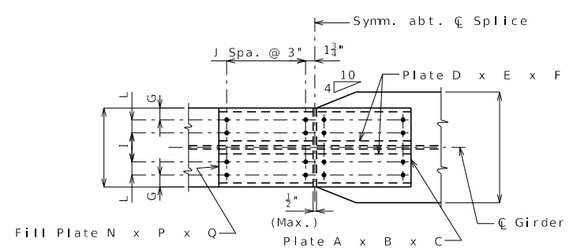

PLAN OF FLANGE
S ( )

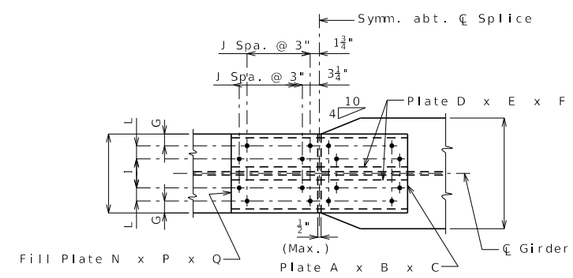

PLAN OF FLANGE
S ( )

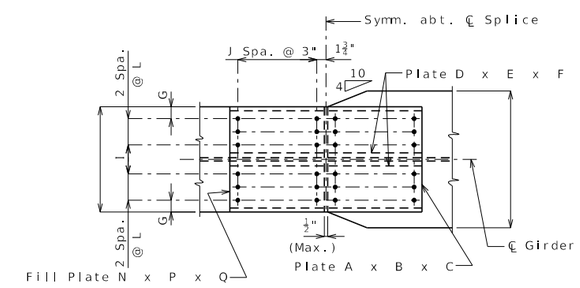

PLAN OF FLANGE
S ( )

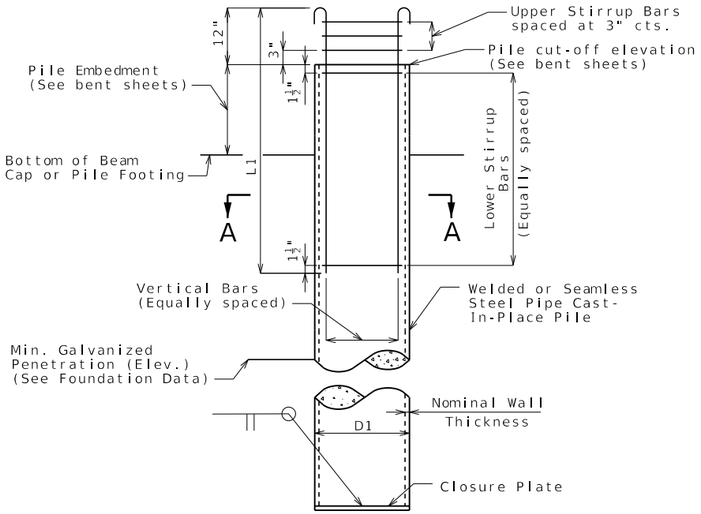

GALVANIZED CLOSED ENDED CAST-IN-PLACE (CECIP) CONCRETE PILE WITHOUT PILE POINT REINFORCEMENT

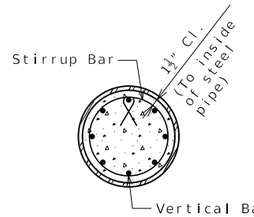

SECTION A-A 6

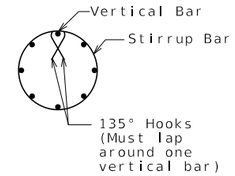

DETAIL OF SEISMIC STIRRUP BAR 6

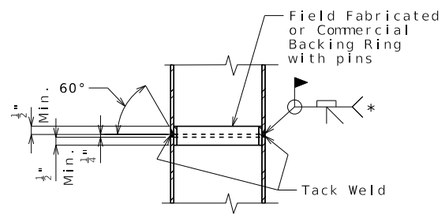

STEEL PIPE PILE SPLICE

* Galvanizing material shall be omitted or removed one inch clear of weld locations in accordance with Sec 702.

1 Cruciform Pile Point Reinforcement Data				
D1, CECIP Pile (O.D.)	14"	16"	20"	24"
B1	14"	16"	20"	24"
B2	6"	7"	8 7/8"	10 5/8"
B3	5 7/8"	6 7/8"	8 3/4"	10 1/2"
B4	6 5/8"	7 5/8"	9 1/2"	11 1/4"
B5	2"	2"	2 1/4"	2 3/4"
B6	3/4"	3/4"	1"	1 1/2"
H1	9 1/8"	10 1/2"	13"	15 3/8"
H2	8 1/8"	9 1/2"	12"	14 3/8"
H3	8 3/8"	9 3/4"	12 1/4"	14 5/8"
T1 and T2 Plate Thickness	3/4"	3/4"	1"	1 1/2"

1 Galvanized Closed Ended Cast-In-Place (CECIP) Concrete Pile Data				
Bent Number	1	2	3	4
D1, CECIP Pile (O.D.)	x			
Min. Nominal Wall Thickness	x			
Closure Plate Thickness	x			
Pile Point Reinforcement	x			
Vertical Bars	x			
L1, Length of Vertical Bars	x			
Upper Stirrup Bars	x			
Lower Stirrup Bars	x			

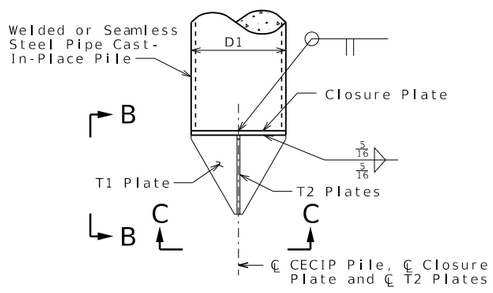

CRUCIFORM PILE POINT

Note: Cost of closure plate is included with cast-in-place concrete pile.

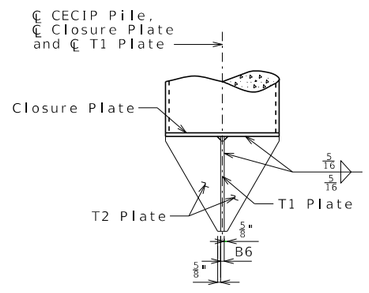

ELEVATION B-B

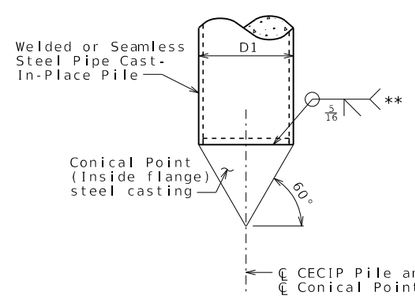

MANUFACTURED CONICAL PILE POINT

(Omit closure plate)

** If the conical pile point is not pre-beveled, place a 3/8" bevel at 40 degrees on the pipe.

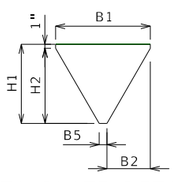

T1 PLATE DETAILS

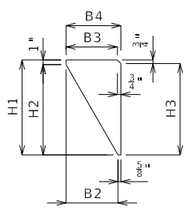

T2 PLATE DETAILS (2 REQUIRED)

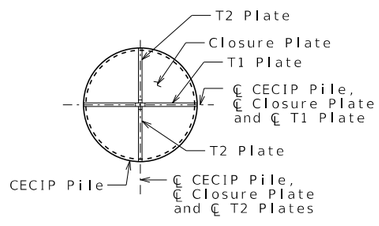

SECTION C-C

CRUCIFORM PILE POINT REINFORCEMENT

Notes:

Welded or seamless steel shell (pipe) shall be ASTM A252 Modified Grade 3 (fy = 50,000 psi) with physical and chemical requirements that meet ASTM A572 Grade 50. Pipe certification and source material certification shall be required.

Concrete for cast-in-place pile shall be Class B-1.

Steel for closure plate shall be ASTM A709 Grade 50.

Steel for cruciform pile point reinforcement shall be ASTM A709 Grade 50.

Steel casting for conical pile point reinforcement shall be ASTM A148 Grade 90-60.

The minimum wall thickness of any spot or local area of any type shall not be more than 12.5% under the specified nominal wall thickness.

The contractor shall determine the pile wall thickness required to avoid damage from all driving activities, but wall thickness shall not be less than the minimum specified. No additional payment will be made for furnishing a thicker pile wall than specified on the plans.

Closure plate shall not project beyond the outside diameter of the pipe pile. Satisfactory weldments may be made by beveling tip end of pipe or by use of inside backing rings. In either case, proper gaps shall be used to obtain weld penetration full thickness of pipe. Payment for furnishing and installing closure plate will be considered completely covered by the contract unit price for Galvanized Cast-In-Place Concrete Piles.

Splices of pipe for cast-in-place concrete pile shall be made watertight and to the full strength of the pipe above and below the splice to permit hard driving without damage. Pipe damaged during driving shall be replaced without cost to the state. Pipe sections used for splicing shall be at least 5 feet in length.

5 At the contractor's option, the hooks of vertical bars embedded in the beam cap may be oriented inward or outward.

The hooks of vertical bars embedded in the beam cap should not be turned outward, away from the pile core.

The hook of vertical bars embedded in the pile footing should be oriented outward for all seismic categories.

Closure plate need not be galvanized.

Reinforcing steel for cast-in-place piles is included in the Bill of Reinforcing Steel.

3 All reinforcement for cast-in-place pile at end bents is included in the Estimated Quantities for Slab on _____. Reinforcement for cast-in-place pile at intermediate bents is included in the substructure quantity tables.

For Foundation Data table, see Sheet No. .

GALVANIZED CLOSED ENDED CAST-IN-PLACE (CECIP) CONCRETE PILE

Detailed
Checked

Note: This drawing is not to scale. Follow dimensions. Sheet No. of

DATE PREPARED	
12/22/2025	
ROUTE	STATE MO
DISTRICT	SHEET NO. 000
COUNTY	
JOB NO.	
CONTRACT ID.	
PROJECT NO.	
BRIDGE NO.	

DESCRIPTION

DATE

MISSOURI HIGHWAYS AND TRANSPORTATION COMMISSION
105 WEST CAPITOL
JEFFERSON CITY, MO 65102
1-888-ASK-MODOT (1-888-275-6636)

PILE01_CECIP Guidance

Standard Drawing Guidance (do not show on plans):

Do not use 20" and 24" diameter closed ended cast-in-place (CECIP) concrete pile without approval of Structural Project Manager or Liaison.

1

Typical Data for CECIP Piles				
D1, CECIP Pile (O.D.) (by design)	14"	16"	20"	24"
Min. Nominal Wall Thickness (by design)	1/2" (See EPG 751.36.2.2.2 for commonly available nominal wall thicknesses.)			
Closure Plate Thickness 4	3/4"		1"	1 1/2"
Pile Point Reinforcement	"Cruciform", "Conical" or "None"			
Vertical Bars	6-#5-Vxxx	6-#6-Vxxx	8-#6-Vxxx	12-#6-Vxxx
L1, Length of Vertical Bars	5'-3"		7'-3"	
Upper Stirrup Bars 2	3-#4-Pxxx			
Lower Stirrup Bars	5-#4-Pxxx		7-#4-Pxxx	

2 For LFD seismic performance category (SPC) A and LRFD seismic design category (SDC) A, minimum number of vertical bars, size and length and seismic stirrup bar information is provided in Galvanized Closed Ended Cast-In-Place (CECIP) Concrete Pile Data. Modify reinforcement size, length of vertical bars (L1), number of vertical bars, number of stirrup bars, and bar mark information as needed for specific project.

Min. L1 = 5'-3" for 14"Ø and 16"Ø CECIP &

7'-3" for 20"Ø and 24"Ø CECIP

Min. Lower Stirrup Bars = 5-#4 for 14"Ø and 16"Ø CECIP &

7-#4 for 20"Ø and 24"Ø CECIP

Min. Vertical Bars = 6-#5 for 14"Ø CECIP,

6-#6 for 16"Ø CECIP,

8-#6 for 20"Ø CECIP &

12-#6 for 24"Ø CECIP

For SPC B, C and D, modify reinforcement as needed to meet AASHTO 17th edition (LFD) and for SDC B, C and D, modify reinforcement as needed to meet AASHTO Guide Specification for LRFD Seismic Bridge Design (SGS).

3 For non-integral end bents, revise wording as shown in EPG 751.50 (Note G5a13). For continuous concrete slab bridges, replace this note with standard note G5a14.

4

Minimum Closure Plate Thickness		
CECIP Pile (O.D.), D1	No pile point reinforcement required	Cruciform pile point reinforcement required
14"	3/4"	3/4"
16"	3/4"	3/4"
20"	3/4"	1"
24"	3/4"	1 1/2"

5 Use appropriate note based on seismic category (See EPG 751.50, Notes G5a9a & G5a9b)

6 These details of bar array 6, 8 and 12 count, can be used as needed in sheet details "Section A-A" & "DETAIL OF SEISMIC STIRRUP BAR" by using centroid as the handle.

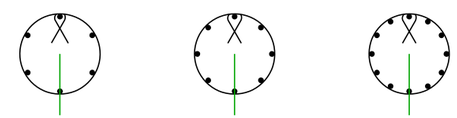

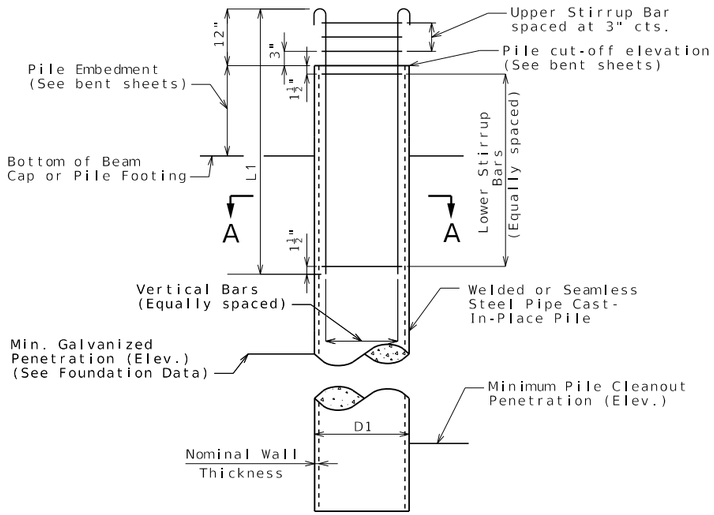

GALVANIZED OPEN ENDED CAST-IN-PLACE (OECIP) CONCRETE PILE WITHOUT PILE POINT REINFORCEMENT

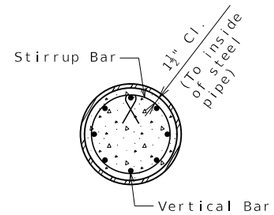

SECTION A-A 5

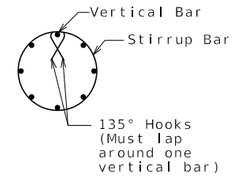

DETAIL OF SEISMIC STIRRUP BAR 5

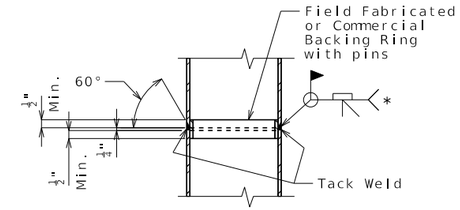

STEEL PIPE PILE SPLICE

* Galvanizing material shall be omitted or removed one inch clear of weld locations in accordance with Sec 702.

1 GALVANIZED OPEN ENDED CAST-IN-PLACE (OECIP) CONCRETE PILE DATA				
Bent Number	1	2	3	4
D1, OECIP Pile (O.D.)	x			
Min. Nominal Wall Thickness	x			
Pile Point Reinforcement	x			
Min. Pile Cleanout Penetration (Elev.)	x			
Vertical Bars	x			
L1, Length of Vertical Bars	x			
Upper Stirrup Bars	x			
Lower Stirrup Bars	x			

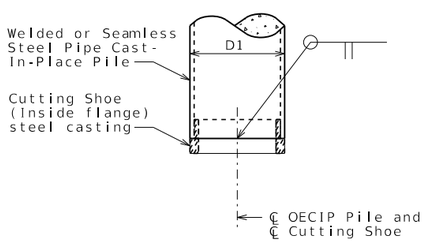

MANUFACTURED OPEN ENDED CUTTING SHOE (INSIDE FLANGE)

Notes:

Welded or seamless steel shell (pipe) shall be ASTM A252 Modified Grade 3 (fy = 50,000 psi) with physical and chemical requirements that meet ASTM A572 Grade 50. Pipe certification and source material certification shall be required.

Open ended pile shall be augered out to the minimum pile cleanout penetration elevation and filled with Class B-1 concrete.

Concrete for cast-in-place pile shall be Class B-1.

Steel casting for open ended cutting shoe pile point reinforcement shall be ASTM A148 Grade 90-60.

The minimum wall thickness of any spot or local area of any type shall not be more than 12.5% under the specified nominal wall thickness.

The contractor shall determine the pile wall thickness required to avoid damage from all driving activities, but wall thickness shall not be less than the minimum specified. No additional payment will be made for furnishing a thicker pile wall then specified on the plans.

Splices of pipe for cast-in-place pipe pile shall be made watertight and to the full strength of the pipe above and below the splice to permit hard driving without damage. Pipe damaged during driving shall be replaced without cost to the state. Pipe sections used for splicing shall be at least 5 feet in length.

4 At the contractor's option, the hooks of vertical bars embedded in the beam cap may be oriented inward or outward.

The hooks of vertical bars embedded in the beam cap should not be turned outward, away from the pile core.

The hooks of vertical bars embedded in the pile footing should be oriented outward for all seismic categories.

Reinforcing steel for cast-in-place pile is included in the Bill of Reinforcing Steel.

3 All reinforcement for cast-in-place pile at end bents is included in the Estimated Quantities for Slab on _____. Reinforcement for cast-in-place pile at intermediate bents is included in the substructure quantity tables.

For Foundation Data table, see Sheet No. .

GALVANIZED OPEN ENDED CAST-IN-PLACE (OECIP) CONCRETE PILE

Detailed
Checked

Note: This drawing is not to scale. Follow dimensions. Sheet No. of

DATE PREPARED	
12/22/2025	
ROUTE	STATE MO
DISTRICT	SHEET NO. 000
COUNTY	
JOB NO.	
CONTRACT ID.	
PROJECT NO.	
BRIDGE NO.	

DESCRIPTION | DATE

MISSOURI HIGHWAYS AND TRANSPORTATION COMMISSION
105 WEST CAPITOL
JEFFERSON CITY, MO 65102
1-888-ASK-MODOT (1-888-275-6636)

PILE02_OECIP Guidance

Standard Drawing Guidance (do not show on plans):

Do not use 20" and 24" diameter open ended cast-in-place (OECIP) concrete pile without approval of Structural Project Manager or Liaison.

1

Typical Data for OECIP Piles				
D1, OECIP Pile (O.D.) (by design)	14"	16"	20"	24"
Min. Nominal Wall Thickness (by design)	1/2" (See EPG 751.36.2.2.2 for commonly available nominal wall thicknesses.)			
Pile Point Reinforcement	"**" (add note below) or "None"			
Min. Pile Cleanout Penetration (Elev.)	300	302	282	295
Vertical Bars	6-#5-Vxxx	6-#6-Vxxx	8-#6-Vxxx	12-#6-Vxxx
L1, Length of Vertical Bars	5'-3"		7'-3"	
Upper Stirrup Bars (2)	3-#4-Pxxx			
Lower Stirrup Bars	5-#4-Pxxx		7-#4-Pxxx	

** Open ended cutting shoe

2 For LFD seismic performance category (SPC) A and LRFD seismic design category (SDC) A, minimum number of vertical bars, size and length and seismic stirrup bar information is provided in Galvanized Open Ended Cast-In-Place (OECIP) Concrete Pile Data. Modify reinforcement size, length of vertical bars (L1), number of vertical bars, number of stirrup bars, and bar mark information as needed for specific project.

Min. L1 = 5'-3" for 14"Ø and 16"Ø OECIP &

7'-3" for 20"Ø and 24"Ø OECIP

Min. Lower Stirrup Bars = 5-#4 for 14"Ø and 16"Ø OECIP &

7-#4 for 20"Ø and 24"Ø OECIP

Min. Vertical Bars = 6-#5 for 14"Ø OECIP,

6-#6 for 16"Ø OECIP,

8-#6 for 20"Ø OECIP &

12-#6 for 24"Ø OECIP

For SPC B, C and D, modify reinforcement as needed to meet AASHTO 17th edition (LFD) and for SDC B, C and D, modify reinforcement as needed to meet AASHTO Guide Specification for LRFD Seismic Bridge Design (SGS).

3 For non-integral end bents, revise wording as shown in EPG 751.50 (Note G5b10). For continuous concrete slab bridges, replace this note with standard note G5b11.

4 Use appropriate note based on seismic category (See EPG 751.50, Notes G5b7a & G5b7b)

5 These details of bar array 6, 8 and 12 count, can be used as needed in sheet details "Section A-A" & "DETAIL OF SEISMIC STIRRUP BAR" by using centroid as the handle.

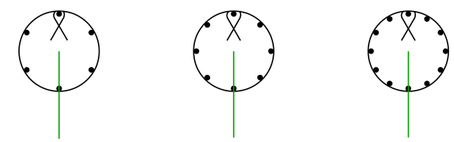

Standard Drawing Guidance (Do not show on plans):

Sheet for piles WITHOUT dynamic pile testing.

Draw layout with bents labeled and provide numbering of piles. List in the tables the piles grouped by bents with the name of the bent included in the remarks column as a header for the piles located at that bent. Provide two blank rows after the last pile of each bent grouping to allow for additions in the field.

Combine with As-Built Drilled Shaft Data if both piles and drilled shafts are shown on same sheet.

PART PLAN SHOWING PILE NUMBERING FOR RECORDING AS-BUILT PILE DATA

As-Built Pile Data

Pile No.	Length in Place (ft)	Computed Nominal Axial Compressive Resistance (kips)	Remarks

As-Built Pile Data

Pile No.	Length in Place (ft)	Computed Nominal Axial Compressive Resistance (kips)	Remarks

As-Built Pile Data

Pile No.	Length in Place (ft)	Computed Nominal Axial Compressive Resistance (kips)	Remarks

Note:
Indicate in remarks column:
A. Pile type and grade
B. Batter
C. Driven to practical refusal

This sheet to be completed by MoDOT construction personnel.

Detailed
Checked

Note: This drawing is not to scale. Follow dimensions. Sheet No. of

DATE PREPARED 10/16/2023
ROUTE | STATE MO
DISTRICT BR | SHEET NO. 3
COUNTY
JOB NO.
CONTRACT ID.
PROJECT NO.
BRIDGE NO.

DESCRIPTION	DATE

MISSOURI HIGHWAYS AND TRANSPORTATION COMMISSION
105 WEST CAPITOL
JEFFERSON CITY, MO 65102
1-888-ASK-MODOT (1-888-275-6636)

Standard Drawing Guidance (Do not show on plans):

Sheet for piles WITH dynamic pile testing.

Draw layout with bents labeled and provide numbering of piles. List in the tables the piles grouped by bents with the name of the bent included in the remarks column as a header for the piles located at that bent. Provide two blank rows after the last pile of each bent grouping to allow for additions in the field.

Combine with As-Built Drilled Shaft Data if both piles and drilled shafts are shown on same sheet.

PART PLAN SHOWING PILE NUMBERING FOR RECORDING AS-BUILT PILE DATA

As-Built Pile Data

Pile No.	Length in Place (ft)	PDA Nom. Axial Compressive Resistance (kips)	PDA End of Drive Blow Count (blows/in.)	Actual End of Drive Blow Count (blows/in.)	Remarks

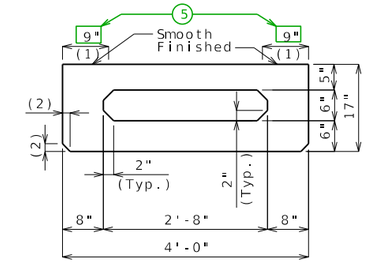

DIMENSIONS

(1) Fabricator shall apply a bond breaker to this region excluding where joint filler will be applied.

(2) $1\frac{1}{2}$" (Typ.) ($\frac{3}{4}$" Optional)

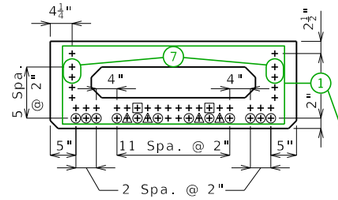

STRAND ARRANGEMENT

All strands are fully bonded unless otherwise noted.

+ Indicates prestressing strand.

○ Indicates cut and shop bend with 2'-0" projection.

□ Indicates debonded for X'-X" from end of beam.

△ Indicates debonded for X'-X" from end of beam.

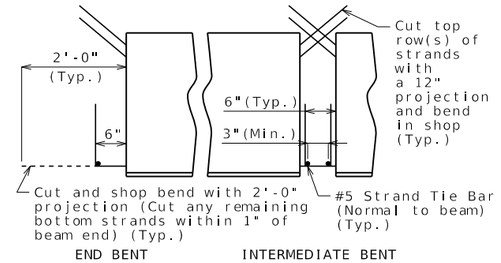

STRANDS AT BEAM ENDS

BILL OF REINFORCING STEEL - EACH BEAM				
NO.	SIZE & MARK	ACTUAL LENGTH	SHAPE	BENDING DIAGRAM
10	5 A1	X'-X"	20	
8	4 A2	X'-X"	20	
X	4 C1	3'-7"	20	
X	4 S1	6'-4"	10S	
X	4 S2	6'-2"	51S	
X	4 S3	4'-6"	50S	
18	5 S4	6'-7"	10S	
18	5 S5	5'-8"	10S	
12	6 U1	4'-3"	10S	
4	4 U2	7'-4"	10S	

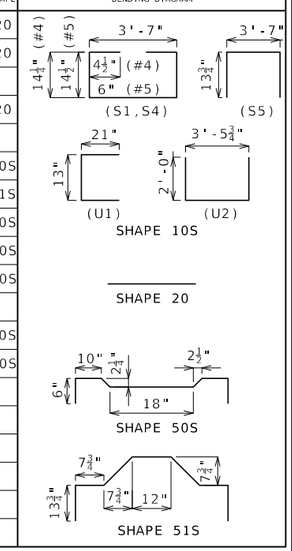

All dimensions are out to out. Use symmetry for dimensions not shown.

Hooks and bends shall be in accordance with the CRSI Manual of Standard Practice for Detailing Reinforced Concrete Structures, Stirrup and Tie Dimensions.

Actual bar lengths are measured along centerline of bar to the nearest inch.

Minimum clearance to reinforcing shall be one inch, unless otherwise shown.

All reinforcement shall be ASTM A615 or A706 Grade 60.

All S2 bars shall be epoxy coated.

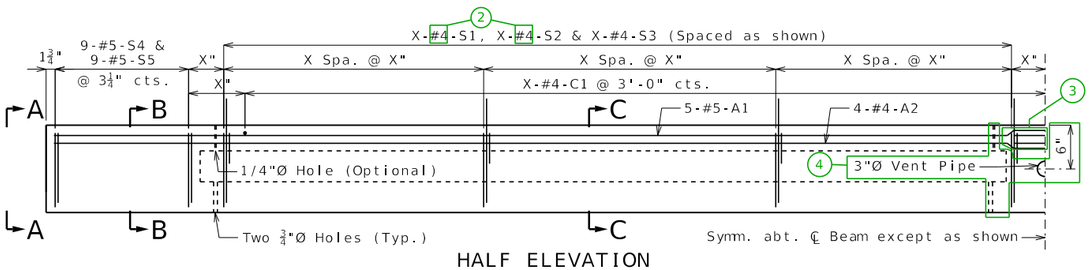

HALF ELEVATION

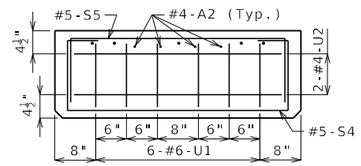

ELEVATION A-A

Strands not shown for clarity.

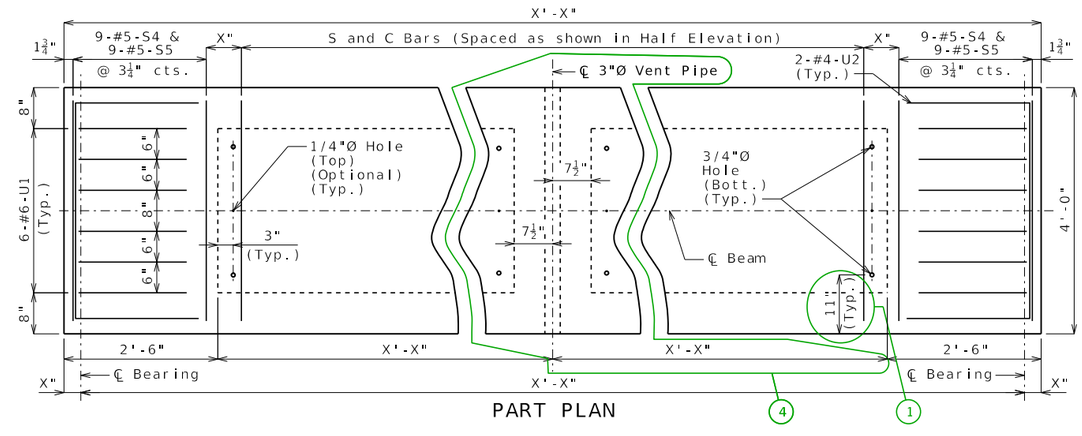

PART PLAN

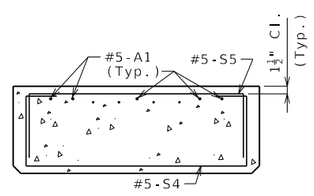

SECTION B-B

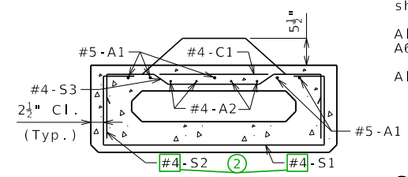

SECTION C-C

(4) ℄ 3/4"Ø (Min.) Coil Tie Rods 2'-6" long (X'-X" at exterior face of exterior beams at end bents)

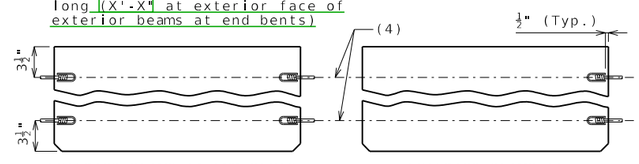

EXTERIOR BEAMS AT END BENTS
INTERIOR BEAMS AT ALL BENTS

EXTERIOR BEAMS AT INTERMEDIATE BENTS

COIL TIES

General Notes:

Concrete for prestressed beams shall be Class A-1 with f'c = psi and f'ci = psi.

Use strands, "Ø Grade 270, with an initial prestress force of kips.

Pretensioned members shall be in accordance with Sec 1029.

Fabricator shall be responsible for location and design of lifting devices.

Exterior and interior beams are the same except: coil ties, application of bond breaker, coil inserts for slab drains.

For Beam Camber Diagram, see Sheet No. __.

For location of coil inserts at slab drains, see Sheet No. __.

For location of coil ties at concrete bent diaphragms, see Sheets No. __ and __.

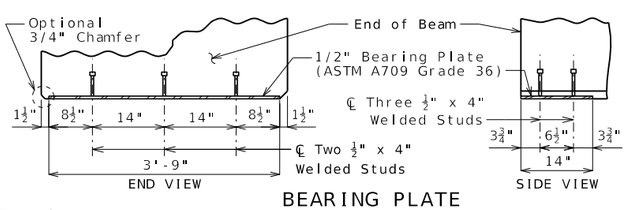

BEARING PLATE

SPREAD BOX BEAMS - SPANS (X-X) AND (X-X)

Detailed
Checked

Note: This drawing is not to scale. Follow dimensions.

Sheet No. of

DATE PREPARED	12/2/2025
ROUTE	STATE MO
DISTRICT	SHEET NO. 000
COUNTY	
JOB NO.	
CONTRACT ID.	
PROJECT NO.	
BRIDGE NO.	

DESCRIPTION

DATE

MISSOURI HIGHWAYS AND TRANSPORTATION COMMISSION
105 WEST CAPITOL
JEFFERSON CITY, MO 65102
1-888-ASK-MODOT (1-888-275-6636)

PSBXB01_17_sq-end Guidance

STANDARD DRAWING GUIDANCE (do not show on plans):
(Turn off level Bridge-Guidance to hide guidance)

① Actual strand arrangement, bent up strands, and debonding (if any) is by design (top two strands are required). Add or remove symbols and instructions as required. Strands may be placed continuously across beam (eliminating 4" space), but dimension to drain hole in Part Plan shall be revised to 10".

② Revise if #5 is required. Use 6'-7" for #5-S1 actual length and 6'-1" for #5-S2 actual length.

③ Splices shown only when necessary (girder length > 60'-2"). Use 19" lap for #4 & 2'-0" lap for #5.

When lap is unnecessary:
- Delete grouped elements.
- Extend A bars to ℄ Beam.
- Revise 10 to 5 A1 bars & 8 to 4 A2 bars.

④ Interior diaphragm, void holes & vent pipe shall be shown only when necessary (when structure may be submerged).

When not necessary:
- Delete the two grouped elements.
- In Half Elev. extend hidden lines to ℄ Beam.
- In Part Plan revise remaining dimension to full length of void.

⑤ Revise minimum dimension if required by design.

⑥ By design. Typically 30.98 kips per 0.5" strand & 43.94 kips per 0.6" strand, rounded to nearest whole kip.

⑦ Strand location not available when vent pipe is required.

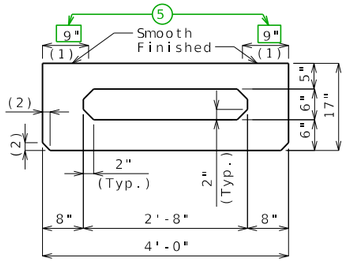

DIMENSIONS

(1) Fabricator shall apply a bond breaker to this region excluding where joint filler will be applied.

(2) $1\frac{1}{2}$" (Typ.) ($\frac{3}{4}$" Optional)

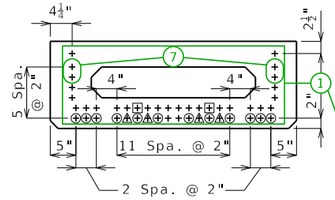

All strands are fully bonded unless otherwise noted.

+ Indicates prestressing strand.

○ Indicates cut and shop bend with 2'-0" projection.

□ Indicates debonded for X'-X" from end of beam.

△ Indicates debonded for X'-X" from end of beam.

STRAND ARRANGEMENT

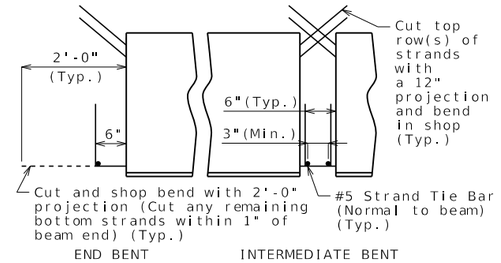

STRANDS AT BEAM ENDS

BILL OF REINFORCING STEEL - EACH BEAM				
NO.	SIZE & MARK	ACTUAL LENGTH	SHAPE	BENDING DIAGRAM
10	5 A1	X'-X"	20	
8	4 A2	X'-X"	20	
X	4 C1	3'-7"	20	
X	4 S1	6'-4"	10S	
X	4 S2	6'-2"	51S	
X	4 S3	4'-6"	50S	
18	5 S4	6'-8"	10S	
18	5 S5	5'-10"	10S	
2	5 S6	5'-8"	10S	
2	5 S7	4'-10"	10S	
12	6 U1	4'-3"	10S	
4	4 U2	8'-4"	21S	

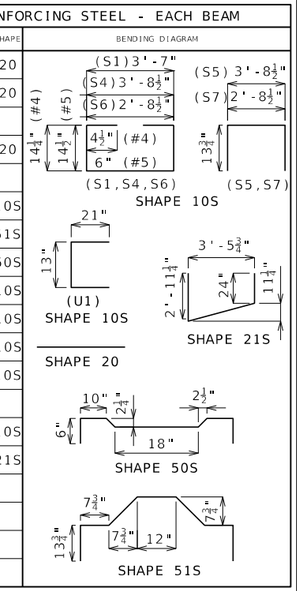

All dimensions are out to out. Use symmetry for dimensions not shown.

Hooks and bends shall be in accordance with the CRSI Manual of Standard Practice for Detailing Reinforced Concrete Structures, Stirrup and Tie Dimensions.

Actual bar lengths are measured along centerline of bar to the nearest inch.

Minimum clearance to reinforcing shall be one inch, unless otherwise shown.

All reinforcement shall be ASTM A615 or A706 Grade 60.

All S2 bars shall be epoxy coated.

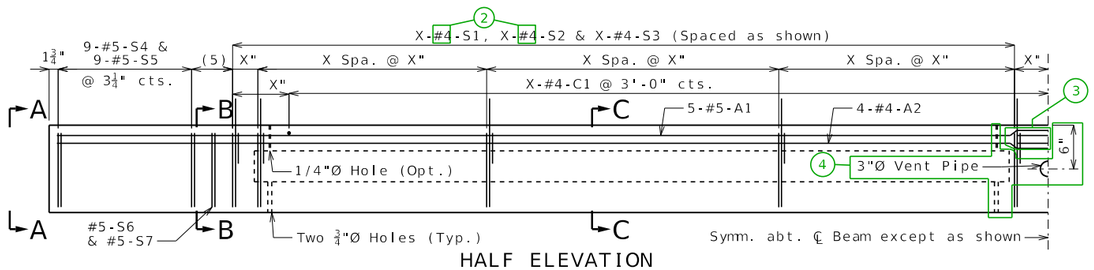

HALF ELEVATION

Dimensions taken along ℄ Beam.

(5) 2 Spa. @ 4"

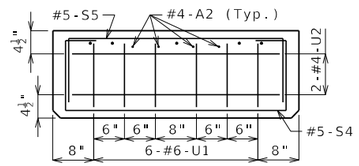

ELEVATION A-A

Strands not shown for clarity.

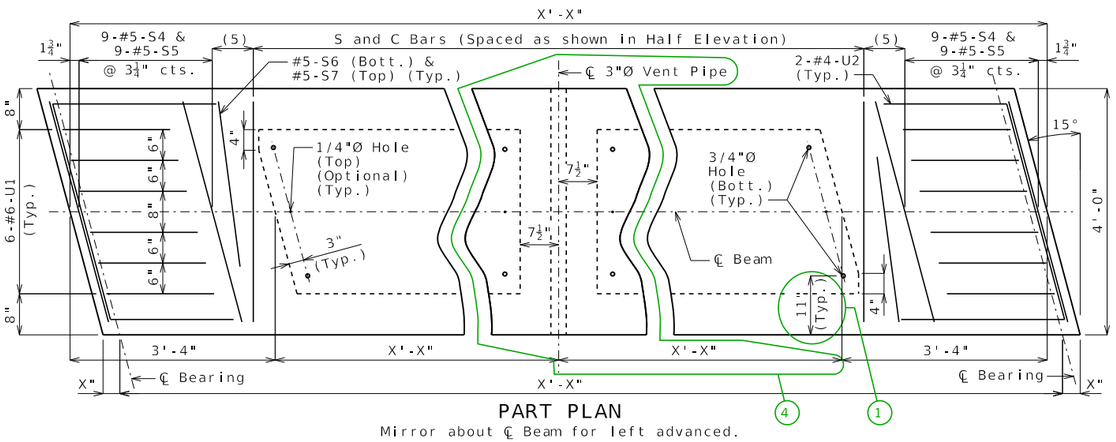

PART PLAN

Mirror about ℄ Beam for left advanced.

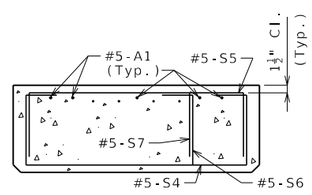

SECTION B-B

Mirror for left advanced.

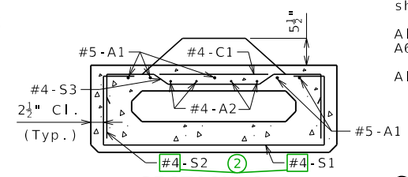

SECTION C-C

(4) ℄ 3/4"Ø (Min.) Coil Tie Rods 2'-6" long (X'-X" at exterior face of exterior beams at end bents)

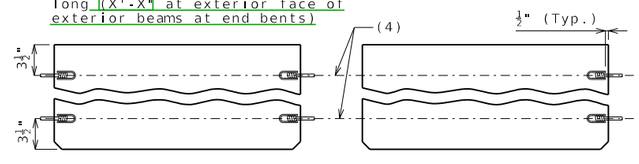

EXTERIOR BEAMS AT END BENTS
INTERIOR BEAMS AT ALL BENTS

EXTERIOR BEAMS AT INTERMEDIATE BENTS

COIL TIES

General Notes:

Concrete for prestressed beams shall be Class A-1 with f'c = psi and f'ci = psi.

Use strands, "Ø Grade 270, with an initial prestress force of kips.

Pretensioned members shall be in accordance with Sec 1029.

Fabricator shall be responsible for location and design of lifting devices.

Exterior and interior beams are the same except: coil ties, application of bond breaker, coil inserts for slab drains.

For Beam Camber Diagram, see Sheet No. __.

For location of coil inserts at slab drains, see Sheet No. __.

For location of coil ties at concrete bent diaphragms, see Sheet No. __ and __.

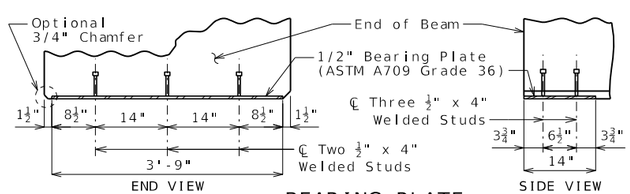

BEARING PLATE

SPREAD BOX BEAMS - SPANS (X-X) AND (X-X)

Detailed
Checked

Note: This drawing is not to scale. Follow dimensions.

Sheet No. of

DATE PREPARED	
12/2/2025	
ROUTE	STATE
	MO
DISTRICT	SHEET NO.
	2
COUNTY	
JOB NO.	
CONTRACT ID.	
PROJECT NO.	
BRIDGE NO.	

DESCRIPTION

DATE

MISSOURI HIGHWAYS AND TRANSPORTATION COMMISSION
105 WEST CAPITOL
JEFFERSON CITY, MO 65102
1-888-ASK-MODOT (1-888-275-6636)

PSBXB02_17_sk-end Guidance

STANDARD DRAWING GUIDANCE (do not show on plans):
(Turn off level Bridge-Guidance to hide guidance)

① Actual strand arrangement, bent up strands, and debonding (if any) is by design (top two strands are required). Add or remove symbols and instructions as required. Strands may be placed continuously across beam (eliminating 4" space), but dimension to drain hole in Part Plan shall be revised to 10".

② Revise if #5 is required. Use 6'-7" for #5-S1 actual length and 6'-1" for #5-S2 actual length.

③ Splices shown only when necessary (girder length > 60'-2"). Use 19" lap for #4 & 2'-0" lap for #5.

When lap is unnecessary:
- Delete grouped elements.
- Extend A bars to ℄ Beam.
- Revise 10 to 5 A1 bars & 8 to 4 A2 bars.

④ Interior diaphragm, void holes & vent pipe shall be shown only when necessary (when structure may be submerged).

When not necessary:
- Delete the two grouped elements.
- In Half Elev. extend hidden lines to ℄ Beam.
- In Part Plan revise remaining dimension to full length of void.

⑤ Revise minimum dimension if required by design.

⑥ By design. Typically 30.98 kips per 0.5" strand & 43.94 kips per 0.6" strand, rounded to nearest whole kip.

⑦ Strand location not available when vent pipe is required.

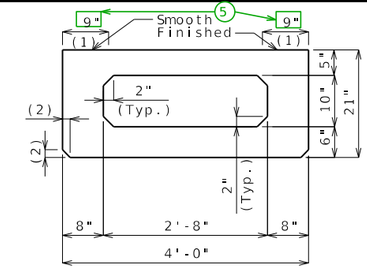

DIMENSIONS

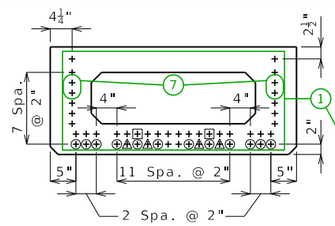

STRAND ARRANGEMENT

All strands are fully bonded unless otherwise noted.

+ Indicates prestressing strand.

○ Indicates cut and shop bend with 2'-0" projection.

□ Indicates debonded for X'-X" from end of beam.

△ Indicates debonded for X'-X" from end of beam.

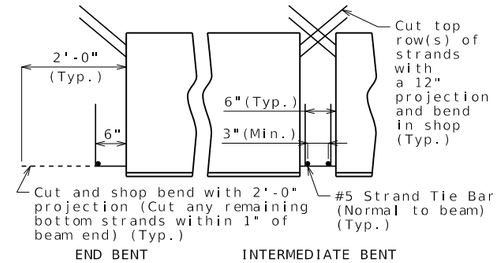

STRANDS AT BEAM ENDS

(1) Fabricator shall apply a bond breaker to this region excluding where joint filler will be applied.

(2) 1½" (Typ.) (¾" Optional)

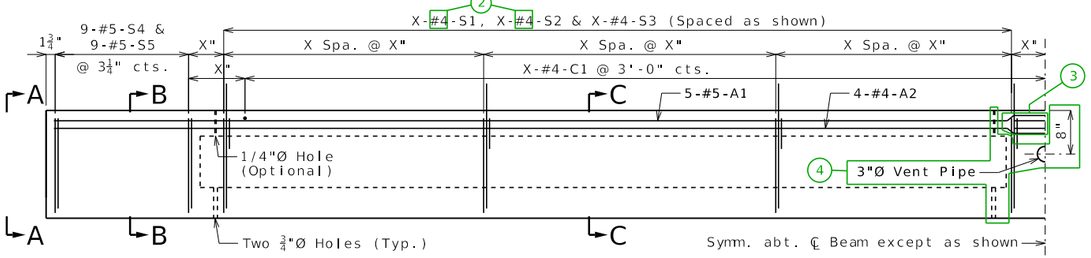

HALF ELEVATION

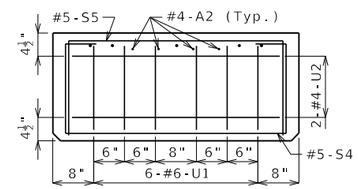

ELEVATION A-A

Strands not shown for clarity.

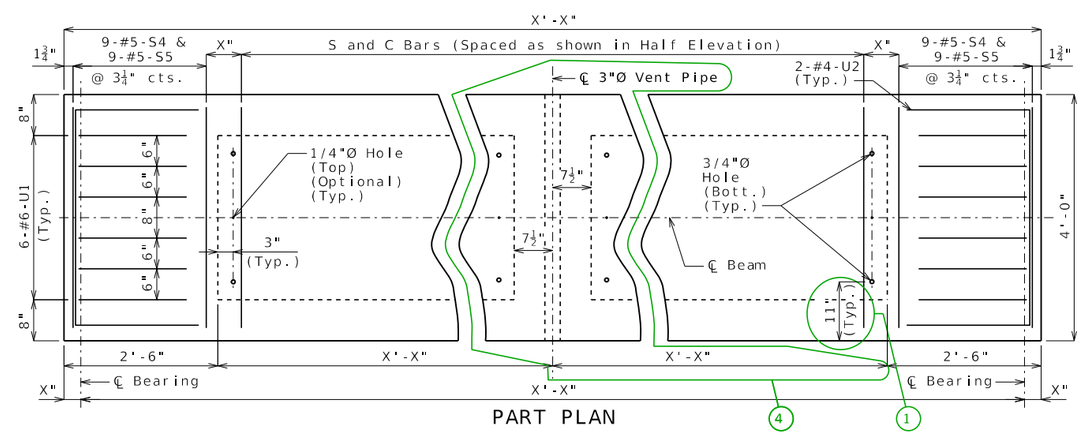

PART PLAN

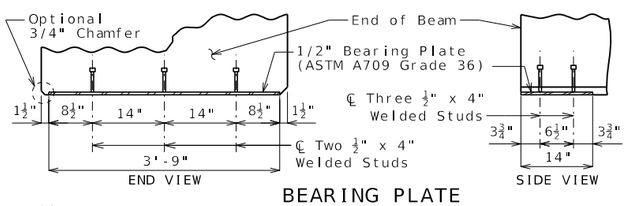

BEARING PLATE

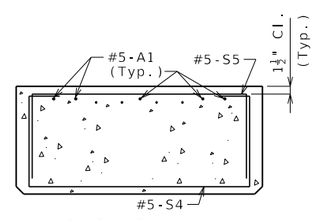

SECTION B-B

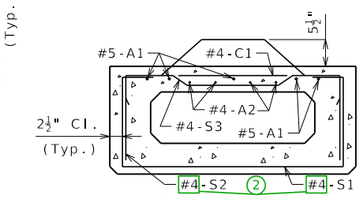

SECTION C-C

(4) ℄ 3/4"Ø (Min.) Coil Tie Rods 2'-6" long (X'-X" at exterior face of exterior beams at end bents)

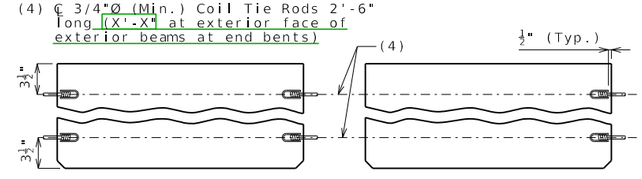

EXTERIOR BEAMS AT END BENTS
INTERIOR BEAMS AT ALL BENTS

EXTERIOR BEAMS AT INTERMEDIATE BENTS

COIL TIES

BILL OF REINFORCING STEEL - EACH BEAM

NO.	SIZE & MARK	ACTUAL LENGTH	SHAPE
10	5 A1	X'-X"	20
8	4 A2	X'-X"	20
X	4 C1	3'-7"	20
X	4 S1	7'-0"	10S
X	4 S2	6'-10"	51S
X	4 S3	4'-6"	50S
18	5 S4	7'-3"	10S
18	5 S5	6'-4"	10S
12	6 U1	4'-7"	10S
4	4 U2	7'-4"	10S

BENDING DIAGRAM

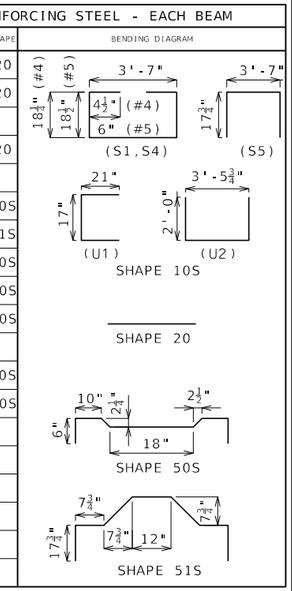

All dimensions are out to out. Use symmetry for dimensions not shown.

Hooks and bends shall be in accordance with the CRSI Manual of Standard Practice for Detailing Reinforced Concrete Structures, Stirrup and Tie Dimensions.

Actual bar lengths are measured along centerline of bar to the nearest inch.

Minimum clearance to reinforcing shall be one inch, unless otherwise shown.

All reinforcement shall be ASTM A615 or A706 Grade 60.

All S2 bars shall be epoxy coated.

General Notes:

Concrete for prestressed beams shall be Class A-1 with f'c = psi and f'ci = psi.

Use strands, "Ø Grade 270, with an initial prestress force of kips.

Pretensioned members shall be in accordance with Sec 1029.

Fabricator shall be responsible for location and design of lifting devices.

Exterior and interior beams are the same except: coil ties, application of bond breaker, coil inserts for slab drains.

For Beam Camber Diagram, see Sheet No. __.

For location of coil inserts at slab drains, see Sheet No. __.

For location of coil ties at concrete bent diaphragms, see Sheets No. __ and __.

DATE PREPARED	12/2/2025
ROUTE	STATE MO
DISTRICT	SHEET NO. 3
COUNTY	
JOB NO.	
CONTRACT ID.	
PROJECT NO.	
BRIDGE NO.	

DESCRIPTION

DATE

MISSOURI HIGHWAYS AND TRANSPORTATION COMMISSION

105 WEST CAPITOL
JEFFERSON CITY, MO 65102
1-888-ASK-MODOT (1-888-275-6636)

SPREAD BOX BEAMS - SPANS (X-X) AND (X-X)

Detailed
Checked

Note: This drawing is not to scale. Follow dimensions.

PSBXB03_21_sq-end Guidance

STANDARD DRAWING GUIDANCE (do not show on plans):
(Turn off level Bridge-Guidance to hide guidance)

① Actual strand arrangement, bent up strands, and debonding (if any) is by design (top two strands are required). Add or remove symbols and instructions as required. Strands may be placed continuously across beam (eliminating 4" space), but dimension to drain hole in Part Plan shall be revised to 10".

② Revise if #5 is required. Use 7'-3" for #5-S1 actual length and 6'-9" for #5-S2 actual length.

③ Splices shown only when necessary (girder length > 60'-2"). Use 19" lap for #4 & 2'-0" lap for #5.

When lap is unnecessary:
- Delete grouped elements.
- Extend A bars to ℄ Beam.
- Revise 10 to 5 A1 bars & 8 to 4 A2 bars.

④ Interior diaphragm, void holes & vent pipe shall be shown only when necessary (when structure may be submerged).

When not necessary:
- Delete the two grouped elements.
- In Half Elev. extend hidden lines to ℄ Beam.
- In Part Plan revise remaining dimension to full length of void.

⑤ Revise minimum dimension if required by design.

⑥ By design. Typically 30.98 kips per 0.5" strand & 43.94 kips per 0.6" strand, rounded to nearest whole kip.

⑦ Strand location not available when vent pipe is required.

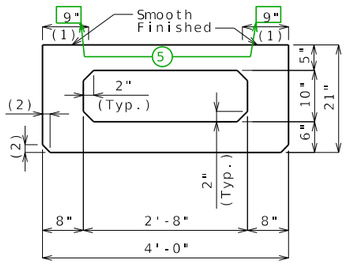

DIMENSIONS

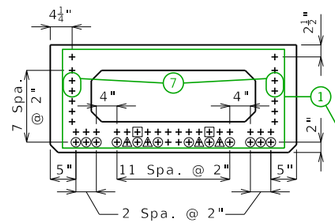

STRAND ARRANGEMENT

All strands are fully bonded unless otherwise noted.

+ Indicates prestressing strand.

○ Indicates cut and shop bend with 2'-0" projection.

□ Indicates debonded for X'-X" from end of beam.

△ Indicates debonded for X'-X" from end of beam.

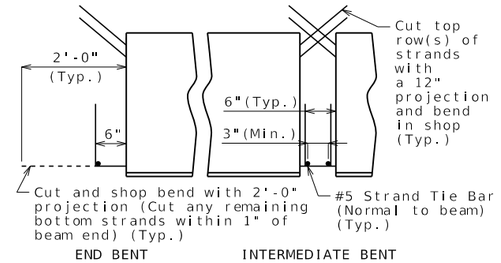

STRANDS AT BEAM ENDS

BILL OF REINFORCING STEEL - EACH BEAM				
NO.	SIZE & MARK	ACTUAL LENGTH	SHAPE	BENDING DIAGRAM
10	5 A1	X'-X"	20	
8	4 A2	X'-X"	20	
X	4 C1	3'-7"	20	
X	4 S1	7'-0"	10S	
X	4 S2	6'-10"	51S	
X	4 S3	4'-6"	50S	
18	5 S4	7'-4"	10S	
18	5 S5	6'-6"	10S	
2	5 S6	6'-4"	10S	
2	5 S7	5'-6"	10S	
12	6 U1	4'-7"	10S	
4	4 U2	8'-4"	21S	

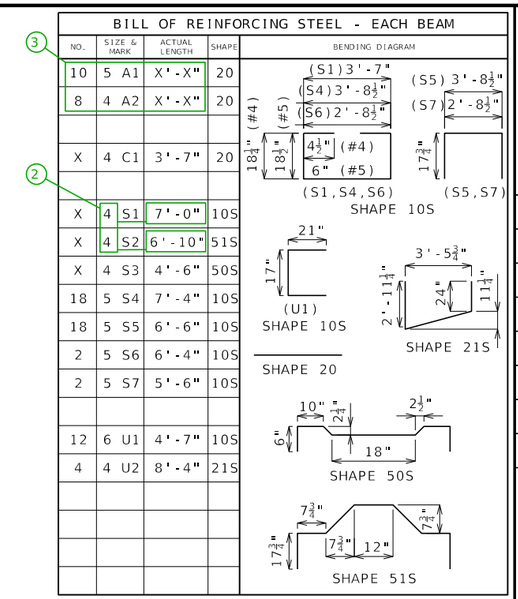

All dimensions are out to out. Use symmetry for dimensions not shown.

Hooks and bends shall be in accordance with the CRSI Manual of Standard Practice for Detailing Reinforced Concrete Structures, Stirrup and Tie Dimensions.

Actual bar lengths are measured along centerline of bar to the nearest inch.

Minimum clearance to reinforcing shall be one inch, unless otherwise shown.

All reinforcement shall be ASTM A615 or A706 Grade 60.

All S2 bars shall be epoxy coated.

(1) Fabricator shall apply a bond breaker to this region excluding where joint filler will be applied.

(2) 1½" (Typ.) (¾" Optional)

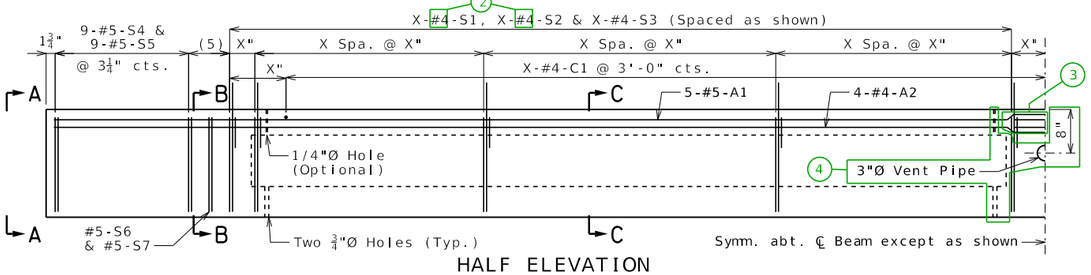

HALF ELEVATION

Dimensions taken along ℄ Beam.

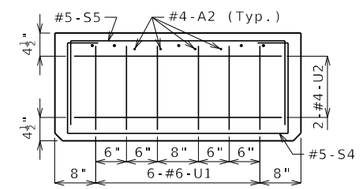

ELEVATION A-A

(5) 2 Spa. @ 4"

Strands not shown for clarity.

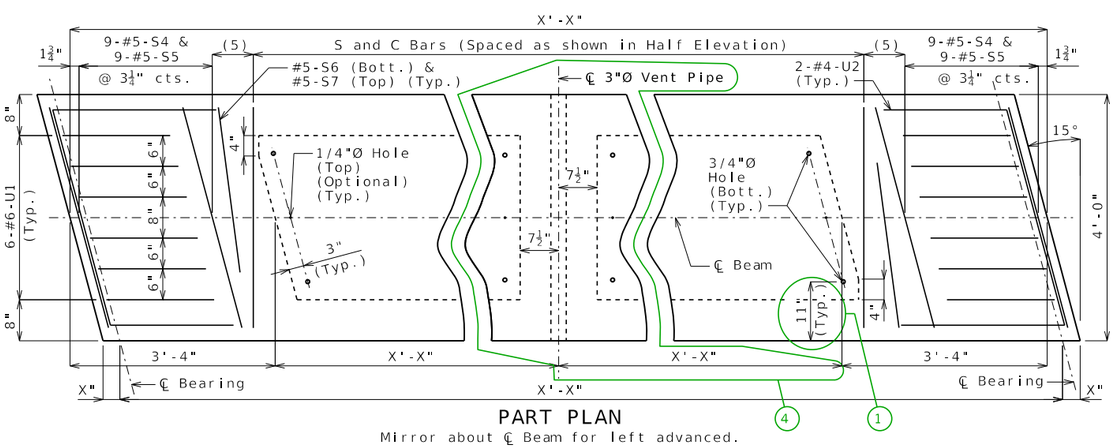

PART PLAN

Mirror about ℄ Beam for left advanced.

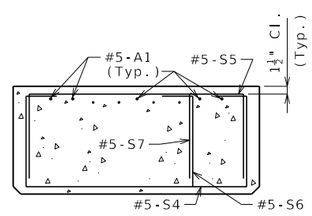

SECTION B-B

Mirror for left advanced.

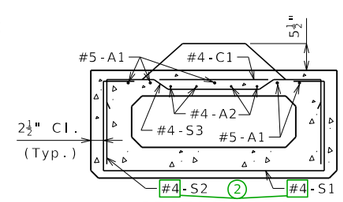

SECTION C-C

(4) ℄ 3/4"Ø (Min.) Coil Tie Rods 2'-6" long (X'-X" at exterior face of exterior beams at end bents)

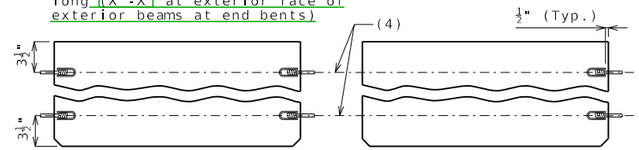

EXTERIOR BEAMS AT END BENTS
INTERIOR BEAMS AT ALL BENTS

EXTERIOR BEAMS AT INTERMEDIATE BENTS

COIL TIES

General Notes:

Concrete for prestressed beams shall be Class A-1 with f'c = psi and f'ci = psi.

Use strands, "Ø Grade 270, with an initial prestress force of 6 kips.

Pretensioned members shall be in accordance with Sec 1029.

Fabricator shall be responsible for location and design of lifting devices.

Exterior and interior beams are the same except: coil ties, application of bond breaker, coil inserts for slab drains.

For Beam Camber Diagram, see Sheet No. __.

For location of coil inserts at slab drains, see Sheet No. __.

For location of coil ties at concrete bent diaphragms, see Sheets No. __ and __.

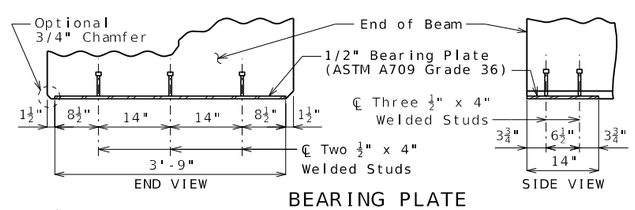

BEARING PLATE

SPREAD BOX BEAMS - SPANS (X-X) AND (X-X)

Detailed
Checked

Note: This drawing is not to scale. Follow dimensions.

Sheet No. of

DATE PREPARED	12/2/2025
ROUTE	STATE MO
DISTRICT	SHEET NO. 4
COUNTY	
JOB NO.	
CONTRACT ID.	
PROJECT NO.	
BRIDGE NO.	

DESCRIPTION

DATE

MISSOURI HIGHWAYS AND TRANSPORTATION COMMISSION
105 WEST CAPITOL
JEFFERSON CITY, MO 65102
1-888-ASK-MODOT (1-888-275-6636)

PSBXB04_21_sk-end Guidance

STANDARD DRAWING GUIDANCE (do not show on plans):
(Turn off level Bridge-Guidance to hide guidance)

① Actual strand arrangement, bent up strands, and debonding (if any) is by design (top two strands are reguired). Add or remove symbols and instructions as required. Strands may be placed continuously across beam (eliminating 4" space), but dimension to drain hole in Part Plan shall be revised to 10".

② Revise if #5 is required. Use 7'-3" for #5-S1 actual length and 6'-9" for #5-S2 actual length.

③ Splices shown only when necessary (girder length > 60'-2"). Use 19" lap for #4 & 2'-0" lap for #5.

When lap is unnecessary:
- Delete grouped elements.
- Extend A bars to ℄ Beam.
- Revise 10 to 5 A1 bars & 8 to 4 A2 bars.

④ Interior diaphragm, void holes & vent pipe shall be shown only when necessary (when structure may be submerged).

When not necessary:
- Delete the two grouped elements.
- In Half Elev. extend hidden lines to ℄ Beam.
- In Part Plan revise remaining dimension to full length of void.

⑤ Revise minimum dimension if required by design.

⑥ By design. Typically 30.98 kips per 0.5" strand & 43.94 kips per 0.6" strand, rounded to nearest whole kip.

⑦ Strand location not available when vent pipe is required.

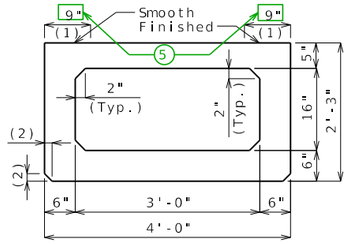

DIMENSIONS

(1) Fabricator shall apply a bond breaker to this region excluding where joint filler will be applied.

(2) $1\frac{1}{2}$" (Typ.) ($\frac{3}{4}$" Optional)

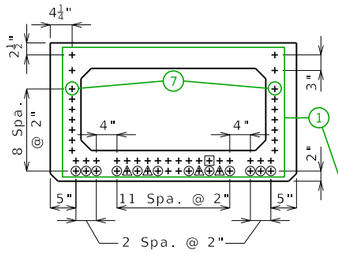

STRAND ARRANGEMENT

All strands are fully bonded unless otherwise noted.

+ Indicates prestressing strand.

○ Indicates cut and shop bend with 2'-0" projection.

□ Indicates debonded for X'-X" from end of beam.

△ Indicates debonded for X'-X" from end of beam.

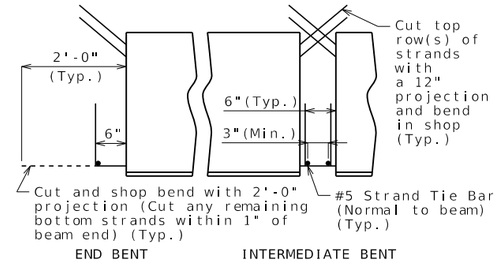

STRANDS AT BEAM ENDS

NO.	SIZE & MARK	ACTUAL LENGTH	SHAPE	BENDING DIAGRAM
10	5 A1	X'-X"	20	
8	4 A2	X'-X"	20	
X	4 C1	3'-7"	20	
X	4 S1	7'-5"	10S	
X	4 S2	7'-10"	51S	
X	4 S3	4'-6"	50S	
18	5 S4	7'-4"	10S	
18	5 S5	7'-4"	10S	
12	6 U1	5'-1"	10S	
6	4 U2	7'-4"	10S	

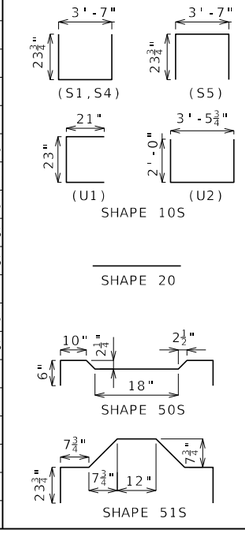

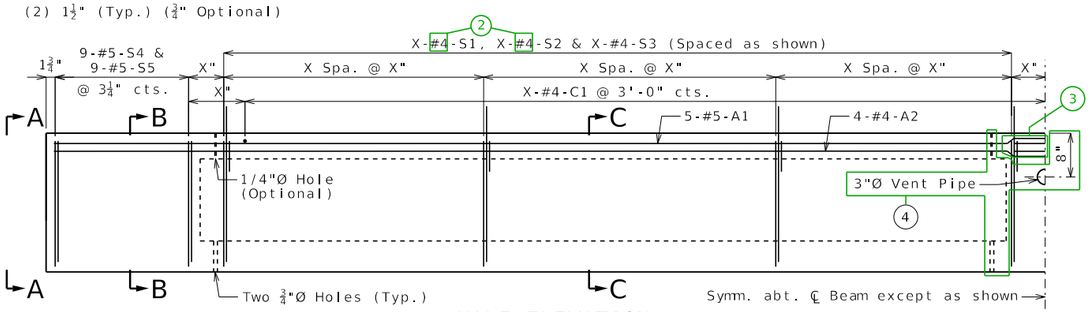

HALF ELEVATION

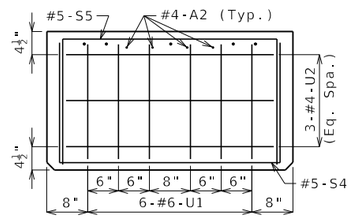

ELEVATION A-A

All dimensions are out to out. Use symmetry for dimensions not shown.

Hooks and bends shall be in accordance with the CRSI Manual of Standard Practice for Detailing Reinforced Concrete Structures, Stirrup and Tie Dimensions.

Actual bar lengths are measured along centerline of bar to the nearest inch.

Minimum clearance to reinforcing shall be one inch, unless otherwise shown.

All reinforcement shall be ASTM A615 or A706 Grade 60.

All S2 bars shall be epoxy coated.

Strands not shown for clarity.

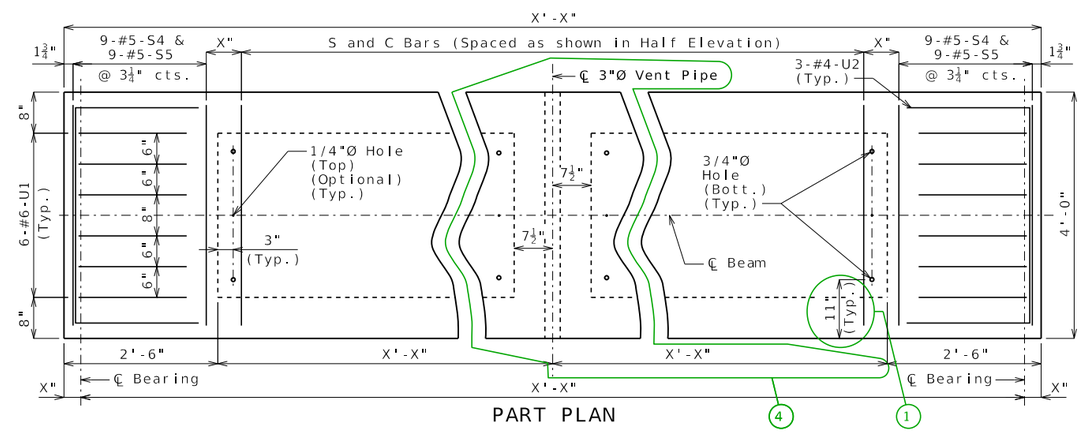

PART PLAN

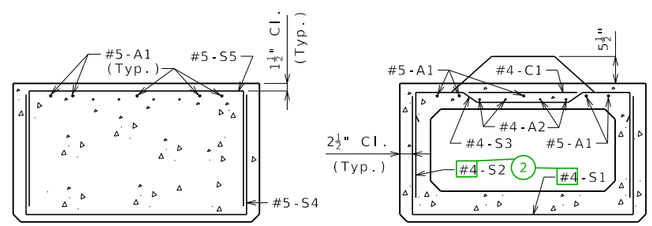

SECTION B-B

SECTION C-C

(4) ℄ 3/4"Ø (Min.) Coil Tie Rods 2'-6" long (X'-X" at exterior face of exterior beams at end bents)

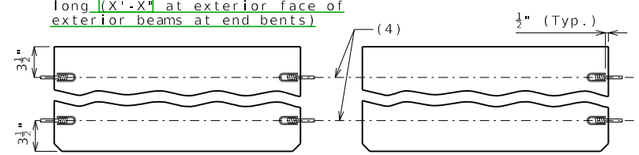

EXTERIOR BEAMS AT END BENTS
INTERIOR BEAMS AT ALL BENTS

EXTERIOR BEAMS AT INTERMEDIATE BENTS

COIL TIES

General Notes:

Concrete for prestressed beams shall be Class A-1 with f'c = psi and f'ci = psi.

Use strands, "Ø Grade 270, with an initial prestress force of kips.

Pretensioned members shall be in accordance with Sec 1029.

Fabricator shall be responsible for location and design of lifting devices.

Exterior and interior beams are the same except: coil ties, application of bond breaker, coil inserts for slab drains.

For Beam Camber Diagram, see Sheet No. __.

For location of coil inserts at slab drains, see Sheet No. __.

For location of coil ties at concrete bent diaphragms, see Sheet No. __ and __.

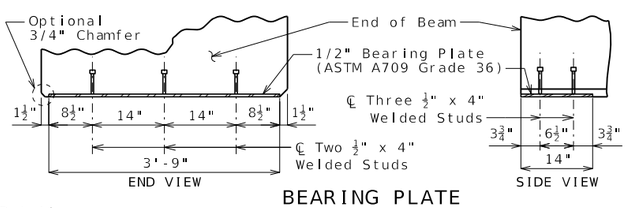

BEARING PLATE

SPREAD BOX BEAMS - SPANS (X-X) AND (X-X)

Detailed
Checked

Note: This drawing is not to scale. Follow dimensions.

Sheet No. of

DATE PREPARED	12/2/2025
ROUTE	STATE MO
DISTRICT	SHEET NO. 5
COUNTY	
JOB NO.	
CONTRACT ID.	
PROJECT NO.	
BRIDGE NO.	

DESCRIPTION

DATE

MISSOURI HIGHWAYS AND TRANSPORTATION COMMISSION
105 WEST CAPITOL
JEFFERSON CITY, MO 65102
1-888-ASK-MODOT (1-888-275-6636)

PSBXB05_27_sq-end Guidance

STANDARD DRAWING GUIDANCE (do not show on plans):
(Turn off level Bridge-Guidance to hide guidance)

① Actual strand arrangement, bent up strands, and debonding (if any) is by design (top two strands are required). Add or remove symbols and instructions as required. Strands may be placed continuously across beam (eliminating 4" space), but dimension to drain hole in Part Plan shall be revised to 10".

② Revise if #5 is required. Use 7'-4" for #5-S1 actual length and 7'-9" for #5-S2 actual length.

③ Splices shown only when necessary (girder length > 60'-2"). Use 19" lap for #4 & 2'-0" lap for #5.

When lap is unnecessary:
- Delete grouped elements.
- Extend A bars to ℄ Beam.
- Revise 10 to 5 A1 bars & 8 to 4 A2 bars.

④ Interior diaphragm, void holes & vent pipe shall be shown only when necessary (when structure may be submerged).

When not necessary:
- Delete the two grouped elements.
- In Half Elev. extend hidden lines to ℄ Beam.
- In Part Plan revise remaining dimension to full length of void.

⑤ Revise minimum dimension if required by design.

⑥ By design. Typically 30.98 kips per 0.5" strand & 43.94 kips per 0.6" strand, rounded to nearest whole kip.

⑦ Strand location not available when vent pipe is required.

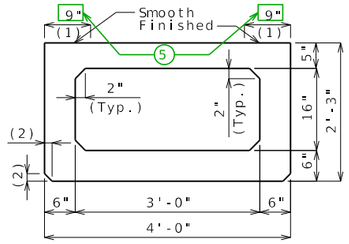

DIMENSIONS

(1) Fabricator shall apply a bond breaker to this region excluding where joint filler will be applied.

(2) $1\frac{1}{2}$" (Typ.) ($\frac{3}{4}$" Optional)

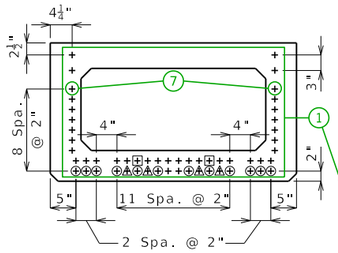

STRAND ARRANGEMENT

All strands are fully bonded unless otherwise noted.

+ Indicates prestressing strand.

○ Indicates cut and shop bend with 2'-0" projection.

□ Indicates debonded for X'-X" from end of beam.

△ Indicates debonded for X'-X" from end of beam.

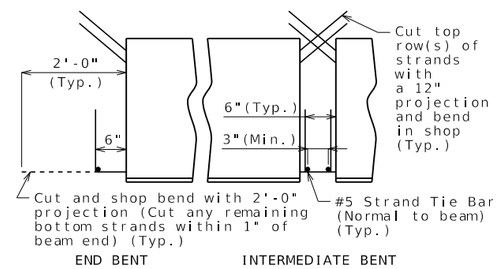

STRANDS AT BEAM ENDS

BILL OF REINFORCING STEEL - EACH BEAM				
NO.	SIZE & MARK	ACTUAL LENGTH	SHAPE	BENDING DIAGRAM
10	5 A1	X'-X"	20	
8	4 A2	X'-X"	20	
X	4 C1	3'-7"	20	
X	4 S1	7'-5"	10S	
X	4 S2	7'-10"	51S	
X	4 S3	4'-6"	50S	
18	5 S4	7'-6"	10S	
18	5 S5	7'-6"	10S	
2	5 S6	6'-6"	10S	
2	5 S7	6'-6"	10S	
12	6 U1	5'-1"	10S	
6	4 U2	8'-4"	21S	

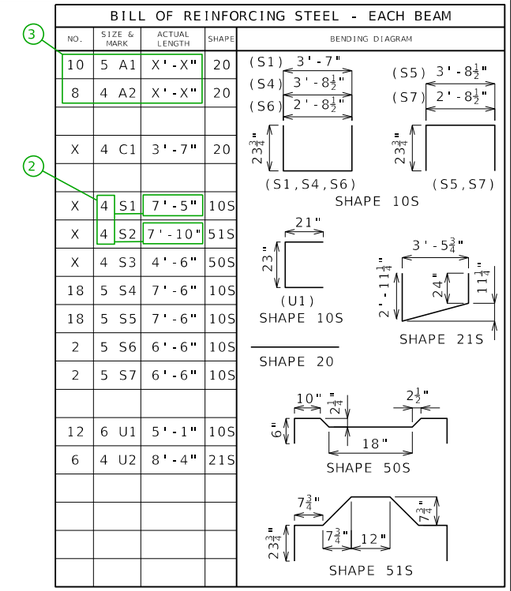

(2) $1\frac{1}{2}$" (Typ.) ($\frac{3}{4}$" Optional)

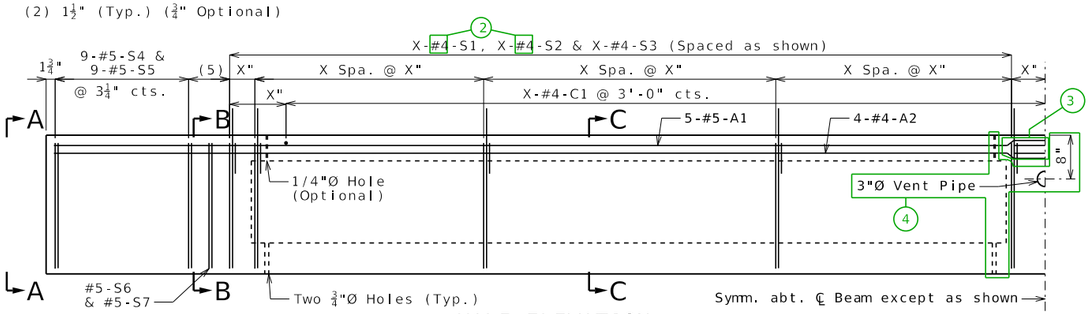

HALF ELEVATION

Dimensions taken along ℄ Beam.

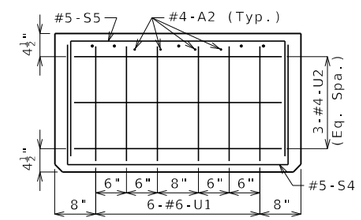

ELEVATION A-A

Strands not shown for clarity.

All dimensions are out to out. Use symmetry for dimensions not shown.

Hooks and bends shall be in accordance with the CRSI Manual of Standard Practice for Detailing Reinforced Concrete Structures, Stirrup and Tie Dimensions.

Actual bar lengths are measured along centerline of bar to the nearest inch.

Minimum clearance to reinforcing shall be one inch, unless otherwise shown.

All reinforcement shall be ASTM A615 or A706 Grade 60.

All S2 bars shall be epoxy coated.

(5) 2 Spa. @ 4"

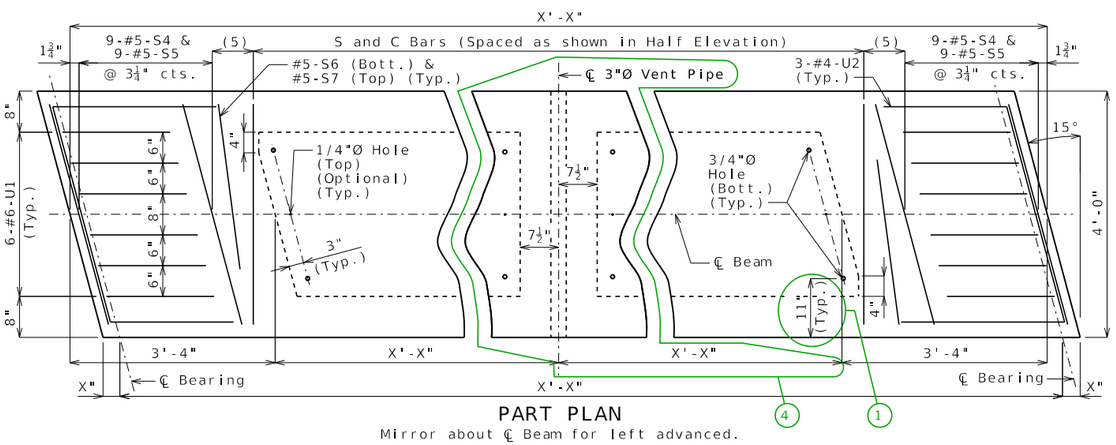

PART PLAN

Mirror about ℄ Beam for left advanced.

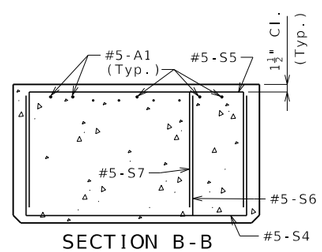

SECTION B-B

Mirror for left advanced.

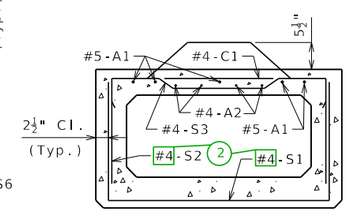

SECTION C-C

(4) ℄ 3/4"Ø (Min.) Coil Tie Rods 2'-6" long [(X'-X" at exterior face of exterior beams at end bents)

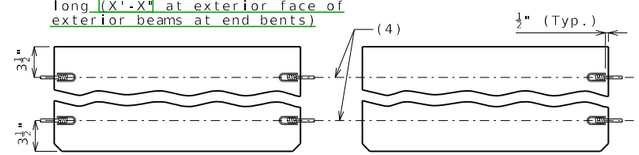

EXTERIOR BEAMS AT END BENTS
INTERIOR BEAMS AT ALL BENTS

EXTERIOR BEAMS AT INTERMEDIATE BENTS

COIL TIES

General Notes:

Concrete for prestressed beams shall be Class A-1 with f'c = psi and f'ci = psi.

Use strands, "Ø Grade 270, with an initial prestress force of 6 kips.

Pretensioned members shall be in accordance with Sec 1029.

Fabricator shall be responsible for location and design of lifting devices.

Exterior and interior beams are the same except: coil ties, application of bond breaker, coil inserts for slab drains.

For Beam Camber Diagram, see Sheet No. __.

For location of coil inserts at slab drains, see Sheet No. __.

For location of coil ties at concrete bent diaphragms, see Sheet No. __ and __.

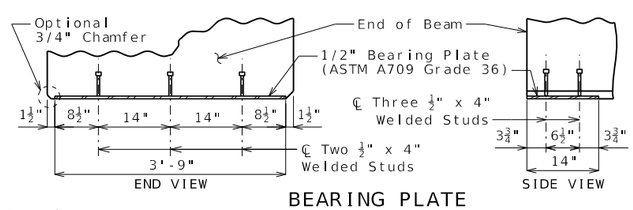

BEARING PLATE

SPREAD BOX BEAMS - SPANS (X-X) AND (X-X)

Detailed
Checked

Note: This drawing is not to scale. Follow dimensions.

Sheet No. of

DATE PREPARED	12/2/2025
ROUTE	STATE MO
DISTRICT	SHEET NO. 6
COUNTY	
JOB NO.	
CONTRACT ID.	
PROJECT NO.	
BRIDGE NO.	

DESCRIPTION	DATE

MISSOURI HIGHWAYS AND TRANSPORTATION COMMISSION
105 WEST CAPITOL
JEFFERSON CITY, MO 65102
1-888-ASK-MODOT (1-888-275-6636)

PSBXB06_27_sk-end Guidance

STANDARD DRAWING GUIDANCE (do not show on plans):
(Turn off level Bridge-Guidance to hide guidance)

① Actual strand arrangement, bent up strands, and debonding (if any) is by design (top two strands are required). Add or remove symbols and instructions as required. Strands may be placed continuously across beam (eliminating 4" space), but dimension to drain hole in Part Plan shall be revised to 10".

② Revise if #5 is required. Use 7'-4" for #5-S1 actual length and 7'-9" for #5-S2 actual length.

③ Splices shown only when necessary (girder length > 60'-2"). Use 19" lap for #4 & 2'-0" lap for #5.

When lap is unnecessary:
- Delete grouped elements.
- Extend A bars to ℄ Beam.
- Revise 10 to 5 A1 bars & 8 to 4 A2 bars.

④ Interior diaphragm, void holes & vent pipe shall be shown only when necessary (when structure may be submerged).

When not necessary:
- Delete the two grouped elements.
- In Half Elev. extend hidden lines to ℄ Beam.
- In Part Plan revise remaining dimension to full length of void.

⑤ Revise minimum dimension if required by design.

⑥ By design. Typically 30.98 kips per 0.5" strand & 43.94 kips per 0.6" strand, rounded to nearest whole kip.

⑦ Strand location not available when vent pipe is required.

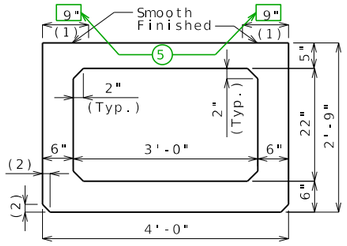

DIMENSIONS

(1) Fabricator shall apply a bond breaker to this region excluding where joint filler will be applied.

(2) $1\frac{1}{2}$" (Typ.) ($\frac{3}{4}$" Optional)

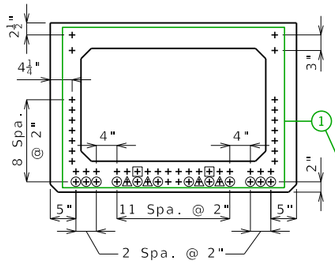

All strands are fully bonded unless otherwise noted.

+ Indicates prestressing strand.

○ Indicates cut and shop bend with 2'-6" projection.

□ Indicates debonded for X'-X" from end of beam.

△ Indicates debonded for X'-X" from end of beam.

STRAND ARRANGEMENT

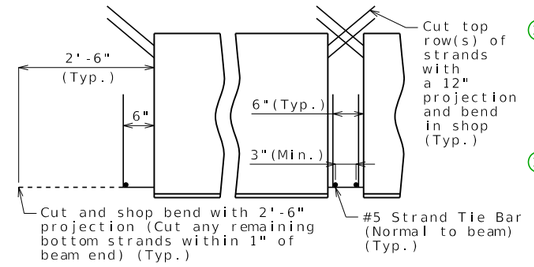

STRANDS AT BEAM ENDS

BILL OF REINFORCING STEEL - EACH BEAM				
NO.	SIZE & MARK	ACTUAL LENGTH	SHAPE	BENDING DIAGRAM
10	5 A1	X'-X"	20	
8	4 A2	X'-X"	20	
X	4 C1	3'-7"	20	
X	4 S1	8'-5"	10S	
X	4 S2	7'-10"	51S	
X	4 S3	4'-6"	50S	
18	5 S4	8'-4"	10S	
18	5 S5	7'-4"	10S	
12	6 U1	5'-7"	10S	
6	4 U2	7'-4"	10S	

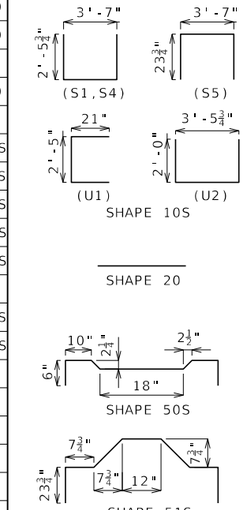

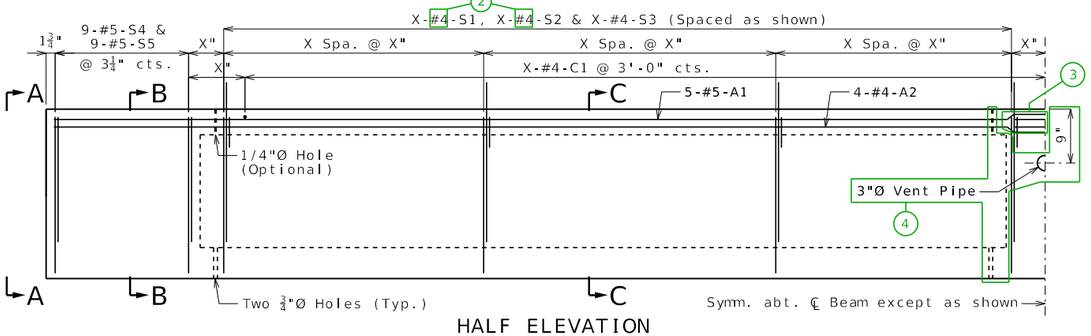

HALF ELEVATION

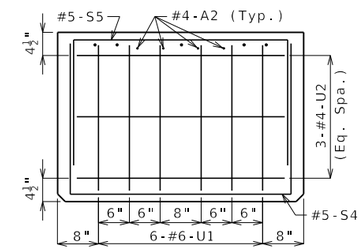

ELEVATION A-A

All dimensions are out to out. Use symmetry for dimensions not shown.

Hooks and bends shall be in accordance with the CRSI Manual of Standard Practice for Detailing Reinforced Concrete Structures, Stirrup and Tie Dimensions.

Actual bar lengths are measured along centerline of bar to the nearest inch.

Minimum clearance to reinforcing shall be one inch, unless otherwise shown.

All reinforcement shall be ASTM A615 or A706 Grade 60.

All S2 bars shall be epoxy coated.

Strands not shown for clarity.

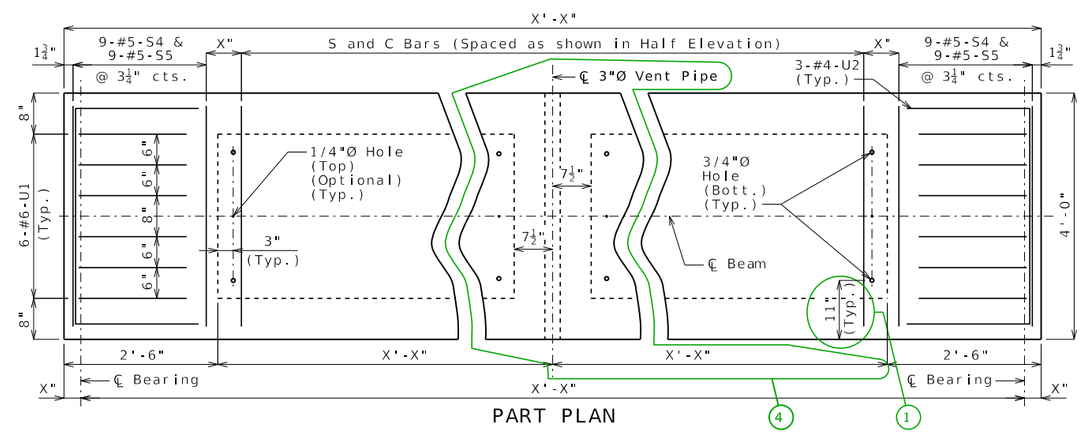

PART PLAN

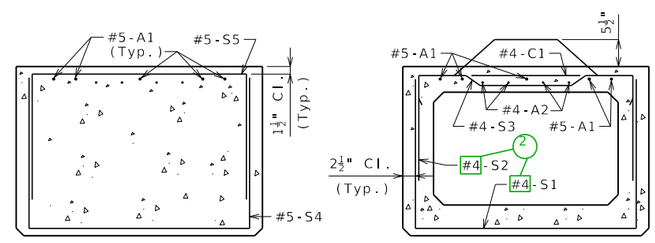

SECTION B-B

SECTION C-C

(4) ℄ 3/4"Ø (Min.) Coil Tie Rods 2'-6" long (X'-X" at exterior face of exterior beams at end bents)

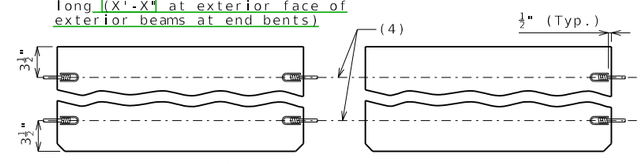

EXTERIOR BEAMS AT END BENTS
INTERIOR BEAMS AT ALL BENTS

EXTERIOR BEAMS AT INTERMEDIATE BENTS

COIL TIES

General Notes:

Concrete for prestressed beams shall be Class A-1 with f'c = psi and f'ci = psi.

Use strands, "Ø Grade 270, with an initial prestress force of kips. 6

Pretensioned members shall be in accordance with Sec 1029.

Fabricator shall be responsible for location and design of lifting devices.

Exterior and interior beams are the same except: coil ties, application of bond breaker, coil inserts for slab drains.

For Beam Camber Diagram, see Sheet No. __.

For location of coil inserts at slab drains, see Sheet No. __.

For location of coil ties at concrete bent diaphragms, see Sheet No. __ and __.

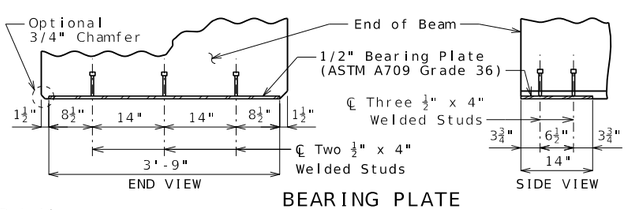

BEARING PLATE

SPREAD BOX BEAMS - SPANS (X-X) AND (X-X)

Detailed
Checked

Note: This drawing is not to scale. Follow dimensions.

Sheet No. of

DATE PREPARED	12/2/2025
ROUTE	STATE MO
DISTRICT	SHEET NO. 7
COUNTY	
JOB NO.	
CONTRACT ID.	
PROJECT NO.	
BRIDGE NO.	

DESCRIPTION

DATE

MISSOURI HIGHWAYS AND TRANSPORTATION COMMISSION
105 WEST CAPITOL
JEFFERSON CITY, MO 65102
1-888-ASK-MODOT (1-888-275-6636)

PSBXB07_33_sq-end Guidance

STANDARD DRAWING GUIDANCE (do not show on plans):
(Turn off level Bridge-Guidance to hide guidance)

① Actual strand arrangement, bent up strands, and debonding (if any) is by design (top two strands are required). Add or remove symbols and instructions as required. Strands may be placed continuously across beam (eliminating 4" space), but dimension to drain hole in Part Plan shall be revised to 10".

② Revise if #5 is required. Use 8'-4" for #5-S1 actual length and 7'-9" for #5-S2 actual length.

③ Splices shown only when necessary (girder length > 60'-2"). Use 19" lap for #4 & 2'-0" lap for #5.

When lap is unnecessary:
- Delete grouped elements.
- Extend A bars to ℄ Beam.
- Revise 10 to 5 A1 bars & 8 to 4 A2 bars.

④ Interior diaphragm, void holes & vent pipe shall be shown only when necessary (when structure may be submerged).

When not necessary:
- Delete the two grouped elements.
- In Half Elev. extend hidden lines to ℄ Beam.
- In Part Plan revise remaining dimension to full length of void.

⑤ Revise minimum dimension if required by design.

⑥ By design. Typically 30.98 kips per 0.5" strand & 43.94 kips per 0.6" strand, rounded to nearest whole kip.

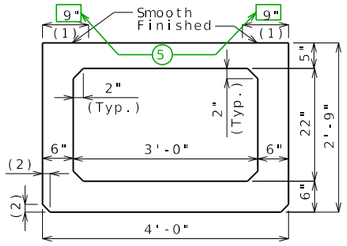

DIMENSIONS

(1) Fabricator shall apply a bond breaker to this region excluding where joint filler will be applied.

(2) $1\frac{1}{2}$" (Typ.) ($\frac{3}{4}$" Optional)

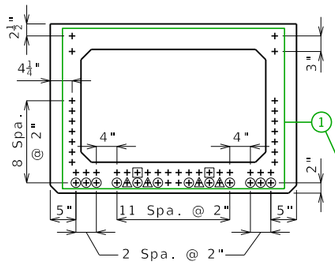

All strands are fully bonded unless otherwise noted.

+ Indicates prestressing strand.

○ Indicates cut and shop bend with 2'-6" projection.

□ Indicates debonded for X'-X" from end of beam.

△ Indicates debonded for X'-X" from end of beam.

STRAND ARRANGEMENT

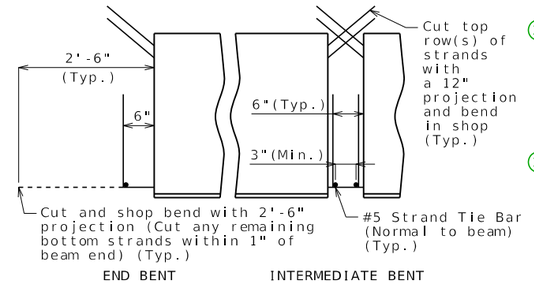

STRANDS AT BEAM ENDS

NO.	SIZE & MARK	ACTUAL LENGTH	SHAPE	BENDING DIAGRAM
10	5 A1	X'-X"	20	
8	4 A2	X'-X"	20	
X	4 C1	3'-7"	20	
X	4 S1	8'-5"	10S	
X	4 S2	7'-10"	51S	
X	4 S3	4'-6"	50S	
18	5 S4	8'-6"	10S	
18	5 S5	7'-6"	10S	
2	5 S6	7'-6"	10S	
2	5 S7	6'-6"	10S	
12	6 U1	5'-7"	10S	
6	4 U2	8'-4"	21S	

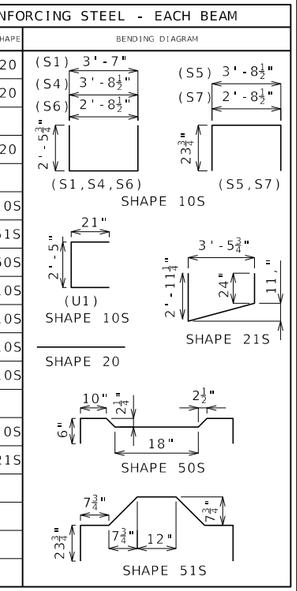

All dimensions are out to out. Use symmetry for dimensions not shown.

Hooks and bends shall be in accordance with the CRSI Manual of Standard Practice for Detailing Reinforced Concrete Structures, Stirrup and Tie Dimensions.

Actual bar lengths are measured along centerline of bar to the nearest inch.

Minimum clearance to reinforcing shall be one inch, unless otherwise shown.

All reinforcement shall be ASTM A615 or A706 Grade 60.

All S2 bars shall be epoxy coated.

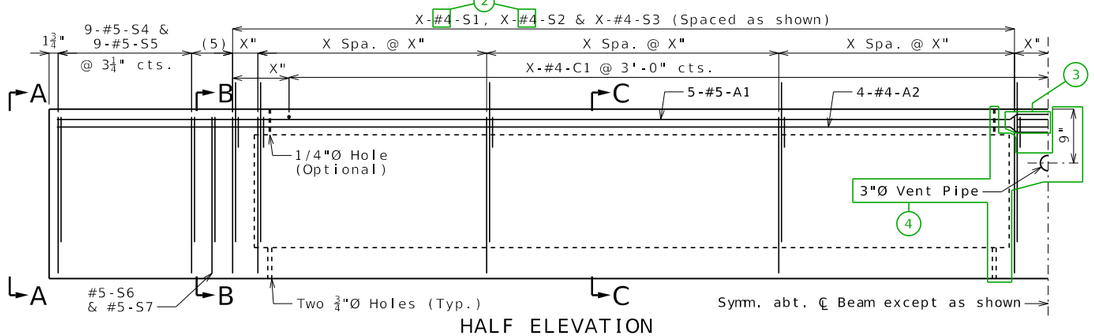

HALF ELEVATION

Dimensions taken along ℄ Beam.

(5) 2 Spa. @ 4"

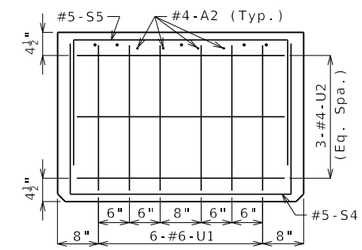

ELEVATION A-A

Strands not shown for clarity.

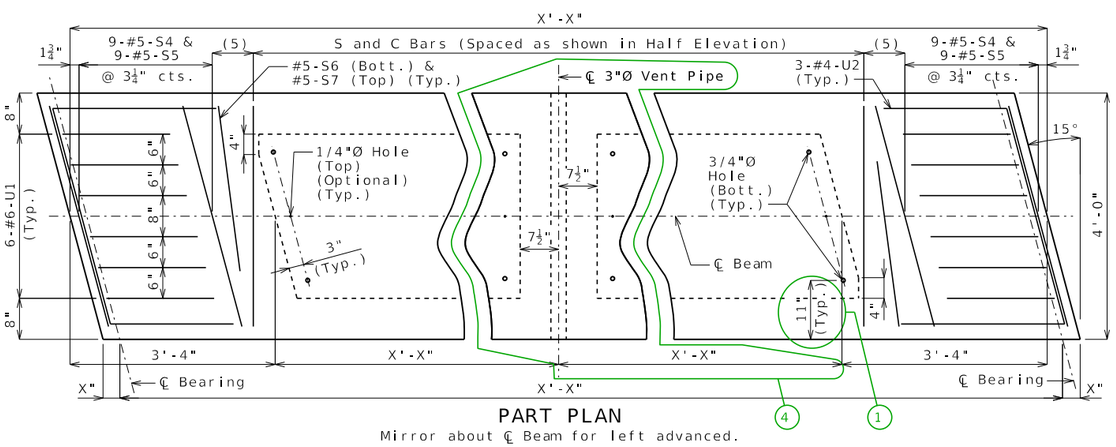

PART PLAN

Mirror about ℄ Beam for left advanced.

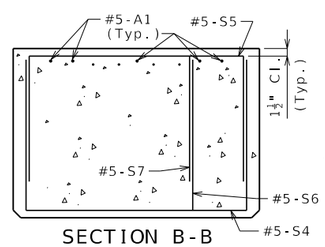

SECTION B-B

Mirror for left advanced.

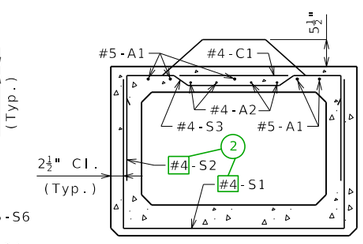

SECTION C-C

(4) ℄ 3/4"Ø (Min.) Coil Tie Rods 2'-6" long [(X'-X" at exterior face of exterior beams at end bents)

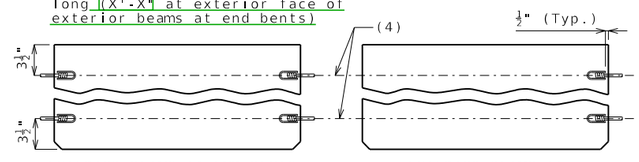

EXTERIOR BEAMS AT END BENTS
INTERIOR BEAMS AT ALL BENTS

EXTERIOR BEAMS AT INTERMEDIATE BENTS

COIL TIES

General Notes:

Concrete for prestressed beams shall be Class A-1 with f'c = psi and f'ci = psi.

Use strands, "Ø Grade 270, with an initial prestress force of kips. 6

Pretensioned members shall be in accordance with Sec 1029.

Fabricator shall be responsible for location and design of lifting devices.

Exterior and interior beams are the same except: coil ties, application of bond breakers, coil inserts for slab drains.

For Beam Camber Diagram, see Sheet No. __.

For location of coil inserts at slab drains, see Sheet No. __.

For location of coil ties at concrete bent diaphragms, see Sheet No. __ and __.

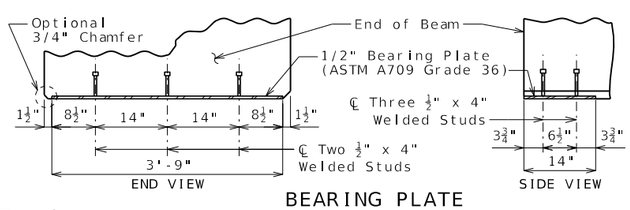

BEARING PLATE

SPREAD BOX BEAMS - SPANS (X-X) AND (X-X)

Detailed
Checked

Note: This drawing is not to scale. Follow dimensions.

Sheet No. of

DATE PREPARED	
12/2/2025	
ROUTE	STATE
	MO
DISTRICT	SHEET NO.
	8
COUNTY	
JOB NO.	
CONTRACT ID.	
PROJECT NO.	
BRIDGE NO.	

DATE	DESCRIPTION

MISSOURI HIGHWAYS AND TRANSPORTATION COMMISSION
105 WEST CAPITOL
JEFFERSON CITY, MO 65102
1-888-ASK-MODOT (1-888-275-6636)

PSBXB08_33_sk-end Guidance

STANDARD DRAWING GUIDANCE (do not show on plans):
(Turn off level Bridge-Guidance to hide guidance)

① Actual strand arrangement, bent up strands, and debonding (if any) is by design (top two strands are required). Add or remove symbols and instructions as required. Strands may be placed continuously across beam (eliminating 4" space), but dimension to drain hole in Part Plan shall be revised to 10".

② Revise if #5 is required. Use 8'-4" for #5-S1 actual length and 7'-9" for #5-S2 actual length.

③ Splices shown only when necessary (girder length > 60'-2"). Use 19" lap for #4 & 2'-0" lap for #5.

When lap is unnecessary:
- Delete grouped elements.
- Extend A bars to ℄ Beam.
- Revise 10 to 5 A1 bars & 8 to 4 A2 bars.

④ Interior diaphragm, void holes & vent pipe shall be shown only when necessary (when structure may be submerged).

When not necessary:
- Delete the two grouped elements.
- In Half Elev. extend hidden lines to ℄ Beam.
- In Part Plan revise remaining dimension to full length of void.

⑤ Revise minimum dimension if required by design.

⑥ By design. Typically 30.98 kips per 0.5" strand & 43.94 kips per 0.6" strand, rounded to nearest whole kip.

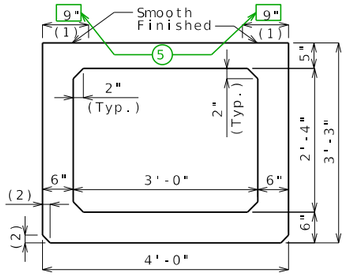

DIMENSIONS

(1) Fabricator shall apply a bond breaker to this region excluding where joint filler will be applied.

(2) $1\frac{1}{2}$" (Typ.) ($\frac{3}{4}$" Optional)

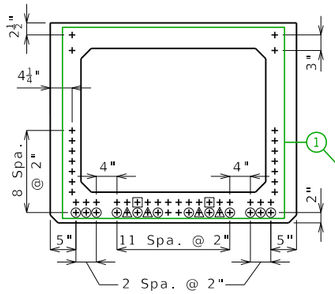

All strands are fully bonded unless otherwise noted.

+ Indicates prestressing strand.

○ Indicates cut and shop bend with 2'-6" projection.

□ Indicates debonded for X'-X" from end of beam.

△ Indicates debonded for X'-X" from end of beam.

STRAND ARRANGEMENT

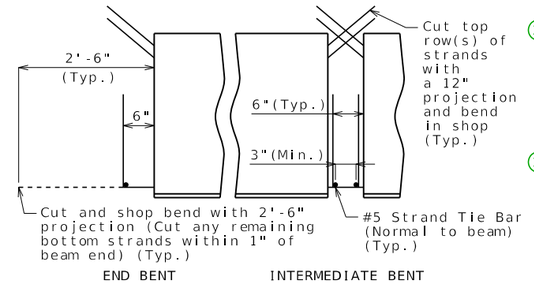

STRANDS AT BEAM ENDS

BILL OF REINFORCING STEEL - EACH BEAM				
NO.	SIZE & MARK	ACTUAL LENGTH	SHAPE	BENDING DIAGRAM
10	5 A1	X'-X"	20	
8	4 A2	X'-X"	20	
X	4 C1	3'-7"	20	
X	4 S1	9'-5"	10S	
X	4 S2	7'-10"	51S	
X	4 S3	4'-6"	50S	
18	5 S4	9'-4"	10S	
18	5 S5	7'-4"	10S	
12	6 U1	6'-1"	10S	
6	4 U2	7'-4"	10S	

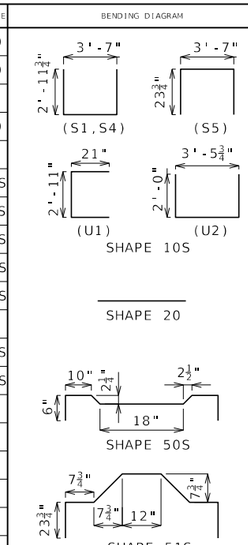

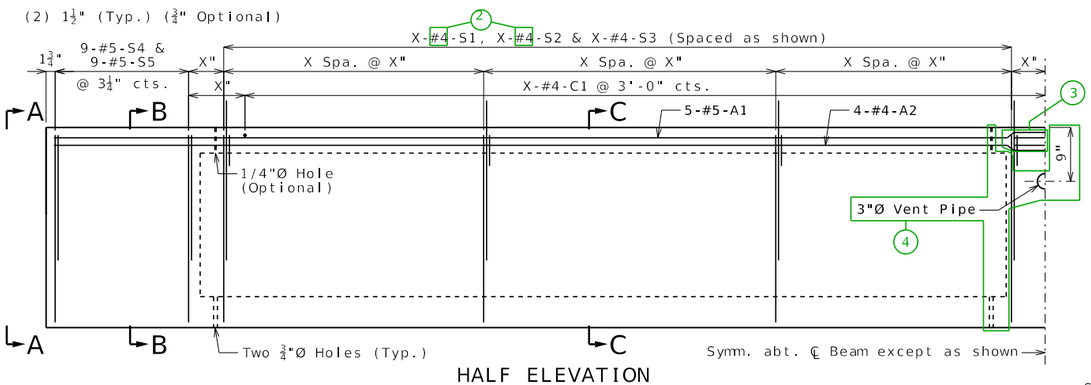

HALF ELEVATION

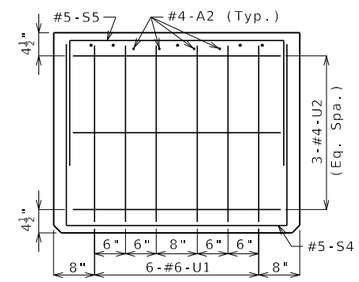

ELEVATION A-A

Strands not shown for clarity.

All dimensions are out to out. Use symmetry for dimensions not shown.

Hooks and bends shall be in accordance with the CRSI Manual of Standard Practice for Detailing Reinforced Concrete Structures, Stirrup and Tie Dimensions.

Actual bar lengths are measured along centerline of bar to the nearest inch.

Minimum clearance to reinforcing shall be one inch, unless otherwise shown.

All reinforcement shall be ASTM A615 or A706 Grade 60.

All S2 bars shall be epoxy coated.

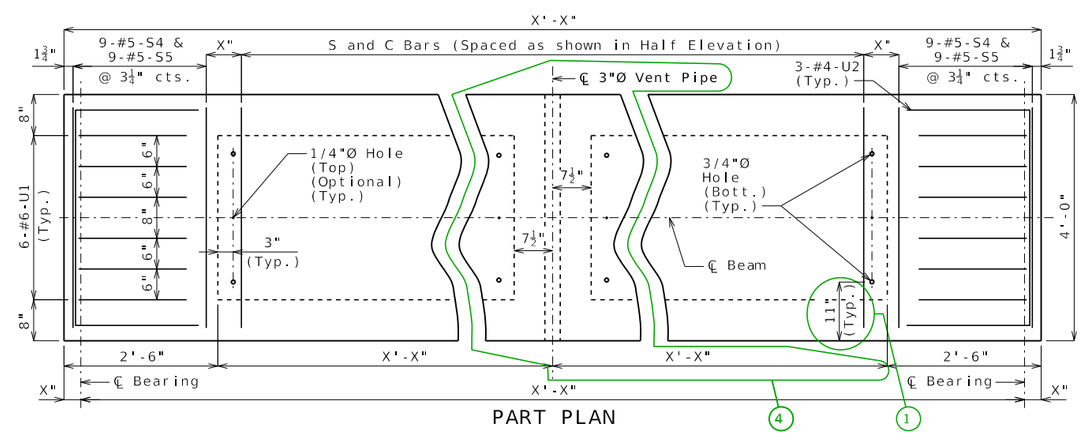

PART PLAN

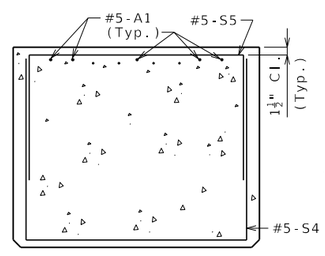

SECTION B-B

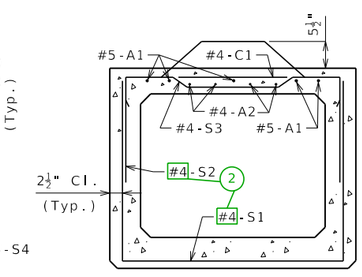

SECTION C-C

(4) ℄ 3/4"Ø (Min.) Coil Tie Rods 2'-6" long (X'-X" at exterior face of exterior beams at end bents)

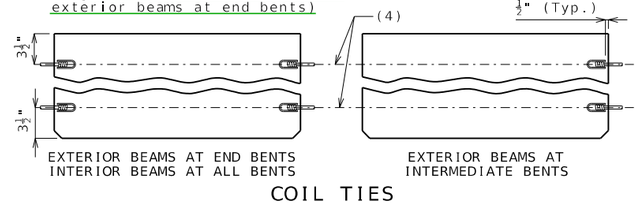

COIL TIES

General Notes:

Concrete for prestressed beams shall be Class A-1 with f'c = psi and f'ci = psi.

Use strands, "Ø Grade 270, with an initial prestress force of kips. (6)

Pretensioned members shall be in accordance with Sec 1029.

Fabricator shall be responsible for location and design of lifting devices.

Exterior and interior beams are the same except: coil ties, application of bond breaker, coil inserts for slab drains.

For Beam Camber Diagram, see Sheet No. __.

For location of coil inserts at slab drains, see Sheet No. __.

For location of coil ties at concrete bent diaphragms, see Sheets No. __ and __.

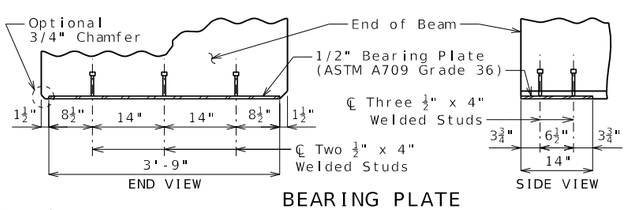

BEARING PLATE

SPREAD BOX BEAMS - SPANS (X-X) AND (X-X)

Detailed
Checked

Note: This drawing is not to scale. Follow dimensions.

Sheet No. of

DATE PREPARED	12/2/2025
ROUTE	STATE MO
DISTRICT	SHEET NO. 9
COUNTY	
JOB NO.	
CONTRACT ID.	
PROJECT NO.	
BRIDGE NO.	

DESCRIPTION

DATE

MISSOURI HIGHWAYS AND TRANSPORTATION COMMISSION

105 WEST CAPITOL
JEFFERSON CITY, MO 65102
1-888-ASK-MODOT (1-888-275-6636)

PSBXB09_39_sq-end Guidance

STANDARD DRAWING GUIDANCE (do not show on plans):
(Turn off level Bridge-Guidance to hide guidance)

① Actual strand arrangement, bent up strands, and debonding (if any) is by design (top two strands are required). Add or remove symbols and instructions as required. Strands may be placed continuously across beam (eliminating 4" space), but dimension to drain hole in Part Plan shall be revised to 10".

② Revise if #5 is required. Use 9'-4" for #5-S1 actual length and 7'-9" for #5-S2 actual length.

③ Splices shown only when necessary (girder length > 60'-2"). Use 19" lap for #4 & 2'-0" lap for #5.

When lap is unnecessary:
- Delete grouped elements.
- Extend A bars to ℄ Beam.
- Revise 10 to 5 A1 bars & 8 to 4 A2 bars.

④ Interior diaphragm, void holes & vent pipe shall be shown only when necessary (when structure may be submerged).

When not necessary:
- Delete the two grouped elements.
- In Half Elev. extend hidden lines to ℄ Beam.
- In Part Plan revise remaining dimension to full length of void.

⑤ Revise minimum dimension if required by design.

⑥ By design. Typically 30.98 kips per 0.5" strand & 43.94 kips per 0.6" strand, rounded to nearest whole kip.

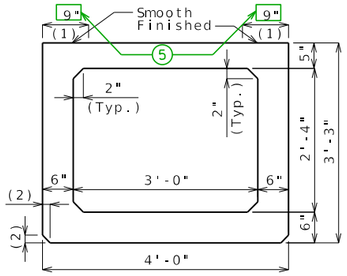

DIMENSIONS

(1) Fabricator shall apply a bond breaker to this region excluding where joint filler will be applied.

(2) $1\frac{1}{2}$" (Typ.) ($\frac{3}{4}$" Optional)

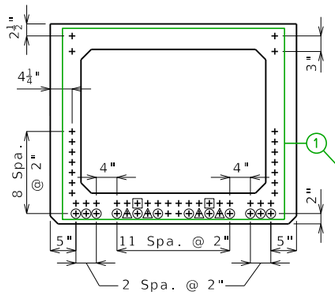

All strands are fully bonded unless otherwise noted.

+ Indicates prestressing strand.

○ Indicates cut and shop bend with 2'-6" projection.

□ Indicates debonded for X'-X" from end of beam.

△ Indicates debonded for X'-X" from end of beam.

STRAND ARRANGEMENT

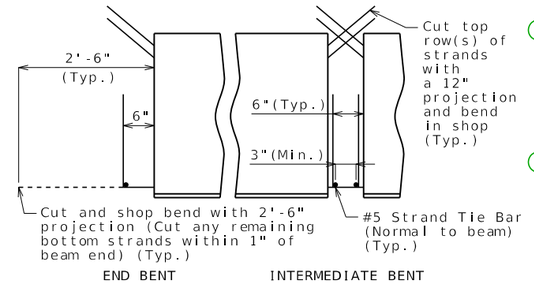

STRANDS AT BEAM ENDS

NO.	SIZE & MARK	ACTUAL LENGTH	SHAPE
10	5 A1	X'-X"	20
8	4 A2	X'-X"	20
X	4 C1	3'-7"	20
X	4 S1	9'-5"	10S
X	4 S2	7'-10"	51S
X	4 S3	4'-6"	50S
18	5 S4	9'-6"	10S
18	5 S5	7'-6"	10S
2	5 S6	8'-6"	10S
2	5 S7	6'-6"	10S
12	6 U1	6'-1"	10S
6	4 U2	8'-4"	21S

BILL OF REINFORCING STEEL - EACH BEAM

BENDING DIAGRAM

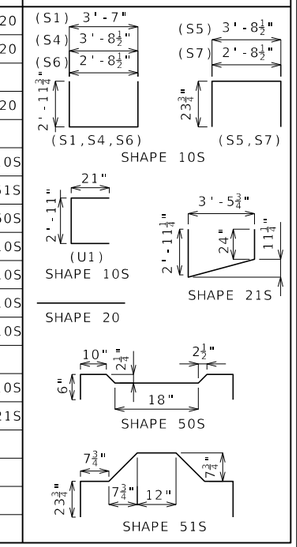

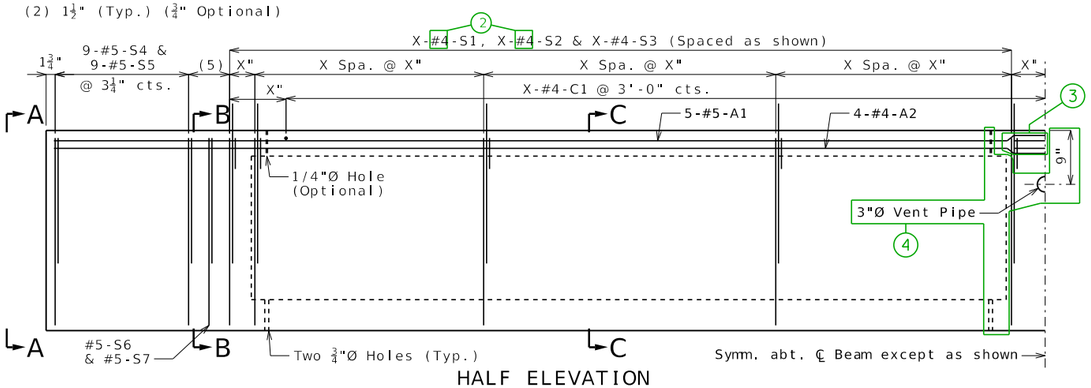

HALF ELEVATION

Dimensions taken along ℄ Beam.

(5) 2 Spa. @ 4"

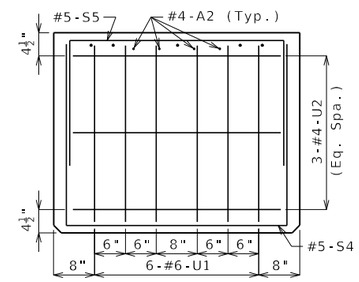

ELEVATION A-A

Strands not shown for clarity.

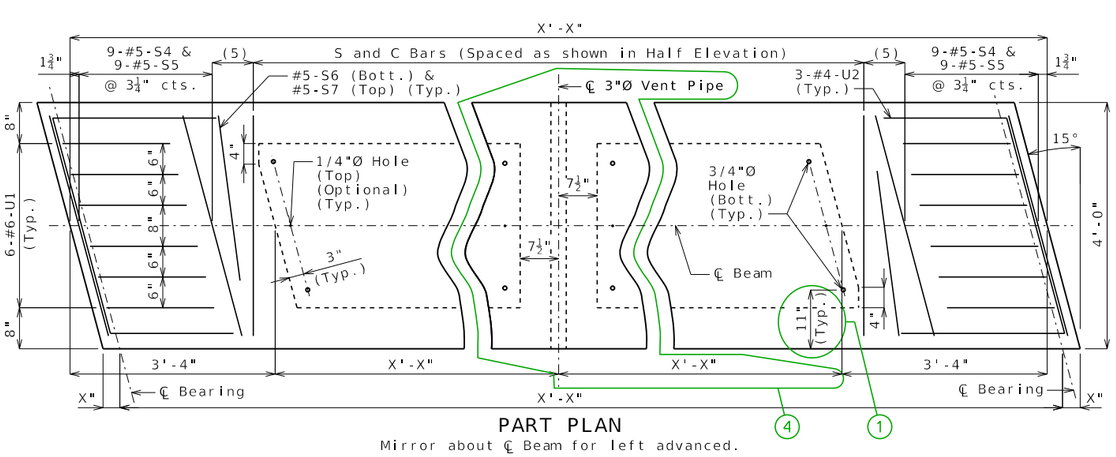

PART PLAN

Mirror about ℄ Beam for left advanced.

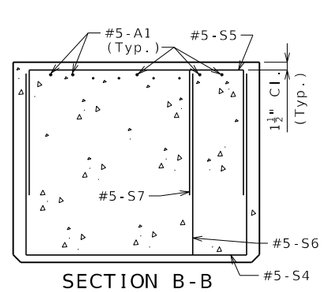

SECTION B-B

Mirror for left advanced.

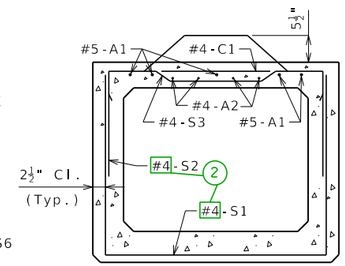

SECTION C-C

(4) ℄ 3/4"Ø (Min.) Coil Tie Rods 2'-6" long (X'-X" at exterior face of exterior beams at end bents)

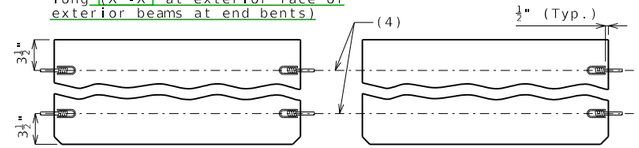

EXTERIOR BEAMS AT END BENTS
INTERIOR BEAMS AT ALL BENTS

EXTERIOR BEAMS AT INTERMEDIATE BENTS

COIL TIES

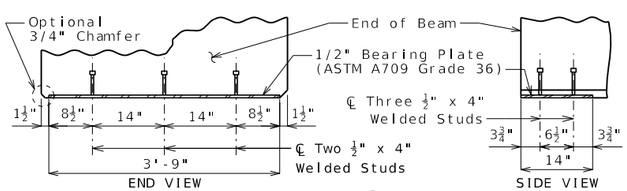

BEARING PLATE

All dimensions are out to out. Use symmetry for dimensions not shown.

Hooks and bends shall be in accordance with the CRSI Manual of Standard Practice for Detailing Reinforced Concrete Structures, Stirrup and Tie Dimensions.

Actual bar lengths are measured along centerline of bar to the nearest inch.

Minimum clearance to reinforcing shall be one inch, unless otherwise shown.

All reinforcement shall be ASTM A615 or A706 Grade 60.

All S2 bars shall be epoxy coated.

General Notes:

Concrete for prestressed beams shall be Class A-1 with f'c = psi and f'ci = psi.

Use strands, "Ø Grade 270, with an initial prestress force of kips.

Pretensioned members shall be in accordance with Sec 1029.

Fabricator shall be responsible for location and design of lifting devices.

Exterior and interior beams are the same except: coil ties, application of bond breaker, coil inserts for slab drains.

For Beam Camber Diagram, see Sheet No. __.

For location of coil inserts at slab drains, see Sheet No. __.

For location of coil ties at concrete bent diaphragms, see Sheet No. __ and __.

Detailed
Checked

Note: This drawing is not to scale. Follow dimensions.

SPREAD BOX BEAMS - SPANS (X-X) AND (X-X)

Sheet No. of

DATE PREPARED	
12/2/2025	
ROUTE	STATE MO
DISTRICT	SHEET NO. 10
COUNTY	
JOB NO.	
CONTRACT ID.	
PROJECT NO.	
BRIDGE NO.	

DESCRIPTION

DATE

MISSOURI HIGHWAYS AND TRANSPORTATION COMMISSION
105 WEST CAPITOL
JEFFERSON CITY, MO 65102
1-888-ASK-MODOT (1-888-275-6636)

PSBXB10_39_sk-end Guidance

STANDARD DRAWING GUIDANCE (do not show on plans):
(Turn off level Bridge-Guidance to hide guidance)

① Actual strand arrangement, bent up strands, and debonding (if any) is by design (top two strands are required). Add or remove symbols and instructions as required. Strands may be placed continuously across beam (eliminating 4" space), but dimension to drain hole in Part Plan shall be revised to 10".

② Revise if #5 is required. Use 9'-4" for #5-S1 actual length and 7'-9" for #5-S2 actual length.

③ Splices shown only when necessary (girder length > 60'-2"). Use 19" lap for #4 & 2'-0" lap for #5.

When lap is unnecessary:
- Delete grouped elements.
- Extend A bars to ℄ Beam.
- Revise 10 to 5 A1 bars & 8 to 4 A2 bars.

④ Interior diaphragm, void holes & vent pipe shall be shown only when necessary (when structure may be submerged).

When not necessary:
- Delete the two grouped elements.
- In Half Elev. extend hidden lines to ℄ Beam.
- In Part Plan revise remaining dimension to full length of void.

⑤ Revise minimum dimension if required by design.

⑥ By design. Typically 30.98 kips per 0.5" strand & 43.94 kips per 0.6" strand, rounded to nearest whole kip.

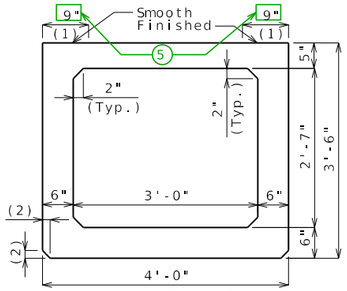

DIMENSIONS

(1) Fabricator shall apply a bond breaker to this region excluding where joint filler will be applied.

(2) $1\frac{1}{2}$" (Typ.) ($\frac{3}{4}$" Optional)

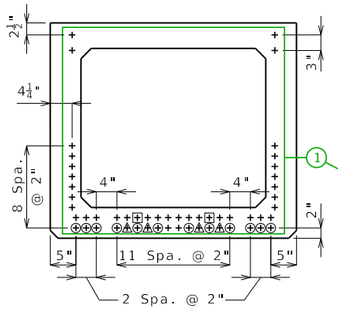

All strands are fully bonded unless otherwise noted.

+ Indicates prestressing strand.

○ Indicates cut and shop bend with 2'-6" projection.

□ Indicates debonded for X'-X" from end of beam.

△ Indicates debonded for X'-X" from end of beam.

STRAND ARRANGEMENT

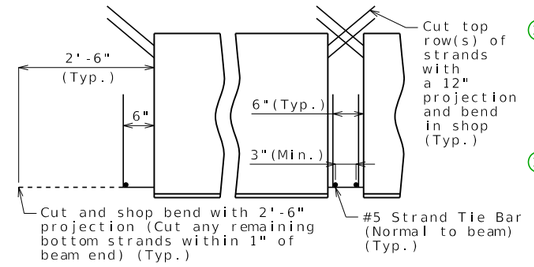

STRANDS AT BEAM ENDS

NO.	SIZE & MARK	ACTUAL LENGTH	SHAPE	BENDING DIAGRAM
10	5 A1	X'-X"	20	
8	4 A2	X'-X"	20	
X	4 C1	3'-7"	20	
X	4 S1	9'-11"	10S	
X	4 S2	7'-10"	51S	
X	4 S3	4'-6"	50S	
18	5 S4	9'-10"	10S	
18	5 S5	7'-4"	10S	
12	6 U1	6'-4"	10S	
8	4 U2	7'-4"	10S	

BILL OF REINFORCING STEEL - EACH BEAM

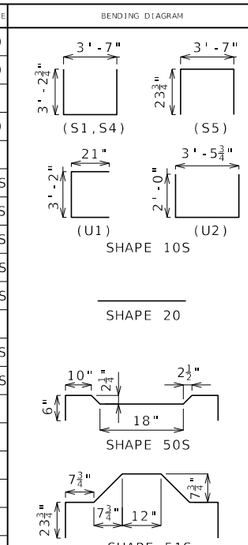

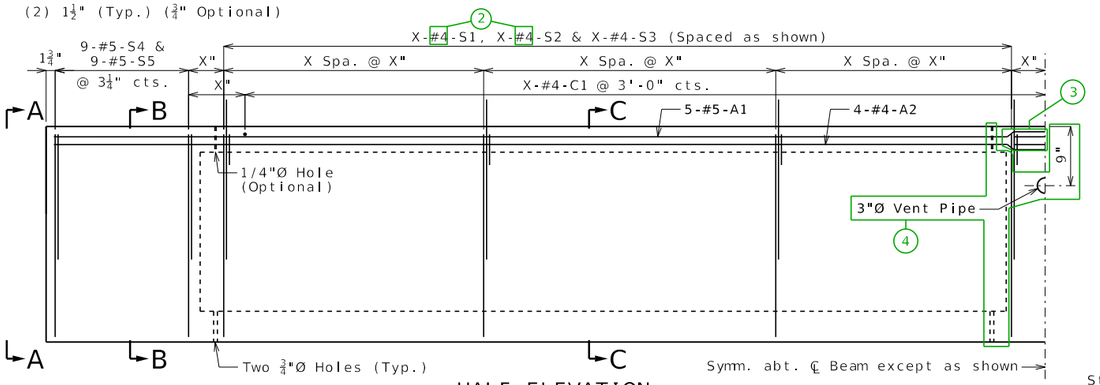

HALF ELEVATION

Strands not shown for clarity.

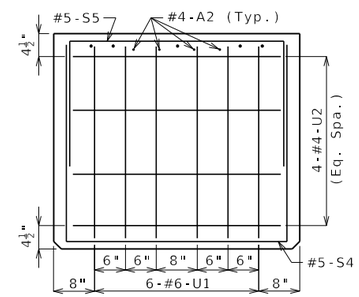

ELEVATION A-A

All dimensions are out to out. Use symmetry for dimensions not shown.

Hooks and bends shall be in accordance with the CRSI Manual of Standard Practice for Detailing Reinforced Concrete Structures, Stirrup and Tie Dimensions.

Actual bar lengths are measured along centerline of bar to the nearest inch.

Minimum clearance to reinforcing shall be one inch, unless otherwise shown.

All reinforcement shall be ASTM A615 or A706 Grade 60.

All S2 bars shall be epoxy coated.

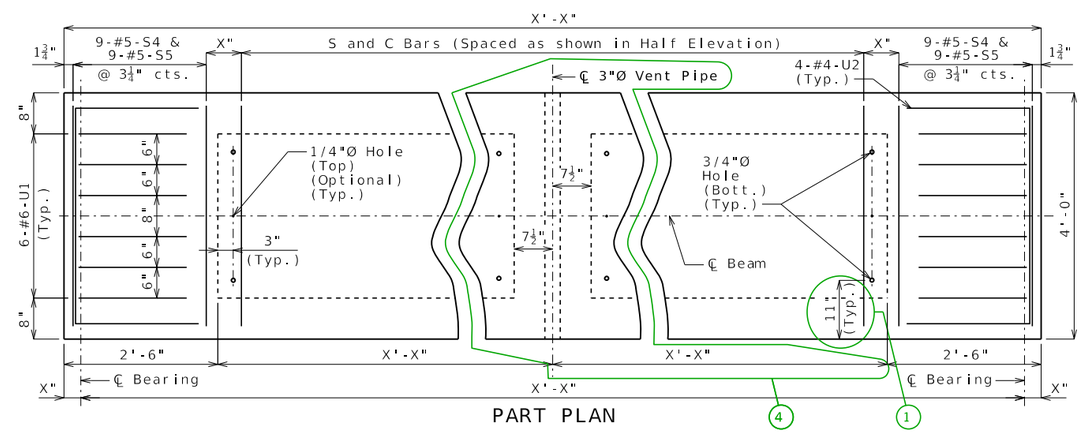

PART PLAN

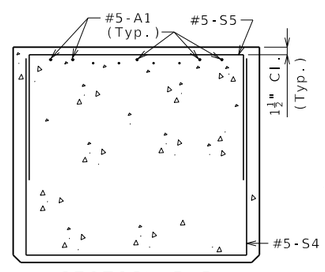

SECTION B-B

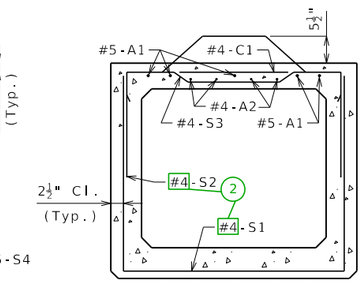

SECTION C-C

General Notes:

Concrete for prestressed beams shall be Class A-1 with f'c = psi and f'ci = psi.

Use strands, "Ø Grade 270, with an initial prestress force of kips. 6

Pretensioned members shall be in accordance with Sec 1029.

Fabricator shall be responsible for location and design of lifting devices.

Exterior and interior beams are the same except: coil ties, application of bond breaker, coil inserts for slab drains.

For Beam Camber Diagram, see Sheet No. __.

For location of coil inserts at slab drains, see Sheet No. __.

For location of coil ties at concrete bent diaphragms, see Sheets No. __ and __.

(4) ℄ 3/4"Ø (Min.) Coil Tie Rods 2'-6" long (X'-X" at exterior face of exterior beams at end bents)

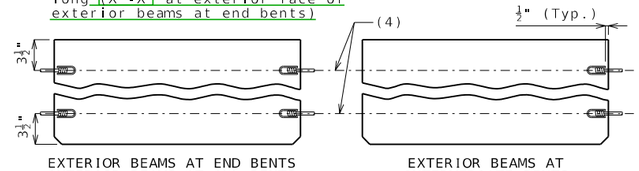

EXTERIOR BEAMS AT END BENTS
INTERIOR BEAMS AT ALL BENTS

EXTERIOR BEAMS AT INTERMEDIATE BENTS

COIL TIES

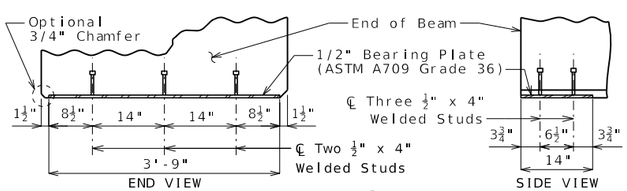

BEARING PLATE

SPREAD BOX BEAMS - SPANS (X-X) AND (X-X)

Detailed
Checked

Note: This drawing is not to scale. Follow dimensions.

Sheet No. of

DATE PREPARED	12/2/2025
ROUTE	STATE MO
DISTRICT	SHEET NO. 11
COUNTY	
JOB NO.	
CONTRACT ID.	
PROJECT NO.	
BRIDGE NO.	

DESCRIPTION

DATE

MISSOURI HIGHWAYS AND TRANSPORTATION COMMISSION
105 WEST CAPITOL
JEFFERSON CITY, MO 65102
1-888-ASK-MODOT (1-888-275-6636)

PSBXB11_42_sq-end Guidance

STANDARD DRAWING GUIDANCE (do not show on plans):
(Turn off level Bridge-Guidance to hide guidance)

① Actual strand arrangement, bent up strands, and debonding (if any) is by design (top two strands are required). Add or remove symbols and instructions as required. Strands may be placed continuously across beam (eliminating 4" space), but dimension to drain hole in Part Plan shall be revised to 10".

② Revise if #5 is required. Use 9'-10" for #5-S1 actual length and 7'-9" for #5-S2 actual length.

③ Splices shown only when necessary (girder length > 60'-2"). Use 19" lap for #4 & 2'-0" lap for #5.

When lap is unnecessary:
- Delete grouped elements.
- Extend A bars to ℄ Beam.
- Revise 10 to 5 A1 bars & 8 to 4 A2 bars.

④ Interior diaphragm, void holes & vent pipe shall be shown only when necessary (when structure may be submerged).

When not necessary:
- Delete the two grouped elements.
- In Half Elev. extend hidden lines to ℄ Beam.
- In Part Plan revise remaining dimension to full length of void.

⑤ Revise minimum dimension if required by design.

⑥ By design. Typically 30.98 kips per 0.5" strand & 43.94 kips per 0.6" strand, rounded to nearest whole kip.

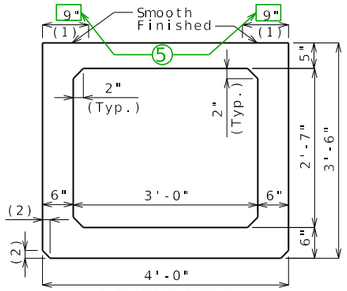

DIMENSIONS

(1) Fabricator shall apply a bond breaker to this region excluding where joint filler will be applied.

(2) $1\frac{1}{2}$" (Typ.) ($\frac{3}{4}$" Optional)

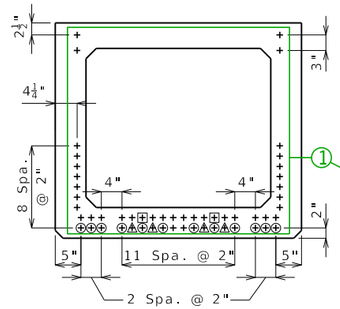

All strands are fully bonded unless otherwise noted.

+ Indicates prestressing strand.

○ Indicates cut and shop bend with 2'-6" projection.

□ Indicates debonded for X'-X" from end of beam.

△ Indicates debonded for X'-X" from end of beam.

STRAND ARRANGEMENT

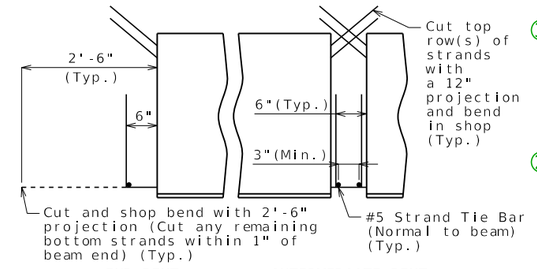

STRANDS AT BEAM ENDS

BILL OF REINFORCING STEEL - EACH BEAM				
NO.	SIZE & MARK	ACTUAL LENGTH	SHAPE	BENDING DIAGRAM
10	5 A1	X'-X"	20	
8	4 A2	X'-X"	20	
X	4 C1	3'-7"	20	
X	4 S1	9'-11"	10S	
X	4 S2	7'-10"	51S	
X	4 S3	4'-6"	50S	
18	5 S4	10'-0"	10S	
18	5 S5	7'-6"	10S	
2	5 S6	9'-0"	10S	
2	5 S7	6'-6"	10S	
12	6 U1	6'-4"	10S	
8	4 U2	8'-4"	21S	

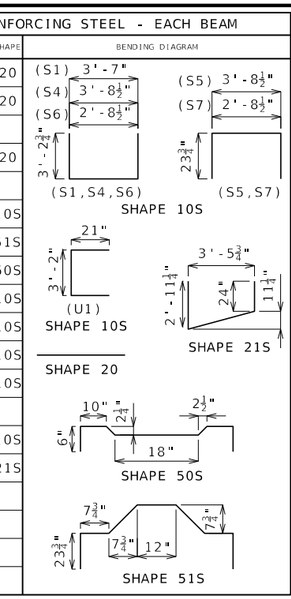

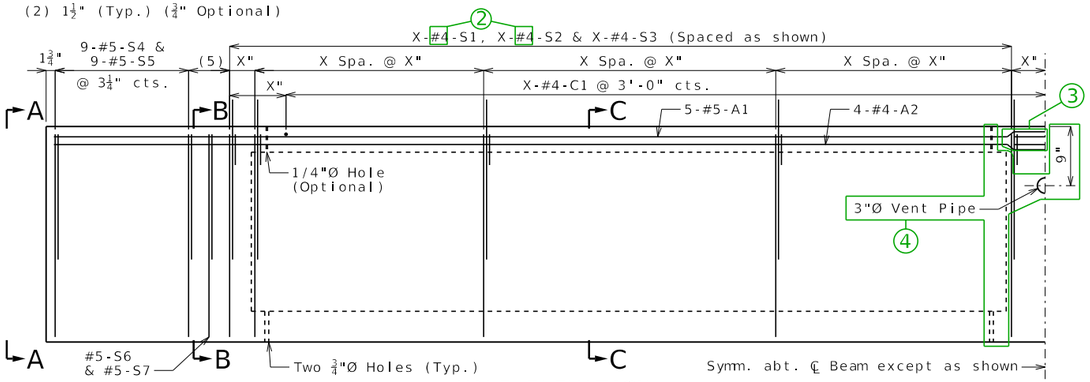

HALF ELEVATION

Dimensions taken along ℄ Beam.

(5) 2 Spa. @ 4"

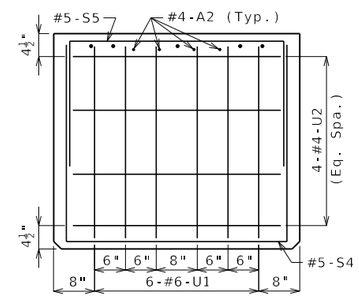

ELEVATION A-A

Strands not shown for clarity.

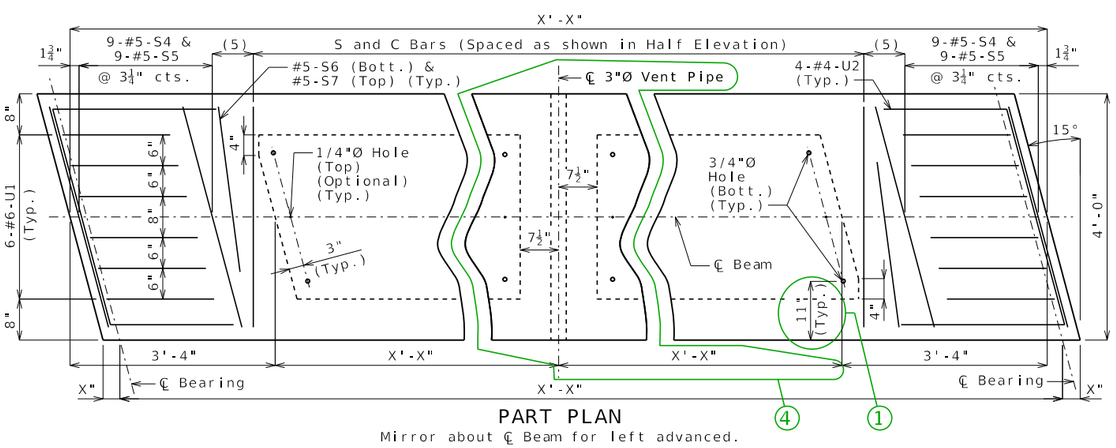

PART PLAN

Mirror about ℄ Beam for left advanced.

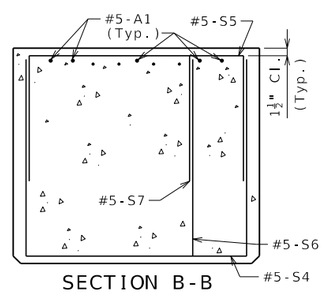

SECTION B-B

Mirror for left advanced.

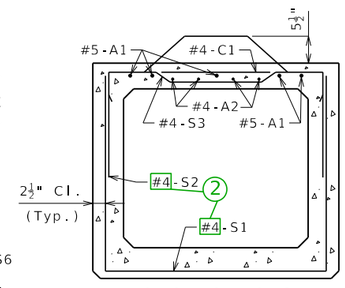

SECTION C-C

(4) ℄ 3/4"Ø (Min.) Coil Tie Rods 2'-6" long (X'-X" at exterior face of exterior beams at end bents)

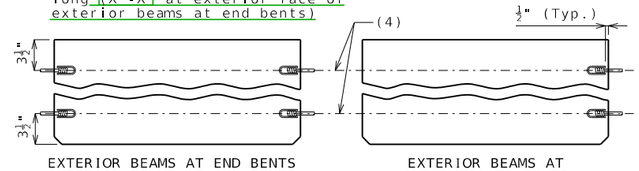

EXTERIOR BEAMS AT END BENTS
INTERIOR BEAMS AT ALL BENTS

EXTERIOR BEAMS AT INTERMEDIATE BENTS

COIL TIES

All dimensions are out to out. Use symmetry for dimensions not shown.

Hooks and bends shall be in accordance with the CRSI Manual of Standard Practice for Detailing Reinforced Concrete Structures, Stirrup and Tie Dimensions.

Actual bar lengths are measured along centerline of bar to the nearest inch.

Minimum clearance to reinforcing shall be one inch, unless otherwise shown.

All reinforcement shall be ASTM A615 or A706 Grade 60.

All S2 bars shall be epoxy coated.

General Notes:

Concrete for prestressed beams shall be Class A-1 with f'c = psi and f'ci = psi.

Use strands, "Ø Grade 270, with an initial prestress force of kips. 6

Pretensioned members shall be in accordance with Sec 1029.

Fabricator shall be responsible for location and design of lifting devices.

Exterior and interior box beams are the same except: coil ties, application of bond breaker, coil inserts for slab drains.

For Beam Camber Diagram, see Sheet No. __.

For location of coil inserts at slab drains, see Sheet No. __.

For location of coil ties at concrete bent diaphragms, see Sheet No. __ and __.

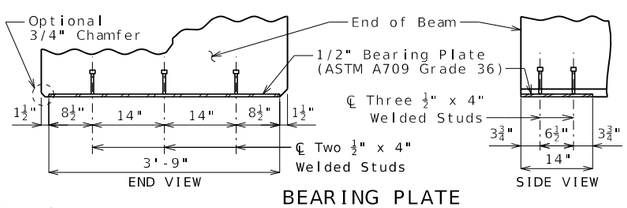

BEARING PLATE

SPREAD BOX BEAMS - SPANS (X-X) AND (X-X)

Detailed
Checked

Note: This drawing is not to scale. Follow dimensions.

Sheet No. of

DATE PREPARED	12/2/2025
ROUTE	STATE MO
DISTRICT	SHEET NO. 12
COUNTY	
JOB NO.	
CONTRACT ID.	
PROJECT NO.	
BRIDGE NO.	

DESCRIPTION

DATE

MISSOURI HIGHWAYS AND TRANSPORTATION COMMISSION
105 WEST CAPITOL
JEFFERSON CITY, MO 65102
1-888-ASK-MODOT (1-888-275-6636)

PSBXB12_42_sk-end Guidance

STANDARD DRAWING GUIDANCE (do not show on plans):
(Turn off level Bridge-Guidance to hide guidance)

① Actual strand arrangement, bent up strands, and debonding (if any) is by design (top two strands are required). Add or remove symbols and instructions as required. Strands may be placed continuously across beam (eliminating 4" space), but dimension to drain hole in Part Plan shall be revised to 10".

② Revise if #5 is required. Use 9'-10" for #5-S1 actual length and 7'-9" for #5-S2 actual length.

③ Splices shown only when necessary (girder length > 60'-2"). Use 19" lap for #4 & 2'-0" lap for #5.

When lap is unnecessary:
- Delete grouped elements.
- Extend A bars to ℄ Beam.
- Revise 10 to 5 A1 bars & 8 to 4 A2 bars.

④ Interior diaphragm, void holes & vent pipe shall be shown only when necessary (when structure may be submerged).

When not necessary:
- Delete the two grouped elements.
- In Half Elev. extend hidden lines to ℄ Beam.
- In Part Plan revise remaining dimension to full length of void.

⑤ Revise minimum dimension if required by design.

⑥ By design. Typically 30.98 kips per 0.5" strand & 43.94 kips per 0.6" strand, rounded to nearest whole kip.

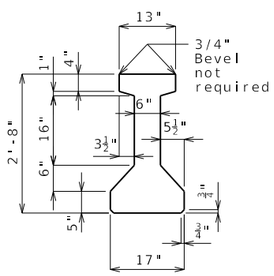

DIMENSIONS

℄ GIRDER END OF GIRDER

STRAND ARRANGEMENT

+ Indicates prestressing strand.

○ Indicates cut & shop bend with 2'-6" projection.

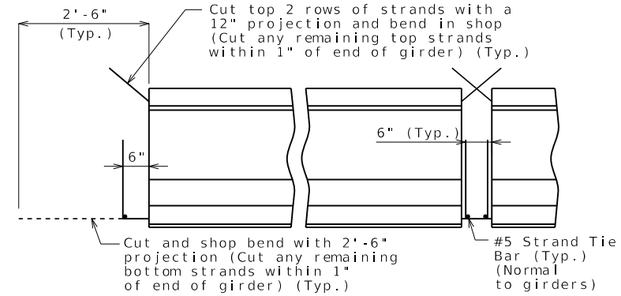

END BENT INTERMEDIATE BENT

STRANDS AT GIRDER ENDS

BILL OF REINFORCING STEEL - EACH GIRDER				
NO.	SIZE & MARK	ACTUAL LENGTH	SHAPE	BENDING DIAGRAM
XXX	X A1	X'-X"	20	
XXX	X B1	X'-X"	11S	
16	6 B2	3'-5"	11S	
XXX	4 C1	13"	10S	
XXX	4 D1	2'-3"	9S	

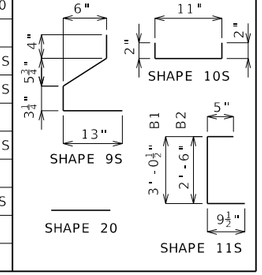

All dimensions are out to out.

Hooks and bends shall be in accordance with the CRSI Manual of Standard Practice for Detailing Reinforced Concrete Structures, Stirrup and Tie Dimensions.

Actual bar lengths are measured along centerline of bar to the nearest inch.

Minimum clearance to reinforcing shall be one inch.

All reinforcement shall be ASTM A615 or A706 Grade 60.

The two D1 bars may be furnished as one bar at the fabricator's option.

All B1 bars shall be epoxy coated.

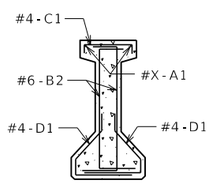

SECTION A-A

Strands not shown for clarity.

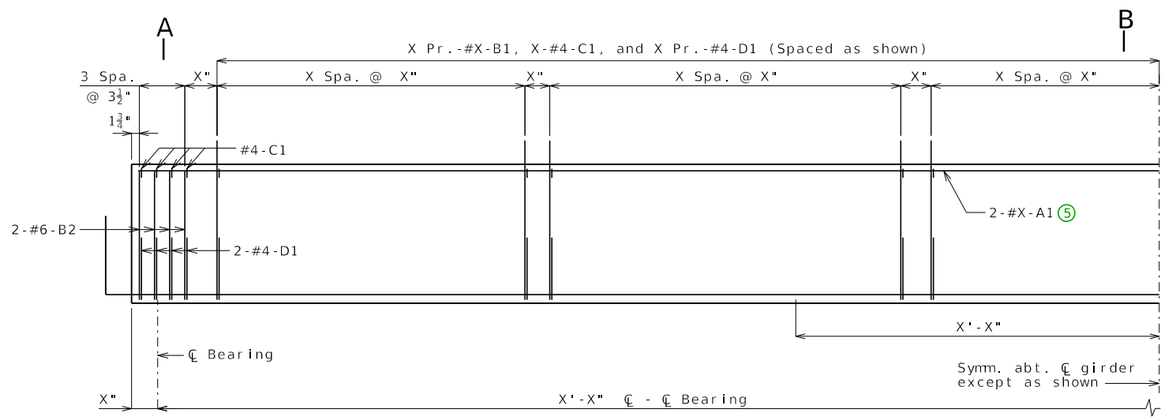

HALF ELEVATION

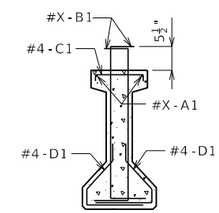

SECTION B-B

Strands not shown for clarity.

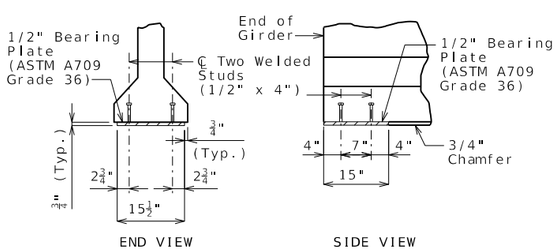

END VIEW SIDE VIEW

BEARING PLATE

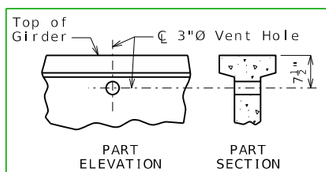

PART ELEVATION PART SECTION

VENT HOLE

Place vent holes at or near upgrade 1/3 point of girders and clear reinforcing steel or strands by 1 1/2" minimum and steel intermediate diaphragm bolt connections by 6" minimum.

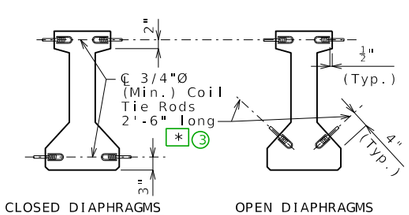

CLOSED DIAPHRAGMS AND INTEGRAL BENTS OPEN DIAPHRAGMS

COIL TIES

Exclude coil tie at exterior face of exterior girders except at integral end bents.

* x'-x" at exterior face of exterior girders at end bents 3

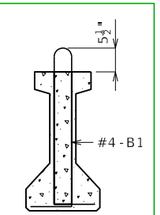

B1 BAR PERMISSIBLE ALTERNATE SHAPE

General Notes:

Concrete for prestressed girders shall be Class A-1 with f'c = psi and f'ci = psi.

Use strands, 1/2"Ø Grade 270, with an initial prestress force of 4 kips.

Pretensioned members shall be in accordance with Sec 1029.

Fabricator shall be responsible for location and design of lifting devices.

Exterior and interior girders are the same except: coil ties, coil inserts for slab drains, holes for steel intermediate diaphragms.

For Girder Camber Diagram, see Sheet No. .

The 1 1/2"Ø holes shall be cast in the web for steel intermediate diaphragms. Drilling is not allowed. For location of holes and details of steel intermediate diaphragms, see Sheet No. .

For location of coil inserts at slab drains, see Sheet No. .

For location of coil ties at concrete bent diaphragms, see Sheets No. & .

DATE PREPARED	
12/2/2025	
ROUTE	STATE MO
DISTRICT	SHEET NO. PSI_01
COUNTY	
JOB NO.	
CONTRACT ID.	
PROJECT NO.	
BRIDGE NO.	

DESCRIPTION

DATE

MISSOURI HIGHWAYS AND TRANSPORTATION COMMISSION

105 WEST CAPITOL
JEFFERSON CITY, MO 65102
1-888-ASK-MODOT (1-888-275-6636)

I-GIRDERS - SPANS (X-X) AND (X-X)

Detailed
Checked

Note: This drawing is not to scale. Follow dimensions.

Sheet No. of

PSI_01_type2_2-8 Guidance & Alternate Details

Standard Drawing Guidance (do not show on plans):

To display the strand details open the reference files dialog box and activate the display option of the file with the description that best matches what is required by the design.

See EPG for actual length of B1 bars which vary by size.

1. This detail only needs to be used if the structure is over water. For all other crossings remove this detail.
2. Remove if #5-B1 bars are used instead of #4-B1 bars.
3. Use with end spans when both interior & exterior girders are detailed on the same sheet, and the 2'-6" long tie rod will not fit in the exterior diaphragm portion. Remove when not necessary.
4. By design. Typically 30.98 kips per 1/2" strand & 43.94 kips per 0.6" strand, rounded to nearest whole kip.
5. If lap splice is required for A bars, use 28" lap for #5 bars; 38" lap for #6 bars

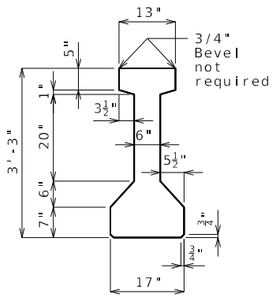

DIMENSIONS

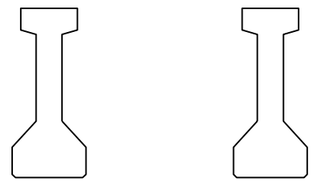

℄ GIRDER END OF GIRDER

STRAND ARRANGEMENT

+ Indicates prestressing strand. ○ Indicates cut & shop bend with 2'-6" projection.

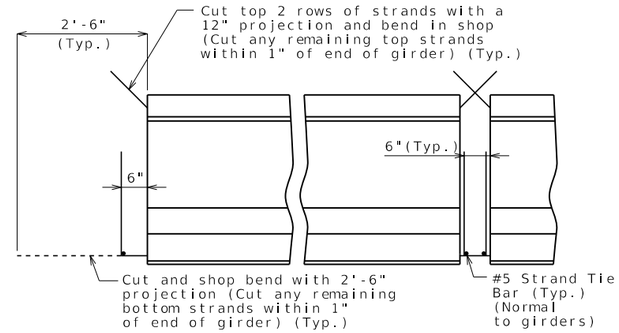

END BENT INTERMEDIATE BENT

STRANDS AT GIRDER ENDS

BILL OF REINFORCING STEEL - EACH GIRDER				
NO.	SIZE & MARK	ACTUAL LENGTH	SHAPE	BENDING DIAGRAM
XXX	X A1	X'-X"	20	
XXX	X B1	X'-X"	11S	
16	6 B2	4'-0"	11S	
XXX	4 C1	13"	10S	
XXX	4 D1	2'-5"	9S	

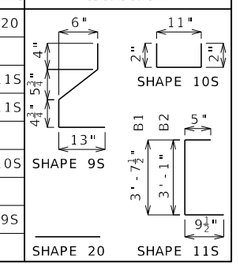

All dimensions are out to out.

Hooks and bends shall be in accordance with the CRSI Manual of Standard Practice for Detailing Reinforced Concrete Structures, Stirrup and Tie Dimensions.

Actual bar lengths are measured along centerline of bar to the nearest inch.

Minimum clearance to reinforcing shall be one inch.

All reinforcement shall be ASTM A615 or A706 Grade 60.

The two D1 bars may be furnished as one bar at the fabricator's option.

All B1 bars shall be epoxy coated.

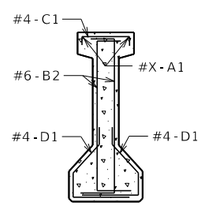

SECTION A-A

Strands not shown for clarity.

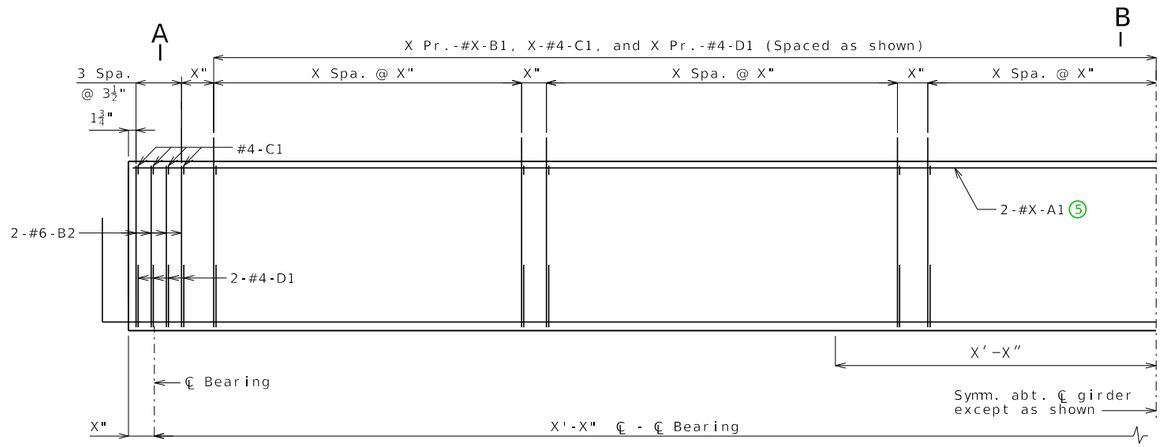

HALF ELEVATION

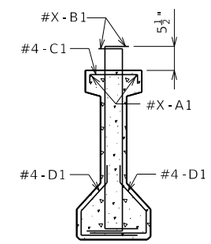

SECTION B-B

Strands not shown for clarity.

General Notes:

Concrete for prestressed girders shall be Class A-1 with f'c = psi and f'ci = psi.

Use strands, 1/2"Ø Grade 270, with an initial prestress force of 4 kips.

Pretensioned members shall be in accordance with Sec 1029.

Fabricator shall be responsible for location and design of lifting devices.

Exterior and interior girders are the same except: coil ties, coil inserts for slab drains, holes for steel intermediate diaphragms.

For Girder Camber Diagram, see Sheet No. .

The 1 1/2"Ø holes shall be cast in the web for steel intermediate diaphragms. Drilling is not allowed. For location of holes and details of steel intermediate diaphragms, see Sheet No. .

For location of coil inserts at slab drains, see Sheet No. .

For location of coil ties at concrete bent diaphragms, see Sheets No. & .

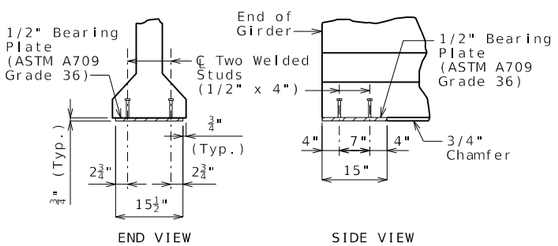

END VIEW SIDE VIEW

BEARING PLATE

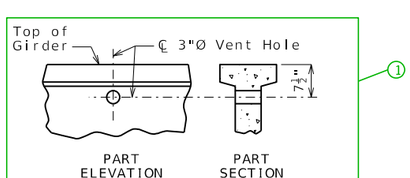

PART ELEVATION PART SECTION

VENT HOLE

Place vent holes at or near upgrade 1/3 point of girders and clear reinforcing steel or strands by 1 1/2" minimum and steel intermediate diaphragm bolt connections by 6" minimum. 1

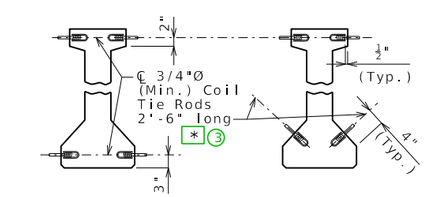

CLOSED DIAPHRAGMS AND INTEGRAL BENTS OPEN DIAPHRAGMS

COIL TIES

Exclude coil tie at exterior face of exterior girders except at integral end bents.

* x'-x" at exterior face of exterior girders at end bents 3

2

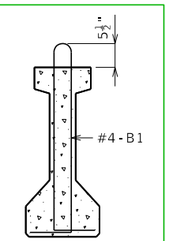

B1 BAR PERMISSIBLE ALTERNATE SHAPE

DATE PREPARED	
12/2/2025	
ROUTE	STATE
	MO
DISTRICT	SHEET NO.
	2
COUNTY	
JOB NO.	
CONTRACT ID.	
PROJECT NO.	
BRIDGE NO.	

DESCRIPTION	DATE

MISSOURI HIGHWAYS AND TRANSPORTATION COMMISSION

105 WEST CAPITOL
JEFFERSON CITY, MO 65102
1-888-ASK-MODOT (1-888-275-6636)

I-GIRDERS - SPANS (X-X) AND (X-X)

Detailed
Checked

Note: This drawing is not to scale. Follow dimensions.

PSI_02_type3_3-3 Guidance & Alternate Details

Standard Drawing Guidance (do not show on plans):

To display the strand details open the reference files dialog box and activate the display option of the file with the description that best matches what is required by the design.

See EPG for actual length of B1 bars which vary by size.

1. This detail only needs to be used if the structure is over water. For all other crossings remove this detail.
2. Remove if #5-B1 bars are used instead of #4-B1 bars.
3. Use with end spans when both interior & exterior girders are detailed on the same sheet, and the 2'-6" long tie rod will not fit in the exterior diaphragm portion. Remove when not necessary.
4. By design. Typically 30.98 kips per 1/2" strand & 43.94 kips per 0.6" strand, rounded to nearest whole kip.
5. If lap splice is required for A bars, use 28" lap for #5 bars; 38" lap for #6 bars

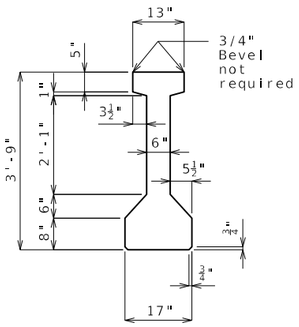

DIMENSIONS

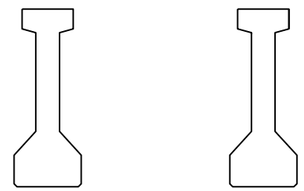

℄ GIRDER END OF GIRDER

STRAND ARRANGEMENT

+ Indicates prestressing strand. ○ Indicates cut & shop bend with 2'-6" projection.

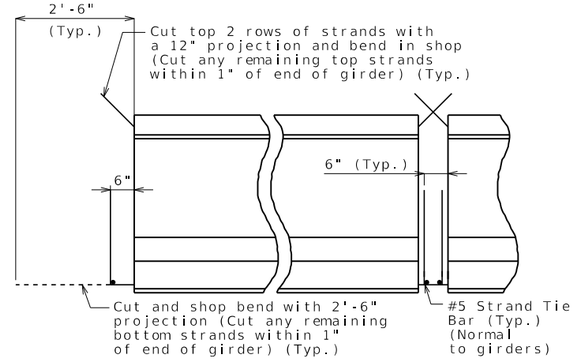

END BENT INTERMEDIATE BENT

STRANDS AT GIRDER ENDS

BILL OF REINFORCING STEEL - EACH GIRDER			
NO.	SIZE & MARK	ACTUAL LENGTH	SHAPE
XXX	X A1	X'-X"	20
XXX	X B1	X'-X"	11S
16	6 B2	4'-6"	11S
XXX	4 C1	13"	10S
XXX	4 D1	2'-6"	9S

BENDING DIAGRAM

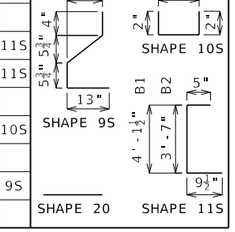

All dimensions are out to out.

Hooks and bends shall be in accordance with the CRSI Manual of Standard Practice for Detailing Reinforced Concrete Structures, Stirrup and Tie Dimensions.

Actual bar lengths are measured along centerline of bar to the nearest inch.

Minimum clearance to reinforcing shall be one inch.

All reinforcement shall be ASTM A615 or A706 Grade 60.

The two D1 bars may be furnished as one bar at the fabricator's option.

All B1 bars shall be epoxy coated.

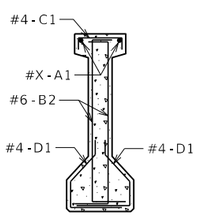

SECTION A-A

Strands not shown for clarity.

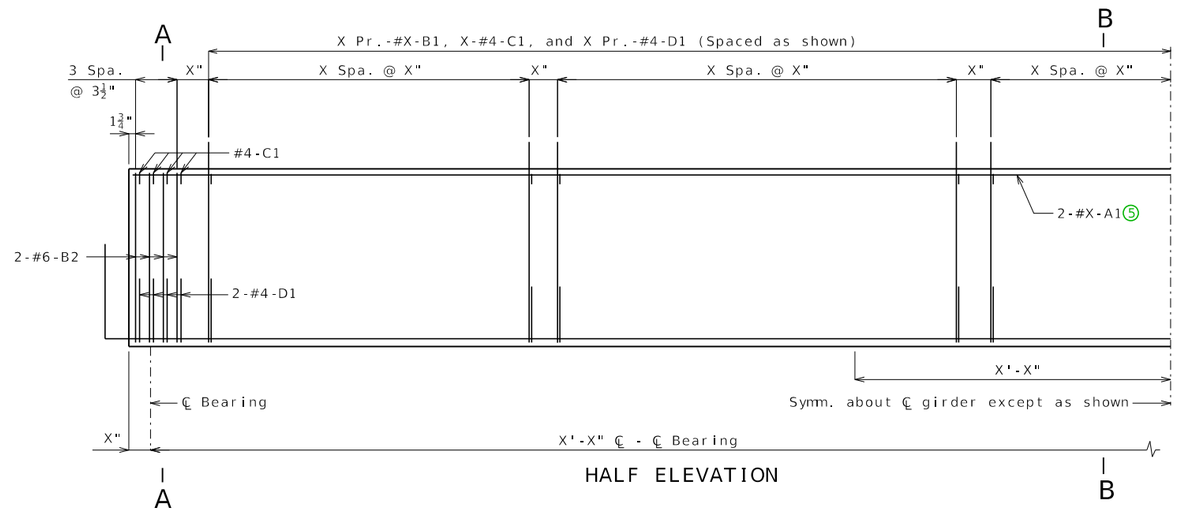

HALF ELEVATION

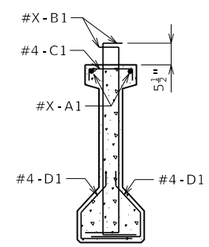

SECTION B-B

Strands not shown for clarity.

General Notes:

Concrete for prestressed girders shall be Class A-1 with f'c = psi and f'ci = psi.

Use strands, 1/2"Ø Grade 270 with an initial prestress force of 4 kips.

Pretensioned members shall be in accordance with Sec 1029.

Fabricator shall be responsible for location and design of lifting devices.

Exterior and interior girders are the same except: coil ties, coil inserts for slab drains, holes for steel intermediate diaphragms.

For Girder Camber Diagram, see Sheet No. .

The 1 1/2"Ø holes shall be cast in the web for steel intermediate diaphragms. Drilling is not allowed. For location of holes and details of steel intermediate diaphragms, see Sheet No. .

For location of coil inserts at slab drains, see Sheet No. .

For location of coil ties at concrete bent diaphragms, see Sheets No. & .

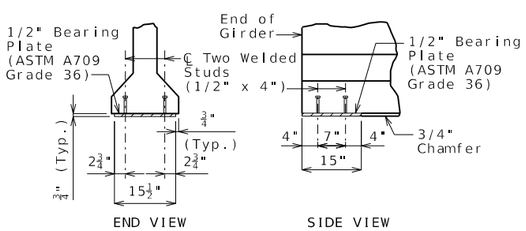

END VIEW SIDE VIEW

BEARING PLATE

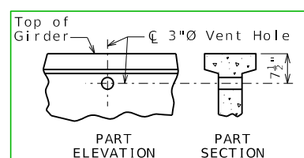

PART ELEVATION PART SECTION

VENT HOLE

Place vent holes at or near upgrade 1/3 point of girders and clear reinforcing steel or strands by 1 1/2" minimum and steel intermediate diaphragm bolt connections by 6" minimum. 1

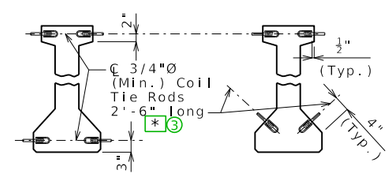

CLOSED DIAPHRAGMS AND INTEGRAL BENTS OPEN DIAPHRAGMS

COIL TIES

Exclude coil tie at exterior face of exterior girders except at integral end bents.

* x'-x" at exterior face of exterior girders at end bents 3

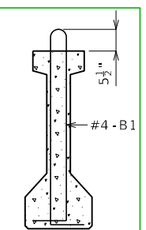

2 B1 BAR PERMISSIBLE ALTERNATE SHAPE

I-GIRDERS - SPANS (X-X) AND (X-X)

Detailed
Checked

Note: This drawing is not to scale. Follow dimensions.

Sheet No. of

DATE PREPARED	12/2/2025
ROUTE	STATE MO
DISTRICT	SHEET NO. 3
COUNTY	
JOB NO.	
CONTRACT ID.	
PROJECT NO.	
BRIDGE NO.	

DESCRIPTION

DATE

MISSOURI HIGHWAYS AND TRANSPORTATION COMMISSION

105 WEST CAPITOL
JEFFERSON CITY, MO 65102
1-888-ASK-MODOT (1-888-275-6636)

PSI_03_type4_3-9 Guidance & Alternate Details

Standard Drawing Guidance (do not show on plans):

To display the strand details open the reference files dialog box and activate the display option of the file with the description that best matches what is required by the design.

See EPG for actual length of B1 bars which vary by size.

1. This detail only needs to be used if the structure is over water. For all other crossings remove this detail.
2. Remove if #5-B1 bars are used instead of #4-B1 bars.
3. Use with end spans when both interior & exterior girders are detailed on the same sheet, and the 2'-6" long tie rod will not fit in the exterior diaphragm portion. Remove when not necessary.
4. By design. Typically 30.98 kips per 1/2" strand & 43.94 kips per 0.6" strand, rounded to nearest whole kip.
5. If lap splice is required for A bars, use 28" lap for #5 bars; 38" lap for #6 bars

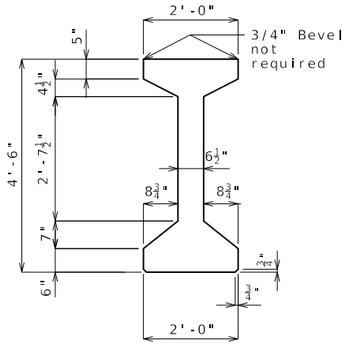

DIMENSIONS

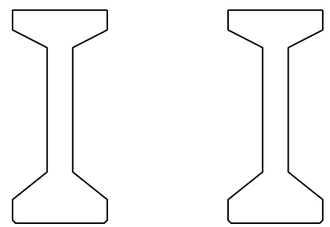

℄ GIRDER END OF GIRDER

STRAND ARRANGEMENT

+ Indicates prestressing strand. ○ Indicates cut & shop bend with 2'-6" projection.

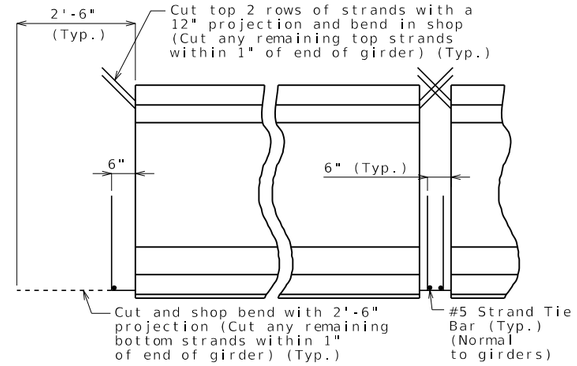

END BENT INTERMEDIATE BENT

STRANDS AT GIRDER ENDS

BILL OF REINFORCING STEEL - EACH GIRDER				
NO.	SIZE & MARK	ACTUAL LENGTH	SHAPE	BENDING DIAGRAM
XXX	X A1	X'-X"	20	
XXX	X B1	X'-X"	11S	
16	6 B2	5'-3"	11S	
XXX	4 C1	2'-2"	10S	
XXX	4 D1	3'-0"	9S	

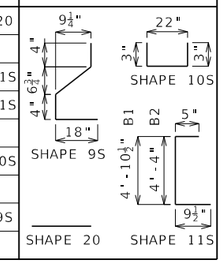

All dimensions are out to out.

Hooks and bends shall be in accordance with the CRSI Manual of Standard Practice for Detailing Reinforced Concrete Structures, Stirrup and Tie Dimensions.

Actual bar lengths are measured along centerline of bar to the nearest inch.

Minimum clearance to reinforcing shall be one inch.

All reinforcement shall be ASTM A615 or A706 Grade 60.

The two D1 bars may be furnished as one bar at the fabricator's option.

All B1 bars shall be epoxy coated.

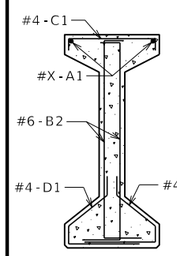

SECTION A-A

Strands not shown for clarity.

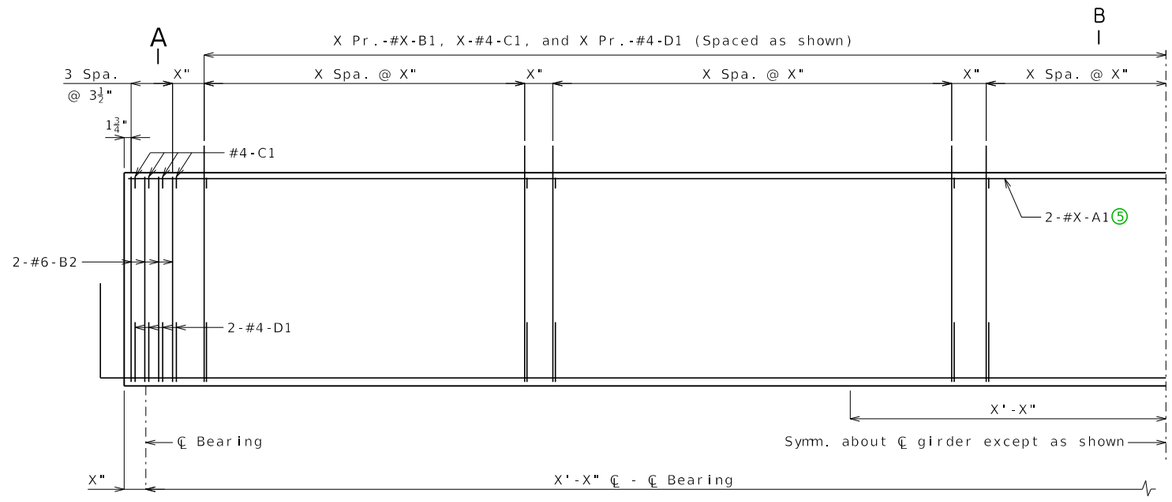

HALF ELEVATION

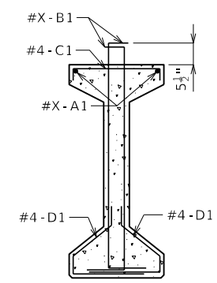

SECTION B-B

Strands not shown for clarity.

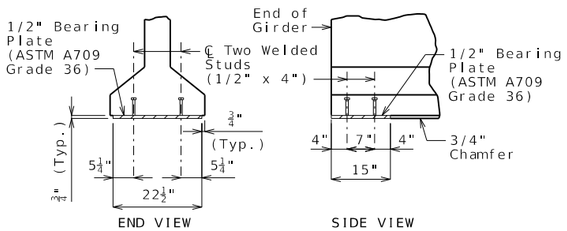

BEARING PLATE

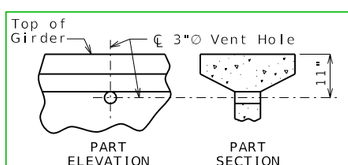

1

VENT HOLE

Place vent holes at or near upgrade 1/3 point of girders and clear reinforcing steel or strands by 1 1/2" minimum and steel intermediate diaphragm bolt connections by 6" minimum.

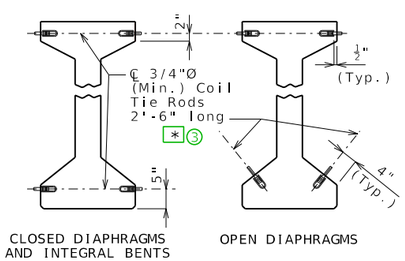

COIL TIES

Exclude coil tie at exterior face of exterior girders except at integral end bents.

* x'-x" at exterior face of exterior girders at end bents 3

2

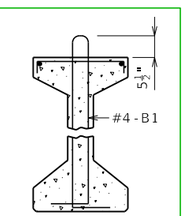

B1 BAR PERMISSIBLE ALTERNATE SHAPE

General Notes:

Concrete for prestressed girders shall be Class A-1 with f'c = psi and f'ci = psi.

Use strands, 1/2"Ø Grade 270 4 with an initial prestress force of kips.

Pretensioned members shall be in accordance with Sec 1029.

Fabricator shall be responsible for location and design of lifting devices.

Exterior and interior girders are the same except: coil ties, coil inserts for slab drains, holes for steel intermediate diaphragms.

For Girder Camber Diagram, see Sheet No. .

The 1 1/2"Ø holes shall be cast in the web for steel intermediate diaphragms. Drilling is not allowed. For location of holes and details of steel intermediate diaphragms, see Sheet No. .

For location of coil inserts at slab drains, see Sheet No. .

For location of coil ties at concrete bent diaphragms, see Sheets No. & .

I-GIRDERS - SPANS (X-X) AND (X-X)

DATE PREPARED	12/2/2025
ROUTE	STATE MO
DISTRICT	SHEET NO. 4
COUNTY	
JOB NO.	
CONTRACT ID.	
PROJECT NO.	
BRIDGE NO.	

DESCRIPTION

DATE

MISSOURI HIGHWAYS AND TRANSPORTATION COMMISSION
105 WEST CAPITOL
JEFFERSON CITY, MO 65102
1-888-ASK-MODOT (1-888-275-6636)

Detailed
Checked

Note: This drawing is not to scale. Follow dimensions.

Sheet No. of

PSI_04_type6_4-6 Guidance & Alternate Details

Standard Drawing Guidance (do not show on plans):

To display the strand details open the reference files dialog box and activate the display option of the file with the description that best matches what is required by the design.

See EPG for actual length of B1 bars which vary by size.

1. This detail only needs to be used if the structure is over water. For all other crossings remove this detail.
2. Remove if #5-B1 bars are used instead of #4-B1 bars.
3. Use with end spans when both interior & exterior girders are detailed on the same sheet, and the 2'-6" long tie rod will not fit in the exterior diaphragm portion. Remove when not necessary.
4. By design. Typically 30.98 kips per 1/2" strand & 43.94 kips per 0.6" strand, rounded to nearest whole kip.
5. If lap splice is required for A bars, use 28" lap for #5 bars; 38" lap for #6 bars

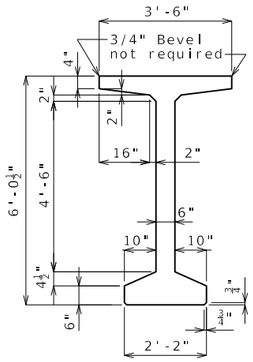

DIMENSIONS

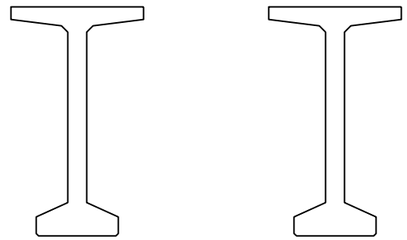

STRAND ARRANGEMENT

+ Indicates prestressing strand.

○ Indicates cut & shop bend with 2'-6" projection.

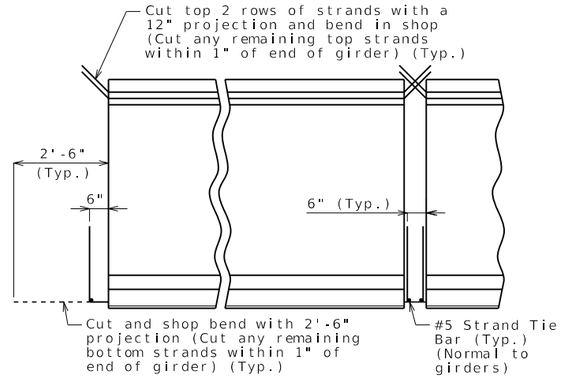

STRANDS AT GIRDER ENDS

BILL OF REINFORCING STEEL - EACH GIRDER				
NO.	SIZE & MARK	ACTUAL LENGTH	SHAPE	BENDING DIAGRAM
XXX	X A1	X'-X"	20	
XXX	X B1	X'-X"	11S	
16	6 B2	6'-11"	11S	
XXX	4 C1	3'-5"	19S	
XXX	4 D1	3'-1"	9S	

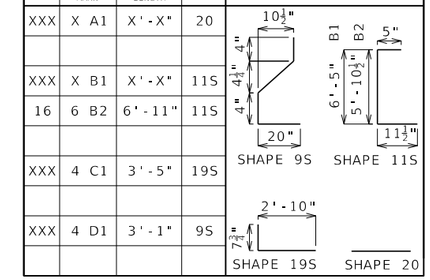

All dimensions are out to out.

Hooks and bends shall be in accordance with the CRSI Manual of Standard Practice for Detailing Reinforced Concrete Structures, Stirrup and Tie Dimensions.

Actual bar lengths are measured along centerline of bar to the nearest inch.

Minimum clearance to reinforcing shall be 1 inch.

All reinforcement shall be ASTM A615 or A706 Grade 60.

The two D1 bars may be furnished as one bar at the fabricator's option.

All B1 and C1 bars shall be epoxy coated.

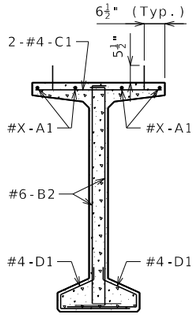

SECTION A-A
Strands not shown for clarity.

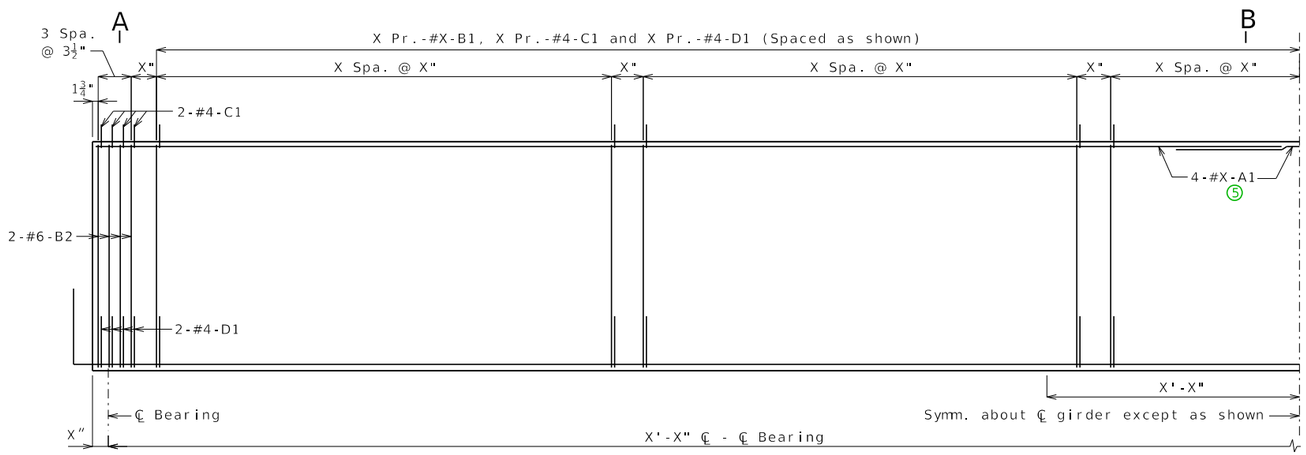

HALF ELEVATION

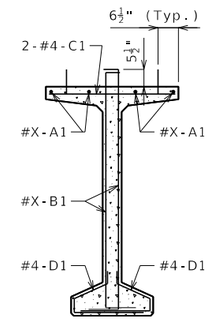

SECTION B-B
Strands not shown for clarity.

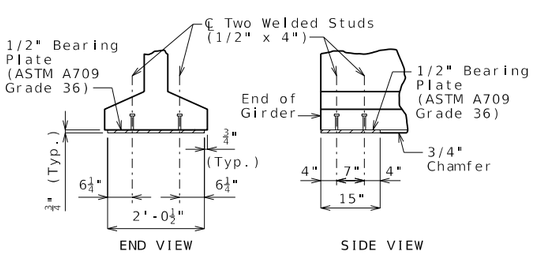

BEARING PLATE

1

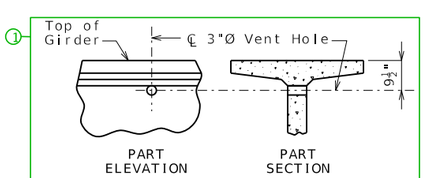

VENT HOLE

Place vent holes at or near upgrade 1/3 point of girders and clear reinforcing steel or strands by 1 1/2" minimum and steel intermediate diaphragm bolt connections by 6" minimum.

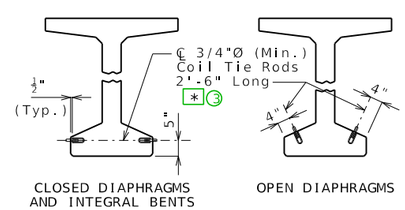

COIL TIES

Exclude coil tie at exterior face of exterior girders except at integral end bents.

* x'-x" at exterior face of exterior girders at end bents. 3

2

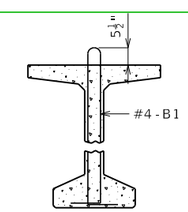

B1 BAR PERMISSIBLE ALTERNATE SHAPE

General Notes:

Concrete for prestressed girders shall be Class A-1 with f'c = psi and f'ci = psi.

Use strands, 1/2"Ø Grade 270, with an initial prestress force of 4 kips.

Pretensioned members shall be in accordance with Sec 1029.

Fabricator shall be responsible for location and design of lifting devices.

Exterior and interior girders are the same except: coil ties, coil inserts for slab drains, holes for steel intermediate diaphragms.

For Girder Camber Diagram, see Sheet No. __.

The 1 1/2"Ø holes shall be cast in the web for steel intermediate diaphragms. Drilling is not allowed. For location of holes and details of steel intermediate diaphragms, see Sheet No. __.

For location of coil inserts at slab drains, see Sheet No. .

For location of coil ties at concrete diaphragms and integral bents, see Sheets No. __ and __.

BULB-TEE GIRDERS - SPANS (X-X) AND (X-X)

Detailed
Checked

Note: This drawing is not to scale. Follow dimensions.

Sheet No. of

DATE PREPARED	
12/2/2025	
ROUTE	STATE
	MO
DISTRICT	SHEET NO.
	5
COUNTY	
JOB NO.	
CONTRACT ID.	
PROJECT NO.	
BRIDGE NO.	

DATE	DESCRIPTION

MISSOURI HIGHWAYS AND TRANSPORTATION COMMISSION
105 WEST CAPITOL
JEFFERSON CITY, MO 65102
1-888-ASK-MODOT (1-888-275-6636)

PSI_05_bulbt_6-0 Guidance & Alternate Details

Standard Drawing Guidance (do not show on plans):

To display the strand details open the reference files dialog box and activate the display option of the file with the description that best matches what is required by the design.

See EPG for actual length of B1 bars which vary by size.

1. This detail only needs to be used if the structure is over water. For all other crossings remove this detail.
2. Remove if #5-B1 bars are used instead of #4-B1 bars.
3. Use with end spans when both interior & exterior girders are detailed on the same sheet, and the 2'-6" long tie rod will not fit in the exterior diaphragm portion. Remove when not necessary.
4. By design. Typically 30.98 kips per 1/2" strand & 43.94 kips per 0.6" strand, rounded to nearest whole kip.
5. If lap splice is required for A bars, use 52" lap for #6 bars

(1) Fabricator shall apply a bond breaker to this region excluding where joint filler will be applied.

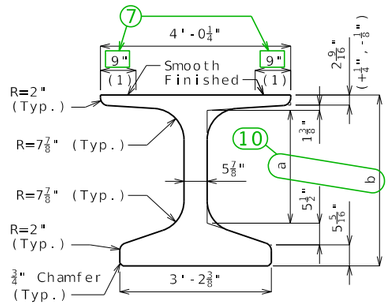

DIMENSIONS

(2) Outer strands tensioned to 2.02 kips/strand and inner strands to 8 kips/strand. Placed symmetrical about ℄ Girder. May be moved laterally in pairs.

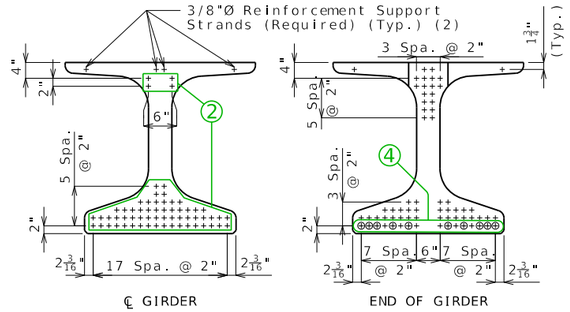

℄ GIRDER END OF GIRDER

STRAND ARRANGEMENT

+ Indicates prestressing strand.

o Indicates cut & shop bend with 3'-0" projection.

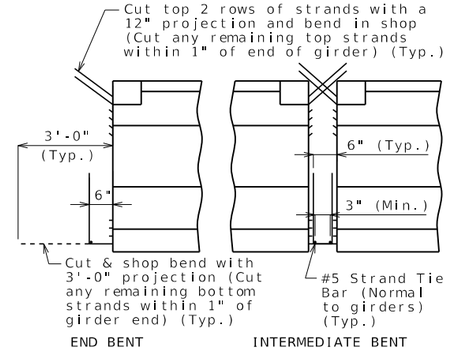

END BENT INTERMEDIATE BENT

STRANDS AT GIRDER ENDS

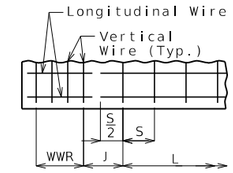

WELDED WIRE PLACEMENT

S = Vertical wire spacing

L = Length of WWR mats

J = Distance between WWR mats

Bill of Reinforcing Steel

Bars Each Girder				
No.	Size/Mark		Length	Shape
XXX	3	G1	2'-10"	8
2	4	G3	X'-X"	20
2	4	G4	2'-3"	20
2	4	G5	X'-X"	20
1 XXX	4	G6	Varies	20

Welded Wire Each Girder					
Mark	Size	S	W	L	J
WWR1	D__	X"	W__	X'-X"	X"
WWR2	D__	X"	W__	X'-X"	X"
WWR3	D__	X"	W__	X'-X"	--
WWR6	D31	2"	W12	16"	X"

Bending Diagrams

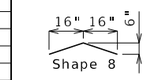

Shape 20

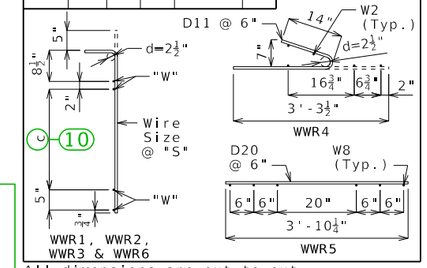

All dimensions are out to out.

Hooks and bends shall be in accordance with the CRSI Manual of Standard Practice for Detailing Reinforced Concrete Structures, Stirrup and Tie Dimensions.

Actual bar lengths are measured along centerline of bar to the nearest inch.

Minimum clearance to reinforcing shall be 1", unless otherwise shown.

All bar reinforcement shall be ASTM A615 or A706 Grade 60.

WWR shall not be epoxy coated.

G4 and G5 not required for interior girders. G3 and G6 not required for exterior girders of intermediate spans. Half no. of G3, G4, G5 and G6 not required for ext. girders of end spans.

General Notes:

Concrete for prestressed beams shall be Class A-1 with f'c = 8000 psi and f'ci = 6500 psi.

Use strands, 0.6"Ø Grade 270, with an initial prestress force of 6 kips.

Pretensioned members shall be in accordance with Sec 1029.

Fabricator shall be responsible for location and design of lifting devices.

Exterior and interior girders are the same except: coil ties, top flange blockout, application of bond breaker, coil inserts for slab drains, holes for steel intermediate diaphragms.

11 The contractor shall provide bracing necessary for lateral and torsional stability of the girders during construction of the concrete slab and remove the bracing after the slab has attained 75% design strength. Contractor shall not drill holes in the girders.

For Girder Camber Diagram, see Sheet No. .

12 The 1 1/2"Ø holes shall be cast in the web for steel intermediate diaphragms. Drilling is not allowed. For location of holes and details of steel intermediate diaphragms, see Sheet No. .

For location of coil inserts at slab drains, see Sheet No. .

For location of coil ties at concrete diaphragms and integral bents, see Sheets No. and .

Alternate bar reinforcing steel details are provided and may be used. The same type of reinforcing steel shall be used for all girders in all spans.

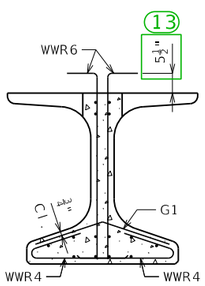

SECTION A-A

Strands not shown for clarity.

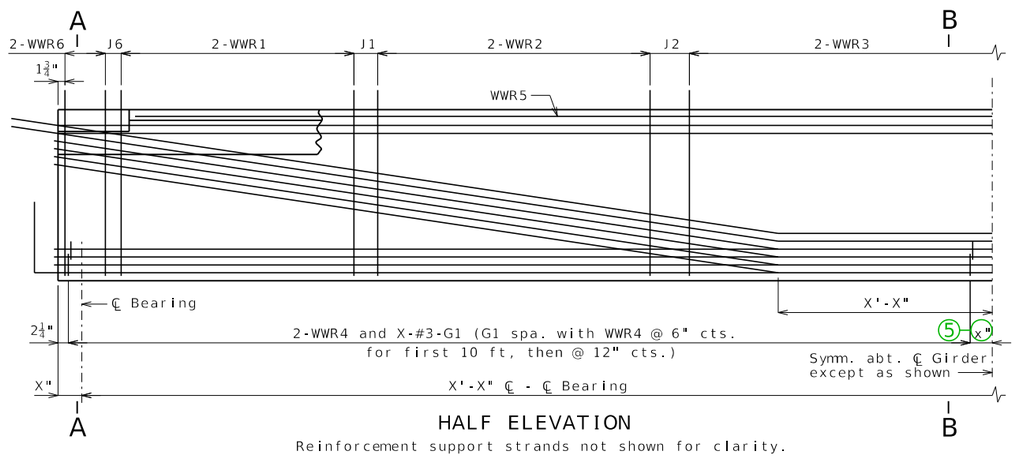

HALF ELEVATION

Reinforcement support strands not shown for clarity.

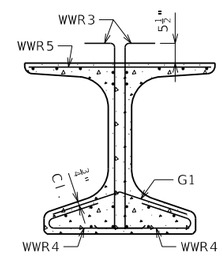

SECTION B-B

Strands not shown for clarity.

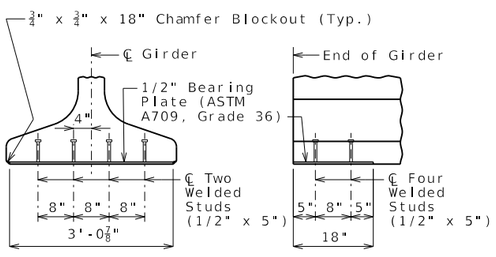

END VIEW SIDE VIEW

BEARING PLATE

3

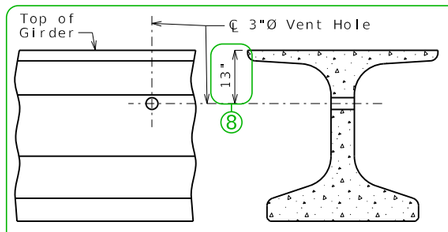

PART ELEVATION PART SECTION

VENT HOLE

Place vent holes at or near upgrade 1/3 point of girders and clear reinforcing steel or strands by 1 1/2" minimum and steel intermediate diaphragm bolt connections by 6" minimum.

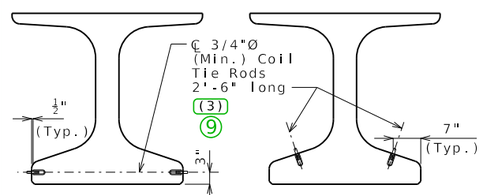

CLOSED DIAPHRAGMS AND INTEGRAL BENTS OPEN DIAPHRAGMS

COIL TIES

Exclude coil tie at exterior face of exterior girders except at integral end bents.

(3) X'-X" at exterior face of exterior girders at end bents 9

NU-GIRDERS - SPANS (X-X) AND (X-X)

Detailed
Checked

Note: This drawing is not to scale. Follow dimensions.

Sheet No. of

DATE PREPARED	12/2/2025
ROUTE	STATE MO
DISTRICT	SHEET NO. 6
COUNTY	
JOB NO.	
CONTRACT ID.	
PROJECT NO.	
BRIDGE NO.	

DESCRIPTION

DATE

MISSOURI HIGHWAYS AND TRANSPORTATION COMMISSION
105 WEST CAPITOL
JEFFERSON CITY, MO 65102
1-888-ASK-MODOT (1-888-275-6636)

PSI_06_NU_WWR Guidance & Alternate Details

Standard Drawing Guidance (do not show on plans)

① Choose one of the 4 details for the top flange blockout detail and follow the provided detail guidance. For 0-7° skew remove G6 bars from bill of reinforcing.

The left advanced details shown may be used for right advanced bridges. May remove mirror note if left advanced.

Blockout shall be dimensioned along the girder to 1 1/2 inches inside the face of the diaphragm and adjusted for girder tilt if present.

Revise bent references as required. Specify the bent number if blockout varies by bent.

The skew angle value need not be shown for tangent bridges. Consult SPM or Liaison on replacing "skew angle" with actual value for curved bridges.

Revised titles for non-integral end bents (exterior girder at end bent will be same detail as at intermediate bent).

FLANGE BLOCKOUT DATA			
Skew	X Eq. Spa.	X #4-G6	Bar Lengths
>14°to 21°	3	2	G3 bar = $\frac{46.25"}{\cos(\text{skew})}$
>21°to 27°	4	3	
>27°to 32°	5	4	G5 bar = $\frac{32.125"}{\cos(\text{skew})}$
>32°to 37°	6	5	
>37°to 42°	7	6	For skews > 7° to 14°:
>42°to 46°	8	7	G6 bar = $\frac{\text{G3 bar} + 46.25"}{2}$
>46°to 49°	9	8	
>49°to 52°	10	9	
>52°to 55°	11	10	For skews > 14° to 60°:
>55°to 57°	12	11	Report length of G6 bars as "Varies".
>57°to 60°	13	12	

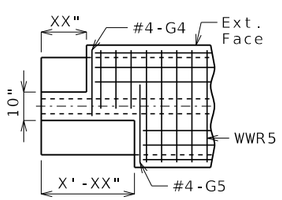

LEFT EXTERIOR GIRDER
AT INTERMEDIATE BENT
Rotate 180° for right ext.

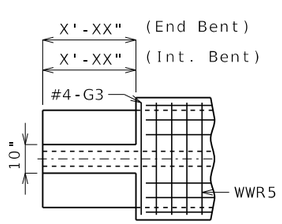

INTERIOR GIRDER AT ALL BENTS
& EXTERIOR GIRDER AT END BENT
TOP FLANGE BLOCKOUT

NO SKEW

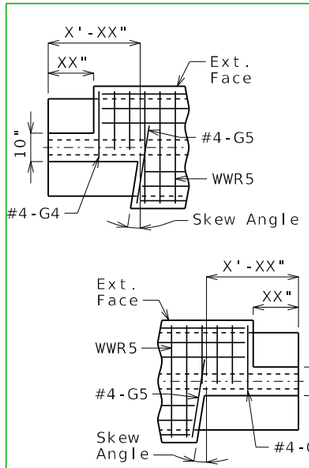

LEFT EXTERIOR GIRDER
AT INTERMEDIATE BENT
Rotate 180° for right ext.

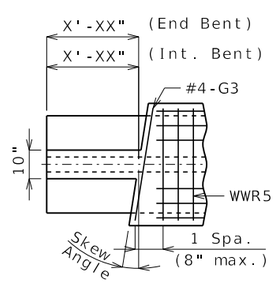

INTERIOR GIRDER AT ALL BENTS
& EXTERIOR GIRDER AT END BENT
TOP FLANGE BLOCKOUT
Mirror for right advanced.

>0° TO 7° LA SKEW

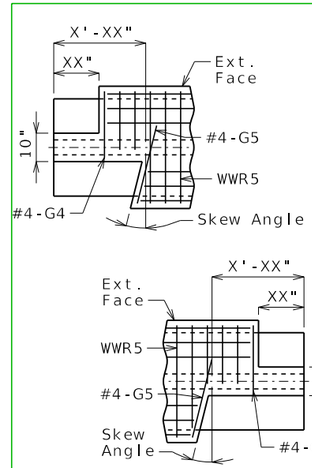

LEFT EXTERIOR GIRDER
AT INTERMEDIATE BENT
Rotate 180° for right ext.

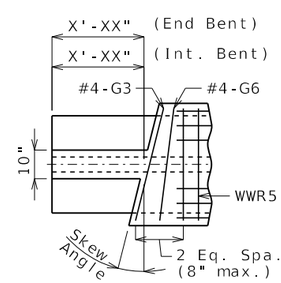

INTERIOR GIRDER AT ALL BENTS
& EXTERIOR GIRDER AT END BENT
TOP FLANGE BLOCKOUT
Mirror for right advanced.

>7° TO 14° LA SKEW

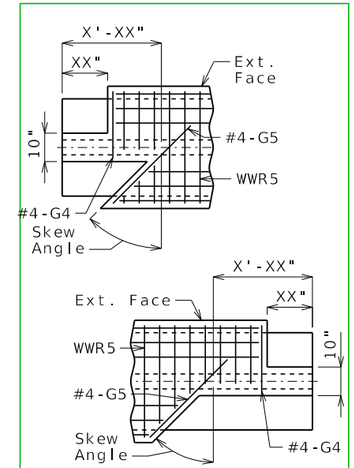

LEFT EXTERIOR GIRDER
AT INTERMEDIATE BENT
Rotate 180° for right ext.

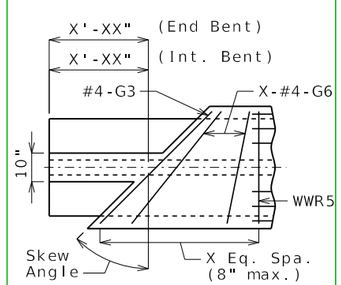

INTERIOR GIRDER AT ALL BENTS
& EXTERIOR GIRDER AT END BENT
TOP FLANGE BLOCKOUT
Mirror for right advanced.

>14° TO 60° LA SKEW

② The maximum strand arrangement is shown in details including top straight strands. Remove unnecessary strands from the four details where shown.

③ Detail only needs to be used if the structure is over water. For all other crossings remove detail.

④ Indicate 10 strands as shown for NU 35, 43 & 53. Indicate two more strands for NU 63, 70 and 78.

⊕⊕⊕⊕⊕+⊕+ +⊕+⊕⊕⊕⊕⊕

Strands are not typically debonded for NU girders, but if required by design, add symbols to End of Girder strand arrangement detail and add the appropriate notes (Note H2c1.44 and as shown below).

□ Indicates debonded for x'-0" from end of girder

△ Indicates debonded for x'-0" from end of girder

⑤ 7" Maximum and 1" Mininum.

⑥ By design. Typically 30.98 kips per 1/2" strand & 43.94 kips per 0.6" strand, rounded to nearest whole kip.

⑦ Revise minimum dimension if required by design.

⑧ Adjust for modified flange thickness.

⑨ Use with end spans when both interior & exterior girders are detailed on same sheet and the 2'-6" long tie rod will not fit in the exterior diaphragm portion. Remove when not necessary.

⑩ Substitute these values into drawing.

NU	a	b	c
35	20 11/16"	2'-11 7/16"	23 3/4"
43	2'-4 9/16"	3'-7 5/16"	2'-7 1/2"
53	3'-2 13/32"	4'-5 5/32"	3'-5 1/4"
63	4'-0 1/4"	5'-3"	4'-3 1/4"
70	4'-8 1/8"	5'-10 7/8"	4'-11"
78	5'-4"	6'-6 3/4"	5'-7"

⑪ Remove note for NU 53, 63, 70 and 78.

⑫ Remove notes for NU 35 and 43.

⑬ The overall height of the WWR6 shall not be increased for girder steps. Reduce this dimension by the accumulated girder step height.

(1) Fabricator shall apply a bond breaker to this region excluding where joint filler will be applied.

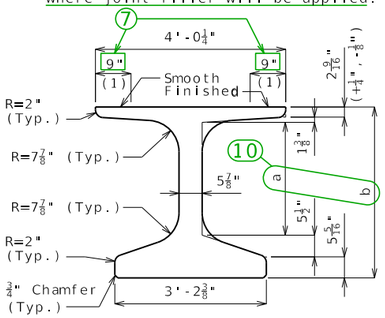

DIMENSIONS

(2) Outer strands tensioned to 2.02 kips/strand and inner strands to 8 kips/strand. Placed symmetrical about ℄ Girder. May be moved laterally in pairs.

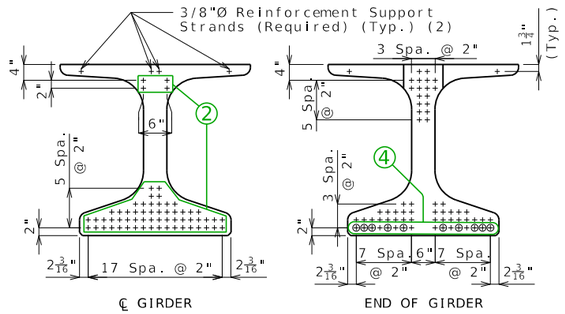

STRAND ARRANGEMENT

+ Indicates prestressing strand.

o Indicates cut & shop bend with 3'-0" projection.

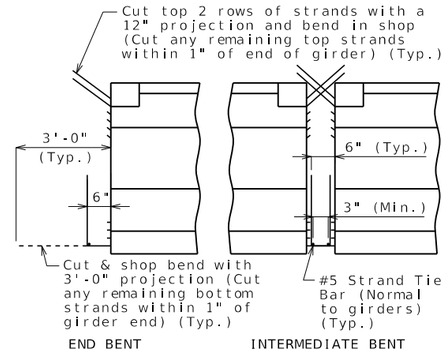

STRANDS AT GIRDER ENDS

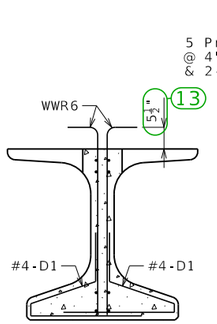

SECTION A-A

Strands not shown for clarity.

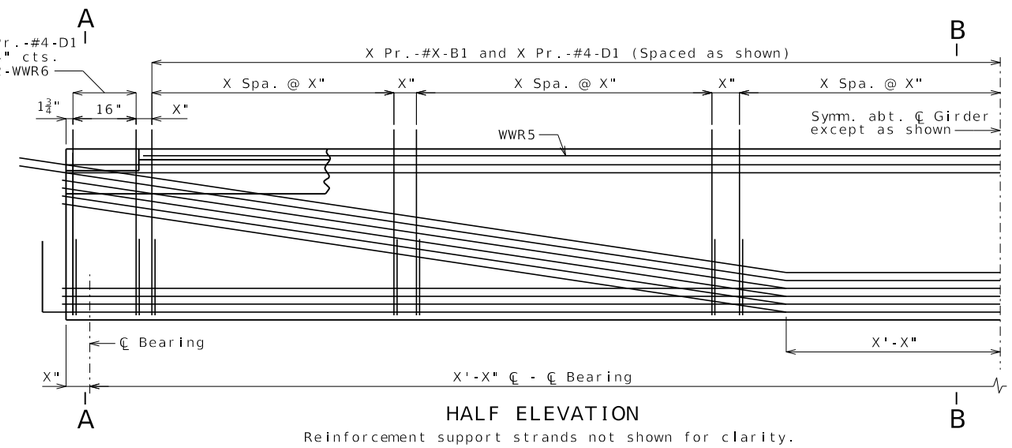

HALF ELEVATION

Reinforcement support strands not shown for clarity.

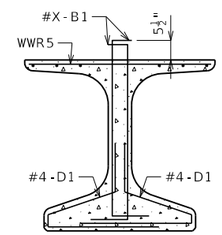

SECTION B-B

Strands not shown for clarity.

1

Bill of Reinforcing Steel - Each Girder				
No.	Size/ Mark	Length	Shape	Bending Diagrams
X	X B1	X'-X"	11S	
X	4 D1	4'-0"	9S	
2	4 G3	X'-X"	20	
2	4 G4	2'-3"	20	
2	4 G5	X'-X"	20	
X	4 G6	Varies	20	

5 1 10

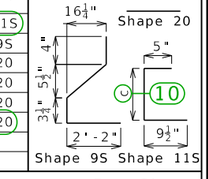

Welded Wire Reinforcement - Each Girder

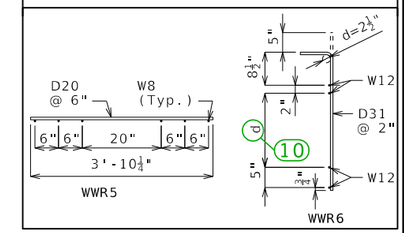

All dimensions are out to out.

Hooks and bends shall be in accordance with the CRSI Manual of Standard Practice for Detailing Reinforced Concrete Structures, Stirrup and Tie Dimensions.

Actual bar lengths are measured along centerline of bar to the nearest inch.

Minimum clearance to reinforcing shall be one inch.

All bar reinforcement shall be ASTM A615 or A706 Grade 60.

The two D1 bars may be furnished as one bar at the fabricator's option.

All B1 bars shall be epoxy coated.

G4 and G5 not required for interior girders. G3 and G6 not required for exterior girders of intermediate spans. Half no. of G3, G4, G5 and G6 not required for ext. girders of end spans.

General Notes:

Concrete for prestressed girders shall be Class A-1 with f'c = 8000 psi and f'ci = 6500 psi.

Use strands, 0.6"Ø Grade 270, with an initial prestress force of 6 kips.

Pretensioned members shall be in accordance with Sec 1029.

Fabricator shall be responsible for location and design of lifting devices.

Exterior and interior girders are the same except: coil ties, top flange blockout, application of bond breaker, coil inserts for slab drains, holes for steel intermediate diaphragms.

The contractor shall provide bracing necessary for lateral and torsional stability of the girders during construction of the concrete slab and remove the bracing after the slab has attained 75% design strength. Contractor shall not drill holes in the girders. 11

For Girder Camber Diagram, see Sheet No. .

12 The 1 1/2"Ø holes shall be cast in the web for steel intermediate diaphragms. Drilling is not allowed. For location of holes and details of steel intermediate diaphragms, see Sheet No. .

For location of coil inserts at slab drains, see Sheet No. .

For location of coil ties at concrete diaphragms and integral bents, see Sheets No. and .

Alternate bar reinforcing steel details are provided and may be used. The same type of reinforcing steel shall be used for all girders in all spans.

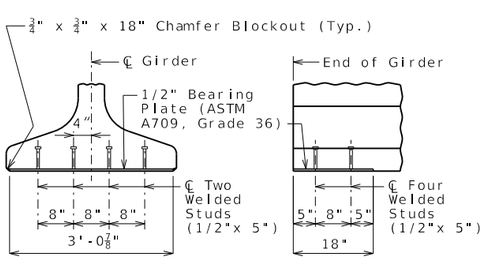

END VIEW SIDE VIEW

BEARING PLATE

3

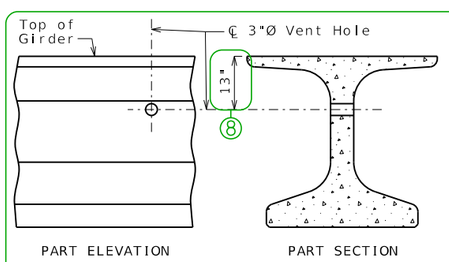

PART ELEVATION PART SECTION

VENT HOLE

Place vent holes at or near upgrade 1/3 point of girders and clear reinforcing steel or strands by 1 1/2" minimum and steel intermediate diaphragm bolt connections by 6" minimum.

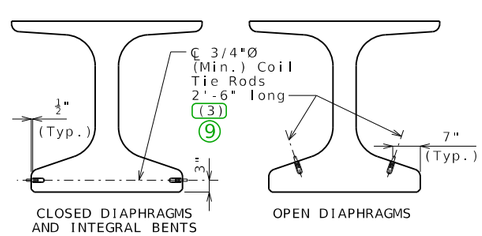

CLOSED DIAPHRAGMS AND INTEGRAL BENTS OPEN DIAPHRAGMS

COIL TIES

Exclude coil tie at exterior face of exterior girders except at integral end bents.

(3) X'-X" at exterior face of exterior girders at end bents 9

14

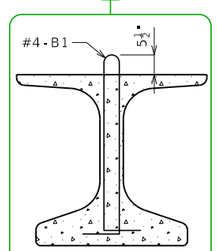

B1 BAR PERMISSIBLE ALTERNATE SHAPE

NU-GIRDERS (ALTERNATE REINFORCEMENT) - SPANS (X-X) AND (X-X)

Detailed
Checked

Note: This drawing is not to scale. Follow dimensions. Sheet No. of

DATE PREPARED	
12/2/2025	
ROUTE	STATE MO
DISTRICT	SHEET NO. NU-BARS
COUNTY	
JOB NO.	
CONTRACT ID.	
PROJECT NO.	
BRIDGE NO.	

DATE	DESCRIPTION

MISSOURI HIGHWAYS AND TRANSPORTATION COMMISSION
105 WEST CAPITOL
JEFFERSON CITY, MO 65102
1-888-ASK-MODOT (1-888-275-6636)

PSI_07_NU_Bars Guidance & Alternate Details

Standard Drawing Guidance (do not show on plans)

① Choose one of the 4 details for the top flange blockout detail and follow the provided detail guidance. For 0-7° skew remove G6 bars from bill of reinforcing.

The left advanced details shown may be used for right advanced bridges. May remove mirror note if left advanced.

Blockout shall be dimensioned along the girder to 1 1/2 inches inside the face of the diaphragm and adjusted for girder tilt if present.

Revise bent references as required. Specify the bent number if blockout varies by bent.

The skew angle value need not be shown for tangent bridges. Consult SPM or Liaison on replacing "skew angle" with actual value for curved bridges.

Revised titles for non-integral end bents (exterior girder at end bent will be same detail as at intermediate bent).

FLANGE BLOCKOUT DATA

Skew	X Eq. Spa.	X #4-G6	Bar Lengths
>14° to 21°	3	2	G3 bar = 46.25" / cos(skew)
>21° to 27°	4	3	
>27° to 32°	5	4	G5 bar = 32.125" / cos(skew)
>32° to 37°	6	5	
>37° to 42°	7	6	For skews > 7° to 14°:
>42° to 46°	8	7	G6 bar = (G3 bar + 46.25") / 2
>46° to 49°	9	8	
>49° to 52°	10	9	For skews > 14° to 60°:
>52° to 55°	11	10	
>55° to 57°	12	11	Report length of G6 bars as "Varies".
>57° to 60°	13	12	

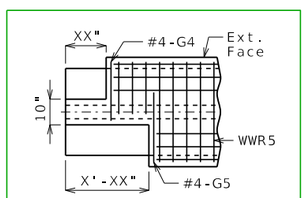

LEFT EXTERIOR GIRDER AT INTERMEDIATE BENT
Rotate 180° for right ext.

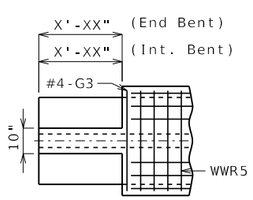

INTERIOR GIRDER AT ALL BENTS & EXTERIOR GIRDER AT END BENT
TOP FLANGE BLOCKOUT

NO SKEW

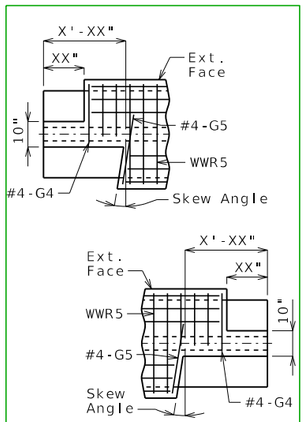

LEFT EXTERIOR GIRDER AT INTERMEDIATE BENT
Rotate 180° for right ext.

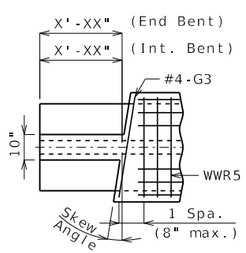

INTERIOR GIRDER AT ALL BENTS & EXTERIOR GIRDER AT END BENT
TOP FLANGE BLOCKOUT
Mirror for right advanced.

>0° TO 7° LA SKEW

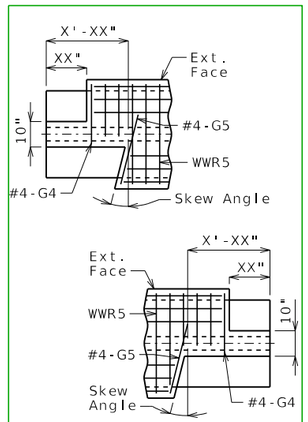

LEFT EXTERIOR GIRDER AT INTERMEDIATE BENT
Rotate 180° for right ext.

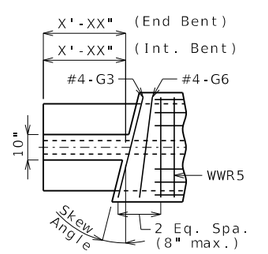

INTERIOR GIRDER AT ALL BENTS & EXTERIOR GIRDER AT END BENT
TOP FLANGE BLOCKOUT
Mirror for right advanced.

>7° TO 14° LA SKEW

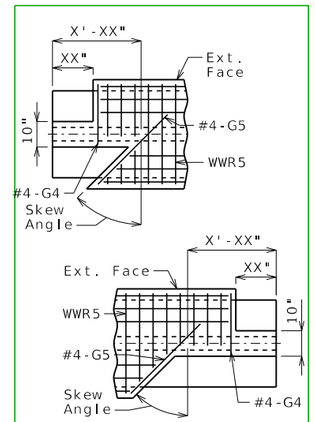

LEFT EXTERIOR GIRDER AT INTERMEDIATE BENT
Rotate 180° for right ext.

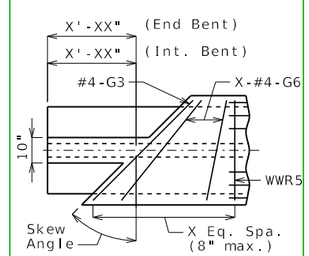

INTERIOR GIRDER AT ALL BENTS & EXTERIOR GIRDER AT END BENT
TOP FLANGE BLOCKOUT
Mirror for right advanced.

>14° TO 60° LA SKEW

② The maximum strand arrangement is shown in details including top straight strands. Remove unnecessary strands from the four details where shown.

③ Detail only needs to be used if the structure is over water. For all other crossings remove detail.

④ Indicate 10 strands as shown for NU 35, 43 & 53. Indicate two more strands for NU 63, 70 and 78.

⊕⊕⊕⊕⊕+⊕+ +⊕+⊕⊕⊕⊕⊕

Strands are not typically debonded for NU girders, but if required by design, add symbols to End of Girder strand arrangement detail and add the appropriate notes (Note H2c1.44 and as shown below).

□ Indicates debonded for x'-0" from end of girder

△ Indicates debonded for x'-0" from end of girder

⑤ Actual length of B1 bars:

	NU 35	NU 43	NU 53	NU 63	NU 70	NU 78
#4	4'-4"	5'-0"	5'-10"	6'-8"	7'-4"	8'-0"
#5	4'-4"	5'-0"	5'-10"	6'-8"	7'-3"	7'-11"
#6	4'-3"	4'-11"	5'-8"	6'-6"	7'-2"	7'-10"

⑥ By design. Typically 30.98 kips per 1/2" strand & 43.94 kips per 0.6" strand, rounded to nearest whole kip.

⑦ Revise minimum dimension if required by design.

⑧ Adjust for modified flange thickness.

⑨ Use with end spans when both interior & exterior girders are detailed on same sheet and the 2'-6" long tie rod will not fit in the exterior diaphragm portion. Remove when not necessary.

⑩ Substitute these values into drawing.

NU	a	b	c	d
35	20 11/16"	2'-11 7/16"	3'-4"	23 3/4"
43	2'-4 9/16"	3'-7 5/16"	3'-11 3/4"	2'-7 1/2"
53	3'-2 13/32"	4'-5 5/32"	4'-9 3/4"	3'-5 1/4"
63	4'-0 1/4"	5'-3"	5'-7 1/2"	4'-3 1/4"
70	4'-8 1/8"	5'-10 7/8"	6'-3 1/2"	4'-11"
78	5'-4"	6'-6 3/4"	6'-11 1/4"	5'-7"

⑪ Remove note for NU 53, 63, 70 and 78.

⑫ Remove notes for NU 35 and 43.

⑬ The overall height of the WWR6 shall not be increased for girder steps. Reduce this dimension by the accumulated girder step height.

⑭ Remove if #5-B1 bars are used.

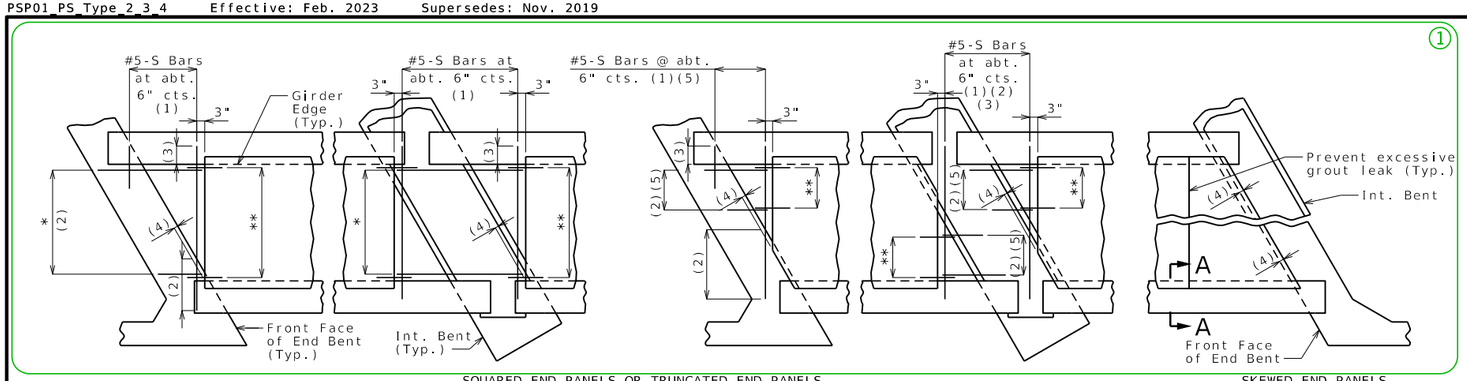

PLAN SHOWING PANEL PLACEMENT

* #5-S Bars at abt. 9" cts. (1)
** #3-P1 at 12" cts. (End panels only)

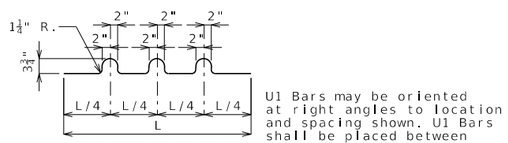

U1 Bars may be oriented at right angles to location and spacing shown. U1 Bars shall be placed between P1 bars.

BENDING DIAGRAM FOR U1 BAR

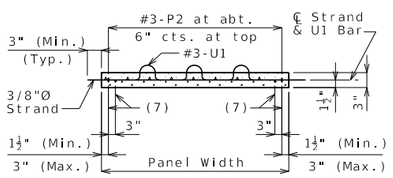

SECTION B-B

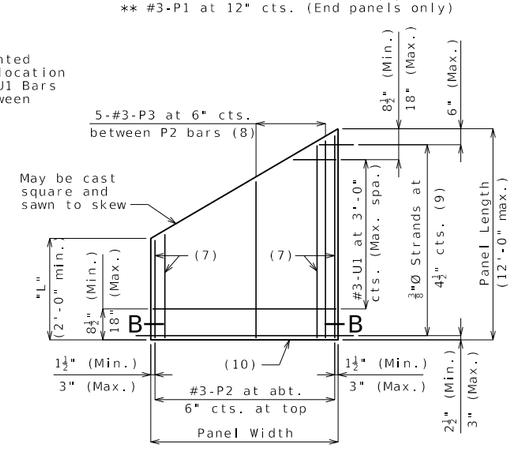

PLAN OF OPTIONAL SKEWED END PANEL

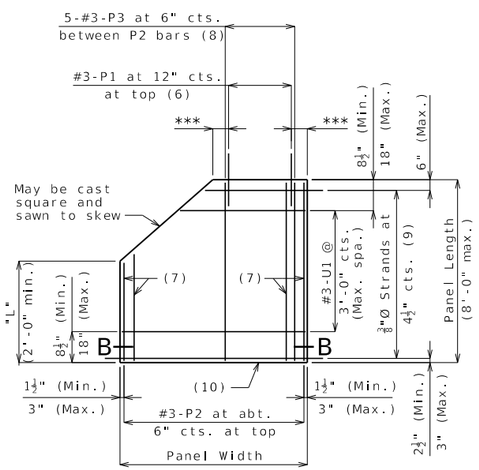

PLAN OF OPTIONAL TRUNCATED END PANEL

*** 3" (Min.), 6" (Max.)

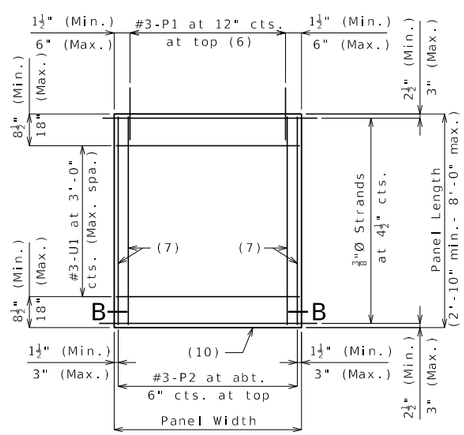

PLAN OF SQUARED PANEL

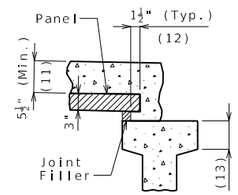

SECTION A-A

Joint Filler Dimensions		
Width	Height	
	Min.	Max.
1½"	1"	2"

Reference Notes:

Plan of Panel Placement:
(1) S-bars shown are bottom steel in slab between panels and used with squared and truncated end panels only.

(2) Extend S-bars 18 inches beyond the front face of end bents and int. bents for squared and truncated end panels only.

(3) Extend S-bars 9 inches beyond edge of girder (Typ.).

(4) End panels shall be dimensioned 1/2" min. to 1 1/2" max. from the inside face of diaphragm.

(5) For truncated end panels, use a min. of #5-S bars at 6" crossings in openings, or min. 4x4-W7xW7.

Plans of Panels:
(6) For end panels only, P1 bars shall be 2'-0" in length and embedded 12". P1 bars will not be required for panels at squared integral end bents.

(7) #3-P2 bars near edge of panel at bottom (under strands).

(8) Use #3-P3 bars if panel is skewed 45° or greater.

(9) Any strand 2'-0" or shorter shall have a #4 reinforcing bar on each side of it, centered between strands. Strands 2'-0" or shorter may then be debonded at the fabricator's option.

(10) Optional 1/2" x 45° Chamfer one or both sides at bottom.

Section A-A:
(11) Slab thickness over prestressed panels varies due to girder camber. In order to maintain minimum slab thickness, it may be necessary to raise the grade uniformly throughout the structure. No payment will be made for additional labor or materials required for necessary grade adjustment.

(12) Contractor shall ensure proper consolidation under and between panels.

(13) At the contractor's option, the variation in slab thickness over prestressed panels may be eliminated or reduced by increasing and varying the girder top flange thickness. Dimensions shall be shown on the shop drawings.

General Notes:

Prestressed Panels:
Concrete for prestressed panels shall be Class A-1 with f'c = 6,000 psi, f'ci = 4,000 psi.

The top surface of all panels shall receive a scored finish with a depth of scoring of 1/8" perpendicular to the prestressing strands in the panels.

Prestressing tendons shall be high-tensile strength, uncoated, seven-wire, low-relaxation strands for prestressed concrete in accordance with AASHTO M 203 Grade 270, with nominal diameter of strand = 3/8" and nominal area = 0.085 sq.in. and minimum ultimate strength = 22.95 kips (270 ksi). Larger strands may be used with the same spacing and initial tension.

Initial prestressing force = 17.2 kips/strand.

The method and sequence of releasing the strands shall be shown on the shop drawings.

Suitable anchorage devices for lifting panels may be cast in panels, provided the devices are shown on the shop drawings and approved by the engineer. Panel lengths shall be determined by the contractor and shown on the shop drawings.

When squared end panels are used at skewed bents, the skewed portion shall be cast full depth. No separate payment will be made for additional concrete and reinforcing required.

Support from diaphragm forms is required under the optional skewed end until cast-in-place concrete has reached 3,000 psi compressive strength.

Prestressed panels shall be brought to saturated surface-dry (SSD) condition just prior to the deck pour. There shall be no free standing water on the panels or in the area to be cast.

The prestressed panel quantities are not included in the table of estimated quantities for the slab.

Reinforcing Steel:
All dimensions are out to out.

Hooks and bends shall be in accordance with the CRSI Manual of Standard Practice for Detailing Reinforced Concrete Structures, Stirrup and Tie Dimensions.

Minimum clearance to reinforcing steel shall be 1 1/2", unless otherwise shown.

If U1 bars interfere with placement of slab steel, U1 loops may be bent over, as necessary, to clear slab steel.

Deformed welded wire reinforcement (WWR) providing a minimum area of reinforcing perpendicular to strands of 0.22 sq in./ft, with spacing parallel to strands sufficient to ensure proper handling, may be used in lieu of the #3-P2 bars shown. Wire diameter shall not be larger than 0.375 inch. The above alternative reinforcement criteria may be used in lieu of the #3-P3 bars, when required, and placed over a width not less than 2 feet.

The following reinforcing steel shall be tied securely to the strands with the following maximum spacing in each direction:
#3-P2 bars at 16 inches.
WWR at 24 inches.

The #3-U1 bars shall be tied securely to #3-P2 bars, to WWR or to strands (when placed between P1 bars) at about 3-foot centers.

Minimum reinforcement steel length shall be 2'-0".

All reinforcement other than prestressing strands shall be epoxy coated.

Precast panels may be in contact with stirrup reinforcing in diaphragms.

S-bars are not listed in the bill of reinforcing.

Cost of S-bars will be considered completely covered by the contract unit price for the slab.

Joint Filler:
Joint filler shall be preformed fiber expansion joint material in accordance with Sec 1057 or expanded or extruded polystyrene bedding material in accordance with Sec 1073.

Use Slab Haunching Diagram on Sheet No. XX for determining thickness of joint filler within the limits noted in the table of Joint Filler Dimensions.

Thicker material may be used on one or both sides of the girder to reduce cast-in-place concrete thickness to within tolerances.

The same thickness of preformed fiber expansion joint material shall be used under any one edge of any panel except at locations where top flange thickness may be stepped. The maximum change in thickness between adjacent panels shall be 1/2 inch. The polystyrene bedding material may be cut with a transition to match haunch height above top of flange.

Joint filler shall be glued to the girder. When thickness exceeds 1 1/2 inches, the joint filler shall be glued top and bottom. The glue used shall be the type recommended by the joint filler manufacturer.

Edges of panels shall be uniformly seated on the joint filler before slab reinforcement is placed.

PRESTRESSED PANELS

Detailed
Checked

Note: This drawing is not to scale. Follow dimensions.

Sheet No. of

DATE PREPARED	
2/24/2023	
ROUTE	STATE MO
DISTRICT	SHEET NO. 1
COUNTY	
JOB NO.	
CONTRACT ID.	
PROJECT NO.	
BRIDGE NO.	

DATE	DESCRIPTION

MISSOURI HIGHWAYS AND TRANSPORTATION COMMISSION
105 WEST CAPITOL
JEFFERSON CITY, MO 65102
1-888-ASK-MODOT (1-888-275-6636)

IF A SEAL IS PRESENT ON THIS SHEET IT HAS BEEN ELECTRONICALLY SEALED AND DATED.

PSP01_PS_Type_2_3_4 Guidance

Standard Drawing Guidance (do not show on plans):

1. Modify details if expansion gap is used and add Section B-B at expansion device and additional reference notes as shown on standard drawing for steel structures (PSP06).

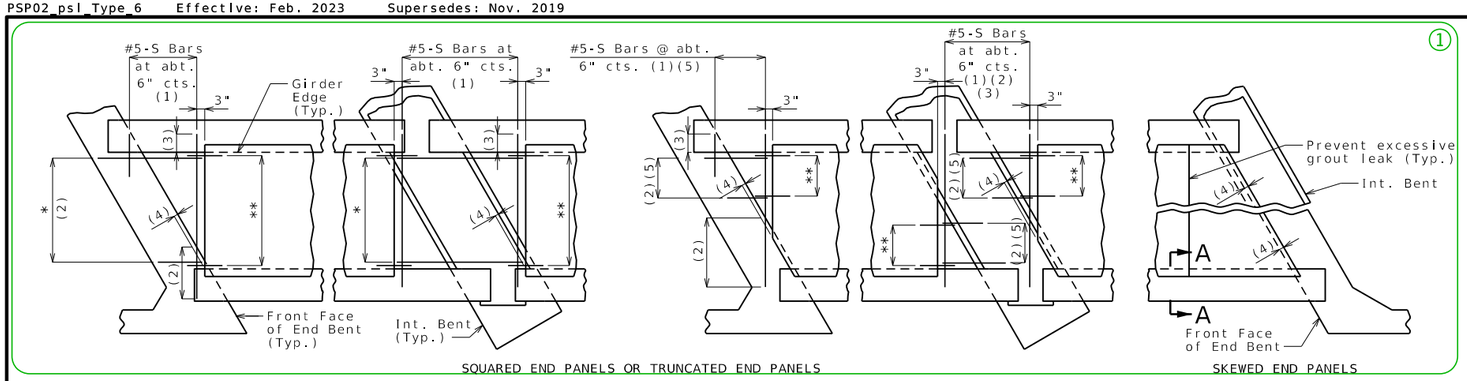

PLAN SHOWING PANEL PLACEMENT

* #5-S Bars at abt. 9" cts. (1)
** #3-P1 at 12" cts. (End panels only)

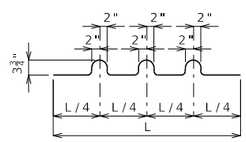

BENDING DIAGRAM FOR U1 BAR

U1 Bars may be oriented at right angles to location and spacing shown. U1 Bars shall be placed between P1 bars.

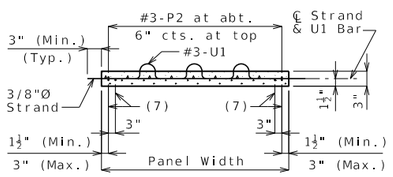

SECTION B-B

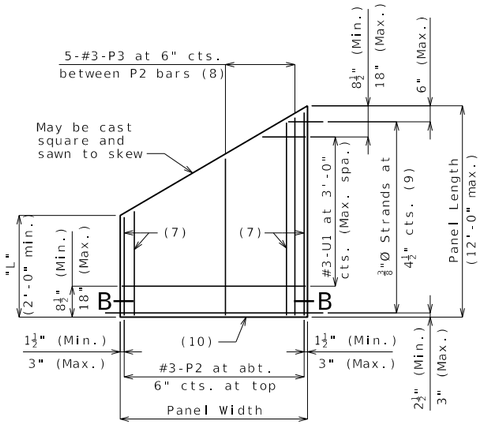

PLAN OF OPTIONAL SKEWED END PANEL

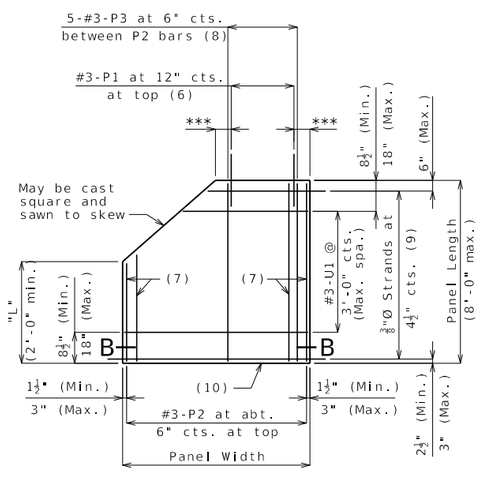

PLAN OF OPTIONAL TRUNCATED END PANEL

*** 3" (Min.), 6" (Max.)

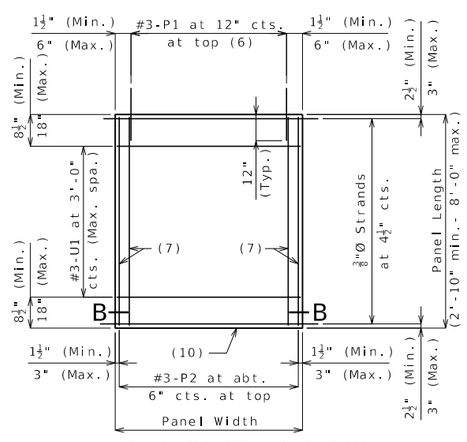

PLAN OF SQUARED PANEL

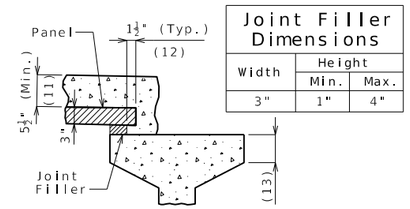

Joint Filler Dimensions		
Width	Height	
	Min.	Max.
3"	1"	4"

SECTION A-A

Reference Notes:

Plan of Panel Placement:

(1) S-bars shown are bottom steel in slab between panels and used with squared and truncated end panels only.

(2) Extend S-bars 18 inches beyond the front face of end bents and int. bents for squared and truncated end panels only.

(3) Extend S-bars 9 inches beyond edge of girder (Typ.).

(4) End panels shall be dimensioned 1/2" min. to 1 1/2" max. from the inside face of diaphragm.

(5) For truncated end panels, use a min. of #5-S bars at 6" crossings in openings, or min. 4x4-W7xW7.

Plans of Panels:

(6) For end panels only, P1 bars shall be 2'-0" in length and embedded 12". P1 bars will not be required for panels at squared integral end bents.

(7) #3-P2 bars near edge of panel at bottom (under strands).

(8) Use #3-P3 bars if panel is skewed 45° or greater.

(9) Any strand 2'-0" or shorter shall have a #4 reinforcing bar on each side of it, centered between strands. Strands 2'-0" or shorter may then be debonded at the fabricator's option.

(10) Optional 1/2" x 45° Chamfer one or both sides at bottom.

Section A-A:

(11) Slab thickness over prestressed panels varies due to girder camber. In order to maintain minimum slab thickness, it may be necessary to raise the grade uniformly throughout the structure. No payment will be made for additional labor or materials required for necessary grade adjustment.

(12) Contractor shall ensure proper consolidation under and between panels.

(13) At the contractor's option, the variation in slab thickness over prestressed panels may be eliminated or reduced by increasing and varying the girder top flange thickness. Dimensions shall be shown on the shop drawings.

General Notes:

Prestressed Panels:
Concrete for prestressed panels shall be Class A-1 with f'c = 6,000 psi, f'ci = 4,000 psi.

The top surface of all panels shall receive a scored finish with a depth of scoring of 1/8" perpendicular to the prestressing strands in the panels.

Prestressing tendons shall be high-tensile strength, uncoated, seven-wire, low-relaxation strands for prestressed concrete in accordance with AASHTO M 203 Grade 270, with nominal diameter of strand = 3/8" and nominal area = 0.085 sq.in. and minimum ultimate strength = 22.95 kips (270 ksi). Larger strands may be used with the same spacing and initial tension.

Initial prestressing force = 17.2 kips/strand.

The method and sequence of releasing the strands shall be shown on the shop drawings.

Suitable anchorage devices for lifting panels may be cast in panels, provided the devices are shown on the shop drawings and approved by the engineer. Panel lengths shall be determined by the contractor and shown on the shop drawings.

When squared end panels are used at skewed bents, the skewed portion shall be cast full depth. No separate payment will be made for additional concrete and reinforcing required.

Support from diaphragm forms is required under the optional skewed end until cast-in-place concrete has reached 3,000 psi compressive strength.

Prestressed panels shall be brought to saturated surface-dry (SSD) condition just prior to the deck pour. There shall be no free standing water on the panels or in the area to be cast.

The prestressed panel quantities are not included in the table of estimated quantities for the slab.

Reinforcing Steel:
All dimensions are out to out.

Hooks and bends shall be in accordance with the CRSI Manual of Standard Practice for Detailing Reinforced Concrete Structures, Stirrup and Tie Dimensions.

Minimum clearance to reinforcing steel shall be 1 1/2", unless otherwise shown.

If U1 bars interfere with placement of slab steel, U1 loops may be bent over, as necessary, to clear slab steel.

Deformed welded wire reinforcement (WWR) providing a minimum area of reinforcing perpendicular to strands of 0.22 sq in./ft, with spacing parallel to strands sufficient to ensure proper handling, may be used in lieu of the #3-P2 bars shown. Wire diameter shall not be larger than 0.375 inch. The above alternative reinforcement criteria may be used in lieu of the #3-P3 bars, when required, and placed over a width not less than 2 feet.

The following reinforcing steel shall be tied securely to the strands with the following maximum spacing in each direction:
#3-P2 bars at 16 inches.
WWR at 24 inches.

The #3-U1 bars shall be tied securely to #3-P2 bars, to WWR or to strands (when placed between P1 bars) at about 3-foot centers.

Minimum reinforcement steel length shall be 2'-0".

All reinforcement other than prestressing strands shall be epoxy coated.

Precast panels may be in contact with stirrup reinforcing in diaphragms.

S-bars are not listed in the bill of reinforcing.

Cost of S-bars will be considered completely covered by the contract unit price for the slab.

Joint Filler:
Joint filler shall be preformed fiber expansion joint material in accordance with Sec 1057 or expanded or extruded polystyrene bedding material in accordance with Sec 1073.

Use Slab Haunching Diagram on Sheet No. XX for determining thickness of joint filler within the limits noted in the table of Joint Filler Dimensions.

Thicker material may be used on one or both sides of the girder to reduce cast-in-place concrete thickness to within tolerances.

The same thickness of preformed fiber expansion joint material shall be used under any one edge of any panel except at locations where top flange thickness may be stepped. The maximum change in thickness between adjacent panels shall be 1/2 inch. The polystyrene bedding material may be cut with a transition to match haunch height above top of flange.

Joint filler shall be glued to the girder. When thickness exceeds 1 1/2 inches, the joint filler shall be glued top and bottom. The glue used shall be the type recommended by the joint filler manufacturer.

Edges of panels shall be uniformly seated on the joint filler before slab reinforcement is placed.

PRESTRESSED PANELS

Detailed
Checked

Note: This drawing is not to scale. Follow dimensions.

Sheet No. of

DATE PREPARED	2/24/2023
ROUTE	STATE MO
DISTRICT	SHEET NO. 2
COUNTY	
JOB NO.	
CONTRACT ID.	
PROJECT NO.	
BRIDGE NO.	

DESCRIPTION

DATE

MISSOURI HIGHWAYS AND TRANSPORTATION COMMISSION
105 WEST CAPITOL
JEFFERSON CITY, MO 65102
1-888-ASK-MODOT (1-888-275-6636)

IF A SEAL IS PRESENT ON THIS SHEET IT HAS BEEN ELECTRONICALLY SEALED AND DATED.

PSP02_PS_Type_6 Guidance

Standard Drawing Guidance (do not show on plans):

① Modify details if expansion gap is used and add Section B-B at expansion device and additional reference notes as shown on standard drawing for steel structures (PSP06).

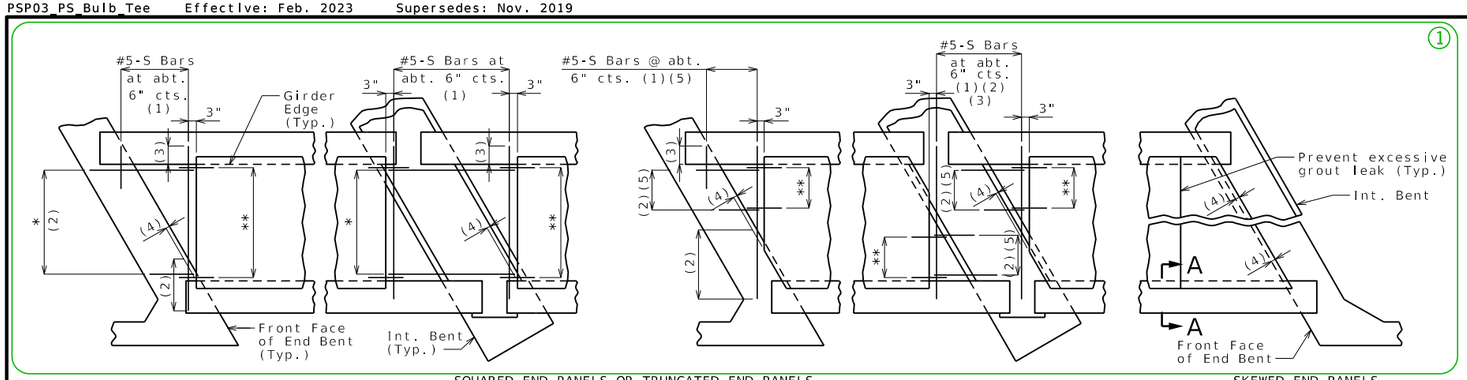

SQUARED END PANELS OR TRUNCATED END PANELS

SKEWED END PANELS

PLAN SHOWING PANEL PLACEMENT

* #5-S Bars at abt. 9" cts. (1)
** #3-P1 at 12" cts. (End panels only)

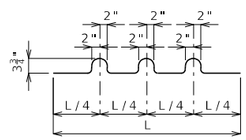

BENDING DIAGRAM FOR U1 BAR

U1 Bars may be oriented at right angles to location and spacing shown. U1 Bars shall be placed between P1 bars.

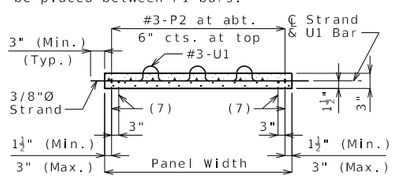

SECTION B-B

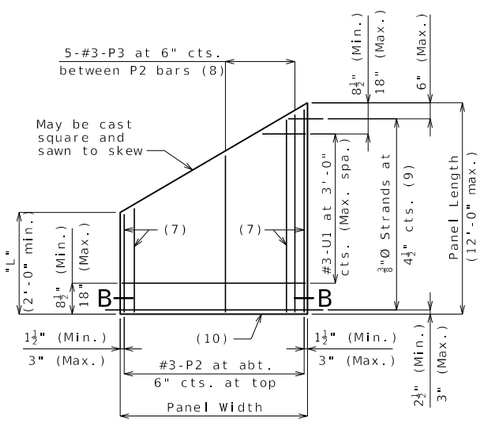

PLAN OF OPTIONAL SKEWED END PANEL

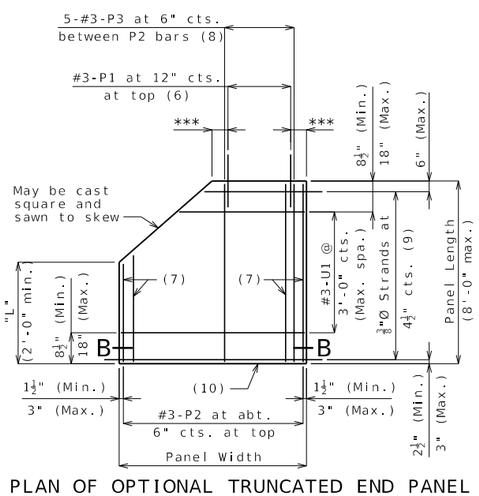

PLAN OF OPTIONAL TRUNCATED END PANEL

*** 3" (Min.), 6" (Max.)

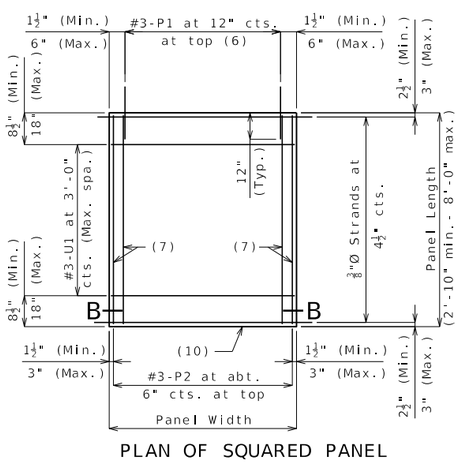

PLAN OF SQUARED PANEL

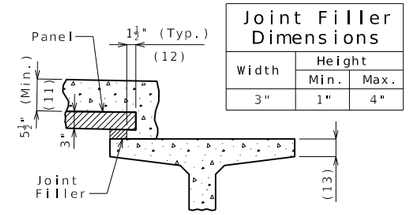

Joint Filler Dimensions		
Width	Height	
	Min.	Max.
3"	1"	4"

SECTION A-A

Reference Notes:

Plan of Panel Placement:
(1) S-bars shown are bottom steel in slab between panels and used with squared and truncated end panels only.

(2) Extend S-bars 18 inches beyond the front face of end bents and int. bents for squared and truncated end panels only.

(3) Extend S-bars 9 inches beyond edge of girder (Typ.).

(4) End panels shall be dimensioned 1/2" min. to 1 1/2" max. from the inside face of diaphragm.

(5) For truncated end panels, use a min. of #5-S bars at 6" crossings in openings, or min. 4x4-W7xW7.

Plans of Panels:
(6) For end panels only, P1 bars shall be 2'-0" in length and embedded 12". P1 bars will not be required for panels at squared integral end bents.

(7) #3-P2 bars near edge of panel at bottom (under strands).

(8) Use #3-P3 bars if panel is skewed 45° or greater.

(9) Any strand 2'-0" or shorter shall have a #4 reinforcing bar on each side of it, centered between strands. Strands 2'-0" or shorter may then be debonded at the fabricator's option.

(10) Optional 1/2" x 45° Chamfer one or both sides at bottom.

Section A-A:
(11) Slab thickness over prestressed panels varies due to girder camber. In order to maintain minimum slab thickness, it may be necessary to raise the grade uniformly throughout the structure. No payment will be made for additional labor or materials required for necessary grade adjustment.

(12) Contractor shall ensure proper consolidation under and between panels.

(13) At the contractor's option, the variation in slab thickness over prestressed panels may be eliminated or reduced by increasing and varying the girder top flange thickness. Dimensions shall be shown on the shop drawings.

General Notes:

Prestressed Panels:
Concrete for prestressed panels shall be Class A-1 with f'c = 6,000 psi, f'ci = 4,000 psi.

The top surface of all panels shall receive a scored finish with a depth of scoring of 1/8" perpendicular to the prestressing strands in the panels.

Prestressing tendons shall be high-tensile strength, uncoated, seven-wire, low-relaxation strands for prestressed concrete in accordance with AASHTO M 203 Grade 270, with nominal diameter of strand = 3/8" and nominal area = 0.085 sq.in. and minimum ultimate strength = 22.95 kips (270 ksi). Larger strands may be used with the same spacing and initial tension.

Initial prestressing force = 17.2 kips/strand.

The method and sequence of releasing the strands shall be shown on the shop drawings.

Suitable anchorage devices for lifting panels may be cast in panels, provided the devices are shown on the shop drawings and approved by the engineer. Panel lengths shall be determined by the contractor and shown on the shop drawings.

When squared end panels are used at skewed bents, the skewed portion shall be cast full depth. No separate payment will be made for additional concrete and reinforcing required.

Support from diaphragm forms is required under the optional skewed end until cast-in-place concrete has reached 3,000 psi compressive strength.

Prestressed panels shall be brought to saturated surface-dry (SSD) condition just prior to the deck pour. There shall be no free standing water on the panels or in the area to be cast.

The prestressed panel quantities are not included in the table of estimated quantities for the slab.

Reinforcing Steel:
All dimensions are out to out.

Hooks and bends shall be in accordance with the CRSI Manual of Standard Practice for Detailing Reinforced Concrete Structures, Stirrup and Tie Dimensions.

Minimum clearance to reinforcing steel shall be 1 1/2", unless otherwise shown.

If U1 bars interfere with placement of slab steel, U1 loops may be bent over, as necessary, to clear slab steel.

Deformed welded wire reinforcement (WWR) providing a minimum area of reinforcing perpendicular to strands of 0.22 sq in./ft, with spacing parallel to strands sufficient to ensure proper handling, may be used in lieu of the #3-P2 bars shown. Wire diameter shall not be larger than 0.375 inch. The above alternative reinforcement criteria may be used in lieu of the #3-P3 bars, when required, and placed over a width not less than 2 feet.

The following reinforcing steel shall be tied securely to the strands with the following maximum spacing in each direction:
#3-P2 bars at 16 inches.
WWR at 24 inches.

The #3-U1 bars shall be tied securely to #3-P2 bars, to WWR or to strands (when placed between P1 bars) at about 3-foot centers.

Minimum reinforcement steel length shall be 2'-0".

All reinforcement other than prestressing strands shall be epoxy coated.

Precast panels may be in contact with stirrup reinforcing in diaphragms.

S-bars are not listed in the bill of reinforcing.

Cost of S-bars will be considered completely covered by the contract unit price for the slab.

Joint Filler:
Joint filler shall be preformed fiber expansion joint material in accordance with Sec 1057 or expanded or extruded polystyrene bedding material in accordance with Sec 1073.

Use Slab Haunching Diagram on Sheet No. XX for determining thickness of joint filler within the limits noted in the table of Joint Filler Dimensions.

Thicker material may be used on one or both sides of the girder to reduce cast-in-place concrete thickness to within tolerances.

The same thickness of preformed fiber expansion joint material shall be used under any one edge of any panel except at locations where top flange thickness may be stepped. The maximum change in thickness between adjacent panels shall be 1/2 inch. The polystyrene bedding material may be cut with a transition to match haunch height above top of flange.

Joint filler shall be glued to the girder. When thickness exceeds 1 1/2 inches, the joint filler shall be glued top and bottom. The glue used shall be the type recommended by the joint filler manufacturer.

Edges of panels shall be uniformly seated on the joint filler before slab reinforcement is placed.

PRESTRESSED PANELS

Detailed
Checked

Note: This drawing is not to scale. Follow dimensions.

Sheet No. of

DATE PREPARED	
2/24/2023	
ROUTE	STATE MO
DISTRICT	SHEET NO. 3
COUNTY	
JOB NO.	
CONTRACT ID.	
PROJECT NO.	
BRIDGE NO.	

DATE	DESCRIPTION

MISSOURI HIGHWAYS AND TRANSPORTATION COMMISSION
105 WEST CAPITOL
JEFFERSON CITY, MO 65102
1-888-ASK-MODOT (1-888-275-6636)

IF A SEAL IS PRESENT ON THIS SHEET IT HAS BEEN ELECTRONICALLY SEALED AND DATED.

PSP03_PS_Bulb_Tee Guidance

Standard Drawing Guidance (do not show on plans):

1. Modify details if expansion gap is used and add Section B-B at expansion device and additional reference notes as shown on standard drawing for steel structures (PSP06).

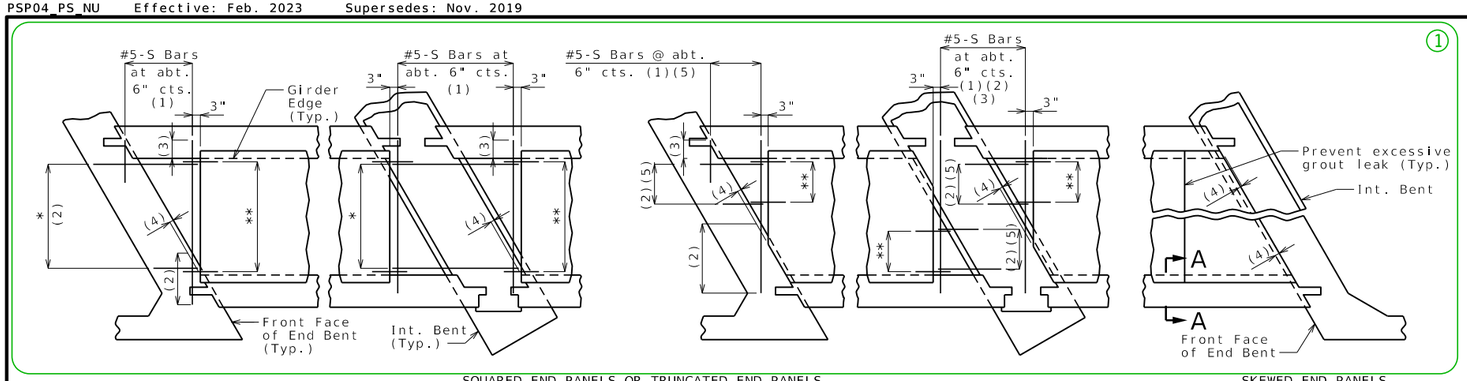

SQUARED END PANELS OR TRUNCATED END PANELS

SKEWED END PANELS

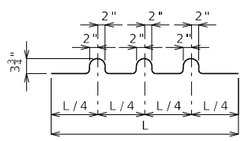

BENDING DIAGRAM FOR U1 BAR

U1 Bars may be oriented at right angles to location and spacing shown. U1 Bars shall be placed between P1 bars.

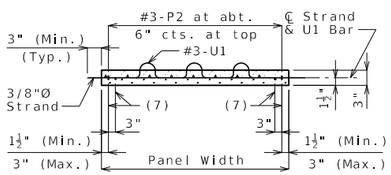

SECTION B-B

PLAN SHOWING PANEL PLACEMENT

* #5-S Bars at abt. 9" cts. (1)
** #3-P1 at 12" cts. (End panels only)

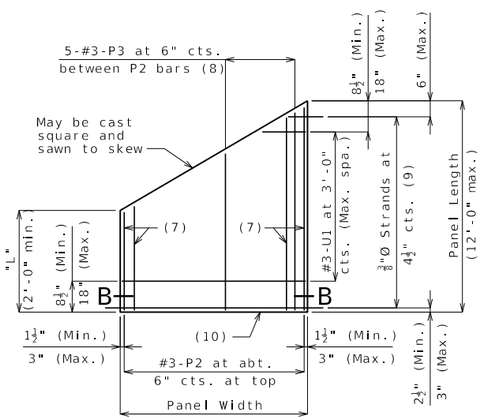

PLAN OF OPTIONAL SKEWED END PANEL

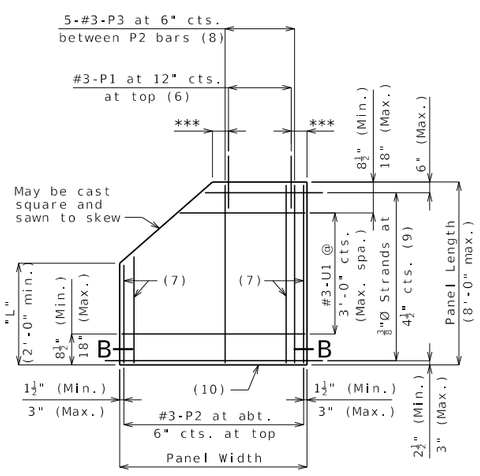

PLAN OF OPTIONAL TRUNCATED END PANEL

*** 3" (Min.), 6" (Max.)

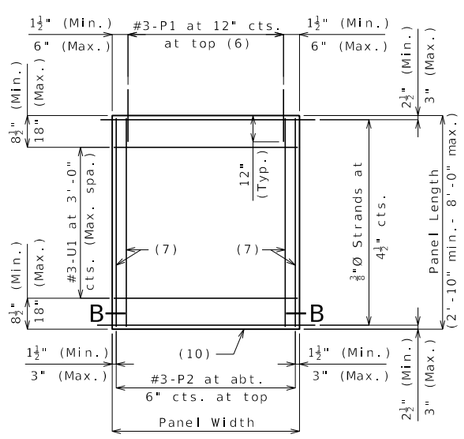

PLAN OF SQUARED PANEL

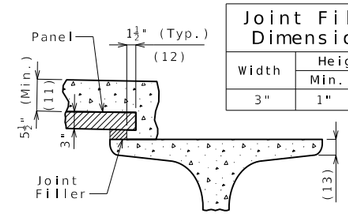

SECTION A-A

Joint Filler Dimensions		
Width	Height	
	Min.	Max.
3"	1"	4"

Reference Notes:

Plan of Panel Placement:

(1) S-bars shown are bottom steel in slab between panels and used with squared and truncated end panels only.

(2) Extend S-bars 18 inches beyond the front face of end bents and int. bents for squared and truncated end panels only.

(3) Extend S-bars 9 inches beyond edge of girder (Typ.).

(4) End panels shall be dimensioned 1/2" min. to 1 1/2" max. from the inside face of diaphragm.

(5) For truncated end panels, use a min. of #5-S bars at 6" crossings in openings, or min. 4x4-W7xW7.

Plans of Panels:

(6) For end panels only, P1 bars shall be 2'-0" in length and embedded 12". P1 bars will not be required for panels at squared integral end bents.

(7) #3-P2 bars near edge of panel at bottom (under strands).

(8) Use #3-P3 bars if panel is skewed 45° or greater.

(9) Any strand 2'-0" or shorter shall have a #4 reinforcing bar on each side of it, centered between strands. Strands 2'-0" or shorter may then be debonded at the fabricator's option.

(10) Optional 1/2" x 45° Chamfer one or both sides at bottom.

Section A-A:

(11) Slab thickness over prestressed panels varies due to girder camber. In order to maintain minimum slab thickness, it may be necessary to raise the grade uniformly throughout the structure. No payment will be made for additional labor or materials required for necessary grade adjustment.

(12) Contractor shall ensure proper consolidation under and between panels.

(13) At the contractor's option, the variation in slab thickness over prestressed panels may be eliminated or reduced by increasing and varying the girder top flange thickness. Dimensions shall be shown on the shop drawings.

General Notes:

Prestressed Panels:

Concrete for prestressed panels shall be Class A-1 with f'c = 6,000 psi, f'ci = 4,000 psi.

The top surface of all panels shall receive a scored finish with a depth of scoring of 1/8" perpendicular to the prestressing strands in the panels.

Prestressing tendons shall be high-tensile strength, uncoated, seven-wire, low-relaxation strands for prestressed concrete in accordance with AASHTO M 203 Grade 270, with nominal diameter of strand = 3/8" and nominal area = 0.085 sq.in. and minimum ultimate strength = 22.95 kips (270 ksi). Larger strands may be used with the same spacing and initial tension.

Initial prestressing force = 17.2 kips/strand.

The method and sequence of releasing the strands shall be shown on the shop drawings.

Suitable anchorage devices for lifting panels may be cast in panels, provided the devices are shown on the shop drawings and approved by the engineer. Panel lengths shall be determined by the contractor and shown on the shop drawings.

When squared end panels are used at skewed bents, the skewed portion shall be cast full depth. No separate payment will be made for additional concrete and reinforcing required.

Support from diaphragm forms is required under the optional skewed end until cast-in-place concrete has reached 3,000 psi compressive strength.

Prestressed panels shall be brought to saturated surface-dry (SSD) condition just prior to the deck pour. There shall be no free standing water on the panels or in the area to be cast.

The prestressed panel quantities are not included in the table of estimated quantities for the slab.

Reinforcing Steel:

All dimensions are out to out.

Hooks and bends shall be in accordance with the CRSI Manual of Standard Practice for Detailing Reinforced Concrete Structures, Stirrup and Tie Dimensions.

Minimum clearance to reinforcing steel shall be 1 1/2", unless otherwise shown.

If U1 bars interfere with placement of slab steel, U1 loops may be bent over, as necessary, to clear slab steel.

Deformed welded wire reinforcement (WWR) providing a minimum area of reinforcing perpendicular to strands of 0.22 sq in./ft, with spacing parallel to strands sufficient to ensure proper handling, may be used in lieu of the #3-P2 bars shown. Wire diameter shall not be larger than 0.375 inch. The above alternative reinforcement criteria may be used in lieu of the #3-P3 bars, when required, and placed over a width not less than 2 feet.

The following reinforcing steel shall be tied securely to the strands with the following maximum spacing in each direction:
#3-P2 bars at 16 inches.
WWR at 24 inches.

The #3-U1 bars shall be tied securely to #3-P2 bars, to WWR or to strands (when placed between P1 bars) at about 3-foot centers.

Minimum reinforcement steel length shall be 2'-0".

All reinforcement other than prestressing strands shall be epoxy coated.

Precast panels may be in contact with stirrup reinforcing in diaphragms.

S-bars are not listed in the bill of reinforcing.

Cost of S-bars will be considered completely covered by the contract unit price for the slab.

Joint Filler:

Joint filler shall be preformed fiber expansion joint material in accordance with Sec 1057 or expanded or extruded polystyrene bedding material in accordance with Sec 1073.

Use Slab Haunching Diagram on Sheet No. XX for determining thickness of joint filler within the limits noted in the table of Joint Filler Dimensions.

Thicker material may be used on one or both sides of the girder to reduce cast-in-place concrete thickness to within tolerances.

The same thickness of preformed fiber expansion joint material shall be used under any one edge of any panel except at locations where top flange thickness may be stepped. The maximum change in thickness between adjacent panels shall be 1/2 inch. The polystyrene bedding material may be cut with a transition to match haunch height above top of flange.

Joint filler shall be glued to the girder. When thickness exceeds 1 1/2 inches, the joint filler shall be glued top and bottom. The glue used shall be the type recommended by the joint filler manufacturer.

Edges of panels shall be uniformly seated on the joint filler before slab reinforcement is placed.

PRESTRESSED PANELS

Detailed
Checked

Note: This drawing is not to scale. Follow dimensions.

Sheet No. of

DATE PREPARED	2/24/2023
ROUTE	STATE MO
DISTRICT	SHEET NO. 4
COUNTY	
JOB NO.	
CONTRACT ID.	
PROJECT NO.	
BRIDGE NO.	

DATE	DESCRIPTION

MISSOURI HIGHWAYS AND TRANSPORTATION COMMISSION
105 WEST CAPITOL
JEFFERSON CITY, MO 65102
1-888-ASK-MODOT (1-888-275-6636)

IF A SEAL IS PRESENT ON THIS SHEET IT HAS BEEN ELECTRONICALLY SEALED AND DATED.

PSP04_PS_NU Guidance

Standard Drawing Guidance (do not show on plans):

1. Modify details if expansion gap is used and add Section B-B at expansion device and additional reference notes as shown on standard drawing for steel structures (PSP06).

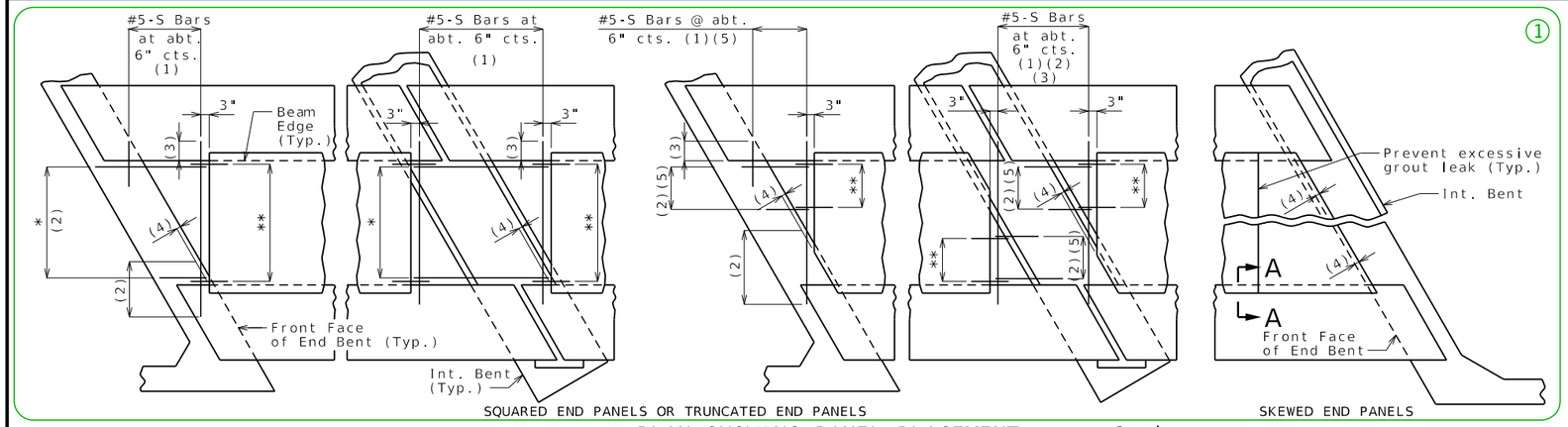

PLAN SHOWING PANEL PLACEMENT

* #5-S Bars at abt. 9" cts. (1)
** #3-P1 at 12" cts. (End panels only)

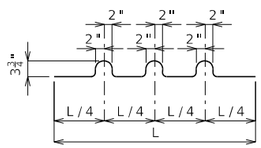

BENDING DIAGRAM FOR U1 BAR

U1 Bars may be oriented at right angles to location and spacing shown. U1 Bars shall be placed between P1 bars.

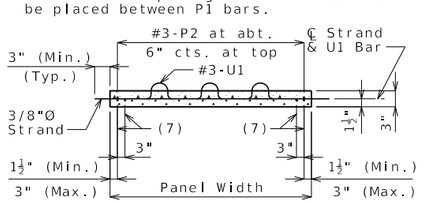

SECTION B-B

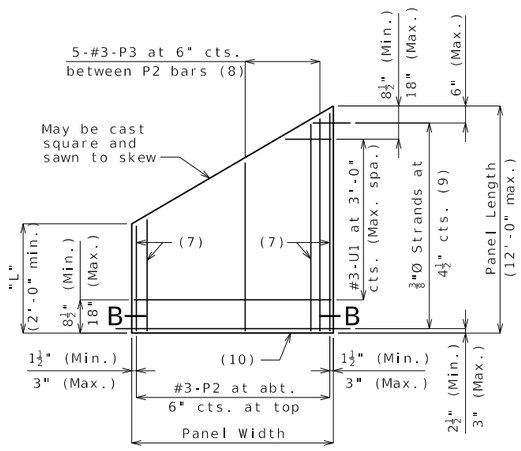

PLAN OF OPTIONAL SKEWED END PANEL

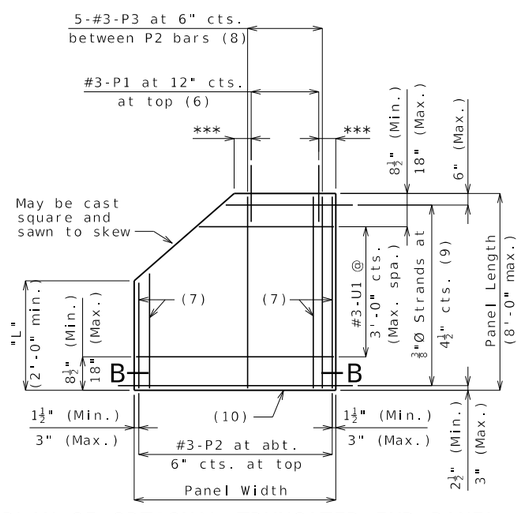

PLAN OF OPTIONAL TRUNCATED END PANEL

*** 3" (Min.), 6" (Max.)

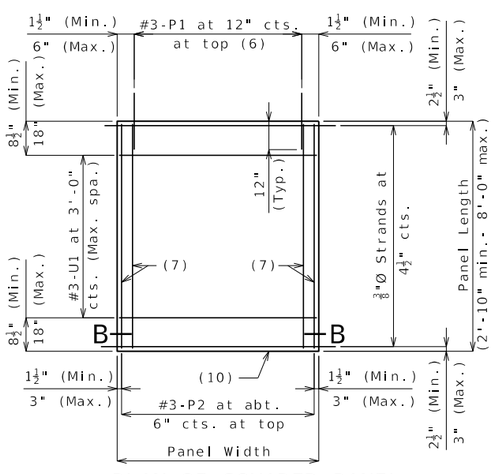

PLAN OF SQUARED PANEL

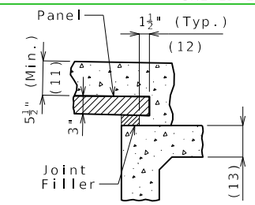

SECTION A-A

Joint Filler Dimensions		
Width	Height	
	Min.	Max.
3"	1"	4"

Reference Notes:

Plan of Panel Placement:
(1) S-bars shown are bottom steel in slab between panels and used with squared and truncated end panels only.

(2) Extend S-bars 18 inches beyond the front face of end bents and int. bents for squared and truncated end panels only.

(3) Extend S-bars 9 inches beyond edge of beam (Typ.).

(4) End panels shall be dimensioned 1/2" min. to 1 1/2" max. from the inside face of diaphragm.

(5) For truncated end panels, use a min. of #5-S bars at 6" crossings in openings, or min. 4x4-W7xW7.

Plans of Panels:
(6) For end panels only, P1 bars shall be 2'-0" in length and embedded 12". P1 bars will not be required for panels at squared integral end bents.

(7) #3-P2 bars near edge of panel at bottom (under strands).

(8) Use #3-P3 bars if panel is skewed 45° or greater.

(9) Any strand 2'-0" or shorter shall have a #4 reinforcing bar on each side of it, centered between strands. Strands 2'-0" or shorter may then be debonded at the fabricator's option.

(10) Optional 1/2" x 45° Chamfer one or both sides at bottom.

Section A-A:
(11) Slab thickness over prestressed panels varies due to beam camber. In order to maintain minimum slab thickness, it may be necessary to raise the grade uniformly throughout the structure. No payment will be made for additional labor or materials required for necessary grade adjustment.

(12) Contractor shall ensure proper consolidation under and between panels.

(13) At the contractor's option, the variation in slab thickness over prestressed panels may be eliminated or reduced by increasing and varying the beam top flange thickness. Dimensions shall be shown on the shop drawings.

General Notes:

Prestressed Panels:
Concrete for prestressed panels shall be Class A-1 with f'c = 6,000 psi, f'ci = 4,000 psi.

The top surface of all panels shall receive a scored finish with a depth of scoring of 1/8" perpendicular to the prestressing strands in the panels.

Prestressing tendons shall be high-tensile strength, uncoated, seven-wire, low-relaxation strands for prestressed concrete in accordance with AASHTO M 203 Grade 270, with nominal diameter of strand = 3/8" and nominal area = 0.085 sq.in. and minimum ultimate strength = 22.95 kips (270 ksi). Larger strands may be used with the same spacing and initial tension.

Initial prestressing force = 17.2 kips/strand.

The method and sequence of releasing the strands shall be shown on the shop drawings.

Suitable anchorage devices for lifting panels may be cast in panels, provided the devices are shown on the shop drawings and approved by the engineer. Panel lengths shall be determined by the contractor and shown on the shop drawings.

When squared end panels are used at skewed bents, the skewed portion shall be cast full depth. No separate payment will be made for additional concrete and reinforcing required.

Support from diaphragm forms is required under the optional skewed end until cast-in-place concrete has reached 3,000 psi compressive strength.

Prestressed panels shall be brought to saturated surface-dry (SSD) condition just prior to the deck pour. There shall be no free standing water on the panels or in the area to be cast.

The prestressed panel quantities are not included in the table of estimated quantities for the slab.

Reinforcing Steel:
All dimensions are out to out.

Hooks and bends shall be in accordance with the CRSI Manual of Standard Practice for Detailing Reinforced Concrete Structures, Stirrup and Tie Dimensions.

Minimum clearance to reinforcing steel shall be 1 1/2", unless otherwise shown.

If U1 bars interfere with placement of slab steel, U1 loops may be bent over, as necessary, to clear slab steel.

Deformed welded wire reinforcement (WWR) providing a minimum area of reinforcing perpendicular to strands of 0.22 sq in./ft, with spacing parallel to strands sufficient to ensure proper handling, may be used in lieu of the #3-P2 bars shown. Wire diameter shall not be larger than 0.375 inch. The above alternative reinforcement criteria may be used in lieu of the #3-P3 bars, when required, and placed over a width not less than 2 feet.

The following reinforcing steel shall be tied securely to the strands with the following maximum spacing in each direction:
#3-P2 bars at 16 inches.
WWR at 24 inches.

The #3-U1 bars shall be tied securely to #3-P2 bars, to WWR or to strands (when placed between P1 bars) at about 3-foot centers.

Minimum reinforcement steel length shall be 2'-0".

All reinforcement other than prestressing strands shall be epoxy coated.

Precast panels may be in contact with stirrup reinforcing in diaphragms.

S-bars are not listed in the bill of reinforcing.

Cost of S-bars will be considered completely covered by the contract unit price for the slab.

Joint Filler:
Joint filler shall be preformed fiber expansion joint material in accordance with Sec 1057 or expanded or extruded polystyrene bedding material in accordance with Sec 1073.

Use Slab Haunching Diagram on Sheet No. XX for determining thickness of joint filler within the limits noted in the table of Joint Filler Dimensions.

Thicker material may be used on one or both sides of the beam to reduce cast-in-place concrete thickness to within tolerances.

The same thickness of preformed fiber expansion joint material shall be used under any one edge of any panel except at locations where top flange thickness may be stepped. The maximum change in thickness between adjacent panels shall be 1/2 inch. The polystyrene bedding material may be cut with a transition to match haunch height above top of flange.

Joint filler shall be glued to the beam. When thickness exceeds 1 1/2 inches, the joint filler shall be glued top and bottom. The glue used shall be the type recommended by the joint filler manufacturer.

Edges of panels shall be uniformly seated on the joint filler before slab reinforcement is placed.

DATE PREPARED	10/17/2024
ROUTE	STATE MO
DISTRICT	SHEET NO. 000
COUNTY	
JOB NO.	
CONTRACT ID.	
PROJECT NO.	
BRIDGE NO.	

DESCRIPTION

DATE

MISSOURI HIGHWAYS AND TRANSPORTATION COMMISSION
105 WEST CAPITOL
JEFFERSON CITY, MO 65102
1-888-ASK-MODOT (1-888-275-6636)

PRESTRESSED PANELS

Detailed
Checked

Note: This drawing is not to scale. Follow dimensions.

Sheet No. of

PSP05_PS_Box Guidance

Standard Drawing Guidance (do not show on plans):

1. Modify details if expansion gap is used and add Section B-B at expansion device and additional reference notes as shown on standard drawing for steel structures (PSP06).

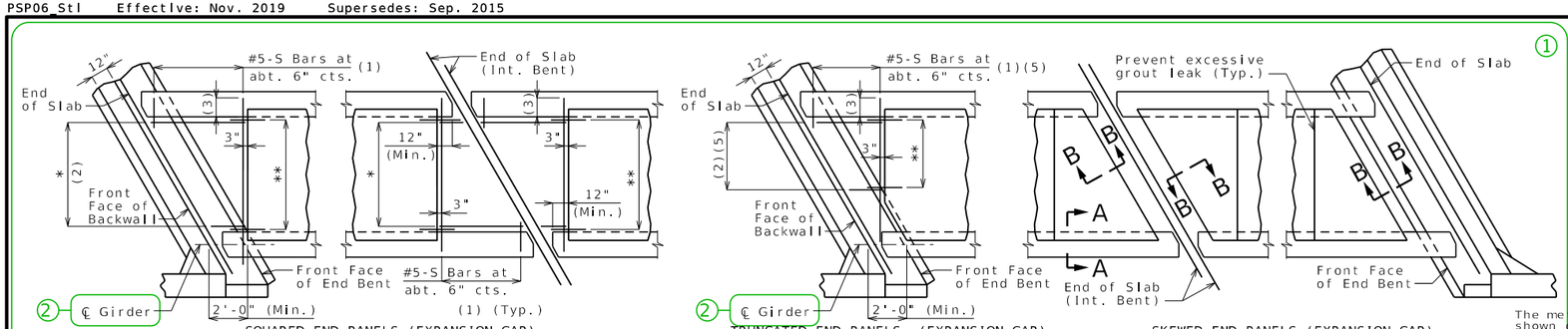

SQUARED END PANELS (EXPANSION GAP)

TRUNCATED END PANELS (EXPANSION GAP)

SKEWED END PANELS (EXPANSION GAP)

PLAN SHOWING PANEL PLACEMENT

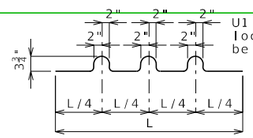

BENDING DIAGRAM FOR U1 BAR

* #5-S Bars at abt. 9" cts. (1)
** #3-P1 at 12" cts. (End panels only)

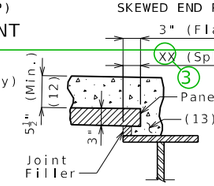

SECTION A-A

Joint Filler Dimensions			
Loc.	Width (W)	Height (H) Min.	Height (H) Max.
Flange	1½"	1"	2"
Splice Plate	¾"***	¼"	1"

*** XX when H < ½"

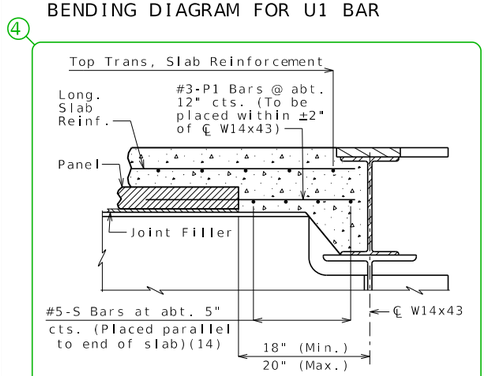

SECTION B-B

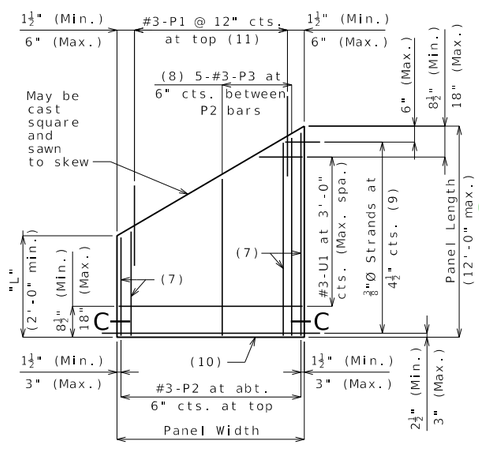

PLAN OF OPTIONAL SKEWED END PANEL

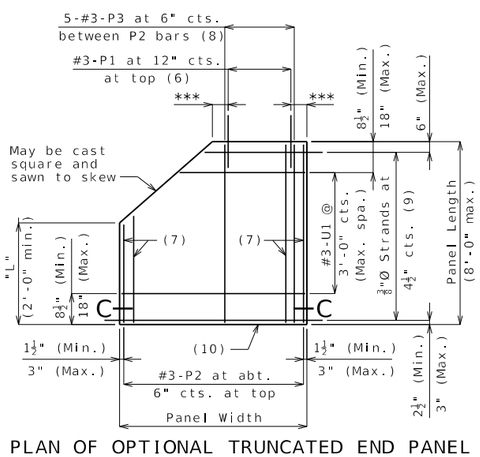

PLAN OF OPTIONAL TRUNCATED END PANEL

*** 3" (Min.), 6" (Max.)

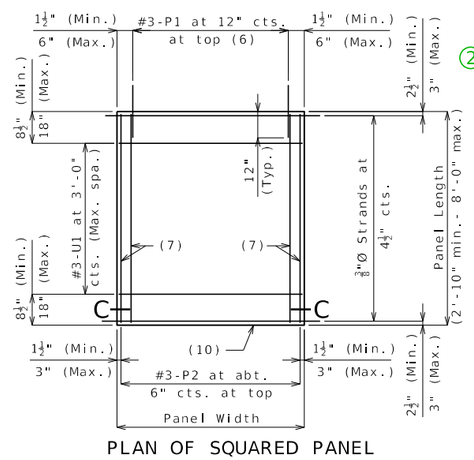

PLAN OF SQUARED PANEL

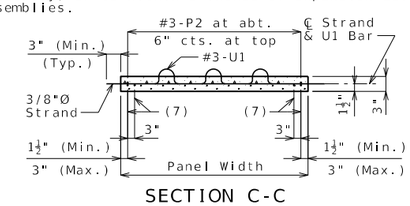

SECTION C-C

PRESTRESSED PANELS

Reference Notes:

Plan of Panel Placement:

(1) S-bars shown are bottom steel in slab between panels and used with squared and truncated end panels only.

(2) Extend S-bars 18 inches beyond the front face of end bents and int. bents for squared and truncated end panels only.

(3) Extend S-bars 9 inches beyond edge of girder (Typ.).

(4) End panels shall be dimensioned 1/2" min. to 1 1/2" max. from the inside face of diaphragm.

(5) For truncated end panels, use a min. of #5-S bars at 6" crossings in openings, or min. 4x4-W7xW7.

Plans of Panels:

(6) For end panels only, P1 bars shall be 2'-0" in length and embedded 12". P1 bars will not be required for panels at squared integral end bents.

(7) #3-P2 bars near edge of panel at bottom (under strands).

(8) Use #3-P3 bars if panel is skewed 45° or greater.

(9) Any strand 2'-0" or shorter shall have a #4 reinforcing bar on each side of it, centered between strands. Strands 2'-0" or shorter may then be debonded at the fabricator's option.

(10) Optional 1/2" x 45° Chamfer one or both sides at bottom.

Section A-A:

(11) P1 bars not required for integral end bents.

(12) Adjustment in the slab thickness, joint filler, or grade will be necessary if the girder camber after erection differs from plan camber by more than the % of dead load deflection due to the weight of structural steel. No payment will be made for additional labor or materials for the adjustment.

(13) Contractor shall ensure proper consolidation under and between panels.

Section B-B:

(14) S-bars shown are used with skewed end panels, or squared end panels of squared structures only. The #5 S-bars shall extend the width of slab (2'-6" lap if necessary) or to within 3 inches of expansion device assemblies.

General Notes:

Prestressed Panels:

Concrete for prestressed panels shall be Class A-1 with f'c = 6,000 psi, f'ci = 4,000 psi.

The top surface of all panels shall receive a scored finish with a depth of scoring of 1/8" perpendicular to the prestressing strands in the panels.

Prestressing tendons shall be high-tensile strength uncoated seven-wire low-relaxation strands for prestressed concrete in accordance with AASHTO M 203 Grade 270, with nominal diameter of strand = 3/8" and nominal area = 0.085 sq. in. and minimum ultimate strength = 22.95 kips (270 ksi). Larger strands may be used with the same spacing and initial tension.

Initial prestressing force = 17.2 kips/strand.

The method and sequence of releasing the strands shall be shown on the shop drawings.

Suitable anchorage devices for lifting panels may be cast in panels, provided the devices are shown on the shop drawings and approved by the engineer. Panel lengths shall be determined by the contractor and shown on the shop drawings.

When squared end panels are used at skewed bents, the skewed portion shall be cast full depth. No separate payment will be made for additional concrete and reinforcing required.

Support from diaphragm forms is required under the optional skewed end until cast-in-place concrete has reached 3,000 psi compressive strength.

Prestressed panels shall be brought to saturated surface-dry (SSD) condition just prior to the deck pour. There shall be no free standing water on the panels or in the area to be cast.

The prestressed panel quantities are not included in the table of estimated quantities for slab.

Reinforcing Steel:

All dimensions are out to out.

Hooks and bends shall be in accordance with the CRSI Manual of Standard Practice for Detailing Reinforced Concrete Structures, Stirrup and Tie Dimensions.

Minimum clearance to reinforcing steel shall be 1 1/2", unless otherwise shown.

If U1 bars interfere with placement of slab steel, U1 loops may be bent over, as necessary, to clear slab steel.

Deformed welded wire reinforcement (WWR) providing a minimum area of reinforcing perpendicular to strands of 0.22 sq in./ft, with spacing parallel to strands sufficient to ensure proper handling, may be used in lieu of the #3-P2 bars shown. Wire diameter shall not be larger than 0.375 inch. The above alternative reinforcement criteria may be used in lieu of the #3-P3 bars, when required, and placed over a width not less than 2 feet.

The following reinforcing steel shall be tied securely to the strands with the following maximum spacing in each direction:
#3-P2 bars at 16 inches.
WWR at 24 inches.

The #3-U1 bars shall be tied securely to #3-P2 bars, to WWR or to strands (when placed between P1 bars) at about 3-foot centers.

Minimum reinforcement steel length shall be 2'-0".

All reinforcement other than prestressing strands shall be epoxy coated.

Precast panels may be in contact with stirrup reinforcing in diaphragms.

S-bars are not listed in the bill of reinforcing.

Cost of S-bars will be considered completely covered by the contract unit price for the Slab.

Joint Filler:

Joint filler shall be preformed fiber expansion joint material in accordance with Sec 1057 or expanded or extruded polystyrene bedding material in accordance with Sec 1073.

The thickness of the joint filler shall be adjusted to achieve the slab haunching dimension found on Sheet No. XX. These adjustments shall be within the limits noted in the table of Joint Filler Dimensions.

Thicker material shall be used on one or both sides of the girder to reduce cast-in-place concrete thickness to within tolerances.

The same thickness of material shall be used under any one edge of any panel except at splices, and the maximum change in thickness between adjacent panels shall be 1/4 inch to correct for variations from Girder Camber Diagram. The polystyrene bedding material may be cut to match haunch height above top of flange.

Joint filler shall be glued to the girder. When thickness exceeds 1 1/2 inches, the joint filler shall be glued top and bottom. The glue used shall be the type recommended by the joint filler manufacturer.

Edges of panels shall be uniformly seated on the joint filler before slab reinforcement is placed.

DATE PREPARED	
2/24/2023	
ROUTE	STATE MO
DISTRICT	SHEET NO. 6
COUNTY	
JOB NO.	
CONTRACT ID.	
PROJECT NO.	
BRIDGE NO.	

DATE	DESCRIPTION

MISSOURI HIGHWAYS AND TRANSPORTATION COMMISSION
105 WEST CAPITOL
JEFFERSON CITY, MO 65102
1-888-ASK-MODOT (1-888-275-6636)

IF A SEAL IS PRESENT ON THIS SHEET IT HAS BEEN ELECTRONICALLY SEALED AND DATED.

Detailed
Checked

Note: This drawing is not to scale. Follow dimensions.

Sheet No. of

PSP06_Stl Guidance

Standard Drawing Guidance (do not show on plans):

① Update with correct sheet no.

② For wide flange beams, turn off Level 20 & turn on Level 21.

③ XX = G - $1\frac{1}{4}$" ($1\frac{1}{2}$" max.) If XX equals $\frac{3}{4}$", remove asterisk and note.
G is from the edge of the spice plate to the centerline of the nearest splice bolt.

④ Trade Section B-B as needed or omit if integral end bents.

⑤ Replace all expansion gap with integral end bents in "Plan Showing Panels Placement".

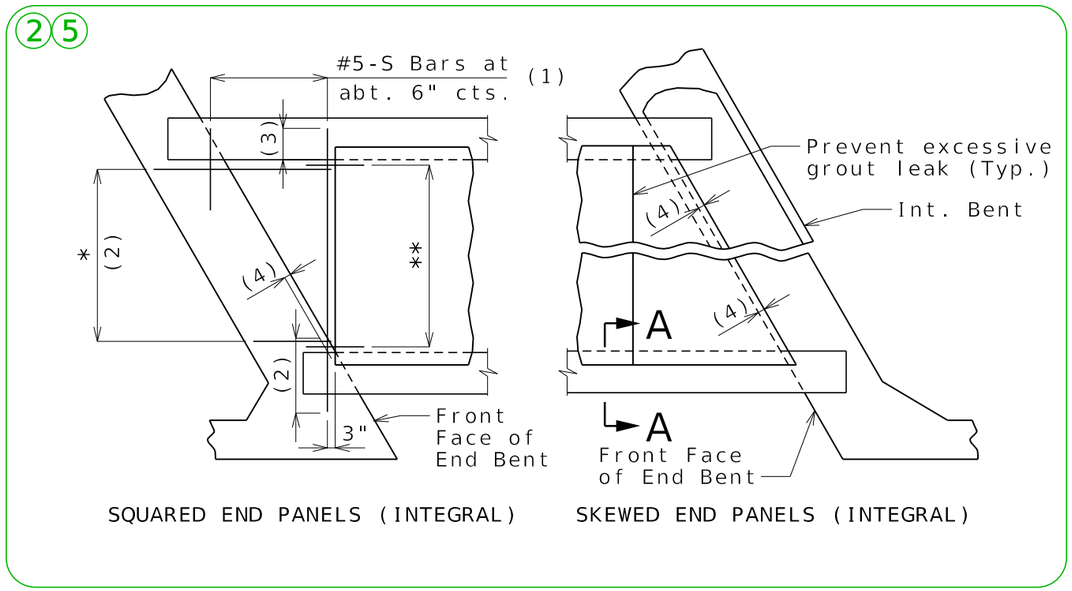

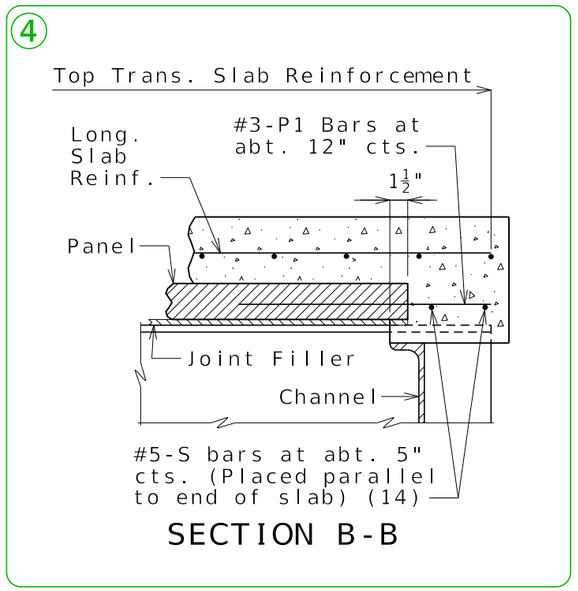

SEC/SUR *	TWP *	RGE *

U.I.P., REDECK AND MAKE COMPOSITE EXISTING (__'- __'- __') CONTINUOUS WIDE FLANGE BEAM SPANS

Table Showing S2 Bar Lengths

Int. Bent No. 2		Int. Bent No. 3	
Span 1	Span 2	Span 2	Span 3
__'-_"	__'-_"	__'-_"	__'-_"

Required Lap Length For Bar Splices **

Bar Size	Splice Length
4	2'-7"
5	3'-3"
6	3'-10"
7	4'-11"

** Unless otherwise shown.

General Notes:

Design Specifications:
2002 AASHTO LFD (17th Ed.) Standard Specifications
Seismic Performance Category A

Design Loading:
HS__-__ (19__) (Existing)
HS20-44 (New Construction)
35 lb/sf Future Wearing Surface
Earth - 120 lb/cf, Equivalent Fluid Pressure 45 lb/cf
Fatigue Stress - Case III

Design Unit Stresses:

Class B-1 Concrete (Barrier)	f'c = 4,000 psi
Class B-2 Concrete (End Bents & Superstructure, except Barrier)	f'c = 4,000 psi
Reinforcing Steel (ASTM A615 Grade 60)	fy = 60,000 psi

Joint Filler:
All joint filler shall be in accordance with Sec 1057 for preformed sponge rubber expansion and partition joint filler, except as noted.

Reinforcing Steel:
Minimum clearance to reinforcing steel shall be 1 1/2", unless otherwise shown.

Miscellaneous:
Protective coating for concrete bents and piers (Urethane or Epoxy) shall be applied as shown on the bridge plans and in accordance with Sec 711.

Bars bonded in existing concrete not removed shall be cleanly stripped and embedded into new concrete where possible. If length is available, existing bars shall extend into new concrete at least 40 diameters for plain bars and 30 diameters for deformed bars, unless otherwise noted.

Roadway surfacing adjacent to bridge ends shall match new bridge slab surface. (Roadway item)

Outline of existing work is indicated by light dashed lines. Heavy lines indicate new work.

Contractor shall verify all dimensions in field before finalizing the shop drawings. (5)

The area exposed by the removal of concrete and not covered with new concrete shall be coated with an approved qualified special mortar in accordance with Sec 704.

Rubblized concrete from the existing bridge deck that qualifies as clean fill may be placed on spill slopes at end bents above ordinary high water line (Roadway item). (2)

For adjusted girder deflection due to the weight of the new deck and barriers, see Bridge Electronic Deliverables.

Traffic Handling:
Structure to be closed during construction. Traffic to be maintained on _____ during construction. See roadway plans for traffic control and Sheet No. ____ for staged construction details.

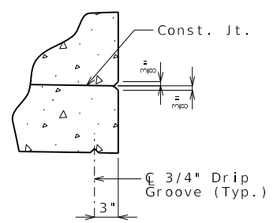

DETAIL B

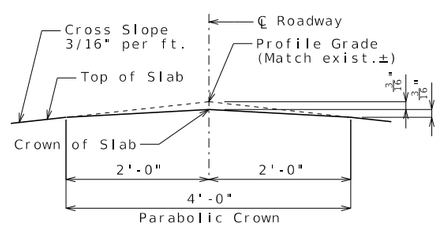

DETAIL A

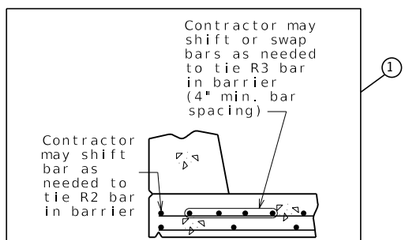

OPTIONAL SHIFTING TOP BARS AT BARRIER (1)

Estimated Quantities

Item		Total
Removal of Existing Bridge Deck	sq. foot	X
Partial Removal of Substructure Concrete	lump sum	1
Slab on Steel	sq. yard	X
Type D Barrier	linear foot	X
Protective Coating - Concrete Bents and Piers (Urethane)	lump sum	1
Shear Connectors	each	X
Slab Drain	each	X

Cost of any required excavation for bridge will be considered completely covered by the contract unit price for other items.

Estimated Quantities for Slab on Steel

Item		Total
Class B-2 Concrete	cu. yard	x
Reinforcing Steel (Epoxy Coated)	pound	x

The table of Estimated Quantities for Slab on Steel represents the quantities used by the State in preparing the cost estimate for concrete slabs. The area of the concrete slab will be measured to the nearest square yard longitudinally from end of slab to end of slab and transversely from out to out of bridge slab (or with the horizontal dimensions as shown on the plan of slab). Payment for stay-in-place corrugated steel forms, conventional forms, all concrete and epoxy coated reinforcing steel will be considered completely covered by the contract unit price for the slab. Variations may be encountered in the estimated quantities but the variations cannot be used for an adjustment in the contract unit price.

Method of forming the slab shall be in accordance with Sec 703. All hardware for forming the slab to be left in place as a permanent part of the structure shall be coated in accordance with ASTM A123 or ASTM B633 with a thickness Class SC 4 and a finish Type I, II or III.

Slab shall be cast-in-place with conventional forming or stay-in-place corrugated steel forms. Precast prestressed panels will not be permitted.

For Optional Stay-In-Place Form Details, see Sheet No. 2.

REPAIRS TO BRIDGE:
ROUTE * OVER *
ROUTE * FROM * TO *
ABOUT * MILES * OF *
BEGINNING STATION ± (MATCH EXISTING)

DATE PREPARED 12/18/2024
ROUTE | STATE MO
DISTRICT | SHEET NO. 000
COUNTY
JOB NO.
CONTRACT ID.
PROJECT NO.
BRIDGE NO.

DATE	DESCRIPTION

MISSOURI HIGHWAYS AND TRANSPORTATION COMMISSION
105 WEST CAPITOL
JEFFERSON CITY, MO 65102
1-888-ASK-MODOT (1-888-275-6636)

REDECK01_front_sheet Guidance & Alternate Details (1 of 7)

Standard Drawing Guidance (do not show on plans):
(Turn off level Bridge-Constructions to hide)

1. Remove if not required; may be incorporated into half section slab details.
2. Use this note only when specified in Bridge Memo or Design Layout.
3. For skewed bridges, add these items to section details to call out varied transverse bars at end bent.
4. Bar spacing shown is for Type D barrier. Below spacing may be used for Type H barrier.

Roadway	22 feet	22 feet	24 feet	24 feet	26 feet	26 feet
Beam Spa.	4 @ 6'-8"	4 @ 6'-0"	4 @ 6'-10"	4 @ 6'-8"	4 @ 7'-8"	4 @ 7'-4"
Bar Spa.	7"	7½"	8"	7½"	8"	8"

Roadway	28 feet	30 feet	32 feet	34 feet	38 feet
Beam Spa.	4 @ 8'-0"	4 @ 8'-8"	4 @ 9'-4"	5 @ 7'-6"	5 @ 8'-6"
Bar Spa.	8"	8"	8"	8"	6"

5. Note is required only when shop drawings will be required (For example, expansion device replacement, diaphragm replacement, etc.)

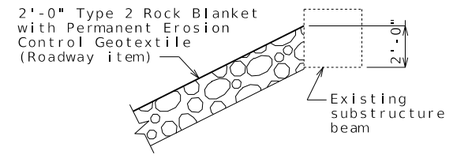

ROCK BLANKET ON SPILL SLOPES

Use when Rock Blanket is specified on BR Memo.

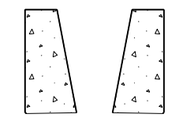

Type H Barrier

Structural Steel Protective Coating:

A4a1.21

Protective Coating: System G in accordance with Sec 1081 except thinners are not permitted.

Surface Preparation: Surface preparation of the existing steel shall be in accordance with Sec 1081 for Overcoating of Structural Steel. The cost of surface preparation will be considered completely covered by the contract lump sum unit price per sq. foot for Surface Preparation for Overcoating Structural Steel (System G).

A4a1.22

Field Coat(s): The color of the field overcoat shall be Gray (Federal Standard #26373) Brown (Federal Standard #30045) Black (Federal Standard #17038) Dark Blue (Federal Standard #25052) Bright Blue (Federal Standard #25095) and shall be applied in accordance with Sec 1081.10.3.4, except that all structural steel shall have the intermediate field coat applied in accordance with Sec 1081.10.3.4.1.1. The cost of the intermediate field coat will be considered completely covered by the contract lump sum unit price per sq. foot for Intermediate Field Coat (Sytem G). The cost of the finish field coat will be considered completely covered by the contract lump sum unit price per sq. foot for Finish Field Coat (System G).

A4a1.23

(Existing Bearings at End Bents and Int. Bents)

Structural Steel Protective Coating:

Protective Coating: System G in accordance with Sec 1081. All existing bearings shall be recoated with System G.

A4a1.9 (Modified)

Surface Preparation: Surface preparation of the existing steel shall be in accordance with Sec 1081 for Recoating of Structural Steel (System G, H or I) with organic inorganic zinc primer. The cost of surface preparation will be considered completely covered by the contract unit price for Recoating Existing Bearings.

A4a1.10 (Modified)

Prime Coat: The cost of the prime coat will be considered completely covered by the contract unit price for Recoating Existing Bearings. Tint of the prime coat for System G shall be similar to the color of the field coat to be used.

A4a1.11 (Modified)

Field Coat: The color of the finish field coat shall be Gray (Federal Standard #26373). The cost of the intermediate field coat will be considered completely covered by the contract unit price for Recoating Existing Bearings. The cost of the finish field coat will be considered completely covered by the contract unit price for Recoating Existing Bearings.

A4a1.12 (Modified)

Sec 1081.10.4.6 shall be modified such that the word "RECOATED" is replaced by the word "RECOATED - SYSTEM G - BEARINGS ONLY".

(Structures with Exposed Piling)

Structural Steel Protective Coating:

A4a3.2

All exposed surfaces of the existing structural steel piles shall be coated with one 6-mil thickness of aluminum gray epoxy-mastic primerapplied over an SSPC-SP3 surface preparation in accordance with Sec 1081. The bituminous coating shall be applied one foot above and one foot below the existing ground line and in accordance with Sec 702. These protective coatings will not be required below the normal low water line. The cost of surface preparation will be considered completely covered by the contract lump sum price for Surface Preparation for Applying Epoxy-Mastic Primer. The cost of the aluminum gray epoxy-mastic primer and bituminous coating will be considered completely covered by the contract lump sum price for Aluminum Gray Epoxy-Mastic Primer.

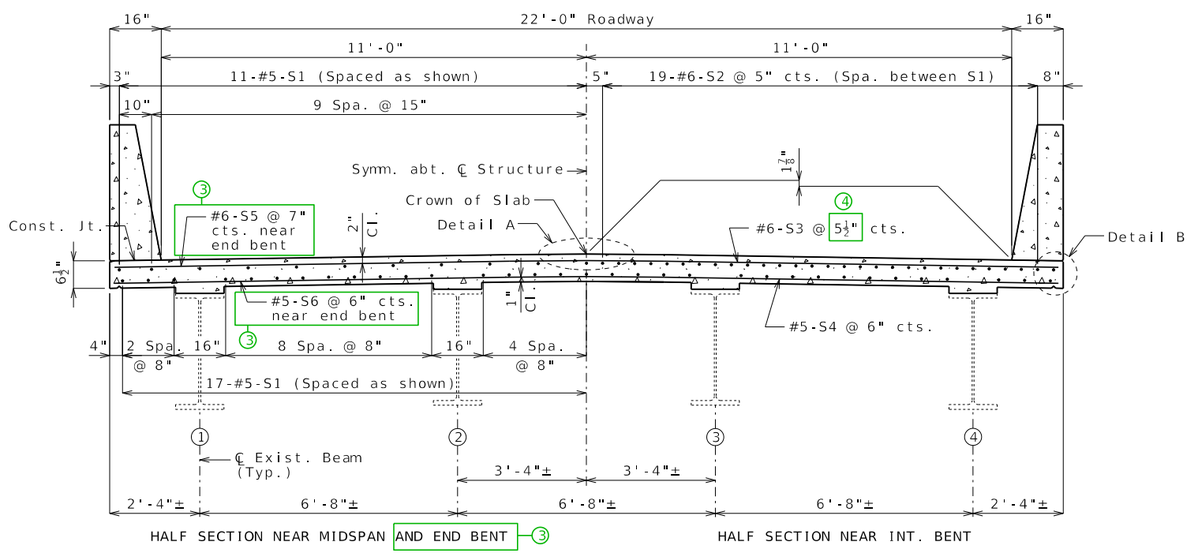

TYPICAL SECTION THRU SLAB

22' RDWY-4 BEAMS @ 6'-8"

*** SKEWED BRIDGES ***

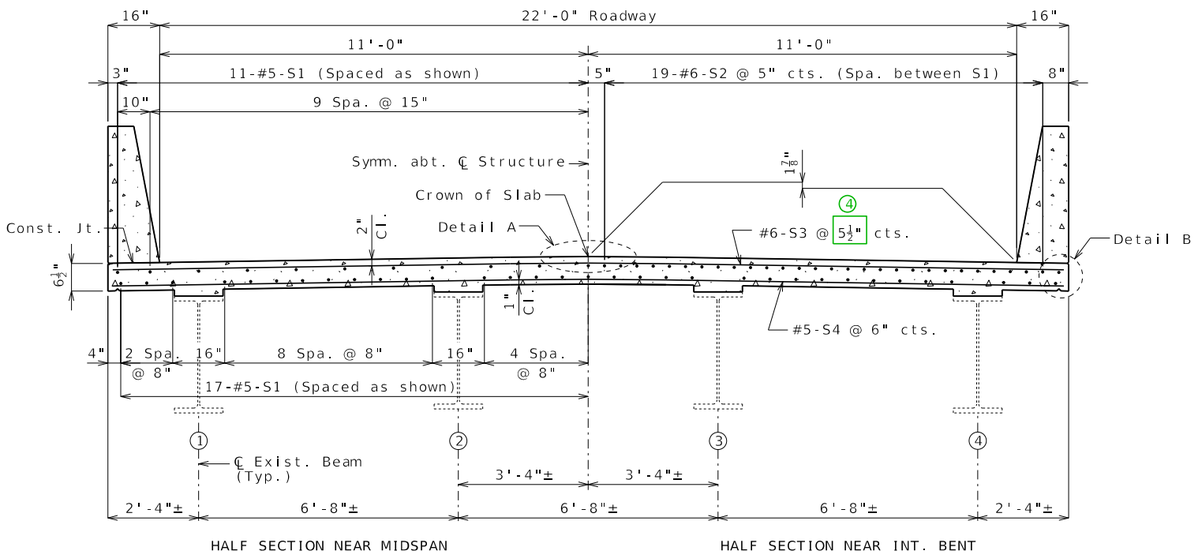

TYPICAL SECTION THRU SLAB

22' RDWY-4 BEAMS @ 6'-8"

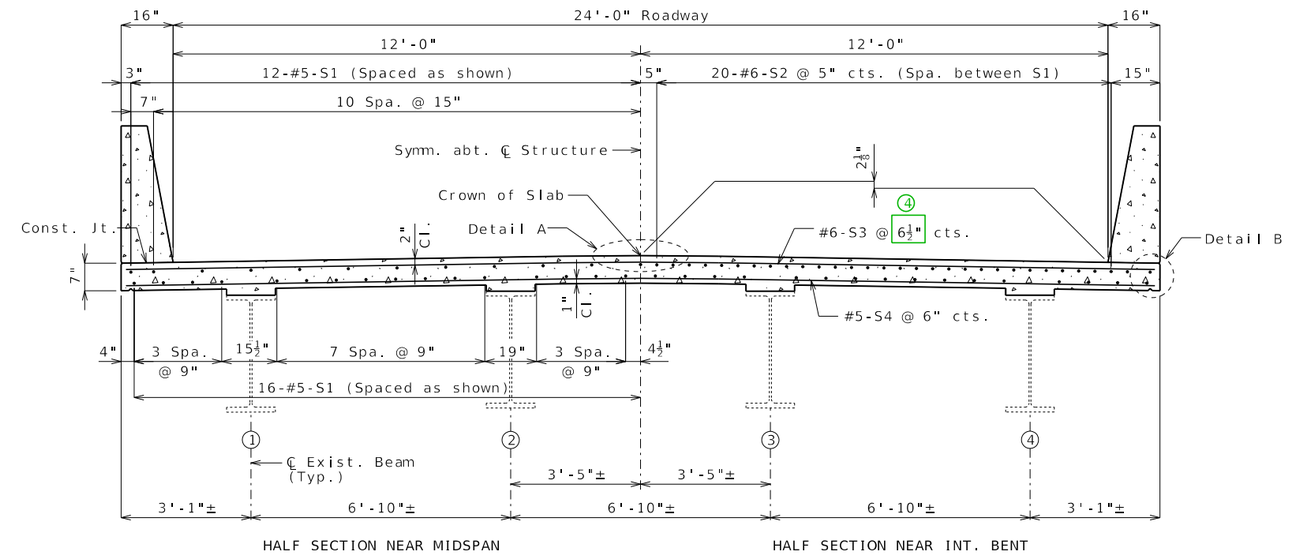

TYPICAL SECTION THRU SLAB

24' RDWY-4 BEAMS @ 6'-10"

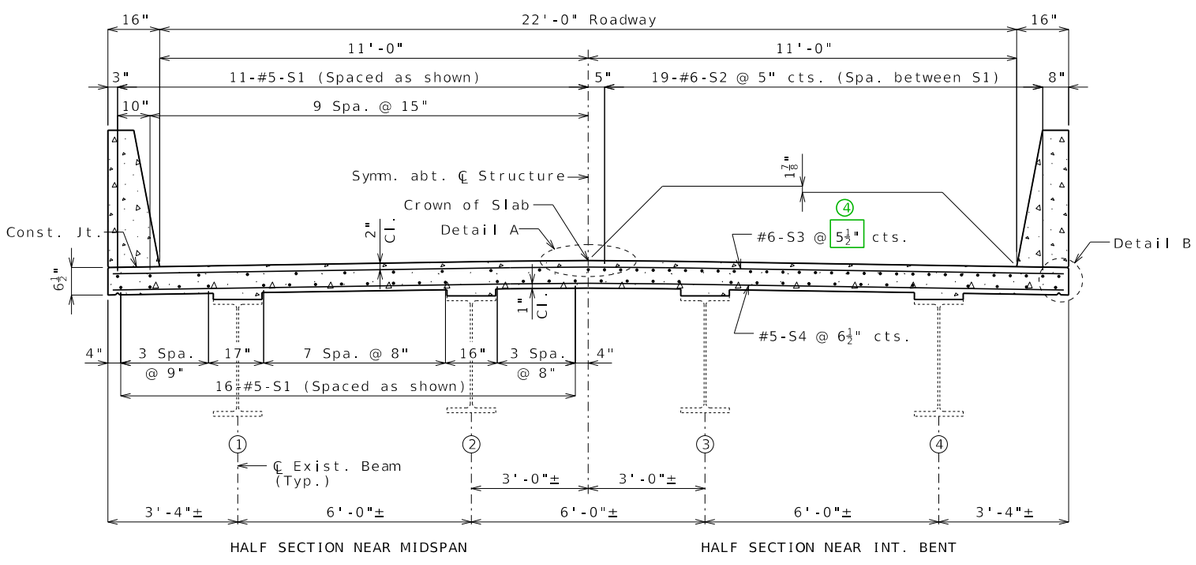

TYPICAL SECTION THRU SLAB

22' RDWY-4 BEAMS @ 6'-0"

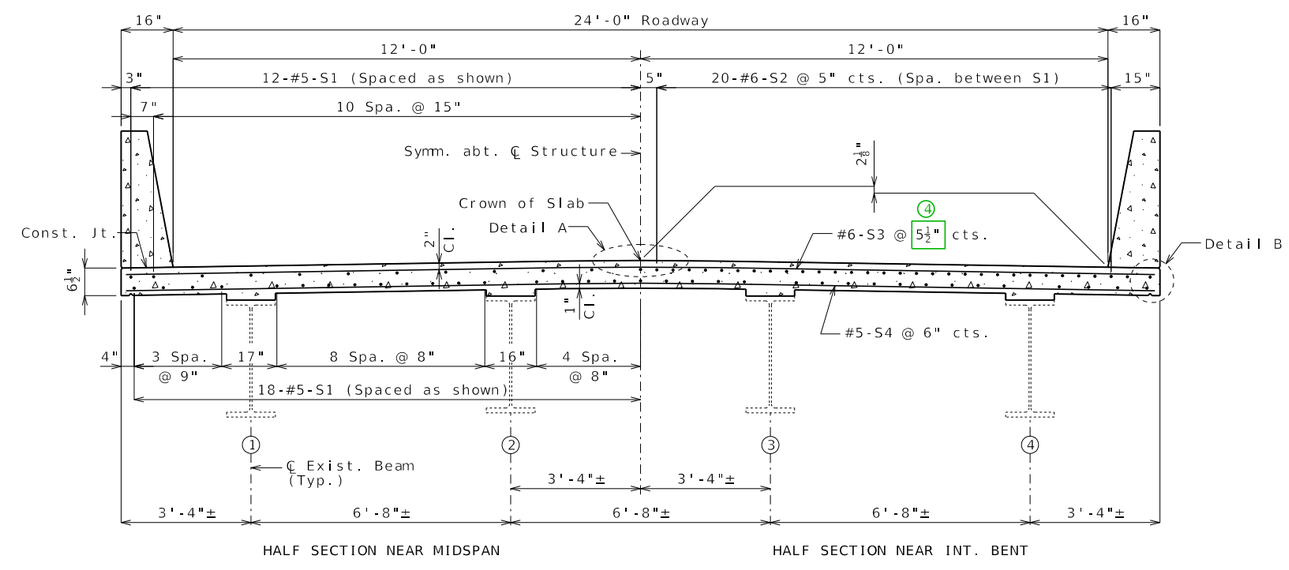

TYPICAL SECTION THRU SLAB

24' RDWY-4 BEAMS @ 6'-8"

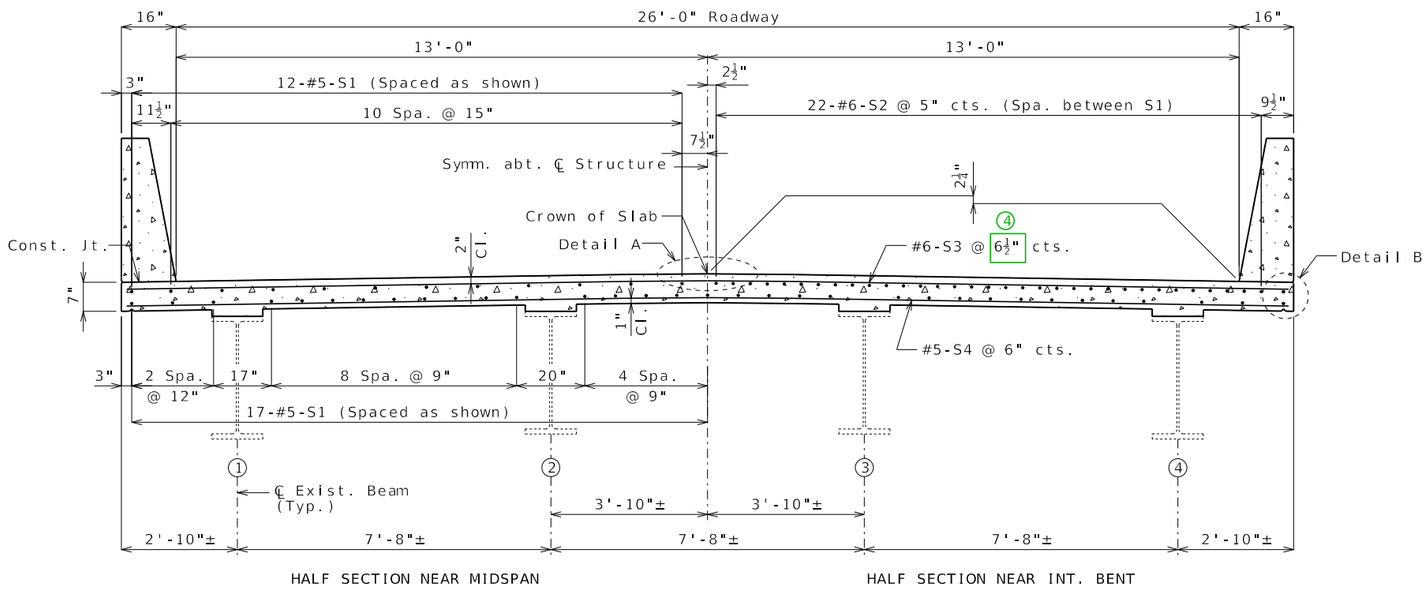

TYPICAL SECTION THRU SLAB

26' RDWY-4 BEAMS @ 7'-8"

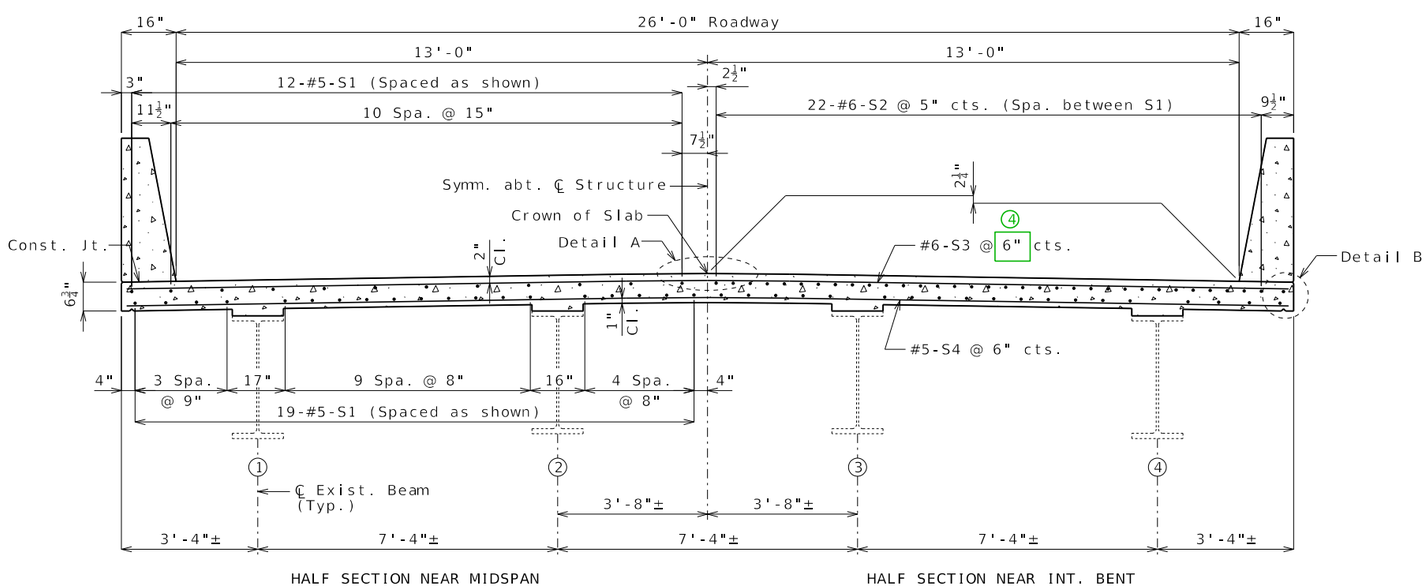

TYPICAL SECTION THRU SLAB

26' RDWY-4 BEAMS @ 7'-4"

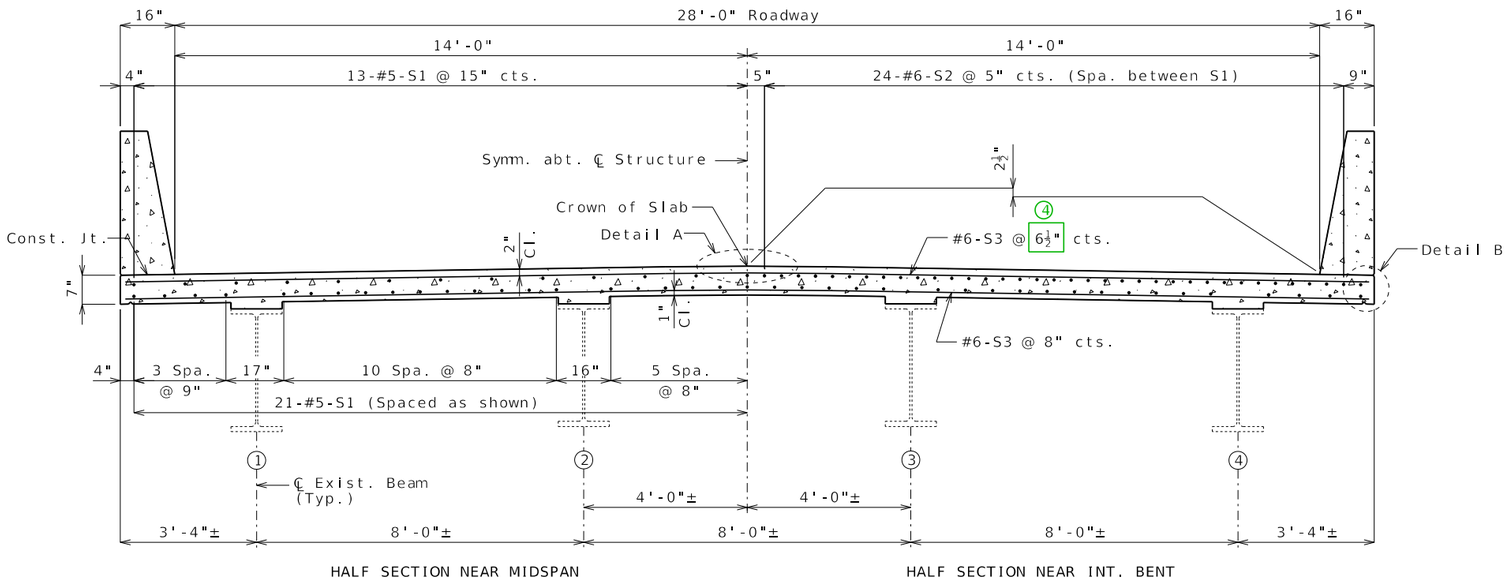

TYPICAL SECTION THRU SLAB

28' RDWY-4 BEAMS @ 8'-0"

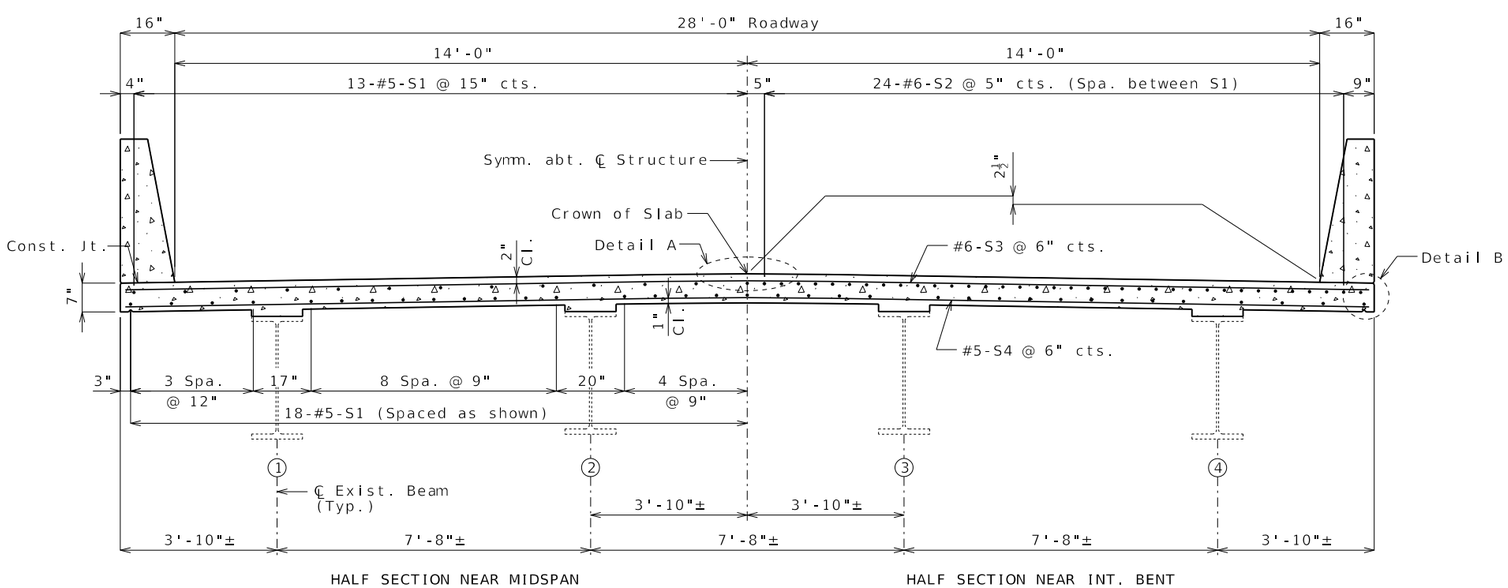

TYPICAL SECTION THRU SLAB

28' RDWY-4 BEAMS @ 7'-8"

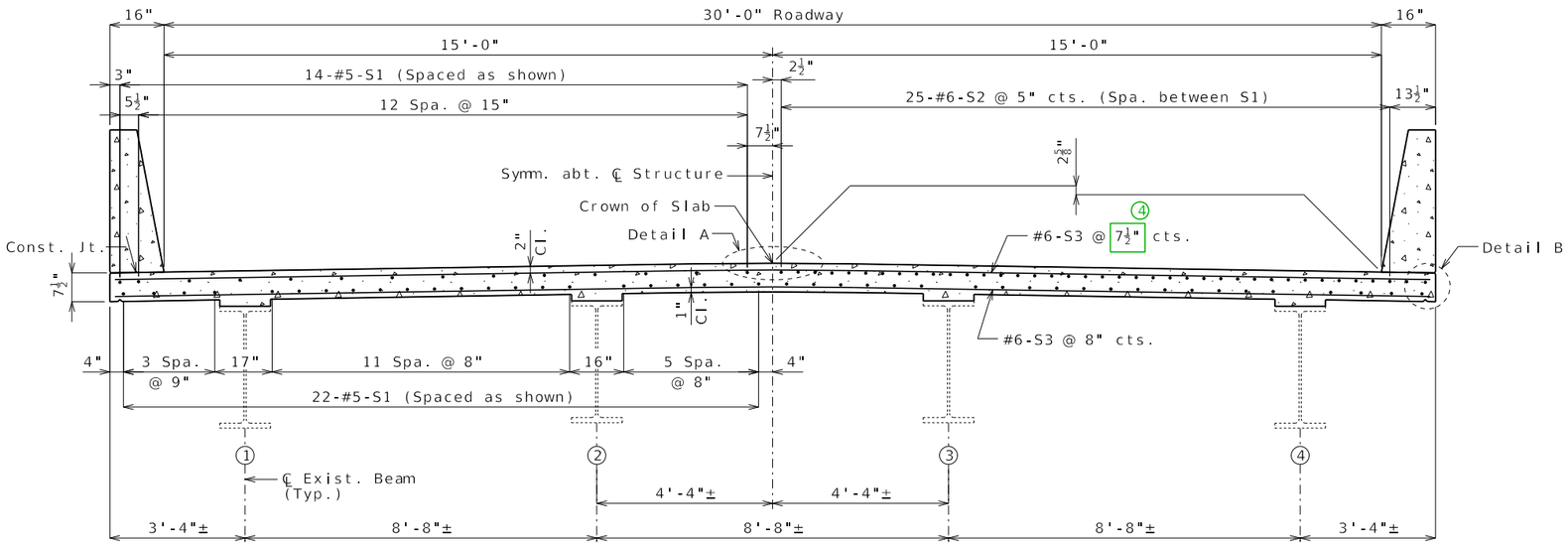

HALF SECTION NEAR MIDSPAN HALF SECTION NEAR INT. BENT

TYPICAL SECTION THRU SLAB

30' RDWY-4 BEAMS @ 8'-8"

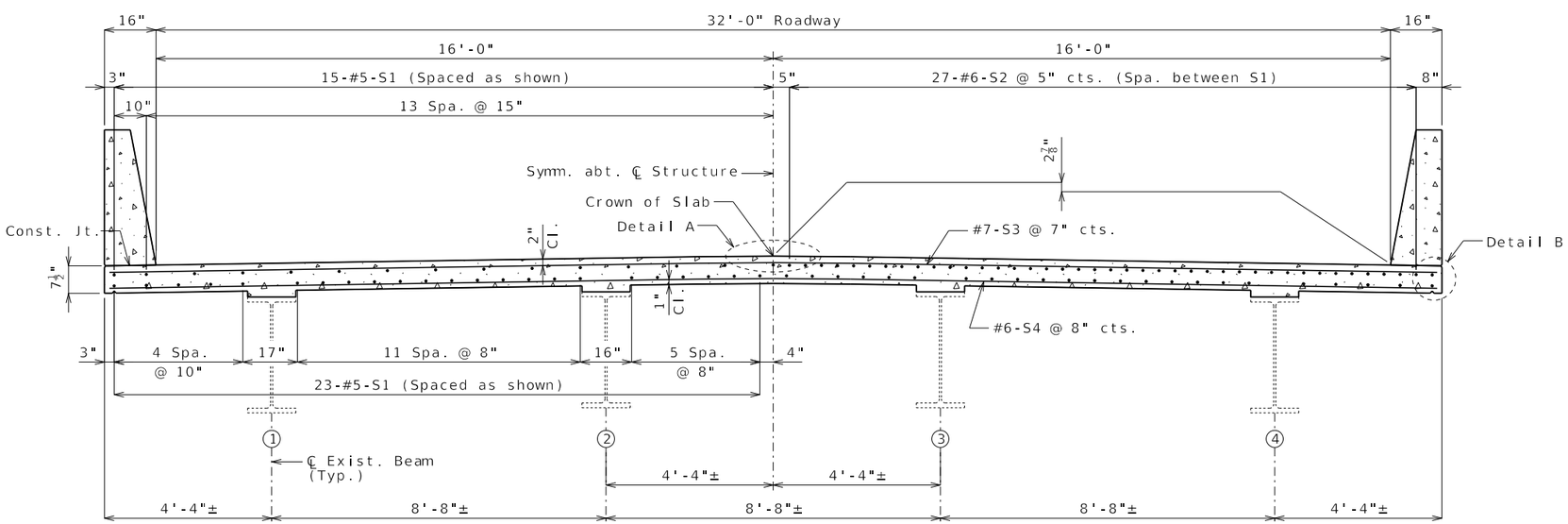

HALF SECTION NEAR MIDSPAN HALF SECTION NEAR INT. BENT

TYPICAL SECTION THRU SLAB

32' RDWY-4 BEAMS @ 8'-8"

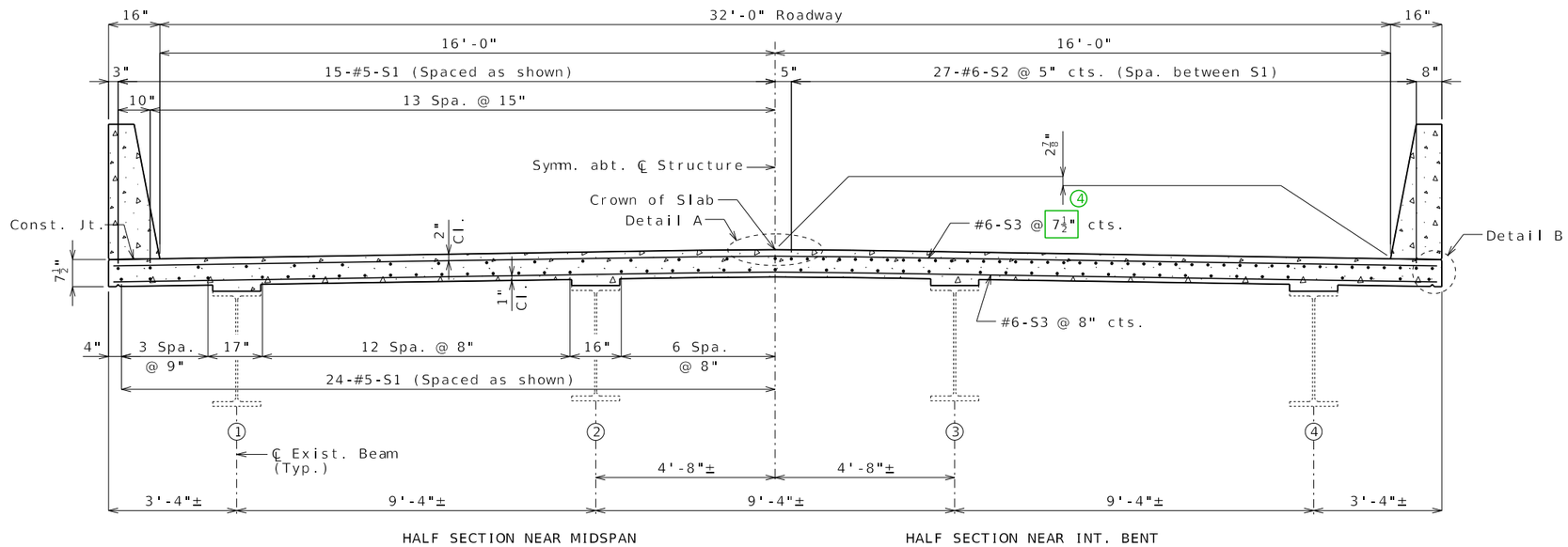

TYPICAL SECTION THRU SLAB

32' RDWY-4 BEAMS @ 9'-4"

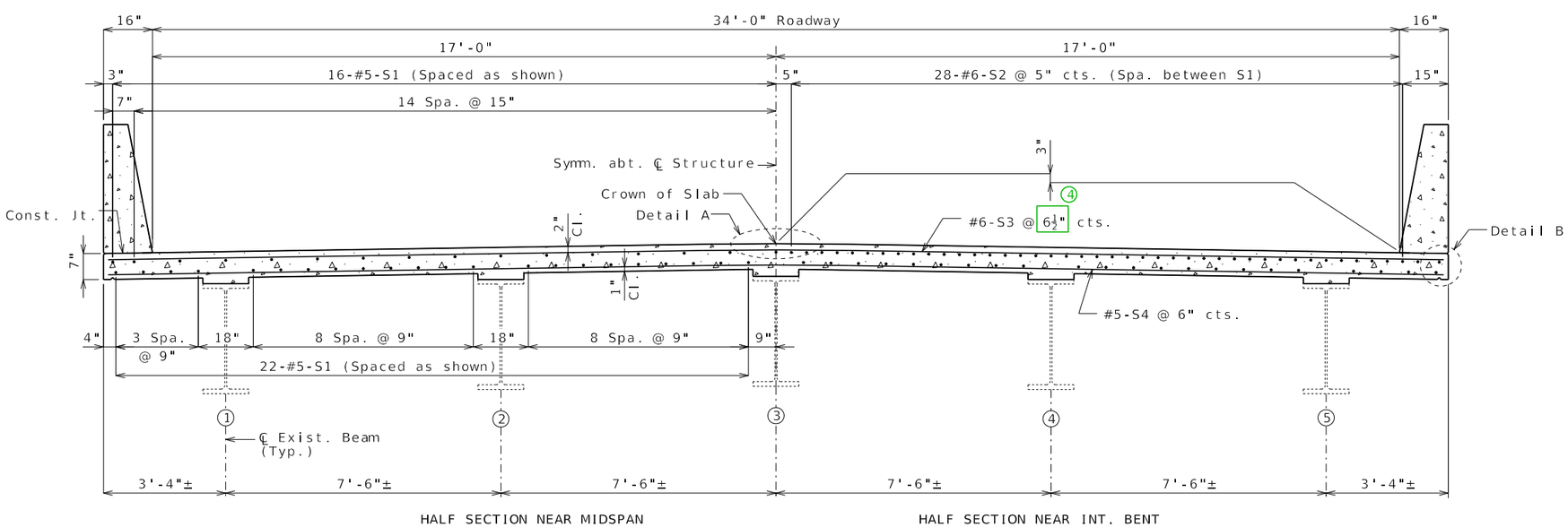

TYPICAL SECTION THRU SLAB

34' RDWY-5 BEAMS @ 7'-6"

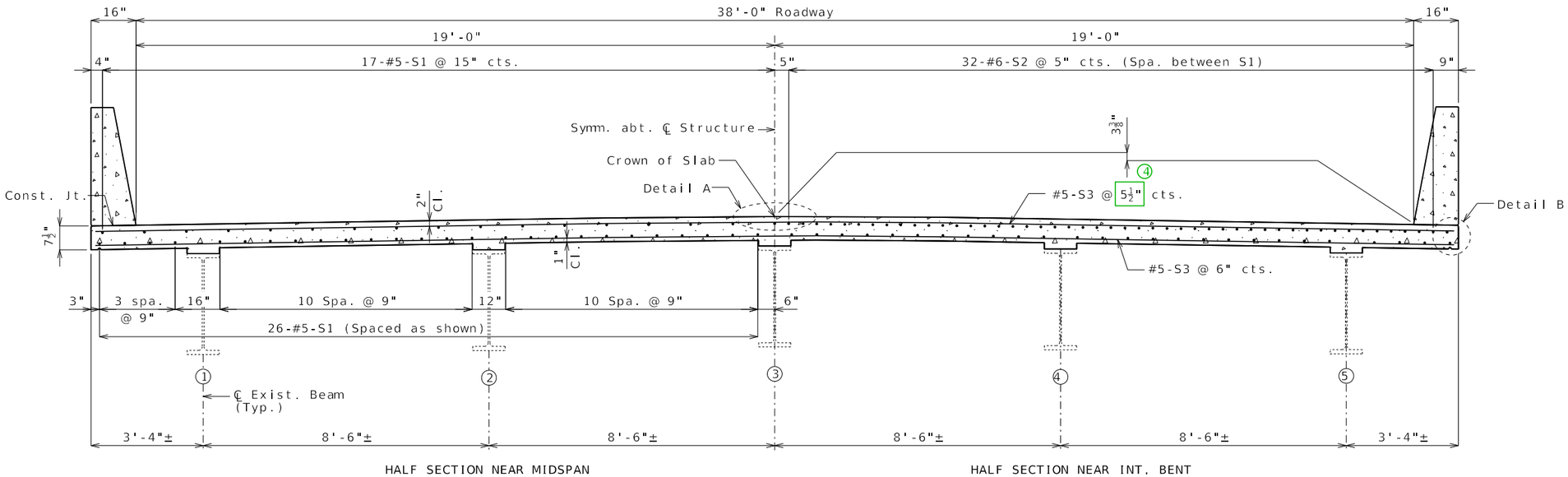

TYPICAL SECTION THRU SLAB

38' RDWY-5 BEAMS @ 8'-6"

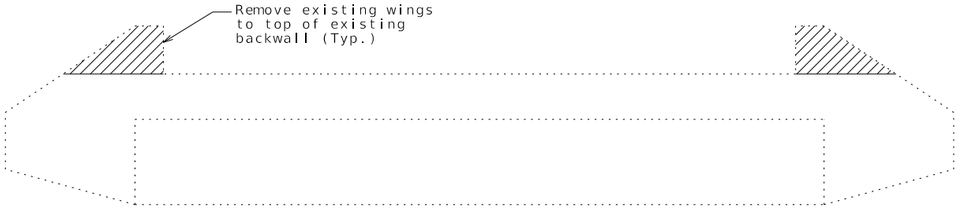

DETAILS OF CONCRETE REMOVAL AT END BENTS

The cost of concrete removal as shown will be considered completely covered by the contract unit price for Removal of Existing Bridge Deck. Vertical backwall and wingwall reinforcement to be cut off one inch below concrete removal surface and the resulting holes shall be filled with a qualified special mortar.

A smooth, level surface shall be provided at Bent No. removal lines.

General Notes:

Stay-In-Place Forms:

Corrugated steel forms, supports, closure elements and accessories shall be in accordance with grade requirement and coating designation G165 of ASTM A653. Complete shop drawings of the permanent steel deck forms shall be required in accordance with Sec 1080.

Corrugations of stay-in-place forms shall be filled with an expanded polystyrene material. The polystyrene material shall be placed in the forms with an adhesive in accordance with the manufacturer's recommendations.

Form sheets shall not rest directly on the top of beam flanges. Sheets shall be securely fastened to form supports with a minimum bearing length of one inch on each end. Form supports shall be placed in direct contact with the flange. Welding on or drilling holes in the beam flanges will not be permitted. All steel fabrication and construction shall be in accordance with Sec 1080 and 712. Certified field welders will not be required for welding of the form supports.

The design of stay-in-place corrugated steel forms is per manufacturer which shall be in accordance with Sec 703 for false work and forms. Maximum actual weight of corrugated steel forms allowed shall be 4 psf assumed for beam loading.

The contractor shall provide a method of preventing the direct contact of the stay-in-place forms and connection components with uncoated weathering steel members that is approved by the engineer.

Pouring and Finishing Slab:

The contractor shall provide bracing necessary for lateral and torsional stability of the beams during construction of the concrete slab and remove the bracing after the slab has attained 75% design strength. Contractor shall not weld on or drill holes in the beams. The cost for furnishing, installing, and removing bracing will be considered completely covered by the contract unit price for Slab on Steel.

Slab shall be poured upgrade from end to end at a minimum rate of 25 cubic yards per hour.

Alternate pour sequences may be submitted to the engineer for approval. Keyed construction joints shall be provided between pours.

Haunching:

(1) Slab is to be considered a uniform thickness as shown on the plans. Haunching will vary. See front sheet for slab thickness.

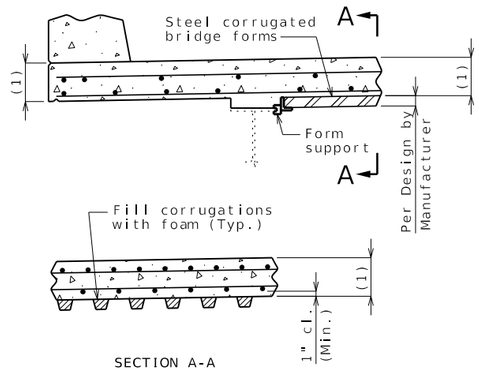

OPTIONAL STAY-IN-PLACE FORM DETAILS

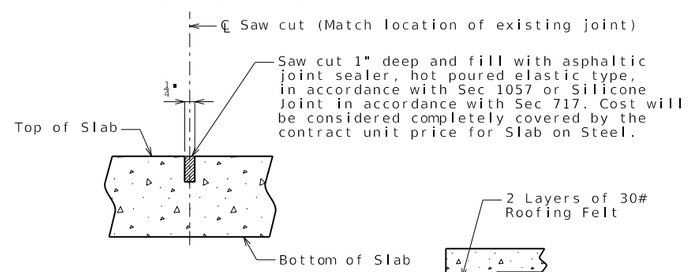

TYPICAL SECTION THRU SAW CUT AT INTERMEDIATE BENTS

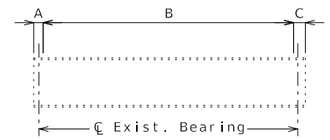

ELEVATION SHOWING SHEAR CONNECTOR SPACING

TABLE SHOWING SHEAR CONNECTOR UNIT SPACING				
Span	S.C. per unit	A	B	C
1	2	X"±	XX Units @ 8" cts.	X"±
2	2	X"±	XX Units @ 8" cts.	X"±
3	2	X"±	XX Units @ 8" cts.	X"±
Total shear connectors required				XXXX

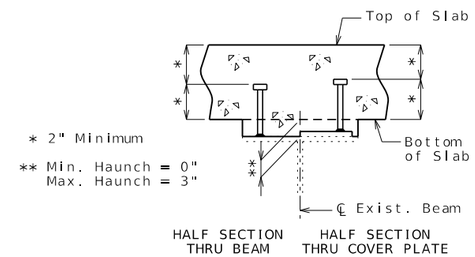

SECTION THRU EXIST. BEAM SHOWING SHEAR CONNECTORS

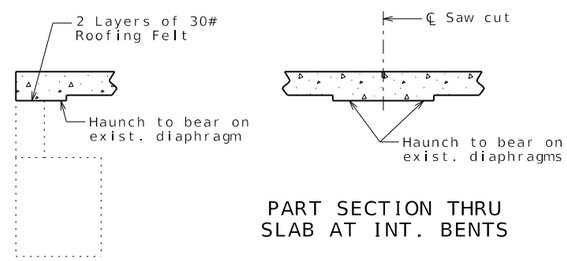

PART SECTION THRU SLAB AT END BENTS

PART SECTION THRU SLAB AT INT. BENTS

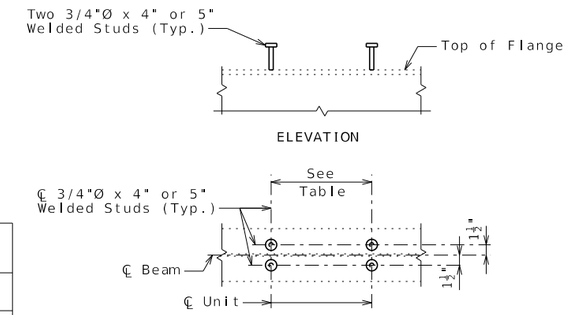

DETAILS OF SHEAR CONNECTORS

The cost of supplying and installing shear connectors will be considered completely covered by the contract unit price for Shear Connectors.

Shear connectors shall be in accordance with Sec 712, 1037 & 1080.

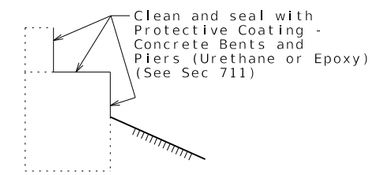

TYPICAL SECTION THRU END BENTS 1 & 4 SHOWING PROTECTIVE COATING

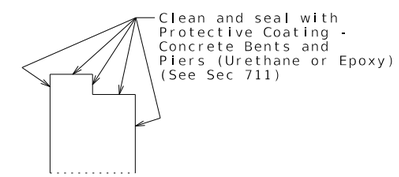

TYPICAL SECTION THRU INT. BENTS 2 & 3 SHOWING PROTECTIVE COATING

DATE PREPARED	
11/21/2024	
ROUTE	STATE MO
DISTRICT	SHEET NO. 2
COUNTY	
JOB NO.	
CONTRACT ID.	
PROJECT NO.	
BRIDGE NO.	

DESCRIPTION

DATE

MISSOURI HIGHWAYS AND TRANSPORTATION COMMISSION

105 WEST CAPITOL
JEFFERSON CITY, MO 65102
1-888-ASK-MODOT (1-888-275-6636)

Detailed
Checked

Note: This drawing is not to scale. Follow dimensions.

REDECK02_rehab_details Guidance & Alternate Details

Standard Drawing Guidance (do not show on plans):

Some notes on the standard redecking template drawings are not shown in EPG 751.50 Standard Detailing Notes.

Remove details that do not apply.

Check slab pouring sequencing and revise notes as required.

Including alternate pour sequences is per approval of Structural Project Manager or Liaison.

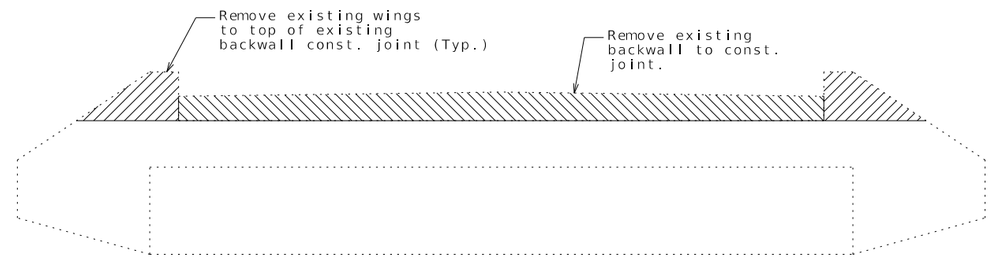

DETAILS OF CONCRETE REMOVAL AT END BENTS

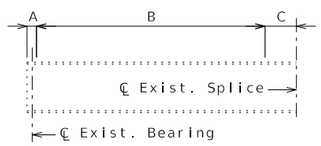

ELEVATION SHOWING SHEAR CONNECTOR SPACING FOR END BEAMS

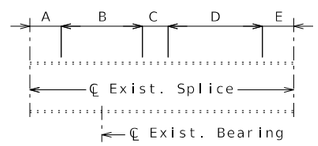

ELEVATION SHOWING SHEAR CONNECTOR SPACING FOR COMBINED BEARING & MID SPAN BEAMS

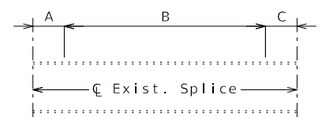

ELEVATION SHOWING SHEAR CONNECTOR SPACING FOR INT. BENT BEARING BEAMS

TABLE SHOWING SHEAR CONNECTOR UNIT SPACING						
Beam	S.C. per unit	A	B	C	D	E
End Beam (Spans 1-2 & 5-4)	x	_"±	__ Units @ __" cts.	__"±	--	--
Brg. Beam (Bent 2 & Span 2-3) & Brg. Beam (Bent 4 & Span 4-3)	x	__"±	__ Units @ __" cts.	__"±	__ Units @ _" cts.	__"±
Brg. Beam (Bent 3)	x	__"±	__ Units @ __" cts.	__"±	--	--
				Total shear connectors required		xxx

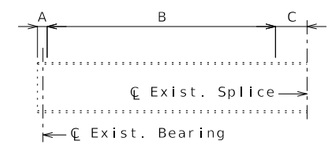

ELEVATION SHOWING SHEAR CONNECTOR SPACING FOR END BEAMS

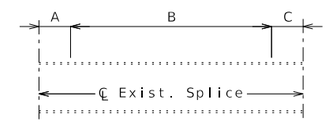

ELEVATION SHOWING SHEAR CONNECTOR SPACING FOR MID SPAN & BEARING BEAMS

TABLE SHOWING SHEAR CONNECTOR UNIT SPACING				
Beam	S.C. per unit	A	B	C
End Beam (SpanS 1-2 & 3-4)	x	_"±	__ Units @ __" cts.	__"±
Brg. Beam (Bents 2 & 3)	x	_"±	__ Units @ __" cts.	__"±
Mid Span (Span 2-3)	x	_"±	__ Units @ __" cts.	__"±
	Total shear connectors required			xxx

CONTINUOUS SPANS

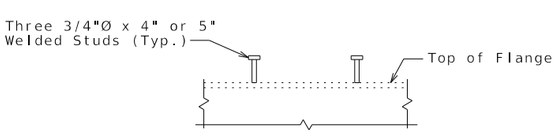

ELEVATION

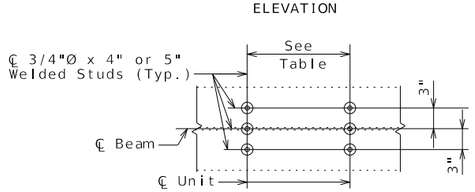

PLAN OF SHEAR CONN. (3 PER UNIT)

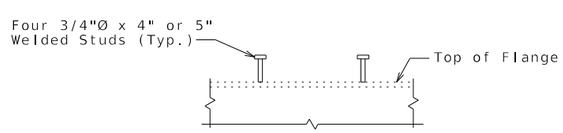

ELEVATION

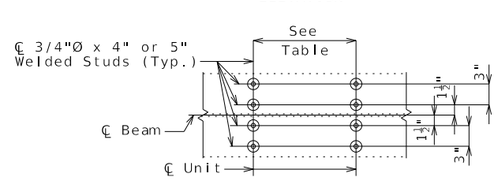

PLAN OF SHEAR CONN. (4 PER UNIT)

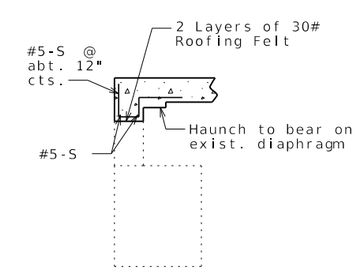

PART SECTION THRU SLAB AT END BENT NO. 1

Use when replacing expansion joint with sliding slab.

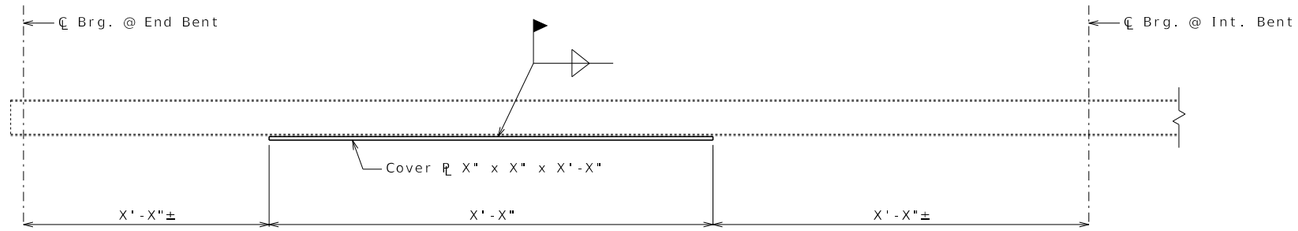

PART ELEVATION OF EXTERIOR BEAM SHOWING COVER PLATE INSTALLATION
SPAN (X-X) AND SPAN (X-X)

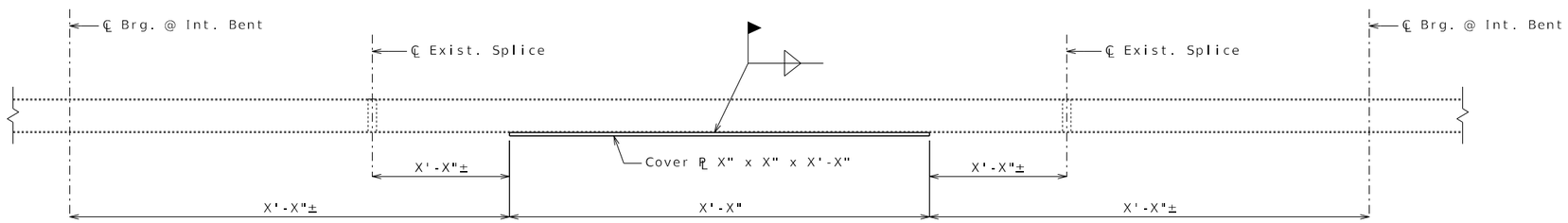

PART ELEVATION OF EXTERIOR BEAM SHOWING COVER PLATE INSTALLATION
SPAN (X-X)

Standard Drawing Guidance (do not show on plans):

1 Use Type 3 for weathering steel bolted connections and Type 1 for plain or galvanized steel bolted connections.

Cover plate width must be at least 1" wider than existing bottom flange to allow for 5/16" top weld.

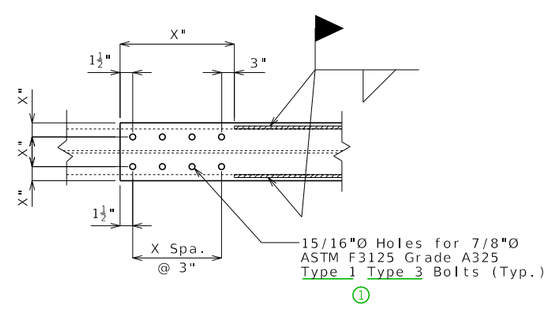

TYPICAL DETAIL OF THE
ENDS OF COVER PLATES
(BOTTOM VIEW)

Notes:

Beam with end-bolted cover plates shall be installed in the following sequence after existing bridge deck is removed:

1. Drill holes in cover plate and flange.
2. Clean faying surfaces. (See Special Provisions)
3. Install and tighten bolts.
4. Weld cover plate to flange.

Fabricated Structural Steel shall be ASTM A709 Grade 36, except as noted.

Payment for ____ pounds of new cover plates, complete in place, will be considered completely covered by the contract lump sum price for Strengthening Existing Beams.

Notch toughness is required for all cover plates.

Contractor shall verify all dimensions in field before finalizing the shop drawings.

STRENGTHENING EXISTING BEAMS

Detailed
Checked

Note: This drawing is not to scale. Follow dimensions.

Sheet No. of _

DATE PREPARED	4/28/2026
ROUTE	STATE MO
DISTRICT	SHEET NO. 3
COUNTY	
JOB NO.	
CONTRACT ID.	
PROJECT NO.	
BRIDGE NO.	

DESCRIPTION

DATE

MISSOURI HIGHWAYS AND TRANSPORTATION COMMISSION
105 WEST CAPITOL
JEFFERSON CITY, MO 65102
1-888-ASK-MODOT (1-888-275-6636)

SEC/SUR * TWP * RGE *

U.I.P. AND REHABILITATE EXISTING (X'-X'-X') SPANS (SKEW: x)

Estimated Quantities

	Item			Total
	Total Surface Hydro Demolition	216-10.01	sq. yard	X
	Removal of Concrete Wearing Surface	216-15.02	sq. foot	X
	Removal of Existing Deck Repair	216-15.03	sq. foot	X
*	Supplementary Wearing Surface Material	505-00.04	cu. yard	X
	Latex Modified Concrete Wearing Surface	505-20.00	sq. yard	X
	Substructure Repair (Formed)	704-01.01	sq. foot	X
	Substructure Repair (Unformed)	704-01.02	sq. foot	X
	Superstructure Repair (Unformed)	704-01.03	sq. foot	X
	Half-Sole Repair	704-01.04	sq. foot	X
	Full Depth Repair	704-01.06	sq. foot	X
	Slab Edge Repair (Bridges)	704-01.07	linear foot	X
	Cleaning and Epoxy Coating	704-01.13	sq. foot	X

Replace as required

B3.8 * Supplementary wearing surface material for monolithic deck repair will be paid for at the fixed unit price in accordance with Sec 109.

Note B3.9 if required.

General Notes:

A1.1 **Design Specifications:**

2002 AASHTO LFD (17th Ed.) Standard Specifications
Bridge Deck Rating =

A1.2 **Design Loading:**

Year Year

HS20-44 Modified ( ) and Military 24,000 lb Tandem Axle ( )

A1.3 **Design Unit Stresses:**

Class B-2 Concrete (Half-Sole and Full Depth Repair) f'c = 4,000 psi

Miscellaneous:

I1.0.1 Roadway surfacing adjacent to bridge ends shall match new bridge wearing surface (roadway item).

I1.0.3 (If required)

I1.0.2 All concrete repairs shall be in accordance with Sec 704, unless otherwise noted.

I1.1 Outline of existing work is indicated by light dashed lines. Heavy lines indicate new work.

J

I1.2 Contractor shall verify all dimensions in field before finalizing the shop drawings.

I1.10 In order to maintain grade and a minimum thickness of wearing surface as shown on plans it may be necessary to use additional quantities of wearing surface at various locations throughout the structure. The cost of furnishing and installing the wearing surface will be considered completely covered in the contract unit price, including all additional labor, materials or equipment for variations in thickness of wearing surface.

Traffic Handling:

A3.8 Structure to be closed during construction. Traffic to be maintained on __ during construction. See roadway plans for traffic control and Sheet No. for staged construction details.

REPAIRS TO BRIDGE: ROUTE *
OVER *

ROUTE * FROM * TO *
ABOUT * MILES * OF *
BEGINNING STATION _____± (Match Existing)

DATE PREPARED 3/7/2024
ROUTE STATE MO
DISTRICT SHEET NO. 000
COUNTY
JOB NO.
CONTRACT ID.
PROJECT NO.
BRIDGE NO.

DESCRIPTION | DATE

MISSOURI HIGHWAYS AND TRANSPORTATION COMMISSION
105 WEST CAPITOL
JEFFERSON CITY, MO 65102
1-888-ASK-MODOT (1-888-275-6636)

Detailed
Checked

Note: This drawing is not to scale. Follow dimensions.

STANDARD DRAWING GUIDANCE (do not show on plans)

This is an index of Standard Drawing details. Draw typical section as required and scale to fit within attached border. Use appropriate deck repair details and modify as required (match orientation of actual reinforcement).

For bridges with epoxy coated steel, see Sec 710 for repairing bars and add notes as necessary. See SPM.

Wearing surface thickness can vary according to grade elevation requirements and minimum barrier curb height requirements. Maximum thickness should be limited to 3" (Ref. Organizational Results Research Report ORO6.004, May 2006). Limit excludes reinforced concrete slab wearing surfaces.

Will need to adjust wearing surface thickness when detailing a thin wearing surface (1" or less), but it is a preferred detailing practice to show a discernable thickness on the plans. No thickness is shown for crack filler application.

Ⓐ Show difference as plus/minus X"± (see Bridge Memo or SPM).

e.g. Match existing grade plus 2¼"±

Ⓑ Identify new wearing surface (see Bridge Memo or SPM) and specify minimum thickness in deck details.

Ⓒ Identify existing wearing surface and thickness, see Bridge Memo or existing plans.

Ⓓ See Bridge Memo or SPM, typically 1/2". Use 1" if more than 30% of existing deck needs repair. Verify there will be a minimum of 1/2" of concrete above the top bars after scarification.

Ⓔ See Bridge Memo or SPM, typically 1/2".

Ⓕ See existing plans.

Ⓖ Use appropriate reference (℄ Structure, ℄ Roadway, ℄ Median, etc.)

Ⓗ Cleaning and epoxy coating is preferred because of the relative short life of slab edge repair and unformed repair especially when over traffic. However in urban regions repairing the overhang may be preferred. Consult with SPM or SLE.

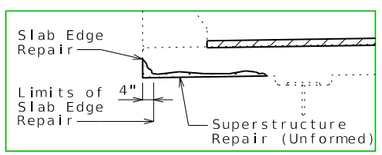

Ⓘ Scarification prior to adding first wearing surface or removing a portion of the deck when removing an existing wearing surface is not required for seal coat, asphalt, UBAWS, epoxy polymer or MMA polymer slurry wearing surfaces.

Ⓙ Note is required only when shop drawings will be required (For example, expansion device replacement, diaphragm replacement, etc.)

FILLED JOINT DETAILS FOR ALL APPLICATIONS

FOR EPOXY POLYMER OR MMA POLYMER SLURRY WEARING SURFACE

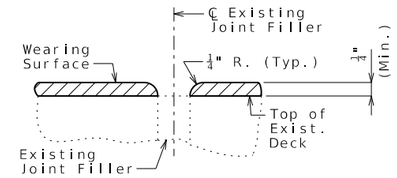

SECTION THRU JOINT
(EPOXY POLYMER OR MMA POLYMER SLURRY)

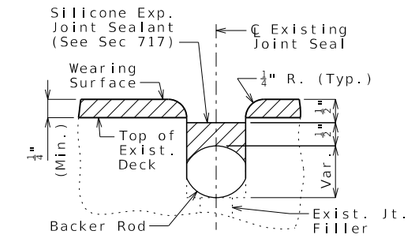

SECTION THRU JOINT
(EPOXY POLYMER OR MMA POLYMER SLURRY)

FOR ALL OTHER WEARING SURFACES

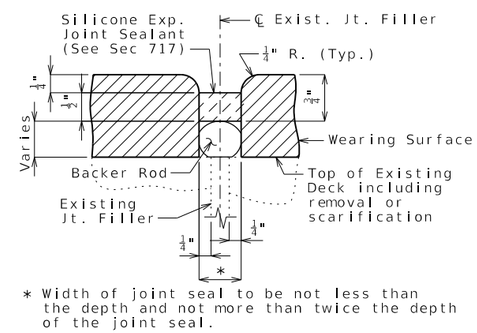

* Width of joint seal to be not less than the depth and not more than twice the depth of the joint seal.

SECTION THRU JOINT
(POLYESTER POLYMER, LATEX, LOW SLUMP OR SILICA FUME CONCRETE)

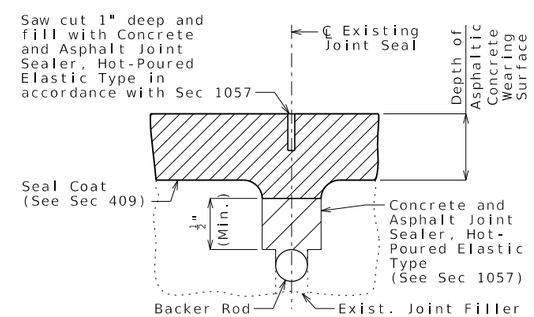

SECTION THRU JOINT
(ASPHALTIC CONCRETE WEARING SURFACE)

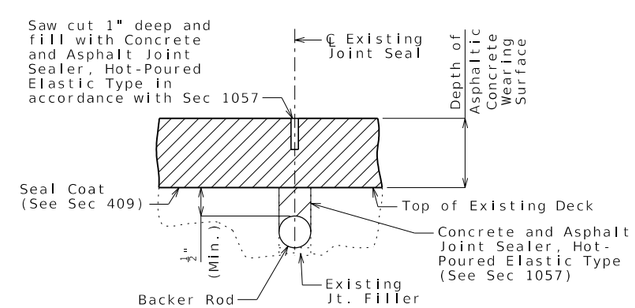

SECTION THRU JOINT
(ASPHALTIC CONCRETE WEARING SURFACE)

Hydro Demolition Case 1:

STANDARD DRAWING GUIDANCE (do not show on plans):

(B) May be used with the following concrete wearing surfaces:

- 1 3/4" to 3" Latex Modified
- 2 1/4" to 3" Silica Fume
- 1 3/4" to 3" Latex Modified Very Early Strength
- 1 3/4" to 3" CSA Cement Very Early Strength
- 3" to 4" Steel Fiber Reinforced

Monolithic Deck Repair After Hydro Demolition

If optional concrete wearing surface is specified and either low slump or polyester polymer is an option:

Use appropriate details below on first sheet and add a sheet title using the allowed options for the below details.

e.g. "LATEX MODIFIED CONCRETE DETAILS"

(Adding First Wearing Surface)

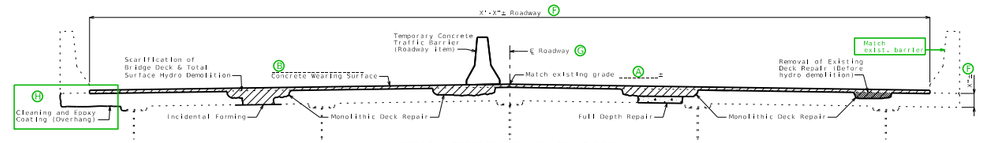

TYPICAL SECTION THRU EXISTING DECK

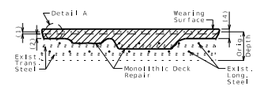

MONOLITHIC DECK REPAIR

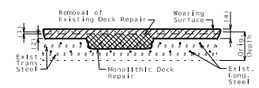

REMOVAL OF EXISTING DECK
REPAIR BEFORE HYDRO DEMOLITION

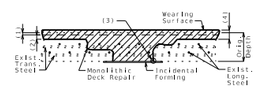

MONOLITHIC DECK REPAIR
REQUIRING INCIDENTAL FORMING

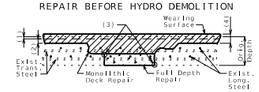

MONOLITHIC DECK REPAIR
REQUIRING FULL DEPTH REPAIR

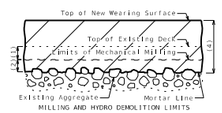

MILLING AND HYDRO DEMOLITION LIMITS

DETAIL A

(1) (B) - scarification of existing deck

(2) (E) - minimum total surface hydro demolition of sound concrete, measured to mortar line

(3) 1" vertical side shall be established outside the deteriorated area.

(4) (B) - minimum _____ concrete wearing surface

(Replacing Existing Wearing Surface)

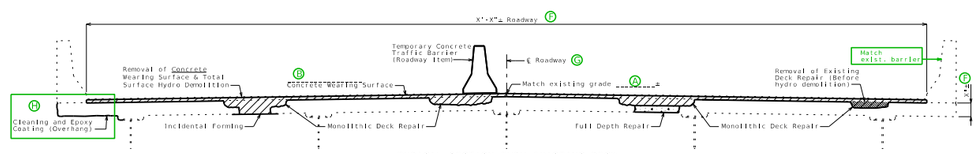

TYPICAL SECTION THRU EXISTING DECK

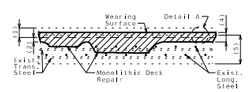

MONOLITHIC DECK REPAIR

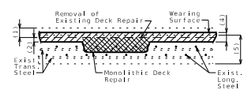

REMOVAL OF EXISTING DECK
REPAIR BEFORE HYDRO DEMOLITION

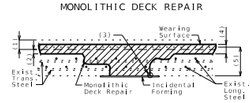

MONOLITHIC DECK REPAIR
REQUIRING INCIDENTAL FORMING

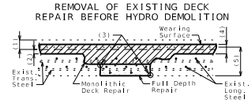

MONOLITHIC DECK REPAIR
REQUIRING FULL DEPTH REPAIR

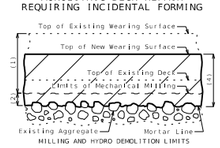

MILLING AND HYDRO DEMOLITION LIMITS

DETAIL A

(1) Removal of existing (C) - _____ wearing surface plus _____ of existing deck (B)

(2) (E) - minimum total surface hydro demolition of sound concrete, measured to mortar line

(3) 1" vertical side shall be established outside the deteriorated area.

(4) (B) - minimum _____ concrete wearing surface

(5) Original depth of deck minus previous scarification

Hydro Demolition Case 2:

STANDARD DRAWING GUIDANCE (do not show on plans):

Ⓑ May be used with the following concrete wearing surfaces:
2 1/4" to 3" Low Slump
3/4" to 3" Polyester Polymer

Conventional Deck Repair After Hydro Demolition

If optional concrete wearing surface is specified and either low slump or polyester polymer is an option:

Use appropriate details below on second sheet and add a sheet title using the allowed options for the below details.

e.g. "LOW SLUMP CONCRETE DETAILS"

(Adding First Wearing Surface)

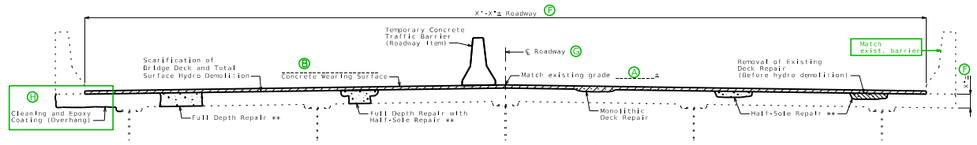

TYPICAL SECTION THRU EXISTING DECK

** After hydro demolition

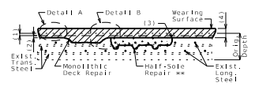

MONOLITHIC AND HALF-SOLE REPAIR

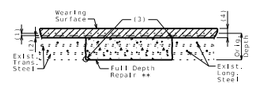

FULL DEPTH REPAIR

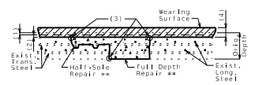

FULL DEPTH REPAIR WITH HALF-SOLE REPAIR

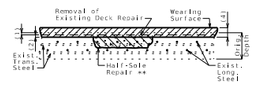

REMOVAL OF EXISTING DECK REPAIR BEFORE HYDRO DEMOLITION

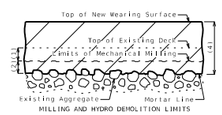

DETAIL A

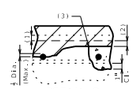

DETAIL B

Monolithic deck repair shall be used when only half the diameter or less of the top bar is exposed.

Clearance around top bar and around bottom bar at the intersection of top bar shall be required when more than half the diameter of the top bar is exposed.

(1) Ⓑ" scarification of existing deck.

(2) Ⓑ" minimum total surface hydro demolition of sound concrete, measured to mortar line.

(3) 1" vertical side shall be established outside the deteriorated area.

(4) Ⓑ" minimum _____ concrete wearing surface.

(Replacing Existing Wearing Surface)

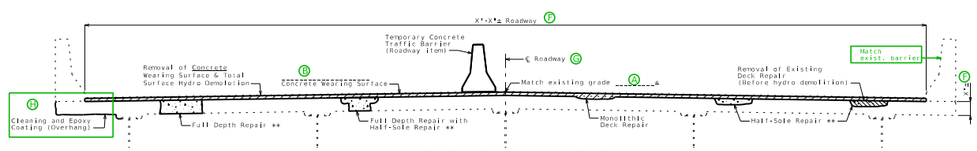

TYPICAL SECTION THRU EXISTING DECK

** After hydro demolition

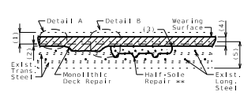

MONOLITHIC AND HALF-SOLE REPAIR

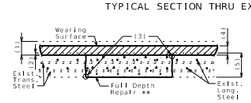

FULL DEPTH REPAIR

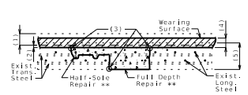

FULL DEPTH REPAIR WITH HALF-SOLE REPAIR

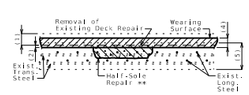

REMOVAL OF EXISTING DECK REPAIR BEFORE HYDRO DEMOLITION

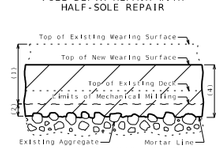

DETAIL A

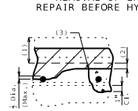

DETAIL B

Monolithic deck repair shall be used when only half the diameter or less of the top bar is exposed.

Clearance around top bar and around bottom bar at the intersection of top bar shall be required when more than half the diameter of the top bar is exposed.

(1) Removal of existing Ⓒ± _____ wearing surface plus _____ of existing deck

(2) Ⓑ" minimum total surface hydro demolition of sound concrete, measured to mortar line

(3) 1" vertical side shall be established outside the deteriorated area.

(4) Ⓑ" minimum _____ concrete wearing surface

(5) Original depth of deck minus previous scarification

Conventional Deck Repair Only

STANDARD DRAWING GUIDANCE (do not show on plans):

May be used with all wearing surfaces.

- (B) 2 1/4" to 3" Low Slump Concrete
- 1 3/4" to 3" Latex Modified Concrete
- 2 1/4" to 3" Silica Fume Concrete
- 1 3/4" to 3" Latex Modified Very Early Strength Concrete
- 1 3/4" to 3" CSA Cement Very Early Strength Concrete
- 3" to 4" Steel Fiber Reinforced Concrete
- 1/4" Epoxy Polymer
- 3/4" to 3" Polyester Polymer Concrete
- 3/8" MMA Polymer Slurry
- 4" to 5" Reinforced Concrete Slab
- 3/8" Chip Seal Grade A1
- 1" to 3" Alternate Asphaltic Concrete
- 1/2" to 3/4" Alternate Ultrathin Bonded Asphalt

Scarification not required with the following wearing surfaces:
- Seal Coat
- Asphalt
- UBAWS
- Epoxy Polymer
- MMA Polymer Slurry

Or when applying concrete crack filler.

(Adding First Wearing Surface or Applying Concrete Crack Filler)

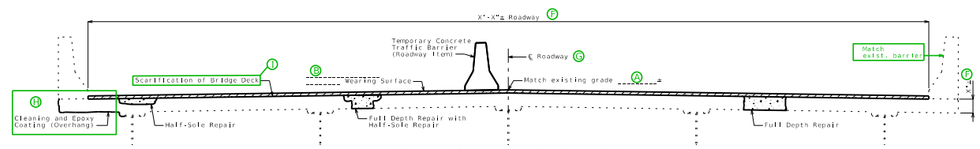

TYPICAL SECTION THRU EXISTING DECK

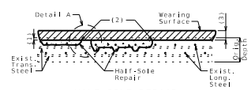

HALF-SOLE REPAIR

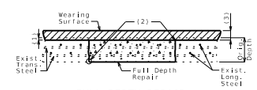

FULL DEPTH REPAIR

SDG: For seal coat, asphalt, UBAWS, epoxy polymer or MMA polymer slurry:
- Delete Dimension/Note (1) and renumber others
- Delete top existing line
- Adjust top of the original depth dimension to bottom of new wearing surface
- Adjust wearing surface thickness for thin wearing surfaces

For application of concrete crack filler:

- Delete Dimension/Note (1) and (3) and renumber others
- Delete top existing line & the wearing surface
- Adjust top of the original depth dimension to the remaining top line.
- Replace "Wearing Surface" with "Concrete Crack Filler" and adjust leader note to point to the remaining top line

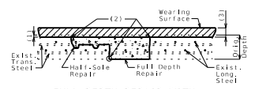

FULL DEPTH REPAIR WITH HALF-SOLE REPAIR

(1) (B) " scarification of existing deck (I)

(2) 1" vertical side shall be established outside the deteriorated area.

(3) (B) " minimum _____ wearing surface

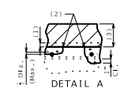

Clearance around top bar and around bottom bar at the intersection of top bar shall be required when more than half the diameter of the top bar is exposed.

DETAIL A

(Replacing Existing Wearing Surface)

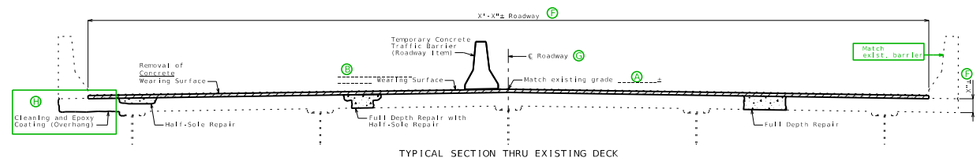

TYPICAL SECTION THRU EXISTING DECK

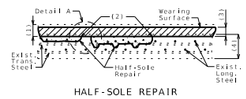

HALF-SOLE REPAIR

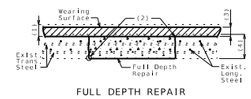

FULL DEPTH REPAIR

SDG: For seal coat, asphalt, UBAWS, epoxy polymer or MMA polymer slurry:

- Delete existing line inside wearing surface
- Adjust top of the original depth dimension to bottom of new wearing surface
- Adjust depth for thin wearing surfaces

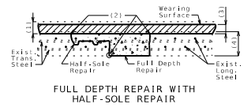

FULL DEPTH REPAIR WITH HALF-SOLE REPAIR

(1) Removal of existing (C) " wearing surface plus (B) " of existing deck (I)

(2) 1" vertical side shall be established outside the deteriorated area.

(3) (B) " minimum _____ wearing surface

(4) Original depth of deck minus previous scarification

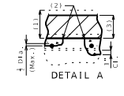

Clearance around top bar and around bottom bar at the intersection of top bar shall be required when more than half the diameter of the top bar is exposed.

DETAIL A

SEC/SUR * TWP * RGE *

U.I.P. AND REHABILITATE EXISTING (X'-X'-X') ____ SPANS (SKEW: x)

Estimated Quantities

	Item			Total
	Total Surface Hydro Demolition	216-10.01	sq. yard	X
	Removal of Concrete Wearing Surface	216-15.02	sq. foot	X
	Removal of Existing Deck Repair	216-15.03	sq. foot	X
*	Supplementary Wearing Surface Material	505-00.04	cu. yard	X
	Latex Modified Concrete Wearing Surface	505-20.00	sq. yard	X
	Substructure Repair (Formed)	704-01.01	sq. foot	X
	Substructure Repair (Unformed)	704-01.02	sq. foot	X
	Superstructure Repair (Unformed)	704-01.03	sq. foot	X
	Half-Sole Repair	704-01.04	sq. foot	X
	Full Depth Repair	704-01.06	sq. foot	X
	Slab Edge Repair (Bridges)	704-01.07	linear foot	X
	Cleaning and Epoxy Coating	704-01.13	sq. foot	X

Replace as required

B3.8 * Supplementary wearing surface material for monolithic deck repair will be paid for at the fixed unit price in accordance with Sec 109.

Note B3.9 if required

General Notes:

A1.1 **Design Specifications:**

2002 AASHTO LFD (17th Ed.) Standard Specifications
Bridge Deck Rating =

A1.2 **Design Loading:**

HS20-44 Modified ( ) and Military 24,000 lb Tandem Axle ( )

Year Year

A1.3 **Design Unit Stresses:**

Class B-2 Concrete (Half-Sole and Full Depth Repair) f'c = 4,000 psi

Miscellaneous:

I1.0.1 Roadway surfacing adjacent to bridge ends shall match new bridge wearing surface (roadway item).

I1.0.2 All concrete repairs shall be in accordance with Sec 704, unless otherwise noted.

I1.0.3 (If required)

I1.1 Outline of existing work is indicated by light dashed lines. Heavy lines indicate new work.

I1.2 (K) Contractor shall verify all dimensions in field before ordering new material.

I1.10 In order to maintain grade and a minimum thickness of wearing surface as shown on plans it may be necessary to use additional quantities of wearing surface at various locations throughout the structure. The cost of furnishing and installing the wearing surface will be considered completely covered in the contract unit price, including all additional labor, materials or equipment for variations in thickness of wearing surface.

Traffic Handling:

A3.8 Structure to be closed during construction. Traffic to be maintained on ___ during construction. See roadway plans for traffic control and Sheet No. for staged construction details.

REPAIRS TO BRIDGE: ROUTE *
OVER *

ROUTE * FROM * TO *
ABOUT * MILES * OF *
BEGINNING STATION _____ ± (Match Existing)

DATE PREPARED 3/7/2024
ROUTE | STATE MO
DISTRICT | SHEET NO. 2
COUNTY
JOB NO.
CONTRACT ID.
PROJECT NO.
BRIDGE NO.

DESCRIPTION	DATE

MISSOURI HIGHWAYS AND TRANSPORTATION COMMISSION
105 WEST CAPITOL
JEFFERSON CITY, MO 65102
1-888-ASK-MODOT (1-888-275-6636)

Detailed
Checked

Note: This drawing is not to scale. Follow dimensions.

RHB02_PC_PS_Panel_Deck_on_Girders Guidance & Alternate Details (1 of 4)

STANDARD DRAWING GUIDANCE (do not show on plans)

This is an index of Standard Drawing details. Draw typical section as required and scale to fit within attached border. Use appropriate deck repair details and modify as required (match orientation of actual reinforcement).

For bridges with epoxy coated steel, see Sec 710 for repairing bars and add notes as necessary. See SPM.

Wearing surface thickness can vary according to grade elevation requirements and minimum barrier curb height requirements. Maximum thickness should be limited to 3" (Ref. Organizational Results Research Report ORO6.004, May 2006). Limit excludes reinforced concrete slab wearing surfaces.

Will need to adjust wearing surface thickness when detailing a thin wearing surface (1" or less), but it is a preferred detailing practice to show a discernable thickness on the plans. No thickness is shown for crack filler application.

Consideration shall be made for additional notes for repairing deterioration of the precast prestressed panels. See SPM.

The Prestressed Panel Joint Repair detail is shown transverse because typically deterioration follows the strand closest to the panel edge, referred to as a "joint".

(A) Show difference as plus/minus X"±, see Bridge Memo or SPM.

e.g. Match existing grade plus 2¼"±

(B) Identify new wearing surface (See Bridge Memo or SPM). Specify minimum thickness in deck details.

(C) Identify existing wearing surface and thickness, see Bridge Memo or existing plans.

(D) See Bridge Memo or SPM, typically 1/2". Use 1" if more than 30% of existing deck need repair. Verify there will be a minimum of 1/2" of concrete above the top bars after scarification.

(E) See Bridge Memo or SPM, typically 1/2".

(F) See existing plans.

(G) Use appropriate reference (℄ Structure, ℄ Roadway, ℄ Median, etc.)

(H) Cleaning and epoxy coating is preferred because of the relative short life of slab edge repair and unformed repair especially when over traffic. However in urban regions repairing the overhang may be preferred. Consult with SPM or SLE.

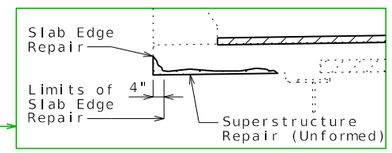

(I) Scarification prior to adding first wearing surface or removing a portion of the deck when removing an existing wearing surface is not required for seal coat, asphalt, UBAWS, epoxy polymer or MMA polymer slurry wearing surfaces.

(J) The following note will be required if concrete removal exposing prestressing strands is anticipated.

Adequate precaution shall be taken to prevent any nicks or cuts of the prestressing strands.

If full depth repair thru panels is anticipated additional deck repair details will be required. Details shown are for conventional deck repair post-hydro demolition when adding first wearing surface. Details for other cases are similar.

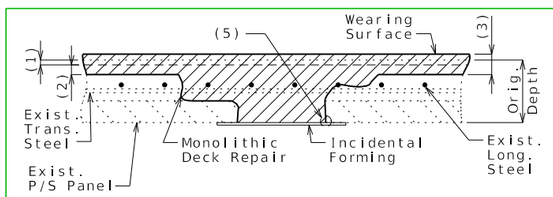

MONOLITHIC DECK REPAIR
REQUIRING INCIDENTAL FORMING

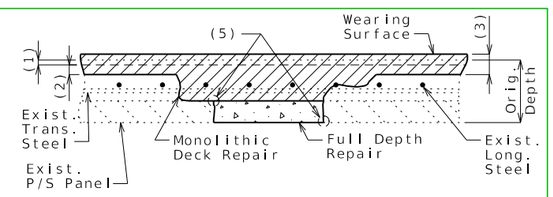

MONOLITHIC DECK REPAIR
REQUIRING FULL DEPTH REPAIR

If severe panel deterioration is anticipated at the strand ends (within the development lengths of the strands) either at a transverse joint or in the interior between transverse joints, a repair method will need to be expertly developed. Contact the Development Section and/or reference similar repairs to Bridge A4729. One solution is to show the limits of strand development and require a hold point on the plans for engineer review when panel deterioration is discovered within these limits.

(K) Note is required only when shop drawings will be required (For example, expansion device replacement, diaphragm replacement, etc.)

Add note: (5) One inch vertical side shall be established outside the deteriorated area. See Sec 704.

FILLED JOINT DETAILS FOR ALL APPLICATIONS

FOR EPOXY POLYMER OR MMA POLYMER SLURRY WEARING SURFACE

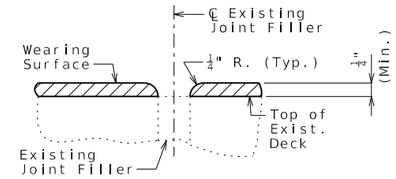

SECTION THRU JOINT
(EPOXY POLYMER OR MMA POLYMER SLURRY)

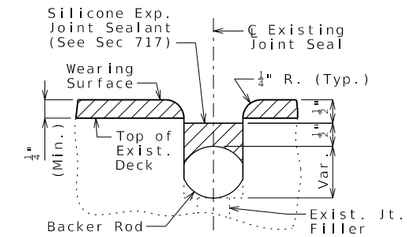

SECTION THRU JOINT
(EPOXY POLYMER OR MMA POLYMER SLURRY)

FOR ALL OTHER WEARING SURFACES

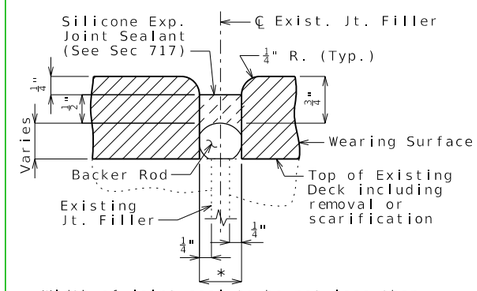

* Width of joint seal to be not less than the depth and not more than twice the depth of the joint seal.

SECTION THRU JOINT
(POLYESTER POLYMER, LATEX, LOW SLUMP OR SILICA FUME CONCRETE)

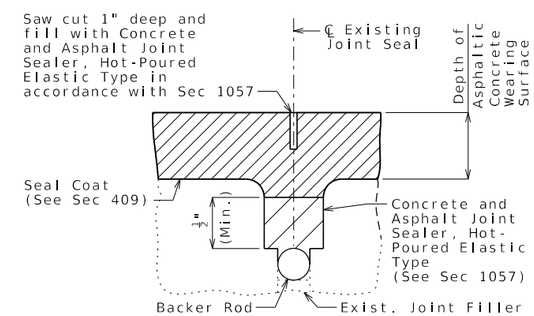

SECTION THRU JOINT
(ASPHALTIC CONCRETE WEARING SURFACE)

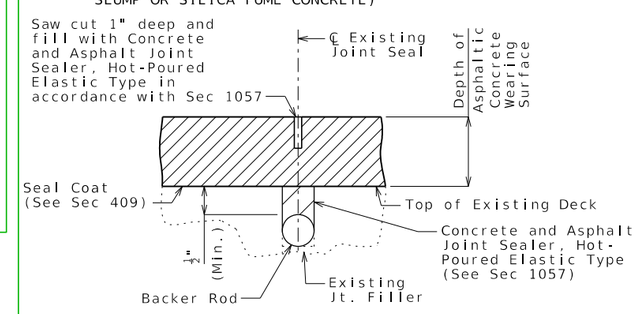

SECTION THRU JOINT
(ASPHALTIC CONCRETE WEARING SURFACE)

If severe panel deterioration is anticipated outside the development lengths of the strands at a transverse joint, it is advisable to consider full depth repair even if not required from above. If only cleaned and coated, there is a chance new reflection cracks will appear and the strand deterioration will accelerate due to chlorides being trapped behind the epoxy.

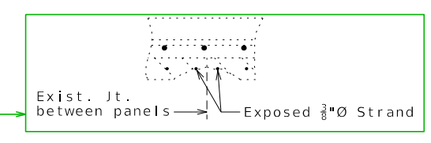

Hydro Demolition Case 1: Monolithic Deck Repair After Hydro Demolition

STANDARD DRAWING GUIDANCE (do not show on plans):

(B) May be used with the following concrete wearing surfaces:
- 1 3/4" to 3" Latex Modified
- 2 1/4" to 3" Silica Fume
- 1 3/4" to 3" Latex Modified Very Early Strength
- 1 3/4" to 3" CSA Cement Very Early Strength
- 3" to 4" Steel Fiber Reinforced

If optional concrete wearing surface is specified and either low slump or polyester polymer is an option:

Use appropriate details below on first sheet and add a sheet title using the allowed options for the below details,

e.g. "LATEX MODIFIED CONCRETE DETAILS"

(Adding First Wearing Surface)

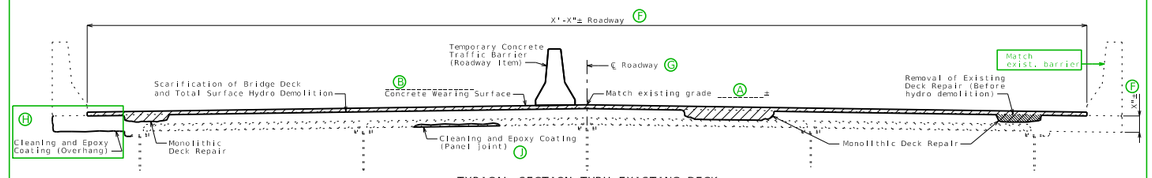

TYPICAL SECTION THRU EXISTING DECK

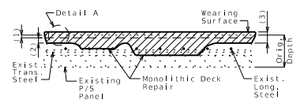

MONOLITHIC DECK REPAIR

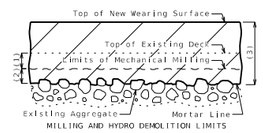

MILLING AND HYDRO DEMOLITION LIMITS

DETAIL A

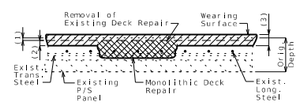

REMOVAL OF EXISTING DECK REPAIR BEFORE HYDRO DEMOLITION

(1) (D)" scarification of existing deck

(2) (E)" minimum total surface hydro demolition of sound concrete, measured to mortar line

(3) (B)" minimum _____ concrete wearing surface

(4) Remove all deteriorated concrete at transverse joint between prestressed panels and coat with epoxy.

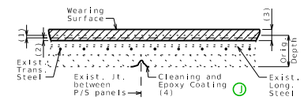

PRESTRESSED PANEL JOINT REPAIR
(TRANSVERSE SECTION SHOWN)

(Replacing Existing Wearing Surface)

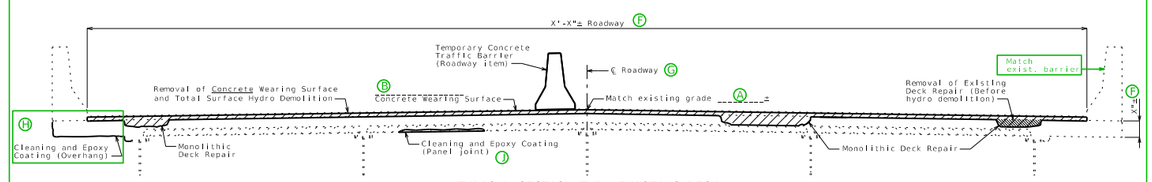

TYPICAL SECTION THRU EXISTING DECK

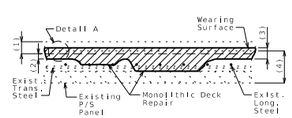

MONOLITHIC DECK REPAIR

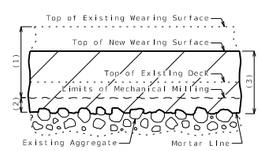

MILLING AND HYDRO DEMOLITION LIMITS

DETAIL A

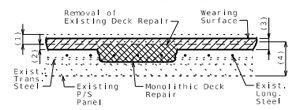

REMOVAL OF EXISTING DECK REPAIR BEFORE HYDRO DEMOLITION

(1) Removal of existing (C)" _____ wearing surface plus ____ (D)" of existing deck

(2) (E)" minimum total surface hydro demolition of sound concrete, measured to mortar line

(3) (B)" minimum _____ concrete wearing surface

(4) Original depth of deck minus previous scarification.

(5) Remove all deteriorated concrete at transverse joint between prestressed panels and coat with epoxy.

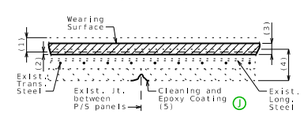

PRESTRESSED PANEL JOINT REPAIR
(TRANSVERSE SECTION SHOWN)

Hydro Demolition Case 2: Conventional Deck Repair After Hydro Demolition

STANDARD DRAWING GUIDANCE (do not show on plans):

May be used with the following concrete wearing surfaces:
Ⓑ 2 1/4" to 3" Low Slump
3/4" to 3" Polyester Polymer

If optional concrete wearing surface is specified and either low slump or polyester polymer is an option:

Use appropriate details below on second sheet and add a sheet title using the allowed options for the below details.

e.g. "LOW SLUMP CONCRETE DETAILS"

(Adding First Wearing Surface)

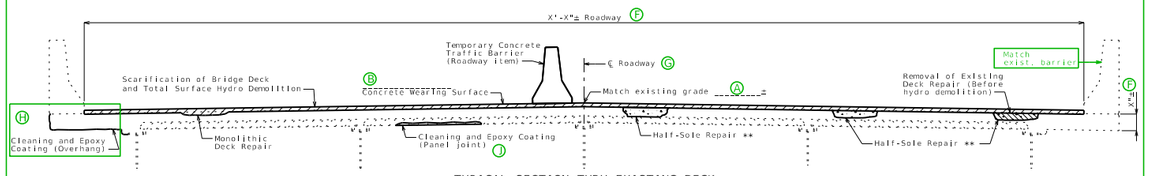

TYPICAL SECTION THRU EXISTING DECK

** After hydro demolition

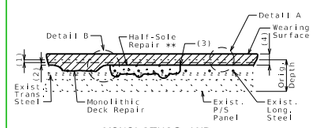

MONOLITHIC AND HALF-SOLE REPAIR

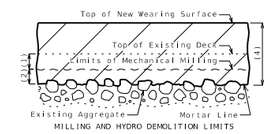

MILLING AND HYDRO DEMOLITION LIMITS

DETAIL A

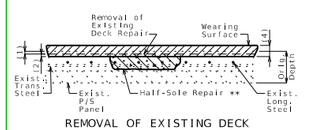

REMOVAL OF EXISTING DECK REPAIR BEFORE HYDRO DEMOLITION

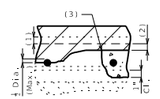

DETAIL B

Monolithic deck repair shall be used when only half the diameter or less of the top bar is exposed.

Clearance around top bar and around bottom bar at the intersection of top bar shall be required when more than half the diameter of the top bar is exposed.

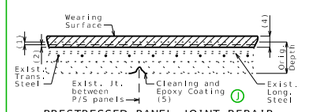

PRESTRESSED PANEL JOINT REPAIR
(TRANSVERSE SECTION SHOWN)

(1) Ⓓ" scarification of existing deck

(2) Ⓒ" minimum total surface hydro demolition of sound concrete, measured to mortar line

(3) 1" vertical side shall be established outside the deteriorated area.

(4) Ⓑ" minimum _____ concrete wearing surface

(5) Remove all deteriorated concrete at transverse joint between prestressed panels and coat with epoxy.

(Replacing Existing Wearing Surface)

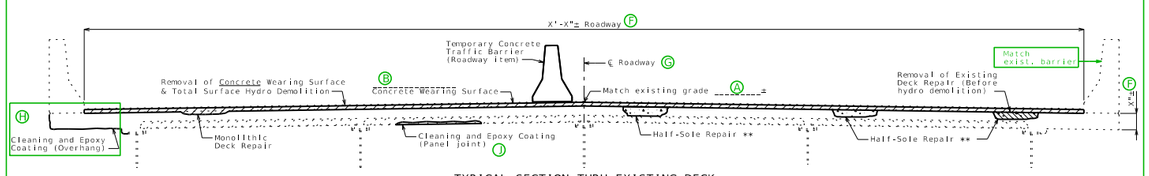

TYPICAL SECTION THRU EXISTING DECK

* After hydro demolition

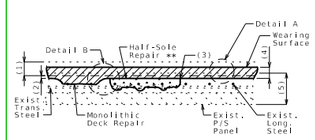

MONOLITHIC AND HALF-SOLE REPAIR

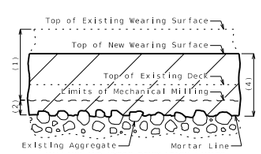

MILLING AND HYDRO DEMOLITION LIMITS

DETAIL A

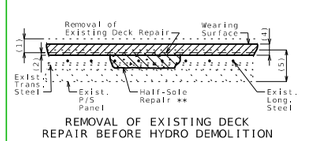

REMOVAL OF EXISTING DECK REPAIR BEFORE HYDRO DEMOLITION

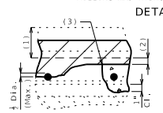

DETAIL B

Monolithic deck repair shall be used when only half the diameter or less of the top bar is exposed.

Clearance around top bar and around bottom bar at the intersection of top bar shall be required when more than half the diameter of the top bar is exposed.

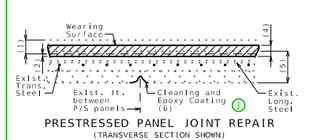

PRESTRESSED PANEL JOINT REPAIR
(TRANSVERSE SECTION SHOWN)

(1) Removal of existing Ⓒ"± _____ wearing surface plus _____ Ⓑ" of existing deck

(2) Ⓒ" minimum total surface hydro demolition of sound concrete, measured to mortar line

(3) 1" vertical side shall be established outside the deteriorated area.

(4) Ⓑ" minimum _____ concrete wearing surface

(5) Original depth of deck minus previous scarification

(6) Remove all deteriorated concrete at transverse joint between prestressed panels and coat with epoxy.

Conventional Deck Repair Only

STANDARD DRAWING GUIDANCE (do not show on plans):

May be used with all wearing surfaces.

- (B) 2 1/4" to 3" Low Slump Concrete
- 1 3/4" to 3" Latex Modified Concrete
- 2 1/4" to 3" Silica Fume Concrete
- 1 3/4" to 3" Latex Modified Very Early Strength Concrete
- 1 3/4" to 3" CSA Cement Very Early Strength Concrete
- 3" to 4" Steel Fiber Reinforced Concrete
- 1/4" Epoxy Polymer
- 3/4" to 3" Polyester Polymer Concrete
- 3/8" MMA Polymer Slurry
- 4" to 5" Reinforced Concrete Slab
- 3/8" Chip Seal Grade A1
- 1" to 3" Alternate Asphaltic Concrete
- 1/2" to 3/4" Alternate Ultrathin Bonded Asphalt

Scarification not required with the following wearing surfaces:

- Seal Coat
- Asphalt
- UBAWS
- Epoxy Polymer
- MMA Polymer Slurry

Or when applying concrete crack filler.

(Adding First Wearing Surface or Applying Concrete Crack Filler)

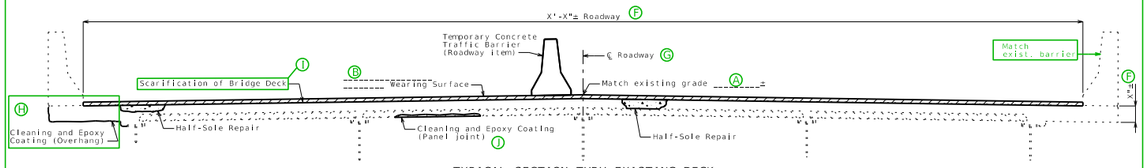

TYPICAL SECTION THRU EXISTING DECK

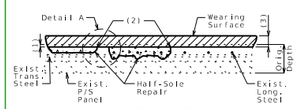

HALF-SOLE REPAIR

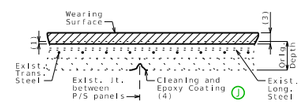

PRESTRESSED PANEL JOINT REPAIR
(TRANSVERSE SECTION SHOWN)

SDG: For seal coat, asphalt, UBAWS, epoxy polymer or MMA polymer slurry:

- Delete Dimension/Note (1) and renumber others
- Delete top existing line
- Adjust top of the original depth dimension to bottom of new wearing surface
- Adjust wearing surface thickness for thin wearing surfaces

For application of concrete crack filler:

- Delete Dimension/Note (1) and (3) and renumber others
- Delete top existing line & the wearing surface
- Adjust top of the original depth dimension to the remaining top line.
- Replace "Wearing Surface" with "Concrete Crack Filler" and adjust leader note to point to the remaining top line

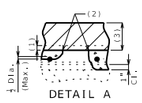

DETAIL A

Clearance around top bar and around bottom bar at the intersection of top bar shall be required when more than half the diameter of the top bar is exposed.

(1) (D) "± scarification of existing deck (I)

(2) 1" vertical side shall be established outside the deteriorated area.

(3) (B) "± minimum _____ wearing surface

(4) Remove all deteriorated concrete at transverse joint between prestressed panels and coat with epoxy.

(Replacing Existing Wearing Surface)

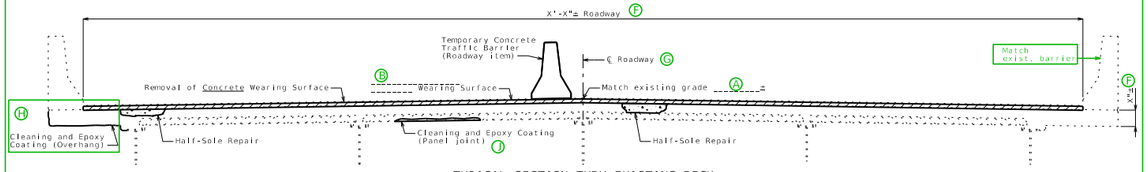

TYPICAL SECTION THRU EXISTING DECK

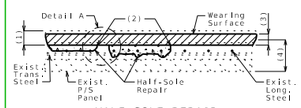

HALF-SOLE REPAIR

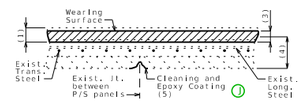

PRESTRESSED PANEL JOINT REPAIR
(TRANSVERSE SECTION SHOWN)

SDG: For seal coat, asphalt, UBAWS, epoxy polymer or MMA polymer slurry:

- Delete existing line inside wearing surface
- Adjust top of the original depth dimension to bottom of new wearing surface
- Adjust depth for thin wearing surfaces

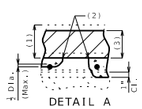

DETAIL A

Clearance around top bar and around bottom bar at the intersection of top bar shall be required when more than half the diameter of the top bar is exposed.

(1) Removal of existing (D) (C) "± _____ wearing surface plus ___" of existing deck. (I)

(2) 1" vertical side shall be established outside the deteriorated area.

(3) (B) "± minimum _____ wearing surface

(4) Original depth of deck minus previous scarification.

(5) Remove all deteriorated concrete at transverse joint between prestressed panels and coat with epoxy.

STANDARD DRAWING GUIDANCE (SDG) (do not show on plans)

Select the appropriate 1st and 2nd sheet. Draw typical section as required and scale to fit within attached border replacing the provided example. Modify other details and notes as required (match orientation of actual reinforcement).

Transverse repair zoning over intermediate bents is required for these structures. Longitudinal repair zoning in spans is required only when hydro demolition is required and is based on anticipated quantity of deck repair if not overlayed, confidence of anticipated quantity of deck repair if overlayed, deck rating (e.g. 6 or better may not need zoning), See EPG 751.40 (If only transverse zoning is required, Zones shall be called "Special Repair Zones").

Wearing surface thickness can vary according to grade elevation requirements and minimum barrier curb height requirements. Maximum thickness should be limited to 3" (Ref. Organizational Results Research Report ORO6.004, May 2006). Limit excludes reinforced concrete slab wearing surfaces.

Will need to adjust wearing surface thickness when detailing a thin wearing surface (1" or less), but it is a preferred detailing practice to show a discernable thickness on the plans. No thickness is shown for crack filler application.

(A) Show difference as plus/minus X"±, see Bridge Memo or SPM. e.g. Match existing grade plus 2¼"±

(B) Identify new wearing surface (See Bridge Memo or SPM). Specify minimum thickness in deck details. Typically 1/4" thicker outside special repair zones for Hydro Case 1 & 2.

(C) Identify existing wearing surface and thickness, see Bridge Memo or existing plans.

(D) See Bridge Memo or SPM, typically 1/2". Use 1" if more than 30% of existing deck needs repair. Verify there will be a minimum of 1/2" of concrete above the top bars after scarification.

(E) See Bridge Memo or SPM, typically 1/4" inside special repair zones to avoid deeper penetration into newly repaired areas and 1/2" outside special repair zones.

(F) See existing plans.

(G) Use appropriate reference (℄ Structure, ℄ Roadway, ℄ Median, etc.)

(H) Two types of overhang rehabilitation are shown. Cleaning and epoxy coating is preferred because of the relative short life of slab edge repair and unformed repair especially when over traffic. However in urban regions repairing the overhang may be preferred. Consult with SPM or SLE.

(I) Scarification prior to adding first wearing surface or removing a portion of the deck when removing an existing wearing surface is not required for seal coat, asphalt, UBAWS, epoxy polymer or MMA polymer slurry wearing surfaces.

(J) Monolithic deck repair should only be allowed where longitudinal zoning is not required.

(K) May be used for aesthetics when there will be an extensive patchwork of repairs visible to the public.

(L) If deterioration is within 4 inches of edge then slab edge repair may be used instead of unformed superstructure repair.

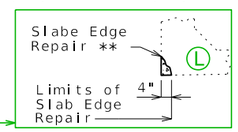

(M) Note is required only when shop drawings will be required (For example, expansion device replacement, diaphragm replacement, etc.)

Detach all unused Drawing Models & Sheet Models before requesting PDFs for sign and seal.

Add to front sheet if required.

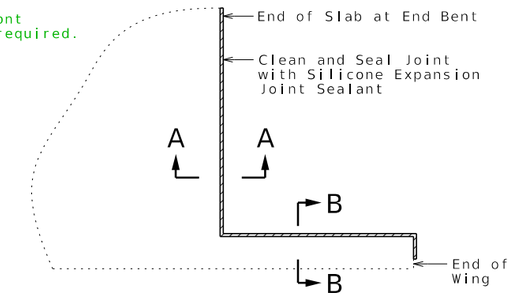

CLEAN AND SEAL JOINT AT END BENTS

Right side shown, left side similar.

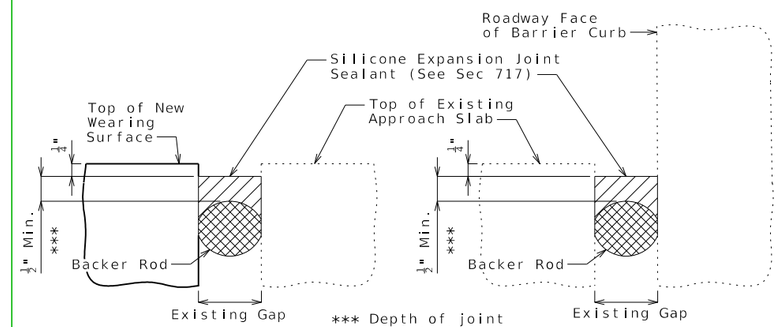

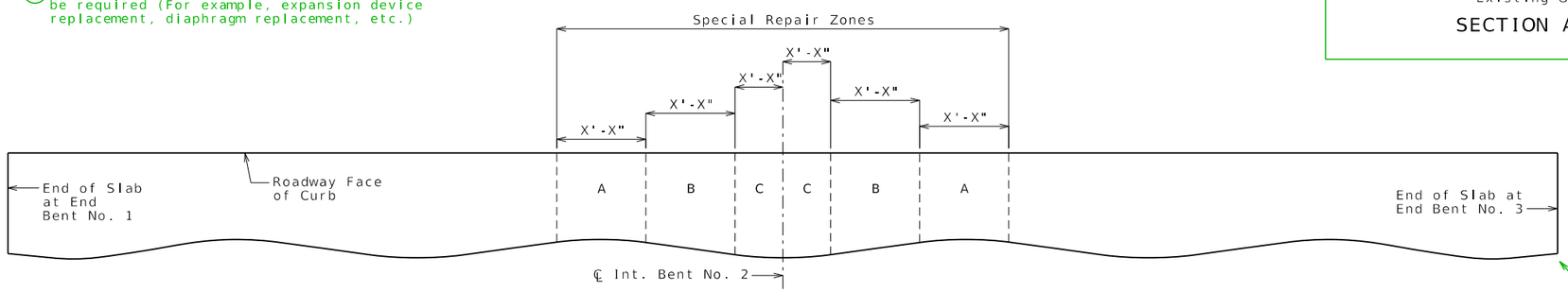

PART PLAN OF SLAB SHOWING SPECIAL REPAIR ZONES

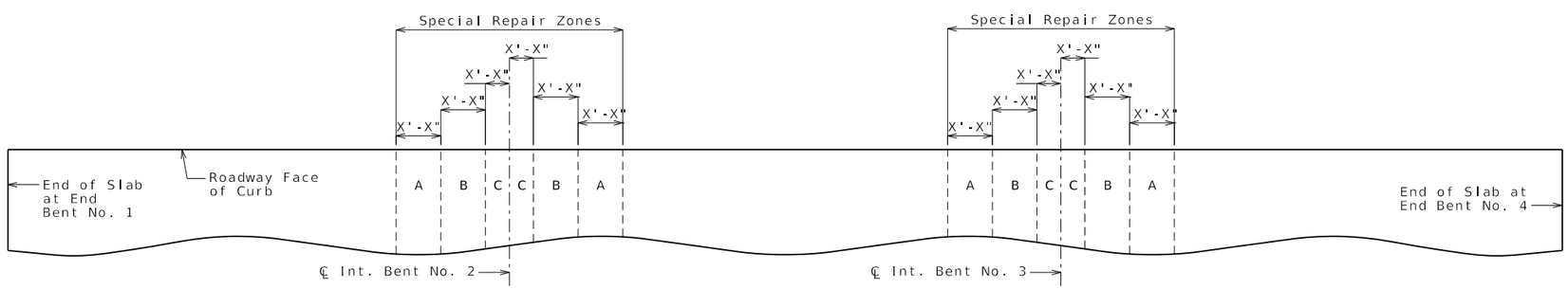

PART PLAN OF SLAB SHOWING SPECIAL REPAIR ZONES

Two spans and three spans shown. These details can be used on Sheets RHB03j and RHB03L for conventional deck repair only projects.

SEC/SUR * TWP * RGE *

U.I.P. AND REHABILITATE EXISTING (X'-X'-X') CONTINUOUS CONCRETE BOX GIRDER SPANS (SKEW: X)

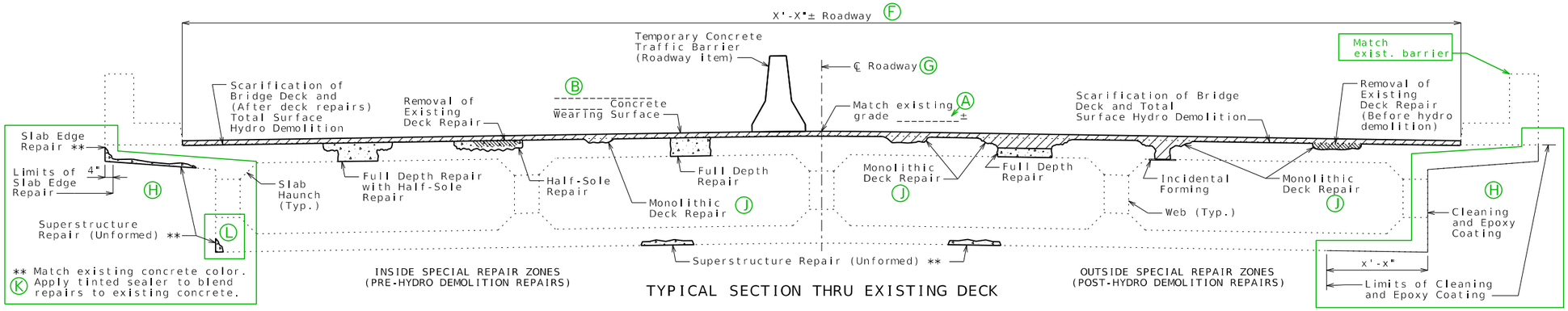

TYPICAL SECTION THRU EXISTING DECK

Hydro Demolition Case 1A:

Zoned Conventional Deck Repair Before Hydro Demolition and Non-Zoned Monolithic Deck Repair After Hydro Demolition

(Adding First Wearing Surface)

STANDARD DRAWING GUIDANCE (do not show on plans):

Use for the following concrete wearing surfaces:
(B) 1 3/4" to 3" Latex Modified
2 1/4" to 3" Silica Fume
1 3/4" to 3" Latex Modified Very Early Strength
1 3/4" to 3" CSA Cement Very Early Strength
3" to 4" Steel Fiber Reinforced

If optional concrete wearing surface is specified and low slump or polyester polymer is an option:
1. Add the allowed options in parentheses to the typical section title below and also to the RHB03e sheet title.
2. Add to this sheet the typical section from Sheet RHB03e with "(Low Slump Concrete)" added to the title.
3. Add "(Low Slump Concrete)" to the RHB03f sheet title and revise the sheet number from two to three. Sheet RHB03e will not be used.

Estimated Quantities

Item			Total
Scarification of Bridge Deck	216-10.00	sq. yard	X
Total Surface Hydro Demolition	216-10.01	sq. yard	X
Removal of Existing Deck Repair	216-15.03	sq. foot	X
* Supplementary Wearing Surface Material	505-00.04	cu. yard	X
Latex Modified Concrete Wearing Surface	505-20.00	sq. yard	X
Substructure Repair (Formed)	704-01.01	sq. foot	X
Substructure Repair (Unformed)	704-01.02	sq. foot	X
Superstructure Repair (Unformed)	704-01.03	sq. foot	X
Half-Sole Repair	704-01.04	sq. foot	X
Full Depth Repair	704-01.06	sq. foot	X
Slab Edge Repair (Bridges)	704-01.07	linear foot	X
Cleaning and Epoxy Coating	704-01.13	sq. foot	X

Replace as required *

B3.8 * Supplementary wearing surface material for monolithic deck repair will be paid for at the fixed unit price in accordance with Sec 109.
B3.9 (If required)

General Notes:

A1.1 **Design Specifications:**

2002 AASHTO LFD (17th Ed.) Standard Specifications
Bridge Deck Rating =

A1.2 **Design Loading:**

HS20-44 Modified ( ) and Military 24,000 lb Tandem Axle ( )
Year Year

A1.3 **Design Unit Stresses:**

Class B-1 Concrete (Half-Sole and Full Depth Repair) f'c = 4,000 psi

Miscellaneous:

I1.0.1 Roadway surfacing adjacent to bridge ends shall match new bridge wearing surface (roadway item).

I1.0.2 All concrete repairs shall be in accordance with Sec 704, unless otherwise noted.

I1.0.3 (If required)

I1.1 Outline of existing work is indicated by light dashed lines. Heavy lines indicate new work.

I1.2 (M) Contractor shall verify all dimensions in field before finalizing the shop drawings.

I1.10 In order to maintain grade and a minimum thickness of wearing surface as shown on plans it may be necessary to use additional quantities of wearing surface at various locations throughout the structure. The cost of furnishing and installing the wearing surface will be considered completely covered in the contract unit price, including all additional labor, materials or equipment for variations in thickness of wearing surface.

Traffic Handling:

A3.8 Structure to be closed during construction. Traffic to be maintained on ___ during construction. See roadway plans for traffic control and Sheet No. for staged construction details.

REPAIRS TO BRIDGE: ROUTE *
OVER *

ROUTE * FROM * TO *
ABOUT * MILES * OF *
BEGINNING STATION _____± (Match Existing)

DATE PREPARED 3/7/2024
ROUTE | STATE MO
DISTRICT | SHEET NO. 3
COUNTY
JOB NO.
CONTRACT ID.
PROJECT NO.
BRIDGE NO.

DESCRIPTION | DATE

MISSOURI HIGHWAYS AND TRANSPORTATION COMMISSION
105 WEST CAPITOL
JEFFERSON CITY, MO 65102
1-888-ASK-MODOT (1-888-275-6636)

Detailed
Checked

Note: This drawing is not to scale. Follow dimensions.

Three spans shown, detail for two spans is on the sheet RHB03f. Detail for four spans is on sheet RHB03d. Detail for five spans is on sheet RHB03h.

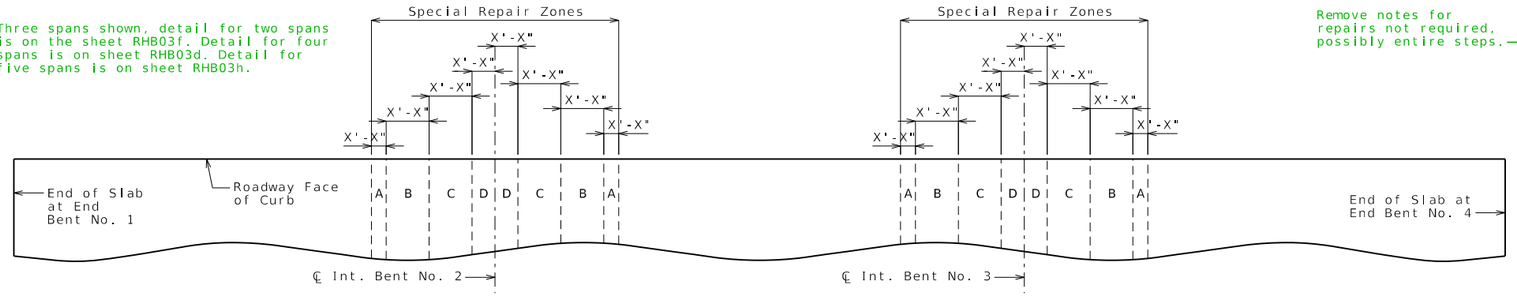

PART PLAN OF SLAB SHOWING SPECIAL REPAIR ZONES

Remove if repair is not required.

Replace with Note 13.3 for structures with single column bents.

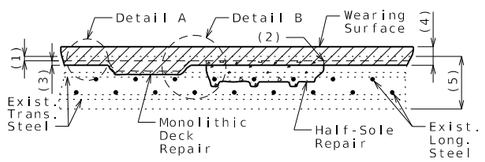

MONOLITHIC AND HALF-SOLE REPAIR

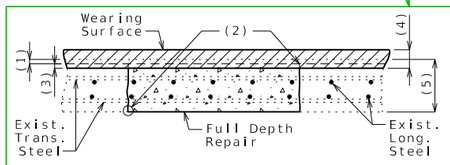

FULL DEPTH REPAIR

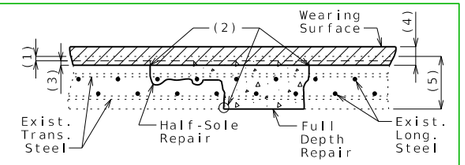

FULL DEPTH REPAIR WITH HALF-SOLE REPAIR

DECK REPAIR INSIDE SPECIAL REPAIR ZONES (BEFORE HYDRO DEMOLITION)

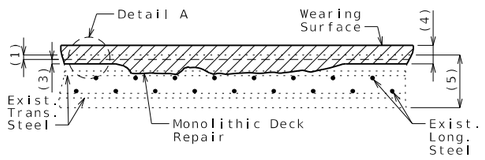

MONOLITHIC DECK REPAIR

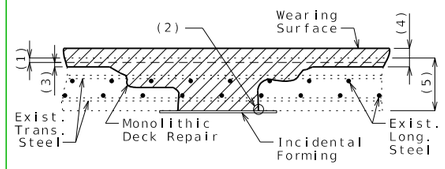

MONOLITHIC DECK REPAIR
REQUIRING INCIDENTAL FORMING

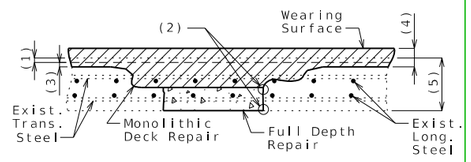

MONOLITHIC DECK REPAIR
REQUIRING FULL DEPTH REPAIR

DECK REPAIR OUTSIDE SPECIAL REPAIR ZONES (AFTER HYDRO DEMOLITION)

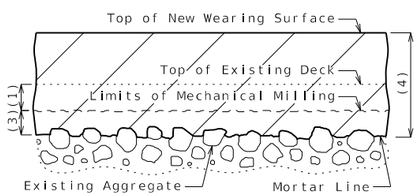

MILLING AND HYDRO DEMOLITION LIMITS

DETAIL A

(1) Ⓓ___" scarification of existing deck

(2) 1" vertical side shall be established outside the deteriorated area.

(3) Total surface hydro demolition of sound concrete, measured to mortar line:

___" minimum inside special repair zones

Ⓔ___" minimum outside special repair zones

(4) Ⓑ_____ concrete wearing surface:

___" minimum inside special repair zones

___" minimum outside special repair zones

(5) Original thickness of top slab

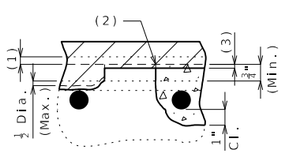

DETAIL B

Monolithic deck repair shall be used when only half the diameter or less of the top bar is exposed.

Clearance around top bar and around bottom bar at the intersection of top bar shall be required when more than half the diameter of the top bar is exposed.

DECK REPAIR DETAILS

Remove notes for repairs not required, possibly entire steps.

Deck Repair Notes:

Order of Repair:

1. Scarify existing deck Ⓓ___".
2. Power wash deck to identify sound and unsound existing deck repair.
3. Inside special repair zones, complete the following repairs:
   a. Removal of existing deck repair
   b. Half-sole repair
   c. Full depth repair
4. Outside special repair zones, remove existing deck repair.
5. Complete total surface hydro demolition, removing Ⓔ___" minimum of sound concrete inside special repair zones and removing ___" minimum of sound concrete and all deteriorated concrete outside special repair zones. Ⓔ
6. Sound deck and if needed complete incidental concrete removal.
7. Outside special repair zones, complete full depth repair.
8. Place new wearing surface including additional material for areas of monolithic deck repair.

Special Repair Zones:

13.2 Deck repair required in the areas designated as special repair zones shall be completed before hydro demolition in alphabetical sequence beginning with Zone A. Zones with the same letter designation may be repaired at the same time. Hydro demolition shall not move forward until the repairs in all special repair zones are completed and properly cured.

13.4 Any deck repair in areas not designated as a special repair zone shall be completed after hydro demolition.

13.5 Removal and deck repair shall be completed in one special repair zone and concrete shall have attained a compressive strength of 3200 psi before work can be started in the next special repair zone.

13.16 Total width of full depth repair shall not exceed 1/3 of the deck width at one time. For any area of deck repair that extends over a web and is more than 18 inches in length along the web, the concrete removal including removal with hydro demolition shall stop at the centerline of web and repair completed in this area. Prior to continuing work in this area, the concrete shall have attained a compressive strength of 3200 psi. No traffic shall be permitted over the web that is undergoing repair.

13.17 When the full depth repair extends over a diaphragm or web and the deteriorated concrete extends into the diaphragm or web, all deteriorated concrete shall be removed and replaced as full depth repair. Concrete in webs shall not be removed below the slab haunch of the girder without prior review and approval from the engineer.

13.20 Interior falsework installed by the contractor resting on the bottom slab shall be removed where entry access is available.

13.21 If any single repair area does not exceed 9 square feet in size and the total repair area within a special repair zone does not exceed 27 square feet, the special repair zone may repaired at the same time as an adjacent zone.

13.22 Half-sole repair in the special repair zone, on either side of the intermediate bents, shall be to a depth that will not expose half the diameter of the longitudinal reinforcing bar. Full depth repair shall be made when removal of deteriorated concrete exposes half or more of the diameter of the longitudinal reinforcing bar.

DATE PREPARED	
3/7/2024	
ROUTE	STATE MO
DISTRICT	SHEET NO. 4
COUNTY	
JOB NO.	
CONTRACT ID.	
PROJECT NO.	
BRIDGE NO.	

DESCRIPTION

DATE

MISSOURI HIGHWAYS AND TRANSPORTATION COMMISSION
105 WEST CAPITOL
JEFFERSON CITY, MO 65102
1-888-ASK-MODOT (1-888-275-6636)

Detailed
Checked

Note: This drawing is not to scale. Follow dimensions.

SEC/SUR * TWP * RGE *

U.I.P. AND REHABILITATE EXISTING (X'-X'-X') CONTINUOUS CONCRETE BOX GIRDER SPANS (SKEW: X)

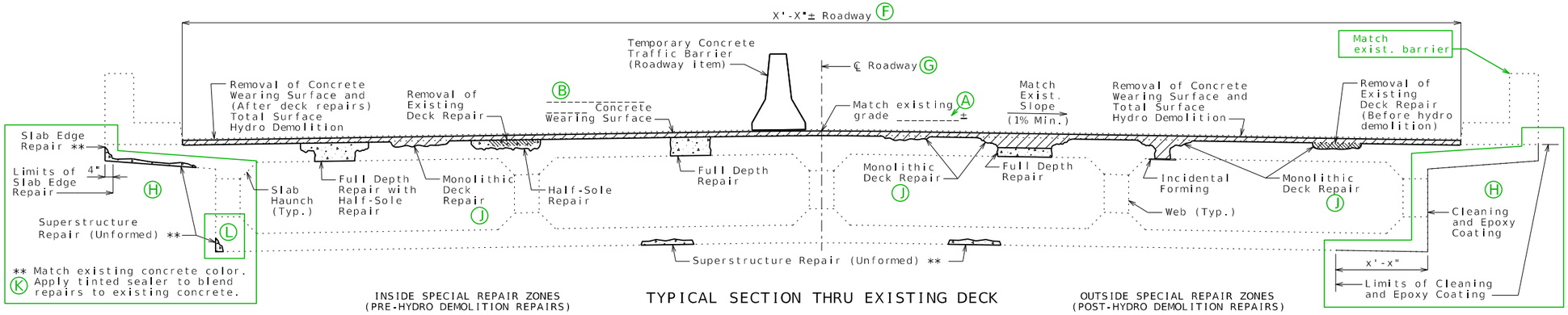

TYPICAL SECTION THRU EXISTING DECK

Hydro Demolition Case 1B:

Zoned Conventional Deck Repair Before Hydro Demolition and Non-Zoned Monolithic Deck Repair After Hydro Demolition

(Replacing Existing Wearing Surface)

STANDARD DRAWING GUIDANCE (do not show on plans):

Use for the following concrete wearing surfaces:
(B) 1 3/4" to 3" Latex Modified
2 1/4" to 3" Silica Fume
1 3/4" to 3" Latex Modified Very Early Strength
1 3/4" to 3" CSA Cement Very Early Strength
3" to 4" Steel Fiber Reinforced

If optional concrete wearing surface is specified and low slump or polyester polymer is an option:
1. Add the allowed options in parentheses to the typical section title below and also to the RHB03h sheet title.
2. Add to this sheet the typical section from Sheet RHB03g with "(Low Slump Concrete)" added to the title.
3. Add "(Low Slump Concrete)" to the RHB03h sheet title and revise the sheet number from two to three. Sheet RHB03g will not be used.

Estimated Quantities

	Item			Total
	Total Surface Hydro Demolition	216-10.01	sq. yard	X
	Removal of Concrete Wearing Surface	216-15.02	sq. foot	X
	Removal of Existing Deck Repair	216-15.03	sq. foot	X
*	Supplementary Wearing Surface Material	505-00.04	cu. yard	X
	Latex Modified Concrete Wearing Surface	505-20.00	sq. yard	X
	Substructure Repair (Formed)	704-01.01	sq. foot	X
	Substructure Repair (Unformed)	704-01.02	sq. foot	X
	Superstructure Repair (Unformed)	704-01.03	sq. foot	X
	Half-Sole Repair	704-01.04	sq. foot	X
	Full Depth Repair	704-01.06	sq. foot	X
	Slab Edge Repair (Bridges)	704-01.07	linear foot	X
	Cleaning and Epoxy Coating	704-01.13	sq. foot	X

Replace as required

B3.8 * Supplementary wearing surface material for monolithic deck repair will be paid for at the fixed unit price in accordance with Sec 109.
B3.9 (If required)

General Notes:

A1.1 **Design Specifications:**

2002 AASHTO LFD (17th Ed.) Standard Specifications
Bridge Deck Rating =

A1.2 **Design Loading:**

HS20-44 Modified ( ) and Military 24,000 lb Tandem Axle ( )
Year Year

A1.3 **Design Unit Stresses:**

Class B-1 Concrete (Half-Sole and Full Depth Repair) f'c = 4,000 psi

Miscellaneous:

I1.0.1 Roadway surfacing adjacent to bridge ends shall match new bridge wearing surface (roadway item).

I1.0.2 All concrete repairs shall be in accordance with Sec 704, unless otherwise noted.

I1.0.3 (If required)

I1.1 Outline of existing work is indicated by light dashed lines. Heavy lines indicate new work.

(M) I1.2 Contractor shall verify all dimensions in field before finalizing the shop drawings.

I1.10 In order to maintain grade and a minimum thickness of wearing surface as shown on plans it may be necessary to use additional quantities of wearing surface at various locations throughout the structure. The cost of furnishing and installing the wearing surface will be considered completely covered in the contract unit price, including all additional labor, materials or equipment for variations in thickness of wearing surface.

Traffic Handling:

A3.8 Structure to be closed during construction. Traffic to be maintained on ___ during construction. See roadway plans for traffic control and Sheet No. for staged construction details.

REPAIRS TO BRIDGE: ROUTE *
OVER *

ROUTE * FROM * TO *
ABOUT * MILES * OF *
BEGINNING STATION _____± (Match Existing)

DATE PREPARED 3/7/2024
ROUTE STATE MO
DISTRICT SHEET NO. 5
COUNTY
JOB NO.
CONTRACT ID.
PROJECT NO.
BRIDGE NO.

DESCRIPTION
DATE

MISSOURI HIGHWAYS AND TRANSPORTATION COMMISSION
105 WEST CAPITOL
JEFFERSON CITY, MO 65102
1-888-ASK-MODOT (1-888-275-6636)

Detailed
Checked

Note: This drawing is not to scale. Follow dimensions.

Four spans shown, detail for two spans is on the sheet RHB03f. Detail for three spans is on sheet RHB03b. Detail for five spans is on sheet RHB03h.

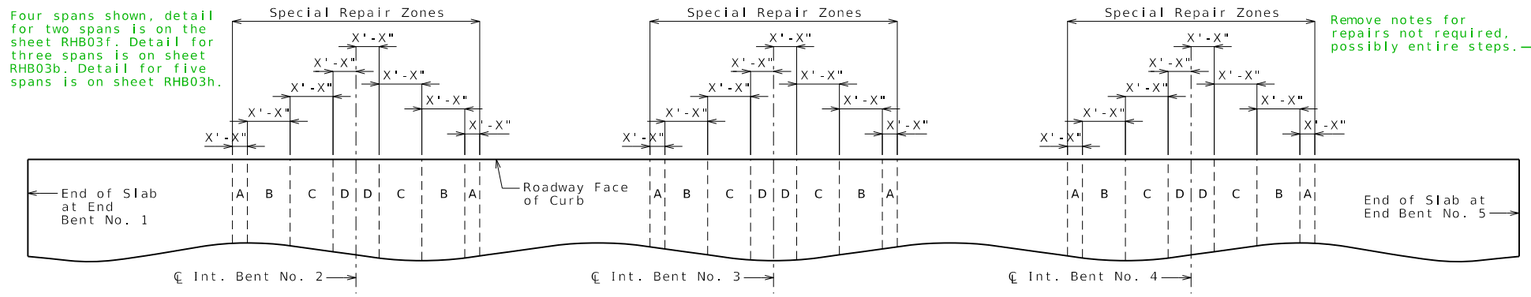

PART PLAN OF SLAB SHOWING SPECIAL REPAIR ZONES

Remove if repair is not required.

Replace with Note I3.3 for structures with single column bents.

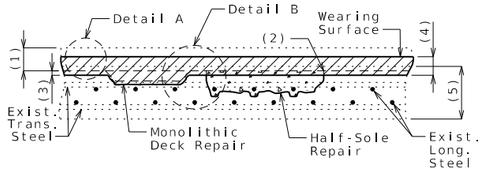

MONOLITHIC AND HALF-SOLE REPAIR

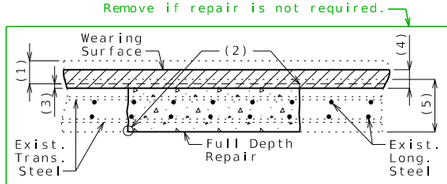

FULL DEPTH REPAIR

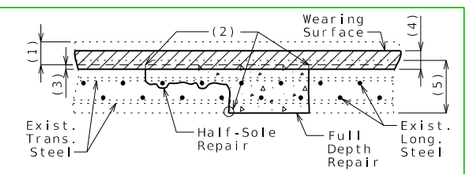

FULL DEPTH REPAIR WITH HALF-SOLE REPAIR

DECK REPAIR INSIDE SPECIAL REPAIR ZONES (BEFORE HYDRO DEMOLITION)

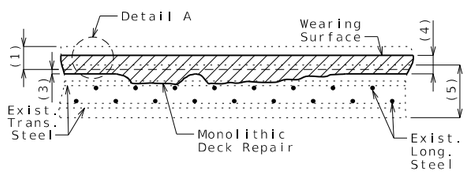

MONOLITHIC DECK REPAIR

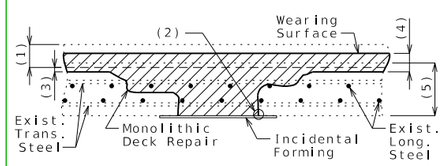

MONOLITHIC DECK REPAIR REQUIRING INCIDENTAL FORMING

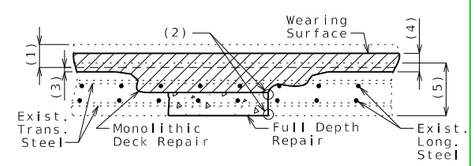

MONOLITHIC DECK REPAIR REQUIRING FULL DEPTH REPAIR

DECK REPAIR OUTSIDE SPECIAL REPAIR ZONES (AFTER HYDRO DEMOLITION)

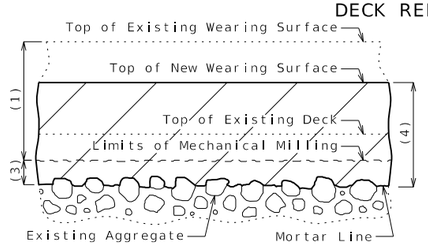

MILLING AND HYDRO DEMOLITION LIMITS

DETAIL A

(1) Removal of existing ___"± _____ wearing surface plus ___" of existing deck

(2) 1" vertical side shall be established outside the deteriorated area.

(3) Total surface hydro demolition of sound concrete, measured to mortar line:

___" minimum inside special repair zones

___" minimum outside special repair zones

(4) _____ concrete wearing surface:

___" minimum inside special repair zones

___" minimum outside special repair zones

(5) Original thickness of top slab minus previous scarification

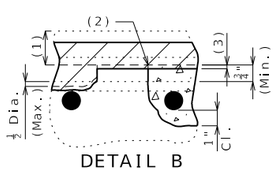

DETAIL B

Monolithic deck repair shall be used when only half the diameter or less of the top bar is exposed.

Clearance around top bar and around bottom bar at the intersection of top bar shall be required when more than half the diameter of the top bar is exposed.

Deck Repair Notes:

Order of Repair:

1. Remove existing wearing surface plus ___" of existing deck.
2. Power wash deck to identify sound and unsound existing deck repair.
3. Inside special repair zones, complete the following repairs:
   a. Removal of existing deck repair
   b. Half-sole repair
   c. Full depth repair
4. Outside special repair zones, remove existing deck repair.
5. Complete total surface hydro demolition, removing ___" minimum of sound concrete inside special repair zones and removing ___" minimum of sound concrete and all deteriorated concrete outside special repair zones.
6. Sound deck and if needed complete incidental concrete removal.
7. Outside special repair zones, complete full depth repair.
8. Place new wearing surface including additional material for areas of monolithic deck repair.

Special Repair Zones:

I3.2 Deck repair required in the areas designated as special repair zones shall be completed before hydro demolition in alphabetical sequence beginning with Zone A. Zones with the same letter designation may be repaired at the same time. Hydro demolition shall not move forward until the repairs in all special repair zones are completed and properly cured.

I3.4 Any deck repair in areas not designated as a special repair zone shall be completed after hydro demolition.

I3.5 Removal and deck repair shall be completed in one special repair zone and concrete shall have attained a compressive strength of 3200 psi before work can be started in the next special repair zone.

I3.16 Total width of full depth repair shall not exceed 1/3 of the deck width at one time. For any area of deck repair that extends over a web and is more than 18 inches in length along the web, the concrete removal including removal with hydro demolition shall stop at the centerline of web and repair completed in this area. Prior to continuing work in this area, the concrete shall have attained a compressive strength of 3200 psi. No traffic shall be permitted over the web that is undergoing repair.

I3.17 When the full depth repair extends over a diaphragm or web and the deteriorated concrete extends into the diaphragm or web, all deteriorated concrete shall be removed and replaced as full depth repair. Concrete in webs shall not be removed below the slab haunch of the girder without prior review and approval from the engineer.

I3.20 Interior falsework installed by the contractor resting on the bottom slab shall be removed where entry access is available.

I3.21 If any single repair area does not exceed 9 square feet in size and the total repair area within a special repair zone does not exceed 27 square feet, the special repair zone may repaired at the same time as an adjacent zone.

I3.22 Half-sole repair in the special repair zone, on either side of the intermediate bents, shall be to a depth that will not expose half the diameter of the longitudinal reinforcing bar. Full depth repair shall be made when removal of deteriorated concrete exposes half or more of the diameter of the longitudinal reinforcing bar.

DATE PREPARED	3/7/2024
ROUTE	STATE MO
DISTRICT	SHEET NO. 6
COUNTY	
JOB NO.	
CONTRACT ID.	
PROJECT NO.	
BRIDGE NO.	

DESCRIPTION

DATE

MISSOURI HIGHWAYS AND TRANSPORTATION COMMISSION
105 WEST CAPITOL
JEFFERSON CITY, MO 65102
1-888-ASK-MODOT (1-888-275-6636)

DECK REPAIR DETAILS

Detailed
Checked

Note: This drawing is not to scale. Follow dimensions.

SEC/SUR * TWP * RGE *

U.I.P. AND REHABILITATE EXISTING (X'-X'-X') CONTINUOUS CONCRETE BOX GIRDER SPANS (SKEW: X)

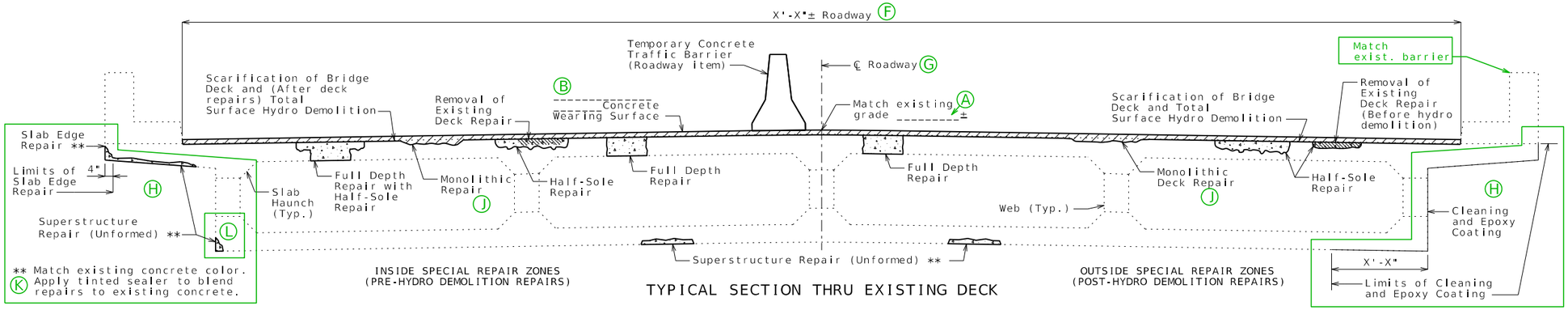

TYPICAL SECTION THRU EXISTING DECK

Hydro Demolition Case 2A:

Zoned Conventional Deck Repair Before Hydro Demolition and Non-Zoned Conventional Deck Repair After Hydro Demolition

(Adding First Wearing Surface)

STANDARD DRAWING GUIDANCE (do not show on plans):

Use for the following concrete wearing surfaces:
(B) 2 1/4" to 3" Low Slump
3/4" to 3" Polyester Polymer

If optional concrete wearing surface is specified and low slump or polyester polymer is an option follow guidance on Sheet RHB03a.

Estimated Quantities

Item			Total
Scarification of Bridge Deck	216-10.00	sq. yard	X
Total Surface Hydro Demolition	216-10.01	sq. yard	X
Removal of Existing Deck Repair	216-15.03	sq. foot	X
* Supplementary Wearing Surface Material	505-00.04	cu. yard	X
Low Slump Concrete Wearing Surface	505-10.00	sq. yard	X
Substructure Repair (Formed)	704-01.01	sq. foot	X
Substructure Repair (Unformed)	704-01.02	sq. foot	X
Superstructure Repair (Unformed)	704-01.03	sq. foot	X
Half-Sole Repair	704-01.04	sq. foot	X
Full Depth Repair	704-01.06	sq. foot	X
Slab Edge Repair (Bridges)	704-01.07	linear foot	X
Cleaning and Epoxy Coating	704-01.13	sq. foot	X

Replace as required → *

B3.8 * Supplementary wearing surface material for monolithic deck repair will be paid for at the fixed unit price in accordance with Sec 109.
B3.9 (If required)

General Notes:

A1.1 **Design Specifications:**

2002 AASHTO LFD (17th Ed.) Standard Specifications
Bridge Deck Rating =

A1.2 **Design Loading:**

HS20-44 Modified (Year) and Military 24,000 lb Tandem Axle (Year)

A1.3 **Design Unit Stresses:**

Class B-1 Concrete (Half-Sole and Full Depth Repair) f'c = 4,000 psi

Miscellaneous:

I1.0.1 Roadway surfacing adjacent to bridge ends shall match new bridge wearing surface (roadway item).

I1.0.3 (If required) → I1.0.2 All concrete repairs shall be in accordance with Sec 704, unless otherwise noted.

I1.1 Outline of existing work is indicated by light dashed lines. Heavy lines indicate new work.

(M) I1.2 Contractor shall verify all dimensions in field before finalizing the shop drawings.

I1.10 In order to maintain grade and a minimum thickness of wearing surface as shown on plans it may be necessary to use additional quantities of wearing surface at various locations throughout the structure. The cost of furnishing and installing the wearing surface will be considered completely covered in the contract unit price, including all additional labor, materials or equipment for variations in thickness of wearing surface.

Traffic Handling:

A3.8 Structure to be closed during construction. Traffic to be maintained on __ during construction. See roadway plans for traffic control and Sheet No. for staged construction details.

REPAIRS TO BRIDGE: ROUTE *
OVER *

ROUTE * FROM * TO *
ABOUT * MILES * OF *
BEGINNING STATION _____± (Match Existing)

Detailed
Checked

Note: This drawing is not to scale. Follow dimensions.

DATE PREPARED 3/7/2024
ROUTE | STATE MO
DISTRICT | SHEET NO. 7
COUNTY
JOB NO.
CONTRACT ID.
PROJECT NO.
BRIDGE NO.

DESCRIPTION
DATE

MISSOURI HIGHWAYS AND TRANSPORTATION COMMISSION
105 WEST CAPITOL
JEFFERSON CITY, MO 65102
1-888-ASK-MODOT (1-888-275-6636)

Two spans shown, detail for three spans is on sheet RHB03b. Detail for four spans is on sheet RHB03d. Detail for five spans is on sheet RHB03h.

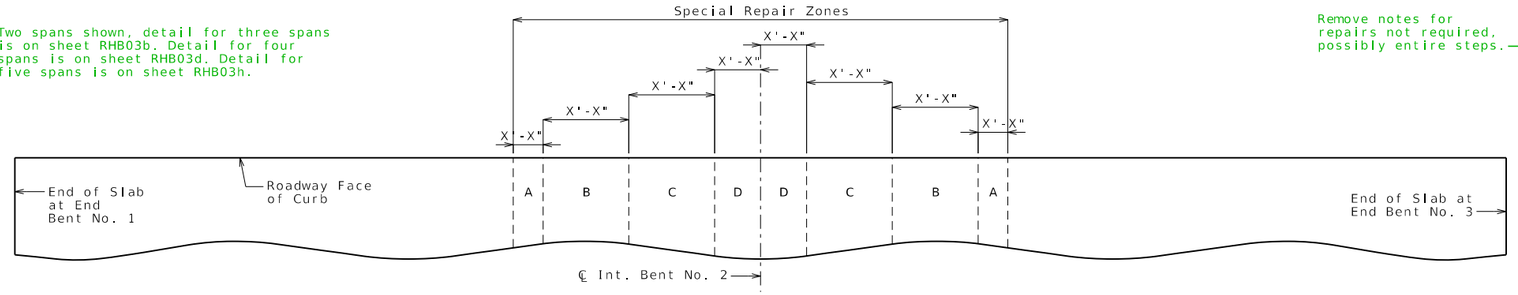

PART PLAN OF SLAB SHOWING SPECIAL REPAIR ZONES

Remove if repair is not required.

Replace with Note I3.3 for structures with single column bents.

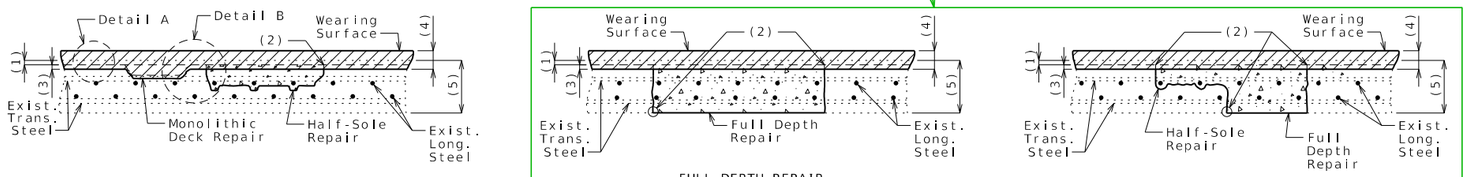

MONOLITHIC AND HALF-SOLE REPAIR

FULL DEPTH REPAIR

FULL DEPTH REPAIR WITH HALF-SOLE REPAIR

DECK REPAIR INSIDE SPECIAL REPAIR ZONES (BEFORE HYDRO DEMOLITION)

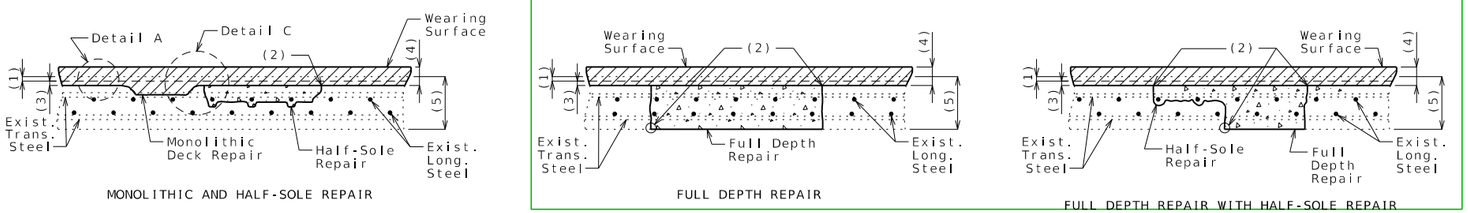

MONOLITHIC AND HALF-SOLE REPAIR

FULL DEPTH REPAIR

FULL DEPTH REPAIR WITH HALF-SOLE REPAIR

DECK REPAIR OUTSIDE SPECIAL REPAIR ZONES (AFTER HYDRO DEMOLITION)

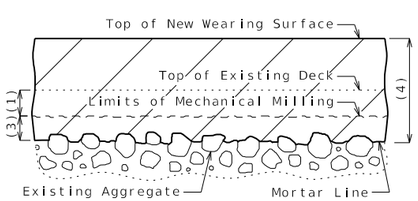

MILLING AND HYDRO DEMOLITION LIMITS

DETAIL A

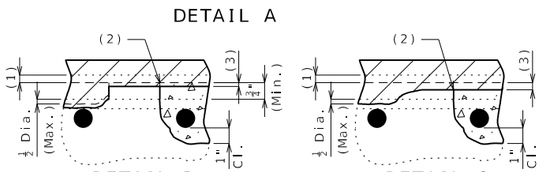

DETAIL B

DETAIL C

Monolithic deck repair shall be used when only half the diameter or less of the top bar is exposed.

Clearance around top bar and around bottom bar at the intersection of top bar shall be required when more than half the diameter of the top bar is exposed.

DECK REPAIR DETAILS

Deck Repair Notes:

Remove notes for repairs not required, possibly entire steps.

Order of Repair:

1. Scarify existing deck (D) ___".
2. Power wash deck to identify sound and unsound existing deck repair.
3. Inside special repair zones, complete the following repairs:
   a. Removal of existing deck repair
   b. Half-sole repair
   c. Full depth repair
4. Outside special repair zones, remove existing deck repair.
5. Complete total surface hydro demolition, removing (E) ___" minimum of sound concrete inside special repair zones and removing ___" minimum of sound concrete and all deteriorated concrete outside special repair zones. (E)
6. Sound deck and if needed complete incidental concrete removal.
7. Outside special repair zones, complete the following repairs:
   a. Half-sole repair
   b. Full depth repair
8. Place new wearing surface including additional material for areas of monolithic deck repair.

Special Repair Zones:

I3.2 Deck repair required in the areas designated as special repair zones shall be completed before hydro demolition in alphabetical sequence beginning with Zone A. Zones with the same letter designation may be repaired at the same time. Hydro demolition shall not move forward until the repairs in all special repair zones are completed and properly cured.

I3.4 Any deck repair in areas not designated as a special repair zone shall be completed after hydro demolition.

I3.5 Removal and deck repair shall be completed in one special repair zone and concrete shall have attained a compressive strength of 3200 psi before work can be started in the next special repair zone.

I3.16 Total width of full depth repair shall not exceed 1/3 of the deck width at one time. For any area of deck repair that extends over a web and is more than 18 inches in length along the web, the concrete removal including removal with hydro demolition shall stop at the centerline of web and repair completed in this area. Prior to continuing work in this area, the concrete shall have attained a compressive strength of 3200 psi. No traffic shall be permitted over the web that is undergoing repair.

I3.17 When the full depth repair extends over a diaphragm or web and the deteriorated concrete extends into the diaphragm or web, all deteriorated concrete shall be removed and replaced as full depth repair. Concrete in webs shall not be removed below the slab haunch of the girder without prior review and approval from the engineer.

I3.20 Interior falsework installed by the contractor resting on the bottom slab shall be removed where entry access is available.

I3.21 If any single repair area does not exceed 9 square feet in size and the total repair area within a special repair zone does not exceed 27 square feet, the special repair zone may repaired at the same time as an adjacent zone.

I3.22 Half-sole repair in the special repair zone, on either side of the intermediate bents, shall be to a depth that will not expose half the diameter of the longitudinal reinforcing bar. Full depth repair shall be made when removal of deteriorated concrete exposes half or more of the diameter of the longitudinal reinforcing bar.

DATE PREPARED	
3/7/2024	
ROUTE	STATE MO
DISTRICT	SHEET NO. 8
COUNTY	
JOB NO.	
CONTRACT ID.	
PROJECT NO.	
BRIDGE NO.	

DESCRIPTION | DATE

MISSOURI HIGHWAYS AND TRANSPORTATION COMMISSION
105 WEST CAPITOL
JEFFERSON CITY, MO 65102
1-888-ASK-MODOT (1-888-275-6636)

Detailed
Checked

Note: This drawing is not to scale. Follow dimensions.

SEC/SUR * TWP * RGE *

U.I.P. AND REHABILITATE EXISTING (X'-X'-X') CONTINUOUS CONCRETE BOX GIRDER SPANS (SKEW: X)

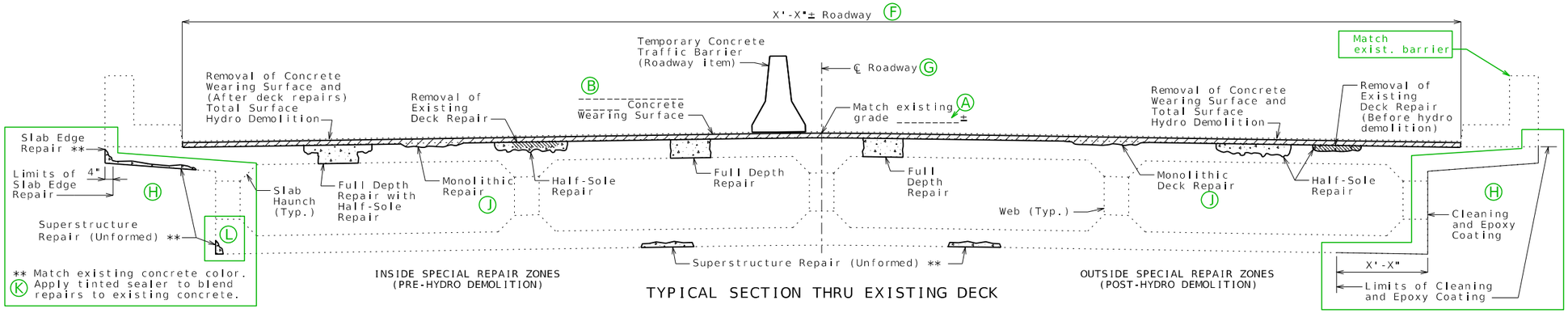

TYPICAL SECTION THRU EXISTING DECK

Hydro Demolition Case 2B:

Zoned Conventional Deck Repair Before Hydro Demolition and Non-Zoned Conventional Deck Repair After Hydro Demolition

(Replacing Existing Wearing Surface)

STANDARD DRAWING GUIDANCE (do not show on plans):

Use for the following concrete wearing surfaces:
(B) 2 1/4" to 3" Low Slump
3/4" to 3" Polyester Polymer

If optional concrete wearing surface is specified and low slump or polyester polymer is an option follow guidance on Sheet RHB03c.

Estimated Quantities

	Item			Total
	Total Surface Hydro Demolition	216-10.01	sq. yard	X
	Removal of Concrete Wearing Surface	216-15.02	sq. foot	X
	Removal of Existing Deck Repair	216-15.03	sq. foot	X
*	Supplementary Wearing Surface Material	505-00.04	cu. yard	X
	Low Slump Concrete Wearing Surface	505-10.00	sq. yard	X
	Substructure Repair (Formed)	704-01.01	sq. foot	X
	Substructure Repair (Unformed)	704-01.02	sq. foot	X
	Superstructure Repair (Unformed)	704-01.03	sq. foot	X
	Half-Sole Repair	704-01.04	sq. foot	X
	Full Depth Repair	704-01.06	sq. foot	X
	Slab Edge Repair (Bridges)	704-01.07	linear foot	X
	Cleaning and Epoxy Coating	704-01.13	sq. foot	X

Replace as required

B3.8 * Supplementary wearing surface material for monolithic deck repair will be paid for at the fixed unit price in accordance with Sec 109.
B3.9 (If required)

General Notes:

A1.1 **Design Specifications:**

2002 AASHTO LFD (17th Ed.) Standard Specifications
Bridge Deck Rating =

A1.2 **Design Loading:**

HS20-44 Modified ( ) and Military 24,000 lb Tandem Axle ( )
Year Year

A1.3 **Design Unit Stresses:**

Class B-1 Concrete (Half-Sole and Full Depth Repair) f'c = 4,000 psi

Miscellaneous:

I1.0.1 Roadway surfacing adjacent to bridge ends shall match new bridge wearing surface (roadway item).

I1.0.2 All concrete repairs shall be in accordance with Sec 704, unless otherwise noted.

I1.0.3 (If required)

I1.1 Outline of existing work is indicated by light dashed lines. Heavy lines indicate new work.

I1.2 (M) Contractor shall verify all dimensions in field before finalizing the shop drawings.

I1.10 In order to maintain grade and a minimum thickness of wearing surface as shown on plans it may be necessary to use additional quantities of wearing surface at various locations throughout the structure. The cost of furnishing and installing the wearing surface will be considered completely covered in the contract unit price, including all additional labor, materials or equipment for variations in thickness of wearing surface.

Traffic Handling:

A3.8 Structure to be closed during construction. Traffic to be maintained on __ during construction. See roadway plans for traffic control and Sheet No. for staged construction details.

REPAIRS TO BRIDGE: ROUTE *
OVER *

ROUTE * FROM * TO *
ABOUT * MILES * OF *
BEGINNING STATION _____± (Match Existing)

DATE PREPARED 3/7/2024
ROUTE STATE MO
DISTRICT SHEET NO. 9
COUNTY
JOB NO.
CONTRACT ID.
PROJECT NO.
BRIDGE NO.

DESCRIPTION
DATE

MISSOURI HIGHWAYS AND TRANSPORTATION COMMISSION
105 WEST CAPITOL
JEFFERSON CITY, MO 65102
1-888-ASK-MODOT (1-888-275-6636)

Detailed
Checked

Note: This drawing is not to scale. Follow dimensions.

Five spans shown, detail for two spans is on sheet RHB03f. Detail for three spans is on sheet RHB03b. Detail for four spans is on sheet RHB03d.

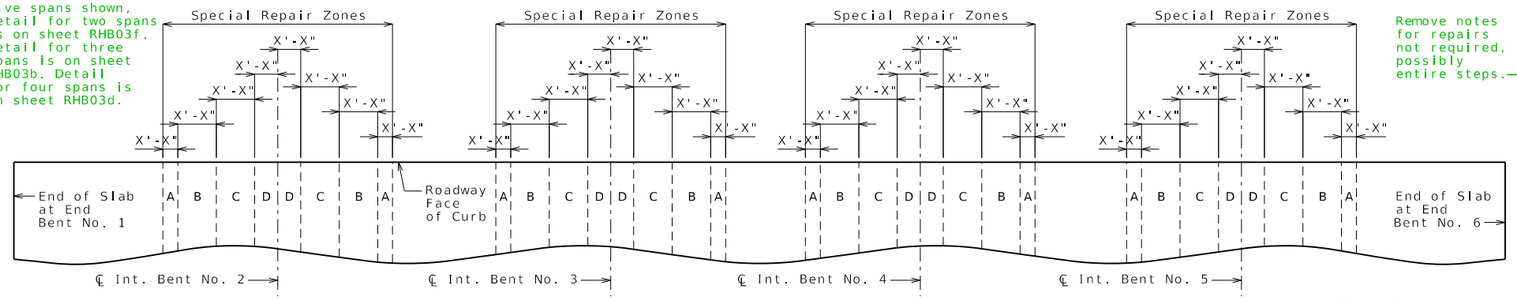

PART PLAN OF SLAB SHOWING SPECIAL REPAIR ZONES

Remove if repair is not required.

Replace with Note I3.3 for structures with single column bents.

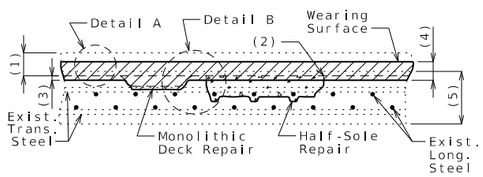

MONOLITHIC AND HALF-SOLE REPAIR

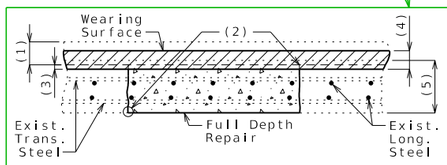

FULL DEPTH REPAIR

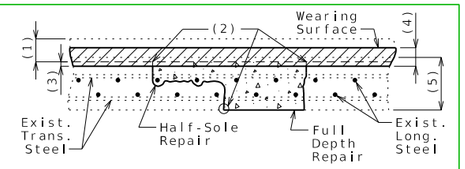

FULL DEPTH REPAIR WITH HALF-SOLE REPAIR

DECK REPAIR INSIDE SPECIAL REPAIR ZONES (BEFORE HYDRO DEMOLITION)

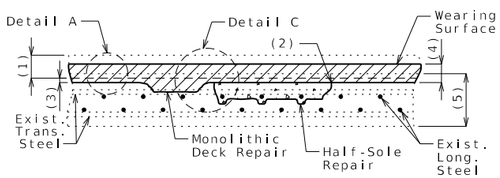

MONOLITHIC AND HALF-SOLE REPAIR

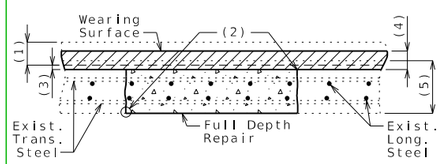

FULL DEPTH REPAIR

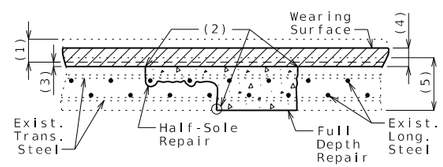

FULL DEPTH REPAIR WITH HALF-SOLE REPAIR

DECK REPAIR OUTSIDE SPECIAL REPAIR ZONES (AFTER HYDRO DEMOLITION)

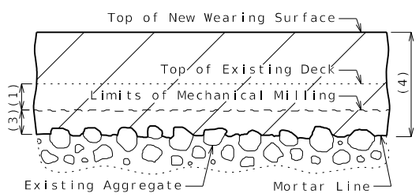

MILLING AND HYDRO DEMOLITION LIMITS

DETAIL A

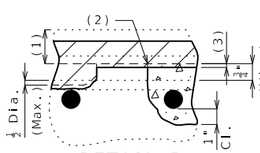

DETAIL B

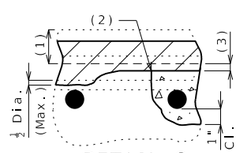

DETAIL C

Monolithic deck repair shall be used when only half the diameter or less of the top bar is exposed.

Clearance around top bar and around bottom bar at the intersection of top bar shall be required when more than half the diameter of the top bar is exposed.

(1) Removal of existing ___"± _____ wearing surface plus ___" of existing deck

(2) 1" vertical side shall be established outside the deteriorated area.

(3) Total surface hydro demolition of sound concrete, measured to mortar line

___" minimum inside special repair zones

___" minimum outside special repair zones

(4) _____ concrete wearing surface:

___" minimum inside special repair zones

___" minimum outside special repair zones

(5) Original thickness of top slab minus previous scarification

DECK REPAIR DETAILS

Deck Repair Notes:

Order of Repair:

1. Remove existing wearing surface plus ___" of existing deck.
2. Power wash deck to identify sound and unsound existing deck repair.
3. Inside special repair zones, complete the following repairs:
   a. Removal of existing deck repair
   b. Half-sole repair
   c. Full depth repair
4. Outside special repair zones, remove existing deck repair.
5. Complete total surface hydro demolition, removing ___" minimum of sound concrete inside special repair zones and removing ___" minimum of sound concrete and all deteriorated concrete outside special repair zones.
6. Sound deck and if needed complete incidental concrete removal.
7. Outside special repair zones, complete the following repairs:
   a. Half-sole repair
   b. Full depth repair
8. Place new wearing surface including additional material for areas of monolithic deck repair.

Remove notes for repairs not required, possibly entire steps.

Special Repair Zones:

I3.2 Deck repair required in the areas designated as special repair zones shall be completed before hydro demolition in alphabetical sequence beginning with Zone A. Zones with the same letter designation may be repaired at the same time. Hydro demolition shall not move forward until the repairs in all special repair zones are completed and properly cured.

I3.4 Any deck repair in areas not designated as a special repair zone shall be completed after hydro demolition.

I3.5 Removal and deck repair shall be completed in one special repair zone and concrete shall have attained a compressive strength of 3200 psi before work can be started in the next special repair zone.

I3.16 Total width of full depth repair shall not exceed 1/3 of the deck width at one time. For any area of deck repair that extends over a web and is more than 18 inches in length along the web, the concrete removal including removal with hydro demolition shall stop at the centerline of web and repair completed in this area. Prior to continuing work in this area, the concrete shall have attained a compressive strength of 3200 psi. No traffic shall be permitted over the web that is undergoing repair.

I3.17 When the full depth repair extends over a diaphragm or web and the deteriorated concrete extends into the diaphragm or web, all deteriorated concrete shall be removed and replaced as full depth repair. Concrete in webs shall not be removed below the slab haunch of the girder without prior review and approval from the engineer.

I3.20 Interior falsework installed by the contractor resting on the bottom slab shall be removed where entry access is available.

I3.21 If any single repair area does not exceed 9 square feet in size and the total repair area within a special repair zone does not exceed 27 square feet, the special repair zone may repaired at the same time as an adjacent zone.

I3.22 Half-sole repair in the special repair zone, on either side of the intermediate bents, shall be to a depth that will not expose half the diameter of the longitudinal reinforcing bar. Full depth repair shall be made when removal of deteriorated concrete exposes half or more of the diameter of the longitudinal reinforcing bar.

DATE PREPARED	3/7/2024
ROUTE	STATE MO
DISTRICT	SHEET NO. 10
COUNTY	
JOB NO.	
CONTRACT ID.	
PROJECT NO.	
BRIDGE NO.	

DESCRIPTION

DATE

MISSOURI HIGHWAYS AND TRANSPORTATION COMMISSION
105 WEST CAPITOL
JEFFERSON CITY, MO 65102
1-888-ASK-MODOT (1-888-275-6636)

Detailed
Checked

Note: This drawing is not to scale. Follow dimensions.

SEC/SUR * TWP * RGE *

U.I.P. AND REHABILITATE EXISTING (X'-X'-X') CONTINUOUS CONCRETE BOX GIRDER SPANS (SKEW: X)

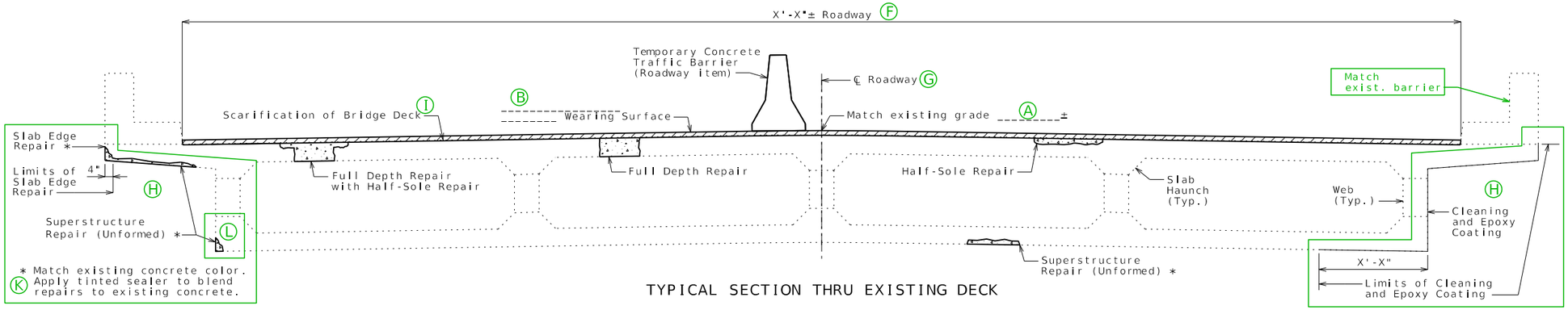

TYPICAL SECTION THRU EXISTING DECK

Conventional Deck Repair Only (Case A)

(Adding First Wearing Surface or Applying Concrete Crack Filler)

STANDARD DRAWING GUIDANCE (do not show on plans):

May be used for all wearing surfaces and when applying concrete crack filler:

Scarification not required when applying concrete crack filler or with the following wearing surfaces:
Seal Coat
Asphalt
UBAWS
Epoxy Polymer
MMA Polymer Slurry

(B) 2 1/4" to 3" Low Slump Concrete

1 3/4" to 3" Latex Modified Concrete

2 1/4" to 3" Silica Fume Concrete

1 3/4" to 3" Latex Modified Very Early Strength Concrete

1 3/4" to 3" CSA Cement Very Early Strength Concrete

3" to 4" Steel Fiber Reinforced Concrete

1/4" Epoxy Polymer

3/4" to 3" Polyester Polymer Concrete

3/8" MMA Polymer Slurry

4" to 5" Reinforced Concrete Slab

3/8" Chip Seal Grade A1

1" to 3" Optional Asphaltic Concrete

1/2" to 3/4" Optional Ultrathin Bonded Asphalt

Estimated Quantities

	Item			Total
	Scarification of Bridge Deck	216-10.00	sq. yard	X
Replace as required →	Latex Modified Concrete Wearing Surface	505-20.00	sq. yard	X
	Substructure Repair (Formed)	704-01.01	sq. foot	X
	Substructure Repair (Unformed)	704-01.02	sq. foot	X
	Superstructure Repair (Unformed)	704-01.03	sq. foot	X
	Half-Sole Repair	704-01.04	sq. foot	X
	Full Depth Repair	704-01.06	sq. foot	X
	Slab Edge Repair (Bridges)	704-01.07	linear foot	X
	Cleaning and Epoxy Coating	704-01.13	sq. foot	X

General Notes:

A1.1 **Design Specifications:**

2002 AASHTO LFD (17th Ed.) Standard Specifications
Bridge Deck Rating =

A1.2 **Design Loading:**

HS20-44 Modified (Year) and Military 24,000 lb Tandem Axle (Year)

A1.3 **Design Unit Stresses:**

Class B-1 Concrete (Half-Sole and Full Depth Repair) f'c = 4,000 psi

Miscellaneous:

I1.0.1 Roadway surfacing adjacent to bridge ends shall match new bridge wearing surface (roadway item).

I1.0.2 All concrete repairs shall be in accordance with Sec 704, unless otherwise noted.

I1.0.3 (If required) →

I1.1 Outline of existing work is indicated by light dashed lines. Heavy lines indicate new work.

(M) I1.2 Contractor shall verify all dimensions in field before ordering finalizing the shop drawings.

I1.10 In order to maintain grade and a minimum thickness of wearing surface as shown on plans it may be necessary to use additional quantities of wearing surface at various locations throughout the structure. The cost of furnishing and installing the wearing surface will be considered completely covered in the contract unit price, including all additional labor, materials or equipment for variations in thickness of wearing surface.

Traffic Handling:

A3.8 Structure to be closed during construction. Traffic to be maintained on ___ during construction. See roadway plans for traffic control and Sheet No. for staged construction details.

REPAIRS TO BRIDGE: ROUTE *
OVER *

ROUTE * FROM * TO *
ABOUT * MILES * OF *
BEGINNING STATION _____± (Match Existing)

DATE PREPARED	3/7/2024
ROUTE	STATE MO
DISTRICT	SHEET NO. 11
COUNTY	
JOB NO.	
CONTRACT ID.	
PROJECT NO.	
BRIDGE NO.	

DESCRIPTION | DATE

MISSOURI HIGHWAYS AND TRANSPORTATION COMMISSION
105 WEST CAPITOL
JEFFERSON CITY, MO 65102
1-888-ASK-MODOT (1-888-275-6636)

Detailed
Checked

Note: This drawing is not to scale. Follow dimensions.

Four spans shown, details for two and three spans are on the standard drawing guidance sheet. Detail for five spans is on sheet RHB03L.

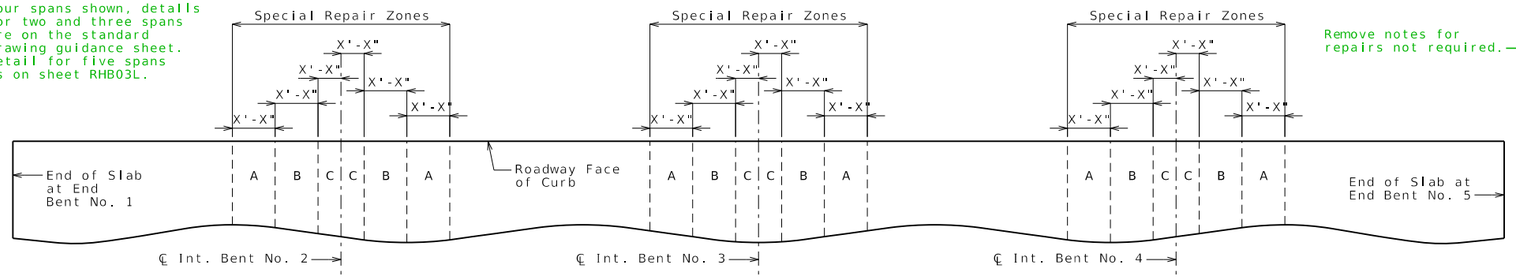

PART PLAN OF SLAB SHOWING SPECIAL REPAIR ZONES

Remove notes for repairs not required.

Deck Repair Notes:

Order of Repair:

1. Scarify existing deck D ___" I.
2. Sound deck to identify areas in need of repair.
3. Outside special repair zones, complete the following repairs:
   a. Half-sole repair
   b. Full depth repair
4. Inside special repair zones, complete the following repairs:
   a. Half-sole repair
   b. Full depth repair
5. Place new wearing surface.

Special Repair Zones:

I3.1 Any deck repair in areas not designated as a special repair zone shall be completed prior to work in Zone A.

I3.2 Deck repair required in the areas designated as special repair zones shall be completed in alphabetical sequence beginning with Zone A. Zones with the same letter designation may be repaired at the same time.

Replace with Note I3.3 for structures with single column bents.

I3.5 Removal and deck repair shall be completed in one special repair zone and concrete shall have attained a compressive strength of 3200 psi before work can be started in the next special repair zone.

I3.16 Total width of full depth repair shall not exceed 1/3 of the deck width at one time. For any area of deck repair that extends over a web and is more than 18 inches in length along the web, the concrete removal shall stop at the centerline of web and repair completed in this area. Prior to continuing work in this area, the concrete shall have attained a compressive strength of 3200 psi. No traffic shall be permitted over the web that is undergoing repair.

I3.17 When the full depth repair extends over a diaphragm or web and the deteriorated concrete extends into the diaphragm or web, all deteriorated concrete shall be removed and replaced as full depth repair. Concrete in webs shall not be removed below the slab haunch of the girder without prior review and approval from the engineer.

I3.20 Interior falsework installed by the contractor resting on the bottom slab shall be removed where entry access is available.

I3.21 If any single repair area does not exceed 9 square feet in size and the total repair area within a special repair zone does not exceed 27 square feet, the special repair zone may repaired at the same time as an adjacent zone.

I3.22 Half-sole repair in the special repair zone, on either side of the intermediate bents, shall be to a depth that will not expose half the diameter of the longitudinal reinforcing bar. Full depth repair shall be made when removal of deteriorated concrete exposes half or more of the diameter of the longitudinal reinforcing bar.

Remove if repair is not required.

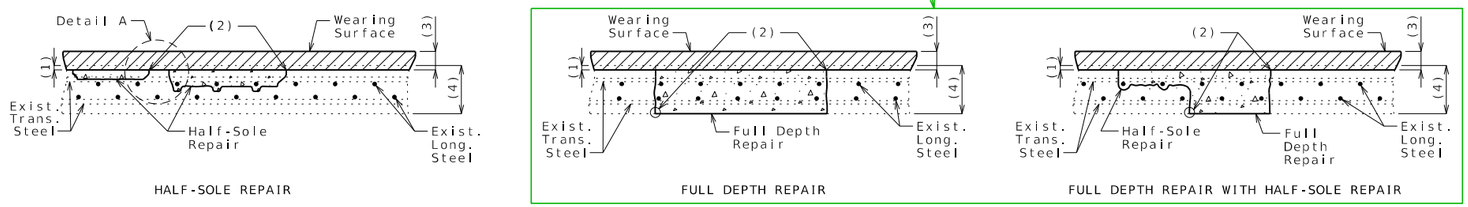

HALF-SOLE REPAIR

FULL DEPTH REPAIR

FULL DEPTH REPAIR WITH HALF-SOLE REPAIR

DECK REPAIR

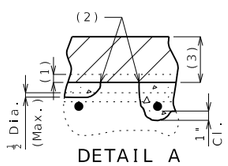

DETAIL A

Clearance around top bar and around bottom bar at the intersection of top bar shall be required when more than half the diameter of the top bar is exposed.

(1) D ___" scarification of existing deck I

(2) 1" vertical side shall be established outside the deteriorated area.

(3) B ___" minimum _____ wearing surface

(4) Original thickness of top slab

SDG:

For seal coat, asphalt, UBAWS, epoxy polymer, or MMA polymer slurry wearing surfaces:

- Delete Dimension/Note (1) and renumber others
- Delete top existing line
- Adjust top of the original depth dimension to bottom of new wearing surface
- Adjust wearing surface thickness for thin wearing surfaces

For application of concrete crack filler:

- Delete Dimension/Note (1) and (3) and renumber others
- Delete top existing line & the wearing surface
- Adjust top of the original depth dimension to the remaining top line.
- Replace "Wearing Surface" with "Concrete Crack Filler" and adjust leader note to point to the remaining top line

DECK REPAIR DETAILS

Detailed
Checked

Note: This drawing is not to scale. Follow dimensions.

Sheet No. of

DATE PREPARED	
3/7/2024	
ROUTE	STATE MO
DISTRICT	SHEET NO. 12
COUNTY	
JOB NO.	
CONTRACT ID.	
PROJECT NO.	
BRIDGE NO.	

DESCRIPTION

DATE

MISSOURI HIGHWAYS AND TRANSPORTATION COMMISSION
105 WEST CAPITOL
JEFFERSON CITY, MO 65102
1-888-ASK-MODOT (1-888-275-6636)

SEC/SUR * TWP * RGE *

U.I.P. AND REHABILITATE EXISTING (X'-X'-X') CONTINUOUS CONCRETE BOX GIRDER SPANS (SKEW: X)

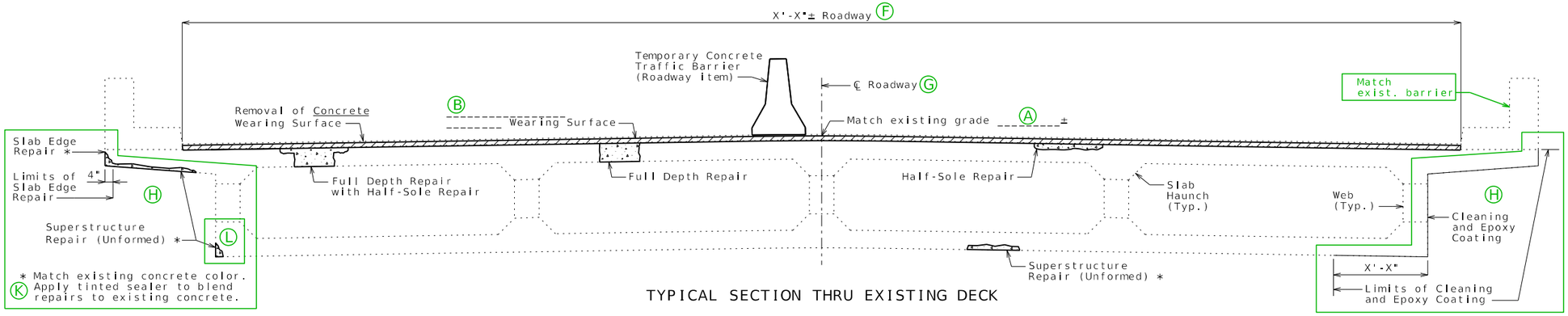

TYPICAL SECTION THRU EXISTING DECK

Conventional Deck Repair Only (Case B)

(Replacing Existing Wearing Surface)

Replace as required

Estimated Quantities			
Item			Total
Removal of Concrete Wearing Surface	216-15.02	sq. foot	X
Latex Modified Concrete Wearing Surface	505-20.00	sq. yard	X
Substructure Repair (Formed)	704-01.01	sq. foot	X
Substructure Repair (Unformed)	704-01.02	sq. foot	X
Superstructure Repair (Unformed)	704-01.03	sq. foot	X
Half-Sole Repair	704-01.04	sq. foot	X
Full Depth Repair	704-01.06	sq. foot	X
Slab Edge Repair (Bridges)	704-01.07	linear foot	X
Cleaning and Epoxy Coating	704-01.13	sq. foot	X

STANDARD DRAWING GUIDANCE (do not show on plans):

May be used for all wearing surfaces:

Scarification not required with the following wearing surfaces:
Seal Coat
Asphalt
UBAWS
Epoxy Polymer
MMA Polymer Slurry

(B) 2 1/4" to 3" Low Slump Concrete
1 3/4" to 3" Latex Modified Concrete
2 1/4" to 3" Silica Fume Concrete
1 3/4" to 3" Latex Modified Very Early Strength Concrete
1 3/4" to 3" CSA Cement Very Early Strength Concrete
3" to 4" Steel Fiber Reinforced Concrete
1/4" Epoxy Polymer
3/4" to 3" Polyester Polymer Concrete
3/8" MMA Polymer Slurry
4" to 5" Reinforced Concrete Slab
3/8" Chip Seal Grade A1
1" to 3" Optional Asphaltic Concrete
1/2" to 3/4" Optional Ultrathin Bonded Asphalt

General Notes:

A1.1 **Design Specifications:**

2002 AASHTO LFD (17th Ed.) Standard Specifications
Bridge Deck Rating =

A1.2 **Design Loading:**

HS20-44 Modified (Year) and Military 24,000 lb Tandem Axle (Year)

A1.3 **Design Unit Stresses:**

Class B-1 Concrete (Half-Sole and Full Depth Repair) f'c = 4,000 psi

Miscellaneous:

I1.0.1 Roadway surfacing adjacent to bridge ends shall match new bridge wearing surface (roadway item).

I1.0.2 All concrete repairs shall be in accordance with Sec 704, unless otherwise noted.

I1.0.3 (If required)

I1.1 Outline of existing work is indicated by light dashed lines. Heavy lines indicate new work.

(M) I1.2 Contractor shall verify all dimensions in field before finalizing the shop drawings.

I1.10 In order to maintain grade and a minimum thickness of wearing surface as shown on plans it may be necessary to use additional quantities of wearing surface at various locations throughout the structure. The cost of furnishing and installing the wearing surface will be considered completely covered in the contract unit price, including all additional labor, materials or equipment for variations in thickness of wearing surface.

Traffic Handling:

A3.8 Structure to be closed during construction. Traffic to be maintained on ___ during construction. See roadway plans for traffic control and Sheet No. ___ for staged construction details.

REPAIRS TO BRIDGE: ROUTE *
OVER *

ROUTE * FROM * TO *
ABOUT * MILES * OF *
BEGINNING STATION _____± (Match Existing)

DATE PREPARED 3/7/2024
ROUTE | STATE MO
DISTRICT | SHEET NO. 13
COUNTY
JOB NO.
CONTRACT ID.
PROJECT NO.
BRIDGE NO.

DESCRIPTION | DATE

MISSOURI HIGHWAYS AND TRANSPORTATION COMMISSION
105 WEST CAPITOL
JEFFERSON CITY, MO 65102
1-888-ASK-MODOT (1-888-275-6636)

Detailed
Checked

Note: This drawing is not to scale. Follow dimensions.

Five spans shown, details for two and three spans are on the standard drawing guidance sheet. Detail for four spans is on sheet RHB03j.

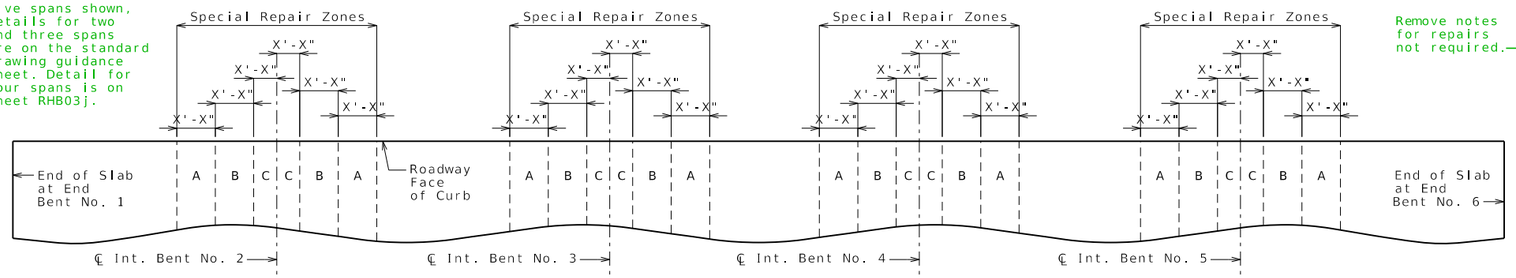

PART PLAN OF SLAB SHOWING SPECIAL REPAIR ZONES

Remove notes for repairs not required.

Deck Repair Notes:

Order of Repair:

1. Remove existing wearing surface plus Ⓓ" of existing deck. Ⓘ
2. Sound deck to identify areas in need of repair.
3. Outside special repair zones, complete the following repairs:
   a. Half-sole repair
   b. Full depth repair
4. Inside special repair zones, complete the following repairs:
   a. Half-sole repair
   b. Full depth repair
5. Place new wearing surface.

Special Repair Zones:

I3.1 Any deck repair in areas not designated as a special repair zone shall be completed prior to work in Zone A.

I3.2 Deck repair required in the areas designated as special repair zones shall be completed in alphabetical sequence beginning with Zone A. Zones with the same letter designation may be repaired at the same time.

Replace with Note I3.3 for structures with single column bents.

I3.5 Removal and deck repair shall be completed in one special repair zone and concrete shall have attained a compressive strength of 3200 psi before work can be started in the next special repair zone.

I3.16 Total width of full depth repair shall not exceed 1/3 of the deck width at one time. For any area of deck repair that extends over a web and is more than 18 inches in length along the web, the concrete removal shall stop at the centerline of web and repair completed in this area. Prior to continuing work in this area, the concrete shall have attained a compressive strength of 3200 psi. No traffic shall be permitted over the web that is undergoing repair.

I3.17 When the full depth repair extends over a diaphragm or web and the deteriorated concrete extends into the diaphragm or web, all deteriorated concrete shall be removed and replaced as full depth repair. Concrete in webs shall not be removed below the slab haunch of the girder without prior review and approval from the engineer.

I3.20 Interior falsework installed by the contractor resting on the bottom slab shall be removed where entry access is available.

I3.21 If any single repair area does not exceed 9 square feet in size and the total repair area within a special repair zone does not exceed 27 square feet, the special repair zone may repaired at the same time as an adjacent zone.

I3.22 Half-sole repair in the special repair zone, on either side of the intermediate bents, shall be to a depth that will not expose half the diameter of the longitudinal reinforcing bar. Full depth repair shall be made when removal of deteriorated concrete exposes half or more of the diameter of the longitudinal reinforcing bar.

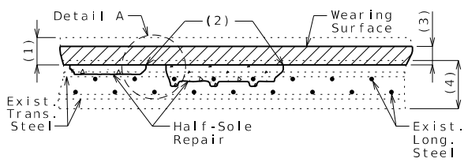

HALF-SOLE REPAIR

Remove if repair is not required.

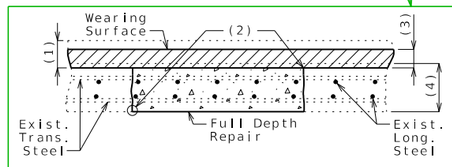

FULL DEPTH REPAIR

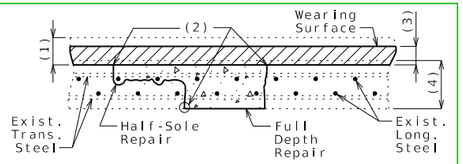

FULL DEPTH REPAIR WITH HALF-SOLE REPAIR

DECK REPAIR

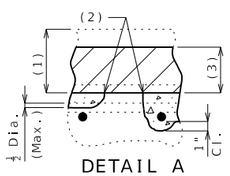

DETAIL A

Clearance around top bar and around bottom bar at the intersection of top bar shall be required when more than half the diameter of the top bar is exposed.

(1) Removal of existing Ⓒ"± _____ wearing surface plus ___" of existing deck Ⓘ (Ⓓ)

(2) 1" vertical side shall be established outside the deteriorated area.

(3) Ⓑ" minimum _____ wearing surface

(4) Original thickness of top slab minus previous scarification

SDG:

For seal coat, asphalt, UBAWS, epoxy polymer or MMA polymer slurry wearing surfaces:

- Delete existing line inside wearing surface
- Adjust top of the original depth dimension to bottom of new wearing surface
- Adjust depth for thin wearing surfaces

DECK REPAIR DETAILS

Detailed
Checked

Note: This drawing is not to scale. Follow dimensions.

Sheet No. of

DATE PREPARED	
3/7/2024	
ROUTE	STATE MO
DISTRICT	SHEET NO. 14
COUNTY	
JOB NO.	
CONTRACT ID.	
PROJECT NO.	
BRIDGE NO.	

DESCRIPTION

DATE

MISSOURI HIGHWAYS AND TRANSPORTATION COMMISSION
105 WEST CAPITOL
JEFFERSON CITY, MO 65102
1-888-ASK-MODOT (1-888-275-6636)

RHB04_CIP_VS_or_SS_Slab Guidance & Alternate Details

Detach all unused Drawing Models & Sheet Models before requesting PDFs for sign and seal.

STANDARD DRAWING GUIDANCE (SDG) (do not show on plans)

Select the appropriate 1st and 2nd sheet. Draw typical section as required and scale to fit within attached border replacing the provided example. Modify other details and notes as required (match orientation of actual reinforcement).

For solid slabs, all details shall be modified by removing voids and all notes pertaining to void repair.

District/SPM typically estimates the percentage of void tube replacement.

Transverse repair zoning over intermediate bents is required for these structures. Longitudinal repair zoning in spans is required only when hydro demolition is required and is based on anticipated quantity of deck repair if not overlayed, confidence of anticipated quantity of deck repair if overlayed, deck rating (e.g. 6 or better may not need zoning), See EPG 751.40 (If only transverse zoning is required, Zones shall be called "Special Repair Zones").

Wearing surface thickness can vary according to grade elevation requirements and minimum barrier curb height requirements. Maximum thickness should be limited to 3" (Ref. Organizational Results Research Report ORO6.004, May 2006). Limit excludes reinforced concrete slab wearing surfaces.

Will need to adjust wearing surface thickness when detailing a thin wearing surface (1" or less), but it is a preferred detailing practice to show a discernable thickness on the plans. No thickness is shown for crack filler application.

(A) Show difference as plus/minus X"±, see Bridge Memo or SPM. e.g. Match existing grade plus 2¼"±

(B) Identify new wearing surface, see Bridge Memo or SPM. Specify minimum thickness in deck details, typically 1/4" thicker outside special repair zones for hydro Case 1 & 2.

(C) Identify existing wearing surface and thickness, see Bridge Memo or existing plans.

(D) See Bridge Memo or SPM, typically 1/2". Use 1" if more than 30% of existing deck needs repair. Verify there will be a minimum of 1/2" of concrete above top bars to allow for this much scarification.

(E) See Bridge Memo or SPM, typically 1/4" inside special repair zones to avoid deeper penetration into newly repaired areas and 1/2" outside special repair zones.

(F) See existing plans.

(G) Use appropriate reference (℄ Structure, ℄ Roadway, ℄ Median, etc.)

(H) Two types of overhang rehabilitation are shown. Cleaning and epoxy coating is preferred because of the relative short life of slab edge repair and unformed repair especially when over traffic. However in urban regions repairing the overhang may be preferred. Consult with SPM or SLE.

(I) Scarification prior to adding first wearing surface or removing a portion of the deck when removing an existing wearing surface is not required for seal coat, asphalt, UBAWS, epoxy polymer or MMA polymer slurry wearing surfaces.

(J) Monolithic deck repair should only be allowed where longitudinal zoning is not required.

(K) May be used for aesthetics with extensive patchwork of repairs visible to public.

(L) Note is required only when shop drawings will be required (For example, expansion device replacement, diaphragm replacement, etc.)

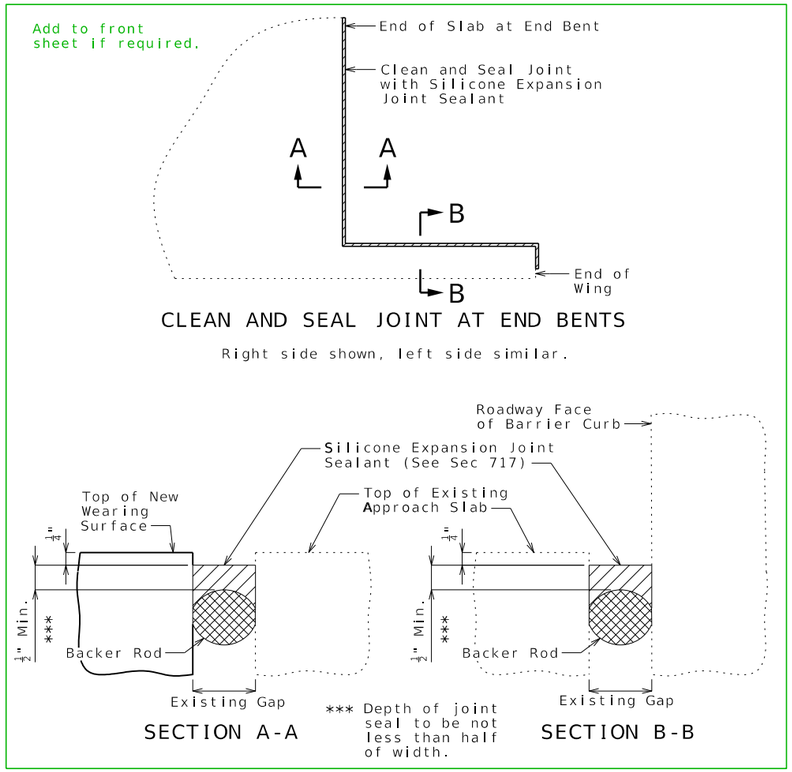

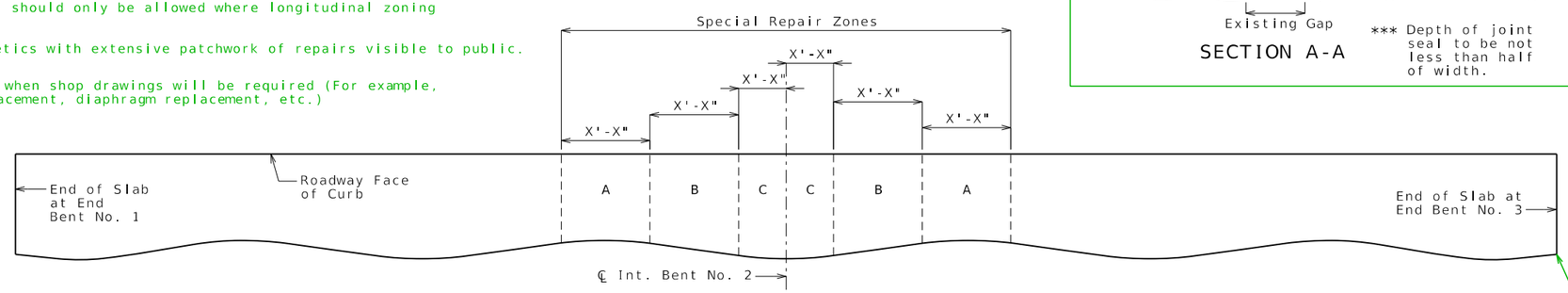

PART PLAN OF SLAB SHOWING SPECIAL REPAIR ZONES

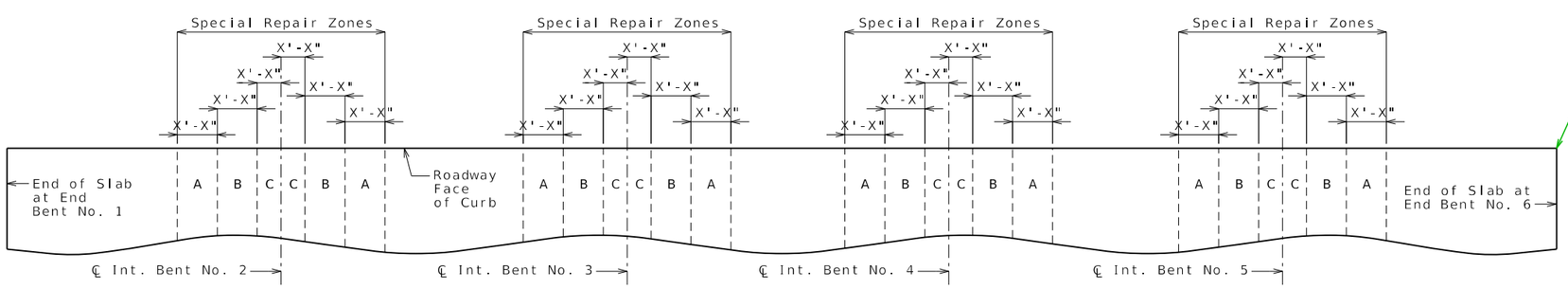

PART PLAN OF SLAB SHOWING SPECIAL REPAIR ZONES

Two spans and five spans shown. These details can be used on Sheets RHB04j and RHB04L for conventional deck repair only projects.

SEC/SUR * TWP * RGE *

U.I.P. AND REHABILITATE EXISTING (X'-X'-X') CONTINUOUS CONCRETE VOIDED SLAB SPANS (SKEW: X)

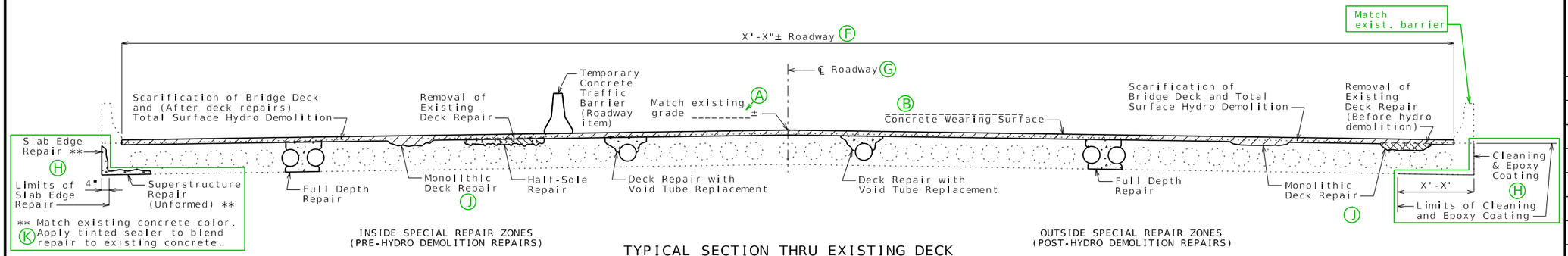

TYPICAL SECTION THRU EXISTING DECK

Hydro Demolition Case 1A:

Zoned Conventional Deck Repair Before Hydro Demolition and Non-Zoned Monolithic Deck Repair After Hydro Demolition

(Adding First Wearing Surface)

STANDARD DRAWING GUIDANCE (do not show on plans):

Use for the following concrete wearing surfaces:
(B) 1 3/4" to 3" Latex Modified
2 1/4" to 3" Silica Fume
1 3/4" to 3" Latex Modified Very Early Strength
1 3/4" to 3" CSA Cement Very Early Strength
3" to 4" Steel Fiber Reinforced

If optional concrete wearing surface is specified and low slump or polyester polymer is an option:
1. Add the allowed options in parentheses to the typical section title below and also to the RHB04e sheet title.
2. Add to this sheet the typical section from Sheet RHB04e with "(Low Slump Concrete)" added to the title.
3. Add "(Low Slump Concrete)" to the RHB04f sheet title and revise the sheet number from two to three. Sheet RHB04e will not be used.

Estimated Quantities

Item			Total
Scarification of Bridge Deck	216-10.00	sq. yard	X
Total Surface Hydro Demolition	216-10.01	sq. yard	X
Removal of Existing Deck Repair	216-15.03	sq. foot	X
* Supplementary Wearing Surface Material	505-00.04	cu. yard	X
Latex Modified Concrete Wearing Surface	505-20.00	sq. yard	X
Substructure Repair (Formed)	704-01.01	sq. foot	X
Substructure Repair (Unformed)	704-01.02	sq. foot	X
Superstructure Repair (Unformed)	704-01.03	sq. foot	X
Half-Sole Repair	704-01.04	sq. foot	X
Full Depth Repair	704-01.06	sq. foot	X
Slab Edge Repair (Bridges)	704-01.07	linear foot	X
Cleaning and Epoxy Coating	704-01.13	sq. foot	X

Replace as required *

B3.8 * Supplementary wearing surface material for monolithic deck repair will be paid for at the fixed unit price in accordance with Sec 109.
B3.9 if required

General Notes:

A1.1 **Design Specifications:**

2002 AASHTO LFD (17th Ed.) Standard Specifications
Bridge Deck Rating =

A1.2 **Design Loading:**

HS20-44 Modified (Year) and Military 24,000 lb Tandem Axle (Year)

A1.3 **Design Unit Stresses:**

Class B-1 Concrete (Half-Sole and Full Depth Repair f'c = 4,000 psi

Miscellaneous:

I1.0.1 Roadway surfacing adjacent to bridge ends shall match new bridge wearing surface (roadway item).

I1.0.3 If required

I1.0.2 All concrete repairs shall be in accordance with Sec 704, unless otherwise noted.

I1.1 Outline of existing work is indicated by light dashed lines. Heavy lines indicate new work.

I1.2 (L) Contractor shall verify all dimensions in field before finalizing the shop drawings.

I1.10 In order to maintain grade and a minimum thickness of wearing surface as shown on plans it may be necessary to use additional quantities of wearing surface at various locations throughout the structure. The cost of furnishing and installing the wearing surface will be considered completely covered in the contract unit price, including all additional labor, materials or equipment for variations in thickness of wearing surface.

Traffic Handling:

A3.8 Structure to be closed during construction. Traffic to be maintained on __ during construction. See roadway plans for traffic control and Sheet No. for staged construction details.

REPAIRS TO BRIDGE: ROUTE *
OVER *

ROUTE * FROM * TO *
ABOUT * MILES * OF *
BEGINNING STATION _____± (Match Existing)

DATE PREPARED	3/7/2024
ROUTE	STATE MO
DISTRICT	SHEET NO. 15
COUNTY	
JOB NO.	
CONTRACT ID.	
PROJECT NO.	
BRIDGE NO.	

DESCRIPTION

DATE

MISSOURI HIGHWAYS AND TRANSPORTATION COMMISSION
105 WEST CAPITOL
JEFFERSON CITY, MO 65102
1-888-ASK-MODOT (1-888-275-6636)

Detailed
Checked

Note: This drawing is not to scale. Follow dimensions.

Two spans shown, detail for three spans is on RHB04f. Detail for four spans is on RHBO4h. Detail for five spans is on sheet RHB04d.

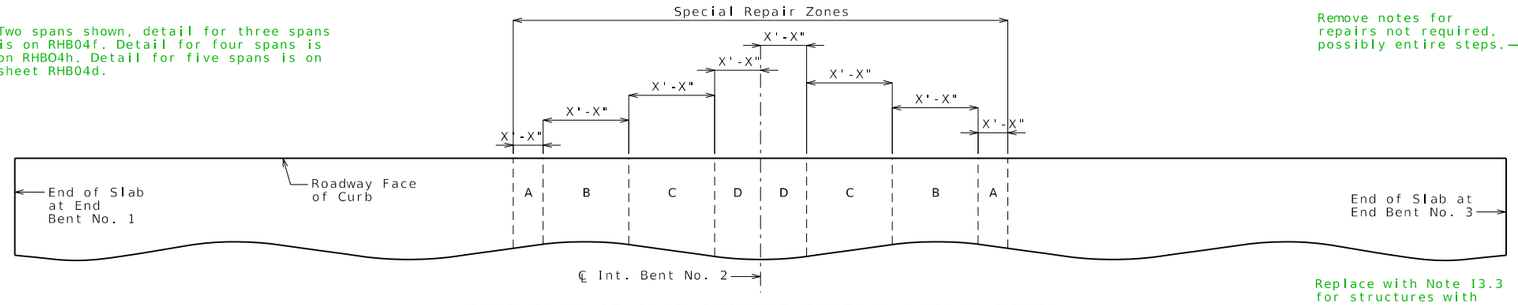

PART PLAN OF SLAB SHOWING SPECIAL REPAIR ZONES

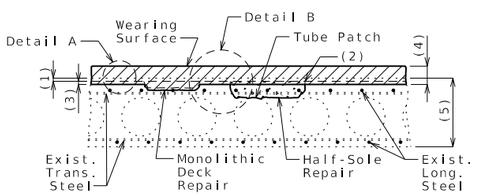

MONOLITHIC AND HALF-SOLE REPAIR

Remove if repair is not required.

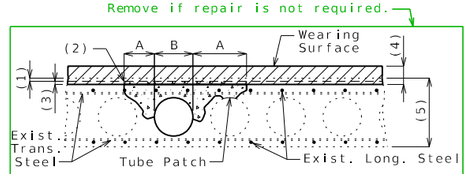

DECK REPAIR WITH VOID TUBE REPLACEMENT

A = Half-Sole Repair
B = Deck Repair with Void Tube Replacement

Remove if repair is not required.

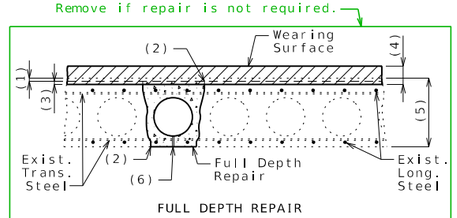

FULL DEPTH REPAIR

DECK REPAIR INSIDE SPECIAL REPAIR ZONES (BEFORE HYDRO DEMOLITION)

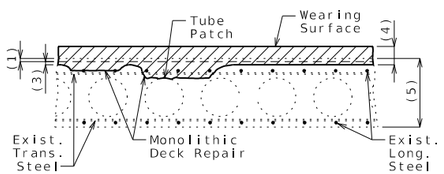

MONOLITHIC DECK REPAIR

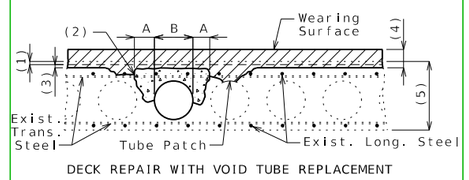

DECK REPAIR WITH VOID TUBE REPLACEMENT

A = Half-Sole Repair
B = Deck Repair with Void Tube Replacement

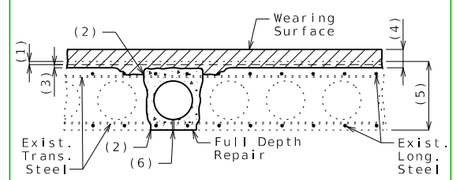

FULL DEPTH REPAIR

DECK REPAIR OUTSIDE SPECIAL REPAIR ZONES (AFTER HYDRO DEMOLITION)

Remove if repair is not required.

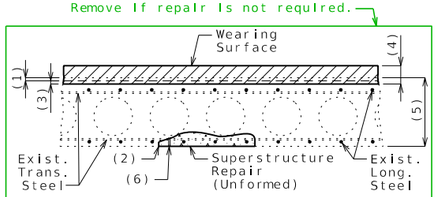

SUPERSTRUCTURE REPAIR (UNFORMED)

(1) Ⓓ___" scarification of existing deck

(2) 1" vertical side shall be established outside the deteriorated area.

(3) Total surface hydro demolition of sound concrete, measured to mortar line:

Ⓔ___" minimum inside special repair zones

___" minimum outside special repair zones

(4) Ⓑ_____ concrete wearing surface:

___" minimum inside special repair zones

___" minimum outside special repair zones

(5) Original depth

(6) Restore existing weep hole, if encountered.

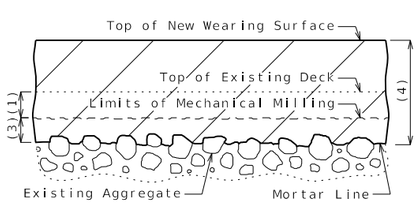

MILLING AND HYDRO DEMOLITION LIMITS

DETAIL A

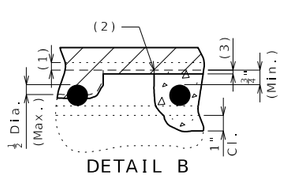

DETAIL B

Monolithic deck repair shall be used when only half the diameter or less of the top bar is exposed.

Clearance around top bar and around bottom bar at the intersection of top bar shall be required when more than half the diameter of the top bar is exposed.

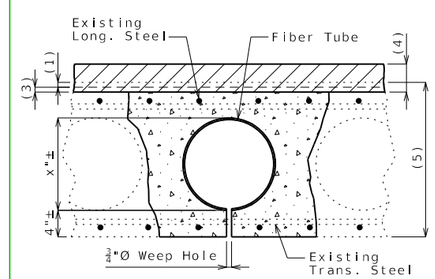

FIBER VOID TUBE REPLACEMENT

Fiber tubes for producing voids shall have an approximate outside diameter of x inches and a wall thickness of 1/4 inch and shall be anchored to joists carrying the floor form at not more than 4-foot centers.

One 3/4"Ø weep hole shall be provided at 2 inches from each end of each new void.

DECK REPAIR DETAILS

Remove notes for repairs not required, possibly entire steps.

Deck Repair Notes:

Order of Repair:

1. Scarify existing deck Ⓓ___".
2. Power wash deck to identify sound and unsound existing deck repair.
3. Inside special repair zones, complete the following repairs:
   a. Removal of existing deck repair
   b. Half-sole repair
   c. Deck repair with void tube replacement
   d. Full depth repair
4. Outside special repair zones, remove existing deck repair.
5. Complete total surface hydro demolition, removing Ⓔ___" minimum of sound concrete inside special repair zones and removing ___" minimum of sound concrete and all deteriorated concrete outside special repair zones. Ⓔ
6. Sound deck and if needed complete incidental concrete removal.
7. Outside special repair zones, complete the following repairs:
   a. Deck repair with void tube replacement
   b. Full depth repair
8. Place new wearing surface including additional material for areas of monolithic deck repair.

Replace with Note 13.3 for structures with single column bents.

Special Repair Zones:

13.2 Deck repair required in the areas designated as special repair zones shall be completed before hydro demolition in alphabetical sequence beginning with Zone A. Zones with the same letter designation may be repaired at the same time. Hydro demolition shall not move forward until the repairs in all special repair zones are completed and properly cured.

13.4 Any deck repair in areas not designated as a special repair zone shall be completed after hydro demolition.

13.5 Removal and deck repair shall be completed in one special repair zone and concrete shall have attained a compressive strength of 3200 psi before work can be started in the next special repair zone.

13.6 If any single repair area does not exceed 4 square feet in size and the total repair area within a special repair zone does not exceed 12 square feet, the special repair zone may be repaired at the same time as an adjacent zone.

Void Repair:

13.10 Any damage sustained to the void tube as a result of the contractor's operations shall be patched or replaced as required by the engineer at the contractor's expense.

13.11 An exposed void in the deck shall be patched as approved by the engineer in a manner that shall maintain the void area completely free of concrete. Cost of patching an exposed void will be considered completely covered by the contract unit price for Half-Sole Repair inside special repair zones and Monolithic Deck Repair outside special repair zones.

13.12 When a deteriorated portion of the void tube is beyond the point of patching as determined by the engineer, the portion of the deteriorated void tube shall be replaced. The void area shall be maintained completely free of concrete. Cutting of the longitudinal reinforcing steel will not be permitted. The fiber tubes for producing the voids shall have an outside diameter with the wall thickness the same as the existing tubes and anchored at not more than the original spacing. Cost of replacing the void tube will be considered completely covered by the contract unit price for Deck Repair with Void Tube Replacement. Measurement will be horizontal projection of the area of exposed tube in plan.

Remove if repair is not required.

DATE PREPARED	
3/7/2024	
ROUTE	STATE MO
DISTRICT	SHEET NO. 16
COUNTY	
JOB NO.	
CONTRACT ID.	
PROJECT NO.	
BRIDGE NO.	

DESCRIPTION	DATE

MISSOURI HIGHWAYS AND TRANSPORTATION COMMISSION
105 WEST CAPITOL
JEFFERSON CITY, MO 65102
1-888-ASK-MODOT (1-888-275-6636)

Detailed
Checked

Note: This drawing is not to scale. Follow dimensions.

Sheet No. of

SEC/SUR * TWP * RGE *

U.I.P. AND REHABILITATE EXISTING (X'-X'-X') CONTINUOUS CONCRETE VOIDED SLAB SPANS (SKEW: X)

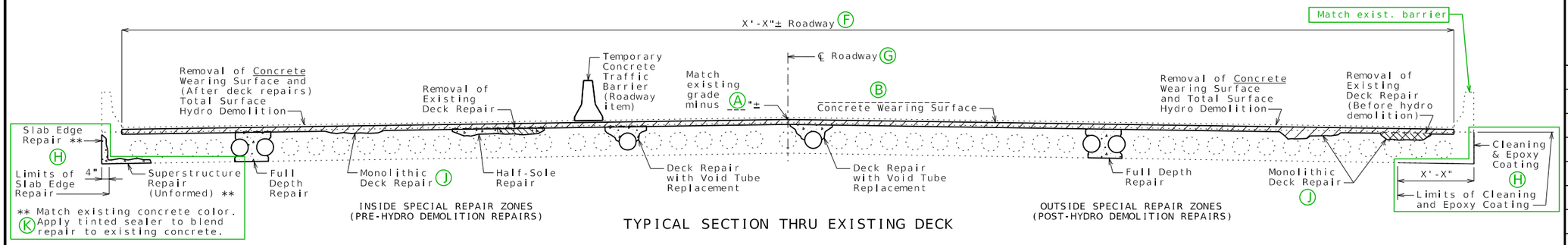

TYPICAL SECTION THRU EXISTING DECK

Hydro Demolition Case 1B:

Zoned Conventional Deck Repair Before Hydro Demolition and Non-Zoned Monolithic Deck Repair After Hydro Demolition

(Replacing Existing Wearing Surface)

STANDARD DRAWING GUIDANCE (do not show on plans):

Use for the following concrete wearing surfaces:
(B) 1 3/4" to 3" Latex Modified
2 1/4" to 3" Silica Fume
1 3/4" to 3" Latex Modified Very Early Strength
1 3/4" to 3" CSA Cement Very Early Strength
3" to 4" Steel Fiber Reinforced

If optional concrete wearing surface is specified and low slump or polyester polymer is an option:
1. Add the allowed options in parentheses to the typical section title below and also to the RHB04h sheet title.
2. Add to this sheet the typical section from Sheet RHB04g with "(Low Slump Concrete)" added to the title.
3. Add "(Low Slump Concrete)" to the RHB04h sheet title and revise the sheet number from two to three. Sheet RHB04g will not be used.

Estimated Quantities

	Item			Total
	Total Surface Hydro Demolition	216-10.01	sq. yard	X
	Removal of Concrete Wearing Surface	216-15.02	sq. foot	X
	Removal of Existing Deck Repair	216-15.03	sq. foot	X
*	Supplementary Wearing Surface Material	505-00.04	cu. yard	X
	Latex Modified Concrete Wearing Surface	505-20.00	sq. yard	X
	Substructure Repair (Formed)	704-01.01	sq. foot	X
	Substructure Repair (Unformed)	704-01.02	sq. foot	X
	Superstructure Repair (Unformed)	704-01.03	sq. foot	X
	Half-Sole Repair	704-01.04	sq. foot	X
	Full Depth Repair	704-01.06	sq. foot	X
	Slab Edge Repair (Bridges)	704-01.07	linear foot	X
	Cleaning and Epoxy Coating	704-01.13	sq. foot	X

Replace as required

B3.8 * Supplementary wearing surface material for monolithic deck repair will be paid for at the fixed unit price in accordance with Sec 109.

Note B3.9 if required.

General Notes:

A1.1 **Design Specifications:**

2002 AASHTO LFD (17th Ed.) Standard Specifications
Bridge Deck Rating =

A1.2 **Design Loading:**

HS20-44 Modified (Year) and Military 24,000 lb Tandem Axle (Year)

A1.3 **Design Unit Stresses:**

Class B-1 Concrete (Half-Sole and Full Depth Repair) f'c = 4,000 psi

Miscellaneous:

I1.0.1 Roadway surfacing adjacent to bridge ends shall match new bridge wearing surface (roadway item).

I1.0.2 All concrete repairs shall be in accordance with Sec 704, unless otherwise noted.

I1.0.3 If required

I1.1 Outline of existing work is indicated by light dashed lines. Heavy lines indicate new work.

I1.2 (L) Contractor shall verify all dimensions in field before finalizing the shop drawings.

I1.10 In order to maintain grade and a minimum thickness of wearing surface as shown on plans it may be necessary to use additional quantities of wearing surface at various locations throughout the structure. The cost of furnishing and installing the wearing surface will be considered completely covered in the contract unit price, including all additional labor, materials or equipment for variations in thickness of wearing surface.

Traffic Handling:

A3.8 Structure to be closed during construction. Traffic to be maintained on ___ during construction. See roadway plans for traffic control and Sheet No. ___ for staged construction details.

REPAIRS TO BRIDGE: ROUTE *
OVER *

ROUTE * FROM * TO *
ABOUT * MILES * OF *
BEGINNING STATION _____± (Match Existing)

DATE PREPARED 3/7/2024
ROUTE | STATE MO
DISTRICT | SHEET NO. 17
COUNTY
JOB NO.
CONTRACT ID.
PROJECT NO.
BRIDGE NO.

DESCRIPTION | DATE

MISSOURI HIGHWAYS AND TRANSPORTATION COMMISSION
105 WEST CAPITOL
JEFFERSON CITY, MO 65102
1-888-ASK-MODOT (1-888-275-6636)

Detailed
Checked

Note: This drawing is not to scale. Follow dimensions.

Five spans shown, detail for two spans is on sheet RHB04b. Detail for three spans is on RHB04f. Detail for four spans is on RHBO4h.

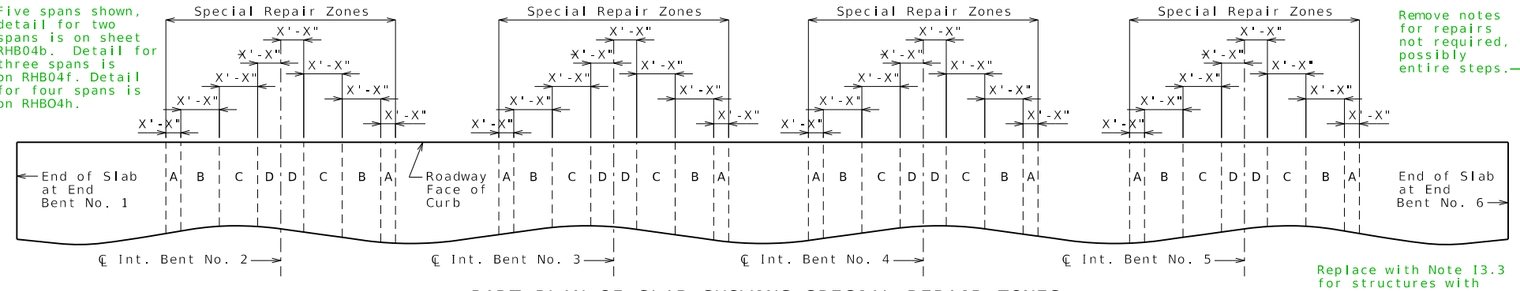

PART PLAN OF SLAB SHOWING SPECIAL REPAIR ZONES

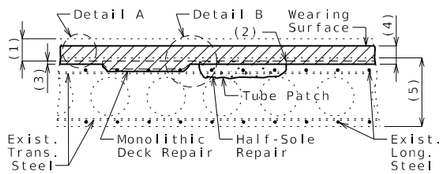

MONOLITHIC AND HALF-SOLE REPAIR

Remove if repair is not required.

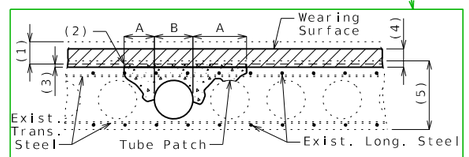

DECK REPAIR WITH VOID TUBE REPLACEMENT

A = Half-Sole Repair
B = Deck Repair with Void Tube Replacement

Remove if repair is not required.

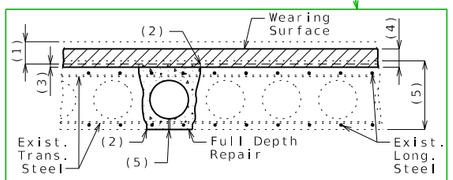

FULL DEPTH REPAIR

DECK REPAIR INSIDE SPECIAL REPAIR ZONES (BEFORE HYDRO DEMOLITION)

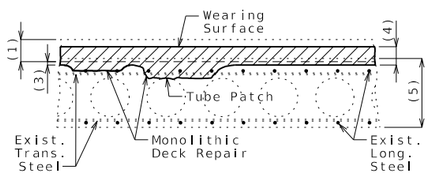

MONOLITHIC DECK REPAIR

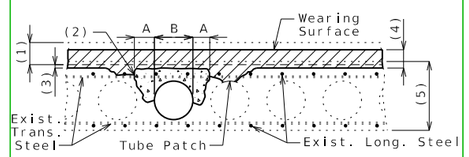

DECK REPAIR WITH VOID TUBE REPLACEMENT

A = Half-Sole Repair
B = Deck Repair with Void Tube Replacement

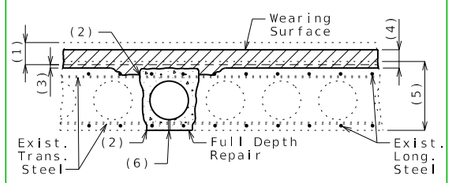

FULL DEPTH REPAIR

DECK REPAIR OUTSIDE SPECIAL REPAIR ZONES (AFTER HYDRO DEMOLITION)

Remove if repair is not required.

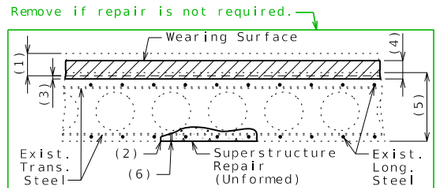

SUPERSTRUCTURE REPAIR (UNFORMED)

(1) Removal of existing Ⓒ ___"± _____ wearing surface plus ___Ⓓ" of existing deck

(2) 1" vertical side shall be established outside the deteriorated area.

(3) Total surface hydro demolition of sound concrete, measured to mortar line:

___" minimum inside special repair zones

Ⓔ ___" minimum outside special repair zones

(4) Ⓑ_____ concrete wearing surface:

___" minimum inside special repair zones

___" minimum outside special repair zones

(5) Original depth minus previous scarification

(6) Restore existing weep hole, if encountered.

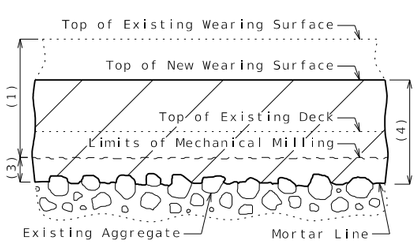

MILLING AND HYDRO DEMOLITION LIMITS

DETAIL A

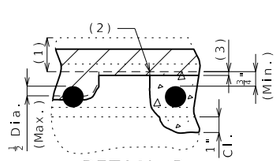

DETAIL B

Monolithic deck repair shall be used when only half the diameter or less of the top bar is exposed.

Clearance around top bar and around bottom bar at the intersection of top bar shall be required when more than half the diameter of the top bar is exposed.

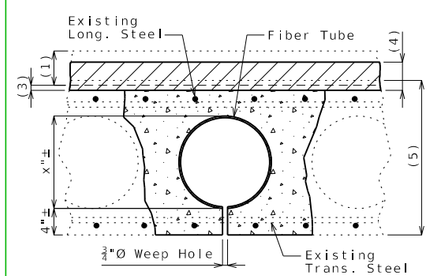

FIBER VOID TUBE REPLACEMENT

Fiber tubes for producing voids shall have an approximate outside diameter of x inches and a wall thickness of 1/4 inch and shall be anchored to joists carrying the floor form at not more than 4-foot centers.

One 3/4"Ø weep hole shall be provided at 2 inches from each end of each new void.

Remove notes for repairs not required, possibly entire steps.

Deck Repair Notes:

Order of Repair:

1. Remove existing wearing surface plus Ⓓ___" of existing deck.
2. Power wash deck to identify sound and unsound existing deck repair.
3. Inside special repair zones, complete the following repairs:
   a. Removal of existing deck repair
   b. Half-sole repair
   c. Deck repair with void tube replacement
   d. Full depth repair
4. Outside special repair zones, remove existing deck repair.
5. Complete total surface hydro demolition, removing Ⓔ___" minimum of sound concrete inside special repair zones and removing Ⓔ___" minimum of sound concrete and all deteriorated concrete outside special repair zones.
6. Sound deck and if needed complete incidental concrete removal.
7. Outside special repair zones, complete the following repairs:
   a. Deck repair with void tube replacement
   b. Full depth repair
8. Place new wearing surface including additional material for areas of monolithic deck repair.

Special Repair Zones:

13.2 Deck repair required in the areas designated as special repair zones shall be completed before hydro demolition in alphabetical sequence beginning with Zone A. Zones with the same letter designation may be repaired at the same time. Hydro demolition shall not move forward until the repairs in all special repair zones are completed and properly cured.

13.4 Any deck repair in areas not designated as a special repair zone shall be completed after hydro demolition.

13.5 Removal and deck repair shall be completed in one special repair zone and concrete shall have attained a compressive strength of 3200 psi before work can be started in the next special repair zone.

13.6 If any single repair area does not exceed 4 square feet in size and the total repair area within a special repair zone does not exceed 12 square feet, the special repair zone may be repaired at the same time as an adjacent zone.

Void Repair:

13.10 Any damage sustained to the void tube as a result of the contractor's operations shall be patched or replaced as required by the engineer at the contractor's expense.

13.11 An exposed void in the deck shall be patched as approved by the engineer in a manner that shall maintain the void area completely free of concrete. Cost of patching an exposed void will be considered completely covered by the contract unit price for Half-Sole Repair inside special repair zones and Monolithic Deck Repair outside special repair zones.

13.12 When a deteriorated portion of the void tube is beyond the point of patching as determined by the engineer, the portion of the deteriorated void tube shall be replaced. The void area shall be maintained completely free of concrete. Cutting of the longitudinal reinforcing steel will not be permitted. The fiber tubes for producing the voids shall have an outside diameter with the wall thickness the same as the existing tubes and anchored at not more than the original spacing. Cost of replacing the void tube will be considered completely covered by the contract unit price for Deck Repair with Void Tube Replacement. Measurement will be horizontal projection of the area of exposed tube in plan.

Remove if repair is not required.

Replace with Note 13.3 for structures with single column bents.

DATE PREPARED	3/7/2024
ROUTE	STATE MO
DISTRICT	SHEET NO. 18
COUNTY	
JOB NO.	
CONTRACT ID.	
PROJECT NO.	
BRIDGE NO.	

DESCRIPTION

DATE

MISSOURI HIGHWAYS AND TRANSPORTATION COMMISSION
105 WEST CAPITOL
JEFFERSON CITY, MO 65102
1-888-ASK-MODOT (1-888-275-6636)

DECK REPAIR DETAILS

Detailed
Checked

Note: This drawing is not to scale. Follow dimensions.

Sheet No. of

SEC/SUR * TWP * RGE *

U.I.P. AND REHABILITATE EXISTING (X'-X'-X') CONTINUOUS CONCRETE VOIDED SLAB SPANS (SKEW: X)

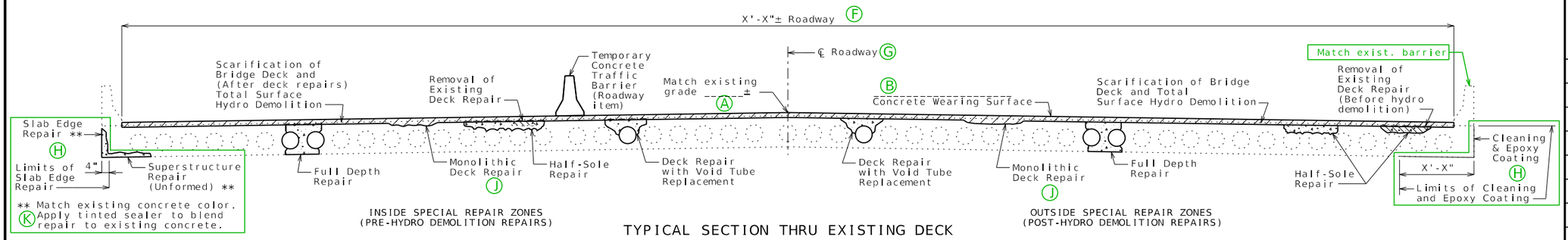

TYPICAL SECTION THRU EXISTING DECK

Hydro Demolition Case 2A:

Zoned Conventional Deck Repair Before Hydro Demolition and Non-Zoned Conventional Deck Repair After Hydro Demolition

(Adding First Wearing Surface)

Estimated Quantities

Item			Total
Scarification of Bridge Deck	216-10.00	sq. yard	X
Total Surface Hydro Demolition	216-10.01	sq. yard	X
Removal of Existing Deck Repair	216-15.03	sq. foot	X
* Supplementary Wearing Surface Material	505-00.04	cu. yard	X
Latex Modified Concrete Wearing Surface	505-20.00	sq. yard	X
Substructure Repair (Formed)	704-01.01	sq. foot	X
Substructure Repair (Unformed)	704-01.02	sq. foot	X
Superstructure Repair (Unformed)	704-01.03	sq. foot	X
Half-Sole Repair	704-01.04	sq. foot	X
Full Depth Repair	704-01.06	sq. foot	X
Slab Edge Repair (Bridges)	704-01.07	linear foot	X
Deck Repair with Void Tube Replacement	704-01.12	sq. foot	X
Cleaning and Epoxy Coating	704-01.13	sq. foot	X

Replace as required

B3.8 * Supplementary wearing surface material for monolithic deck repair will be paid for at the fixed unit price in accordance with Sec 109.

B3.9 if required

STANDARD DRAWING GUIDANCE (do not show on plans):

(B) May be used with the following concrete wearing surfaces:
2 1/4" to 3" Low Slump
3/4" to 3" Polyester Polymer

If optional concrete wearing surface is specified and low slump or polyester polymer is an option follow guidance on Sheet RHB04a.

General Notes:

A1.1 **Design Specifications:**

2002 AASHTO LFD (17th Ed.) Standard Specifications
Bridge Deck Rating =

A1.2 **Design Loading:**

HS20-44 Modified (Year) and Military 24,000 lb Tandem Axle (Year)

A1.3 **Design Unit Stresses:**

Class B-1 Concrete (Half-Sole and Full Depth Repair and Deck Repair with Void Tube Replacement) f'c = 4,000 psi

Miscellaneous:

I1.0.1 Roadway surfacing adjacent to bridge ends shall match new bridge wearing surface (roadway item).

I1.0.2 All concrete repairs shall be in accordance with Sec 704, unless otherwise noted.

I1.0.3 If required

I1.1 Outline of existing work is indicated by light dashed lines. Heavy lines indicate new work.

I1.2 (L) Contractor shall verify all dimensions in field before finalizing the shop drawings.

I1.10 In order to maintain grade and a minimum thickness of wearing surface as shown on plans it may be necessary to use additional quantities of wearing surface at various locations throughout the structure. The cost of furnishing and installing the wearing surface will be considered completely covered in the contract unit price, including all additional labor, materials or equipment for variations in thickness of wearing surface.

Traffic Handling:

A3.8 Structure to be closed during construction. Traffic to be maintained on ____ during construction. See roadway plans for traffic control and Sheet No. for staged construction details.

REPAIRS TO BRIDGE: ROUTE *
OVER *

ROUTE * FROM * TO *
ABOUT * MILES * OF *
BEGINNING STATION _____± (Match Existing)

DATE PREPARED 3/7/2024
ROUTE | STATE MO
DISTRICT | SHEET NO. 19
COUNTY
JOB NO.
CONTRACT ID.
PROJECT NO.
BRIDGE NO.

DESCRIPTION | DATE

MISSOURI HIGHWAYS AND TRANSPORTATION COMMISSION
105 WEST CAPITOL
JEFFERSON CITY, MO 65102
1-888-ASK-MODOT (1-888-275-6636)

Detailed
Checked

Note: This drawing is not to scale. Follow dimensions.

Three spans shown, detail for two is on RHB04b. Detail for four spans is on RHB04h. Five spans is on RHB04d.

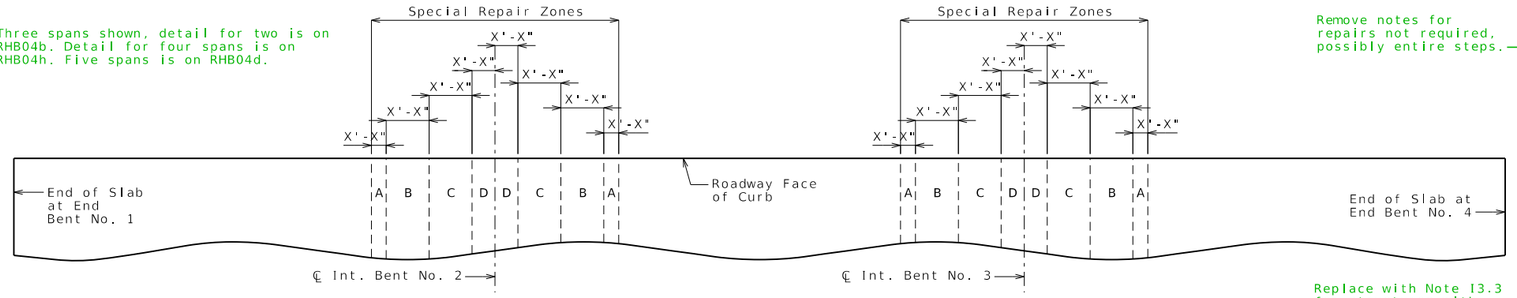

PART PLAN OF SLAB SHOWING SPECIAL REPAIR ZONES

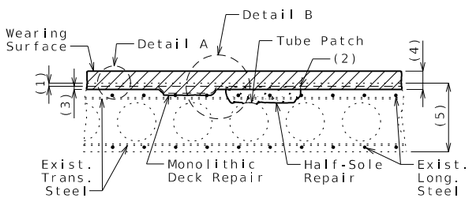

MONOLITHIC AND HALF-SOLE REPAIR

Remove if repair is not required.

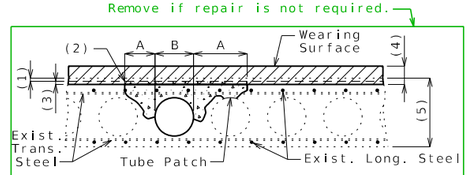

DECK REPAIR WITH VOID TUBE REPLACEMENT

A = Half-Sole Repair
B = Deck Repair with Void Tube Replacement

Remove if repair is not required.

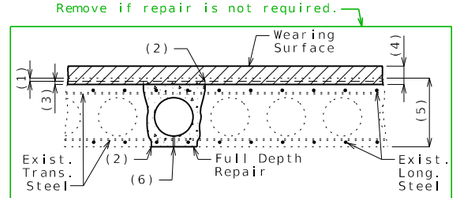

FULL DEPTH REPAIR

DECK REPAIR INSIDE SPECIAL REPAIR ZONES (BEFORE HYDRO DEMOLITION)

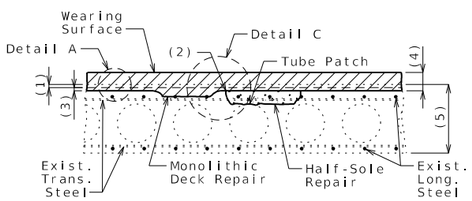

MONOLITHIC AND HALF-SOLE REPAIR

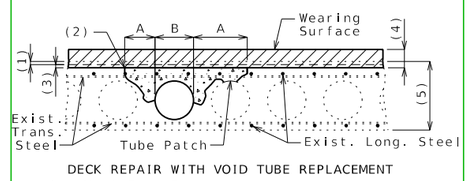

DECK REPAIR WITH VOID TUBE REPLACEMENT

A = Half-Sole Repair
B = Deck Repair with Void Tube Replacement

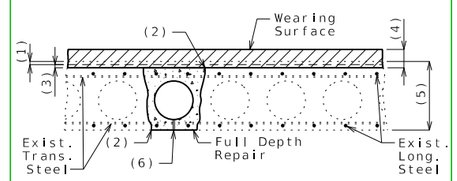

FULL DEPTH REPAIR

DECK REPAIR OUTSIDE SPECIAL REPAIR ZONES (AFTER HYDRO DEMOLITION)

Remove if repair is not required.

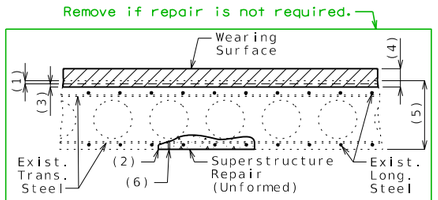

SUPERSTRUCTURE REPAIR (UNFORMED)

(1) Ⓓ___" scarification of existing deck

(2) 1" vertical side shall be established outside the deteriorated area.

(3) Total surface hydro demolition of sound concrete, measured to mortar line:

Ⓔ___" minimum inside special repair zones

___" minimum outside special repair zones

(4) Ⓑ_____ concrete wearing surface:

___" minimum inside special repair zones

___" minimum outside special repair zones

(5) Original depth

(6) Restore existing weep hole, if encountered.

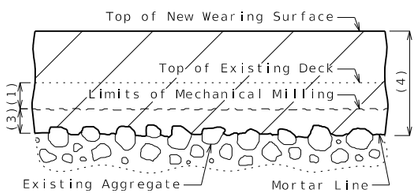

MILLING AND HYDRO DEMOLITION LIMITS

DETAIL A

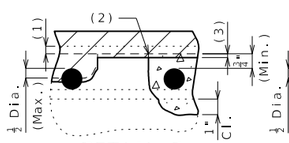

DETAIL B

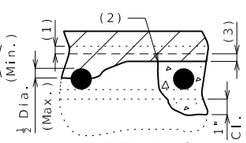

DETAIL C

Monolithic deck repair shall be used when only half the diameter or less of the top bar is exposed.

Clearance around top bar and around bottom bar at the intersection of top bar shall be required when more than half the diameter of the top bar is exposed.

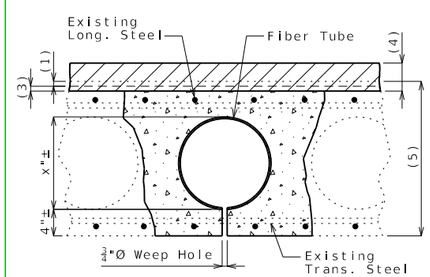

FIBER VOID TUBE REPLACEMENT

Fiber tubes for producing voids shall have an approximate outside diameter of _ inches and a wall thickness of 1/4 Inch and shall be anchored to joists carrying the floor form at not more than 4-foot centers.

One 3/4"Ø weep hole shall be provided at 2 inches from each end of each new void.

Remove notes for repairs not required, possibly entire steps.

Deck Repair Notes:

Order of Repair:

1. Scarify existing deck Ⓓ___".
2. Power wash deck to identify sound and unsound existing deck repair.
3. Inside special repair zones, complete the following repairs:
   a. Removal of existing deck repair
   b. Half-sole repair
   c. Deck repair with void tube replacement
   d. Full depth repair
4. Outside special repair zones, remove existing deck repair.
5. Complete total surface hydro demolition, removing Ⓔ____ minimum of sound concrete inside special repair zones and removing __" minimum of sound concrete and all deteriorated Ⓔ concrete outside special repair zones.
6. Sound deck and if needed complete incidental concrete removal.
7. Outside special repair zones, complete the following repairs:
   a. Half-sole repair
   b. Deck repair with void tube replacement
   c. Full depth repair
8. Place new wearing surface including additional material for areas of monolithic deck repair.

Replace with Note 13.3 for structures with single column bents.

Special Repair Zones:

13.2 Deck repair required in the areas designated as special repair zones shall be completed before hydro demolition in alphabetical sequence beginning with Zone A. Zones with the same letter designation may be repaired at the same time. Hydro demolition shall not move forward until the repairs in all special repair zones are completed and properly cured.

13.4 Any deck repair in areas not designated as a special repair zone shall be completed after hydro demolition.

13.5 Removal and deck repair shall be completed in one special repair zone and concrete shall have attained a compressive strength of 3200 psi before work can be started in the next special repair zone.

13.6 If any single repair area does not exceed 4 square feet in size and the total repair area within a special repair zone does not exceed 12 square feet, the special repair zone may be repaired at the same time as an adjacent zone.

Void Repair:

13.10 Any damage sustained to the void tube as a result of the contractor's operations shall be patched or replaced as required by the engineer at the contractor's expense.

13.11 An exposed void in the deck shall be patched as approved by the engineer in a manner that shall maintain the void area completely free of concrete. Cost of patching an exposed void will be considered completely covered by the contract unit price for Half-Sole Repair.

13.12 When a deteriorated portion of the void tube is beyond the point of patching as determined by the engineer, the portion of the deteriorated void tube shall be replaced. The void area shall be maintained completely free of concrete. Cutting of the longitudinal reinforcing steel will not be permitted. The fiber tubes for producing the voids shall have an outside diameter with the wall thickness the same as the existing tubes and anchored at not more than the original spacing. Cost of replacing the void tube will be considered completely covered by the contract unit price for Deck Repair with Void Tube Replacement. Measurement will be horizontal projection of the area of exposed tube in plan.

Remove if repair is not required.

DATE PREPARED	
3/7/2024	
ROUTE	STATE MO
DISTRICT	SHEET NO. 20
COUNTY	
JOB NO.	
CONTRACT ID.	
PROJECT NO.	
BRIDGE NO.	

DESCRIPTION	DATE

MISSOURI HIGHWAYS AND TRANSPORTATION COMMISSION
105 WEST CAPITOL
JEFFERSON CITY, MO 65102
1-888-ASK-MODOT (1-888-275-6636)

DECK REPAIR DETAILS

Detailed
Checked

Sheet No. of

Note: This drawing is not to scale. Follow dimensions.

SEC/SUR * TWP * RGE *

U.I.P. AND REHABILITATE EXISTING (X'-X'-X') CONTINUOUS CONCRETE VOIDED SLAB SPANS (SKEW: X)

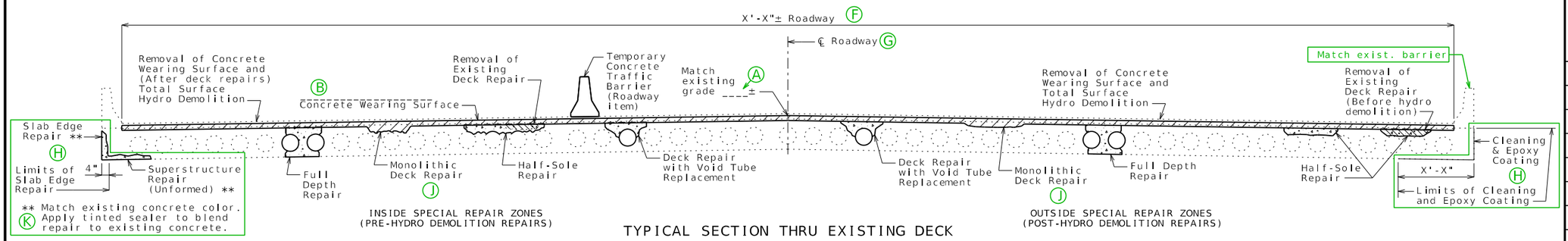

TYPICAL SECTION THRU EXISTING DECK

Hydro Demolition Case 2B:

Zoned Conventional Deck Repair Before Hydro Demolition and Non-Zoned Conventional Deck Repair After Hydro Demolition

(Replacing Existing Wearing Surface)

STANDARD DRAWING GUIDANCE (do not show on plans):

B May be used with the following concrete wearing surfaces:
2 1/4" to 3" Low Slump
3/4" to 3" Polyester Polymer

If optional concrete wearing surface is specified and low slump or polyester polymer is an option follow guidance on Sheet RHB04c.

Estimated Quantities

Item			Total
Total Surface Hydro Demolition	216-10.01	sq. yard	X
Removal of Concrete Wearing Surface	216-15.02	sq. foot	X
Removal of Existing Deck Repair	216-15.03	sq. foot	X
* Supplementary Wearing Surface Material	505-00.04	cu. yard	X
Latex Modified Concrete Wearing Surface (Replace as required)	505-20.00	sq. yard	X
Substructure Repair (Formed)	704-01.01	sq. foot	X
Substructure Repair (Unformed)	704-01.02	sq. foot	X
Superstructure Repair (Unformed)	704-01.03	sq. foot	X
Half-Sole Repair	704-01.04	sq. foot	X
Full Depth Repair	704-01.06	sq. foot	X
Slab Edge Repair (Bridges)	704-01.07	linear foot	X
Deck Repair with Void Tube Replacement	704-01.12	sq. foot	X
Cleaning and Epoxy Coating	704-01.13	sq. foot	X

B3.8 * Supplementary wearing surface material for monolithic deck repair will be paid for at the fixed unit price in accordance with Sec 109. (B3.9 if required)

General Notes:

A1.1 **Design Specifications:**

2002 AASHTO LFD (17th Ed.) Standard Specifications
Bridge Deck Rating =

A1.2 **Design Loading:**

HS20-44 Modified (Year) and Military 24,000 lb Tandem Axle (Year)

A1.3 **Design Unit Stresses:**

Class B-1 Concrete (Half-Sole and Full Depth Repair and Deck Repair with Void Tube Replacement) f'c = 4,000 psi

Miscellaneous:

I1.0.1 Roadway surfacing adjacent to bridge ends shall match new bridge wearing surface (roadway item).

I1.0.2 All concrete repairs shall be in accordance with Sec 704, unless otherwise noted. (I1.0.3 If required)

I1.1 Outline of existing work is indicated by light dashed lines. Heavy lines indicate new work.

I1.2 L Contractor shall verify all dimensions in field before finalizing the shop drawings.

I1.10 In order to maintain grade and a minimum thickness of wearing surface as shown on plans it may be necessary to use additional quantities of wearing surface at various locations throughout the structure. The cost of furnishing and installing the wearing surface will be considered completely covered in the contract unit price, including all additional labor, materials or equipment for variations in thickness of wearing surface.

Traffic Handling:

A3.8 Structure to be closed during construction. Traffic to be maintained on __ during construction. See roadway plans for traffic control and Sheet No. for staged construction details.

REPAIRS TO BRIDGE: ROUTE *
OVER *

ROUTE * FROM * TO *
ABOUT * MILES * OF *
BEGINNING STATION _____± (Match Existing)

Detailed
Checked

Note: This drawing is not to scale. Follow dimensions.

DATE PREPARED 3/7/2024
ROUTE | STATE MO
DISTRICT | SHEET NO. 21
COUNTY
JOB NO.
CONTRACT ID.
PROJECT NO.
BRIDGE NO.

DESCRIPTION | DATE

MISSOURI HIGHWAYS AND TRANSPORTATION COMMISSION
105 WEST CAPITOL
JEFFERSON CITY, MO 65102
1-888-ASK-MODOT (1-888-275-6636)

Four spans shown, detail for two is on RHB04b. Detail for three spans is on RHB04f. Five spans is on RHB04d.

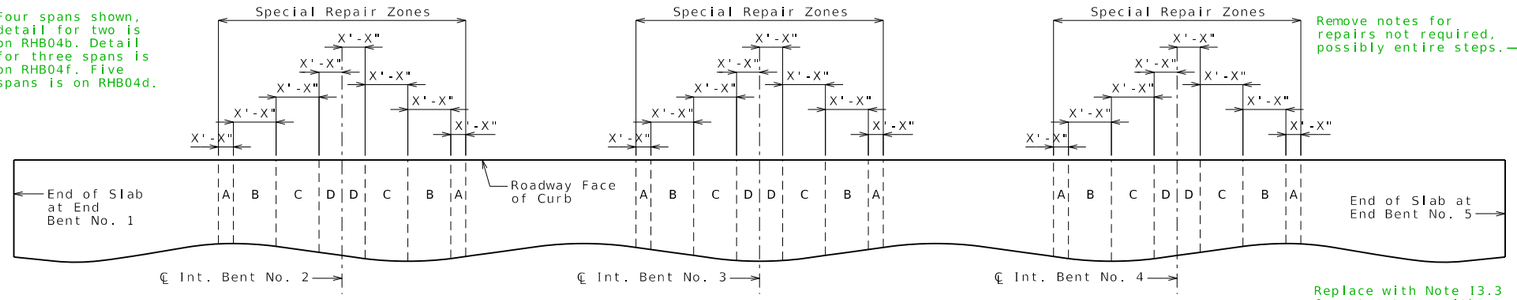

PART PLAN OF SLAB SHOWING SPECIAL REPAIR ZONES

Remove notes for repairs not required, possibly entire steps.

Deck Repair Notes:

Order of Repair:

1. Remove existing wearing surface plus (D) ___" of existing deck.
2. Power wash deck to identify sound and unsound existing deck repair.
3. Inside special repair zones, complete the following repairs:
   a. Removal of existing deck repair
   b. Half-sole repair
   c. Deck repair with void tube replacement
   d. Full depth repair
4. Outside special repair zones, remove existing deck repair.
5. Complete total surface hydro demolition, removing (E) ____ minimum of sound concrete inside special repair zones and removing (E) ___" minimum of sound concrete and all deteriorated concrete outside special repair zones.
6. Sound deck and if needed complete incidental concrete removal.
7. Outside special repair zones, complete the following repairs:
   a. Half-sole repair
   b. Deck repair with void tube replacement
   c. Full depth repair
8. Place new wearing surface including additional material for areas of monolithic deck repair.

Special Repair Zones:

13.2 Deck repair required in the areas designated as special repair zones shall be completed before hydro demolition in alphabetical sequence beginning with Zone A. Zones with the same letter designation may be repaired at the same time. Hydro demolition shall not move forward until the repairs in all special repair zones are completed and properly cured.

13.4 Any deck repair in areas not designated as a special repair zone shall be completed after hydro demolition.

13.5 Removal and deck repair shall be completed in one special repair zone and concrete shall have attained a compressive strength of 3200 psi before work can be started in the next special repair zone.

13.6 If any single repair area does not exceed 4 square feet in size and the total repair area within a special repair zone does not exceed 12 square feet, the special repair zone may be repaired at the same time as an adjacent zone.

Void Repair:

13.10 Any damage sustained to the void tube as a result of the contractor's operations shall be patched or replaced as required by the engineer at the contractor's expense.

13.11 An exposed void in the deck shall be patched as approved by the engineer in a manner that shall maintain the void area completely free of concrete. Cost of patching an exposed void will be considered completely covered by the contract unit price for Half-Sole Repair.

13.12 When a deteriorated portion of the void tube is beyond the point of patching as determined by the engineer, the portion of the deteriorated void tube shall be replaced. The void area shall be maintained completely free of concrete. Cutting of the longitudinal reinforcing steel will not be permitted. The fiber tubes for producing the voids shall have an outside diameter with the wall thickness the same as the existing tubes and anchored at not more than the original spacing. Cost of replacing the void tube will be considered completely covered by the contract unit price for Deck Repair with Void Tube Replacement. Measurement will be horizontal projection of the area of exposed tube in plan.

Remove if repair is not required.

Replace with Note 13.3 for structures with single column bents.

Remove if repair is not required.

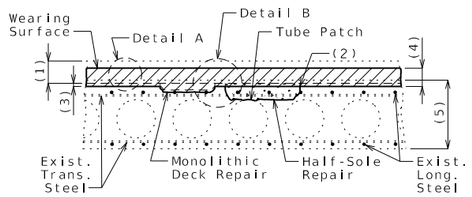

MONOLITHIC AND HALF-SOLE REPAIR

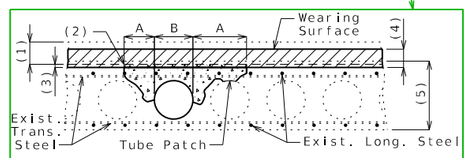

DECK REPAIR WITH VOID TUBE REPLACEMENT

A = Half-Sole Repair
B = Deck Repair with Void Tube Replacement

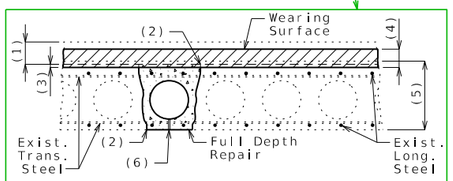

FULL DEPTH REPAIR

DECK REPAIR INSIDE SPECIAL REPAIR ZONES (BEFORE HYDRO DEMOLITION)

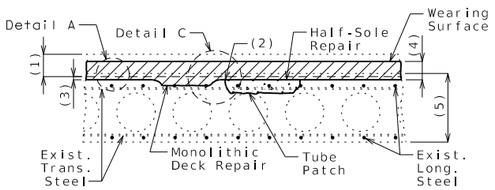

MONOLITHIC AND HALF-SOLE REPAIR

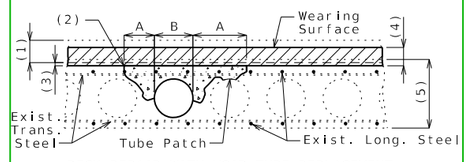

DECK REPAIR WITH VOID TUBE REPLACEMENT

A = Half-Sole Repair
B = Deck Repair with Void Tube Replacement

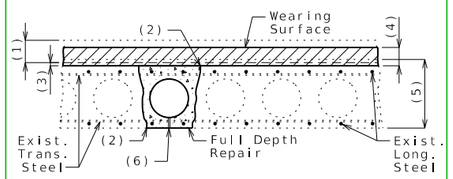

FULL DEPTH REPAIR

DECK REPAIR OUTSIDE SPECIAL REPAIR ZONES (AFTER HYDRO DEMOLITION)

Remove if repair is not required.

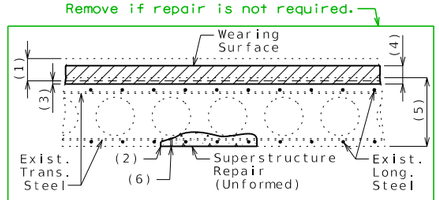

SUPERSTRUCTURE REPAIR (UNFORMED)

(1) Removal of existing (C) ___"± _____ wearing surface plus ___" (D) of existing deck

(2) 1" vertical side shall be established outside the deteriorated area.

(3) Total surface hydro demolition of sound concrete, measured to mortar line:

___" minimum inside special repair zones

(E) ___" minimum outside special repair zones

(4) (B) _____ concrete wearing surface:

___" minimum inside special repair zones

___" minimum outside special repair zones

(5) Original depth minus previous scarification

(6) Restore existing weep hole, if encountered.

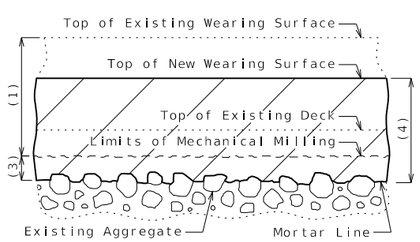

MILLING AND HYDRO DEMOLITION LIMITS

DETAIL A

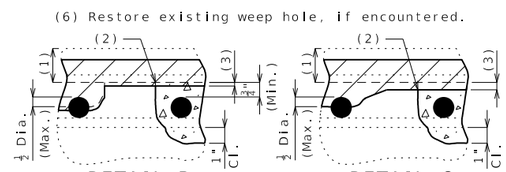

DETAIL B DETAIL C

Monolithic deck repair shall be used when only half the diameter or less of the top bar is exposed.

Clearance around top bar and around bottom bar at the intersection of top bar shall be required when more than half the diameter of the top bar is exposed.

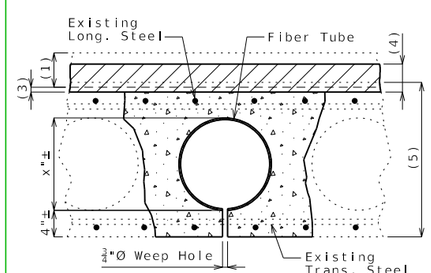

FIBER VOID TUBE REPLACEMENT

Fiber tubes for producing voids shall have an approximate outside diameter of _ inches and a wall thickness of 1/4 inch and shall be anchored to joists carrying the floor form at not more than 4-foot centers.

One 3/4"Ø weep hole shall be provided at 2 inches from each end of each new void.

Remove if repair is not required.

DECK REPAIR DETAILS

Detailed
Checked

Note: This drawing is not to scale. Follow dimensions.

Sheet No. of

DATE PREPARED	3/7/2024
ROUTE	STATE MO
DISTRICT	SHEET NO. 22
COUNTY	
JOB NO.	
CONTRACT ID.	
PROJECT NO.	
BRIDGE NO.	

DESCRIPTION

DATE

MISSOURI HIGHWAYS AND TRANSPORTATION COMMISSION

105 WEST CAPITOL
JEFFERSON CITY, MO 65102
1-888-ASK-MODOT (1-888-275-6636)

SEC/SUR * TWP * RGE *

U.I.P. AND REHABILITATE EXISTING (X'-X'-X') CONTINUOUS CONCRETE VOIDED SLAB SPANS (SKEW: X)

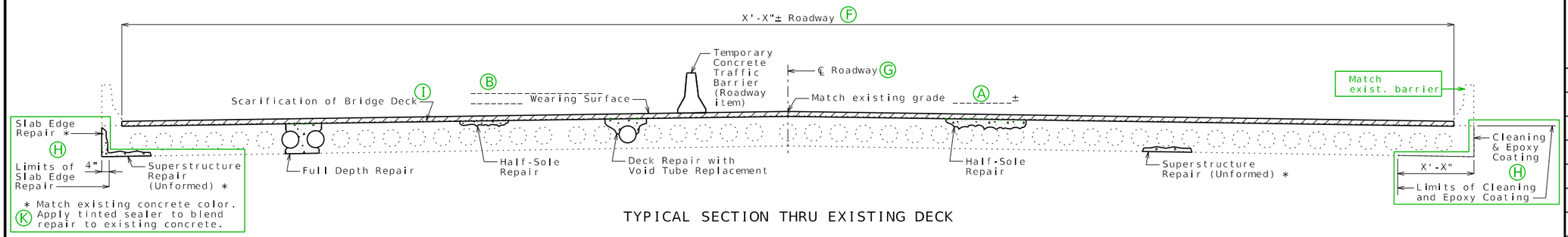

TYPICAL SECTION THRU EXISTING DECK

Conventional Deck Repair Only (Case A)

(Adding First Wearing Surface or Applying Concrete Crack Filler)

STANDARD DRAWING GUIDANCE (do not show on plans):

May be used for all wearing surfaces and when applying concrete crack filler:

Scarification not required when applying concrete crack filler or with the following wearing surfaces:
- Seal Coat
- Asphalt
- UBAWS
- Epoxy Polymer
- MMA Polymer Slurry

(B) 2 1/4" to 3" Low Slump Concrete
- 1 3/4" to 3" Latex Modified Concrete
- 2 1/4" to 3" Silica Fume Concrete
- 1 3/4" to 3" Latex Modified Very Early Strength Concrete
- 1 3/4" to 3" CSA Cement Very Early Strength Concrete
- 3" to 4" Steel Fiber Reinforced Concrete
- 1/4" Epoxy Polymer
- 3/4" to 3" Polyester Polymer Concrete
- 3/8" MMA Polymer Slurry
- 4" to 5" Reinforced Concrete Slab
- 3/8" Chip Seal Grade A1
- 1" to 3" Optional Asphaltic Concrete
- 1/2" to 3/4" Optional Ultrathin Bonded Asphalt

Estimated Quantities

	Item			Total
	Scarification of Bridge Deck	216-10.00	sq. yard	X
Replace as required →	Latex Modified Concrete Wearing Surface	505-20.00	sq. yard	X
	Substructure Repair (Formed)	704-01.01	sq. foot	X
	Substructure Repair (Unformed)	704-01.02	sq. foot	X
	Superstructure Repair (Unformed)	704-01.03	sq. foot	X
	Half-Sole Repair	704-01.04	sq. foot	X
	Full Depth Repair	704-01.06	sq. foot	X
	Slab Edge Repair (Bridges)	704-01.07	linear foot	X
	Deck Repair with Void Tube Replacement	704-01.12	sq. foot	X
	Cleaning and Epoxy Coating	704-01.13	sq. foot	X

General Notes:

A1.1 **Design Specifications:**

2002 AASHTO LFD (17th Ed.) Standard Specifications
Bridge Deck Rating =

A1.2 **Design Loading:**

HS20-44 Modified (Year) and Military 24,000 lb Tandem Axle (Year)

A1.3 **Design Unit Stresses:**

Class B-1 Concrete (Half-Sole and Full Depth Repair and Deck Repair with Void Tube Replacement) f'c = 4,000 psi

Miscellaneous:

I1.0.1 Roadway surfacing adjacent to bridge ends shall match new bridge wearing surface (roadway item).

I1.0.2 All concrete repairs shall be in accordance with Sec 704, unless otherwise noted.

I1.0.3 If required → I1.1 Outline of existing work is indicated by light dashed lines. Heavy lines indicate new work.

(L) I1.2 Contractor shall verify all dimensions in field before finalizing the shop drawings.

I1.10 In order to maintain grade and a minimum thickness of wearing surface as shown on plans it may be necessary to use additional quantities of wearing surface at various locations throughout the structure. The cost of furnishing and installing the wearing surface will be considered completely covered in the contract unit price, including all additional labor, materials or equipment for variations in thickness of wearing surface.

Traffic Handling:

A3.8 Structure to be closed during construction. Traffic to be maintained on ___ during construction. See roadway plans for traffic control and Sheet No. ___ for staged construction details.

REPAIRS TO BRIDGE: ROUTE *
OVER *

ROUTE * FROM * TO *
ABOUT * MILES * OF *
BEGINNING STATION _____± (Match Existing)

DATE PREPARED 3/7/2024
ROUTE | STATE MO
DISTRICT | SHEET NO. 23
COUNTY
JOB NO.
CONTRACT ID.
PROJECT NO.
BRIDGE NO.

DESCRIPTION | DATE

MISSOURI HIGHWAYS AND TRANSPORTATION COMMISSION
105 WEST CAPITOL
JEFFERSON CITY, MO 65102
1-888-ASK-MODOT (1-888-275-6636)

Detailed
Checked

Note: This drawing is not to scale. Follow dimensions.

Three spans shown, details for two spans and five spans are on the standard drawing guidance sheet. Detail for four spans is on RHB04L.

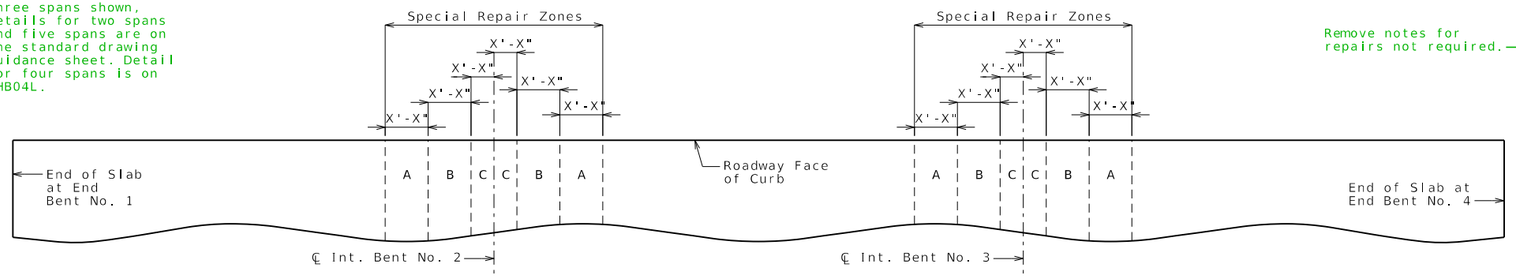

PART PLAN OF SLAB SHOWING SPECIAL REPAIR ZONES

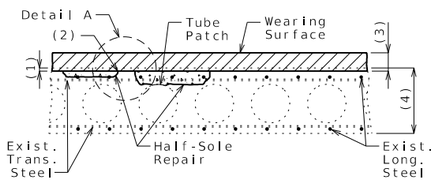

HALF-SOLE REPAIR

Remove if repair is not required.

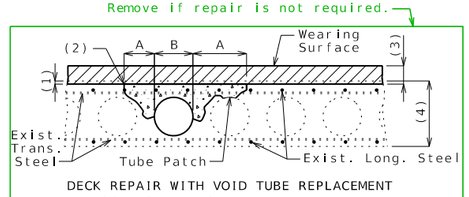

DECK REPAIR WITH VOID TUBE REPLACEMENT

A = Half-Sole Repair
B = Deck Repair with Void Tube Replacement

DECK REPAIR

Remove if repair is not required.

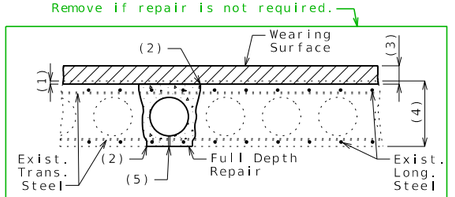

FULL DEPTH REPAIR

Remove if repair is not required.

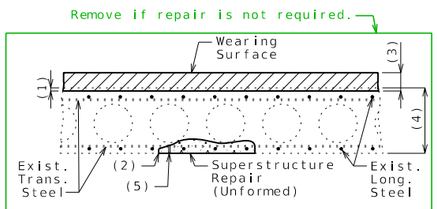

SUPERSTRUCTURE REPAIR (UNFORMED)

(1) (D)" scarification of existing deck (I)

(2) 1" vertical side shall be established outside the deteriorated area.

(3) (B)" minimum _____ wearing surface

(4) Original depth

(5) Restore existing weep hole, if encountered.

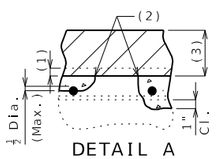

DETAIL A

Clearance around top bar and around bottom bar at the intersection of top bar shall be required when more than half the diameter of the top bar is exposed.

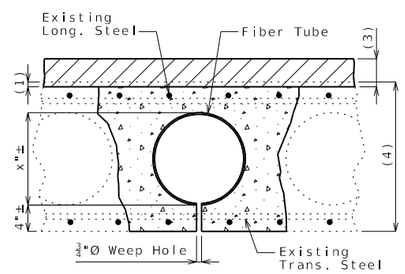

FIBER VOID TUBE REPLACEMENT

Fiber tubes for producing voids shall have an approximate outside diameter of _ inches and a wall thickness of 1/4 inch and shall be anchored to joists carrying the floor form at not more than 4-foot centers.

One 3/4"Ø weep hole shall be provided at 2 inches from each end of each new void.

Deck Repair Notes:

Remove notes for repairs not required.

Order of Repair:

1. Scarify existing deck (D)". (I)
2. Sound deck to identify areas in need of repair.
3. Outside special repair zones, complete the following repairs:
   a. Half-sole repair
   b. Deck repair with void tube replacement
   c. Full depth repair
4. Inside special repair zones, complete the following repairs:
   a. Half-sole repair
   b. Deck repair with void tube replacement
   c. Full depth repair
5. Place new wearing surface.

Special Repair Zones:

I3.1 Any deck repair in areas not designated as a special repair zone shall be completed prior to work in Zone A.

I3.2 Deck repair required in the areas designated as special repair zones shall be completed in alphabetical sequence beginning with Zone A. Zones with the same letter designation may be repaired at the same time.

Replace with Note I3.3 for structures with single column bents.

I3.5 Removal and deck repair shall be completed in one special repair zone and concrete shall have attained a compressive strength of 3200 psi before work can be started in the next special repair zone.

I3.6 If any single repair area does not exceed 4 square feet in size and the total repair area within a special repair zone does not exceed 12 square feet, the special repair zone may be repaired at the same time as an adjacent zone.

Void Repair:

I3.10 Any damage sustained to the void tube as a result of the contractor's operations shall be patched or replaced as required by the engineer at the contractor's expense.

I3.11 An exposed void in the deck shall be patched as approved by the engineer in a manner that shall maintain the void area completely free of concrete. Cost of patching an exposed void will be considered completely covered by the contract unit price for Half-Sole Repair.

I3.12 When a deteriorated portion of the void tube is beyond the point of patching as determined by the engineer, the portion of the deteriorated void tube shall be replaced. The void area shall be maintained completely free of concrete. Cutting of the longitudinal reinforcing steel will not be permitted. The fiber tubes for producing the voids shall have an outside diameter with the wall thickness the same as the existing tubes and anchored at not more than the original spacing. Cost of replacing the void tube will be considered completely covered by the contract unit price for Deck Repair with Void Tube Replacement. Measurement will be horizontal projection of the area of exposed tube in plan.

Remove if repair is not required.

SDG:

For seal coat, asphalt, UBAWS, epoxy polymer, or MMA polymer slurry wearing surfaces:

- Delete Dimension/Note (1) and renumber others
- Delete top existing line
- Adjust top of the original depth dimension to bottom of new wearing surface
- Adjust wearing surface thickness for thin wearing surfaces

For application of concrete crack filler:

- Delete Dimension/Note (1) and (3) and renumber others
- Delete top existing line & the wearing surface
- Adjust top of the original depth dimension to the remaining top line.
- Replace "Wearing Surface" with "Concrete Crack Filler" and adjust leader note to point to the remaining top line

DATE PREPARED	
3/7/2024	
ROUTE	STATE MO
DISTRICT	SHEET NO. 24
COUNTY	
JOB NO.	
CONTRACT ID.	
PROJECT NO.	
BRIDGE NO.	

DESCRIPTION

DATE

MISSOURI HIGHWAYS AND TRANSPORTATION COMMISSION
105 WEST CAPITOL
JEFFERSON CITY, MO 65102
1-888-ASK-MODOT (1-888-275-6636)

DECK REPAIR DETAILS

Detailed
Checked

Note: This drawing is not to scale. Follow dimensions.

Sheet No. of

SEC/SUR * TWP * RGE *

U.I.P. AND REHABILITATE EXISTING (X'-X'-X') CONTINUOUS CONCRETE VOIDED SLAB SPANS (SKEW: X)

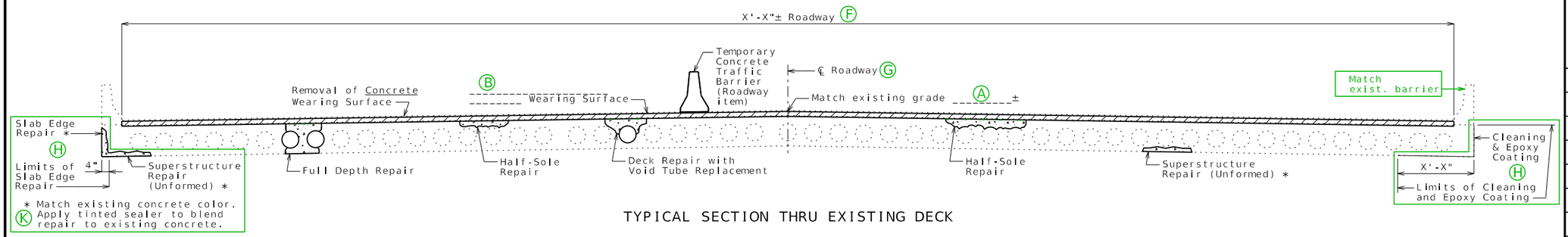

TYPICAL SECTION THRU EXISTING DECK

Conventional Deck Repair Only (Case B)

(Replacing Existing Wearing Surface)

STANDARD DRAWING GUIDANCE (do not show on plans):

May be used for all wearing surfaces:

Scarification not required with the following wearing surfaces:
- Seal Coat
- Asphalt
- UBAWS
- Epoxy Polymer
- MMA Polymer Slurry

(B) 2 1/4" to 3" Low Slump Concrete
- 1 3/4" to 3" Latex Modified Concrete
- 2 1/4" to 3" Silica Fume Concrete
- 1 3/4" to 3" Latex Modified Very Early Strength Concrete
- 1 3/4" to 3" CSA Cement Very Early Strength Concrete
- 3" to 4" Steel Fiber Reinforced Concrete
- 1/4" Epoxy Polymer
- 3/4" to 3" Polyester Polymer Concrete
- 3/8" MMA Polymer Slurry
- 4" to 5" Reinforced Concrete Slab
- 3/8" Chip Seal Grade A1
- 1" to 3" Optional Asphaltic Concrete
- 1/2" to 3/4" Optional Ultrathin Bonded Asphalt

Estimated Quantities

Item			Total
Removal of Concrete Wearing Surface	216-15.02	sq. foot	X
Latex Modified Concrete Wearing Surface	505-20.00	sq. yard	X
Substructure Repair (Formed)	704-01.01	sq. foot	X
Substructure Repair (Unformed)	704-01.02	sq. foot	X
Superstructure Repair (Unformed)	704-01.03	sq. foot	X
Half-Sole Repair	704-01.04	sq. foot	X
Full Depth Repair	704-01.06	sq. foot	X
Slab Edge Repair (Bridges)	704-01.07	linear foot	X
Deck Repair with Void Tube Replacement	704-01.12	sq. foot	X
Cleaning and Epoxy Coating	704-01.13	sq. foot	X

Replace as required

General Notes:

A1.1 **Design Specifications:**

2002 AASHTO LFD (17th Ed.) Standard Specifications
Bridge Deck Rating =

A1.2 **Design Loading:**

HS20-44 Modified ( ) and Military 24,000 lb Tandem Axle ( )
Year Year

A1.3 **Design Unit Stresses:**

Class B-1 Concrete (Half-Sole and Full Depth Repair and Deck Repair with Void Tube Replacement) f'c = 4,000 psi

Miscellaneous:

I1.0.1 Roadway surfacing adjacent to bridge ends shall match new bridge wearing surface (roadway item).

I1.0.2 All concrete repairs shall be in accordance with Sec 704, unless otherwise noted.

I1.0.3 If required

I1.1 Outline of existing work is indicated by light dashed lines. Heavy lines indicate new work.

(L) I1.2 Contractor shall verify all dimensions in field before finalizing the shop drawings.

I1.10 In order to maintain grade and a minimum thickness of wearing surface as shown on plans it may be necessary to use additional quantities of wearing surface at various locations throughout the structure. The cost of furnishing and installing the wearing surface will be considered completely covered in the contract unit price, including all additional labor, materials or equipment for variations in thickness of wearing surface.

Traffic Handling:

A3.8 Structure to be closed during construction. Traffic to be maintained on ___ during construction. See roadway plans for traffic control and Sheet No. for staged construction details.

REPAIRS TO BRIDGE: ROUTE *
OVER *

ROUTE * FROM * TO *
ABOUT * MILES * OF *
BEGINNING STATION _____± (Match Existing)

DATE PREPARED 3/7/2024
ROUTE STATE MO
DISTRICT SHEET NO. 25
COUNTY
JOB NO.
CONTRACT ID.
PROJECT NO.
BRIDGE NO.

DESCRIPTION
DATE

MISSOURI HIGHWAYS AND TRANSPORTATION COMMISSION
105 WEST CAPITOL
JEFFERSON CITY, MO 65102
1-888-ASK-MODOT (1-888-275-6636)

Detailed
Checked

Note: This drawing is not to scale. Follow dimensions.

Four spans shown, details for two spans and five spans are on the standard drawing guidance sheet. Detail for three spans is on RHB04j.

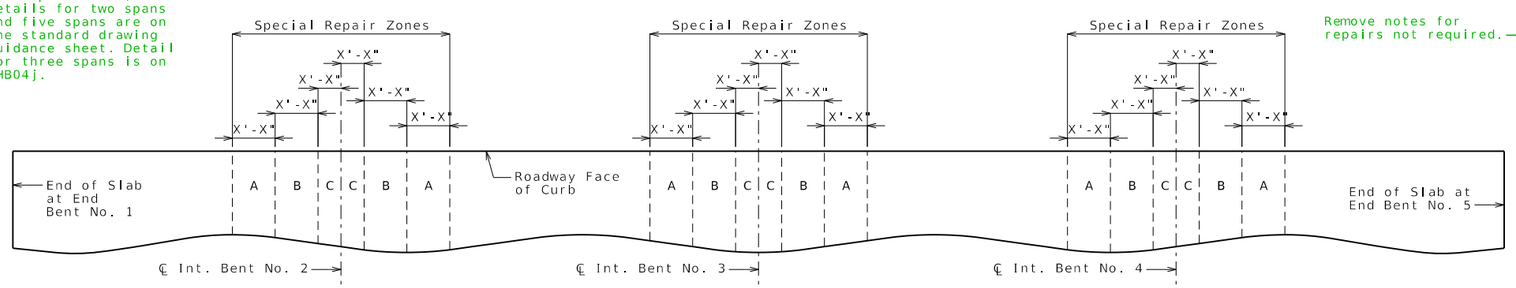

PART PLAN OF SLAB SHOWING SPECIAL REPAIR ZONES

Deck Repair Notes:

Remove notes for repairs not required.

Order of Repair:

1. Remove existing wearing surface plus Ⓓ" of existing deck. Ⓘ
2. Sound deck to identify areas in need of repair.
3. Outside special repair zones, complete the following repairs:
   a. Half-sole repair
   b. Deck repair with void tube replacement
   c. Full depth repair
4. Inside special repair zones, complete the following repairs:
   a. Half-sole repair
   b. Deck repair with void tube replacement
   c. Full depth repair
5. Place new wearing surface.

Special Repair Zones:

I3.1 Any deck repair in areas not designated as a special repair zone shall be completed prior to work in Zone A.

Replace with Note I3.3 for structures with single column bents.

I3.2 Deck repair required in the areas designated as special repair zones shall be completed in alphabetical sequence beginning with Zone A. Zones with the same letter designation may be repaired at the same time.

I3.5 Removal and deck repair shall be completed in one special repair zone and concrete shall have attained a compressive strength of 3200 psi before work can be started in the next special repair zone.

I3.6 If any single repair area does not exceed 4 square feet in size and the total repair area within a special repair zone does not exceed 12 square feet, the special repair zone may be repaired at the same time as an adjacent zone.

Void Repair:

I3.10 Any damage sustained to the void tube as a result of the contractor's operations shall be patched or replaced as required by the engineer at the contractor's expense.

I3.11 An exposed void in the deck shall be patched as approved by the engineer in a manner that shall maintain the void area completely free of concrete. Cost of patching an exposed void will be considered completely covered by the contract unit price for Half-Sole Repair.

I3.12 When a deteriorated portion of the void tube is beyond the point of patching as determined by the engineer, the portion of the deteriorated void tube shall be replaced. The void area shall be maintained completely free of concrete. Cutting of the longitudinal reinforcing steel will not be permitted. The fiber tubes for producing the voids shall have an outside diameter with the wall thickness the same as the existing tubes and anchored at not more than the original spacing. Cost of replacing the void tube will be considered completely covered by the contract unit price for Deck Repair with Void Tube Replacement. Measurement will be horizontal projection of the area of exposed tube in plan.

Remove if repair is not required.

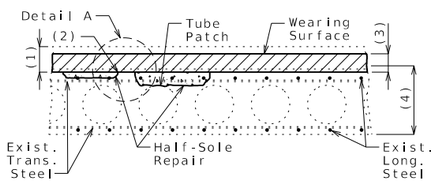

HALF-SOLE REPAIR

Remove if repair is not required.

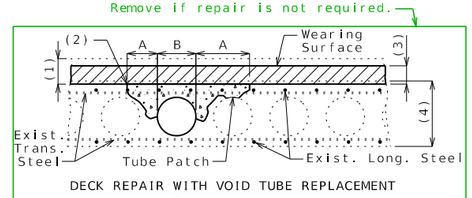

DECK REPAIR WITH VOID TUBE REPLACEMENT

A = Half-Sole Repair
B = Deck Repair with Void Tube Replacement

Remove if repair is not required.

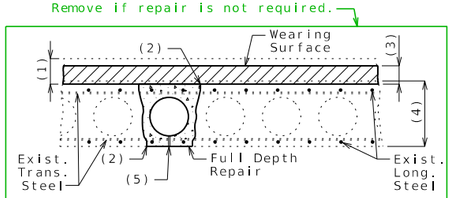

FULL DEPTH REPAIR

DECK REPAIR

(1) Removal of existing Ⓒ"± _____ wearing surface plus ___" of existing deck Ⓘ

(2) 1" vertical side shall be established outside the deteriorated area.

(3) Ⓑ_" minimum _____ wearing surface

(4) Original depth minus previous scarification

(5) Restore existing weep hole, if encountered.

Remove if repair is not required.

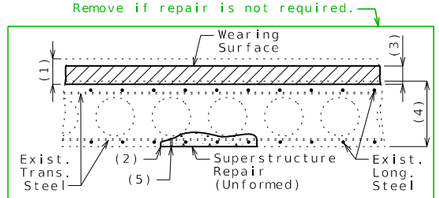

SUPERSTRUCTURE REPAIR (UNFORMED)

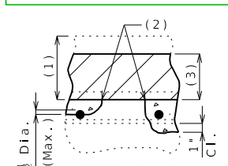

DETAIL A

Clearance around top bar and around bottom bar at the intersection of top bar shall be required when more than half the diameter of the top bar is exposed.

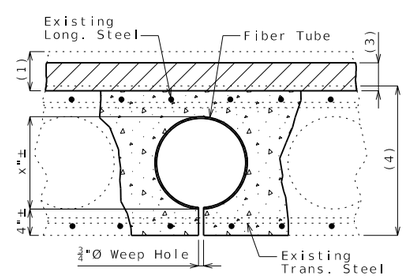

FIBER VOID TUBE REPLACEMENT

Fiber tubes for producing voids shall have an approximate outside diameter of inches and a wall thickness of 1/4 inch and shall be anchored to joists carrying the floor form at not more than 4-foot centers.

One 3/4"Ø weep hole shall be provided at 2 inches from each end of each new void.

SDG:

For seal coat, asphalt, UBAWS, epoxy polymer or MMA polymer slurry wearing surfaces:

- Delete existing line inside wearing surface
- Adjust top of the original depth dimension to bottom of new wearing surface
- Adjust depth for thin wearing surfaces

DECK REPAIR DETAILS

Detailed
Checked

Note: This drawing is not to scale. Follow dimensions.

Sheet No. of

DATE PREPARED	
3/7/2024	
ROUTE	STATE MO
DISTRICT	SHEET NO. 26
COUNTY	
JOB NO.	
CONTRACT ID.	
PROJECT NO.	
BRIDGE NO.	

DESCRIPTION

DATE

MISSOURI HIGHWAYS AND TRANSPORTATION COMMISSION
105 WEST CAPITOL
JEFFERSON CITY, MO 65102
1-888-ASK-MODOT (1-888-275-6636)

SEC/SUR * TWP * RGE *

U.I.P., STRENGTHEN AND REHABILITATE EXISTING (X', X', X') WIDE FLANGE BEAM SPANS (SKEW: X)

STANDARD DETAILING GUIDANCE
(do not show on plans):
Use for adding welded cover plates and applying a jacking load to increase capacity.

A "no jack" option may be used by designer in lieu of "jacking" option. Welding in both cases should not be performed under live load, especially direct live load.

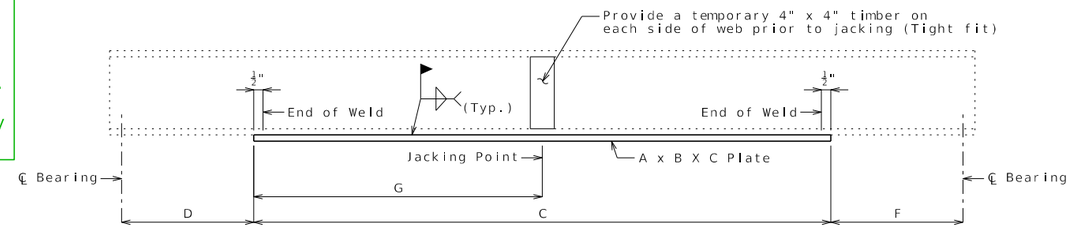

TYPICAL ELEVATION OF BEAM

Span (-) and (-)

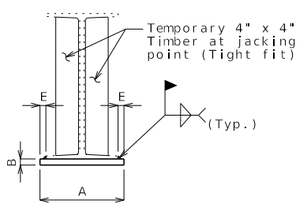

SECTION THRU BEAM

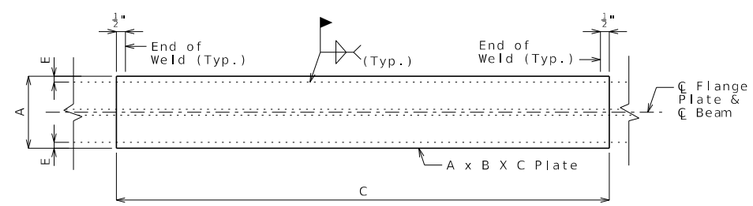

DETAIL OF FLANGE PLATE

Estimated Quantities

Item		Total
Strengthening Existing Beams	Lump Sum	1

General Notes:

Design Specifications:

2002 AASHTO LFD (17th Ed.) Standard Specifications

Design Loading:

1993 Missouri Posting Loads (H20 & 3S2)
No Future Wearing Surface

Design Unit Stresses:

Structural Carbon Steel Fy= 36,000 psi (New Steel)
Existing Steel Fy = psi
Working Stress Design = 68% of Fy (Existing)

Paint:

Calcium Sulfonate (2 coats)

Beam Support:

All existing beams in the span being strengthened shall be raised simultaneously Dimension H at jacking point and supported during welding of new steel plates.

The temporary supports must be capable of safely supporting a service load of approximately Load J tons per beam (factor of safety not included). See special provisions.

Traffic Handling:

One lane of traffic shall be maintained on structure during construction. See roadway plans for traffic control.

Miscellaneous:

Outline of existing work is indicated by light dashed lines.
Heavy lines indicate new work.

Longitudinal dimensions are based on the original design plans.

Contractor shall verify all dimensions in field before finalizing the shop drawings.

Table of Variables

Beam Location		Dimensions								Load
		A	B	C	D	E	F	G	H	J

REPAIRS TO BRIDGE: ROUTE *
OVER *

ROUTE * FROM * TO *
ABOUT * MILES * OF *
STA. _____± (Match Existing)

DATE PREPARED	3/7/2024
ROUTE	STATE MO
DISTRICT	SHEET NO. 27
COUNTY	
JOB NO.	
CONTRACT ID.	
PROJECT NO.	
BRIDGE NO.	

DESCRIPTION

DATE

MISSOURI HIGHWAYS AND TRANSPORTATION COMMISSION

105 WEST CAPITOL
JEFFERSON CITY, MO 65102
1-888-ASK-MODOT (1-888-275-6636)

Detailed
Checked

Note: This drawing is not to scale. Follow dimensions.

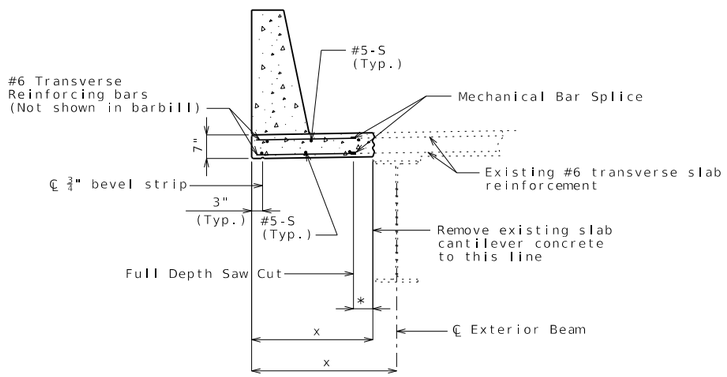

TYPICAL PART SECTION SHOWING OPTIONAL
SLAB CANTILEVER REPLACEMENT

OPTIONAL SLAB CANTILEVER REPLACEMENT

MoDOT Construction personnel will indicate the method used:

☐ Optional replacement method was used.
☐ Optional replacement method was not used.

Notes:

* Minimum distance required for mechanical bar splice. All existing transverse slab reinforcement in this area shall be cleanly stripped.

With the optional slab cantilever replacement, the contractor shall use a mechanical bar splice for the existing exposed transverse slab reinforcement. The length of the new #6 reinforcing bars used with the mechanical bar splice shall be determined by the contractor based on the style of mechanical bar splice used and other considerations. Mechanical bars splices shall be in accordance with Sec 706 except that there will be no seperate pay item for mechanical bar splices. The mechanical bar splices and accompanying new #6 reinforcing bars will be considered completely covered by contract unit price for other items included in the contract.

For spacing of longitudinal reinforcing steel, see Sheet No. .

For details of barrier, see Sheets No. & .

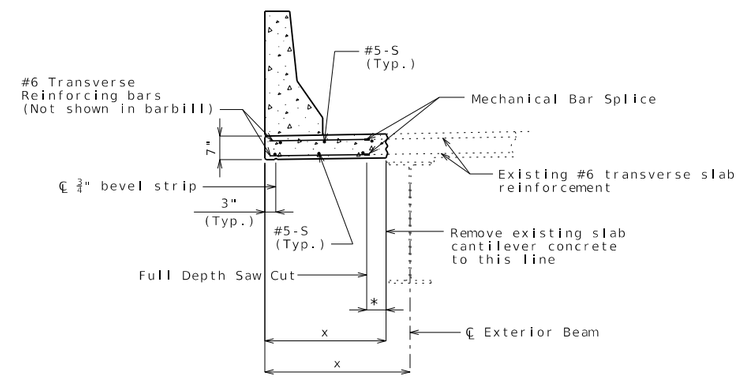

TYPICAL PART SECTION SHOWING OPTIONAL
SLAB CANTILEVER REPLACEMENT

ALTERNATE DETAIL SHOWING
SAFETY BARRIER CURB

(Use only to match existing if only some portions of barrier are being replaced.)

DETAILS OF OPTIONAL SLAB CANTILEVER REPLACEMENT

Detailed
Checked

Note: This drawing is not to scale. Follow dimensions.

Sheet No. of

DATE PREPARED	10/17/2023
ROUTE	STATE MO
DISTRICT	SHEET NO. 28
COUNTY	
JOB NO.	
CONTRACT ID.	
PROJECT NO.	
BRIDGE NO.	

DESCRIPTION

DATE

MISSOURI HIGHWAYS AND TRANSPORTATION COMMISSION

105 WEST CAPITOL
JEFFERSON CITY, MO 65102
1-888-ASK-MODOT (1-888-275-6636)

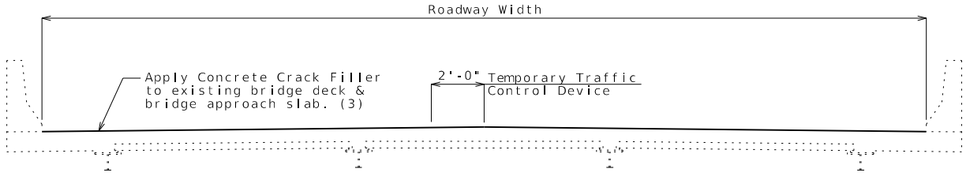

SECTION THRU EXISTING DECK

Bridge deck on steel girders with safety barrier curbs shown.
Actual superstructure type and barrier type may vary.

Notes:

Outline of existing work is indicated by light dashed lines.
Heavy lines indicate new work.

Traffic to be maintained on structure during construction.
See roadway plans for traffic control.

Bridge Number	County	Route Carried	Bridge Over	Bridge Deck Rating	Average Roadway Width ± (feet)	Length of Bridge Deck (feet) (1)	Bridge Skew (degrees)	Estimated Area of Bridge Approach Slab (sq. yard) (2)	Estimated Quantity of Concrete Crack Filler (sq. yard) (3)
Bid Quantities:									
x	x	x	x	x	x	x	x	x	x
								Total	x
Variable Scope Bid Quantities:									

(1) End of slab to end of slab (includes semi-deep abutment slabs)

(2) Conrete Crack Filler shall not be applied to bridge approach slabs if quantity is zero.

(3) Estimated area of bridge approach slabs to be coated with Concrete Crack Filler is included in this quantity. See special provisions.

Standard Drawing Guidance (Do not show on plans):

Add note (4) if applicable for individual structures.
Add "(4)" after the total quantity for applicable bridge (in last column).

(4) Do not apply Concrete Crack Filler to portions of bridge approach slab with an existing asphalt overlay.

DATE PREPARED 3/7/2024
ROUTE Var. STATE MO
DISTRICT BR SHEET NO. 1
COUNTY Various
JOB NO. x
CONTRACT ID.
PROJECT NO.
BRIDGE NO. Various

DESCRIPTION | DATE

MISSOURI HIGHWAYS AND TRANSPORTATION COMMISSION
105 WEST CAPITOL
JEFFERSON CITY, MO 65102
1-888-ASK-MODOT (1-888-275-6636)

Detailed
Checked

Note: This drawing is not to scale. Follow dimensions.

Standard Drawing Guidance (do not show on plans):

Modify standard drawing details as required.

(1) Compute factored Design Force

Use pay item Fiber Reinforced Polymer Wrap, __sq. foot.

Add the following note to Expansion Bent Details.
Protective Coating - Concrete Bents and Piers (Epoxy or Urethane) shall not be applied on the FRP system.

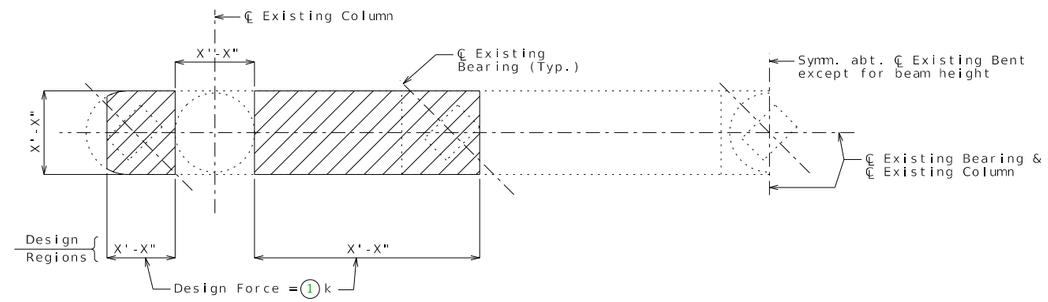

PART PLAN

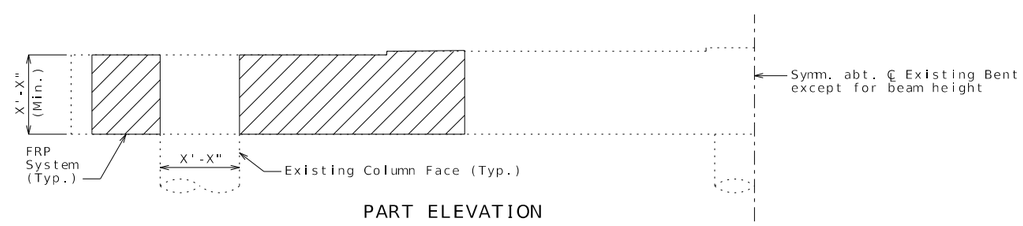

PART ELEVATION

FRP WRAP AT INT. BENT NO.

Notes:

Design Force is the factored shear force at any cross section in each design region that shall be resisted entirely by the FRP reinforcement.

See special provisions.

BENT CAP SHEAR STRENGTHENING USING FRP WRAP

Detailed
Checked

Note: This drawing is not to scale. Follow dimensions.

Sheet No. of

DATE PREPARED	10/17/2023
ROUTE	STATE MO
DISTRICT	SHEET NO. 30
COUNTY	
JOB NO.	
CONTRACT ID.	
PROJECT NO.	
BRIDGE NO.	

DESCRIPTION

DATE

MISSOURI HIGHWAYS AND TRANSPORTATION COMMISSION
105 WEST CAPITOL
JEFFERSON CITY, MO 65102
1-888-ASK-MODOT (1-888-275-6636)

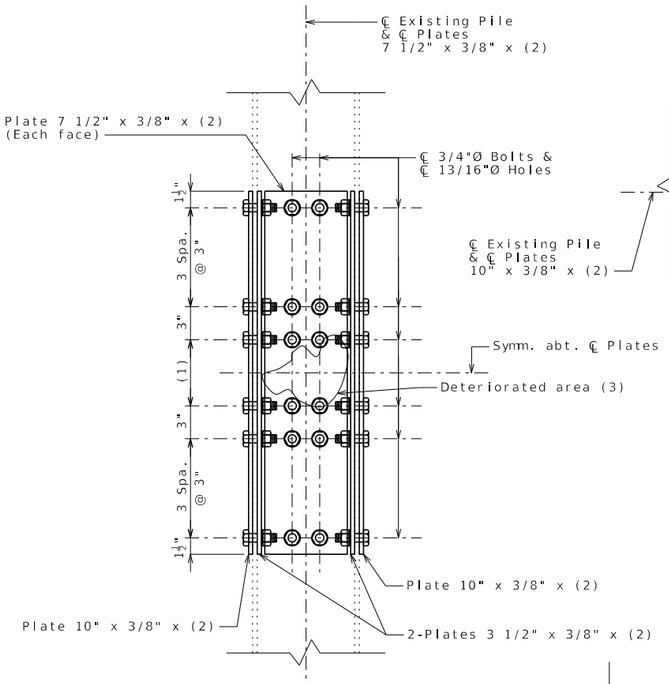

PART ELEVATION SHOWING PILE PLATING

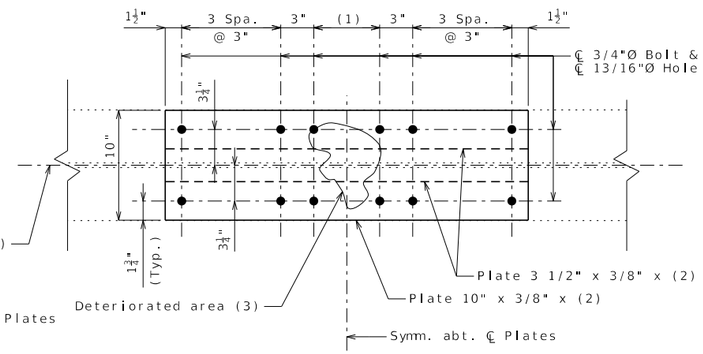

PART PLAN OF FLANGE SHOWING PILE PLATING

(Web plates not shown for clarity.)

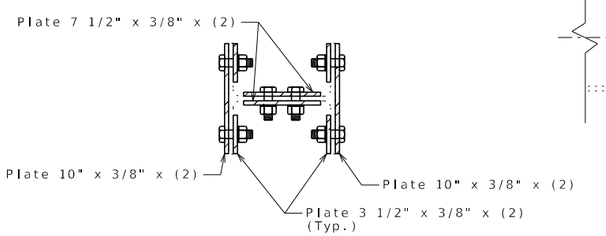

SECTION SHOWING PILE PLATING

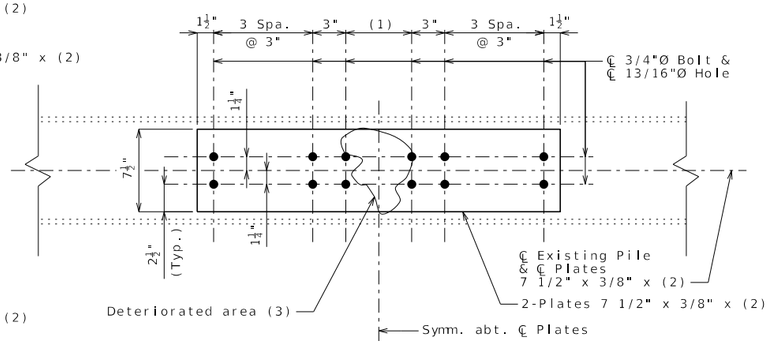

PART PLAN OF WEB SHOWING PILE PLATING

(Flange plates not shown for clarity.)

General Notes:

Design Specifications:
2002 AASHTO LFD (17th Ed.) Standard Specifications

Fabricated structural steel shall be ASTM A709 Grade 36 or 50.

Field connections shall be made with 3/4-inch diameter ASTM F3125 Grade A325 Type 1 bolts and 13/16-inch diameter holes.

Only one pile shall be repaired at a time.

Instructions for Pile Plating:

(1) Number of 3" spaces shall be determined in the field to extend past the extents of the deteriorated area.

(2) Plate length shall be determined in the field.

(3) Extents of deteriorated area will be determined by the engineer.

(4) Use plates as templates for field drilling holes in existing pile. Place bolts snug tight as drilled per each. High-strength tightening shall begin after all bolts are installed per flange or web.

General Notes:

Contact surfaces shall be in accordance with Sec 1081 for surface preparation.

All new or existing structural steel shall be coated with a minimum of two coats of inorganic zinc primer (5 mils minimum).

Cost of furnishing and installing structural steel, all steel coatings and any other incidental material or labor to complete pile repair, complete in place, will be considered completely covered by the contract unit price for Steel Pile Repair. Variations may be encountered in the estimated quantities but the variations can not be used for an adjustment in the contract unit price.

Cost of all excavation will be considered completely covered by the contract lump sum price for Class 2 Excavation.

Cost of dewatering will be considered completely covered by the contract lump sum price for Dewatering. See special provisions.

For details of pile encasement, see Sheet No. .

PILE PLATING ①

All exposed surfaces of the existing structural steel piles and sway bracing shall be recoated with one 6-mil thickness of aluminum gray epoxy-mastic primer applied over an SSPC-SP3 surface preparation in accordance with Sec 1081. The bituminous coating shall be applied one foot above and below the existing ground line and in accordance with Sec 702. These protective coatings will not be required below the normal low water line. The cost of surface preparation will be considered completely covered by the contract lump sum price for Surface Preparation for Applying Epoxy-Mastic Primer. The cost of the aluminum gray epoxy-mastic primer and bituminous coating will be considered completely covered by the contract lump sum price for Aluminum Gray Epoxy-Mastic Primer.③ (Add to either method)

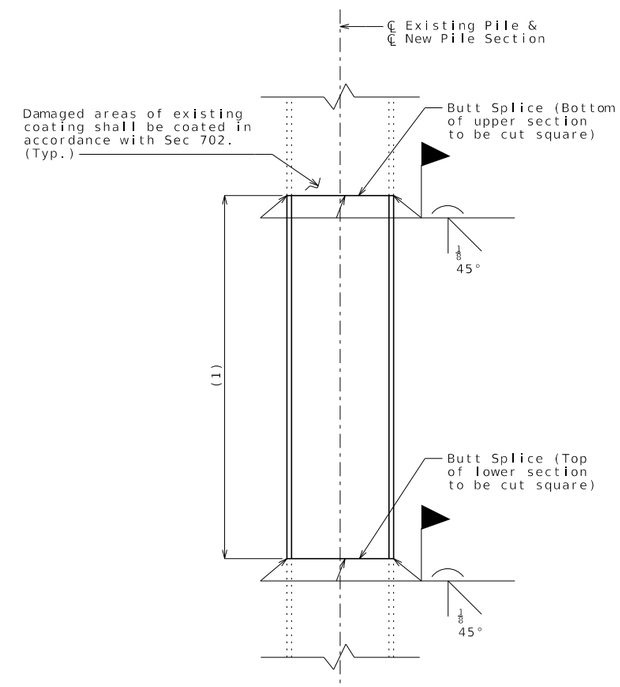

PART ELEVATION SHOWING PARTIAL PILE REPLACEMENT

General Notes:

New steel pile section shall be the same grade as, or greater than, the existing pile (ASTM A709 Grade 36 or 50).

New steel pile section shall be coated in accordance with Sec 702.④

Only one pile shall be repaired at a time. Repair shall be a continous operation from removal through splicing.

(1) Length and location of pile replacement will be determined by the engineer.

Cost of furnishing and installing structural steel pile, all steel coatings and any other incidental material or labor to complete pile repair, complete in place, will be considered completely covered by the contract unit price for Steel Pile Repair. Variations may be encountered in the estimated quantities but the variations can not be used for an adjustment in the contract unit price.

Cost of all excavation will be considered completely covered by the contract lump sum price for Class 2 Excavation.

Cost of dewatering will be considered completely covered by the contract lump sum price for Dewatering. See special provisions.

See Supplemental Details of HP10x42 Pile Encasement With Pile Repair Sheet.

PARTIAL PILE REPLACEMENT ②

DATE PREPARED	10/17/2023
ROUTE	STATE MO
DISTRICT	SHEET NO. 31
COUNTY	
JOB NO.	
CONTRACT ID.	
PROJECT NO.	
BRIDGE NO.	

DESCRIPTION

DATE

MISSOURI HIGHWAYS AND TRANSPORTATION COMMISSION
105 WEST CAPITOL
JEFFERSON CITY, MO 65102
1-888-ASK-MODOT (1-888-275-6636)

PILE REPAIR

Detailed
Checked

Note: This drawing is not to scale. Follow dimensions.

Sheet No. of

RHB09_10x42PileRepair Guidance & Alternate Details

Standard Drawing Guidance (do not show on plans):

Show only pile repair method required. Delete all other details. If used in combination, specify associated pile(s) by method.

① Based on similar percentage of section loss, pile plating may be more attractive than partial pile replacement. Details can be modified if only the web or flanges need to be plated. If only the web is plated, plates on each side of the web are required. If only a flange is to be plated, both flanges and plates on each side of the flanges are required. Overall symmetry of the section shall be maintained.

② Based on additional factors other than just percent of section loss, partial pile replacement may be considered. Minimizing or eliminating traffic loading, adding falsework, or just having support conditions such as integral bents can help to determine the repair method. Pile replacement shall not be used if multiple piles need repair and falsework is not provided.

③ Use this note for coating any remaining piles or pile sections, and sway bracing not being repaired. Use this note on Front Sheet or Notes Sheet when no repair or no encasement is required. Include standard pay items "Surface Preparation for Applying Epoxy-Mastic Primer" and either "Aluminum Epoxy-Mastic Primer" or "Gray Epoxy-Mastic Primer".

"Aluminum" is preferred because it acts as both a barrier and corrosion protection where "Gray" only acts as a barrier. If for any reason coated pile is embedded in fresh concrete or "Gray" is being used elsewhere, "Aluminum" shall not be used.

④ If galvanizing is preferred, add splice detail and replace note with:

New steel pile section shall be galvanized. See special provisions.

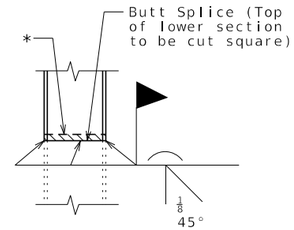

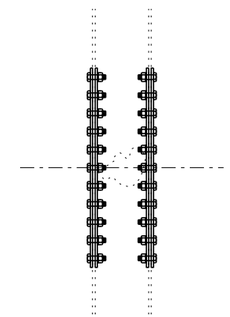

STEEL PILE SPLICE

* Galvanizing material shall be omitted or removed 1 inch clear of weld locations. See Special Provisions.

See EPG 751.40.1.2.1 for guidance on when coating, encasement or jacketing, and plating or partial replacement should be considered.

Show Quantity Table on sheet. (Possible items given)

Quantity Table		
Item		Quantity
Class 2 Excavation	lump sum	x
Dewatering	lump sum	x
Surface Preparation for Applying Epoxy-Mastic Primer	lump sum	x
Aluminum Epoxy-Mastic Primer	lump sum	x
Gray Epoxy-Mastic Primer	lump sum	x
Steel Pile Repair	linear foot	x
Pile Encasement	linear foot	x

These quantities are included in the Estimated Quantities table on Sheet No. .

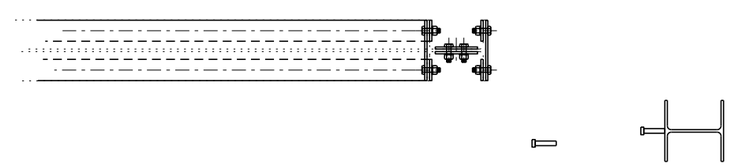

BILL OF REINFORCING STEEL - EACH PILE

NO.	SIZE & MARK	ACTUAL LENGTH	SHAPE	BENDING DIAGRAM
Varies	4 P1	10'-0"	16	
8	5 V1	Varies	20	

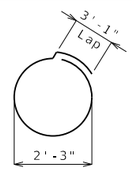

SHAPE 16

SHAPE 20

Notes:

All dimensions are out to out.

Hooks and bends shall be in accordance with the CRSI Manual of Standard Practice for Detailing Reinforced Concrete Structures, Stirrup and Tie Dimensions.

Actual lengths are measured along centerline of bar to the nearest inch.

All bars shall be epoxy coated.

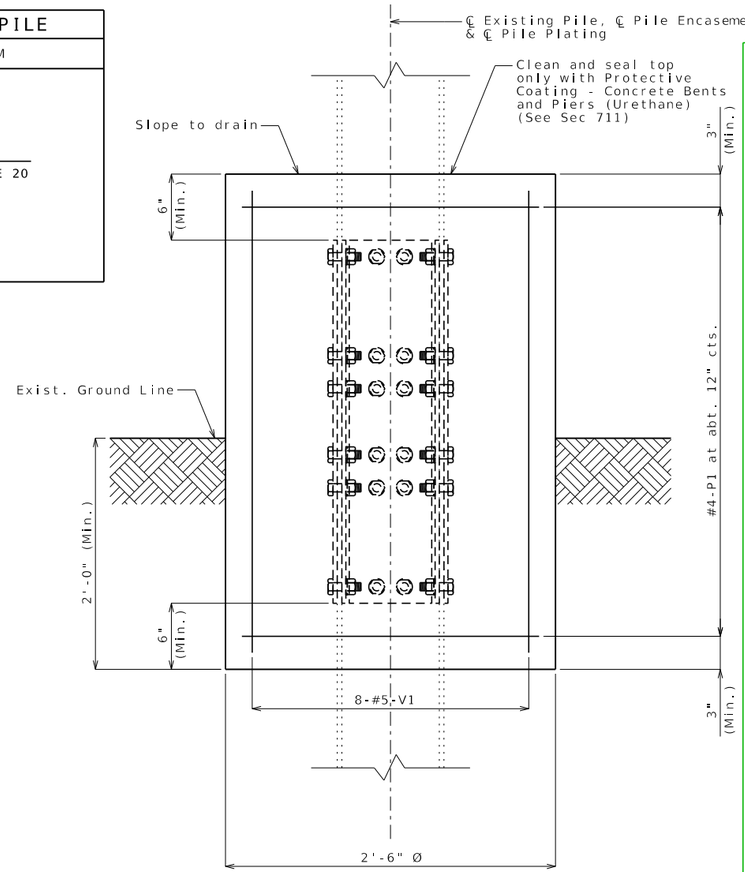

PART ELEVATION SHOWING PILE ENCASEMENT ①

Note: Existing sway bracing not shown for clarity. Shift reinforcing steel in the field to clear existing sway bracing.②

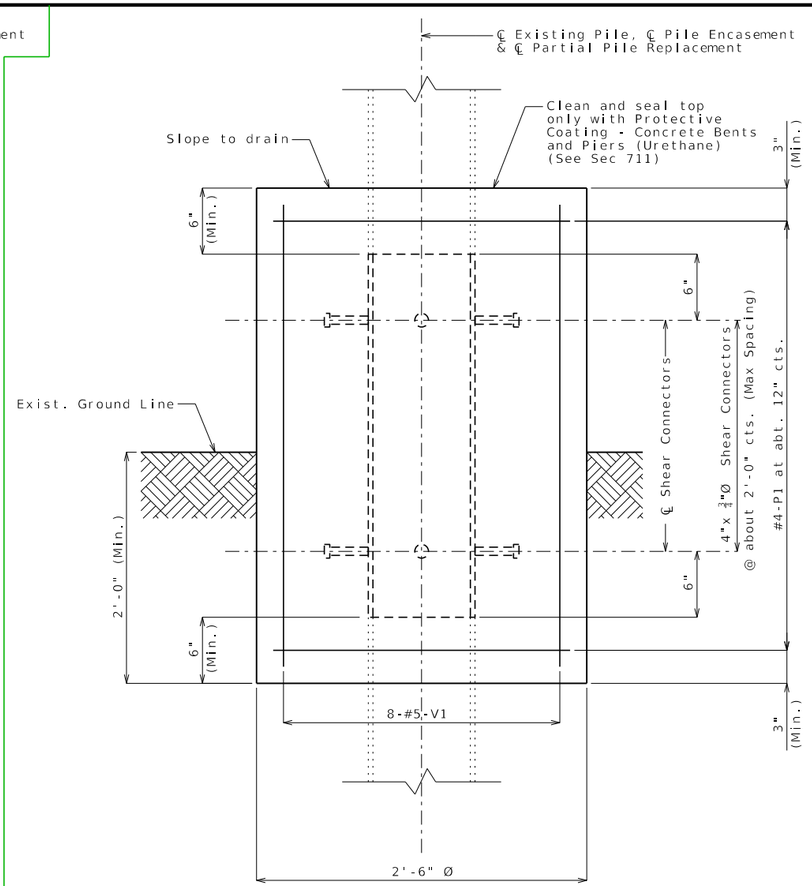

PART ELEVATION SHOWING PILE ENCASEMENT ①

Note: Existing sway bracing not shown for clarity. Shift reinforcing steel in the field to clear existing sway bracing.②

General Notes:

All concrete for pile encasement shall be Class B (f'c = 3000 psi).

The reinforcing steel shall be epoxy coated Grade 60 with fy = 60,000 psi

Minimum clearance to reinforcing steel shall be 1 1/2", unless otherwise shown.

The exposed and accessible surfaces of the existing structural steel that will be encased in concrete shall be cleaned with a minimum of SSPC-SP-3 surface preparation and coated with a minimum of one coat of gray epoxy-mastic primer (non-aluminum) in accordance with Sec 1081 to produce a dry film thickness of not less than 3 mils before concrete is poured. The surface preparation and coating for piles shall extend a minimum of one foot outside the face of the pile encasement.

Cost of all concrete, reinforcement, shear connectors, surface preparation, coatings and any other incidental material or labor to complete pile encasement, complete in place, will be considered completely covered by the contract unit price for Pile Encasement.③

A FRP pile jacketing system may be used in lieu of pile encasement at the contractor's option. No additional payment will be made for this substitution. See special provisions.

Shear connectors shall be in accordance with Sec 712, 1037 and 1080.③

For details of pile plating, see Sheet No. .

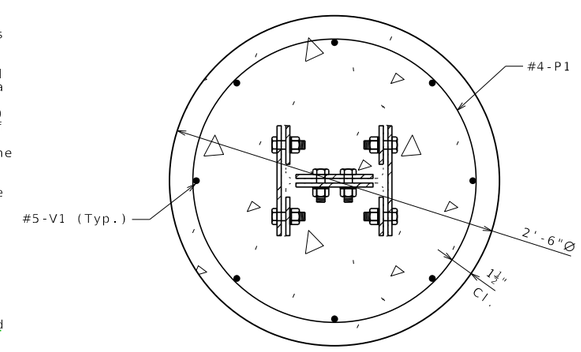

SECTION SHOWING PILE ENCASEMENT WITH PILE PLATING ①

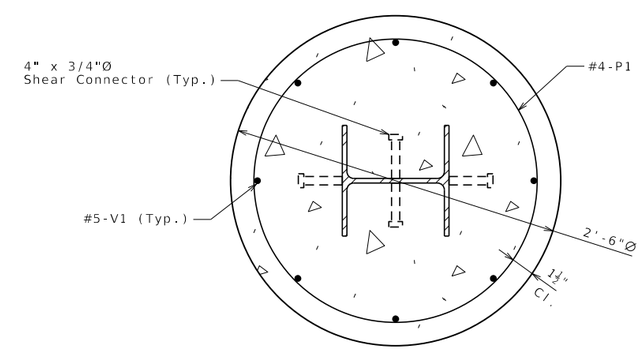

SECTION SHOWING PILE ENCASEMENT WITH PARTIAL PILE REPLACEMENT ①

PILE ENCASEMENT WITH PILE REPAIR

Detailed
Checked

Note: This drawing is not to scale. Follow dimensions.

Sheet No. of

DATE PREPARED	10/17/2023
ROUTE	STATE MO
DISTRICT	SHEET NO. 32
COUNTY	
JOB NO.	
CONTRACT ID.	
PROJECT NO.	
BRIDGE NO.	

DESCRIPTION

DATE

MISSOURI HIGHWAYS AND TRANSPORTATION COMMISSION
105 WEST CAPITOL
JEFFERSON CITY, MO 65102
1-888-ASK-MODOT (1-888-275-6636)

RHB10_10x42PileRepairEncased Guidance & Alternate Details

Standard Drawing Guidance (do not show on plans):

① This sheet is supplemental to Details of Pile Repair Sheet. Use details that match the selected pile repair method. Delete all other details. Use general notes and bill of reinforcing steel for either method.

See EPG 751.40.1.2.1 for guidance on when coating, encasement or jacketing, and plating or partial replacement should be considered.

② Delete note if there is not any existing sway bracing.

Existing sway bracing may need to be removed and replaced or reattached if it is located in the area of pile to be replaced or plated.

③ Shear connectors are only used for partial pile replacement.

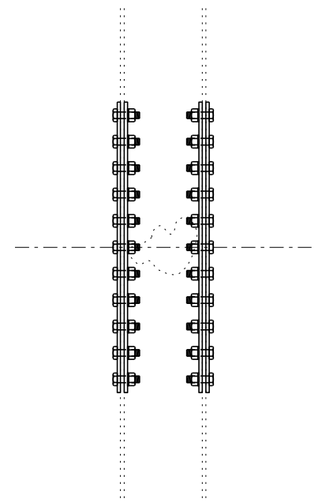

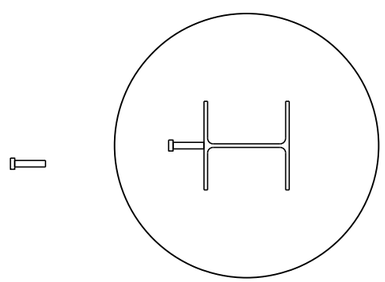

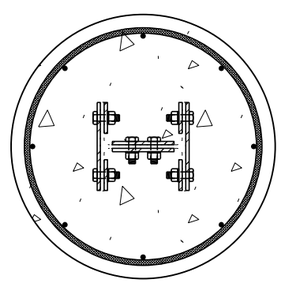

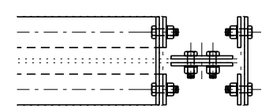

BILL OF REINFORCING STEEL - EACH PILE

NO.	SIZE & MARK	ACTUAL LENGTH	SHAPE	BENDING DIAGRAM
Varies	4 P1	10'-0"	16	
8	5 V1	Varies	20	

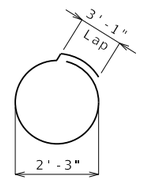

SHAPE 20

SHAPE 16

Notes:

All dimensions are out to out.

Hooks and bends shall be in accordance with the CRSI Manual of Standard Practice for Detailing Reinforced Concrete Structures, Stirrup and Tie Dimensions.

Actual lengths are measured along centerline of bar to the nearest inch.

All bars shall be epoxy coated.

All exposed surfaces of the existing structural steel piles and sway bracing shall be recoated with one 6-mil thickness of aluminum gray epoxy-mastic primer applied over an SSPC-SP3 surface preparation in accordance with Sec 1081. The bituminous coating shall be applied one foot above and below the existing ground line and in accordance with Sec 702. These protective coatings will not be required below the normal low water line. The cost of surface preparation will be considered completely covered by the contract lump sum price for Surface Preparation for Applying Epoxy-Mastic Primer. The cost of the aluminum gray epoxy-mastic primer and bituminous coating will be considered completely covered by the contract lump sum price for Aluminum Gray Epoxy-Mastic Primer. 1

General Notes:

All concrete for pile encasement shall be Class B (f'c = 3000 psi).

The reinforcing steel shall be epoxy coated Grade 60 with fy = 60,000 psi

Minimum clearance to reinforcing steel shall be 1 1/2", unless otherwise shown.

The exposed and accessible surfaces of the existing structural steel that will be encased in concrete shall be cleaned with a minimum of SSPC-SP-3 surface preparation and coated with a minimum of one coat of gray epoxy-mastic primer (non-aluminum) in accordance with Sec 1081 to produce a dry film thickness of not less than 3 mils before concrete is poured. The surface preparation and coating for piles shall extend a minimum of one foot outside the face of the pile encasement.

Cost of all concrete, reinforcement, shear connectors, surface preparation, coatings, excavation, dewatering and any other incidental material or labor to complete pile encasement, complete in place, will be considered completely covered by the contract unit price for Pile Encasement.

Cost of all excavation will be considered completely covered by the contract lump sum price for Class 2 Excavation.

Cost of dewatering will be considered completely covered by the contract lump sum price for Dewatering. See special provisions.

A FRP pile jacketing system may be used in lieu of pile encasement at the contractor's option. No additional payment will be made for this substitution. See special provisions.

Shear connectors shall be in accordance with Sec 712, 1037 and 1080.

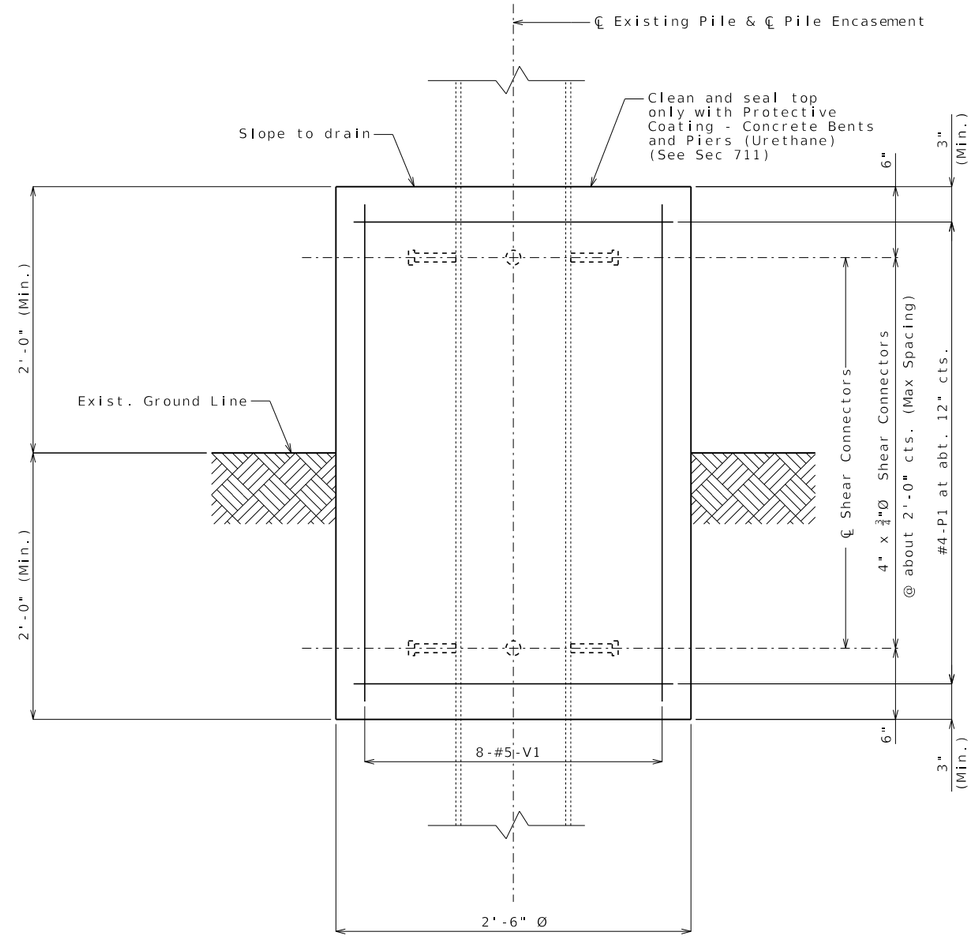

PART ELEVATION SHOWING PILE ENCASEMENT

Note: Existing sway bracing not shown for clarity. Shift reinforcing steel in the field to clear existing sway bracing. 2

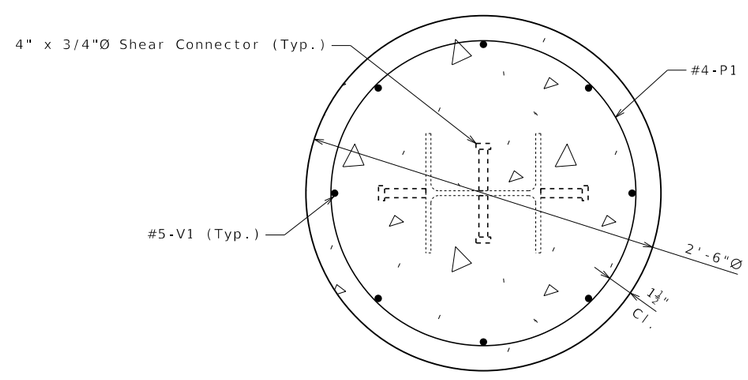

SECTION SHOWING PILE ENCASEMENT

PILE ENCASEMENT

DATE PREPARED	2/18/2025
ROUTE	STATE MO
DISTRICT	SHEET NO. 33
COUNTY	
JOB NO.	
CONTRACT ID.	
PROJECT NO.	
BRIDGE NO.	

DESCRIPTION

DATE

MISSOURI HIGHWAYS AND TRANSPORTATION COMMISSION

105 WEST CAPITOL
JEFFERSON CITY, MO 65102
1-888-ASK-MODOT (1-888-275-6636)

Detailed
Checked

Note: This drawing is not to scale. Follow dimensions.

Sheet No. of

RHB11_10x42PileEncase Guidance & Alternate Details

Standard Drawing Guidance (do not show on plans):

1. Use this note for coating any remaining piles or pile sections, and sway bracing not being repaired. Use this note on Front Sheet or Notes Sheet when no repair or no encasement is required. Include standard pay items "Surface Preparation for Applying Epoxy-Mastic Primer" and either "Aluminum Epoxy-Mastic Primer" or "Gray Epoxy-Mastic Primer".

   "Aluminum" is preferred because it acts as both a barrier and corrosion protection where "Gray" only acts as a barrier. If for any reason coated pile is embedded in fresh concrete or "Gray" is being used elsewhere, "Aluminum" shall not be used.)

   See EPG 751.40.1.2.1 for guidance on when coating, encasement or jacketing, and plating or partial replacement should be considered.

2. Delete note if there is not any existing sway bracing.

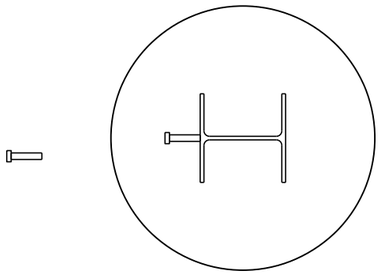

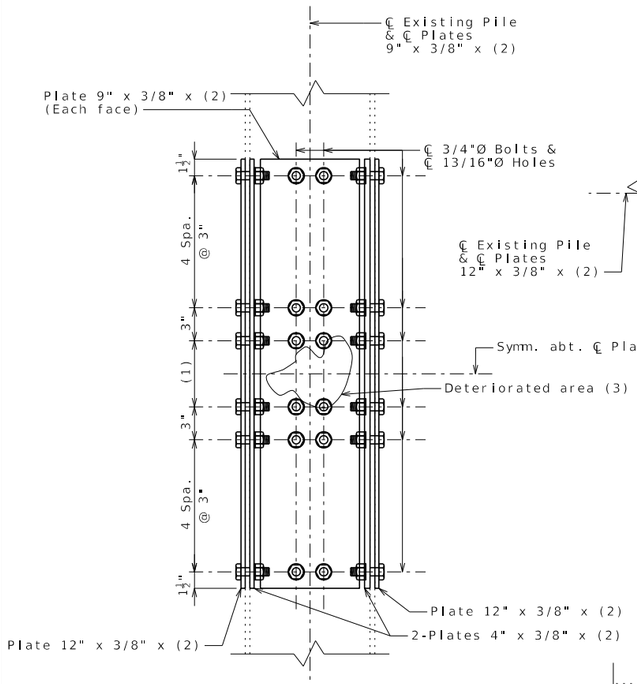

PART ELEVATION SHOWING PILE PLATING

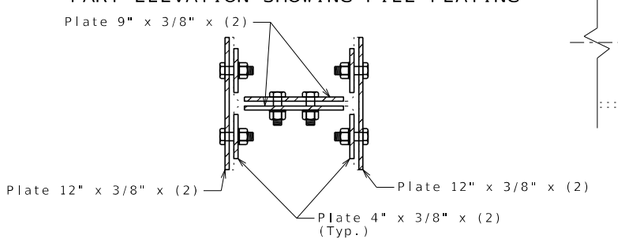

SECTION SHOWING PILE PLATING

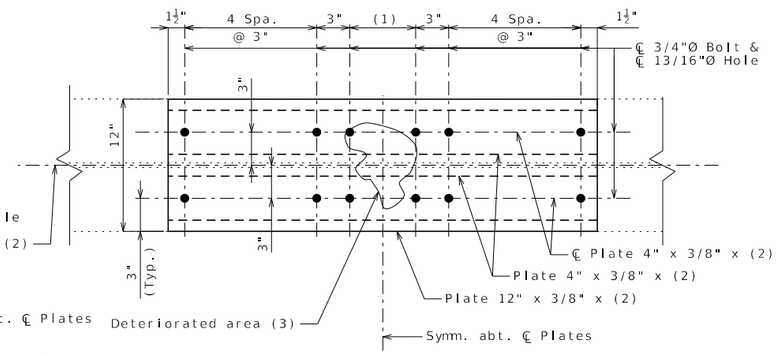

PART PLAN OF FLANGE SHOWING PILE PLATING

(Web plates not shown for clarity.)

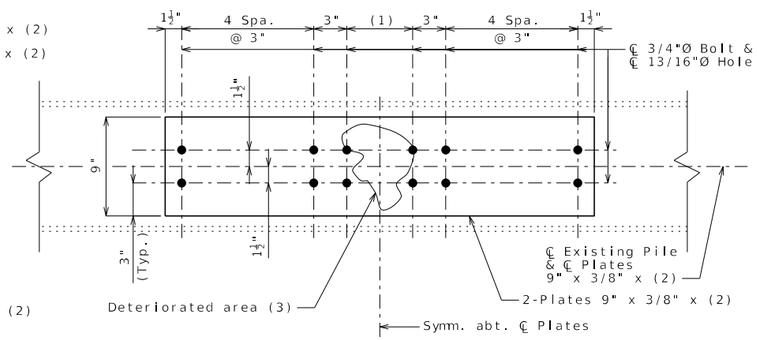

PART PLAN OF WEB SHOWING PILE PLATING

(Flange plates not shown for clarity.)

General Notes:

Design Specifications:
2002 AASHTO LFD (17th Ed.) Standard Specifications

Fabricated structural steel shall be ASTM A709 Grade 36 or 50.

Field connections shall be made with 3/4-inch diameter ASTM F3125 Grade A325 Type 1 bolts and 13/16-inch diameter holes.

Only one pile shall be repaired at a time.

Instructions for Pile Plating:

(1) Number of 3" spaces shall be determined in the field to extend past the extents of the deteriorated area.

(2) Plate length shall be determined in the field.

(3) Extents of deteriorated area will be determined by the engineer.

(4) Use plates as templates for field drilling holes in existing pile. Place bolts snug tight as drilled per each. High-strength tightening shall begin after all bolts are installed per flange or web.

General Notes:

Contact surfaces shall be in accordance with Sec 1081 for surface preparation.

All new or existing structural steel shall be coated with a minimum of two coats of inorganic zinc primer (5 mils minimum).

Cost of furnishing and installing structural steel, all steel coatings and any other incidental material or labor to complete pile repair, complete in place, will be considered completely covered by the contract unit price for Steel Pile Repair. Variations may be encountered in the estimated quantities but the variations can not be used for an adjustment in the contract unit price.

Cost of all excavation will be considered completely covered by the contract lump sum price for Class 2 Excavation.

Cost of dewatering will be considered completely covered by the contract lump sum price for Dewatering. See special provisions.

For details of pile encasement, see Sheet No. .

PILE PLATING ①

All exposed surfaces of the existing structural steel piles and sway bracing shall be recoated with one 6-mil thickness of aluminum gray epoxy-mastic primer applied over an SSPC-SP3 surface preparation in accordance with Sec 1081. The bituminous coating shall be applied one foot above and below the existing ground line and in accordance with Sec 702. These protective coatings will not be required below the normal low water line. The cost of surface preparation will be considered completely covered by the contract lump sum price for Surface Preparation for Applying Epoxy-Mastic Primer. The cost of the aluminum gray epoxy-mastic primer and bituminous coating will be considered completely covered by the contract lump sum price for Aluminum Gray Epoxy-Mastic Primer.③ (Add to either method)

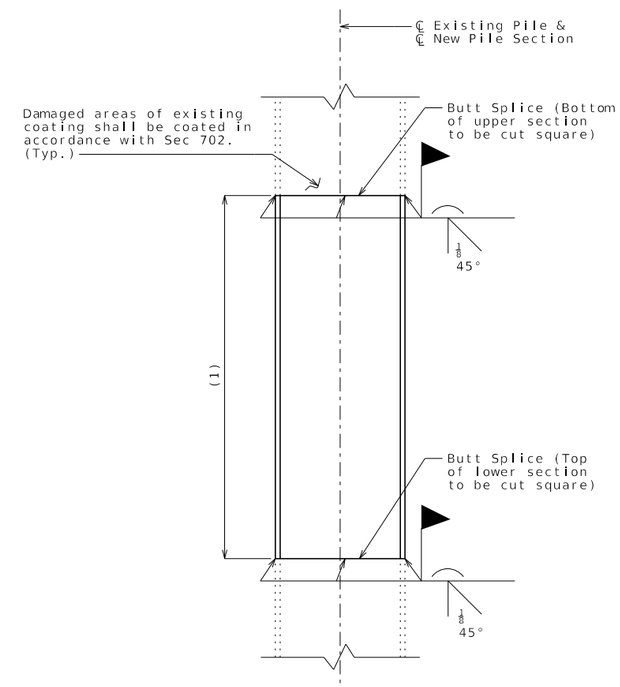

PART ELEVATION SHOWING PARTIAL PILE REPLACEMENT

General Notes:

New steel pile section shall be the same grade as, or greater than, the existing pile (ASTM A709 Grade 36 or 50).

New steel pile section shall be coated in accordance with Sec 702.④

Only one pile shall be repaired at a time. Repair shall be a continous operation from removal through splicing.

(1) Length and location of pile replacement will be determined by the engineer.

Cost of furnishing and installing structural steel pile, all steel coatings and any other incidental material or labor to complete pile repair, complete in place, will be considered completely covered by the contract unit price for Steel Pile Repair. Variations may be encountered in the estimated quantities but the variations can not be used for an adjustment in the contract unit price.

Cost of all excavation will be considered completely covered by the contract lump sum price for Class 2 Excavation.

Cost of dewatering will be considered completely covered by the contract lump sum price for Dewatering. See special provisions.

See Supplemental Details of HP12x53 Pile Encasement With Pile Repair Sheet.

PARTIAL PILE REPLACEMENT ②

DATE PREPARED	10/17/2023
ROUTE	STATE MO
DISTRICT	SHEET NO. 34
COUNTY	
JOB NO.	
CONTRACT ID.	
PROJECT NO.	
BRIDGE NO.	

DESCRIPTION

DATE

MISSOURI HIGHWAYS AND TRANSPORTATION COMMISSION
105 WEST CAPITOL
JEFFERSON CITY, MO 65102
1-888-ASK-MODOT (1-888-275-6636)

PILE REPAIR

Detailed
Checked

Note: This drawing is not to scale. Follow dimensions.

Sheet No. of

RHB12_12x53PileRepair Guidance & Alternate Details

Standard Drawing Guidance (do not show on plans):

Show only pile repair method required. Delete all other details. If used in combination, specify associated pile(s) by method.

① Based on similar percentage of section loss, pile plating may be more attractive than partial pile replacement. Details can be modified if only the web or flanges need to be plated. If only the web is plated, plates on each side of the web are required. If only a flange is to be plated, both flanges and plates on each side of the flanges are required. Overall symmetry of the section shall be maintained.

② Based on additional factors other than just percent of section loss, partial pile replacement may be considered. Minimizing or eliminating traffic loading, adding falsework, or just having support conditions such as integral bents can help to determine the repair method. Pile replacement shall not be used if multiple piles need repair and falsework is not provided.

③ Use this note for coating any remaining piles or pile sections, and sway bracing not being repaired. Use this note on Front Sheet or Notes Sheet when no repair or no encasement is required. Include standard pay items "Surface Preparation for Applying Epoxy-Mastic Primer" and either "Aluminum Epoxy-Mastic Primer" or "Gray Epoxy-Mastic Primer".

"Aluminum" is preferred because it acts as both a barrier and corrosion protection where "Gray" only acts as a barrier. If for any reason coated pile is embedded in fresh concrete or "Gray" is being used elsewhere, "Aluminum" shall not be used.

④ If galvanizing is preferred, add splice detail and replace note with:

New steel pile section shall be galvanized. See special provisions.

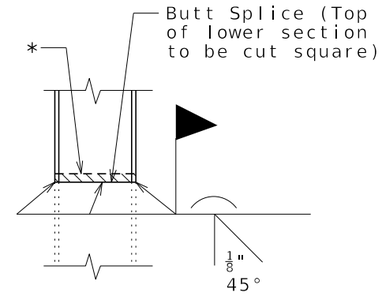

STEEL PILE SPLICE

* Galvanizing material shall be omitted or removed 1 inch clear of weld locations. See Special Provisions.

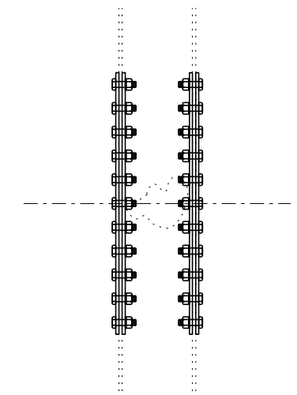

See EPG 751.40.1.2.1 for guidance on when coating, encasement or jacketing, and plating or partial replacement should be considered.

Show Quantity Table on sheet. (Possible items given)

Quantity Table		
Item		Quantity
Class 2 Excavation	lump sum	x
Dewatering	lump sum	x
Surface Preparation for Applying Epoxy-Mastic Primer	lump sum	x
Aluminum Epoxy-Mastic Primer	lump sum	x
Gray Epoxy-Mastic Primer	lump sum	x
Steel Pile Repair	linear foot	x
Pile Encasement	linear foot	x

These quantities are included in the Estimated Quantities table on Sheet No. .

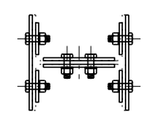

BILL OF REINFORCING STEEL - EACH PILE

NO.	SIZE & MARK	ACTUAL LENGTH	SHAPE	BENDING DIAGRAM
Varies	4 P1	10'-0"	16	
8	5 V1	Varies	20	

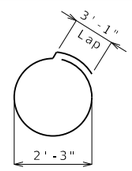

SHAPE 20

SHAPE 16

Notes:

All dimensions are out to out.

Hooks and bends shall be in accordance with the CRSI Manual of Standard Practice for Detailing Reinforced Concrete Structures, Stirrup and Tie Dimensions.

Actual lengths are measured along centerline of bar to the nearest inch.

All bars shall be epoxy coated.

General Notes:

All concrete for pile encasement shall be Class B (f'c = 3000 psi).

The reinforcing steel shall be epoxy coated Grade 60 with fy = 60,000 psi

Minimum clearance to reinforcing steel shall be 1 1/2", unless otherwise shown.

The exposed and accessible surfaces of the existing structural steel that will be encased in concrete shall be cleaned with a minimum of SSPC-SP-3 surface preparation and coated with a minimum of one coat of gray epoxy-mastic primer (non-aluminum) in accordance with Sec 1081 to produce a dry film thickness of not less than 3 mils before concrete is poured. The surface preparation and coating for piles shall extend a minimum of one foot outside the face of the pile encasement.

Cost of all concrete, reinforcement, shear connectors, surface preparation, coatings and any other incidental material or labor to complete pile encasement, complete in place, will be considered completely covered by the contract unit price for Pile Encasement. 3

A FRP pile jacketing system may be used in lieu of pile encasement at the contractor's option. No additional payment will be made for this substitution. See special provisions.

Shear connectors shall be in accordance with Sec 712, 1037 and 1080. 3

For details of pile plating, see Sheet No. .

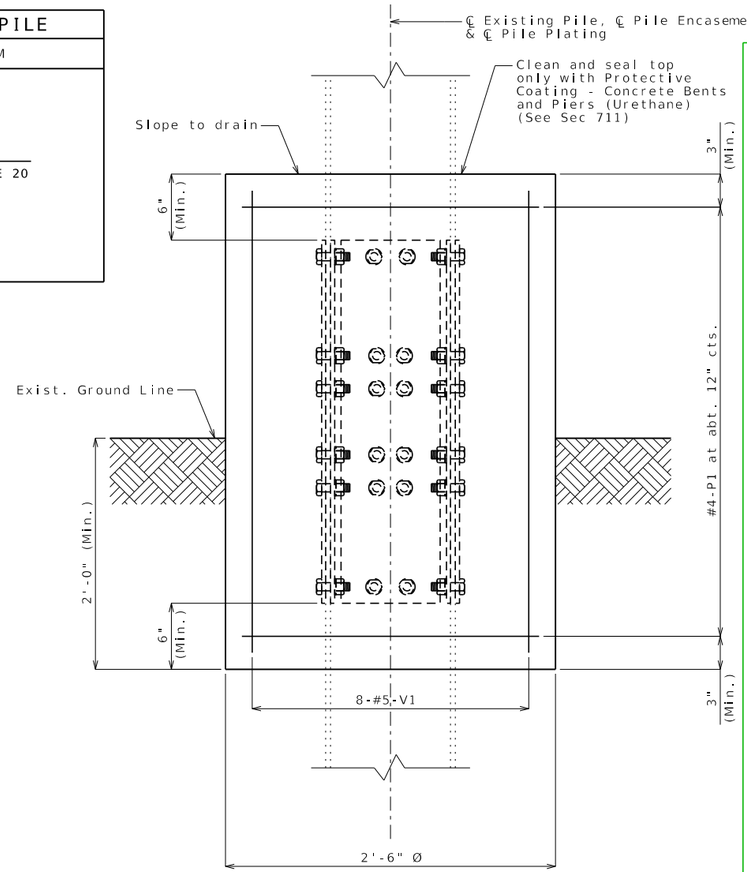

PART ELEVATION SHOWING PILE ENCASEMENT 1

Note: Existing sway bracing not shown for clarity. Shift reinforcing steel in the field to clear existing sway bracing. 2

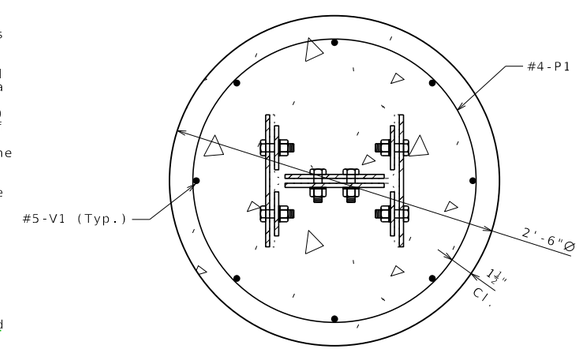

SECTION SHOWING PILE ENCASEMENT WITH PILE PLATING 1

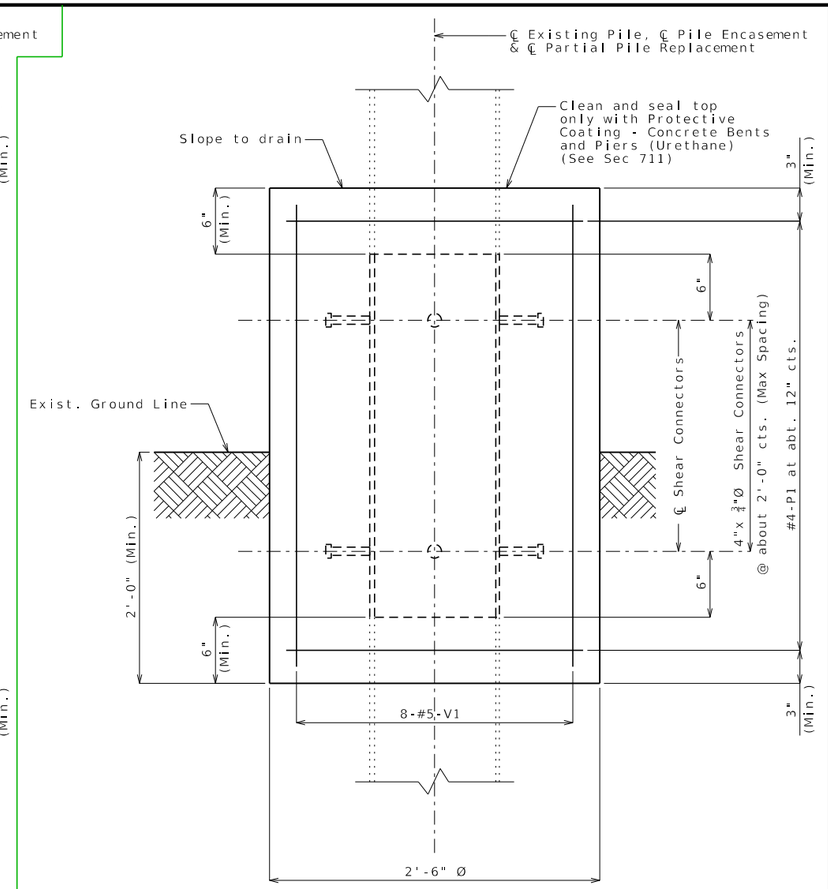

PART ELEVATION SHOWING PILE ENCASEMENT 1

Note: Existing sway bracing not shown for clarity. Shift reinforcing steel in the field to clear existing sway bracing. 2

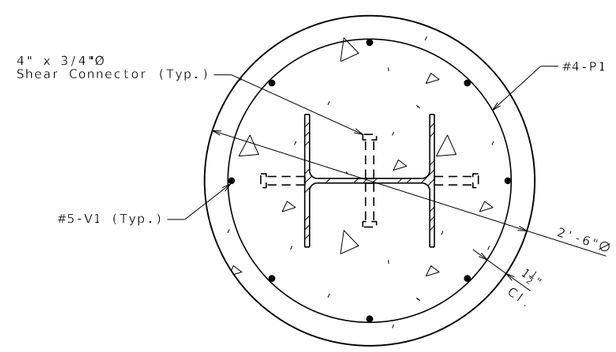

SECTION SHOWING PILE ENCASEMENT WITH PARTIAL PILE REPLACEMENT 1

DATE PREPARED	10/17/2023
ROUTE	STATE MO
DISTRICT	SHEET NO. 35
COUNTY	
JOB NO.	
CONTRACT ID.	
PROJECT NO.	
BRIDGE NO.	

DATE	DESCRIPTION

MISSOURI HIGHWAYS AND TRANSPORTATION COMMISSION
105 WEST CAPITOL
JEFFERSON CITY, MO 65102
1-888-ASK-MODOT (1-888-275-6636)

PILE ENCASEMENT WITH PILE REPAIR

Detailed
Checked

Note: This drawing is not to scale. Follow dimensions.

Sheet No. of

RHB13_12x53PileRepairEncased Guidance & Alternate Details

Standard Drawing Guidance (do not show on plans):

1. This sheet is supplemental to Details of Pile Repair Sheet. Use details that match the selected pile repair method. Delete all other details. Use general notes and bill of reinforcing steel for either method.

   See EPG 751.40.1.2.1 for guidance on when coating, encasement or jacketing, and plating or partial replacement should be considered.

2. Delete note if there is not any existing sway bracing.

   Existing sway bracing may need to be removed and replaced or reattached if it is located in the area of pile to be replaced or plated.

3. Shear connectors are only used for partial pile replacement.

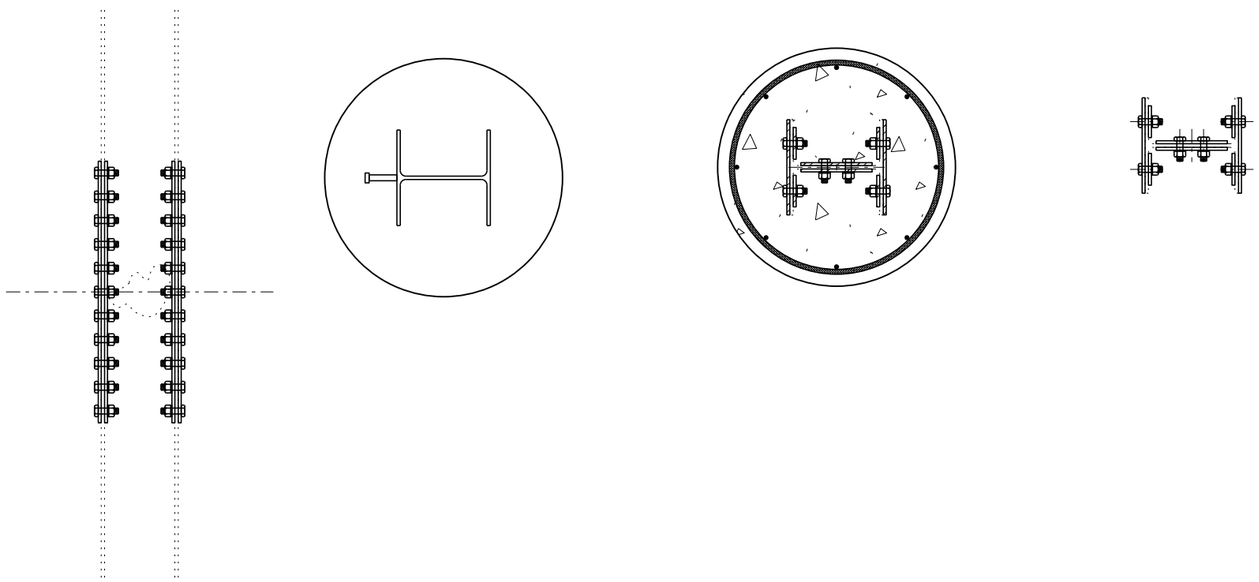

BILL OF REINFORCING STEEL - EACH PILE

NO.	SIZE & MARK	ACTUAL LENGTH	SHAPE	BENDING DIAGRAM
Varies	4 P1	10'-0"	16	
8	5 V1	Varies	20	

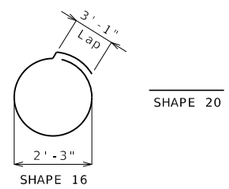

Notes:

All dimensions are out to out.

Hooks and bends shall be in accordance with the CRSI Manual of Standard Practice for Detailing Reinforced Concrete Structures, Stirrup and Tie Dimensions.

Actual lengths are measured along centerline of bar to the nearest inch.

All bars shall be epoxy coated.

All exposed surfaces of the existing structural steel piles and sway bracing shall be recoated with one 6-mil thickness of aluminum gray epoxy-mastic primer applied over an SSPC-SP3 surface preparation in accordance with Sec 1081. The bituminous coating shall be applied one foot above and below the existing ground line and in accordance with Sec 702. These protective coatings will not be required below the normal low water line. The cost of surface preparation will be considered completely covered by the contract lump sum price for Surface Preparation for Applying Epoxy-Mastic Primer. The cost of the aluminum gray epoxy-mastic primer and bituminous coating will be considered completely covered by the contract lump sum price for Aluminum Gray Epoxy-Mastic Primer. (1)

General Notes:

All concrete for pile encasement shall be Class B (f'c = 3000 psi).

The reinforcing steel shall be epoxy coated Grade 60 with fy = 60,000 psi

Minimum clearance to reinforcing steel shall be 1 1/2", unless otherwise shown.

The exposed and accessible surfaces of the existing structural steel that will be encased in concrete shall be cleaned with a minimum of SSPC-SP-3 surface preparation and coated with a minimum of one coat of gray epoxy-mastic primer (non-aluminum) in accordance with Sec 1081 to produce a dry film thickness of not less than 3 mils before concrete is poured. The surface preparation and coating for piles shall extend a minimum of one foot outside the face of the pile encasement.

Cost of all concrete, reinforcement, shear connectors, surface preparation, coatings and any other incidental material or labor to complete pile encasement, complete in place, will be considered completely covered by the contract unit price for Pile Encasement.

Cost of all excavation will be considered completely covered by the contract lump sum price for Class 2 Excavation.

Cost of dewatering will be considered completely covered by the contract lump sum price for Dewatering. See special provisions.

A FRP pile jacketing system may be used in lieu of pile encasement at the contractor's option. No additional payment will be made for this substitution. See special provisions.

Shear connectors shall be in accordance with Sec 712, 1037 and 1080.

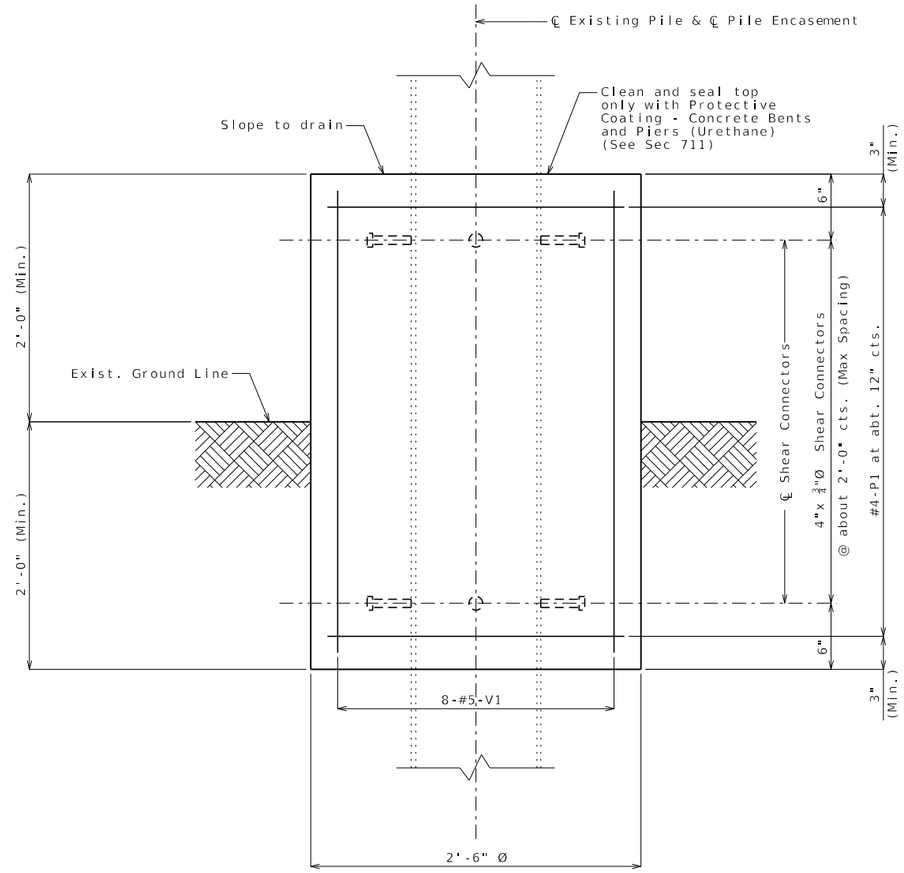

PART ELEVATION SHOWING PILE ENCASEMENT

Note: Existing sway bracing not shown for clarity. Shift reinforcing steel in the field to clear existing sway bracing. (2)

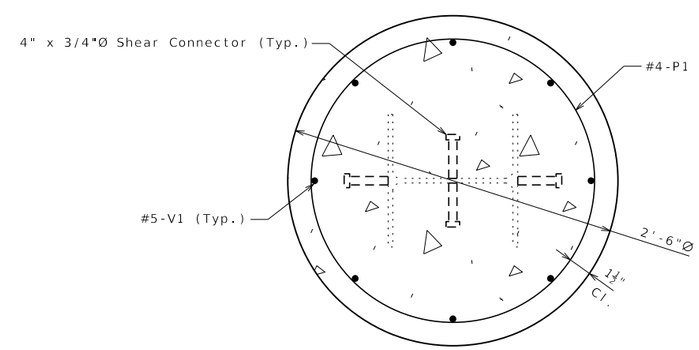

SECTION SHOWING PILE ENCASEMENT

PILE ENCASEMENT

Detailed
Checked

Note: This drawing is not to scale. Follow dimensions.

Sheet No. of

DATE PREPARED	10/17/2023
ROUTE	STATE MO
DISTRICT	SHEET NO. 36
COUNTY	
JOB NO.	
CONTRACT ID.	
PROJECT NO.	
BRIDGE NO.	

DATE	DESCRIPTION

MISSOURI HIGHWAYS AND TRANSPORTATION COMMISSION
105 WEST CAPITOL
JEFFERSON CITY, MO 65102
1-888-ASK-MODOT (1-888-275-6636)

RHB14_12x53PileEncase Guidance & Alternate Details

Standard Drawing Guidance (do not show on plans):

1. Use this note for coating any remaining piles or pile sections, and sway bracing not being repaired. Use this note on Front Sheet or Notes Sheet when no repair or no encasement is required. Include standard pay items "Surface Preparation for Applying Epoxy-Mastic Primer" and either "Aluminum Epoxy-Mastic Primer" or "Gray Epoxy-Mastic Primer".

   "Aluminum" is preferred because it acts as both a barrier and corrosion protection where "Gray" only acts as a barrier. If for any reason coated pile is embedded in fresh concrete or "Gray" is being used elsewhere, "Aluminum" shall not be used.)

   See EPG 751.40.1.2.1 for guidance on when coating, encasement or jacketing, and plating or partial replacement should be considered.

2. Delete note if there is not any existing sway bracing.

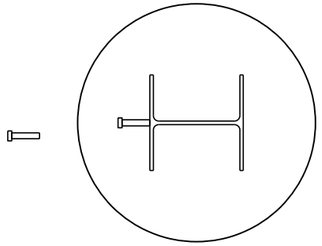

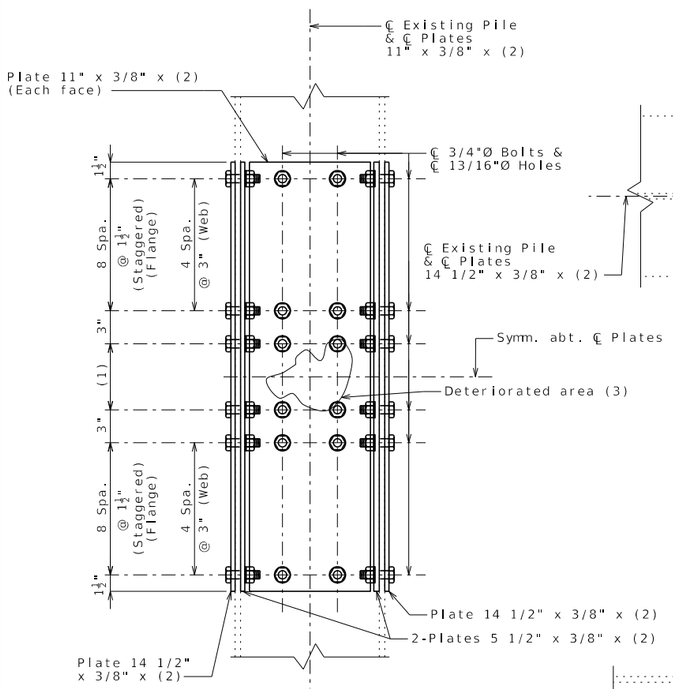

PART ELEVATION SHOWING PILE PLATING

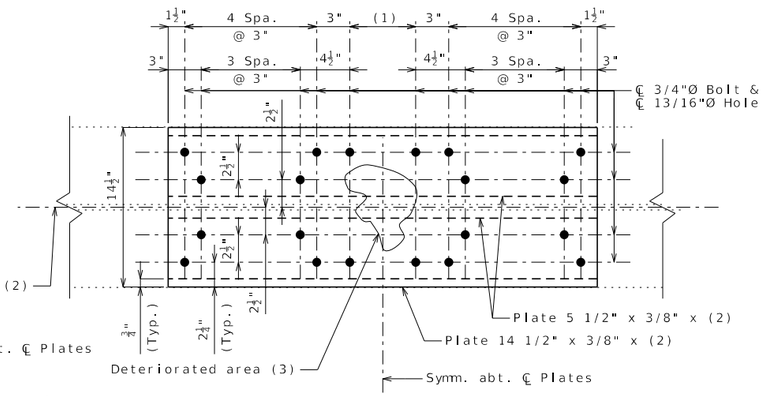

PART PLAN OF FLANGE SHOWING PILE PLATING

(Web plates not shown for clarity.)

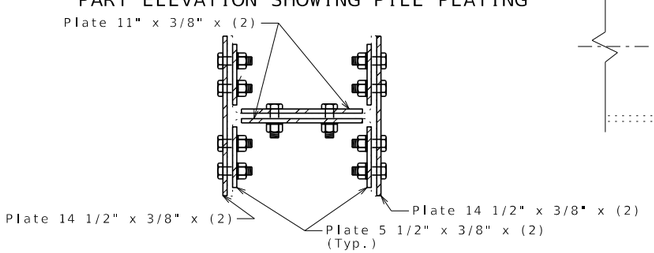

SECTION SHOWING PILE PLATING

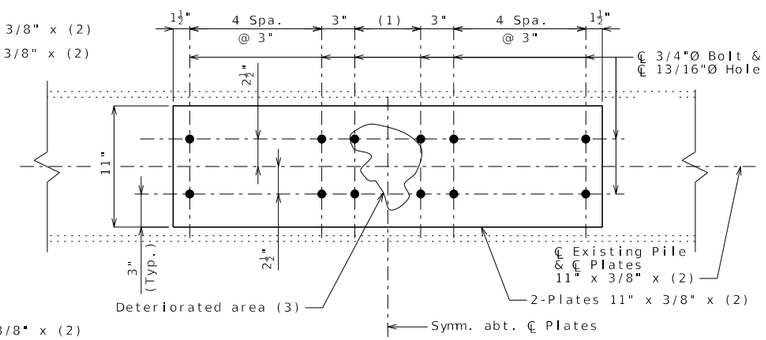

PART PLAN OF WEB SHOWING PILE PLATING

(Flange plates not shown for clarity.)

General Notes:

Design Specifications:
2002 AASHTO LFD (17th Ed.) Standard Specifications

Fabricated structural steel shall be ASTM A709 Grade 36 or 50.

Field connections shall be made with 3/4-inch diameter ASTM F3125 Grade A325 Type 1 bolts and 13/16-inch diameter holes.

Only one pile shall be repaired at a time.

Instructions for Pile Plating:

(1) Number of 1 1/2" staggered spaces and 3" spaces shall be determined in the field to extend past the extents of the deteriorated area.

(2) Plate length shall be determined in the field.

(3) Extents of deteriorated area will be determined by the engineer.

(4) Use plates as templates for field drilling holes in existing pile. Place bolts snug tight as drilled per each. High-strength tightening shall begin after all bolts are installed per flange or web.

PILE PLATING ①

General Notes:

Contact surfaces shall be in accordance with Sec 1081 for surface preparation.

All new or existing structural steel shall be coated with a minimum of two coats of inorganic zinc primer (5 mils minimum).

Cost of furnishing and installing structural steel, all steel coatings and any other incidental material or labor to complete pile repair, complete in place, will be considered completely covered by the contract unit price for Steel Pile Repair. Variations may be encountered in the estimated quantities but the variations can not be used for an adjustment in the contract unit price.

Cost of all excavation will be considered completely covered by the contract lump sum price for Class 2 Excavation.

Cost of dewatering will be considered completely covered by the contract lump sum price for Dewatering. See special provisions.

For details of pile encasement, see Sheet No. __.

All exposed surfaces of the existing structural steel piles and sway bracing shall be recoated with one 6-mil thickness of aluminum gray epoxy-mastic primer applied over an SSPC-SP3 surface preparation in accordance with Sec 1081. The bituminous coating shall be applied one foot above and below the existing ground line and in accordance with Sec 702. These protective coatings will not be required below the normal low water line. The cost of surface preparation will be considered completely covered by the contract lump sum price for Surface Preparation for Applying Epoxy-Mastic Primer. The cost of the aluminum gray epoxy-mastic primer and bituminous coating will be considered completely covered by the contract lump sum price for Aluminum Gray Epoxy-Mastic Primer.③ (Add to either method)

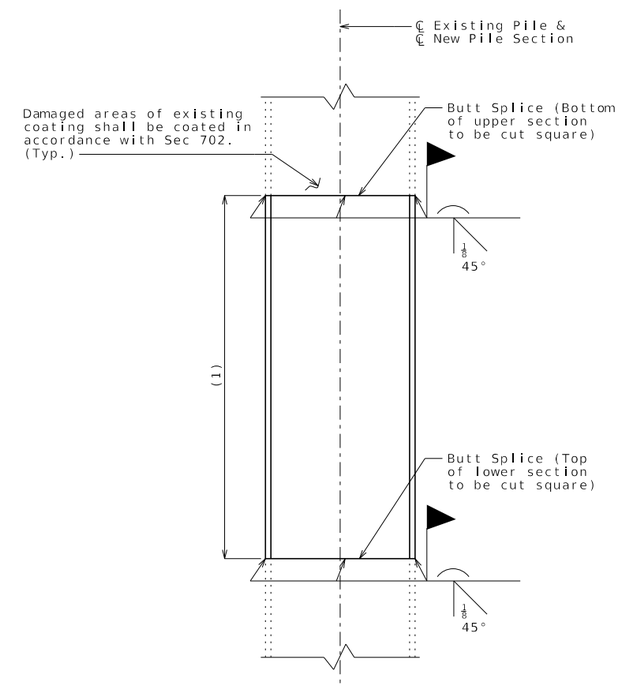

PART ELEVATION SHOWING PARTIAL PILE REPLACEMENT

General Notes:

New steel pile section shall be the same grade as, or greater than, the existing pile (ASTM A709 Grade 36 or 50).

New steel pile section shall be coated in accordance with Sec 702. ④

Only one pile shall be repaired at a time. Repair shall be a continous operation from removal through splicing.

(1) Length and location of pile replacement will be determined by the engineer.

Cost of furnishing and installing structural steel pile, all steel coatings and any other incidental material or labor to complete pile repair, complete in place, will be considered completely covered by the contract unit price for Steel Pile Repair. Variations may be encountered in the estimated quantities but the variations can not be used for an adjustment in the contract unit price.

Cost of all excavation will be considered completely covered by the contract lump sum price for Class 2 Excavation.

Cost of dewatering will be considered completely covered by the contract lump sum price for Dewatering. See special provisions.

See Supplemental Details of HP14x73 Pile Encasement With Pile Repair Sheet.

PARTIAL PILE REPLACEMENT ②

DATE PREPARED	10/17/2023
ROUTE	STATE MO
DISTRICT	SHEET NO. 37
COUNTY	
JOB NO.	
CONTRACT ID.	
PROJECT NO.	
BRIDGE NO.	

DESCRIPTION

DATE

MISSOURI HIGHWAYS AND TRANSPORTATION COMMISSION
105 WEST CAPITOL
JEFFERSON CITY, MO 65102
1-888-ASK-MODOT (1-888-275-6636)

PILE REPAIR

Detailed
Checked

Note: This drawing is not to scale. Follow dimensions.

Sheet No. of

RHB15_14x73PileRepair Guidance & Alternate Details

Standard Drawing Guidance (do not show on plans):

Show only pile repair method required. Delete all other details. If used in combination, specify associated pile(s) by method.

1. Based on similar percentage of section loss, pile plating may be more attractive than partial pile replacement. Details can be modified if only the web or flanges need to be plated. If only the web is plated, plates on each side of the web are required. If only a flange is to be plated, both flanges and plates on each side of the flanges are required. Overall symmetry of the section shall be maintained.

2. Based on additional factors other than just percent of section loss, partial pile replacement may be considered. Minimizing or eliminating traffic loading, adding falsework, or just having support conditions such as integral bents can help to determine the repair method. Pile replacement shall not be used if multiple piles need repair and falsework is not provided.

3. Use this note for coating any remaining piles or pile sections, and sway bracing not being repaired. Use this note on Front Sheet or Notes Sheet when no repair or no encasement is required. Include standard pay items "Surface Preparation for Applying Epoxy-Mastic Primer" and either "Aluminum Epoxy-Mastic Primer" or "Gray Epoxy-Mastic Primer".

   "Aluminum" is preferred because it acts as both a barrier and corrosion protection where "Gray" only acts as a barrier. If for any reason coated pile is embedded in fresh concrete or "Gray" is being used elsewhere, "Aluminum" shall not be used.

4. If galvanizing is preferred, add splice detail and replace note with:

   New steel pile section shall be galvanized. See special provisions.

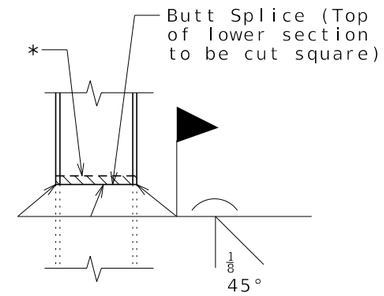

STEEL PILE SPLICE

* Galvanizing material shall be omitted or removed 1 inch clear of weld locations. See Special Provisions.

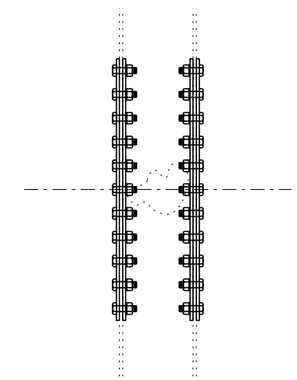

See EPG 751.40.1.2.1 for guidance on when coating, encasement or jacketing, and plating or partial replacement should be considered.

Show Quantity Table on sheet. (Possible items given)

Quantity Table		
Item		Quantity
Class 2 Excavation	lump sum	x
Dewatering	lump sum	x
Surface Preparation for Applying Epoxy-Mastic Primer	lump sum	x
Aluminum Epoxy-Mastic Primer	lump sum	x
Gray Epoxy-Mastic Primer	lump sum	x
Steel Pile Repair	linear foot	x
Pile Encasement	linear foot	x

These quantities are included in the Estimated Quantities table on Sheet No. .

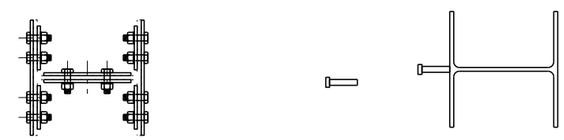

BILL OF REINFORCING STEEL - EACH PILE

NO.	SIZE & MARK	ACTUAL LENGTH	SHAPE	BENDING DIAGRAM
Varies	4 P1	10'-0"	16	
8	5 V1	Varies	20	

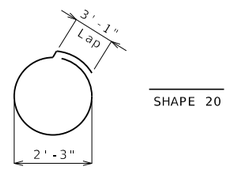

SHAPE 16

SHAPE 20

Notes:

All dimensions are out to out.

Hooks and bends shall be in accordance with the CRSI Manual of Standard Practice for Detailing Reinforced Concrete Structures, Stirrup and Tie Dimensions.

Actual lengths are measured along centerline of bar to the nearest inch.

All bars shall be epoxy coated.

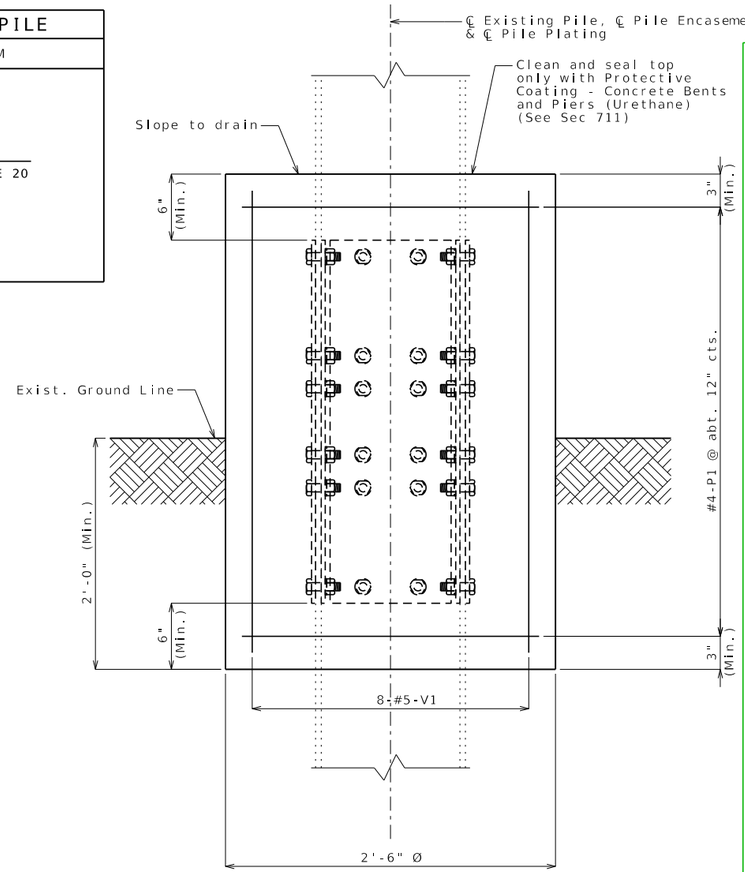

PART ELEVATION SHOWING PILE ENCASEMENT ①

Note: Existing sway bracing not shown for clarity. Shift reinforcing steel in the field to clear existing sway bracing.②

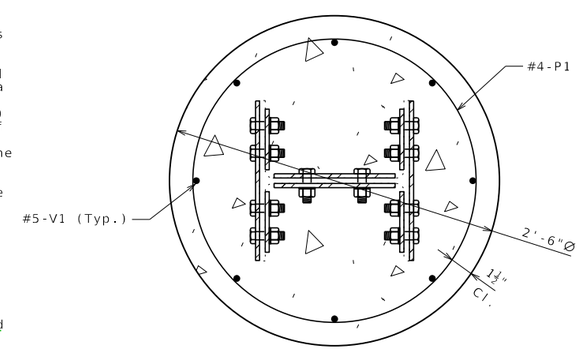

SECTION SHOWING PILE ENCASEMENT WITH PILE PLATING ①

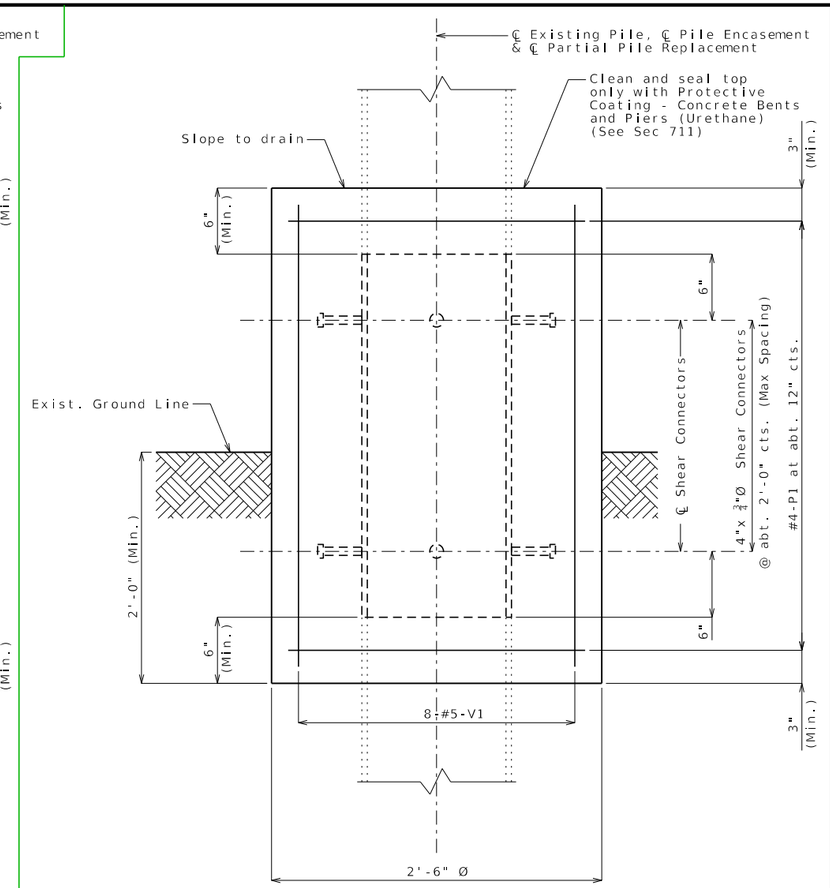

PART ELEVATION SHOWING PILE ENCASEMENT ①

Note: Existing sway bracing not shown for clarity. Shift reinforcing steel in the field to clear existing sway bracing.②

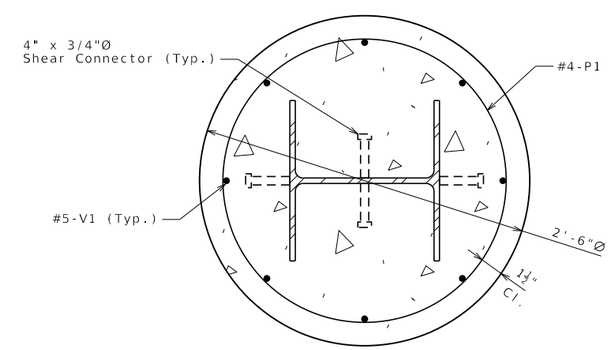

SECTION SHOWING PILE ENCASEMENT WITH PARTIAL PILE REPLACEMENT ①

General Notes:

All concrete for pile encasement shall be Class B (f'c = 3000 psi).

The reinforcing steel shall be epoxy coated Grade 60 with fy = 60,000 psi

Minimum clearance to reinforcing steel shall be 1 1/2", unless otherwise shown.

The exposed and accessible surfaces of the existing structural steel that will be encased in concrete shall be cleaned with a minimum of SSPC-SP-3 surface preparation and coated with a minimum of one coat of gray epoxy-mastic primer (non-aluminum) in accordance with Sec 1081 to produce a dry film thickness of not less than 3 mils before concrete is poured. The surface preparation and coating for piles shall extend a minimum of one foot outside the face of the pile encasement.

Cost of all concrete, reinforcement, shear connectors, surface preparation, coatings and any other incidental material or labor to complete pile encasement, complete in place, will be considered completely covered by the contract unit price for Pile Encasement.③

A FRP pile jacketing system may be used in lieu of pile encasement at the contractor's option. No additional payment will be made for this substitution. See special provisions.

Shear connectors shall be in accordance with Sec 712, 1037 and 1080. ③

For details of pile plating, see Sheet No. __.

DATE PREPARED	10/17/2023
ROUTE	STATE MO
DISTRICT	SHEET NO. 38
COUNTY	
JOB NO.	
CONTRACT ID.	
PROJECT NO.	
BRIDGE NO.	

DATE	DESCRIPTION

MISSOURI HIGHWAYS AND TRANSPORTATION COMMISSION
105 WEST CAPITOL
JEFFERSON CITY, MO 65102
1-888-ASK-MODOT (1-888-275-6636)

PILE ENCASEMENT WITH PILE REPAIR

Detailed
Checked

Note: This drawing is not to scale. Follow dimensions.

Sheet No. of

RHB16_14x73PileRepairEncased Guidance & Alternate Details

Standard Drawing Guidance (do not show on plans):

1. This sheet is supplemental to Details of Pile Repair Sheet. Use details that match the selected pile repair method. Delete all other details. Use general notes and bill of reinforcing steel for either method.

   See EPG 751.40.1.2.1 for guidance on when coating, encasement or jacketing, and plating or partial replacement should be considered.

2. Delete note if there is not any existing sway bracing.

   Existing sway bracing may need to be removed and replaced or reattached if it is located in the area of pile to be replaced or plated.

3. Shear connectors are only used for partial pile replacement.

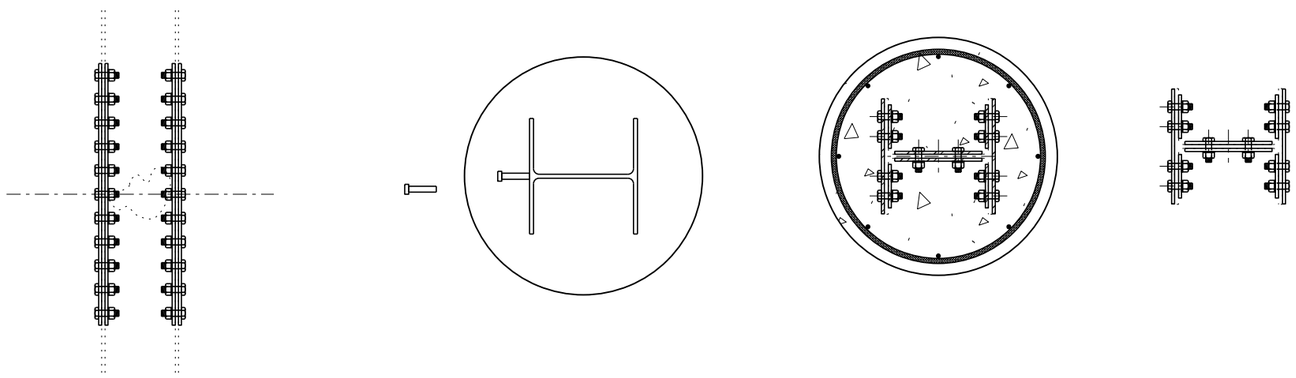

BILL OF REINFORCING STEEL - EACH PILE

NO.	SIZE & MARK	ACTUAL LENGTH	SHAPE	BENDING DIAGRAM
Varies	4 P1	10'-0"	16	
8	5 V1	Varies	20	

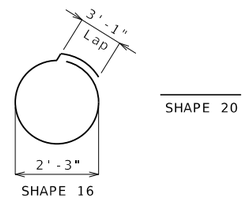

Notes:

All dimensions are out to out.

Hooks and bends shall be in accordance with the CRSI Manual of Standard Practice for Detailing Reinforced Concrete Structures, Stirrup and Tie Dimensions.

Actual lengths are measured along centerline of bar to the nearest inch.

All bars shall be epoxy coated.

All exposed surfaces of the existing structural steel piles and sway bracing shall be recoated with one 6-mil thickness of aluminum gray epoxy-mastic primer applied over an SSPC-SP3 surface preparation in accordance with Sec 1081. The bituminous coating shall be applied one foot above and below the existing ground line and in accordance with Sec 702. These protective coatings will not be required below the normal low water line. The cost of surface preparation will be considered completely covered by the contract lump sum price for Surface Preparation for Applying Epoxy-Mastic Primer. The cost of the aluminum gray epoxy-mastic primer and bituminous coating will be considered completely covered by the contract lump sum price for Aluminum Gray Epoxy-Mastic Primer.(1)

General Notes:

All concrete for pile encasement shall be Class B (f'c = 3000 psi).

The reinforcing steel shall be epoxy coated Grade 60 with fy = 60,000 psi

Minimum clearance to reinforcing steel shall be 1 1/2", unless otherwise shown.

The exposed and accessible surfaces of the existing structural steel that will be encased in concrete shall be cleaned with a minimum of SSPC-SP-3 surface preparation and coated with a minimum of one coat of gray epoxy-mastic primer (non-aluminum) in accordance with Sec 1081 to produce a dry film thickness of not less than 3 mils before concrete is poured. The surface preparation and coating for piles shall extend a minimum of one foot outside the face of the pile encasement.

Cost of all concrete, reinforcement, shear connectors, surface preparation, coatings and any other incidental material or labor to complete pile encasement, complete in place, will be considered completely covered by the contract unit price for Pile Encasement.

Cost of all excavation will be considered completely covered by the contract lump sum price for Class 2 Excavation.

Cost of dewatering will be considered completely covered by the contract lump sum price for Dewatering. See special provisions.

A FRP pile jacketing system may be used in lieu of pile encasement at the contractor's option. No additional payment will be made for this substitution. See special provisions.

Shear connectors shall be in accordance with Sec 712, 1037 and 1080.

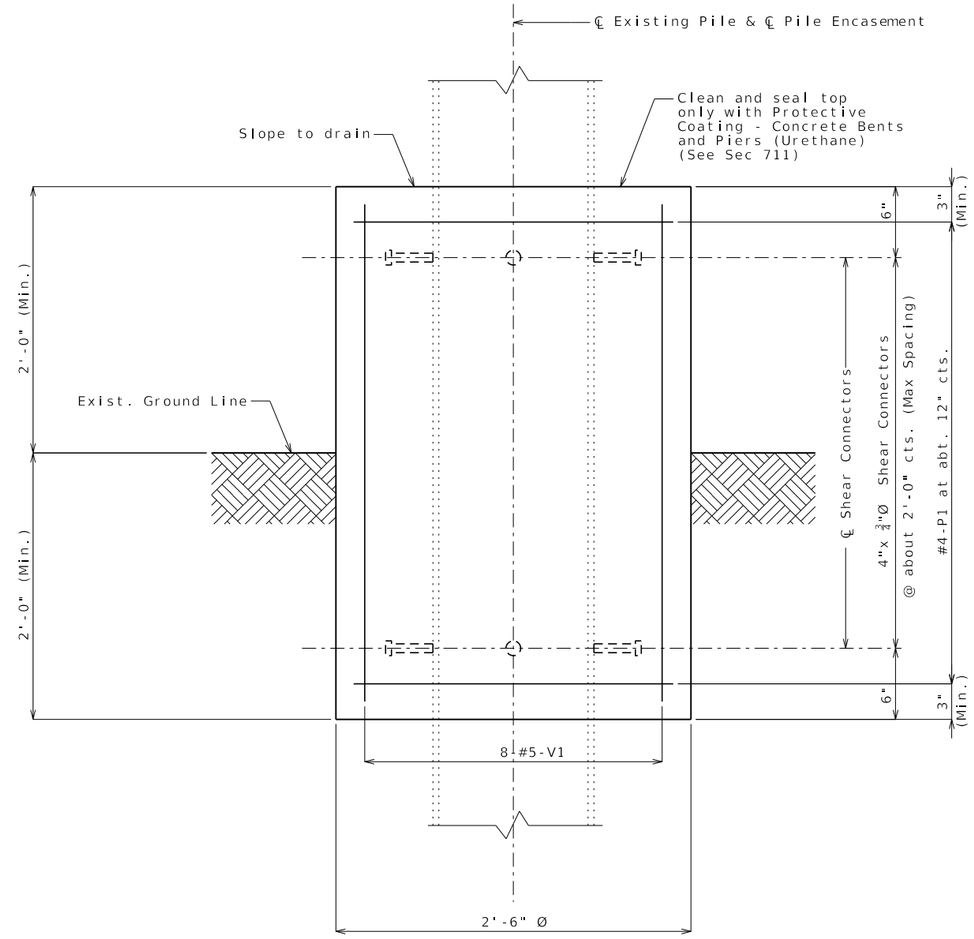

PART ELEVATION SHOWING PILE ENCASEMENT

Note: Existing sway bracing not shown for clarity. Shift reinforcing steel in the field to clear existing sway bracing.(2)

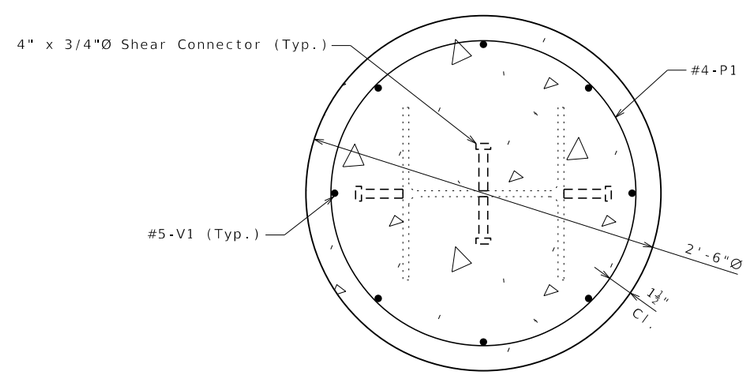

SECTION SHOWING PILE ENCASEMENT

PILE ENCASEMENT

Detailed
Checked

Note: This drawing is not to scale. Follow dimensions.

Sheet No. of

DATE PREPARED	10/17/2023
ROUTE	STATE MO
DISTRICT	SHEET NO. 000
COUNTY	
JOB NO.	
CONTRACT ID.	
PROJECT NO.	
BRIDGE NO.	

DATE	DESCRIPTION

MISSOURI HIGHWAYS AND TRANSPORTATION COMMISSION
105 WEST CAPITOL
JEFFERSON CITY, MO 65102
1-888-ASK-MODOT (1-888-275-6636)

RHB17_14x73PileEncase Guidance & Alternate Details

Standard Drawing Guidance (do not show on plans):

① Use this note for coating any remaining piles or pile sections, and sway bracing not being repaired. Use this note on Front Sheet or Notes Sheet when no repair or no encasement is required. Include standard pay items "Surface Preparation for Applying Epoxy-Mastic Primer" and either "Aluminum Epoxy-Mastic Primer" or "Gray Epoxy-Mastic Primer".

"Aluminum" is preferred because it acts as both a barrier and corrosion protection where "Gray" only acts as a barrier. If for any reason coated pile is embedded in fresh concrete or "Gray" is being used elsewhere, "Aluminum" shall not be used.)

See EPG 751.40.1.2.1 for guidance on when coating, encasement or jacketing, and plating or partial replacement should be considered.

② Delete note if there is not any existing sway bracing.

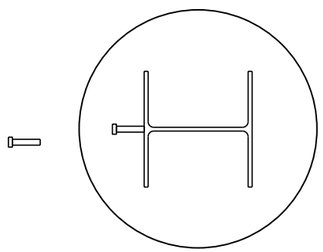

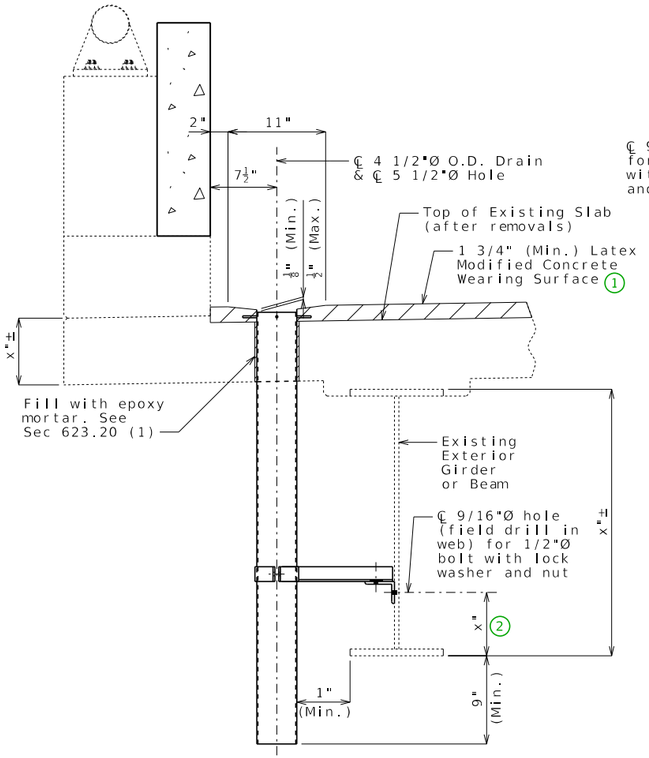

(1) Use backer rod around drain @ bottom of slab and epoxy inject from the top.

PART SECTION NEAR DRAIN

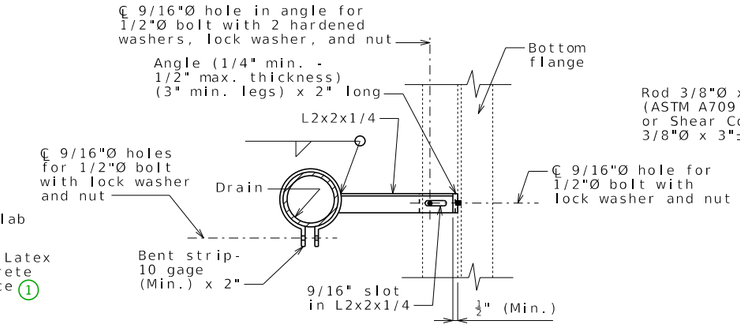

PART SECTION SHOWING BRACKET ASSEMBLY

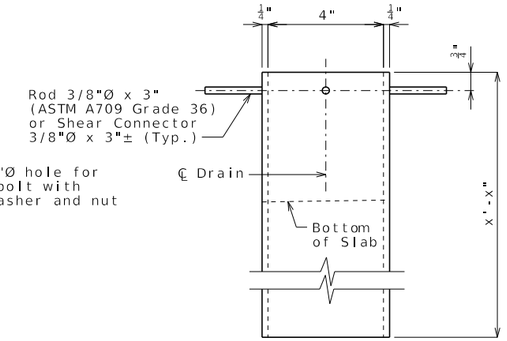

ELEVATION OF DRAIN

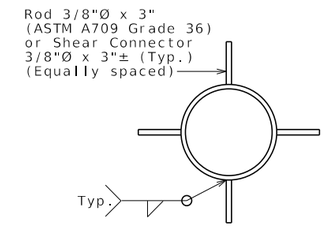

PLAN OF DRAIN

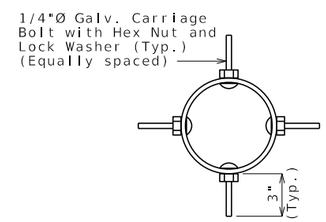

PLAN OF OPTIONAL FRP DRAIN

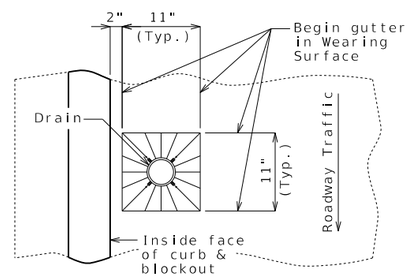

PART PLAN OF SLAB AT DRAIN

This Bridge Standard Drawing is meant to be used as a starting point. Modify details as needed.

Standard Drawing Guidance (Do not show on plans):

1. Modify as needed.
2. Approximately one sixth of girder/beam height; 5" minimum
3. Add Note H7.8.2 when attaching to weathering steel girders or beams (See EPG 751.50)
4. Omit underlined portion for prestressed girders.

General Notes:

Contractor shall have the option to construct either steel or FRP slab drains. All drains shall be of same type.

Slab drain bracket assembly shall be ASTM A709 Grade 36 steel.

The bracket assembly shall be galvanized in accordance with ASTM A123.

All bolts, hardened washers, lock washers and nuts shall be galvanized in accordance with AASHTO M232 (ASTM A153), Class C.

All 1/2-inch diameter bolts shall be ASTM A307, except as noted.

Shop drawings will not be required for the slab drains and the bracket assembly.

Cost of cored slab drains, complete in place, will be considered completely covered by the contract unit price for Cored Slab Drain per each.

Holes for slab drains shall be cored. Percussion drilling will not be permitted.

Slab drain locations may be shifted the minimum extent necessary to avoid slab reinforcement <u>and to allow for field drilling bolt hole in web of existing beam for bracket assembly attachment.</u> 4

3 Cored slab drains shall be placed vertically.

For details of plugging existing curb outlets, see Sheet No. _.

Notes for Steel Drain:

Slab drains shall be fabricated from 1/4-inch structural steel tubing ASTM A500 or A501.

The drains shall be galvanized in accordance with ASTM A123.

Drains shall be inserted through slab such that damage to galvanized coating is minimized.

Notes for FRP Drain:

Drains shall be machine filament-wound thermosetting resin tubing meeting the requirements of ASTM D2996 with the following exceptions:

Minimum reinforced wall thickness shall be 1/4 inch.

The resin used shall be ultraviolet (UV) resistant and/or have UV inhibitors mixed throughout. Drains may have an exterior coating for additional UV resistance. Care shall be taken to avoid damage to exterior coating during installation.

The color of the slab drain shall be gray (Federal Standard #26373). The color shall be uniform throughout the resin and any coating used.

The combination of materials used in the manufacture of the drains shall be tested for UV resistance in accordance with ASTM D4329 Cycle A. The representative material shall withstand at least 500 hours of testing with only minor discoloration and without any physical deterioration. The contractor shall furnish the results of the required ultraviolet testing prior to acceptance of the slab drains.

At the contractor's option, drains may be field cut. The method of cutting FRP slab drains shall be as recommended by the manufacturer to ensure a smooth, chip-free cut.

PART PLAN SHOWING CORED SLAB DRAIN LOCATIONS

CORED SLAB DRAINS

Detailed
Checked

Note: This drawing is not to scale. Follow dimensions.

Sheet No. of

DATE PREPARED	3/3/2025
ROUTE	STATE MO
DISTRICT	SHEET NO. 000
COUNTY	
JOB NO.	
CONTRACT ID.	
PROJECT NO.	
BRIDGE NO.	

DESCRIPTION

DATE

MISSOURI HIGHWAYS AND TRANSPORTATION COMMISSION
105 WEST CAPITOL
JEFFERSON CITY, MO 65102
1-888-ASK-MODOT (1-888-275-6636)

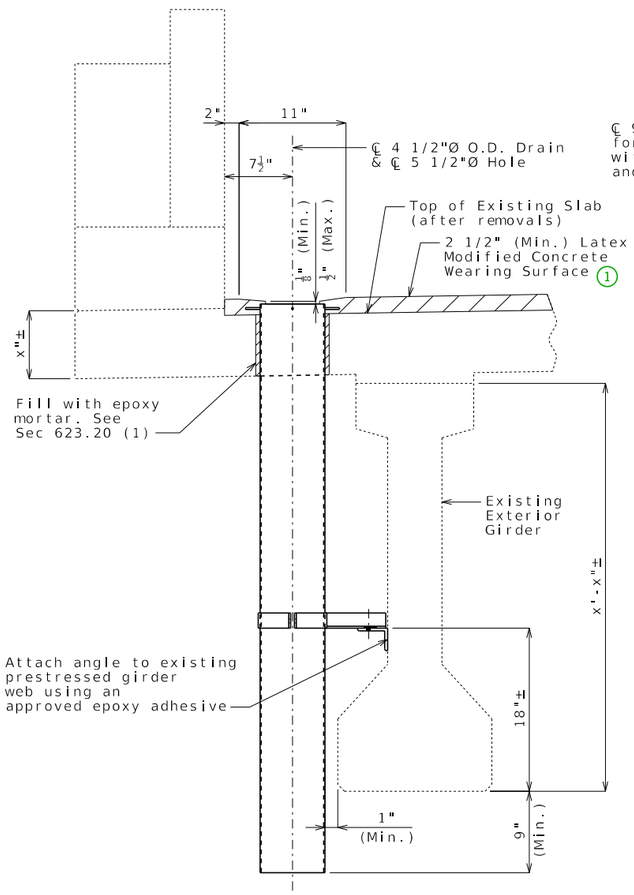

(1) Use backer rod around drain @ bottom of slab and epoxy inject from the top.

PART SECTION NEAR DRAIN

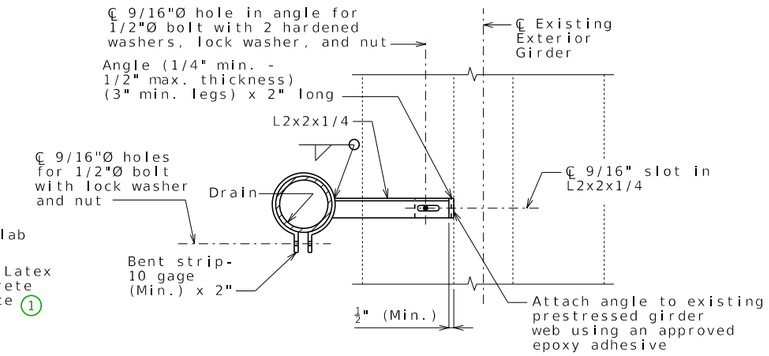

PART SECTION SHOWING BRACKET ASSEMBLY

PRESTRESSED GIRDER, EXISTING CURB BLOCKOUT

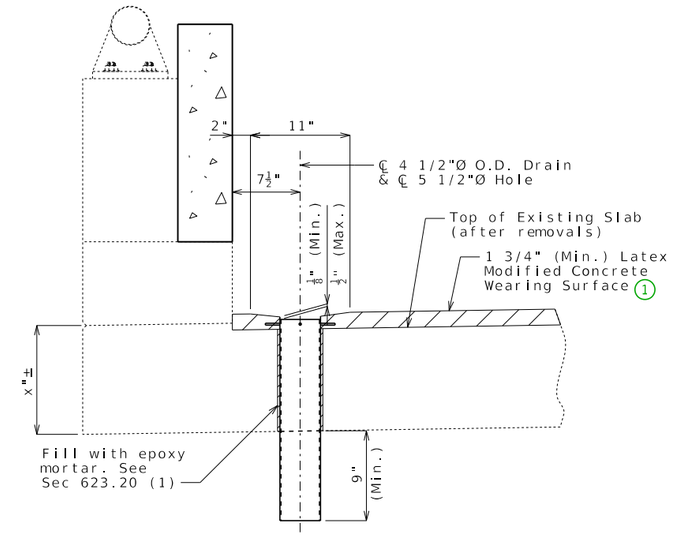

(1) Use backer rod around drain @ bottom of slab and epoxy inject from the top.

PART SECTION NEAR DRAIN

SOLID SLAB

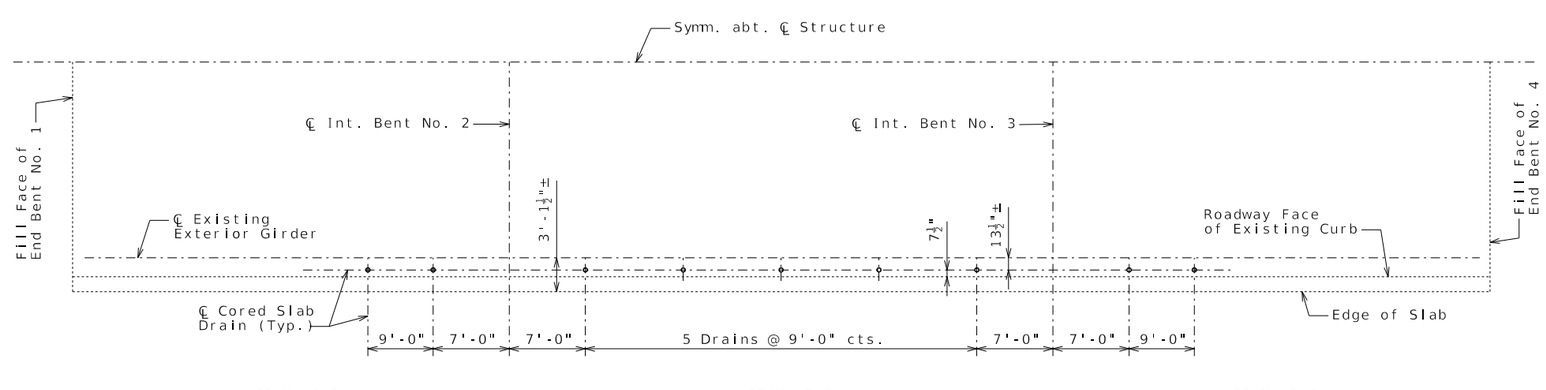

PART PLAN SHOWING CORED SLAB DRAIN LOCATIONS

EXAMPLE PLAN

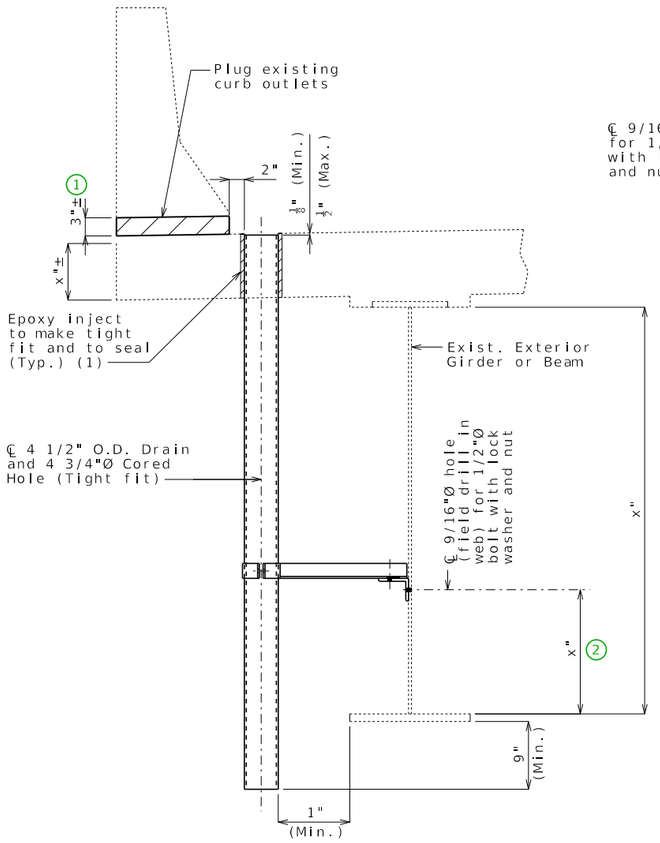

PART SECTION NEAR DRAIN

(1) Use backer rod around drain @ bottom of slab and epoxy inject from the top.

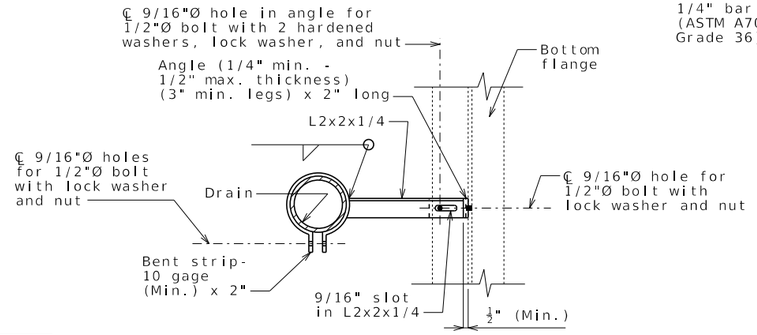

PART SECTION SHOWING BRACKET ASSEMBLY

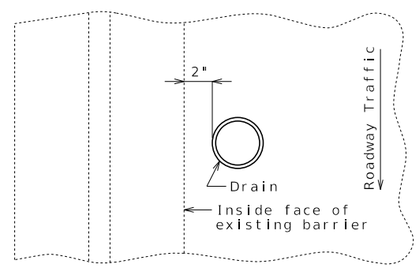

PART PLAN OF SLAB AT DRAIN

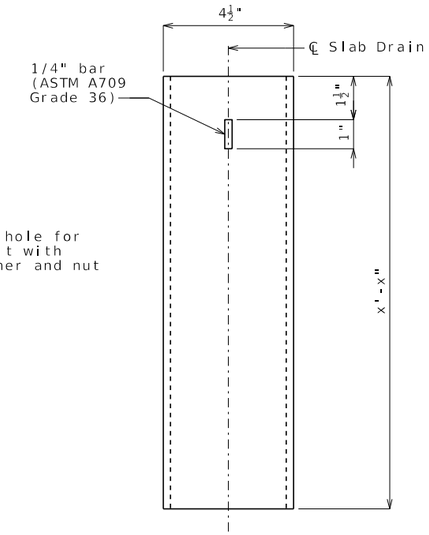

ELEVATION OF DRAIN

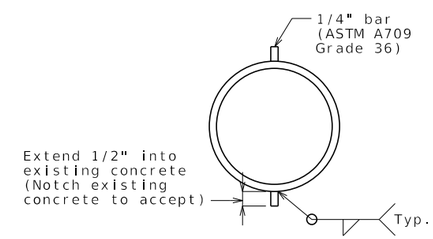

PLAN OF DRAIN

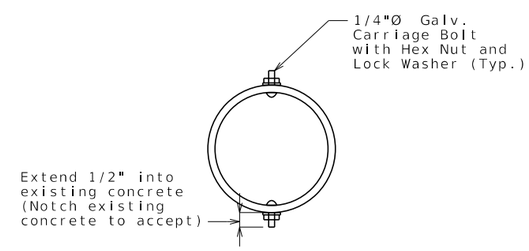

PLAN OF OPTIONAL FRP DRAIN

ANCHOR TO EXISTING SLAB, STEEL GIRDER

(Based on A02015 & A46301)

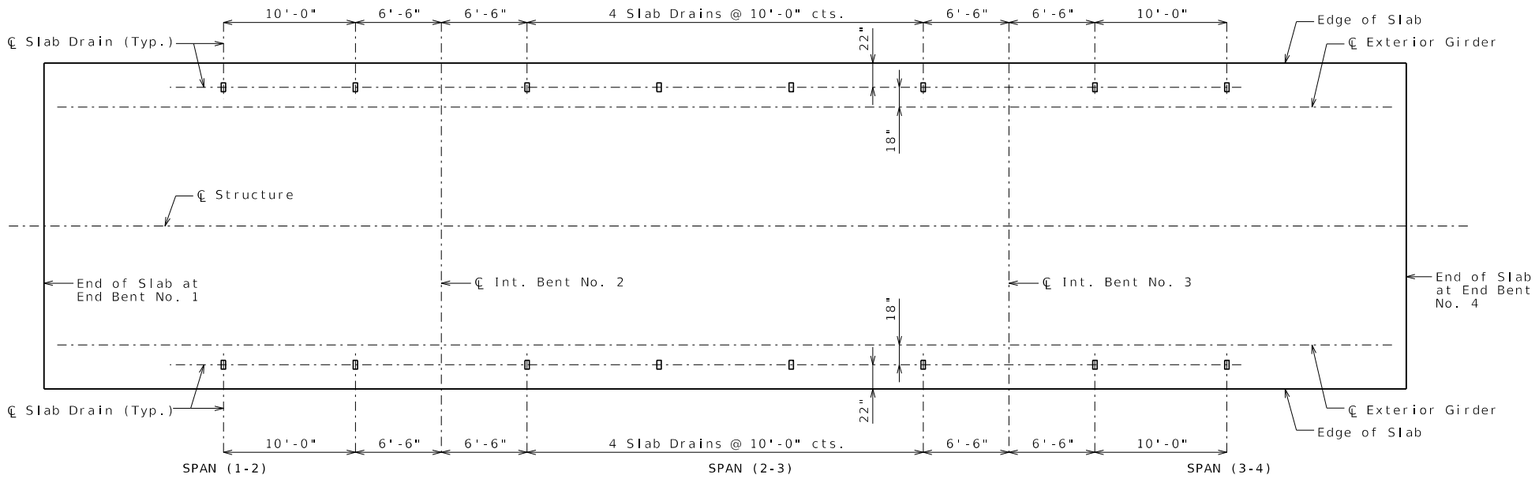

PLAN OF SLAB SHOWING SLAB DRAIN LOCATIONS

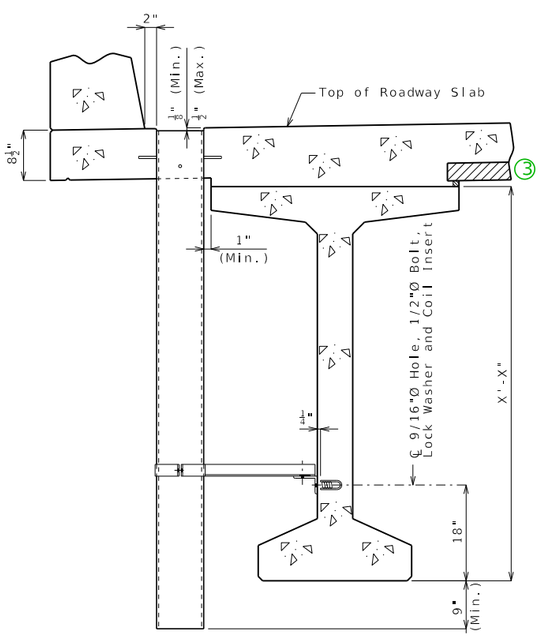

PART SECTION NEAR DRAIN

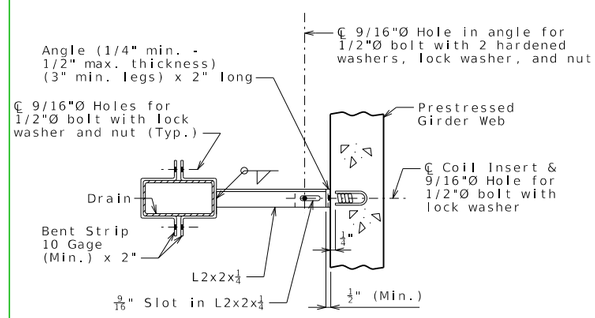

PART SECTION SHOWING BRACKET ASSEMBLY

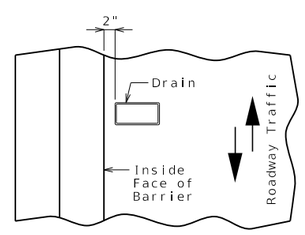

PART PLAN OF SLAB AT DRAIN

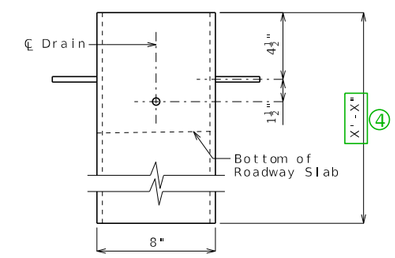

ELEVATION OF DRAIN

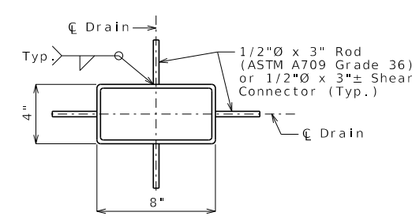

PLAN OF STEEL DRAIN OPTION

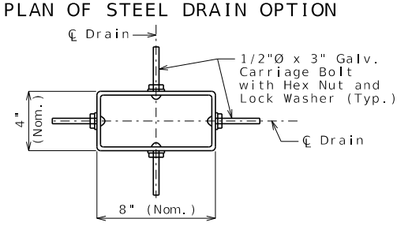

PLAN OF FRP DRAIN OPTION

SLAB DRAINS

General Notes:

Contractor shall have the option to construct either steel or FRP slab drains. All drains shall be of same type.

Slab drain bracket assembly shall be ASTM A709 Grade 36 steel.

Locate drains in slab by dimensions shown in Part Section Near Drain.

Reinforcing steel shall be shifted to clear drains.

The coil inserts and bracket assembly shall be galvanized in accordance with ASTM A123.

All bolts, hardened washers, lock washers and nuts shall be galvanized in accordance with ASTM F2329.

All 1/2"Ø bolts shall be ASTM A307.

Shop drawings will not be required for the slab drains and the bracket assembly.

The coil insert required for the bracket assembly attachment shall be located on the prestressed girder shop drawings.

Coil inserts shall have a concrete pull-out strength (ultimate load) of at least 2,500 pounds in 5,000 psi concrete.

The bolt required to attach the slab drain bracket assembly to the prestressed girder web shall be supplied by the prestressed girder fabricator.

Notes for Steel Drain:

Slab drains may be fabricated of either 1/4" welded sheets of ASTM A709 Grade 36 steel or from 1/4" structural steel tubing ASTM A500 or A501.

Outside dimensions of drains are 8" x 4".

The drains shall be galvanized in accordance with ASTM A123.

Notes for FRP Drain:

Drains shall be machine filament-wound thermosetting resin tubing meeting the requirements of ASTM D2996 with the following exceptions:

Shape of drains shall be rectangular with outside nominal dimensions of 8" x 4".

Minimum reinforced wall thickness shall be 1/4 inch.

The resin used shall be ultraviolet (UV) resistant and/or have UV inhibitors mixed throughout. Drains may have an exterior coating for additional UV resistance.

The color of the slab drain shall be gray (Federal Standard #26373). The color shall be uniform throughout the resin and any coating used.

The combination of materials used in the manufacture of the drains shall be tested for UV resistance in accordance with ASTM D4329 Cycle A. The representative material shall withstand at least 500 hours of testing with only minor discoloration and without any physical deterioration. The contractor shall furnish the results of the required ultraviolet testing prior to acceptance of the slab drains.

At the contractor's option, drains may be field cut. The method of cutting FRP slab drain shall be as recommended by the manufacturer to ensure a smooth, chip free cut.

DATE PREPARED	
5/12/2026	
ROUTE	STATE MO
DISTRICT	SHEET NO. 1
COUNTY	
JOB NO.	
CONTRACT ID.	
PROJECT NO.	
BRIDGE NO.	

DESCRIPTION	DATE

MISSOURI HIGHWAYS AND TRANSPORTATION COMMISSION
105 WEST CAPITOL
JEFFERSON CITY, MO 65102
1-888-ASK-MODOT (1-888-275-6636)

Standard Drawing Guidance (do not show on plans):

① Replace example Plan of Slab Showing Slab Drain Locations with actual plan.

② Details shown inside the sheet border are for drains transverse to roadway requiring a cantilever 4 feet or more. Use the below details for drains parallel to roadway requiring a cantilever 3'-8" or more.

③ Delete panels for CIP slab.

④ Total drain length is equal to 9" + maximum girder and haunch + slab thickness, rounded UP to the next whole inch.

Alternate details for Type B barrier (SBC):

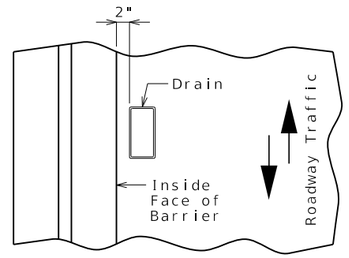

PART PLAN OF SLAB AT DRAIN

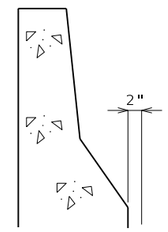

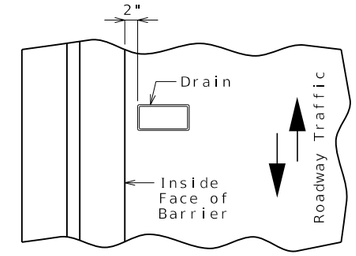

PART PLAN OF SLAB AT DRAIN

②

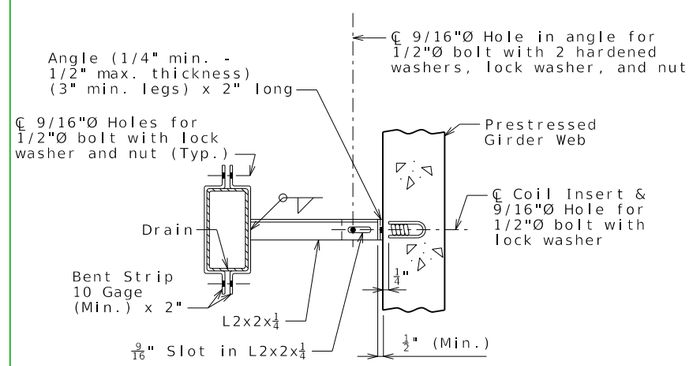

PART SECTION SHOWING BRACKET ASSEMBLY

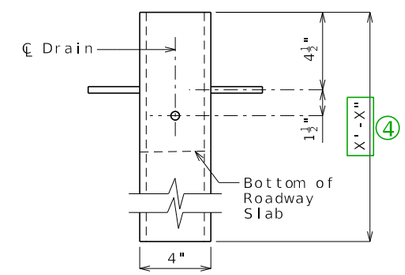

ELEVATION OF DRAIN

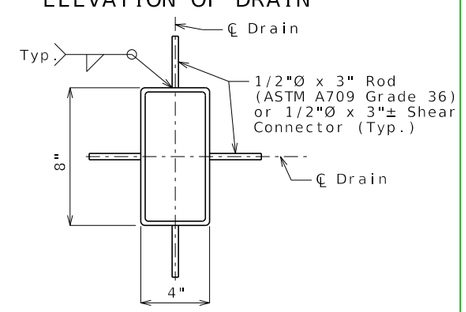

PLAN OF STEEL DRAIN OPTION

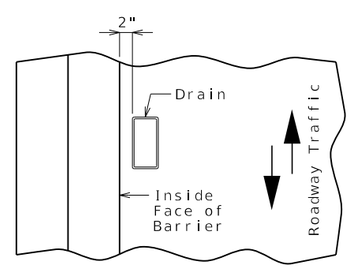

PART PLAN OF SLAB AT DRAIN

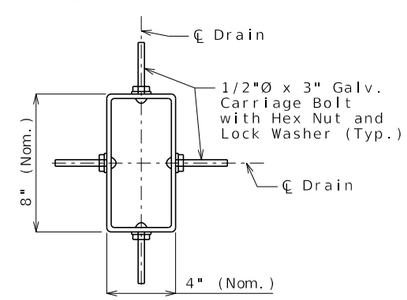

PLAN OF FRP DRAIN OPTION

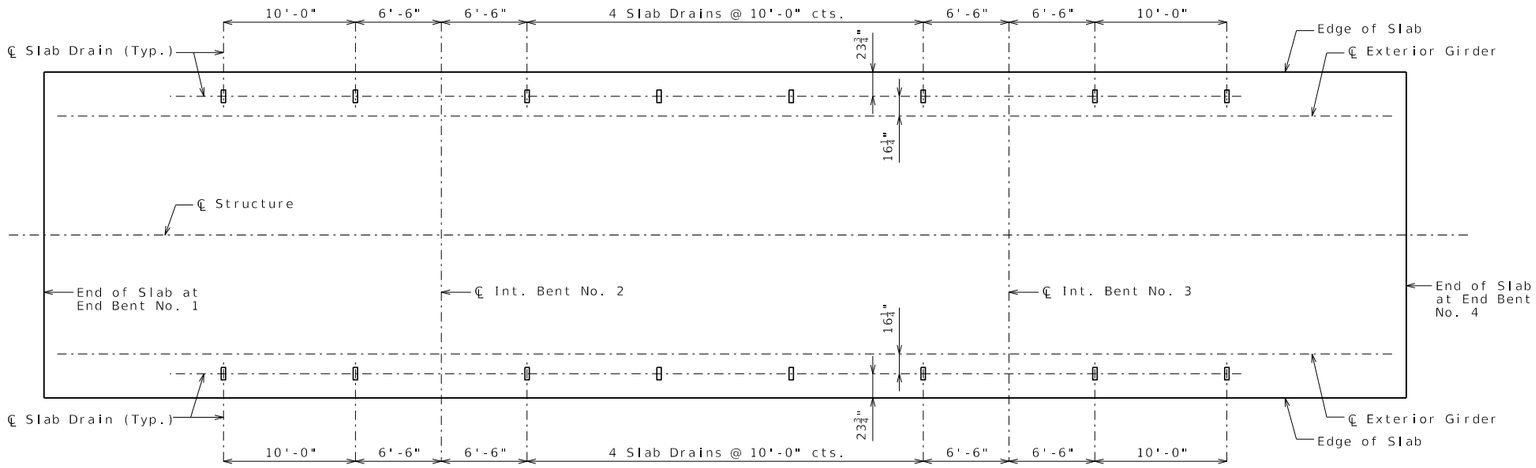

PLAN OF SLAB SHOWING SLAB DRAIN LOCATIONS

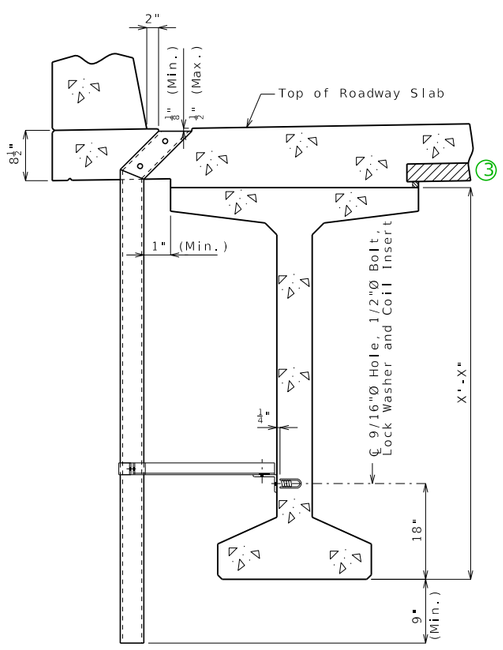

PART SECTION NEAR DRAIN

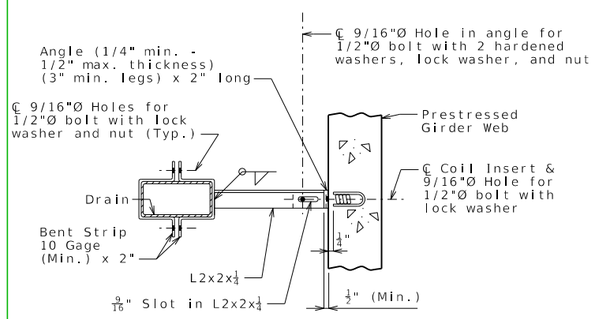

PART SECTION SHOWING BRACKET ASSEMBLY

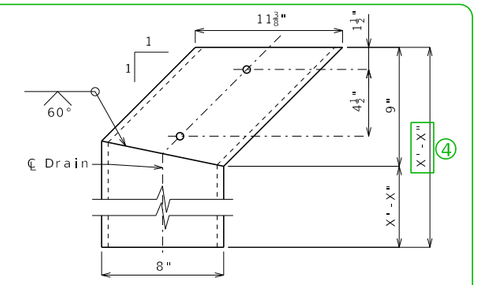

ELEVATION OF DRAIN

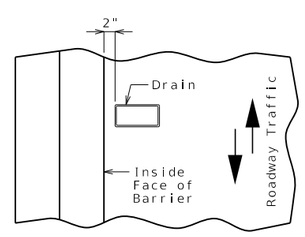

PART PLAN OF SLAB AT DRAIN

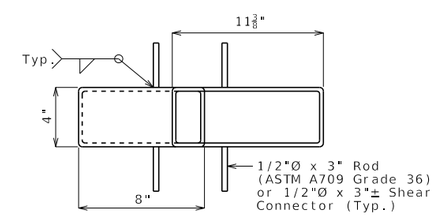

PLAN OF STEEL DRAIN OPTION

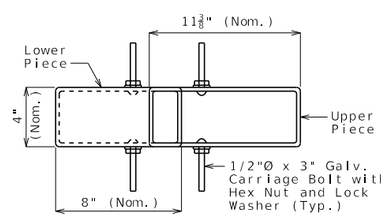

PLAN OF FRP DRAIN OPTION

SLAB DRAINS

General Notes:

Contractor shall have the option to construct either steel or FRP slab drains. All drains shall be of same type.

Slab drain bracket assembly shall be ASTM A709 Grade 36 steel.

Locate drains in slab by dimensions shown in Part Section Near Drain.

Reinforcing steel shall be shifted to clear drains.

The coil inserts and bracket assembly shall be galvanized in accordance with ASTM A123.

All bolts, hardened washers, lock washers and nuts shall be galvanized in accordance with ASTM F2329.

All 1/2"Ø bolts shall be ASTM A307.

Shop drawings will not be required for the slab drains and the bracket assembly.

The coil insert required for the bracket assembly attachment shall be located on the prestressed girder shop drawings.

Coil inserts shall have a concrete pull-out strength (ultimate load) of at least 2,500 pounds in 5,000 psi concrete.

The bolt required to attach the slab drain bracket assembly to the prestressed girder web shall be supplied by the prestressed girder fabricator.

Notes for Steel Drain:

Slab drains may be fabricated of either 1/4" welded sheets of ASTM A709 Grade 36 steel or from 1/4" structural steel tubing ASTM A500 or A501.

Outside dimensions of drains are 8" x 4".

The drains shall be galvanized in accordance with ASTM A123.

Notes for FRP Drain:

Drains shall be machine filament-wound thermosetting resin tubing meeting the requirements of ASTM D2996 with the following exceptions:

Shape of drains shall be rectangular with outside nominal dimensions of 8" x 4".

Minimum reinforced wall thickness shall be 1/4 inch.

The resin used shall be ultraviolet (UV) resistant and/or have UV inhibitors mixed throughout. Drains may have an exterior coating for additional UV resistance.

The color of the slab drain shall be gray (Federal Standard #26373). The color shall be uniform throughout the resin and any coating used.

The combination of materials used in the manufacture of the drains shall be tested for UV resistance in accordance with ASTM D4329 Cycle A. The representative material shall withstand at least 500 hours of testing with only minor discoloration and without any physical deterioration. The contractor shall furnish the results of the required ultraviolet testing prior to acceptance of the slab drains.

At the contractor's option, drains may be field cut. The method of cutting FRP slab drain shall be as recommended by the manufacturer to ensure a smooth, chip free cut.

Both upper and lower drain pieces shall be rigidly connected to each other. Drain flow shall not be obstructed. Approval of the engineer is required.

DATE PREPARED	5/12/2026
ROUTE	STATE MO
DISTRICT	SHEET NO. 2
COUNTY	
JOB NO.	
CONTRACT ID.	
PROJECT NO.	
BRIDGE NO.	

DATE	DESCRIPTION

MISSOURI HIGHWAYS AND TRANSPORTATION COMMISSION
105 WEST CAPITOL
JEFFERSON CITY, MO 65102
1-888-ASK-MODOT (1-888-275-6636)

Detailed
Checked

Note: This drawing is not to scale. Follow dimensions.

S_DRA02_psbt_angle Guidance & Alternate Details

Standard Drawing Guidance (do not show on plans):

① Replace example Plan of Slab Showing Slab Drain Locations with actual plan.

② Details shown inside the sheet border are for drains transverse to roadway requiring a cantilever 4 feet or more. Use the below details for drains parallel to roadway requiring a cantilever 3'-8" or more.

③ Delete panels for CIP slab.

④ Total drain length is equal to 9" + maximum girder and haunch + slab thickness, rounded UP to the next whole inch.

Alternate details for Type B barrier (SBC):

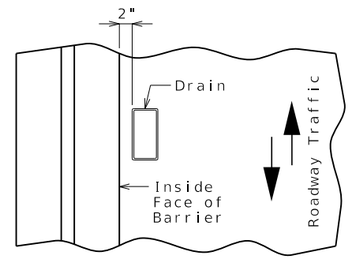

PART PLAN OF SLAB AT DRAIN

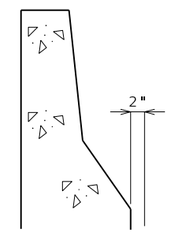

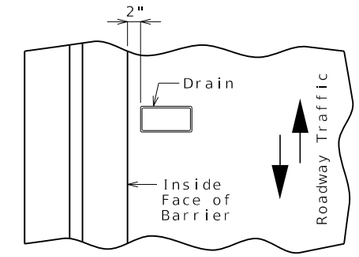

PART PLAN OF SLAB AT DRAIN

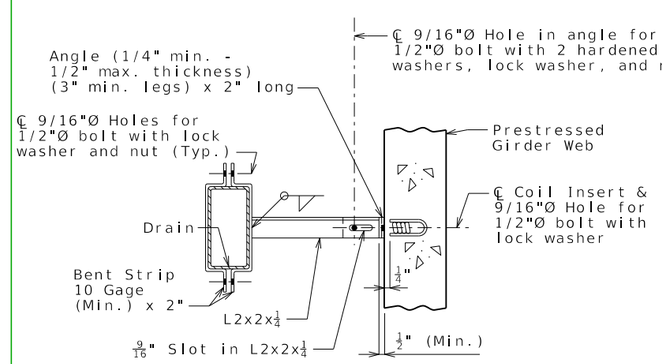

PART SECTION SHOWING BRACKET ASSEMBLY

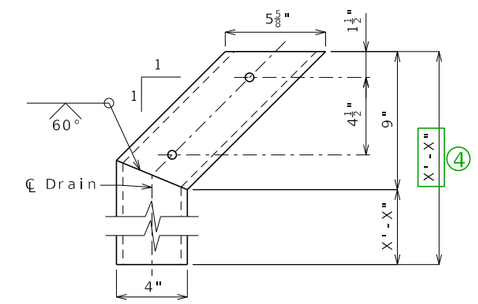

ELEVATION OF DRAIN

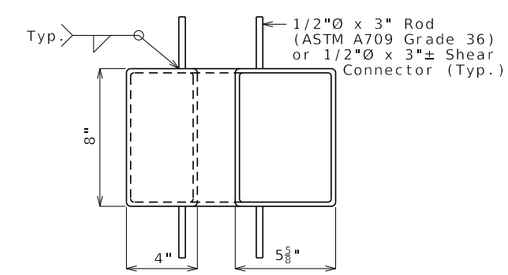

PLAN OF STEEL DRAIN OPTION

②

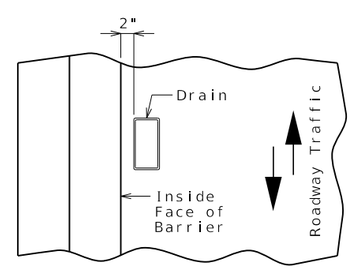

PART PLAN OF SLAB AT DRAIN

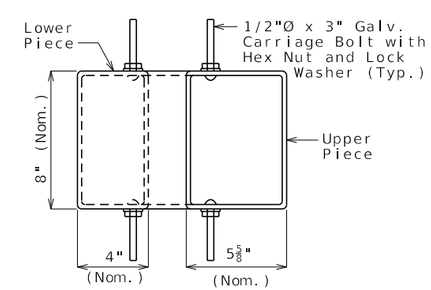

PLAN OF FRP DRAIN OPTION

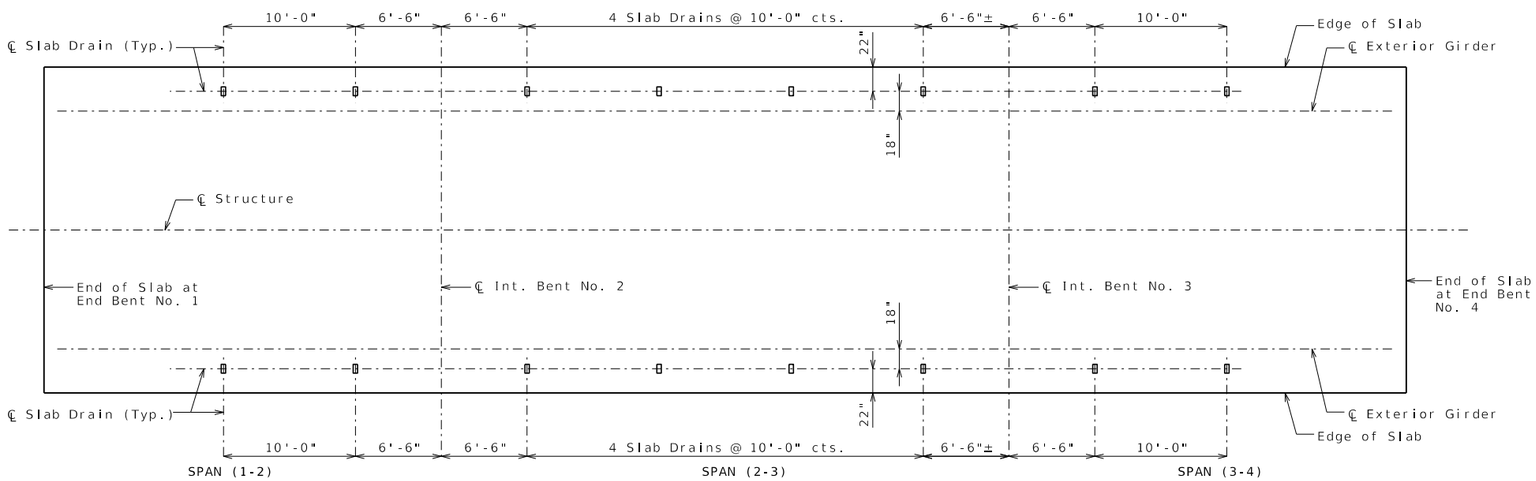

PLAN OF SLAB SHOWING SLAB DRAIN LOCATIONS

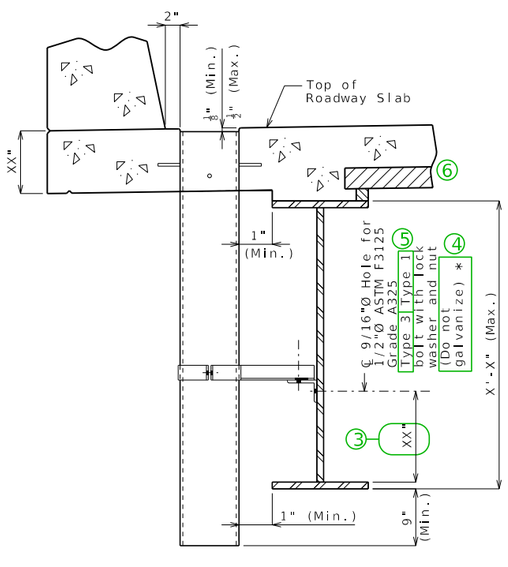

PART SECTION NEAR DRAIN

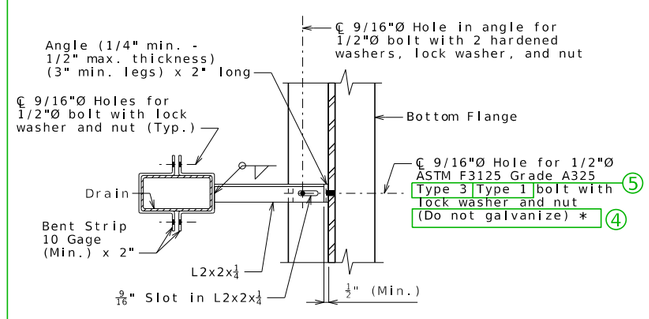

PART SECTION SHOWING BRACKET ASSEMBLY

* See Sec 1080.4 4

2

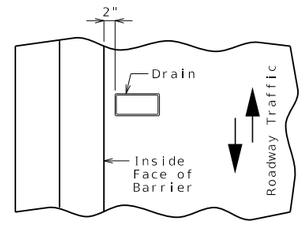

PART PLAN OF SLAB AT DRAIN

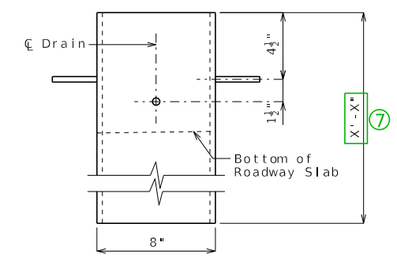

ELEVATION OF DRAIN

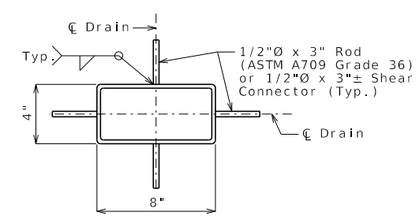

PLAN OF STEEL DRAIN OPTION

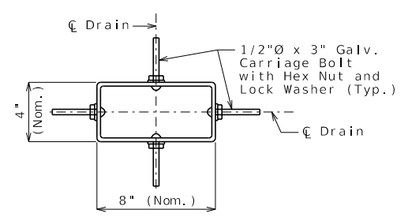

PLAN OF FRP DRAIN OPTION

SLAB DRAINS

General Notes:

1

Contractor shall have the option to construct either steel or FRP slab drains. All drains shall be of same type.

Slab drain bracket assembly shall be ASTM A709 Grade 36 steel.

Locate drains in slab by dimensions shown in Part Section Near Drain.

Reinforcing steel shall be shifted to clear drains.

The bracket assembly shall be galvanized in accordance with ASTM A123.

All bolts, hardened washers, lock washers and nuts shall be galvanized in accordance with ASTM F2329, except as shown. 4

All 1/2-inch diameter bolts shall be ASTM A307, except as shown.

Shop drawings will not be required for the slab drains and the bracket assembly.

The bolt hole for the bracket assembly attachment shall be located on the plate girder shop drawings.

4 The galvanized surfaces of drain support brackets shall be prepared according to the coating manufacturer's recommendation and field coated with a gray epoxy-mastic primer (non-aluminum) within a distance of 6 inches from the point of connection to the weathering steel structure.

Notes for Steel Drain:

Slab drains may be fabricated of either 1/4-inch welded sheets of ASTM A709 Grade 36 steel or from 1/4-inch structural steel tubing ASTM A500 or A501.

Outside dimensions of drains are 8" x 4".

The drains shall be galvanized in accordance with ASTM A123.

Notes for FRP Drain:

Drains shall be machine filament-wound thermosetting resin tubing meeting the requirements of ASTM D2996 with the following exceptions:

Shape of drains shall be rectangular with outside nominal dimensions of 8" x 4".

Minimum reinforced wall thickness shall be 1/4 inch.

The resin used shall be ultraviolet (UV) resistant and/or have UV inhibitors mixed throughout. Drains may have an exterior coating for additional UV resistance.

The color of the slab drain shall be gray (Federal Standard #26373). The color shall be uniform throughout the resin and any coating used.

The combination of materials used in the manufacture of the drains shall be tested for UV resistance in accordance with ASTM D4329 Cycle A. The representative material shall withstand at least 500 hours of testing with only minor discoloration and without any physical deterioration. The contractor shall furnish the results of the required ultraviolet testing prior to acceptance of the slab drains.

At the contractor's option, drains may be field cut. The method of cutting FRP slab drain shall be as recommended by the manufacturer to ensure a smooth, chip free cut.

DATE PREPARED	
5/12/2026	
ROUTE	STATE MO
DISTRICT	SHEET NO. SDRA03
COUNTY	
JOB NO.	
CONTRACT ID.	
PROJECT NO.	
BRIDGE NO.	

DATE	DESCRIPTION

MISSOURI HIGHWAYS AND TRANSPORTATION COMMISSION
105 WEST CAPITOL
JEFFERSON CITY, MO 65102
1-888-ASK-MODOT (1-888-275-6636)

S_DRA03_steel Guidance & Alternate Details

Standard Drawing Guidance (do not show on plans):

① Replace example Plan of Slab Showing Slab Drain Locations with actual plan.

② Details shown inside the sheet border are for drains transverse to roadway.
Use the below details for drains parallel to roadway.

③ Use 1/6 of web depth.

④ Use with weathering steel. Delete for painted or galvanized steel.

⑤ Type 3 for weathering steel; Type 1 for painted or galvanized steel.

⑥ Delete panel for CIP slab.

⑦ Total drain length is equal to 9" + maximum girder and haunch + slab thickness, rounded UP to the next whole inch.

Alternate details for Type B barrier (SBC):

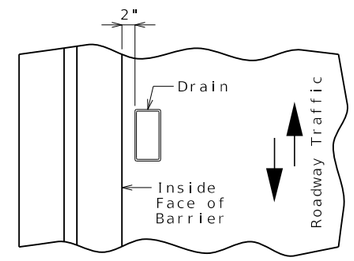

PART PLAN OF SLAB AT DRAIN

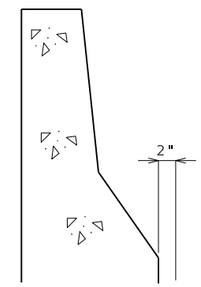

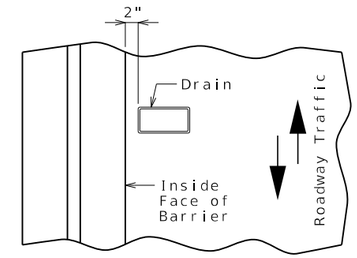

PART PLAN OF SLAB AT DRAIN

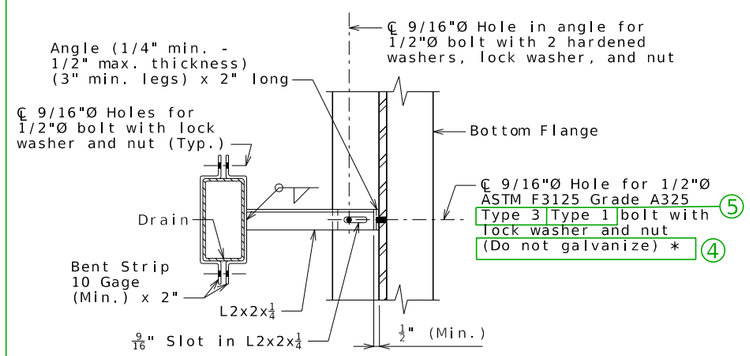

PART SECTION SHOWING BRACKET ASSEMBLY

* See Sec 1080.4 ④

②

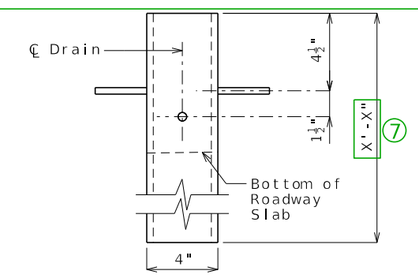

ELEVATION OF DRAIN

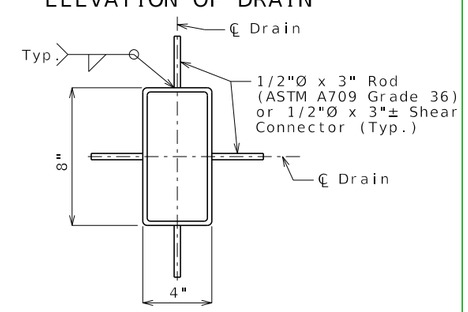

PLAN OF STEEL DRAIN OPTION

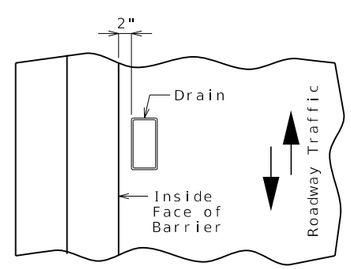

PART PLAN OF SLAB AT DRAIN

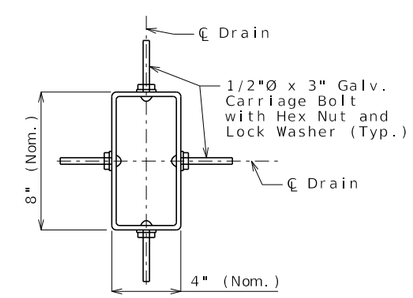

PLAN OF FRP DRAIN OPTION

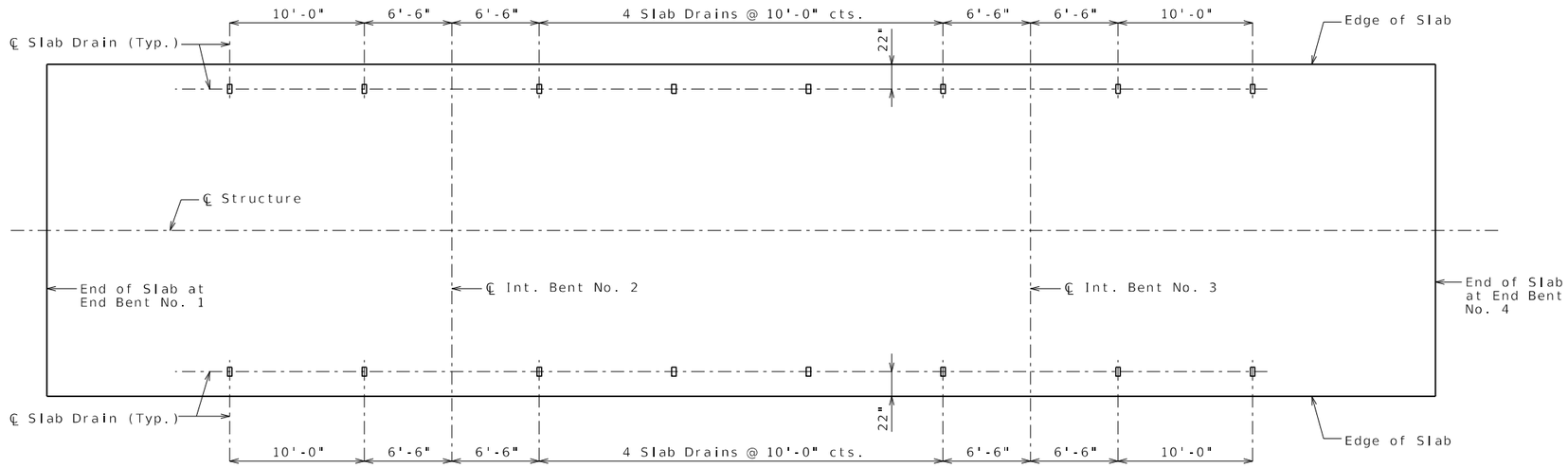

PLAN OF SLAB SHOWING SLAB DRAIN LOCATIONS

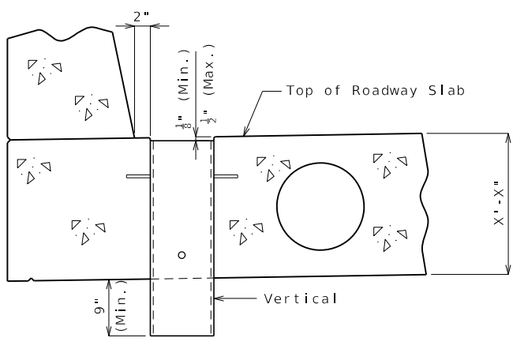

PART SECTION NEAR DRAIN

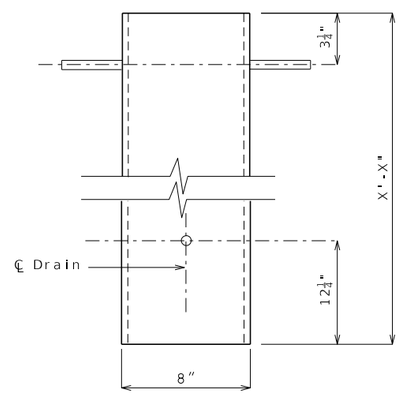

ELEVATION OF DRAIN

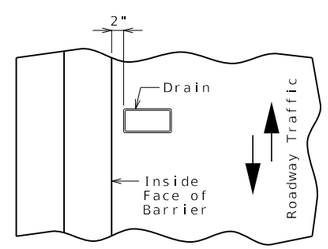

PART PLAN OF SLAB AT DRAIN

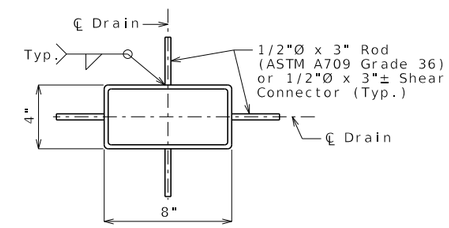

PLAN OF STEEL DRAIN OPTION

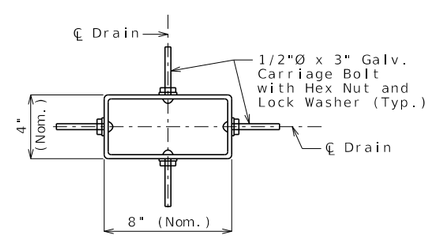

PLAN OF FRP DRAIN OPTION

SLAB DRAINS

General Notes:

Contractor shall have the option to construct either steel or FRP slab drains. All drains shall be of same type.

Locate drains in slab by dimensions shown in Part Section Near Drain.

Reinforcing steel shall be shifted to clear drains.

Shop drawings will not be required for the slab drains.

Notes for Steel Drain:

Slab drains may be fabricated of either 1/4" welded sheets of ASTM A709 Grade 36 steel or from 1/4" structural steel tubing ASTM A500 or A501.

Outside dimensions of drains are 8" x 4".

The drains shall be galvanized in accordance with ASTM A123.

Notes for FRP Drain:

Drains shall be machine filament-wound thermosetting resin tubing meeting the requirements of ASTM D2996 with the following exceptions:

Shape of drains shall be rectangular with outside nominal dimensions of 8" x 4".

Minimum reinforced wall thickness shall be 1/4 inch.

The resin used shall be ultraviolet (UV) resistant and/or have UV inhibitors mixed throughout. Drains may have an exterior coating for additional UV resistance.

The color of the slab drain shall be gray (Federal Standard 26373). The color shall be uniform throughout the resin and any coating used.

The combination of materials used in the manufacture of the drains shall be tested for UV resistance in accordance with ASTM D4329 Cycle A. The representative material shall withstand at least 500 hours of testing with only minor discoloration and without any physical deterioration. The contractor shall furnish the results of the required ultraviolet testing prior to acceptance of the slab drains.

At the contractor's option, drains may be field cut. The method of cutting FRP slab drain shall be as recommended by the manufacturer to ensure a smooth, chip free cut.

DATE PREPARED	10/17/2023
ROUTE	STATE MO
DISTRICT	SHEET NO. 4
COUNTY	
JOB NO.	
CONTRACT ID.	
PROJECT NO.	
BRIDGE NO.	

DATE	DESCRIPTION

MISSOURI HIGHWAYS AND TRANSPORTATION COMMISSION
105 WEST CAPITOL
JEFFERSON CITY, MO 65102
1-888-ASK-MODOT (1-888-275-6636)

Detailed
Checked

Note: This drawing is not to scale. Follow dimensions.

Sheet No. of

S_DRA04_vslab Guidance & Alternate Details

Standard Drawing Guidance (do not show on plans):

① Replace example Plan of Slab Showing Slab Drain Locations with actual plan.

② Details shown inside the sheet border are for drains transverse to roadway.
Use the below details for drains parallel to roadway.

Alternate details for Type B barrier (SBC):

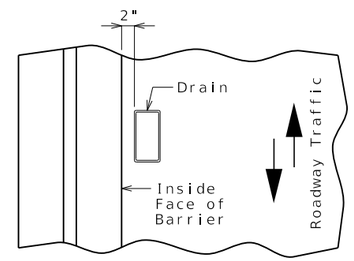

PART PLAN OF SLAB AT DRAIN

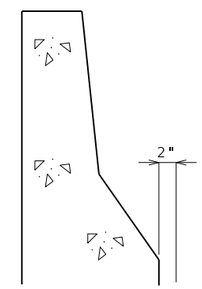

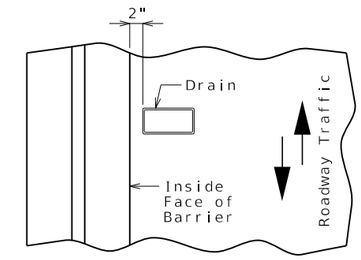

PART PLAN OF SLAB AT DRAIN

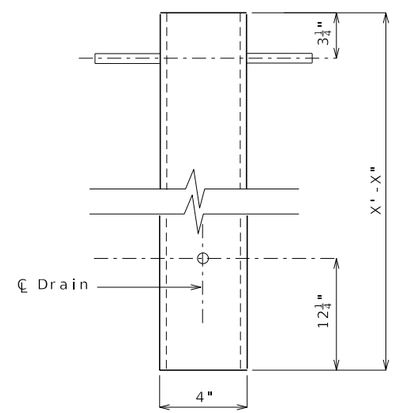

ELEVATION OF DRAIN

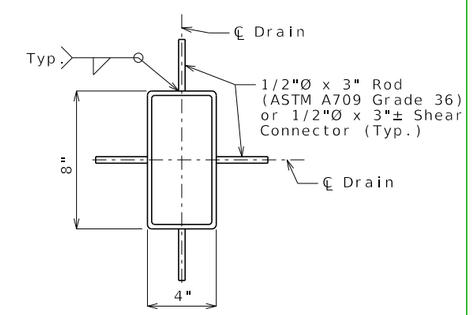

PLAN OF STEEL DRAIN OPTION

②

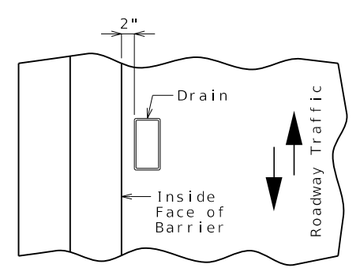

PART PLAN OF SLAB AT DRAIN

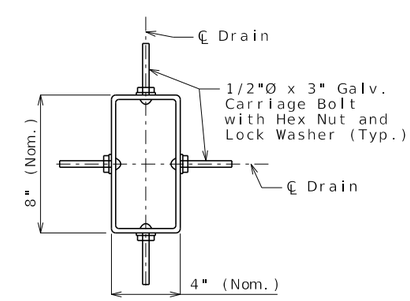

PLAN OF FRP DRAIN OPTION

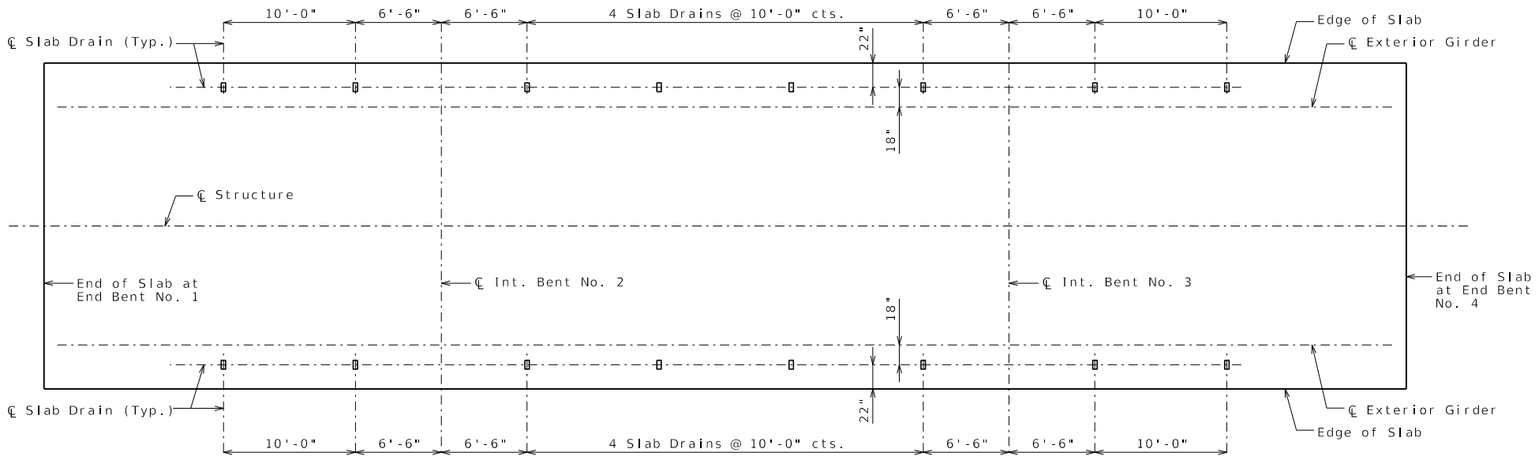

PLAN OF SLAB SHOWING SLAB DRAIN LOCATIONS

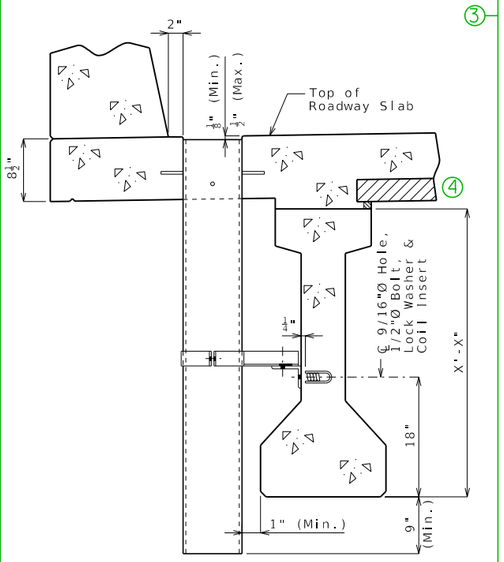

PART SECTION NEAR DRAIN

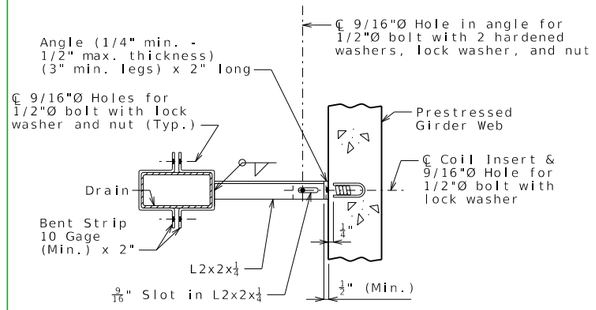

PART SECTION SHOWING BRACKET ASSEMBLY

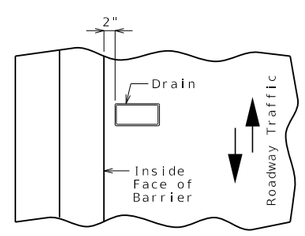

PART PLAN OF SLAB AT DRAIN

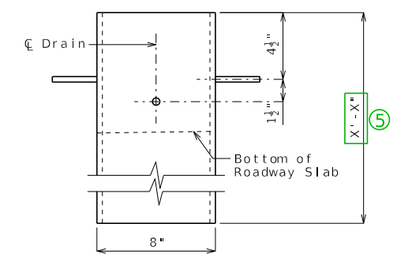

ELEVATION OF DRAIN

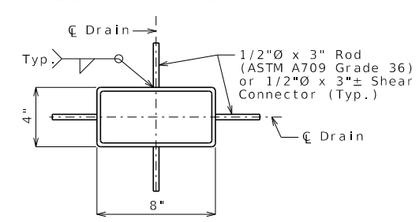

PLAN OF STEEL DRAIN OPTION

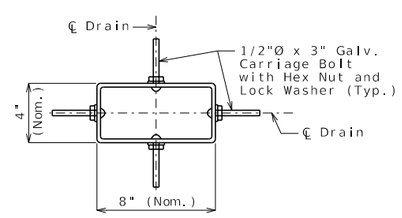

PLAN OF FRP DRAIN OPTION

SLAB DRAINS

General Notes:

Contractor shall have the option to construct either steel or FRP slab drains. All drains shall be of same type.

Slab drain bracket assembly shall be ASTM A709 Grade 36 steel.

Locate drains in slab by dimensions shown in Part Section Near Drain.

Reinforcing steel shall be shifted to clear drains.

The coil inserts and bracket assembly shall be galvanized in accordance with ASTM A123.

All bolts, hardened washers, lock washers and nuts shall be galvanized in accordance with ASTM F2329.

All 1/2"Ø bolts shall be ASTM A307.

Shop drawings will not be required for the slab drains and the bracket assembly.

The coil insert required for the bracket assembly attachment shall be located on the prestressed girder shop drawings.

Coil inserts shall have a concrete pull-out strength (ultimate load) of at least 2,500 pounds in 5,000 psi concrete.

The bolt required to attach the slab drain bracket assembly to the prestressed girder web shall be supplied by the prestressed girder fabricator.

Notes for Steel Drain:

Slab drains may be fabricated of either 1/4" welded sheets of ASTM A709 Grade 36 steel or from 1/4" structural steel tubing ASTM A500 or A501.

Outside dimensions of drains are 8" x 4".

The drains shall be galvanized in accordance with ASTM A123.

Notes for FRP Drain:

Drains shall be machine filament-wound thermosetting resin tubing meeting the requirements of ASTM D2996 with the following exceptions:

Shape of drains shall be rectangular with outside nominal dimensions of 8" x 4".

Minimum reinforced wall thickness shall be 1/4 inch.

The resin used shall be ultraviolet (UV) resistant and/or have UV inhibitors mixed throughout. Drains may have an exterior coating for additional UV resistance.

The color of the slab drain shall be gray (Federal Standard #26373). The color shall be uniform throughout the resin and any coating used.

The combination of materials used in the manufacture of the drains shall be tested for UV resistance in accordance with ASTM D4329 Cycle A. The representative material shall withstand at least 500 hours of testing with only minor discoloration and without any physical deterioration. The contractor shall furnish the results of the required ultraviolet testing prior to acceptance of the slab drains.

At the contractor's option, drains may be field cut. The method of cutting FRP slab drain shall be as recommended by the manufacturer to ensure a smooth, chip free cut.

DATE PREPARED	
5/12/2026	
ROUTE	STATE MO
DISTRICT	SHEET NO. 5
COUNTY	
JOB NO.	
CONTRACT ID.	
PROJECT NO.	
BRIDGE NO.	

DESCRIPTION	DATE

MISSOURI HIGHWAYS AND TRANSPORTATION COMMISSION
105 WEST CAPITOL
JEFFERSON CITY, MO 65102
1-888-ASK-MODOT (1-888-275-6636)

Detailed
Checked

Note: This drawing is not to scale. Follow dimensions.

Sheet No. of

Standard Drawing Guidance (do not show on plans):

① Replace example Plan of Slab Showing Slab Drain Locations with actual plan.

② Details shown inside the sheet border are for drains transverse to roadway requiring a cantilever of at least 2'-9 1/2" for Type 2, 3 & 4 and at least 3'-3" for Type 6. Use the below details for drains parallel to roadway requiring a cantilever of at least 2'-5 1/2" for Type 2, 3 & 4 and at least 2'-11" for Type 6.

③ Details shown inside the sheet border are for Type 2, 3 & 4 girders. Use the below left details for Type 6 girders.

④ Delete panel for CIP slab.

⑤ Total drain length is equal to 9" + maximum girder and haunch + slab thickness, rounded UP to the next whole inch.

Alternate details for Type B barrier (SBC):

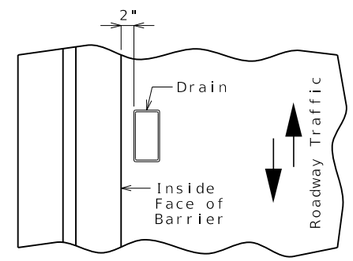

PART PLAN OF SLAB AT DRAIN

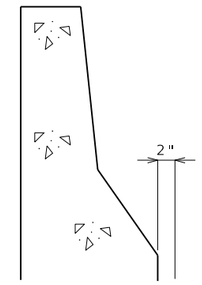

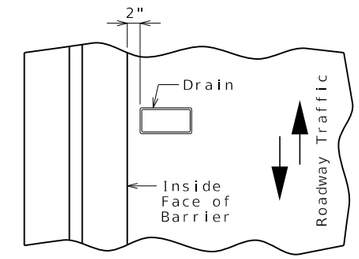

PART PLAN OF SLAB AT DRAIN

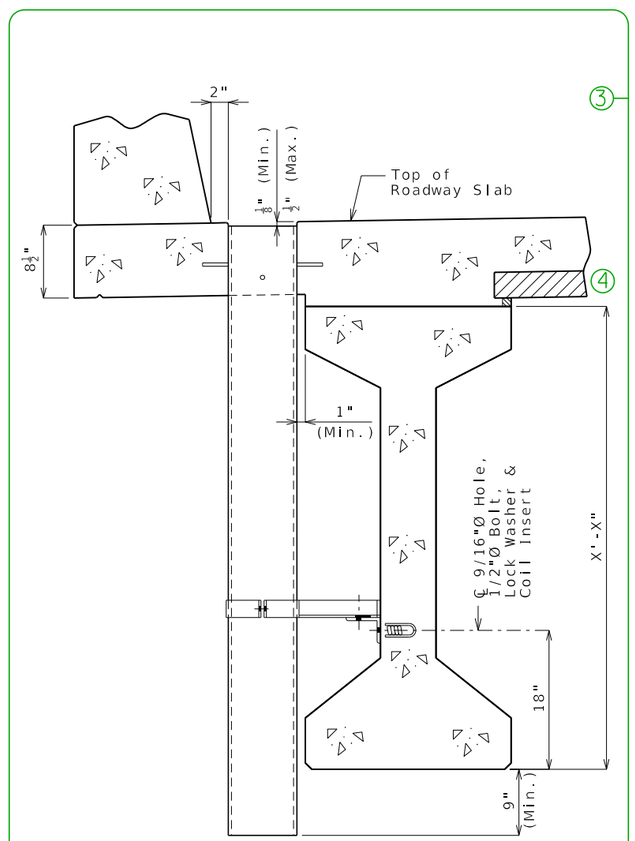

PART SECTION NEAR DRAIN

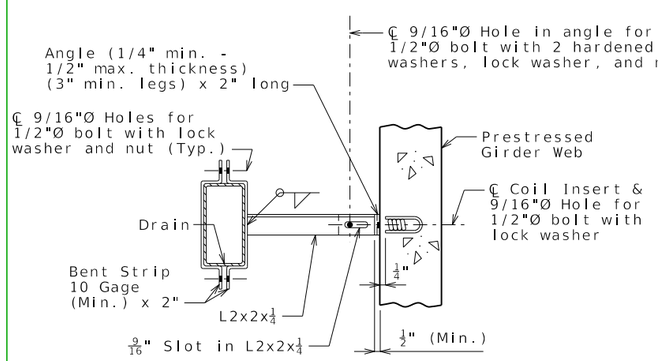

PART SECTION SHOWING BRACKET ASSEMBLY

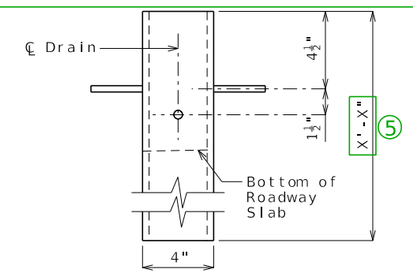

ELEVATION OF DRAIN

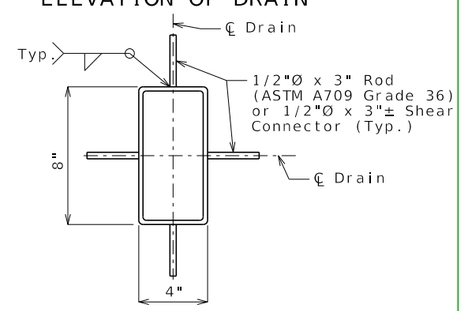

PLAN OF STEEL DRAIN OPTION

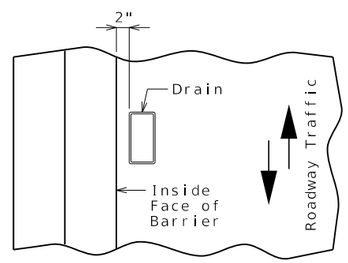

PART PLAN OF SLAB AT DRAIN

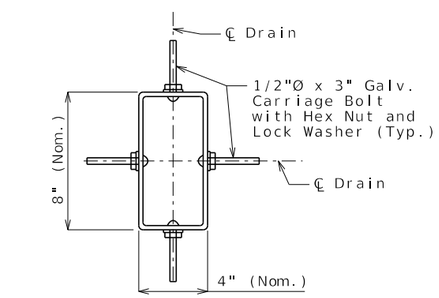

PLAN OF FRP DRAIN OPTION

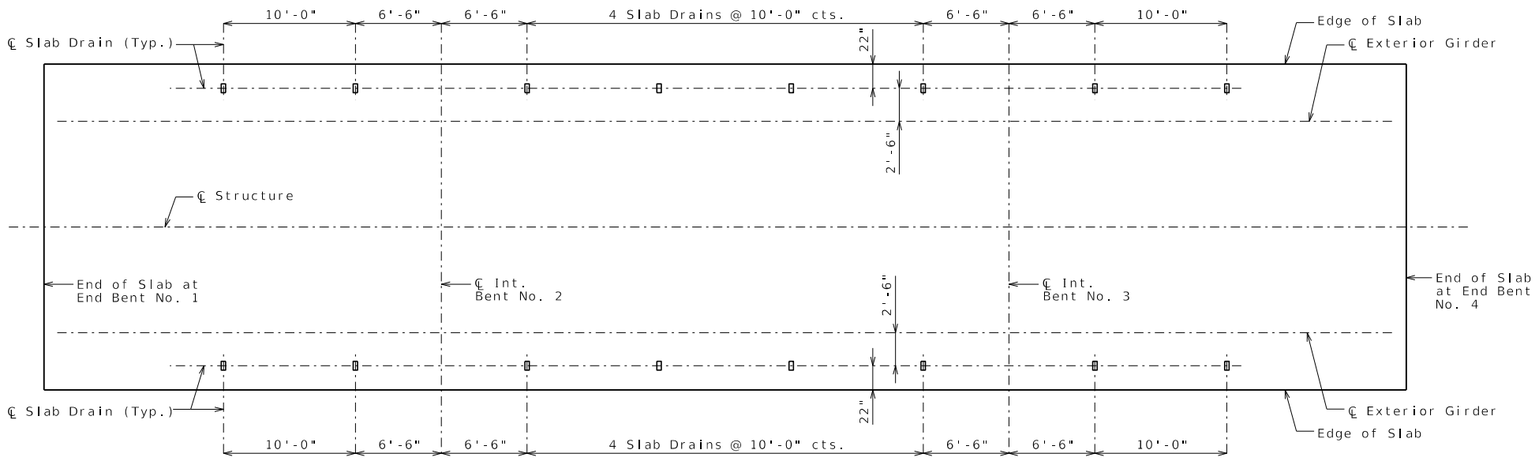

PLAN OF SLAB SHOWING SLAB DRAIN LOCATIONS

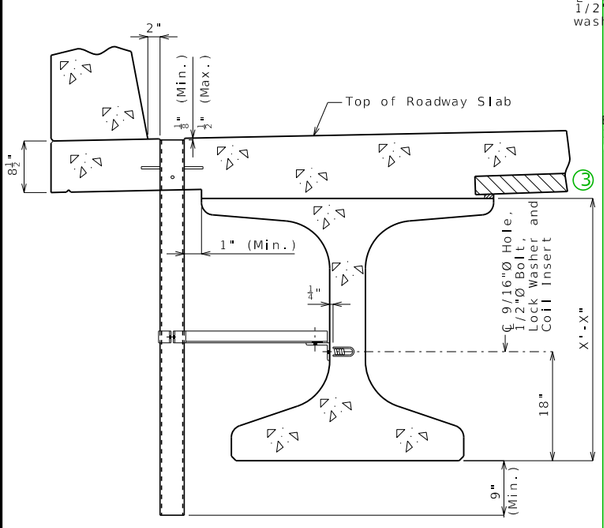

PART SECTION NEAR DRAIN

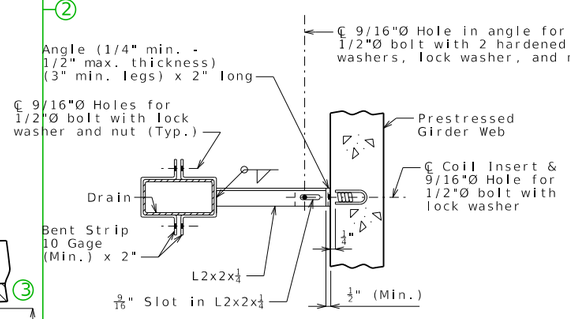

PART SECTION SHOWING BRACKET ASSEMBLY

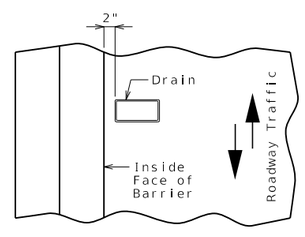

PART PLAN OF SLAB AT DRAIN

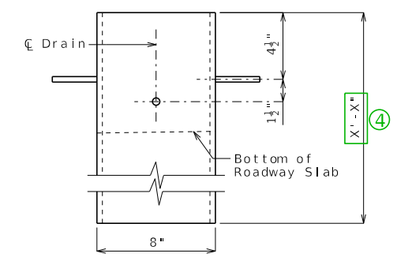

ELEVATION OF DRAIN

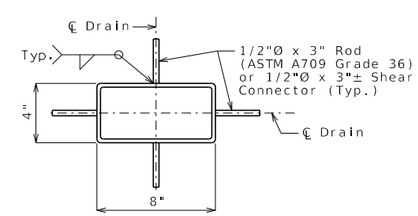

PLAN OF STEEL DRAIN OPTION

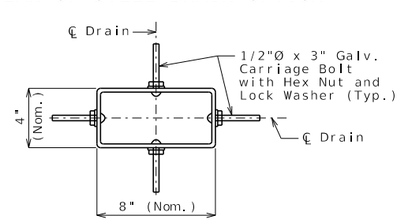

PLAN OF FRP DRAIN OPTION

SLAB DRAINS

General Notes:

Contractor shall have the option to construct either steel or FRP slab drains. All drains shall be of same type.

Slab drain bracket assembly shall be ASTM A709 Grade 36 steel.

Locate drains in slab by dimensions shown in Part Section Near Drain.

Reinforcing steel shall be shifted to clear drains.

The coil inserts and bracket assembly shall be galvanized in accordance with ASTM A123.

All bolts, hardened washers, lock washers and nuts shall be galvanized in accordance with ASTM F2329.

All 1/2"Ø bolts shall be ASTM A307.

Shop drawings will not be required for the slab drains and the bracket assembly.

The coil insert required for the bracket assembly attachment shall be located on the prestressed girder shop drawings.

Coil inserts shall have a concrete pull-out strength (ultimate load) of at least 2,500 pounds in 5,000 psi concrete.

The bolt required to attach the slab drain bracket assembly to the prestressed girder web shall be supplied by the prestressed girder fabricator.

Notes for Steel Drain:

Slab drains may be fabricated of either 1/4" welded sheets of ASTM A709 Grade 36 steel or from 1/4" structural steel tubing ASTM A500 or A501.

Outside dimensions of drains are 8" x 4".

The drains shall be galvanized in accordance with ASTM A123.

Notes for FRP Drain:

Drains shall be machine filament-wound thermosetting resin tubing meeting the requirements of ASTM D2996 with the following exceptions:

Shape of drains shall be rectangular with outside nominal dimensions of 8" x 4".

Minimum reinforced wall thickness shall be 1/4 inch.

The resin used shall be ultraviolet (UV) resistant and/or have UV inhibitors mixed throughout. Drains may have an exterior coating for additional UV resistance.

The color of the slab drain shall be gray (Federal Standard #26373). The color shall be uniform throughout the resin and any coating used.

The combination of materials used in the manufacture of the drains shall be tested for UV resistance in accordance with ASTM D4329 Cycle A. The representative material shall withstand at least 500 hours of testing with only minor discoloration and without any physical deterioration. The contractor shall furnish the results of the required ultraviolet testing prior to acceptance of the slab drains.

At the contractor's option, drains may be field cut. The method of cutting FRP slab drain shall be as recommended by the manufacturer to ensure a smooth, chip free cut.

DATE PREPARED	5/12/2026
ROUTE	STATE MO
DISTRICT	SHEET NO. 6
COUNTY	
JOB NO.	
CONTRACT ID.	
PROJECT NO.	
BRIDGE NO.	

DESCRIPTION	DATE

MISSOURI HIGHWAYS AND TRANSPORTATION COMMISSION
105 WEST CAPITOL
JEFFERSON CITY, MO 65102
1-888-ASK-MODOT (1-888-275-6636)

Detailed
Checked

Note: This drawing is not to scale. Follow dimensions.

Sheet No. of

Standard Drawing Guidance (do not show on plans):

① Replace example Plan of Slab Showing Slab Drain Locations with actual plan.

② Details shown inside the sheet border are for drains transverse to roadway requiring a cantilever 4 feet or more. Use the below details for drains parallel to roadway requiring a cantilever 3'-8" or more.

③ Delete panels for CIP slab.

④ Total drain length is equal to 9" + maximum girder and haunch + slab thickness, rounded UP to the next whole inch.

Alternate details for Type B barrier (SBC):

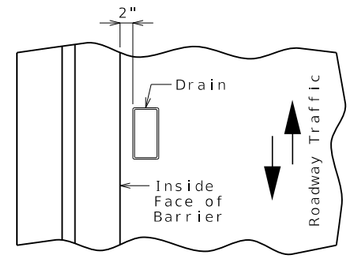

PART PLAN OF SLAB AT DRAIN

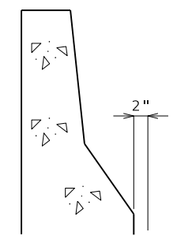

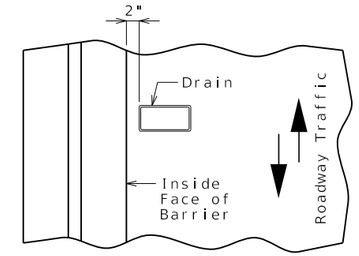

PART PLAN OF SLAB AT DRAIN

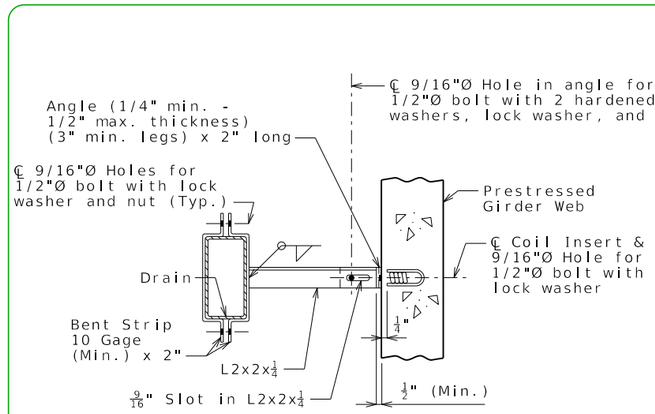

PART SECTION SHOWING BRACKET ASSEMBLY

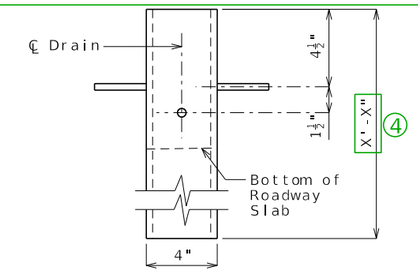

ELEVATION OF DRAIN

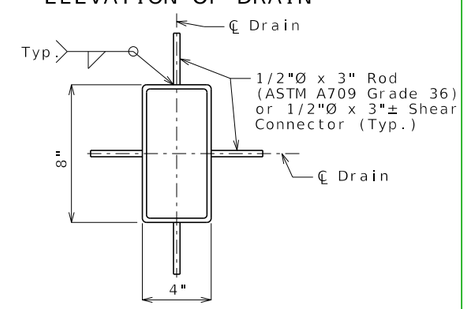

PLAN OF STEEL DRAIN OPTION

②

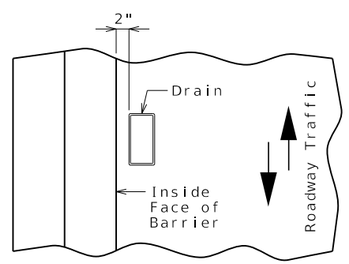

PART PLAN OF SLAB AT DRAIN

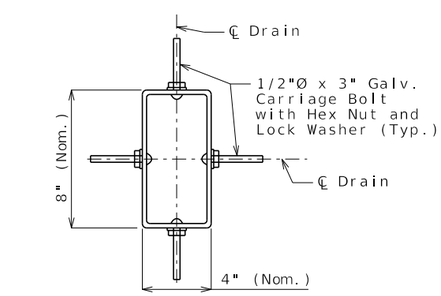

PLAN OF FRP DRAIN OPTION

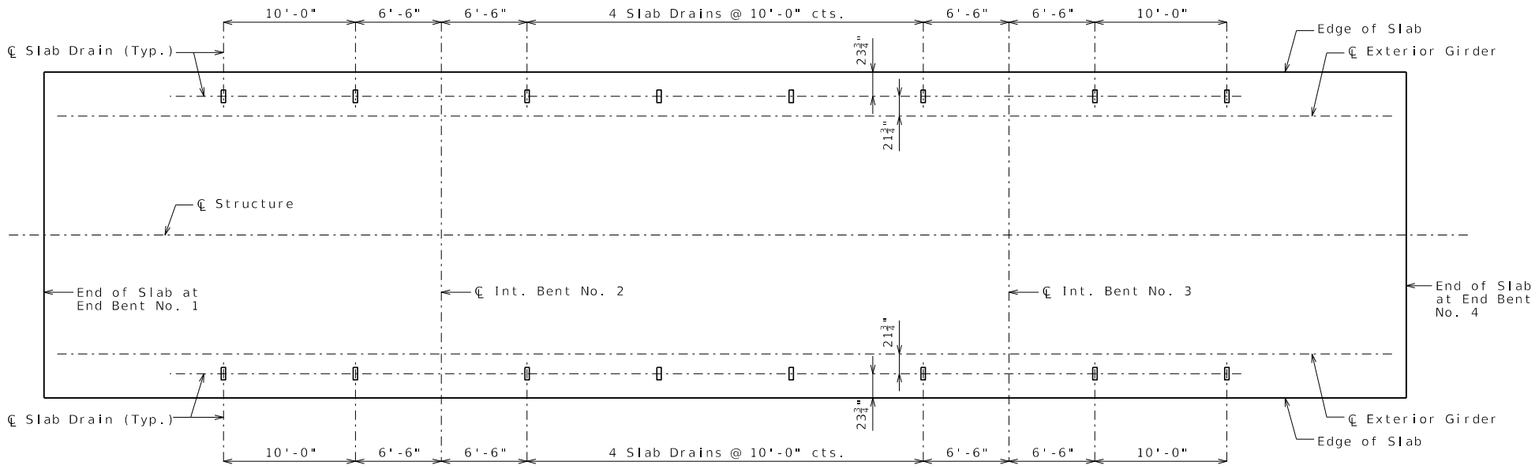

PLAN OF SLAB SHOWING SLAB DRAIN LOCATIONS

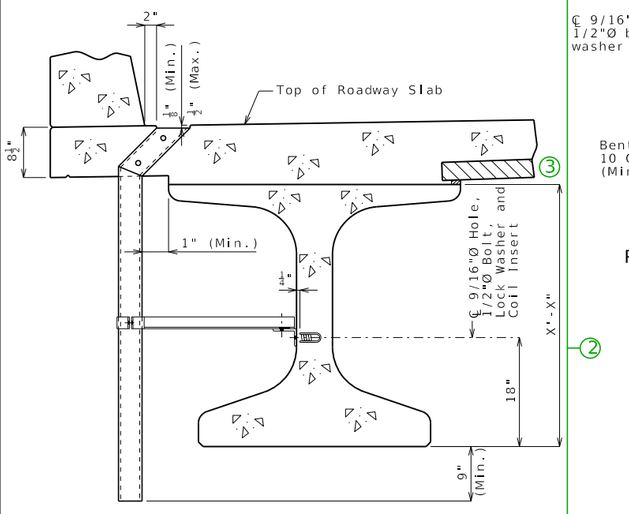

PART SECTION NEAR DRAIN

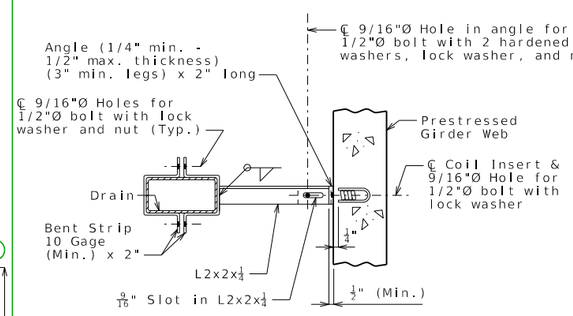

PART SECTION SHOWING BRACKET ASSEMBLY

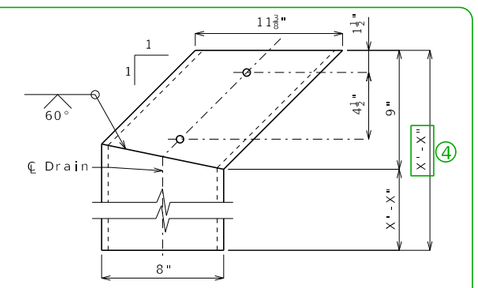

ELEVATION OF DRAIN

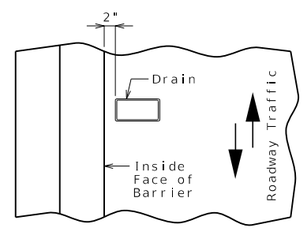

PART PLAN OF SLAB AT DRAIN

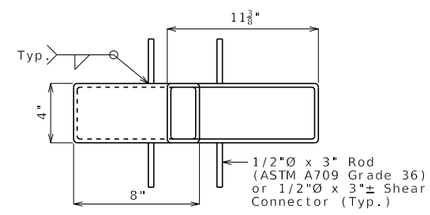

PLAN OF STEEL DRAIN OPTION

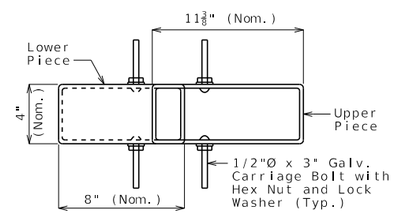

PLAN OF FRP DRAIN OPTION

SLAB DRAINS

General Notes:

Contractor shall have the option to construct either steel or FRP slab drains. All drains shall be of same type.

Slab drain bracket assembly shall be ASTM A709 Grade 36 steel.

Locate drains in slab by dimensions shown in Part Section Near Drain.

Reinforcing steel shall be shifted to clear drains.

The coil inserts and bracket assembly shall be galvanized in accordance with ASTM A123.

All bolts, hardened washers, lock washers and nuts shall be galvanized in accordance with ASTM F2329.

All 1/2"Ø bolts shall be ASTM A307.

Shop drawings will not be required for the slab drains and the bracket assembly.

The coil insert required for the bracket assembly attachment shall be located on the prestressed girder shop drawings.

Coil inserts shall have a concrete pull-out strength (ultimate load) of at least 2,500 pounds in 5,000 psi concrete.

The bolt required to attach the slab drain bracket assembly to the prestressed girder web shall be supplied by the prestressed girder fabricator.

Notes for Steel Drain:

Slab drains may be fabricated of either 1/4" welded sheets of ASTM A709 Grade 36 steel or from 1/4" structural steel tubing ASTM A500 or A501.

Outside dimensions of drains are 8" x 4".

The drains shall be galvanized in accordance with ASTM A123.

Notes for FRP Drain:

Drains shall be machine filament-wound thermosetting resin tubing meeting the requirements of ASTM D2996 with the following exceptions:

Shape of drains shall be rectangular with outside nominal dimensions of 8" x 4".

Minimum reinforced wall thickness shall be 1/4 inch.

The resin used shall be ultraviolet (UV) resistant and/or have UV inhibitors mixed throughout. Drains may have an exterior coating for additional UV resistance.

The color of the slab drain shall be gray (Federal Standard #26373). The color shall be uniform throughout the resin and any coating used.

The combination of materials used in the manufacture of the drains shall be tested for UV resistance in accordance with ASTM D4329 Cycle A. The representative material shall withstand at least 500 hours of testing with only minor discoloration and without any physical deterioration. The contractor shall furnish the results of the required ultraviolet testing prior to acceptance of the slab drains.

At the contractor's option, drains may be field cut. The method of cutting FRP slab drain shall be as recommended by the manufacturer to ensure a smooth, chip free cut.

Both upper and lower drain pieces shall be rigidly connected to each other. Drain flow shall not be obstructed. Approval of the engineer is required.

DATE PREPARED	5/12/2026
ROUTE	STATE MO
DISTRICT	SHEET NO. 000
COUNTY	
JOB NO.	
CONTRACT ID.	
PROJECT NO.	
BRIDGE NO.	

DESCRIPTION	DATE

MISSOURI HIGHWAYS AND TRANSPORTATION COMMISSION
105 WEST CAPITOL
JEFFERSON CITY, MO 65102
1-888-ASK-MODOT (1-888-275-6636)

Detailed
Checked

Note: This drawing is not to scale. Follow dimensions.

S_DRA07_NU_angle Guidance & Alternate Details

Standard Drawing Guidance (do not show on plans):

① Replace example Plan of Slab Showing Slab Drain Locations with actual plan.

② Details shown inside the sheet border are for drains transverse to roadway requiring a cantilever 3'-9 1/2" or more. Use the below details for drains parallel to roadway requiring a cantilever 3'-3 3/4" or more.

③ Delete panel for CIP slab.

④ Total drain length is equal to 9" + maximum girder and haunch + slab thickness, rounded UP to the next whole inch.

Alternate details for Type B barrier (SBC):

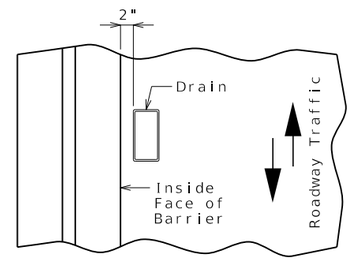

PART PLAN OF SLAB AT DRAIN

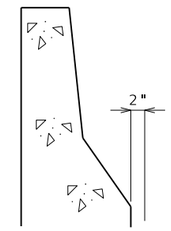

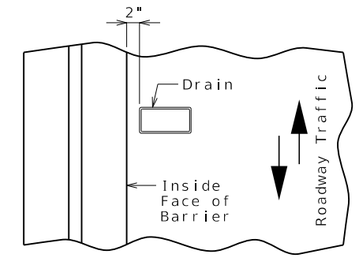

PART PLAN OF SLAB AT DRAIN

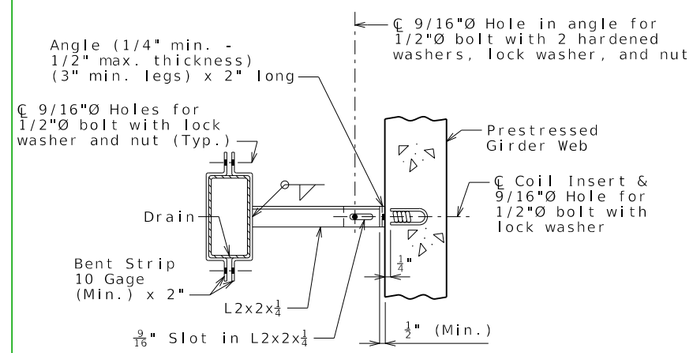

PART SECTION SHOWING BRACKET ASSEMBLY

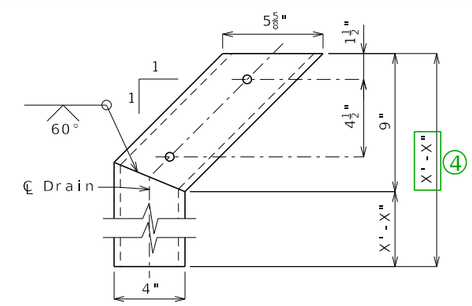

ELEVATION OF DRAIN

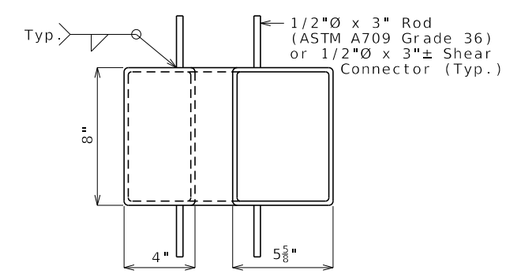

PLAN OF STEEL DRAIN OPTION

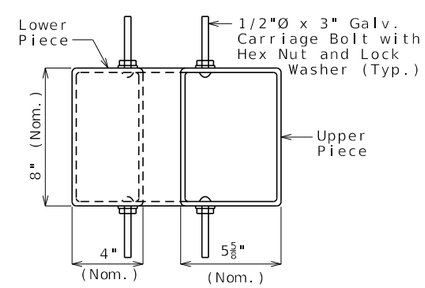

PLAN OF FRP DRAIN OPTION

②

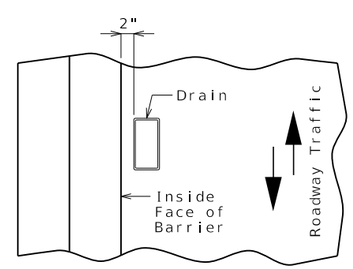

PART PLAN OF SLAB AT DRAIN

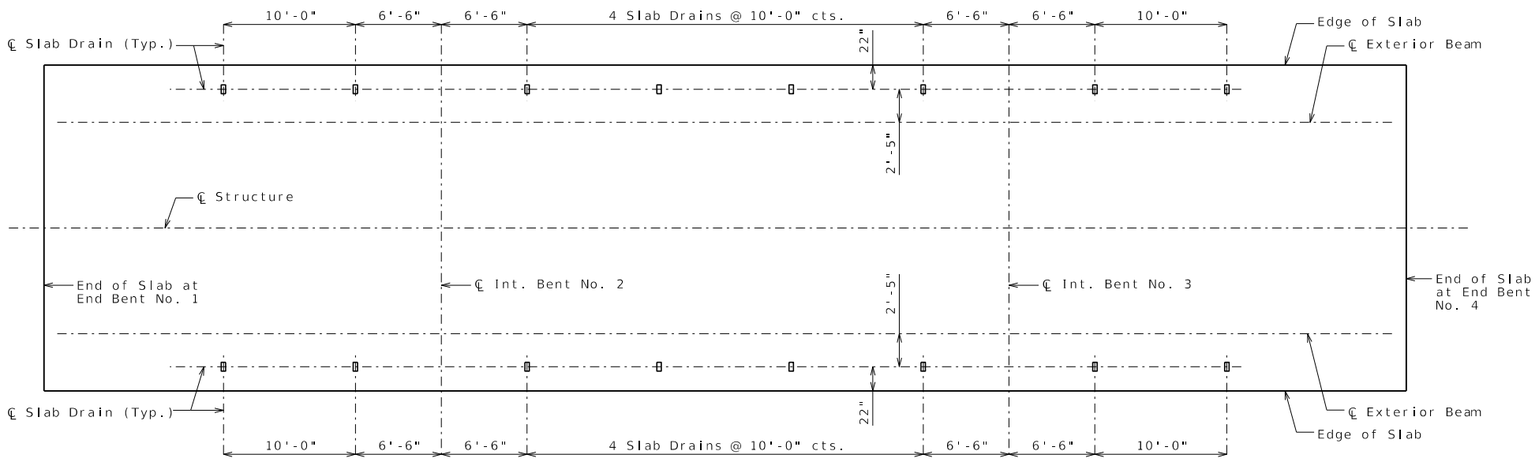

PLAN OF SLAB SHOWING SLAB DRAIN LOCATIONS

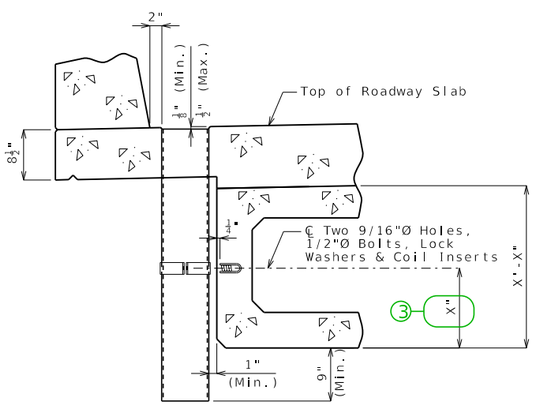

PART SECTION NEAR DRAIN

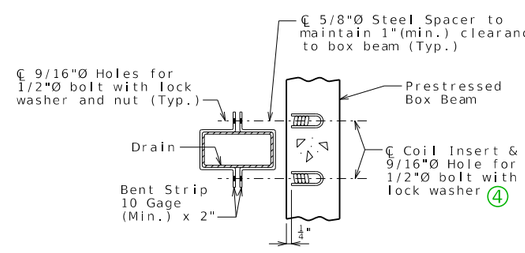

PART SECTION SHOWING BRACKET ASSEMBLY

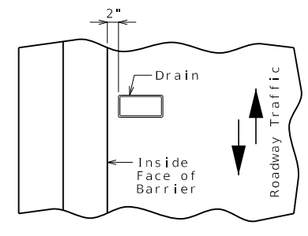

PART PLAN OF SLAB AT DRAIN

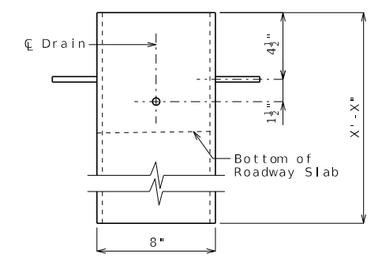

ELEVATION OF DRAIN

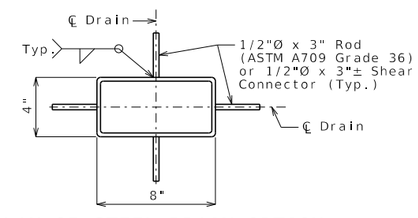

PLAN OF STEEL DRAIN OPTION

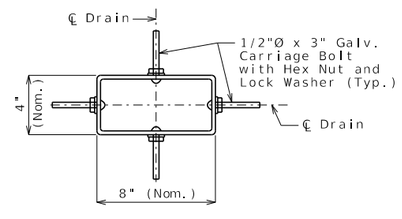

PLAN OF FRP DRAIN OPTION

SLAB DRAINS

General Notes:

1

Contractor shall have the option to construct either steel or FRP slab drains. All drains shall be of same type.

Slab drain bracket assembly shall be ASTM A709 Grade 36 steel.

Locate drains in slab by dimensions shown in Part Section Near Drain.

Reinforcing steel shall be shifted to clear drains.

The coil inserts and bracket assembly shall be galvanized in accordance with ASTM A123.

All bolts, hardened washers, lock washers and nuts shall be galvanized in accordance with ASTM F2329.

All 1/2"Ø bolts shall be ASTM A307.

Shop drawings will not be required for the slab drains and the bracket assembly.

The coil inserts required for the bracket assembly attachment shall be located on the prestressed beam shop drawings.

Coil inserts shall have a concrete pull-out strength (ultimate load) of at least 2,500 pounds in 5,000 psi concrete.

The bolts required to attach the slab drain bracket assembly to the prestressed beam shall be supplied by the prestressed beam fabricator.

Notes for Steel Drain:

Slab drains may be fabricated of either 1/4" welded sheets of ASTM A709 Grade 36 steel or from 1/4" structural steel tubing ASTM A500 or A501.

Outside dimensions of drains are 8" x 4".

The drains shall be galvanized in accordance with ASTM A123.

Notes for FRP Drain:

2

Drains shall be machine filament-wound thermosetting resin tubing meeting the requirements of ASTM D2996 with the following exceptions:

Shape of drains shall be rectangular with outside nominal dimensions of 8" x 4".

Minimum reinforced wall thickness shall be 1/4 inch.

The resin used shall be ultraviolet (UV) resistant and/or have UV inhibitors mixed throughout. Drains may have an exterior coating for additional UV resistance.

The color of the slab drain shall be gray (Federal Standard #26373). The color shall be uniform throughout the resin and any coating used.

The combination of materials used in the manufacture of the drains shall be tested for UV resistance in accordance with ASTM D4329 Cycle A. The representative material shall withstand at least 500 hours of testing with only minor discoloration and without any physical deterioration. The contractor shall furnish the results of the required ultraviolet testing prior to acceptance of the slab drains.

At the contractor's option, drains may be field cut. The method of cutting FRP slab drain shall be as recommended by the manufacturer to ensure a smooth, chip free cut.

DATE PREPARED	
5/12/2026	
ROUTE	STATE MO
DISTRICT	SHEET NO. 8
COUNTY	
JOB NO.	
CONTRACT ID.	
PROJECT NO.	
BRIDGE NO.	

DESCRIPTION	DATE

MISSOURI HIGHWAYS AND TRANSPORTATION COMMISSION
105 WEST CAPITOL
JEFFERSON CITY, MO 65102
1-888-ASK-MODOT (1-888-275-6636)

Standard Drawing Guidance (do not show on plans):

① Replace example Plan of Slab Showing Slab Drain Locations with actual plan. Verify slab drain does not block vent pipe in box beam.

② Details shown inside the sheet border are for drains transverse to roadway requiring a cantilever 4'-3" or more. Use the below details for drains parallel to roadway requiring a cantilever 3'-11" or more.

③ Use half of the beam depth.

④ Beam manufacturer determines required distance between inserts with coordination between contractor and drain supplier.

Alternate details for Type B barrier (SBC):

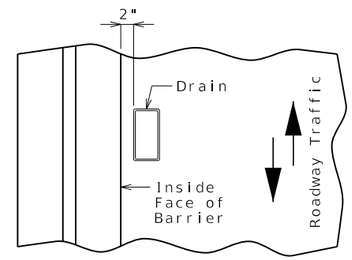

PART PLAN OF SLAB AT DRAIN

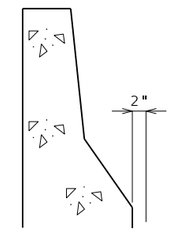

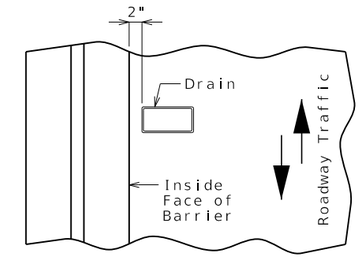

PART PLAN OF SLAB AT DRAIN

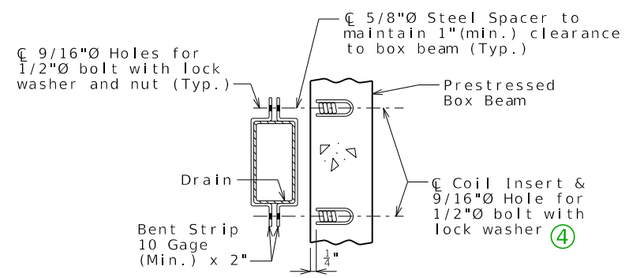

PART SECTION SHOWING BRACKET ASSEMBLY

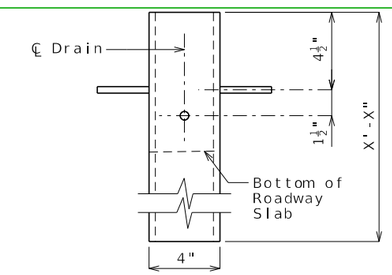

ELEVATION OF DRAIN

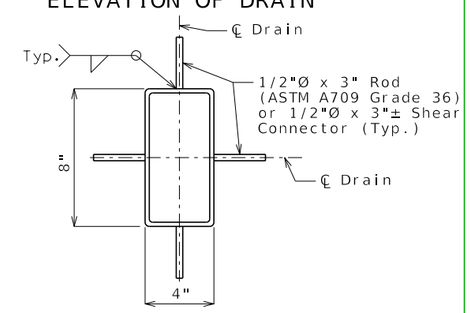

PLAN OF STEEL DRAIN OPTION

②

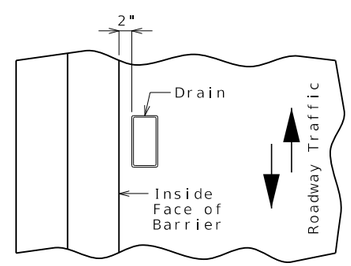

PART PLAN OF SLAB AT DRAIN

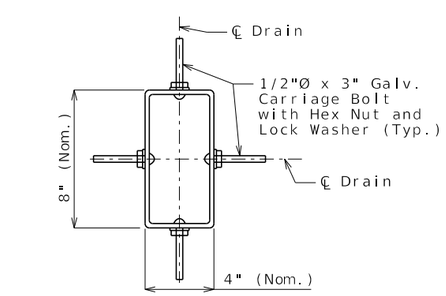

PLAN OF FRP DRAIN OPTION

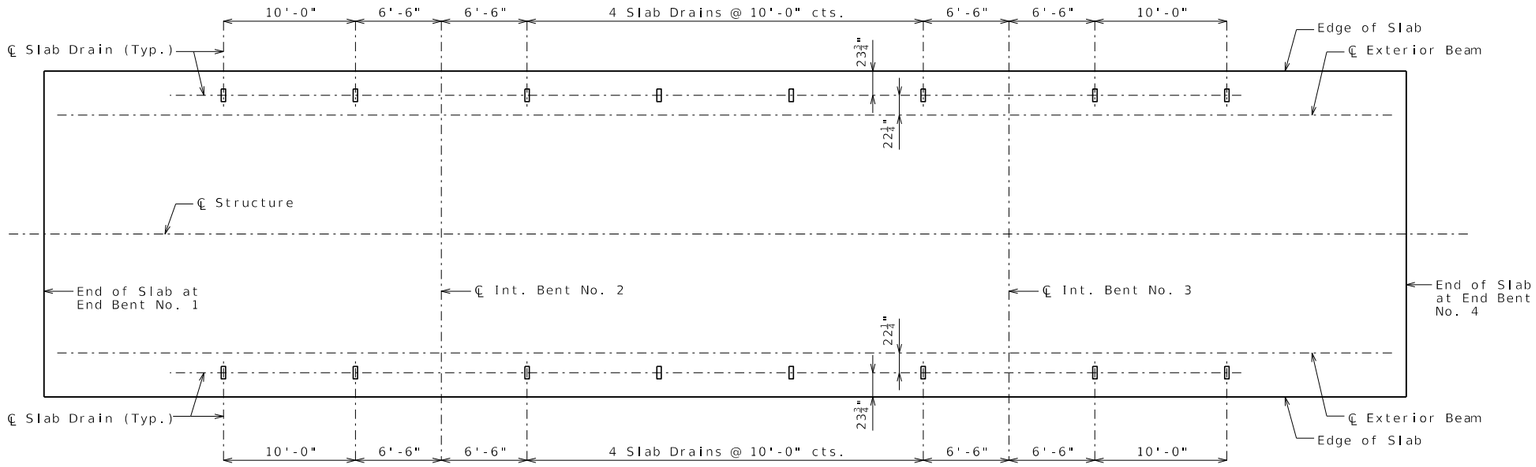

PLAN OF SLAB SHOWING SLAB DRAIN LOCATIONS

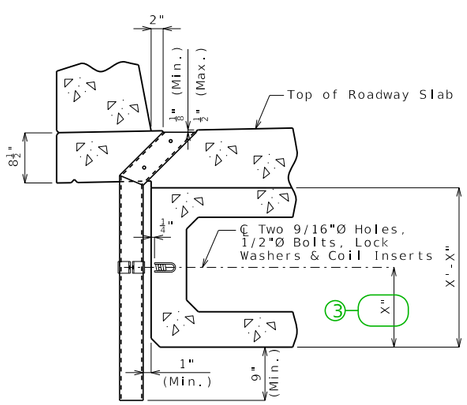

PART SECTION NEAR DRAIN

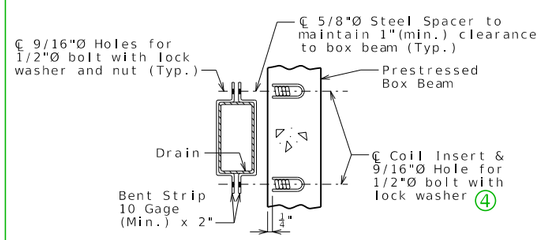

PART SECTION SHOWING BRACKET ASSEMBLY

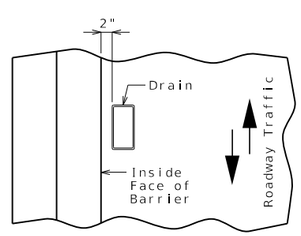

PART PLAN OF SLAB AT DRAIN

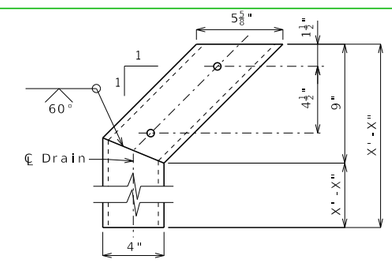

ELEVATION OF DRAIN

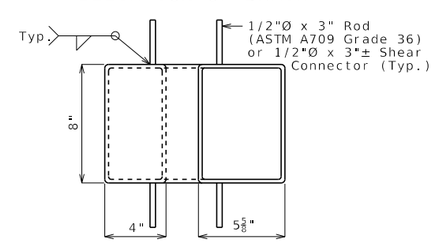

PLAN OF STEEL DRAIN OPTION

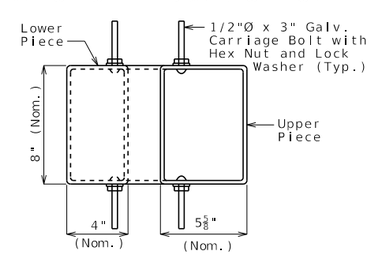

PLAN OF FRP DRAIN OPTION

SLAB DRAINS

General Notes:

Contractor shall have the option to construct either steel or FRP slab drains. All drains shall be of same type. 1

Slab drain bracket assembly shall be ASTM A709 Grade 36 steel.

Locate drains in slab by dimensions shown in Part Section Near Drain.

Reinforcing steel shall be shifted to clear drains.

The coil inserts and bracket assembly shall be galvanized in accordance with ASTM A123.

All bolts, hardened washers, lock washers and nuts shall be galvanized in accordance with ASTM F2329.

All 1/2"Ø bolts shall be ASTM A307.

Shop drawings will not be required for the slab drains and the bracket assembly.

The coil inserts required for the bracket assembly attachment shall be located on the prestressed beam shop drawings.

Coil inserts shall have a concrete pull-out strength (ultimate load) of at least 2,500 pounds in 5,000 psi concrete.

The bolts required to attach the slab drain bracket assembly to the prestressed beam shall be supplied by the prestressed beam fabricator.

Notes for Steel Drain:

Slab drains may be fabricated of either 1/4" welded sheets of ASTM A709 Grade 36 steel or from 1/4" structural steel tubing ASTM A500 or A501.

Outside dimensions of drains are 8" x 4".

The drains shall be galvanized in accordance with ASTM A123.

Notes for FRP Drain:

Drains shall be machine filament-wound thermosetting resin tubing meeting the requirements of ASTM D2996 with the following exceptions:

Shape of drains shall be rectangular with outside nominal dimensions of 8" x 4".

Minimum reinforced wall thickness shall be 1/4 inch.

The resin used shall be ultraviolet (UV) resistant and/or have UV inhibitors mixed throughout. Drains may have an exterior coating for additional UV resistance.

The color of the slab drain shall be gray (Federal Standard #26373). The color shall be uniform throughout the resin and any coating used.

The combination of materials used in the manufacture of the drains shall be tested for UV resistance in accordance with ASTM D4329 Cycle A. The representative material shall withstand at least 500 hours of testing with only minor discoloration and without any physical deterioration. The contractor shall furnish the results of the required ultraviolet testing prior to acceptance of the slab drains.

At the contractor's option, drains may be field cut. The method of cutting FRP slab drain shall be as recommended by the manufacturer to ensure a smooth, chip free cut.

Both upper and lower drain pieces shall be rigidly connected to each other. Drain flow shall not be obstructed. Approval of the engineer is required.

DATE PREPARED	
5/12/2026	
ROUTE	STATE MO
DISTRICT	SHEET NO. 9
COUNTY	
JOB NO.	
CONTRACT ID.	
PROJECT NO.	
BRIDGE NO.	

DATE	DESCRIPTION

MISSOURI HIGHWAYS AND TRANSPORTATION COMMISSION
105 WEST CAPITOL
JEFFERSON CITY, MO 65102
1-888-ASK-MODOT (1-888-275-6636)

Detailed
Checked

Note: This drawing is not to scale. Follow dimensions.

Sheet No. of

S_DRA09_BXB_angle Guidance & Alternate Details

Standard Drawing Guidance (do not show on plans):

① Replace example Plan of Slab Showing Slab Drain Locations with actual plan. Verify slab drain does not block vent pipe in box beam.

② Details shown inside the sheet border are for drains transverse to roadway requiring a cantilever 3'-9 3/8" or more. Use the below details for drains parallel to roadway requiring a cantilever 3'-3 5/8" or more.

③ Use half of the beam depth.

④ Beam manufacturer determines required distance between inserts with coordination between contractor and drain supplier.

Alternate details for Type B barrier (SBC):

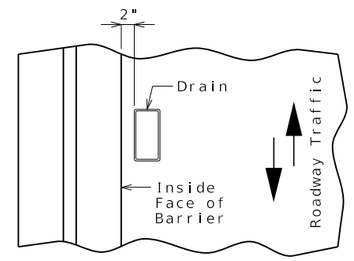

PART PLAN OF SLAB AT DRAIN

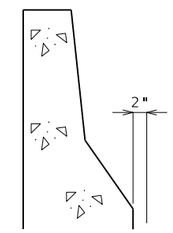

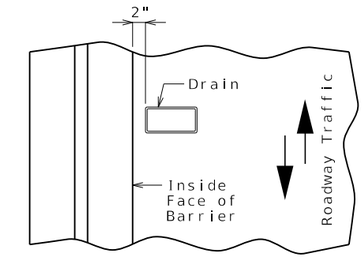

PART PLAN OF SLAB AT DRAIN

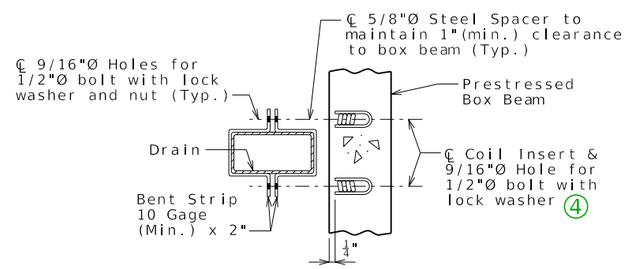

PART SECTION SHOWING BRACKET ASSEMBLY

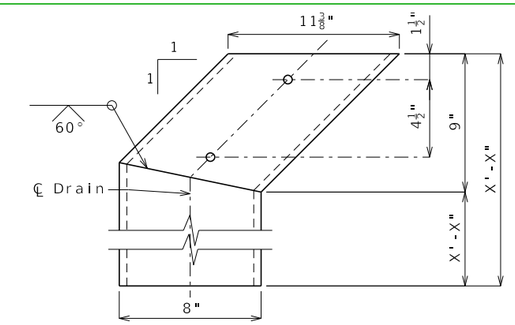

ELEVATION OF DRAIN

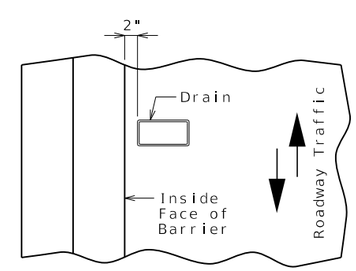

PART PLAN OF SLAB AT DRAIN

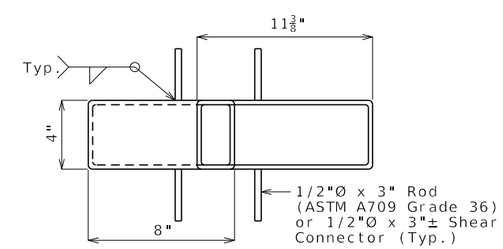

PLAN OF STEEL DRAIN OPTION

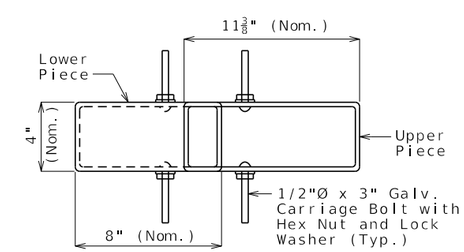

PLAN OF FRP DRAIN OPTION

②

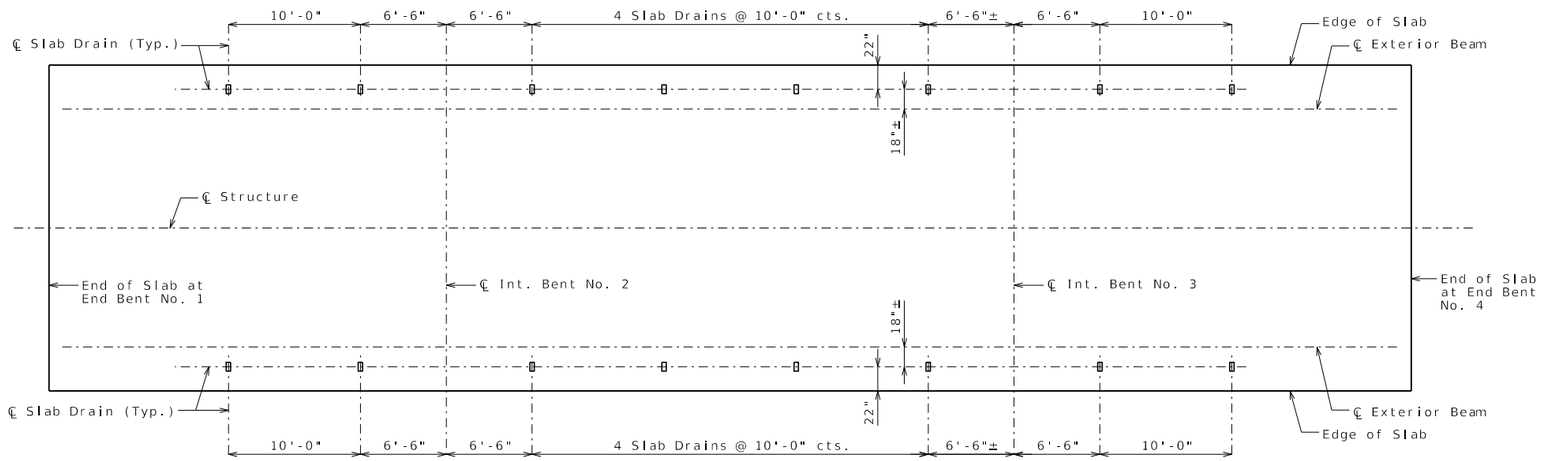

PLAN OF SLAB SHOWING SLAB DRAIN LOCATIONS

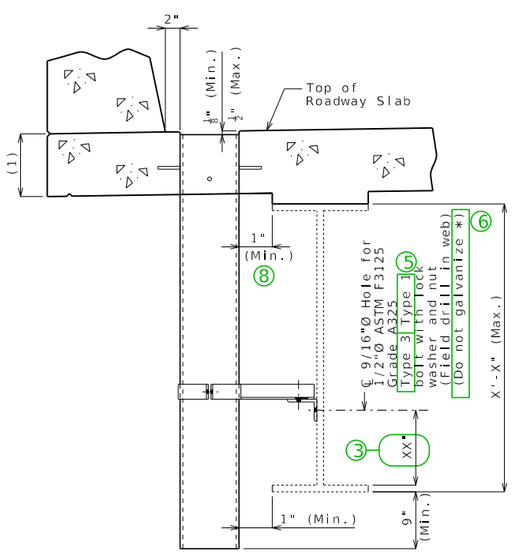

PART SECTION NEAR DRAIN

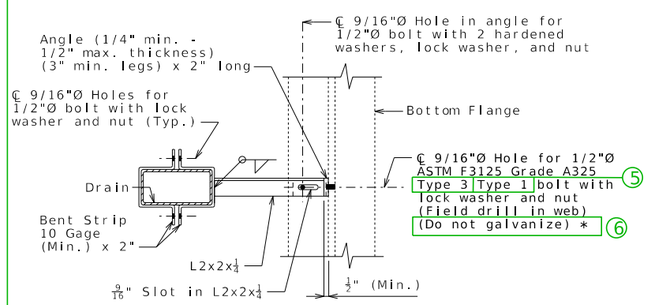

PART SECTION SHOWING BRACKET ASSEMBLY

* See Sec 1080.4

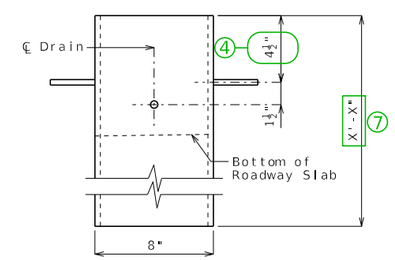

ELEVATION OF DRAIN

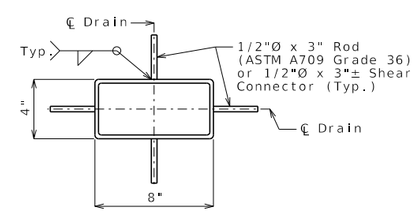

PLAN OF STEEL DRAIN OPTION

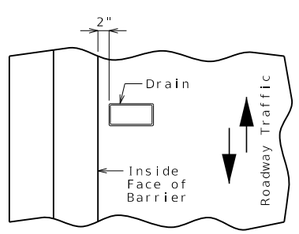

PART PLAN OF SLAB AT DRAIN

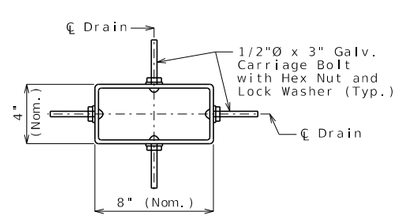

PLAN OF FRP DRAIN OPTION

SLAB DRAINS

General Notes:

Contractor shall have the option to construct either steel or FRP slab drains. All drains shall be of same type. (1)

Slab drain bracket assembly shall be ASTM A709 Grade 36 steel.

Locate drains in slab by dimensions shown in Part Section Near Drain.

Reinforcing steel shall be shifted to clear drains.

The bracket assembly shall be galvanized in accordance with ASTM A123.

All bolts, hardened washers, lock washers and nuts shall be galvanized in accordance with ASTM F2329, except as shown. (6)

All 1/2"Ø bolts shall be ASTM A307, except as shown.

Shop drawings will not be required for the slab drains and the bracket assembly.

The bolt hole for the bracket assembly attachment shall be shifted to the minimum extent necessary to field drill in the existing web.

(1) See front sheet for slab thickness.

(6) The galvanized surfaces of drain support brackets shall be prepared according to the coating manufacturer's recommendation and field coated with a gray epoxy-mastic primer (non-aluminum) within a distance of 6 inches from the point of connection to the weathering steel structure.

Notes for Steel Drain:

Slab drains may be fabricated of either 1/4" welded sheets of ASTM A709 Grade 36 steel or from 1/4" structural steel tubing ASTM A500 or A501.

Outside dimensions of drains are 8" x 4".

The drains shall be galvanized in accordance with ASTM A123.

Notes for FRP Drain:

Drains shall be machine filament-wound thermosetting resin tubing meeting the requirements of ASTM D2996 with the following exceptions:

Shape of drains shall be rectangular with outside nominal dimensions of 8" x 4".

Minimum reinforced wall thickness shall be 1/4 inch.

The resin used shall be ultraviolet (UV) resistant and/or have UV inhibitors mixed throughout. Drains may have an exterior coating for additional UV resistance.

The color of the slab drain shall be gray (Federal Standard #26373). The color shall be uniform throughout the resin and any coating used.

The combination of materials used in the manufacture of the drains shall be tested for UV resistance in accordance with ASTM D4329 Cycle A. The representative material shall withstand at least 500 hours of testing with only minor discoloration and without any physical deterioration. The contractor shall furnish the results of the required ultraviolet testing prior to acceptance of the slab drains.

At the contractor's option, drains may be field cut. The method of cutting FRP slab drain shall be recommended by the manufacturer to ensure a smooth, chip free cut.

DATE PREPARED	
5/12/2026	
ROUTE	STATE MO
DISTRICT	SHEET NO. 10
COUNTY	
JOB NO.	
CONTRACT ID.	
PROJECT NO.	
BRIDGE NO.	

DATE	DESCRIPTION

MISSOURI HIGHWAYS AND TRANSPORTATION COMMISSION
105 WEST CAPITOL
JEFFERSON CITY, MO 65102
1-888-ASK-MODOT (1-888-275-6636)

S_DRA10_exist_stl Guidance & Alternate Details

Standard Drawing Guidance (do not show on plans):

1. Replace example Plan of Slab Showing Slab Drain Locations with actual plan.
2. Details shown inside the sheet border are for drains transverse to roadway. Use the below details for drains parallel to roadway.
3. Use 1/6 of web depth.
4. For slab thickness less than 7 3/4", revise dimension to be equal to the slab thickness minus 3 1/4".
5. Type 3 for weathering steel; Type 1 for painted or galvanized steel.
6. Use with weathering steel. Delete for painted or galvanized steel.
7. Total drain length is equal to 9" + maximum girder and haunch + slab thickness, rounded UP to the next whole inch.
8. Consider cover plates that are wider than flanges when checking this dimension.

Alternate details for Type B barrier (SBC):

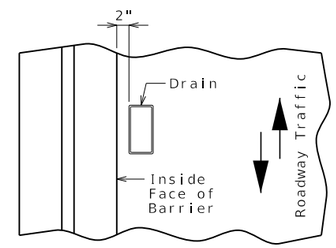

PART PLAN OF SLAB AT DRAIN

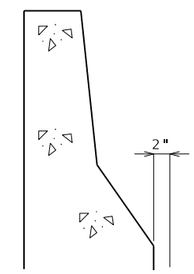

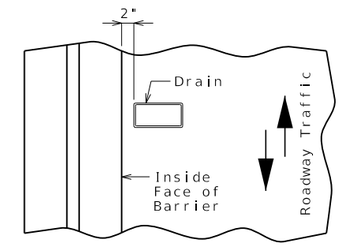

PART PLAN OF SLAB AT DRAIN

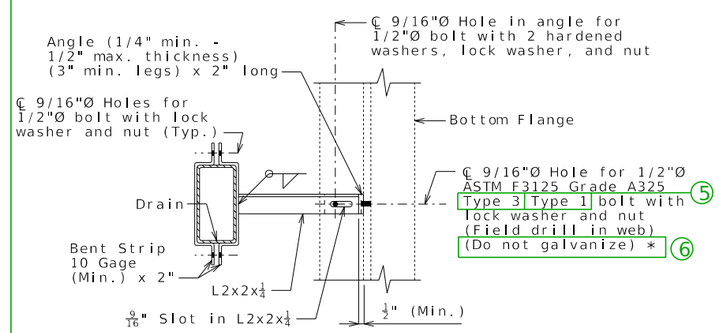

PART SECTION SHOWING BRACKET ASSEMBLY

* See Sec 1080.4 6

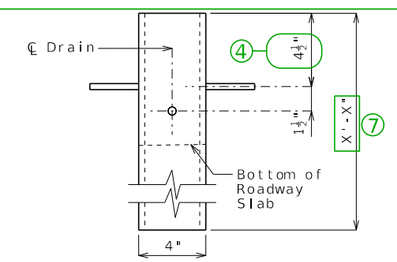

ELEVATION OF DRAIN

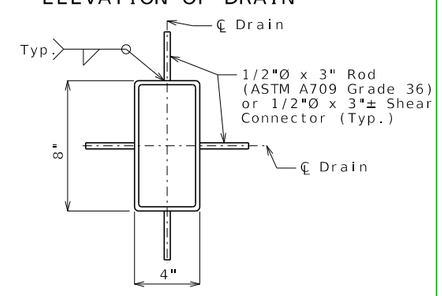

PLAN OF STEEL DRAIN OPTION

2

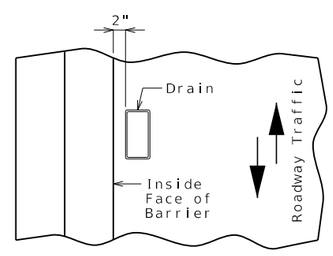

PART PLAN OF SLAB AT DRAIN

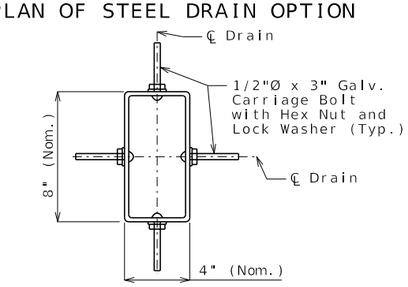

PLAN OF FRP DRAIN OPTION

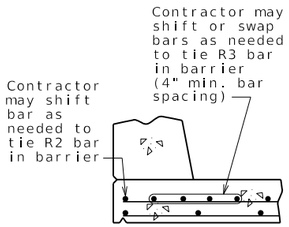

OPTIONAL SHIFTING TOP BARS AT BARRIER

1

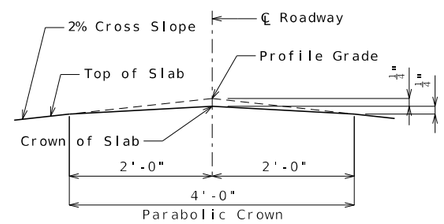

DETAIL A

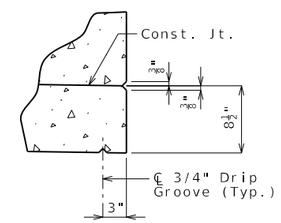

DETAIL B

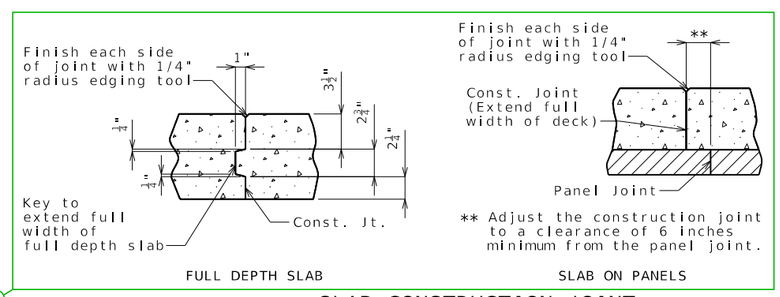

6

SLAB CONSTRUCTION JOINT

5

Notes:

7 For details of precast prestressed panels, see Sheet No. .

For reinforcement of barrier not shown, see Sheet No. .

For Theoretical Bottom of Slab Elevations, Girder Camber Diagram and Theoretical Slab Haunching Diagram, see Sheet No. .

For Plan of Slab Showing Reinforcement, see Sheet No. .

SLAB DETAILS

Detailed
Checked

Note: This drawing is not to scale. Follow dimensions.

Sheet No. of

DATE PREPARED	10/17/2023
ROUTE	STATE MO
DISTRICT	SHEET NO. 000
COUNTY	
JOB NO.	
CONTRACT ID.	
PROJECT NO.	
BRIDGE NO.	

DESCRIPTION

DATE

MISSOURI HIGHWAYS AND TRANSPORTATION COMMISSION
105 WEST CAPITOL
JEFFERSON CITY, MO 65102
1-888-ASK-MODOT (1-888-275-6636)

SLAB01_24ft_symm Guidance & Alternate Details (1 of 3)

Standard Drawing Guidance
(do not show on plans):

1 Remove if not required.

2 Use the following values for clearance to top longitudinal bars:

$3\frac{1}{8}$" for #5 bars

3" for #6 bars

$2\frac{7}{8}$" for #7 bars

$2\frac{3}{4}$" for #8 bars

Use a triple asterisk when there are different size top bars and add below the single asterisk note the following (modified as needed)(this will be the only astrisk note for CIP decks):

*** $3\frac{1}{8}$" (#5)
3" (#6)
$2\frac{7}{8}$" (#7)
$2\frac{3}{4}$" (#8)

Clearance values based on the #6 top transverse bar used for this standard slab. Values will need to be revised for other size transverse bars.

3 The larger negative moment reinforcement shown is grouped and can be deleted if the negative moment steel is the same size as the distribution reinforcement. A set of bars the same size as the distribution bars exist behind the larger bars shown, and will become visible when the larger bars are deleted. (No need to resize)

4 The subheadings and negative moment bars are grouped and can be deleted for single span bridges.
<Ctrl> U to ungroup

5 Place appropriate slab pouring sequence cell and modify as required.

6 Use alternate detail for CIP decks:

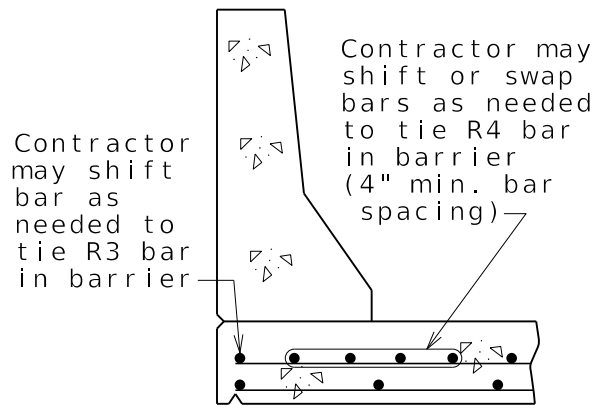

OPTIONAL SHIFTING
TOP BARS AT BARRIER

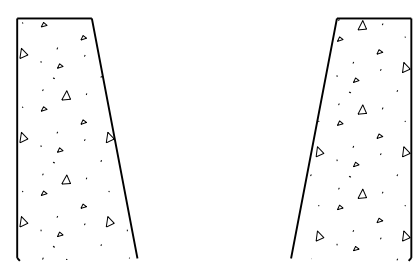

Alternate detail for
Type H barrier

For 8" thick slabs, change top dimension to 3 1/4" and center dimension to 2 1/2".

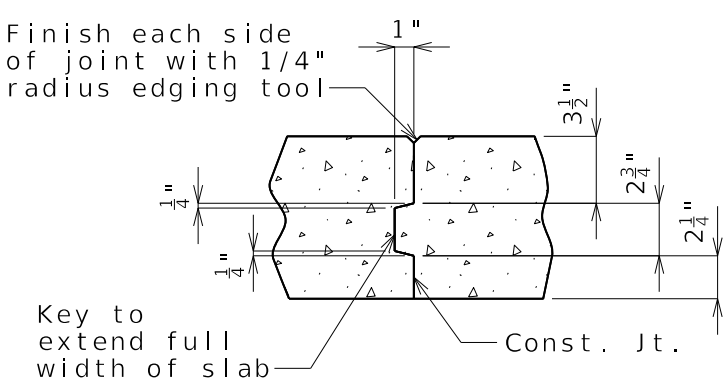

SLAB CONSTRUCTION JOINT

7 Remove for CIP deck

Girder spacing and reinforcement size & spacing shown are not necessarily standard. Follow design.

SLAB01_24ft_symm Guidance & Alternate Details (2 of 3)

4-Beam Panel Deck

Plate Girder

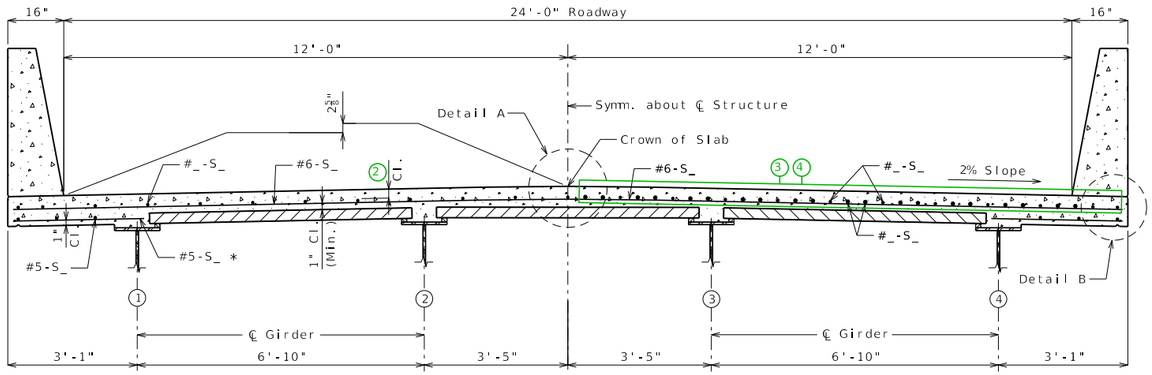

SECTION THRU SLAB

* Alternate bar shape available, see barrier sheet.

4-Beam CIP Deck

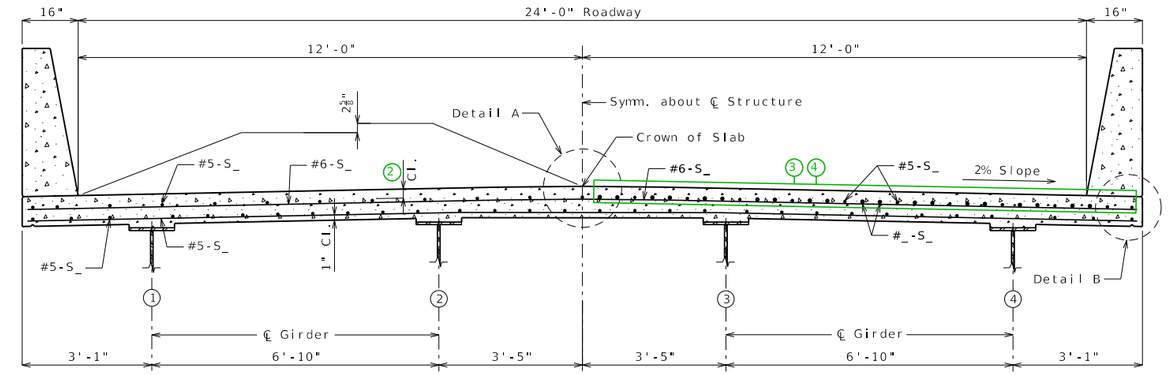

SECTION THRU SLAB

Type 2,3,4

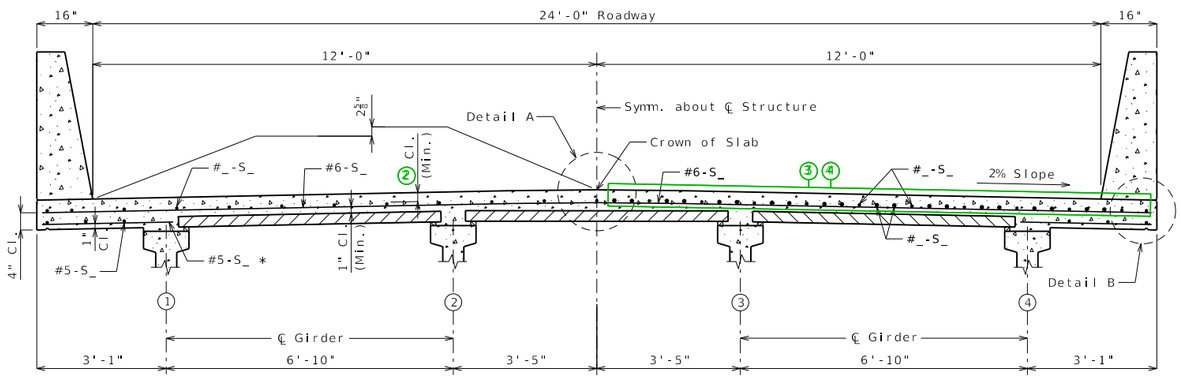

SECTION THRU SLAB

* Alternate bar shape available, see barrier sheet.

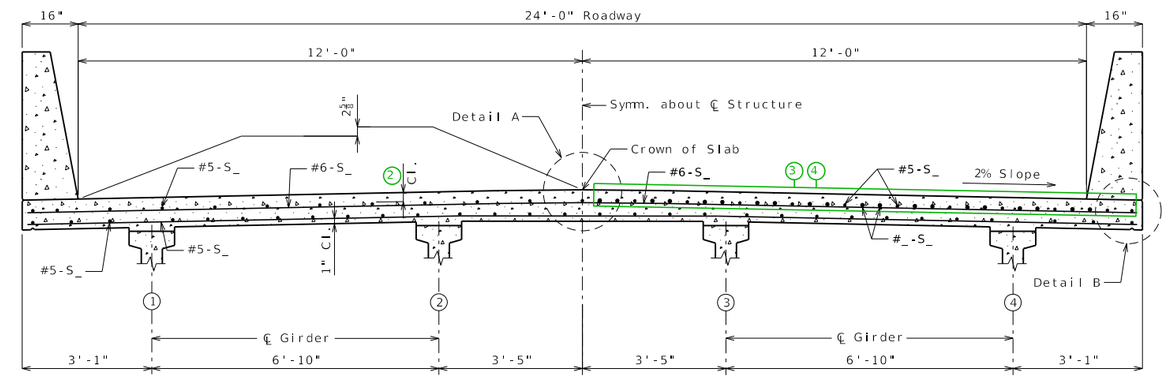

SECTION THRU SLAB

Type 6

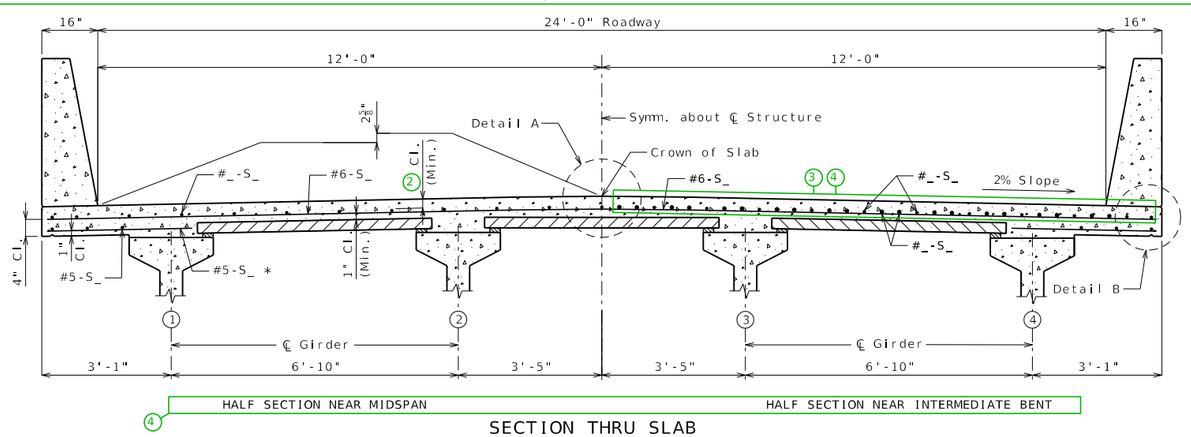

SECTION THRU SLAB

* Alternate bar shape available, see barrier sheet.

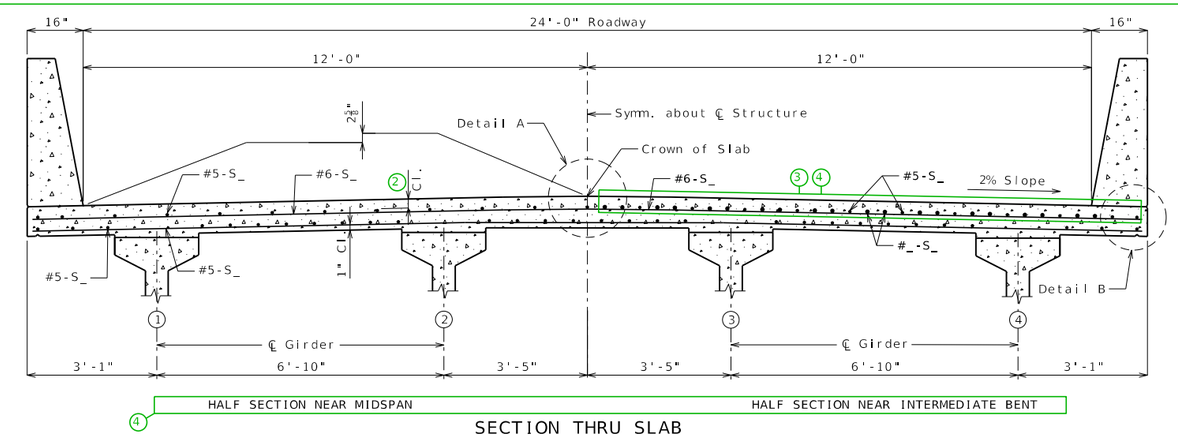

SECTION THRU SLAB

SLAB01_24ft_symm Guidance & Alternate Details (3 of 3)

3-Beam Panel Deck

3-Beam CIP Deck

Bulb-Tee

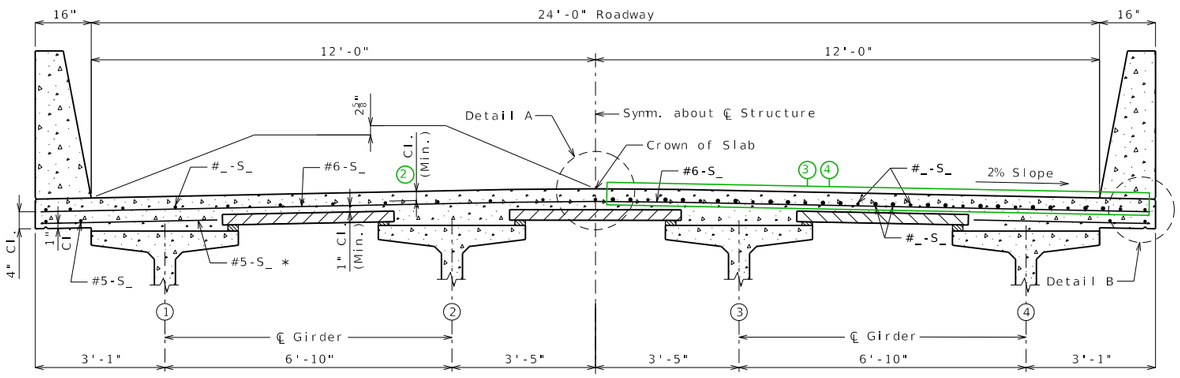

SECTION THRU SLAB

* Alternate bar shape available, see barrier sheet.

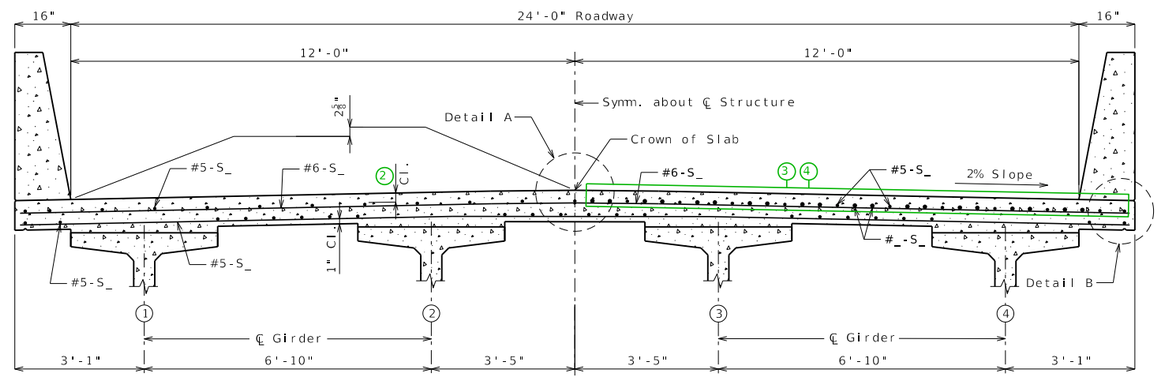

SECTION THRU SLAB

NU

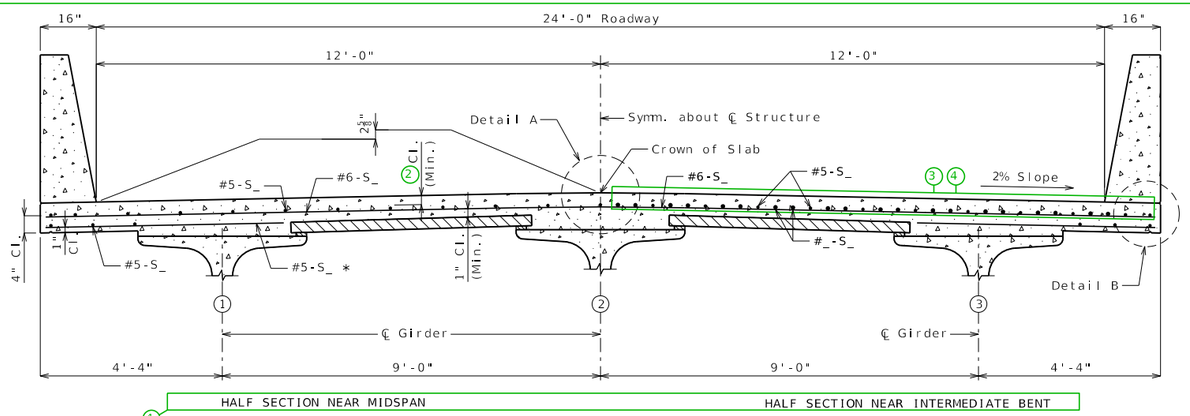

SECTION THRU SLAB

* Alternate bar shape available, see barrier sheet.

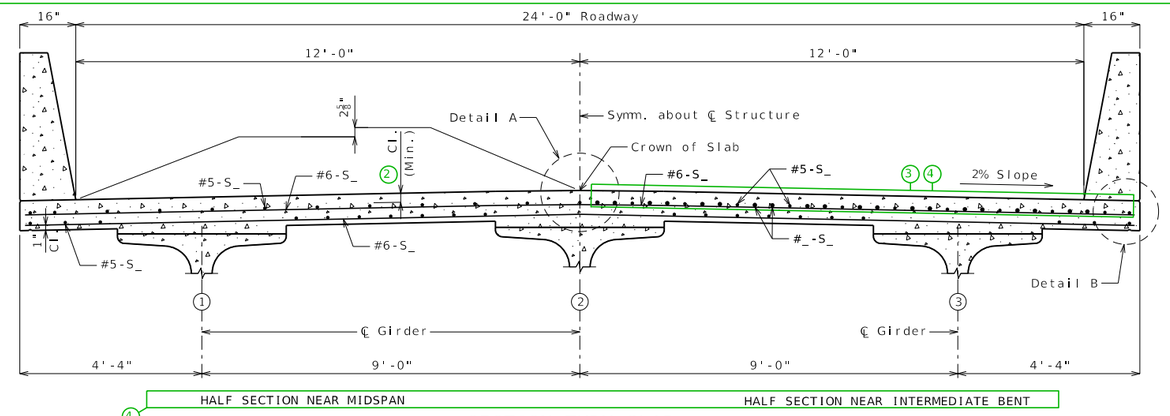

SECTION THRU SLAB

Box

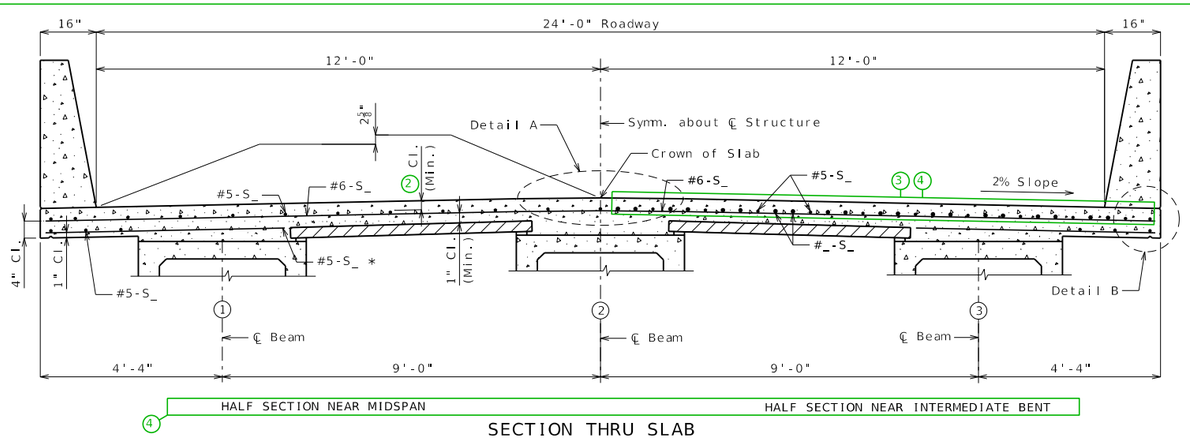

SECTION THRU SLAB

* Alternate bar shape available, see barrier sheet.

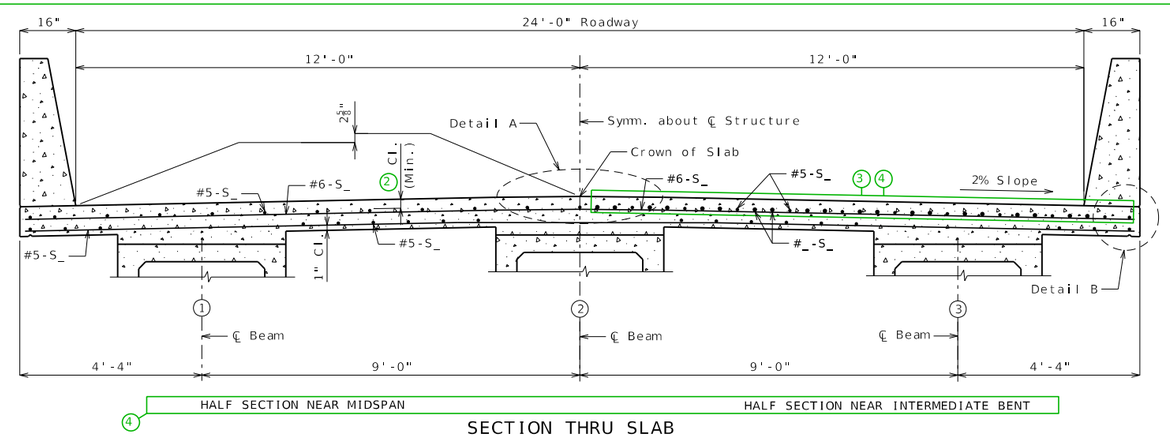

SECTION THRU SLAB

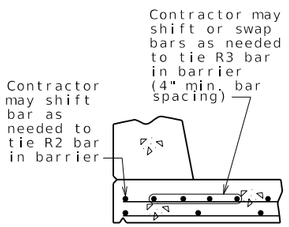

1

OPTIONAL SHIFTING TOP BARS AT BARRIER

5

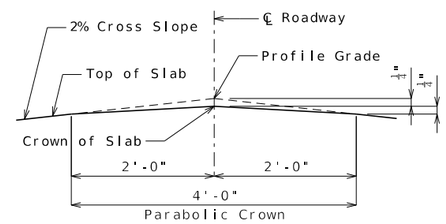

DETAIL A

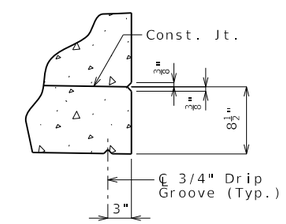

DETAIL B

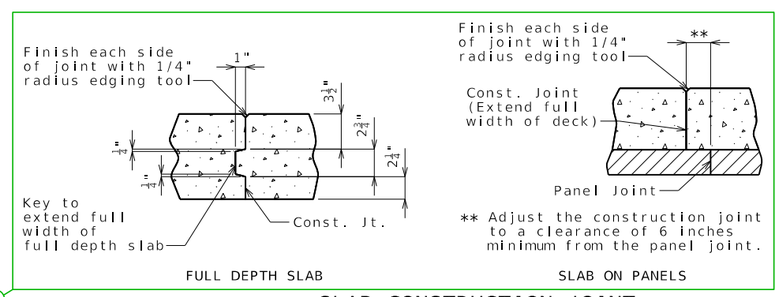

6

SLAB CONSTRUCTION JOINT

Notes:

7 For details of precast prestressed panels, see Sheet No. .

For reinforcement of barrier not shown, see Sheet No. .

For Theoretical Bottom of Slab Elevations, Girder Camber Diagram and Theoretical Slab Haunching Diagram, see Sheet No. .

For Plan of Slab Showing Reinforcement, see Sheet No. .

SLAB DETAILS

Detailed
Checked

Note: This drawing is not to scale. Follow dimensions.

Sheet No. of

DATE PREPARED	10/17/2023
ROUTE	STATE MO
DISTRICT	SHEET NO. 2
COUNTY	
JOB NO.	
CONTRACT ID.	
PROJECT NO.	
BRIDGE NO.	

DESCRIPTION

DATE

MISSOURI HIGHWAYS AND TRANSPORTATION COMMISSION
105 WEST CAPITOL
JEFFERSON CITY, MO 65102
1-888-ASK-MODOT (1-888-275-6636)

SLAB02_26ft_symm Guidance & Alternate Details (1 of 3)

Standard Drawing Guidance
(do not show on plans):

1 Remove if not required.

2 Use the following values for clearance to top longitudinal bars:

$3\frac{1}{8}$" for #5 bars

3" for #6 bars

$2\frac{7}{8}$" for #7 bars

$2\frac{3}{4}$" for #8 bars

Use a triple asterisk when there are different size top bars and add below the single asterisk note the following (modified as needed)(this will be the only astrisk note for CIP decks):

*** $3\frac{1}{8}$" (#5)
3" (#6)
$2\frac{7}{8}$" (#7)
$2\frac{3}{4}$" (#8)

Clearance values based on the #6 top transverse bar used for this standard slab. Values will need to be revised for other size transverse bars.

3 The larger negative moment reinforcement shown is grouped and can be deleted if the negative moment steel is the same size as the distribution reinforcement. A set of bars the same size as the distribution bars exist behind the larger bars shown, and will become visible when the larger bars are deleted. (No need to resize)

4 The subheadings and negative moment bars are grouped and can be deleted for single span bridges. <Ctrl> U to ungroup

5 Place appropriate slab pouring sequence cell and modify as required.

6 Use alternate detail for CIP decks:

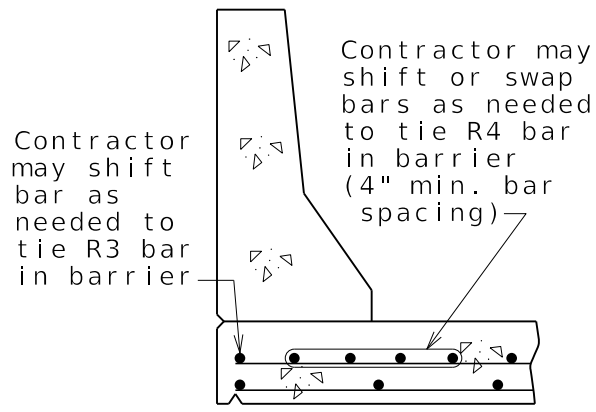

OPTIONAL SHIFTING TOP BARS AT BARRIER

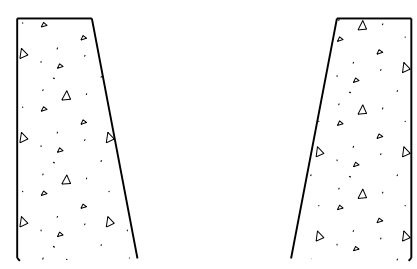

Alternate detail for Type H barrier

For 8" thick slabs, change top dimension to 3 1/4" and center dimension to 2 1/2".

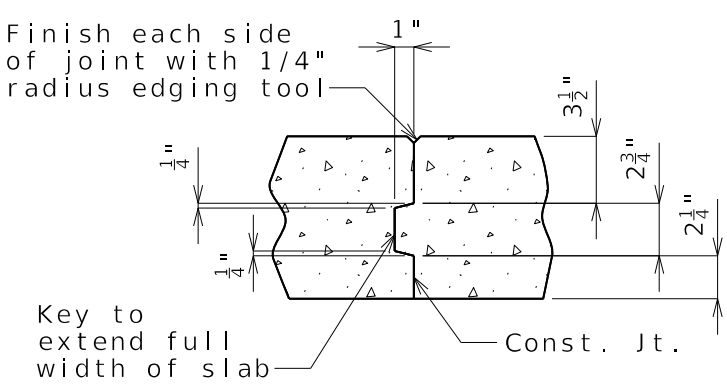

SLAB CONSTRUCTION JOINT

7 Remove for CIP deck

Girder spacing and reinforcement size & spacing shown are not necessarily standard. Follow design.

SLAB02_26ft_symm Guidance & Alternate Details (2 of 3)

4-Beam Panel Deck

Plate Girder

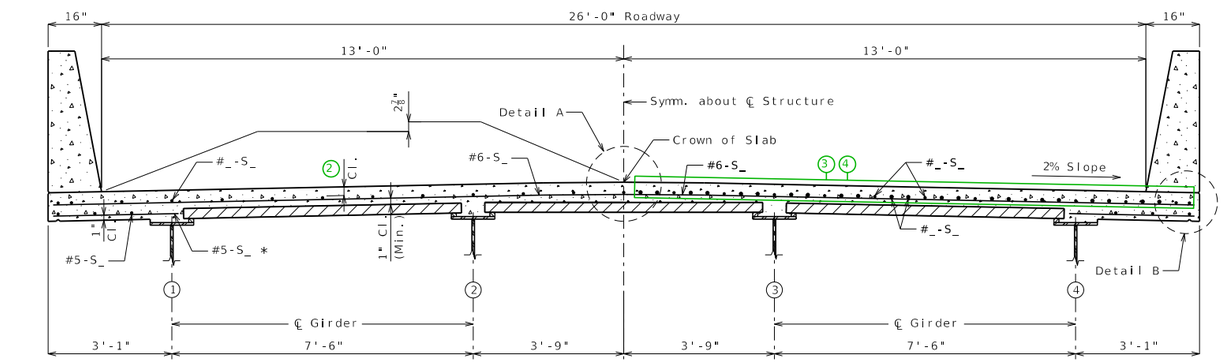

SECTION THRU SLAB

* Alternate bar shape available, see barrier sheet.

4-Beam CIP Deck

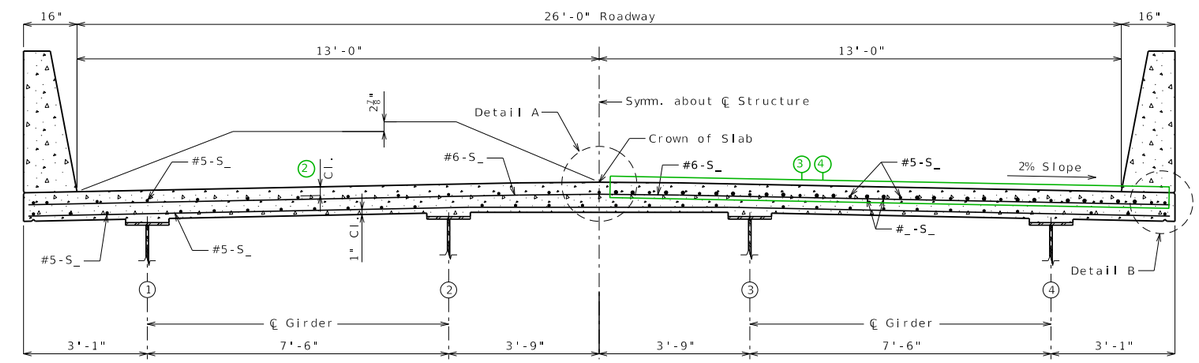

SECTION THRU SLAB

Type 2,3,4

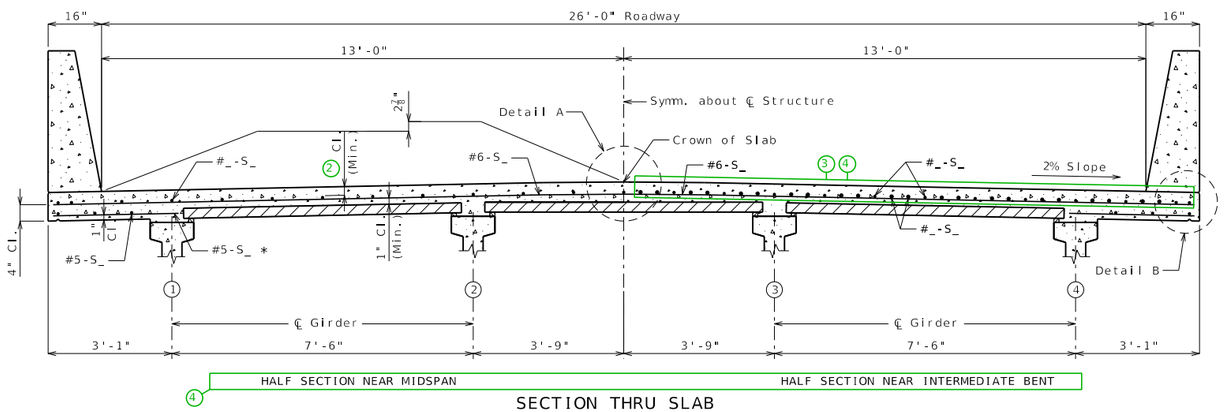

SECTION THRU SLAB

* Alternate bar shape available, see barrier sheet.

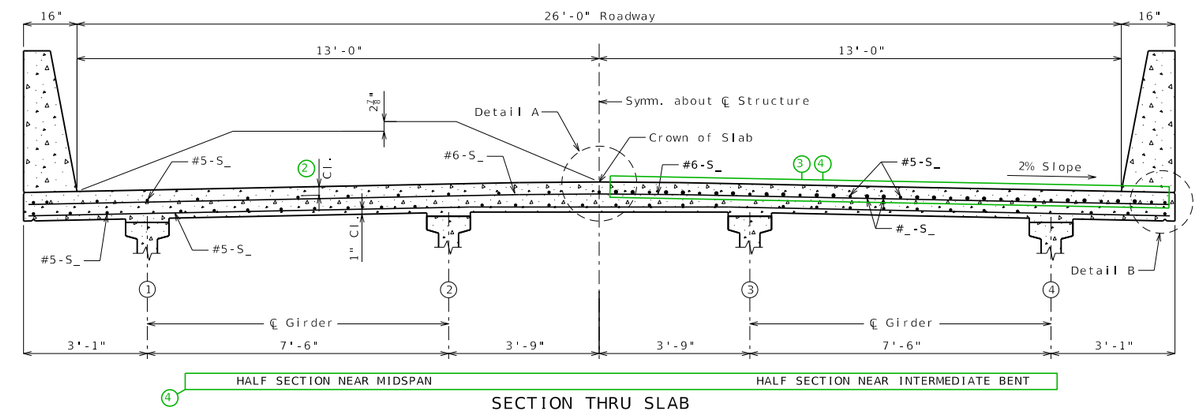

SECTION THRU SLAB

Type 6

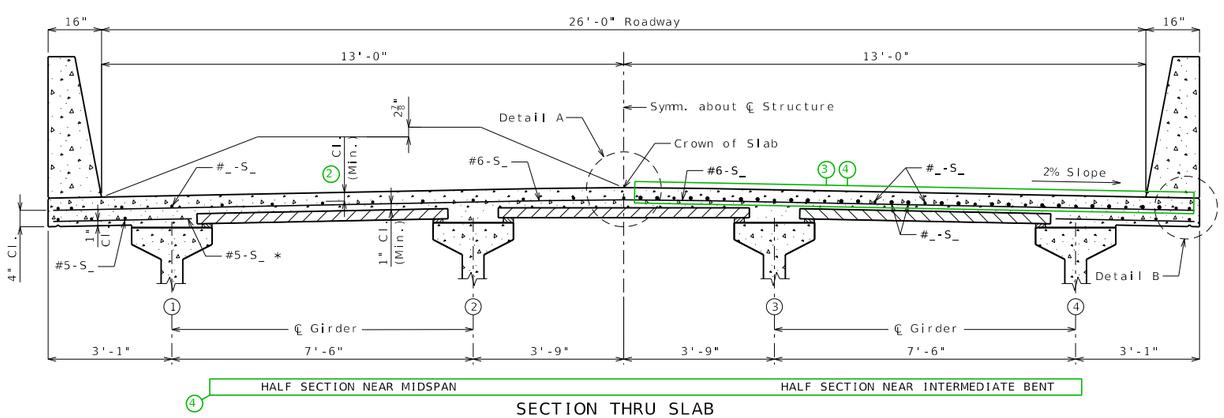

SECTION THRU SLAB

* Alternate bar shape available, see barrier sheet.

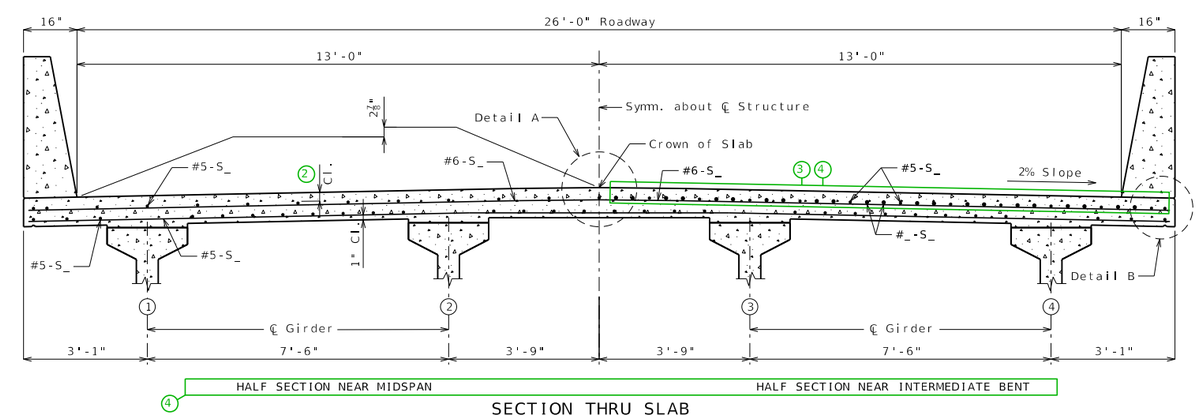

SECTION THRU SLAB

SLAB02_26ft_symm Guidance & Alternate Details (3 of 3)

4-Beam Panel Deck

Bulb-Tee

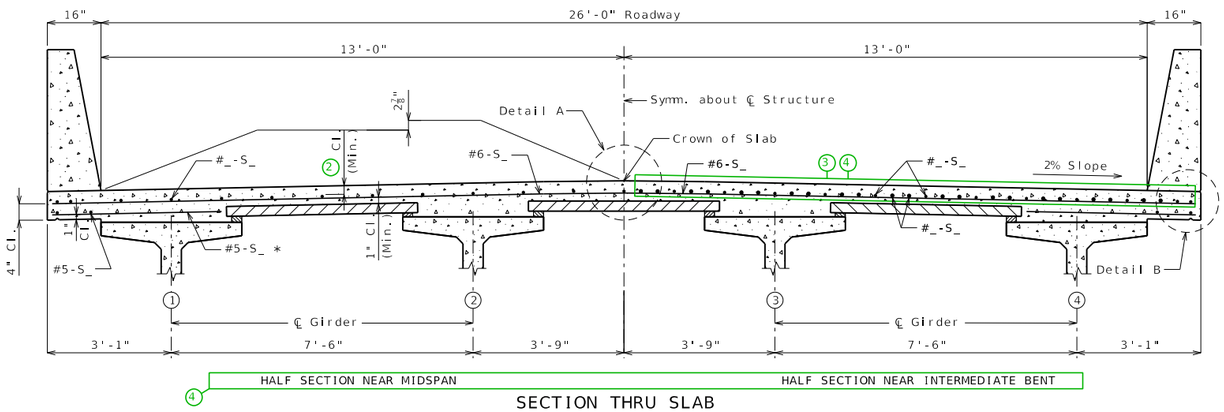

SECTION THRU SLAB

* Alternate bar shape available, see barrier sheet.

4-Beam CIP Deck

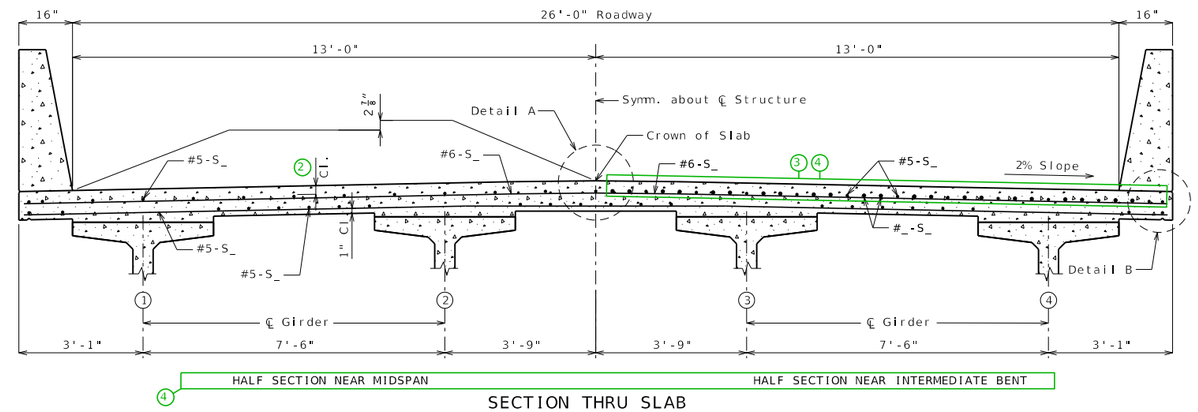

SECTION THRU SLAB

3-Beam Panel Deck

NU

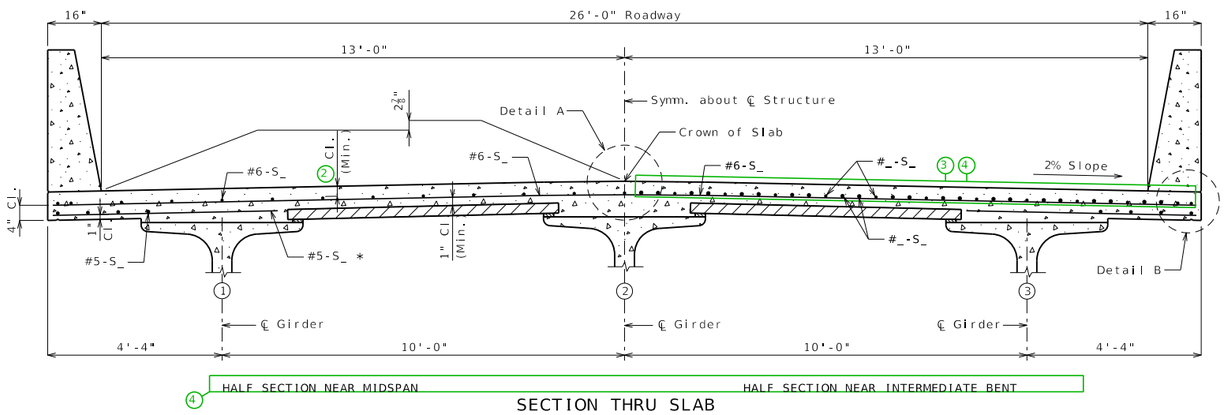

SECTION THRU SLAB

* Alternate bar shape available, see barrier sheet.

3-Beam CIP Deck

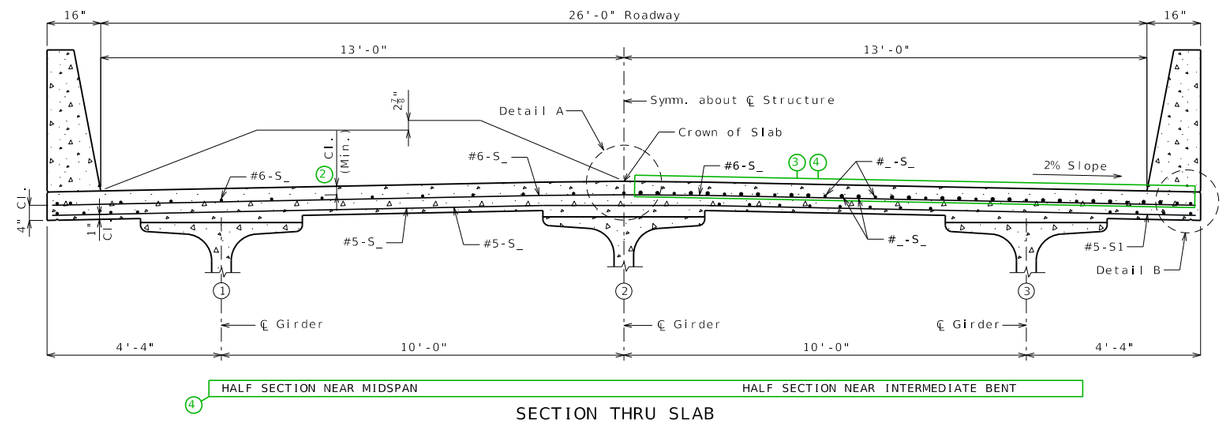

SECTION THRU SLAB

Box

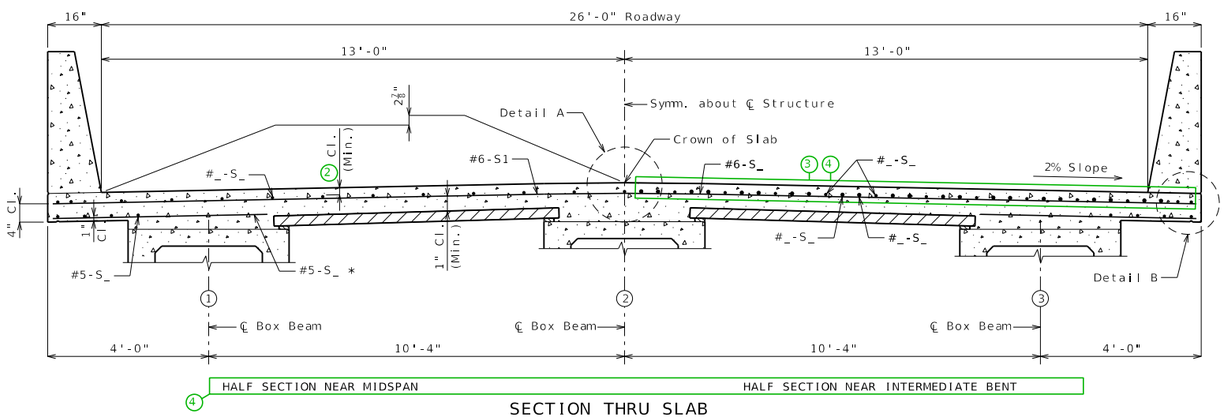

SECTION THRU SLAB

* Alternate bar shape available, see barrier sheet.

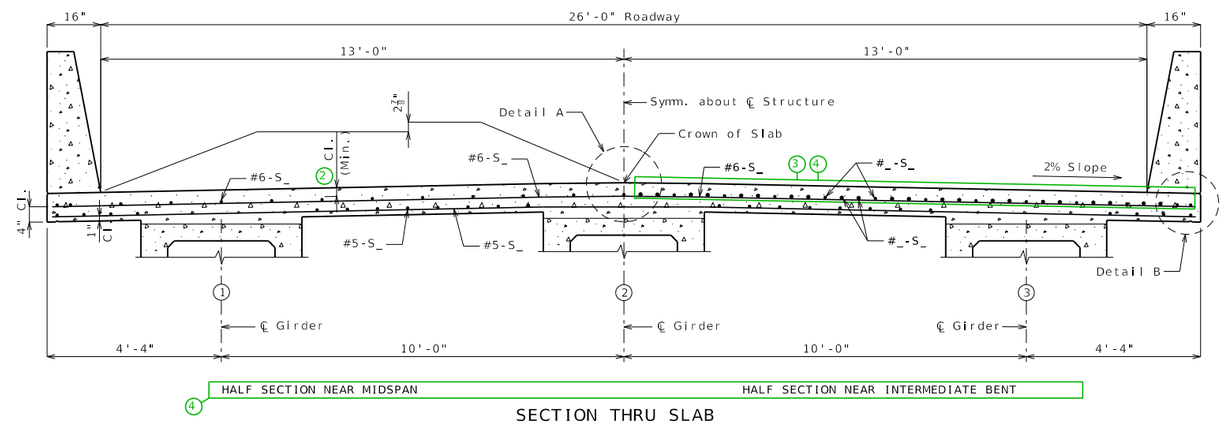

SECTION THRU SLAB

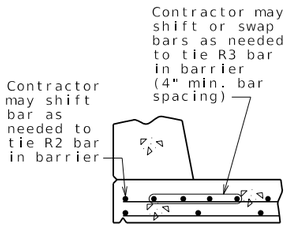

1

OPTIONAL SHIFTING TOP BARS AT BARRIER

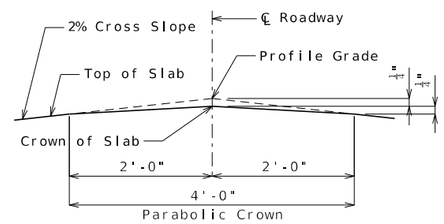

DETAIL A

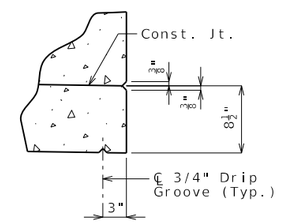

DETAIL B

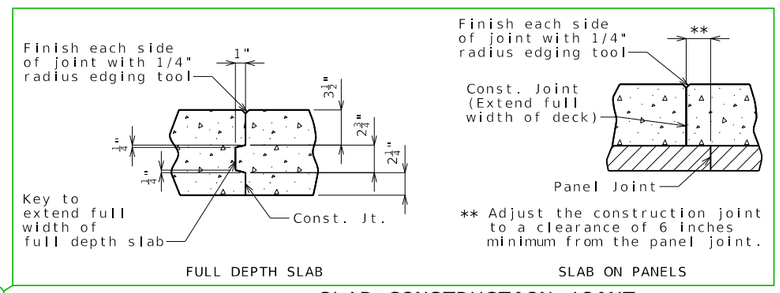

6

SLAB CONSTRUCTION JOINT

5

Notes:

7 For details of precast prestressed panels, see Sheet No. .

For reinforcement of barrier not shown, see Sheet No. .

For Theoretical Bottom of Slab Elevations, Girder Camber Diagram and Theoretical Slab Haunching Diagram, see Sheet No. .

For Plan of Slab Showing Reinforcement, see Sheet No. .

SLAB DETAILS

Detailed
Checked

Note: This drawing is not to scale. Follow dimensions.

Sheet No. of

DATE PREPARED	10/17/2023
ROUTE	STATE MO
DISTRICT	SHEET NO. 3
COUNTY	
JOB NO.	
CONTRACT ID.	
PROJECT NO.	
BRIDGE NO.	

DESCRIPTION	DATE

MISSOURI HIGHWAYS AND TRANSPORTATION COMMISSION
105 WEST CAPITOL
JEFFERSON CITY, MO 65102
1-888-ASK-MODOT (1-888-275-6636)

SLAB03_28ft_symm Guidance & Alternate Details (1 of 4)

Standard Drawing Guidance
(do not show on plans):

(1) Remove if not required.

(2) Use the following values for clearance to top longitudinal bars:

$3\frac{1}{8}$" for #5 bars

3" for #6 bars

$2\frac{7}{8}$" for #7 bars

$2\frac{3}{4}$" for #8 bars

Use a triple asterisk when there are different size top bars and add below the single asterisk note the following (modified as needed)(this will be the only astrisk note for CIP decks):

*** $3\frac{1}{8}$" (#5)
3" (#6)
$2\frac{7}{8}$" (#7)
$2\frac{3}{4}$" (#8)

Clearance values based on the #6 top transverse bar used for this standard slab. Values will need to be revised for other size transverse bars.

(3) The larger negative moment reinforcement shown is grouped and can be deleted if the negative moment steel is the same size as the distribution reinforcement. A set of bars the same size as the distribution bars exist behind the larger bars shown, and will become visible when the larger bars are deleted. (No need to resize)

(4) The subheadings and negative moment bars are grouped and can be deleted for single span bridges. <Ctrl> U to ungroup

(5) Place appropriate slab pouring sequence cell and modify as required.

(6) Use alternate detail for CIP decks:

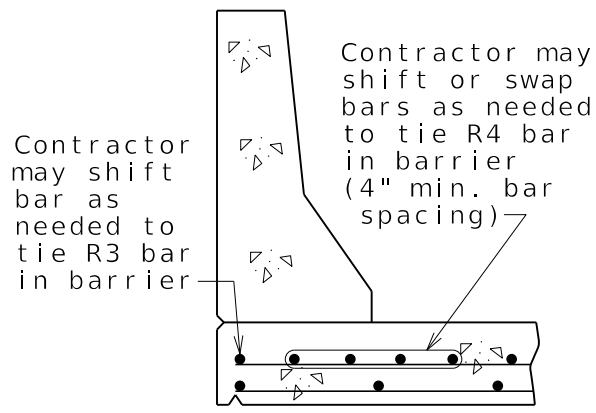

OPTIONAL SHIFTING
TOP BARS AT BARRIER

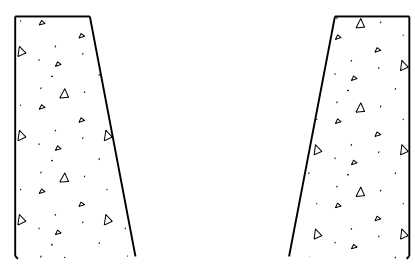

Alternate detail for
Type H barrier

For 8" thick slabs, change top dimension to 3 1/4" and center dimension to 2 1/2".

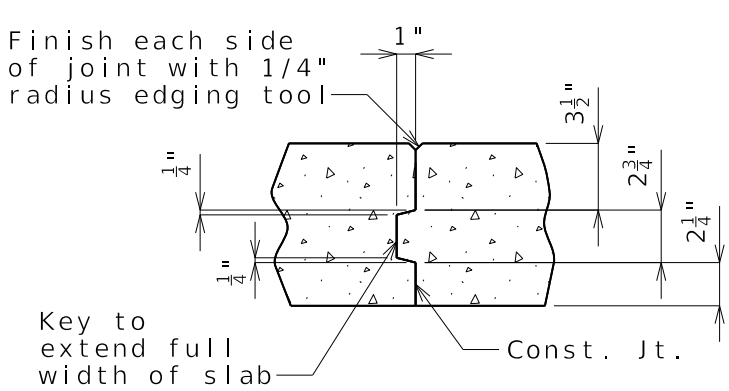

SLAB CONSTRUCTION JOINT

(7) Remove for CIP deck

Girder spacing and reinforcement size & spacing shown are not necessarily standard. Follow design.

SLAB03_28ft_symm Guidance & Alternate Details (2 of 4)

4-Beam Panel Deck

Plate Girder

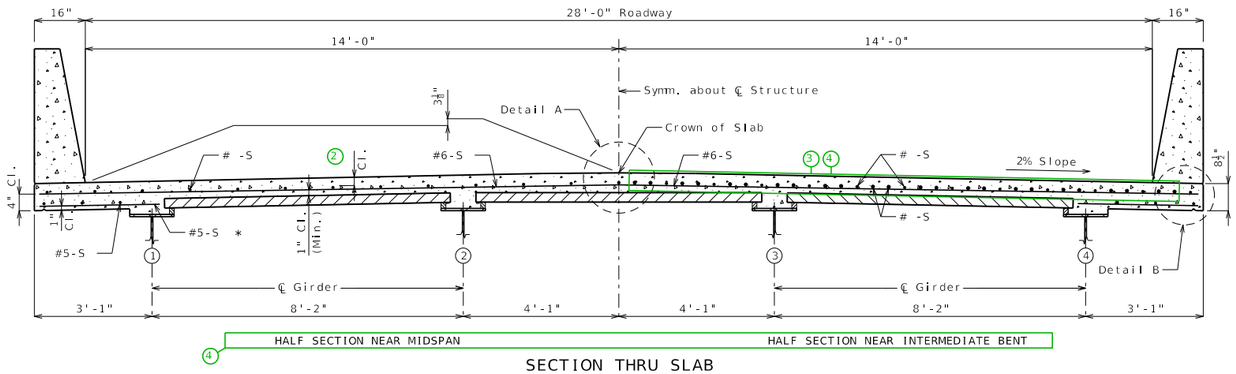

SECTION THRU SLAB

* Alternate bar shape available, see barrier sheet.

4-Beam CIP Deck

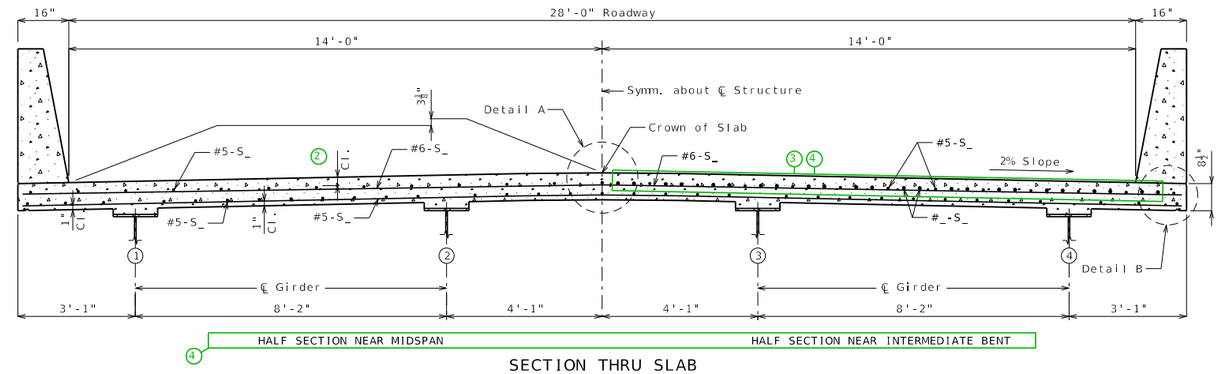

SECTION THRU SLAB

Type 2,3,4

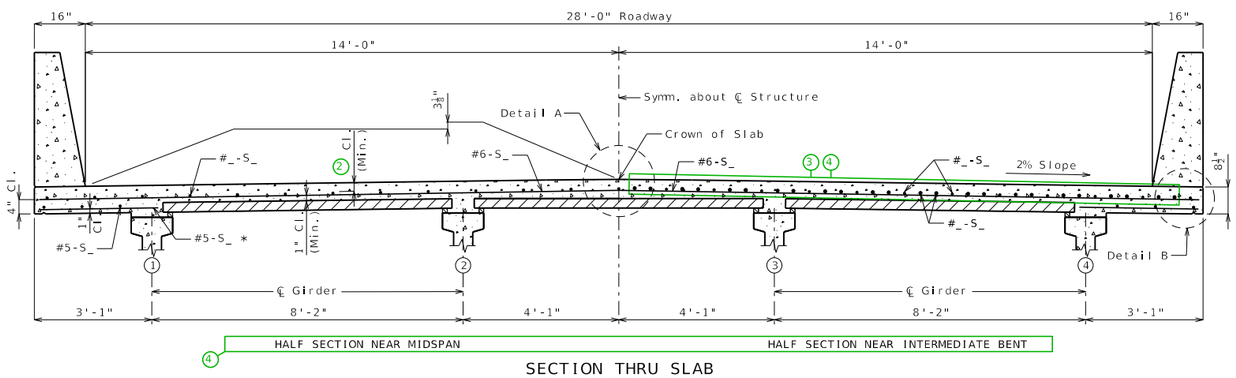

SECTION THRU SLAB

* Alternate bar shape available, see barrier sheet.

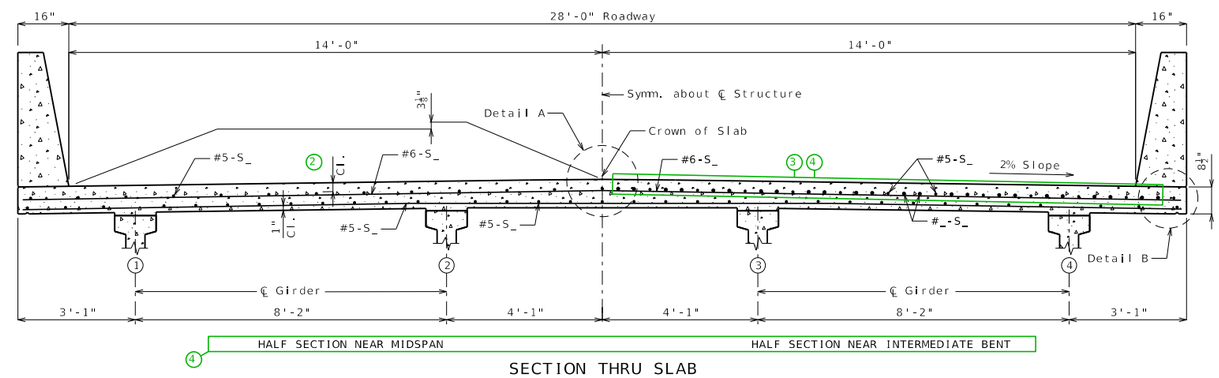

SECTION THRU SLAB

Type 6

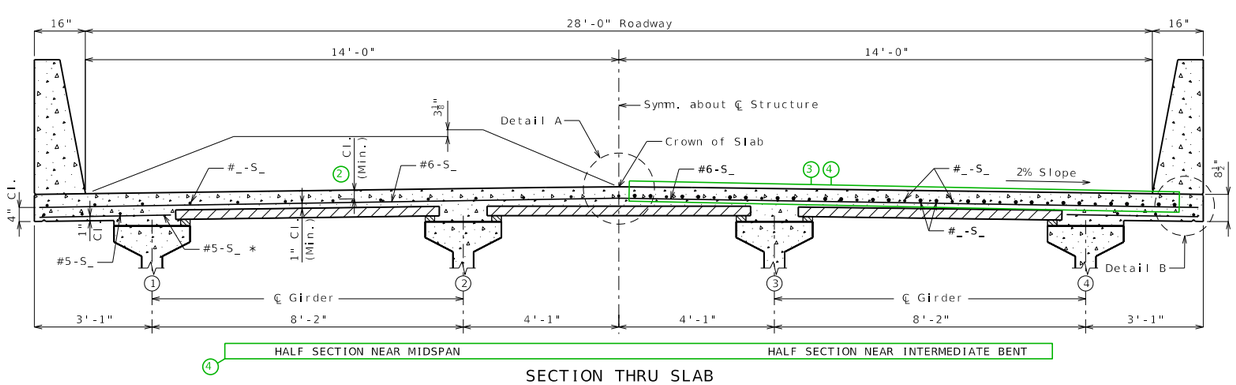

SECTION THRU SLAB

* Alternate bar shape available, see barrier sheet.

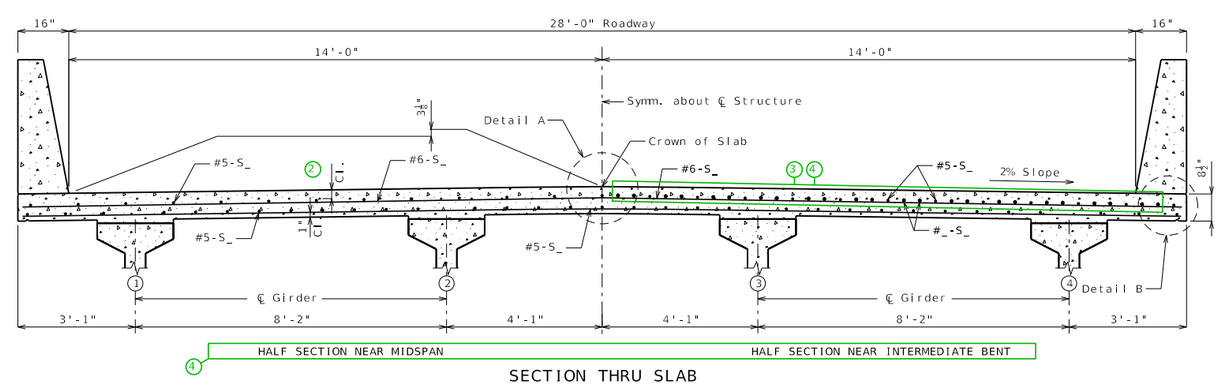

SECTION THRU SLAB

SLAB03_28ft_symm Guidance & Alternate Details (3 of 4)

4-Beam Panel Deck

Bulb-Tee

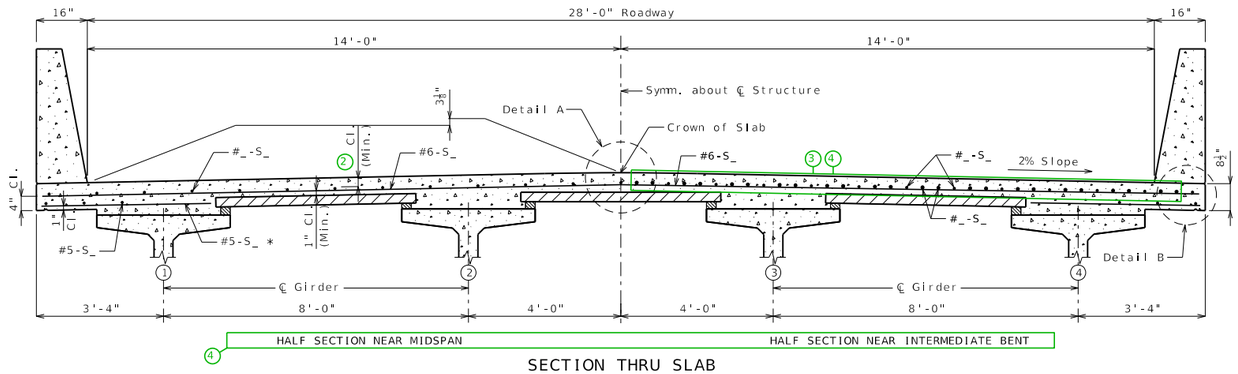

SECTION THRU SLAB

* Alternate bar shape available, see barrier sheet.

NU

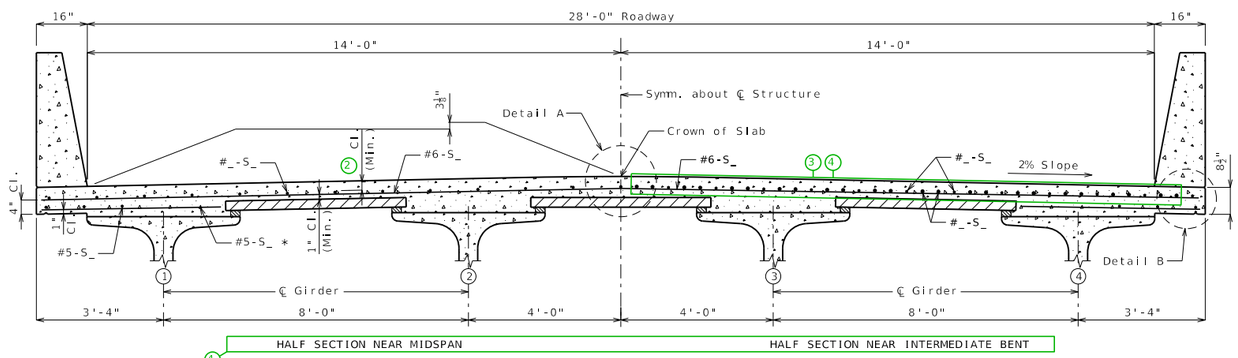

SECTION THRU SLAB

* Alternate bar shape available, see barrier sheet.

Box

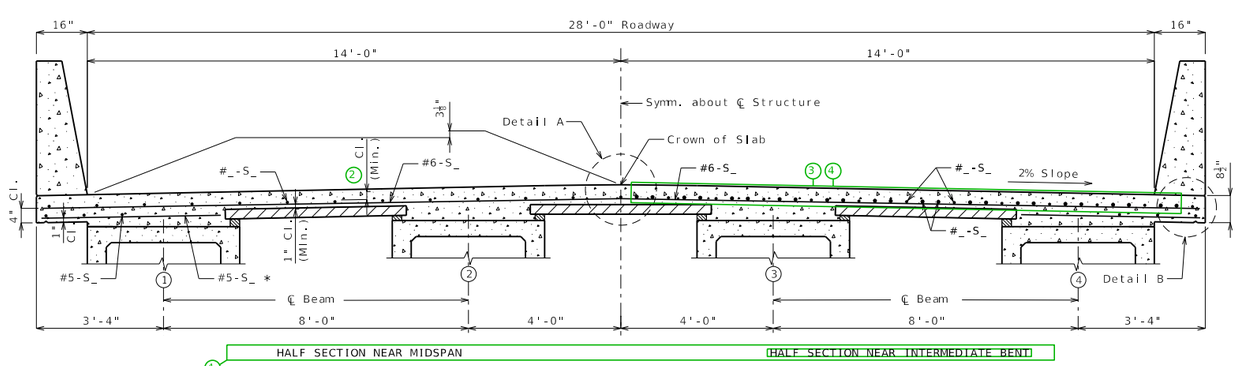

SECTION THRU SLAB

* Alternate bar shape available, see barrier sheet.

4-Beam CIP Deck

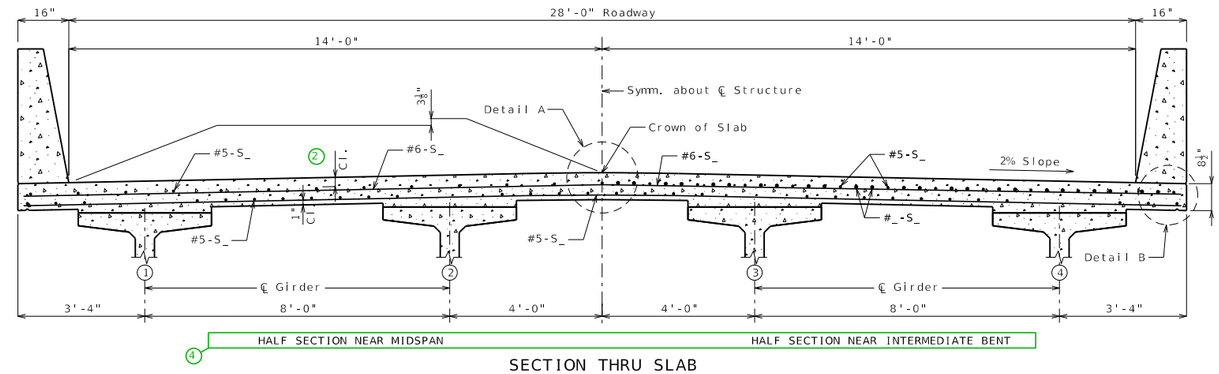

SECTION THRU SLAB

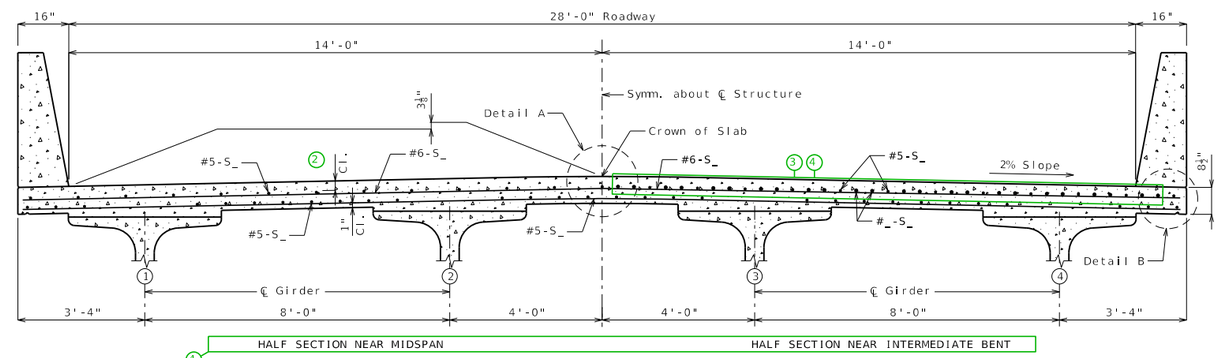

SECTION THRU SLAB

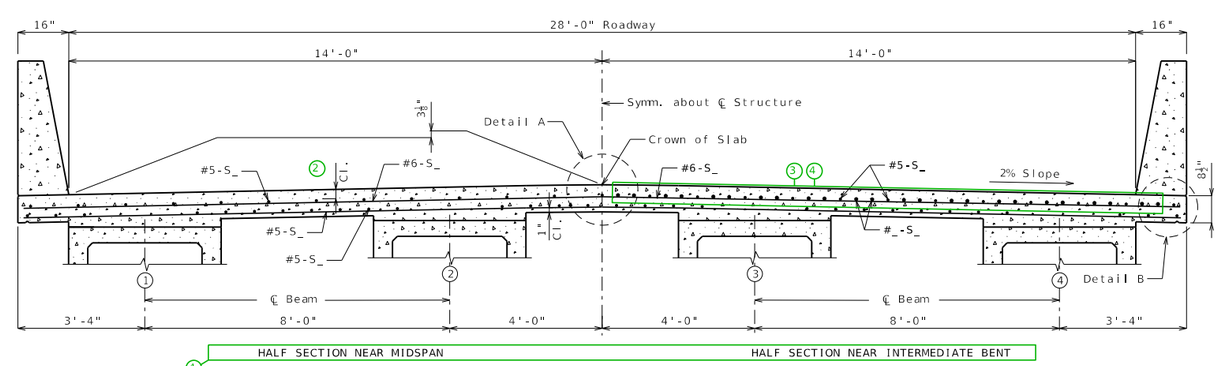

SECTION THRU SLAB

SLAB03_28ft_symm Guidance & Alternate Details (4 of 4)

3-Beam Panel Deck

Bulb-Tee

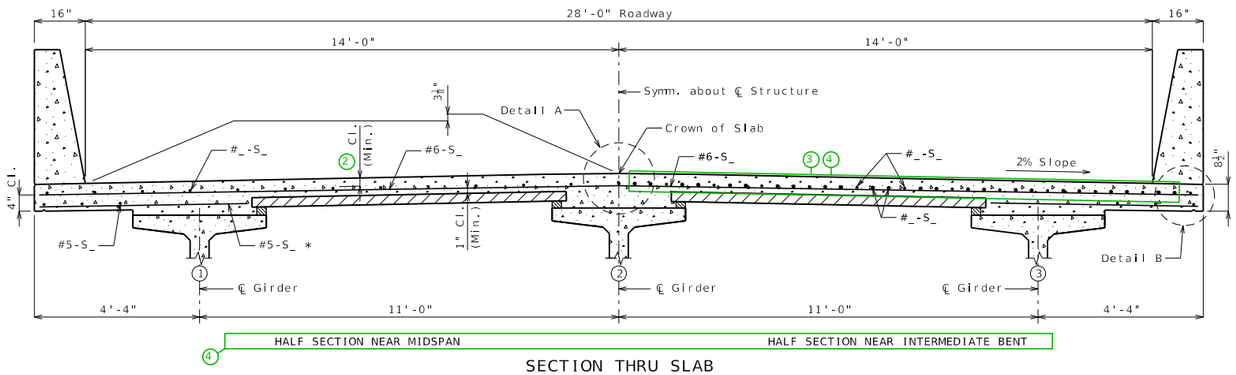

SECTION THRU SLAB

* Alternate bar shape available, see barrier sheet.

NU

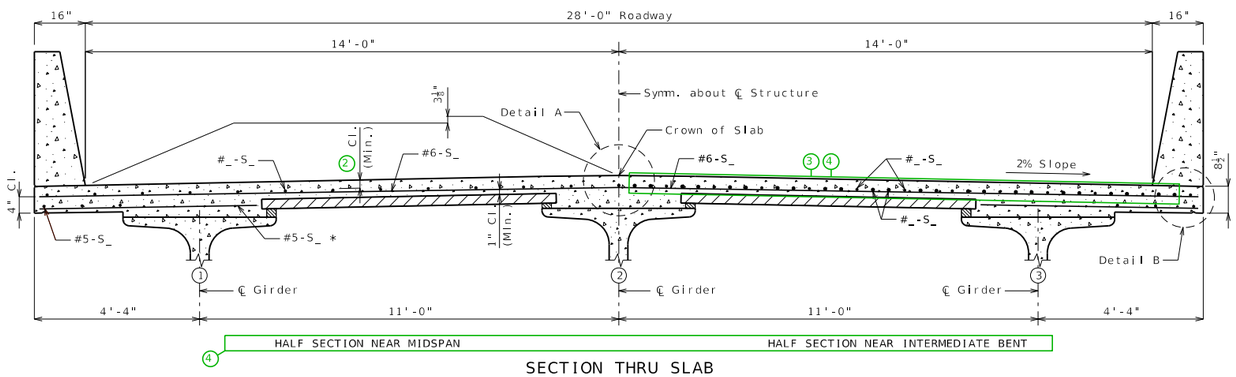

SECTION THRU SLAB

* Alternate bar shape available, see barrier sheet.

Box

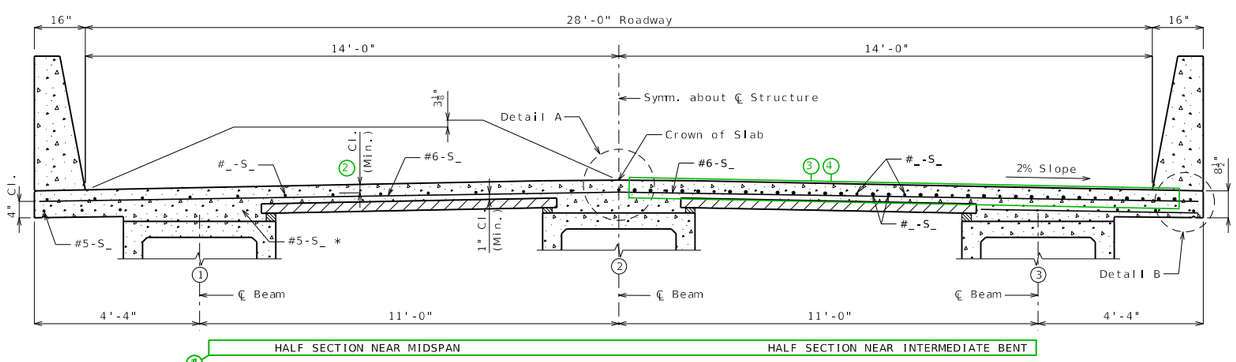

SECTION THRU SLAB

* Alternate bar shape available, see barrier sheet.

3-Beam CIP Deck

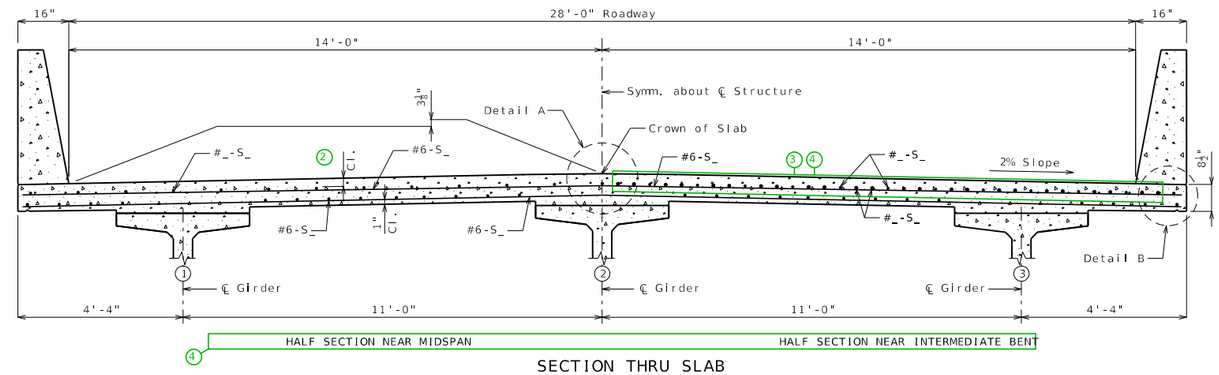

SECTION THRU SLAB

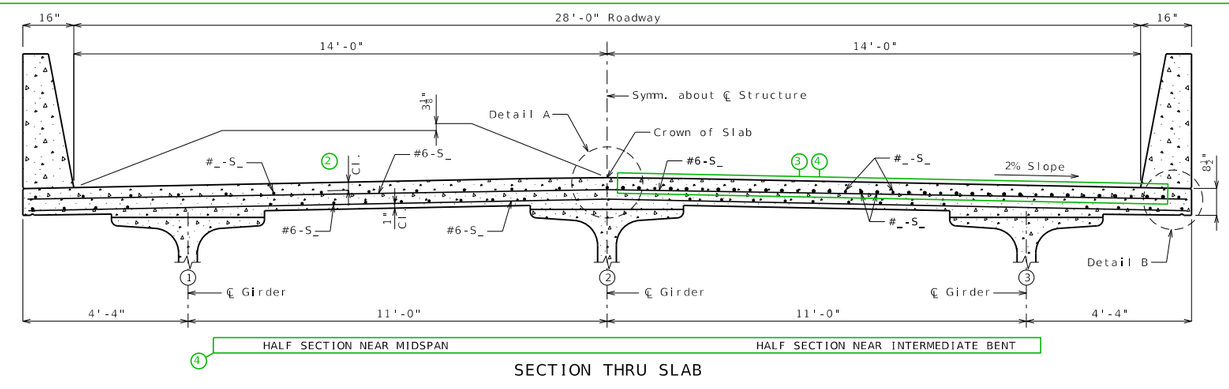

SECTION THRU SLAB

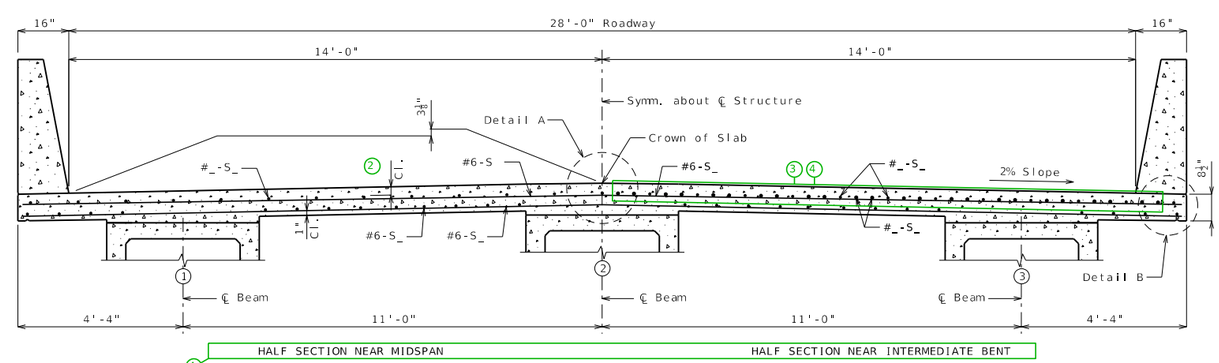

SECTION THRU SLAB

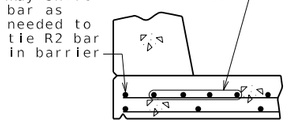

OPTIONAL SHIFTING TOP BARS AT BARRIER

1

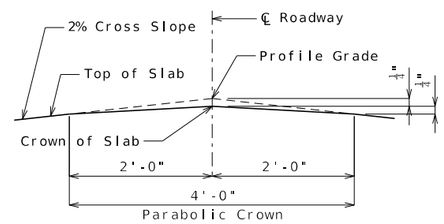

DETAIL A

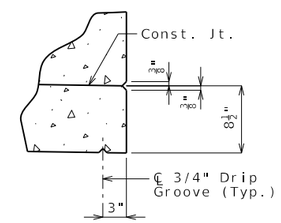

DETAIL B

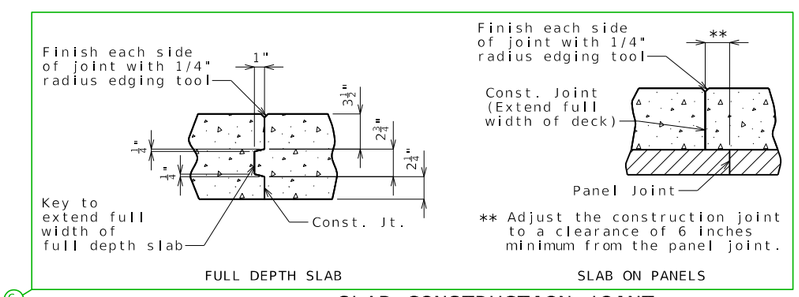

6

SLAB CONSTRUCTION JOINT

5

Notes:

7 For details of precast prestressed panels, see Sheet No. .

For reinforcement of barrier not shown, see Sheet No. .

For Theoretical Bottom of Slab Elevations, Girder Camber Diagram and Theoretical Slab Haunching Diagram, see Sheet No. .

For Plan of Slab Showing Reinforcement, see Sheet No. .

SLAB DETAILS

Detailed
Checked

Note: This drawing is not to scale. Follow dimensions.

Sheet No. of

DATE PREPARED	10/17/2023
ROUTE	STATE MO
DISTRICT	SHEET NO. 4
COUNTY	
JOB NO.	
CONTRACT ID.	
PROJECT NO.	
BRIDGE NO.	

DESCRIPTION

DATE

MISSOURI HIGHWAYS AND TRANSPORTATION COMMISSION
105 WEST CAPITOL
JEFFERSON CITY, MO 65102
1-888-ASK-MODOT (1-888-275-6636)

SLAB04_30ft_symm Guidance & Alternate Details (1 of 3)

Standard Drawing Guidance
(do not show on plans):

1 Remove if not required.

2 Use the following values for clearance to top longitudinal bars:

$3\frac{1}{8}$" for #5 bars

3" for #6 bars

$2\frac{7}{8}$" for #7 bars

$2\frac{3}{4}$" for #8 bars

Use a triple asterisk when there are different size top bars and add below the single asterisk note the following (modified as needed)(this will be the only astrisk note for CIP decks):

*** $3\frac{1}{8}$" (#5)
3" (#6)
$2\frac{7}{8}$" (#7)
$2\frac{3}{4}$" (#8)

Clearance values based on the #6 top transverse bar used for this standard slab. Values will need to be revised for other size transverse bars.

3 The larger negative moment reinforcement shown is grouped and can be deleted if the negative moment steel is the same size as the distribution reinforcement. A set of bars the same size as the distribution bars exist behind the larger bars shown, and will become visible when the larger bars are deleted. (No need to resize)

4 The subheadings and negative moment bars are grouped and can be deleted for single span bridges. <Ctrl> U to ungroup

5 Place appropriate slab pouring sequence cell and modify as required.

6 Use alternate detail for CIP decks:

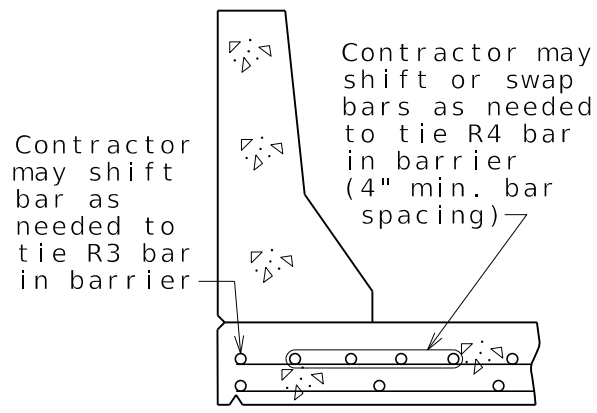

OPTIONAL SHIFTING
TOP BARS AT BARRIER

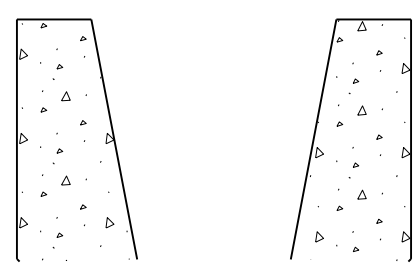

Alternate detail for
Type H barrier

For 8" thick slabs, change top dimension to 3 1/4" and center dimension to 2 1/2".

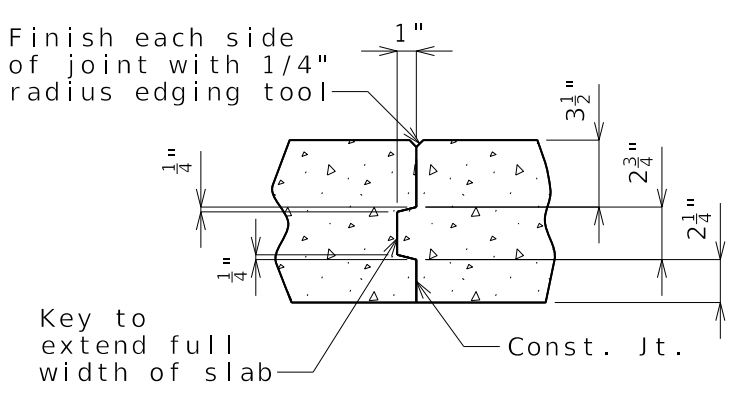

SLAB CONSTRUCTION JOINT

7 Remove for CIP deck

Girder spacing and reinforcement size & spacing shown are not necessarily standard. Follow design.

SLAB04_30ft_symm

Guidance & Alternate Details (2 of 3)

4-Beam Panel Deck

4-Beam CIP Deck

Plate Girder

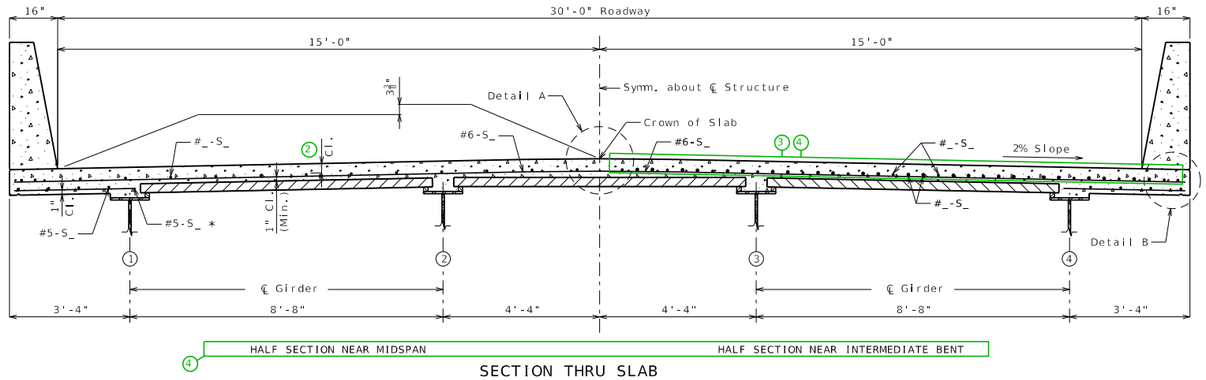

SECTION THRU SLAB

* Alternate bar shape available, see barrier sheet.

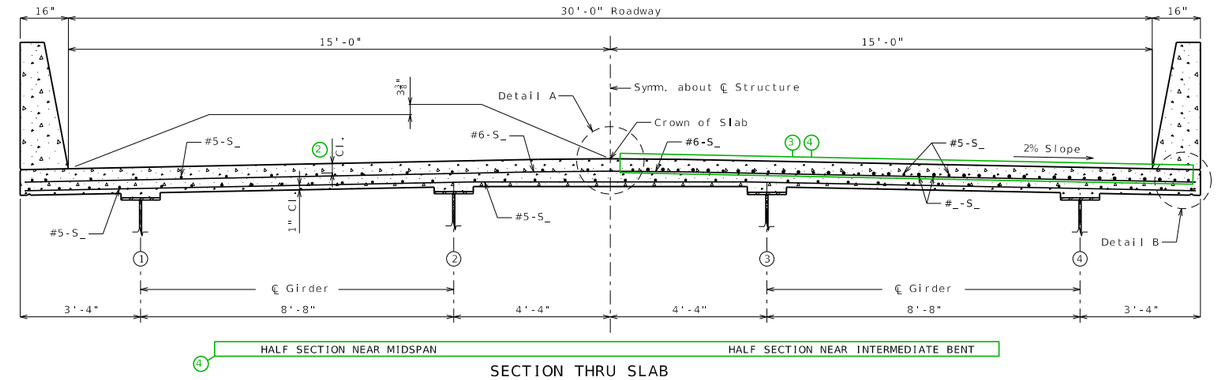

SECTION THRU SLAB

Type 2,3,4

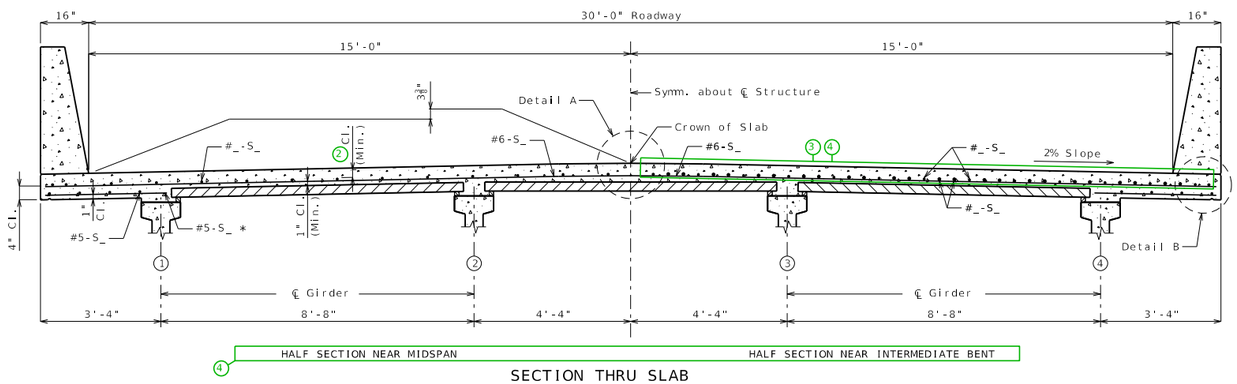

SECTION THRU SLAB

* Alternate bar shape available, see barrier sheet.

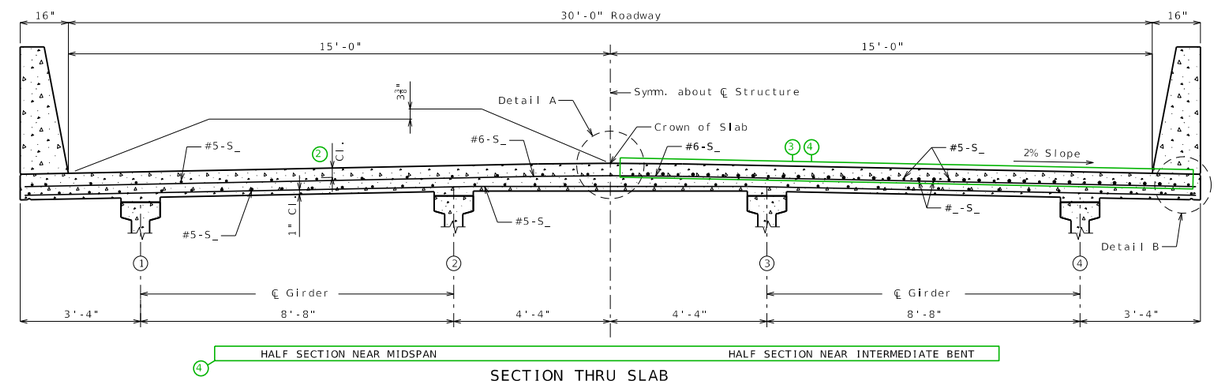

SECTION THRU SLAB

Type 6

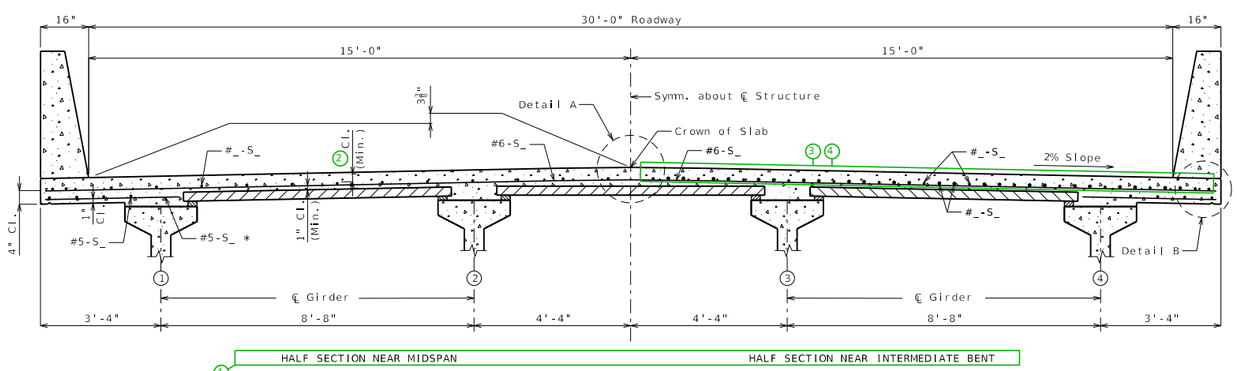

SECTION THRU SLAB

* Alternate bar shape available, see barrier sheet.

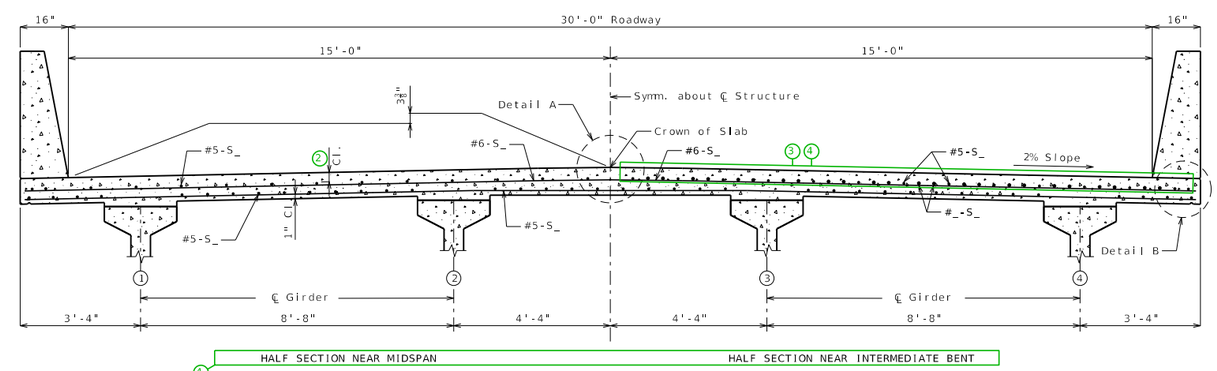

SECTION THRU SLAB

SLAB04_30ft_symm Guidance & Alternate Details (3 of 3)

4-Beam Panel Deck

Bulb-Tee

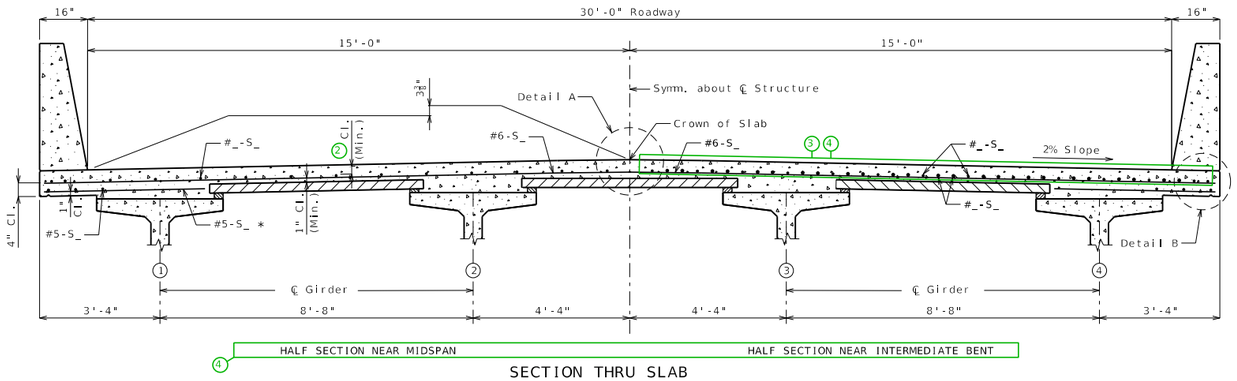

SECTION THRU SLAB

* Alternate bar shape available, see barrier sheet.

NU

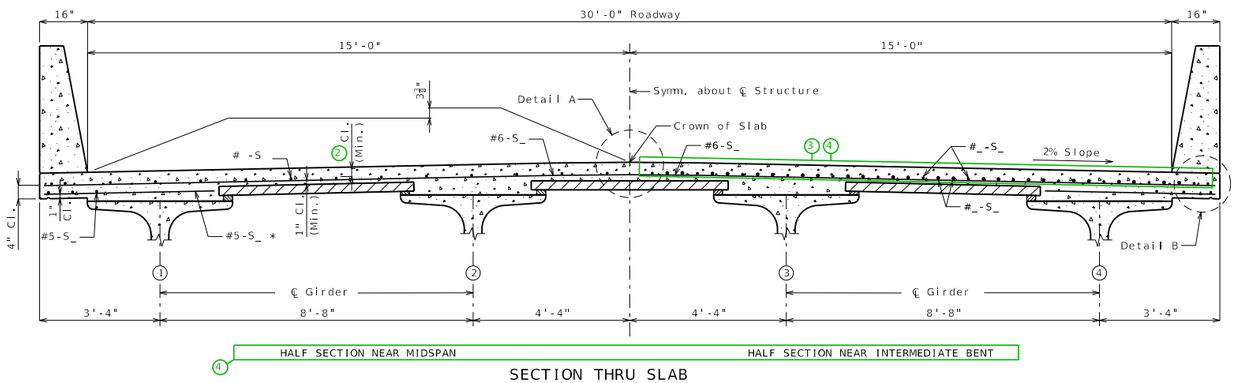

SECTION THRU SLAB

* Alternate bar shape available, see barrier sheet.

Box

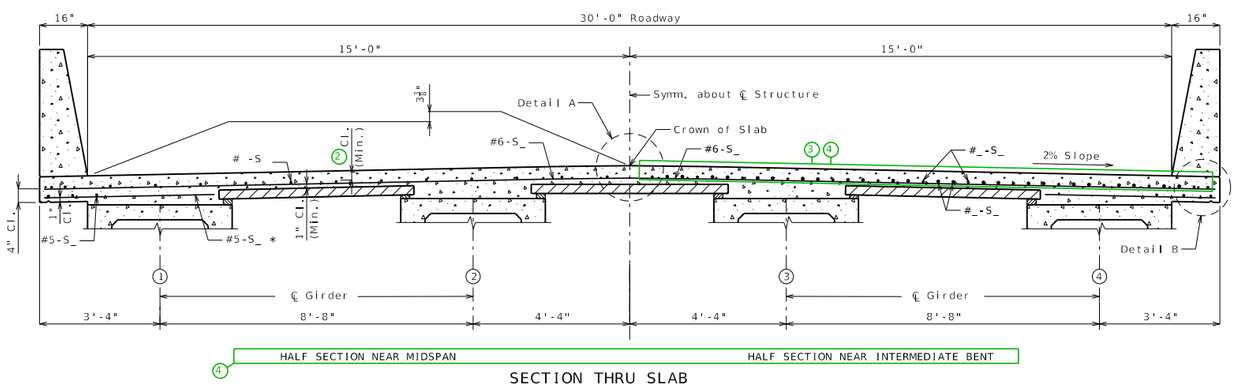

SECTION THRU SLAB

* Alternate bar shape available, see barrier sheet.

4-Beam CIP Deck

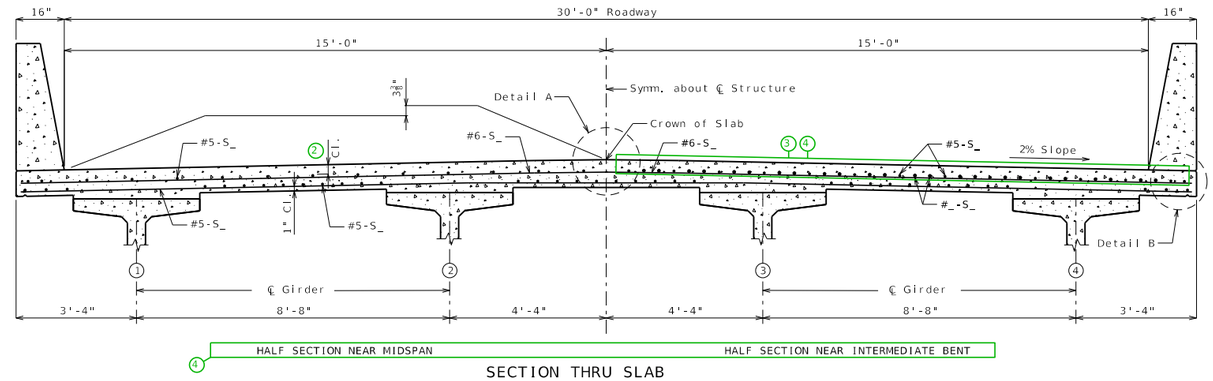

SECTION THRU SLAB

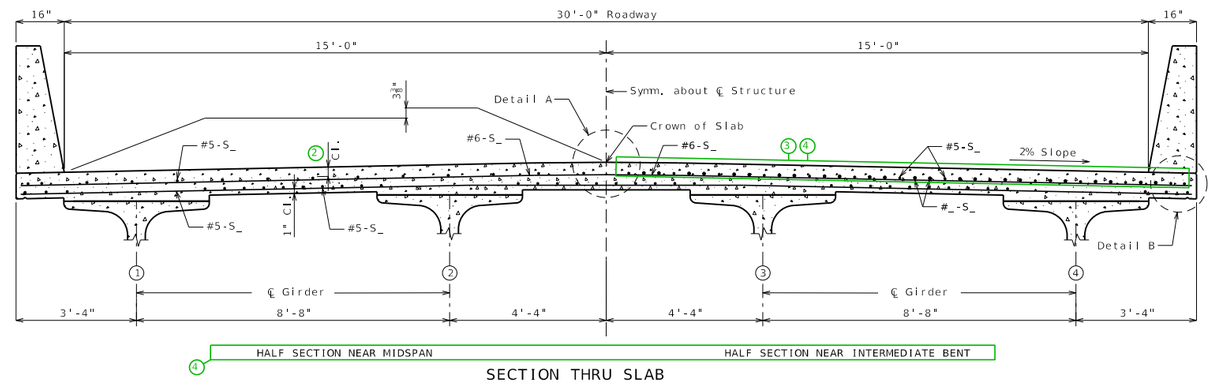

SECTION THRU SLAB

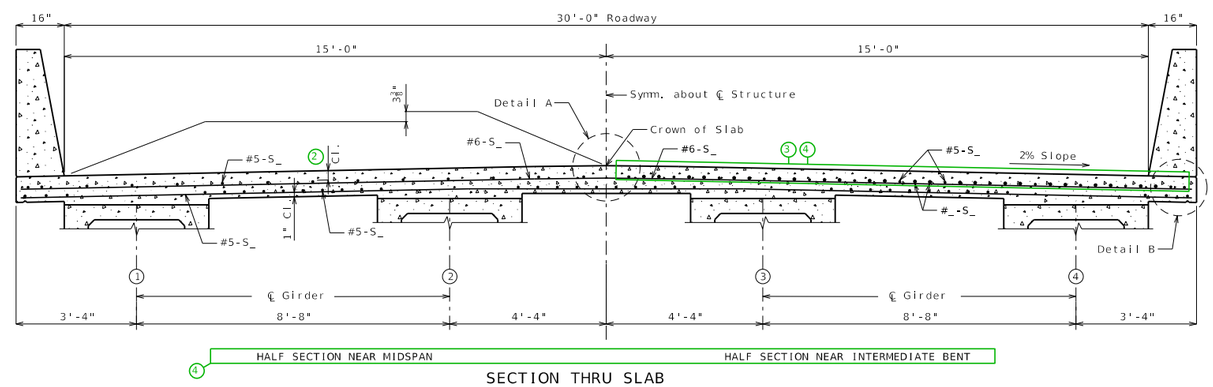

SECTION THRU SLAB

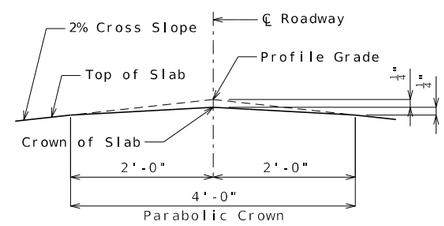

DETAIL A

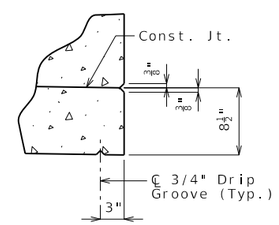

DETAIL B

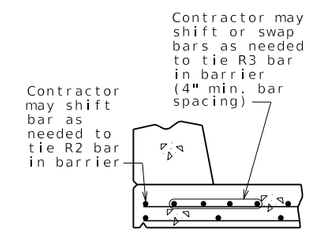

OPTIONAL SHIFTING TOP BARS AT BARRIER

1

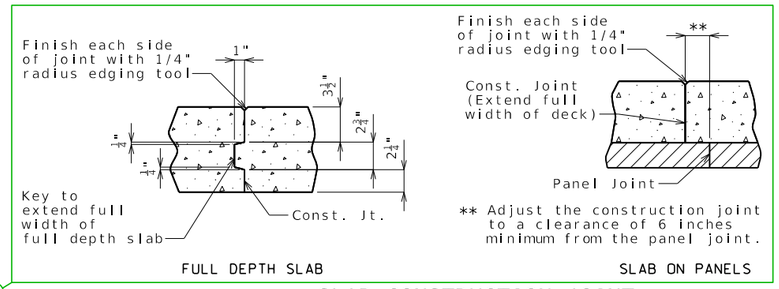

6

SLAB CONSTRUCTION JOINT

5

Notes:

7 For details of precast prestressed panels, see Sheet No. .

For reinforcement of barrier not shown, see Sheet No. .

For Theoretical Bottom of Slab Elevations, Girder Camber Diagram and Theoretical Slab Haunching Diagram, see Sheet No. .

For Plan of Slab Showing Reinforcement, see Sheet No. .

SLAB DETAILS

Detailed
Checked

Note: This drawing is not to scale. Follow dimensions.

Sheet No. of

DATE PREPARED	
10/17/2023	
ROUTE	STATE MO
DISTRICT	SHEET NO. 5
COUNTY	
JOB NO.	
CONTRACT ID.	
PROJECT NO.	
BRIDGE NO.	

DESCRIPTION	DATE

MISSOURI HIGHWAYS AND TRANSPORTATION COMMISSION
105 WEST CAPITOL
JEFFERSON CITY, MO 65102
1-888-ASK-MODOT (1-888-275-6636)

SLAB05_32ft_symm Guidance & Alternate Details (1 of 3)

Standard Drawing Guidance
(do not show on plans):

1 Remove if not required.

2 Use the following values for clearance to top longitudinal bars:

$3\frac{1}{8}$" for #5 bars

3" for #6 bars

$2\frac{7}{8}$" for #7 bars

$2\frac{3}{4}$" for #8 bars

Use a triple asterisk when there are different size top bars and add below the single asterisk note the following (modified as needed)(this will be the only astrisk note for CIP decks):

*** $3\frac{1}{8}$" (#5)
3" (#6)
$2\frac{7}{8}$" (#7)
$2\frac{3}{4}$" (#8)

Clearance values based on the #6 top transverse bar used for this standard slab. Values will need to be revised for other size transverse bars.

3 The larger negative moment reinforcement shown is grouped and can be deleted if the negative moment steel is the same size as the distribution reinforcement. A set of bars the same size as the distribution bars exist behind the larger bars shown, and will become visible when the larger bars are deleted. (No need to resize)

4 The subheadings and negative moment bars are grouped and can be deleted for single span bridges. <Ctrl> U to ungroup

5 Place appropriate slab pouring sequence cell and modify as required.

6 Use alternate detail for CIP decks:

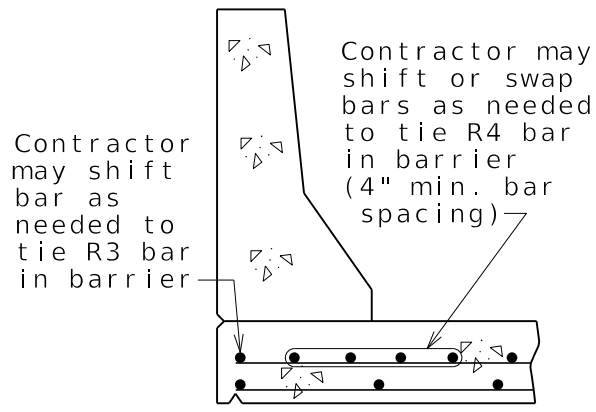

OPTIONAL SHIFTING
TOP BARS AT BARRIER

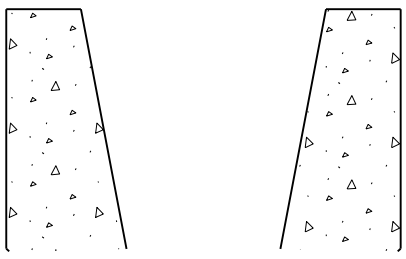

Alternate detail for
Type H barrier

For 8" thick slabs, change top dimension to 3 1/4" and center dimension to 2 1/2".

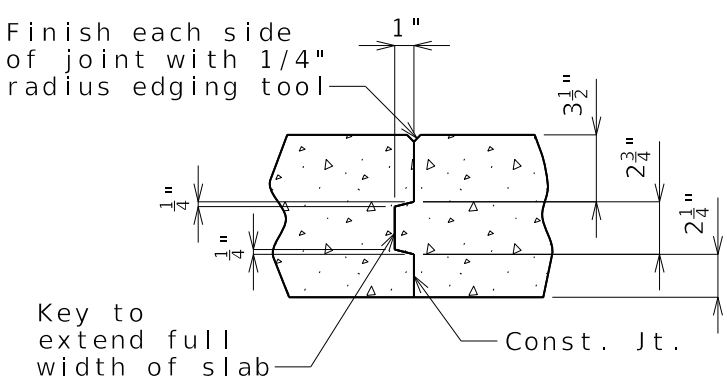

SLAB CONSTRUCTION JOINT

7 Remove for CIP deck

Girder spacing and reinforcement size & spacing shown are not necessarily standard. Follow design.

SLAB05_32ft_symm Guidance & Alternate Details (2 of 3)

4-Beam Panel Deck

Plate Girder

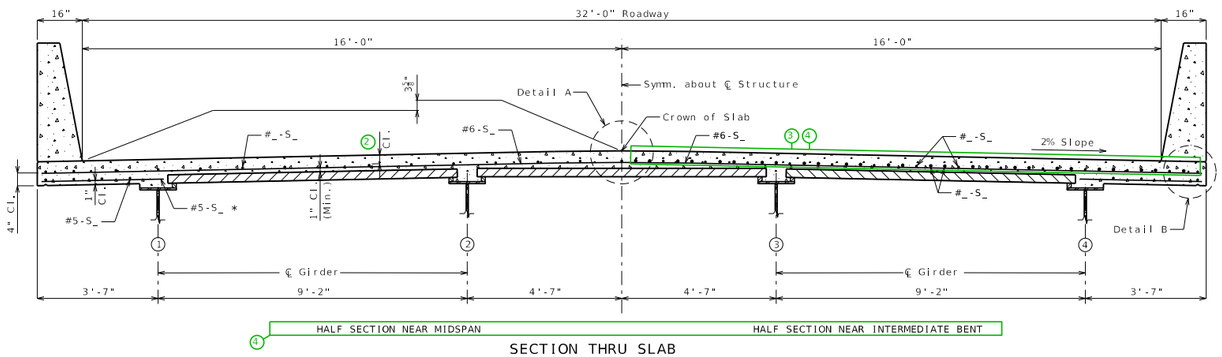

SECTION THRU SLAB

* Alternate bar shape available, see barrier sheet.

4-Beam CIP Deck

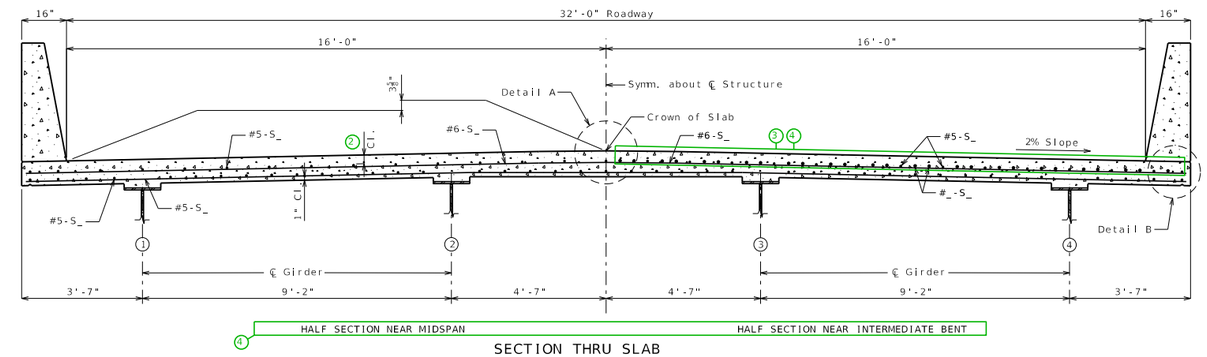

SECTION THRU SLAB

Type 2,3,4

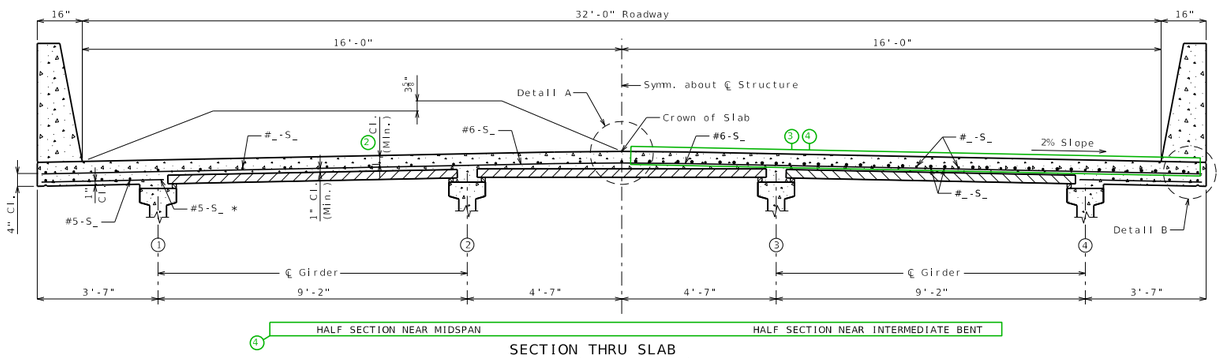

SECTION THRU SLAB

* Alternate bar shape available, see barrier sheet.

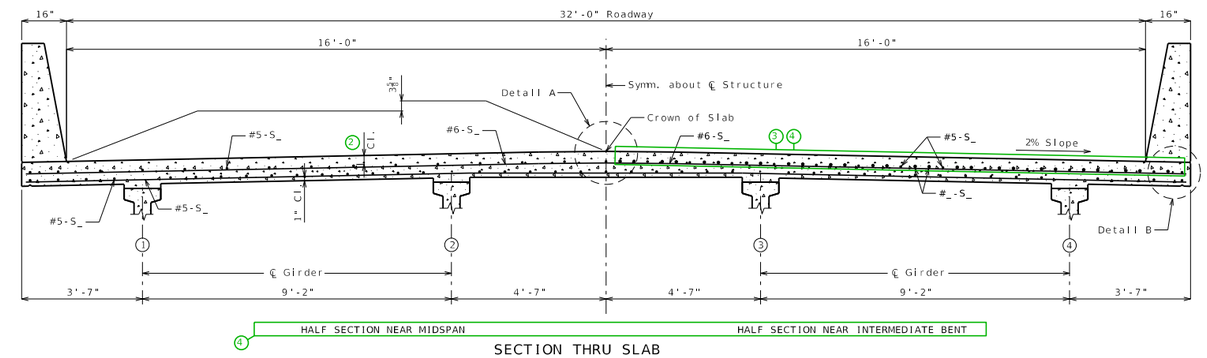

SECTION THRU SLAB

Type 6

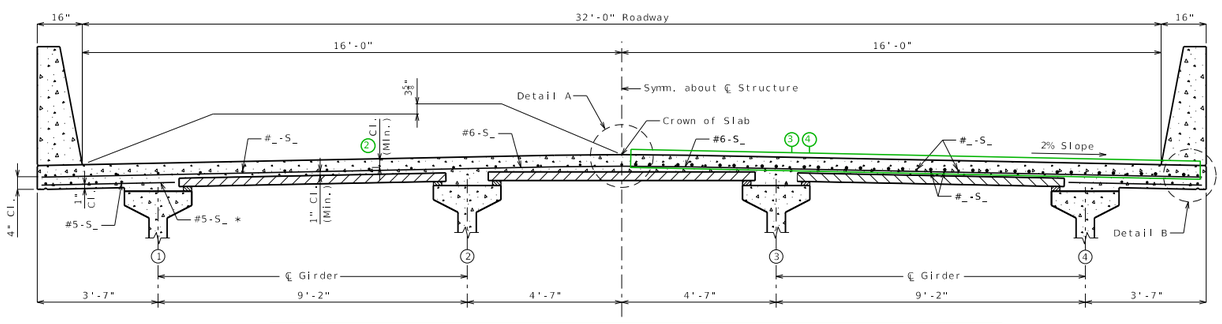

SECTION THRU SLAB

* Alternate bar shape available, see barrier sheet.

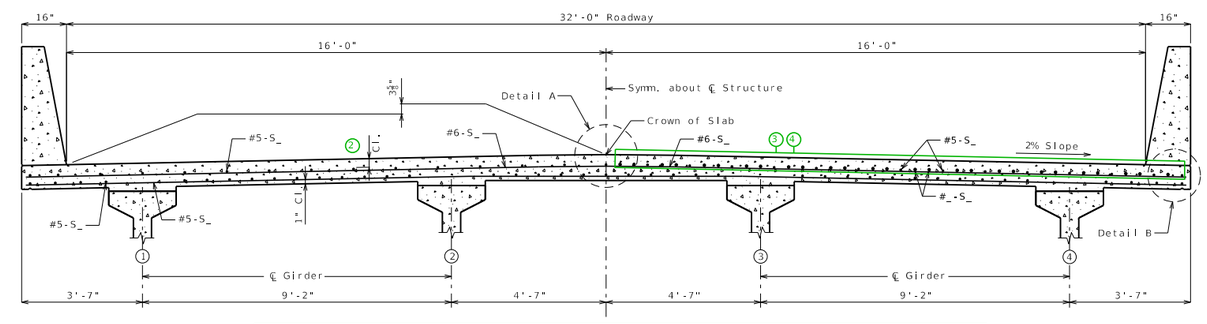

SECTION THRU SLAB

SLAB05_32ft_symm Guidance & Alternate Details (3 of 3)

4-Beam Panel Deck

Bulb-Tee

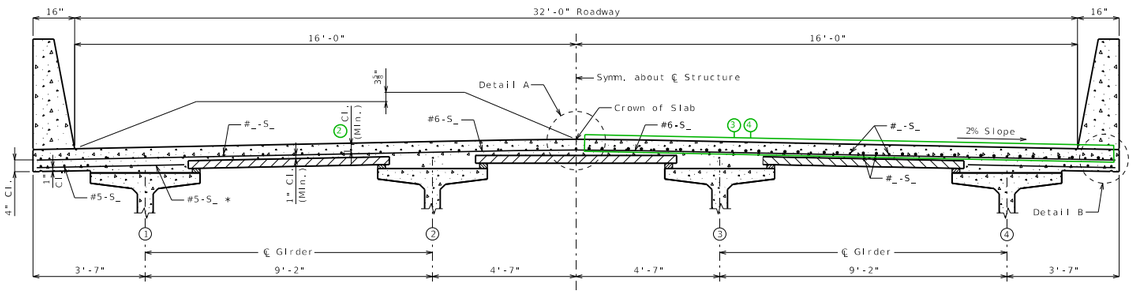

SECTION THRU SLAB

* Alternate bar shape available, see barrier sheet.

NU

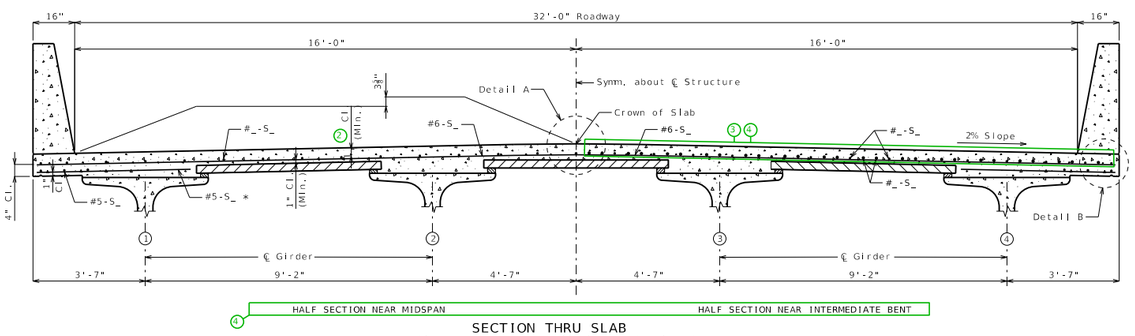

SECTION THRU SLAB

* Alternate bar shape available, see barrier sheet.

Box

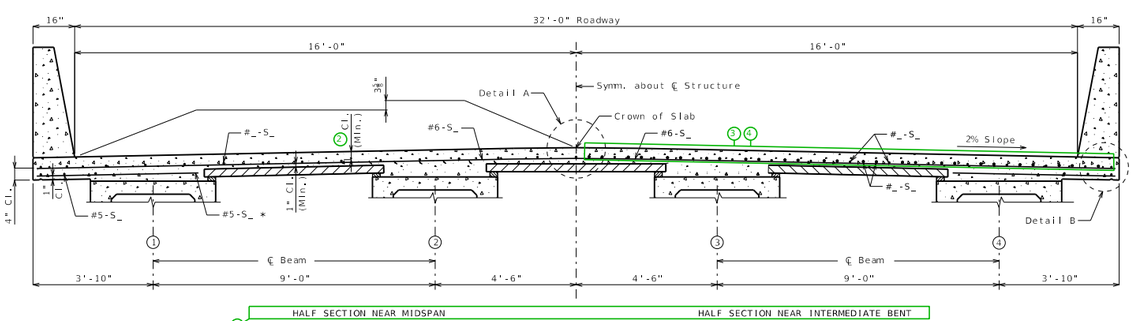

SECTION THRU SLAB

* Alternate bar shape available, see barrier sheet.

4-Beam CIP Deck

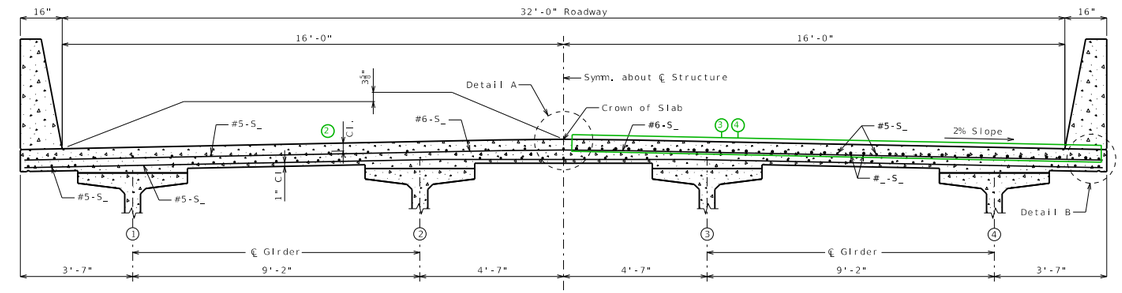

SECTION THRU SLAB

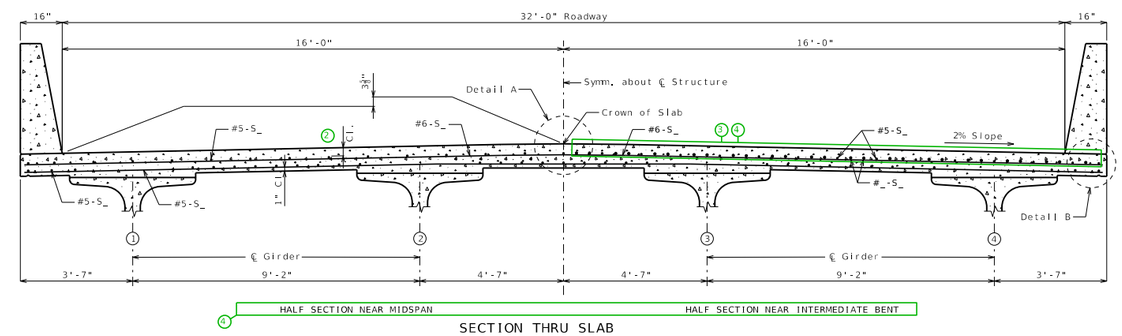

SECTION THRU SLAB

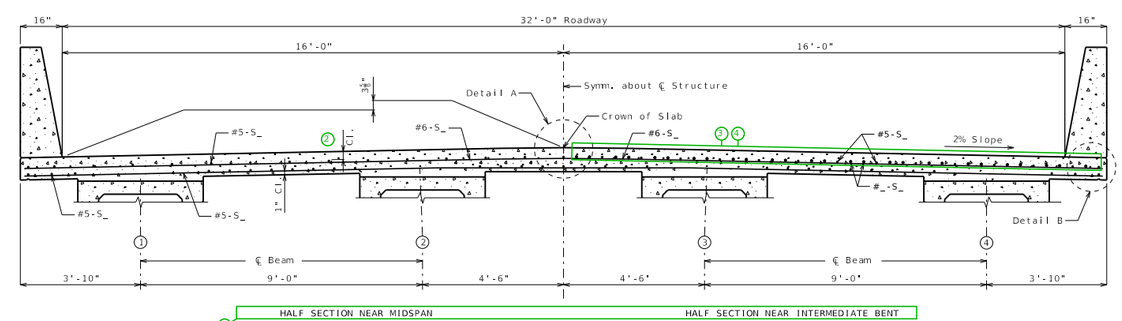

SECTION THRU SLAB

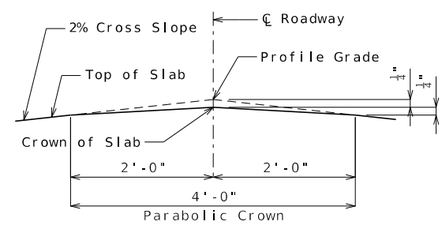

DETAIL A

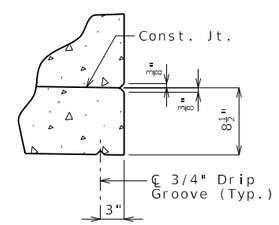

DETAIL B

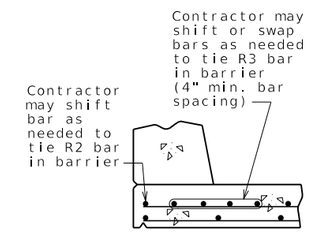

OPTIONAL SHIFTING TOP BARS AT BARRIER

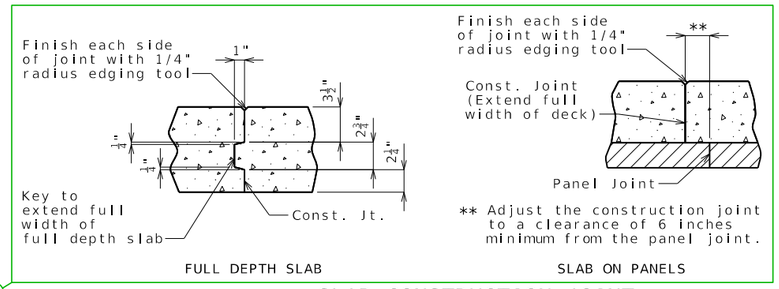

SLAB CONSTRUCTION JOINT

Notes:

For details of precast prestressed panels, see Sheet No. .

For reinforcement of barrier not shown, see Sheet No. .

For Theoretical Bottom of Slab Elevations, Girder Camber Diagram and Theoretical Slab Haunching Diagram, see Sheet No. .

For Plan of Slab Showing Reinforcement, see Sheet No. .

SLAB DETAILS

Detailed
Checked

Note: This drawing is not to scale. Follow dimensions.

Sheet No. of

DATE PREPARED	10/17/2023
ROUTE	STATE MO
DISTRICT	SHEET NO. 6
COUNTY	
JOB NO.	
CONTRACT ID.	
PROJECT NO.	
BRIDGE NO.	

DESCRIPTION | DATE

MISSOURI HIGHWAYS AND TRANSPORTATION COMMISSION

105 WEST CAPITOL
JEFFERSON CITY, MO 65102
1-888-ASK-MODOT (1-888-275-6636)

Standard Drawing Guidance
(do not show on plans):

1 Remove if not required.

2 Use the following values for clearance to top longitudinal bars:

$3\frac{1}{8}$" for #5 bars

3" for #6 bars

$2\frac{7}{8}$" for #7 bars

$2\frac{3}{4}$" for #8 bars

Use a triple asterisk when there are different size top bars and add below the single asterisk note the following (modified as needed)(this will be the only astrisk note for CIP decks):

*** $3\frac{1}{8}$" (#5)
3" (#6)
$2\frac{7}{8}$" (#7)
$2\frac{3}{4}$" (#8)

Clearance values based on the #6 top transverse bar used for this standard slab. Values will need to be revised for other size transverse bars.

3 The larger negative moment reinforcement shown is grouped and can be deleted if the negative moment steel is the same size as the distribution reinforcement. A set of bars the same size as the distribution bars exist behind the larger bars shown, and will become visible when the larger bars are deleted. (No need to resize)

4 The subheadings and negative moment bars are grouped and can be deleted for single span bridges. <Ctrl> U to ungroup

5 Place appropriate slab pouring sequence cell and modify as required.

6 Use alternate detail for CIP decks:

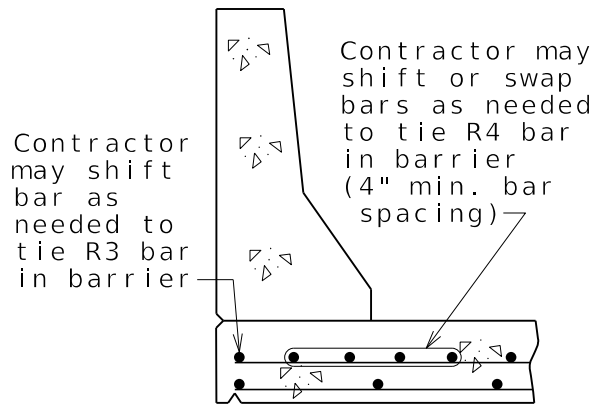

OPTIONAL SHIFTING
TOP BARS AT BARRIER

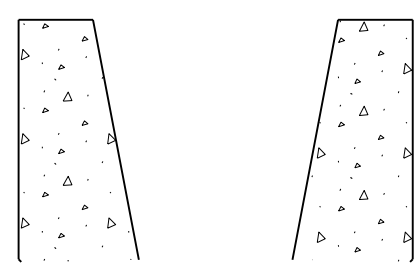

Alternate detail for
Type H barrier

For 8" thick slabs, change top dimension to 3 1/4" and center dimension to 2 1/2".

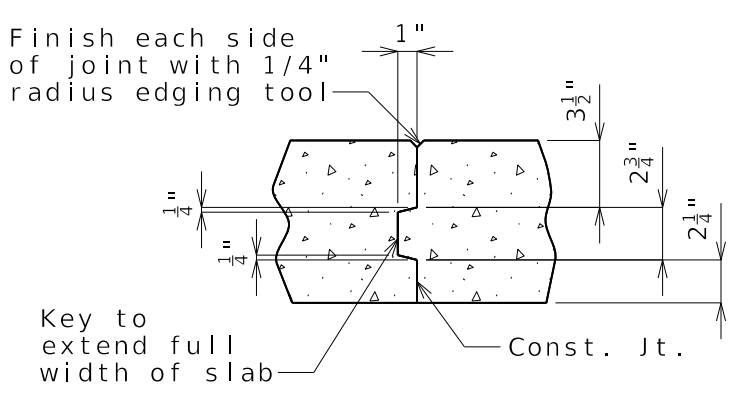

SLAB CONSTRUCTION JOINT

7 Remove for CIP deck

Girder spacing and reinforcement size & spacing shown are not necessarily standard. Follow design.

SLAB06_36ft_symm Guidance & Alternate Details (2 of 3)

Panel Deck

Plate Girder

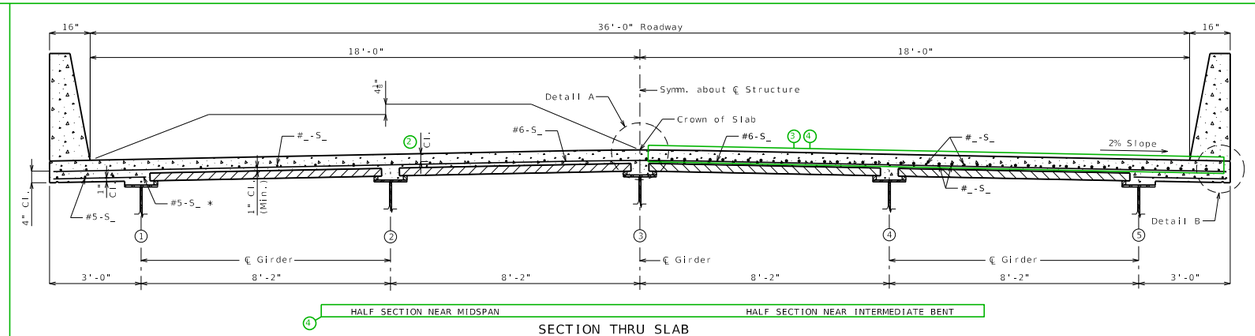

SECTION THRU SLAB

* Alternate bar shape available, see barrier sheet.

Type 2,3,4

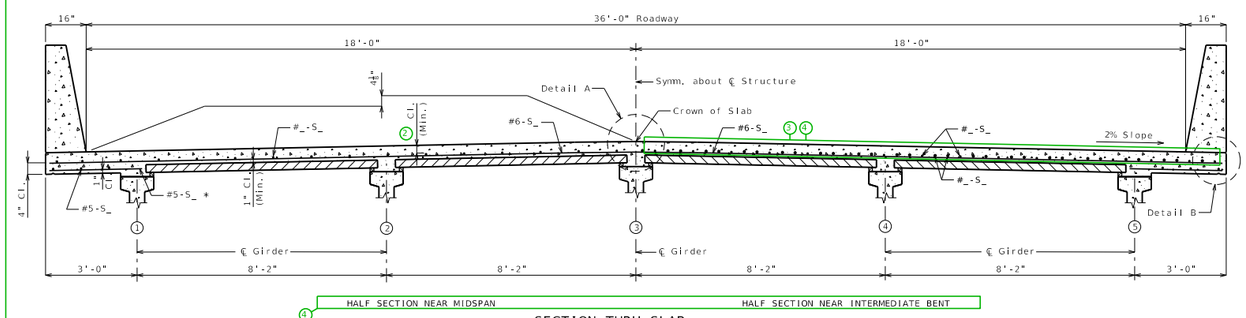

SECTION THRU SLAB

* Alternate bar shape available, see barrier sheet.

Type 6

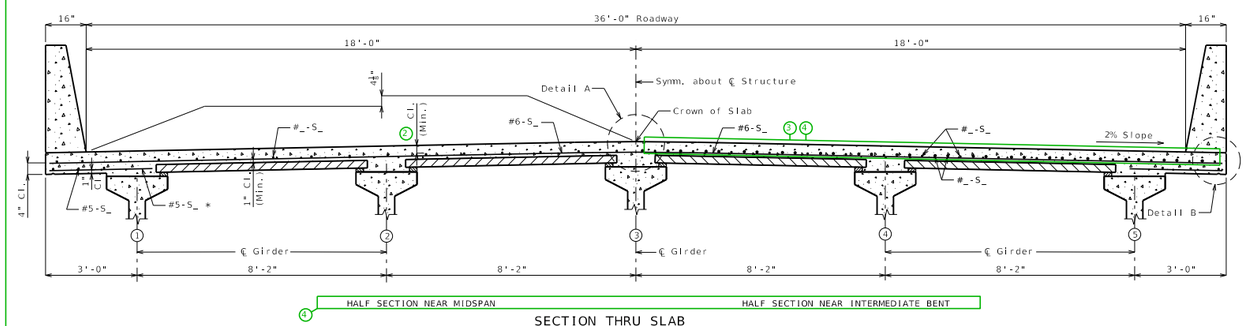

SECTION THRU SLAB

* Alternate bar shape available, see barrier sheet.

CIP Deck

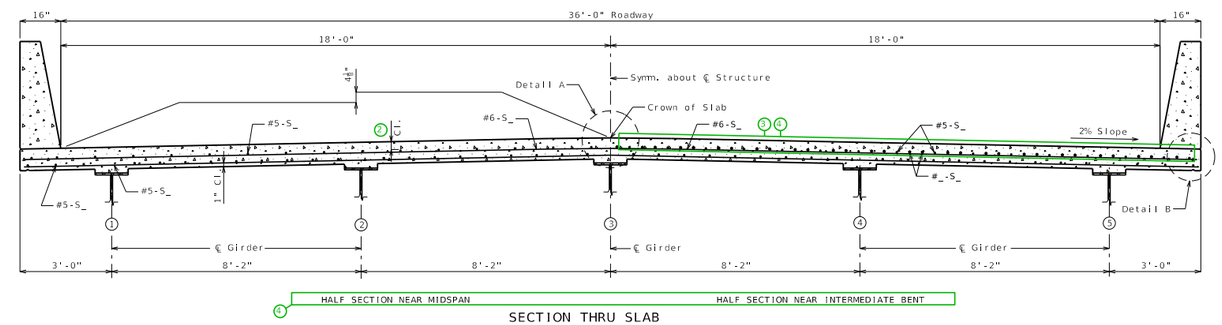

SECTION THRU SLAB

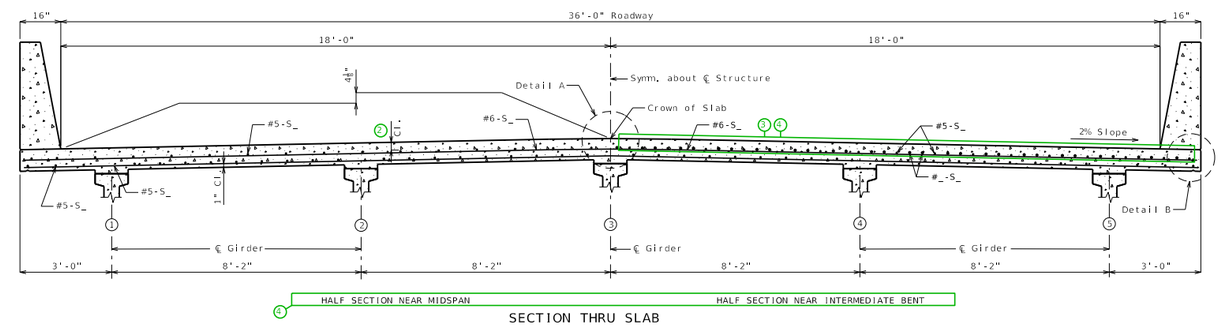

SECTION THRU SLAB

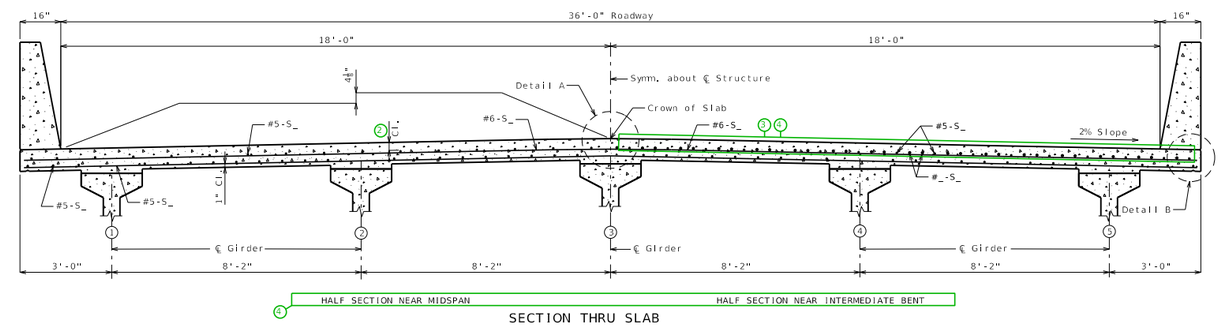

SECTION THRU SLAB

SLAB06_36ft_symm Guidance & Alternate Details (3 of 3)

Panel Deck

Bulb-Tee

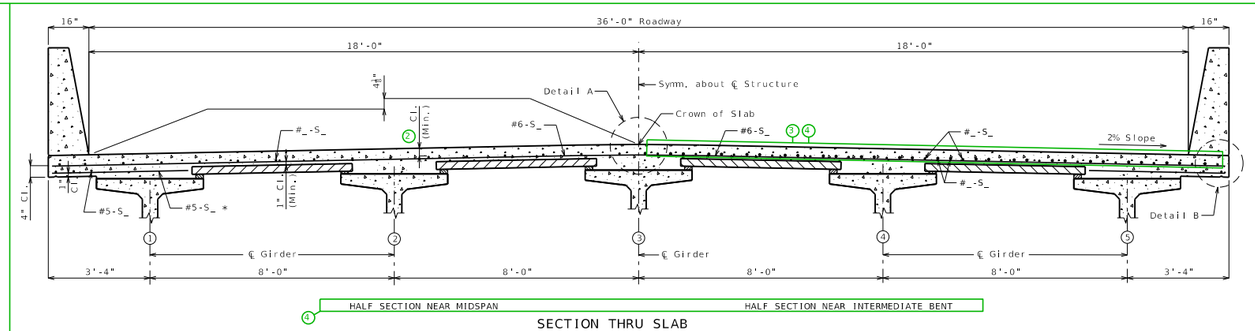

SECTION THRU SLAB

* Alternate bar shape available, see barrier sheet.

NU

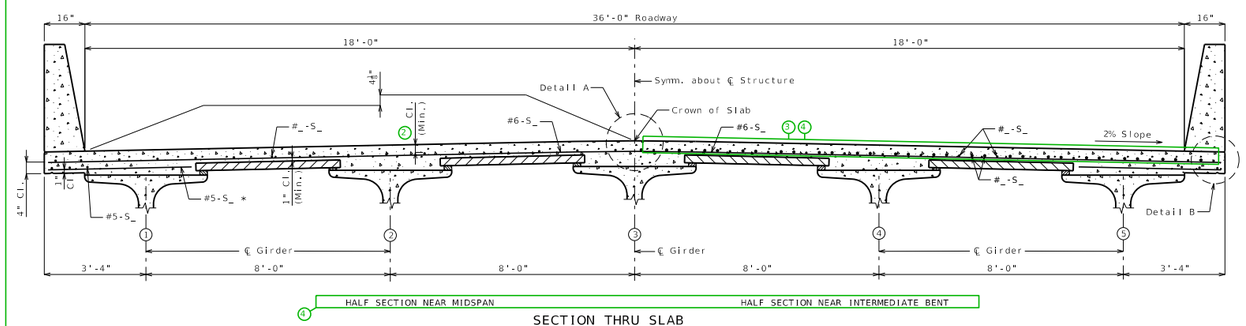

SECTION THRU SLAB

* Alternate bar shape available, see barrier sheet.

Box

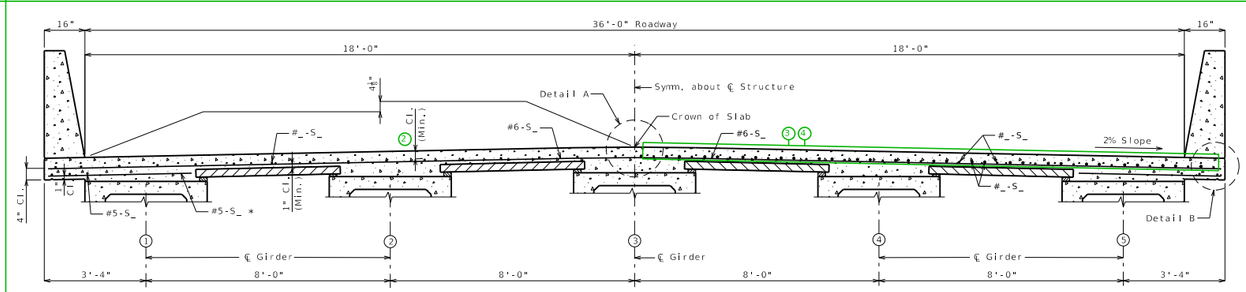

SECTION THRU SLAB

* Alternate bar shape available, see barrier sheet.

CIP Deck

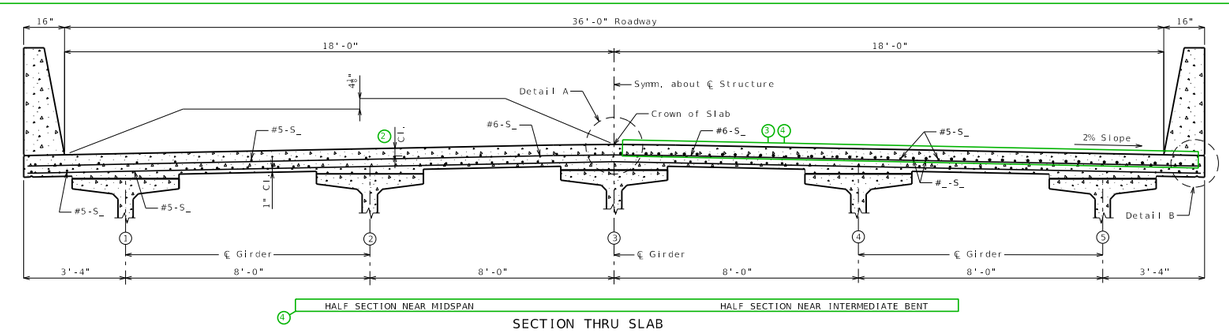

SECTION THRU SLAB

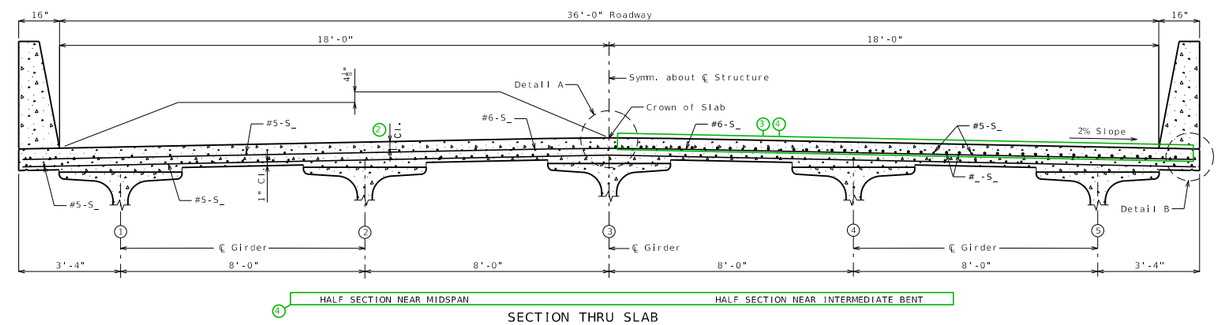

SECTION THRU SLAB

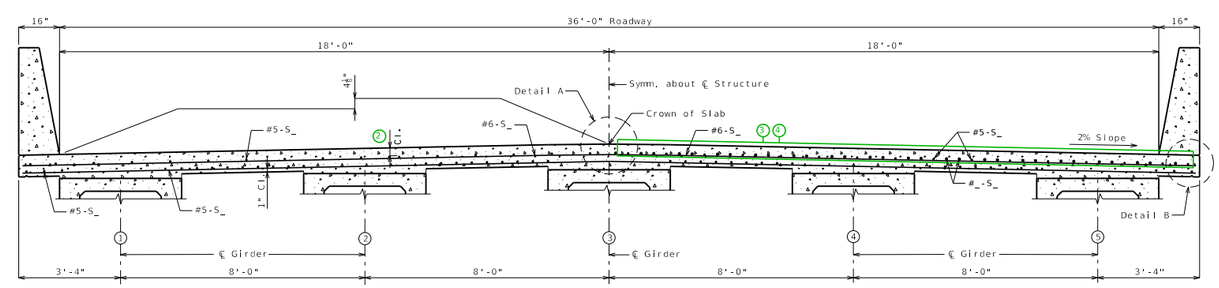

SECTION THRU SLAB

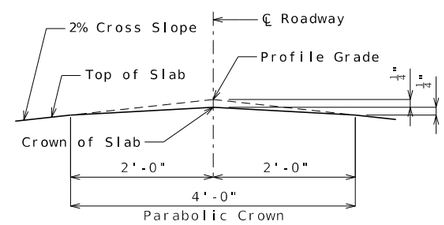

DETAIL A

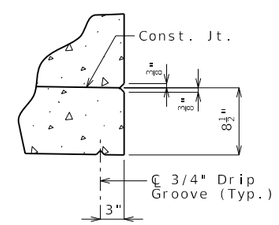

DETAIL B

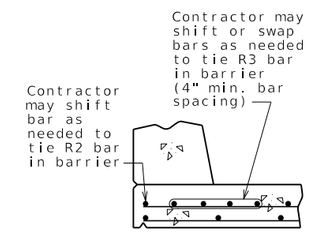

OPTIONAL SHIFTING TOP BARS AT BARRIER

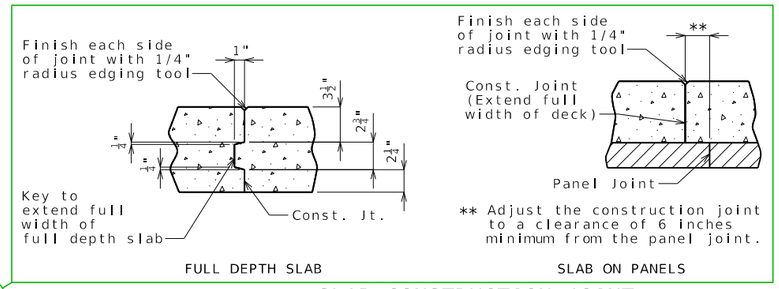

SLAB CONSTRUCTION JOINT

Notes:

For details of precast prestressed panels, see Sheet No. .

For reinforcement of barrier not shown, see Sheet No. .

For Theoretical Bottom of Slab Elevations, Girder Camber Diagram and Theoretical Slab Haunching Diagram, see Sheet No. .

For Plan of Slab Showing Reinforcement, see Sheet No. .

SLAB DETAILS

Detailed
Checked

Note: This drawing is not to scale. Follow dimensions.

DATE PREPARED 10/17/2023

ROUTE	STATE MO
DISTRICT	SHEET NO. 7

COUNTY

JOB NO.

CONTRACT ID.

PROJECT NO.

BRIDGE NO.

DESCRIPTION	DATE

MISSOURI HIGHWAYS AND TRANSPORTATION COMMISSION
105 WEST CAPITOL
JEFFERSON CITY, MO 65102
1-888-ASK-MODOT (1-888-275-6636)

SLAB07_38ft_symm Guidance & Alternate Details (1 of 3)

Standard Drawing Guidance
(do not show on plans):

1 Remove if not required.

2 Use the following values for clearance to top longitudinal bars:

$3\frac{1}{8}$" for #5 bars

3" for #6 bars

$2\frac{7}{8}$" for #7 bars

$2\frac{3}{4}$" for #8 bars

Use a triple asterisk when there are different size top bars and add below the single asterisk note the following (modified as needed)(this will be the only astrisk note for CIP decks):

*** $3\frac{1}{8}$" (#5)
3" (#6)
$2\frac{7}{8}$" (#7)
$2\frac{3}{4}$" (#8)

Clearance values based on the #6 top transverse bar used for this standard slab. Values will need to be revised for other size transverse bars.

3 The larger negative moment reinforcement shown is grouped and can be deleted if the negative moment steel is the same size as the distribution reinforcement. A set of bars the same size as the distribution bars exist behind the larger bars shown, and will become visible when the larger bars are deleted. (No need to resize)

4 The subheadings and negative moment bars are grouped and can be deleted for single span bridges. <Ctrl> U to ungroup

5 Place appropriate slab pouring sequence cell and modify as required.

6 Use alternate detail for CIP decks:

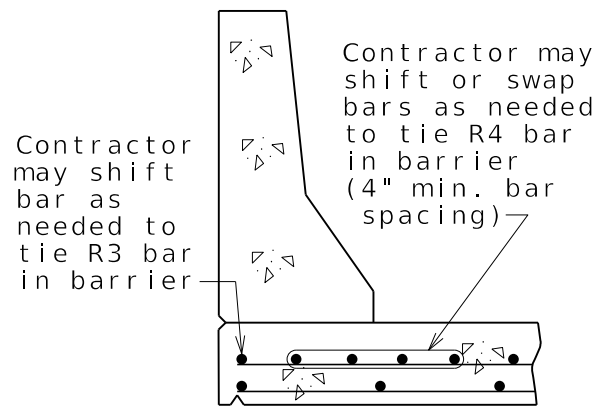

OPTIONAL SHIFTING
TOP BARS AT BARRIER

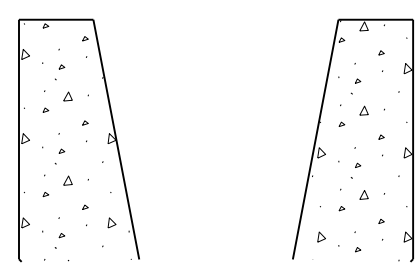

Alternate detail for
Type H barrier

For 8" thick slabs, change top dimension to 3 1/4" and center dimension to 2 1/2".

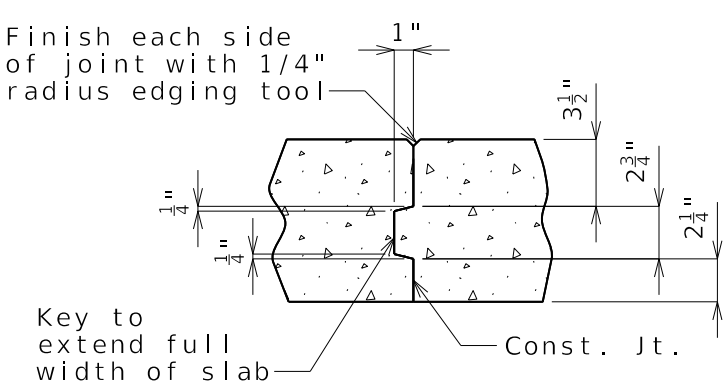

SLAB CONSTRUCTION JOINT

7 Remove for CIP deck

Girder spacing and reinforcement size & spacing shown are not necessarily standard. Follow design.

SLAB07_38ft_symm Guidance & Alternate Details (2 of 3)

Panel Deck

Plate Girder

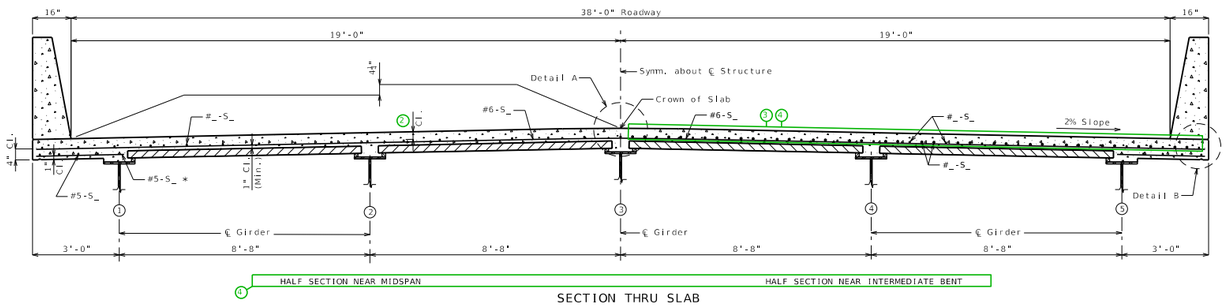

SECTION THRU SLAB

* Alternate bar shape available, see barrier sheet.

Type 2,3,4

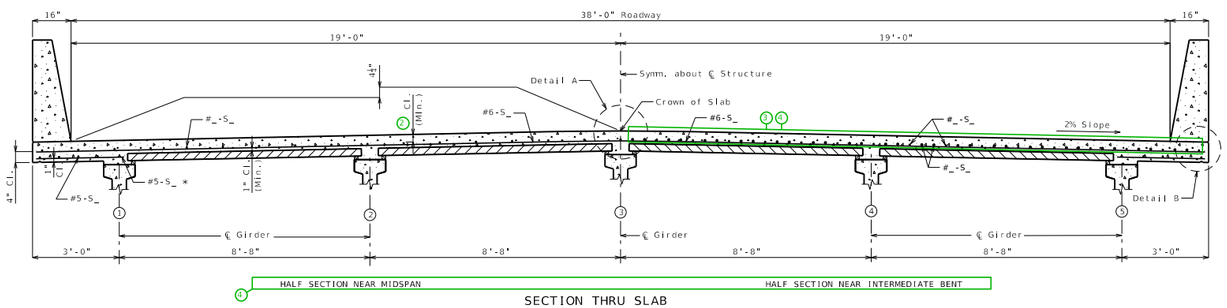

SECTION THRU SLAB

* Alternate bar shape available, see barrier sheet.

Type 6

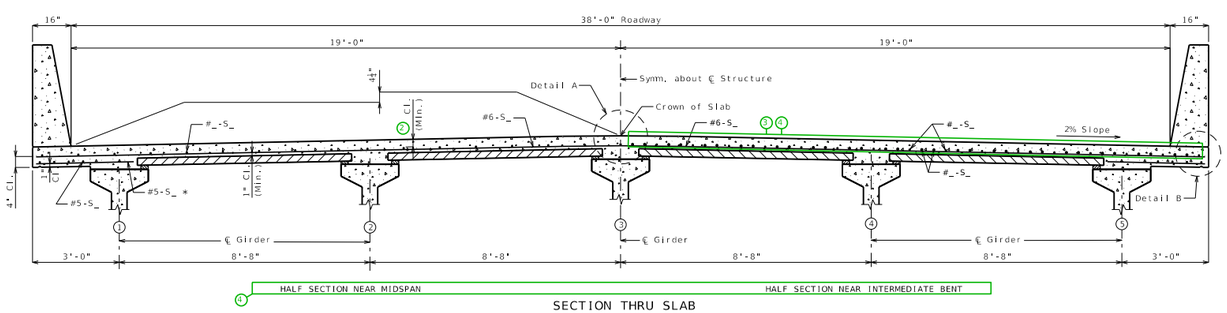

SECTION THRU SLAB

* Alternate bar shape available, see barrier sheet.

CIP Deck

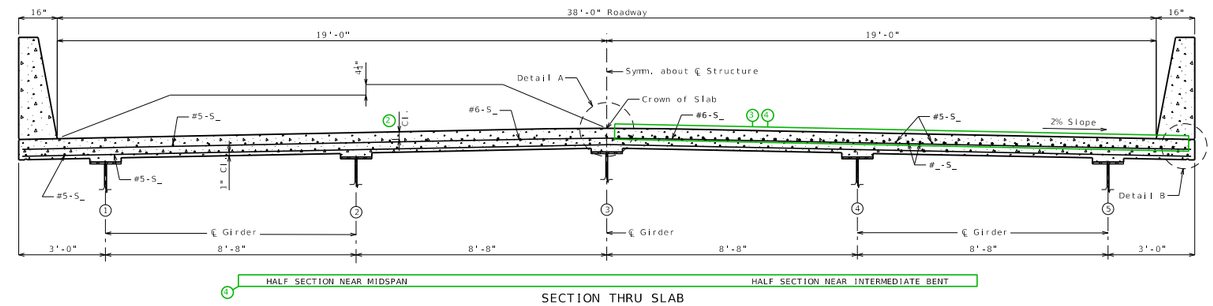

SECTION THRU SLAB

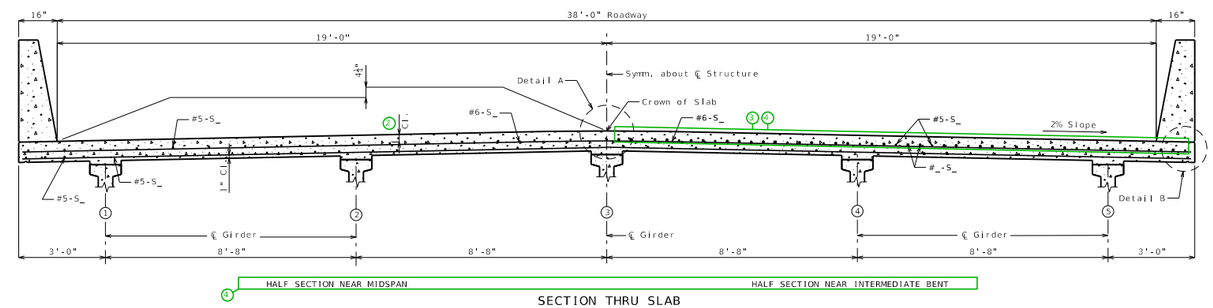

SECTION THRU SLAB

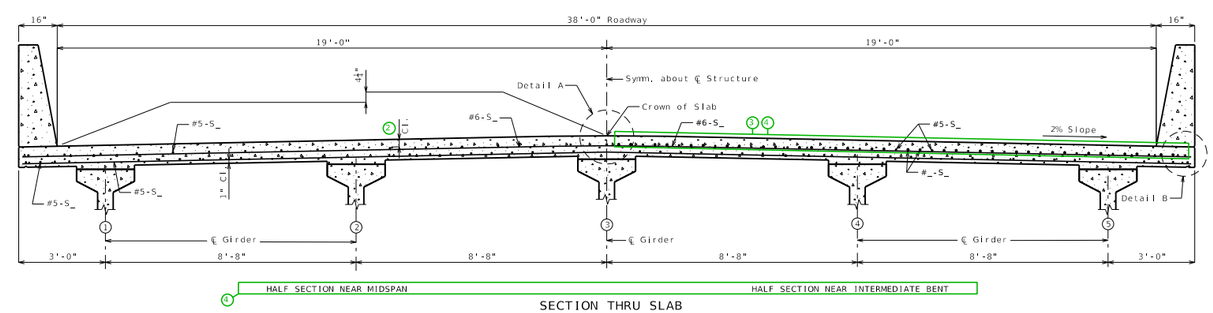

SECTION THRU SLAB

SLAB07_38ft_symm Guidance & Alternate Details (3 of 3)

Panel Deck

Bulb-Tee

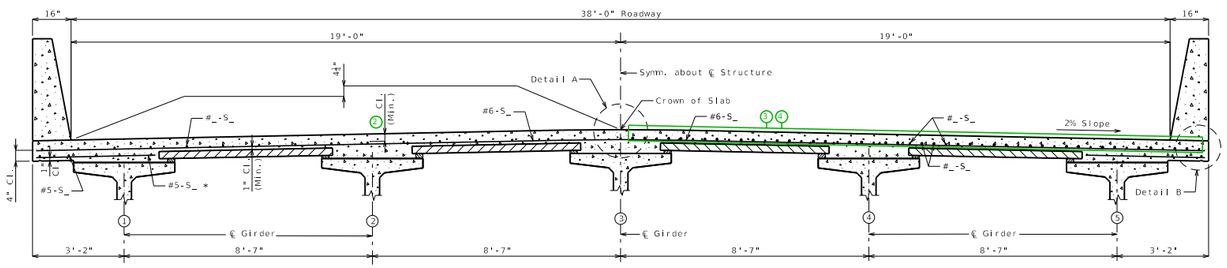

SECTION THRU SLAB

* Alternate bar shape available, see barrier sheet.

NU

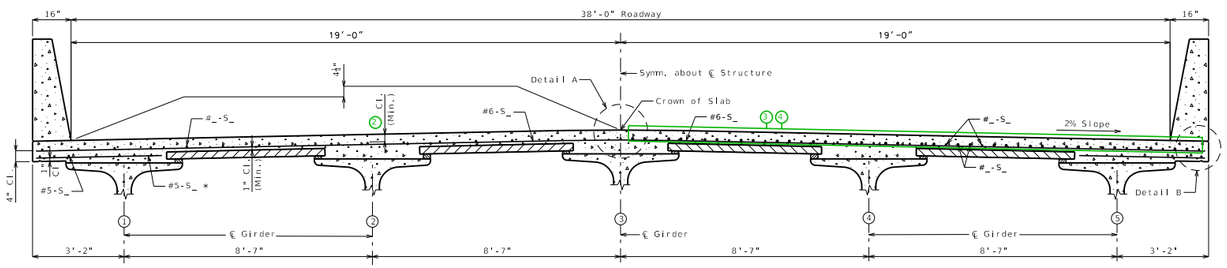

SECTION THRU SLAB

* Alternate bar shape available, see barrier sheet.

Box

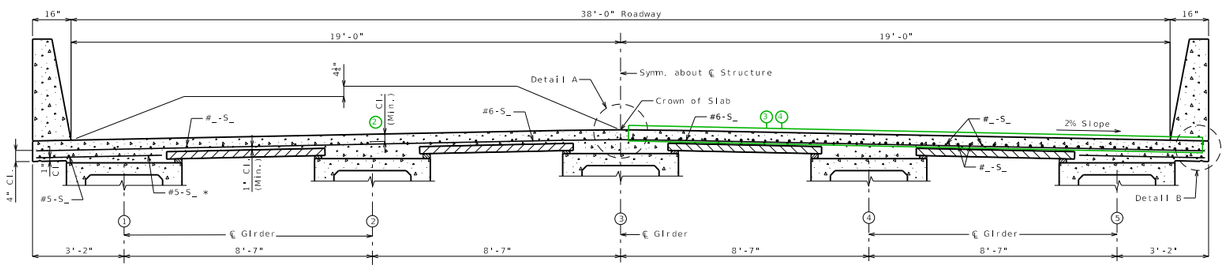

SECTION THRU SLAB

* Alternate bar shape available, see barrier sheet.

CIP Deck

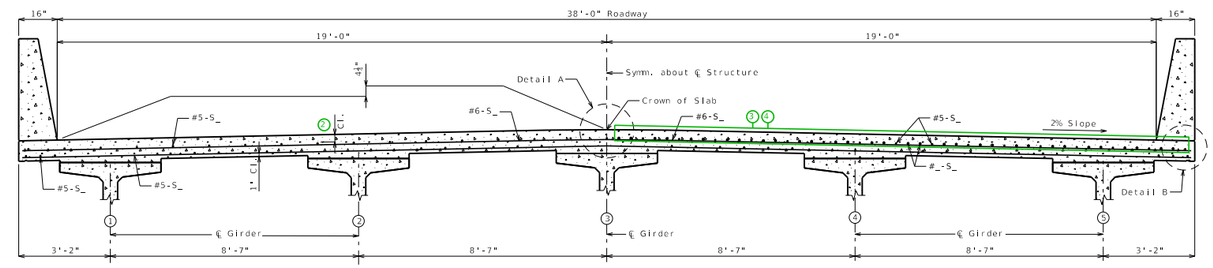

SECTION THRU SLAB

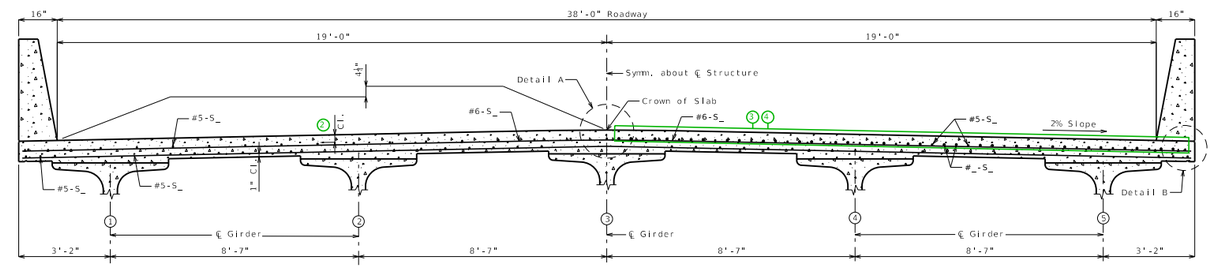

SECTION THRU SLAB

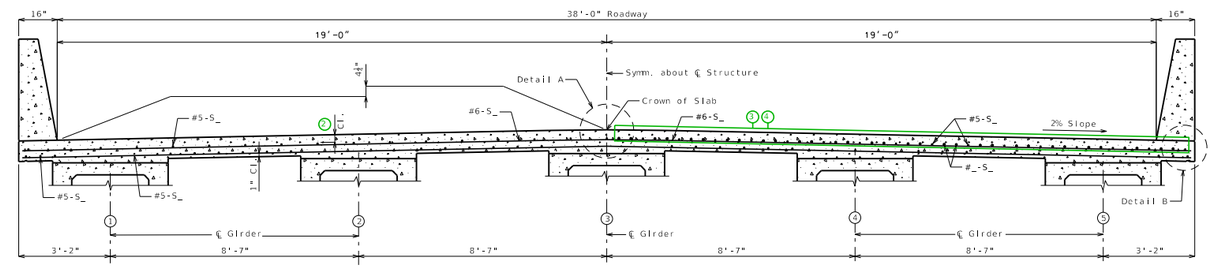

SECTION THRU SLAB

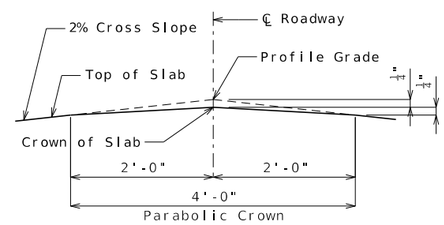

DETAIL A

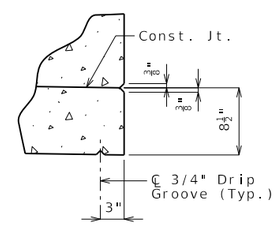

DETAIL B

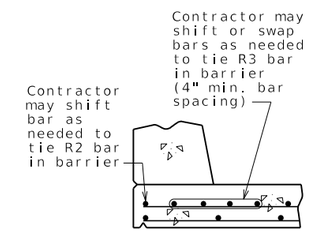

OPTIONAL SHIFTING TOP BARS AT BARRIER

1

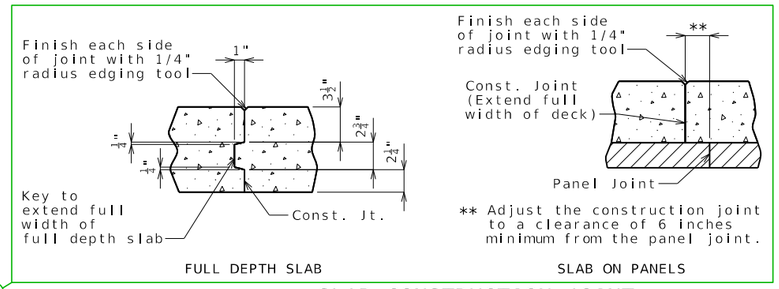

FULL DEPTH SLAB

SLAB ON PANELS

6

SLAB CONSTRUCTION JOINT

5

Notes:

7 For details of precast prestressed panels, see Sheet No. .

For reinforcement of barrier not shown, see Sheet No. .

For Theoretical Bottom of Slab Elevations, Girder Camber Diagram and Theoretical Slab Haunching Diagram, see Sheet No. .

For Plan of Slab Showing Reinforcement, see Sheet No. .

SLAB DETAILS

Detailed
Checked

Note: This drawing is not to scale. Follow dimensions.

Sheet No. of

DATE PREPARED	10/17/2023
ROUTE	STATE MO
DISTRICT	SHEET NO. 8
COUNTY	
JOB NO.	
CONTRACT ID.	
PROJECT NO.	
BRIDGE NO.	

DESCRIPTION | DATE

MISSOURI HIGHWAYS AND TRANSPORTATION COMMISSION

105 WEST CAPITOL
JEFFERSON CITY, MO 65102
1-888-ASK-MODOT (1-888-275-6636)

SLAB08_38ft_unsymm Guidance & Alternate Details (1 of 3)

Standard Drawing Guidance
(do not show on plans):

1 Remove if not required.

2 Use the following values for clearance to top longitudinal bars:

$3\frac{1}{8}$" for #5 bars

3" for #6 bars

$2\frac{7}{8}$" for #7 bars

$2\frac{3}{4}$" for #8 bars

Use a triple asterisk when there are different size top bars and add below the single asterisk note the following (modified as needed)(this will be the only astrisk note for CIP decks):

*** $3\frac{1}{8}$" (#5)
3" (#6)
$2\frac{7}{8}$" (#7)
$2\frac{3}{4}$" (#8)

Clearance values based on the #6 top transverse bar used for this standard slab. Values will need to be revised for other size transverse bars.

3 The larger negative moment reinforcement shown is grouped and can be deleted if the negative moment steel is the same size as the distribution reinforcement. A set of bars the same size as the distribution bars exist behind the larger bars shown, and will become visible when the larger bars are deleted. (No need to resize)

4 The subheadings and negative moment bars are grouped and can be deleted for single span bridges. <Ctrl> U to ungroup

5 Place appropriate slab pouring sequence cell and modify as required.

6 Use alternate detail for CIP decks:

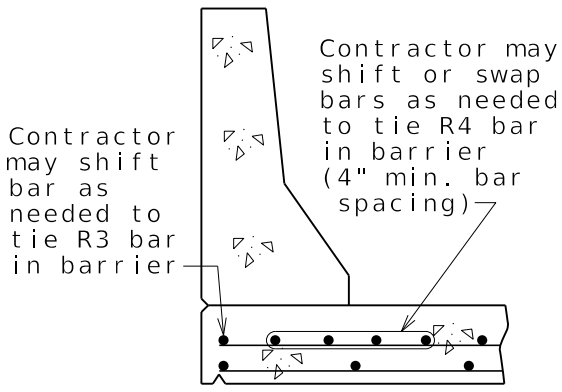

OPTIONAL SHIFTING
TOP BARS AT BARRIER

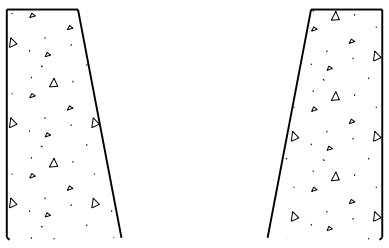

Alternate detail for
Type H barrier

For 8" thick slabs, change top dimension to 3 1/4" and center dimension to 2 1/2".

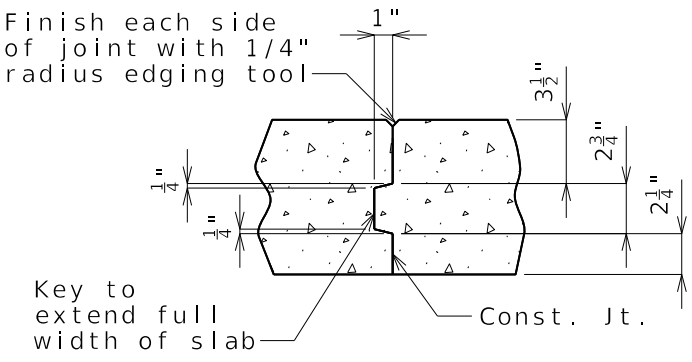

SLAB CONSTRUCTION JOINT

7 Remove for CIP deck

Girder spacing and reinforcement size & spacing shown are not necessarily standard. Follow design.

SLAB08_38ft_unsymm Guidance & Alternate Details (2 of 3)

Panel Deck

Plate Girder

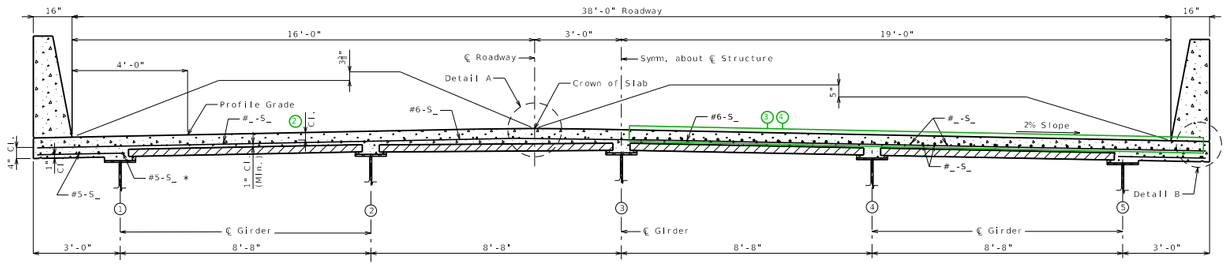

1 HALF SECTION NEAR MIDSPAN HALF SECTION NEAR INTERMEDIATE BENT

SECTION THRU SLAB

* Alternate bar shape available, see barrier sheet.

Type 2,3,4

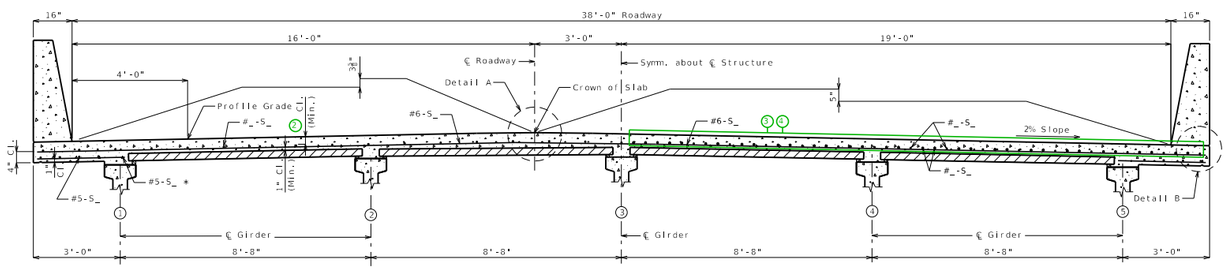

1 HALF SECTION NEAR MIDSPAN HALF SECTION NEAR INTERMEDIATE BENT

SECTION THRU SLAB

* Alternate bar shape available, see barrier sheet.

Type 6

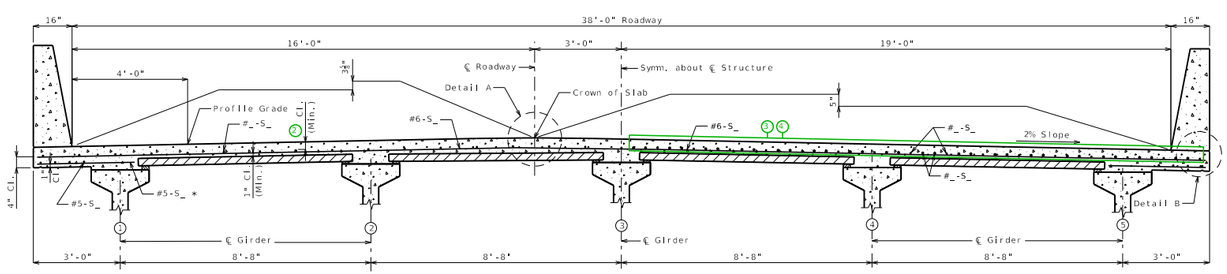

1 HALF SECTION NEAR MIDSPAN HALF SECTION NEAR INTERMEDIATE BENT

SECTION THRU SLAB

* Alternate bar shape available, see barrier sheet.

CIP Deck

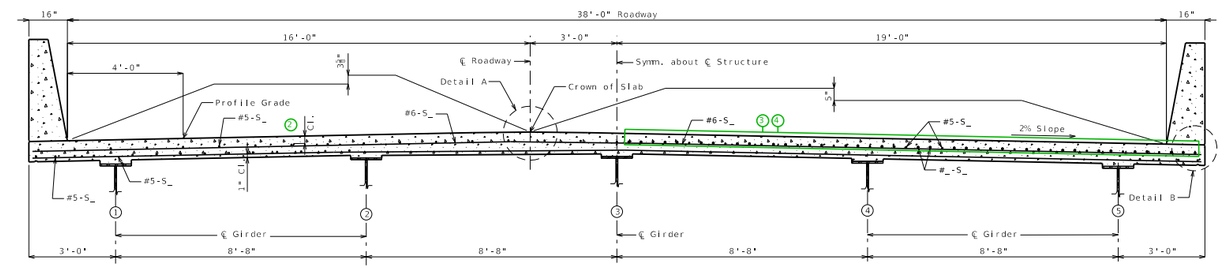

4 HALF SECTION NEAR MIDSPAN HALF SECTION NEAR INTERMEDIATE BENT

SECTION THRU SLAB

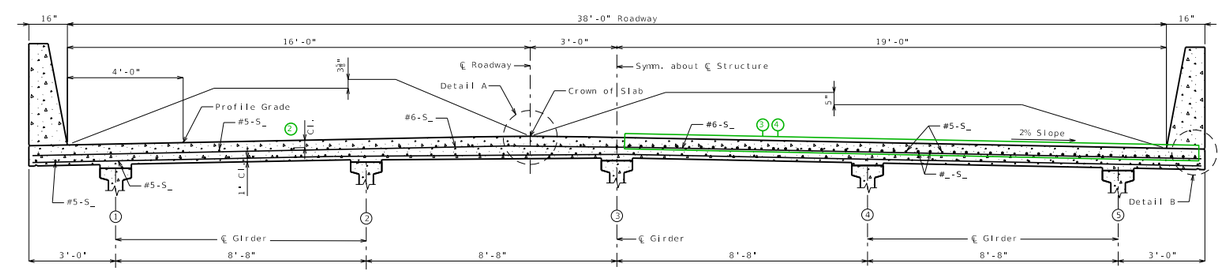

4 HALF SECTION NEAR MIDSPAN HALF SECTION NEAR INTERMEDIATE BENT

SECTION THRU SLAB

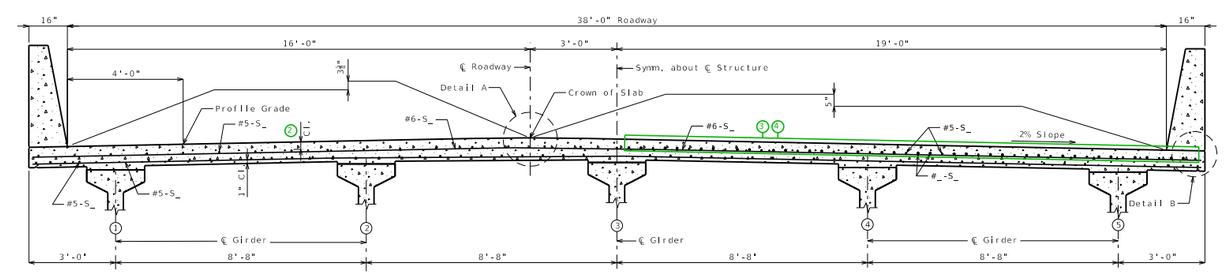

4 HALF SECTION NEAR MIDSPAN HALF SECTION NEAR INTERMEDIATE BENT

SECTION THRU SLAB

SLAB08_38ft_unsymm Guidance & Alternate Details (3 of 3)

Panel Deck

Bulb-Tee

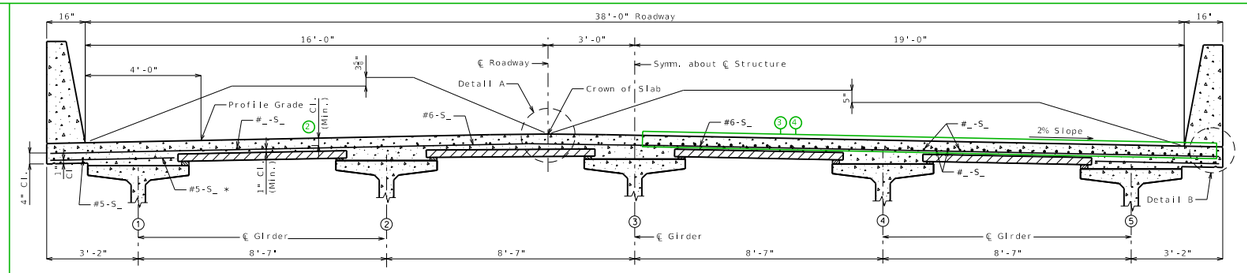

4 HALF SECTION NEAR MIDSPAN HALF SECTION NEAR INTERMEDIATE BENT

SECTION THRU SLAB

* Alternate bar shape available, see barrier sheet.

CIP Deck

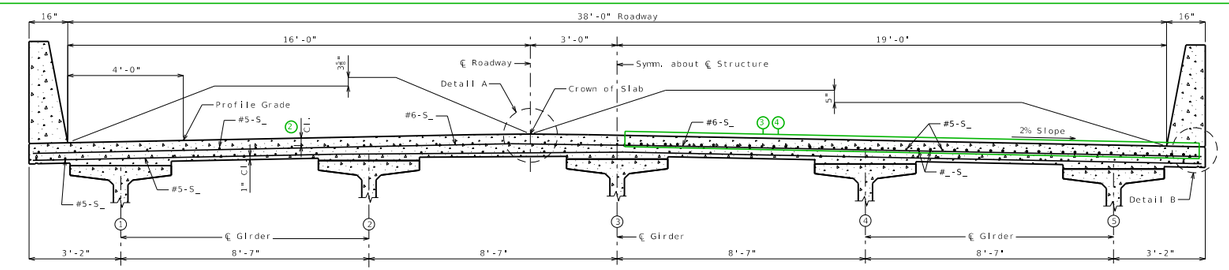

4 HALF SECTION NEAR MIDSPAN HALF SECTION NEAR INTERMEDIATE BENT

SECTION THRU SLAB

NU

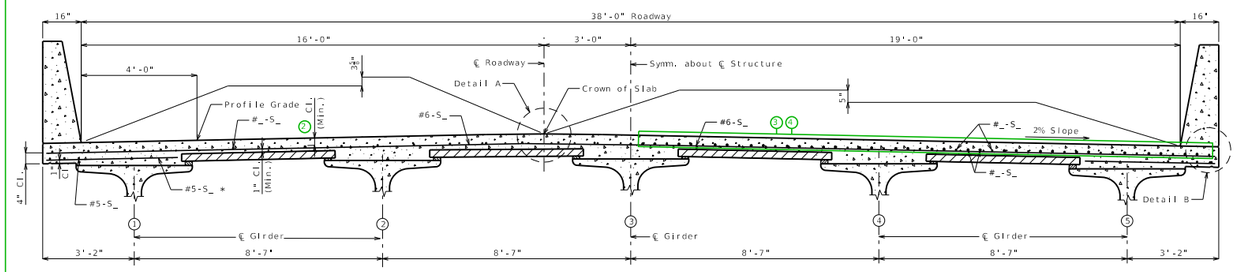

4 HALF SECTION NEAR MIDSPAN HALF SECTION NEAR INTERMEDIATE BENT

SECTION THRU SLAB

* Alternate bar shape available, see barrier sheet.

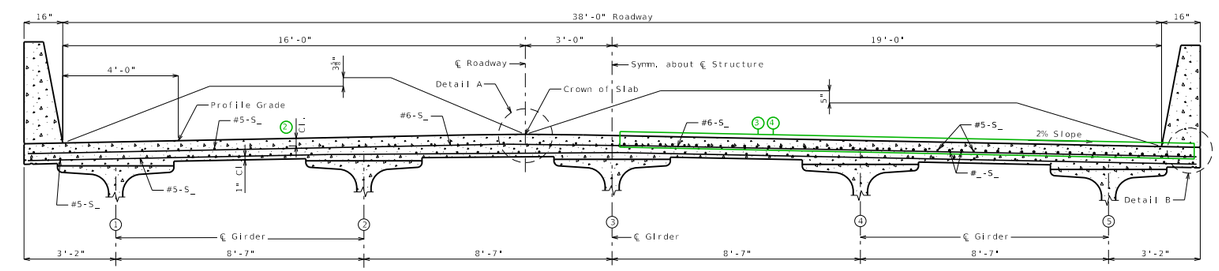

4 HALF SECTION NEAR MIDSPAN HALF SECTION NEAR INTERMEDIATE BENT

SECTION THRU SLAB

Box

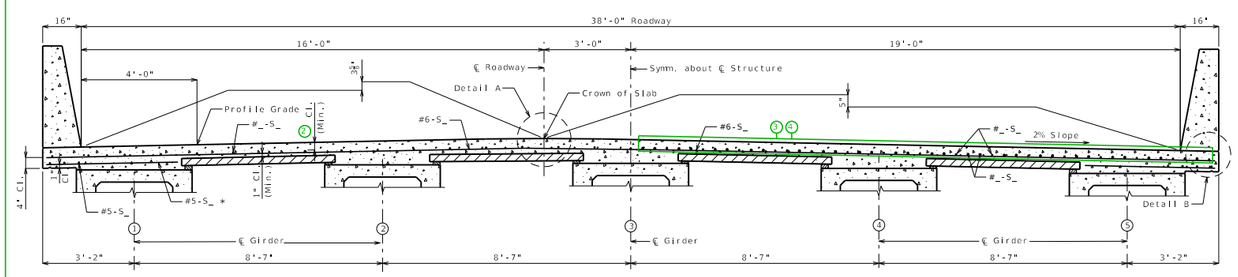

4 HALF SECTION NEAR MIDSPAN HALF SECTION NEAR INTERMEDIATE BENT

SECTION THRU SLAB

* Alternate bar shape available, see barrier sheet.

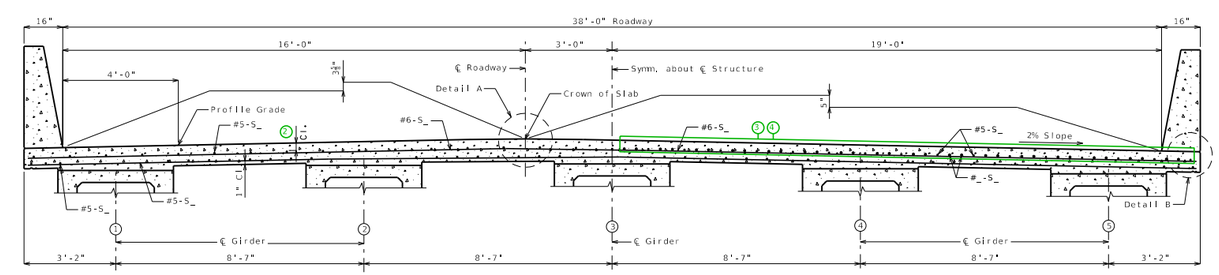

4 HALF SECTION NEAR MIDSPAN HALF SECTION NEAR INTERMEDIATE BENT

SECTION THRU SLAB

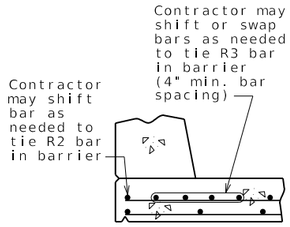

OPTIONAL SHIFTING TOP BARS AT BARRIER

1

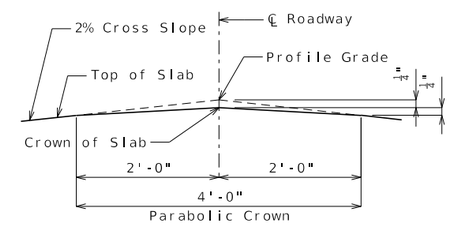

DETAIL A

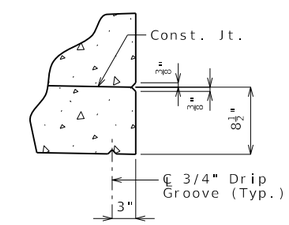

DETAIL B

5

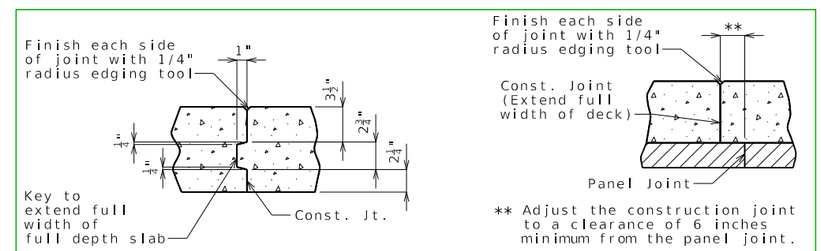

SLAB CONSTRUCTION JOINT

6

Notes:

7 For details of precast prestressed panels, see Sheet No. .

For reinforcement of barrier not shown, see Sheet No. .

For Theoretical Bottom of Slab Elevations, Girder Camber Diagram and Theoretical Slab Haunching Diagram, see Sheet No. .

For Plan of Slab Showing Reinforcement, see Sheet No. .

SLAB DETAILS

Detailed
Checked

Note: This drawing is not to scale. Follow dimensions.

Sheet No. of

DATE PREPARED	10/17/2023
ROUTE	STATE MO
DISTRICT	SHEET NO. 9
COUNTY	
JOB NO.	
CONTRACT ID.	
PROJECT NO.	
BRIDGE NO.	

DESCRIPTION

DATE

MISSOURI HIGHWAYS AND TRANSPORTATION COMMISSION
105 WEST CAPITOL
JEFFERSON CITY, MO 65102
1-888-ASK-MODOT (1-888-275-6636)

SLAB09_40ft_symm Guidance & Alternate Details (1 of 3)

Standard Drawing Guidance
(do not show on plans):

1 Remove if not required.

2 Use the following values for clearance to top longitudinal bars:

$3\frac{1}{8}$" for #5 bars

3" for #6 bars

$2\frac{7}{8}$" for #7 bars

$2\frac{3}{4}$" for #8 bars

Use a triple asterisk when there are different size top bars and add below the single asterisk note the following (modified as needed)(this will be the only astrisk note for CIP decks):

*** $3\frac{1}{8}$" (#5)
3" (#6)
$2\frac{7}{8}$" (#7)
$2\frac{3}{4}$" (#8)

Clearance values based on the #6 top transverse bar used for this standard slab. Values will need to be revised for other size transverse bars.

3 The larger negative moment reinforcement shown is grouped and can be deleted if the negative moment steel is the same size as the distribution reinforcement. A set of bars the same size as the distribution bars exist behind the larger bars shown, and will become visible when the larger bars are deleted. (No need to resize)

4 The subheadings and negative moment bars are grouped and can be deleted for single span bridges. <Ctrl> U to ungroup

5 Place appropriate slab pouring sequence cell and modify as required.

6 Use alternate detail for CIP decks:

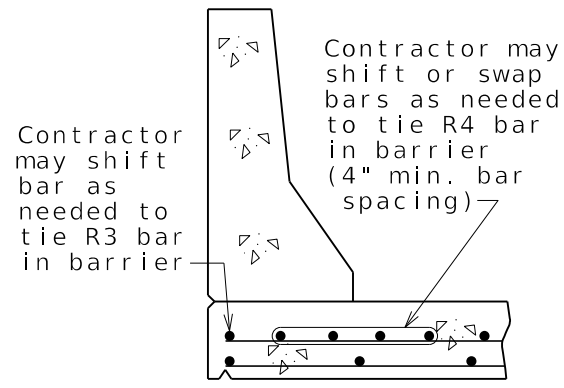

OPTIONAL SHIFTING TOP BARS AT BARRIER

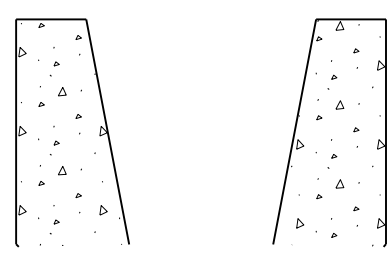

Alternate detail for Type H barrier

For 8" thick slabs, change top dimension to 3 1/4" and center dimension to 2 1/2".

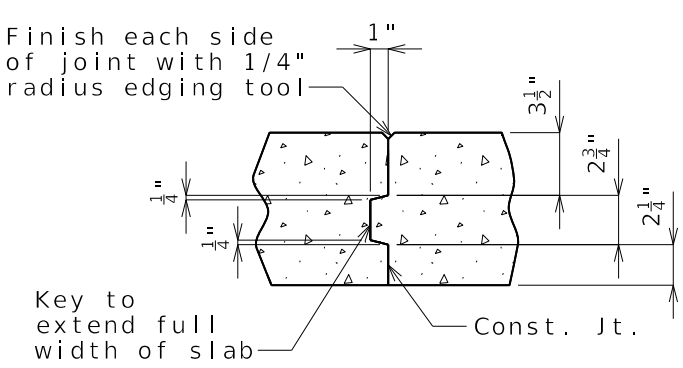

SLAB CONSTRUCTION JOINT

7 Remove for CIP deck

Girder spacing and reinforcement size & spacing shown are not necessarily standard. Follow design.

SLAB09_40ft_symm Guidance & Alternate Details (2 of 3)

Panel Deck

Plate Girder

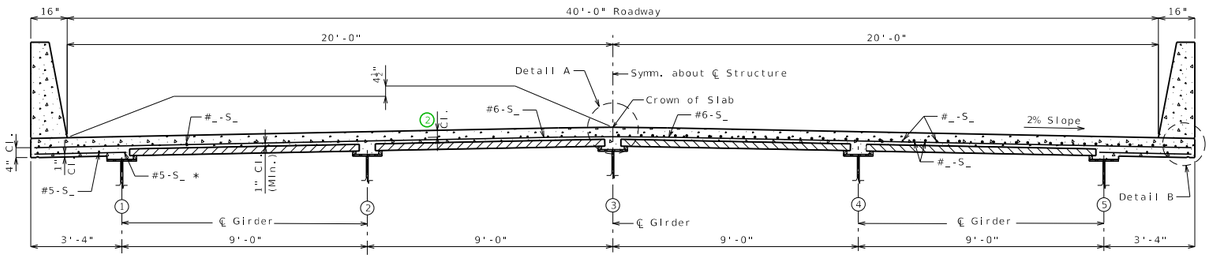

HALF SECTION NEAR MIDSPAN HALF SECTION NEAR INTERMEDIATE BENT

SECTION THRU SLAB

* Alternate bar shape available, see barrier sheet.

Type 2,3,4

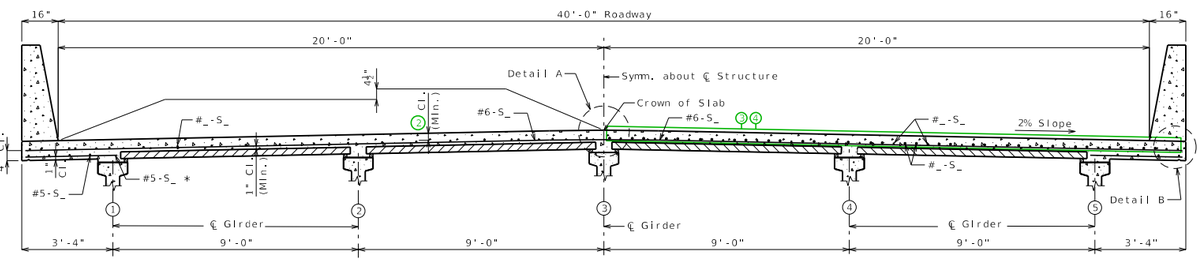

4 HALF SECTION NEAR MIDSPAN HALF SECTION NEAR INTERMEDIATE BENT

SECTION THRU SLAB

* Alternate bar shape available, see barrier sheet.

Type 6

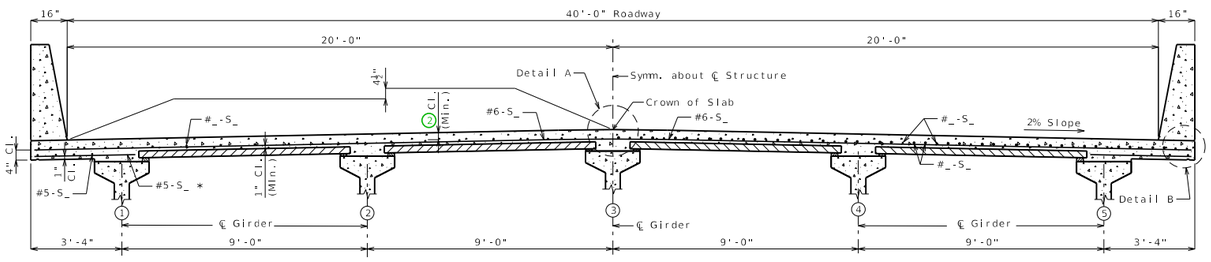

HALF SECTION NEAR MIDSPAN HALF SECTION NEAR INTERMEDIATE BENT

SECTION THRU SLAB

* Alternate bar shape available, see barrier sheet.

CIP Deck

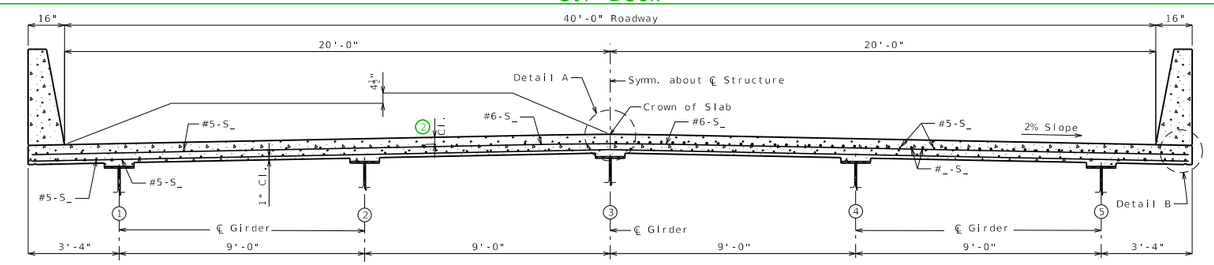

HALF SECTION NEAR MIDSPAN HALF SECTION NEAR INTERMEDIATE BENT

SECTION THRU SLAB

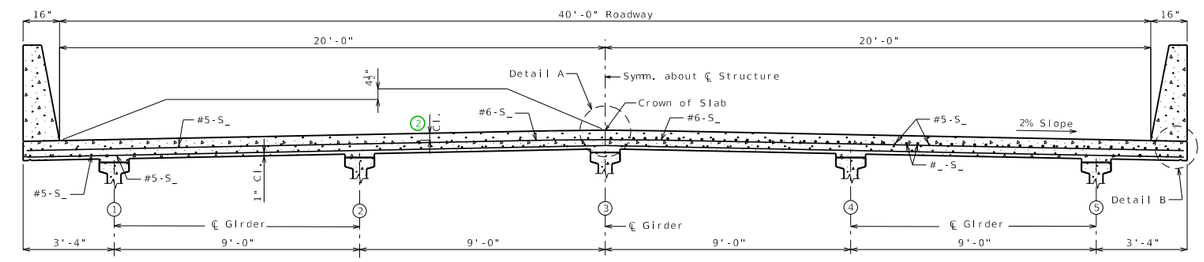

HALF SECTION NEAR MIDSPAN HALF SECTION NEAR INTERMEDIATE BENT

SECTION THRU SLAB

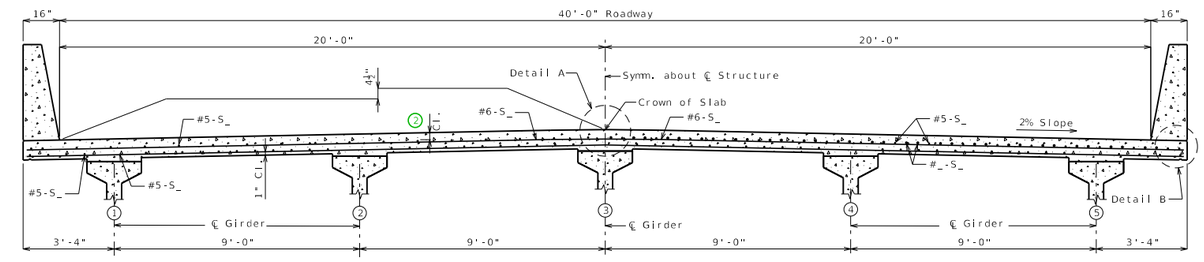

HALF SECTION NEAR MIDSPAN HALF SECTION NEAR INTERMEDIATE BENT

SECTION THRU SLAB

SLAB09_40ft_symm Guidance & Alternate Details (3 of 3)

Panel Deck

Bulb-Tee

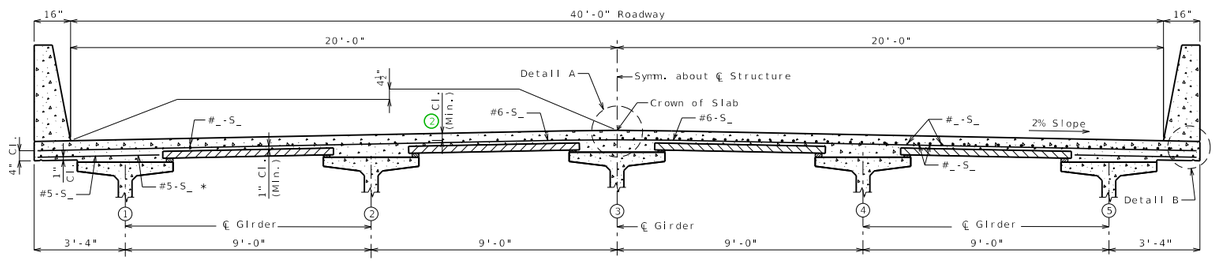

HALF SECTION NEAR MIDSPAN HALF SECTION NEAR INTERMEDIATE BENT

SECTION THRU SLAB

* Alternate bar shape available, see barrier sheet.

NU

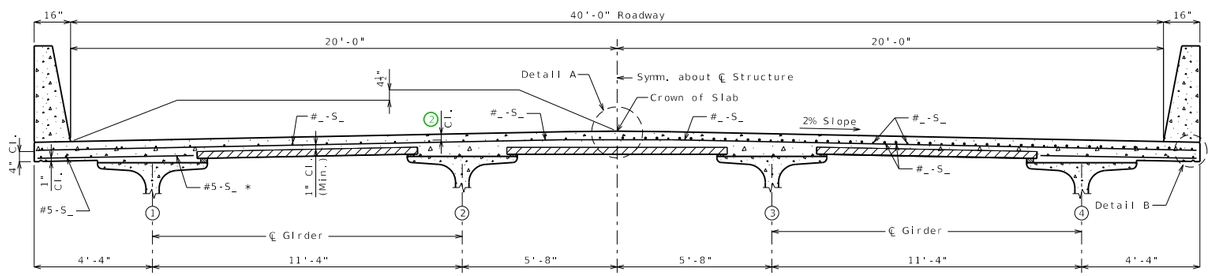

HALF SECTION NEAR MIDSPAN HALF SECTION NEAR INTERMEDIATE BENT

SECTION THRU SLAB

* Alternate bar shape available, see barrier sheet.

Box

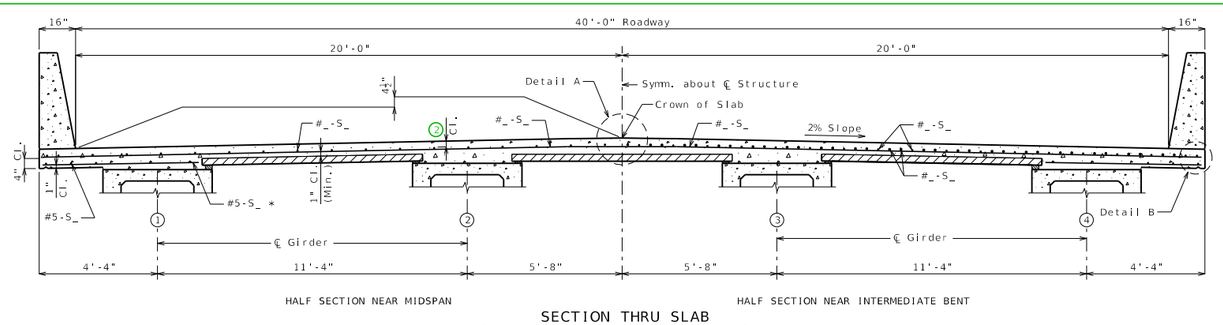

HALF SECTION NEAR MIDSPAN HALF SECTION NEAR INTERMEDIATE BENT

SECTION THRU SLAB

* Alternate bar shape available, see barrier sheet.

CIP Deck

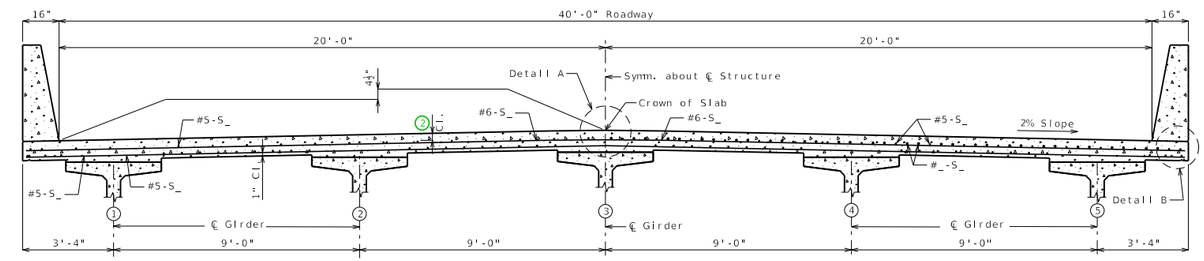

HALF SECTION NEAR MIDSPAN HALF SECTION NEAR INTERMEDIATE BENT

SECTION THRU SLAB

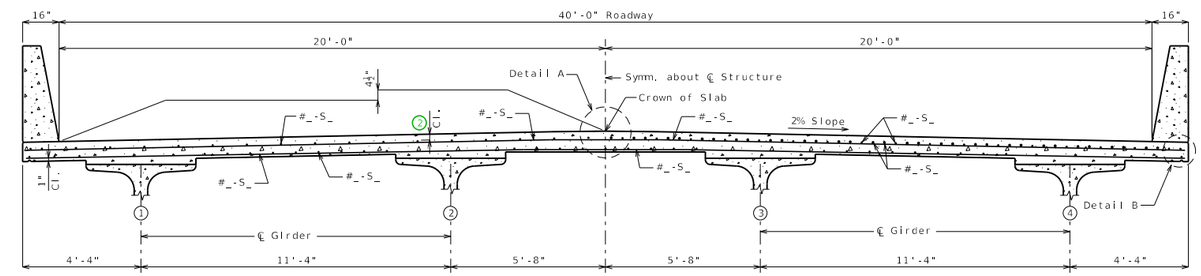

HALF SECTION NEAR MIDSPAN HALF SECTION NEAR INTERMEDIATE BENT

SECTION THRU SLAB

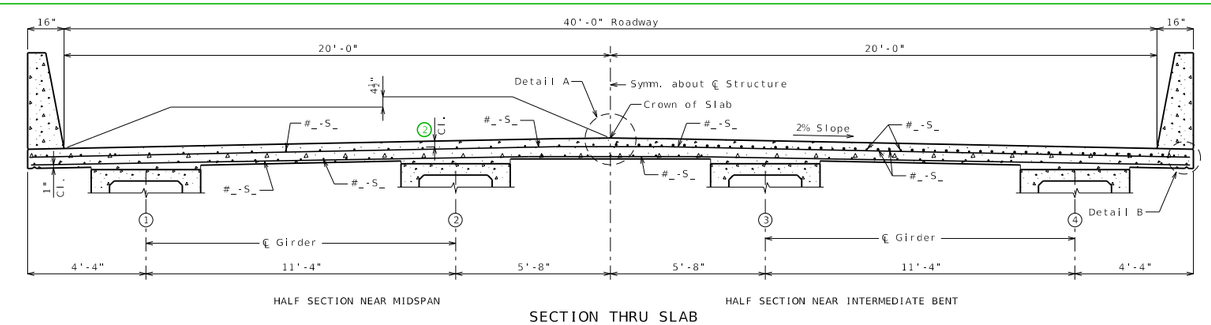

HALF SECTION NEAR MIDSPAN HALF SECTION NEAR INTERMEDIATE BENT

SECTION THRU SLAB

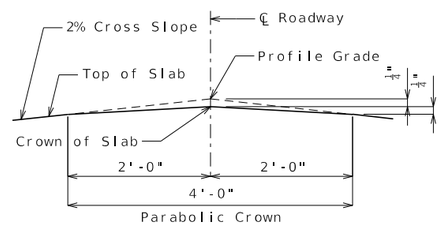

DETAIL A

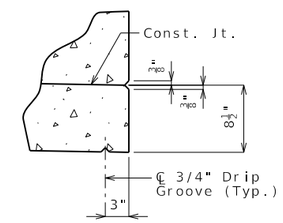

DETAIL B

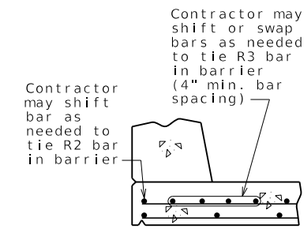

OPTIONAL SHIFTING TOP BARS AT BARRIER

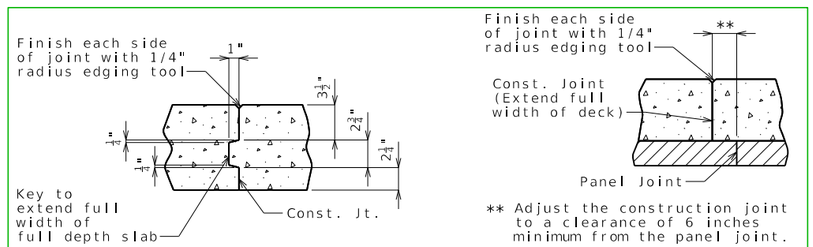

FULL DEPTH SLAB

SLAB ON PANELS

SLAB CONSTRUCTION JOINT

Notes:

For details of precast prestressed panels, see Sheet No. .

For reinforcement of barrier not shown, see Sheet No. .

For Theoretical Bottom of Slab Elevations, Girder Camber Diagram and Theoretical Slab Haunching Diagram, see Sheet No. .

For Plan of Slab Showing Reinforcement, see Sheet No. .

SLAB DETAILS

Detailed
Checked

Note: This drawing is not to scale. Follow dimensions.

Sheet No. of

DATE PREPARED	10/17/2023
ROUTE	STATE MO
DISTRICT	SHEET NO. 10
COUNTY	
JOB NO.	
CONTRACT ID.	
PROJECT NO.	
BRIDGE NO.	

DESCRIPTION	DATE

MISSOURI HIGHWAYS AND TRANSPORTATION COMMISSION
105 WEST CAPITOL
JEFFERSON CITY, MO 65102
1-888-ASK-MODOT (1-888-275-6636)

SLAB10_44ft_symm Guidance & Alternate Details (1 of 3)

Standard Drawing Guidance
(do not show on plans):

(1) Remove if not required.

(2) Use the following values for clearance to top longitudinal bars:

$3\frac{1}{8}$" for #5 bars

3" for #6 bars

$2\frac{7}{8}$" for #7 bars

$2\frac{3}{4}$" for #8 bars

Use a triple asterisk when there are different size top bars and add below the single asterisk note the following (modified as needed)(this will be the only astrisk note for CIP decks):

*** $3\frac{1}{8}$" (#5)
3" (#6)
$2\frac{7}{8}$" (#7)
$2\frac{3}{4}$" (#8)

Clearance values based on the #6 top transverse bar used for this standard slab. Values will need to be revised for other size transverse bars.

(3) The larger negative moment reinforcement shown is grouped and can be deleted if the negative moment steel is the same size as the distribution reinforcement. A set of bars the same size as the distribution bars exist behind the larger bars shown, and will become visible when the larger bars are deleted. (No need to resize)

(4) The subheadings and negative moment bars are grouped and can be deleted for single span bridges. <Ctrl> U to ungroup

(5) Place appropriate slab pouring sequence cell and modify as required.

(6) Use alternate detail for CIP decks:

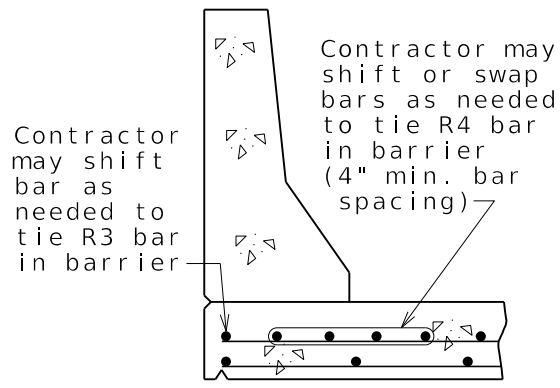

OPTIONAL SHIFTING
TOP BARS AT BARRIER

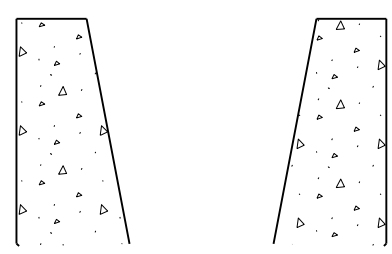

Alternate detail for
Type H barrier

For 8" thick slabs, change top dimension to 3 1/4" and center dimension to 2 1/2".

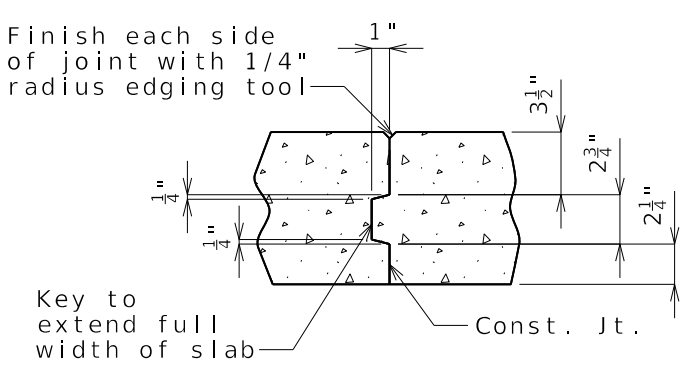

SLAB CONSTRUCTION JOINT

(7) Remove for CIP deck

Girder spacing and reinforcement size & spacing shown are not necessarily standard. Follow design.

SLAB10_44ft_symm Guidance & Alternate Details (2 of 3)

Panel Deck

Plate Girder

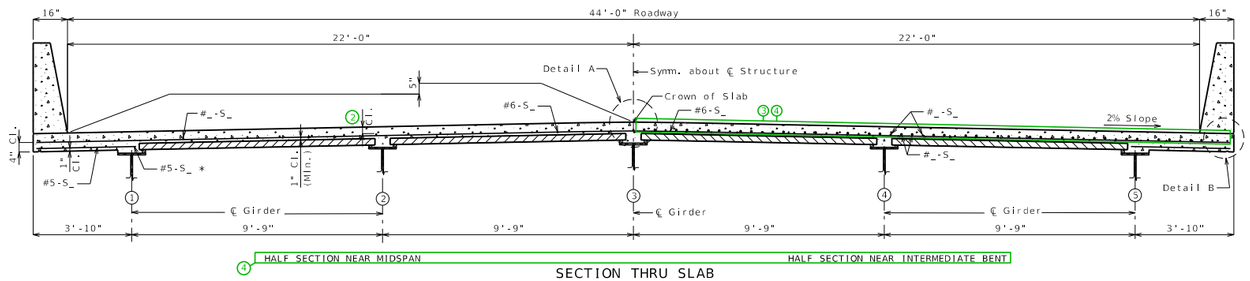

SECTION THRU SLAB

* Alternate bar shape available, see barrier sheet.

Type 2,3,4

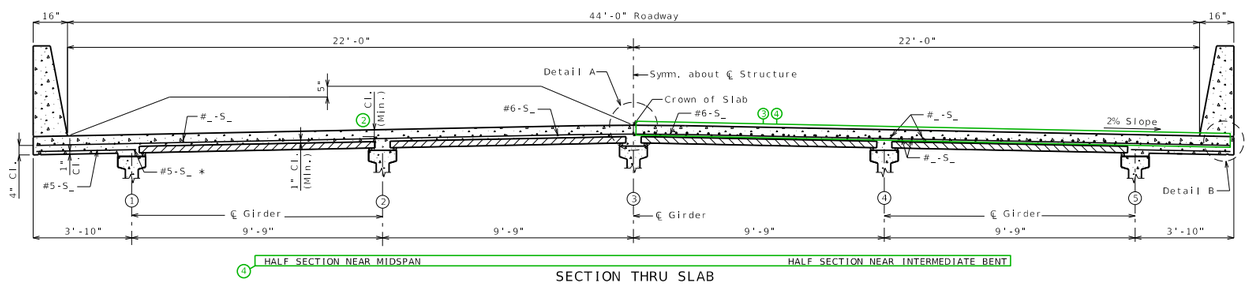

SECTION THRU SLAB

* Alternate bar shape available, see barrier sheet.

Type 6

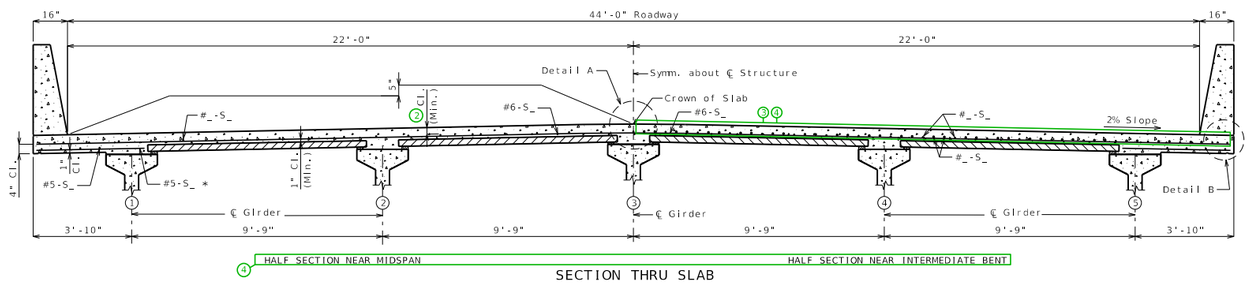

SECTION THRU SLAB

* Alternate bar shape available, see barrier sheet.

CIP Deck

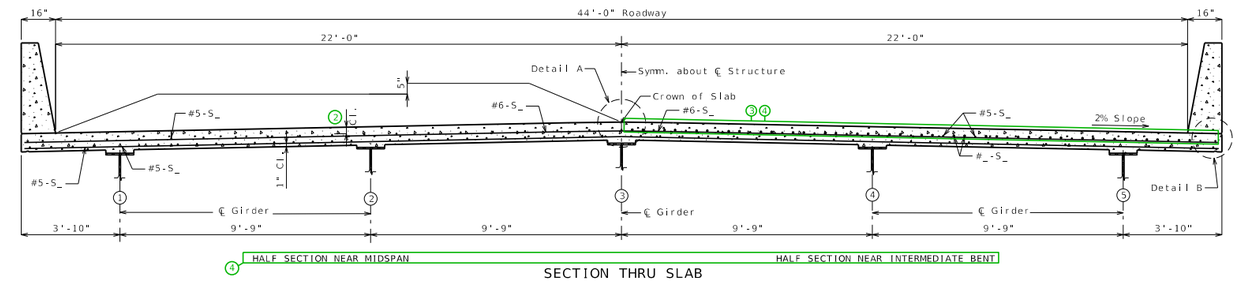

SECTION THRU SLAB

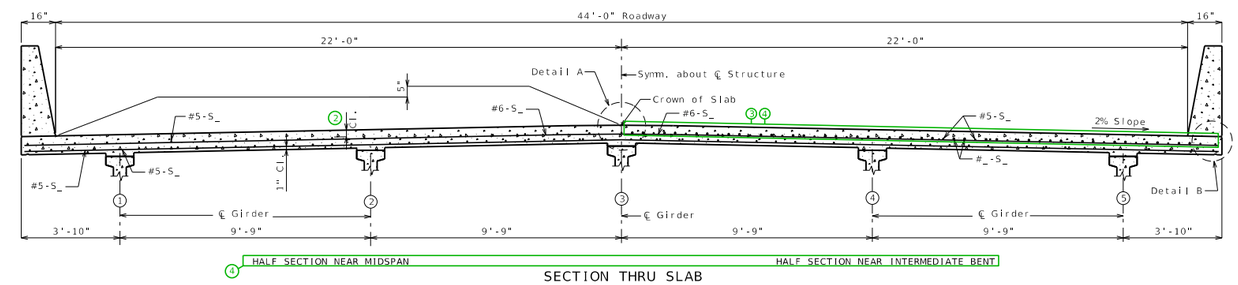

SECTION THRU SLAB

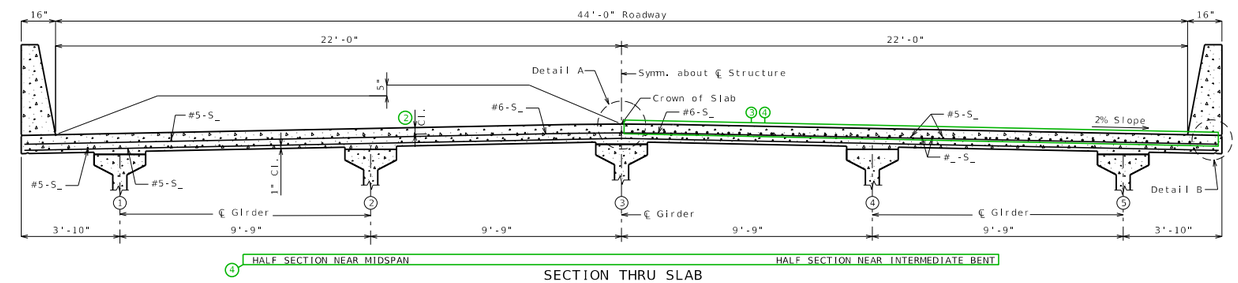

SECTION THRU SLAB

SLAB10_44ft_symm Guidance & Alternate Details (3 of 3)

Panel Deck

Bulb-Tee

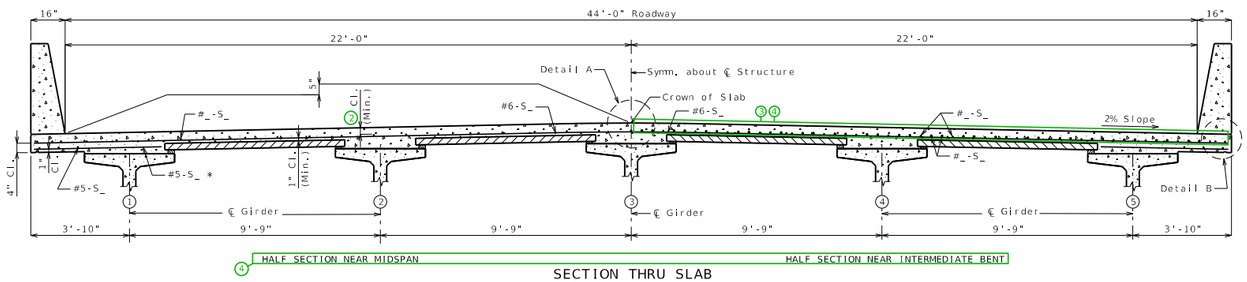

SECTION THRU SLAB

* Alternate bar shape available, see barrier sheet.

NU

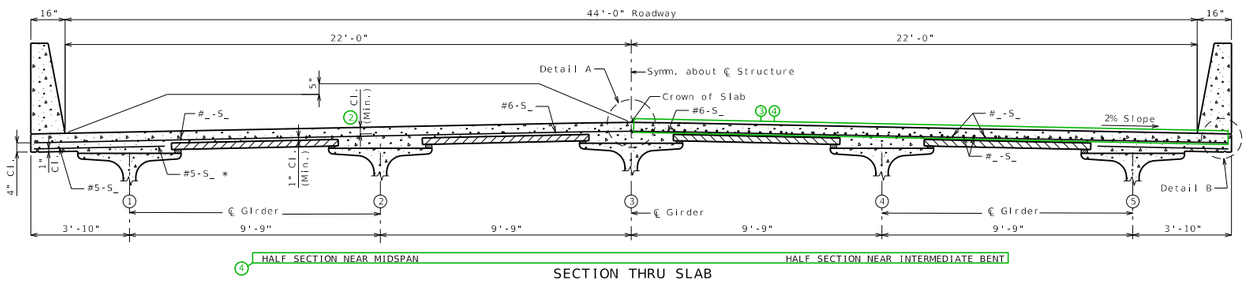

SECTION THRU SLAB

* Alternate bar shape available, see barrier sheet.

Box

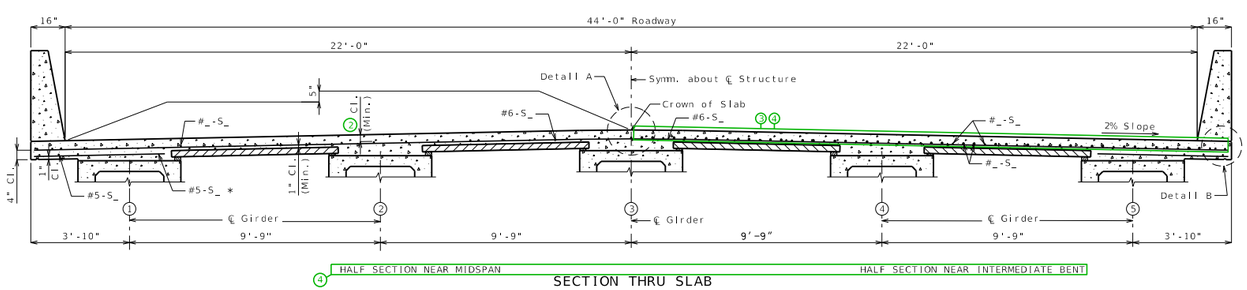

SECTION THRU SLAB

* Alternate bar shape available, see barrier sheet.

CIP Deck

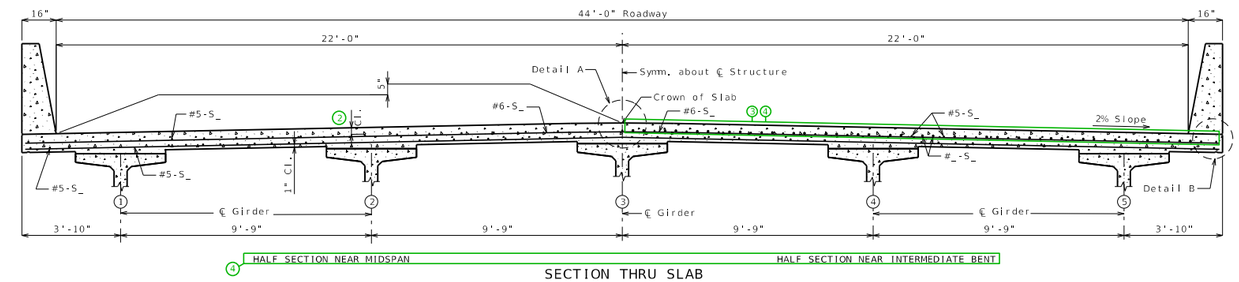

SECTION THRU SLAB

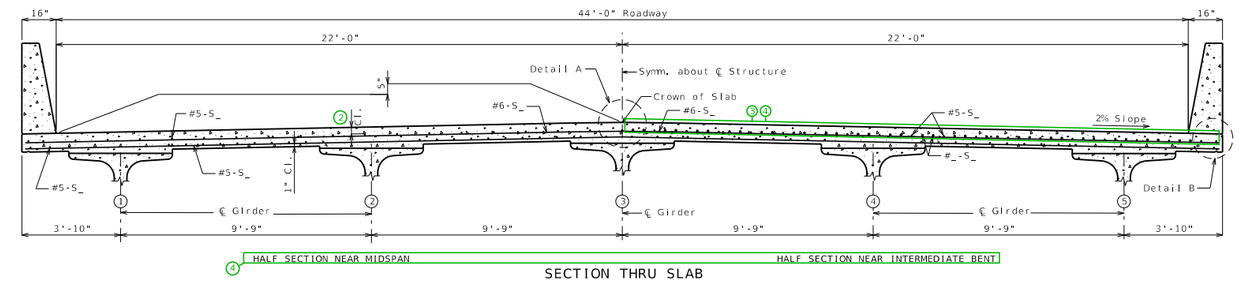

SECTION THRU SLAB

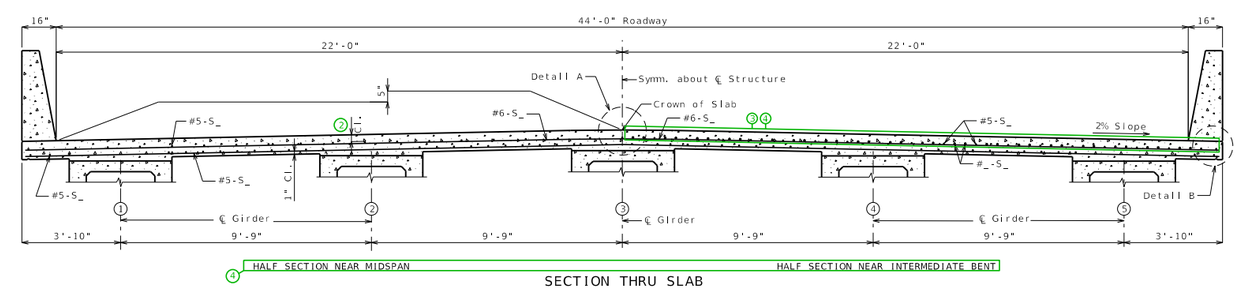

SECTION THRU SLAB

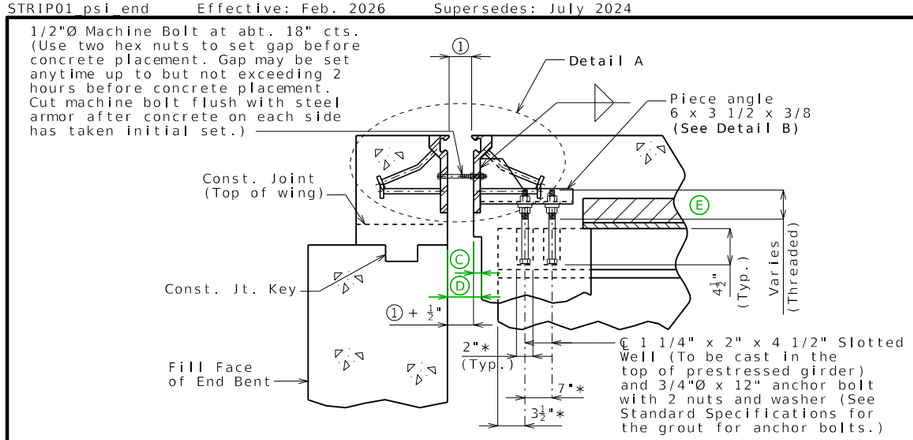

SECTION A-A

Strip seal gland not shown for clarity.
* Dimension along ℄ Girder

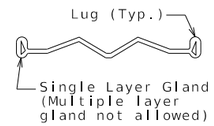

DETAIL OF GLAND

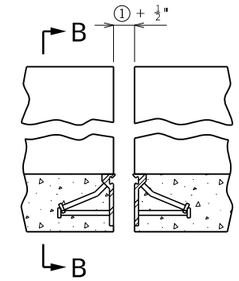

PART ELEVATION OF BARRIER

Strip seal gland not shown for clarity.

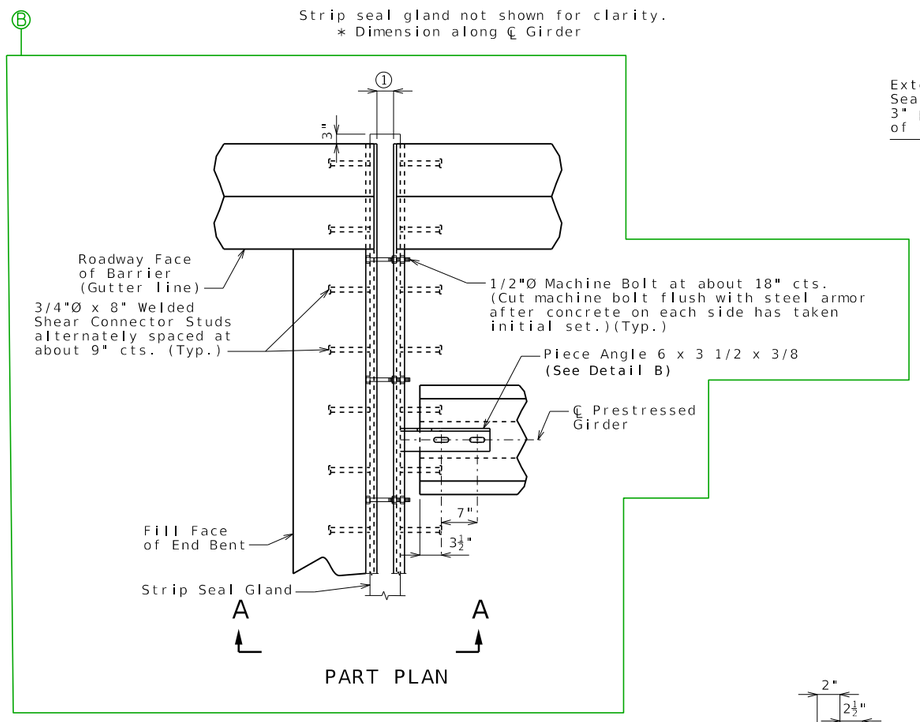

PART PLAN

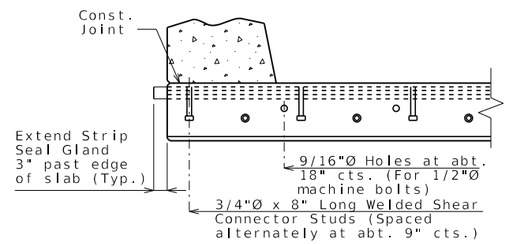

PART SECTION B-B

GENERAL NOTES:

Expansion joint system shall be fabricated in one section, except for staged construction and when the length is over 50 feet. A complete joint penetration groove welded splice shall be required. Welds shall be ground flush to provide a smooth surface. The expansion joint system shall be fabricated and installed to the crown and grade of the roadway.

The strip seal gland shall be installed in joints in one continuous piece without field splices. Factory splicing will be permitted for joints in excess of 53 feet.

Structural steel for the expansion joint system shall be ASTM A709 Grade 36 except the steel armor may be ASTM A709 Grade 50W. Anchors for the expansion joint system shall be in accordance with Sec 1037. Strip seal expansion joint system shall be in accordance with Sec 717.

Structural steel for the expansion joint system shall be coated with a minimum of two coats of inorganic zinc primer to provide a total dry film thickness of 4 mils minimum, 6 mils maximum, or galvanized in accordance with ASTM A123. Anchors need not be protected from overspray.

Longitudinal reinforcing steel shall be placed so that ends shall be 1" from the vertical leg of the steel armor at the expansion joint system.

Concrete shall be forced under and around steel armor and anchors. Proper consolidation of the concrete shall be achieved by localized internal vibration.

② The installation temperature shall be taken as the actual air temperature averaged over the 24-hour period immediately preceding installation.

③ MoDOT Construction personnel will indicate the strip seal expansion joint system installed.

④ The 4" dimension may be reduced if necessary to allow piece angle to be installed flush with the joint armor.

Steel armor may also be referred to as extrusion or rail.

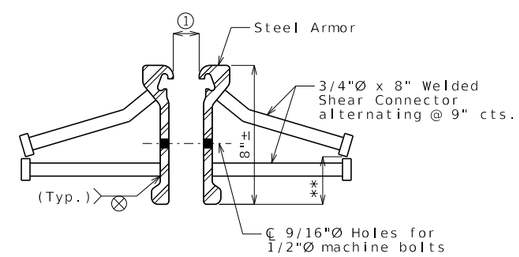

DETAIL OF JOINT ARMOR

** Bend stud in shop to maintain 1" min. from bottom of steel armor.

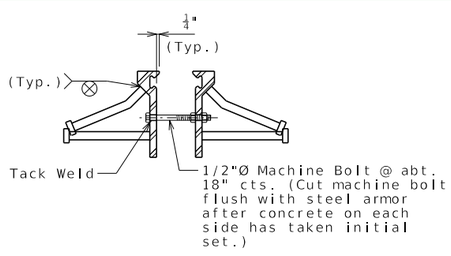

DETAIL A

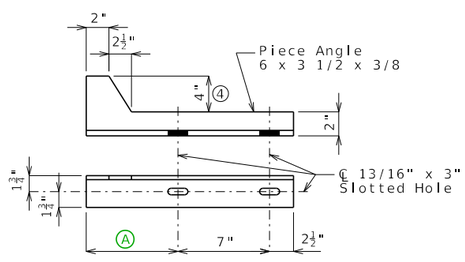

DETAIL B

Table of Allowed Transverse Strip Seal Expansion Joint System

Manufacturer	Strip Seal System (Designated Name)	Movement Parallel to RDWY	① Allowed Installation Gap Normal to Joint at RDWY Surface @ Air/Surface Temperature ②						③
			@ 40°F	@ 50°F	@ 60°F	@ 70°F	@ 80°F	@ 90°F	
D S Brown	Strip seal L2-400	XXX	XXX	XXX	XXX	XXX	XXX	XXX	□
D S Brown	Strip seal L2-500	XXX	XXX	XXX	XXX	XXX	XXX	XXX	□
Watson Bowman Acme (Wabo)	Strip seal SE-300	XXX	XXX	XXX	XXX	XXX	XXX	XXX	□
Watson Bowman Acme (Wabo)	Strip seal SE-400	XXX	XXX	XXX	XXX	XXX	XXX	XXX	□
Watson Bowman Acme (Wabo)	Strip seal SE-500	XXX	XXX	XXX	XXX	XXX	XXX	XXX	□

STRIP SEAL EXPANSION JOINT SYSTEM AT END BENT NO. _

DATE PREPARED	
2/4/2026	
ROUTE	STATE MO
DISTRICT	SHEET NO. 1
COUNTY	
JOB NO.	
CONTRACT ID.	
PROJECT NO.	
BRIDGE NO.	

DESCRIPTION | DATE

MISSOURI HIGHWAYS AND TRANSPORTATION COMMISSION
105 WEST CAPITOL
JEFFERSON CITY, MO 65102
1-888-ASK-MODOT (1-888-275-6636)

Detailed
Checked

Note: This drawing is not to scale. Follow dimensions.

Sheet No. of

STRIP01_psi_end Guidance & Alternate Details

Standard Drawing Guidance (do not show on plans):

Modify drawing as necessary.

Remove non-applicable rows in table.

Ⓐ Piece angle length to center of first slotted hole.

Ⓑ Use squared, left advanced or right advanced Part Plan as needed.

Ⓒ = 3/4" (Min.) @ 60°. Verify only. Do not show on plans.

Ⓓ = ① @ 60°+ 1/2" + 3/4" (Min.). Verify only. Do not show on plans.

Ⓔ Remove precast panel for CIP slab.

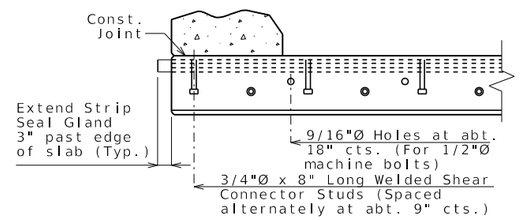

PART SECTION B-B

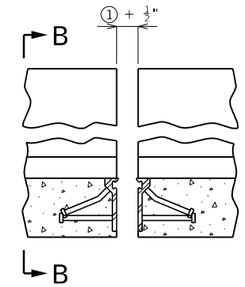

PART ELEVATION OF BARRIER

Strip seal gland not shown for clarity.

Alternate details for Type B barrier (SBC)

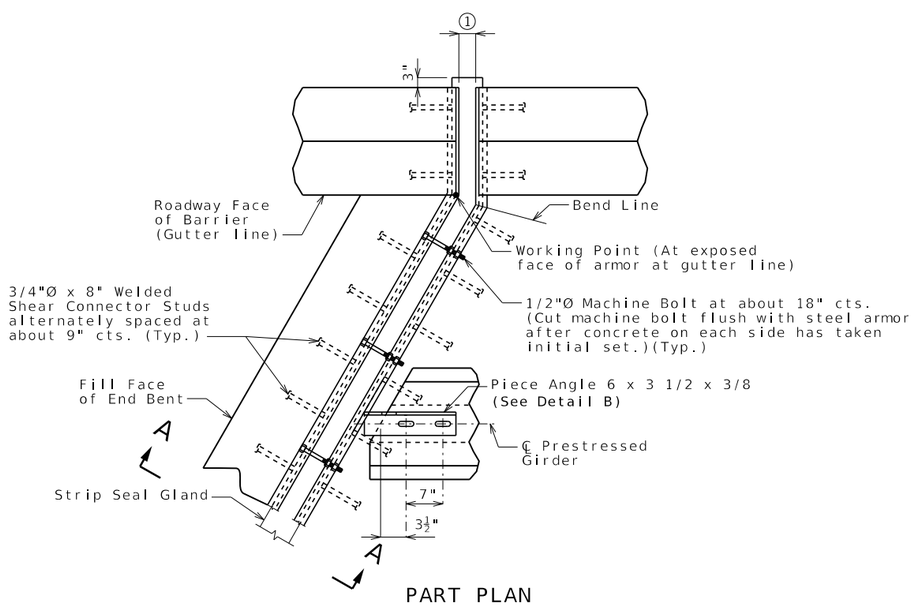

PART PLAN

Left Advanced

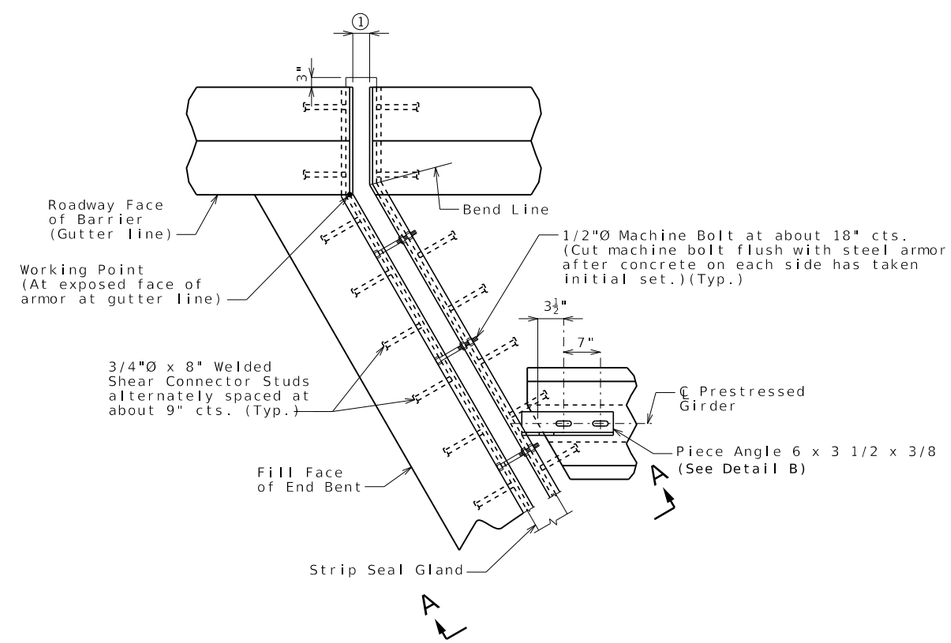

PART PLAN

Right Advanced

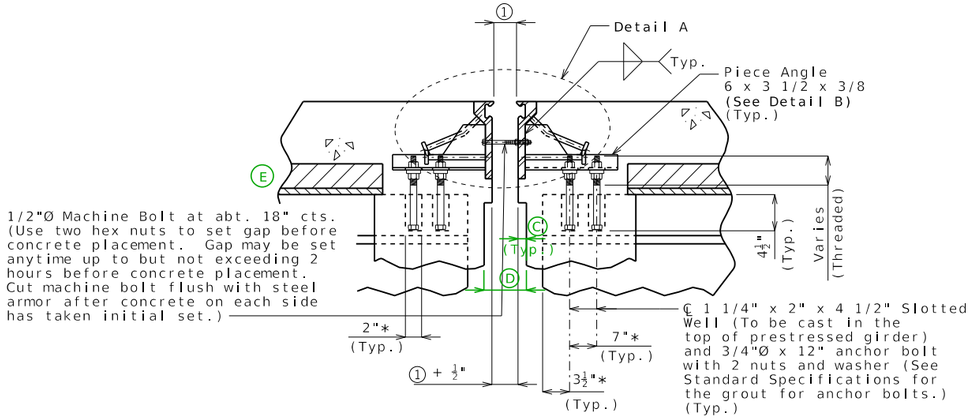

SECTION A-A

Strip seal gland not shown for clarity.
* Dimension along ℄ Girder

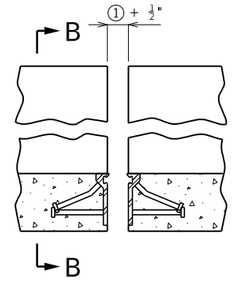

PART ELEVATION OF BARRIER

Strip seal gland not shown for clarity.

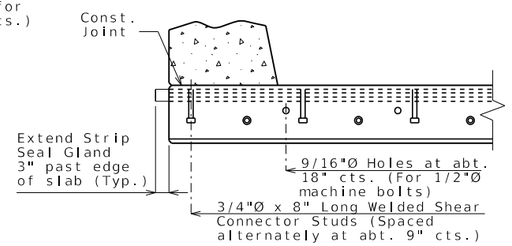

PART SECTION B-B

GENERAL NOTES:

Expansion joint system shall be fabricated in one section, except for staged construction and when the length is over 50 feet. A complete joint penetration groove welded splice shall be required. Welds shall be ground flush to provide a smooth surface. The expansion joint system shall be fabricated and installed to the crown and grade of the roadway.

The strip seal gland shall be installed in joints in one continuous piece without field splices. Factory splicing will be permitted for joints in excess of 53 feet.

Structural steel for the expansion joint system shall be ASTM A709 Grade 36 except the steel armor may be ASTM A709 Grade 50W. Anchors for the expansion joint system shall be in accordance with Sec 1037. Strip seal expansion joint system shall be in accordance with Sec 717.

Structural steel for the expansion joint system shall be coated with a minimum of two coats of inorganic zinc primer to provide a total dry film thickness of 4 mils minimum, 6 mils maximum, or galvanized in accordance with ASTM A123. Anchors need not be protected from overspray.

Longitudinal reinforcing steel shall be placed so that ends shall be 1" from the vertical leg of the steel armor at the expansion joint system.

Concrete shall be forced under and around steel armor and anchors. Proper consolidation of the concrete shall be achieved by localized internal vibration.

② The installation temperature shall be taken as the actual air temperature averaged over the 24-hour period immediately preceding installation.

③ MoDOT Construction personnel will indicate the strip seal expansion joint system installed.

④ The 4" dimension may be reduced if necessary to allow piece angle to be installed flush with the joint armor.

Steel armor may also be referred to as extrusion or rail.

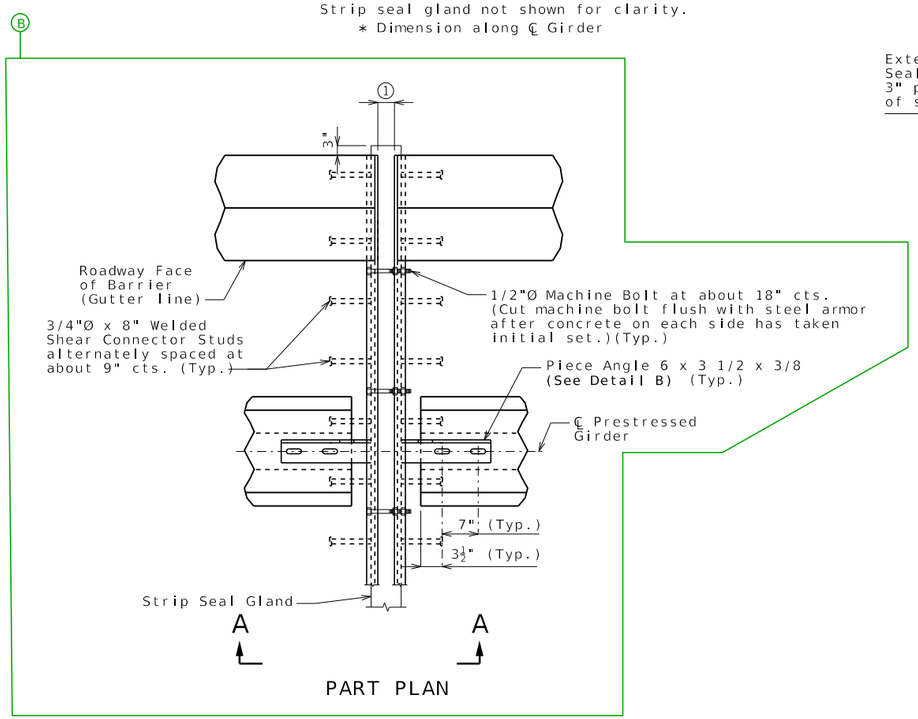

PART PLAN

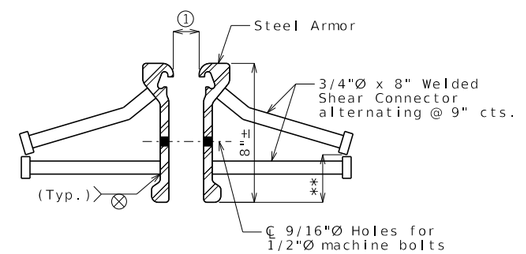

DETAIL OF JOINT ARMOR

** Bend stud in shop to maintain 1" min. from bottom of steel armor.

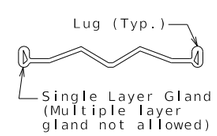

DETAIL OF GLAND

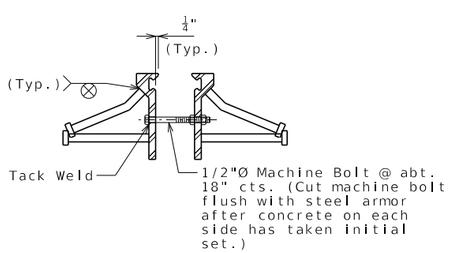

DETAIL A

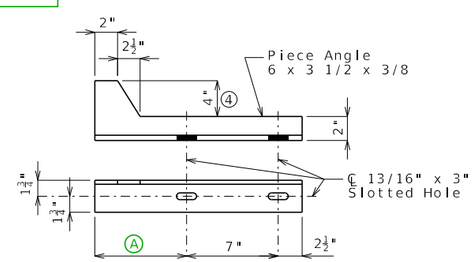

DETAIL B

Table of Allowed Transverse Strip Seal Expansion Joint System

Manufacturer	Strip Seal System (Designated Name)	Movement Parallel to RDWY	① Allowed Installation Gap Normal to Joint at RDWY Surface @ Air/Surface Temperature ②						③
			@ 40°F	@ 50°F	@ 60°F	@ 70°F	@ 80°F	@ 90°F	
D S Brown	Strip seal L2-400	XXX	XXX	XXX	XXX	XXX	XXX	XXX	□
D S Brown	Strip seal L2-500	XXX	XXX	XXX	XXX	XXX	XXX	XXX	□
Watson Bowman Acme (Wabo)	Strip seal SE-300	XXX	XXX	XXX	XXX	XXX	XXX	XXX	□
Watson Bowman Acme (Wabo)	Strip seal SE-400	XXX	XXX	XXX	XXX	XXX	XXX	XXX	□
Watson Bowman Acme (Wabo)	Strip seal SE-500	XXX	XXX	XXX	XXX	XXX	XXX	XXX	□

STRIP SEAL EXPANSION JOINT SYSTEM AT INTERMEDIATE BENT NO. _

Detailed
Checked

Note: This drawing is not to scale. Follow dimensions.

Sheet No. of

DATE PREPARED	
2/4/2026	
ROUTE	STATE MO
DISTRICT	SHEET NO. 2
COUNTY	
JOB NO.	
CONTRACT ID.	
PROJECT NO.	
BRIDGE NO.	

DESCRIPTION

DATE

MISSOURI HIGHWAYS AND TRANSPORTATION COMMISSION
105 WEST CAPITOL
JEFFERSON CITY, MO 65102
1-888-ASK-MODOT (1-888-275-6636)

STRIP02_psi_int Guidance & Alternate Details

Standard Drawing Guidance (do not show on plans):

Modify drawing as necessary.

Remove non-applicable rows in table.

Ⓐ Piece angle length to center of first slotted hole.

Ⓑ Use squared, left advanced or right advanced Part Plan as needed.

Ⓒ = 3/4" (Min.) @ 60° Verify only. Do not show on plans.

Ⓓ = ① @ 60°+ 1/2" + 3/4" (Min.). Verify only. Do not show on plans.

Ⓔ Remove precast panel for CIP slab.

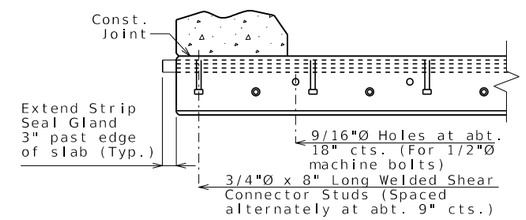

PART SECTION B-B

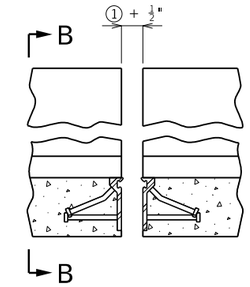

PART ELEVATION OF BARRIER

Strip seal gland not shown for clarity.

Alternate details for Type B barrier (SBC)

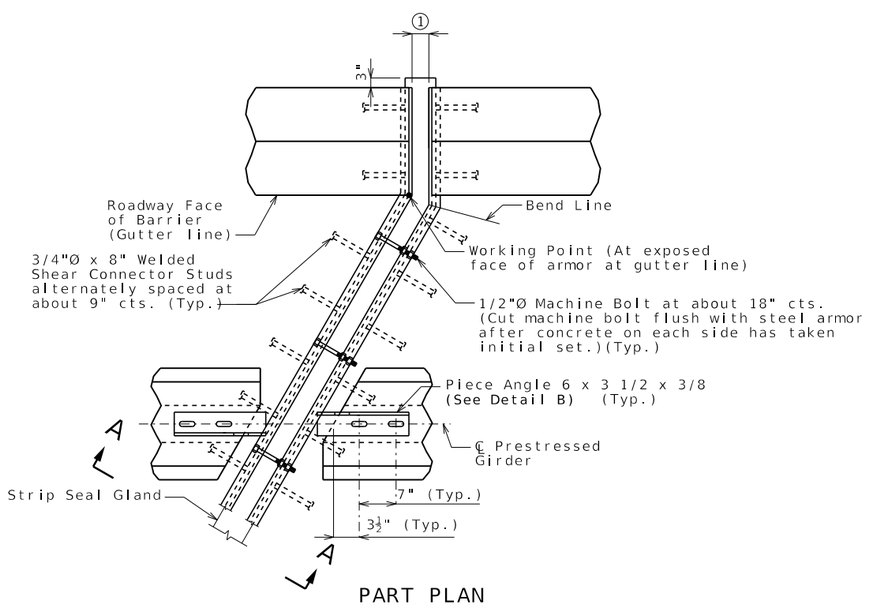

PART PLAN

Left Advanced

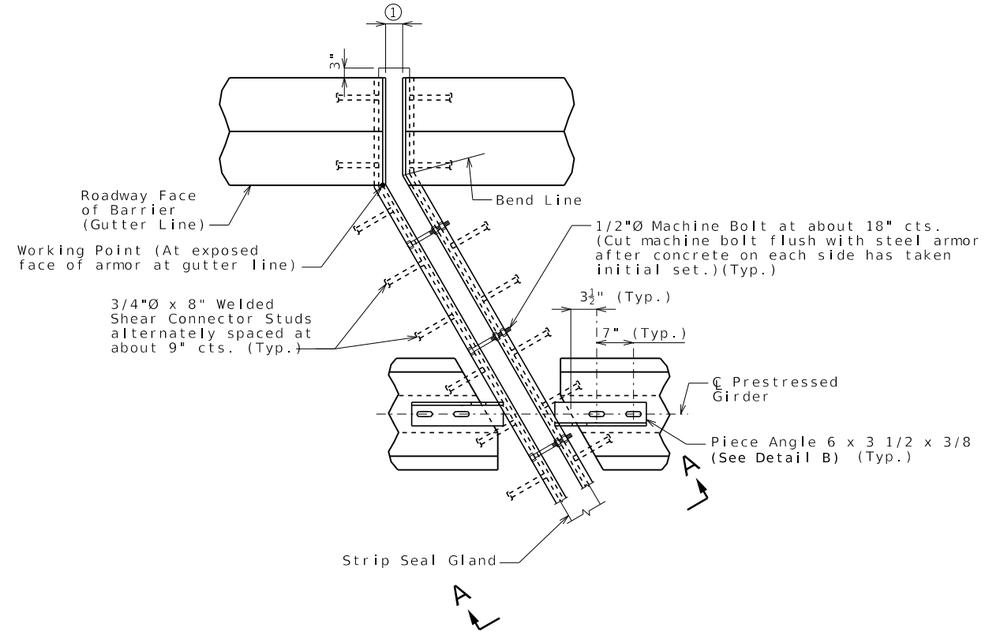

PART PLAN

Right Advanced

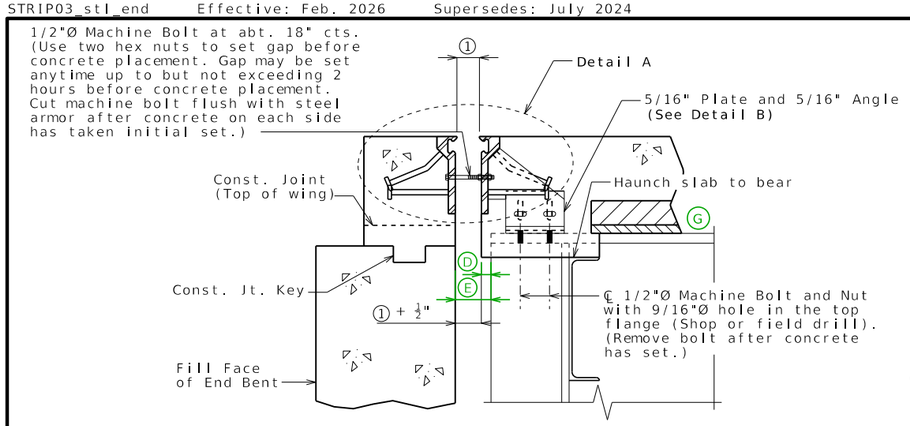

SECTION A-A

Strip seal gland not shown for clarity.

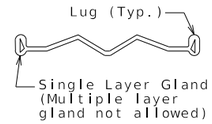

DETAIL OF GLAND

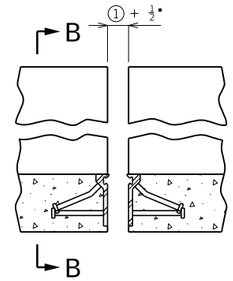

PART ELEVATION OF BARRIER

Strip seal gland not shown for clarity.

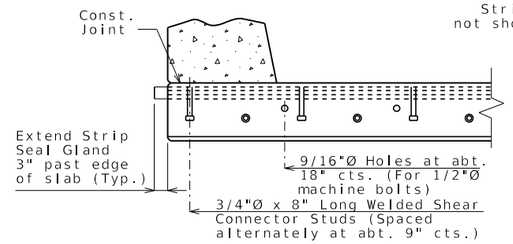

PART SECTION B-B

GENERAL NOTES:

Expansion joint system shall be fabricated in one section, except for staged construction and when the length is over 50 feet. A complete joint penetration groove welded splice shall be required. Welds shall be ground flush to provide a smooth surface. The expansion joint system shall be fabricated and installed to the crown and grade of the roadway.

The strip seal gland shall be installed in joints in one continuous piece without field splices. Factory splicing will be permitted for joints in excess of 53 feet.

Structural steel for the expansion joint system shall be ASTM A709 Grade 36 except the steel armor may be ASTM A709 Grade 50W. Anchors for the expansion joint system shall be in accordance with Sec 1037. Strip seal expansion joint system shall be in accordance with Sec 717.

Structural steel for the expansion joint system shall be coated with a minimum of two coats of inorganic zinc primer to provide a total dry film thickness of 4 mils minimum, 6 mils maximum, or galvanized in accordance with ASTM A123. Anchors need not be protected from overspray.

Longitudinal reinforcing steel shall be placed so that ends shall be 1" from the vertical leg of the steel armor at the expansion joint system.

Concrete shall be forced under and around steel armor and anchors. Proper consolidation of the concrete shall be achieved by localized internal vibration.

② The installation temperature shall be taken as the actual air temperature averaged over the 24-hour period immediately preceding installation.

③ MoDOT Construction personnel will indicate the strip seal expansion joint system installed.

Steel armor may also be referred to as extrusion or rail.

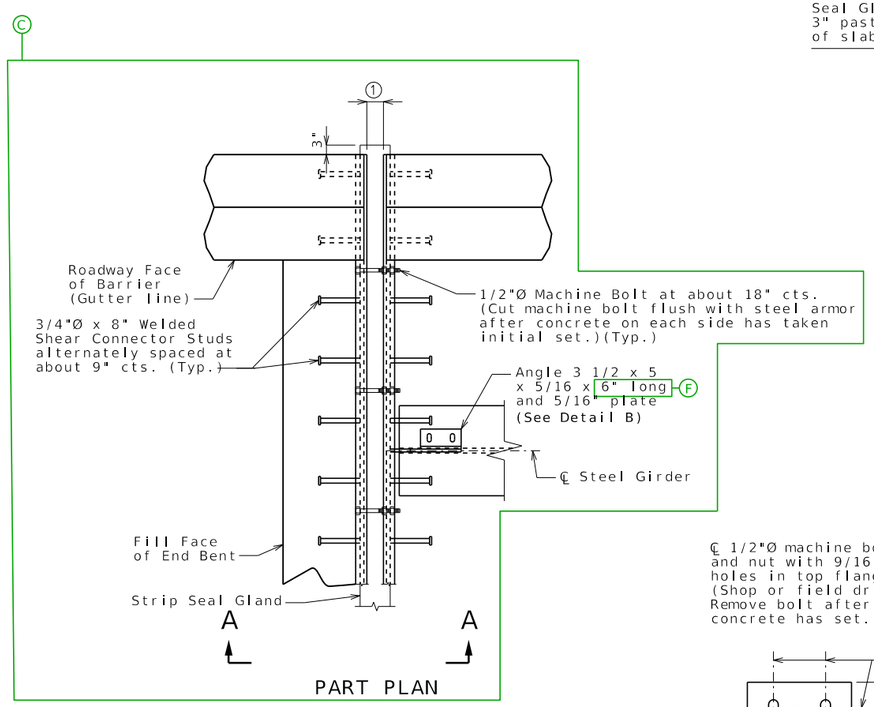

PART PLAN

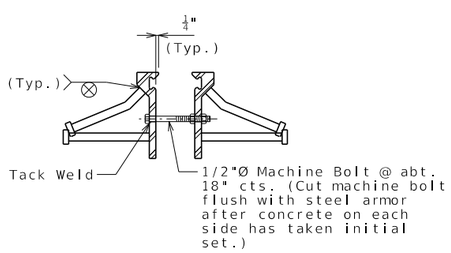

DETAIL A

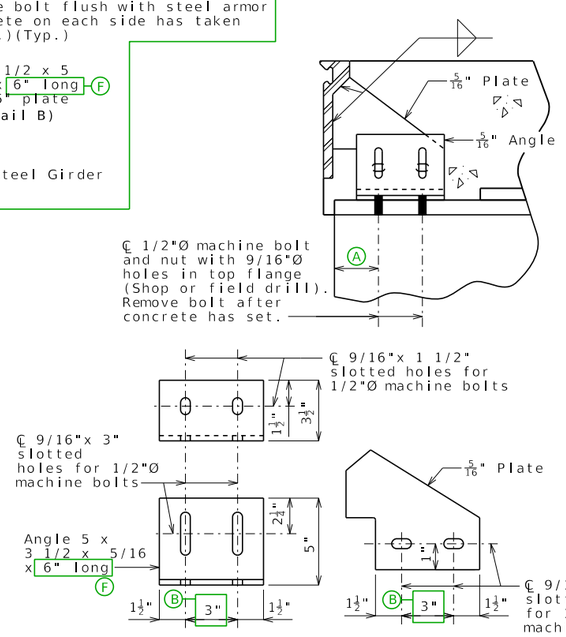

DETAIL B

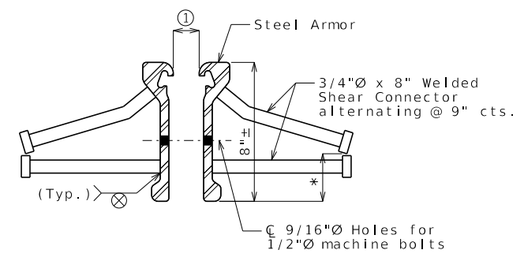

DETAIL OF JOINT ARMOR

* Bend stud in shop to maintain 1" min. from bottom of steel armor.

Table of Allowed Transverse Strip Seal Expansion Joint System

Manufacturer	Strip Seal System (Designated Name)	Movement Parallel to RDWY	① Allowed Installation Gap Normal to Joint at RDWY Surface @ Air/Surface Temperature ②						③
			@ 40°F	@ 50°F	@ 60°F	@ 70°F	@ 80°F	@ 90°F	
D S Brown	Strip seal L2-400	XXX	XXX	XXX	XXX	XXX	XXX	XXX	☐
D S Brown	Strip seal L2-500	XXX	XXX	XXX	XXX	XXX	XXX	XXX	☐
Watson Bowman Acme (Wabo)	Strip seal SE-300	XXX	XXX	XXX	XXX	XXX	XXX	XXX	☐
Watson Bowman Acme (Wabo)	Strip seal SE-400	XXX	XXX	XXX	XXX	XXX	XXX	XXX	☐
Watson Bowman Acme (Wabo)	Strip seal SE-500	XXX	XXX	XXX	XXX	XXX	XXX	XXX	☐

STRIP SEAL EXPANSION JOINT SYSTEM AT END BENT NO. _

Detailed
Checked

Note: This drawing is not to scale. Follow dimensions.

Sheet No. of

DATE PREPARED	
2/5/2026	
ROUTE	STATE MO
DISTRICT	SHEET NO. 3
COUNTY	
JOB NO.	
CONTRACT ID.	
PROJECT NO.	
BRIDGE NO.	

DESCRIPTION

DATE

MISSOURI HIGHWAYS AND TRANSPORTATION COMMISSION
105 WEST CAPITOL
JEFFERSON CITY, MO 65102
1-888-ASK-MODOT (1-888-275-6636)

STRIP03_stl_end Guidance & Alternate Details

Standard Drawing Guidance (do not show on plans):

Modify drawing as necessary.

Remove non-applicable rows in table.

(A) Dimension to clear bearing stiffener (1 1/2" Min.). For rehab bridge, dimension should be based on shop drawing or field check.

(B) Use 3". For rehab bridge, dimension should be based on shop drawing or field check.

(C) Use squared, left advanced or right advanced Part Plan as needed.

(D) = 3/4" (Min.) @ 60° Verify only. Do not show on plans.

(E) = (1) @ 60°+ 1/2" + 3/4" (Min.). Verify only. Do not show on plans.

(F) = Use 6" long angle. For rehab bridge, modify angle length based on shop drawing or field check.

(G) Delete precast panel for CIP slab.

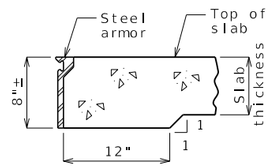

PART SECTION THRU EXPANSION JOINT IN SLAB CANTILEVER

Include this detail on redecks & rehabs when slab thickness is less than 8".

If slab thickness + haunch to bear is less than 8" within the girder bays, a shorter armor may be used.

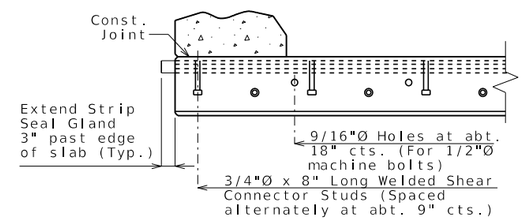

PART SECTION B-B

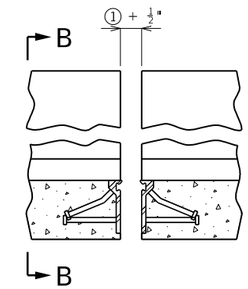

PART ELEVATION OF BARRIER

Strip seal gland not shown for clarity.

Alternate details for Type B barrier (SBC)

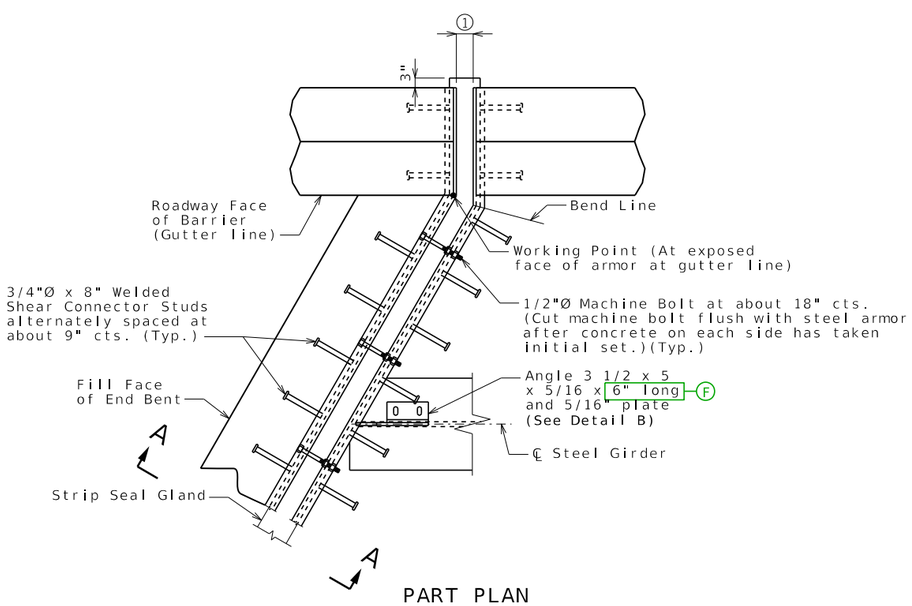

PART PLAN

Left Advanced

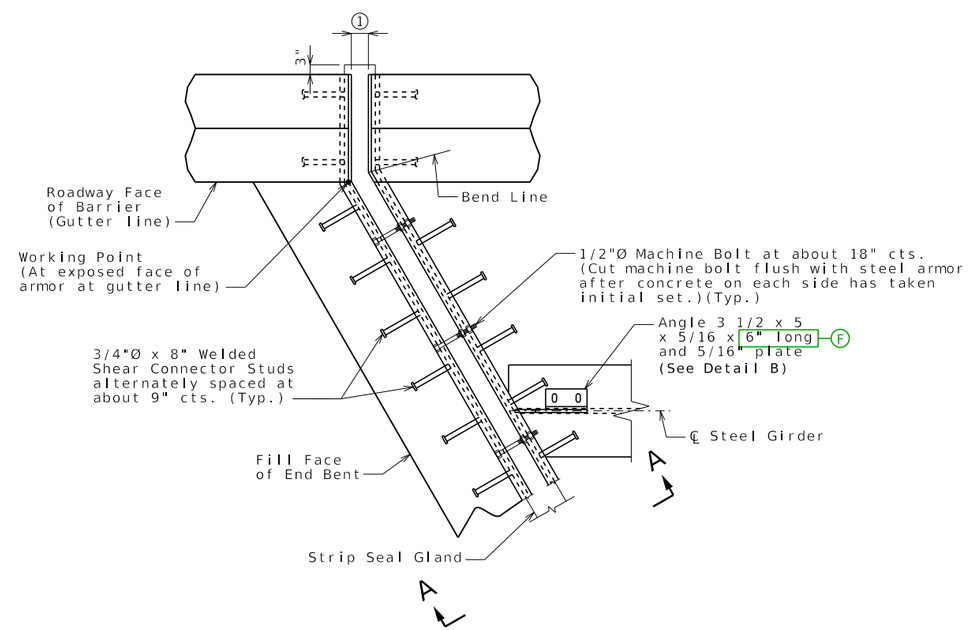

PART PLAN

Right Advanced

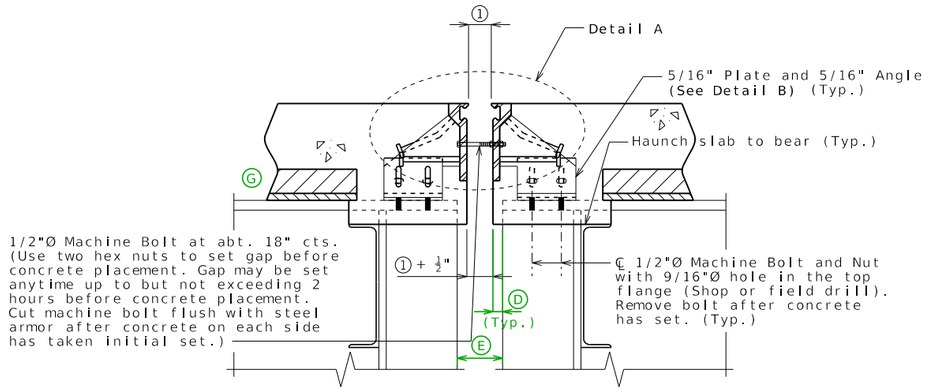

SECTION A-A

Strip seal gland not shown for clarity.

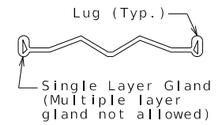

DETAIL OF GLAND

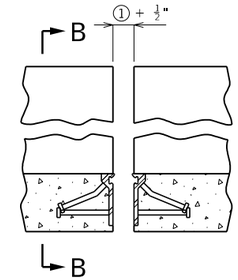

PART ELEVATION OF BARRIER

Strip seal gland not shown for clarity.

GENERAL NOTES:

Expansion joint system shall be fabricated in one section, except for staged construction and when the length is over 50 feet. A complete joint penetration groove welded splice shall be required. Welds shall be ground flush to provide a smooth surface. The expansion joint system shall be fabricated and installed to the crown and grade of the roadway.

The strip seal gland shall be installed in joints in one continuous piece without field splices. Factory splicing will be permitted for joints in excess of 53 feet.

Structural steel for the expansion joint system shall be ASTM A709 Grade 36 except the steel armor may be ASTM A709 Grade 50W. Anchors for the expansion joint system shall be in accordance with Sec 1037. Strip seal expansion joint system shall be in accordance with Sec 717.

Structural steel for the expansion joint system shall be coated with a minimum of two coats of inorganic zinc primer to provide a total dry film thickness of 4 mils minimum, 6 mils maximum, or galvanized in accordance with ASTM A123. Anchors need not be protected from overspray.

Longitudinal reinforcing steel shall be placed so that ends shall be 1" from the vertical leg of the steel armor at the expansion joint system.

Concrete shall be forced under and around steel armor and anchors. Proper consolidation of the concrete shall be achieved by localized internal vibration.

② The installation temperature shall be taken as the actual air temperature averaged over the 24-hour period immediately preceding installation.

③ MoDOT Construction personnel will indicate the strip seal expansion joint system installed.

Steel armor may also be referred to as extrusion or rail.

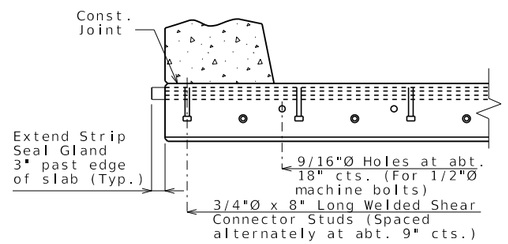

PART SECTION B-B

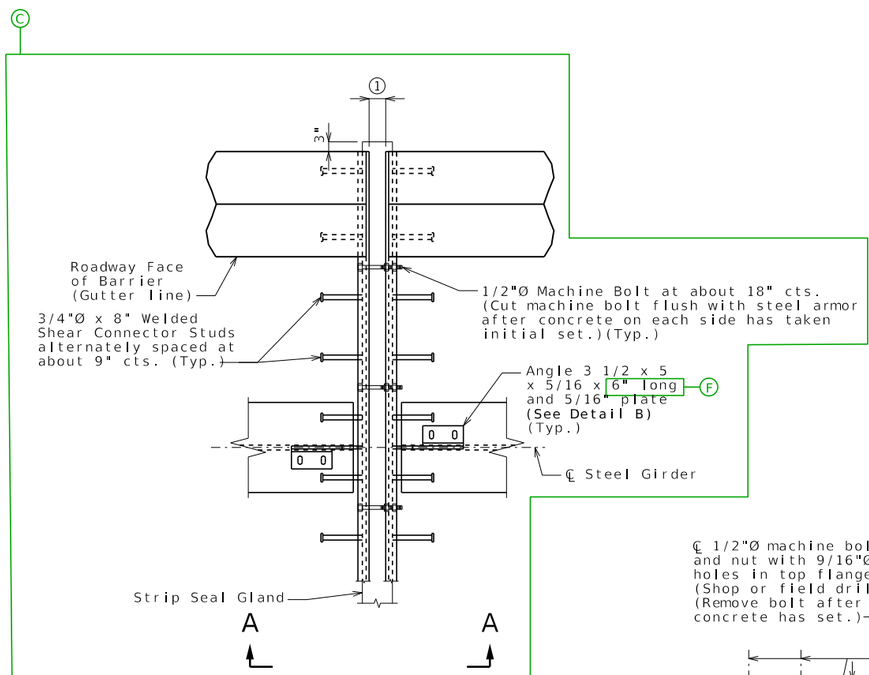

PART PLAN

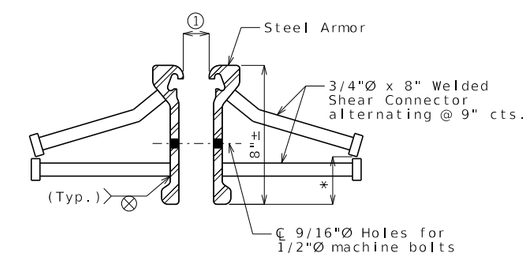

DETAIL OF JOINT ARMOR

* Bend stud in shop to maintain 1" min. from bottom of steel armor.

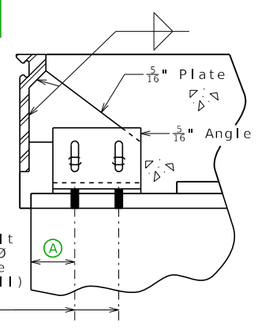

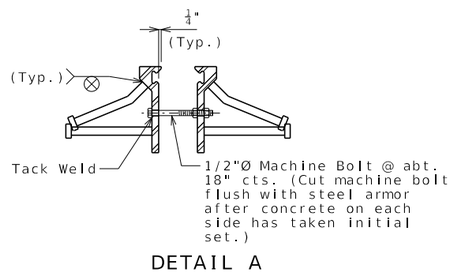

DETAIL A

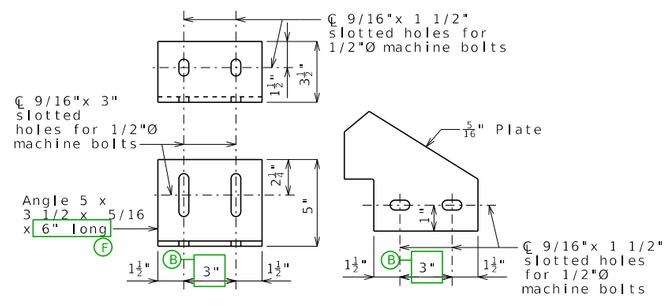

DETAIL B

Table of Allowed Transverse Strip Seal Expansion Joint System

Manufacturer	Strip Seal System (Designated Name)	Movement Parallel to RDWY	Allowed Installation Gap ① Normal to Joint at RDWY Surface @ Air/Surface Temperature ②							③
			@ 40°F	@ 50°F	@ 60°F	@ 70°F	@ 80°F	@ 90°F		
D S Brown	Strip seal L2-400	XXX	XXX	XXX	XXX	XXX	XXX	XXX		□
D S Brown	Strip seal L2-500	XXX	XXX	XXX	XXX	XXX	XXX	XXX		□
Watson Bowman Acme (Wabo)	Strip seal SE-300	XXX	XXX	XXX	XXX	XXX	XXX	XXX		□
Watson Bowman Acme (Wabo)	Strip seal SE-400	XXX	XXX	XXX	XXX	XXX	XXX	XXX		□
Watson Bowman Acme (Wabo)	Strip seal SE-500	XXX	XXX	XXX	XXX	XXX	XXX	XXX		□

STRIP SEAL EXPANSION JOINT SYSTEM AT INTERMEDIATE BENT NO. _

Detailed
Checked

Note: This drawing is not to scale. Follow dimensions.

Sheet No. of

DATE PREPARED	2/5/2026
ROUTE	STATE MO
DISTRICT	SHEET NO. 4
COUNTY	
JOB NO.	
CONTRACT ID.	
PROJECT NO.	
BRIDGE NO.	

DESCRIPTION

DATE

MISSOURI HIGHWAYS AND TRANSPORTATION COMMISSION
105 WEST CAPITOL
JEFFERSON CITY, MO 65102
1-888-ASK-MODOT (1-888-275-6636)

STRIP04_stl_int Guidance & Alternate Details

Standard Drawing Guidance (do not show on plans):

Modify drawing as necessary.

Remove non-applicable rows in table.

(A) Dimension to clear bearing stiffener (1 1/2" Min.). For rehab bridge, dimension should be based on shop drawing or field check.

(B) Use 3". For rehab bridge, dimension should be based on shop drawing or field check.

(C) Use squared, left advanced or right advanced Part Plan as needed.

(D) = 3/4" (Min.) @ 60° Verify only. Do not show on plans.

(E) = (1) @ 60°+ 1/2" + 3/4" (Min.). Verify only. Do not shown on plans.

(F) = Use 6" long angle. For rehab bridge, modify angle length based on shop drawing or field check.

(G) Delete precast panel for CIP slab.

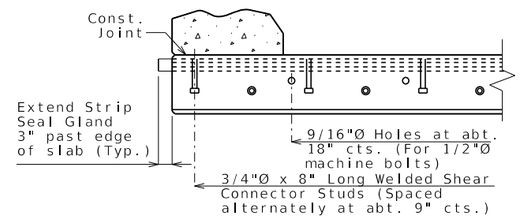

PART SECTION B-B

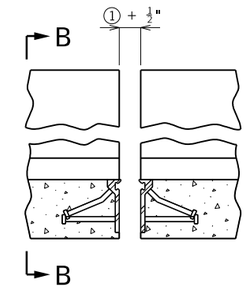

PART ELEVATION OF BARRIER

Strip seal gland not shown for clarity.

Alternate details for Type B barrier (SBC)

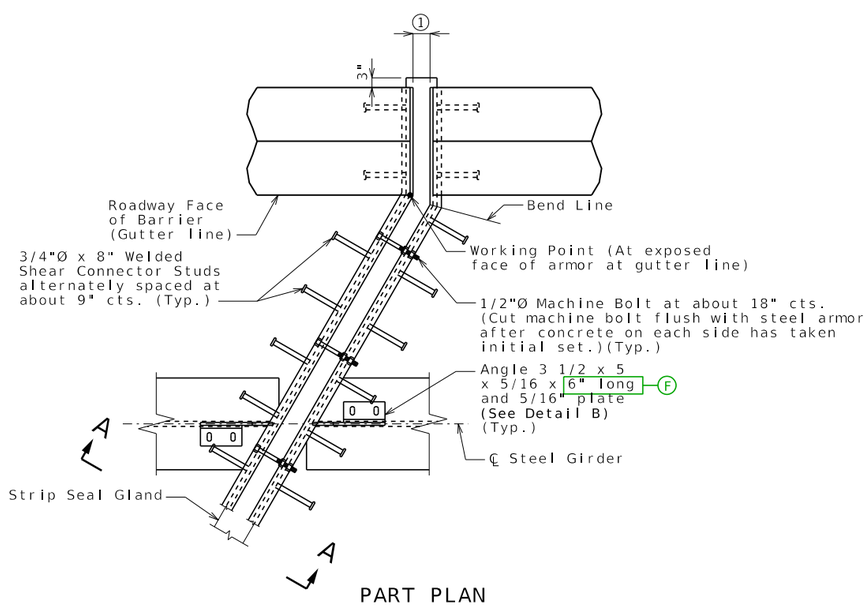

PART PLAN

Left Advanced

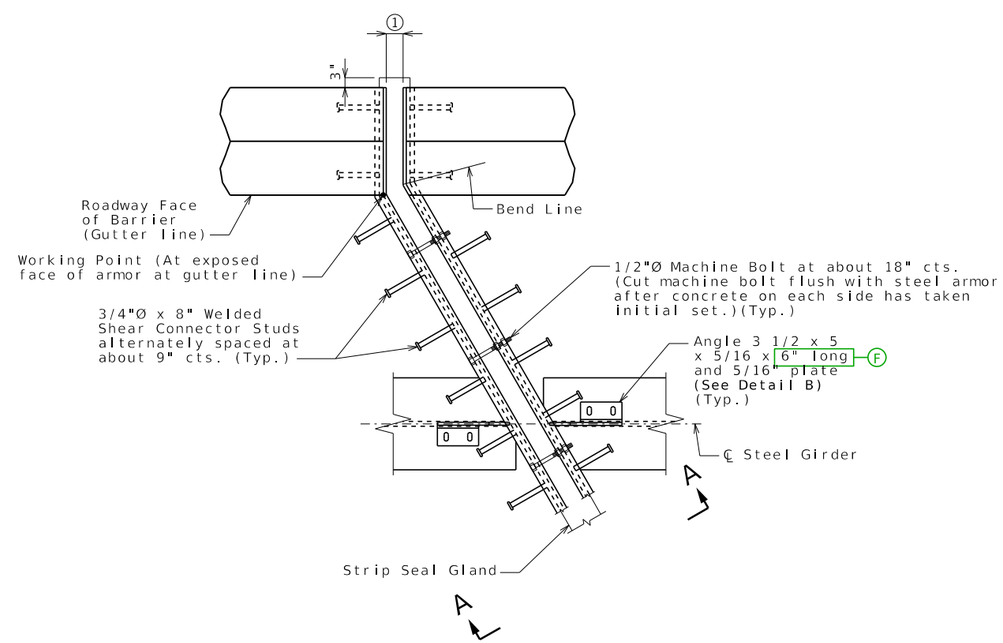

PART PLAN

Right Advanced

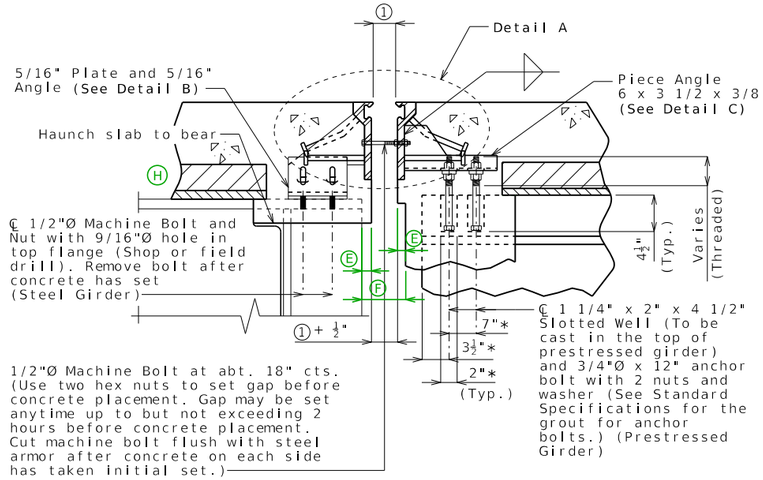

SECTION A-A

Strip seal gland not shown for clarity.
* Dimension along ℄ Girder

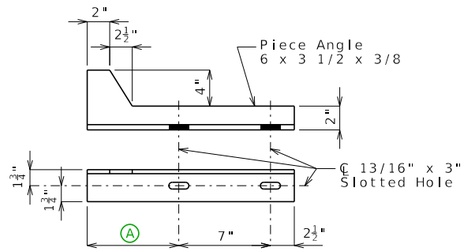

DETAIL C

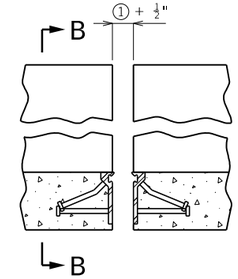

PART ELEVATION OF BARRIER

Strip seal gland not shown for clarity.

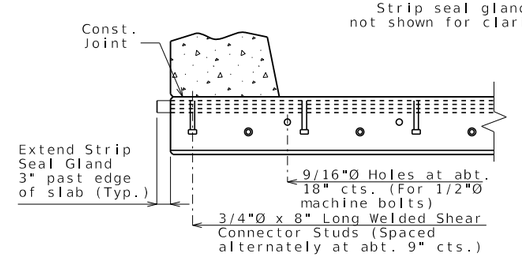

PART SECTION B-B

GENERAL NOTES:

Expansion joint system shall be fabricated in one section, except for staged construction and when the length is over 50 feet. A complete joint penetration groove welded splice shall be required. Welds shall be ground flush to provide a smooth surface. The expansion joint system shall be fabricated and installed to the crown and grade of the roadway.

The strip seal gland shall be installed in joints in one continuous piece without field splices. Factory splicing will be permitted for joints in excess of 53 feet.

Structural steel for the expansion joint system shall be ASTM A709 Grade 36 except the steel armor may be ASTM A709 Grade 50W. Anchors for the expansion joint system shall be in accordance with Sec 1037. Strip seal expansion joint system shall be in accordance with Sec 717.

Structural steel for the expansion joint system shall be coated with a minimum of two coats of inorganic zinc primer to provide a total dry film thickness of 4 mils minimum, 6 mils maximum, or galvanized in accordance with ASTM A123. Anchors need not be protected from overspray.

Longitudinal reinforcing steel shall be placed so that ends shall be 1" from the vertical leg of the steel armor at the expansion joint system.

Concrete shall be forced under and around steel armor and anchors. Proper consolidation of the concrete shall be achieved by localized internal vibration.

② The installation temperature shall be taken as the actual air temperature averaged over the 24-hour period immediately preceding installation.

③ MoDOT Construction personnel will indicate the strip seal expansion joint system installed.

Steel armor may also be referred to as extrusion or rail.

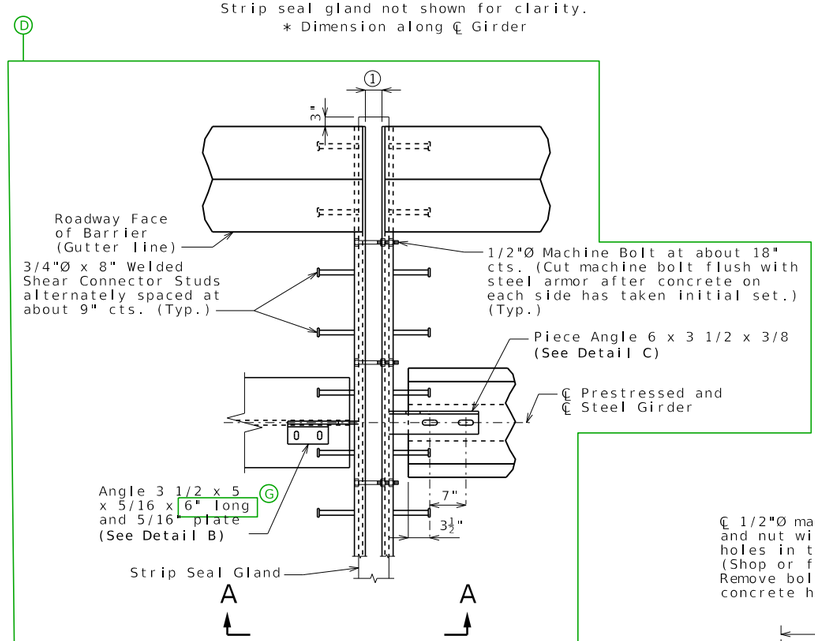

PART PLAN

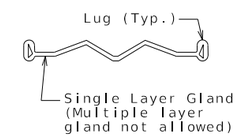

DETAIL OF GLAND

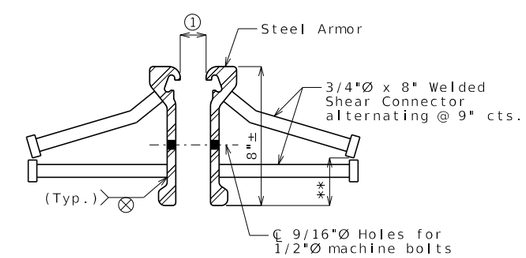

DETAIL OF JOINT ARMOR

** Bend stud in shop to maintain 1" min. from bottom of steel armor.

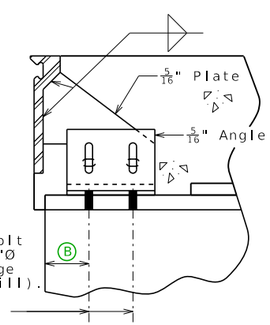

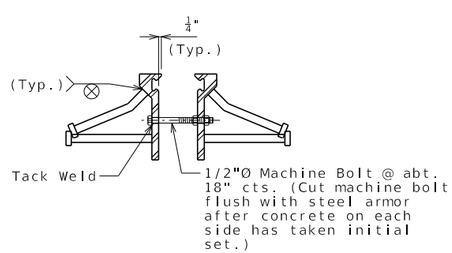

DETAIL A

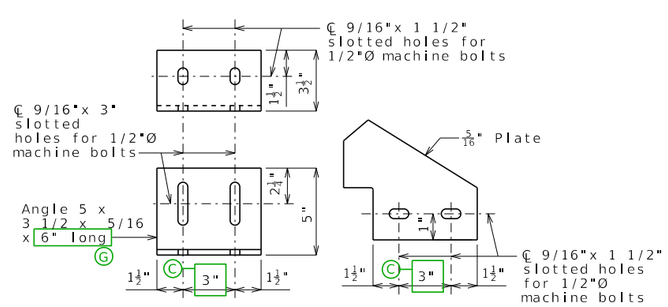

DETAIL B

Table of Allowed Transverse Strip Seal Expansion Joint System

Manufacturer	Strip Seal System (Designated Name)	Movement Parallel to RDWY	① Allowed Installation Gap Normal to Joint at RDWY Surface @ Air/Surface Temperature ②						③
			@ 40°F	@ 50°F	@ 60°F	@ 70°F	@ 80°F	@ 90°F	
D S Brown	Strip seal L2-400	XXX	XXX	XXX	XXX	XXX	XXX	XXX	☐
D S Brown	Strip seal L2-500	XXX	XXX	XXX	XXX	XXX	XXX	XXX	☐
Watson Bowman Acme (Wabo)	Strip seal SE-300	XXX	XXX	XXX	XXX	XXX	XXX	XXX	☐
Watson Bowman Acme (Wabo)	Strip seal SE-400	XXX	XXX	XXX	XXX	XXX	XXX	XXX	☐
Watson Bowman Acme (Wabo)	Strip seal SE-500	XXX	XXX	XXX	XXX	XXX	XXX	XXX	☐

STRIP SEAL EXPANSION JOINT SYSTEM AT INTERMEDIATE BENT NO. _

DATE PREPARED	
2/4/2026	
ROUTE	STATE MO
DISTRICT	SHEET NO. 5
COUNTY	
JOB NO.	
CONTRACT ID.	
PROJECT NO.	
BRIDGE NO.	

DESCRIPTION

DATE

MISSOURI HIGHWAYS AND TRANSPORTATION COMMISSION
105 WEST CAPITOL
JEFFERSON CITY, MO 65102
1-888-ASK-MODOT (1-888-275-6636)

Detailed
Checked

Note: This drawing is not to scale. Follow dimensions.

Sheet No. of

STRIP05_stl-psi Guidance & Alternate Details

Standard Drawing Guidance (do not show on plans):

Modify drawing as necessary.

Remove non-applicable rows in table.

(A) Piece angle length to center of first slotted hole.

(B) Dimension to clear bearing stiffener (1 1/2" Min.). For rehab bridge, dimension should be based on shop drawing or field check.

(C) Use 3". For rehab bridge, dimension should be based on shop drawing or field check.

(D) Use Square, Right Advanced or Left Advanced Part Plan as needed.

(E) 3/4" (Min.) @ 60° Verify only. Do not show on plans.

(F) (1) @ 60°+ 1/2" + (2 x 3/4") (Min.). Verify only. Do not show on plans.

(G) Use 6" long angle. For rehab bridge, modify angle length based on shop drawing or field check.

(H) Delete precast panel for CIP slab.

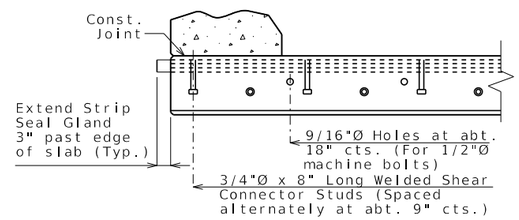

PART SECTION B-B

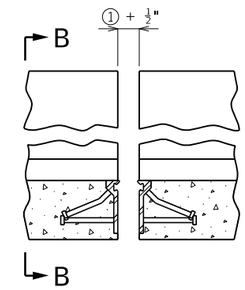

PART ELEVATION OF BARRIER

Strip seal gland not shown for clarity.

Alternate details for Type B barrier (SBC)

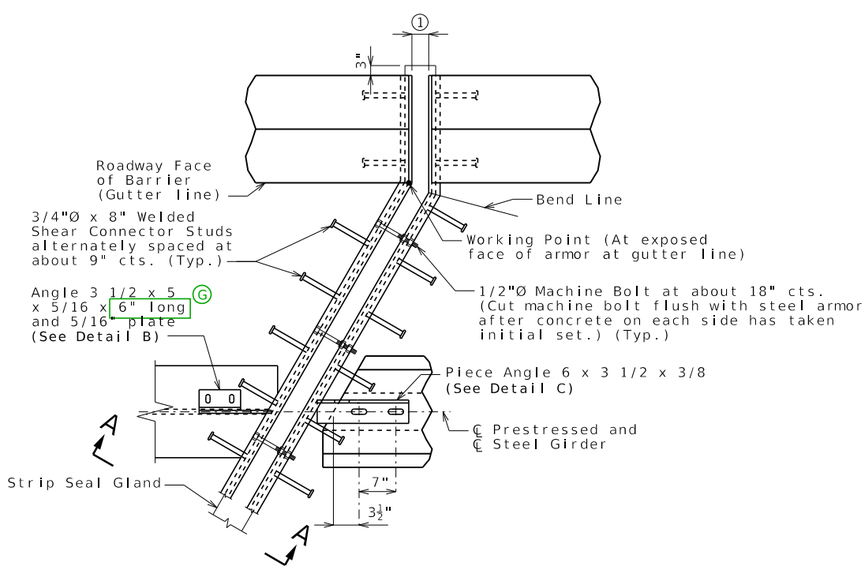

PART PLAN

Left Advanced

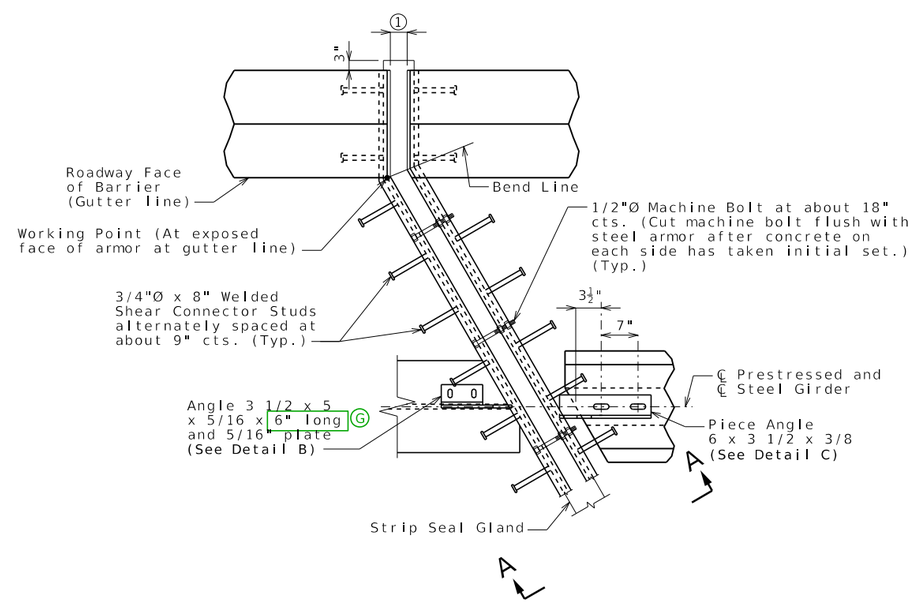

PART PLAN

Right Advanced

SEC/SUR * TWP * RGE *

(4 @ 40') PREFABRICATED SIMPLE SEGMENTED WIDE FLANG BEAM SPANS

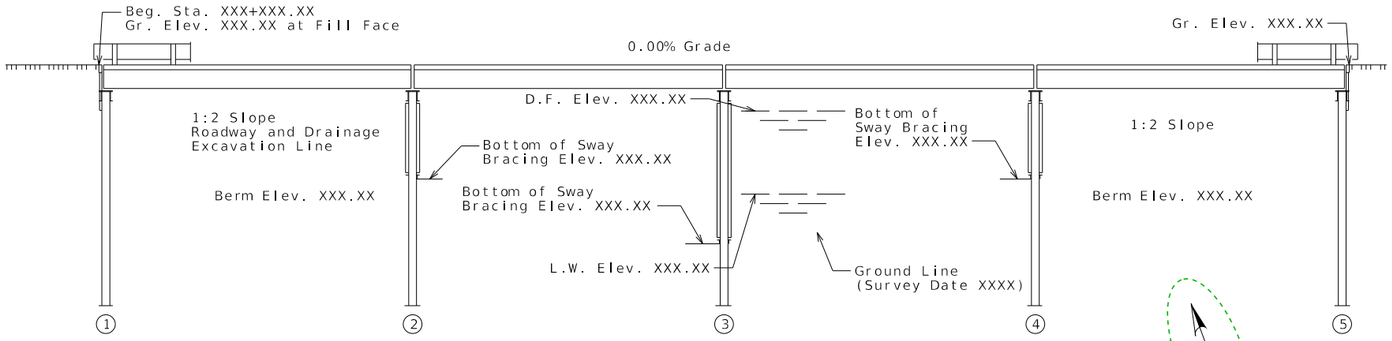

GENERAL ELEVATION

SDG: ROTATE TO DESIRED ANGLE

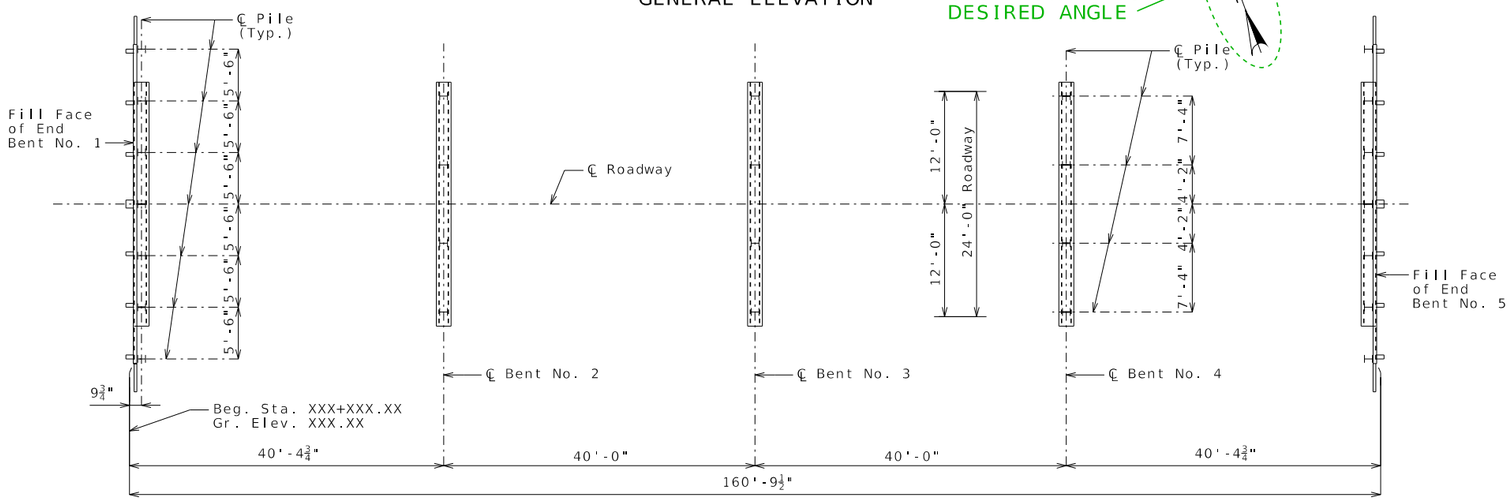

PLAN

Indicates location of borings.

Notice and Disclaimer Regarding Boring Log Data

The locations of all subsurface borings for this structure are shown on the plan sheet(s) for this structure. The boring data for all locations indicated, as well as any other boring logs or other factual records of subsurface data and investigations performed by the department for the design of the project, are shown on Sheet(s) No. __ and may be included in the Electronic Bridge Deliverables. They will also be available from the Project Contact upon written request. No greater significance or weight should be given to the boring data depicted on the plan sheets than is given to the subsurface data available from the district or elsewhere.

The Commission does not represent or warrant that any such boring data accurately depicts the conditions to be encountered in constructing this project. A contractor assumes all risks it may encounter in basing its bid prices, time or schedule of performance on the boring data depicted here or those available from the district, or on any other documentation not expressly warranted, which the contractor may obtain from the Commission.

Foundation Data

Type	Design Data	Bent Number 1	2	3	4	5
Load Bearing Pile	Pile Type and Size	HP 14x73	HP 14x73	HP 14x73	HP 14x73	HP 14x73
	Number ea	7	4	4	4	7
	Approximate Length Per Each ft	*	*	*	*	*
	Pile Driving Verification Method	DF	DF	DF	DF	DF
	Design Bearing kip	22	38	38	38	22
	Min. Hammer Energy Required ft-lb	*	*	*	*	*

All piling shall be driven to a minimum nominal axial compressive resistance equal to 3.5 times the Design Bearing as shown on the plans.

General Notes

Design Specifications:
2002 AASHTO LFD (17th Ed.) Standard Specifications
Seismic Performance Category =
Acceleration Coefficient =

Design Loading:
H20-44
Earth 120 lb/cf, Equivalent Fluid Pressure 45 lb/cf (Min.)

Design Unit Stresses:
Structural Steel (ASTM A709 Grade 50W) fy = 50,000 psi
Structural Steel (ASTM A709 Grade 36) fy = 36,000 psi
Steel Pile (ASTM A709 Grade 50) fy = 50,000 psi
Structural Steel Tubing (ASTM A500) fy = 46,000 psi

Timber:
All timber shall be standard rough sawn. At the contractor's option, timber may be untreated or protected with commercially applied timber preservatives. All timber shall have a minimum strength of 1500 psi and shall be either douglas fir in accordance with paragraph 123B (MC-19), 124B (MC-19) and 130BB of the current edition of Standard Grading Rules for West Coast Lumber, southern pine in accordance with paragraphs 312 (MC-19), 342 (MC-19) and 405.1 of the current edition of Southern Pine Inspection Bureau Grading Rules, or a satisfactory grade of sound native oak.

Bolts:
All bolts shall be ASTM F3125 Grade A325 Type 3, except as noted.

All ASTM A307 bolts and their accompanying hex nuts and washers and all ASTM A449 Type 1 studs and their accompanying heavy hex nuts shall be galvanized in accordance with ASTM F2329.

Structural Steel:
All structural steel shall be ASTM A709 Grade 50W except piles, sway bracing, thrie beam rail assembly and structural tubing. Structural tubing coating shall be in accordance with Sec 718.

Substructure:
All substructure items specified in Sec 718.3.1 except for the pile point reinforcement and sway bracing will be considered completely covered by the contract unit price for Structural Steel Piles (14 in.).

Miscellaneous:
The superstructure only and cap beam units will be provided by the State and shall be transported from Maintenance Lot. The superstructure shall be returned and stored at the same location as designated by the engineer after Bridge No. is open to traffic.

Traffic Handling:
Traffic to be maintained on existing structure during construction. See roadway plans for traffic control.

Estimated Quantities

	Item		Total
	Structural Steel Pile (14 in.)	linear foot	X
*	Fabricated Structural Carbon Steel (Misc.)	pound	1
	Partial Furnishing of Superstructure	lump sum	1
	Tranporting and Erecting Superstructure	lump sum	1
	Removing and Storing Superstructure	lump sum	1

* Furnishing and installing sway bracing at intermediate bents.

Standard Drawing Guidance (do not show on plans: Remove the boring data notes if does not apply.

Hydrologic Data

Drainage Area = ___ mi^2
Design Flood Frequency = ___ years
Design Flood Discharge = ___ cfs
Design Flood (D.F.) Elevation = _____
Base Flood (100-year)
Base Flood Elevation = _____
Base Flood Discharge = ___ cfs
Estimated Backwater = __ ft
Average Velocity thru Opening = __ ft/s
Freeboard (50-year)
Freeboard = __ ft
Roadway Overtopping
Overtopping Flood Discharge = ___ cfs
Overtopping Flood Frequency = ___ years
_____ Flood Elevation = _____

B.M.

LOCATION SKETCH

BRIDGE: ROUTE * OVER *
ROUTE * FROM * TO *
ABOUT * MILES * OF *
BEGINNING STA. _____

Designed
Detailed
Checked

Note: This drawing is not to scale. Follow dimensions.

Sheet No. 1 of

DATE PREPARED	
5/12/2026	
ROUTE	STATE MO
DISTRICT	SHEET NO. 1
COUNTY	
JOB NO.	
CONTRACT ID.	
PROJECT NO.	
BRIDGE NO.	

DESCRIPTION

DATE

MISSOURI HIGHWAYS AND TRANSPORTATION COMMISSION

105 WEST CAPITOL
JEFFERSON CITY, MO 65102
1-888-ASK-MODOT (1-888-275-6636)

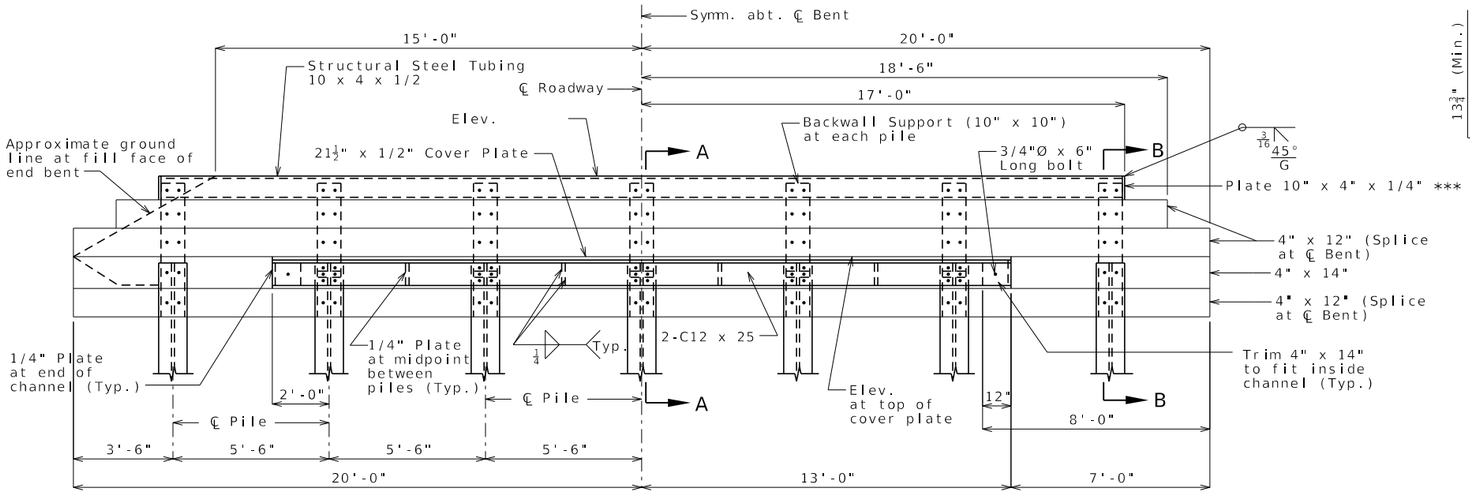

ELEVATION

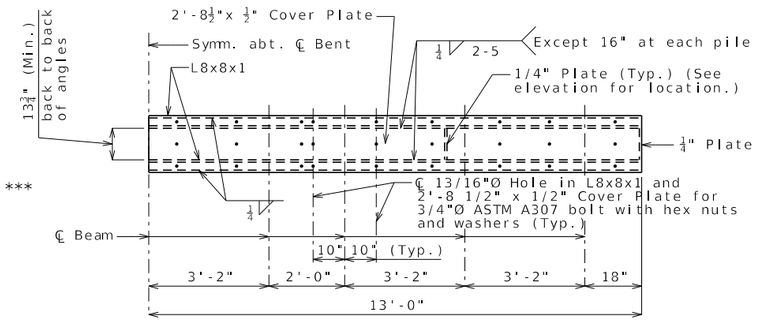

HALF PLAN OF INT. BENT CAP
(Bearing plates and piles not shown)

DETAILS OF INT. BENTS NO. 2, 3, & 4

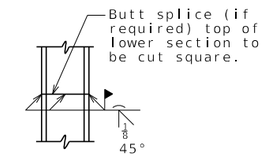

STEEL PILE SPLICE

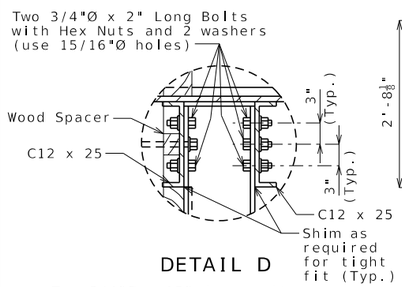

DETAIL D

* Two 3/4"Ø x 15" long bolts with hex nuts and 2 washers. 3/4"Ø ASTM A307 bolts are acceptable at this location.

** Two 3/4"Ø x 15" long round bolts with hex nuts and washers. 3/4"Ø ASTM A307 bolts are acceptable at this location.

*** ASTM A709, Grade 36

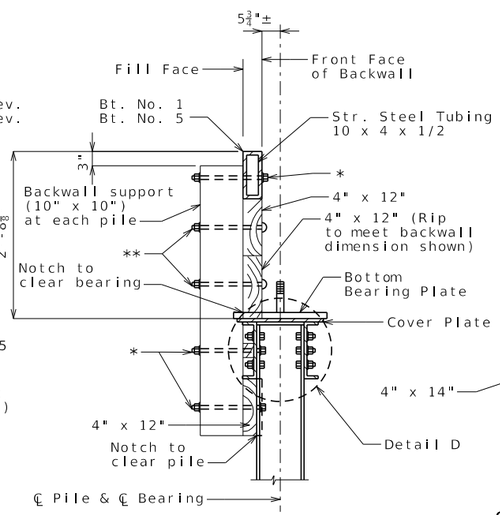

SECTION A-A

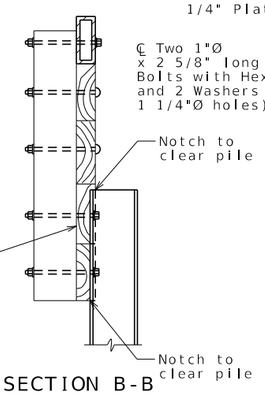

SECTION B-B

Sections A-A and B-B are same except as shown.

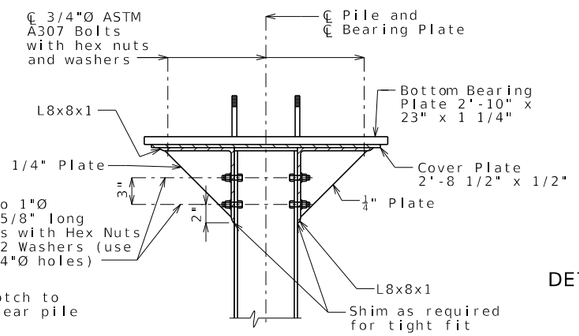

SECTION C-C

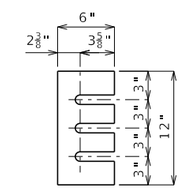

DETAIL OF SHIM PLATES (END BENTS)

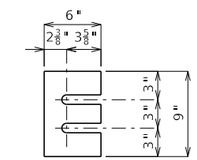

DETAIL OF SHIM PLATES (INT. BENTS)

Shim plates may be used between pile and channel at the end bents or angle at the intermediate bents. Shim plates may vary in thickness from 1/16 inch to thickness required.

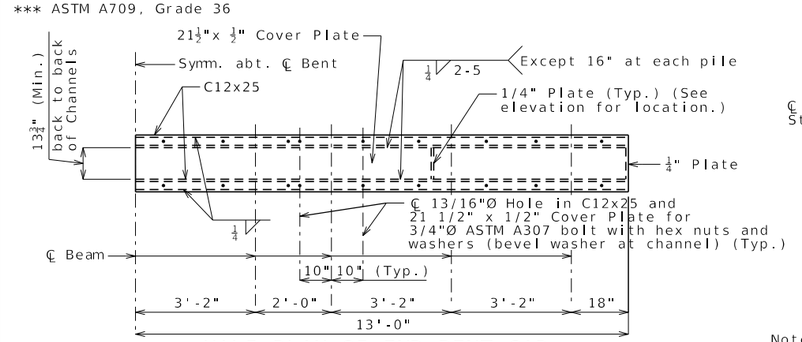

HALF PLAN OF END BENT CAP
(Bearing plates and piles not shown)

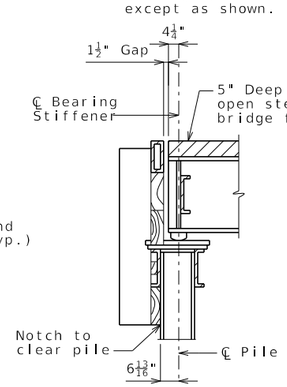

TYPICAL SECTION NEAR END BENT

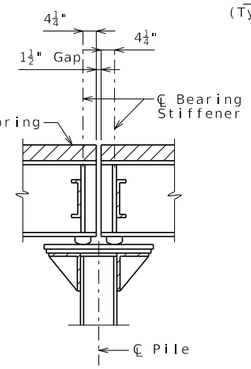

TYPICAL SECTION NEAR INT. BENT

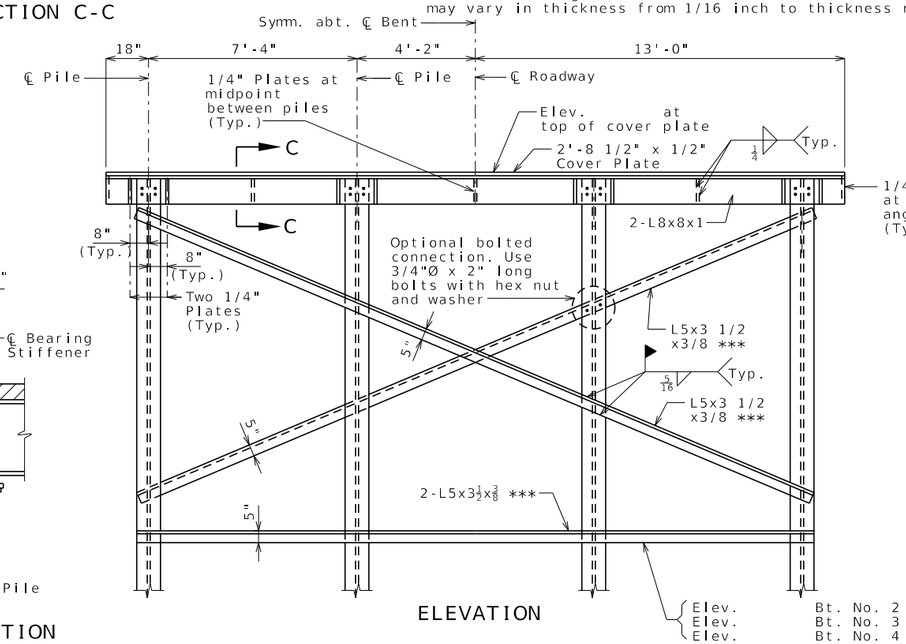

ELEVATION

DETAILS OF END BENTS NO. 1 & 5

Detailed
Checked

Note: This drawing is not to scale. Follow dimensions.

Sheet No. of

DATE PREPARED	10/17/2023
ROUTE	STATE MO
DISTRICT	SHEET NO. 2
COUNTY	
JOB NO.	
CONTRACT ID.	
PROJECT NO.	
BRIDGE NO.	

DESCRIPTION

DATE

MISSOURI HIGHWAYS AND TRANSPORTATION COMMISSION
105 WEST CAPITOL
JEFFERSON CITY, MO 65102
1-888-ASK-MODOT (1-888-275-6636)

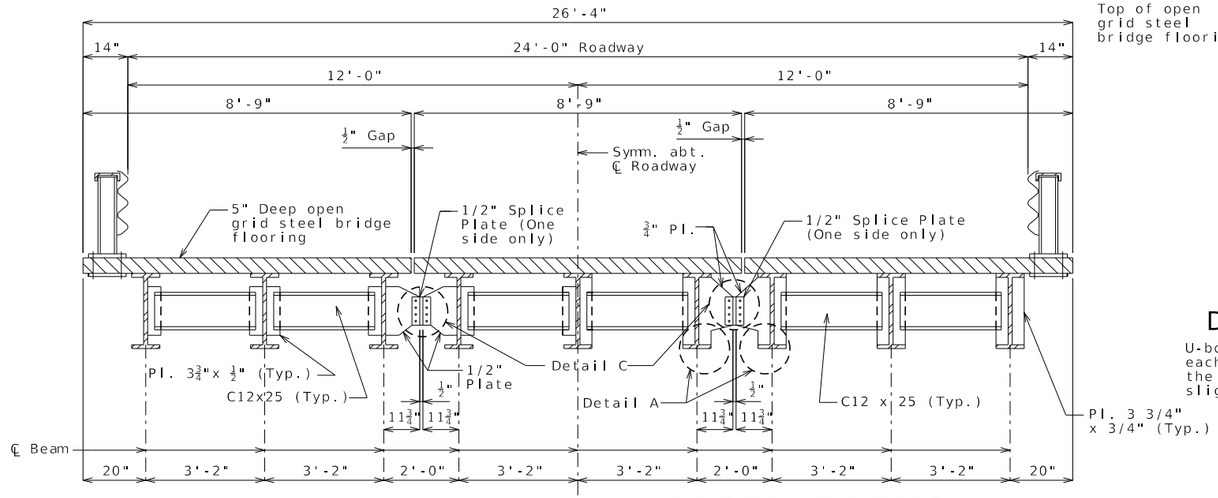

HALF SECTION NEAR INT. DIAPH. HALF SECTION NEAR BENTS

Steel bridge flooring shall be Foster 5-Inch RB/8.2M open steel bridge flooring or equivalent. Trim bars will be required at the sides and ends of each 39'-10 1/2" unit.

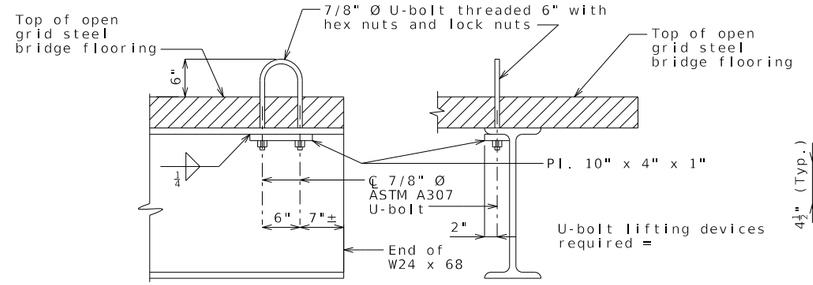

SIDE VIEW END VIEW

DETAILS OF U-BOLTS LIFTING DEVICE

U-bolts lifting device shall be on the inside top flange at both ends of each exterior beam of each unit. U-bolts shall be removed during the time the bridge is open to traffic. Position of the U-bolts may be shifted slightly to miss the bars in the flooring.

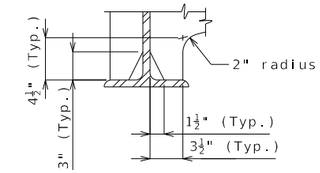

DETAIL A

Note:
Field connections shall be made with 7/8"Ø ASTM F3125 Grade A325 Type 3 bolts and 1 1/16"Ø holes except as noted.

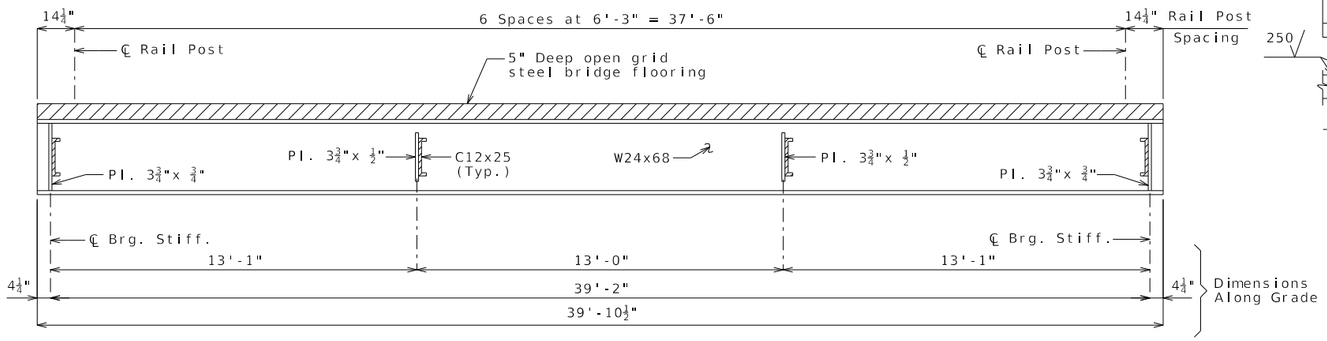

LONGITUDINAL SECTION - ALL SPANS

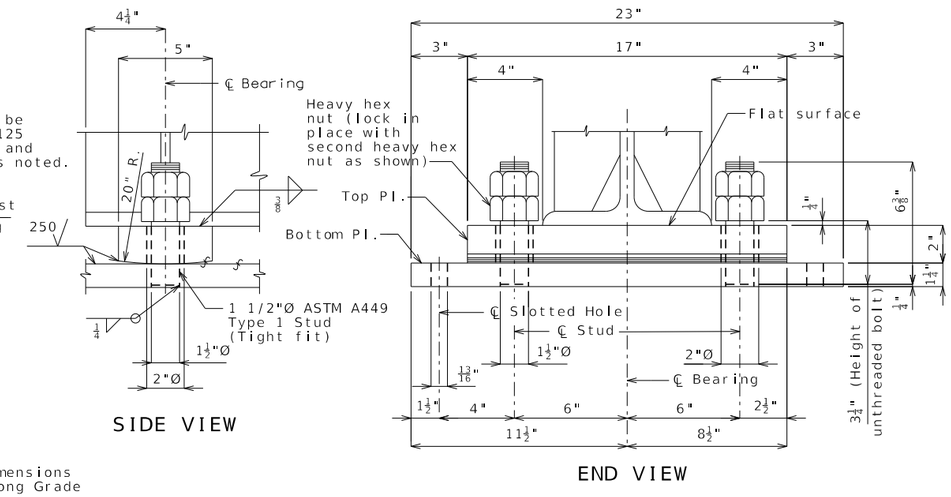

SIDE VIEW END VIEW

DETAILS OF BEARINGS

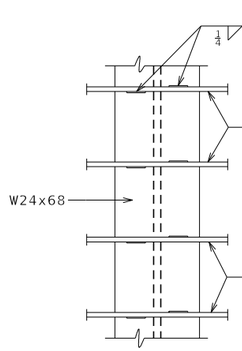

FLOORING TO BEAM CONNECTION
(Typical Connection of Each Beam)

Cross bars of steel grid floor are not shown for clarity.

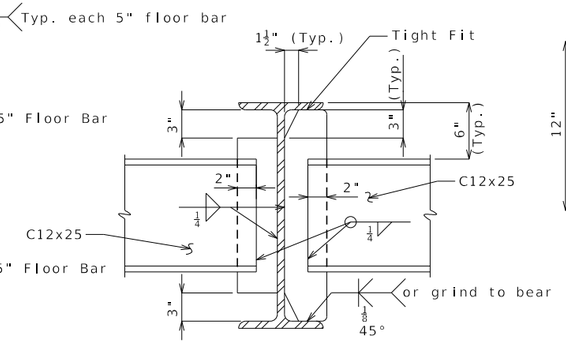

INT. DIAPH. BEARING STIFF.

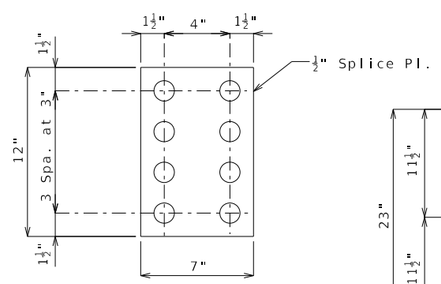

DETAIL C

Note:
Use 1 1/16"Ø holes thru 10" x 4" x 1" plate and flange of W24x68.

NO. REQUIRED
Top plates
Bott. plates (Int. Bents)
Bott. plates (End Bents)

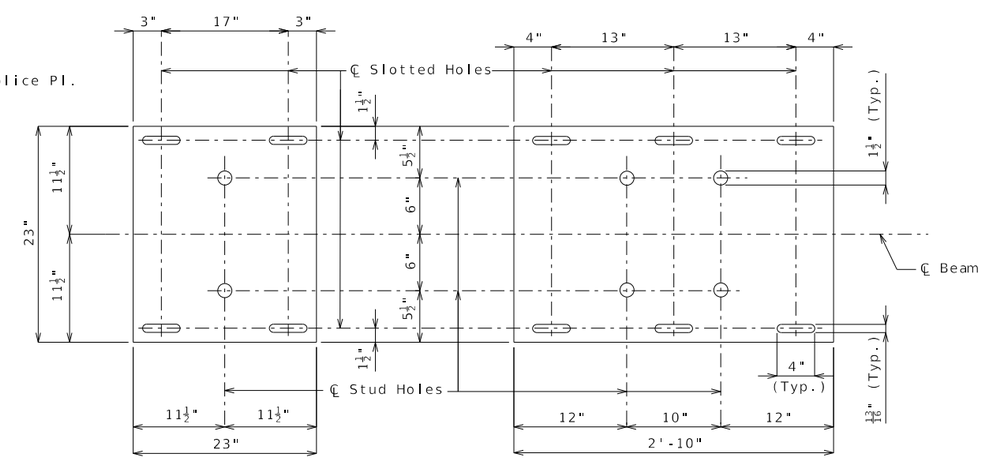

END BENTS INT. BENTS

PLAN OF BOTTOM PLATES

DATE PREPARED	10/17/2023
ROUTE	STATE MO
DISTRICT	SHEET NO. 3
COUNTY	
JOB NO.	
CONTRACT ID.	
PROJECT NO.	
BRIDGE NO.	

DESCRIPTION

DATE

MISSOURI HIGHWAYS AND TRANSPORTATION COMMISSION
105 WEST CAPITOL
JEFFERSON CITY, MO 65102
1-888-ASK-MODOT (1-888-275-6636)

Detailed
Checked

Note: This drawing is not to scale. Follow dimensions. Sheet No. of

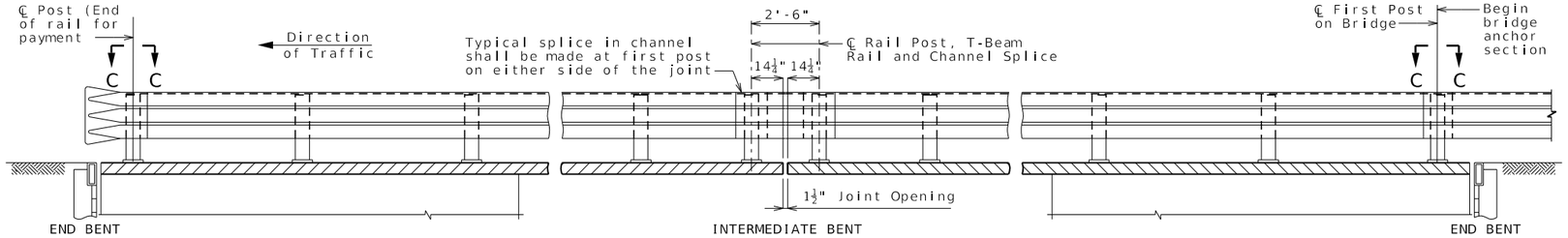

ELEVATION OF THRIE BEAM RAIL

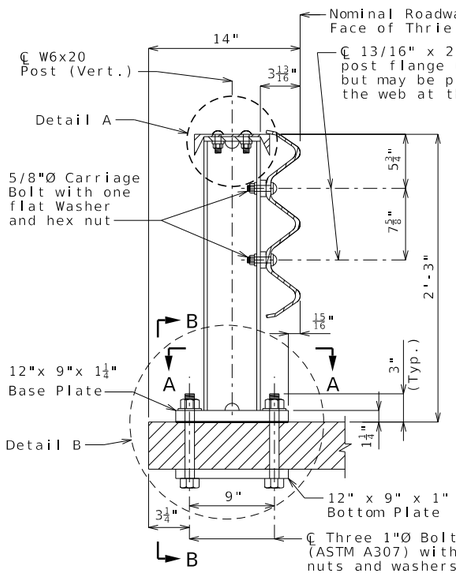

PART SECTION AT RAIL POST

The size of base and bottom plate may be increased depending on which grid option is used.

See preceding sheet for post spacing.

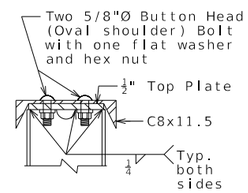

DETAIL A

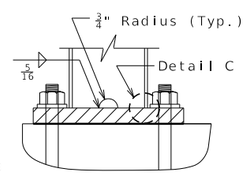

DETAIL B

Semi-circular notches centered on the axis of the post web ends may be made to facilitate galvanizing.

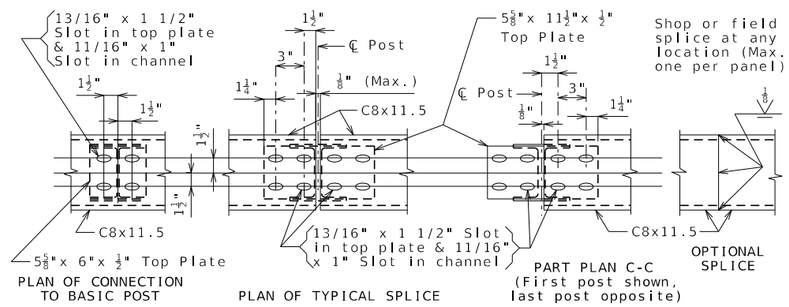

CHANNEL MEMBER DETAILS

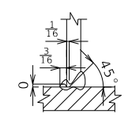

DETAIL C

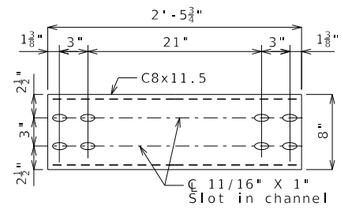

CHANNEL MEMBER AT INTERMEDIATE BENT

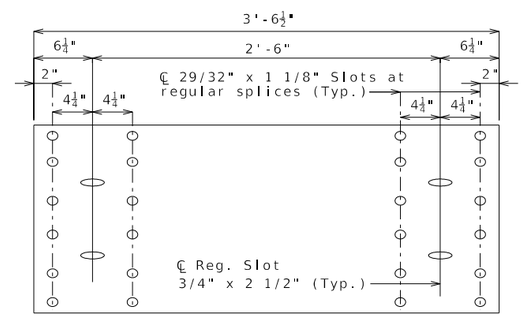

THRIE BEAM MEMBER AT INT. BENT

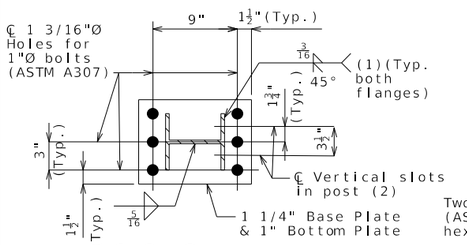

SECTION A-A

(1) Optional welding of the post to the base plate, in lieu of the weld shown, is a 5/16-inch fillet weld all around, including the edges of the post flanges.

(2) Required on one side only, but may be provided on both sides of web at contractor's option.

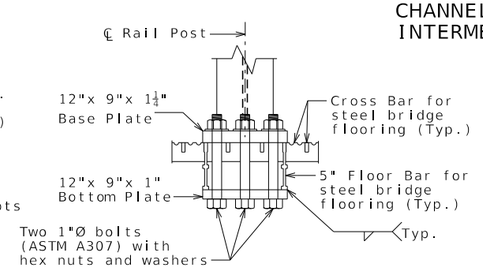

SECTION B-B

Bottom plate shall be fabricated from ASTM A709 Grade 50W steel and shall be welded to two 5-inch floor bars. Bottom plate shall not be galvanized.

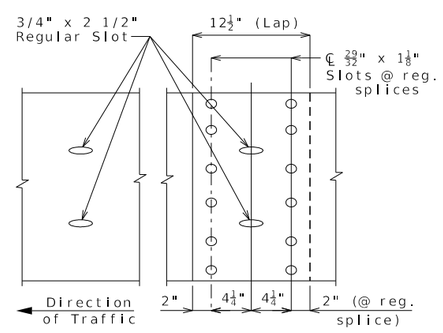

RAIL SPLICE DETAILS
(Part Elevation Thrie Beam Member)

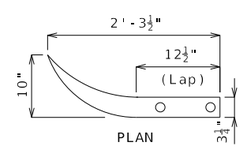

PLAN

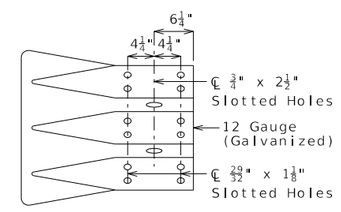

ELEVATION

DETAILS OF FLARED END

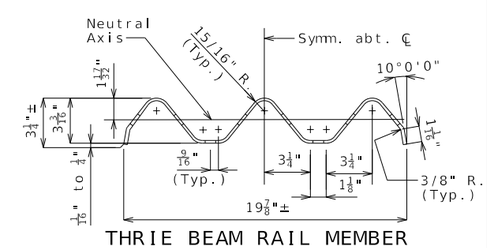

THRIE BEAM RAIL MEMBER

General Notes:

Design Specification: 2002 - AASHTO 17th Edition

Guardrail delineators shall be attached to the top of the bridge guardrail and shall similarly use the delineator details of Missouri Standard Plan 617.10, except that the delineator body shall be attached to the top of the cap rail using galvanized anchorage as shown on Missouri Standard Plan 606.00. Delineators on bridges with two-lane, two-way traffic shall have retroreflective sheeting on both sides. Cost of supplying and installing new delineators will be considered completely covered by other pay items. Delineators shall be stored with bridge guardrail after use.

Panel lengths of channel members shall be attached continuously to a minimum of four posts and a maximum of six posts (except at end bents).

All bolts, nuts, washers and plates will be considered completely covered by the contract unit price for other items.

All steel connecting bolts and fasteners for posts and railing, and all bolts, nuts, washers and plates shall be galvanized after fabrication except for bottom plate. Protective coating and material requirement of steel railing shall be in accordance with Sec 1040.

Rail posts shall be set perpendicular to roadway profile grade, vertically in cross section and aligned in accordance with Sec 713 except that the rail posts shall be aligned by the use of 3 x 1 3/4-inch shims such that the post deviates not more than 1/2 inch from true horizontal alignment after final adjustment. The shims shall be placed between the post and the thrie beam rail. The thickness of the shims shall be determined by the contractor and verified by the engineer before ordering material for this work.

At the expansion slots in the thrie beam rails and channels, the bolts shall be tightened and backed off one-half turn and the threads shall be burred.

At the thrie beam connection to posts on wings, the bolts shall be tightened and backed off one-half turn and the threads shall be burred.

Minimum length of thrie beam sections is equal to one post space.

A 5/8-inch diameter button head, oval shoulder bolt with a minimum 3/8-inch thick hex nut shall be used at all slots.

Thrie beam guardrail on the bridge shall be 12 gage steel.

Posts, top plates, base plates, channels and channel splice plates shall be fabricated from ASTM A709 Grade 36 steel and galvanized.

Flat washers, 3 x 1 3/4 x 3/16-inch minimum, shall be used at all post bolts between the bolt head and beam. The washers shall be rectangular in shape with an 11/16 x 1-inch slot, or when necessary of such design as to fit the contour of the beam. Rectangular Washer, 3 x 1 3/4 x 5/8-inch, shall be used between the post and the thrie beam rail.

Special drilling of the thrie beam may be required at the splices. All drilling details shall be shown on the shop drawings.

Fabrication of structural steel shall be accordance with Sec 1080.

If Type A guardrail is not attached to ends of the temporary structure, flared ends shall be required. The existing thrie beam rails shall be modified to accept flared ends. Cost for furnishing and installing flared ends will be considered completely covered by the contract unit price for other items.

Contractor shall verify all dimensions in field before finalizing the shop drawings.

At the bridge ends for head to head traffic, guardrail shall be used at all four corners and for single directional traffic, guardrail shall be used at the entrance ends only unless required at the exit.

DATE PREPARED	
3/7/2024	
ROUTE	STATE MO
DISTRICT	SHEET NO. 4
COUNTY	
JOB NO.	
CONTRACT ID.	
PROJECT NO.	
BRIDGE NO.	

DATE	DESCRIPTION

MISSOURI HIGHWAYS AND TRANSPORTATION COMMISSION
105 WEST CAPITOL
JEFFERSON CITY, MO 65102
1-888-ASK-MODOT (1-888-275-6636)

Detailed
Checked

Note: This drawing is not to scale. Follow dimensions.

Sheet No. of

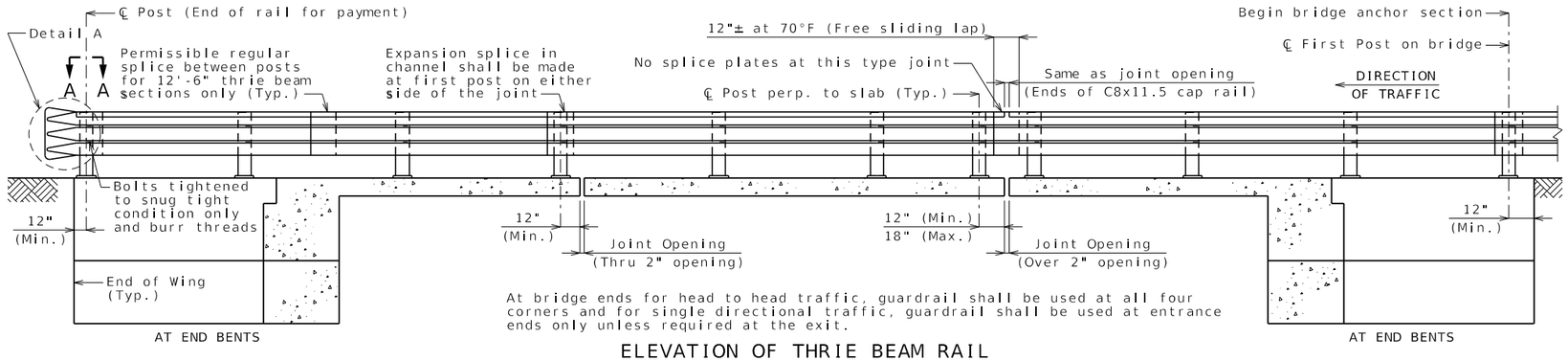

At bridge ends for head to head traffic, guardrail shall be used at all four corners and for single directional traffic, guardrail shall be used at entrance ends only unless required at the exit.

ELEVATION OF THRIE BEAM RAIL

For Plan A-A, see Sheet No. __.

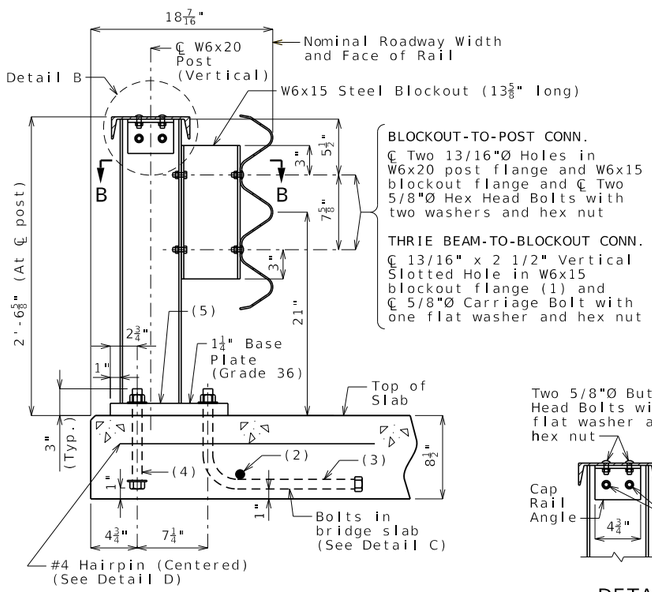

PART SECTION AT RAIL POST

See slab sheet for rail post spacing.

(1) Required on one side of web only, but may be provided on both sides of web at the contractor's option.

(2) Tack weld 32-inch long centered bar of the same size as longitudinal slab reinforcement. Optional to wrap bolt under longitudinal slab reinforcement provided that 1-inch clearance is maintained to bottom of slab.

(3) Three 1-inch diameter ASTM F1554 Grade 36 anchor bolts with ASTM A563 Grade A hex nuts and ASTM F436 hardened washers

(4) Two 1-inch diameter ASTM F1554 Grade 36 anchor bolts with ASTM A563 Grade A hex nuts and ASTM F436 hardened washers. Use same length bolts in end bent wing as in slab.

(5) Bevel bottom of post (slope 2% or slab elevation).

Standard Drawing Guidance (do not show on plans):

This system meets NCHRP 350 TL-3 bridge railing requirements.

Max. post spacing = 6'-3"

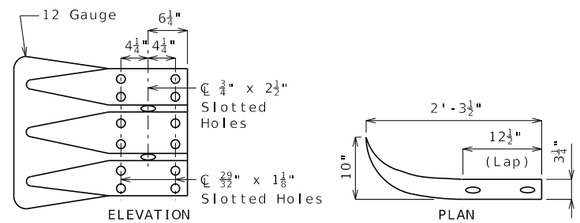

DETAIL A

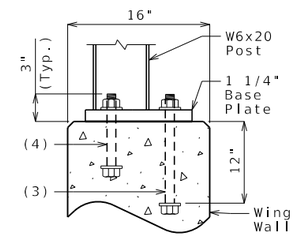

PART SECTION AT WING

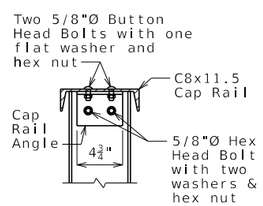

DETAIL B

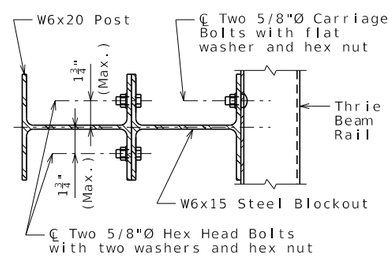

SECTION B-B

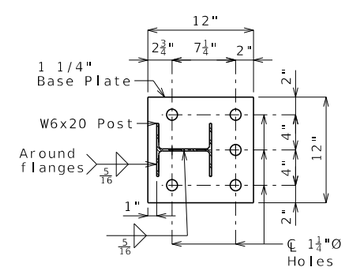

BASE PLATE

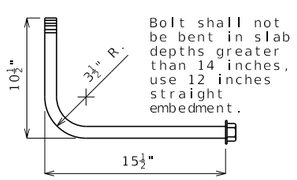

Bolt shall not be bent in slab depths greater than 14 inches, use 12 inches straight embedment.

DETAIL C

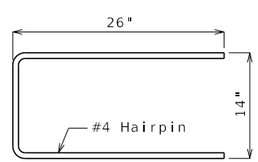

DETAIL D

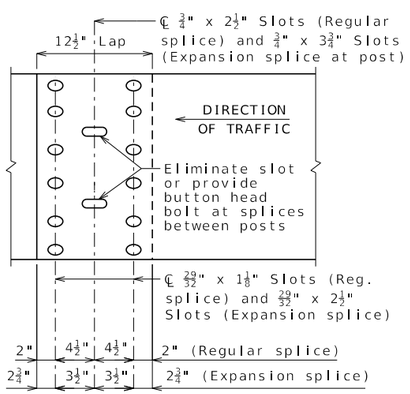

THRIE BEAM RAIL SPLICE

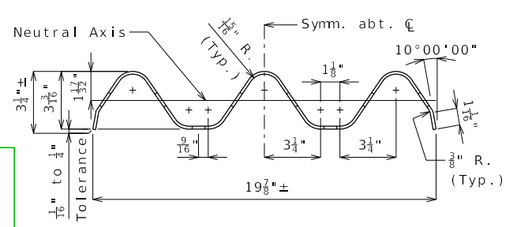

SECTION THRU THRIE BEAM RAIL

Note: This drawing is not to scale. Follow dimensions.

Detailed
Checked

Sheet No. of

General Notes:

Design Specifications: 2002 AASHTO LFD (17th Ed.)
Standard Specifications

Guardrail delineators shall be attached to the top of the guardrail and shall similarly use the delineator details of Missouri Standard Plan 617.10, except that the delineator body shall be attached to the top of the cap rail using galvanized anchorage as shown on Missouri Standard Plan 606.00. Delineators on bridges with two-lane, two-way traffic shall have retroreflective sheeting on both sides. Guardrail delineators will be considered completely covered by the contract unit price for Bridge Guardrail (Thrie Beam).

Panel lengths of channel members shall be attached continuously to a minimum of four posts and a maximum of six posts (except at end bents).

All bolts, nuts, washers, plates, reinforcement and elastomeric material will be considered completely covered by the contract unit price for Bridge Guardrail (Thrie Beam).

All steel connecting bolts and fasteners for posts and railing, and all anchor bolts, nuts, washers and plates shall be galvanized after fabrication. Protective coating and material requirement of steel railing shall be in accordance with Sec 1040.

Rail posts shall be set perpendicular to roadway profile grade, vertically in cross section and aligned in accordance with Sec 713 except that the rail posts shall be aligned by the use of 3 x 1 3/4-inch shims such that the post deviates not more than 1/2 inch from true horizontal alignment after final adjustment. The shims shall be placed between the blockout and the thrie beam rail. The thickness of the shims shall be determined by the contractor and verified by the engineer before ordering material for this work.

Rail posts shall be seated on 1/16-inch elastomeric pads having the same dimensions as the post base plate. Such pads may be any elastomeric material, plain or fibered, having a hardness (durometer) of 50 or above, as certified by the manufacturer. Additional pads or half pads may be used in shimming for alignment. Post heights shown will increase by the thickness of the pad.

At the expansion slots in the thrie beam rails and channels, the bolts shall be tightened and backed off one-half turn and the threads shall be burred.

At the thrie beam connection to blockout on wings, the bolts shall be tightened and backed off one-half turn and the threads shall be burred.

Minimum length of thrie beam sections is equal to one post space.

A 5/8-inch diameter button-head, oval shoulder bolt with a minimum 3/8-inch thick hex nut shall be used at all slots.

Thrie beam guardrail on the bridge shall be 12-guage steel.

Posts, cap rail angles, base plates, blockouts, channels and channel splice plates shall be fabricated from ASTM A709 Grade 36 steel and galvanized.

Flat washers 3 x 1 3/4 x 3/16-inch minimum shall be used at all post bolts between the bolt head and beam. The washers shall be rectangular in shape with an 11/16 x 1-inch slot, or when necessary of such design as to fit the contour of the beam. Rectangular washers 3 x 1 3/4 x 5/8-inch shall be used between the blockout and the thrie beam rail.

Special drilling of the thrie beam may be required at the splices. All drilling details shall be shown on the shop drawings.

Fabrication of structural steel shall be in accordance with Sec 1080.

Expansion splices in the thrie beam rail shall be made at either the first or second post on either side of the joint and on structure at bridge ends. When the splice is made at the second post, an expansion slot shall be provided in the thrie beam rail for connection to the first post to allow for movement.

In addition to the expansion provisions at the expansion joints, expansion splices in the thrie beam rail and the channel shall be provided at other locations so that the maximum length without expansion provisions does not exceed 200 feet.

Shim plates 6 x 6 x 1/16-inch may be used between the top of the post and the channel member as required for vertical alignment.

Shim plates shall be galvanized after fabrication.

See Missouri Standard Plan 606.00 for details not shown.

DATE PREPARED	10/17/2023
ROUTE	STATE MO
DISTRICT	SHEET NO. 1
COUNTY	
JOB NO.	
CONTRACT ID.	
PROJECT NO.	
BRIDGE NO.	

DESCRIPTION	DATE

MISSOURI HIGHWAYS AND TRANSPORTATION COMMISSION
105 WEST CAPITOL
JEFFERSON CITY, MO 65102
1-888-ASK-MODOT (1-888-275-6636)

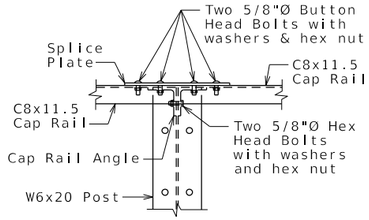

ELEVATION OF TYPICAL SPLICE

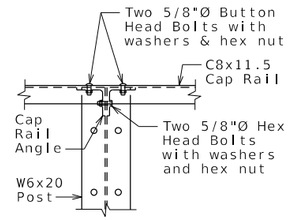

ELEVATION OF RAIL POST CONNECTION

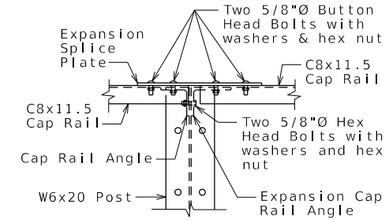

ELEVATION OF EXPANSION SPLICE

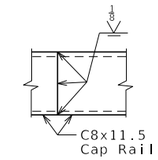

OPTIONAL SPLICE

One shop or field splice per panel may be provided at any location.

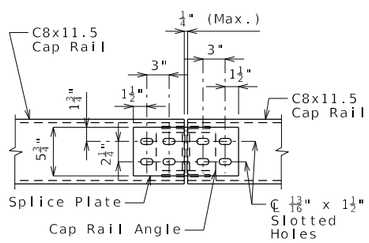

PLAN OF TYPICAL SPLICE

One shop or field splice per panel may be provided at any location.

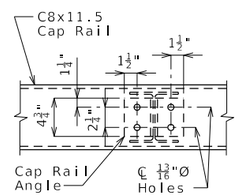

PLAN OF RAIL POST CONNECTION

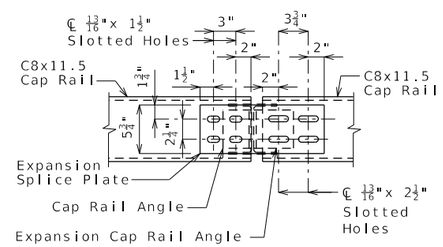

PLAN OF EXPANSION SPLICE

Expansion slots shall be on the same side of post as the expansion joint.

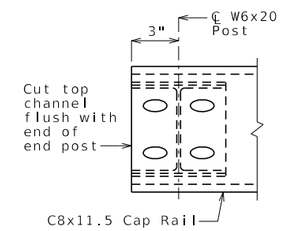

PLAN A-A

For location of Plan A-A, see Sheet No. __.

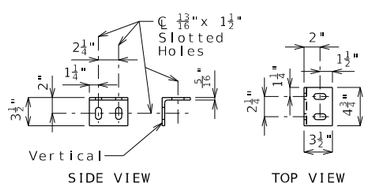

CAP RAIL ANGLE

L3 1/2x3 1/2x5/16

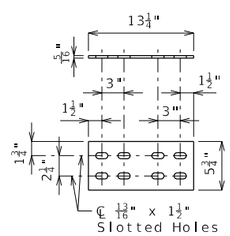

SPLICE PLATE

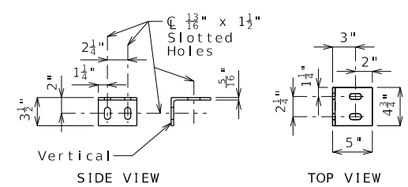

EXPANSION CAP RAIL ANGLE

L5x3 1/2x5/16

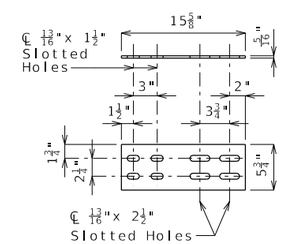

EXPANSION SPLICE PLATE

Detailed
Checked

Note: This drawing is not to scale. Follow dimensions.

Sheet No. of

DATE PREPARED	10/17/2023
ROUTE	STATE MO
DISTRICT	SHEET NO. 2
COUNTY	
JOB NO.	
CONTRACT ID.	
PROJECT NO.	
BRIDGE NO.	

DESCRIPTION

DATE

MISSOURI HIGHWAYS AND TRANSPORTATION COMMISSION
105 WEST CAPITOL
JEFFERSON CITY, MO 65102
1-888-ASK-MODOT (1-888-275-6636)

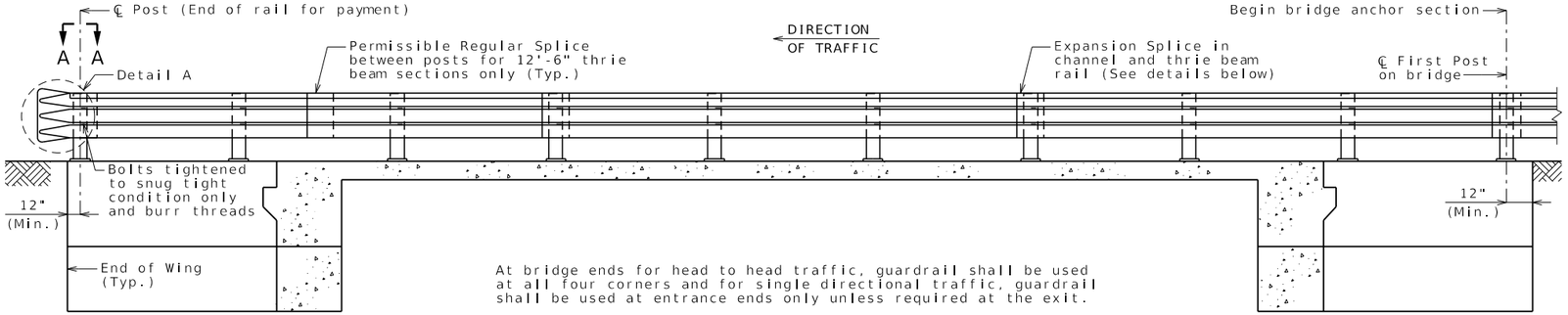

AT END BENTS

At bridge ends for head to head traffic, guardrail shall be used at all four corners and for single directional traffic, guardrail shall be used at entrance ends only unless required at the exit.

ELEVATION OF THRIE BEAM RAIL

For Plan A-A, see Sheet No. __.

AT END BENTS

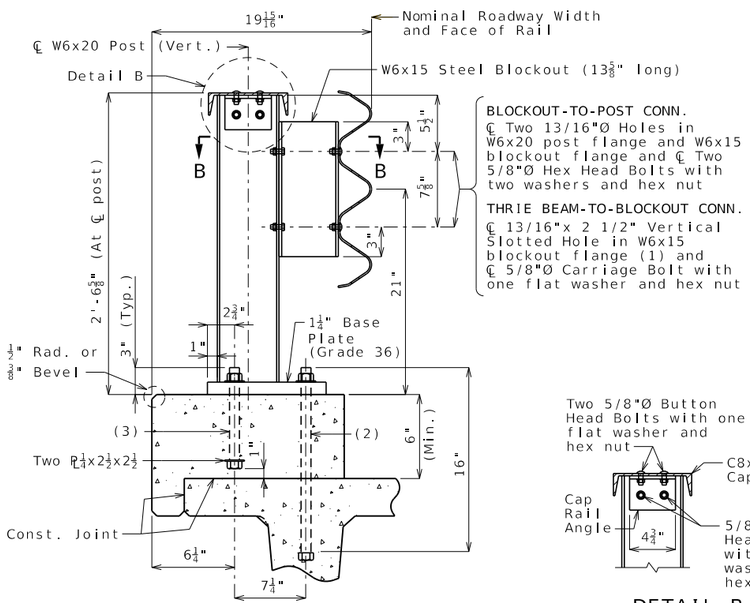

PART SECTION AT RAIL POST

See slab sheet for rail post spacing.

(1) Required on one side of web only, but may be provided on both sides of web at the contractor's option.

(2) Three 1-inch diameter ASTM F1554 Grade 36 anchor bolts with ASTM A563 Grade A hex nuts and ASTM F436 hardened washers

(3) Two 1-inch diameter ASTM F1554 Grade 36 anchor bolts with ASTM A563 Grade A hex nuts and ASTM F436 hardened washers

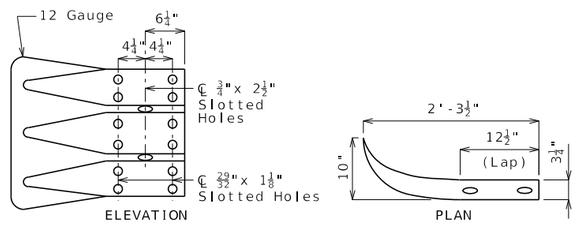

DETAIL A

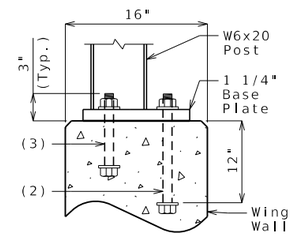

PART SECTION AT WING

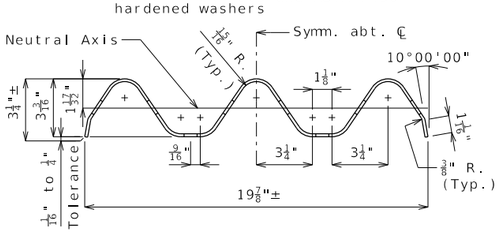

SECTION THRU THRIE BEAM RAIL

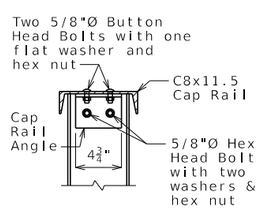

DETAIL B

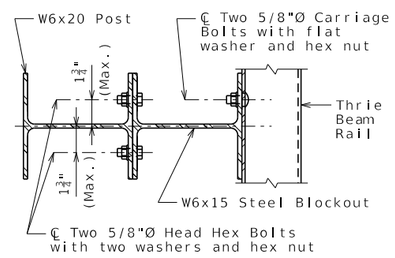

SECTION B-B

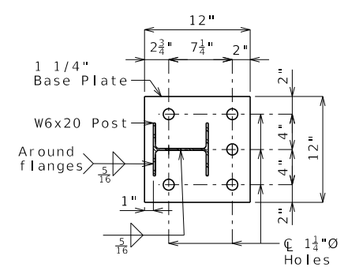

BASE PLATE

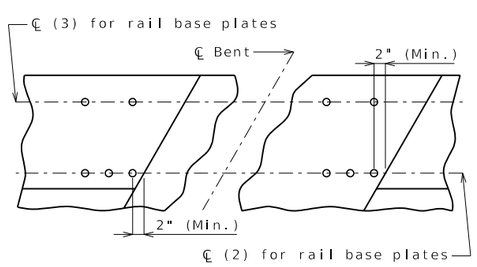

BOLTS IN GIRDER BOLTS IN DIAPHRAGM

Adjust the rail post spacing to meet the requirements as shown above.

PART PLAN AT INTERMEDIATE BENT

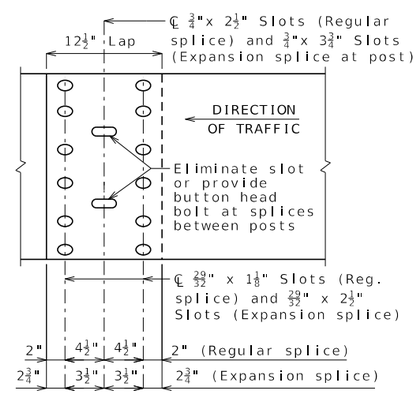

THRIE BEAM RAIL SPLICE

General Notes:

Design Specifications: 2002 AASHTO LFD (17th Ed.) Standard Specifications

Guardrail delineators shall be attached to the top of the guardrail and shall similarly use the delineator details of Missouri Standard Plan 617.10, except that the delineator body shall be attached to the top of the cap rail using galvanized anchorage as shown on Missouri Standard Plan 606.00. Delineators on bridges with two-lane, two-way traffic shall have retroreflective sheeting on both sides. Guardrail delineators will be considered completely covered by the contract unit price for Bridge Guardrail (Thrie Beam).

Panel lengths of channel members shall be attached continuously to a minimum of four posts and a maximum of six posts (except at end bents).

All bolts, nuts, washers, plates and elastomeric material will be considered completely covered by the contract unit price for Bridge Guardrail (Thrie Beam).

All steel connecting bolts and fasteners for posts and railing, and all anchor bolts, nuts, washers and plates shall be galvanized after fabrication. Protective coating and material requirement of steel railing shall be in accordance with Sec 1040.

Rail posts shall be set perpendicular to roadway profile grade, vertically in cross section and aligned in accordance with Sec 713 except that the rail posts shall be aligned by the use of 3 x 1 3/4-inch shims such that the post deviates not more than 1/2 inch from true horizontal alignment after final adjustment. The shims shall placed between the blockout and the thrie beam rail. The thickness of the shims shall be determined by the contractor and verified by the engineer before ordering material for this work.

Rail posts shall be seated on 1/16-inch elastomeric pads having the same dimensions as the post base plate. Such pads may be any elastomeric material, plain or fibered, having a hardness (durometer) of 50 or above, as certified by the manufacturer. Additional pads or half pads may be used in shimming for alignment. Post heights shown will increase by the thickness of the pad.

At the expansion slots in the thrie beam rails and channels, the bolts shall be tightened and backed off one-half turn and the threads shall be burred.

At the thrie beam connection to blockout on wings, the bolts shall be tightened and backed off one-half turn and the threads shall be burred.

Minimum length of thrie beam sections is equal to one post space.

A 5/8-inch diameter button-head, oval shoulder bolt with a minimum 3/8-inch thick hex nut shall be used at all slots.

Thrie beam guardrail on the bridge shall be 12-guage steel.

Posts, cap rail angles, base plates, blockouts, channels and channel splice plates shall be fabricated from ASTM A709 Grade 36 steel and galvanized.

Flat washers 3 x 1 3/4 x 3/16-inch minimum shall be used at all post bolts between the bolt head and beam. The washers shall be rectangular in shape with an 11/16 x 1-inch slot, or when necessary of such design as to fit the contour of the beam. Rectangular washers 3 x 1 3/4 x 5/8-inch shall be used between the blockout and the thrie beam rail.

Special drilling of the thrie beam may be required at the splices. All drilling details shall be shown on the shop drawings.

Fabrication of structural steel shall be in accordance with Sec 1080.

Expansion splices in the thrie beam rail and the channel shall be provided at locations so that the maximum length without expansion provisions does not exceed 200 feet.

Shim plates 6 x 6 x 1/16-inch may be used between the top of the post and the channel member as required for vertical alignment.

Shim plates shall be galvanized after fabrication.

See Missouri Standard Plan 606.00 for details not shown.

DATE PREPARED	10/17/2023
ROUTE	STATE MO
DISTRICT	SHEET NO. 3
COUNTY	
JOB NO.	
CONTRACT ID.	
PROJECT NO.	
BRIDGE NO.	

DESCRIPTION	DATE

MISSOURI HIGHWAYS AND TRANSPORTATION COMMISSION

105 WEST CAPITOL
JEFFERSON CITY, MO 65102
1-888-ASK-MODOT (1-888-275-6636)

Detailed
Checked

Note: This drawing is not to scale. Follow dimensions.

Sheet No. of

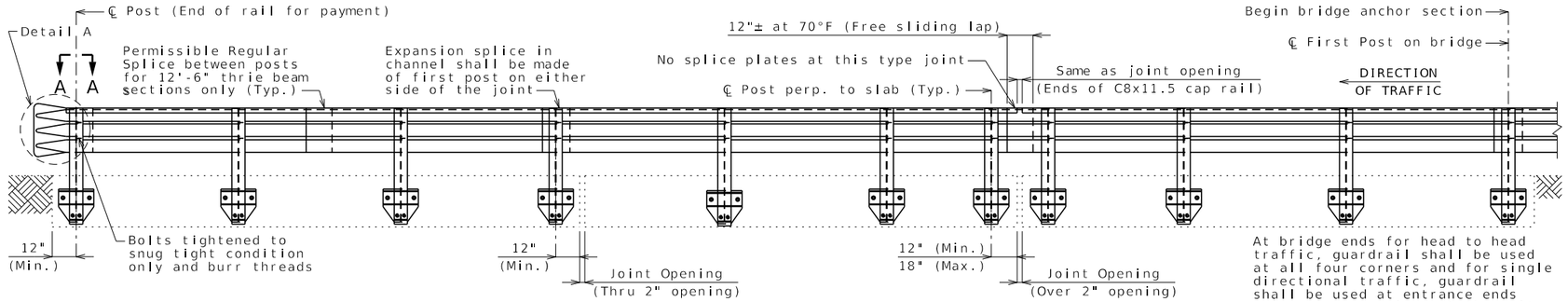

ELEVATION OF THRIE BEAM RAIL

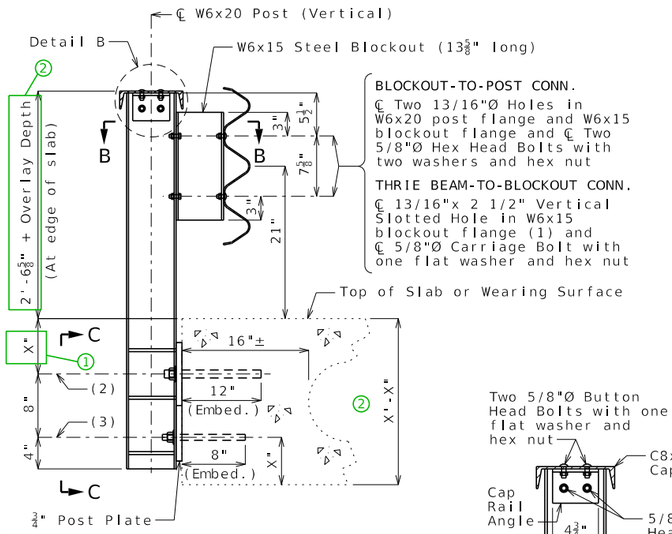

PART SECTION AT RAIL POST

For Elevation C-C see Sheet No. __.

See slab sheet for rail post spacing.

(1) Required on one side of web only, but may be provided on both sides of web at the contractor's option.

(2) ℄ Two Resin Anchor Systems each with a minimum ultimate pullout strength of 72 kip in f'c = 4,000 psi concrete and each to include:
- 1 1/8"Ø (Min.) Drilled Hole in slab or as recommended by manufacturer
- 1 1/4"Ø Hole in post plate and inside post flange
- 1"Ø ASTM A449 Type 1 Threaded Rod snug tight and embedded 12 inches in slab
- Hex Nut and 2 1/2"Ø Hardened Locking Washer

(3) ℄ Two Resin Anchor Systems each with a minimum ultimate pullout strength of 20.4 kip in f'c = 4,000 psi concrete and each to include:
- 7/8"Ø (Min.) Drilled Hole in slab or as recommended by manufacturer
- 1"Ø Hole in post plate and inside post flange
- 3/4"Ø ASTM A449 Type 1 Threaded Rod snug tight and embedded 8 inches in slab
- Hex Nut and Hardened Locking Washer

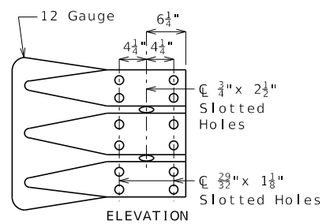

DETAIL A

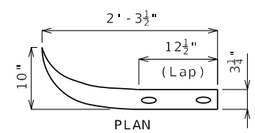

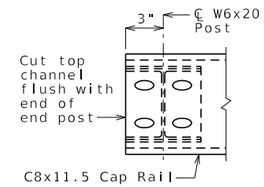

PLAN A-A

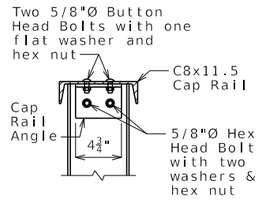

DETAIL B

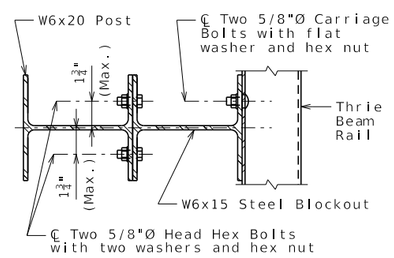

SECTION B-B

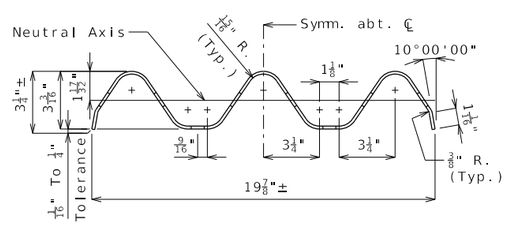

SECTION THRU THRIE BEAM RAIL

See Missouri Standard Plan 606.00 for details not shown.

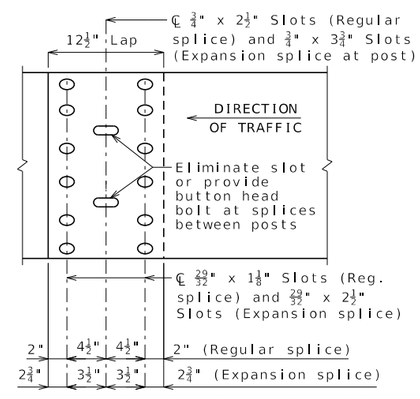

THRIE BEAM RAIL SPLICE

General Notes:

Design Specifications: 2002 AASHTO LFD (17th Ed.)
Standard Specifications

Guardrail delineators shall be attached to the top of the guardrail and shall similarly use the delineator details of Missouri Standard Plan 617.10, except that the delineator body shall be attached to the top of the cap rail using galvanized anchorage as shown on Missouri Standard Plan 606.00. Delineators on bridges with two-lane, two-way traffic shall have retroreflective sheeting on both sides. Guardrail delineators will be considered completely covered by the contract unit price for Bridge Guardrail (Thrie Beam).

Panel lengths of channel members shall be attached continuously to a minimum of four posts and a maximum of six posts (except at end bents).

All bolts, nuts, washers and plates will be considered completely covered by the contract unit price for Bridge Guardrail (Thrie Beam).

All steel connecting bolts and fasteners for posts and railing, and all resin anchor bolts, nuts, washers and plates shall be galvanized after fabrication. Protective coating and material requirement of steel railing shall be in accordance with Sec 1040.

Rail posts shall be set perpendicular to roadway profile grade, vertically in cross section and aligned in accordance with Sec 713 except that the rail posts shall be aligned by the use of 3 x 1 3/4-inch shims such that the post deviates not more than 1/2 inch from true horizontal alignment after final adjustment. The shims shall placed between the blockout and the thrie beam rail. The thickness of the shims shall be determined by the contractor and verified by the engineer before ordering material for this work.

At the expansion slots in the thrie beam rails and channels, the bolts shall be tightened and backed off one-half turn and the threads shall be burred.

At the thrie beam connection to blockout on wings, the bolts shall be tightened and backed off one-half turn and the threads shall be burred.

Minimum length of thrie beam sections is equal to one post space.

A 5/8-inch diameter button-head, oval shoulder bolt with a minimum 3/8-inch thick hex nut shall be used at all slots.

Thrie beam guardrail on the bridge shall be 12-guage steel.

Posts, cap rail angles, post plates, blockouts, channels and channel splice plates shall be fabricated from ASTM A709 Grade 36 steel and galvanized.

Flat washers 3 x 1 3/4 x 3/16-inch minimum shall be used at all post bolts between the bolt head and beam. The washers shall be rectangular in shape with an 11/16 x 1-inch slot, or when necessary of such design as to fit the contour of the beam. Rectangular washers 3 x 1 3/4 x 5/8-inch shall be used between the blockout and the thrie beam rail.

Special drilling of the thrie beam may be required at the splices. All drilling details shall be shown on the shop drawings.

Fabrication of structural steel shall be in accordance with Sec 1080.

Expansion splices in the thrie beam rail shall be made at either the first or second post on either side of the joint and on structure at bridge ends. When the splice is made at the second post, an expansion slot shall be provided in the thrie beam rail for connection to the first post to allow for movement.

In addition to the expansion provisions at the expansion joints, expansion splices in the thrie beam rail and the channel shall be provided at other locations so that the maximum length without expansion provisions does not exceed 200 feet.

Shim plates 6 x 6 x 1/16-inch may be used between the top of the post and the channel member as required for vertical alignment.

Shim plates shall be galvanized after fabrication.

Contractor shall verify all dimensions in field before finalizing the shop drawings.

Outline of existing work is indicated by light dashed lines. Heavy lines indicate new work.

DATE PREPARED	
3/7/2024	
ROUTE	STATE MO
DISTRICT	SHEET NO. 4
COUNTY	
JOB NO.	
CONTRACT ID.	
PROJECT NO.	
BRIDGE NO.	

DATE	DESCRIPTION

MISSOURI HIGHWAYS AND TRANSPORTATION COMMISSION
105 WEST CAPITOL
JEFFERSON CITY, MO 65102
1-888-ASK-MODOT (1-888-275-6636)

Designed
Detailed
Checked

Note: This drawing is not to scale. Follow dimensions.

Sheet No. of

THRIE2a_system2_rehab Guidance

Standard Drawing Guidance (do not show on plans):

This system meets NCHRP 350 TL-3 bridge railing requirements.

Max. post spacing = 6'-3"

Design weight of 12-gauge thrie beam bridge rail equals 35 lb/lf.

① For 22 thru 31-inch voided slab depth, use 10 inches from top of original slab plus overlay depth. For 20-inch voided slab depth, reduce to 8 inches plus overlay depth.

② Remove and show total of 2'-6$\frac{5}{8}$" plus overlay depth; give total depth of slab plus overlay depth.

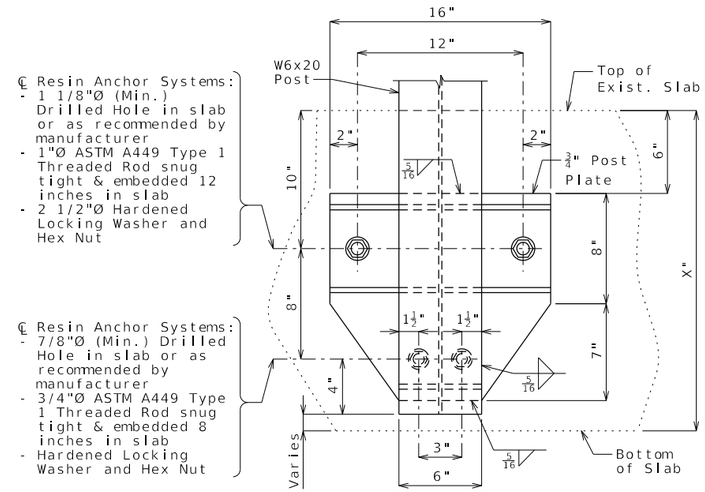

ELEVATION C-C

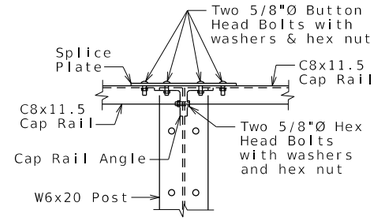

ELEVATION OF TYPICAL SPLICE

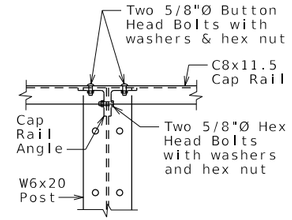

ELEVATION OF RAIL POST CONNECTION

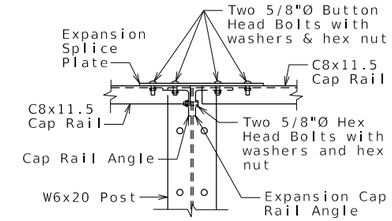

ELEVATION OF EXPANSION SPLICE

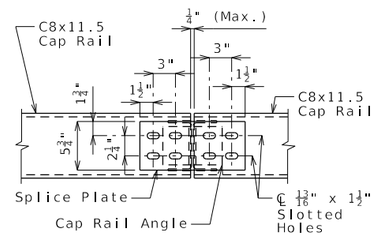

PLAN OF TYPICAL SPLICE

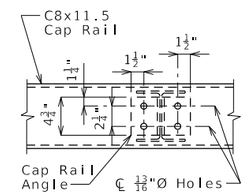

PLAN OF RAIL POST CONNECTION

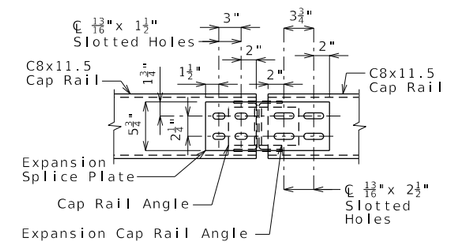

PLAN OF EXPANSION SPLICE

Expansion slots shall be on the same side of post as the expansion joint.

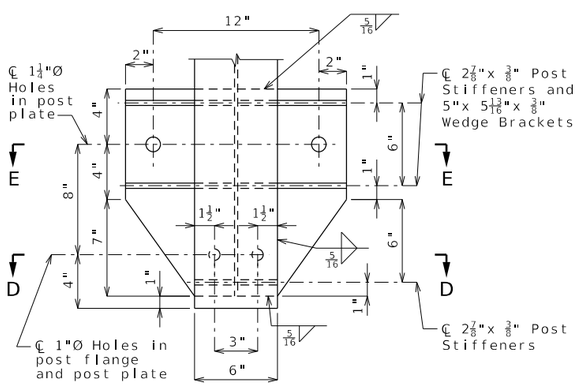

DETAILS OF POST PLATE

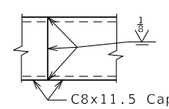

OPTIONAL SPLICE

One shop or field splice per panel may be provided at any location.

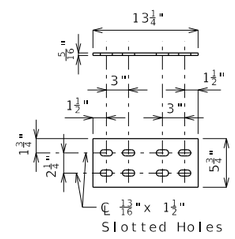

SPLICE PLATE

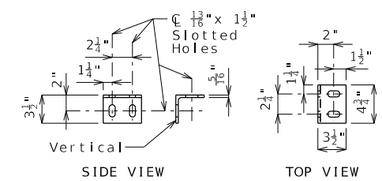

CAP RAIL ANGLE

L3 1/2x3 1/2x5/16

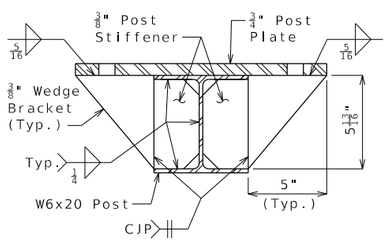

SECTION E-E

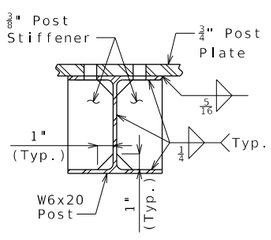

SECTION D-D

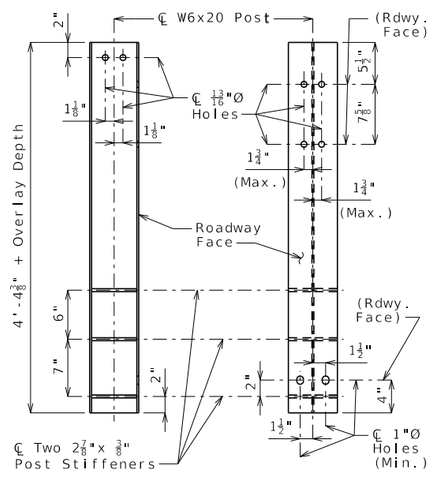

DETAILS OF POST

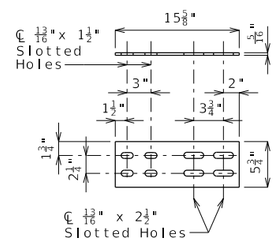

EXPANSION SPLICE PLATE

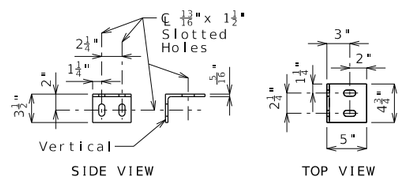

EXPANSION CAP RAIL ANGLE

L5x3 1/2x5/16

DATE PREPARED	10/17/2023
ROUTE	STATE MO
DISTRICT	SHEET NO. 5
COUNTY	
JOB NO.	
CONTRACT ID.	
PROJECT NO.	
BRIDGE NO.	

DESCRIPTION

DATE

MISSOURI HIGHWAYS AND TRANSPORTATION COMMISSION
105 WEST CAPITOL
JEFFERSON CITY, MO 65102
1-888-ASK-MODOT (1-888-275-6636)

Detailed
Checked

Note: This drawing is not to scale. Follow dimensions.

Sheet No. of

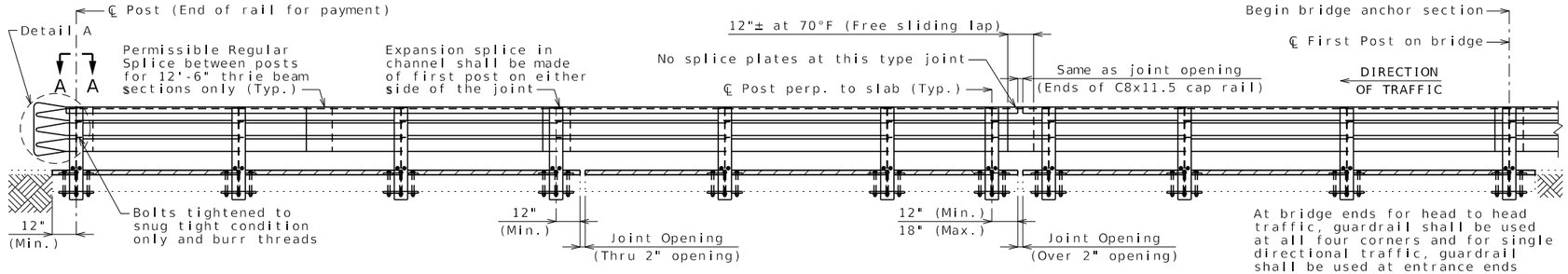

ELEVATION OF THRIE BEAM RAIL

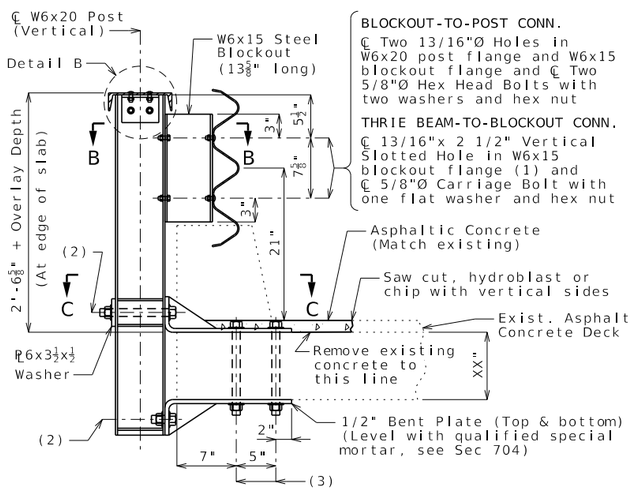

PART SECTION AT RAIL POST

For Section C-C see Sheet No. __.

See slab sheet for rail post spacing.

(1) Required on one side of web only, but may be provided on both sides of web at the contractor's option.

(2) POST-TO-BENT PLATE CONNECTION

℄ Two 1"Ø ASTM F3125 Grade A325 Type 1 Bolts with hardened washers and hex nuts

℄ Two 1 1/16" x 1 1/2" Vertical Slotted Holes in both upper post flanges

℄ Two 1 1/16"Ø Holes in washer plate, inside lower post flange and both bent plates

(3) BENT PLATE-TO-DECK CONNECTION

℄ Three 1 1/8"Ø Drilled Holes in slab

℄ Three 1"Ø ASTM A307 Bolts with plate washer, hardened locking washers and hex nuts

℄ Three 1 1/4"Ø Holes in both bent plates

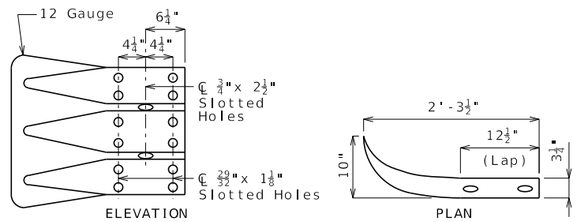

DETAIL A

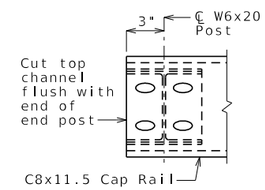

PLAN A-A

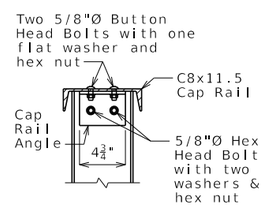

DETAIL B

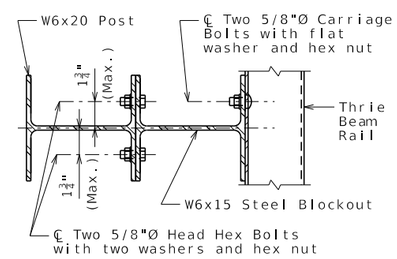

SECTION B-B

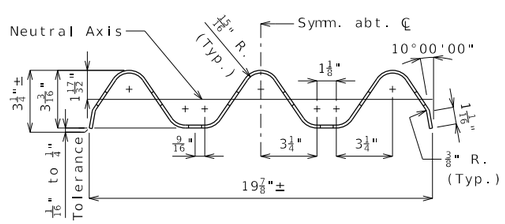

SECTION THRU THRIE BEAM RAIL

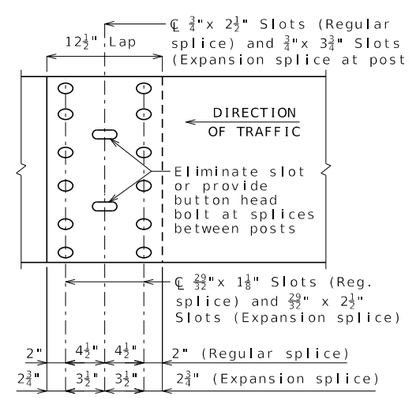

THRIE BEAM RAIL SPLICE

Standard Drawing Guidance (do not show on plans):
This system meets NCHRP 350 TL-3 bridge railing requirements.
Max. post spacing = 6'-3"
Design weight of 12-gauge thrie beam bridge rail equals 35 lb/lf.

See Missouri Standard Plan 606.00 for details not shown.

Note: This drawing is not to scale. Follow dimensions.

General Notes:

Design Specifications: 2002 AASHTO LFD (17th Ed.) Standard Specifications

Guardrail delineators shall be attached to the top of the guardrail and shall similarly use the delineator details of Missouri Standard Plan 617.10, except that the delineator body shall be attached to the top of the cap rail using galvanized anchorage as shown on Missouri Standard Plan 606.00. Delineators on bridges with two-lane, two-way traffic shall have retroreflective sheeting on both sides. Guardrail delineators will be considered completely covered by the contract unit price for Bridge Guardrail (Thrie Beam).

Panel lengths of channel members shall be attached continuously to a minimum of four posts and a maximum of six posts (except at end bents).

All bolts, nuts, washers and plates will be considered completely covered by the contract unit price for Bridge Guardrail (Thrie Beam).

All steel connecting bolts and fasteners for posts and railing, and all bolts, nuts, washers and plates shall be galvanized after fabrication. Protective coating and material requirement of steel railing shall be in accordance with Sec 1040.

Rail posts shall be set perpendicular to roadway profile grade, vertically in cross section and aligned in accordance with Sec 713 except that the rail posts shall be aligned by the use of 3 x 1 3/4-inch shims such that the post deviates not more than 1/2 inch from true horizontal alignment after final adjustment. The shims shall placed between the blockout and the thrie beam rail. The thickness of the shims shall be determined by the contractor and verified by the engineer before ordering material for this work.

At the expansion slots in the thrie beam rails and channels, the bolts shall be tightened and backed off one-half turn and the threads shall be burred.

At the thrie beam connection to blockout on wings, the bolts shall be tightened and backed off one-half turn and the threads shall be burred.

Minimum length of thrie beam sections is equal to one post space.

A 5/8-inch diameter button-head, oval shoulder bolt with a minimum 3/8-inch thick hex nut shall be used at all slots.

Thrie beam guardrail on the bridge shall be 12-guage steel.

Posts, cap rail angles, bent plates, blockouts, channels and channel splice plates shall be fabricated from ASTM A709 Grade 36 steel and galvanized.

Flat washers 3 x 1 3/4 x 3/16-inch minimum shall be used at all post bolts between the bolt head and beam. The washers shall be rectangular in shape with an 11/16 x 1-inch slot, or when necessary of such design as to fit the contour of the beam. Rectangular washers 3 x 1 3/4 x 5/8-inch shall be used between the blockout and the thrie beam rail.

Special drilling of the thrie beam may be required at the splices. All drilling details shall be shown on the shop drawings.

Fabrication of structural steel shall be in accordance with Sec 1080.

Expansion splices in the thrie beam rail shall be made at either the first or second post on either side of the joint and on structure at bridge ends. When the splice is made at the second post, an expansion slot shall be provided in the thrie beam rail for connection to the first post to allow for movement.

In addition to the expansion provisions at the expansion joints, expansion splices in the thrie beam rail and the channel shall be provided at other locations so that the maximum length without expansion provisions does not exceed 200 feet.

Shim plates 6 x 6 x 1/16-inch may be used between the top of the post and the channel member as required for vertical alignment.

Shim plates shall be galvanized after fabrication.

Contractor shall verify all dimensions in field before finalizing the shop drawings.

Outline of existing work is indicated by light dashed lines. Heavy lines indicate new work.

DATE PREPARED	3/7/2024
ROUTE	STATE MO
DISTRICT	SHEET NO. 6
COUNTY	
JOB NO.	
CONTRACT ID.	
PROJECT NO.	
BRIDGE NO.	

DESCRIPTION	DATE

MISSOURI HIGHWAYS AND TRANSPORTATION COMMISSION
105 WEST CAPITOL
JEFFERSON CITY, MO 65102
1-888-ASK-MODOT (1-888-275-6636)

Detailed
Checked

Sheet No. of

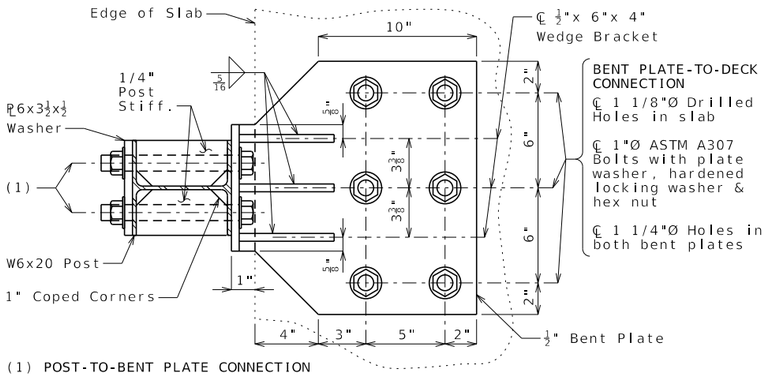

(1) POST-TO-BENT PLATE CONNECTION

℄ Two 1"Ø ASTM F3125 Grade A325 Type 1 Bolts with hardened washers and hex nuts

℄ 1 1/16" x 1½" Vertical Slotted Hole in both upper post flanges

℄ 1 1/16"Ø Hole in washer plate, inside lower post flange and both bent plates

SECTION C-C

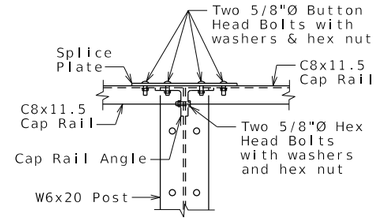

ELEVATION OF TYPICAL SPLICE

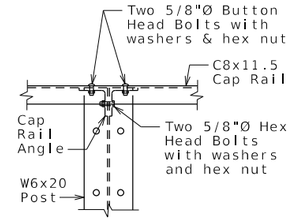

ELEVATION OF RAIL POST CONNECTION

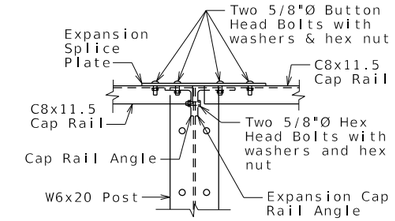

ELEVATION OF EXPANSION SPLICE

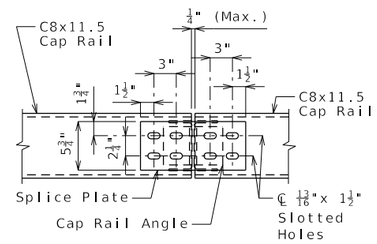

PLAN OF TYPICAL SPLICE

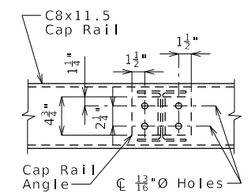

PLAN OF RAIL POST CONNECTION

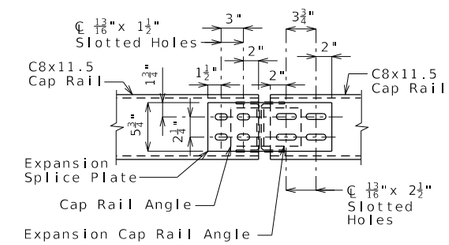

PLAN OF EXPANSION SPLICE

Expansion slots shall be on the same side of post as the expansion joint.

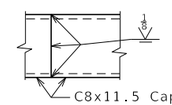

OPTIONAL SPLICE

One shop or field splice per panel may be provided at any location.

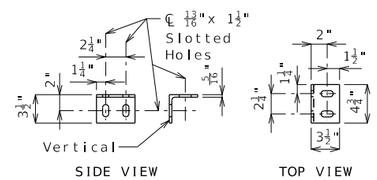

CAP RAIL ANGLE

L3½x3½x5/16

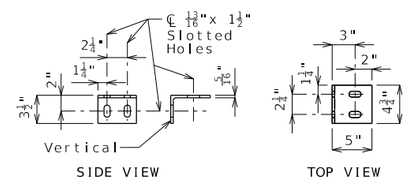

EXPANSION CAP RAIL ANGLE

L5x3½x5/16

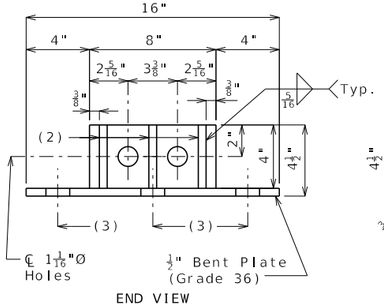

(2) ½"x 6"x 4" Wedge Bracket

(3) ℄ Two 1¼"Ø Holes

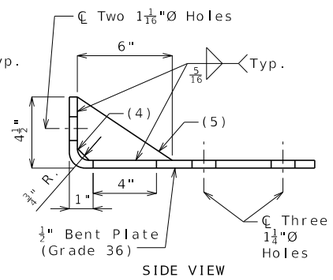

(4) ¾" Coped Corners

(5) Three ½"x 6"x 4" Wedge Brackets

BENT PLATE AND WEDGE BRACKET

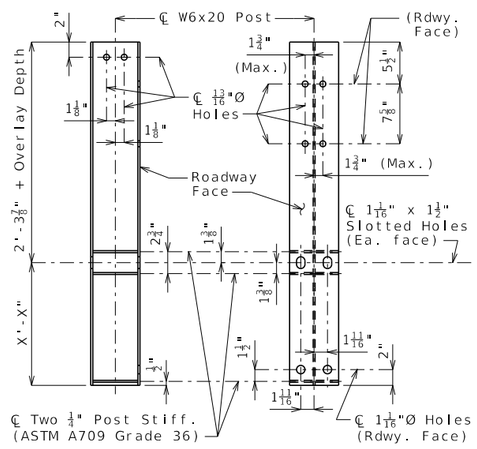

DETAILS OF POST

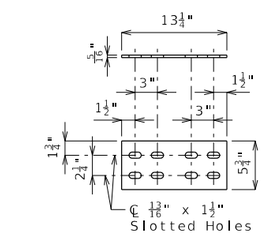

SPLICE PLATE

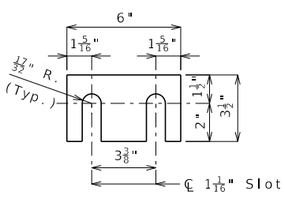

SHIM PLATE

Shim plates 6 x 3 x 1/16-inch may be used between the W6x20 post and 1/2-inch bent plate connetion as required for horizontal alignment.

Shim plates may vary in thickness from 1/16 inch to the thickness required, and may be used in multiples.

Shim plates shall be galvanized after fabrication.

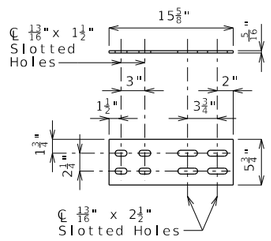

EXPANSION SPLICE PLATE

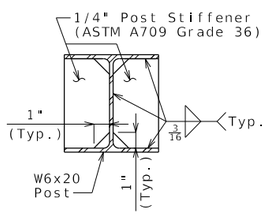

POST STIFFENERS

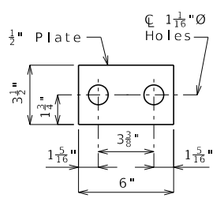

WASHER PLATE

DATE PREPARED	10/17/2023
ROUTE	STATE MO
DISTRICT	SHEET NO. 7
COUNTY	
JOB NO.	
CONTRACT ID.	
PROJECT NO.	
BRIDGE NO.	

DESCRIPTION

DATE

MISSOURI HIGHWAYS AND TRANSPORTATION COMMISSION

105 WEST CAPITOL
JEFFERSON CITY, MO 65102
1-888-ASK-MODOT (1-888-275-6636)

Detailed
Checked

Note: This drawing is not to scale. Follow dimensions.

Sheet No. of

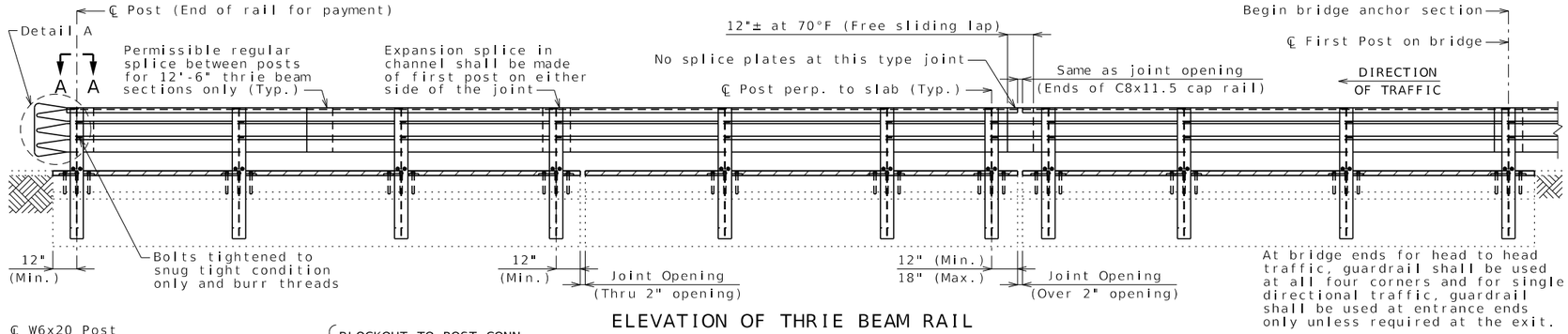

ELEVATION OF THRIE BEAM RAIL

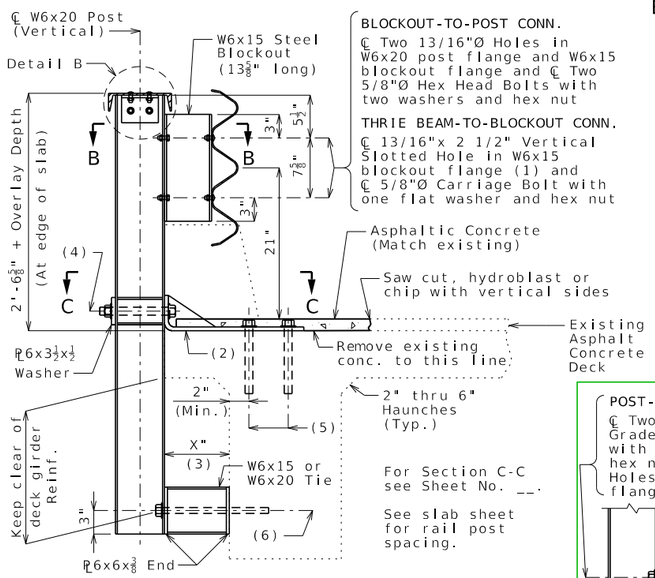

PART SECTION AT RAIL POST

(1) Required on one side of web only, but may be provided on both sides of web at the contractor's option.

(2) 1/2" Bent Plate (Level with qualified special motar, see Sec 704)

(3) Cantilever may vary

(4) POST-TO-BENT PLATE CONNECTION
- ℄ Two 1"Ø ASTM F3125 Grade A325 Type 1 Bolts with hex nuts and hardened washers
- ℄ Two 1 1/16"x 1 1/2" Vertical Slotted Holes in both post flanges
- ℄ Two 1 1/16"Ø Holes in washer plate and bent plate

(5) BENT PLATE-TO-DECK CONNECTION
℄ Three Resin Anchor Systems each to include:
- 1 1/8"Ø (Min.) Drilled Hole in slab or as recommended by manufacturer
- 1 1/4"Ø Hole in bent plate
- 1"Ø ASTM A449 Type 1 Threaded Rod snug tight and embedded 8 inches in slab
- Hex Nut and 2 1/2"Ø Hardened Locking Washer

(6) POST-TO-GIRDER CONN. (TIE-TO-GIRDER OPTIONAL CONN.)
℄ Two Resin Anchor Systems each to include:
- 7/8"Ø (Min.) Drilled Hole in girder or as recommended by manufacturer
- 1"Ø Hole in inside post flange and both end plates (Only inside end plate for optional connection)
- 3/4"Ø ASTM A449 Type 1 Threaded Rod snug tight and embedded 5 inches in girder
- Hex Nut and Hardened Locking Washer

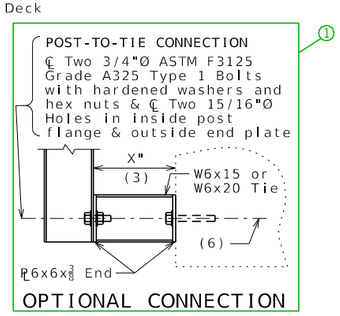

OPTIONAL CONNECTION

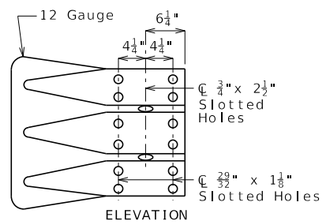

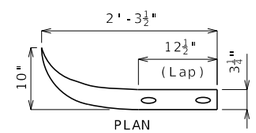

DETAIL A

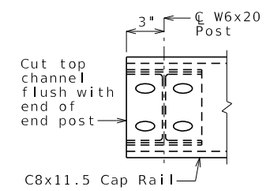

PLAN A-A

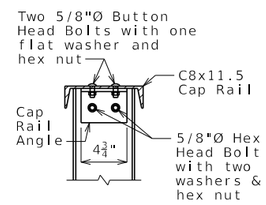

DETAIL B

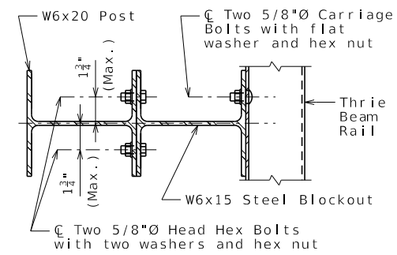

SECTION B-B

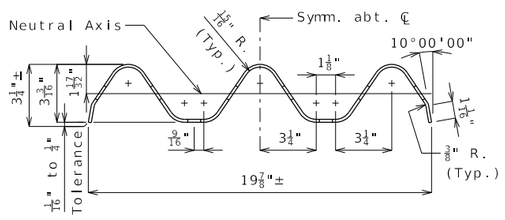

SECTION THRU THRIE BEAM RAIL

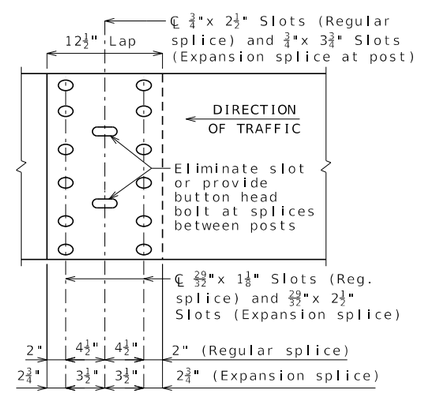

THRIE BEAM RAIL SPLICE

See Missouri Standard Plan 606.00 for details not shown.

General Notes:

Design Specifications: 2002 AASHTO LFD (17th Ed.)
Standard Specifications

Guardrail delineators shall be attached to the top of the guardrail and shall similarly use the delineator details of Missouri Standard Plan 617.10, except that the delineator body shall be attached to the top of the cap rail using galvanized anchorage as shown on Missouri Standard Plan 606.00. Delineators on bridges with two-lane, two-way traffic shall have retroreflective sheeting on both sides. Guardrail delineators will be considered completely covered by the contract unit price for Bridge Guardrail (Thrie Beam).

Panel lengths of channel members shall be attached continuously to a minimum of four posts and a maximum of six posts (except at end bents).

All bolts, nuts, washers and plates will be considered completely covered by the contract unit price for Bridge Guardrail (Thrie Beam).

All steel connecting bolts and fasteners for posts and railing, and all resin anchor bolts, nuts, washers and plates shall be galvanized after fabrication. Protective coating and material requirement of steel railing shall be in accordance with Sec 1040.

Rail posts shall be set perpendicular to roadway profile grade, vertically in cross section and aligned in accordance with Sec 713 except that the rail posts shall be aligned by the use of 3 x 1 3/4-inch shims such that the post deviates not more than 1/2 inch from true horizontal alignment after final adjustment. The shims shall placed between the blockout and the thrie beam rail. The thickness of the shims shall be determined by the contractor and verified by the engineer before ordering material for this work.

At the expansion slots in the thrie beam rails and channels, the bolts shall be tightened and backed off one-half turn and the threads shall be burred.

At the thrie beam connection to blockout on wings, the bolts shall be tightened and backed off one-half turn and the threads shall be burred.

Minimum length of thrie beam sections is equal to one post space.

A 5/8-inch diameter button-head, oval shoulder bolt with a minimum 3/8-inch thick hex nut shall be used at all slots.

Thrie beam guardrail on the bridge shall be 12-guage steel.

Posts, cap rail angles, bent plates, blockouts, channels and channel splice plates shall be fabricated from ASTM A709 Grade 36 steel and galvanized.

Flat washers 3 x 1 3/4 x 3/16-inch minimum shall be used at all post bolts between the bolt head and beam. The washers shall be rectangular in shape with an 11/16 x 1-inch slot, or when necessary of such design as to fit the contour of the beam. Rectangular washers 3 x 1 3/4 x 5/8-inch shall be used between the blockout and the thrie beam rail.

Special drilling of the thrie beam may be required at the splices. All drilling details shall be shown on the shop drawings.

Fabrication of structural steel shall be in accordance with Sec 1080.

Expansion splices in the thrie beam rail shall be made at either the first or second post on either side of the joint and on structure at bridge ends. When the splice is made at the second post, an expansion slot shall be provided in the thrie beam rail for connection to the first post to allow for movement.

In addition to the expansion provisions at the expansion joints, expansion splices in the thrie beam rail and the channel shall be provided at other locations so that the maximum length without expansion provisions does not exceed 200 feet.

Shim plates 6 x 6 x 1/16-inch may be used between the top of the post and the channel member as required for vertical alignment.

Shim plates shall be galvanized after fabrication.

Contractor shall verify all dimensions in field before finalizing the shop drawings.

Outline of existing work is indicated by light dashed lines. Heavy lines indicate new work.

DATE PREPARED	
3/7/2024	
ROUTE	STATE MO
DISTRICT	SHEET NO. 8
COUNTY	
JOB NO.	
CONTRACT ID.	
PROJECT NO.	
BRIDGE NO.	

DATE	DESCRIPTION

MISSOURI HIGHWAYS AND TRANSPORTATION COMMISSION
105 WEST CAPITOL
JEFFERSON CITY, MO 65102
1-888-ASK-MODOT (1-888-275-6636)

Detailed
Checked

Note: This drawing is not to scale. Follow dimensions.

Sheet No. of

THRIE4a_system4_rehab Guidance

Standard Drawing Guidance (do not show on plans):

This system meets NCHRP 350 TL-3 bridge railing requirements.

Max. post spacing = 6'-3"

① If slab cantilever length exceeds 6", consideration shall be given to:
(with the result that anchorage into slab lies in the cantilever part of slab)

(1) Anchorage into cantilever portion of slab provided original slab thickness allows for min. embedment & 1" cover (check negative moment in cantilever).

(2) Extending bent plate (within reason).

(3) Alternating method of attachment, i.e. System 1 or System 3 types and variations thereof, Consult Structural Project Manager.

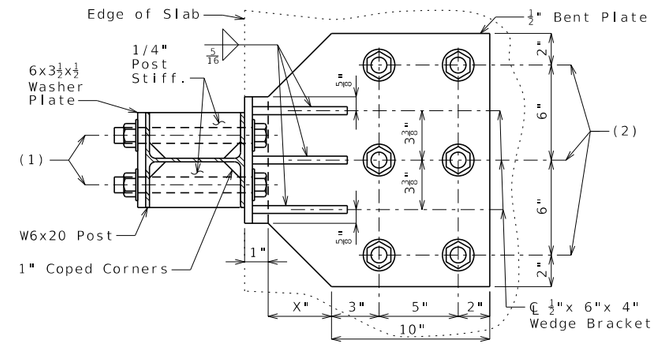

SECTION C-C

(1) UPPER POST-TO-BENT PLATE CONN.
- ℄ 1"Ø ASTM F3125 Grade A325 Type 1 Bolt with hex nut and hardened washer
- ℄ 1 1/16"x 1 1/2" Vertical Slotted Hole in both post flanges
- ℄ 1 1/16"Ø Hole in washer plate and bent plate

(1) LOWER POST-TO-GIRDER CONNECTION
℄ Resin Anchor System to include:
- 7/8"Ø (Min.) Drilled Hole in girder or as recommended by manufacturer
- 1"Ø Hole in inside post flange and both end plates
- 3/4"Ø ASTM A449 Type 1 Threaded Rod snug tight and embedded 5 inches in girder
- Hex Nut and Hardened Locking Washer

(1) OPTIONAL LOWER POST-TO-TIE CONNECTION
- ℄ 3/4"Ø ASTM F3125 Grade A325 Type 1 Bolt with hex nut and hardened washer
- ℄ 15/16"Ø Hole in inside post flange and outside end plate

(2) BENT PLATE-TO-DECK CONNECTION
℄ Resin Anchor Systems each to include:
- 1 1/8"Ø (Min.) Drilled Hole in slab or as recommended by manufacturer
- 1 1/4"Ø Hole in bent plate
- 1"Ø ASTM A449 Type 1 Threaded Rod snug tight & embedded 8 inches in slab
- Hex Nut and 2 1/2"Ø Hardened Locking Washer

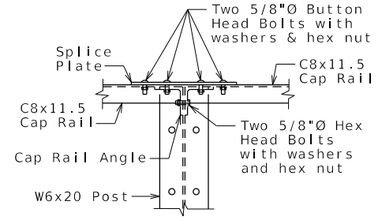

ELEVATION OF TYPICAL SPLICE

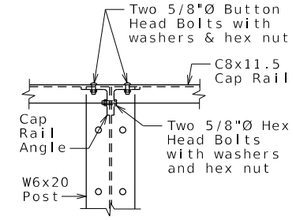

ELEVATION OF RAIL POST CONNECTION

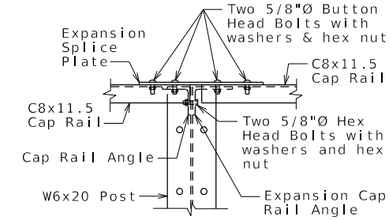

ELEVATION OF EXPANSION SPLICE

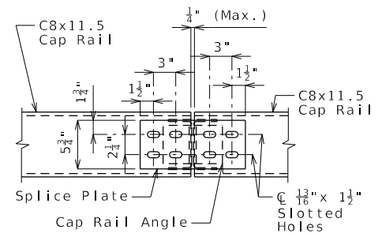

PLAN OF TYPICAL SPLICE

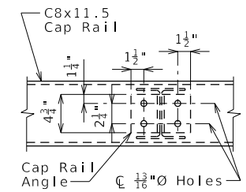

PLAN OF RAIL POST CONNECTION

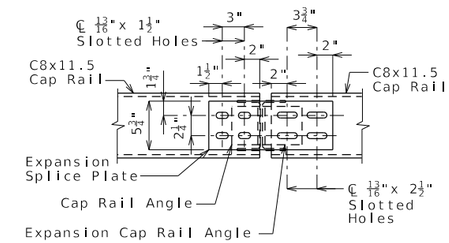

PLAN OF EXPANSION SPLICE

Expansion slots shall be on the same side of post as the expansion joint.

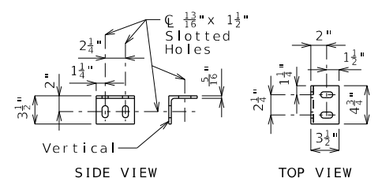

CAP RAIL ANGLE

L3½x3½x5/16

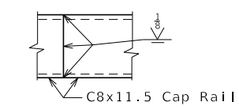

OPTIONAL SPLICE

One shop or field splice per panel may be provided at any location.

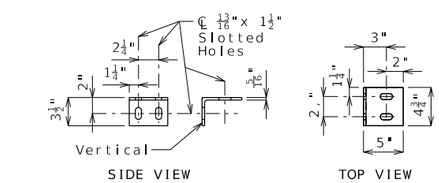

EXPANSION CAP RAIL ANGLE

L5x3½x5/16

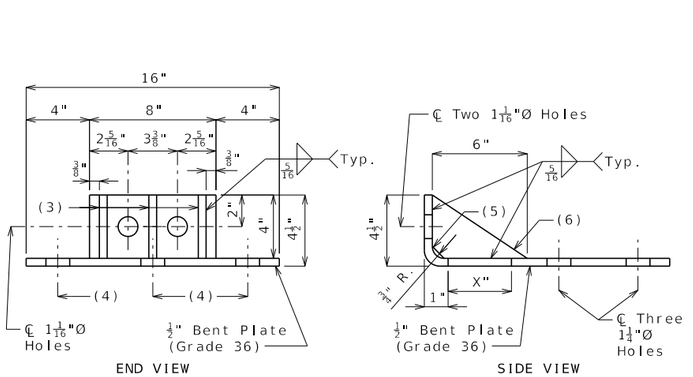

(3) ½"x 6"x 4" Wedge Bracket

(4) ℄ Two 1¼"Ø Holes

(5) ¾" Coped Corners

(6) Three ½"x 6"x 4" Wedge Brackets

BENT PLATE AND WEDGE BRACKET

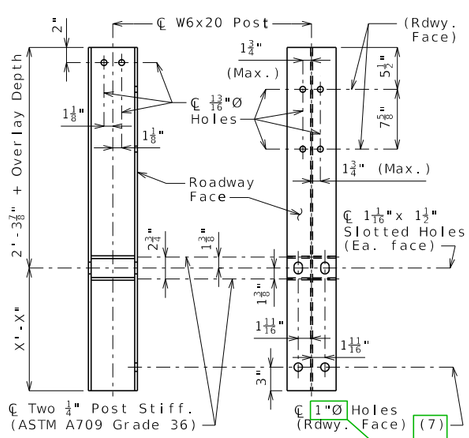

DETAILS OF POST

(7) 15/16"Ø for optional connection

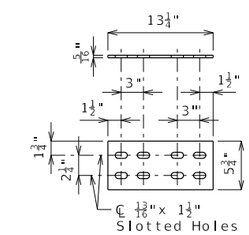

SPLICE PLATE

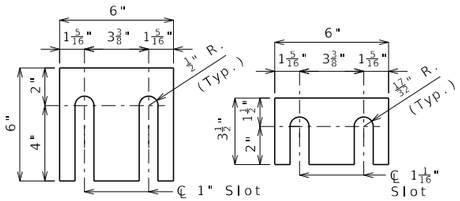

SHIM PLATES

Shim plates 6 x 3 x 1/16-inch may be used between the W6x20 post and 1/2-inch bent plate connetion as required for horizontal alignment.

Shim plates may vary in thickness from 1/16 inch to the thickness required, and may be used in multiples.

Shim plates shall be galvanized after fabrication.

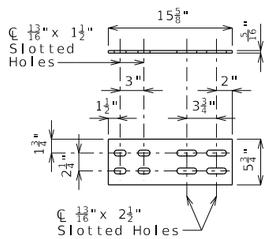

EXPANSION SPLICE PLATE

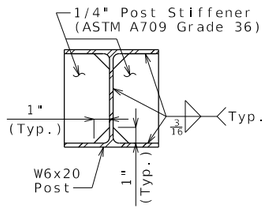

POST STIFFENERS

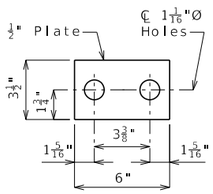

WASHER PLATE

DATE PREPARED	10/17/2023
ROUTE	STATE MO
DISTRICT	SHEET NO. 9
COUNTY	
JOB NO.	
CONTRACT ID.	
PROJECT NO.	
BRIDGE NO.	

DESCRIPTION | DATE

MISSOURI HIGHWAYS AND TRANSPORTATION COMMISSION
105 WEST CAPITOL
JEFFERSON CITY, MO 65102
1-888-ASK-MODOT (1-888-275-6636)

Detailed
Checked

Note: This drawing is not to scale. Follow dimensions.

Sheet No. of

THRIE4b_system4_details Guidance

Standard Drawing Guidance (do not show on plans):

① Remove these details when this sheet is used in combination with drawing THRIE 4D, and use 15/16" for diameter of the bottom two holes in the Details of Post.

② Replace with below notes when this sheet is used in combination with drawing THRIE 4D.

- ℄ 1"Ø ASTM F3125 Grade A325 Type 1 Bolts with hex nuts and hardened loc washers
- ℄ 1 1/8"Ø Drilled Holes in slab
- ℄ 1 1/4"Ø Holes in bent plate and bearing plate

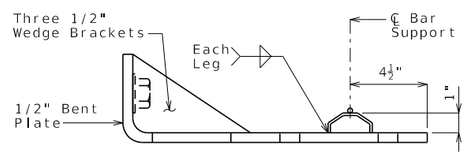

PART SECTION THRU PLATE

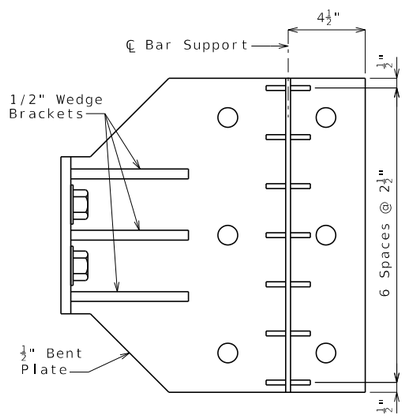

PLAN OF BENT PLATE

Bar supports shall be Beam Bolsters (BB-ref. CRSI) and shall be galvanized. See Sec 706.

Standard Drawing Guidance (do not show on plans):

When a latex, low slump or silica fume concrete overlay is used, add these details.

DATE PREPARED	10/17/2023
ROUTE	STATE MO
DISTRICT	SHEET NO. 10
COUNTY	
JOB NO.	
CONTRACT ID.	
PROJECT NO.	
BRIDGE NO.	

DESCRIPTION	DATE

MISSOURI HIGHWAYS AND TRANSPORTATION COMMISSION

105 WEST CAPITOL
JEFFERSON CITY, MO 65102
1-888-ASK-MODOT (1-888-275-6636)

Detailed
Checked

Note: This drawing is not to scale. Follow dimensions.

Sheet No. of

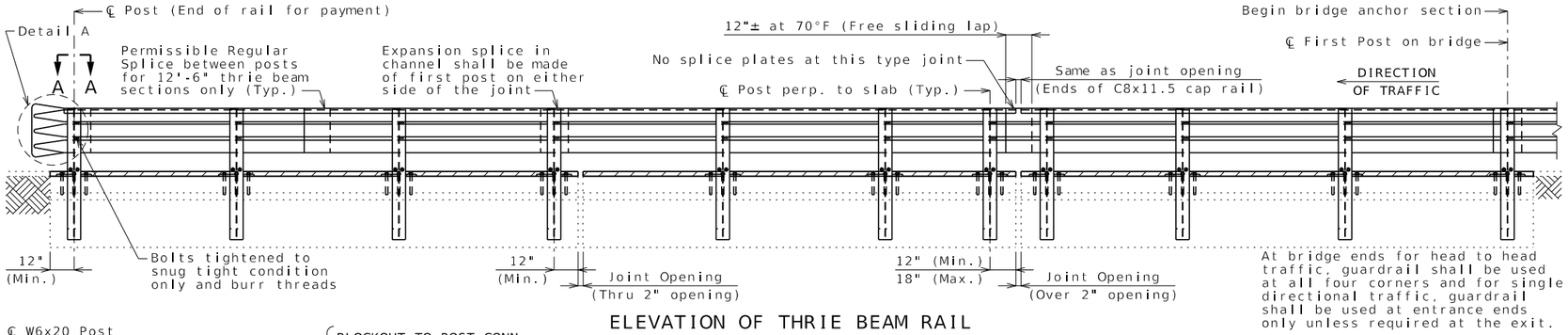

ELEVATION OF THRIE BEAM RAIL

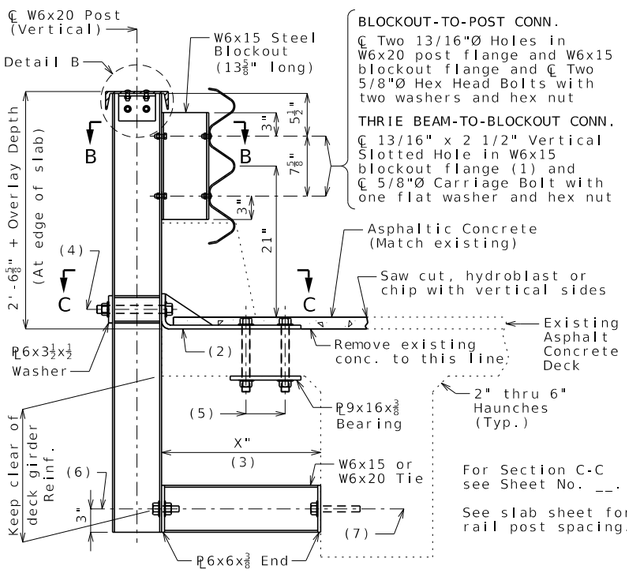

PART SECTION AT RAIL POST

For Section C-C see Sheet No. __.

See slab sheet for rail post spacing.

(1) Required on one side of web only, but may be provided on both sides of web at the contractor's option.

(2) ½" Bent Plate (Level with qualified special mortar, see Sec 704)

(3) Cantilever may vary.

(4) POST-TO-BENT PLATE CONNECTION
- ℄ Two 1"Ø ASTM F3125 Grade A325 Type 1 Bolts with hardened washers and hex nuts
- ℄ Two 1 1/16"x 1 1/2" Vertical Slotted Holes in both post flanges
- ℄ Two 1 1/16"Ø Holes in washer plate & bent plate

(5) BENT PLATE-TO-DECK CONNECTION
- ℄ Three 1"Ø ASTM F3125 Grade A325 Type 1 Bolts with hex nuts and hardened locking washers
- ℄ Three 1 1/4"Ø Holes in bent plate and bearing plate
- ℄ Three 1 1/8"Ø (Min.) Drilled Holes in slab

(6) POST-TO-TIE CONNECTION
- ℄ Two 3/4"Ø ASTM F3125 Grade A325 Type 1 Bolts with hex nuts and hardened washers
- ℄ Two 15/16"Ø Holes in inside post flange and end plate

(7) TIE-TO-GIRDER CONNECTION
℄ Two Resin Anchor Systems each to include:
- 7/8"Ø (Min.) Drilled Hole in girder or as recommended by manufacturer
- 1"Ø Hole in end plate
- 3/4"Ø ASTM A449 Type 1 Threaded Rod snug tight and embedded 5 inches in girder
- Hex Nut and Hardened Locking Washer

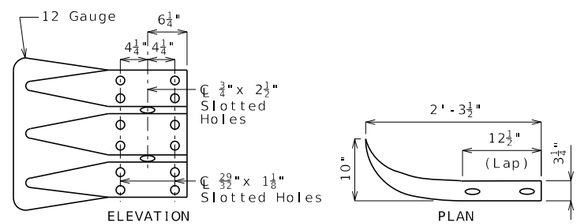

DETAIL A

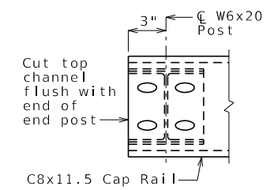

PLAN A-A

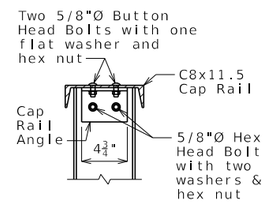

DETAIL B

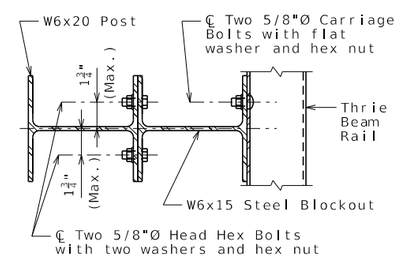

SECTION B-B

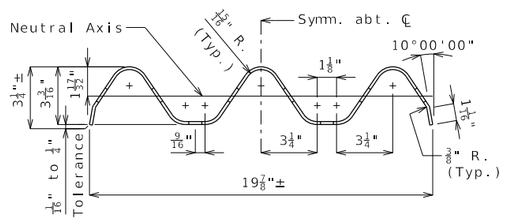

SECTION THRU THRIE BEAM RAIL

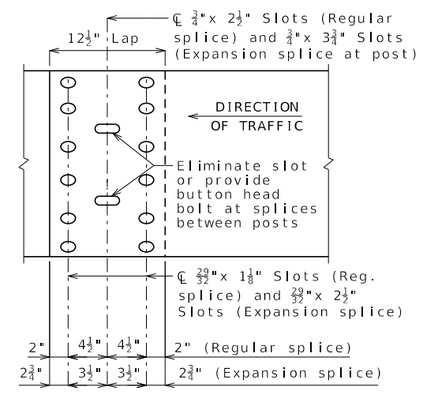

THRIE BEAM RAIL SPLICE

General Notes:

Design Specifications: 2002 AASHTO LFD (17th Ed.)
Standard Specifications

Guardrail delineators shall be attached to the top of the guardrail and shall similarly use the delineator details of Missouri Standard Plan 617.10, except that the delineator body shall be attached to the top of the cap rail using galvanized anchorage as shown on Missouri Standard Plan 606.00. Delineators on bridges with two-lane, two-way traffic shall have retroreflective sheeting on both sides. Guardrail delineators will be considered completely covered by the contract unit price for Bridge Guardrail (Thrie Beam).

Panel lengths of channel members shall be attached continuously to a minimum of four posts and a maximum of six posts (except at end bents).

All bolts, nuts, washers and plates will be considered completely covered by the contract unit price for Bridge Guardrail (Thrie Beam).

All steel connecting bolts and fasteners for posts and railing, and all resin anchor bolts, nuts, washers and plates shall be galvanized after fabrication. Protective coating and material requirement of steel railing shall be in accordance with Sec 1040.

Rail posts shall be set perpendicular to roadway profile grade, vertically in cross section and aligned in accordance with Sec 713 except that the rail posts shall be aligned by the use of 3 x 1 3/4-inch shims such that the post deviates not more than 1/2 inch from true horizontal alignment after final adjustment. The shims shall placed between the blockout and the thrie beam rail. The thickness of the shims shall be determined by the contractor and verified by the engineer before ordering material for this work.

At the expansion slots in the thrie beam rails and channels, the bolts shall be tightened and backed off one-half turn and the threads shall be burred.

At the thrie beam connection to blockout on wings, the bolts shall be tightened and backed off one-half turn and the threads shall be burred.

Minimum length of thrie beam sections is equal to one post space.

A 5/8-inch diameter button-head, oval shoulder bolt with a minimum 3/8-inch thick hex nut shall be used at all slots.

Thrie beam guardrail on the bridge shall be 12-guage steel.

Posts, cap rail angles, bent plates, blockouts, channels and channel splice plates shall be fabricated from ASTM A709 Grade 36 steel and galvanized.

Flat washers 3 x 1 3/4 x 3/16-inch minimum shall be used at all post bolts between the bolt head and beam. The washers shall be rectangular in shape with an 11/16 x 1-inch slot, or when necessary of such design as to fit the contour of the beam. Rectangular washers 3 x 1 3/4 x 5/8-inch shall be used between the blockout and the thrie beam rail.

Special drilling of the thrie beam may be required at the splices. All drilling details shall be shown on the shop drawings.

Fabrication of structural steel shall be in accordance with Sec 1080.

Expansion splices in the thrie beam rail shall be made at either the first or second post on either side of the joint and on structure at bridge ends. When the splice is made at the second post, an expansion slot shall be provided in the thrie beam rail for connection to the first post to allow for movement.

In addition to the expansion provisions at the expansion joints, expansion splices in the thrie beam rail and the channel shall be provided at other locations so that the maximum length without expansion provisions does not exceed 200 feet.

Shim plates 6 x 6 x 1/16-inch may be used between the top of the post and the channel member as required for vertical alignment.

Shim plates shall be galvanized after fabrication.

Contractor shall verify all dimensions in field before finalizing the shop drawings.

See Missouri Standard Plan 606.00 for details not shown.

DATE PREPARED	7/10/2024
ROUTE	STATE MO
DISTRICT	SHEET NO. 11
COUNTY	
JOB NO.	
CONTRACT ID.	
PROJECT NO.	
BRIDGE NO.	

DESCRIPTION

DATE

MISSOURI HIGHWAYS AND TRANSPORTATION COMMISSION
105 WEST CAPITOL
JEFFERSON CITY, MO 65102
1-888-ASK-MODOT (1-888-275-6636)

Detailed
Checked

Note: This drawing is not to scale. Follow dimensions.

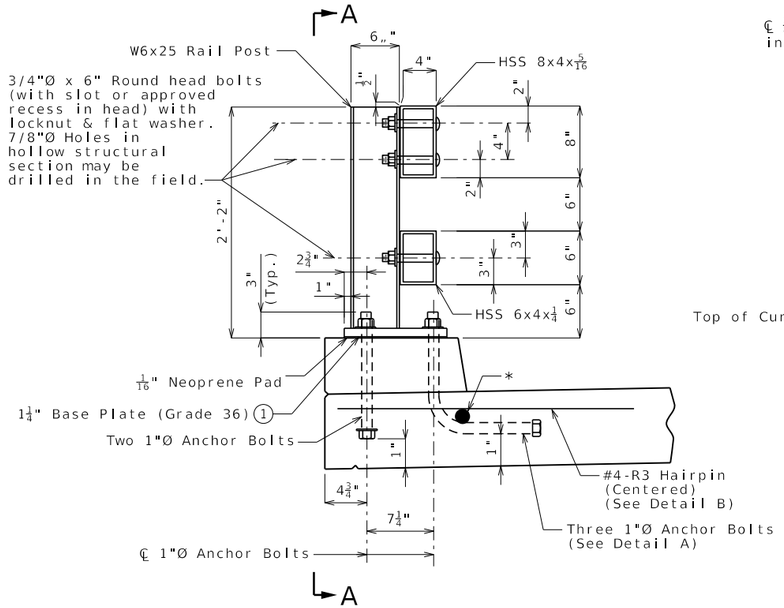

SECTION AT RAIL POST

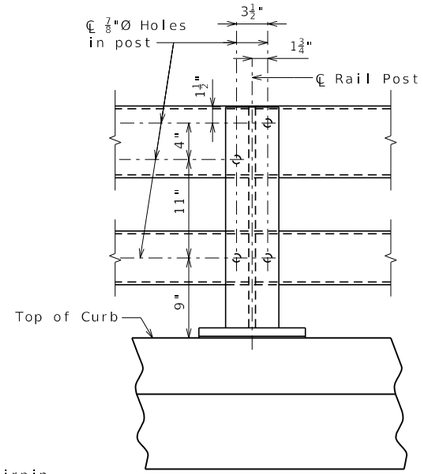

PART ELEVATION A-A

* Tack weld same size bar (2'-8" long and centered) as slab longitudinal reinf. Optional to wrap bolt under slab long. reinf. provided that 1" clearance is maintained to bottom of slab.

1 Bevel bottom of post (slope 2% or slab cross slope).

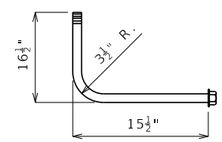

DETAIL A

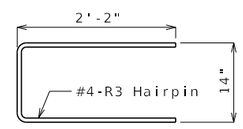

DETAIL B

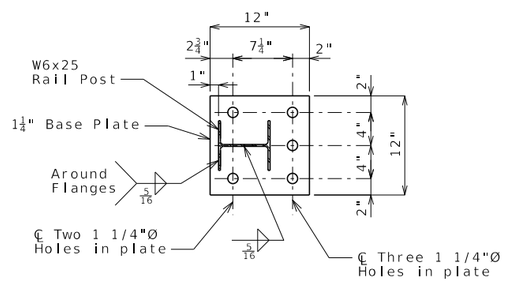

PLAN OF BASE PLATE

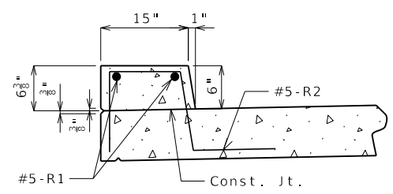

PART SECTION SHOWING CURB

Bridge Rail Notes:

Rail posts shall be set perpendicular to roadway profile grade, vertically in cross section and aligned in accordance with Sec 713 except that the rail posts shall be aligned by the use of shims such that the post deviates not more than 1/2 inch from true horizontal alignment after final adjustment. The shims shall be 3" x 1 3/4" and placed between the post and the rail. The thickness of the shims shall be determined by the contractor and verified by the engineer before ordering material for this work.

Rail posts shall be seated on elastomeric pads having the same dimensions as the base plate and 1/16-inch thickness. Pads may be any elastomeric material, plain or fibered, having a hardness (Durometer) of 50 or greater, and certified by the manufacturer. Additional pads or half pads may be used for shimming for alignment. Post heights shown will increase by the thickness of the pad.

HSS = Hollow Structural Section

Dimensions of bridge rails are measured horizontally.

Bridge Rails will be measured to the nearest linear foot for each structure measured from end of slab to end of slab.

Payment for furnishing all materials and labor necessary to install Bridge Rail, complete in place, will be considered completely covered by the contract unit price for Bridge Rail (Two Tube Structural Steel) per linear foot.

Guardrail delineators shall be attached to the top of the guardrail post using galvanized anchorage as shown on Missouri Standard Plan 606.00 and in accordance with Sec 606. Delineators on bridges with two-lane, two-way traffic shall have retroreflective sheeting on both sides. Guardrail delineators will be considered completely covered by the contract unit price for Bridge Rail (Two Tube Structural Steel).

Curb Notes:

Top of curb shall be built parallel to grade.

All exposed edges of curb shall have either a 1/2-inch radius or a 3/8-inch bevel, unless unless otherwise noted.

Use a minimum lap of 2'-11" for #5-R1 bars.

The cross-sectional area of curb above the slab = 0.66 sq. ft.

Concrete in the curb shall be Class B-2.

The curb shall be cured by application of Type 1-D Liquid Membrane-Forming Curing Compound in accordance with Sec 1055 and sealed in accordance with Sec 703. The contractor shall remove all curing compound in accordance with the manufacturer's recommendations before the concrete sealer is applied.

Measurement of the curb is to the nearest linear foot for each structure, measured along the outside top of slab from end of slab to end of slab.

Payment for all concrete and reinforcement, complete in place, will be considered completely covered by the contract unit price for Concrete Curb (Bridge Rail) per linear foot.

1

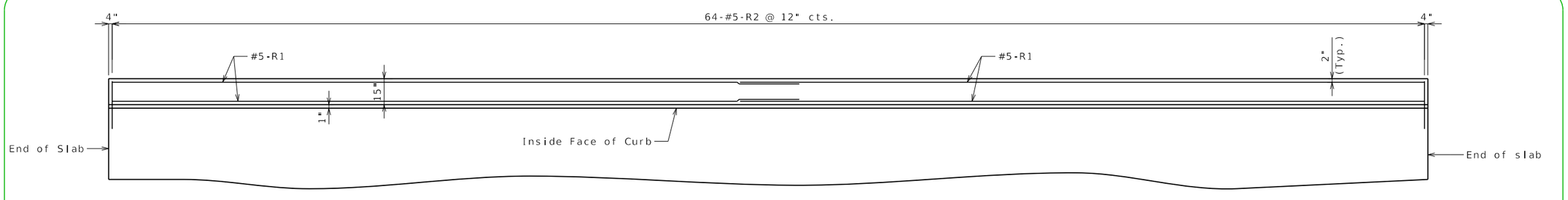

SPAN (1-2)

PLAN OF LEFT CURB SHOWING REINFORCEMENT

(Left curb shown. Right curb similar.)

Note: Longitudinal dimensions are horizontal along outside face of curb.

DATE PREPARED	10/17/2024
ROUTE	STATE MO
DISTRICT	SHEET NO. 000
COUNTY	
JOB NO.	
CONTRACT ID.	
PROJECT NO.	
BRIDGE NO.	

DESCRIPTION

DATE

MISSOURI HIGHWAYS AND TRANSPORTATION COMMISSION
105 WEST CAPITOL
JEFFERSON CITY, MO 65102
1-888-ASK-MODOT (1-888-275-6636)

Detailed
Checked

Note: This drawing is not to scale. Follow dimensions.

Sheet No. of

TTR1 Guidance

Standard Drawing Guidance (do not show on plans):

1 Modify as required.

TL-4 (NCHRP 350) bridge rail is typically used on spread box beam bridges and may be used on adjacent box beam bridges where reinforcement is embedded in the beam.

Use only in certain applications because of cost. Acceptable for use when roadway width or site distance is a concern. Curb shall be used to prevent drainage over deck.

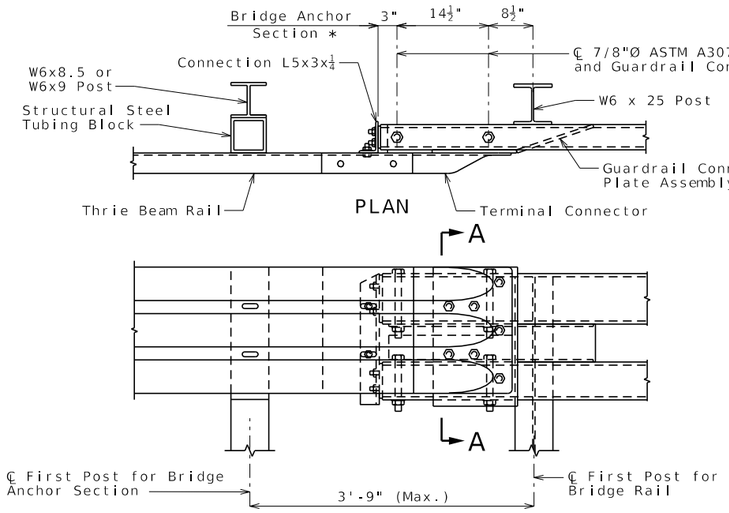

PLAN

DETAIL A

(Part elevation of bridge anchor section)

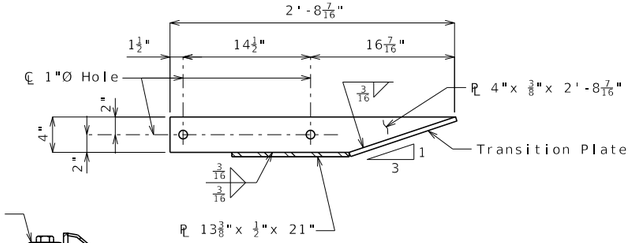

SECTION B-B

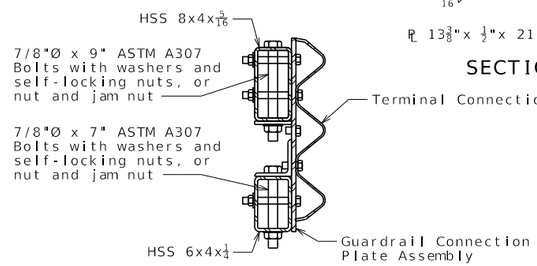

SECTION A-A

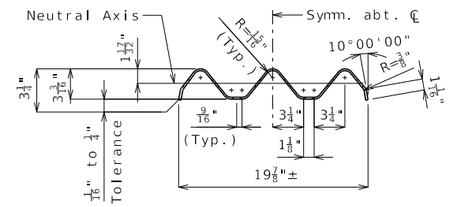

SECTION THRU THRIE BEAM RAIL

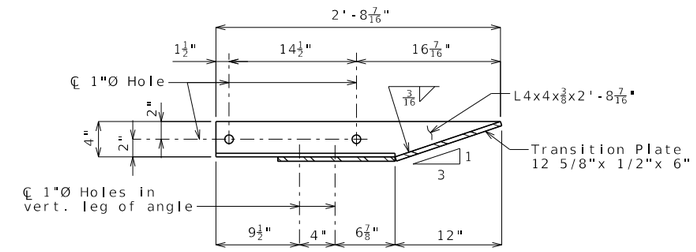

SECTION C-C

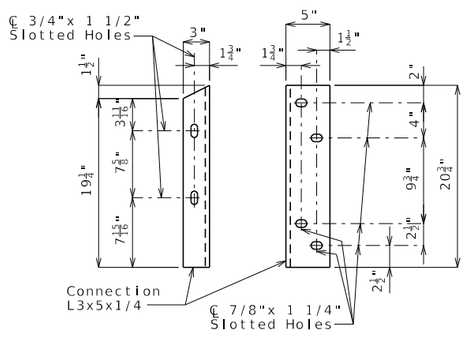

CONNECTION ANGLE DETAILS

Install angles to rail caps using 5/8"Ø washers and self-locking nuts, or nuts and jam nuts.

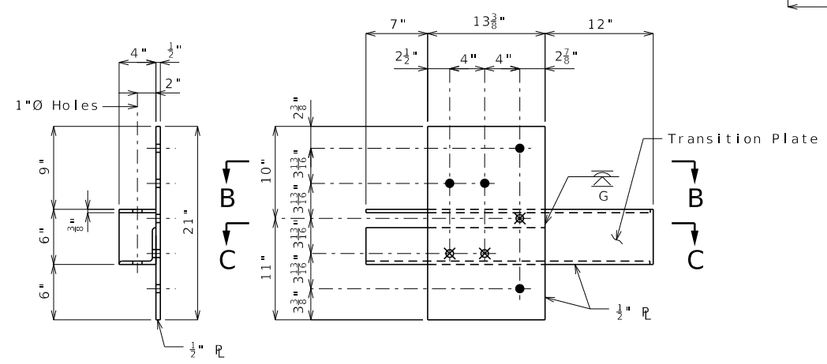

GUARDRAIL CONNECTION PLATE ASSEMBLY DETAILS

(Mirror for opposite end)

⊗ Drill and tap 3 holes for 7/8-inch diameter ASTM F3125 Grade A325 Type 1 bolts.

● Four 1-inch diameter holes for 7/8-inch diameter ASTM F3125 Grade A325 Type 1 bolts and nuts

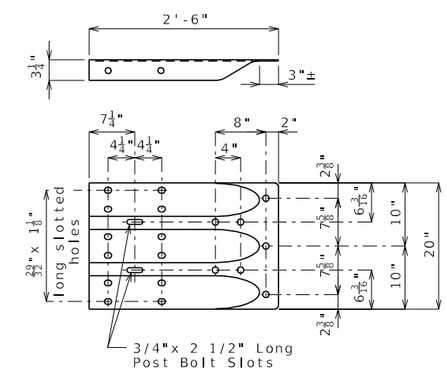

TERMINAL CONNECTOR

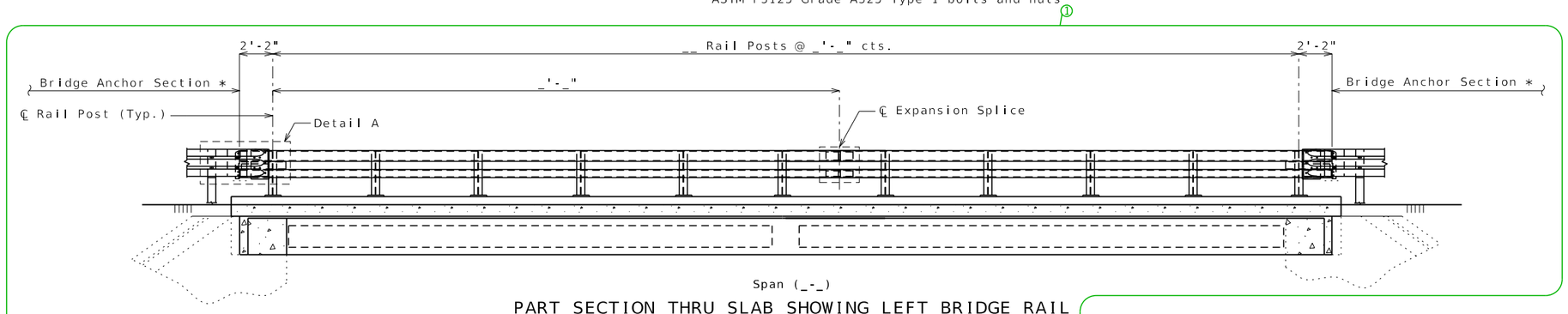

PART SECTION THRU SLAB SHOWING LEFT BRIDGE RAIL

(Right bridge rail similar)

* Bridge anchor section shall be in accordance with Missouri Standard Plan 606.22 except bearing plate and connector plate will not be required.

DATE PREPARED	10/17/2024
ROUTE	STATE MO
DISTRICT	SHEET NO. 000
COUNTY	
JOB NO.	
CONTRACT ID.	
PROJECT NO.	
BRIDGE NO.	

DESCRIPTION

DATE

MISSOURI HIGHWAYS AND TRANSPORTATION COMMISSION

105 WEST CAPITOL
JEFFERSON CITY, MO 65102
1-888-ASK-MODOT (1-888-275-6636)

Detailed
Checked

Note: This drawing is not to scale. Follow dimensions.

Sheet No. of

TTR2 Guidance

Standard Drawing Guidance (do not show on plans):

① Modify as required.

TL-4 (NCHRP 350) bridge rail is typically used on spread box beam bridges and may be used on adjacent box beam bridges where reinforcement is embedded in the beam.

Use only in certain applications because of cost. Acceptable for use when roadway width or site distance is a concern. Curb shall be used to prevent drainage over deck.

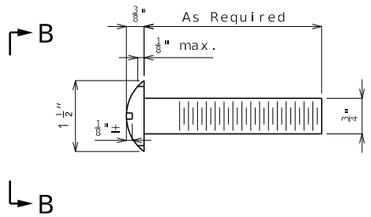

DETAIL OF $\frac{3}{4}$"Ø ROUND HEAD BOLT

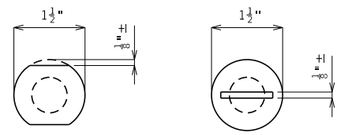

Without Slot or Recess

With Slot

VIEW B-B

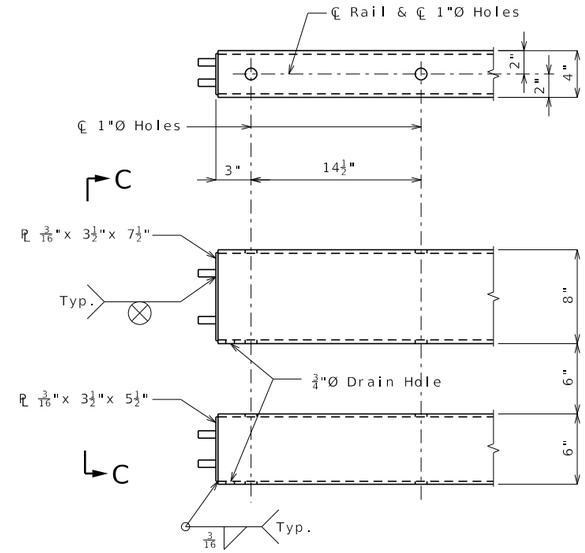

END OF RAIL DETAILS

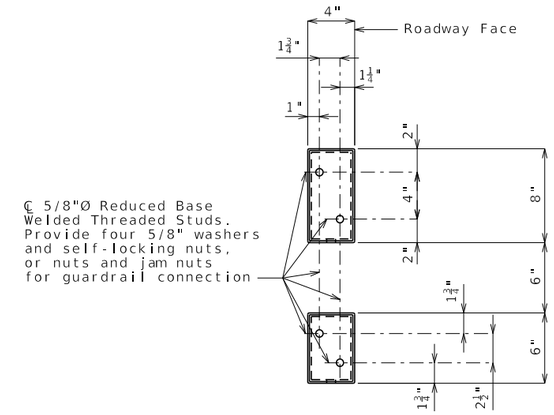

SECTION C-C

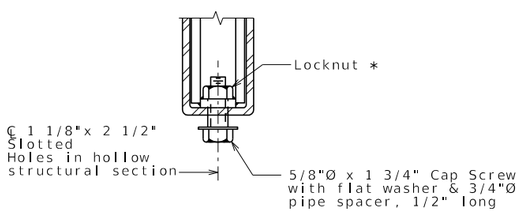

RAIL SPLICE CONNECTION AT EXPANSION JOINT

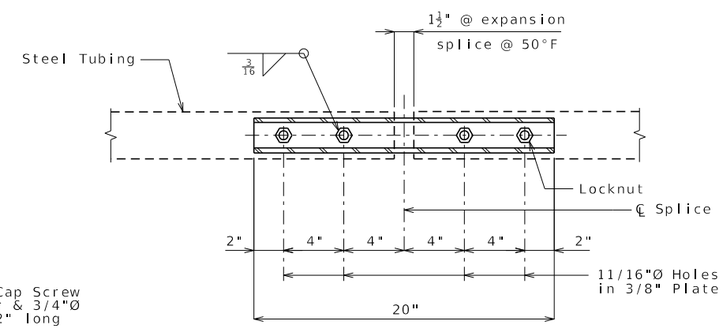

PLAN BOTTOM SPLICE PLATE TYPICAL

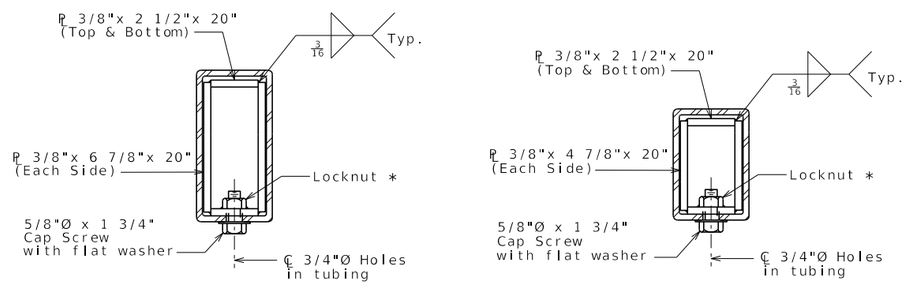

TOP RAIL

BOTTOM RAIL

SECTIONS AT RAIL SPLICE

Notes:

Fabrication of structural steel shall be in accordance with Sec 712 and 1080.

Hollow structural sections shall be in accordance with ASTM designation A 500 Grade B Structural Steel Tubing and shall meet the longitudinal CVN requirements of 15 ft-lbs at 0° F, see Sec 1080 for reporting.

All other steel shapes and plates shall be in accordance with AASHTO M 270 Grade 36 except posts shall be in accordance with AASHTO M 270, Grade 50.

All anchor bolts shall be ASTM F1554 Grade 36 with ASTM A563 Grade A hex nuts and ASTM F436 hardened washers.

Bolts, cap screws, and nuts shall be in accordance with ASTM designation A307 except for high strength bolts, nuts and washers noted which shall be in accordance with AASHTO M 164.

All anchor bolts, bolts, nuts, cap screws, washers and lock washers shall be galvanized in accordance with AASHTO M 232 (ASTM A153), Class C.

All posts, railing, rail splices, and angles shall be galvanized after shop fabrication in accordance with AASHTO M 111 and ASTM A385. Galvanized rail shall not be painted.

Railing shall be in accordance with Sec 713, except as noted.

All field drilled holes shall be coated with an approved zinc rich paint before erection.

HSS = Hollow Structural Section

* Tack weld nut to plate.

DATE PREPARED	10/17/2024
ROUTE	STATE MO
DISTRICT	SHEET NO. 000
COUNTY	
JOB NO.	
CONTRACT ID.	
PROJECT NO.	
BRIDGE NO.	

DESCRIPTION

DATE

MISSOURI HIGHWAYS AND TRANSPORTATION COMMISSION
105 WEST CAPITOL
JEFFERSON CITY, MO 65102
1-888-ASK-MODOT (1-888-275-6636)

Detailed
Checked

Note: This drawing is not to scale. Follow dimensions.

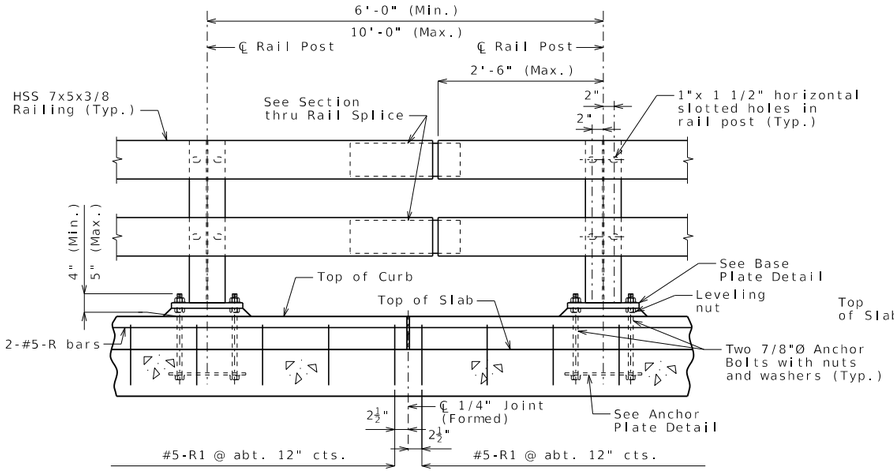

PART ELEVATION OF CURB & RAIL

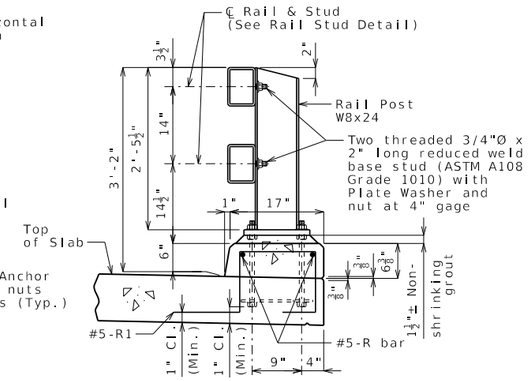

TYPICAL SECTION

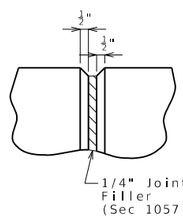

PART ELEVATION AT FORMED JOINT

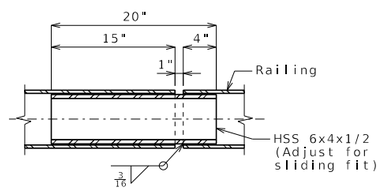

SECTION THRU RAIL SPLICE

(@ 50' maximum intervals)

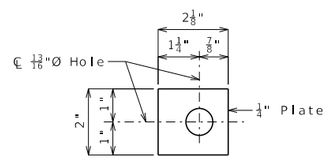

PLATE WASHER DETAIL

Note: Position washer to completely cover slotted hole.

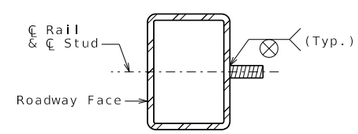

RAIL STUD DETAIL

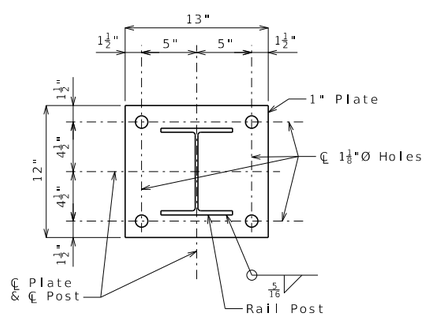

BASE PLATE DETAIL

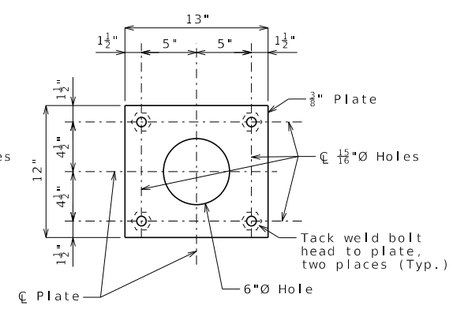

ANCHOR PLATE DETAIL

Note: Work this sheet with Sheet No. .

Bridge Rail Notes:

Rail posts shall be set perpendicular to roadway profile grade, vertically in cross section and aligned in accordance with Sec 713, except that the rail posts shall be aligned by the use of 6 1/2 x 6 1/2-inch shims such that the post deviates not more than 1/2 inch from true horizontal alignment after final adjustment. The shims shall be placed between the post and the rail. The thickness of the shims shall be determined by the contractor and verified by the engineer before ordering material for this work.

Rail posts shall be set plumb and aligned in accordance with Sec 713.

Payment for furnishing all materials and labor necessary to install bridge rail, complete in place, will be considered completely covered by the contract unit price for Bridge Rail (Two Tube Structural Steel) per linear foot.

Guardrail delineators shall be attached to the top of the guardrail post using galvanized anchorage as shown on Missouri Standard Plan 606.50 and in accordance with Sec 606. Delineators on bridges with two-lane, two-way traffic shall have retroreflective sheeting on both sides. Guardrail delineators will be considered completely covered by the contract unit price for Bridge Rail (Two Tube Structural Steel).

HSS = Hollow Structural Section

Dimensions of bridge rails are measured horizontally.

Bridge rails will be measured to the nearest linear foot for each structure measured from end of wing to end of wing.

Fabrication of structural steel shall be in accordance with Sec 1080.

Hollow structural sections shall be in accordance with ASTM A500 Grade B Structural Steel Tubing and shall meet the longitudinal CVN requirements of 15 ft-lbs at 0° F, see Sec 1080 for reporting.

All other steel shapes and plates shall be in accordance with ASTM A709 Grade 50.

All anchor bolts shall be ASTM A449 Type 1 with ASTM A563 Grade DH heavy hex nuts and ASTM F436 hardened washers.

All anchor bolts, studs, nuts, and washers shall be galvanized in accordance with ASTM F2329.

All posts, railing, rail splices, and plates shall be galvanized after shop fabrication in accordance with AASHTO M 111 and ASTM A385. Galvanized rail shall not be painted.

Provide railing expansion joints at 50 foot maximum intervals. Railing shall be continuous over two posts minimum. Railing expansion joints are required in rail sections that span bridge expansion joints.

Use grout with a minimum 24-hour f'c of 3000 psi in single placement.

Curb Notes:

Top of curb shall be built parallel to grade and curb joints (except at end bents) normal to grade.

All exposed edges of curb shall have either a 1/2-inch radius or a 3/8-inch bevel, unless otherwise noted.

Minimum lap for longitudinal R-bars is 2'-5".

The cross-sectional area of curb above the slab = 0.75 sq. ft.

Concrete in the curb shall be Class B-2.

The curb shall be cured by application of Type 1-D Liquid Membrane-Forming Curing Compound in accordance with Sec 1055 and sealed in accordance with Sec 703. The contractor shall remove all curing compound in accordance with the manufacturer's recommendations before the concrete sealer is applied.

Measurement of the curb is to the nearest linear foot for each structure, measured along the outside top of slab from end of wing to end of wing.

Payment for all concrete and reinforcement, complete in place, will be considered completely covered by the contract unit price for Concrete Curb (Bridge Rail) per linear foot.

DATE PREPARED	
5/12/2026	
ROUTE	STATE MO
DISTRICT	SHEET NO. 004
COUNTY	
JOB NO.	
CONTRACT ID.	
PROJECT NO.	
BRIDGE NO.	

DESCRIPTION

DATE

MISSOURI HIGHWAYS AND TRANSPORTATION COMMISSION

105 WEST CAPITOL
JEFFERSON CITY, MO 65102
1-888-ASK-MODOT (1-888-275-6636)

38-INCH TWO-TUBE RAIL

Detailed
Checked

Note: This drawing is not to scale. Follow dimensions.

Sheet No. of

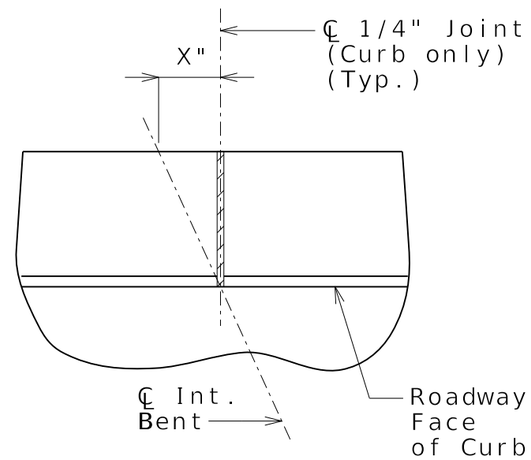

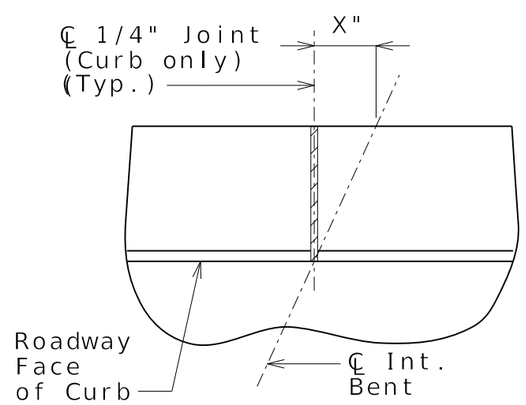

PART PLAN SHOWING
JOINT LOCATION

(For skewed structures only)

Modify Elevation below as necessary. Elevation shown is scaled down 0.25 from full size.

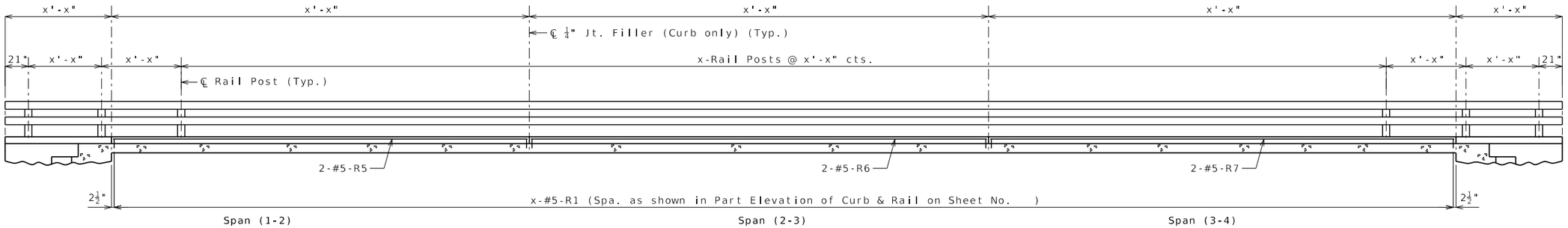

ELEVATION OF LEFT CURB AND RAIL

(Right curb and rail similar by 180° rotation.)
Longitudinal dimensions are horizontal.

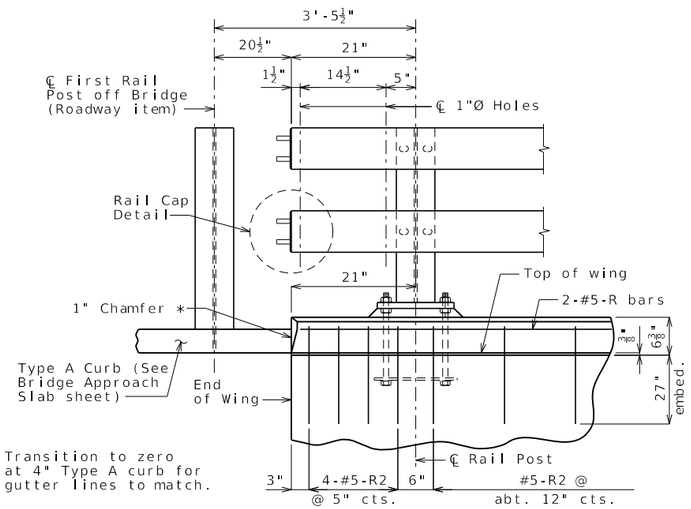

PART ELEVATION SHOWING END OF RAIL ON WING

Bridge Approach Transition not shown for clarity (Roadway item)

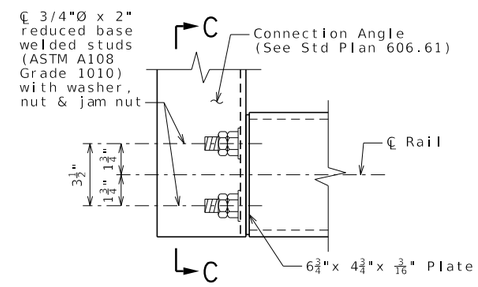

RAIL CAP DETAIL

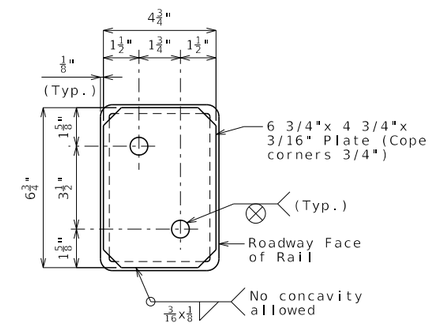

SECTION C-C (RAIL CAP)

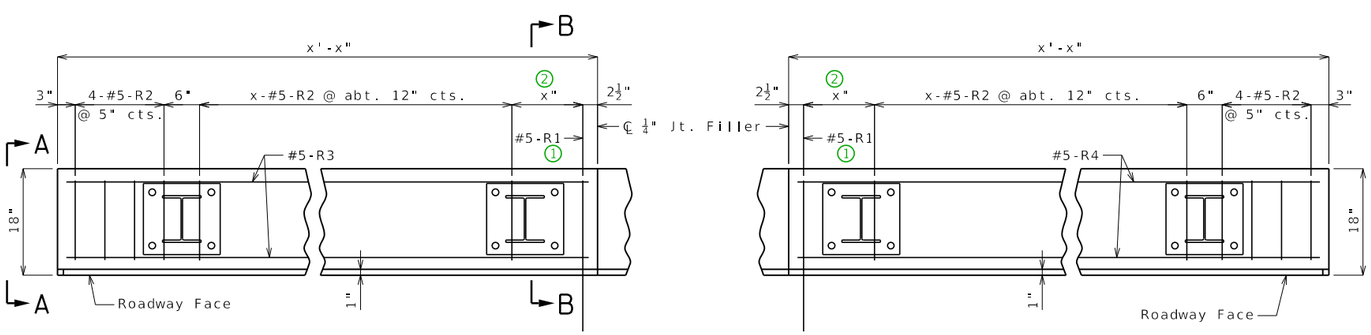

PART PLAN OF LEFT CURB AT END BENTS SHOWING REINFORCEMENT

Right curb similar. Rail not shown for clarity.

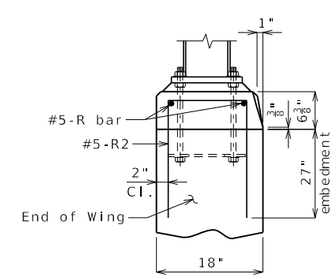

ELEVATION A-A

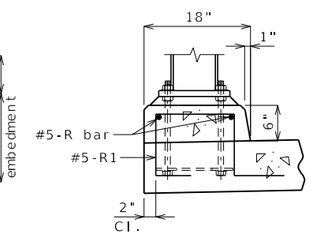

SECTION B-B

Note: Work this sheet with Sheet No. .

38-INCH TWO-TUBE RAIL

Detailed
Checked

Note: This drawing is not to scale. Follow dimensions.

Sheet No. of

DATE PREPARED	1/23/2024
ROUTE	STATE MO
DISTRICT	SHEET NO. 005
COUNTY	
JOB NO.	
CONTRACT ID.	
PROJECT NO.	
BRIDGE NO.	

DESCRIPTION

DATE

MISSOURI HIGHWAYS AND TRANSPORTATION COMMISSION
105 WEST CAPITOL
JEFFERSON CITY, MO 65102
1-888-ASK-MODOT (1-888-275-6636)

TTR05 Guidance & Alternate Details

Standard Drawing Guidance (Do not show on plans)

① Large skews may require additional R1 bars.

② 6" min., 12" max. to avoid anchor bolts by $1\frac{1}{2}$" min.

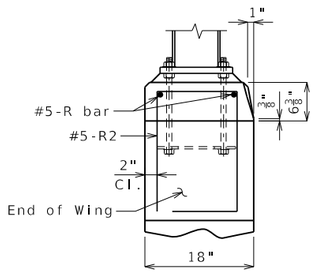

ELEVATION A-A

Use for shallow superstructure where 27" embedment is not possible. (Shape 6 with E=12")

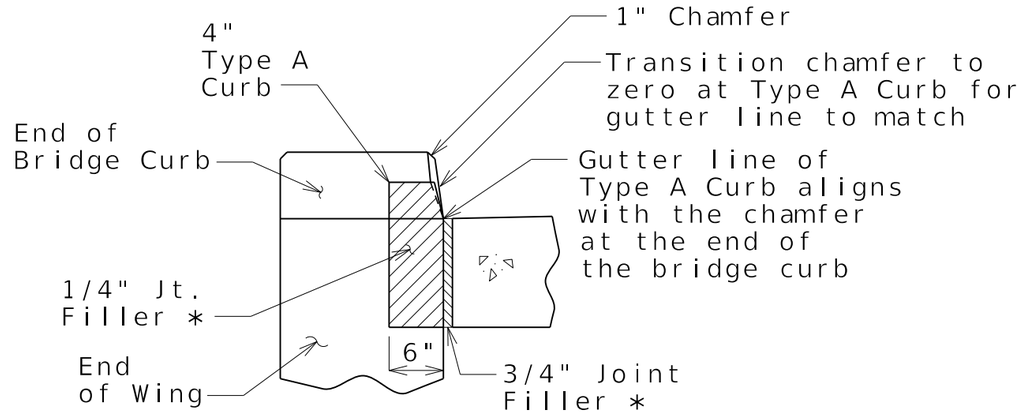

SECTION BETWEEN CURBS

Copy and paste this detail to Bridge Approach Slab sheet to replace Section Between Curb and Barrier. This detail is scaled to match the scale of the MAJOR Bridge Approach Slab sheets.

Post spacing guidance:

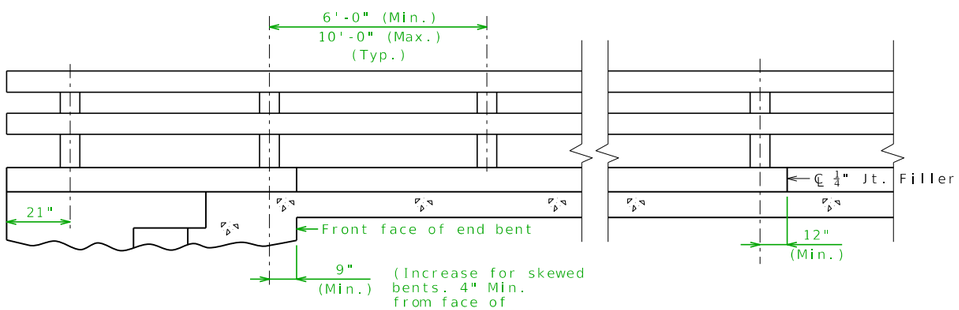

AT END BENT

AT INT. BENT

(1/4" joint at ℄ Bent only)

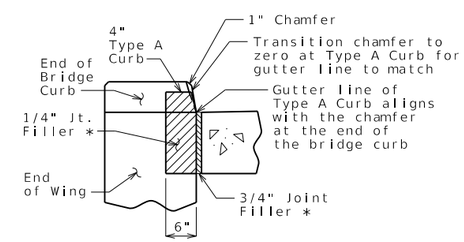

SECTION BETWEEN CURBS

Copy and paste this detail to Bridge Approach Slab sheet to replace Section Between Curb and Barrier. This detail is scaled to match the scale of the MINOR Bridge Approach Slab sheet.

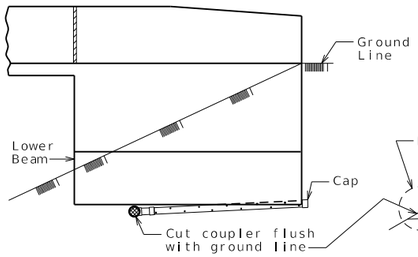

ELEVATION OF WING

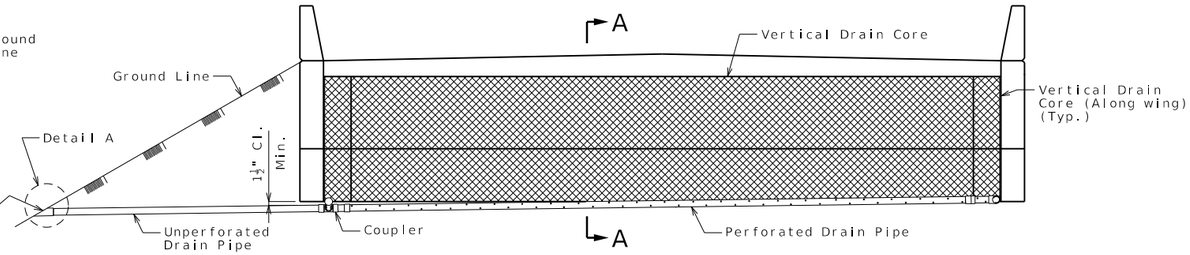

ELEVATION OF END BENT

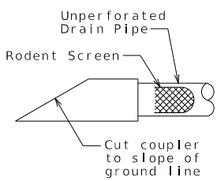

DETAIL A

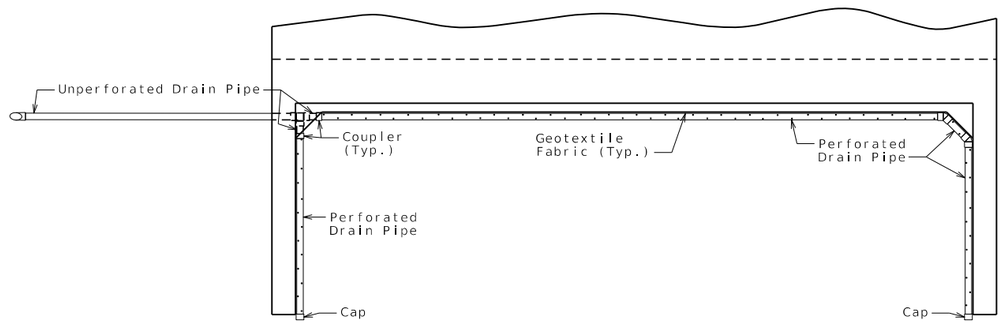

PLAN OF END BENT

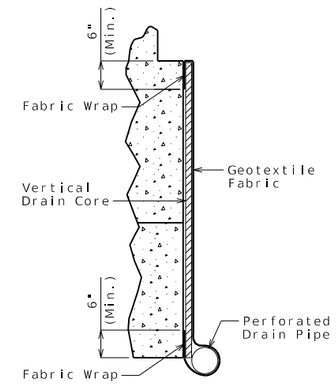

PART SECTION A-A
(Section thru wing similar)

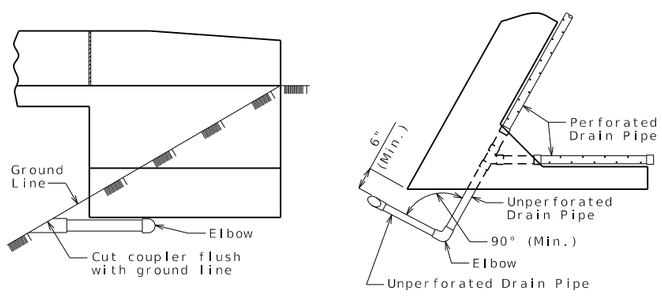

ELEVATION OF WING PART PLAN

OPTIONAL TURNED DRAIN
(Use only when straight drain is not practical.)

Standard Drawing Guidance (do not show on plans):

Remove details that do not apply.

Revising for skewed end bent is not necessary nor required unless unusual details of drainage need to be shown.

For end bents with intermediate wing, see Bridge Standard Drawing sheet DRAIN03.

If the drain pipe discharges onto soil, front or side slope (Case 3 and 4 of Standard Plan 609.40), and discharges at greater then 20 feet above the toe of slope, then the possible erosion of the slope should be considered and prevention coordinated with the district.

Possible solutions:

A. Provide a drain flume consistent with 609.40.

B. Extend the drain to the toe of slope using the following note (or similar) added to the general notes:

The unperforated drain pipe shall be extended parallel to the slope at a depth of 30 inches until the drain discharges onto rock blanket or the ditch flowline.

C. Add a detail showing the drain extension.

General Notes:

All drain pipe shall be sloped 1 to 2 percent.

Drain pipe may be either 6-inch diameter corrugated metallic-coated steel pipe underdrain, 4-inch diameter corrugated polyvinyl chloride (PVC) drain pipe, or 4-inch diameter corrugated polyethylene (PE) drain pipe.

Drain pipe shall be placed at fill face of end bent and inside face of wings. The pipe shall slope to lowest grade of ground line, also missing the lower beam of end bent by a minimum of 1 1/2 inches.

Perforated pipe shall be placed at fill face side and inside face of wings at the bottom of end bent and plain pipe shall be used where the vertical drain ends to the exit at ground line.

VERTICAL DRAIN AT END BENTS
(Squared end bent shown, skewed end bent similar)

Detailed
Checked

Note: This drawing is not to scale. Follow dimensions.

Sheet No. of

DATE PREPARED	10/17/2023
ROUTE	STATE MO
DISTRICT	SHEET NO. 000
COUNTY	
JOB NO.	
CONTRACT ID.	
PROJECT NO.	
BRIDGE NO.	

DESCRIPTION	DATE

MISSOURI HIGHWAYS AND TRANSPORTATION COMMISSION
105 WEST CAPITOL
JEFFERSON CITY, MO 65102
1-888-ASK-MODOT (1-888-275-6636)

V_DRA01_i Alternate Details

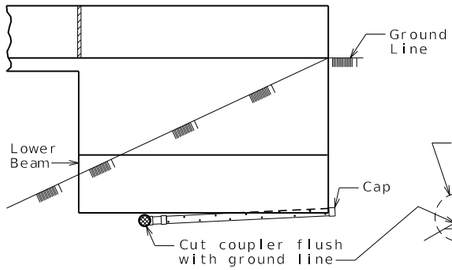

ELEVATION OF WING

USE FOR TYPE H OR B (SBC)

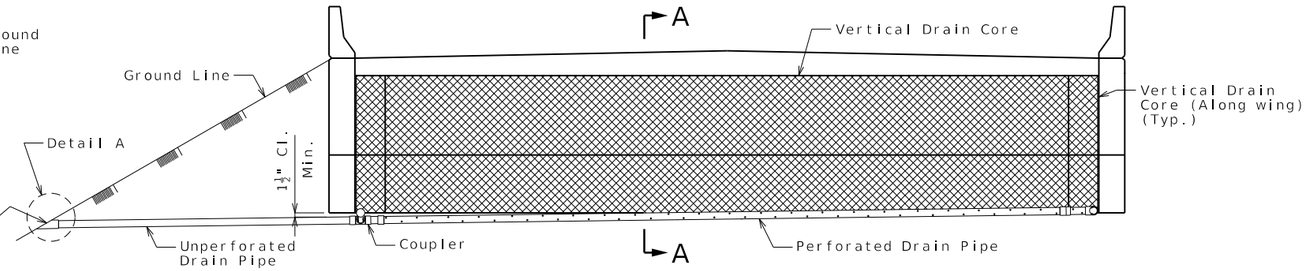

ELEVATION OF END BENT

USE FOR TYPE B BARRIER (SBC)

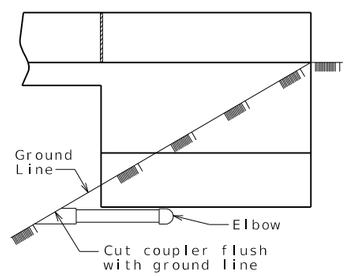

ELEVATION OF WING

USE FOR TYPE H OR B (SBC)

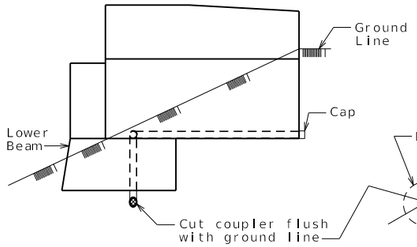

ELEVATION OF WING

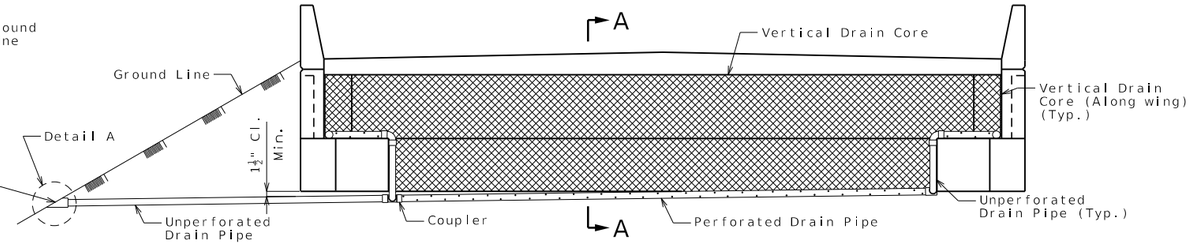

ELEVATION OF END BENT

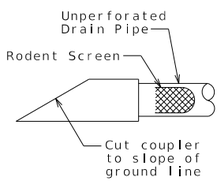

DETAIL A

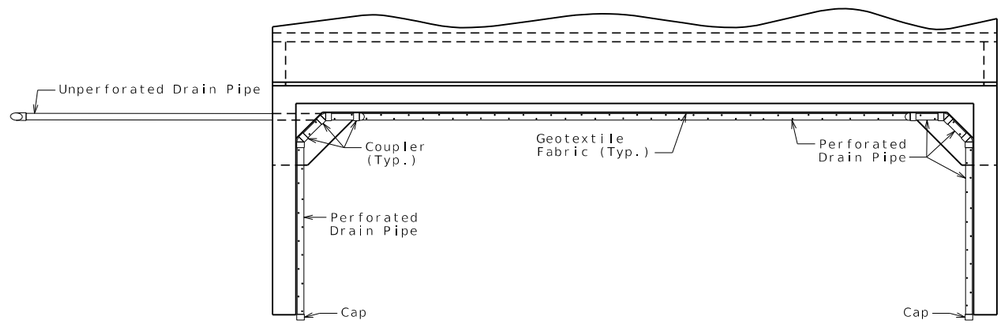

PLAN OF END BENT

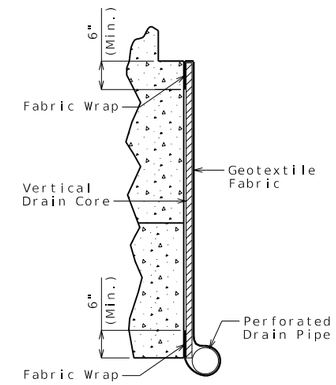

PART SECTION A-A
(Section thru wing similar)

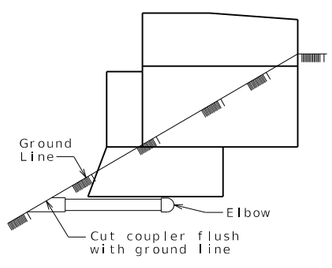

ELEVATION OF WING

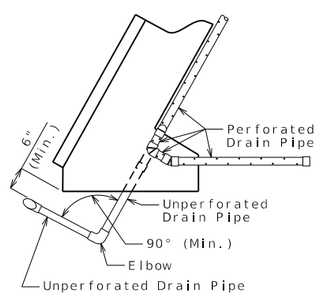

PART PLAN

OPTIONAL TURNED DRAIN
(Use only when straight drain is not practical.)

Standard Drawing Guidance (do not show on plans):

Remove details that do not apply.

Revising for skewed end bent is not necessary nor required unless unusual details of drainage need to be shown.

If the drain pipe discharges onto soil, front or side slope (Case 3 and 4 of Standard Plan 609.40), and discharges at greater then 20 feet above the toe of slope, then the possible erosion of the slope should be considered and prevention coordinated with the district.

Possible solutions:

A. Provide a drain flume consistent with 609.40.

B. Extend the drain to the toe of slope using the following note (or similar) added to the general notes:

The unperforated drain pipe shall be extended parallel to the slope at a depth of 30 inches until the drain discharges onto rock blanket or the ditch flowline.

C. Add a detail showing the drain extension.

General Notes:

All drain pipe shall be sloped 1 to 2 percent.

Drain pipe may be either 6-inch diameter corrugated metallic-coated steel pipe underdrain, 4-inch diameter corrugated polyvinyl chloride (PVC) drain pipe, or 4-inch diameter corrugated polyethylene (PE) drain pipe.

Drain pipe shall be placed at fill face of end bent and inside face of wings. The pipe shall slope to lowest grade of ground line, also missing the lower beam of end bent by a minimum of 1 1/2 inches.

Perforated pipe shall be placed at fill face side and inside face of wings at the bottom of end bent and plain pipe shall be used where the vertical drain ends to the exit at ground line.

VERTICAL DRAIN AT END BENTS

(Squared end bent shown, skewed end bent similar)

Detailed
Checked

Note: This drawing is not to scale. Follow dimensions.

Sheet No. of

DATE PREPARED	10/17/2023
ROUTE	STATE MO
DISTRICT	SHEET NO. 2
COUNTY	
JOB NO.	
CONTRACT ID.	
PROJECT NO.	
BRIDGE NO.	

DESCRIPTION	DATE

MISSOURI HIGHWAYS AND TRANSPORTATION COMMISSION
105 WEST CAPITOL
JEFFERSON CITY, MO 65102
1-888-ASK-MODOT (1-888-275-6636)

V_DRA02_ni Alternate Details

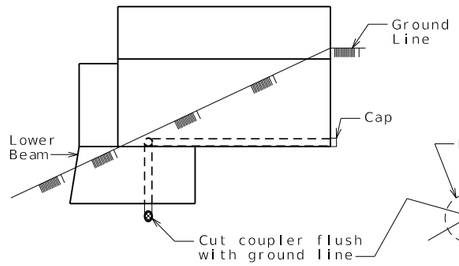

ELEVATION OF WING

USE FOR TYPE H OR B (SBC)

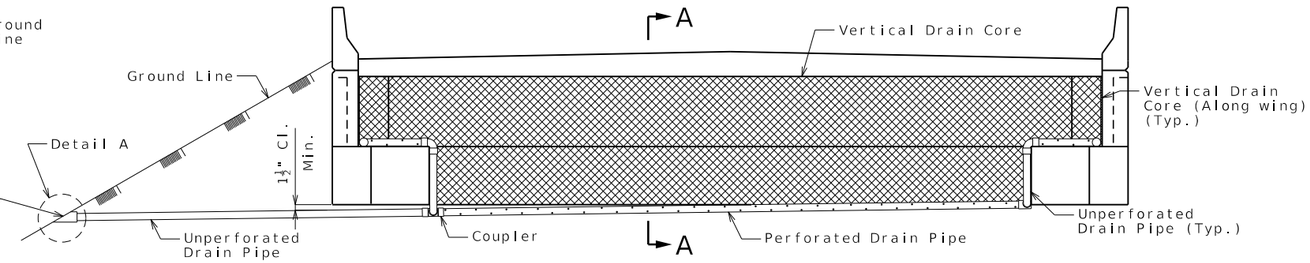

ELEVATION OF END BENT

USE FOR TYPE B BARRIER (SBC)

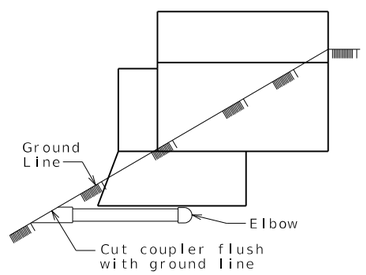

ELEVATION OF WING

USE FOR TYPE H OR B (SBC)

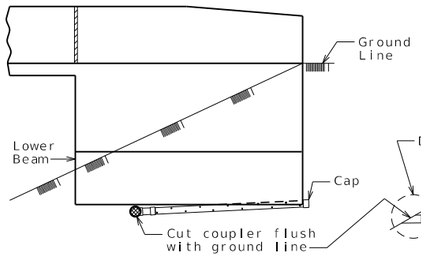

ELEVATION OF WING

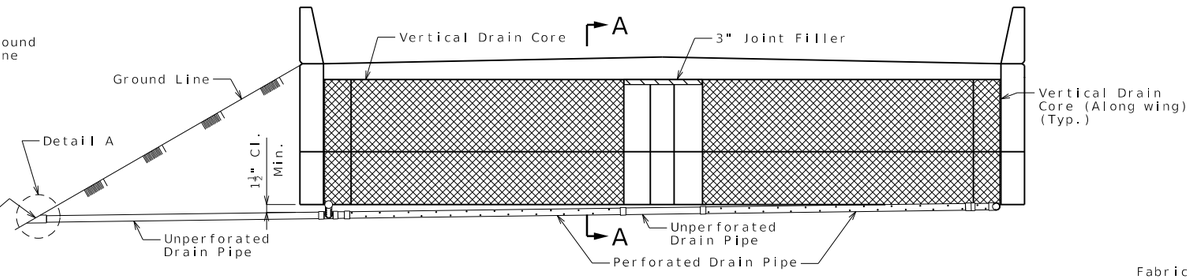

ELEVATION OF END BENT

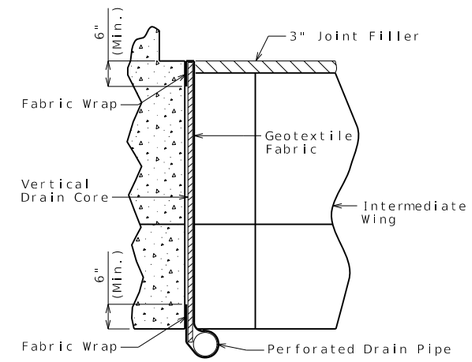

PART SECTION A-A
(Section thru wing similar)

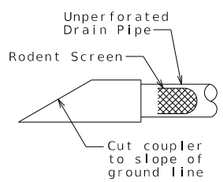

DETAIL A

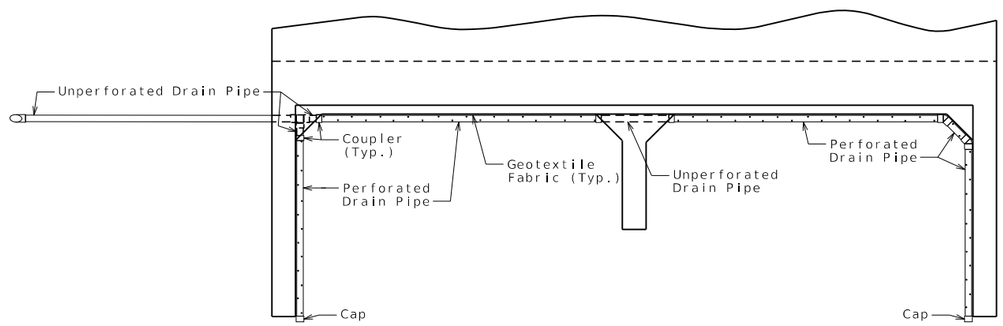

PLAN OF END BENT

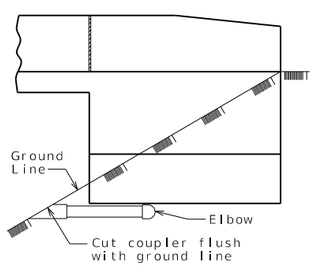

ELEVATION OF WING

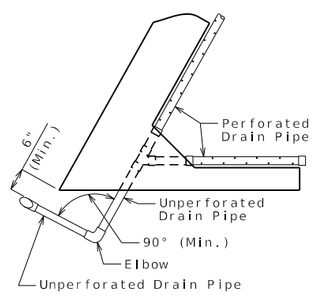

PART PLAN

OPTIONAL TURNED DRAIN
(Use only when straight drain is not practical.)

Standard Drawing Guidance (do not show on plans):

Remove details that do not apply.

Revising for skewed end bent is not necessary nor required unless unusual details of drainage need to be shown.

If the drain pipe discharges onto soil, front or side slope (Case 3 and 4 of Standard Plan 609.40), and discharges at greater then 20 feet above the toe of slope, then the possible erosion of the slope should be considered and prevention coordinated with the district.

Possible solutions:

A. Provide a drain flume consistent with 609.40.

B. Extend the drain to the toe of slope using the following note (or similar) added to the general notes:

The unperforated drain pipe shall be extended parallel to the slope at a depth of 30 inches until the drain discharges onto rock blanket or the ditch flowline.

C. Add a detail showing the drain extension.

General Notes:

All drain pipe shall be sloped 1 to 2 percent.

Drain pipe may be either 6-inch diameter corrugated metallic-coated steel pipe underdrain, 4-inch diameter corrugated polyvinyl chloride (PVC) drain pipe, or 4-inch diameter corrugated polyethylene (PE) drain pipe.

Drain pipe shall be placed at fill face of end bent and inside face of wings. The pipe shall slope to lowest grade of ground line, also missing the lower beam of end bent by a minimum of 1 1/2 inches.

Perforated pipe shall be placed at fill face side and inside face of wings at the bottom of end bent and plain pipe shall be used where the vertical drain ends to the exit at ground line.

VERTICAL DRAIN AT END BENTS
(Squared end bent shown, skewed end bent similar)

Detailed
Checked

Note: This drawing is not to scale. Follow dimensions.

Sheet No. of

DATE PREPARED	10/17/2023
ROUTE	STATE MO
DISTRICT	SHEET NO. 3
COUNTY	
JOB NO.	
CONTRACT ID.	
PROJECT NO.	
BRIDGE NO.	

DESCRIPTION	DATE

MISSOURI HIGHWAYS AND TRANSPORTATION COMMISSION
105 WEST CAPITOL
JEFFERSON CITY, MO 65102
1-888-ASK-MODOT (1-888-275-6636)

V_DRA03_midwing Alternate Details

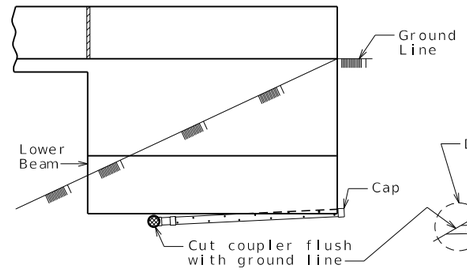

ELEVATION OF WING

USE FOR TYPE H OR B (SBC)

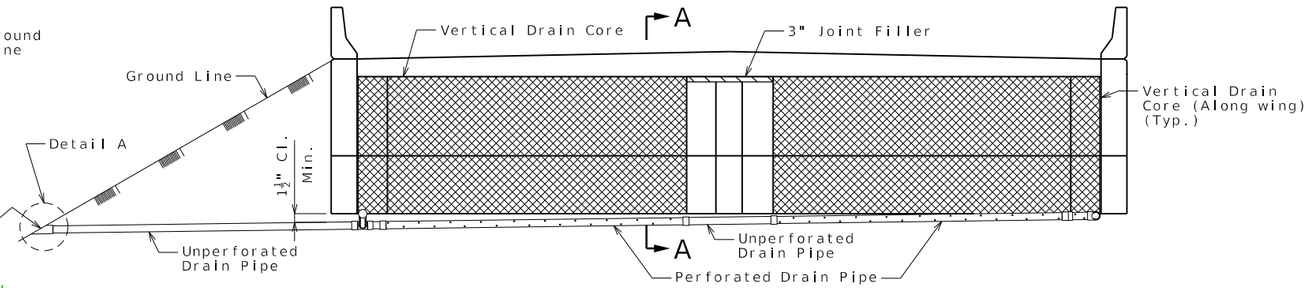

ELEVATION OF END BENT

USE FOR TYPE B BARRIER (SBC)

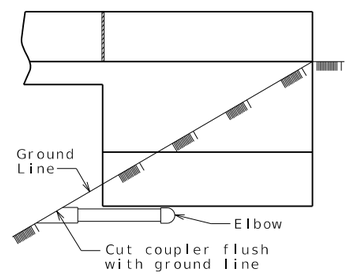

ELEVATION OF WING

USE FOR TYPE H OR B (SBC)