MISSOURI
HIGHWAYS and TRANSPORTATION
COMMISSION

JEFFERSON CITY, MISSOURI

SUPPLEMENTAL PLANS TO JULY 2021 MISSOURI STANDARD
PLANS FOR HIGHWAY CONSTRUCTION

EFFECTIVE January 1, 2022

EFFECTIVE: 01/01/2022

MISSOURI HIGHWAYS AND TRANSPORTATION COMMISSION

MISSOURI STANDARD PLANS FOR HIGHWAY CONSTRUCTION

TABLE OF CONTENTS

STANDARD NO.	DRAWING TITLE	NO. OF SHEETS	EFFECTIVE DATE
203.00E	EXCAVATION AND EMBANKMENT - TYPICAL DETAILS	1	08/01/1998
203.02F	UNDERGRADING - TYPICAL DETAILS	2	01/01/2004
203.10D	TABULATED EARTHWORK AND SECTION DATA	1	02/01/2009
203.20G	SUPERELEVATION, SPIRALS AND WIDENING (UNDIVIDED HIGHWAY)	4	07/01/2017
203.21K	SUPERELEVATION, SPIRALS AND WIDENING (DIVIDED HIGHWAY)	3	07/01/2017
203.22	SUPERELEVATION, SPIRALS AND WIDENING	2	07/01/2017
203.35A	MAILBOX TURNOUTS	1	08/01/1981
203.40G	TYPICAL DETAILS ON AND OFF RAMPS	2	10/01/2007
203.41F	TYPICAL DETAILS ON AND OFF RAMPS (ROADWAY WITH 6:1 FORESLOPE)	2	01/01/1995
203.50N	TYPICAL MEDIAN OPENINGS (DIVIDED HIGHWAYS)	2	04/01/2016
203.61A	DRIVEWAY - TYPE I	1	07/01/2004
203.62D	DRIVEWAY - TYPE II	2	04/01/2017
203.63B	DRIVEWAY - TYPE III	2	04/01/2017
203.64D	DRIVEWAY - TYPE IV	2	04/01/2017
203.65A	DRIVEWAY - TYPE V	1	10/01/1998
204.00D	EMBANKMENT CONTROL - MEASURING DEVICES	1	04/01/1983
204.30	PORE PRESSURE MEASUREMENT DEVICES	1	03/01/1996
401.00B	TYPE A2 AND A3 SHOULDERS, SAFETY EDGE SM	3	04/01/2018
413.20	SCRUB SEAL BROOM CONFIGURATION	1	07/01/2004
502.05P	CONCRETE PAVEMENT AND BASE APPURTENANCES FOR 15 FT. JOINT SPACING	4	10/01/2020
502.10K	DOWEL SUPPORTING UNITS	2	06/01/2010
504.00K	CONCRETE APPROACH PAVEMENT ✳	3	10/01/2021
506.20	BIG BLOCK UNBONDED CONCRETE OVERLAY	1	07/01/2021
602.00D	RIGHT-OF-WAY AND DRAIN MARKERS	2	01/01/2003
604.05D	PIPE CULVERT HEADWALLS - TYPE S	2	08/01/2006
604.10E	PIPE CULVERT HEADWALL - ENERGY DISSIPATOR FOR 18" CONCRETE PIPE	1	07/01/2001
604.11E	PIPE CULVERT HEADWALL - ENERGY DISSIPATOR FOR 24" CONCRETE PIPE	1	07/01/2001
604.12E	PIPE CULVERT HEADWALL - ENERGY DISSIPATOR FOR 30" CONCRETE PIPE	1	07/01/2001
604.13E	PIPE CULVERT HEADWALL - ENERGY DISSIPATOR FOR 36" CONCRETE PIPE	1	07/01/2001
604.14E	PIPE CULVERT HEADWALL - ENERGY DISSIPATOR FOR 42" CONCRETE PIPE	1	07/01/2001
604.15E	PIPE CULVERT HEADWALL - ENERGY DISSIPATOR FOR 48" CONCRETE PIPE	1	07/01/2001
604.29C	DROP INLET - TYPE X	2	04/01/2018
604.30G	CONCRETE MANHOLES	2	02/01/2009
604.40G	PIPE COLLARS	2	07/01/2021
604.70	SLOTTED DRAIN	2	03/01/1994
605.10I	PAVEMENT UNDERDRAINAGE	4	06/01/2013
606.00AY	GUARDRAIL	7	01/01/2020
606.01F	MEDIAN PIER PROTECTION	9	04/01/2021
606.22U	BRIDGE ANCHOR SECTION - SAFETY BARRIER CURB ON BRIDGE	6	07/01/2016
606.23J	BRIDGE ANCHOR SECTION (THRIE BEAM RAIL ON BRIDGE)	5	07/01/2016
606.30L	GUARDRAIL - TERMINAL ANCHOR ENDS	7	04/01/2021
606.31B	CRASHWORTHY END TERMINALS - TYPE A - GRADING LIMITS	1	10/01/2019
606.40D	ONE-STRAND ACCESS RESTRAINT CABLE	2	07/01/2004
606.41M	THREE-STRAND GUARD CABLE	7	04/01/2021
606.50D	MIDWEST GUARDRAIL SYSTEM (MGS)	8	04/01/2021
606.51	MIDWEST GUARDRAIL SYSTEM (MGS) - MEDIAN PIER PROTECTION ✳	2	04/01/2021
606.60B	MIDWEST GUARDRAIL SYSTEM (MGS) - VERTICAL BARRIER TRNSITIONS	6	07/01/2021
606.70B	MIDWEST GUARDRAIL SYSTEM (MGS) - THRIE BEAM RAIL ON BRIDGE	5	04/01/2018
606.80C	MIDWEST GUARDRAIL SYSTEM (MGS) - TERMINAL ANCHOR ENDS	7	07/01/2021
606.81B	MASH - CRASHWORTHY END TERMINALS - TYPE A - GRADING LIMITS	1	10/01/2019
607.10V	CHAIN-LINK FENCE	1	02/01/2007
607.11H	CHAIN-LINK FENCE FOR RETAINING WALLS	1	06/01/2009
607.20G	WOVEN WIRE FENCE	2	07/01/2016
608.00J	PAVED APPROACHES	2	04/01/2020
608.10P	CONCRETE SIDEWALK	1	04/01/2015
608.20E	CONCRETE STAIRS	2	04/01/2015
608.30A	CONCRETE MEDIAN STRIP	1	10/01/2020
608.40A	HANDRAILING	4	01/01/2021
608.50	CURB RAMPS	4	04/01/2015
609.00P	CONCRETE CURB, CURB AND GUTTER AND GUTTER	2	04/01/2021
609.15D	PAVED DITCHES	1	07/01/2016
609.40S	DRAIN BASIN, SHOULDER PAVING AND FILL SLOPES AT BRIDGE ENDS ✳	3	01/01/2022
609.60C	ROCK DITCH LINER	1	03/01/1993
609.70C	ROCK LINING FOR CULVERT OUTLET	1	10/01/1981
611.60R	CONCRETE SLOPE PROTECTION	1	07/01/2015
612.20E	SAND FILLED IMPACT ATTENUATORS	1	10/01/2018
613.00T	PAVEMENT REPAIR	4	01/01/2020
614.10U	GRATES AND BEARING PLATES ✳	1	10/01/2021
614.11D	CURVED VANE GRATE AND FRAME	1	01/01/2021
614.30E	MANHOLE FRAMES AND COVERS	2	03/01/1996
616.10AY	TEMPORARY TRAFFIC CONTROL DEVICES ✳	9	01/01/2022
616.20	TEMPORARY TRAFFIC CONTROL PLANS - TWO-LANE ROADWAYS	5	07/01/2021
617.10M	PERMANENT CONCRETE TRAFFIC BARRIER	11	10/01/2020
617.20F	TEMPORARY CONCRETE TRAFFIC BARRIER	8	01/01/2021
619.10J	PAVEMENT EDGE TREATMENT	1	10/01/2017
620.00M	PAVEMENT MARKING ✳	6	10/01/2021
620.10G	TEMPORARY PAVEMENT MARKING	5	07/01/2017
625.00	HOLE PATTERN FOR PAVEMENT SLAB STABILIZATION	1	10/01/1998
626.00H	RUMBLE STRIPS	2	04/01/2009

✳ REVISED OR ADDED SINCE JULY 2021

IF A SEAL IS PRESENT ON THIS SHEET IT HAS BEEN ELECTRONICALLY SEALED AND DATED.

EFFECTIVE: 01/01/2022

MISSOURI HIGHWAYS AND TRANSPORTATION COMMISSION

MISSOURI STANDARD PLANS FOR HIGHWAY CONSTRUCTION

TABLE OF CONTENTS

STANDARD NO.	DRAWING TITLE	NO. OF SHEETS	EFFECTIVE DATE
703.10J	CONCRETE SINGLE BOX CULVERT - STRAIGHT WINGS (SQUARED)	3	01/01/2021
703.11J	CONCRETE SINGLE BOX CULVERT - FLARED WINGS (SQUARED)	3	01/01/2021
703.12J	CONCRETE SINGLE BOX CULVERT - STRAIGHT WINGS (LEFT ADVANCE)	3	01/01/2021
703.13J	CONCRETE SINGLE BOX CULVERT - FLARED WINGS (LEFT ADVANCE)	3	01/01/2021
703.14J	CONCRETE SINGLE BOX CULVERT - STRAIGHT WINGS (RIGHT ADVANCE)	3	01/01/2021
703.15E	CONCRETE SINGLE BOX CULVERT - FLARED WINGS (RIGHT ADVANCE)	3	01/01/2021
703.16	CONCRETE SINGLE BOX CULVERT - CUT SECTION	1	01/01/2021
703.17	CONCRETE SINGLE BOX CULVERT - MEMBER SIZES AND REINFORCEMENT	14	04/01/2011
703.37C	CONCRETE BOX CULVERT - EXTERIOR WING REINFORCEMENT	2	04/01/2011
703.38A	CONCRETE BOX CULVERT - CUTTING DETAILS	2	10/01/2009
703.40H	CONCRETE DOUBLE BOX CULVERT - STRAIGHT WINGS (SQUARED)	3	01/01/2021
703.41H	CONCRETE DOUBLE BOX CULVERT - FLARED WINGS (SQUARED)	3	01/01/2021
703.42H	CONCRETE DOUBLE BOX CULVERT - STRAIGHT WINGS (LEFT ADVANCE)	3	01/01/2021
703.43H	CONCRETE DOUBLE BOX CULVERT - FLARED WINGS (LEFT ADVANCE)	3	01/01/2021
703.44H	CONCRETE DOUBLE BOX CULVERT - STRAIGHT WINGS (RIGHT ADVANCE)	3	01/01/2021
703.45C	CONCRETE DOUBLE BOX CULVERT - FLARED WINGS (RIGHT ADVANCE)	3	01/01/2021
703.46	CONCRETE BOX CULVERT - CUT SECTION	1	01/01/2021
703.47	CONCRETE BOX CULVERT - MEMBER SIZES AND REINFORCEMENT	27	10/01/2011
703.60E	CONCRETE BOX STRUCTURE - PIPE INLET	1	07/01/2001
703.80H	CONCRETE TRIPLE BOX CULVERT - STRAIGHT WINGS (SQUARED)	3	01/01/2021
703.81H	CONCRETE TRIPLE BOX CULVERT - FLARED WINGS (SQUARED)	3	01/01/2021
703.82H	CONCRETE TRIPLE BOX CULVERT - STRAIGHT WINGS (LEFT ADVANCE)	3	01/01/2021
703.83H	CONCRETE TRIPLE BOX CULVERT - FLARED WINGS (LEFT ADVANCE)	3	01/01/2021
703.84H	CONCRETE TRIPLE BOX CULVERT - STRAIGHT WINGS (RIGHT ADVANCE)	3	01/01/2021
703.85C	CONCRETE TRIPLE BOX CULVERT - FLARED WINGS (RIGHT ADVANCE)	3	01/01/2021
703.86	CONCRETE TRIPLE BOX CULVERT - CUT SECTION	1	01/01/2021
703.87	CONCRETE TRIPLE BOX CULVERT - MEMBER SIZES AND REINFORCEMENT	27	12/01/2011
706.35H	BAR SUPPORTS FOR CONCRETE REINFORCEMENT	1	07/01/2004
712.40L	STEEL DAMS AT EXPANSION DEVICES	1	10/01/2019
725.00C	CORRUGATED METAL PIPE INSTALLATION METHODS	5	04/01/2011
725.31C	METAL CURTAIN WALL AND METAL INLETS	1	07/01/2004
726.30J	RIGID CULVERT INSTALLATION METHODS	2	04/01/2015
730.00E	THERMOPLASTIC PIPE INSTALLATION METHODS	1	04/01/2015
731.00U	PRECAST MANHOLES	2	07/01/2016
731.10S	PRECAST DROP INLET *	8	01/01/2022
732.00S	FLARED END SECTION	3	07/01/2021
732.05D	BEVELED PIPE END TREATMENT	2	07/01/2004
732.10H	SAFETY SLOPE END SECTION	3	01/01/2021
733.00	PRECAST CONCRETE BOX CULVERT TIES	1	07/01/2021
806.10J	TEMPORARY EROSION CONTROL MEASURES	6	04/01/2019
808.00	TYPICAL PLANTING ILLUSTRATIONS	3	07/01/2004
901.00AB	HIGHWAY LIGHTING - POLES, FOUNDATIONS & APPURTENANCES FOR 30′ M.H.	4	01/01/2021
901.01AJ	HIGHWAY LIGHTING - POLES, FOUNDATIONS & APPURTENANCES FOR 45′ M.H.	6	01/01/2021
901.02B	HIGHWAY LIGHTING - CABLE, CONDUIT AND TRENCHING	1	04/01/2002
901.30F	HIGHWAY LIGHTING - BASE MOUNTED CONTROL STATION	2	04/01/2005
901.80D	HIGHWAY LIGHTING - POWER SUPPLY ASSEMBLY - SECONDARY SERVICE	2	04/01/2002
901.85B	HIGHWAY LIGHTING SYMBOLS	1	04/01/2018
902.00P	TRAFFIC SIGNALS	2	04/01/2018
902.05	TRAFFIC SIGNALS - ACCESSIBLE PEDESTRIAN SIGNALS	2	04/01/2021
902.10Q	TRAFFIC SIGNALS - CONTROLLERS CONDUIT LOCATION	1	04/01/2005
902.15K	TRAFFIC SIGNALS - POWER SUPPLY ASSEMBLY	3	07/01/2004
902.20G	TRAFFIC SIGNALS - CONCRETE PULL BOXES	3	04/01/2019
902.21C	TRAFFIC SIGNALS - TELEPHONE INTERCONNECT	1	03/01/1996
902.30P	TRAFFIC SIGNALS - POST BASES	2	10/01/2018
902.40R	TRAFFIC SIGNALS - TUBULAR STEEL POSTS	3	04/01/2018
902.50M	TRAFFIC SIGNALS - INDUCTION LOOP DETECTORS	2	04/01/2020
902.70Q	TRAFFIC SIGNALS - RIGID SPAN WIRE DETAILS *	3	01/01/2022
902.80L	TRAFFIC SIGNALS - TRAFFIC SIGNAL SYMBOLS	1	04/01/2020
903.01J	STANDARD ARROW DETAILS	2	10/01/2016
903.02AP	HIGHWAY SIGNING	8	10/01/2019
903.03BN	POST INSTALLATIONS AND SIGN MOUNTING DETAILS	16	01/01/2021
903.04F	HIGHWAY SIGNING - WEIGH STATION	1	02/01/2012
903.05K	HIGHWAY SIGNING - TUBULAR SUPPORT STEEL - TYPE S, ONE TUBE	2	01/01/2021
903.06K	HIGHWAY SIGNING - TUBULAR SUPPORT STEEL - TYPE S, TWO TUBE	2	01/01/2021
903.07K	HIGHWAY SIGNING - TUBULAR SUPPORT STEEL - TYPE C	2	01/01/2021
903.08J	HIGHWAY SIGNING - TUBULAR SUPPORT STEEL - TYPE B	2	01/01/2021
903.10BD	OVERHEAD SIGN TRUSSES - ALUMINUM	6	01/01/2021
903.12AA	OVERHEAD SIGN TRUSSES - BUTTERFLY AND CANTILEVER STRUCTURAL STEEL	7	01/01/2021
903.60AC	OVERHEAD SIGN TRUSSES - STRUCTURAL STEEL	5	01/01/2021

* REVISED OR ADDED SINCE JULY 2021

IF A SEAL IS PRESENT ON THIS SHEET IT HAS BEEN ELECTRONICALLY SEALED AND DATED.

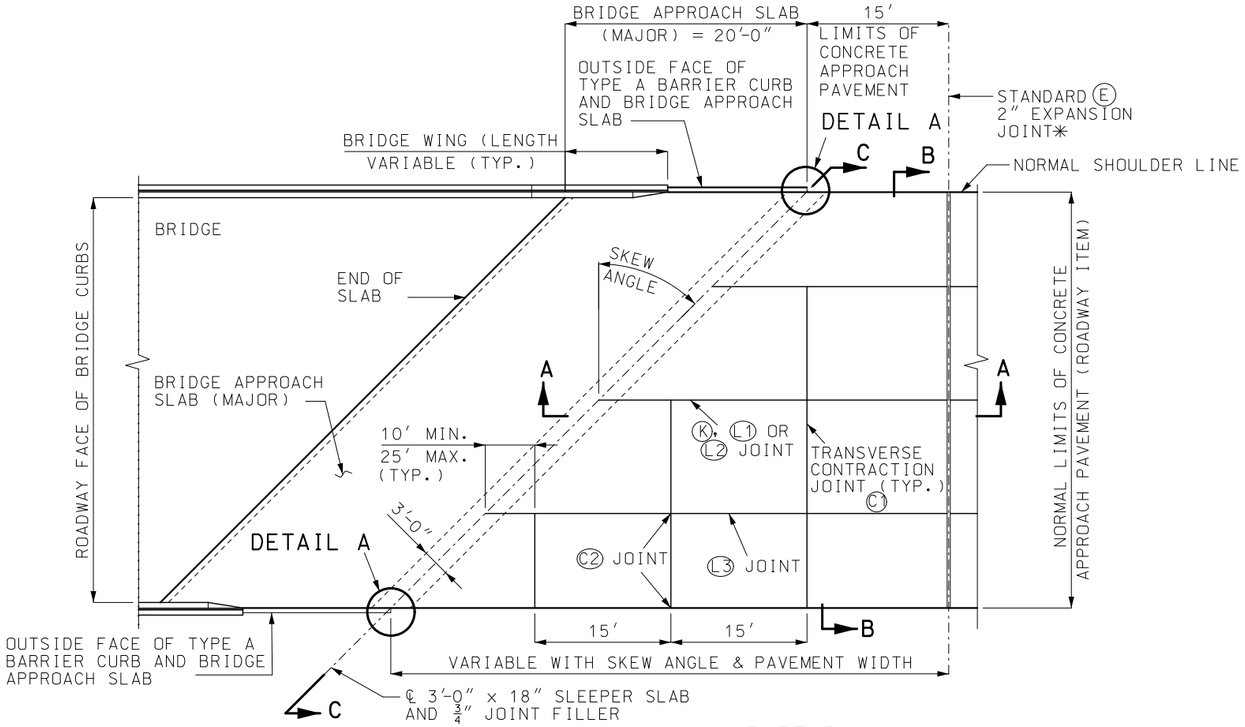

PART PLAN
(SKEWED)

* NOT REQUIRED WHEN ADJACENT PAVEMENT IS ASPHALT.

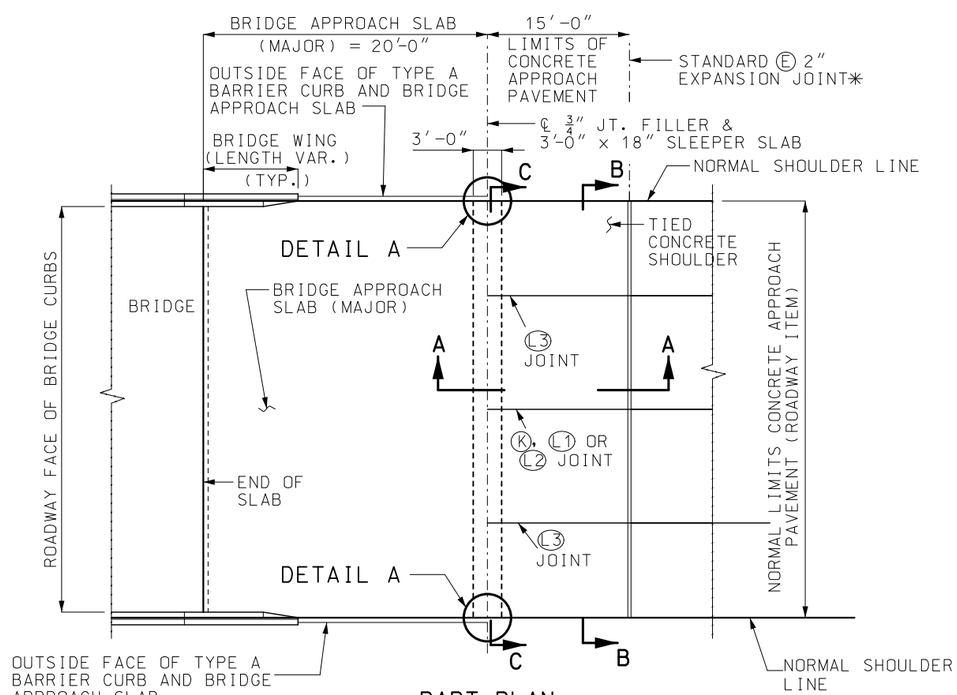

PART PLAN
(SQUARE)

SEE SHEET 2 OF 3 FOR DETAIL A.

FOR SECTIONS A-A, B-B AND C-C, SEE SHEET 3 OF 3.

GENERAL NOTES:

TYPE A CURB IS TO BE CONSTRUCTED WITH CONCRETE APPROACH PAVEMENT ONLY WHEN DRAIN BASINS ARE REQUIRED. TYPE A CURBS WILL BE CONSIDERED AS INCIDENTAL, AND WILL BE INCLUDED IN THE PAYMENT FOR CONCRETE APPROACH PAVEMENT.

FOR SHOULDER PAVING AND DRAIN BASINS AT BRIDGE ENDS, SEE STANDARD DRAWING NUMBER 609.40.

FOR TYPE A BARRIER CURBS, STANDARD 2" EXPANSION JOINTS, LONGITUDINAL JOINTS AND TONGUE AND GROOVE JOINTS, SEE STANDARD DRAWINGS NO. 502.00 AND 609.00.

FOR BRIDGE APPROACH SLAB, SLEEPER SLAB, AND JOINT FILLER DETAILS, SEE BRIDGE PLANS.

A PRE-FORMED FIBER EXPANSION JOINT MATERIAL SHALL BE PLACED WITH CONCRETE APPROACH PAVEMENT AND MEET THE REQUIREMENTS OF SECTION 1057 OF THE STANDARD SPECIFICATION FOR HIGHWAY CONSTRUCTION.

COST OF FURNISHING AND PLACEMENT OF 4" TYPE 5 AGGREGATE BASE AND ¾" JOINT FILLER IS INCLUDED IN CONTRACT UNIT BID PRICE FOR CONCRETE APPROACH PAVEMENT.

MISSOURI HIGHWAYS AND TRANSPORTATION COMMISSION
105 WEST CAPITOL
JEFFERSON CITY, MO 65102
1-888-ASK-MODOT (1-888-275-6636)

STATE OF MISSOURI
TRAVIS D. KOESTNER
NUMBER PE-30042
PROFESSIONAL ENGINEER
THIS SHEET HAS BEEN SIGNED, SEALED AND DATED ELECTRONICALLY.

CONCRETE APPROACH PAVEMENT

FOR TWO-LANE PAVEMENTS
(MAJOR ROUTE)

DATE EFFECTIVE: 10/01/2021
DATE PREPARED: 7/13/2021

504.00K

SHEET NO. 1 OF 3

IF A SEAL IS PRESENT ON THIS SHEET IT HAS BEEN ELECTRONICALLY SEALED AND DATED.

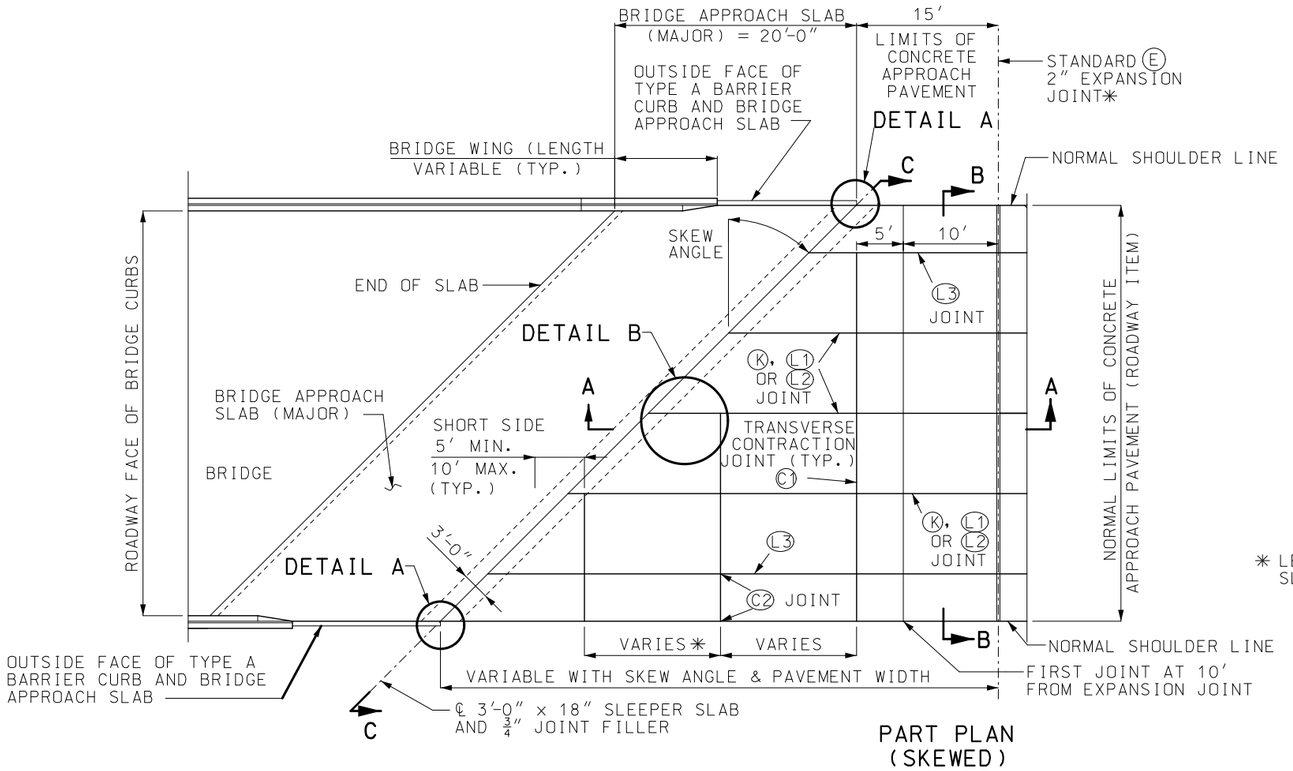

PART PLAN
(SKEWED)

NOTE:
SHORT SIDE OF SKEWED SLAB FOR ALL LANES NEXT TO BRIDGE APPROACH SLAB SHALL BE 5' TO 10'.

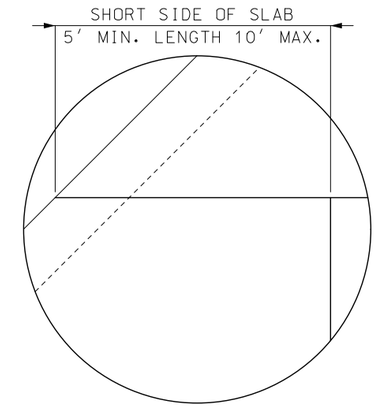

DETAIL B

✱ LENGTH OF RECTANGULAR SLABS BETWEEN SKEWED SLAB AND FIRST 10' SLAB SHALL BE 10' TO 15'.

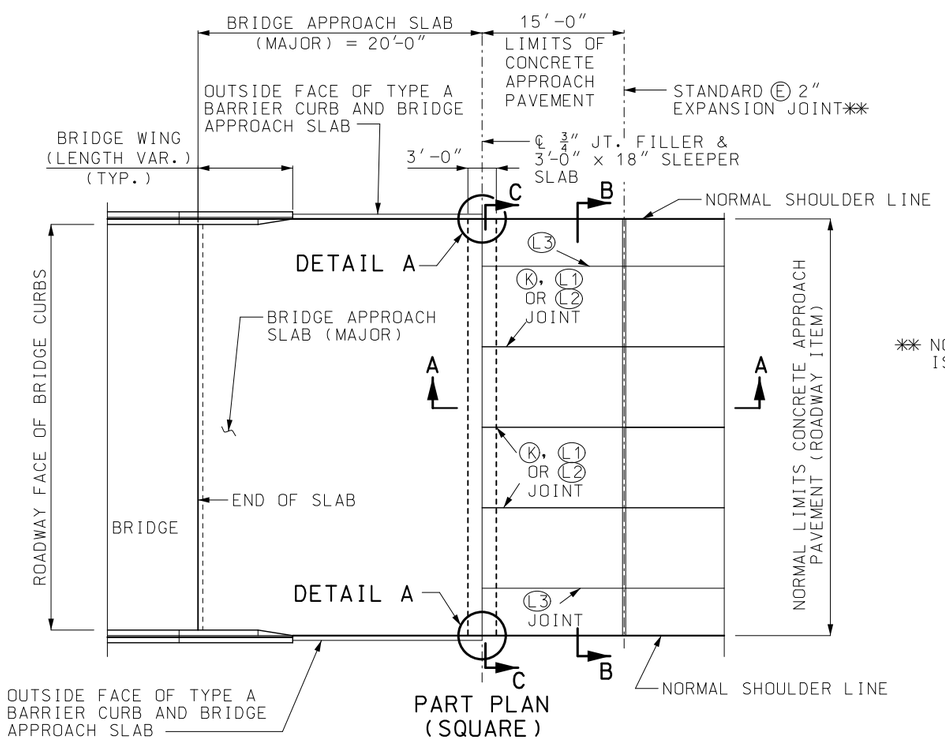

PART PLAN
(SQUARE)

✱✱ NOT REQUIRED WHEN ADJACENT PAVEMENT IS ASPHALT.

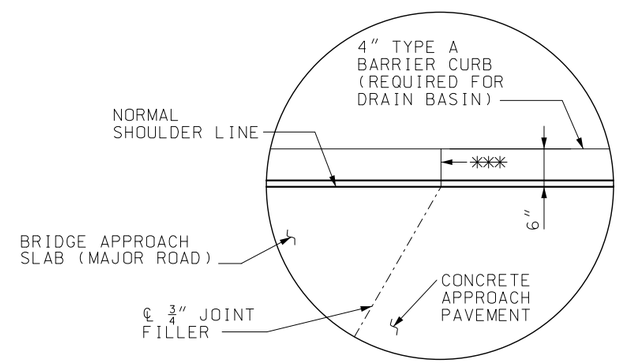

DETAIL A

✱✱✱ USE ¾" JOINT FILLER BETWEEN TYPE A CURBS

NOTE:
FOR SECTIONS A-A, B-B AND C-C, SEE SHEET 3 OF 3.

MISSOURI HIGHWAYS AND TRANSPORTATION COMMISSION
105 WEST CAPITOL
JEFFERSON CITY, MO 65102
1-888-ASK-MODOT (1-888-275-6636)

STATE OF MISSOURI
TRAVIS D. KOESTNER
NUMBER PE-30042
PROFESSIONAL ENGINEER
THIS SHEET HAS BEEN SIGNED, SEALED AND DATED ELECTRONICALLY.

CONCRETE APPROACH PAVEMENT
FOR MULTI-LANE PAVEMENTS
(MAJOR ROUTE)

DATE EFFECTIVE: 10/01/2021
DATE PREPARED: 7/13/2021

504.00K

SHEET NO. 2 OF 3

IF A SEAL IS PRESENT ON THIS SHEET IT HAS BEEN ELECTRONICALLY SEALED AND DATED.

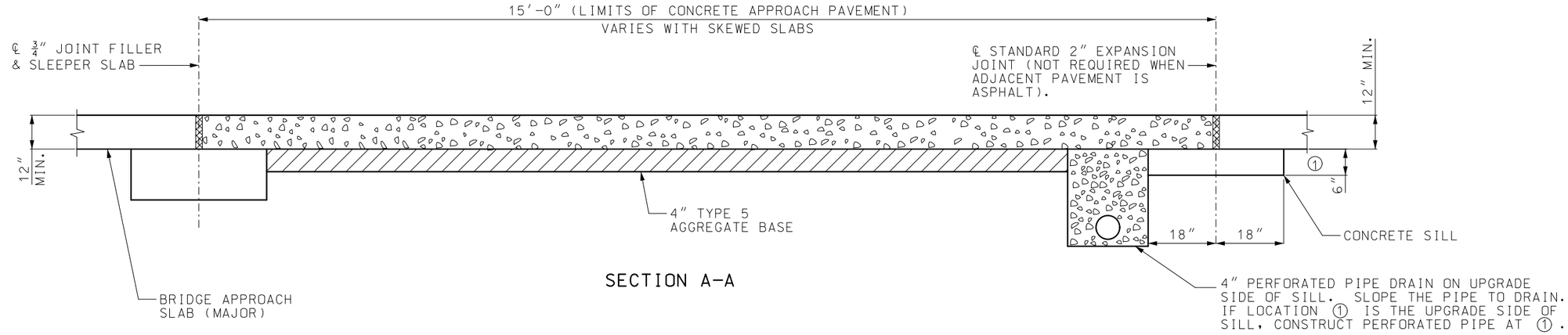

SECTION A-A

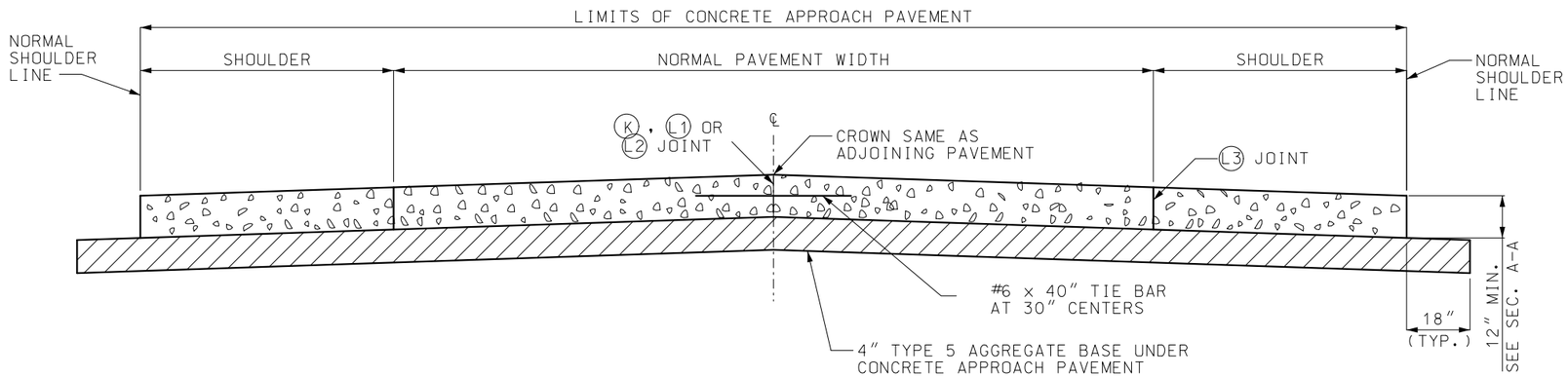

SECTION B-B

FOR LOCATIONS OF SECTIONS A-A, B-B AND C-C, SEE SHEETS 1 AND 2.

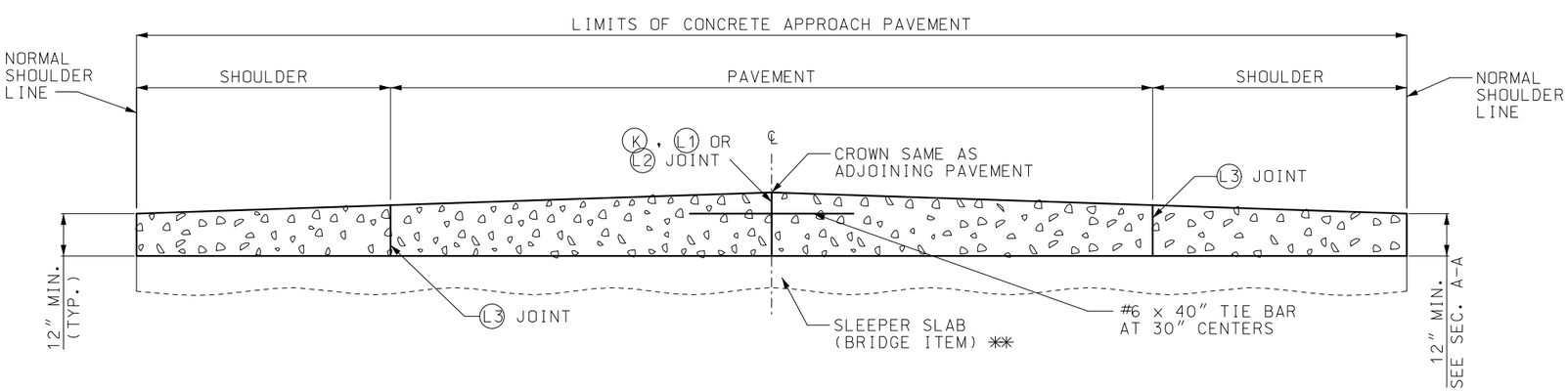

SECTION C-C

** TOP OF SLEEPER SLAB MAY BE FLAT OR CROWNED. SEE BRIDGE PLANS.

GENERAL NOTES:

SEE STANDARD DRAWING 605.10 FOR PIPE OUTLET DETAIL FROM SHOULDER POINT TO INSLOPE.

MISSOURI HIGHWAYS AND TRANSPORTATION COMMISSION
105 WEST CAPITOL
JEFFERSON CITY, MO 65102
1-888-ASK-MODOT (1-888-275-6636)

STATE OF MISSOURI
TRAVIS D. KOESTNER
NUMBER PE-30042
PROFESSIONAL ENGINEER
THIS SHEET HAS BEEN SIGNED, SEALED AND DATED ELECTRONICALLY.

CONCRETE APPROACH PAVEMENT (MAJOR ROUTE)

DATE EFFECTIVE: 10/01/2021
DATE PREPARED: 7/13/2021

504.00K

SHEET NO. 3 OF 3

IF A SEAL IS PRESENT ON THIS SHEET IT HAS BEEN ELECTRONICALLY SEALED AND DATED.

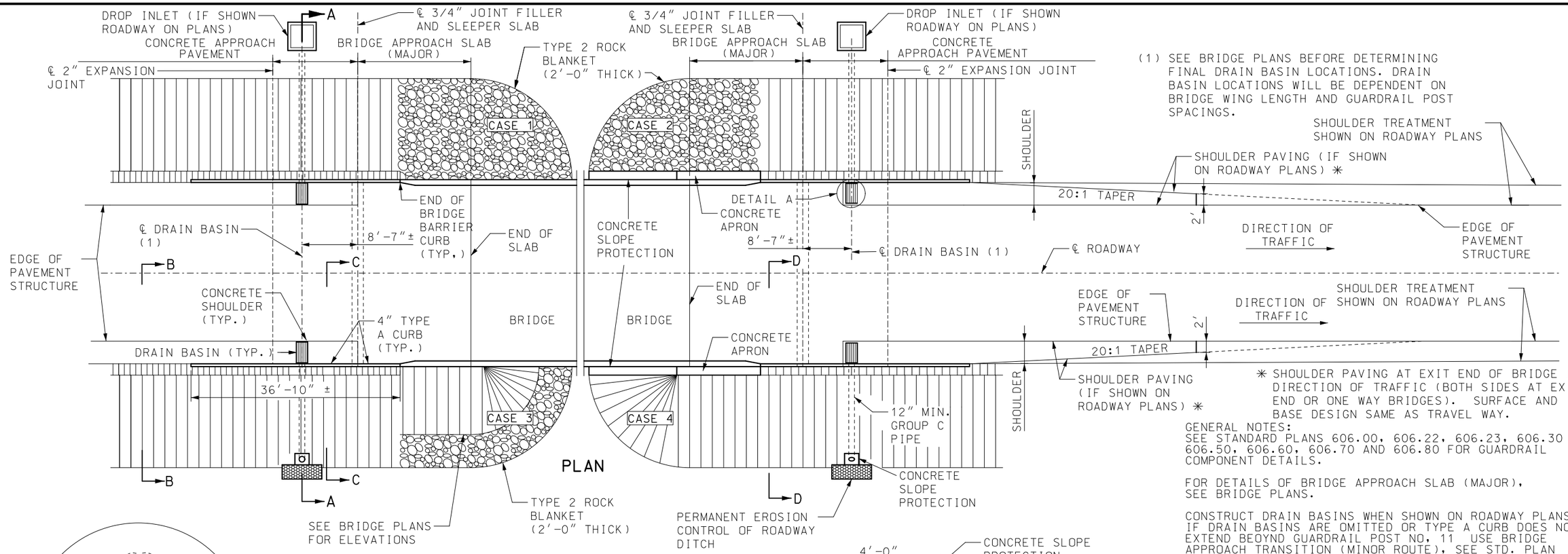

GENERAL NOTES:
SEE STANDARD PLANS 606.00, 606.22, 606.23, 606.30 606.50, 606.60, 606.70 AND 606.80 FOR GUARDRAIL COMPONENT DETAILS.

FOR DETAILS OF BRIDGE APPROACH SLAB (MAJOR), SEE BRIDGE PLANS.

CONSTRUCT DRAIN BASINS WHEN SHOWN ON ROADWAY PLANS. IF DRAIN BASINS ARE OMITTED OR TYPE A CURB DOES NOT EXTEND BEOYND GUARDRAIL POST NO. 11 USE BRIDGE APPROACH TRANSITION (MINOR ROUTE), SEE STD. PLAN 606.60 SHEET 2 OF 6.

TYPE A CURB IS TO BE CONSTRUCTED TO THE END OF THE BRIDGE APPROACH TRANSITION WHEN DRAIN BASINS ARE REQUIRED. SEE STANDARD PLANS 609.00 FOR TYPE A CURB.

SEE STANDARD PLANS 504.00 FOR DETAILS OF CONCRETE APPROACH PAVEMENT.

FOR DETAILS OF GRATES AND BEARING PLATES FOR DROP INLET, SEE STANDARD PLANS 614.10 AND 614.11.

FOR DETAILS OF DROP INLET FOR ROADWAY SURFACE, SEE STANDARD PLANS 731.10. USE TYPE A DROP INLET AND USE DEPTH OF DROP INLET AS SHOWN ON ROADWAY PLANS.

PAYMENT FOR DROP INLET, GRATE, GROUP C PIPE, CONCRETE SLOPE PROTECTION AT PIPE OUTLETS, MATERIAL AND INSTALLATION WILL BE PAID FOR AT THE CONTRACT UNIT PRICE FOR DRAIN BASIN PER EACH.

FOR DETAILS OF SECTION B-B, C-C AND D-D, SEE SHEET 2 OF 3.

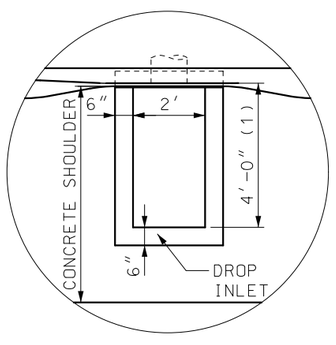

DETAIL A

CASE	FILL SLOPE PROTECTION
1	ROCK BLANKET FILL SLOPE
2	ROCK BLANKET FILL SLOPE WITH CONCRETE SLOPE PROTECTION
3	FILL SLOPE WITH PARTIAL ROCK BLANKET
4	FILL SLOPE WITH CONCRETE SLOPE PROTECTION

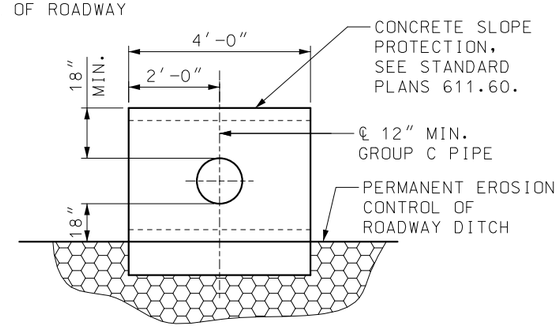

SECTION E-E

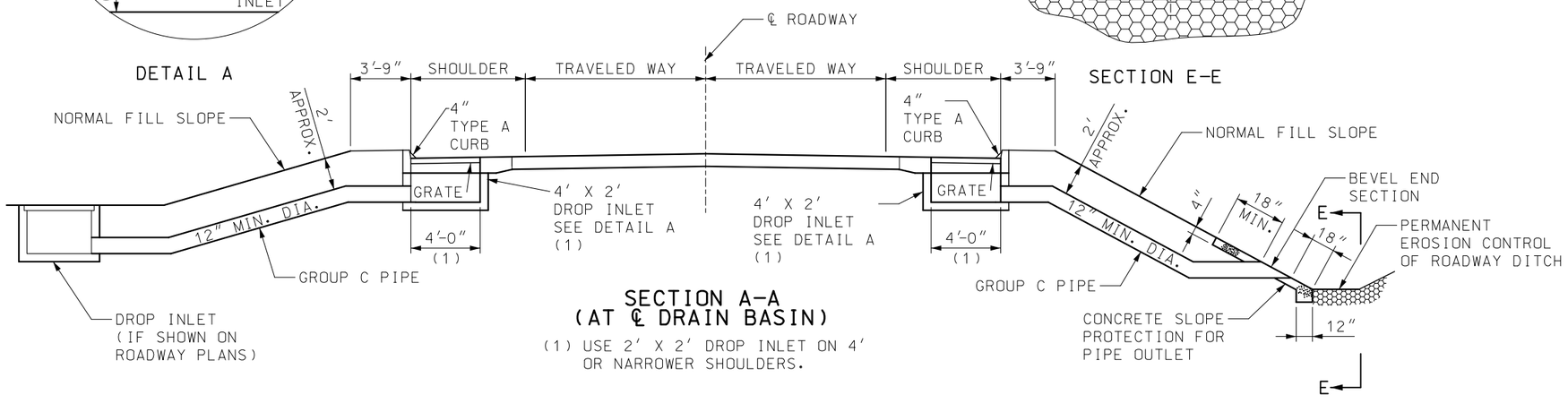

SECTION A-A
(AT ℄ DRAIN BASIN)

(1) USE 2' X 2' DROP INLET ON 4' OR NARROWER SHOULDERS.

MISSOURI HIGHWAYS AND TRANSPORTATION COMMISSION
105 WEST CAPITOL
JEFFERSON CITY, MO 65102
1-888-ASK-MODOT (1-888-275-6636)

STATE OF MISSOURI
TRAVIS D. KOESTNER
NUMBER PE-30042
PROFESSIONAL ENGINEER
THIS SHEET HAS BEEN SIGNED, SEALED AND DATED ELECTRONICALLY.

DRAIN BASIN, SHOULDER PAVING AND FILL SLOPES AT BRIDGE ENDS (MAJOR ROUTE)

DATE EFFECTIVE: 10/01/2021
DATE PREPARED: 7/13/2021

609.40S

SHEET NO. 1 OF 3

IF A SEAL IS PRESENT ON THIS SHEET IT HAS BEEN ELECTRONICALLY SEALED AND DATED.

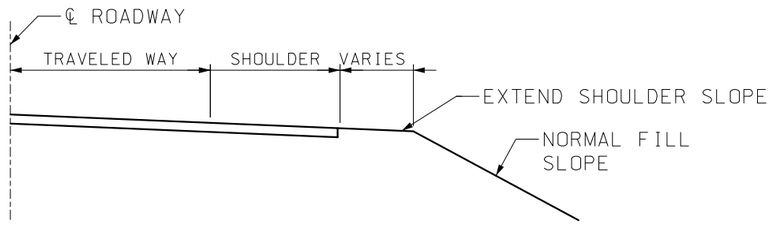

SECTION B-B

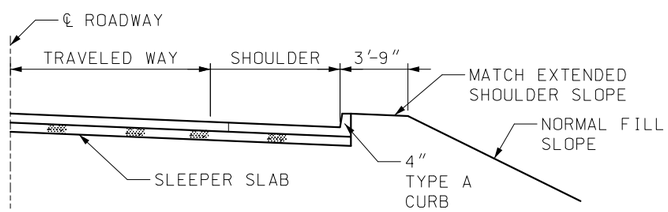

SECTION C-C

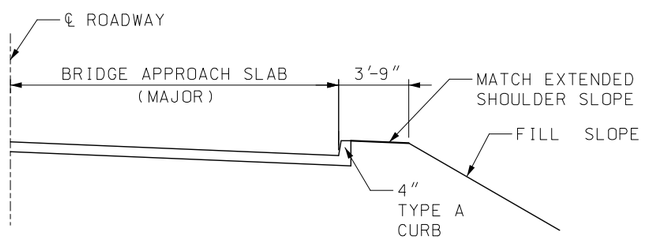

SECTION D-D

NOTE: FOR DETAILS NOT SHOWN, SEE OTHER SECTIONS.

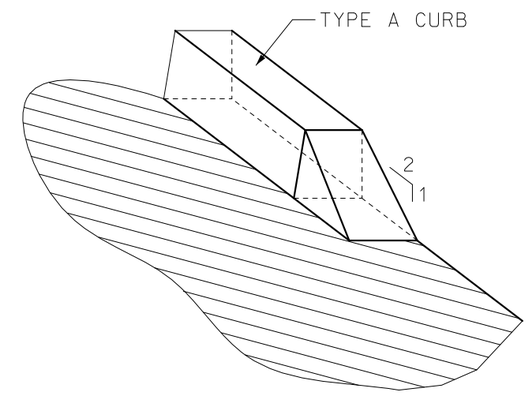

TYPE A CURB
TRANSITION DETAIL

GENERAL NOTE:

FOR LOCATION OF SEC. B-B, C-C AND D-D, SEE SHEET 1 OF 3.

MISSOURI HIGHWAYS AND TRANSPORTATION COMMISSION
105 WEST CAPITOL
JEFFERSON CITY, MO 65102
1-888-ASK-MODOT (1-888-275-6636)

STATE OF MISSOURI
TRAVIS D. KOESTNER
NUMBER PE-30042
PROFESSIONAL ENGINEER
THIS SHEET HAS BEEN SIGNED, SEALED AND DATED ELECTRONICALLY.

DRAIN BASIN, SHOULDER PAVING AND FILL SLOPE AT BRIDGE ENDS (MAJOR ROUTE)

DATE EFFECTIVE: 10/01/2021
DATE PREPARED: 7/13/2021

609.40S

SHEET NO. 2 OF 3

IF A SEAL IS PRESENT ON THIS SHEET IT HAS BEEN ELECTRONICALLY SEALED AND DATED.

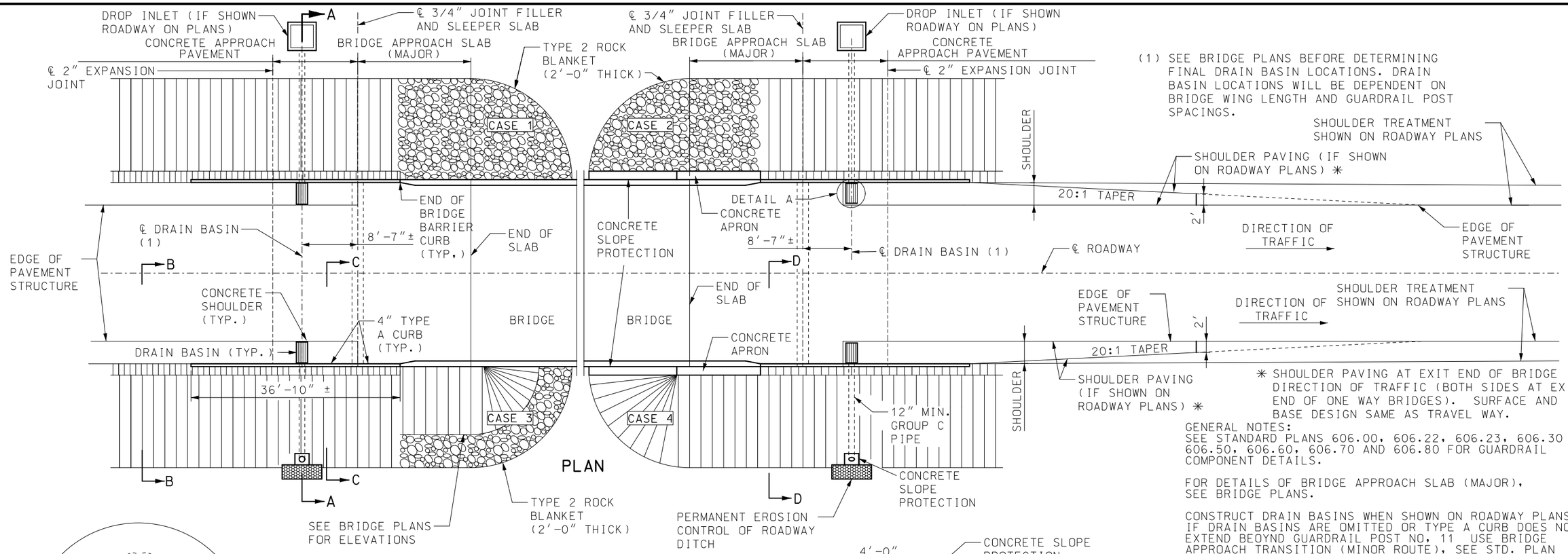

GENERAL NOTES:
SEE STANDARD PLANS 606.00, 606.22, 606.23, 606.30 606.50, 606.60, 606.70 AND 606.80 FOR GUARDRAIL COMPONENT DETAILS.

FOR DETAILS OF BRIDGE APPROACH SLAB (MAJOR), SEE BRIDGE PLANS.

CONSTRUCT DRAIN BASINS WHEN SHOWN ON ROADWAY PLANS. IF DRAIN BASINS ARE OMITTED OR TYPE A CURB DOES NOT EXTEND BEOYND GUARDRAIL POST NO. 11 USE BRIDGE APPROACH TRANSITION (MINOR ROUTE), SEE STD. PLAN 606.60 SHEET 2 OF 6.

TYPE A CURB IS TO BE CONSTRUCTED TO THE END OF THE BRIDGE APPROACH TRANSITION WHEN DRAIN BASINS ARE REQUIRED. SEE STANDARD PLANS 609.00 FOR TYPE A CURB.

SEE STANDARD PLANS 504.00 FOR DETAILS OF CONCRETE APPROACH PAVEMENT.

FOR DETAILS OF GRATES AND BEARING PLATES FOR DROP INLET, SEE STANDARD PLANS 614.10 AND 614.11.

FOR DETAILS OF DROP INLET FOR ROADWAY SURFACE, SEE STANDARD PLANS 731.10. USE TYPE A DROP INLET AND USE DEPTH OF DROP INLET AS SHOWN ON ROADWAY PLANS.

PAYMENT FOR DROP INLET, GRATE, GROUP C PIPE, CONCRETE SLOPE PROTECTION AT PIPE OUTLETS, MATERIAL AND INSTALLATION WILL BE PAID FOR AT THE CONTRACT UNIT PRICE FOR DRAIN BASIN PER EACH.

FOR DETAILS OF SECTION B-B, C-C AND D-D, SEE SHEET 2 OF 3.

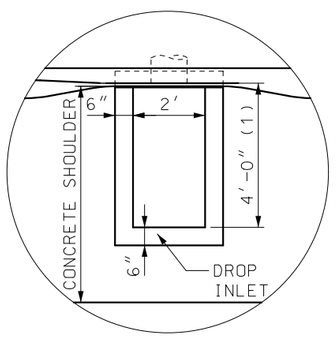

DETAIL A

CASE	FILL SLOPE PROTECTION
1	ROCK BLANKET FILL SLOPE
2	ROCK BLANKET FILL SLOPE WITH CONCRETE SLOPE PROTECTION
3	FILL SLOPE WITH PARTIAL ROCK BLANKET
4	FILL SLOPE WITH CONCRETE SLOPE PROTECTION

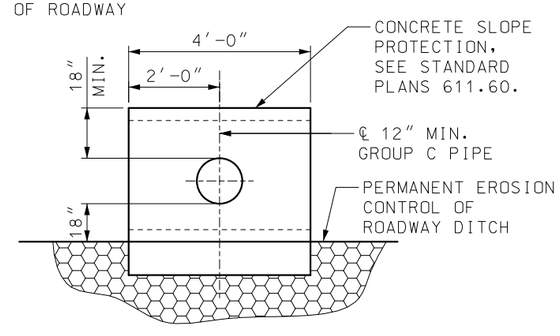

SECTION E-E

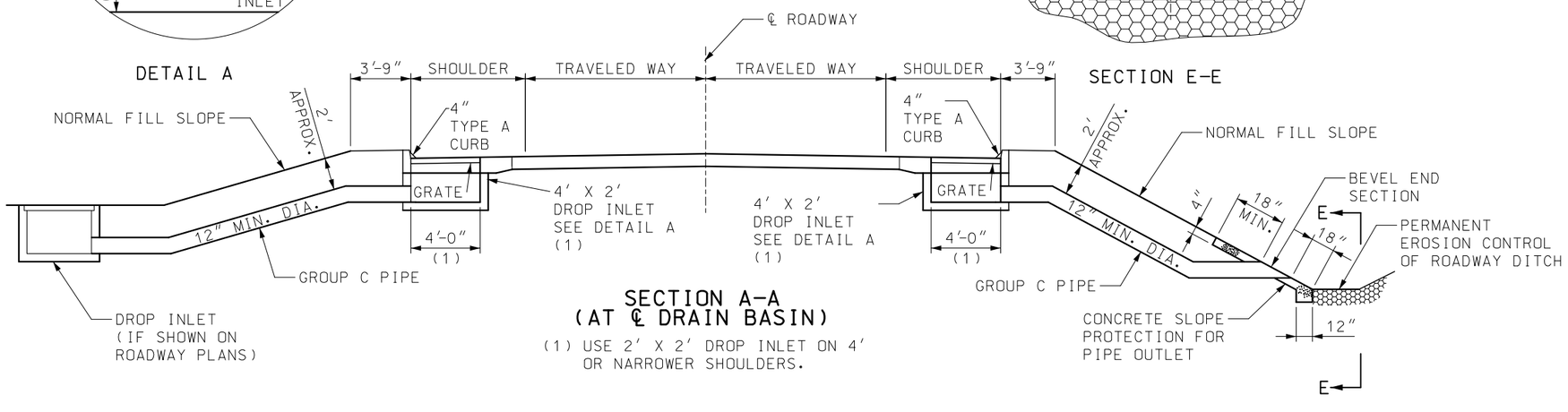

SECTION A-A
(AT ℄ DRAIN BASIN)

(1) USE 2' X 2' DROP INLET ON 4' OR NARROWER SHOULDERS.

MISSOURI HIGHWAYS AND TRANSPORTATION COMMISSION
105 WEST CAPITOL
JEFFERSON CITY, MO 65102
1-888-ASK-MODOT (1-888-275-6636)

STATE OF MISSOURI
TRAVIS D. KOESTNER
NUMBER PE-30042
PROFESSIONAL ENGINEER
THIS SHEET HAS BEEN SIGNED, SEALED AND DATED ELECTRONICALLY.

DRAIN BASIN, SHOULDER PAVING AND FILL SLOPES AT BRIDGE ENDS (MAJOR ROUTE)

DATE EFFECTIVE: 01/01/2022
DATE PREPARED: 10/21/2021

609.40S

SHEET NO. 1 OF 3

IF A SEAL IS PRESENT ON THIS SHEET IT HAS BEEN ELECTRONICALLY SEALED AND DATED.

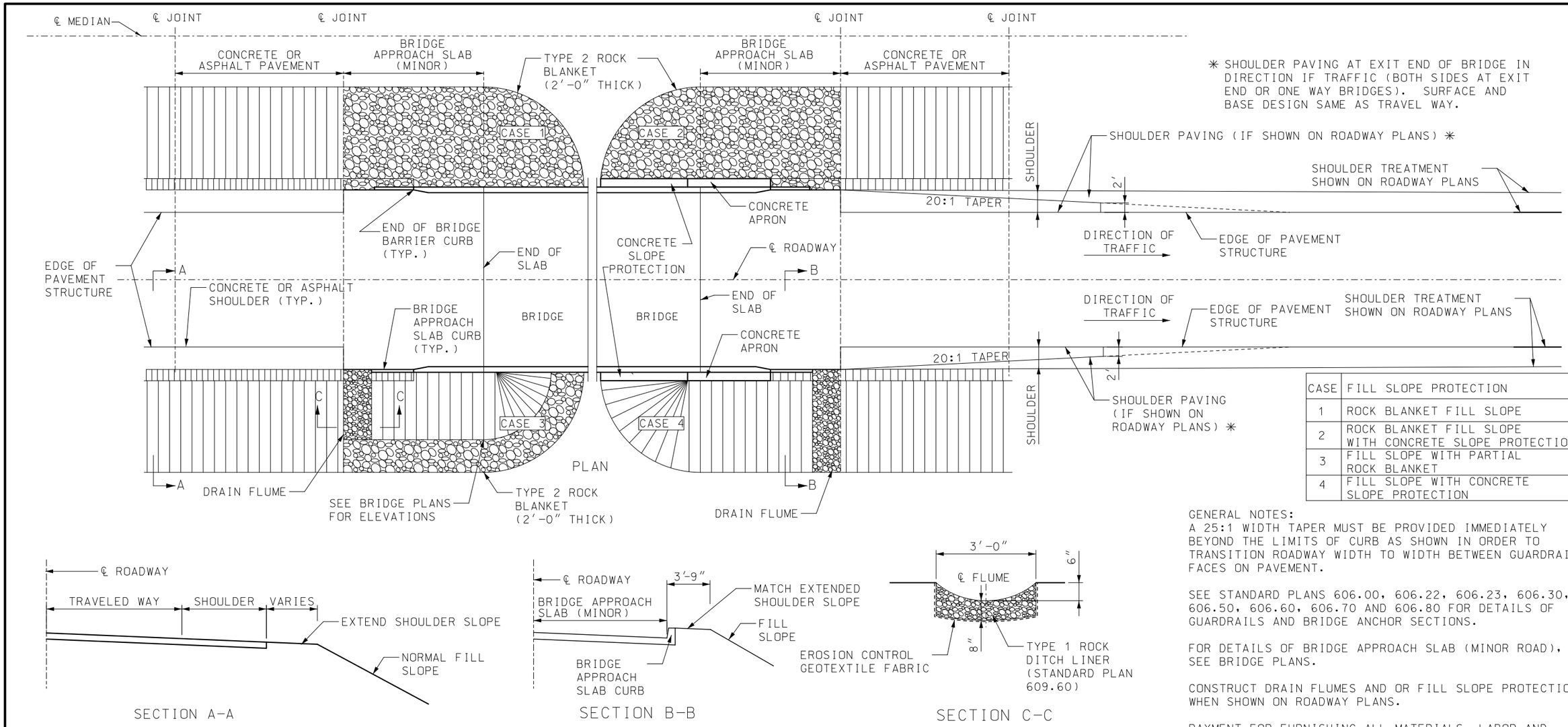

✳ SHOULDER PAVING AT EXIT END OF BRIDGE IN DIRECTION IF TRAFFIC (BOTH SIDES AT EXIT END OR ONE WAY BRIDGES). SURFACE AND BASE DESIGN SAME AS TRAVEL WAY.

CASE	FILL SLOPE PROTECTION
1	ROCK BLANKET FILL SLOPE
2	ROCK BLANKET FILL SLOPE WITH CONCRETE SLOPE PROTECTION
3	FILL SLOPE WITH PARTIAL ROCK BLANKET
4	FILL SLOPE WITH CONCRETE SLOPE PROTECTION

SECTION A-A

SECTION B-B

SECTION C-C

GENERAL NOTES:
A 25:1 WIDTH TAPER MUST BE PROVIDED IMMEDIATELY BEYOND THE LIMITS OF CURB AS SHOWN IN ORDER TO TRANSITION ROADWAY WIDTH TO WIDTH BETWEEN GUARDRAIL FACES ON PAVEMENT.

SEE STANDARD PLANS 606.00, 606.22, 606.23, 606.30, 606.50, 606.60, 606.70 AND 606.80 FOR DETAILS OF GUARDRAILS AND BRIDGE ANCHOR SECTIONS.

FOR DETAILS OF BRIDGE APPROACH SLAB (MINOR ROAD), SEE BRIDGE PLANS.

CONSTRUCT DRAIN FLUMES AND OR FILL SLOPE PROTECTION WHEN SHOWN ON ROADWAY PLANS.

PAYMENT FOR FURNISHING ALL MATERIALS, LABOR AND EXCAVATION NECESSARY TO CONSTRUCT THE DRAIN FLUMES, INCLUDING THE PERMANENT EROSION CONTROL GEOTEXTILE, COMPLETE-IN-PLACE, WILL BE CONSIDERED COMPLETELY COVERED BY THE CONTRACT UNIT PRICE FOR TYPE 1 ROCK DITCH LINER.

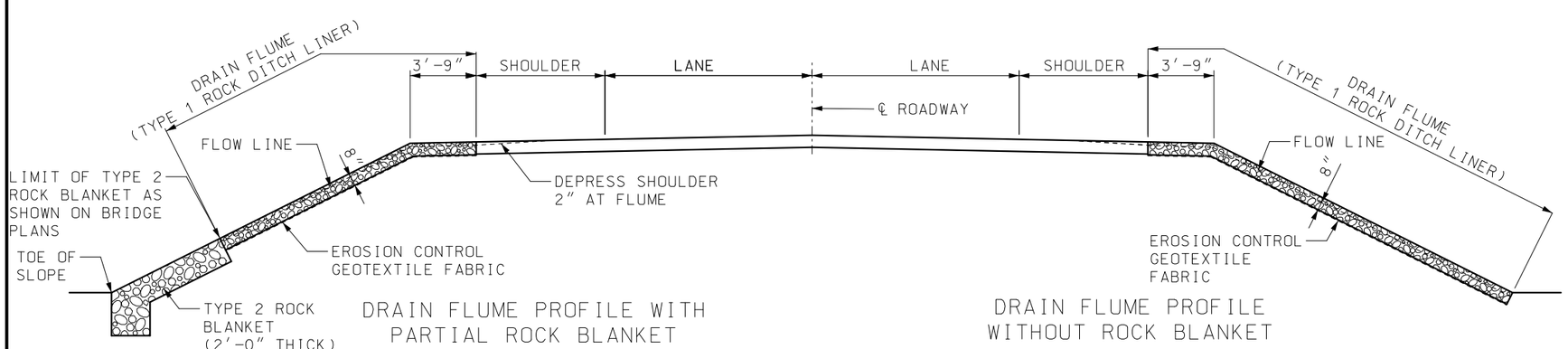

DRAIN FLUME PROFILE WITH PARTIAL ROCK BLANKET

DRAIN FLUME PROFILE WITHOUT ROCK BLANKET

MISSOURI HIGHWAYS AND TRANSPORTATION COMMISSION
105 WEST CAPITOL
JEFFERSON CITY, MO 65102
1-888-ASK-MODOT (1-888-275-6636)

STATE OF MISSOURI
TRAVIS D. KOESTNER
NUMBER PE-30042
PROFESSIONAL ENGINEER
THIS SHEET HAS BEEN SIGNED, SEALED AND DATED ELECTRONICALLY.

DRAIN FLUME, SHOULDER PAVING AND FILL SLOPES AT BRIDGE ENDS

(MINOR AND LOW VOLUME ROUTES)

DATE EFFECTIVE: 10/01/2021
DATE PREPARED: 7/13/2021

609.40S

SHEET NO. 3 OF 3

IF A SEAL IS PRESENT ON THIS SHEET IT HAS BEEN ELECTRONICALLY SEALED AND DATED.

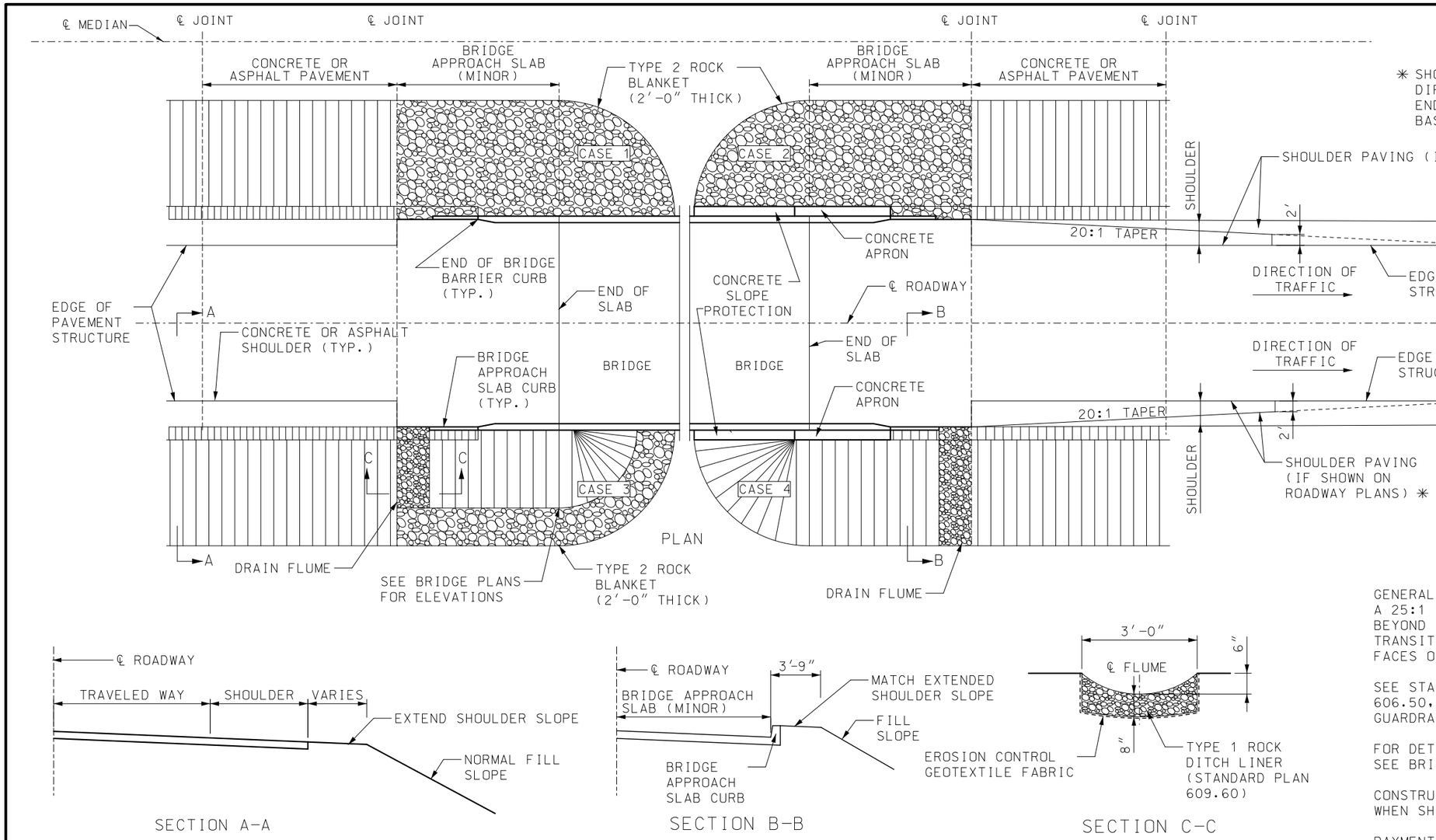

✳ SHOULDER PAVING AT EXIT END OF BRIDGE IN DIRECTION OF TRAFFIC (BOTH SIDES AT EXIT END OF ONE WAY BRIDGES). SURFACE AND BASE DESIGN SAME AS TRAVEL WAY.

CASE	FILL SLOPE PROTECTION
1	ROCK BLANKET FILL SLOPE
2	ROCK BLANKET FILL SLOPE WITH CONCRETE SLOPE PROTECTION
3	FILL SLOPE WITH PARTIAL ROCK BLANKET
4	FILL SLOPE WITH CONCRETE SLOPE PROTECTION

SECTION A-A

SECTION B-B

SECTION C-C

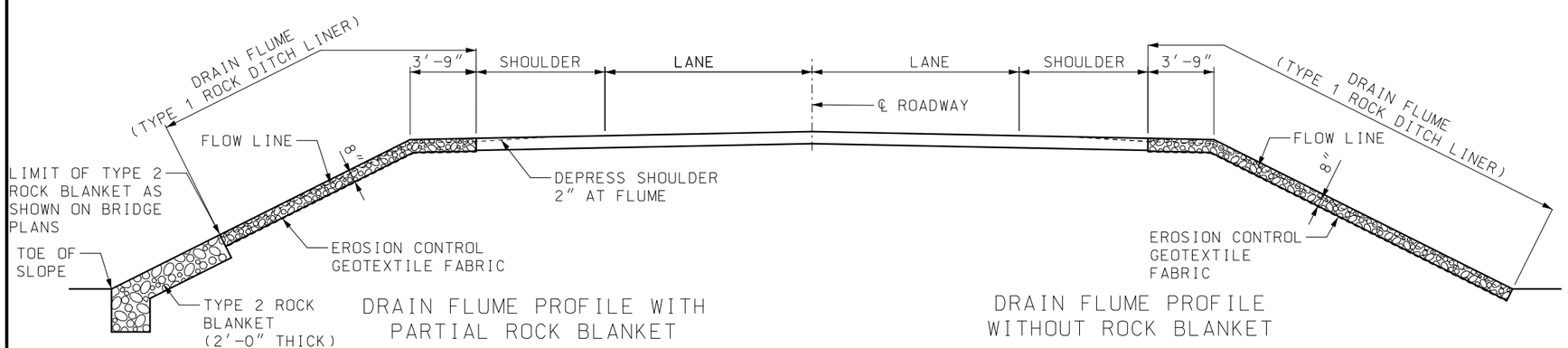

DRAIN FLUME PROFILE WITH PARTIAL ROCK BLANKET

DRAIN FLUME PROFILE WITHOUT ROCK BLANKET

GENERAL NOTES:
A 25:1 WIDTH TAPER MUST BE PROVIDED IMMEDIATELY BEYOND THE LIMITS OF CURB AS SHOWN IN ORDER TO TRANSITION ROADWAY WIDTH TO WIDTH BETWEEN GUARDRAIL FACES ON PAVEMENT.

SEE STANDARD PLANS 606.00, 606.22, 606.23, 606.30, 606.50, 606.60, 606.70 AND 606.80 FOR DETAILS OF GUARDRAILS AND BRIDGE ANCHOR SECTIONS.

FOR DETAILS OF BRIDGE APPROACH SLAB (MINOR ROAD), SEE BRIDGE PLANS.

CONSTRUCT DRAIN FLUMES AND OR FILL SLOPE PROTECTION WHEN SHOWN ON ROADWAY PLANS.

PAYMENT FOR FURNISHING ALL MATERIALS, LABOR AND EXCAVATION NECESSARY TO CONSTRUCT THE DRAIN FLUMES, INCLUDING THE PERMANENT EROSION CONTROL GEOTEXTILE, COMPLETE-IN-PLACE, WILL BE CONSIDERED COMPLETELY COVERED BY THE CONTRACT UNIT PRICE FOR TYPE 1 ROCK DITCH LINER.

MISSOURI HIGHWAYS AND TRANSPORTATION COMMISSION
105 WEST CAPITOL
JEFFERSON CITY, MO 65102
1-888-ASK-MODOT (1-888-275-6636)

STATE OF MISSOURI
TRAVIS D. KOESTNER
NUMBER PE-30042
PROFESSIONAL ENGINEER
THIS SHEET HAS BEEN SIGNED, SEALED AND DATED ELECTRONICALLY.

DRAIN FLUME, SHOULDER PAVING AND FILL SLOPES AT BRIDGE ENDS

(MINOR AND LOW VOLUME ROUTES)

DATE EFFECTIVE: 01/01/2022
DATE PREPARED: 10/21/2021

609.40S

SHEET NO. 3 OF 3

IF A SEAL IS PRESENT ON THIS SHEET IT HAS BEEN ELECTRONICALLY SEALED AND DATED.

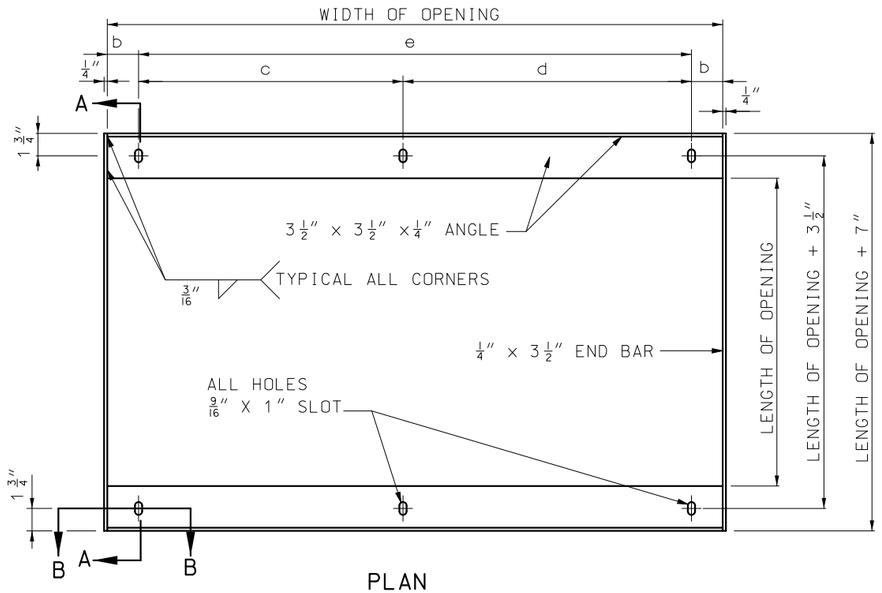

PLAN
BEARING PLATE

END VIEW OF BEARING BAR

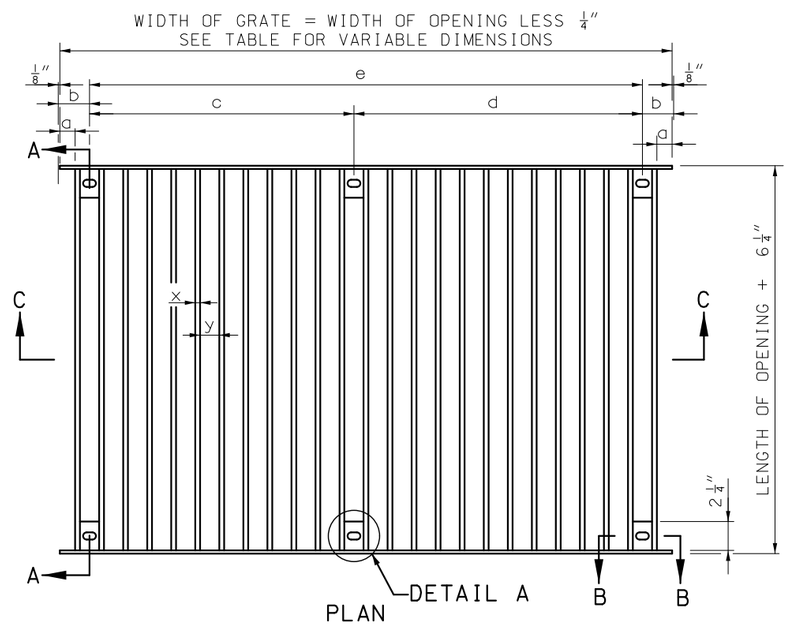

PLAN

SECTION C-C
GRATE

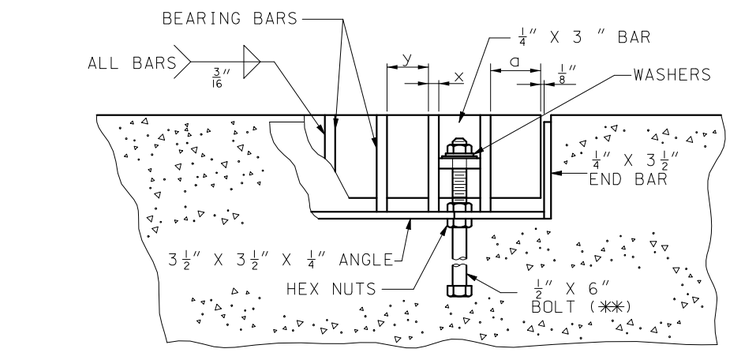

SECTION B-B

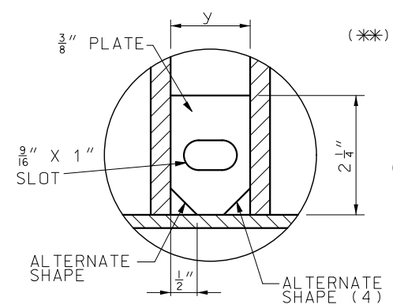

DETAIL A

WEIGHT AND DIMENSIONS DATA

OPENING WIDTH	OPENING LENGTH	WEIGHT (1) LBS.	BEARING BARS x	BEARING BARS y	BEARING BARS LENGTH	BEARING BARS NUMBER	DIMENSIONS a	DIMENSIONS b	DIMENSIONS c	DIMENSIONS d	DIMENSIONS e	REMARKS
3'-0"	2'-0"	190	3/8"	3"	2'-5 3/4"	11	13/16"	2 13/16"			2'-6 3/8"	USE WITH TYPE S-1 INLETS AND TYPE S HEADWALLS
3'-0"	3'-0"	330	5/8"	3"	3'-5 3/4"	10	1 1/4"	3 1/2"			2'-5"	
5'-0"	2'-0"	300	3/8"	3"	2'-5 3/4"	18	1"	3"	2'-3"	2'-3"		
5'-0"	3'-0"	550	5/8"	3"	3'-5 3/4"	17	9/16"	2 13/16"	2'-1 3/8"	2'-5"		
3'-1"	2'-1"	200	3/8"	3"	2'-6 3/4"	11	1 5/16"	3 5/16"			2'-6 3/8"	USE WITH TYPE S-2 AND TYPE S-3 INLETS ONLY
3'-1"	3'-1"	340	5/8"	3"	3'-6 3/4"	10	1 3/4"	4"			2'-5"	
5'-1"	2'-1"	310	3/8"	3"	2'-6 3/4"	18	1 1/2"	3 1/2"	2'-3"	2'-3"		
5'-1"	3'-1"	560	5/8"	3"	3'-6 3/4"	17	1 1/16"	3 5/16"	2'-1 3/8"	2'-5"		

(1) THE WEIGHT OF THE GRATE AND BEARING PLATE INCLUDES THE BOLTS, NUTS, AND WASHERS AND SHALL BE AS SHOWN WITH A TOLERANCE OF 5 PERCENT.

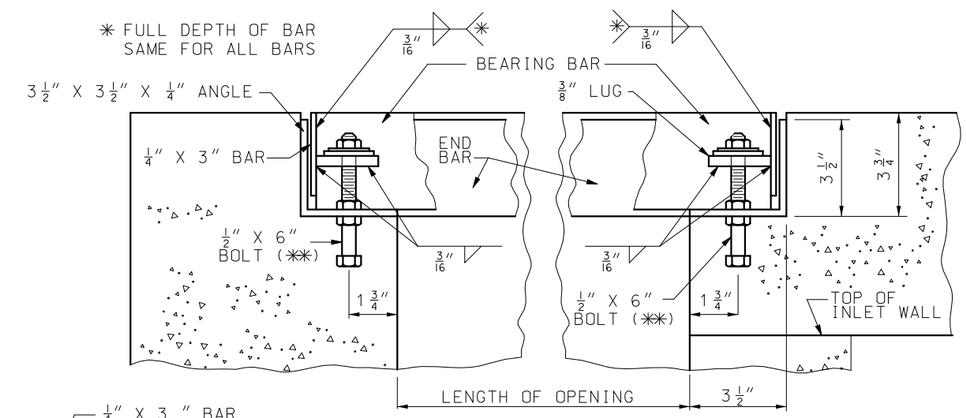

SECTION A-A

(✱✱) 1/2" DIA. ASTM F1554, GRADE 36 ANCHOR BOLTS.

(4) OTHER ALTERNATE SHAPES ARE ALLOWED, UPON APPROVAL, PROVIDED 4 LINEAR INCHES WELD IS MAINTAINED SYMETRICALLY AROUND THE PLATE AND THE NOMINAL DIMENSIONS OF THE PLATE AND SLOT ARE MAINTAINED.

GENERAL NOTES:

WHEN BOLTS ARE CUT IN THE FIELD, THREADS MUST BE CLEANED TO PERMIT THE FINAL NUT TO RUN FREELY ON THE BOLT.

THE WELDING REQUIREMENTS SHOWN ON THIS DRAWING ARE FOR PAINTED GRATES AND BEARING PLATES. IF GALVANIZED, ALL TIGHTLY CONTACTING SURFACES SHALL BE COMPLETELY SEALED, ON ALL SIDES BY WELDING, PRIOR TO GALVANIZING.

MISSOURI HIGHWAYS AND TRANSPORTATION COMMISSION
105 WEST CAPITOL
JEFFERSON CITY, MO 65102
1-888-ASK-MODOT (1-888-275-6636)

STATE OF MISSOURI
TRAVIS D. KOESTNER
NUMBER PE-30042
PROFESSIONAL ENGINEER
THIS SHEET HAS BEEN SIGNED, SEALED AND DATED ELECTRONICALLY.

GRATES AND BEARING PLATES

DATE EFFECTIVE: 10/01/2021
DATE PREPARED: 7/13/2021

614.10U

SHEET NO. 1 OF 1

IF A SEAL IS PRESENT ON THIS SHEET IT HAS BEEN ELECTRONICALLY SEALED AND DATED.

WARNING SIGNS

SIGN	SIZE (IN.)	AREA (SQ. FT.)	SHEETING	COLOR SYM. LEG. BRD.	COLOR BACK GROUND	DESIGNATION	DESCRIPTION
W01-1L	48X48	16.00	ASTM 9 OR 11	BK	FL. OR	SHF	TURN (SYMBOL LEFT ARROW)
W01-1R	48X48	16.00	ASTM 9 OR 11	BK	FL. OR	SHF	TURN (SYMBOL RIGHT ARROW)
W01-2L	48X48	16.00	ASTM 9 OR 11	BK	FL. OR	SHF	CURVE (SYMBOL LEFT ARROW)
W01-2R	48X48	16.00	ASTM 9 OR 11	BK	FL. OR	SHF	CURVE (SYMBOL RIGHT ARROW)
W01-3L	48X48	16.00	ASTM 9 OR 11	BK	FL. OR	SHF	REVERSE TURN (SYMBOL LEFT ARROW)
W01-3R	48X48	16.00	ASTM 9 OR 11	BK	FL. OR	SHF	REVERSE TURN (SYMBOL RIGHT ARROW)
W01-4L	48X48	16.00	ASTM 9 OR 11	BK	FL. OR	SHF	REVERSE CURVE (SYMBOL LEFT ARROW)
W01-4R	48X48	16.00	ASTM 9 OR 11	BK	FL. OR	SHF	REVERSE CURVE (SYMBOL RIGHT ARROW)
W01-4bL	48X48	16.00	ASTM 9 OR 11	BK	FL. OR	SHF	DOUBLE ARROW REVERSE CURVE (SYMBOL LEFT ARROWS) (2)
W01-4bR	48X48	16.00	ASTM 9 OR 11	BK	FL. OR	SHF	DOUBLE ARROW REVERSE CURVE (SYMBOL RIGHT ARROWS) (2)
W01-4cL	48X48	16.00	ASTM 9 OR 11	BK	FL. OR	SHF	TRIPLE ARROW REVERSE CURVE (SYMBOL LEFT ARROWS) (2)
W01-4cR	48X48	16.00	ASTM 9 OR 11	BK	FL. OR	SHF	TRIPLE ARROW REVERSE CURVE (SYMBOL RIGHT ARROWS) (2)
W01-6	60X30	12.50	ASTM 9 OR 11	BK	FL. OR	SHF	HORIZONTAL ARROW (SYMBOL)
W01-6a	72X36	18.00	ASTM 9 OR 11	BK	FL. OR	SHF	HORIZONTAL ARROW (SYMBOL ON PERMANENT BARRICADE) (1)
W01-7	60X30	12.50	ASTM 9 OR 11	BK	FL. OR	SHF	DOUBLE HEAD HORIZONTAL ARROW (SYMBOL)
W01-7a	72X36	18.00	ASTM 9 OR 11	BK	FL. OR	SHF	DOUBLE HEAD HORIZONTAL ARROW (SYMBOL ON PERMANENT BARRICADE)(1)
W01-8	18X24	3.00	ASTM 9 OR 11	BK	FL. OR	SHF	CHEVRON (SYMBOL)
W01-8a	30X36	7.50	ASTM 9 OR 11	BK	FL. OR	SHF	CHEVRON (SYMBOL FOR DIVIDED HIGHWAYS)
W03-1	48X48	16.00	ASTM 9 OR 11	BK	FL. OR	SHF	STOP AHEAD (SYMBOL)
W03-2	48X48	16.00	ASTM 9 OR 11	BK	FL. OR	SHF	YIELD AHEAD (SYMBOL)
W03-3	48X48	16.00	ASTM 9 OR 11	BK	FL. OR	SHF	SIGNAL AHEAD (SYMBOL)
W03-4	48X48	16.00	ASTM 9 OR 11	BK	FL. OR	SHF	BE PREPARED TO STOP
W03-5	48X48	16.00	ASTM 9 OR 11	BK	FL. OR	SHF	SPEED LIMIT AHEAD
W04-1L	48X48	16.00	ASTM 9 OR 11	BK	FL. OR	SHF	MERGE (SYMBOL FROM LEFT)
W04-1R	48X48	16.00	ASTM 9 OR 11	BK	FL. OR	SHF	MERGE (SYMBOL FROM RIGHT)
W04-1a(L)	48X48	16.00	ASTM 9 OR 11	BK	FL. OR	SHF	MERGE (ARROW SYMBOL) (3)
W04-1a(R)	48X48	16.00	ASTM 9 OR 11	BK	FL. OR	SHF	MERGE (ARROW SYMBOL) (3)
W05-1	48X48	16.00	ASTM 9 OR 11	BK	FL. OR	SHF	ROAD/BRIDGE/RAMP NARROWS (4)
W05-3	48X48	16.00	ASTM 9 OR 11	BK	FL. OR	SHF	ONE LANE BRIDGE
W05-5	48X48	16.00	ASTM 9 OR 11	BK	FL. OR	SHF	NARROW LANES (3)
W06-1	48X48	16.00	ASTM 9 OR 11	BK	FL. OR	SHF	DIVIDED HIGHWAY (SYMBOL)
W06-2	48X48	16.00	ASTM 9 OR 11	BK	FL. OR	SHF	DIVIDED HIGHWAY END (SYMBOL)
W06-3	48X48	16.00	ASTM 9 OR 11	BK	FL. OR	SHF	TWO WAY TRAFFIC (SYMBOL)
W07-3a	30X24	5.00	ASTM 9 OR 11	BK	FL. OR	SHF	NEXT XX MILES (PLAQUE)
W08-1	48X48	16.00	ASTM 9 OR 11	BK	FL. OR	SHF	BUMP
W08-2	48X48	16.00	ASTM 9 OR 11	BK	FL. OR	SHF	DIP
W08-3	48X48	16.00	ASTM 9 OR 11	BK	FL. OR	SHF	PAVEMENT ENDS
W08-4	48X48	16.00	ASTM 9 OR 11	BK	FL. OR	SHF	SOFT SHOULDER
W08-5	48X48	16.00	ASTM 9 OR 11	BK	FL. OR	SHF	SLIPPERY WHEN WET (SYMBOL)
W08-6	48X48	16.00	ASTM 9 OR 11	BK	FL. OR	SHF	TRUCK CROSSING WITH FLAGS
W08-6c	48X48	16.00	ASTM 9 OR 11	BK	FL. OR	SHF	TRUCK ENTRANCE (3)
W08-7a	36X36	9.00	ASTM 9 OR 11	BK	FL. OR	SHF	FRESH OIL/LOOSE GRAVEL (3)
W08-9	48X48	16.00	ASTM 9 OR 11	BK	FL. OR	SHF	LOW SHOULDER
W08-11	48X48	16.00	ASTM 9 OR 11	BK	FL. OR	SHF	UNEVEN LANES
W08-12	48X48	16.00	ASTM 9 OR 11	BK	FL. OR	SHF	NO CENTER LINE
W08-15	48X48	16.00	ASTM 9 OR 11	BK	FL. OR	SHF	GROOVED PAVEMENT
W08-15p	30X24	5.00	ASTM 9 OR 11	BK	FL. OR	SHF	MOTORCYCLE (PLAQUE)
W08-17(L)	48X48	16.00	ASTM 9 OR 11	BK	FL. OR	SHF	SHOULDER DROP-OFF (SYMBOL LEFT)
W08-17(R)	48X48	16.00	ASTM 9 OR 11	BK	FL. OR	SHF	SHOULDER DROP OFF (SYMBOL RIGHT) (4)
W08-17p	30X24	5.00	ASTM 9 OR 11	BK	FL. OR	SHF	SHOULDER DROP-OFF (PLAQUE)
W10-1	42 RND.	9.62	ASTM 9 OR 11	BK	FL. YL	SHF	RAILROAD CROSSING
W012-1	24X24	4.00	ASTM 9 OR 11	BK	FL. OR	SHF	DOUBLE DOWN ARROW (SYMBOL)
W012-2	48X48	16.00	ASTM 9 OR 11	BK	FL. OR	SHF	LOW CLEARANCE (SYMBOL)
W012-2x	24X18	3.00	ASTM 9 OR 11	BK	FL. OR	SHF	LOW CLEARANCE (PLAQUE) (3)
W012-2a	84X24	14.00	ASTM 9 OR 11	BK	FL. OR	SHF	OVERHEAD LOW CLEARANCE (FEET AND INCHES) (3)
W012-4	120X60	50.00	ASTM 9 OR 11	BK	FL. OR	SHF	LOW CLEARANCE XX FT XX IN XX MILES AHEAD (3)
W012-5	120X60	50.00	ASTM 9 OR 11	BK	FL. OR	SHF	WIDTH RESTRICTION XX FT XX IN XX MILES AHEAD (3)
W013-1	30X30	6.25	ASTM 9 OR 11	BK	FL. OR	SHF	ADVISORY SPEED (PLAQUE)
W016-2	30X24	5.00	ASTM 9 OR 11	BK	FL. OR	SHF	XXX FEET (PLAQUE)
W016-3	30X24	5.00	ASTM 9 OR 11	BK	FL. OR	SHF	X MILE (PLAQUE)
W020-1	48X48	16.00	ASTM 9 OR 11	BK	FL. OR	SHF	ROAD/BRIDGE/RAMP WORK AHEAD (4)
W020-2	48X48	16.00	ASTM 9 OR 11	BK	FL. OR	SHF	DETOUR AHEAD
W020-3	48X48	16.00	ASTM 9 OR 11	BK	FL. OR	SHF	ROAD CLOSED AHEAD
W020-4	48X48	16.00	ASTM 9 OR 11	BK	FL. OR	SHF	ONE LANE ROAD AHEAD
W020-5	48X48	16.00	ASTM 9 OR 11	BK	FL. OR	SHF	RIGHT/CENTER/LEFT LANE CLOSED AHEAD (4)

(1) SIGN DEPICTION, ARROW, BORDERS AND SPACING SHALL BE IN ACCORDANCE WITH THE LATEST EDITION OF "STANDARD HIGHWAY SIGNS" BY THE U.S. DEPARTMENT OF TRANSPORTATION - FHWA.

(2) REFER TO THE LATEST EDITION OF MUTCD PART VI BY THE U.S. DEPARTMENT OF TRANSPORTATION - FHWA FOR SIGN DEPICTION. ARROW, BORDERS AND SPACING SHALL CONFORM TO THE GUIDELINES SET FORTH IN THE LATEST EDITION OF "STANDARD HIGHWAY SIGNS" BY THE U.S. DEPARTMENT OF TRANSPORTATION - FHWA.

(3) ARROW, BORDERS AND SPACING SHALL BE IN ACCORDANCE WITH THE LATEST EDITION OF "STANDARD HIGHWAY SIGNS" BY THE U.S. DEPARTMENT OF TRANSPORTATION - FHWA.

(4) USE OF A SUPPLEMENTAL PLATE FOR LINE 1 IS ACCEPTABLE.

(5) PLAQUE AND APPLICABLE REGULATORY SIGN MAY BE MANUFACTURED AS ONE SIGN.

(6) SHF REFER TO STD. 903.02 SHEET 1 OF 8

GENERAL NOTES:

SIGN LAYOUTS SHALL BE IN ACCORDANCE WITH THE LATEST EDITION OF "STANDARD HIGHWAY SIGNS" BY THE U.S. DEPARTMENT OF TRANSPORTATION - FHWA, UNLESS SPECIFIED OTHERWISE.

SIGN DIMENSIONS SHOWN ARE MINIMUM. NO ADDITIONAL PAYMENT WILL BE MADE IF CONTRACTORS USE LARGER SIGNS.

NO ADDITIONAL PAYMENT WILL BE MADE FOR PLATES.

ALL PLAQUES SHALL HAVE A BORDER. PLATES SHALL NOT HAVE A BORDER.

MISSOURI HIGHWAYS AND TRANSPORTATION COMMISSION
105 WEST CAPITOL
JEFFERSON CITY, MO 65102
1-888-ASK-MODOT (1-888-275-6636)

STATE OF MISSOURI
TRAVIS D. KOESTNER
NUMBER PE-30042
PROFESSIONAL ENGINEER
THIS SHEET HAS BEEN SIGNED, SEALED AND DATED ELECTRONICALLY.

TEMPORARY
TRAFFIC CONTROL DEVICES
WARNING SIGNS

DATE EFFECTIVE: 10/01/2021
DATE PREPARED: 7/13/2021

616.10AY

SHEET NO. 6 OF 9

IF A SEAL IS PRESENT ON THIS SHEET IT HAS BEEN ELECTRONICALLY SEALED AND DATED.

SIGN	SIZE (IN.)	AREA (SQ. FT.)	SHEETING	COLOR SYM. LEG. BRD.	COLOR BACK GROUND	DESIGNATION	DESCRIPTION
WARNING SIGNS							
W020-5a	48X48	16.00	ASTM 9 OR 11	BK	FL. OR	SHF	2 RIGHT/CENTER/LEFT LANES CLOSED AHEAD (4)
W020-6a	48X48	16.00	ASTM 9 OR 11	BK	FL. OR	SHF	RIGHT/CENTER/LEFT LANE CLOSED (3)(4)
W020-7	48X48	16.00	ASTM 9 OR 11	BK	FL. OR	SHF	FLAGGER (SYMBOL) WITH FLAGS
W021-5	48X48	16.00	ASTM 9 OR 11	BK	FL. OR	SHF	SHOULDER WORK AHEAD (3)
W021-5a	48X48	16.00	ASTM 9 OR 11	BK	FL. OR	SHF	RIGHT/LEFT SHOULDER CLOSED
W021-5b	48X48	16.00	ASTM 9 OR 11	BK	FL. OR	SHF	RIGHT/LEFT SHOULDER CLOSED AHEAD
W022-1	48X48	16.00	ASTM 9 OR 11	BK	FL. OR	SHF	BLASTING ZONE AHEAD
W022-2	42X36	10.50	ASTM 9 OR 11	BK	FL. OR	SHF	TURN OFF 2-WAY RADIO AND PHONE
W022-3	42X36	10.50	ASTM 9 OR 11	BK	FL. OR	SHF	END BLASTING ZONE
G022-1	15X21	2.19	ASTM 9 OR 11	BK	FL. OR	SHF	WET PAINT (ARROW PIVOTS) (3)
GUIDE SIGNS							
E05-1	36X48	12.00	ASTM 9 OR 11	BK	FL. OR	SHF	GORE EXIT (3)
E05-2	48X36	12.00	ASTM 9 OR 11	BK	FL. OR	SHF	EXIT OPEN (3)
E05-2a	48X36	12.00	ASTM 9 OR 11	BK	FL. OR	SHF	EXIT CLOSED
G020-1	60X24	10.00	ASTM 9 OR 11	BK	FL. OR	SHF	ROAD WORK NEXT XX MILES
G020-2	48X24	8.00	ASTM 9 OR 11	BK	FL. OR	SHF	END ROAD WORK
G020-4	36X18	4.50	ASTM 9 OR 11	BK	FL. OR	SHF	PILOT CAR FOLLOW ME - REAR VEHICLE MOUNT SIGN
G020-4a	42X30	8.75	ASTM 9 OR 11	BK	FL. OR	SHF	PILOT CAR IN USE WAIT & FOLLOW - STATE ROUTE SIGN
G020-4a	18X12	1.50	ASTM 9 OR 11	BK	FL. OR	SHF	PILOT CAR IN USE WAIT & FOLLOW - NON-STATE ROUTE SIGN
G020-5aP	36X24	6.00	ASTM 9 OR 11	BK	FL. OR	SHF	WORK ZONE (PLAQUE) (3) (5)
M04-8a	24X18	3.00	ASTM 9 OR 11	BK	FL. OR	SHF	END DETOUR
M04-9L	48X36	12.00	ASTM 9 OR 11	BK	FL. OR	SHF	DETOUR (LEFT ARROW)
M04-9R	48X36	12.00	ASTM 9 OR 11	BK	FL. OR	SHF	DETOUR (RIGHT ARROW)
M04-9P	48X12	4.00	ASTM 9 OR 11	BK	FL. OR	SHF	STREET NAME (PLAQUE)
M04-10L	48X18	6.00	ASTM 9 OR 11	BK	FL. OR	SHF	DETOUR (ARROW LEFT)
M04-10R	48X18	6.00	ASTM 9 OR 11	BK	FL. OR	SHF	DETOUR (ARROW RIGHT)
REGULATORY SIGNS							
R1-1	48X48	13.25	ASTM 4	WH	RD	SH	STOP
R1-2	48 TRI.	6.93	ASTM 4	RD	WH	SH	YIELD
R1-2a	36X36	9.00	ASTM 4	BK	WH	SH	TO ONCOMING TRAFFIC (PLAQUE)
R1-3p	30X12	2.50	ASTM 4	WH	RD	SH	ALL WAY (PLAQUE)
R2-1	36X48	12.00	ASTM 4	BK	WH	SH	SPEED LIMIT XX
R3-1	48X48	16.00	ASTM 4	BK/RD	WH	SH	NO RIGHT TURN (SYMBOL)
R3-2	48X48	16.00	ASTM 4	BK/RD	WH	SH	NO LEFT TURN (SYMBOL)
R3-3	36X36	9.00	ASTM 4	BK	WH	SH	NO TURNS
R3-4	48X48	16.00	ASTM 4	BK/RD	WH	SH	NO U-TURN (SYMBOL)
R3-7L	30X30	6.25	ASTM 4	BK	WH	SH	LEFT LANE MUST TURN LEFT
R3-7R	30X30	6.25	ASTM 4	BK	WH	SH	RIGHT LANE MUST TURN RIGHT
R4-1	36X48	12.00	ASTM 4	BK	WH	SH	DO NOT PASS
R4-2	36X48	12.00	ASTM 4	BK	WH	SH	PASS WITH CARE
R4-7a	36X48	12.00	ASTM 4	BK	WH	SH	KEEP RIGHT (HORIZONTAL ARROW)
R4-8a	36X48	12.00	ASTM 4	BK	WH	SH	KEEP LEFT (HORIZONTAL ARROW)
R5-1	30X30	6.25	ASTM 4	RD	WH	SH	DO NOT ENTER
R5-1a	36X24	6.00	ASTM 4	WH	RD	SH	WRONG WAY
R6-1L	54X18	6.75	ASTM 4	BK	WH	SH	ONE WAY ARROW (LEFT)
R6-1R	54X18	6.75	ASTM 4	BK	WH	SH	ONE WAY ARROW (RIGHT)
R6-2L	24X30	5.00	ASTM 4	BK	WH	SH	ONE WAY (LEFT)
R6-2R	24X30	5.00	ASTM 4	BK	WH	SH	ONE WAY (RIGHT)
R9-9	24X12	2.00	ASTM 4	BK	WH	SH	SIDEWALK CLOSED
R9-11L	24X18	3.00	ASTM 4	BK	WH	SH	SIDEWALK CLOSED AHEAD, (ARROW RIGHT) CROSS HERE
R9-11R	24X18	3.00	ASTM 4	BK	WH	SH	SIDEWALK CLOSED AHEAD, (ARROW LEFT) CROSS HERE
R10-6	24X36	6.00	ASTM 4	BK	WH	SH	STOP HERE ON RED (45° ARROW)
R11-2	48X30	10.00	ASTM 4	BK	WH	SH	ROAD CLOSED
R11-3a	60X30	12.50	ASTM 4	BK	WH	SH	ROAD CLOSED XX MILES AHEAD LOCAL TRAFFIC ONLY
R11-4	60X30	12.50	ASTM 4	BK	WH	SH	ROAD CLOSED TO THRU TRAFFIC
CONST-3A	60X48	20.00	ASTM 4	BK	WH/ FL. OR	SH	FINE SIGN (3)
CONST-3X	56X12	4.67	ASTM 4	BK	WH	SH	SPEEDING/PASSING (PLATE) (3)
MISCELLANEOUS SIGNS							
CONST-5	48X36	12.00	ASTM 4	WH	BL	SH	POINT OF PRESENCE
CONST-5	96X48	32.00	ASTM 4	WH	BL	SH	POINT OF PRESENCE
CONST-7	72X36	18.00	ASTM 4	WH/BK	BL/FL.OR	SH	RATE OUR WORK ZONE
CONST-7	48X24	8.00	ASTM 4	WH/BK	BL/FL.OR	SH	RATE OUR WORK ZONE
CONST-8	48X36	12.00	ASTM 9 OR 11	BK	FL.OR	SHF	WORK ZONE NO PHONE ZONE

(1) SIGN DEPICTION, ARROW, BORDERS AND SPACING SHALL BE IN ACCORDANCE WITH THE LATEST EDITION OF "STANDARD HIGHWAY SIGNS" BY THE U.S. DEPARTMENT OF TRANSPORTATION - FHWA.

(2) REFER TO THE LATEST EDITION OF MUTCD PART VI BY THE U.S. DEPARTMENT OF TRANSPORTATION - FHWA FOR SIGN DEPICTION. ARROW, BORDERS AND SPACING SHALL CONFORM TO THE GUIDELINES SET FORTH IN THE LATEST EDITION OF "STANDARD HIGHWAY SIGNS" BY THE U.S. DEPARTMENT OF TRANSPORTATION - FHWA.

(3) ARROW, BORDERS AND SPACING SHALL BE IN ACCORDANCE WITH THE LATEST EDITION OF "STANDARD HIGHWAY SIGNS" BY THE U.S. DEPARTMENT OF TRANSPORTATION - FHWA.

(4) USE OF A SUPPLEMENTAL PLATE FOR LINE 1 IS ACCEPTABLE.

(5) PLAQUE AND APPLICABLE REGULATORY SIGN MAY BE MANUFACTURED AS ONE SIGN.

(6) SH REFER TO STD. 903.02 SHEET 1 OF 8

(7) SHF REFER TO STD. 903.02 SHEET 1 OF 8

GENERAL NOTES:

SIGN LAYOUTS SHALL BE IN ACCORDANCE WITH THE LATEST EDITION OF "STANDARD HIGHWAY SIGNS" BY THE U.S. DEPARTMENT OF TRANSPORTATION - FHWA, UNLESS SPECIFIED OTHERWISE.

SIGN DIMENSIONS SHOWN ARE MINIMUM. NO ADDITIONAL PAYMENT WILL BE MADE IF CONTRACTORS USE LARGER SIGNS.

NO ADDITIONAL PAYMENT WILL BE MADE FOR PLATES.

ALL PLAQUES SHALL HAVE A BORDER. PLATES SHALL NOT HAVE A BORDER.

MISSOURI HIGHWAYS AND TRANSPORTATION COMMISSION
105 WEST CAPITOL
JEFFERSON CITY, MO 65102
1-888-ASK-MODOT (1-888-275-6636)

STATE OF MISSOURI
TRAVIS D. KOESTNER
NUMBER PE-30042
PROFESSIONAL ENGINEER
THIS SHEET HAS BEEN SIGNED, SEALED AND DATED ELECTRONICALLY.

TEMPORARY TRAFFIC CONTROL DEVICES

WARNING, GUIDE AND REGULATORY SIGNS

DATE EFFECTIVE: 10/01/2021
DATE PREPARED: 7/13/2021

616.10AY

IF A SEAL IS PRESENT ON THIS SHEET IT HAS BEEN ELECTRONICALLY SEALED AND DATED.

SIGN	SIZE (IN.)	AREA (SQ. FT.)	SHEETING	COLOR SYM. LEG. BRD.	COLOR BACK GROUND	DESIGNATION	DESCRIPTION
WARNING SIGNS							
W020-5a	48X48	16.00	ASTM 9 OR 11	BK	FL. OR	SHF	2 RIGHT/CENTER/LEFT LANES CLOSED AHEAD (4)
W020-6a	48X48	16.00	ASTM 9 OR 11	BK	FL. OR	SHF	RIGHT/CENTER/LEFT LANE CLOSED (3)(4)
W020-7	48X48	16.00	ASTM 9 OR 11	BK	FL. OR	SHF	FLAGGER (SYMBOL) WITH FLAGS
W021-5	48X48	16.00	ASTM 9 OR 11	BK	FL. OR	SHF	SHOULDER WORK/SHOULDER WORK AHEAD (3)
W021-5a	48X48	16.00	ASTM 9 OR 11	BK	FL. OR	SHF	RIGHT SHOULDER CLOSED
W021-5b	48X48	16.00	ASTM 9 OR 11	BK	FL. OR	SHF	RIGHT SHOULDER CLOSED AHEAD
W022-1	48X48	16.00	ASTM 9 OR 11	BK	FL. OR	SHF	BLASTING ZONE AHEAD
W022-2	42X36	10.50	ASTM 9 OR 11	BK	FL. OR	SHF	TURN OFF 2-WAY RADIO AND PHONE
W022-3	42X36	10.50	ASTM 9 OR 11	BK	FL. OR	SHF	END BLASTING ZONE
G022-1	15X21	2.19	ASTM 9 OR 11	BK	FL. OR	SHF	WET PAINT (ARROW PIVOTS) (3)
GUIDE SIGNS							
E05-1	36X48	12.00	ASTM 9 OR 11	BK	FL. OR	SHF	GORE EXIT (3)
E05-2	48X36	12.00	ASTM 9 OR 11	BK	FL. OR	SHF	EXIT OPEN (3)
E05-2a	48X36	12.00	ASTM 9 OR 11	BK	FL. OR	SHF	EXIT CLOSED
G020-1	60X24	10.00	ASTM 9 OR 11	BK	FL. OR	SHF	ROAD WORK NEXT XX MILES
G020-2	48X24	8.00	ASTM 9 OR 11	BK	FL. OR	SHF	END ROAD WORK
G020-4	36X18	4.50	ASTM 9 OR 11	BK	FL. OR	SHF	PILOT CAR FOLLOW ME - REAR VEHICLE MOUNT SIGN
G020-4a	42X30	8.75	ASTM 9 OR 11	BK	FL. OR	SHF	PILOT CAR IN USE WAIT & FOLLOW - STATE ROUTE SIGN
G020-4a	18X12	1.50	ASTM 9 OR 11	BK	FL. OR	SHF	PILOT CAR IN USE WAIT & FOLLOW - NON-STATE ROUTE SIGN
G020-5aP	36X24	6.00	ASTM 9 OR 11	BK	FL. OR	SHF	WORK ZONE (PLAQUE) (3) (5)
M04-8a	24X18	3.00	ASTM 9 OR 11	BK	FL. OR	SHF	END DETOUR
M04-9L	48X36	12.00	ASTM 9 OR 11	BK	FL. OR	SHF	DETOUR (LEFT ARROW)
M04-9R	48X36	12.00	ASTM 9 OR 11	BK	FL. OR	SHF	DETOUR (RIGHT ARROW)
M04-9P	48X12	4.00	ASTM 9 OR 11	BK	FL. OR	SHF	STREET NAME (PLAQUE)
M04-10L	48X18	6.00	ASTM 9 OR 11	BK	FL. OR	SHF	DETOUR (ARROW LEFT)
M04-10R	48X18	6.00	ASTM 9 OR 11	BK	FL. OR	SHF	DETOUR (ARROW RIGHT)
REGULATORY SIGNS							
R1-1	48X48	13.25	ASTM 4	WH	RD	SH	STOP
R1-2	48 TRI.	6.93	ASTM 4	RD	WH	SH	YIELD
R1-2a	36X36	9.00	ASTM 4	BK	WH	SH	TO ONCOMING TRAFFIC (PLAQUE)
R1-3p	30X12	2.50	ASTM 4	WH	RD	SH	ALL WAY (PLAQUE)
R2-1	36X48	12.00	ASTM 4	BK	WH	SH	SPEED LIMIT XX
R3-1	48X48	16.00	ASTM 4	BK/RD	WH	SH	NO RIGHT TURN (SYMBOL)
R3-2	48X48	16.00	ASTM 4	BK/RD	WH	SH	NO LEFT TURN (SYMBOL)
R3-3	36X36	9.00	ASTM 4	BK	WH	SH	NO TURNS
R3-4	48X48	16.00	ASTM 4	BK/RD	WH	SH	NO U-TURN (SYMBOL)
R3-7L	30X30	6.25	ASTM 4	BK	WH	SH	LEFT LANE MUST TURN LEFT
R3-7R	30X30	6.25	ASTM 4	BK	WH	SH	RIGHT LANE MUST TURN RIGHT
R4-1	36X48	12.00	ASTM 4	BK	WH	SH	DO NOT PASS
R4-2	36X48	12.00	ASTM 4	BK	WH	SH	PASS WITH CARE
R4-7a	36X48	12.00	ASTM 4	BK	WH	SH	KEEP RIGHT (HORIZONTAL ARROW)
R4-8a	36X48	12.00	ASTM 4	BK	WH	SH	KEEP LEFT (HORIZONTAL ARROW)
R5-1	30X30	6.25	ASTM 4	RD	WH	SH	DO NOT ENTER
R5-1a	36X24	6.00	ASTM 4	WH	RD	SH	WRONG WAY
R6-1L	54X18	6.75	ASTM 4	BK	WH	SH	ONE WAY ARROW (LEFT)
R6-1R	54X18	6.75	ASTM 4	BK	WH	SH	ONE WAY ARROW (RIGHT)
R6-2L	24X30	5.00	ASTM 4	BK	WH	SH	ONE WAY (LEFT)
R6-2R	24X30	5.00	ASTM 4	BK	WH	SH	ONE WAY (RIGHT)
R9-9	24X12	2.00	ASTM 4	BK	WH	SH	SIDEWALK CLOSED
R9-11L	24X18	3.00	ASTM 4	BK	WH	SH	SIDEWALK CLOSED AHEAD, (ARROW RIGHT) CROSS HERE
R9-11R	24X18	3.00	ASTM 4	BK	WH	SH	SIDEWALK CLOSED AHEAD, (ARROW LEFT) CROSS HERE
R10-6	24X36	6.00	ASTM 4	BK	WH	SH	STOP HERE ON RED (45° ARROW)
R11-2	48X30	10.00	ASTM 4	BK	WH	SH	ROAD CLOSED
R11-3a	60X30	12.50	ASTM 4	BK	WH	SH	ROAD CLOSED XX MILES AHEAD LOCAL TRAFFIC ONLY
R11-4	60X30	12.50	ASTM 4	BK	WH	SH	ROAD CLOSED TO THRU TRAFFIC
CONST-3A	60X48	20.00	ASTM 4	BK	WH/ FL. OR	SH	FINE SIGN (3)
CONST-3X	56X12	4.67	ASTM 4	BK	WH	SH	SPEEDING/PASSING (PLATE) (3)
MISCELLANEOUS SIGNS							
CONST-5	48X36	12.00	ASTM 4	WH	BL	SH	POINT OF PRESENCE
CONST-5	96X48	32.00	ASTM 4	WH	BL	SH	POINT OF PRESENCE
CONST-7	72X36	18.00	ASTM 4	WH/BK	BL/FL.OR	SH	RATE OUR WORK ZONE
CONST-7	48X24	8.00	ASTM 4	WH/BK	BL/FL.OR	SH	RATE OUR WORK ZONE
CONST-8	48X36	12.00	ASTM 9 OR 11	BK	FL.OR	SHF	WORK ZONE NO PHONE ZONE

(1) SIGN DEPICTION, ARROW, BORDERS AND SPACING SHALL BE IN ACCORDANCE WITH THE LATEST EDITION OF "STANDARD HIGHWAY SIGNS" BY THE U.S. DEPARTMENT OF TRANSPORTATION - FHWA.

(2) REFER TO THE LATEST EDITION OF MUTCD PART VI BY THE U.S. DEPARTMENT OF TRANSPORTATION - FHWA FOR SIGN DEPICTION. ARROW, BORDERS AND SPACING SHALL CONFORM TO THE GUIDELINES SET FORTH IN THE LATEST EDITION OF "STANDARD HIGHWAY SIGNS" BY THE U.S. DEPARTMENT OF TRANSPORTATION - FHWA.

(3) ARROW, BORDERS AND SPACING SHALL BE IN ACCORDANCE WITH THE LATEST EDITION OF "STANDARD HIGHWAY SIGNS" BY THE U.S. DEPARTMENT OF TRANSPORTATION - FHWA.

(4) USE OF A SUPPLEMENTAL PLATE FOR LINE 1 IS ACCEPTABLE.

(5) PLAQUE AND APPLICABLE REGULATORY SIGN MAY BE MANUFACTURED AS ONE SIGN.

(6) SH REFER TO STD. 903.02 SHEET 1 OF 8

(7) SHF REFER TO STD. 903.02 SHEET 1 OF 8

GENERAL NOTES:

SIGN LAYOUTS SHALL BE IN ACCORDANCE WITH THE LATEST EDITION OF "STANDARD HIGHWAY SIGNS" BY THE U.S. DEPARTMENT OF TRANSPORTATION - FHWA, UNLESS SPECIFIED OTHERWISE.

SIGN DIMENSIONS SHOWN ARE MINIMUM. NO ADDITIONAL PAYMENT WILL BE MADE IF CONTRACTORS USE LARGER SIGNS.

NO ADDITIONAL PAYMENT WILL BE MADE FOR PLATES.

ALL PLAQUES SHALL HAVE A BORDER. PLATES SHALL NOT HAVE A BORDER.

MISSOURI HIGHWAYS AND TRANSPORTATION COMMISSION
105 WEST CAPITOL
JEFFERSON CITY, MO 65102
1-888-ASK-MODOT (1-888-275-6636)

STATE OF MISSOURI
TRAVIS D. KOESTNER
NUMBER PE-30042
PROFESSIONAL ENGINEER
THIS SHEET HAS BEEN SIGNED, SEALED AND DATED ELECTRONICALLY.

TEMPORARY TRAFFIC CONTROL DEVICES

WARNING, GUIDE AND REGULATORY SIGNS

DATE EFFECTIVE: 01/01/2022
DATE PREPARED: 10/21/2021

616.10AY

IF A SEAL IS PRESENT ON THIS SHEET IT HAS BEEN ELECTRONICALLY SEALED AND DATED.

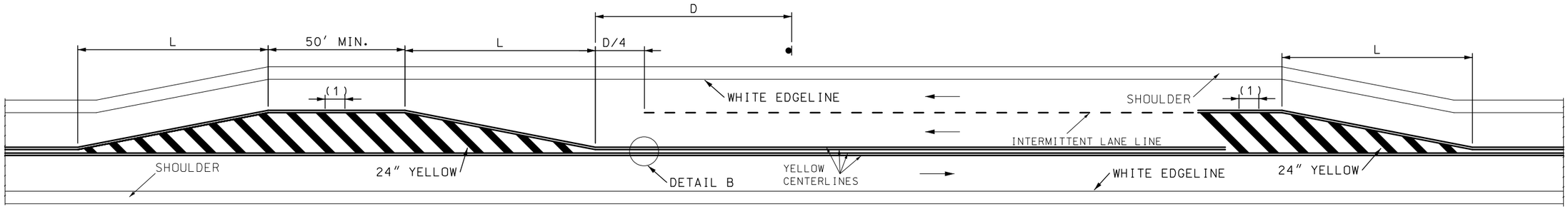

(1) 50′ (TYP.) SPACE BETWEEN BARS. A MINIMUM OF 3 BARS ARE REQUIRED. IF NECESSARY, THE DISTANCE BETWEEN THE BARS SHALL BE DECREASED TO INSTALL 3 BARS.

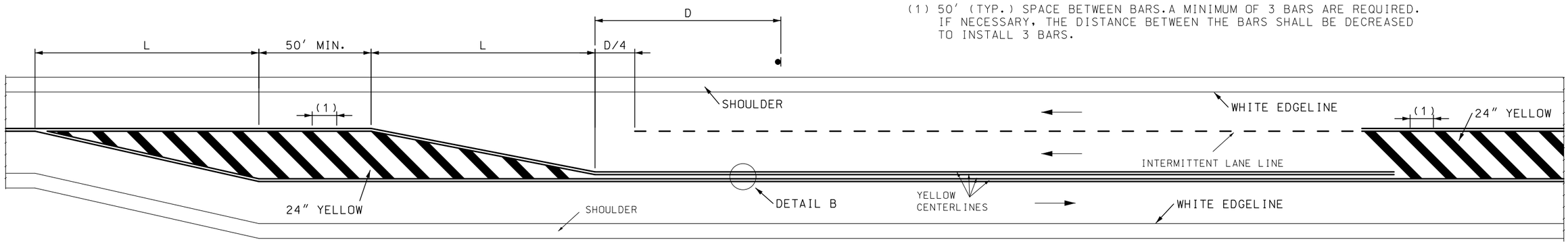

L = S x W WHEN POSTED SPEED 45 MPH OR GREATER OR WS^2 /60 WHEN POSTED SPEED IS 40 MPH OR LESS. EXTEND DISTANCE (L) AS REQUIRED BY SIGHT DISTANCE CONDITIONS.

L = LENGTH OF TAPER IN FEET.

S = POSTED OR 85 PERCENTILE SPEED IN MPH.

W = OFFSET DISTANCE IN FEET.

D = WARNING SIGN SPACING MEASURED FROM BEGINNING OF THE TAPER TO WARNING SIGN "LANE ENDS MERGE RIGHT"

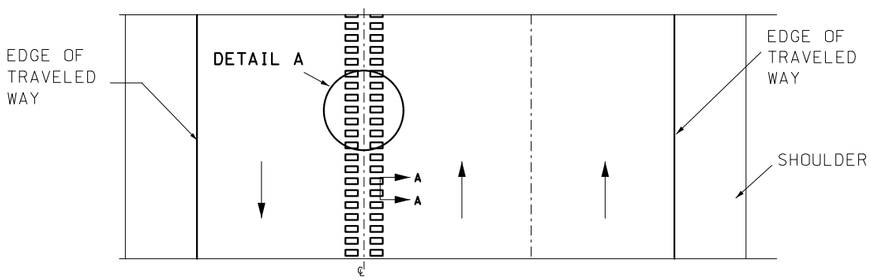

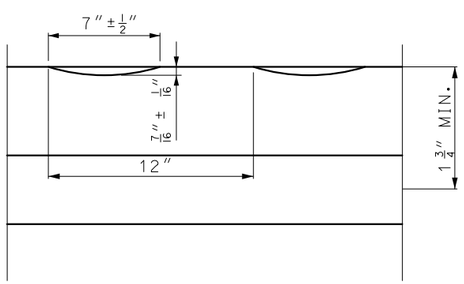

SECTION A-A

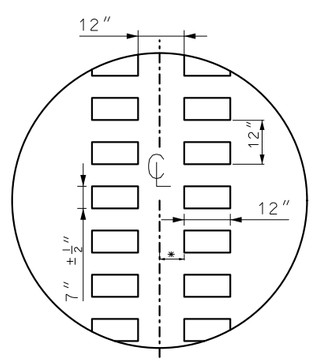

DETAIL A

✳ = LATERAL DEVIATION SHALL NOT EXCEED ONE INCH IN 100 FEET.

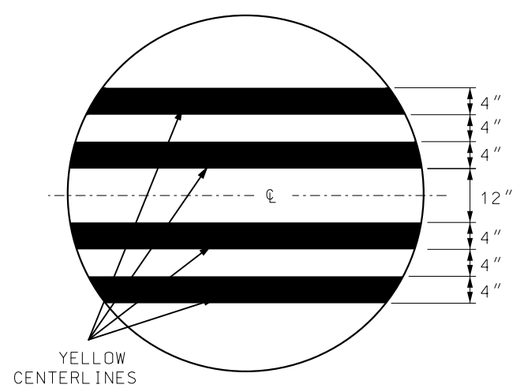

DETAIL B

GENERAL NOTES:

INTERMITTENT LINES SHALL BE 10 FEET IN LENGTH SEPARATED BY 30 FOOT GAPS.

RIGHT SIDE EDGELINES SHALL BE SOLID WHITE. EDGELINES SHALL BE CONTINUOUS ACROSS DRIVEWAYS AND MINOR INTERSECTING ROADS.

CENTERLINE RUMBLE STRIPS ON PASSING ROADWAYS SHALL FOLLOW PAVEMENT STRIPING THROUGH TRANSITIONS. SEE CONTRACT PLANS FOR STRIPING DETAILS.

RUMBLE STRIPS SHALL NOT BE PLACED ON BRIDGES.

ALL RUMBLE STRIPS SHALL BE MILLED.

CENTERLINE RUMBLE STRIPS SHALL BE CONTINUOUS THROUGH CONNECTIONS OF SIDEROADS WITH NO LEFT TURN LANES.

DISCONTINUE CENTERLINE RUMBLE STRIPS THROUGH THE LIMITS OF ALL LEFT TURN LANES. INCLUDING ANY LANE TAPER SECTIONS.

MISSOURI HIGHWAYS AND TRANSPORTATION COMMISSION
105 WEST CAPITOL
JEFFERSON CITY, MO 65102
1-888-ASK-MODOT (1-888-275-6636)

STATE OF MISSOURI
TRAVIS D. KOESTNER
NUMBER PE-30042
PROFESSIONAL ENGINEER
THIS SHEET HAS BEEN SIGNED, SEALED AND DATED ELECTRONICALLY.

PAVEMENT MARKING

ALTERNATE PASSING LANE

DATE EFFECTIVE: 10/01/2021
DATE PREPARED: 7/13/2021

620.00M

SHEET NO. 2 OF 6

IF A SEAL IS PRESENT ON THIS SHEET IT HAS BEEN ELECTRONICALLY SEALED AND DATED.

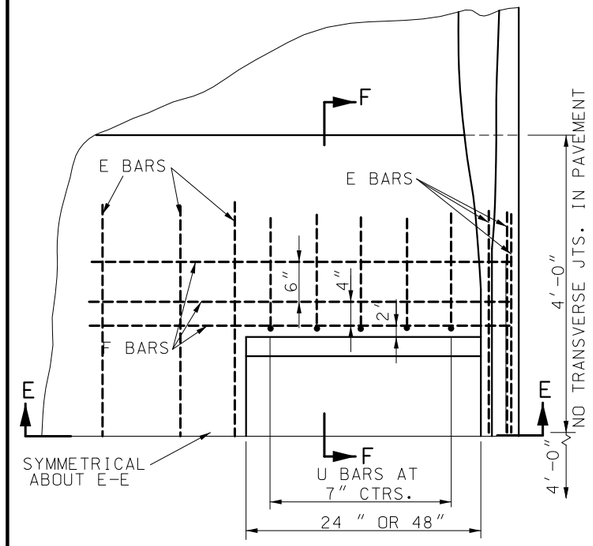

HALF-PLAN

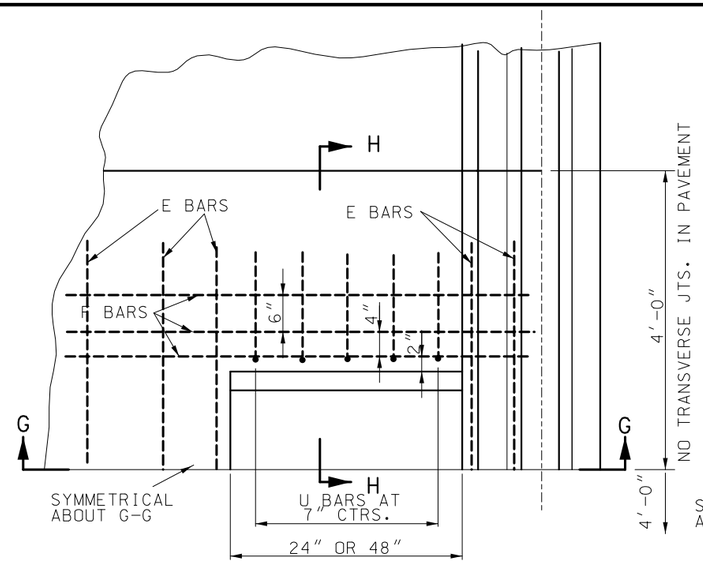

HALF-PLAN

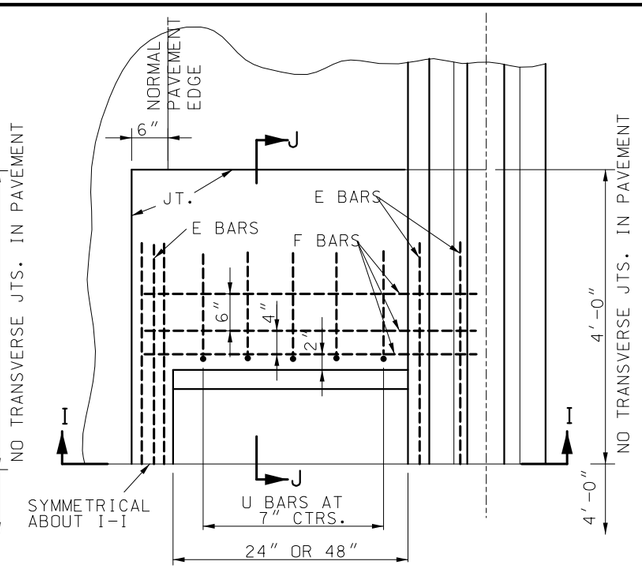

HALF-PLAN

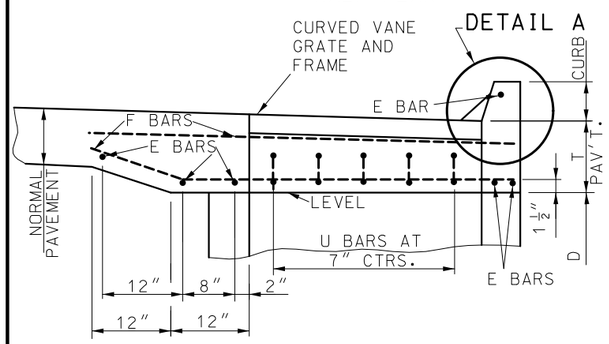

SECTION E-E

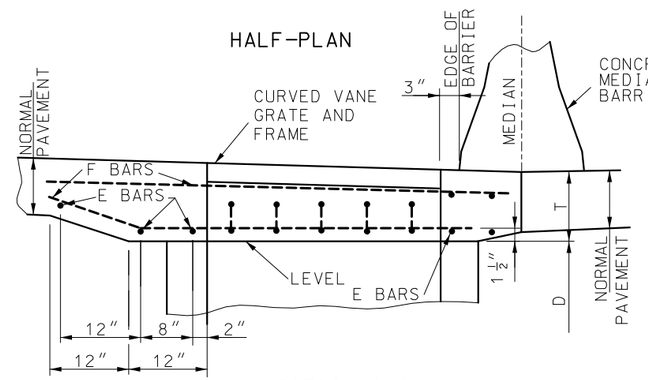

SECTION G-G

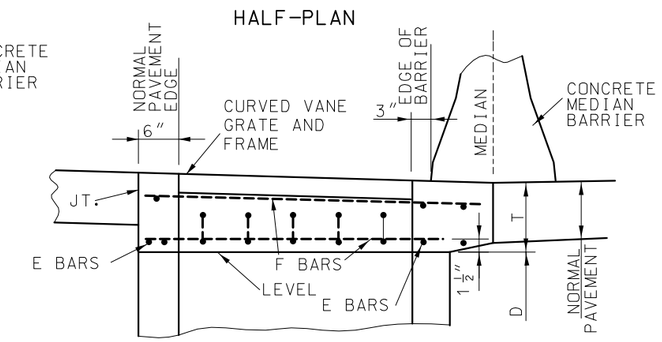

SECTION I-I

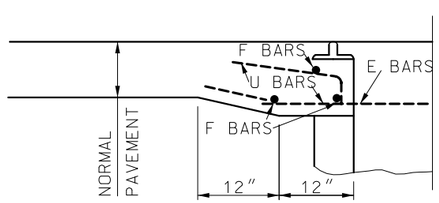

HALF SECTION F-F

TYPE A

INLET ADJACENT TO CURB

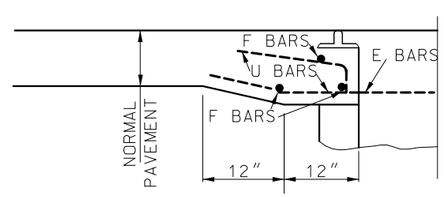

HALF SECTION H-H

TYPE B

DISTANCE BETWEEN BARRIER AND PAVEMENT EDGE GREATER THAN INLET WIDTH

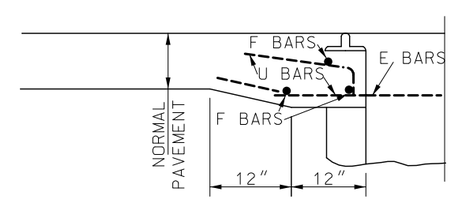

HALF SECTIONJ-J

TYPE C

DISTANCE BETWEEN BARRIER AND PAVEMENT EDGE EQUALTO INLET WIDTH

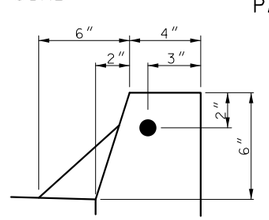

DETAIL A

PAVEMENT BAR BILL

TYPE	WIDTH	LENGTH	MARK	NO.	LENGTH
A	4'	2'	E	6	6'-0"
			F	6	6'-6"
			U	14	2'-9"
	2'	2'	E	6	6'-0"
			F	6	4'-6"
			U	8	2'-9"
B	4'	2'	E	7	6'-0"
			F	6	7'-0"
			U	14	2'-9"
	2'	2'	E	7	6'-0"
			F	6	5'-0"
			U	8	2'-9"
C	4'	2'	E	7	6'-0"
			F	6	5'-3"
			U	14	2'-9"
	2'	2'	E	7	6'-0"
			F	6	3'-3"
			U	8	2'-9"
D	2'	2'	E	6	7'-0"
			F	6	2'-9"
			U	8	2'-9"

BARS E, F, & U.....#4

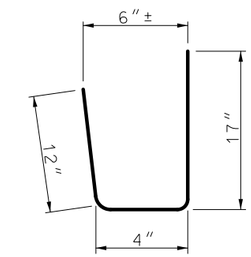

U-BARS

BENDING DIAGRAM

GENERAL NOTE:

SEE STANDARD PLAN 614.11 FOR CURVED VANE GRATE.

IF A SEAL IS PRESENT ON THIS SHEET IT HAS BEEN ELECTRONICALLY SEALED AND DATED.

MISSOURI HIGHWAYS AND TRANSPORTATION COMMISSION
105 WEST CAPITOL
JEFFERSON CITY, MO 65102
1-888-ASK-MODOT (1-888-275-6636)

STATE OF MISSOURI
TRAVIS D. KOESTNER
NUMBER PE-30042
PROFESSIONAL ENGINEER
THIS SHEET HAS BEEN SIGNED, SEALED AND DATED ELECTRONICALLY.

PRECAST DROP INLET

COVERS

DATE EFFECTIVE: 01/01/2022
DATE PREPARED: 10/21/2021

731.10S

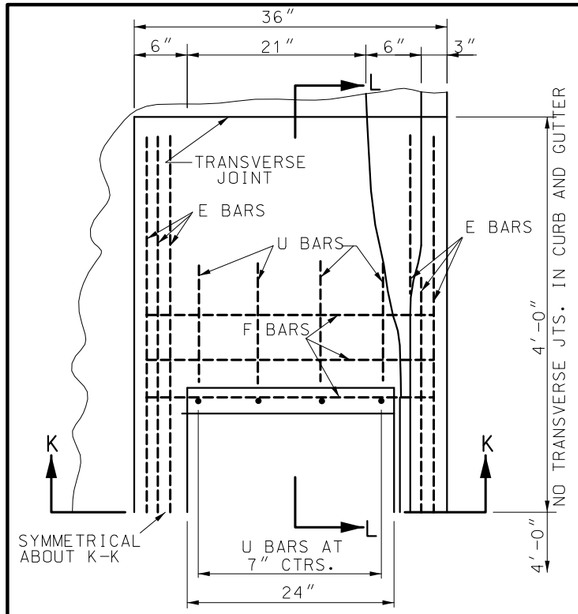

HALF-PLAN

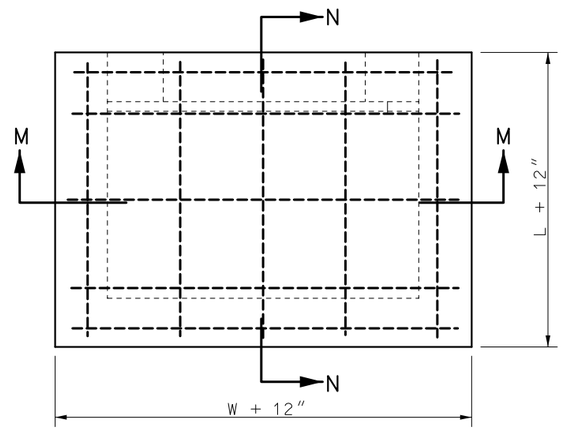

PLAN

PAVEMENT THICKNESS	"T" DIMENSION
LESS THAN OR EQUAL TO 11″	11″
12″	12″
13″	13″
GREATER THAN OR EQUAL TO 14″	14″

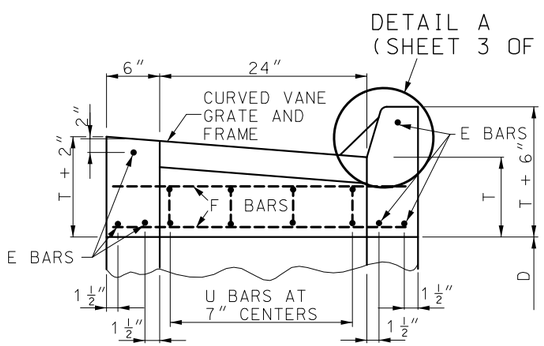

SECTION K-K

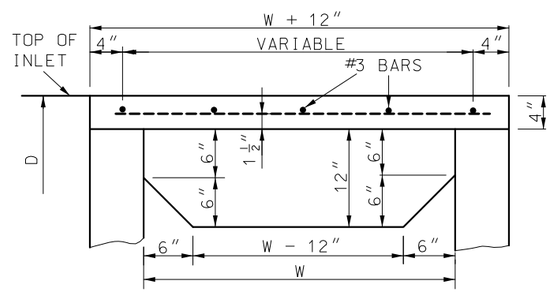

SECTION M-M

TYPE E COVER BAR BILL				
WIDTH	LENGTH	BAR SIZE	NO.	LENGTH
3′	2′	#3	5	2′-9″
		#4	5	3′-9″
3′	3′	#3	5	3′-9″
		#4	5	3′-9″
5′	2′	#3	6	2′-9″
		#4	6	5′-9″
5′	3′	#3	6	3′-9″
		#4	7	5′-9″

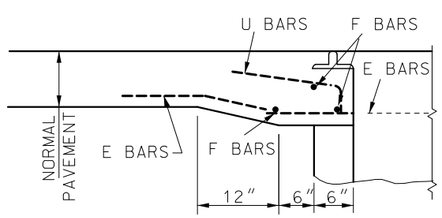

HALF SECTION L-L

TYPE D
CURB AND GUTTER

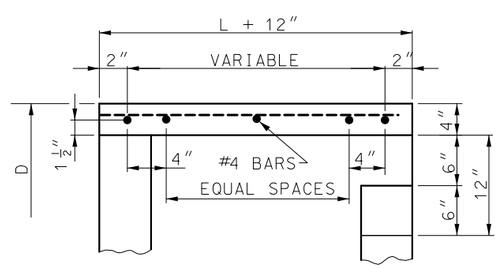

SECTION N-N

TYPE E
PRECAST SLAB

GENERAL NOTES:

THE SIZE OF THE DROP INLET AND TYPE OF COVER WILL BE SHOWN ON THE PLANS.

THE CONFIGURATION DETAILS SHOWN ARE DESCRIPTIVE ONLY AND MAY BE VARIED TO CONFORM WITH ESTABLISHED MANUFACTURING PROCEDURES.

TOP OF DROP INLET WALL SHALL BE CONSTRUCTED TO THE ELEVATION OF BOTTOM OF SLAB AT THE EDGE OF PAVEMENT OR BOTTOM OF CURB AND GUTTER AT DROP INLET.

WHERE THE DROP INLET IS LOCATED IN AN UNPAVED AREA, THE TOP OF THE DROP INLET WALLS SHALL BE SET TO THE ELEVATION SHOWN ON THE PLANS.

ALL CONCRETE ABOVE THE TAR PAPER SEPARATION JOINT IS TO BE CONSTRUCTED DURING PAVING OPERATIONS OR CURB AND GUTTER CONSTRUCTION, AND WILL BE PAID FOR AS SQUARE YARDS OF CONCRETE PAVEMENT OR LINEAR FEET OF CURB AND GUTTER.

FORMED OR CUT-OUT OPENINGS SHALL BE PROVIDED WHERE PIPE INLETS AND OUTLETS ARE SHOWN ON THE PLANS.

REINFORCING BARS IN PAVEMENT SHALL BE EPOXY COATED AND SECURELY TIED TOGETHER AND FASTENED TO AVOID ANY POSSIBLE DISPLACEMENT DURING THE PLACING OF CONCRETE. REINFORCEMENT SHOWN IS IN ADDITION TO ANY REINFORCEMENT SHOWN FOR CONCRETE PAVEMENT OR CURB AND GUTTER.

JOINTS SHALL BE SEALED IN ACCORDANCE WITH SECTION 726.3.1 OF THE STANDARD SPECIFICATIONS.

THE CONTRACTOR WILL BE PERMITTED TO CAST IN PLACE THE DROP INLETS CALLED FOR IN THE PLANS, TO THE DIMENSIONS REQUIRED FOR PRECAST DROP INLETS.

WELDED WIRE REINFORCEMENT MAY BE IN LIEU OF REINFORCING BARS, THE REINFORCEMENT SHALL NOT BE LESS THAN .23 SQUARE INCHES PER LINEAR FOOT BOTH HORIZONTALLY AND VERTICALLY.

NO DIRECT PAYMENT WILL BE MADE FOR REINFORCING STEEL.

NO DIRECT PAYMENT WILL BE MADE FOR CUTTING PIPE NOR FOR CUTTING OR BENDING REINFORCING STEEL.

THE TOP OF INLET PIPES SHALL NOT BE SET BELOW THE TOP OF THE OUTLET PIPE.

NO DIRECT PAYMENT WILL BE MADE FOR FORMING FOR CURVED VANE GRATES AND FRAMES.

THE REINFORCEMENT SHOWN IS THE MINIMUM REQUIRED. AT THE CONTRACTOR'S OPTION, ADDITIONAL REINFORCEMENT MAY BE USED.

REINFORCING STEEL EDGE DISTANCE WILL BE 1½″ UNLESS OTHERWISE SPECIFIED.

NOT MORE THEN TWO LIFT HOLES OR LIFTING INSERTS MAY BE PROVIDED.

CLASS 3 EXCAVATION WILL BE PAID WITHIN VERTICAL PLANES 18″ OUTSIDE OF THE OUTER WALLS OF THE BASE SECTION OF THE DROP INLETS, CLASS 3 EXCAVATION WILL NOT BE PAID FOR OUTSIDE THE FOOTING LIMITS.

IF A SEAL IS PRESENT ON THIS SHEET IT HAS BEEN ELECTRONICALLY SEALED AND DATED.

MISSOURI HIGHWAYS AND TRANSPORTATION COMMISSION
105 WEST CAPITOL
JEFFERSON CITY, MO 65102
1-888-ASK-MODOT (1-888-275-6636)

STATE OF MISSOURI
TRAVIS D. KOESTNER
NUMBER PE-30042
PROFESSIONAL ENGINEER
THIS SHEET HAS BEEN SIGNED, SEALED AND DATED ELECTRONICALLY.

PRECAST DROP INLET
COVERS

DATE EFFECTIVE: 01/01/2022
DATE PREPARED: 10/21/2021

731.10S

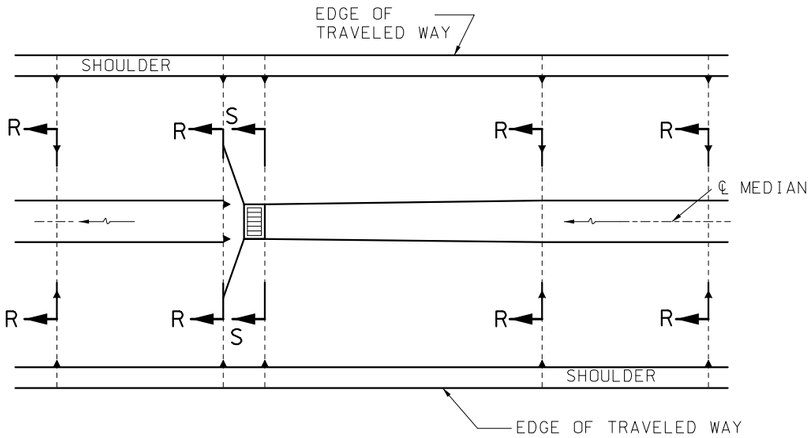

PLAN

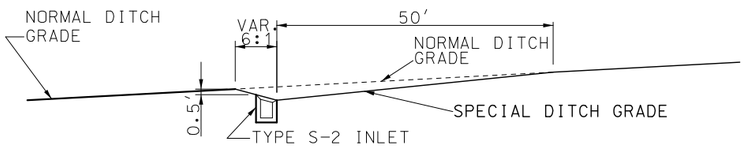

SECTION ALONG CENTERLINE OF MEDIAN RELIEF ON GRADE

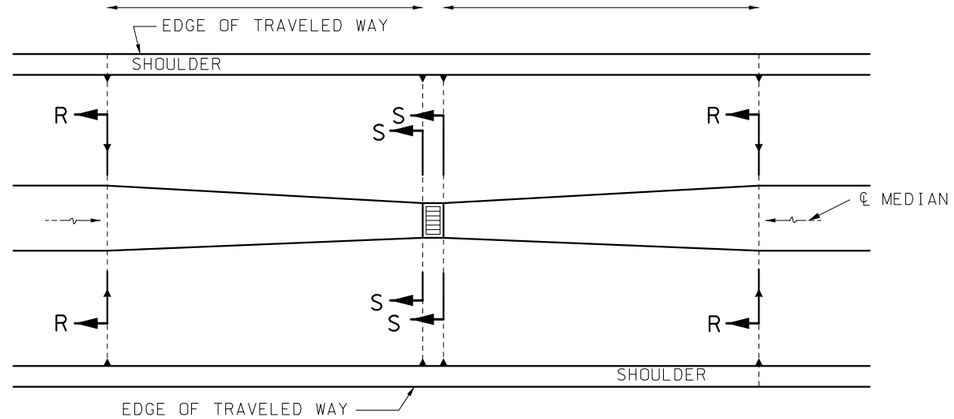

PLAN

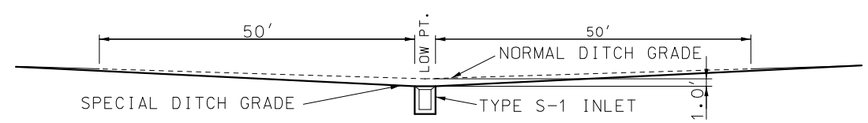

SECTION ALONG CENTERLINE OF MEDIAN RELIEF AT LOW POINT

DETAILS FOR MEDIAN RELIEF-60' MEDIAN

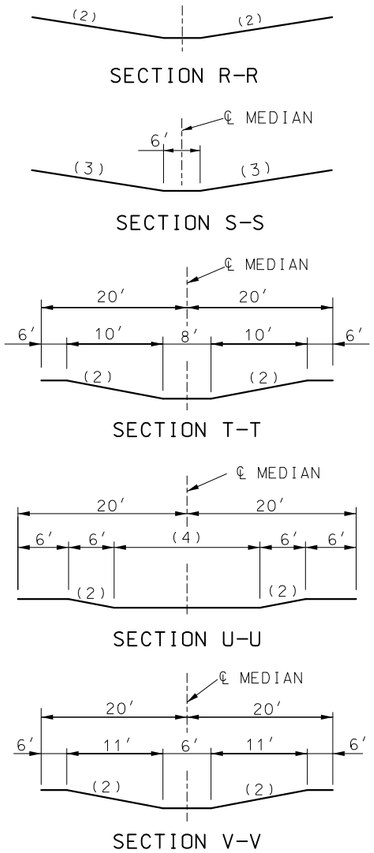

(1) DITCH WIDTH AS GIVEN ON TYPICAL SECTION.

(2) DITCH SLOPE AS GIVEN ON TYPICAL SECTION.

(3) VARY SLOPE TO ACHIEVE MINIMUM 0.5 FT. FREEBOARD ABOVE TOP OF INLET GRATE ON GRADE, OR 1.0 FT. ADDITIONAL DITCH DEPTH BELOW NORMAL DITCH GRADE AT LOW POINT.

(4) VARY WIDTH TO ACHIEVE MINIMUM 0.5 FEET FREEBORAD ABOVE TOP OF INLET GRATE.

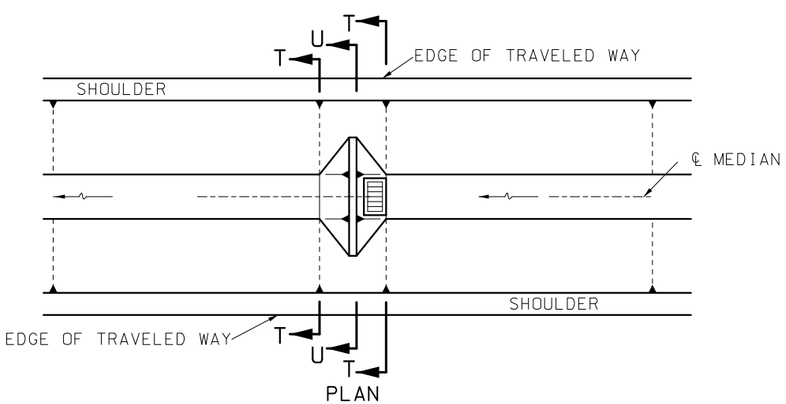

PLAN

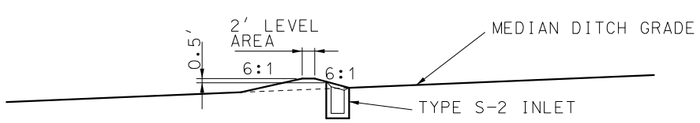

SECTION ALONG CENTERLINE OF MEDIAN RELIEF ON GRADE

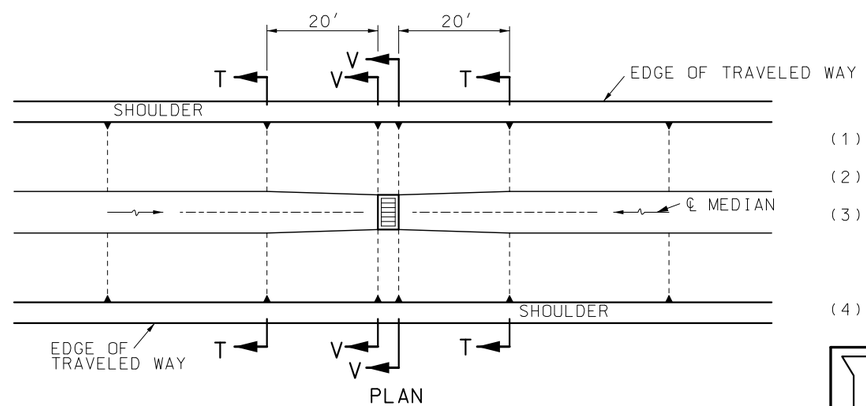

PLAN

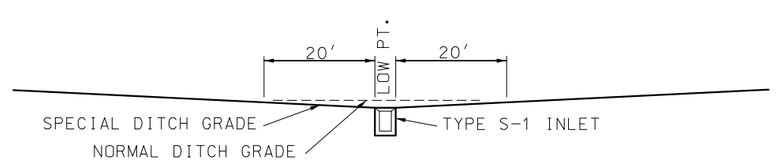

SECTION ALONG CENTERLINE OF MEDIAN RELEIF AT LOW POINT

DETAILS FOR MEDIAN RELIEF-40' MEDIAN

IF A SEAL IS PRESENT ON THIS SHEET IT HAS BEEN ELECTRONICALLY SEALED AND DATED.

MISSOURI HIGHWAYS AND TRANSPORTATION COMMISSION
105 WEST CAPITOL
JEFFERSON CITY, MO 65102
1-888-ASK-MODOT (1-888-275-6636)

STATE OF MISSOURI
TRAVIS D. KOESTNER
NUMBER PE-30042
PROFESSIONAL ENGINEER
THIS SHEET HAS BEEN SIGNED, SEALED AND DATED ELECTRONICALLY.

PRECAST DROP INLET
TYPICAL LOCATION DETAILS - TYPE S

DATE EFFECTIVE: 01/01/2022 DATE PREPARED: 10/21/2021	731.10S	SHEET NO. 7 OF 8

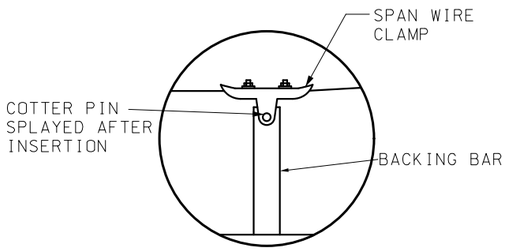

DETAIL A

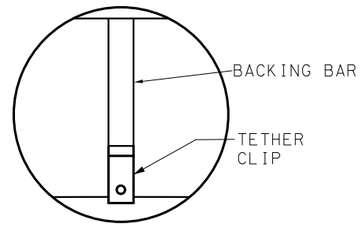

DETAIL B

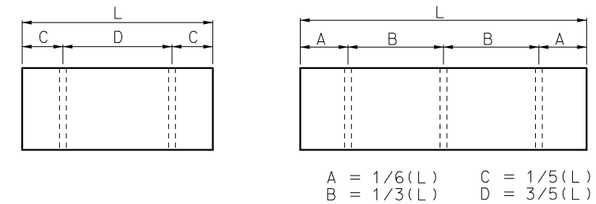

BACKING BAR PLACEMENT

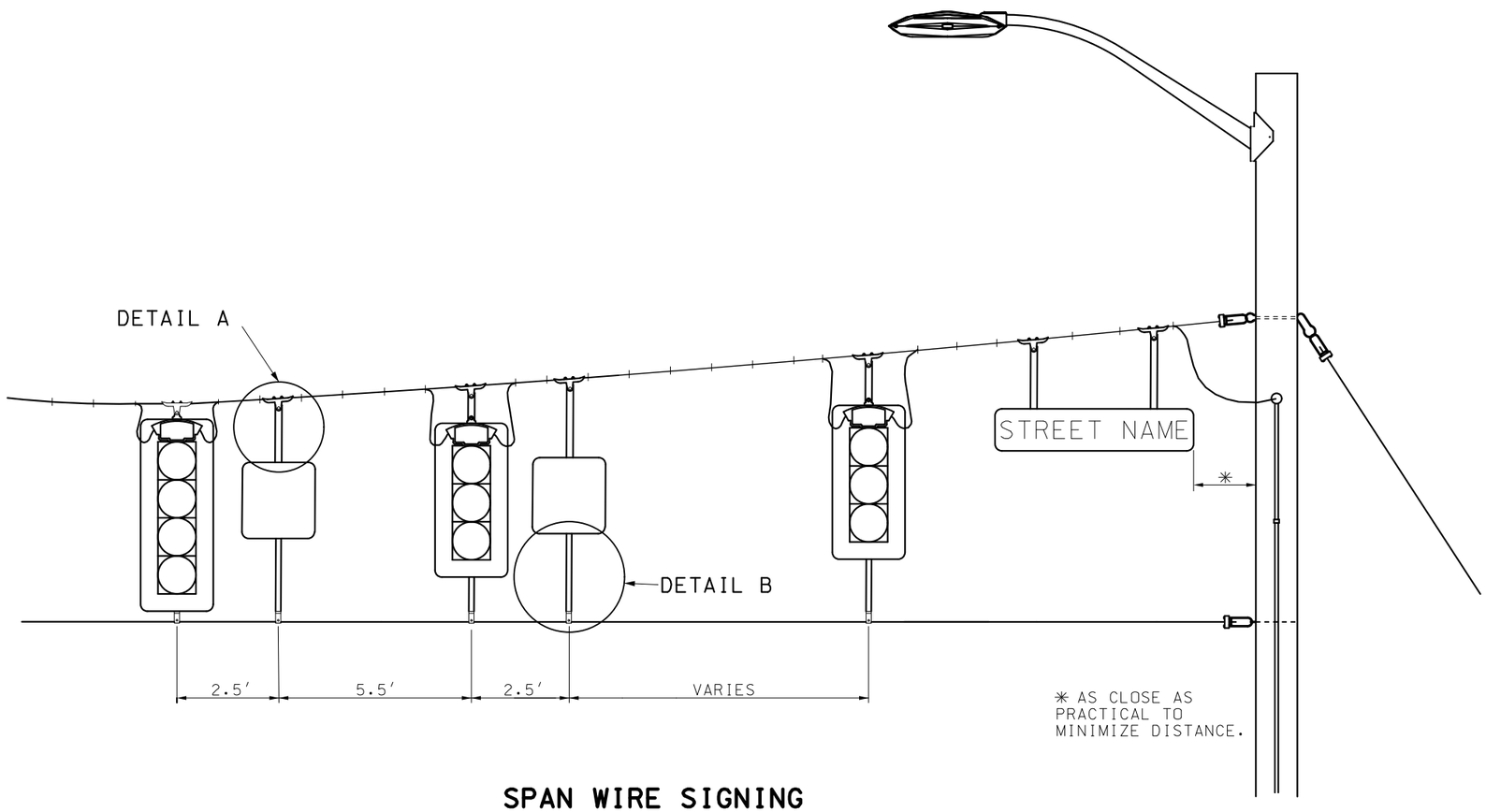

✳ AS CLOSE AS PRACTICAL TO MINIMIZE DISTANCE.

SPAN WIRE SIGNING

GENERAL NOTES:

SIGNS UP TO 30″ IN WIDTH SHALL BE INSTALLED ON ONE VERTICAL BACKING BAR. SIGNS 30″ TO 60″ IN WIDTH SHALL BE INSTALLED ON TWO VERTICAL BACKING BARS. SIGNS WIDER THAN 60″ SHALL BE INSTALLED ON THREE VERTICAL BACKING BARS.

MISSOURI HIGHWAYS AND TRANSPORTATION COMMISSION
105 WEST CAPITOL
JEFFERSON CITY, MO 65102
1-888-ASK-MODOT (1-888-275-6636)

STATE OF MISSOURI
NICOLE A. KOLB HOOD
NUMBER PE-2001018754
PROFESSIONAL ENGINEER
THIS SHEET HAS BEEN SIGNED, SEALED AND DATED ELECTRONICALLY.

TRAFFIC SIGNALS

RIGID SPAN WIRE SIGN DETAILS

DATE EFFECTIVE: 01/01/2022 DATE PREPARED: 10/21/2021	902.70Q	SHEET NO. 3 OF 3

IF A SEAL IS PRESENT ON THIS SHEET IT HAS BEEN ELECTRONICALLY SEALED AND DATED.