MOUNTING HEIGHT DETAIL

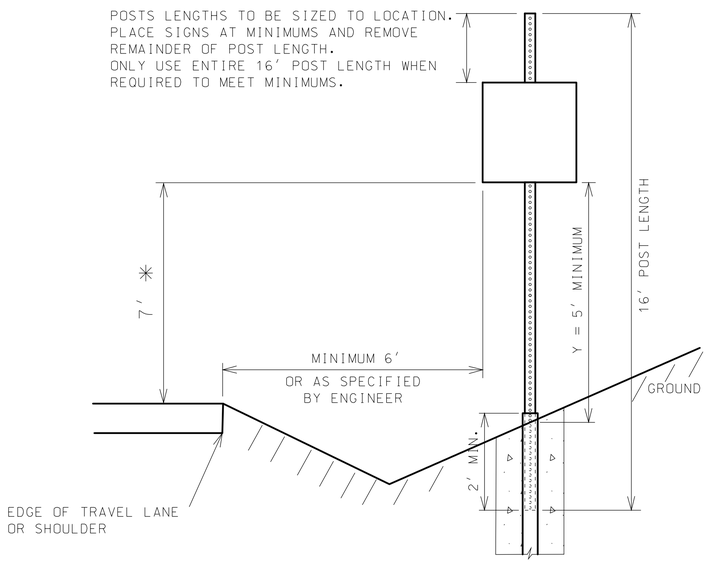

* 7' MINIMUM REQUIRED IN URBAN APPLICATIONS AND PREFERRED IN RURAL APPLICATIONS.
IN RURAL APPLICATIONS ONLY - IN SITUATIONS WHERE THE 7' MINIMUM CAN NOT BE ATTAINED WITH A 16' PSST A RANGE OF 5'- 7' CAN BE USED AS LONG AS DISTANCE "Y" IS ALSO MAINTAINED.

NOTE: PERFORATED SQUARE STEEL TUBE (PSST) POSTS ARE PAID AS 16 LINEAR FOOT. CONTRACTOR IS RESPONSIBLE TO PROPERLY PLACE SIGN AS SHOWN ABOVE IN "MOUNTING HEIGHT DETAIL"

POSTS - 12 GAUGE - 2.5" X 2.5"

ANCHORS - 7 GAUGE - 3" X 3" O.D.

BREAKAWAY - CERTIFIED NCHRP 350 COMPLIANT USE REQUIRED FOR DOUBLE POST INSTALLATIONS ONLY

GALVANIZATION - ALL PSST POSTS, ANCHORS AND BREAKAWAY CASTINGS SHALL BE GALVANIZED PER MoDOT STANDARD SPECIFICATIONS

CONCRETE FOOTING DETAIL

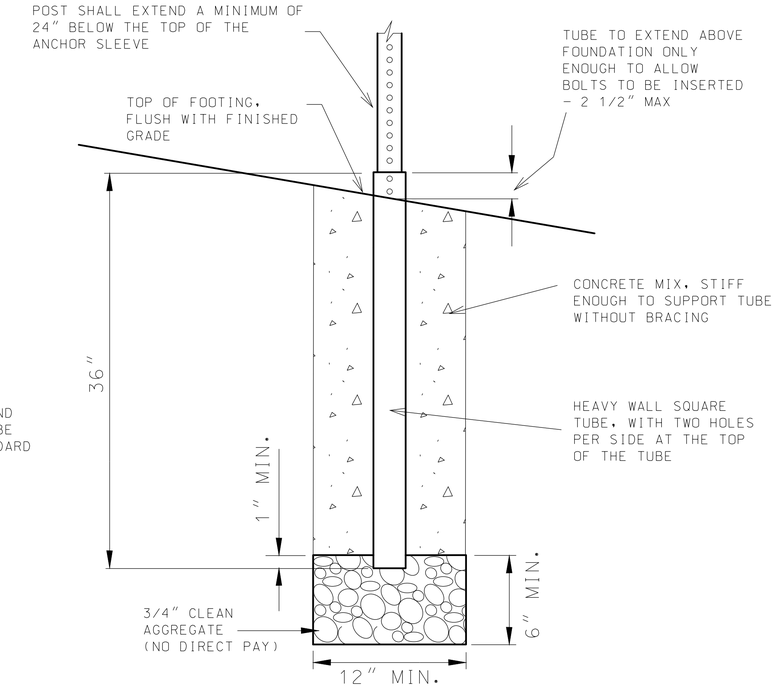

PSST CONCRETE FOOTINGS EMBEDDED PAID AS 3' LENGTH, 12" DIAMETER = 0.09 CUBIC YARDS
REQUIRED AGGREGATE CONSIDERED INCIDENTIAL AND INCLUDED IN CONCRETE FOOTING

BREAKAWAY DETAIL

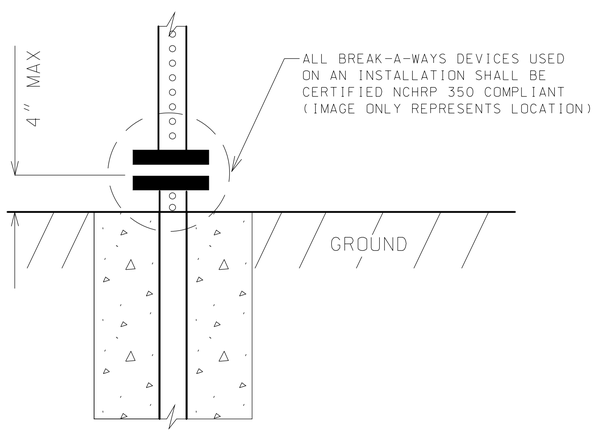

WHEN BREAKAWAY DEVICES ARE REQUIRED THE PORTION FIXED TO THE GROUND ANCHOR SHALL BE NO HIGHER THAN 4" ABOVE THE FINISHED GRADE

7 GAUGE ANCHOR FABRICATION DETAIL FOR 2.5" PSST

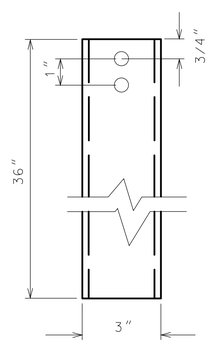

ANCHOR BOLT DETAIL FOR 2.5" PSST

2 SHOULDER BOLTS REQUIRED
INSTALLED PERPENDICULAR TO EACH OTHER

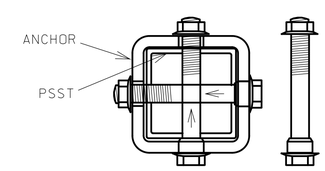

3/8" X 3.5" SHOULDER BOLT AND NUT

THIS DRAWING IS NOT TO SCALE

SPECIAL SHEET

2.5" PSST POST DETAILS

SHEET 22 OF 22

STATE OF MISSOURI
MICHAEL WAYNE DUSENBERG
NUMBER PE-26546
PROFESSIONAL ENGINEER

THIS SHEET HAS BEEN SIGNED, SEALED AND DATED ELECTRONICALLY.

DATE PREPARED	
2/10/2017	
ROUTE 54	STATE MO
DISTRICT CD	SHEET NO. 36
COUNTY CALLAWAY	
JOB NO. J5P3119	
CONTRACT ID.	
PROJECT NO.	
BRIDGE NO.	

DATE	DESCRIPTION

IF A SEAL IS PRESENT ON THIS SHEET IT HAS BEEN ELECTRONICALLY SEALED AND DATED.

MISSOURI HIGHWAYS AND TRANSPORTATION COMMISSION
105 WEST CAPITOL
JEFFERSON CITY, MO 65102
1-888-ASK-MODOT (1-888-275-6636)

REV.