TYPICAL SECTION SHEET

54 EBL OVER STINSON CR.
A-2112
STA. 512+19.30 TO STA. 513+71.68

ROADWAY TYPICAL SECTION

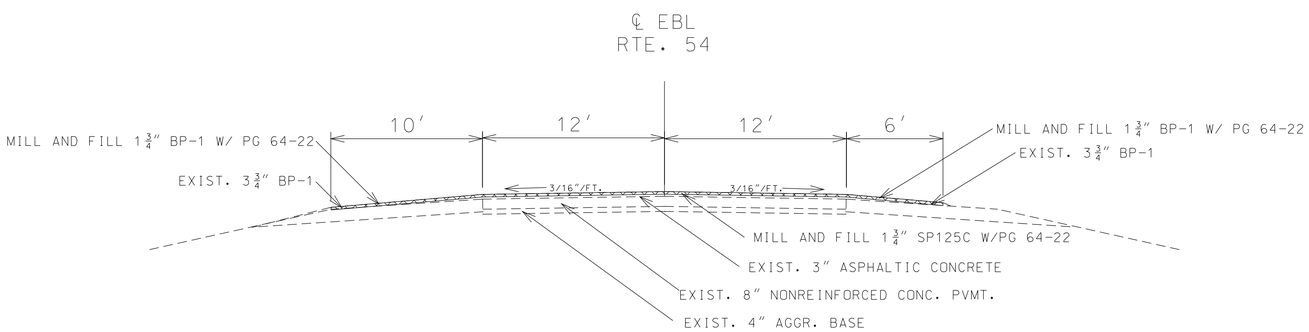

STA. 510+99.30 TO STA. 511+99.30
STA. 513+91.68 TO STA. 514+91.68

NOTE:

1. 8″ HMA SHALL CONSIST OF THE FOLLOWING
   1¾″ BP-1 PG 64-22
   6¼″ BB PG 64-22

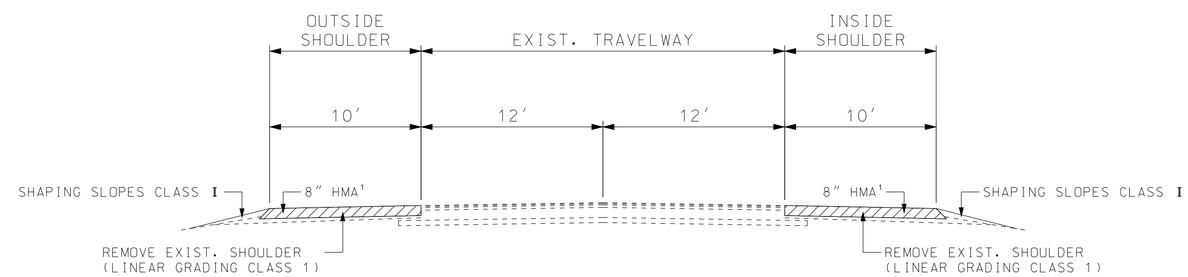

FULL DEPTH SHOULDER DETAILS

EAST BOUND ROUTE 54 AT STINSON CREEK
STA. 509+99.00 TO STA. 518+07.00 INSIDE SHOULDER
STA. 509+99.00 TO STA. 518+07.00 OUTSIDE SHOULDER

PAVEMENT DEPTH TRANSITIONS

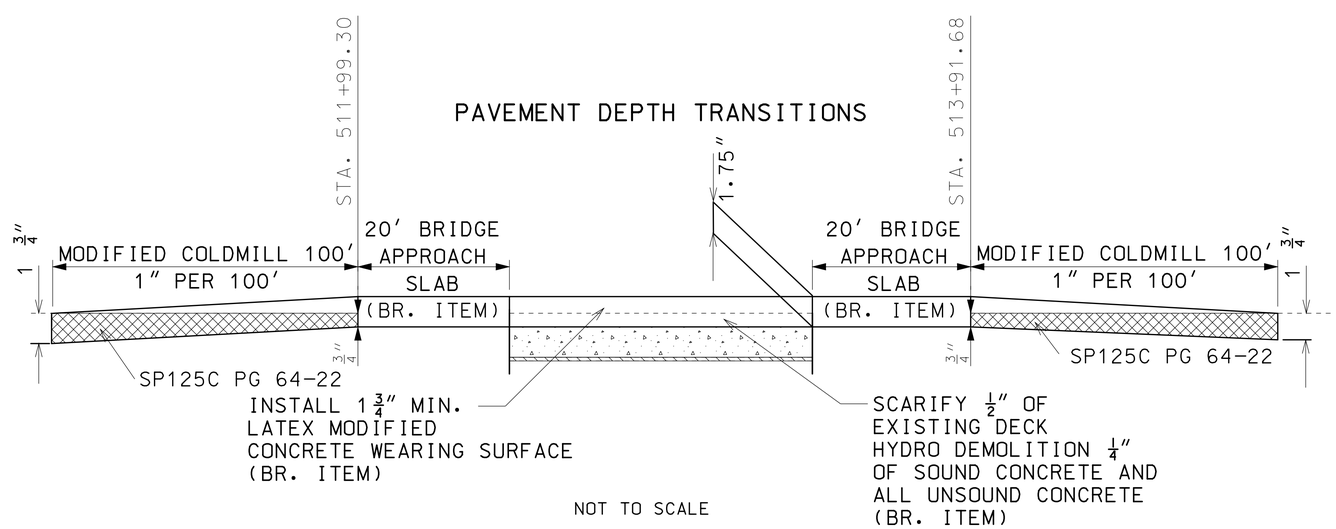

NOT TO SCALE

BRIDGE NO. A2112

TYPICAL SECTION
SHEET 5 OF 8

STATE OF MISSOURI
MICHAEL WAYNE DUSENBERG
NUMBER PE-26546
PROFESSIONAL ENGINEER

THIS SHEET HAS BEEN SIGNED, SEALED AND DATED ELECTRONICALLY.

DATE PREPARED	
2/10/2017	
ROUTE 54	STATE MO
DISTRICT CD	SHEET NO. 2
COUNTY CALLAWAY	
JOB NO. J5P3119	
CONTRACT ID.	
PROJECT NO.	
BRIDGE NO.	

DATE	DESCRIPTION

MISSOURI HIGHWAYS AND TRANSPORTATION COMMISSION
105 WEST CAPITOL
JEFFERSON CITY, MO 65102
1-888-ASK-MODOT (1-888-275-6636)

IF A SEAL IS PRESENT ON THIS SHEET IT HAS BEEN ELECTRONICALLY SEALED AND DATED.

REV.