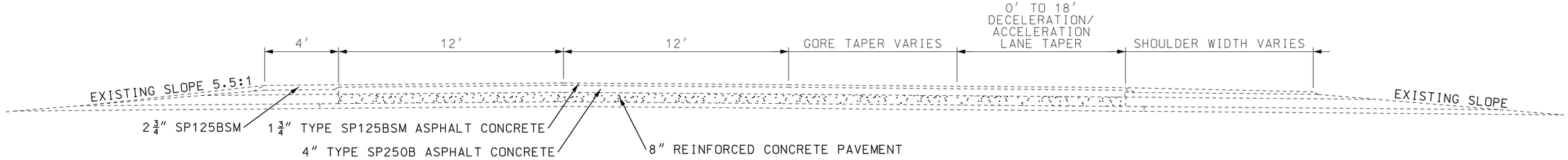

EXISTING TYPICAL SECTION AT RTE. 54 (I-70 E.)

L.M. 147.728 (I-70 E.) TO 147.800/0.049 (I-70 E./I-70 E. TO U.S. 54 W.) (U.S. 54 OFF-RAMP F-2)
L.M. 148.125/0.184 (I-70 E./U.S. 54 E. TO I-70 E.) TO L.M. 148.313 I-70 E. (U.S. 54 ON-RAMP F-4)

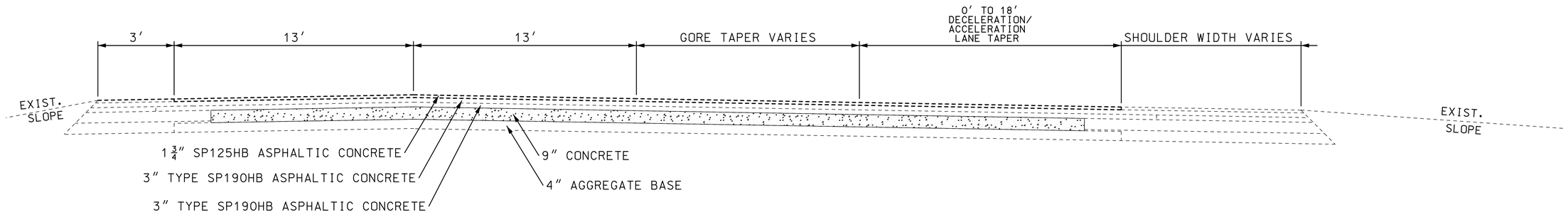

EXISTING TYPICAL SECTION AT RTE. 54 (I-70 W.)

L.M. 101.796 I-70 W. TO L.M. 101.889/0.027 (I-70 W./I-70 W. TO U.S. 54 E.) (U.S. 54 OFF-RAMP F-3)
L.M. 102.193/0.162 (I-70 W./U.S. 54 W. TO I-70 W.) TO L.M. 102.361 I-70 W. (U.S. 54 ON-RAMP F-1)

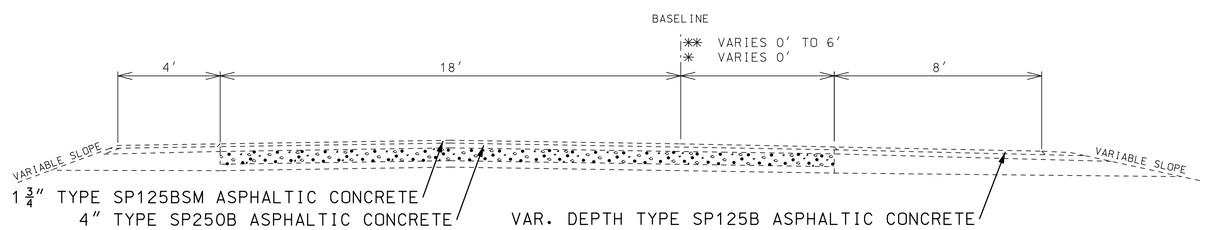

EXISTING TYPICAL SECTION AT RTE. 54 (I-70 E.)

✳ L.M. 0.049 (I-70 E. TO U.S. 54 W.) TO L.M. 0.079 (I-70 E. TO U.S. 54 W.) (U.S. 54 OFF-RAMP F-2)
✳✳ L.M. 0.079 (I-70 E. TO U.S. 54 W.) TO L.M. 0.163 (I-70 E. TO U.S. 54 W.) (U.S. 54 OFF-RAMP F-2)

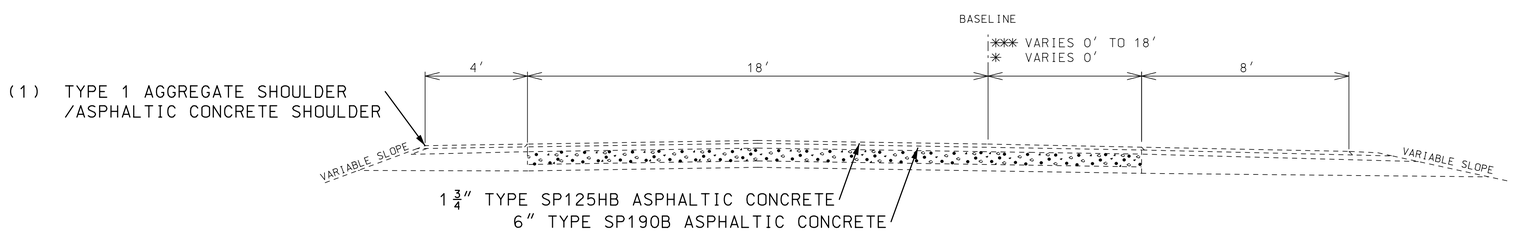

EXISTING TYPICAL SECTION AT RTE. 54 (I-70 W.)

✳ (1) L.M. 0.025 (U.S. 54 W. TO I-70 W.) TO L.M. 102.193/0.162 (I-70 W./U.S. 54 W. TO I-70 W.) (U.S. 54 ON-RAMP F-1)
✳ L.M. 101.889/0.027 (I-70 W./I-70 W. TO U.S. 54 E.) TO L.M. 0.072 (I-70 W. TO I-70 W. TO U.S. 54 E.) (U.S. 54 OFF-RAMP F-3)
✳✳✳ L.M. 0.072 (I-70 W. TO U.S. 54 E.) TO L.M. 0.111 (I-70 W. TO U.S. 54 E.) (U.S. 54 OFF-RAMP F-3)

EXISTING U.S. 54 RAMPS
TYPICAL SECTION
SHEET 7 OF 8

STATE OF MISSOURI
MARIA K. PETERS
NUMBER PE-2000162118
PROFESSIONAL ENGINEER
THIS SHEET HAS BEEN SIGNED, SEALED AND DATED ELECTRONICALLY.

DATE PREPARED 8/24/2020
ROUTE 70 | STATE MO
DISTRICT CD | SHEET NO. 2
COUNTY CALLAWAY
JOB NO. J5I3137
CONTRACT ID.
PROJECT NO.
BRIDGE NO.

DATE	DESCRIPTION

MISSOURI HIGHWAYS AND TRANSPORTATION COMMISSION
105 WEST CAPITOL
JEFFERSON CITY, MO 65102
1-888-ASK-MODOT (1-888-275-6636)

IF A SEAL IS PRESENT ON THIS SHEET IT HAS BEEN ELECTRONICALLY SEALED AND DATED.