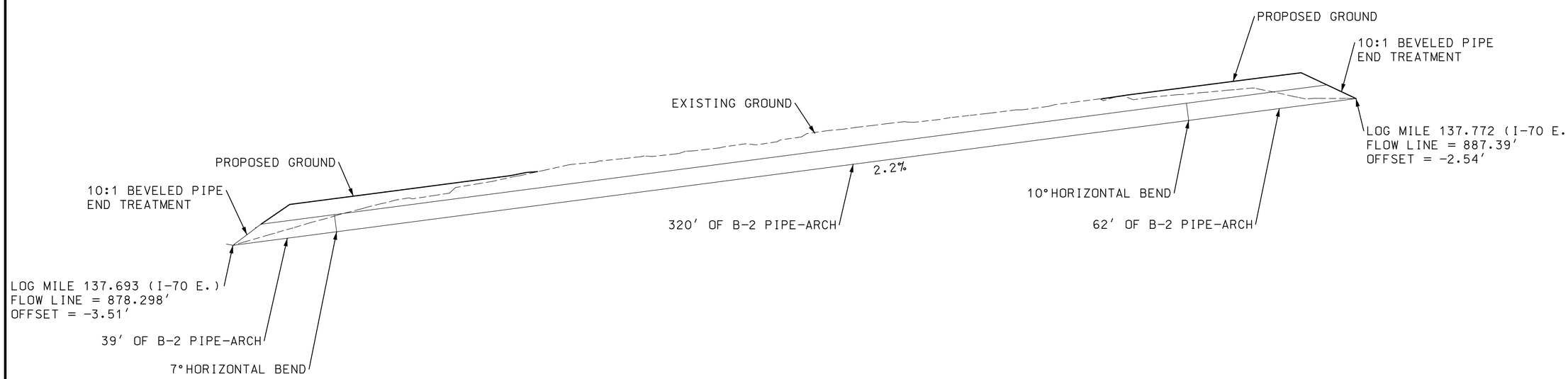

CULVERT SECTION

ROUTE J

SHEET 1 OF 4

STATE OF MISSOURI
MARIA K. PETERS
NUMBER
PE-2000162118
PROFESSIONAL ENGINEER

THIS SHEET HAS BEEN SIGNED, SEALED AND DATED ELECTRONICALLY.

DATE PREPARED	
8/24/2020	
ROUTE	STATE
70	MO
DISTRICT	SHEET NO.
CD	41
COUNTY	
CALLAWAY	
JOB NO.	
J5I3137	
CONTRACT ID.	
PROJECT NO.	
BRIDGE NO.	

DATE	DESCRIPTION

IF A SEAL IS PRESENT ON THIS SHEET IT HAS BEEN ELECTRONICALLY SEALED AND DATED.

MISSOURI HIGHWAYS AND TRANSPORTATION COMMISSION

105 WEST CAPITOL
JEFFERSON CITY, MO 65102
1-888-ASK-MODOT (1-888-275-6636)