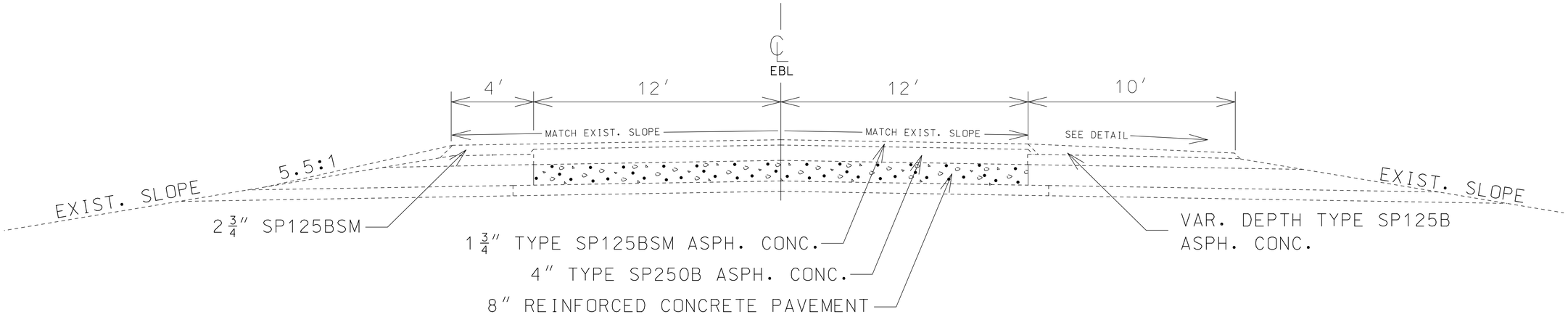

EXISTING TYPICAL SECTION I-70 E.

LOG MILE 136.615 TO LOG MILE 145.204

EXCEPTIONS: L.M. 137.477 I-70 E. TO L.M. 137.582 I-70 E. (ROUTE J OFF-RAMP D-3)
L.M. 137.855/0.126 (I-70 E./RTE. J TO I-70 E.) TO L.M. 138.030 I-70 E. (ROUTE J ON-RAMP D-4)
L.M. 143.952 I-70 E. TO L.M. 144.052/0.048 (I-70 E./I-70 E. TO RTE. HH) (ROUTE M OFF-RAMP E-3)
L.M. 144.334/0.142 (I-70 E./RTE. HH TO I-70 E.) TO L.M. 144.513 I-70 E. (ROUTE M ON-RAMP E-4)

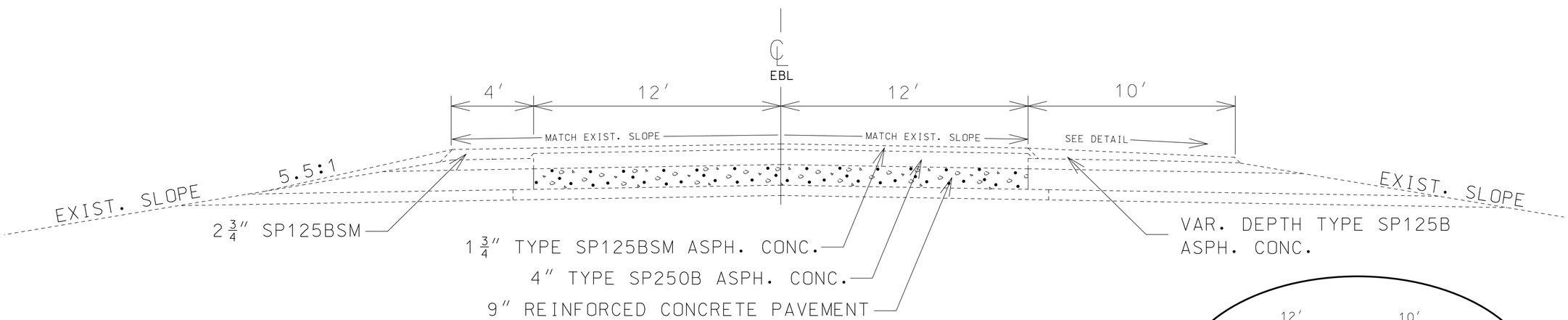

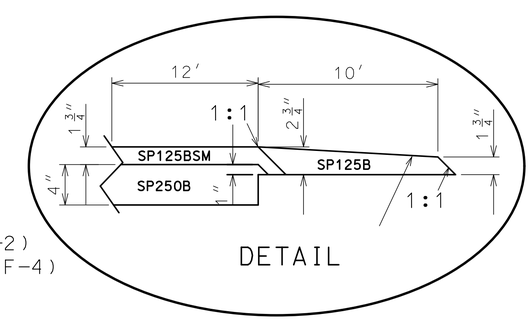

EXISTING TYPICAL SECTION I-70 E.

LOG MILE 145.204 TO LOG MILE 148.313

EXCEPTIONS: L.M. 147.728 (I-70 E.) TO 147.800/0.049 (I-70 E./I-70 E. TO U.S. 54 W.) (U.S. 54 OFF-RAMP F-2)
L.M. 148.125/0.184 (I-70 E./U.S. 54 E. TO I-70 E.) TO L.M. 148.313 I-70 E. (U.S. 54 ON-RAMP F-4)

EXISTING I-70 E.
TYPICAL SECTION
SHEET 1 OF 8

STATE OF MISSOURI
MARIA K. PETERS
NUMBER PE-2000162118
PROFESSIONAL ENGINEER

THIS SHEET HAS BEEN SIGNED, SEALED AND DATED ELECTRONICALLY.

DATE PREPARED	8/24/2020
ROUTE	70
STATE	MO
DISTRICT	CD
SHEET NO.	2
COUNTY	CALLAWAY
JOB NO.	J5I3137
CONTRACT ID.	
PROJECT NO.	
BRIDGE NO.	

DATE	DESCRIPTION

MISSOURI HIGHWAYS AND TRANSPORTATION COMMISSION
105 WEST CAPITOL
JEFFERSON CITY, MO 65102
1-888-ASK-MODOT (1-888-275-6636)

IF A SEAL IS PRESENT ON THIS SHEET IT HAS BEEN ELECTRONICALLY SEALED AND DATED.