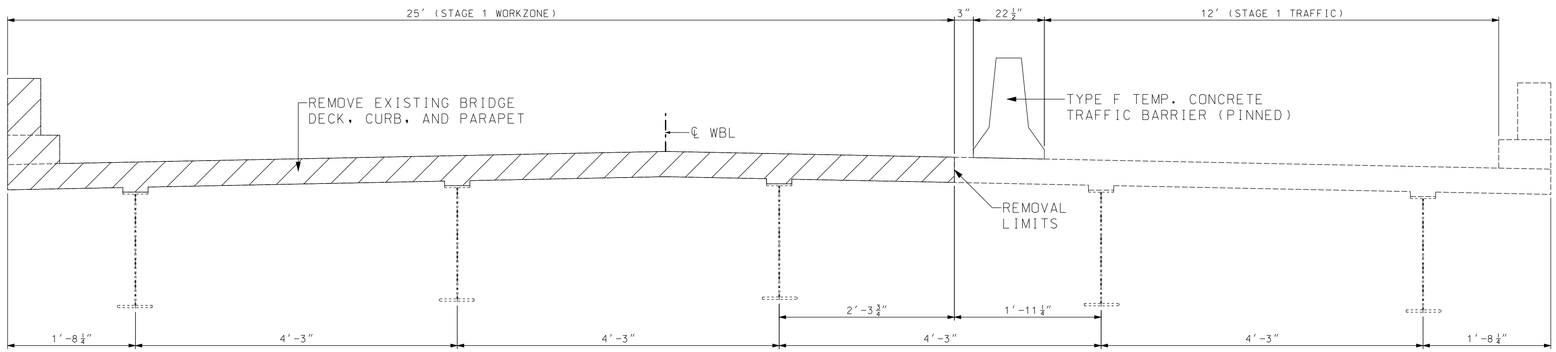

STAGE 1 REMOVAL

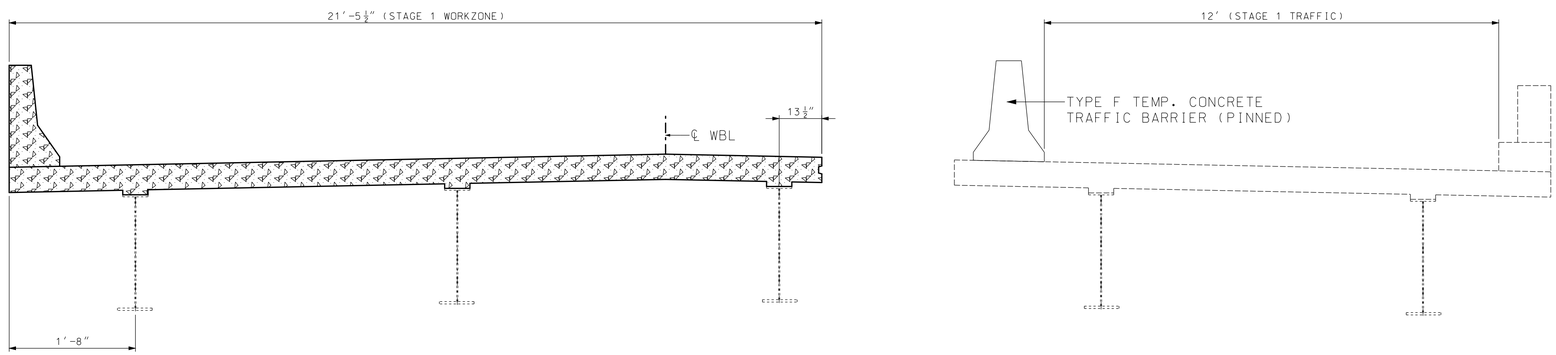

STAGE 1 CONSTRUCTION

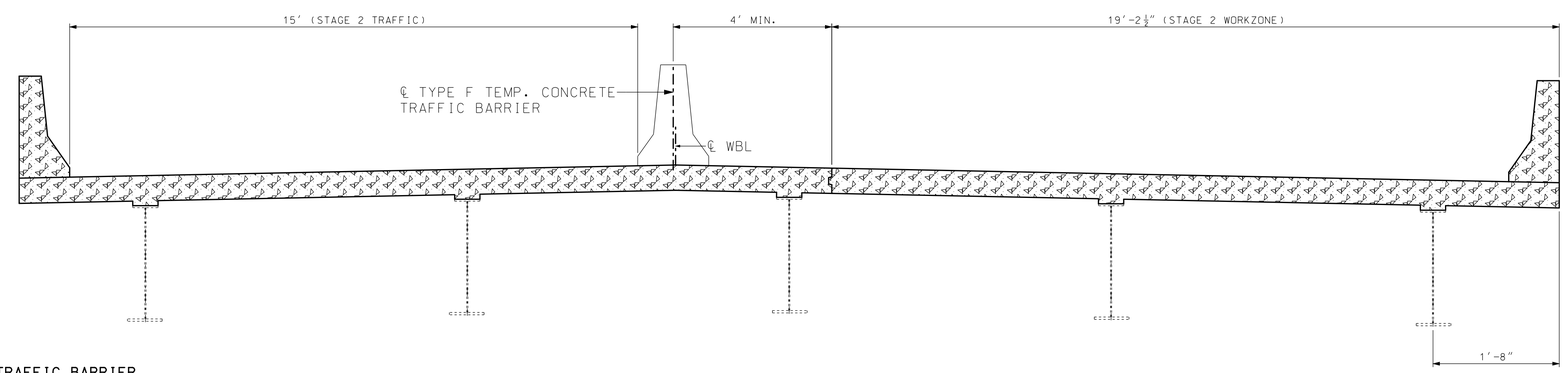

STAGE 2 CONSTRUCTION

NOTE: THIS DRAWING IS NOT TO SCALE. FOLLOW DIMENSIONS.

NOTE:

TYPE F TEMPORARY CONCRETE TRAFFIC BARRIER SHALL BE ANCHORED DURING STAGE 1.
TYPE F TEMPORARY CONCRETE TRAFFIC BARRIER SHALL NOT BE ANCHORED DURING STAGE 2.

STAGED CONSTRUCTION

BRIDGE NO. A2109

TRAFFIC CONTROL SHEET
RICHLAND CREEK
SHEET 13 OF 16

STATE OF MISSOURI
MICHAEL WAYNE DUSENBERG
NUMBER PE-26546
PROFESSIONAL ENGINEER

THIS SHEET HAS BEEN SIGNED, SEALED AND DATED ELECTRONICALLY.

DATE PREPARED	2/10/2017
ROUTE	54
STATE	MO
DISTRICT	CD
SHEET NO.	49
COUNTY	CALLAWAY
JOB NO.	J5P3119
CONTRACT ID.	
PROJECT NO.	
BRIDGE NO.	A2109

DATE	DESCRIPTION

MISSOURI HIGHWAYS AND TRANSPORTATION COMMISSION
105 WEST CAPITOL
JEFFERSON CITY, MO 65102
1-888-ASK-MODOT (1-888-275-6636)

IF A SEAL IS PRESENT ON THIS SHEET IT HAS BEEN ELECTRONICALLY SEALED AND DATED.

REV.