MISSOURI 2019 AIRPORT LIGHTING PACKAGE

WEST PACKAGE
SCHEDULE A: ALBANY MUNICIPAL AIRPORT (K19)
SCHEDULE B: CARROLLTON MEMORIAL AIRPORT (K26)
SCHEDULE C: ROY OTTEN MEMORIAL AIRFIELD (3VS)
SCHEDULE D: AVA BILL MARTIN MEMORIAL AIRPORT (AOV)

ADDENDUM NO. 1

November 2, 2020

STATE OF MISSOURI
MATTHEW JOHN JACOBS
NUMBER
PE-2002025585
PROFESSIONAL ENGINEER
11/2/20

TO ALL PROSPECTIVE BIDDERS:

A. You are hereby notified of the following amendments to the Contract Documents/Specifications for the subject project.

1. Section 1, Notice to Bidders. The **deadline to submit sealed bids has been revised to 2:00 P.M. (CST), Tuesday, November 10th, 2020**. Contractors that are dropping off bids at Lochner's Lenexa, KS office and staying for the bid opening will be required to wait in their car after dropping off bids to maintain minimal amount of contact with others. Once it is time to open bids, Contractors will be allowed into the building to attend the bid opening. Lochner will have chairs spaced at least six feet apart to maintain social distancing requirements. For those not attending the bid opening but would like to hear the bid results virtually, Lochner has set up a Microsoft Teams room dedicated to the bid opening. To attend the bid opening videoconference for this project, please email your request to be added to the invitation to Ian Wright with Lochner. This section now reads:

   "Sealed bids subject to the conditions and provisions presented herein will be received until **2:00 P.M. (CST), Tuesday, November 10, 2020,** ***(Revised per Addendum No. 1)*** and then publicly opened and read at the office of **Lochner, 16105 W 113th Street, Suite 107, Lenexa, KS 66219**. Contractors delivering bids must first deliver their bid and then wait in their car until the bid opening. Once it is time to open bids, Contractors will be allowed into the Lochner office where there will be chairs spaced at least six feet apart in a large room to maintain social distancing requirements. **A bid opening videoconference will be held for those who would like to attend the bid opening virtually. To receive a calendar invitation via email with a link to access the videoconference, please email your request to be added to the invitation to Ian Wright with Lochner at iwright@hwlochner.com.** ***(Revised per Addendum No. 1)*** Bids will be submitted for furnishing all labor, materials…"

   Revised Section 1 Notice to Bidders is included with this addendum for reference.

2. Section 2, Instructions to Bidders. The deadline to submit sealed bids has been revised to 2:00 P.M. (CST), Tuesday, November 10th, 2020. The upper left hand corner of the envelope containing the sealed bid should now be marked as follows:

   "Sealed Bid Proposal
   Bid of NAME OF BIDDER
   For construction improvements at **Missouri 2019 Airport Lighting Package – Western Half**
   To be opened at: **2:00 P.M. (CST), Tuesday, November 10, 2020"**

   Revised Section 2 Instructions to Bidders is included with this addendum for reference.

B. You are hereby notified of the following amendments to the Construction Plans for the subject project. Revised versions of the referenced Plan Sheets are included with this addendum for reference.

1. **Schedule A: Albany Municipal Airport**, Sheet No. 16 Vault Enclosure Plan and Details. The vault height (6'-10" minimum) and length (13'-6" minimum) were added to the vault enclosure elevation detail. The 8" x 8" wireway is now a 4" x 4" wireway. The 100A lighting contactor for the regulator, rotating beacon, and wind cone was removed. The regulator will now be controlled via a 120V, 5A (minimum) control relay and the rotating beacon and wind cone via a 20A, 2 pole lighting contactor. The PAPI control relay is now a 20A, 2 pole lighting contactor.

   Revised Schedule A: Albany Municipal Airport, Sheet No. 16 Vault Enclosure Plan and Details is included with this addendum for reference.

2. **Schedule A: Albany Municipal Airport**, Sheet No. 17 Distribution Schematic. The 8" x 8" wireway is now a 4" x 4" wireway. The 100A lighting contactor for the regulator, rotating beacon, and wind cone was removed. The regulator will now be controlled via a 120V, 5A (minimum) control relay and the rotating beacon and wind cone via a 20A, 2 pole lighting contactor. The PAPI control relay is now a 20A, 2 pole lighting contactor. Radio interface specifications were added to the label, and the callout for the S-1 cutout revised to indicate that this is to be integrated with the regulator. The Distribution System Elevation and Wiring Diagram Schematics were updated to reflect these changes.

   Revised Schedule A: Albany Municipal Airport, Sheet No. 17 Distribution Schematic is included with this addendum for reference.

3. **Schedule B: Carrollton Memorial Airport**, Sheet No. 16 Vault Plan and Details. The 100A lighting contactor for the regulator, rotating beacon, and wind cone was removed. The regulator will now be controlled via a 120V, 5A (minimum) control relay and the rotating beacon and wind cone via a 20A, 2 pole lighting contactor. The PAPI control relay is now a 20A, 2 pole lighting contactor.

   Revised Schedule B: Carrollton Memorial Airport, Sheet No. 16 Vault Plan and Details is included with this addendum for reference.

4. **Schedule B: Carrollton Memorial Airport**, Sheet No. 17 Distribution Schematic. The 6'x8" x 8" wireway is now a 4" x 4" wireway. The 100A lighting contactor for the regulator, rotating beacon, and wind cone was removed. The regulator will now be controlled via a 120V, 5A (minimum) control relay and the rotating beacon and wind cone via a 20A, 2 pole lighting contactor. The PAPI control relay is now a 20A, 2 pole lighting contactor. Radio interface specifications were added to the label, and the callout for the S-1 cutout revised to indicate that this is to be integrated with the regulator. The Distribution System Elevation and Wiring Diagram Schematics were updated to reflect these changes.

   Revised Schedule B: Carrollton Memorial Airport, Sheet No. 17 Distribution Schematic is included with this addendum for reference.

5. **Schedule C: Roy Otten Memorial Airfield**, Sheet No. 12 Vault Enclosure Plan and Details. The 4" x 4" wireway note was added to the drawing. Dimensions for the electrical vault enclosure that were accidentally omitted have been added. The 100A lighting contactor for the regulator and wind cone was removed. The regulator will now be controlled via a 120V, 5A (minimum) control relay and 20A, 2 pole lighting contactor.

   Revised Schedule C: Roy Otten Memorial Airfield, Sheet No. 12 Vault Enclosure Plan and Details is included with this addendum for reference.

6. **Schedule C: Roy Otten Memorial Airfield**, Sheet No. 13 Distribution Schematic. The 8" x 8" wireway is now a 4" x 4" wireway. The 100A lighting contactor for the regulator and wind cone was removed. The regulator will now be controlled via a 120V, 5A (minimum) control relay and 20A, 2 pole lighting contactor. Radio interface specifications were added to the label, and the callout for the S-1 cutout revised to indicate that this is to be integrated with the regulator. The Distribution System Elevation and Wiring Diagram Schematics were updated to reflect these changes.

   Revised Schedule C: Roy Otten Memorial Airfield, Sheet No. 13 Distribution Schematic is included with this addendum for reference.

7. **Schedule D: Ava Bill Martin Memorial Airport**, Sheet No. 14 Vault Enclosure Plan and Details. The vault height (6'-10" minimum) and length (13'-6" minimum) were added to the vault enclosure elevation detail. The 8" x 8" wireway is now a 4" x 4" wireway. The 100A lighting contactor for the regulator, was removed. The regulator will now be controlled via a 120V, 5A (minimum) control relay. The PAPI control relay is now a 20A, 2 pole lighting contactor.

   Revised Schedule D: Ava Bill Martin Memorial Airport, Sheet No. 14 Vault Enclosure Plan and Details is included with this addendum for reference.

8. **Schedule D: Ava Bill Martin Memorial Airport**, Sheet No. 15 Distribution Schematic. The 8" x 8" wireway is now a 4" x 4" wireway. The 100A lighting contactor for the regulator, was removed. The regulator will now be controlled via a 120V, 5A (minimum) control relay. The PAPI control relay is now a 20A, 2 pole lighting contactor. Radio interface specifications were added to the label, and the callout for the S-1 cutout revised to indicate that this is to be integrated with the regulator. The Distribution System Elevation and Wiring Diagram Schematics were updated to reflect these changes.

   Revised Schedule D: Ava Bill Martin Memorial Airport, Sheet No. 15 Distribution Schematic is included with this addendum for reference.

C. A copy of the pre-bid videoconference minutes and attendees list is included with this addendum.

D. All bidders must acknowledge receipt of this addendum in the space provided on page PF-10 of the Proposal Form within the OFFICIAL BID FORM. Failure to acknowledge receipt of an addendum may be cause for rejection of the bid.

SECTION 1
NOTICE TO BIDDERS

MISSOURI 2019 AIRPORT LIGHTING PACKAGE – WESTERN HALF

Sealed bids subject to the conditions and provisions presented herein will be received until **2:00 P.M. (CST), Tuesday, November 10, 2020,** ***(Revised per Addendum No. 1)*** and then publicly opened and read at the office of **Lochner, 16105 W 113th Street, Suite 107, Lenexa, KS 66219**. Contractors delivering bids must first deliver their bid and then wait in their car until the bid opening. Once it is time to open bids, Contractors will be allowed into the Lochner office where there will be chairs spaced at least six feet apart in a large room to maintain social distancing requirements. **A bid opening videoconference will be held for those who would like to attend the bid opening virtually. To receive a calendar invitation via email with a link to access the videoconference, please email your request to be added to the invitation to Ian Wright with Lochner at iwright@hwlochner.com.** ***(Revised per Addendum No. 1)*** Bids will be submitted for furnishing all labor, materials, equipment and performing all work necessary to.

SCHEDULE A: ALBANY MUNICIPAL AIRPORT (K19)
MoDOT Project No. AIR 206-04A

Base Bid
Install Base Mounted Runway Edge and Threshold Lights
Install Base Mounted Taxiway Edge Lights and Retroreflective Markers
Install Non-Lighted Runway Holding Position Sign
Replace Primary Wind Cone
Install Rotating Beacon
Install Electrical Vault Enclosure, Equipment, and Controls

Add Alternate
Replace Existing VGSI System with 2-Box PAPI Systems for Runways 1 and 19

SCHEDULE B: CARROLLTON MEMORIAL AIRPORT (K26)
MoDOT Project No. AIR 206-016A

Base Bid
Install Base Mounted Runway Edge and Threshold Lights
Install Base Mounted Taxiway Edge Lights and Retroreflective Markers
Install Non-Lighted Runway Holding Position Sign
Replace Primary Wind Cone
Replace Rotating Beacon
Install Electrical Equipment and Controls

Add Alternate
Install 2-Box PAPI Systems for Runways 18 and 36

SCHEDULE C: ROY OTTEN MEMORIAL AIRFIELD (3VS)
MoDOT Project No. AIR 206-041A

Base Bid
Install Base Mounted Runway Edge and Threshold Lights
Install Base Mounted Taxiway Edge Lights and Retroreflective Markers
Install Non-Lighted Runway Holding Position Sign
Replace Primary Wind Cone and Install Supplemental Wind Cone
Install Electrical Vault Enclosure, Equipment, and Controls

SCHEDULE D: AVA BILL MARTIN MEMORIAL AIRPORT (AOV)
MoDOT Project No. AIR 206-102A

Base Bid
Install Base Mounted Runway Edge and Threshold Lights
Install Base Mounted Taxiway Edge Lights and Retroreflective Markers
Install Non-Lighted Runway Holding Position Signs
Install Electrical Vault Enclosure, Equipment, and Controls

Add Alternate
Replace Existing VASI with 2-Box PAPI System for Runway 13

Copies of the bid documents including project drawings and technical specifications are on file and may be inspected at:

Albany
Office of the City Clerk
City Hall
106 East Clay Street
Albany, MO 64402

Carrollton
Office of the City Clerk
City Hall
206 W. Washington Street
Carrollton, MO 64633

Versailles
Office of the City Clerk
City Hall
104 N. Fisher Street
Versailles, MO 65084

Ava
Office of the City Clerk
City Hall
404 S. Jefferson Street
Ava, MO 65608

and at the office of the Consulting Engineers, H.W. Lochner, Inc., 16105 W. 113th Street, Suite 107, Lenexa, Kansas 66219. Questions concerning the Plans and Specifications for this project should be directed to **Matt Jacobs, P.E.** at H.W. Lochner's Office in Lenexa, Kansas at (816) 945-5840.

Drawings, specifications, official bid form and other related contract information may be ordered online at www.drexeltech.com or by contacting Drexel Technologies, Inc. at 10840 W. 86th Street, Lenexa, KS 66214, phone (913) 371-4430, fax (913) 371-7128. Checks shall be made payable to "Drexel Technologies" and mailing costs are the responsibility of the purchaser. Drawings, specifications, official bid form, addenda, and a plan holders list are available at www.drexeltech.com by clicking on "Enter Plan Room."

A **prebid videoconference** for this project will be held at **10:00 A.M. (CDT), Tuesday, October 27, 2020**. To receive a calendar invitation via email with a link to access the video conference, please email your request to be added to the invitation to Ian Wright with Lochner at iwright@hwlochner.com.

Contract Work Items. This project will involve the following work items and estimated quantities. Prospective bidders are hereby advised that the quantities indicated herein are approximate and are subject to change.

SCHEDULE A: ALBANY MUNICIPAL AIRPORT (K19)

ITEM NO.	SPEC.	ITEM DESCRIPTION	QTY.	UNIT
MoDOT PROJECT NO. AIR 206-04A				
BASE BID **Install Base Mounted Runway Edge and Threshold Lights** **Install Base Mounted Taxiway Edge Lights and Retroreflective Markers** **Install Non-Lighted Runway Holding Position Sign** **Replace Primary Wind Cone** **Install Rotating Beacon** **Install Electrical Vault Enclosure, Equipment, and Controls**				
1	MO-100	Mobilization	1	L.S.
2	TEMP	Temporary Marking, Lighting, & Barricades	1	L.S.
3	MO-101	Furnish and Install Airport Rotating Beacon and Tip-Down Pole (In Place) (55')	1	EA.
4	MO-107	Furnish and Install Airport L-807 (LED), Style I-B, Size 2 Wind Cone (In-Place)	1	EA.
5	MO-107	Furnish and Install Segmented Circle Marker System	1	L.S.
6	MO-108	Install Cable in Duct (1/c, #8 AWG, 5 kV, L-824C)	7,933	L.F.
7	MO-108	Install Cable in Duct (1/c, #8 AWG, 600 V, L-824C)	1,866	L.F.
8	MO-108	Install Cable in Duct (1/c, #8 AWG, 600 V, L-824C, Ground)	933	L.F.
9	MO-108	Bare Counterpoise Wire (#6 AWG)	8,471	L.F.
10	MO-109	Furnish and Install Prefabricated Housing and Foundation	1	L.S.
11	MO-109	Furnish and Install 4 kW Constant Current Regulator	1	EA.
12	MO-109	Furnish and Install Electrical System Controls	1	L.S.
13	MO-110	1" Electrical Duct and Trench	8,471	L.F.
14	MO-110	1" PVC, Schedule 80, Bore Duct Under Pavement	174	L.F.
15	MO-110	2" PVC, Schedule 80, Bore Duct Under Pavement	64	L.F.
16	MO-125	Remove Existing Lighting System (Lights, Retroreflective Markers, Wind Cone, Segmented Circle, and Rotating Beacon)	1	L.S.
17	MO-125	Furnish and Install M.I.R.L. (LED), Base Mounted (Red/Green Lens) with Arctic Option (18")	12	EA.
18	MO-125	Furnish and Install M.I.R.L. (LED), Base Mounted (Yellow/Clear Lens) with Arctic Option (18")	31	EA.
19	MO-125	Furnish and Install M.I.T.L. (LED), Base Mounted (Blue Lens) with Arctic Option (18")	18	EA.
20	MO-125	Furnish M.I.R.L. (LED), Base Mounted (Red/Green Lens) With Arctic Option for Base Mounted Connection (Fixture, Transformer, and Cover Plate)	1	EA.
21	MO-125	Furnish M.I.R.L. (LED), Base Mounted (Yellow/Clear Lens) With Arctic Option for Base Mounted Connection (Fixture, Transformer, and Cover Plate)	3	EA.
22	MO-125	Furnish M.I.T.L. (LED), Base Mounted (Blue Lens) With Arctic Option for Base Mounted Connection (Fixture, Transformer, and Cover Plate)	2	EA.
23	MO-125	Furnish and Install L-858R Non-Lighted Guidance Sign and Foundation	1	EA.
24	MO-125	Furnish and Install L-867 Junction Box, Size B	6	EA.
25	MO-125	Furnish and Install L-867 Junction Box, Size D	3	EA.
26	MO-125	Furnish and Install Retroreflective Markers (22")	43	EA.
27	MO-901 MO-908	Seeding and Hydro-Mulch	1	L.S.
ADD ALTERNATE **Replace Existing VGSI System with 2-Box PAPI Systems for Runways 1 and 19**				
1	MO-108	Install Cable in Duct (1/c, #8 AWG, 600 V, L-824C)	5,248	L.F.
2	MO-108	Install Cable in Duct (1/c, #8 AWG, 600 V, L-824C, Ground)	2,624	L.F.
3	MO-110	1" Electrical Duct and Trench	2,425	L.F.
4	MO-120	Furnish and Install L-881(L) 2-Box PAPI System	2	EA.
5	MO-125	Remove Existing Lighting System (VGSI System)	1	L.S.
6	MO-125	Furnish and Install L-867 Junction Box, Size B	4	EA.

SCHEDULE B: CARROLLTON MEMORIAL AIRPORT (K26)

ITEM NO.	SPEC.	ITEM DESCRIPTION	QTY.	UNIT
MoDOT PROJECT NO. AIR 206-016A				
BASE BID **Install Base Mounted Runway Edge and Threshold Lights** **Install Base Mounted Taxiway Edge Lights and Retroreflective Markers** **Install Non-Lighted Runway Holding Position Sign** **Replace Primary Wind Cone** **Replace Rotating Beacon** **Install Electrical Equipment and Controls**				
1	MO-100	Mobilization	1	L.S.
2	TEMP	Temporary Marking, Lighting, & Barricades	1	L.S.
3	MO-101	Furnish and Install Airport Rotating Beacon and Tip-Down Pole (In Place) (55')	1	EA.
4	MO-107	Furnish and Install Airport L-807 (LED), Style I-B, Size 2 Wind Cone (In-Place)	1	EA.
5	MO-107	Furnish and Install Segmented Circle Marker System	1	L.S.
6	MO-108	Install Cable in Duct (1/c, #8 AWG, 5 kV, L-824C)	7,368	L.F.
7	MO-108	Install Cable in Duct (1/c, #6 AWG, 600 V, L-824C)	322	L.F.
8	MO-108	Install Cable in Duct (1/c, #8 AWG, 600 V, L-824C)	720	L.F.
9	MO-108	Install Cable in Duct (1/c, #6 AWG, 600 V, L-824C, Ground)	161	L.F.
10	MO-108	Install Cable in Duct (1/c, #8 AWG, 600 V, L-824C, Ground)	360	L.F.
11	MO-108	Bare Counterpoise Wire (#6 AWG)	7,197	L.F.
12	MO-109	Furnish and Install 4 kW Constant Current Regulator	1	EA.
13	MO-109	Furnish and Install Electrical System Controls	1	L.S.
14	MO-110	1" Electrical Duct and Trench	7,197	L.F.
15	MO-110	1" PVC, Schedule 80, Bore Duct Under Pavement	125	L.F.
16	MO-110	2" PVC, Schedule 80, Bore Duct Under Pavement	61	L.F.
17	MO-125	Remove Existing Lighting System (Lights, Retroreflective Markers, Wind Cone, and Rotating Beacon)	1	L.S.
18	MO-125	Furnish and Install M.I.R.L. (LED), Base Mounted (Red/Green Lens) with Arctic Option (14")	12	EA.
19	MO-125	Furnish and Install M.I.R.L. (LED), Base Mounted (Yellow/Clear Lens) with Arctic Option (14")	25	EA.
20	MO-125	Furnish and Install M.I.T.L. (LED), Base Mounted (Blue Lens) with Arctic Option (14")	16	EA.
21	MO-125	Furnish M.I.R.L. (LED), Base Mounted (Red/Green Lens) With Arctic Option for Base Mounted Connection (Fixture, Transformer, and Cover Plate)	1	EA.
22	MO-125	Furnish M.I.R.L. (LED), Base Mounted (Yellow/Clear Lens) With Arctic Option for Base Mounted Connection (Fixture, Transformer, and Cover Plate)	3	EA.
23	MO-125	Furnish M.I.T.L. (LED), Base Mounted (Blue Lens) With Arctic Option for Base Mounted Connection (Fixture, Transformer, and Cover Plate)	2	EA.
24	MO-125	Furnish and Install L-858R Non-Lighted Guidance Sign and Foundation	1	EA.
25	MO-125	Furnish and Install L-867 Junction Box, Size B	10	EA.
26	MO-125	Furnish and Install L-867 Junction Box, Size D	4	EA.
27	MO-125	Furnish and Install Retroreflective Markers (18")	24	EA.
28	MO-901 MO-908	Seeding and Hydro-Mulch	1	L.S.
ADD ALTERNATE **Install 2-Box PAPI Systems for Runways 18 and 36**				
1	MO-108	Install Cable in Duct (1/c, #8 AWG, 600 V, L-824C)	4,060	L.F.
2	MO-108	Install Cable in Duct (1/c, #8 AWG, 600 V, L-824C, Ground)	2,030	L.F.
3	MO-110	1" Electrical Duct and Trench	1,874	L.F.
4	MO-110	1" PVC, Schedule 80, Bore Duct Under Pavement	95	L.F.
5	MO-120	Furnish and Install L-881(L) 2-Box PAPI System	2	EA.
6	MO-125	Furnish and Install L-867 Junction Box, Size B	8	EA.

SCHEDULE C: ROY OTTEN MEMORIAL AIRFIELD (3VS)

ITEM NO.	SPEC.	ITEM DESCRIPTION	QTY.	UNIT
MoDOT PROJECT NO. AIR 206-041A				
BASE BID **Install Base Mounted Runway Edge and Threshold Lights** **Install Base Mounted Taxiway Edge Lights and Retroreflective Markers** **Install Non-Lighted Runway Holding Position Sign** **Replace Primary Wind Cone and Install Supplemental Wind Cone** **Install Electrical Vault Enclosure, Equipment, and Controls**				
1	MO-100	Mobilization	1	L.S.
2	TEMP	Temporary Marking, Lighting, & Barricades	1	L.S.
3	MO-107	Furnish and Install Airport L-807 (LED), Style I-B, Size 2 Wind Cone (In-Place)	1	EA.
4	MO-107	Furnish and Install Airport L-806 (LED), Style I-A, Size 1 Wind Cone (In-Place)	1	EA.
5	MO-108	Install Cable in Duct (1/c, #8 AWG, 5 kV, L-824C)	7,150	L.F.
6	MO-108	Install Cable in Duct (1/c, #8 AWG, 600 V, L-824C)	952	L.F.
7	MO-108	Install Cable in Duct (1/c, #8 AWG, 600 V, L-824C, Ground)	476	L.F.
8	MO-108	Bare Counterpoise Wire (#6 AWG)	7,141	L.F.
9	MO-109	Furnish and Install Prefabricated Housing and Foundation	1	L.S.
10	MO-109	Furnish and Install 4 kW Constant Current Regulator	1	EA.
11	MO-109	Furnish and Install Electrical System Controls	1	L.S.
12	MO-110	1" Electrical Duct and Trench	7,141	L.F.
13	MO-110	1" PVC, Schedule 80, Bore Duct Under Pavement	65	L.F.
14	MO-125	Remove Existing Lighting System (Lights, Retroreflective Markers, and Wind Cone)	1	L.S.
15	MO-125	Furnish and Install M.I.R.L. (LED), Base Mounted (Red/Green Lens) with Arctic Option (24")	12	EA.
16	MO-125	Furnish and Install M.I.R.L. (LED), Base Mounted (Yellow/Clear Lens) with Arctic Option (24")	28	EA.
17	MO-125	Furnish and Install M.I.T.L. (LED), Base Mounted (Blue Lens) with Arctic Option (24")	8	EA.
18	MO-125	Furnish and Install HL-51 (LED), Base Mounted (Green Lens)	9	EA.
19	MO-125	Furnish M.I.R.L. (LED), Base Mounted (Red/Green Lens) With Arctic Option for Base Mounted Connection (Fixture, Transformer, and Cover Plate)	1	EA.
20	MO-125	Furnish M.I.R.L. (LED), Base Mounted (Yellow/Clear Lens) With Arctic Option for Base Mounted Connection (Fixture, Transformer, and Cover Plate)	3	EA.
21	MO-125	Furnish M.I.T.L. (LED), Base Mounted (Blue Lens) With Arctic Option for Base Mounted Connection (Fixture, Transformer, and Cover Plate)	1	EA.
22	MO-125	Furnish and Install HL-51 (LED), Base Mounted (Green Lens) for Base Mounted Connection (Fixture, Transformer, and Cover Plate)	1	EA.
23	MO-125	Furnish and Install L-858R Non-Lighted Guidance Sign and Foundation	1	EA.
24	MO-125	Furnish and Install L-867 Junction Box, Size B	4	EA.
25	MO-125	Furnish and Install Retroreflective Markers (24")	13	EA.
26	MO-901 MO-908	Seeding and Hydro-Mulch	1	L.S.

SCHEDULE D: AVA BILL MARTIN MEMORIAL AIRPORT (AOV)

ITEM NO.	SPEC.	ITEM DESCRIPTION	QTY.	UNIT
MoDOT PROJECT NO. AIR 206-102A				
BASE BID **Install Base Mounted Runway Edge and Threshold Lights** **Install Base Mounted Taxiway Edge Lights and Retroreflective Markers** **Install Non-Lighted Runway Holding Position Signs** **Install Electrical Vault Enclosure, Equipment, and Controls**				
1	MO-100	Mobilization	1	L.S.
2	TEMP	Temporary Marking, Lighting, & Barricades	1	L.S.
3	MO-108	Install Cable in Duct (1/c, #8 AWG, 5 kV, L-824C)	8,832	L.F.
4	MO-108	Bare Counterpoise Wire (#6 AWG)	8,155	L.F.
5	MO-109	Furnish and Install Prefabricated Housing and Foundation	1	L.S.
6	MO-109	Furnish and Install 4 kW Constant Current Regulator	1	EA.
7	MO-109	Furnish and Install Electrical System Controls	1	L.S.
8	MO-110	1" Electrical Duct and Trench	8,155	L.F.
9	MO-110	1" PVC, Schedule 80, Bore Duct Under Pavement	162	L.F.
10	MO-125	Remove Existing Lighting System (Lights and Retroreflective Markers)	1	L.S.
11	MO-125	Furnish and Install M.I.R.L. (LED), Base Mounted (Red/Green Lens) with Arctic Option (18")	16	EA.
12	MO-125	Furnish and Install M.I.R.L. (LED), Base Mounted (Yellow/Clear Lens) with Arctic Option (18")	35	EA.
13	MO-125	Furnish and Install M.I.T.L. (LED), Base Mounted (Blue Lens) with Arctic Option (18")	18	EA.
14	MO-125	Furnish M.I.R.L. (LED), Base Mounted (Red/Green Lens) With Arctic Option for Base Mounted Connection (Fixture, Transformer, and Cover Plate)	2	EA.
15	MO-125	Furnish M.I.R.L. (LED), Base Mounted (Yellow/Clear Lens) With Arctic Option for Base Mounted Connection (Fixture, Transformer, and Cover Plate)	4	EA.
16	MO-125	Furnish M.I.T.L. (LED), Base Mounted (Blue Lens) With Arctic Option for Base Mounted Connection (Fixture, Transformer, and Cover Plate)	2	EA.
17	MO-125	Furnish and Install L-858R Non-Lighted Guidance Sign and Foundation	3	EA.
18	MO-125	Furnish and Install L-867 Junction Box, Size B	8	EA.
19	MO-125	Furnish and Install Retroreflective Markers (18")	25	EA.
20	MO-901 MO-908	Seeding and Hydro-Mulch	1	L.S.
ADD ALTERNATE **Replace Existing VASI with 2-Box PAPI System for Runway 13**				
1	MO-108	Install Cable in Duct (1/c, #8 AWG, 600 V, L-824C)	4,348	L.F.
2	MO-108	Install Cable in Duct (1/c, #8 AWG, 600 V, L-824C, Ground)	2,174	L.F.
3	MO-108	Bare Counterpoise Wire (#6 AWG)	599	L.F.
4	MO-110	1" Electrical Duct and Trench	2,089	L.F.
5	MO-110	1" PVC, Schedule 80, Bore Duct Under Pavement	85	L.F.
6	MO-120	Furnish and Install L-881(L) 2-Box PAPI System	1	EA.
7	MO-125	Remove Existing Lighting System (Runway 13 VASI System)	1	L.S.
8	MO-125	Furnish and Install L-867 Junction Box, Size B	10	EA.

Contract Time.

Schedule A: Albany Municipal Airport (K19)
The owner has established a contract performance time of **forty-five (45) calendar days** from the date of the Notice-to-Proceed. All project work shall be substantially completed within the stated timeframe. This project is subject to liquidated damages as prescribed in the project manual.

Schedule B: Carrollton Memorial Airport (K26)
The owner has established a contract performance time of **forty-five (45) calendar days** from the date of the Notice-to-Proceed. All project work shall be substantially completed within the stated timeframe. This project is subject to liquidated damages as prescribed in the project manual.

Schedule C: Roy Otten Memorial Airfield (3VS)
The owner has established a contract performance time of **forty-five (45) calendar days** from the date of the Notice-to-Proceed. All project work shall be substantially completed within the stated timeframe. This project is subject to liquidated damages as prescribed in the project manual.

Schedule D: Ava Bill Martin Memorial Airport (AOV)
The owner has established a contract performance time of **forty-five (45) calendar days** from the date of the Notice-to-Proceed. All project work shall be substantially completed within the stated timeframe. This project is subject to liquidated damages as prescribed in the project manual.

Bid Security. No bid will be considered unless accompanied by a certified check or cashier's check on any bank or trust company insured by the Federal Deposit Insurance Corporation, payable to **City of Albany / City of Carrollton / City of Versailles / City of Ava**, for not less than five (5) percent of the total amount of the bid, or by a bid bond secured by an approved surety or sureties, payable to the owner, for not less than five (5) percent of the total amount of the bid.

Bonding Requirements. The successful bidder will be required to furnish separate performance and payment bonds each in an amount equal to 100% of the contract price at the time of contract execution.

Award of Contract. All proposals submitted in accordance with the instructions presented herein will be subject to evaluation. Bids may be held by the **Consulting Engineers** for a period not to exceed **ninety (90) calendar days** from the date of the bid opening for the purpose of conducting the bid evaluation.

Award of contract will be based on the lowest aggregate sum proposal submitted from those bidders that are confirmed as being responsive and responsible. The bidder must submit a bid for all Base Bids and Add Alternates listed in the Proposal Form. The owner reserves the right to select any one of the combinations of the base bid(s) and alternate bid(s), which in the judgment of the owner, best serves the owner's interest. The right is reserved, as the **City of Albany / City of Carrollton / City of Versailles / City of Ava** may require, to reject any bid and all bids.

Award of contract is contingent upon the owner receiving State-funding assistance under the State Aviation Trust Fund.

Notice-To-Proceed. It is the intent of the Owners to issue the Notice-To-Proceed (NTP) as soon as practical in the Spring of 2021 after the Award of Contract. The Ava Bill Martin Memorial Airport has requested that construction at their airport begin after July 1, 2021.

State Wage Requirements. The contractor will be required to comply with the wage and labor requirements and pay minimum wages in accordance with the schedule of wage rates established by the Missouri Division of Labor Standards included in the Supplementary Provisions.

COVID-19 Safety
The contractor shall be aware of all COVID-19 guidance from the Center for Disease Control (CDC) and other government health mandates and conduct all operations in conformance with these safety directives. The guidance may change during the project construction and the contractor shall change and adapt their operation and safety protocols accordingly.

The contractor shall include these procedures in the project safety plan as called for in the contract documents and revise the safety plan as needed.

The contractor shall be aware of the Missouri Standard Specifications for Highway Construction Section 107.1 "Laws to be Observed".

Additional Provisions.
Modification to the project documents may only be made by written addendum by the Owner or Owner's authorized Representative.

The proposal must be made on the forms provided separate from the bound project manual. Bidders must supply all required information prior to the time of bid opening.

SECTION 2
INSTRUCTIONS TO BIDDERS

This section contains excerpts of the bidding requirements from Section 20 of the General Provisions. The bidder's attention is directed to Section 20 for complete details.

1. **THE EXECUTED PROPOSAL FORM MUST BE SUBMITTED IN ITS ENTIRETY. A COPY OF THE OFFICIAL BID FORM SEPARATE FROM THE BOUND PROJECT MANUAL IS PROVIDED FOR SUBMISSION.**

2. The apparent low bidder shall submit ``evidence of competency'' and ``evidence of financial responsibility'' to the owner no later than 3 business days after the specified date for opening bids.

3. Each bidder shall certify in the Proposal Form at the time of bid submittal that they acknowledge receipt of all issued addenda.

4. No bid will be considered unless accompanied by a certified check or cashier's check on any bank or trust company insured by the Federal Deposit Insurance Corporation, payable to the owner, for not less than five (5) percent of the amount of the bid, or by a bid bond secured by an approved surety or sureties (licensed to conduct surety business in the state of Missouri), payable to the owner, for not less than five (5) percent of the amount of the bid.

5. Proposals shall be sent to arrive at the time and date specified in Section 1, Notice to Bidders. Proposals received after the specified time and date will not receive consideration and will be returned unopened. Prior to submittal, the proposal shall be placed in a sealed opaque envelope and addressed to:

   Lochner
   Attn: Matt Jacobs
   16105 W. 113th Street
   Suite 107
   Lenexa, KS 66219

   The upper left hand corner of the envelope should be marked as follows ***(Revised per Addendum No. 1)***:

   Sealed Bid Proposal
   Bid of NAME OF BIDDER
   For construction improvements at **Missouri 2019 Airport Lighting Package – Western Half**
   To be opened at: **2:00 P.M. (CST), Tuesday, November 10, 2020**

For a modification to a previously submitted proposal, insert "Modification to Proposal" in place of "Sealed Bid Proposal".

6. The Owner reserves the right to reject any or all bids, as determined to be in the best interest of the Owner. Causes for rejection of proposals include but are not limited to:

   - Submittal of more than one proposal from the same partnership, firm or corporation;
   - Failure by Bidder to submit the bid prior to the stated time and date for receipt of bids;
   - Failure by Bidder to furnish satisfactory bid guarantee;
   - Failure by Bidder to provide all information required of the bid forms;
   - Failure by Bidder to comply with the requirements of bid instructions;
   - Determination by the Owner that Bidder is not qualified to accomplish the project work;
   - Determination by the Owner that the Bidder has placed conditions on or qualified their proposal;
   - Discovery of any alteration, interlineations or erasure of any project requirement by the Bidder;
   - Evidence of collusion among bidders.

7. The City of Albany / City of Carrollton / City of Versailles / City of Ava will issue a state sales tax exemption certificate to the successful Bidder and the successful Bidder will not be required to pay State sales tax on materials and supplies purchased for use on this project. The successful Bidder will be responsible for payment of all other taxes.

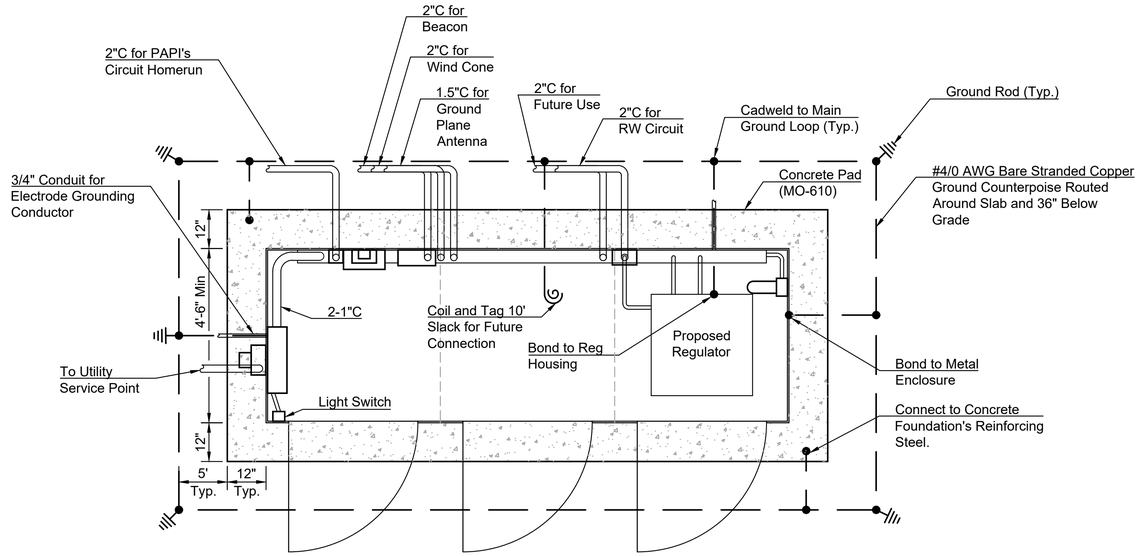

VAULT ENCLOSURE PLAN

Scale: 1" = 2'

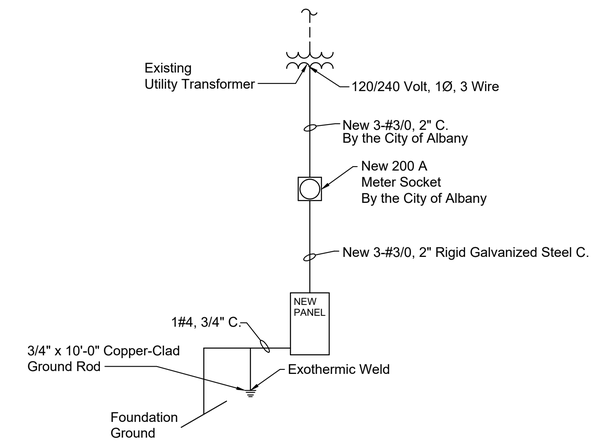

RISER DIAGRAM

No Scale

Note: All electrical equipment on the load side of the meter socket is to be installed by the contractor.

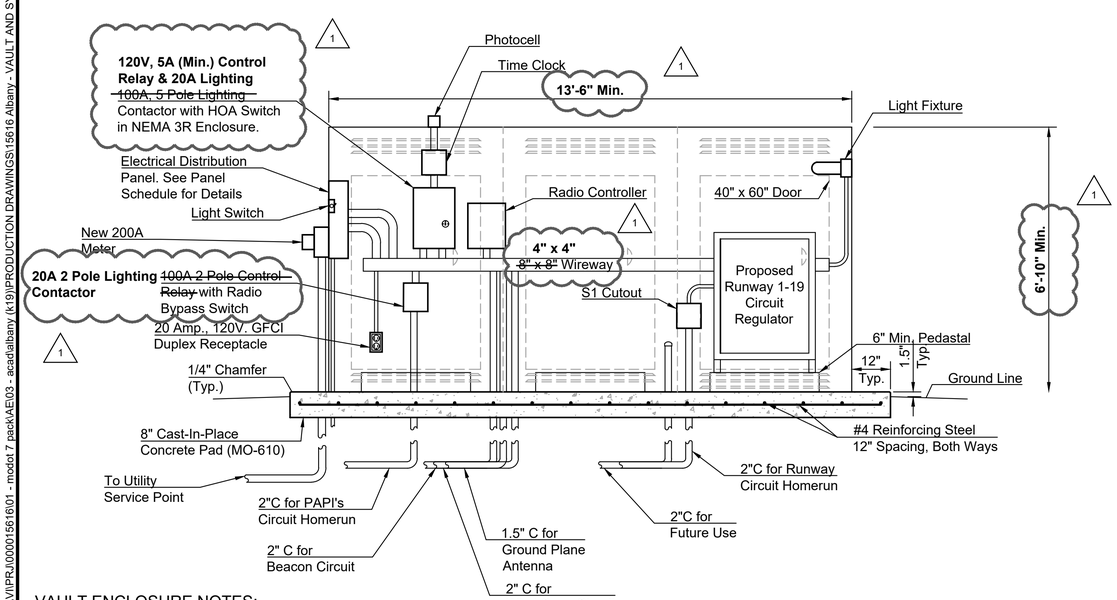

VAULT ENCLOSURE ELEVATION

Scale: 1" = 2'

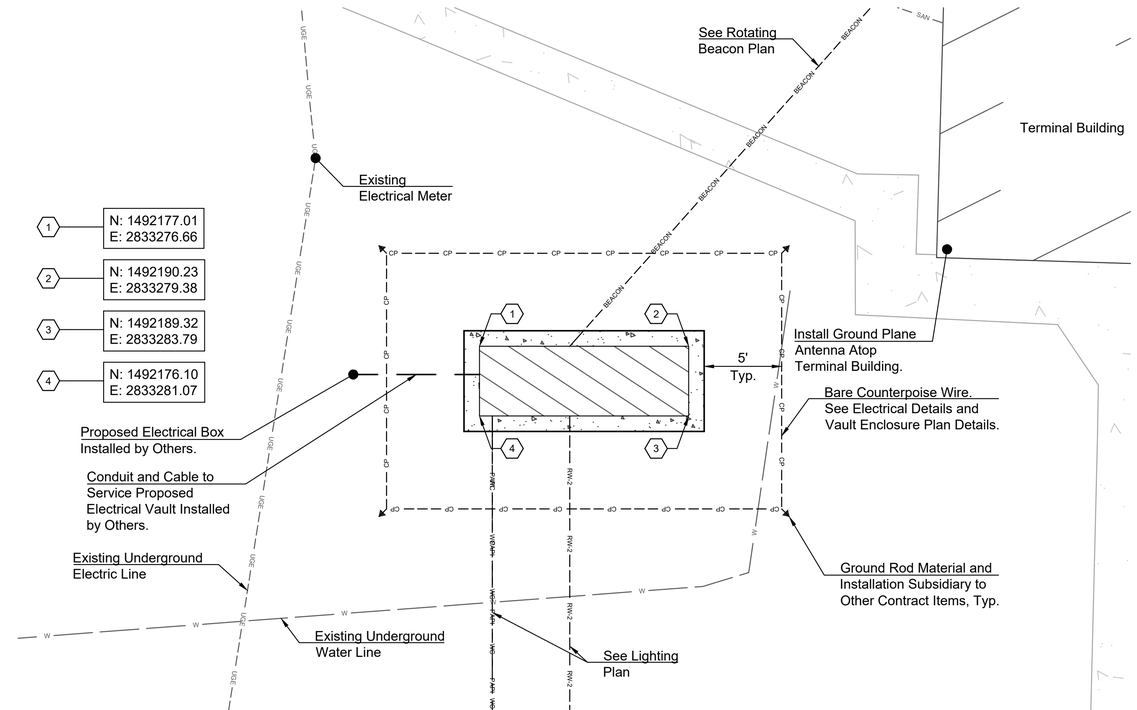

VAULT ENCLOSURE LOCATION

Scale: 1" = 5'

VAULT ENCLOSURE NOTES:

1. Any grading and site preparation required for the construction of the concrete pad shall be considered subsidiary to other bid items.

STATE OF MISSOURI
ALEJANDRO GARI
NUMBER PE-2018042871
11/02/2020
PROFESSIONAL ENGINEER

LOCHNER
16105 W. 113th Street | Suite 107 | Lenexa, Kansas 66219
P 816.945.5840 | www.hwlochner.com

CITY OF ALBANY, MISSOURI

ALBANY MUNICIPAL AIRPORT (K19)
ALBANY, MISSOURI

PROJECT NO.	000015616
DRAWN BY AG	DATE 07/06/2020
CHECKED BY MJJ	DATE 07/15/2020
DESIGNED BY AG	DATE 07/06/2020
REVISIONS Addendum No. 1	DATE 11-02-2020

VAULT ENCLOSURE PLAN AND DETAILS

16

Drawing Name: I:\AVI\PRJ\00001561601 - modot 7 pack\AE03 - acad\albany (k19)\PRODUCTION DRAWINGS\15616 Albany - VAULT AND SYSTEM DETAILS.dwg Nov 02,2020 - 2:42pmLast Saved By: iwright 2020/11/02 Layout Name: VAULT DETAILS Plot Style: ae.ctb

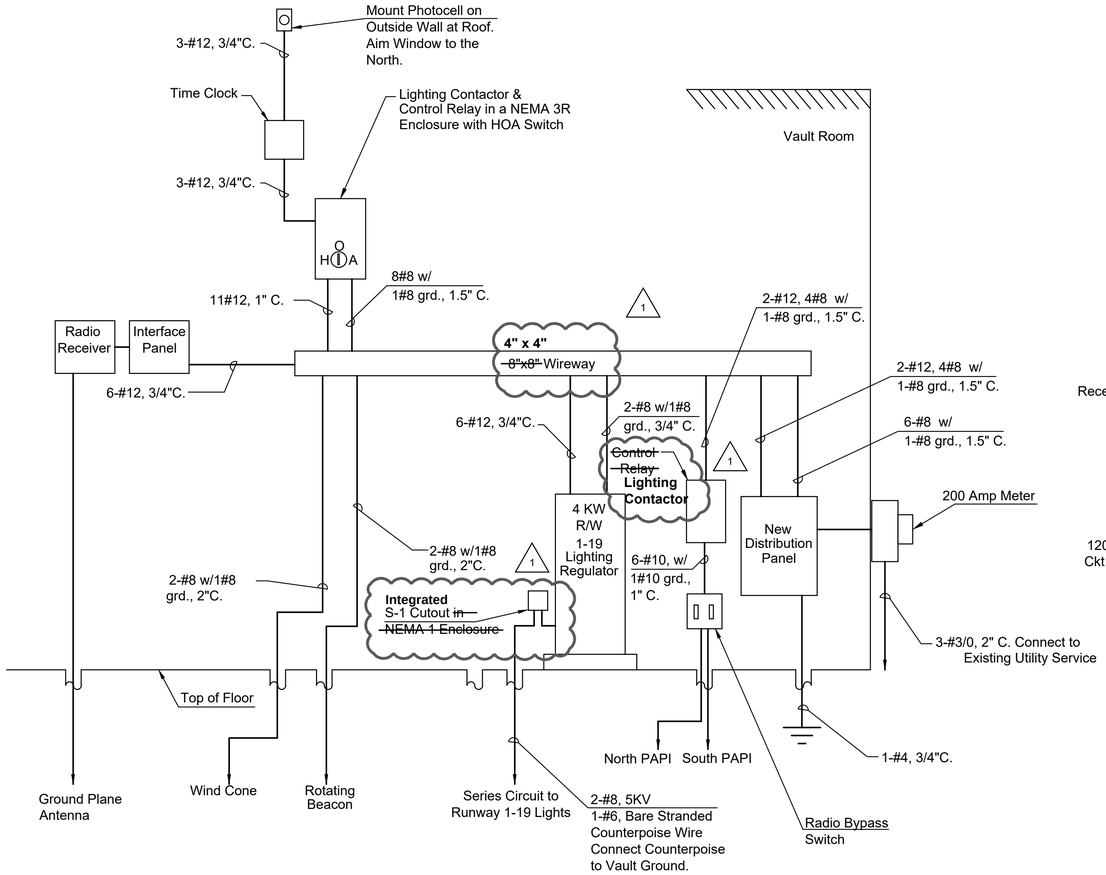

NEW DISTRIBUTION SYSTEM ELEVATION

No Scale

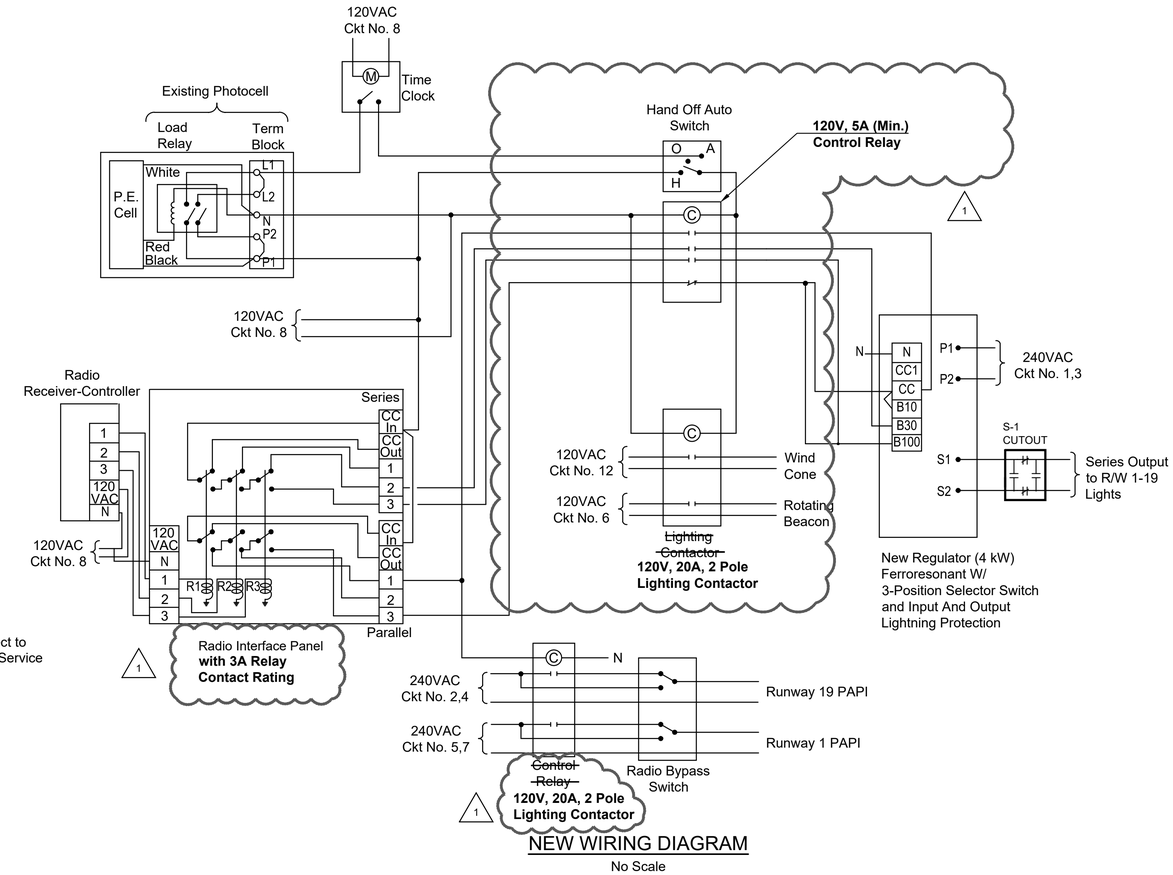

NEW WIRING DIAGRAM

No Scale

NOTES:

1. Conduit shall enter equipment at the location recommended by the manufacturer.
2. Contractor shall furnish & install a minimum of 1#12 grd. in each conduit routing unless otherwise mentioned.
3. Coordinate meter location with City of Albany, Mr. Darryl Cooper at (660) 822-6150. Meter shall be installed with isolated neutral.
4. Use terminal blocks for all wire splices within 8" x 8" wireway.
5. Contractor shall disconnect existing runway lighting circuit from terminal building distribution panel.
6. Contractor shall remove out of service 240V, 60A disconnect switch, contactor, and photocell located next to utility service transformer.

NEW PANEL SCHEDULE

Voltage: 120/240, Single Phase — Bus Mains: 200 Amps
Mounting: Surface — Main CB: 100 Amps
Ampere Interrupting Capacity: 14 kAIC

No.	Description	Load (VA)	CKT. BKR	Amps (A) A	Amps (A) B	CKT. BKR	Load (VA)	Description	No.
1	RW & TW Edge Lighting CCR	4000	30	17.8		20	264	Runway 19 2-Box PAPIs	2
3					17.8				4
5	Runway 1 2-Box PAPIs	264	20	7.7		20	795	Rotating Beacon	6
7					5.3	20	500	Lighting Controls	8
9	Surge Arrestor	0	20	0.8		20	100	Vault Lighting	10
11	Vault Receptacle	360	20		3.6	20	76	Wind Cone	12
13	Spare	0	20	0.0		20	0	Spare	14
15	Space				0.0			Space	16
17	Space			0.0				Space	18
			Total Connected Amps:	26.3	26.7		Total Connected Load:	6359 VA	
			25% Continous Amps:	1.9	1.2				
			CCR Demand Amps:	6.3	6.3				
			Total Demand Amps:	34.5	34.2				

Radio System Operation		
Daylight		Night
Timer, resets after 20 minutes		
R/W 1-19		
Off	Photocell	Off
Off	3 Clicks	On, Step 10%
Off	5 Clicks	On, Step 30%
On, Step 100%	7 Clicks	On, Step 100%
PAPIs		
Off	Photocell	Off
On	3 Clicks	On
On	5 Clicks	On
On	7 Clicks	On

STATE OF MISSOURI
ALEJANDRO GARI
NUMBER PE-2018042871
PROFESSIONAL ENGINEER
11/02/2020

LOCHNER
16105 W. 113th Street | Suite 107 | Lenexa, Kansas 66219
P 816.945.5840 | www.hwlochner.com

CITY OF ALBANY, MISSOURI

ALBANY MUNICIPAL AIRPORT (K19)
ALBANY, MISSOURI

PROJECT NO.	000015616
DRAWN BY AG	DATE 07/06/2020
CHECKED BY MJJ	DATE 07/15/2020
DESIGNED BY AG	DATE 07/06/2020
REVISIONS Addendum No. 1	DATE 11-02-2020

DISTRIBUTION SCHEMATIC

17

Drawing Name: I:\AVI\PRJ\0000015616\01 - modot 7 pack\AE\03 - acad\albany (k19)\PRODUCTION DRAWINGS\15616 Albany - VAULT AND SYSTEM DETAILS.dwg Nov 02,2020 - 2:42pm

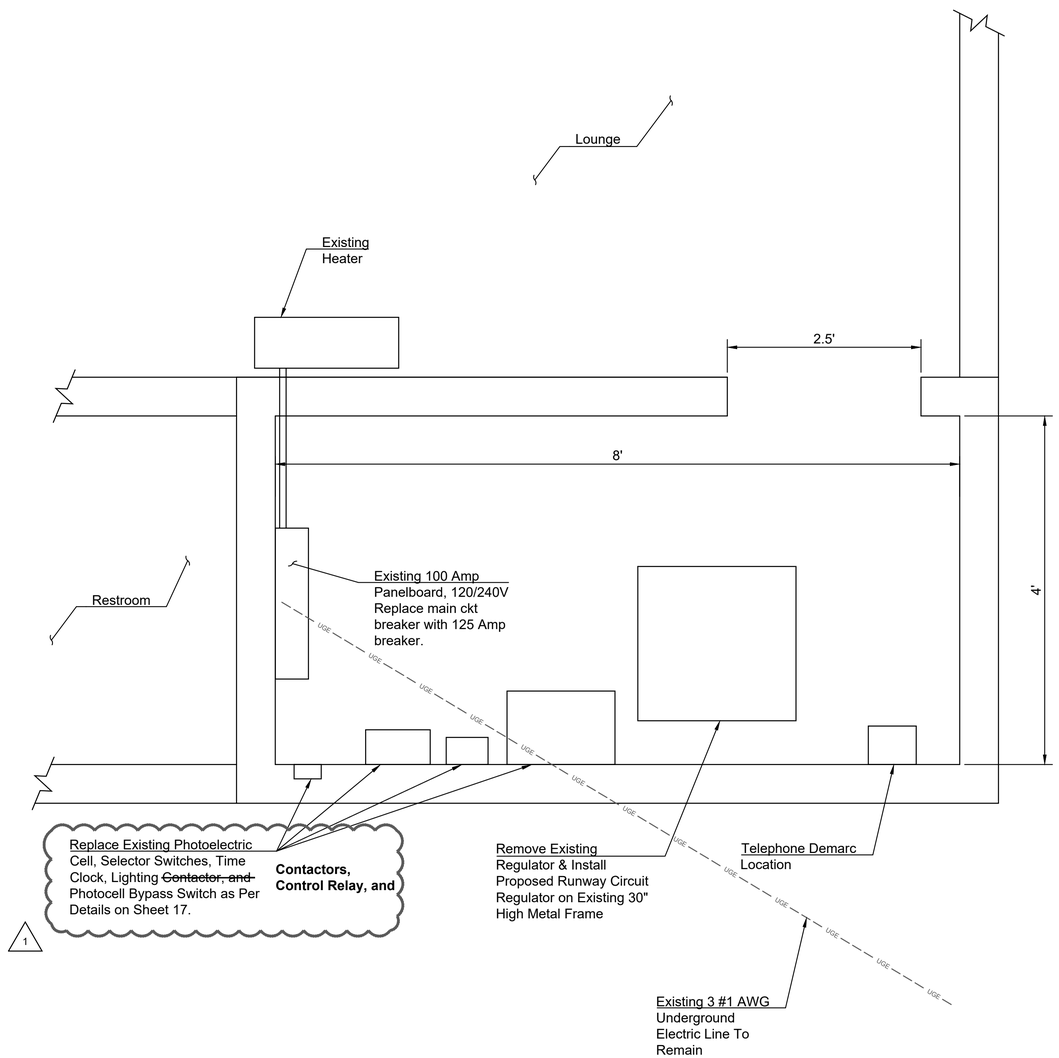

VAULT PLAN

Scale: 1" = 2'

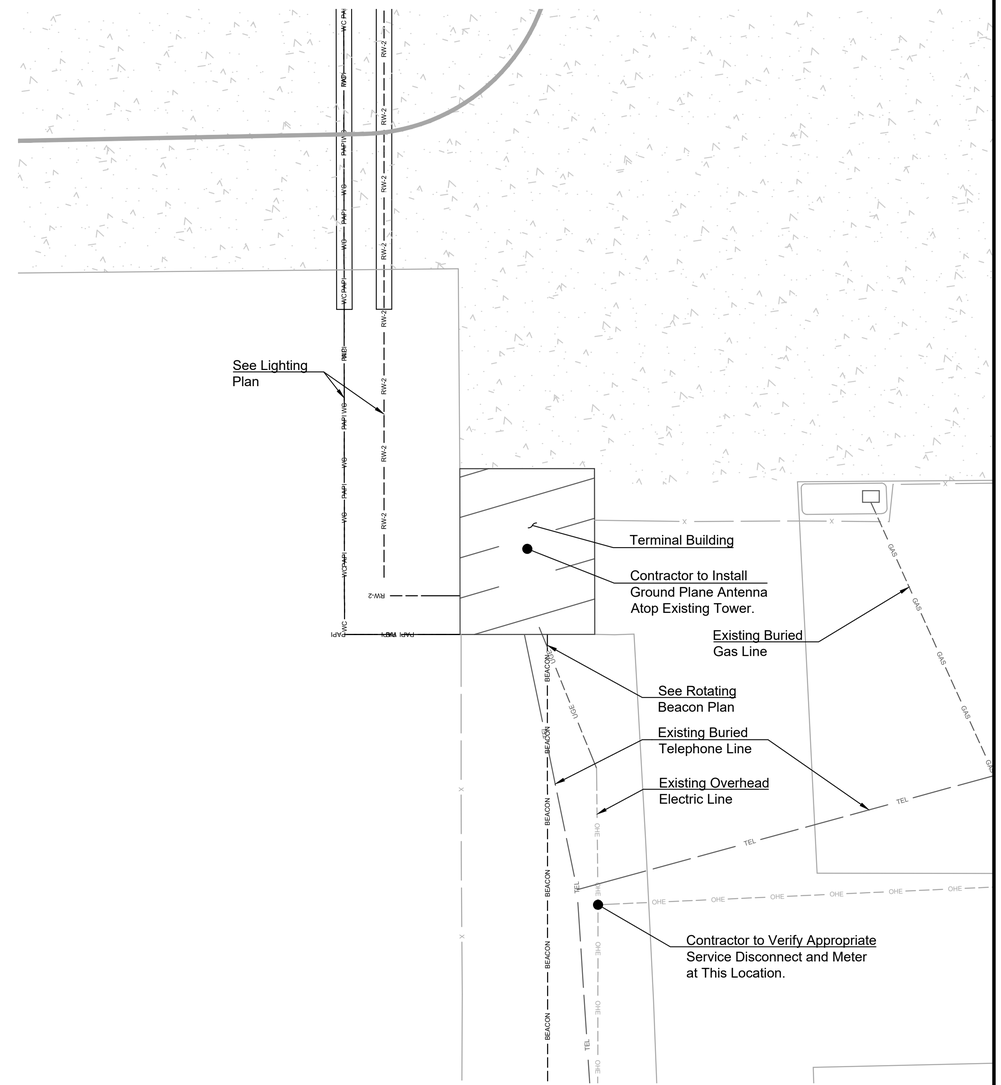

VAULT ENCLOSURE LOCATION / TERMINAL BUILDING

Scale: 1" = 10'

STATE OF MISSOURI
ALEJANDRO GARI
NUMBER
PE-2018042871
11/02/2020
PROFESSIONAL ENGINEER

LOCHNER

16105 W. 113th Street | Suite 107 | Lenexa, Kansas 66219
P 816.945.5840 | www.hwlochner.com

TOWN OF CARROLLTON, MISSOURI

CARROLLTON MEMORIAL AIRPORT (K26)
CARROLLTON, MISSOURI

PROJECT NO.	000015616
DRAWN BY AG	DATE 07/06/2020
CHECKED BY MJJ	DATE 07/16/2020
DESIGNED BY AG	DATE 07/06/2020
REVISIONS Addendum No. 1	DATE 11-02-2020

VAULT PLAN AND DETAILS

16

Drawing Name: I:\AVI\PRJ\000015616\01 - MODOT 7 PACK\AE\03 - ACAD\CARROLLTON (K26)\PRODUCTION DRAWINGS\15616 K26 - VAULT AND SYSTEM DETAILS.dwg Nov 02,2020 Last Saved By: iwright 2020/11/02 Layout Name: VAULT DETAILS Plot Style: ae.ctb

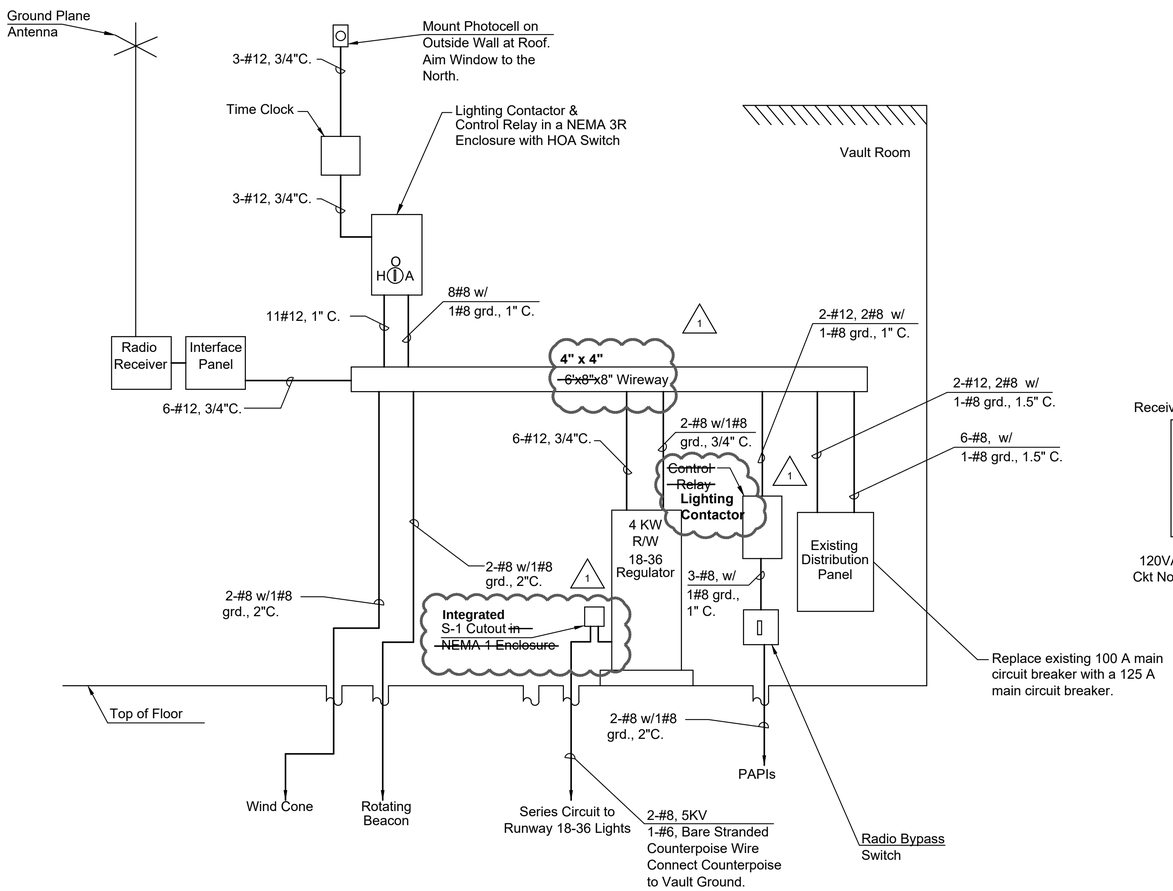

NEW DISTRIBUTION SYSTEM ELEVATION

Not To Scale

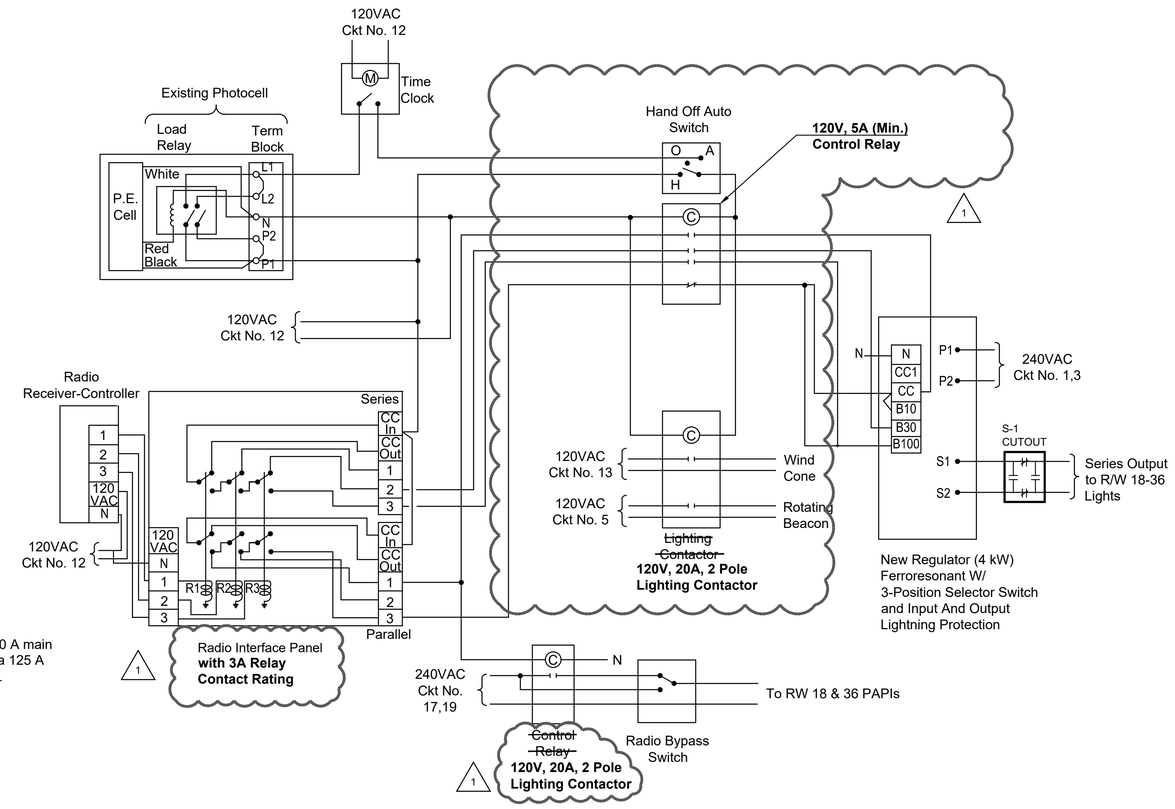

NEW WIRING DIAGRAM

Not To Scale

NOTES:

1. Conduit shall enter equipment at the location recommended by the manufacturer.
2. Contractor shall furnish & install a minimum of 1#12 grd. in each conduit routing unless otherwise mentioned.
3. Use terminal blocks for all wire splices within 8" x 8" wireway. Contractor shall disconnect existing runway lighting circuit from
4. existing building.
5. The New Distribution System Elevation detail is schematic only. Contractor is responsible for determining the best equipment layout and ensure all conduit wall penetrations are sealed with fire rated material.
6. All conductors within the vault shall be rated 600V unless otherwise mentioned.
7. Contractor is to furnish and install new radio reciever, interface panel, wireway, regulator, main circuit breaker, control relay, hand-off-auto switch, radio bypass switch, time clock, and photocell as depicted in the New Distribution System Elevation detail.

EXISTING PANEL SCHEDULE

Voltage: 120/240, Single Phase — Bus Mains: 125 Amps
Mounting: Surface — Main CB: 125 Amps
Ampere Interrupting Capacity: 10 kAIC

No.	Description	Load (VA)	CKT. BKR	Amps (A) A	Amps (A) B	CKT. BKR	Load (VA)	Description	No.
1	Proposed RW Edge Lighting CCR	4000	30	27.1		30	2500	Existing Overhead Heater	2
3					27.1				4
5	Proposed Rotating Beacon	795	30	9.6		20	750	Existing Baseboard Heaters	6
7	Existing South Plugin	1920	20		3.3				8
9	Existing Front Rm & Vault Lights	500	20	7.5		20	400	Existing Waterfountain	10
11	Existing Bath Rm Lights	300	20		6.7	20	500	Proposed Lighting Controls	12
13	Proposed Windcone Light	76	20	2.1		20	180	Existing Printer	14
15	Existing Petroleum	1440	15		28.0	20	1920	Existing Petroleum	16
17	Prposed 2-Box PAPIs	528	20	18.2		20	3840	Existing Petroleum	18
19					16.0				20
			Total Connected Amps:	64.5	81.1				
			CCR Demand Amps:	6.3	6.3				
			25% Continuous Load Amps:	2.9	1.7				
			25% Largest Motor Amps:	2.6	2.6				
			Total Demand Amps:	70.8	87.4				

Total Connected Load: 19649 VA

Radio System Operation		
Daylight		Night
Timer, resets after 20 minutes		
R/W 18-36		
Off	Photocell	Off
Off	3 Clicks	On, Step 10%
Off	5 Clicks	On, Step 30%
On, Step 100%	7 Clicks	On, Step 100%
PAPIs		
Off	Photocell	Off
On	3 Clicks	On
On	5 Clicks	On
On	7 Clicks	On

STATE OF MISSOURI
ALEJANDRO GARI
NUMBER PE-2018042871
11/02/2020
PROFESSIONAL ENGINEER

LOCHNER
16105 W. 113th Street | Suite 107 | Lenexa, Kansas 66219
P 816.945.5840 | www.hwlochner.com

TOWN OF CARROLLTON, MISSOURI
CARROLLTON MEMORIAL AIRPORT (K26)
CARROLLTON, MISSOURI

PROJECT NO.	000015616
DRAWN BY AG	DATE 07/06/2020
CHECKED BY MJJ	DATE 07/16/2020
DESIGNED BY AG	DATE 07/06/2020
REVISIONS	DATE
Addendum No. 1	11-02-2020

DISTRIBUTION SCHEMATIC

17

Drawing Name: I:\AVI\PRJ\00001561616\01 - MODOT 7 PACK\AE\03 - ACAD\CARROLLTON (K26)\PRODUCTION DRAWINGS\15616 K26 - VAULT AND SYSTEM DETAILS.dwg Nov 02,2020 Layout Name: DISTRIBUTION SCHEMATIC Plot Style: ae.ctb
Date/Time: 11/02/2020 Saved By: iwright 2020/11/02

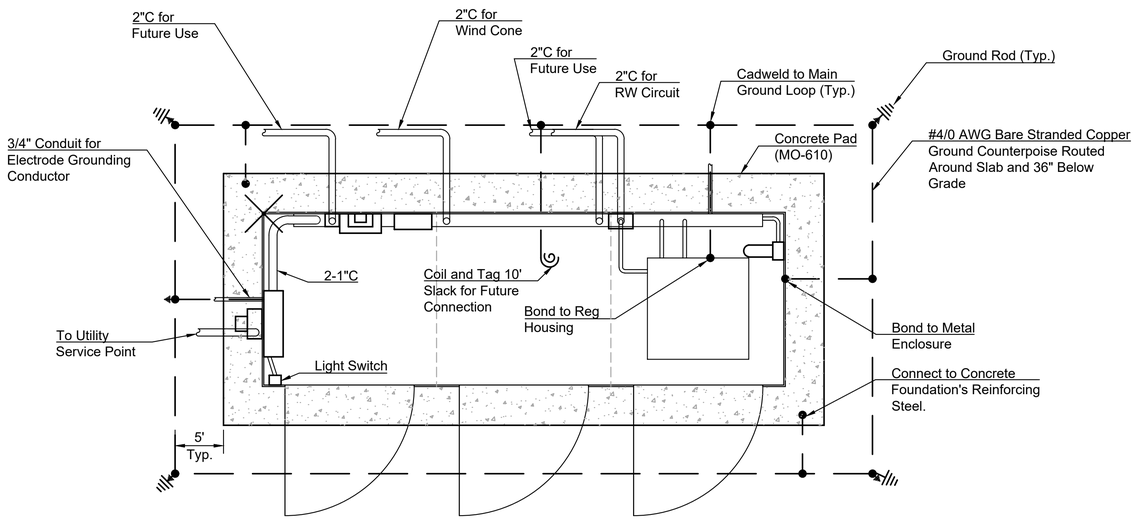

VAULT ENCLOSURE PLAN

Scale: 1" = 2'

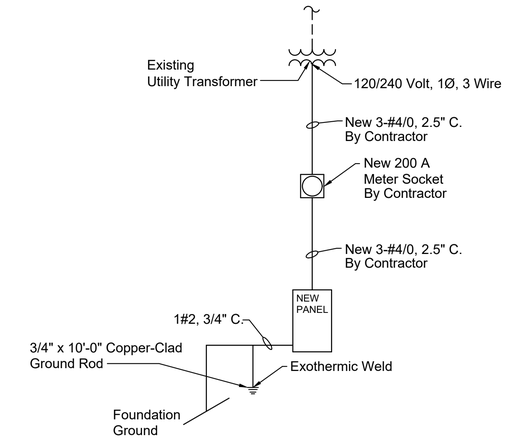

RISER DIAGRAM

No Scale

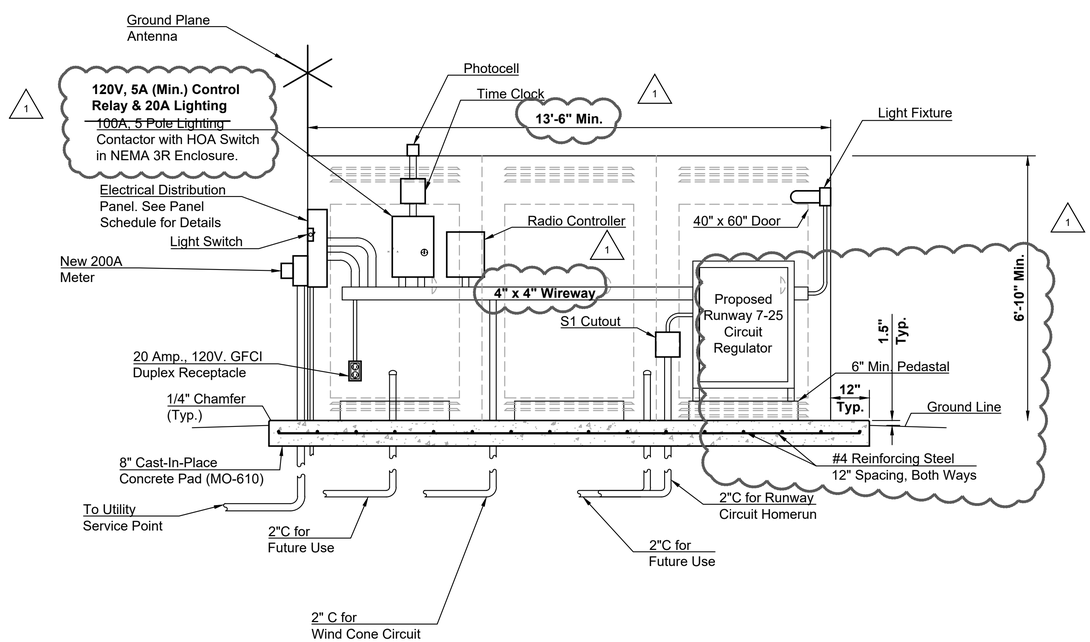

VAULT ENCLOSURE ELEVATION

Scale: 1" = 2'

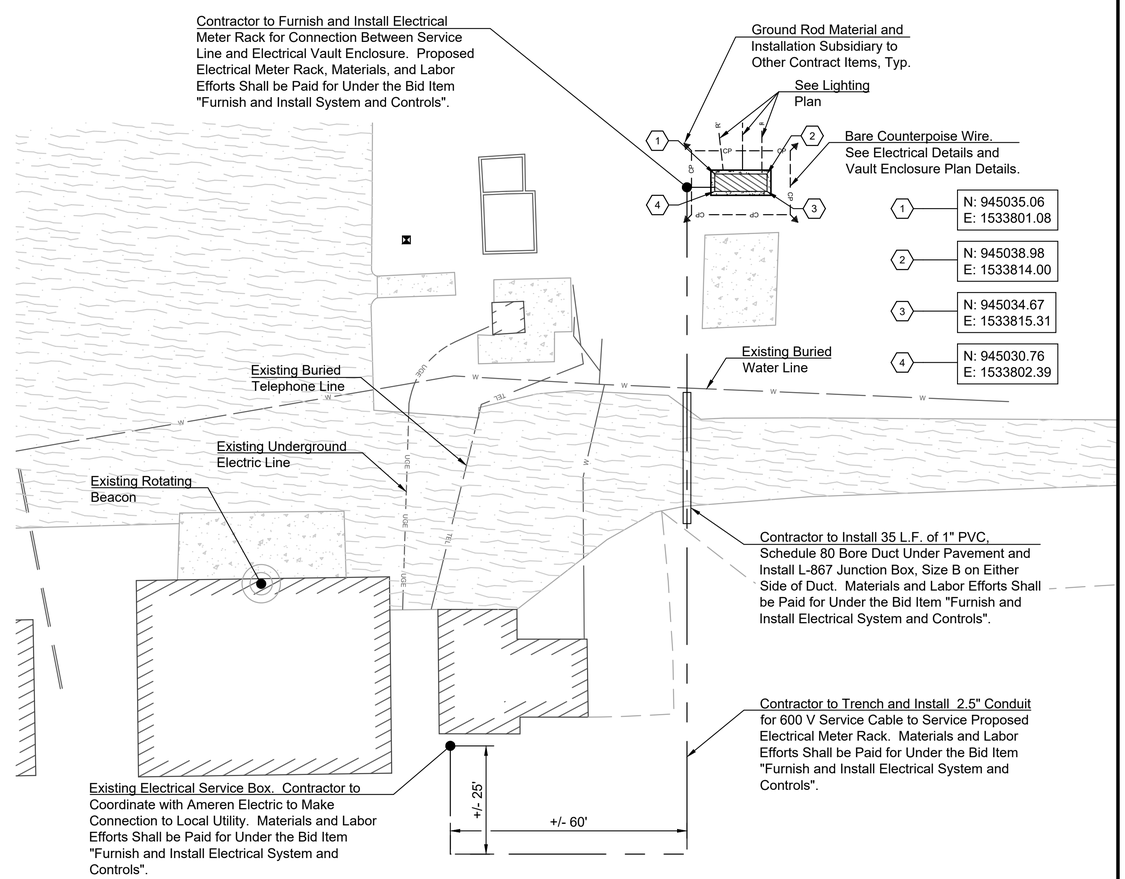

VAULT ENCLOSURE LOCATION

Scale: 1" = 5'

VAULT ENCLOSURE NOTES:

1. Any grading and site preparation required for the construction of the concrete pad shall be considered subsidiary to other bid items.

STATE OF MISSOURI
ALEJANDRO GARI
NUMBER
PE-2018042871
11/02/2020
PROFESSIONAL ENGINEER

LOCHNER
16105 W. 113th Street | Suite 107 | Lenexa, Kansas 66219
P 816.945.5840 | www.hwlochner.com

CITY OF VERSAILLES, MISSOURI

ROY OTTEN MEMORIAL AIRFIELD (3VS)
VERSAILLES, MISSOURI

PROJECT NO.	000015616
DRAWN BY AG	DATE 07/13/2020
CHECKED BY MJJ	DATE 07/16/2020
DESIGNED BY AG	DATE 07/13/2020
REVISIONS Addendum No. 1	DATE 11-02-2020

VAULT ENCLOSURE
PLAN AND DETAILS

12

Plot Style: ae.ctb
Layout Name: VAULT DETAILS
Drawing Name: I:\AV\PRJ\0000015616\01 - modot 7 pack\AE\03 - acad\versailles (3vs)\PRODUCTION DRAWINGS\15616 3VS - VAULT AND SYSTEM DETAILS.dwg Nov 02,2020 - 2:54pmLast Saved By: iwright 2020/11/02

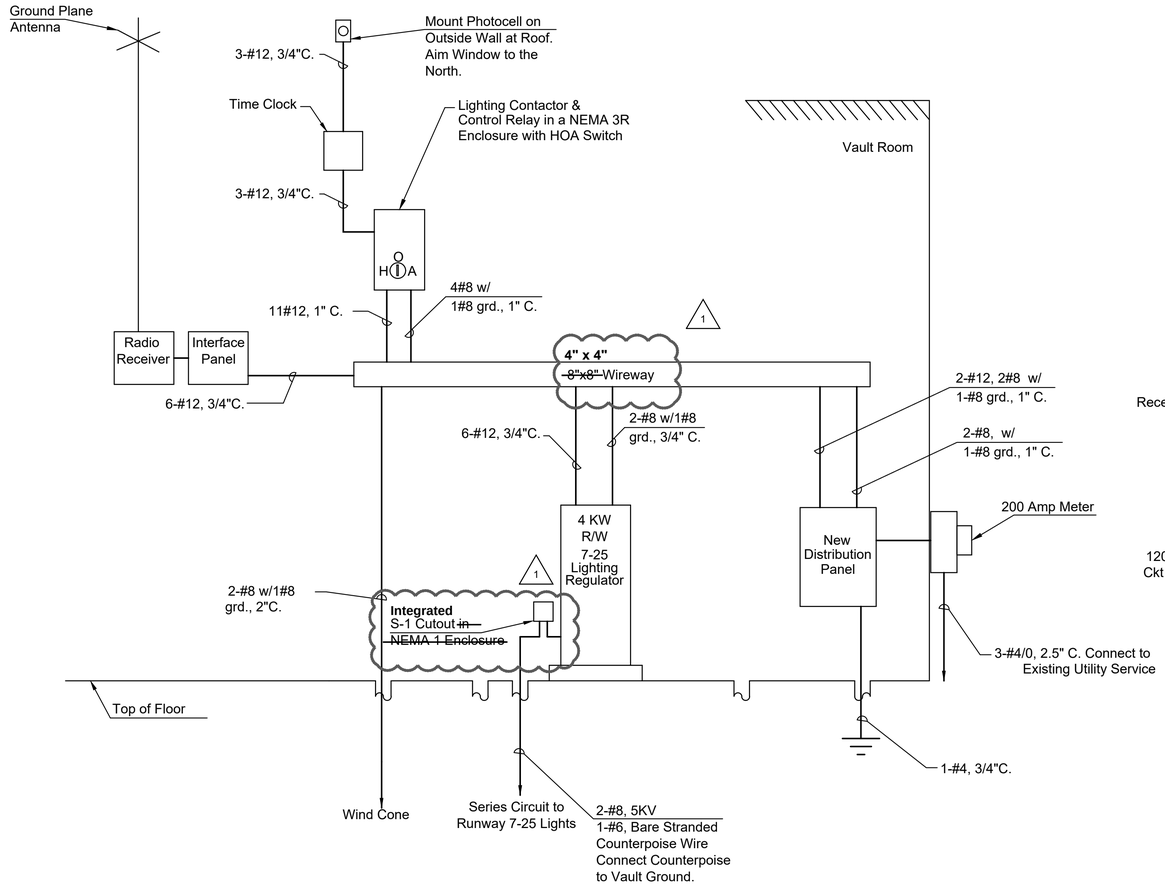

NEW DISTRIBUTION SYSTEM ELEVATION

No Scale

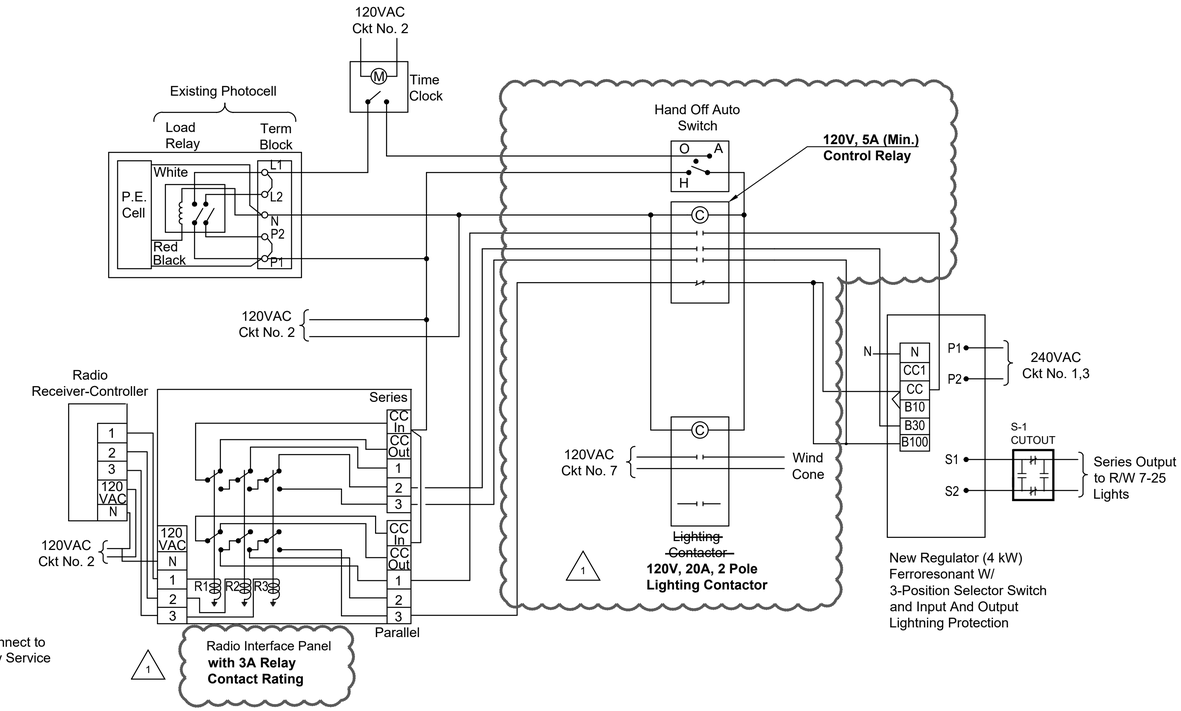

NEW WIRING DIAGRAM

No Scale

NOTES:

1. Conduit shall enter equipment at the location recommended by the manufacturer.
2. Contractor Shall Furnish & Install a Minimum of 1#12 grd. in each conduit routing unless otherwise mentioned.
3. Coordinate meter location with electric utility company Ameren UC at (866) 992-6619. Meter shall be installed with isolated neutral.
4. Use terminal blocks for all wire splices within 8" x 8" wireway. Contractor shall remove existing electrical building and electrical service and meter.
5. New distribution panel shall be service rated.

NEW PANEL SCHEDULE

Voltage: 120/240, Single Phase
Mounting: Surface
Bus Mains: 200 Amps
Main CB: 100 Amps
Ampere Interrupting Capacity: 14 kAIC

No.	Description	Load (VA)	CKT. BKR	Amps (A) A	Amps (A) B	CKT. BKR	Load (VA)	Description	No.
1	RW & TW Lighting CCR	4000	30	20.8		20	500	Lighting Controls	2
3					19.7	20	360	Vault Receptacle	4
5	Surge Arrestor	0	20	0.8		20	100	Vault Lighting	6
7	Wind Cone	76	20		0.6	20	0	Spare	8
9	Spare	0	20	0.0		20	0	Spare	10
11	Space				0.0			Space	12
13	Space			0.0				Space	14
15	Space				0.0			Space	16
17	Space			0.0				Space	18
			Total Connected Amps:	21.7	20.3			Total Connected Load: 5036 VA	
			25% Continous Amps:	1.3	0.2				
			CCR Demand Amps:	6.3	6.3				
			Total Demand Amps:	29.3	26.8				

Radio System Operation		
Daylight		Night
Timer, resets after 20 minutes		
R/W 7-25		
Off	Photocell	Off
Off	3 Clicks	On, Step 10%
Off	5 Clicks	On, Step 30%
On, Step 100%	7 Clicks	On, Step 100%

STATE OF MISSOURI
ALEJANDRO GARI
NUMBER PE-2018042871
11/02/2020
PROFESSIONAL ENGINEER

LOCHNER
16105 W. 113th Street | Suite 107 | Lenexa, Kansas 66219
P 816.945.5840 | www.hwlochner.com

CITY OF VERSAILLES, MISSOURI

ROY OTTEN MEMORIAL AIRFIELD (3VS)
VERSAILLES, MISSOURI

PROJECT NO.	000015616
DRAWN BY AG	DATE 07/13/2020
CHECKED BY MJJ	DATE 07/16/2020
DESIGNED BY AG	DATE 07/13/2020
REVISIONS Addendum No. 1	DATE 11-02-2020

DISTRIBUTION SCHEMATIC

13

Drawing Name: I:\AV\PRJ\000015616\01 - model 7 pack\AE03 - acad\versailles (3vs)\PRODUCTION DRAWINGS\15616 3VS - VAULT AND SYSTEM DETAILS.dwg Nov 02,2020 - 2:54pmLast Saved By: iwright 2020/11/02
Layout Name: DISTRIBUTION SCHEMATIC
Plot Style: ae.ctb

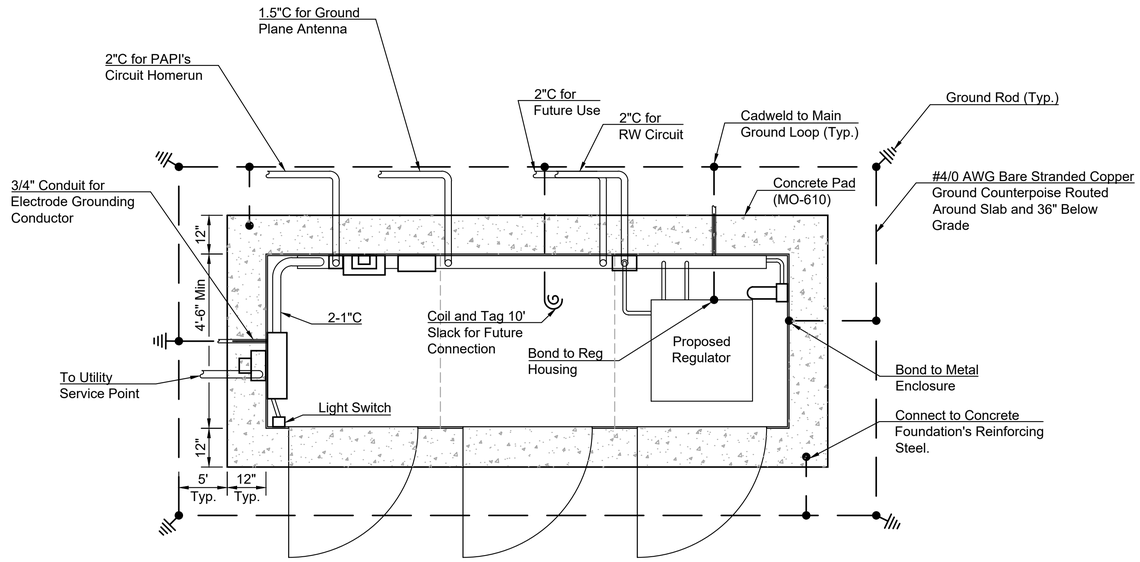

VAULT ENCLOSURE PLAN

Scale: 1" = 2'

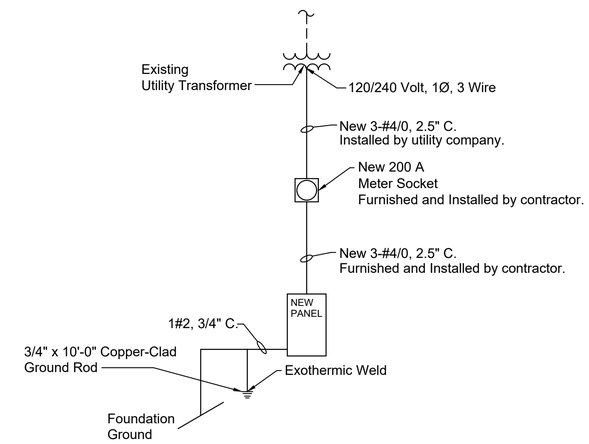

RISER DIAGRAM

No Scale

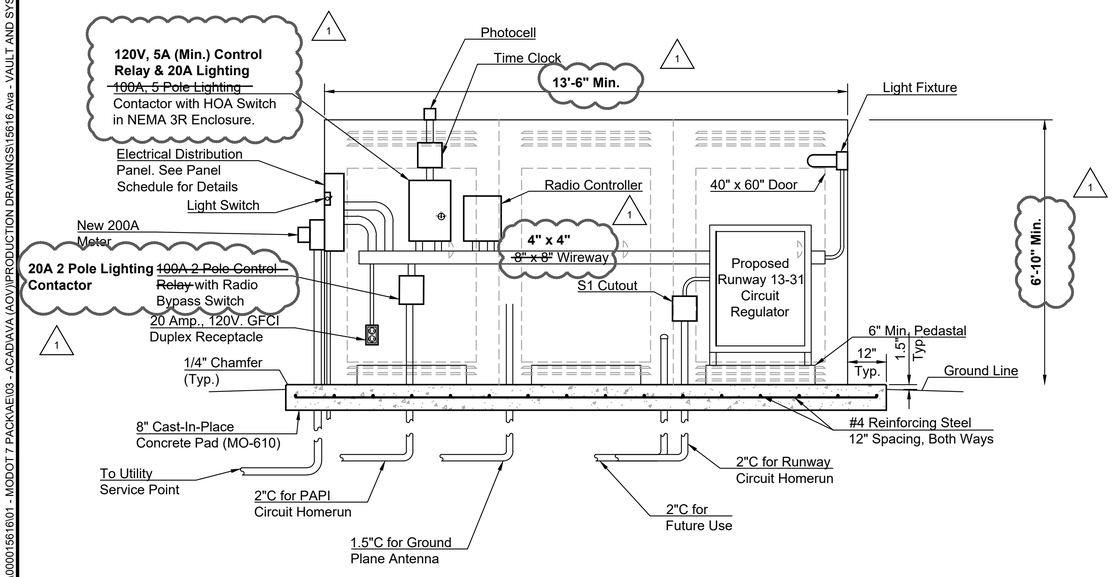

VAULT ENCLOSURE ELEVATION

Scale: 1" = 2'

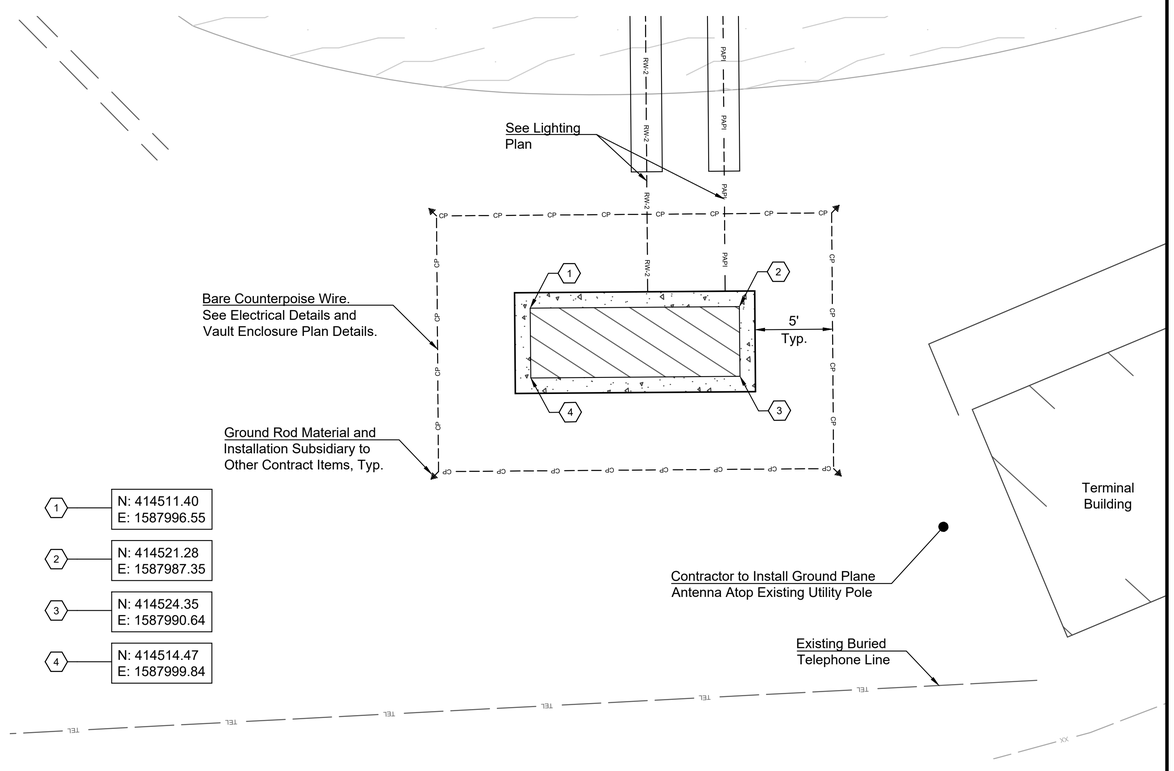

1	N: 414511.40 E: 1587996.55
2	N: 414521.28 E: 1587987.35
3	N: 414524.35 E: 1587990.64
4	N: 414514.47 E: 1587999.84

VAULT ENCLOSURE LOCATION

Scale: 1" = 5'

VAULT ENCLOSURE NOTES:

1. Any grading and site preparation required for the construction of the concrete pad shall be considered subsidiary to other bid items.

STATE OF MISSOURI
ALEJANDRO GARI
NUMBER PE-2018042871
11/02/2020
PROFESSIONAL ENGINEER

LOCHNER
16105 W. 113th Street | Suite 107 | Lenexa, Kansas 66219
P 816.945.5840 | www.hwlochner.com

CITY OF AVA, MISSOURI

AVA BILL MARTIN MEMORIAL AIRPORT (AOV)

AVA, MISSOURI

PROJECT NO.	000015616
DRAWN BY IJW	DATE 04/03/2020
CHECKED BY MJJ	DATE 07/16/2020
DESIGNED BY IJW	DATE 04/03/2020
REVISIONS Addendum No. 1	DATE 11-02-2020

VAULT ENCLOSURE PLAN AND DETAILS

14

Drawing Name: I:\AVI\PRJ\00001561601 - MODOT 7 PACK\AE\03 - ACAD\AVA (AOV)\PRODUCTION DRAWINGS\15616 Ava - VAULT AND SYSTEM DETAILS.dwg Nov 02,2020 - 2:45pm Last Saved By: iwright 2020/11/02 Layout Name: VAULT DETAILS Plot Style: ae.ctb

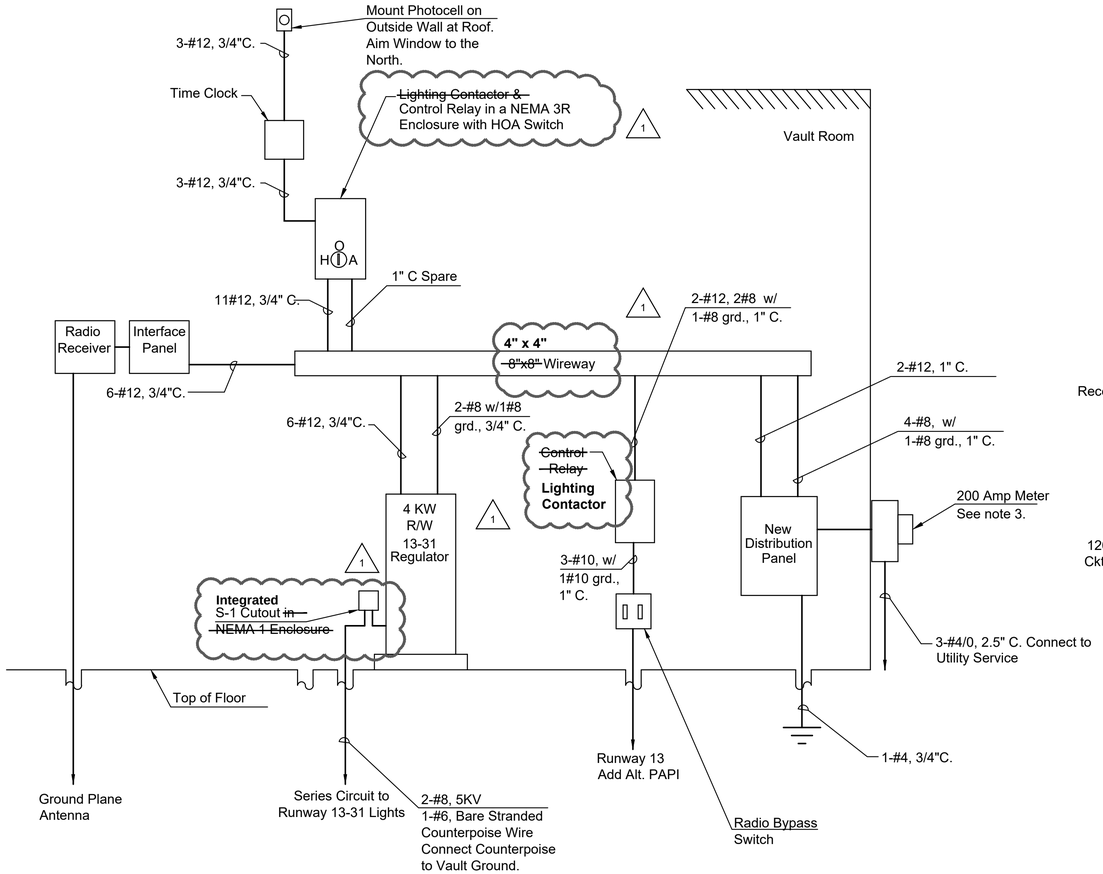

NEW DISTRIBUTION SYSTEM ELEVATION

No Scale

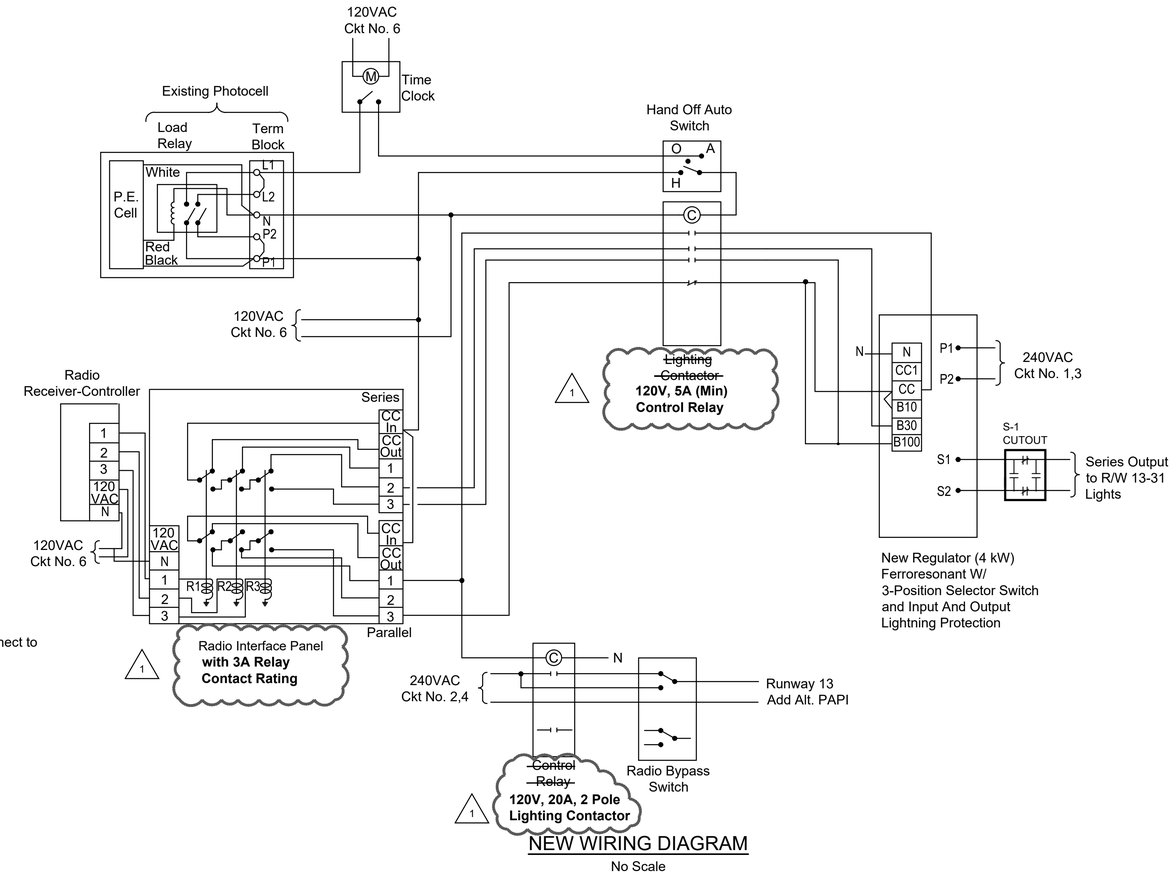

NEW WIRING DIAGRAM

No Scale

NOTES:

1. Conduit shall enter equipment at the location recommended by the manufacturer.
2. Contractor shall furnish & install a minimum of 1#12 grd. in each conduit routing unless otherwise mentioned.
3. Coordinate exact meter location with White River Electric Co Op, Mr. LeRay at (417) 294-0585. Meter shall be installed with
4. isolated neutral.
5. Use terminal blocks for all wire splices within 8" x 8" wireway. Contractor shall disconnect existing runway lighting circuit from
6. terminal building distribution panel. Contractor shall disconnect existing runway lighting circuits from existing panel to remain.
7. New distribution panel shall be service entrance rated.

NEW PANEL SCHEDULE

Voltage: 120/240, Single Phase — Bus Mains: 200 Amps
Mounting: Surface — Main CB: 100 Amps
Ampere Interrupting Capacity: 14 kAIC

No.	Description	Load (VA)	CKT. BKR	Amps (A) A	Amps (A) B	CKT. BKR	Load (VA)	Description	No.
1	Proposed RW & TW Edge Lighting CCR	4000	30	18.9		20	528	Existing VASI or Add Alt. Proposed 2-Box PAPI	2
3					18.9				4
5	Proposed Surge Arrestor	0	20	4.2		20	500	Proposed Lighting Controls	6
7	Vault Receptacle	360	20		3.8	20	100	Vault Lighting	8
9	Spare	0	20	0.0		20	0	Spare	10
11	Space				0.0			Space	12
13	Space			0.0				Space	14
15	Space				0.0			Space	16
17	Space			0.0				Space	18
			Total Connected Amps:	23.0	22.7				
			25% Continous Amps:	1.0	0.0				
			CCR Demand Amps:	6.3	6.3				
			Total Demand Amps:	30.4	29.0				

Total Connected Load: 5488 VA

Radio System Operation		
Daylight		Night
Timer, resets after 20 minutes		
R/W 13-31		
Off	Photocell	Off
Off	3 Clicks	On, Step 10%
Off	5 Clicks	On, Step 30%
On, Step 100%	7 Clicks	On, Step 100%
PAPIs		
Off	Photocell	Off
On	3 Clicks	On
On	5 Clicks	On
On	7 Clicks	On

STATE OF MISSOURI
ALEJANDRO GARI
NUMBER PE-2018042871
11/02/2020
PROFESSIONAL ENGINEER

LOCHNER
16105 W. 113th Street | Suite 107 | Lenexa, Kansas 66219
P 816.945.5840 | www.hwlochner.com

CITY OF AVA, MISSOURI

AVA BILL MARTIN MEMORIAL AIRPORT (AOV)
AVA, MISSOURI

PROJECT NO.	000015616
DRAWN BY IJW	DATE 04/03/2020
CHECKED BY MJJ	DATE 07/16/2020
DESIGNED BY IJW	DATE 04/03/2020
REVISIONS Addendum No. 1	DATE 11-02-2020

DISTRIBUTION SCHEMATIC

15

Drawing Name: I:\AV\PRJ\0000\15616\01 - MODOT 7 PACK\AE\03 - ACAD\AVA (AOV)\PRODUCTION DRAWINGS\15616 Ava - VAULT AND SYSTEM DETAILS.dwg Nov 02,2020 - 2:45pm Last Saved By: iwright 2020/11/02
Layout Name: DISTRIBUTION SCHEMATIC
Plot Style: ae.ctb

MISSOURI 2019 AIRPORT LIGHTING PACKAGE

West Package
Schedule A: Albany Municipal Airport (K19)
Schedule B: Carrollton Memorial Airport (K26)
Schedule C: Roy Otten Memorial Airfield (3VS)
Schedule D: Ava Bill Martin Memorial Airport (AOV)

East Package
Schedule A: Captain Ben Smith Airfield (K52)
Schedule B: Bonne Terre Municipal Airport (1BT)
Schedule C: Campbell Municipal Airport (34M)

PRE-BID VIDEO CONFERENCE MINUTES

Tuesday, October 27th, 2020 at 10:00 A.M. (CDT)

I. Introduction of Attendees:

(Attendees list attached to these minutes for references)

II. Project Description (reference attached project summary exhibits)

The **WEST PACKAGE** consists of the following improvements:

SCHEDULE A: ALBANY MUNICIPAL AIRPORT (K19)
MoDOT Project No. AIR 206-04A

Base Bid
Install Base Mounted Runway Edge and Threshold Lights
Install Base Mounted Taxiway Edge Lights and Retroreflective Markers
Install Non-Lighted Runway Holding Position Sign
Replace Primary Wind Cone
Install Rotating Beacon
Install Electrical Vault Enclosure, Equipment, and Controls

Add Alternate
Replace Existing VGSI System with 2-Box PAPI Systems for Runways 1 and 19

SCHEDULE B: CARROLLTON MEMORIAL AIRPORT (K26)
MoDOT Project No. AIR 206-016A

Base Bid
Install Base Mounted Runway Edge and Threshold Lights
Install Base Mounted Taxiway Edge Lights and Retroreflective Markers
Install Non-Lighted Runway Holding Position Sign
Replace Primary Wind Cone
Replace Rotating Beacon
Install Electrical Equipment and Controls

Add Alternate
Install 2-Box PAPI Systems for Runways 18 and 36

SCHEDULE C: ROY OTTEN MEMORIAL AIRFIELD (3VS)
MoDOT Project No. AIR 206-041A

Base Bid
Install Base Mounted Runway Edge and Threshold Lights
Install Base Mounted Taxiway Edge Lights and Retroreflective Markers
Install Non-Lighted Runway Holding Position Sign
Replace Primary Wind Cone and Install Supplemental Wind Cone
Install Electrical Vault Enclosure, Equipment, and Controls

SCHEDULE D: AVA BILL MARTIN MEMORIAL AIRPORT (AOV)
MoDOT Project No. AIR 206-102A

Base Bid
Install Base Mounted Runway Edge and Threshold Lights
Install Base Mounted Taxiway Edge Lights and Retroreflective Markers
Install Non-Lighted Runway Holding Position Signs
Install Electrical Vault Enclosure, Equipment, and Controls

Add Alternate
Replace Existing VASI with 2-Box PAPI System for Runway 13

The **EAST PACKAGE** consists of the following improvements:

SCHEDULE A: CAPTAIN BEN SMITH AIRFIELD (K52)
MoDOT Project No. AIR 206-035A

Base Bid
Install Base Mounted Runway Edge and Threshold Lights
Install Base Mounted Taxiway Edge Lights
Replace Existing 2-Box PAPI Systems for Runways 9 and 27
Install Non-Lighted Runway Holding Position Signs
Replace Primary Wind Cone
Install Electrical Equipment and Controls

SCHEDULE B: BONNE TERRE MUNICIPAL AIRPORT (1BT)
MoDOT Project No. AIR 206-061D

Base Bid
Install Base Mounted Runway Edge and Threshold Lights
Install Base Mounted Taxiway Edge Lights and Retroreflective Markers
Install Non-Lighted Runway Holding Position Sign
Install Supplemental Wind Cone
Install Rotating Beacon
Install Electrical Vault Enclosure, Equipment, and Controls

SCHEDULE C: CAMPBELL MUNICIPAL AIRPORT (34M)
MoDOT Project No. AIR 206-079B

Base Bid
Install Base Mounted Runway Edge and Threshold Lights
Install Base Mounted Taxiway Edge Lights and Retroreflective Markers
Install Non-Lighted Runway Holding Position Signs
Install 2-Box PAPI System for Runways 18 and 36
Replace Primary Wind Cone
Install Rotating Beacon
Install Electrical Equipment and Controls

III. Bidding Process:

A. Time and Location:

1. Proposals for the **WEST PACKAGE** will be received until **2:00 P.M. (CST), Tuesday, November 10th, 2020** ***(Revised per Addendum No. 1)*** and then publicly opened and read at:

   Lochner Office
   16105 W. 113th Street, Suite 107
   Lenexa, KS 66219

   Proposals for the **EAST PACKAGE** will be received until **2:00 P.M. (CST), Thursday, November 19th, 2020** and then publicly opened and read at:

   Lochner Office
   16105 W. 113th Street, Suite 107
   Lenexa, KS 66219

   Bids received after these times for either package will not be considered. Contractors submitting a bid will have the option to attend the bid opening in person or join via teleconference.

2. Bids may be held by the Consulting Engineers (Lochner) for a period not to exceed ninety (90) calendar days from the date of the bid opening. **Award of contract is contingent upon the Missouri Department of Transportation (MoDOT) from the State Aviation Trust Fund for this project.**

3. Envelopes containing bids must be sealed and addressed as shown on Page 2-1 Instructions to Bidders of the Contract Documents/Specifications.

4. No official Sponsor led site visit will be conducted at any of the airports. Each bidder may contact Lochner to coordinate and schedule a site visit at a specific airport in the West or East package. Photos of the existing electrical items are included within each respective plan set.

5. Each bidder shall provide a bid bond with submission of bid for no less than five (5) percent of the total amount of the bid for the West or East package. The bid bond shall be payable to the Sponsors within each bid. (West Package: City of Albany, City of Carrollton, City of Versailles, and City of Ava. East Package: City of Monroe City, City of Bonne Terre, and City of Campbell). Include the Bid Bond with your Proposal Form in the sealed envelope.

6. The intentions are to execute contracts after receiving concurrence in award from MoDOT.

B. Contract Provisions:

1. Mandatory contract provisions are identified in Section 3 and Section 4 of the Contract Documents.

2. There is **not** a DBE goal required for this project.

3. The West and East package are subject to the requirements of Section 34.350 et seq RSMo Supp 2005, which requires all manufactured goods or commodities used or supplied in the performance of this contract or any subcontract to be manufactured, assembled, or produced in the United States. Reference Section 5 of the Supplementary Provisions within the Project Manual.

4. The Contractor and all Subcontractors will be required to pay minimum wage rates as established by the Missouri Division of Labor Standards. Minimum wage requirements are identified on the current wage rates included at the end of Section 4.

5. The apparent low bidder shall submit "evidence of competency" and "evidence of financial responsibility" to the Engineer no later than three business days after the specified date for opening bids. Reference Section 20-01 of the General Provisions for additional information.

6. The Contractor and his/her Subcontractors will be required to provide certificates of insurance for at least the minimum amounts specified in Section 4: Supplementary Provisions, Part B: Local Provisions.

7. The Contractor is required to provide a 10-hour OSHA construction safety program for all employees who will be on-site at the Project as provided on Page 4-2.

8. Each individual Sponsor will provide the successful bidder of each package a state sales tax exempt certification. The successful bidder needs to request this from each individual Sponsor prior to procurement of any materials for the project.

9. Per Section 80-01 Subletting of Contract of the General Provisions, the Prime Contractor shall perform, with their organization, an amount of work equal to at least 25% of the total contract cost.

C. Contract Proposal Forms:

1. Proposals must be submitted on the "OFFICAL BID FORM" provided by Drexel Technologies for the submittal of bid.

2. The bidder must submit a bid for **ALL SCHEDULES** in the West or East Package. The bidder must submit a bid for each Base Bid **AND** each Add Alternate (if applicable). At the time of the bid opening, Lochner will read the base bid and add alternate (if applicable) for each schedule and create a bid tabulation for each package. An evaluation will be completed based on overall costs and the recommendation for award will be determined based upon which scenario best serves the Owner.

3. Bidders may submit on both the West and East packages and have the opportunity to successfully be awarded both projects. It is MoDOT, Lochner, and the Sponsor's preference to complete these projects during the 2021 construction season to the fullest extent possible.

4. When completing the Proposal Form, the unit price needs to be written in numerical form in the column under the header "Unit Price" and the extension (quantity x unit price) needs to be written in numerical form. All bidders submitting proposals must acknowledge receipt of all addendums issued in the space provided in the Proposal in Section j. Acknowledgements by Bidder.

5. As part of the OFFICIAL BID FORM, the bidder is required to complete the Worker Eligibility Verification Affidavit. Note also that you are required to submit with your proposal a completed copy of the first page and a valid copy of the signature page of your E-Verify Memorandum of Understanding.

6. The entire Proposal Form needs to be completed and signed.

7. If for some reason any of the pages of the Proposal Form are changed by addendum, the entire OFFICIAL BID FORM will be re-issued.

8. The successful bidder will be required to execute the Contract Agreement, the Performance Bond and the Payment Bond. The bonds will be in the amount of 100% of the contract price for either the West or East package. Contracts will be prepared between the successful bidder and each individual Sponsor.

IV. Project Information:

A. The contract performance time for all schedules is **forty-five (45) calendar days** from the date of the Construction Notice-to-Proceed. All project work shall be substantially completed within this stated timeframe and is subject to liquidated damages as prescribed in the project manual if not completed in time.

B. It is the intent of all Sponsors to be as flexible as possible with regards to issuing a Notice-to-Proceed and coordinating with the other Sponsors in the West or East package. Individual Notice-to-Proceeds will be issued with the preference to substantially complete these projects during the 2021 construction season.

C. Liquidated damages are set at $1,500.00 per calendar day for the Total Project time allotted for each schedule. Delays due to weather and other factors out of the control of the Contractor **that are above and beyond a typical season** may be requested in writing as a reason for contract period extension. The request should be made as soon as the Contractor is aware of an issue with the construction period. The Contractor shall also make every attempt to make up any lost days by working extended periods during the day and/or weekends.

D. Lochner will provide Construction Observation and acceptance testing throughout the project.

E. All bidders should carefully review the Construction Safety and Phasing Plan (CSPP) in the Appendix of the project manual. **The Contractor shall submit a Safety Plan Compliance Document (SPCD) detailing how they will comply with the Construction Safety and Phasing Plan. This SPCD must be approved by the Engineer prior to the issuance of the notice to proceed.**

F. Contractor's access roads, haul roads, and staging areas are shown on the Safety and Details Plan sheet included with each plan set. The Contractor is responsible for restoring any access roads, haul roads, and staging areas to their original, pre-construction condition at no additional cost to the Owner.

G. During construction, the airport will be closed. Closed Runway Markings and Low Profile Barricades shall be placed as shown on the Plans.

H. Extreme caution shall be used when working near underground electrical cable and other utilities. The Contractor shall notify Missouri One Call, (1-800-344-7483) a minimum of 48 hours prior to any construction activities to allow sufficient time to locate and mark any existing field cables or utility which might be affected by this project. Should damage occur to any of these items, they will be replaced immediately at the Contractor's expense to the satisfaction of the Engineer and the Owner.

I. The Contractor is required to complete all utility coordination with each Sponsor's utility provider. Lochner has reached out to each Sponsor's utility provider during the design process. Contact information is listed within each plan set. Any permitting or connection related costs shall be the responsibility of the Contractor.

V. Demolition:

A. All items marked for removal shall be disposed of off airport property. In some cases, the existing segmented circle markers are to be utilized for the new primary wind cone. The Contractor is required to determine the condition of the salvaged segmented circle markers, and if new markers are required, they shall be ordered and placed at the Engineer's discretion.

VI. Electrical Construction:

A. Installation of conduit by plowing method is acceptable.

B. The Contractor shall have the option of installing the electrical counterpoise system by the Equipotential Method (in the same trench as the conduit) or the Isolation Method (in a separate trench from the conduit). If installed in the same trench as the conduit, the counterpoise wire shall be connected to the ground lug of each light base and ground rods installed at intervals not to exceed 500 feet. If the counterpoise is installed in a separate trench, with ground rods installed at intervals not to exceed 500 feet, then a ground rod shall also be installed at each light base.

C. The cable quantities listed do not include the three foot of slack required at each connection. This amount is subsidiary to the contract item.

D. All concrete for this project shall be in accordance with MO-610 of the Project Specifications, and all materials shall conform to the requirements of the 2004 Missouri Standard Specifications for Highway Construction, Section 501 for Class B Concrete.

E. The 2-Box LED PAPI systems will be <u>purchased and installed</u> by the Contractor. The requirements for the PAPIs are that they comply with MO-120 of the Project Specifications. Additionally, they shall conform to the requirements listed in FAA AC 150/5345-2A and the PAPI manufacturer shall be listed on the FAA approved manufacturer list as shown in the Appendix of the Project Specifications.

F. The Contractor shall have a representative on site during the FAA flight check for commissioning of the new PAPI systems.

G. Edge light and retroreflective marker heights vary per location. Reference each plan set for appropriate information and pay item descriptions.

VII. Additional Notes:

A. Boring logs are included within the Plans to identify if rock was encountered prior to a depth of three feet at the respective location.

B. All areas disturbed during construction shall be seeded and mulched in accordance with MO-901 and MO-908 of the Project Specifications. Lump Sum Bid Item "Seeding and Hydro-Mulch" is included with the proposal section for each schedule.

C. For the Bonne Terre Airport (East Package, Schedule B), per General Note No. 14 on Plan Sheet 2, all excess excavation shall be retained on site and spread out as directed by the Engineer, due to the potential for lead contamination.

D. Any grading and site preparation required for construction of the electrical vault concrete pad shall be considered subsidiary to other items.

E. During construction, the first pay estimate shall be processed when necessary. All subsequent pay estimates will only be processed once the prime contractor has submitted lien releases from their subcontractors.

F. A contractor furnished Engineer's Field Office is not required.

VIII. Proposed Addendum Items:

A. None at this time.

IX. Open Discussion.

A. Materials on hand shall be paid upon confirmation of receipt of materials for the proposed work.

Engineering Design Report

for the

MoDOT Airport Lighting Package – Western Half

Schedule A: Albany Municipal Airport (K19)

Base Bid

Install Base Mounted Runway Edge and Threshold Lights
Install Base Mounted Taxiway Edge Lights and Retroreflective Markers
Install Non-Lighted Runway Holding Position Sign
Replace Primary Wind Cone
Install Rotating Beacon
Install Electrical Vault Enclosure, Equipment, and Controls

Add Alternate

Replace Existing VGSI System with 2-Box PAPI Systems for Runways 1 and 19

Schedule B: Carrollton Memorial Airport (K26)

Base Bid

Install Base Mounted Runway Edge and Threshold Lights
Install Base Mounted Taxiway Edge Lights and Retroreflective Markers
Install Non-Lighted Runway Holding Position Sign
Replace Primary Wind Cone
Replace Rotating Beacon
Install Electrical Equipment and Controls

Add Alternate

Install 2-Box PAPI Systems for Runways 18 and 36

Schedule C: Roy Otten Memorial Airfield (3VS)

Base Bid

Install Base Mounted Runway Edge and Threshold Lights
Install Base Mounted Taxiway Edge Lights and Retroreflective Markers
Install Non-Lighted Runway Holding Position Sign
Replace Primary Wind Cone and Install Supplemental Wind Cone
Install Electrical Vault Enclosure, Equipment, and Controls

Schedule D: Ava Bill Martin Memorial Airport (AOV)

Base Bid

Install Base Mounted Runway Edge and Threshold Lights
Install Base Mounted Taxiway Edge Lights and Retroreflective Markers
Install Non-Lighted Runway Holding Position Signs
Install Electrical Vault Enclosure, Equipment, and Controls

Add Alternate

Replace Existing VASI with 2-Box PAPI System for Runway 13

LEGEND

- LED Runway Edge Light
- LED Runway Threshold Light
- LED Taxiway Edge Light
- Retroreflective Marker
- 2-Box PAPI System (ADD ALT.)
- Primary Wind Cone
- Rotating Beacon
- Non-Lighted Holding Position Sign
- Electrical Vault Building

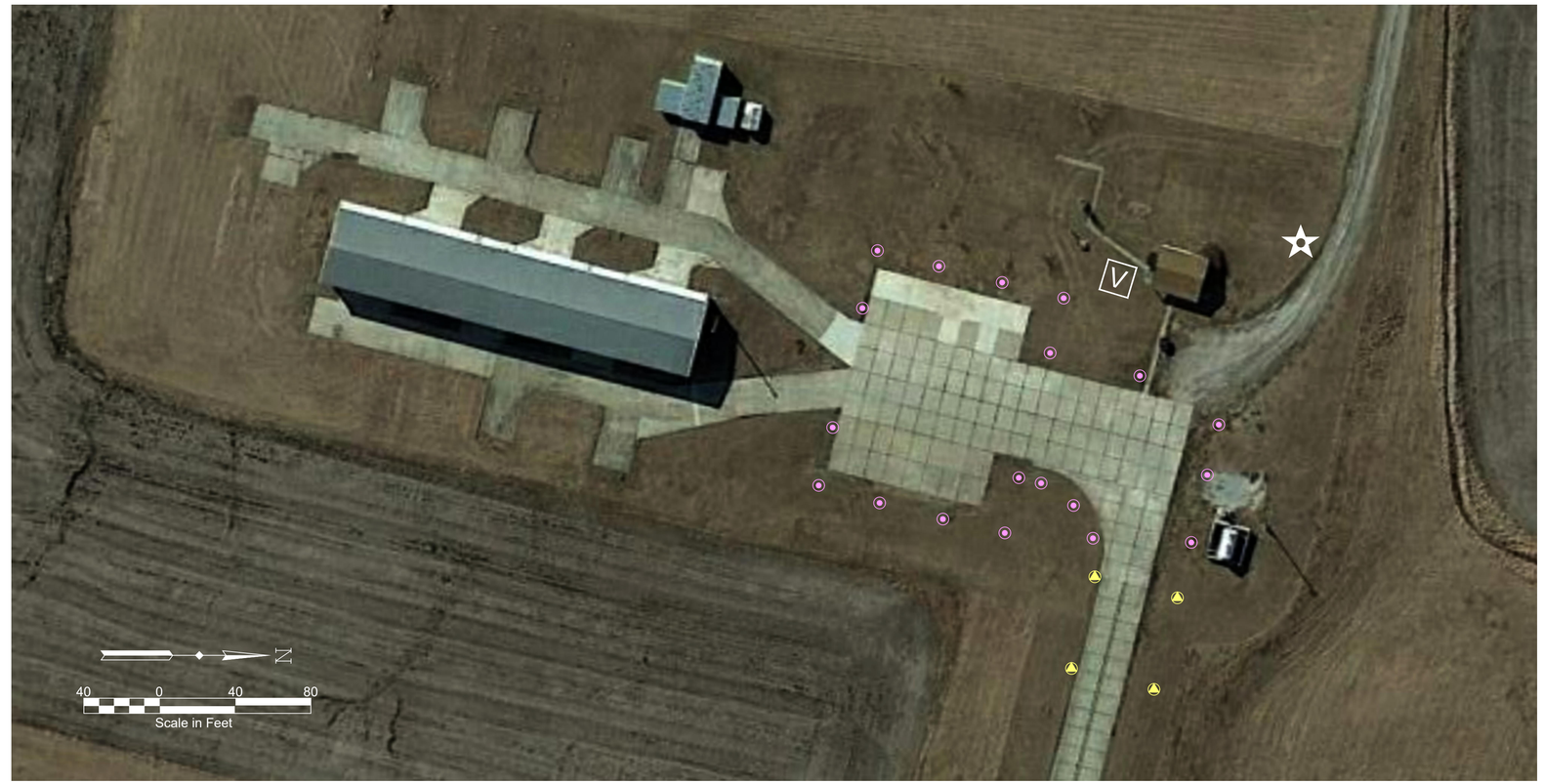

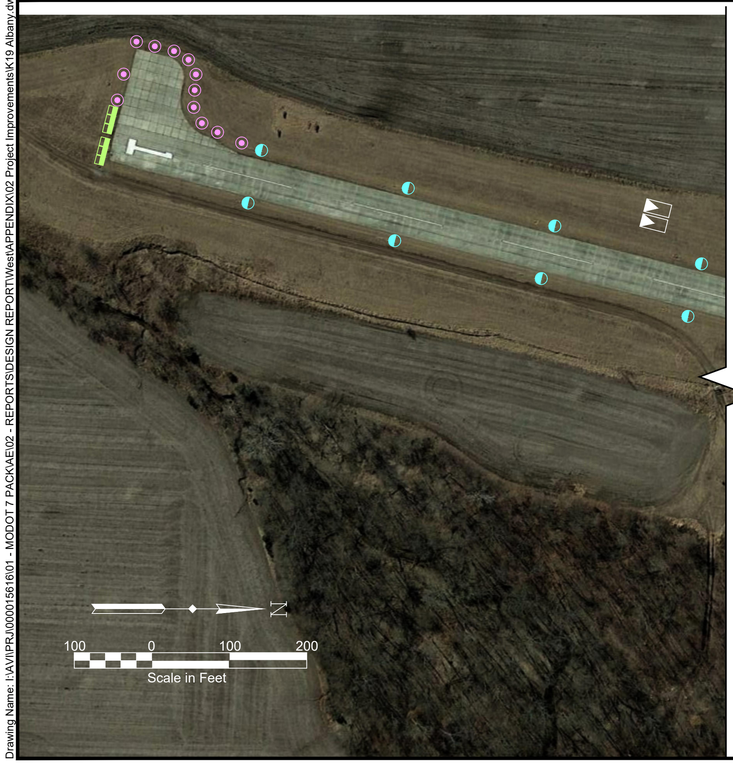

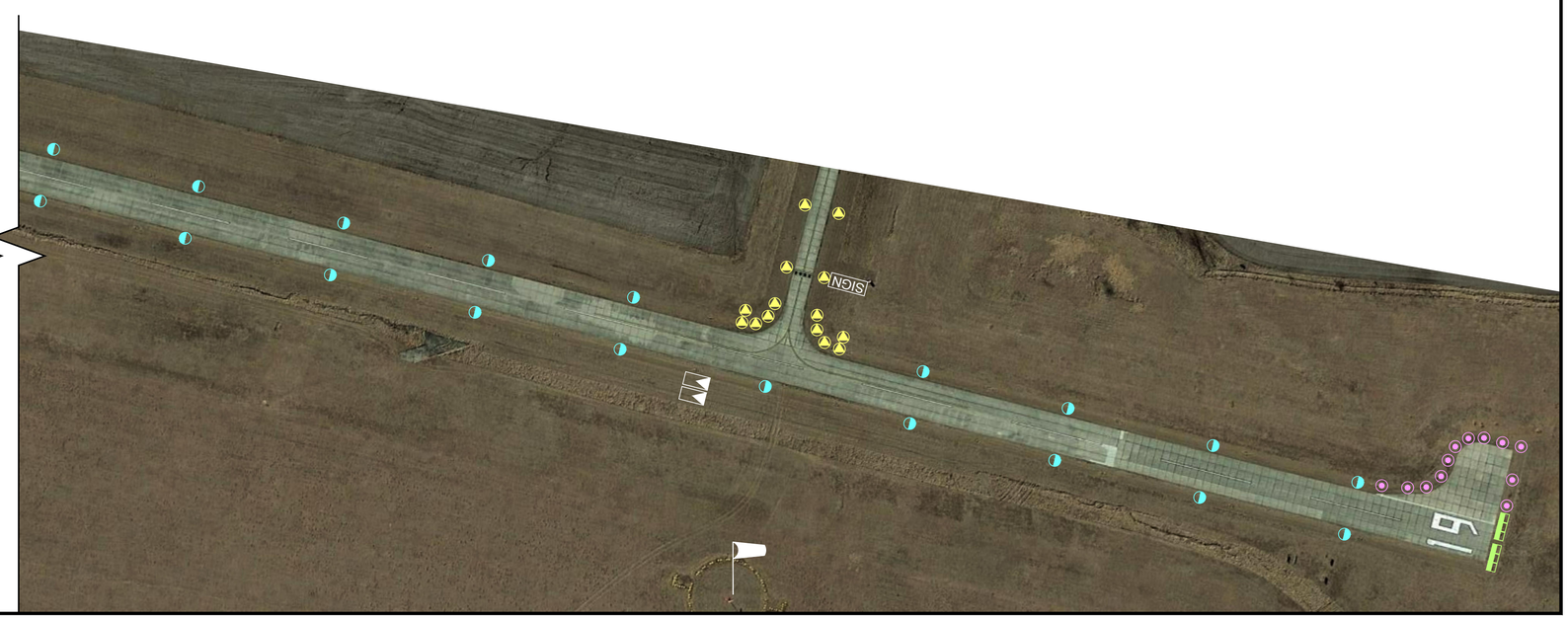

This document is preliminary in nature and is not a final signed and sealed document.

LOCHNER
16105 W. 113th Street | Suite 107 | Lenexa, Kansas 66219
P 816.945.5840 | www.hwlochner.com

CITY OF ALBANY, MISSOURI

ALBANY MUNICIPAL AIRPORT (K19)
ALBANY, MISSOURI

PROJECT NO.	000015616
DRAWN BY IJW	DATE 06/08/2020
CHECKED BY MJJ	DATE 06/08/2020
DESIGNED BY IJW	DATE 06/08/2020
REVISIONS	DATE

APPENDIX II A
PROJECT IMPROVEMENT OVERVIEW

II A

Drawing Name: I:\AV\PRJ\000015616\01 - MODOT 7 PACK\AE\02 - REPORTS\DESIGN REPORT\West\APPENDIX\02 Project Improvements\K19 Albany.dwg Oct 06,2020 - 1:08pm Saved By: iwright 2020/06/08
Layout Name: GENERAL LAYOUT
Plot Style: ae.ctb

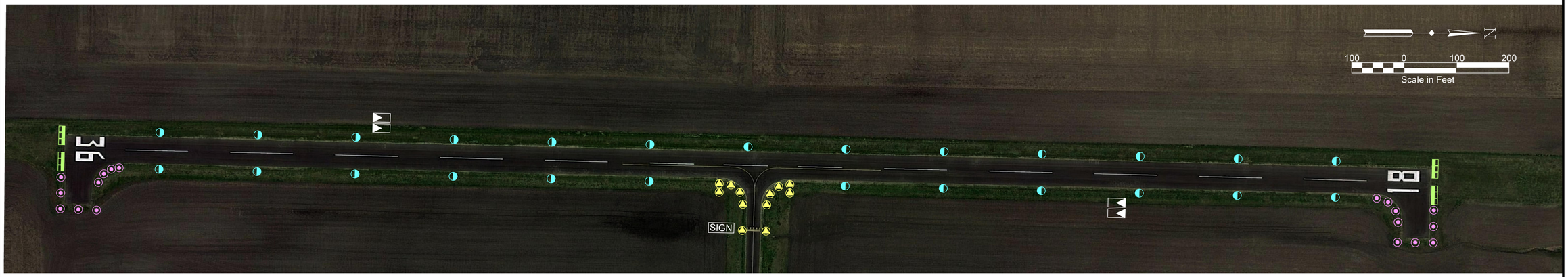

LEGEND

- LED Runway Edge Light
- LED Runway Threshold Light
- LED Taxiway Edge Light
- Retroreflective Marker
- 2-Box PAPI System (ADD ALT.)
- Primary Wind Cone
- Rotating Beacon
- SIGN Non-Lighted Holding Position Sign
- V Electrical Vault Building

This document is preliminary in nature and is not a final signed and sealed document.

LOCHNER
16105 W. 113th Street | Suite 107 | Lenexa, Kansas 66219
P 816.945.5840 | www.hwlochner.com

TOWN OF CARROLLTON, MISSOURI

CARROLLTON MEMORIAL AIRPORT (K26)
CARROLLTON, MISSOURI

PROJECT NO.	000015616
DRAWN BY IJW	DATE 06/08/2020
CHECKED BY MJJ	DATE 06/08/2020
DESIGNED BY IJW	DATE 06/08/2020
REVISIONS	DATE

APPENDIX II B
PROJECT IMPROVEMENT OVERVIEW

II B

Drawing Name: I:\AVI\PRJ\000015616\01 - MODOT 7 PACK\AE\02 - REPORTS\DESIGN REPORT\West\APPENDIX\02 Project Improvements\K26 Carrollton.dwg Oct 06,2020 - 1:17pm Last Saved By: iwright 2020/06/08
Layout Name: GENERAL LAYOUT
Plot Style: ae.ctb

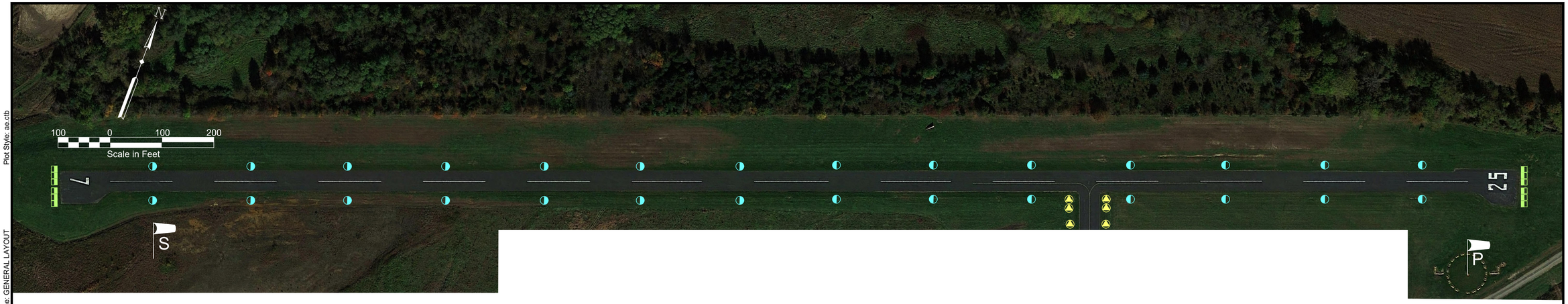

LEGEND

- LED Runway Edge Light
- LED Runway Threshold Light
- LED Taxiway Edge Light
- Retroreflective Marker
- 2-Box PAPI System
- REIL System
- Primary Wind Cone
- Supplemental Wind Cone
- Rotating Beacon
- Non-Lighted Holding Position Sign
- Electrical Vault Building

NOTE:

1. FAA Form 7460, "Notice of Proposed Construction or Alteration", will be submitted for airspace evaluation as part of the design process to ensure the Primary and Supplemental Wind Cones do not penetrate the FAA standard surfaces.

This document is preliminary in nature and is not a final signed and sealed document.

LOCHNER
16105 W. 113th Street | Suite 107 | Lenexa, Kansas 66219
P 816.945.5840 | www.hwlochner.com

CITY OF VERSAILLES, MISSOURI

ROY OTTEN MEMORIAL AIRFIELD (3VS)
VERSAILLES, MISSOURI

PROJECT NO.	000015616
DRAWN BY IJW	DATE 06/08/2020
CHECKED BY MJJ	DATE 06/08/2020
DESIGNED BY IJW	DATE 06/08/2020
REVISIONS	DATE

APPENDIX II C
PROJECT
IMPROVEMENT
OVERVIEW

II C

Drawing Name: I:\AVIPRJ\0000156161\01 - MODOT 7 PACK\AE\02 - REPORTS\DESIGN REPORT\West\APPENDIX\02 Project Improvements\3VS Versailles.dwg Oct 06,2020 - 1:15pm Saved By: iwright 2020/06/08
Layout Name: GENERAL LAYOUT
Plot Style: ae.ctb

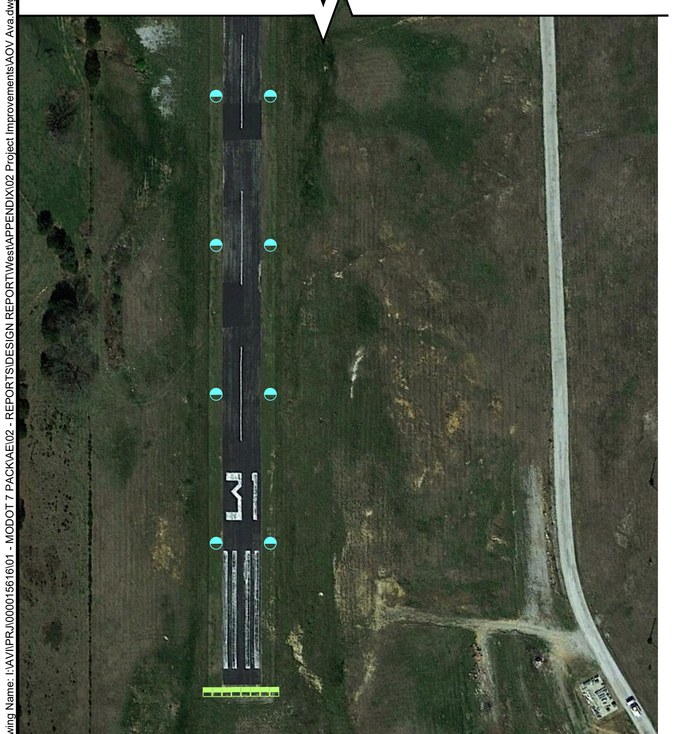

LEGEND

- LED Runway Edge Light
- LED Runway Threshold Light
- LED Taxiway Edge Light
- Retroreflective Marker
- 2-Box PAPI System (ADD ALT.)
- REIL System
- Primary Wind Cone
- Rotating Beacon
- SIGN Non-Lighted Holding Position Sign
- V Electrical Vault Building

This document is preliminary in nature and is not a final signed and sealed document.

LOCHNER
16105 W. 113th Street | Suite 107 | Lenexa, Kansas 66219
P 816.945.5840 | www.hwlochner.com

CITY OF AVA, MISSOURI

AVA BILL MARTIN MEMORIAL AIRPORT (AOV)
AVA, MISSOURI

PROJECT NO.	000015616
DRAWN BY IJW	DATE 06/08/2020
CHECKED BY MJJ	DATE 06/08/2020
DESIGNED BY IJW	DATE 06/08/2020
REVISIONS	DATE

APPENDIX II D
PROJECT
IMPROVEMENT
OVERVIEW

II D

Drawing Name: I:\AVI\PRJ\000015616\01 - MODOT 7 PACK\AE\02 - REPORTS\DESIGN REPORT\West\APPENDIX\02 Project Improvements\AOV Ava.dwg Oct 06,2020 - 1:13pm Last Saved By: iwright 2020/06/08 Layout Name: GENERAL LAYOUT Plot Style: ae.ctb

Engineering Design Report

for the

MoDOT Airport Lighting Package – Eastern Half

Schedule A: Captain Ben Smith Airfield (K52)

Base Bid

Install Base Mounted Runway Edge and Threshold Lights
Install Base Mounted Taxiway Edge Lights
Replace Existing 2-Box PAPI Systems for Runways 9 and 27
Install Non-Lighted Runway Holding Position Signs
Replace Primary Wind Cone
Install Electrical Equipment and Controls

Schedule B: Bonne Terre Municipal Airport (1BT)

Base Bid

Install Base Mounted Runway Edge and Threshold Lights
Install Base Mounted Taxiway Edge Lights and Retroreflective Markers
Install Non-Lighted Runway Holding Position Sign
Install Supplemental Wind Cone
Install Rotating Beacon
Install Electrical Vault Enclosure, Equipment, and Controls

Schedule C: Campbell Municipal Airport (34M)

Base Bid

Install Base Mounted Runway Edge and Threshold Lights
Install Base Mounted Taxiway Edge Lights and Retroreflective Markers
Install Non-Lighted Runway Holding Position Signs
Install 2-Box PAPI System for Runways 18 and 36
Replace Primary Wind Cone
Install Rotating Beacon
Install Electrical Equipment and Controls

LEGEND

- LED Runway Edge Light
- LED Runway Threshold Light
- LED Taxiway Edge Light
- Retroreflective Marker
- 2-Box PAPI System
- REIL System
- Primary Wind Cone
- Rotating Beacon
- SIGN — Non-Lighted Holding Position Sign
- V — Electrical Vault Building

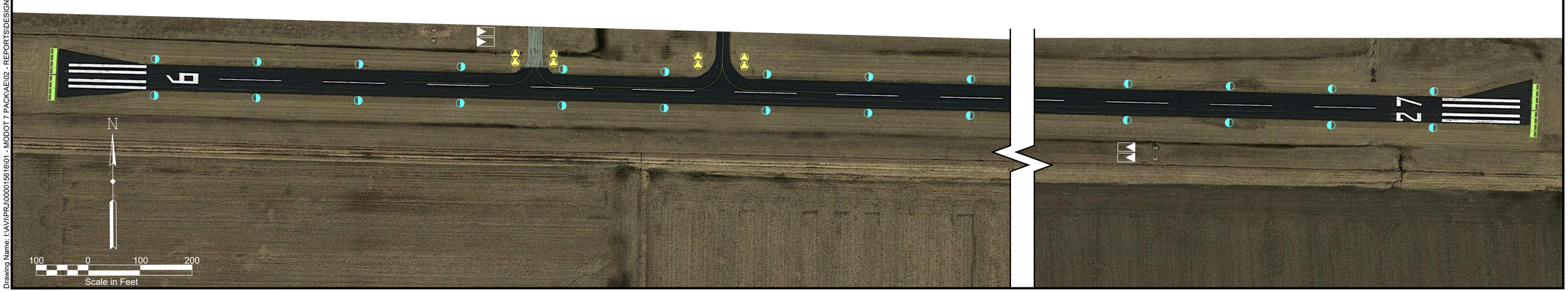

This document is preliminary in nature and is not a final signed and sealed document.

LOCHNER
16105 W. 113th Street | Suite 107 | Lenexa, Kansas 66219
P 816.945.5840 | www.hwlochner.com

CITY OF MONROE CITY, MISSOURI

CAPTAIN BEN SMITH AIRFIELD (K52)

MONROE CITY, MISSOURI

PROJECT NO.	000015616
DRAWN BY IJW	DATE 06/19/2020
CHECKED BY MJJ	DATE 06/19/2020
DESIGNED BY IJW	DATE 06/19/2020
REVISIONS	DATE

APPENDIX II A
PROJECT IMPROVEMENT OVERVIEW

II A

Drawing Name: I:\AV\PRJ\000015616\01 - MODOT 7 PACK\AE\02 - REPORTS\DESIGN REPORT\East\APPENDIX\02 Project Improvements\K52 Monroe City.dwg Oct 19,2020 - 8:02am Saved By: iwright 2020/06/24 Layout Name: GENERAL LAYOUT Plot Style: ae.ctb

LEGEND

- LED Runway Edge Light
- LED Runway Threshold Light
- LED Taxiway Edge Light
- Retroreflective Marker
- 2-Box PAPI System
- REIL System
- Supplemental Wind Cone
- Rotating Beacon
- Non-Lighted Holding Position Sign
- Electrical Vault Building

NOTE:

1. Typically Rotating Beacons are installed on a pole at a height of 60'. However, the Rotating Beacon depicted in this drawing shall be installed on a pole that is 18' in height or less to meet the surface penetration requirements set forth by the FAA. To meet the 7:1 Primary Surface, the Rotating Beacon location depicted must be sighted at a minimum of 251' from the Runway 14-32 centerline on an 18' or less pole.

2. Due to constraints with existing features around the airport and penetration of FAA surface requirements, the Primary Wind Cone will no longer be considered for this project. A Supplemental Wind Cone mounted to a frangible support will be designed and sighted so long as it is not penetrating the Runway 14-32 Safety Area. The location of the Supplemental Wind Cone does not penetrate the Runway 14-32 Safety Area.

3. Field survey determined that the siting of REILs is not feasible due to terrain.

This document is preliminary in nature and is not a final signed and sealed document.

LOCHNER
16105 W. 113th Street | Suite 107 | Lenexa, Kansas 66219
P 816.945.5840 | www.hwlochner.com

CITY OF BONNE TERRE, MISSOURI

BONNE TERRE MUNICIPAL AIRPORT (1BT)
BONNE TERRE, MISSOURI

PROJECT NO.	000015616
DRAWN BY IJW	DATE 06/19/2020
CHECKED BY MJJ	DATE 10/02/2019
DESIGNED BY IJW	DATE 06/19/2020
REVISIONS	DATE

APPENDIX II B
PROJECT
IMPROVEMENT
OVERVIEW

II B

Drawing Name: I:\AV\PRJ\000015616\01 - MODOT 7 PACK\AE\02 - REPORTS\DESIGN REPORT\East\APPENDIX\02 Project Improvements\1BT Bonne Terre.dwg Oct 19,2020 - 7:54am Saved By: iwright 2020/06/24
Layout Name: GENERAL LAYOUT
Plot Style: ae.ctb

LEGEND

- LED Runway Edge Light
- LED Runway Threshold Light
- LED Taxiway Edge Light
- Retroreflective Marker
- 2-Box PAPI System
- REIL System
- Primary Wind Cone
- Rotating Beacon
- SIGN Non-Lighted Holding Position Sign
- V Electrical Vault Building

This document is preliminary in nature and is not a final signed and sealed document.

LOCHNER
16105 W. 113th Street | Suite 107 | Lenexa, Kansas 66219
P 816.945.5840 | www.hwlochner.com

CITY OF CAMPBELL, MISSOURI

CAMPBELL MUNICIPAL AIRPORT (34M)

CAMPBELL, MISSOURI

PROJECT NO.	000015616
DRAWN BY IJW	DATE 06/19/2020
CHECKED BY MJJ	DATE 06/19/2020
DESIGNED BY IJW	DATE 06/19/2020
REVISIONS	DATE

APPENDIX II C
PROJECT IMPROVEMENT OVERVIEW

II C

Drawing Name: I:\AVI\PRJ\000015616\01 - MODOT 7 PACK\AE\02 - REPORTS\DESIGN REPORT\East\APPENDIX\02 Project Improvements\34M Campbell.dwg Oct 19,2020 - 8:01am Saved By: iwright 2020/06/24 Layout Name: GENERAL LAYOUT Plot Style: ae.ctb

MISSOURI 2019 AIRPORT LIGHTING PACKAGE

West Package
Schedule A: Albany Municipal Airport (K19)
Schedule B: Carrollton Memorial Airport (K26)
Schedule C: Roy Otten Memorial Airfield (3VS)
Schedule D: Ava Bill Martin Memorial Airport (AOV)

East Package
Schedule A: Captain Ben Smith Airfield (K52)
Schedule B: Bonne Terre Municipal Airport (1BT)
Schedule C: Campbell Municipal Airport (34M)

ATTENDEES LIST FOR PRE-BID VIDEO CONFERENCE

Tuesday, October 27th, 2020 at 10:00 A.M. (CDT)

NAME	REPRESENTING	PHONE	EMAIL
Matt Jacobs	Lochner	816.945.5840	mjacobs@hwlochner.com
Ian Wright	Lochner	816.945.5840	iwright@hwlochner.com
Chris Flageolle	Lochner	816.945.5840	cflageolle@hwlochner.com
Alex Gari	Lochner	305.503.9873	agari@hwlochner.com
Andy Hanks	MoDOT	573.751.7478	andrew.hanks@modot.mo.gov
Burley Loftin	City of Ava	417.683.5516	bloftin@avamissouri.org
Cole Zoglman	Decker Electric	316.858.0784	czoglman@decker-electric.com
Dave Ewing	Ewing Signal Construction	417.724.9405	daveewing@ewingsignals.com
David Davidson	Ava Bill Martin Memorial Airport	417.683.5516	dmkdavidson@gmail.com
Derek Brown	City of Albany	660-726-3935	cityadmin@albanymo.net

NAME	REPRESENTING	PHONE	EMAIL
Jennie Kennemore	KT Power Systems	573.388.4524	jkennemore@ktpowersystems.com
Shawn Kay	City of Bonne Terre	573.358.2254	cityadmin@bonneterre.net
Michael Schmidt	Strukel Electric	620.724.8589	mike.strukelinc@ckt.net
Spencer Owens	Ewing Signal Construction	417.724.9405	interns@ewingsignals.com
Ralph Smith	Meyer Electric	573.298.6419	wmralphsmith@yahoo.com