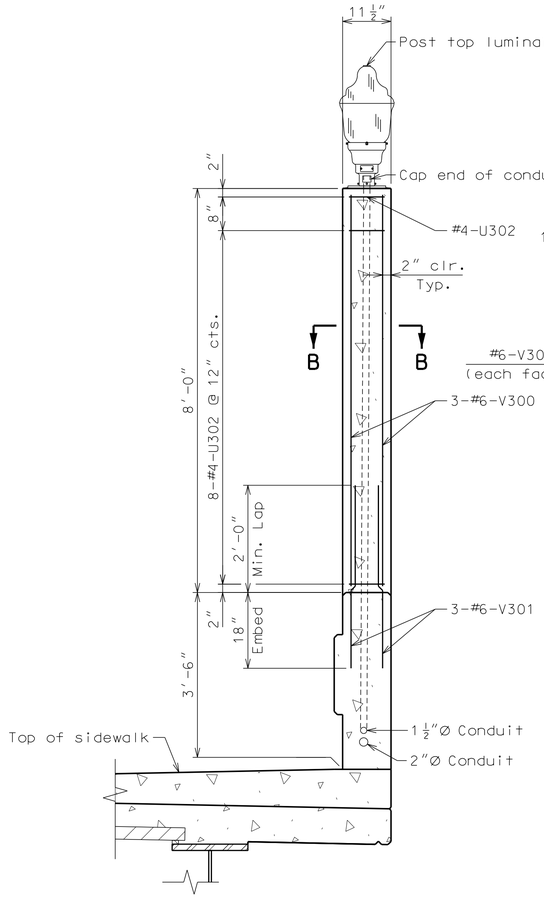

TYPICAL PEDESTAL SECTION

Shown along right fascia. Barrier curb reinforcing not shown for clarity.

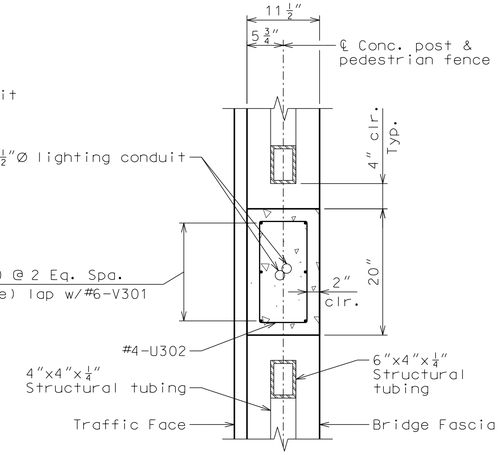

SECTION B-B

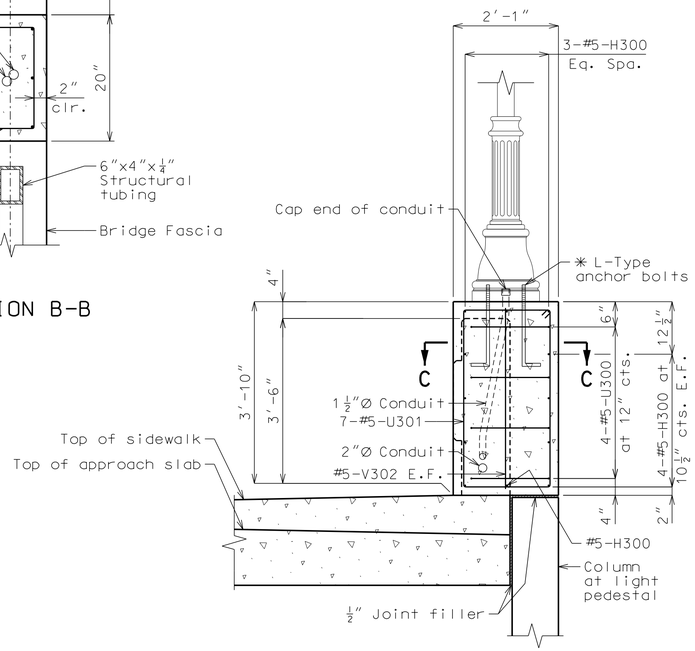

TYPICAL LIGHT PEDESTAL SECTION

Shown along right fascia. Barrier reinforcing not shown for clarity. △1

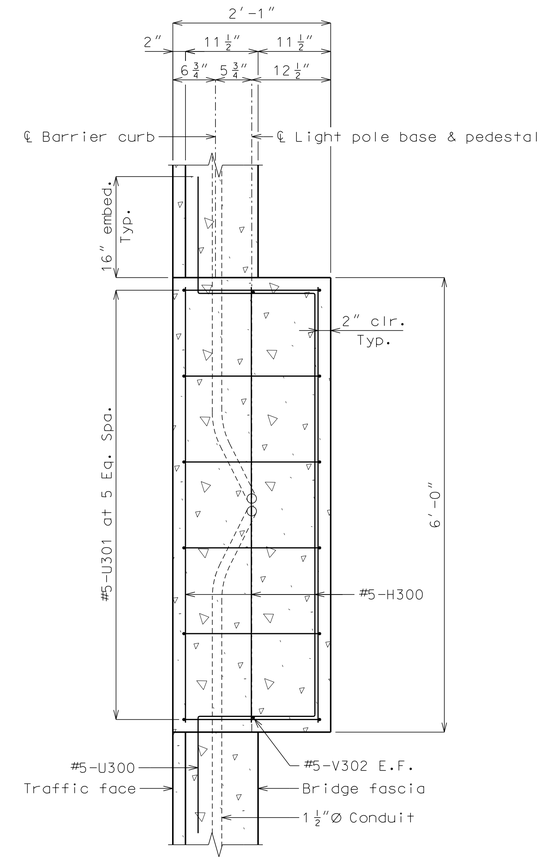

SECTION C-C

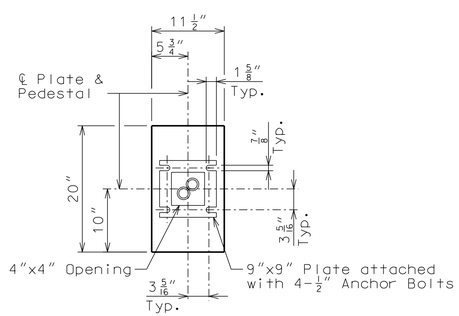

POST TOP LUMINAIRE ATTACHMENT DETAIL

Slope all concrete to drain away from fixture.

Notes:
E.F. denotes each face.

Cost of furnishing and placing anchor bolts for light poles and light fixtures will be considered completely covered by the contract unit price for other items.

Anchor bolts and nuts shall be AASHTO M314-90 Grade 55. Anchor bolts, nuts and washers shall be fully galvanized.

Light standards, wiring and fixtures shall be furnished and installed by others.

Top of pedestal support shall be horizontal, anchor bolts shall be placed vertical.

For details of light standards and wiring, see lighting plans.

✳ Contractor shall coordinate with light pole manufacturor to determine anchor bolt size and embedment requirements.

All concrete and reinforcing steel for the light pedestals will be considered completely covered by the contract unit price for Safety Barrier Curb. △1

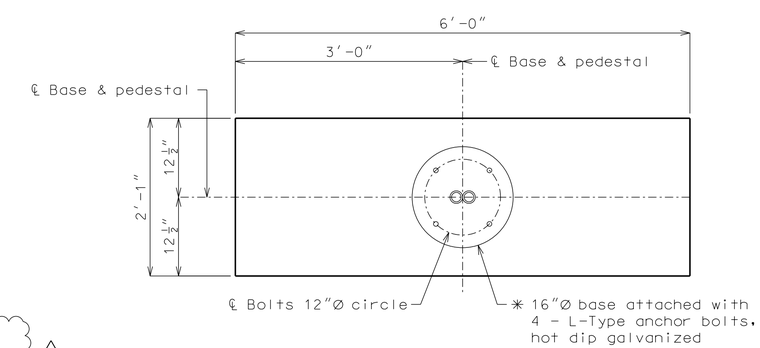

TEAR DROP LUMINAIRE ATTACHMENT DETAIL

LIGHT PEDESTAL DETAILS

Detailed MAY, 2013
Checked JUL, 2013

Note: This drawing is not to scale. Follow dimensions.

STATE OF MISSOURI
David J. Glastetter
NUMBER PE-2000150018
PROFESSIONAL ENGINEER

THIS SHEET HAS BEEN SIGNED, SEALED AND DATED ELECTRONICALLY.

DATE PREPARED	
8/30/2013	
ROUTE	STATE
N/A	MO
DISTRICT	SHEET NO.
BR	147
COUNTY	
JASPER	
JOB NO.	
TDG-3200(718)	
CONTRACT ID.	
PROJECT NO.	
BRIDGE NO.	
2205040	

DATE	DESCRIPTION

MISSOURI HIGHWAYS AND TRANSPORTATION COMMISSION
105 WEST CAPITOL
JEFFERSON CITY, MO 65102
1-888-ASK-MODOT (1-888-275-6636)

2400 PERSHING ROAD
SUITE 400
KANSAS CITY, MO 64108
PHONE: (816)329-8600
FAX: (816)329-8601
MO STATE CERTIFICATE OF AUTHORITY # 273
ENGINEERING