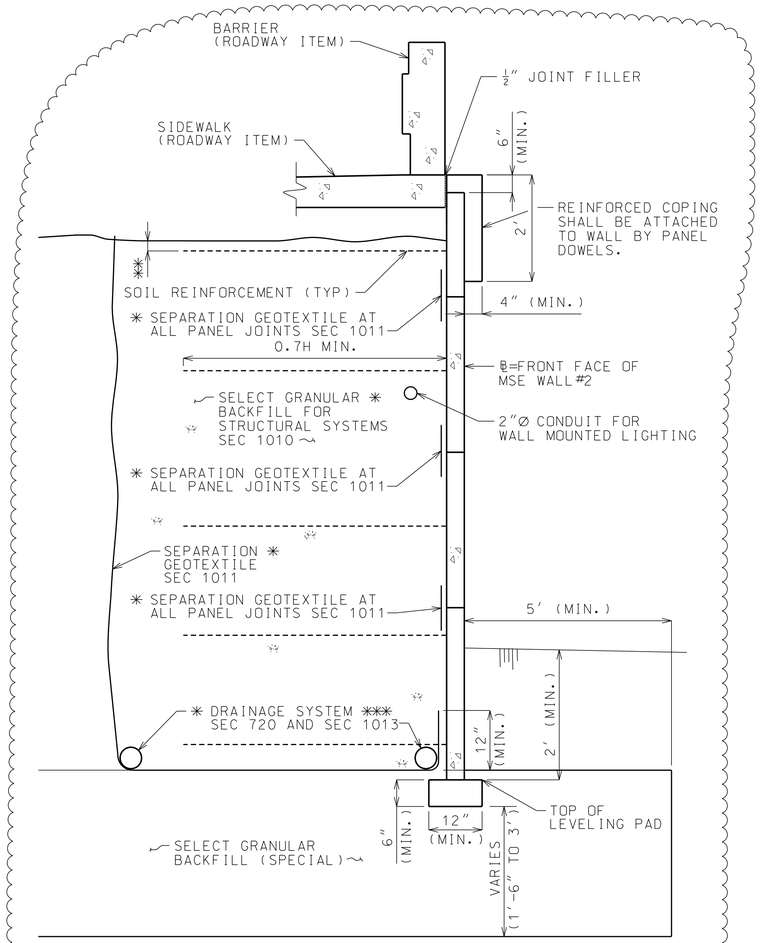

SECTION A-A THRU MSE WALL ⚠1

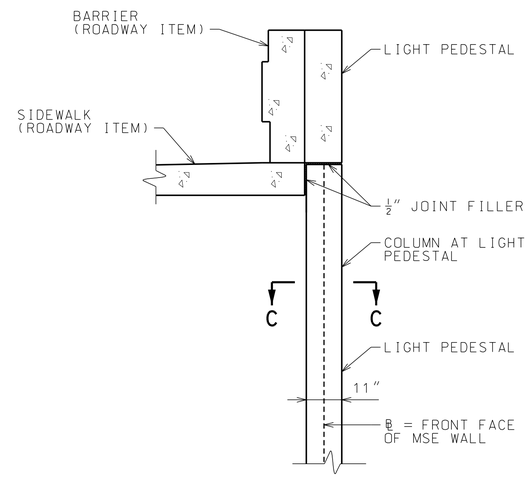

COLUMN AT LIGHT PEDESTAL

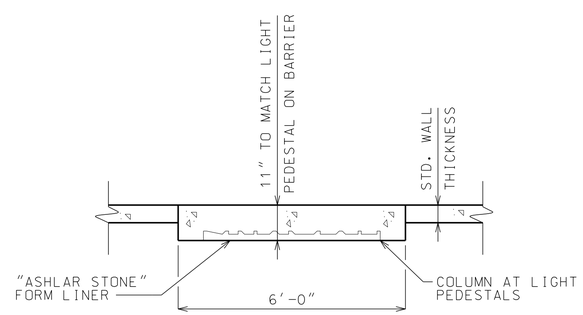

SECTION C-C

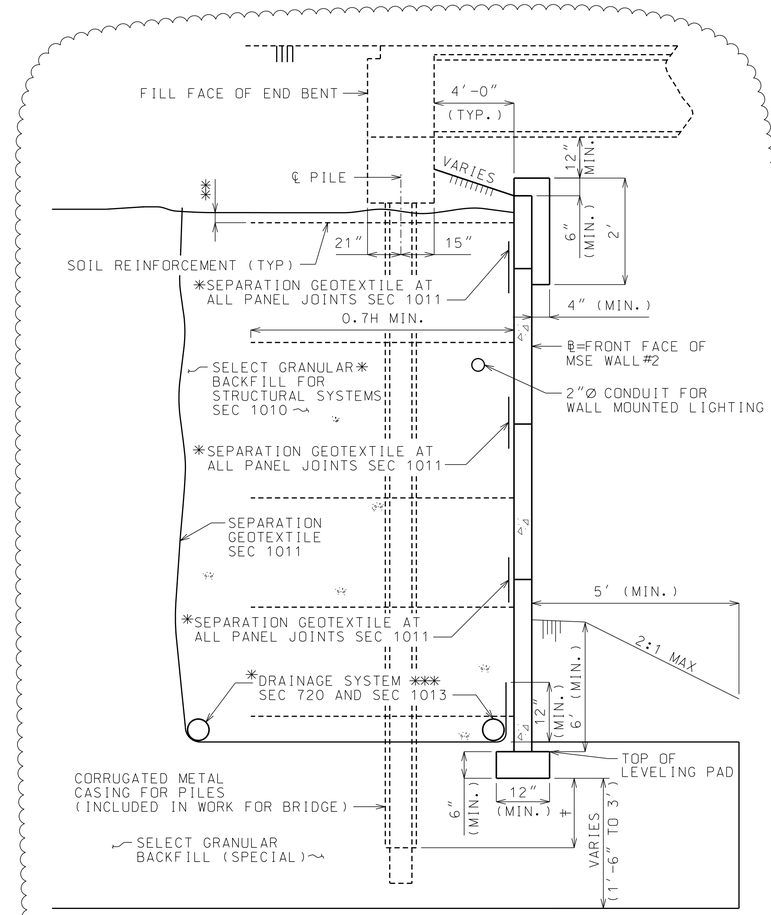

SECTION B-B THRU MSE WALL UNDER BRIDGE ⚠1

‡ BOTTOM OF PIPE PILE SPACERS SHALL BE SET 12" INTO TO TOP OF ROCK OR 5' MIN. BELOW LEVELING PAD.

✱ SEPARATION GEOTEXTILE, SELECT GRANULAR BACKFILL FOR STRUCTURAL SYSTEMS, LEVELING PAD, AND DRAINAGE SYSTEM SHALL BE SUBSIDIARY TO BID ITEM MECHANICALLY STABILIZED EARTHWALL SYSTEMS.

✱✱ TOPMOST LAYER OF REINFORCEMENT SHALL BE FULLY COVERED WITH SELECT GRANULAR BACKFILL FOR STRUCTURAL SYSTEMS, AS APPROVED BY THE WALL MANUFACTURER, BEFORE PLACEMENT OF THE SEPARATION GEOTEXTILE.

✱✱✱ MINIMUM 6" DIAMETER PERFORATED PVC OR PE PIPE, UNLESS LARGER SIZE PIPES ARE REQUIRED BY DESIGN BY WALL MANUFACTURER.

ADJUSTMENT IN THE VERTICAL ALIGNMENT OF THE DRAINAGE PIPES FROM THAT DEPICTED IN THE PLANS MAY BE NECESSARY TO ENSURE POSITIVE FLOW OUT OF THE DRAINAGE SYSTEM.

OUTLET ENDS OF PIPES SHALL BE LOCATED TO AVOID CLOGGING OR FLOW INTO THE DRAINAGE SYSTEM.

NOTES:

FOR FORM LINER DETAILS SEE SHEET 148.
FOR LIGHT PEDESTAL DETAILS SEE SHEET 147

SEE SHEET 129 FOR SELECT GRANULAR BACKFILL (SPECIAL) LIMITS. SELECT GRANULAR BACKFILL (SPECIAL) PAY ITEM SHALL INCLUDE EXCAVATION AND INSTALLATION THE SELECT GRANULAR BACKFILL. ⚠1

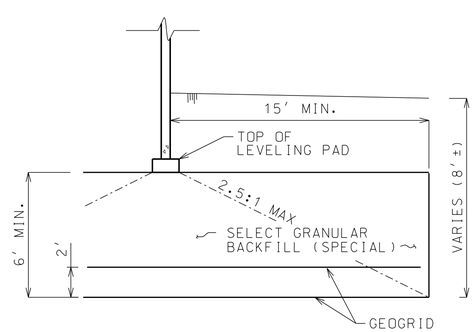

SUBGRADE STABILIZATION DETAIL ⚠1

MSE RETAINING WALL
3 OF 3

STATE OF MISSOURI
David J. Glastetter
NUMBER PE-2000150018
PROFESSIONAL ENGINEER
THIS SHEET HAS BEEN SIGNED, SEALED AND DATED ELECTRONICALLY.

DATE PREPARED	
8/30/2013	
ROUTE	STATE
N/A	MO
DISTRICT	SHEET NO.
BR	130
COUNTY	
JASPER	
JOB NO.	
TDG-3200(718)	
CONTRACT ID.	
PROJECT NO.	
BRIDGE NO.	
2205040	

DESCRIPTION	DATE

MISSOURI HIGHWAYS AND TRANSPORTATION COMMISSION
105 WEST CAPITOL
JEFFERSON CITY, MO 65102
1-888-ASK-MODOT (1-888-275-6636)

TranSystems
2400 PERSHING ROAD
SUITE 400
KANSAS CITY, MO 64108
PHONE: (816)329-8600
FAX: (816)329-8601
MO STATE CERTIFICATE OF AUTHORITY # 273
ENGINEERING

Detailed MAY, 2013
Checked JUL, 2013

Note: This drawing is not to scale. Follow dimensions.

G:\KC11\0427\Bridge\Tiger Grant\20th street\dgn\MSE2_WS_01.dgn 4:02:27 PM 8/30/2013