2019 **Missouri Standard Plans** for Highway Construction

Missouri Department of Transportation

This set of standard plans has been approved by the Missouri Highways and Transportation Commission for highway construction projects and constitutes a contract document in accordance with Section 101.2 of the Standard Specifications for Highway Construction.

This set of Standard Plans is effective beginning with the July 2019 bid opening.

www.modot.org/business/standards_and_specs/standardplans.htm

MISSOURI HIGHWAYS AND TRANSPORATION COMMISSION

EFFECTIVE: 07/01/2019

MISSOURI STANDARD PLANS FOR HIGHWAY CONSTRUCTION

TABLE OF CONTENTS

STANDARD NO.	DRAWING TITLE	NO. OF SHEETS	EFFECTIVE DATE
203.00E	EXCAVATION AND EMBANKEMNT – TYPICAL DETAILS	1	08/01/1998
203.02F	UNDERGRADING – TYPICAL DETAILS	2	01/01/2004
203.10D	TABULATED EARTHWORK AND SECTION DATA	1	02/01/2009
203.20G	SUPERELEVATION, SPIRALS AND WIDENING (UNDIVIDED HIGHWAY)	4	07/01/2017
203.21K	SUPERELEVATION, SPIRALS AND WIDENING (DIVIDED HIGHWAY)	3	07/01/2017
203.22	SUPERELEVATION, SPIRALS AND WIDENING	2	07/01/2018
203.35A	MAILBOX TURNOUTS	1	08/01/1981
203.40G	TYPICAL DETAILS ON AND OFF RAMP	2	10/01/2007
203.41F	TYPICAL DETIALS ON AND OFF RAMPS (ROADWAY WITH 6:1 FORESLOPE)	2	01/01/1995
203.50N	TYPICAL MEDIAN OPENINGS (DIVIDED HIGHWAYS)	2	04/01/2016
203.61A	DRIVEWAY – TYPE I	1	07/01/2004
203.62D	DRIVEWAY – TYPE II	2	04/01/2017
203.63B	DRIVEWAY – TYPE III	2	04/01/2017
203.64D	DRIVEWAY – TYPE IV	2	04/01/2017
203.65A	DRIVEWAY – TYPE V	1	10/01/1998
204.00D	EMBANKMENT CONTROL – MEASURING DEVICES	1	04/01/1983
204.30	PORE PRESSURE MEASUREMENT DEVICES	1	03/01/1996
401.00C	TYPE A2 AND A3 SHOULDERS, SAFETY EDGE SM	3	07/01/2018
413.20	SCRUB SEAL BROOM CONFIGURATION	1	07/01/2004
502.05N	CONCRETE PAVEMENT AND BASE APPURTENANCES FOR 15 FT. JOINT SPACING	4	07/01/2015
502.10K	DOWEL SUPPORTING UNITS	2	06/01/2010
504.00J	CONCRETE APPROACH PAVEMENT	3	07/01/2015
602.00D	RIGHT-OF-WAY AND DRAIN MARKERS	2	01/01/2003
604.05D	PIPE CULVERT HEADWALLS – TYPES S	2	08/01/2006
604.10E	PIPE CULVERT HEADWALLS – ENERGY DISSIPATOR FOR 18” CONCRETE PIPE	1	07/01/2001
604.11E	PIPE CULVERT HEADWALLS – ENERGY DISSIPATOR FOR 24” CONCRETE PIPE	1	07/01/2001
604.12E	PIPE CULVERT HEADWALLS – ENERGY DISSIPATOR FOR 30” CONCRETE PIPE	1	07/01/2001
604.13E	PIPE CULVERT HEADWALLS – ENERGY DISSIPATOR FOR 36” CONCRETE PIPE	1	07/01/2001
604.14E	PIPE CULVERT HEADWALLS – ENERGY DISSIPATOR FOR 42” CONCRETE PIPE	1	07/01/2001
604.15E	PIPE CULVERT HEADWALLS – ENERGY DISSIPATOR FOR 48” CONCRETE PIPE	1	07/01/2001
604.29C	DROP INLET- TYPE X	2	04/01/2018
604.30G	CONCRETE MANHOLES	2	02/01/2009
604.40F	PIPE COLLARS	2	10/01/2000
604.70	SLOTTED DRAIN	2	03/01/1994
605.10I	PAVEMENT UNDERDRAINAGE	4	06/01/2013
606.00AY	GUARDRAIL	7	04/01/2018
606.01F	MEDIAN PIER PROTECTION	9	08/01/2012
606.22U	BRIDGE ANCHOR SECTION – SAFTEY BARRIER CURB ON BRIDGE	6	07/01/2016
606.23J	BRIDGE ANCHOR SECTION - THRIE BEAM RAIL ON BRIDGE	5	07/01/2016
606.30K	GUARDRAIL - TERMINAL ANCHOR ENDS	7	04/01/2017
606.31A	CRASHWORTHY END TERMINALS – TYPE A – GRADING LIMITS	1	04/01/2019
606.40D	ONE-STRAND ACCESS RESTRAINT CABLE	2	07/01/2004
606.41L	THREE-STRAND GUARD CABLE	7	04/01/2019
606.50D	MIDWEST GUARDRAIL SYSTEM (MGS)	8	01/01/2019
606.51	MIDWEST GUARDRAIL SYSTEM (MGS) – MEDIAN PIER PROTECTION	2	04/01/2018
606.60B	MIDWEST GUARDRAIL SYSTEM (MGS) – VERTICAL BARRIER TRANSITIONS	6	04/01/2018
606.70B	MIDWEST GUARDRAIL SYSTEM (MGS) – THRIE BEAM RAIL ON BRIDGE	5	04/01/2018
606.80C	MIDWEST GUARDRAIL SYSTEM (MGS) – TERMINAL ANCHOR ENDS	7	07/01/2017
606.81A	MASH – CRASHWORTHY END TERMINALS – TYPE A – GRADING LIMITS	1	04/01/2019
607.10V	CHAIN-LINK FENCE	1	02/01/2007
607.11H	CHAIN-LINK FENCE FOR RETAINING WALLS	1	06/01/2009
607.20G	WOVEN WIRE FENCE	2	07/01/2016
608.00H	PAVED APPROACHES	2	10/01/2009
608.10P	CONCRETE SIDEWALK	1	04/01/2015
608.20E	CONCRETE STAIRS	2	04/01/2015
608.30A	CONCRETE MEDIAN STRIP	1	02/01/2011
608.40	HANDRAILING	4	07/01/2018
608.50	CURB RAMPS	4	04/01/2015
609.00P	CONCRETE CURB, CURB AND GUTTER AND GUTTER	2	07/01/2018
609.15D	PAVED DITCHES	1	07/01/2016
609.40S	DRAIN BASIN, SHOULDER PAVING AND FILL SLOPES AT BRIDGE ENDS	3	01/01/2017
609.60C	ROCK DITCH LINER	1	03/01/1993
609.70C	ROCK LINING FOR CULVERT OUTLET	1	10/01/1981
611.60R	CONCRETE SLOPE PROTECTION	1	07/01/2015
612.20E	SAND FILLED IMPACT ATTENUATORS	1	10/01/2018
613.00S	PAVEMENT REPAIR	4	04/01/2017
614.10T	GRATES AND BEARING PLATES	1	12/01/2005
614.11C	CURVED VANE GRATE AND FRAME	1	06/01/2010
614.30E	MANHOLE AND FRAME COVERS	2	07/01/1996
616.10AV	TEMPORARY TRAFFIC CONTROL DEVICES	9	07/01/2019
617.10L	PERMANENT CONCRETE TRAFFIC BARRIER	11	01/01/2019
617.20E	TEMPORARY CONCRETE TRAFFIC BARRIER	8	07/01/2018
619.10J	PAVEMENT EDGE TREATMENT	1	10/01/2017
620.00L	PAVEMENT MARKING	5	10/01/2016
620.10G	TEMPORARY PAVEMENT MARKING	5	07/01/2017
625.00	HOLE PATTERN FOR PAVEMENT SLAB STABILIZATION	1	10/01/1998
626.00H	RUMBLE STRIPS	2	04/01/2009

MISSOURI HIGHWAYS AND TRANSPORATION COMMISSION

EFFECTIVE: 07/01/2019

MISSOURI STANDARD PLANS FOR HIGHWAY CONSTRUCTION

TABLE OF CONTENTS

STANDARD NO.	DRAWING TITLE	NO. OF SHEETS	EFFECTIVE DATE
703.10J	CONCRETE SINGLE BOX CULVERT – STRAIGHT WINGS (SQUARED)	3	07/01/2015
703.11J	CONCRETE SINGLE BOX CULVERT – FLARED WINGS (SQUARED)	3	07/01/2015
703.12J	CONCRETE SINGLE BOX CULVERT – STRAIGHT WINGS (LEFT ADVANCE)	3	07/01/2015
703.13J	CONCRETE SINGLE BOX CULVERT – FLARED WINGS (LEFT ADVANCE)	3	07/01/2015
703.14J	CONCRETE SINGLE BOX CULVERT – STRAIGHT WINGS (RIGHT ADVANCE)	3	07/01/2015
703.15E	CONCRETE SINGLE BOX CULVERT – FLARED WINGS (RIGHT ADVANCE)	3	07/01/2015
703.16	CONCRETE SINGLE BOX CULVERT – CUT SECTIONS	1	04/01/2011
703.17	CONCRETE SINGLE BOX CULVERT – MEMBER SIZES AND REINFORCEMENT	14	04/01/2011
703.37C	CONCRETE BOX CULVERT – EXTERIOR WING REINFORCEMENT	2	04/01/2011
703.38A	CONCRETE BOX CULVERT – CUTTING DETAILS	2	10/01/2009
703.40H	CONCRETE DOUBLE BOX CULVERT – STRAIGHT WINGS (SQUARE)	3	10/01/2011
703.41H	CONCRETE DOUBLE BOX CULVERT – FLARED WINGS (SQUARE)	3	10/01/2011
703.42H	CONCRETE DOUBLE BOX CULVERT – STRAIGHT WINGS (LEFT ADVANCE)	3	10/01/2011
703.43H	CONCRETE DOUBLE BOX CULVERT – FLARED WINGS (LEFT ADVANCE)	3	10/01/2011
703.44H	CONCRETE DOUBLE BOX CULVERT – STRAIGHT WINGS (RIGHT ADVANCE)	3	10/01/2011
703.45C	CONCRETE DOUBLE BOX CULVERT – FLARED WINGS (RIGHT ADVANCE)	3	10/01/2011
703.46	CONCRETE DOUBLE BOX CULVERT – CUT SECTION	1	10/01/2011
703.47	CONCRETE DOUBLE BOX CULVERT – MEMBER SIZES AND REINFORCEMENT	27	10/01/2011
703.60E	CONCRETE BOX STRUCTURE – PIPE INLET	1	07/01/2001
703.80H	CONCRETE TRIPLE BOX CULVERT – STRAIGHT WINGS (SQUARE)	3	12/01/2011
703.81H	CONCRETE TRIPLE BOX CULVERT – FLARED WINGS (SQUARE)	3	12/01/2011
703.82H	CONCRETE TRIPLE BOX CULVERT – STRAIGHT WINGS (LEFT ADVANCE)	3	12/01/2011
703.83H	CONCRETE TRIPLE BOX CULVERT – FLARED WINGS (LEFT ADVANCE)	3	12/01/2011
703.84H	CONCRETE TRIPLE BOX CULVERT – STRAIGHT WINGS (RIGHT ADVANCE)	3	12/01/2011
703.85C	CONCRETE TRIPLE BOX CULVERT – FLARED WINGS (RIGHT ADVANCE)	3	12/01/2011
703.86	CONCRETE TRIPLE BOX CULVERT – CUT SECTIONS	1	12/01/2011
703.87	CONCRETE TRIPLE BOX CULVERT – MEMBER SIZES AND REINFORCEMENT	27	12/01/2011
706.35H	BAR SUPPORTS FOR CONCRETE REINFORCEMENT	1	07/01/2004
712.40K	STEEL DAMS AT EXPANSION JOINTS	1	04/01/2016
725.00C	CORRUGATED METAL PIPE INSTALLATION METHODS	5	04/01/2011
725.31C	METAL CURTAIN WALL AND METAL INLETS	1	07/01/2004
726.30J	RIGID CULVERT INSTALLATION METHODS	2	04/01/2015
730.00E	THERMOPLASTIC PIPE INSTALLATION METHODS	1	04/01/2015
731.00U	PRECAST MANHOLES	2	07/01/2016
731.10S	PRECAST DROP INLET	8	07/01/2016
732.00S	FLARED END SECTION	3	04/01/2016
732.05C	BEVELED PIPE END TREATMENT	2	07/01/2004
732.10H	SAFETY SLOPE END SECTION	3	06/01/2013
733.00	PRECAST CONCRETE BOX CULVERT TIES	1	04/01/2018
806.10J	TEMPORARY EROSION CONTROL MEASURES	6	04/01/2019
808.00	TYPICAL PLANTING ILLUSTRATIONS	3	07/01/2004
901.00AB	HIGHWAY LIGHTING – POLES, FOUNDATION & APPURTENANCES FOR 30’ M.H.	4	04/01/2018
901.01AJ	HIGHWAY LIGHTING – POLES, FOUNDATION & APPURTENANCES FOR 45’ M.H.	6	04/01/2018
901.02B	HIGHWAY LIGHTING – CABLE, CONDUIT AND TRENCHING	1	04/01/2002
901.30F	HIGHWAY LIGHTING – BASE MOUNTED CONTROL STATION	2	04/01/2005
901.80D	HIGHWAY LIGHTING – POWER SUPPLY ASSEMBLY – SECONDARY SERVICE	2	04/01/2002
901.85B	HIGHWAY LIGHTING SYMBOLS	1	04/01/2018
902.00P	TRAFFIC SIGNALS	2	07/01/2018
902.10Q	TRAFFIC SIGNALS – CONTROLLERS CONDUIT LOCATION	1	04/01/2005
902.15K	TRAFFIC SIGNALS – POWER SUPPLY ASSEMBLY	3	07/01/2004
902.20G	TRAFFIC SIGNALS – CONCRETE PULL BOXES	3	04/01/2019
902.21C	TRAFFIC SIGNALS – TELEPHONE INTERCONNECT	1	03/01/1996
902.30P	TRAFFIC SIGNALS – POST BASES	2	10/01/2018
902.40R	TRAFFIC SIGNALS – TUBULAR STEEL POSTS	3	04/01/2018
902.50L	TRAFFIC SIGNALS – INDUCTION LOOP DETECTORS	2	06/01/2009
902.70P	TRAFFIC SIGNALS – RIGID SPAN WIRE DETAILS	2	04/01/2018
902.80L	TRAFFIC SIGNALS – TRAFFIC SIGNAL SYMBOLS	1	07/01/2017
903.01J	STANDARD ARROW DETAILS	2	10/01/2016
903.02AN	HIGHWAY SIGNING	8	01/01/2017
903.03BL	POST INSTALLATION AND SIGN MOUNTING DETAILS	16	07/01/2018
903.04F	HIGHWAY SIGNING – WEIGH STATION	1	02/01/2012
903.05J	HIGHWAY SIGNING – TUBULAR SUPPORT STEEL – TYPE S, ONE TUBE	2	10/01/2016
903.06J	HIGHWAY SIGNING – TUBULAR SUPPORT STEEL – TYPE S, TWO TUBE	2	10/01/2016
903.07J	HIGHWAY SIGNING – TUBULAR SUPPORT STEEL – TYPE C	2	10/01/2016
903.08H	HIGHWAY SIGNING – TUBULAR SUPPORT STEEL – TYPE B	2	10/01/2016
903.10BC	OVERHEAD SIGN TRUSSES – ALUMINUM	6	10/01/2016
903.12Z	OVERHEAD SIGN TRUSSES – BUTTERFLY AND CANTILEVER STRUCTURAL STEEL	7	10/01/2016
903.60AB	OVERHEAD SIGN TRUSSES – STRUCTURAL STEEL	5	10/01/2016

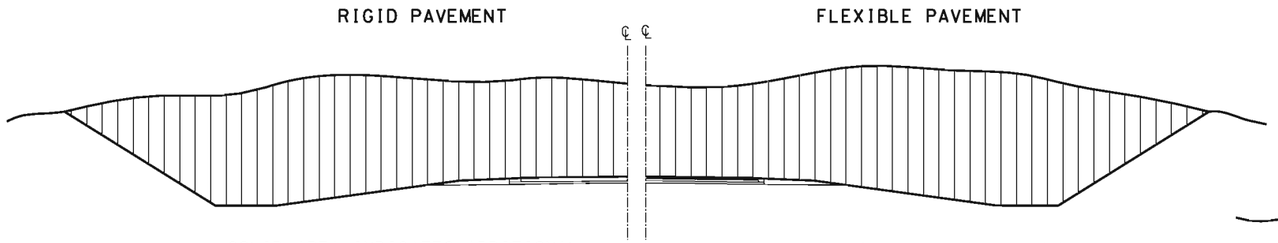

EXCAVATION PAY LIMITS

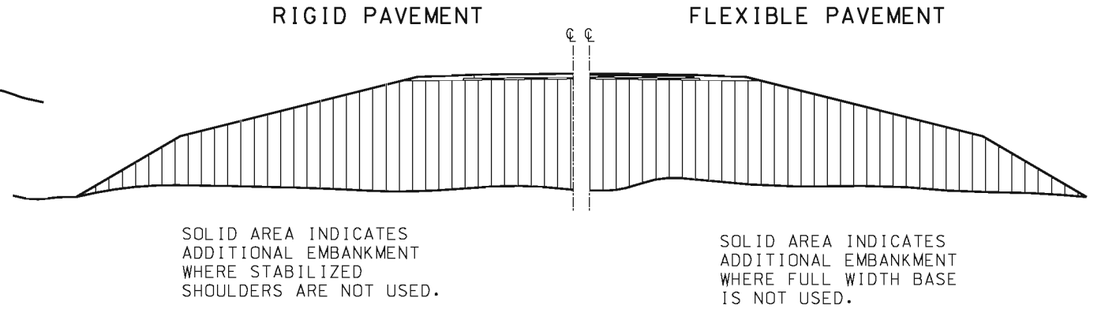

EMBANKMENT LIMITS

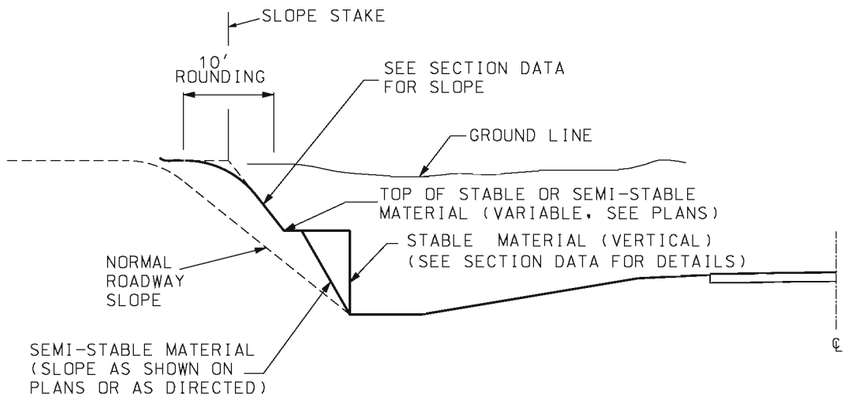

BACKSLOPES IN STABLE AND SEMI-STABLE MATERIAL

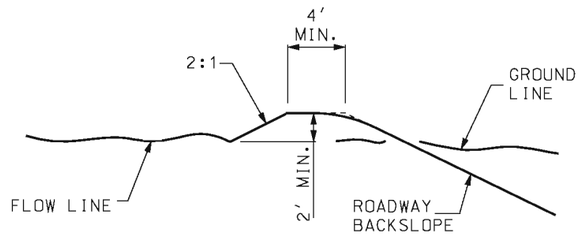

LEVEE

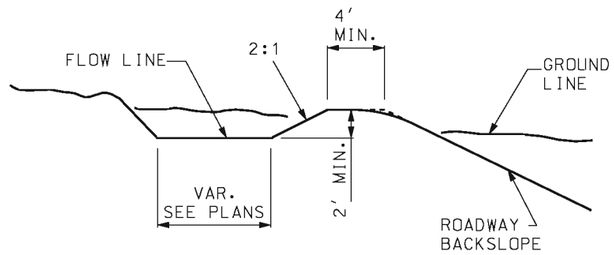

LEVEE AND DITCH

LEVEE AND/OR DITCH MAY BE LOCATED BACK OF BACKSLOPE WHEN CONDITIONS REQUIRE. USE DITCH ONLY WHERE INDICATED OR WHERE REQUIRED FOR DRAINAGE.

INTERCEPTION DITCH AND/OR LEVEE

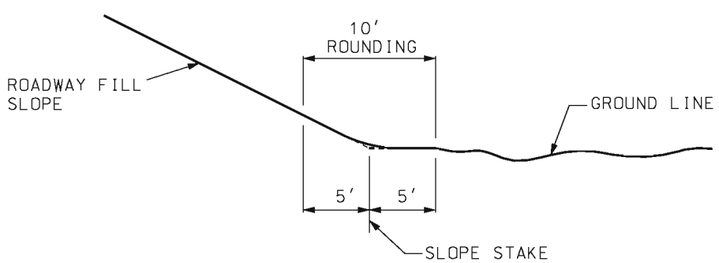

AT TOE OF ROADWAY FILL SLOPE

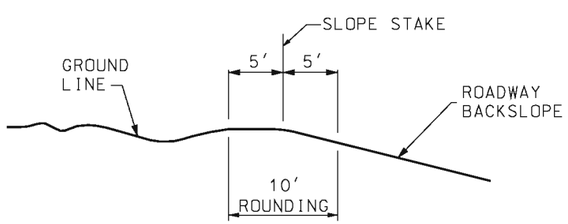

AT TOP OF ROADWAY BACKSLOPES

PARABOLIC ROUNDING

GENERAL NOTES:

SUBSURFACE LOGS OF MATERIALS OBTAINED DURING THE SOIL SURVEY FOR THE PURPOSE OF CUT CLASSIFICATION MAY BE ACQUIRED FROM THE DISTRICT OFFICE UPON REQUEST.

MISSOURI HIGHWAYS AND TRANSPORTATION COMMISSION
105 WEST CAPITOL
JEFFERSON CITY, MO 65102
1-888-ASK-MODOT (1-888-275-6636)

STATE OF MISSOURI
KATHRYN PHILLIPS HARVEY
NUMBER PE-23751
PROFESSIONAL ENGINEER
THIS SHEET HAS BEEN SIGNED, SEALED AND DATED ELECTRONICALLY.

EXCAVATION AND EMBANKMENT
TYPICAL DETAILS

DATE EFFECTIVE: 08/01/1998
DATE PREPARED: 8/21/2009

203.00E

SHEET NO. 1 OF 1

IF A SEAL IS PRESENT ON THIS SHEET IT HAS BEEN ELECTRONICALLY SEALED AND DATED.

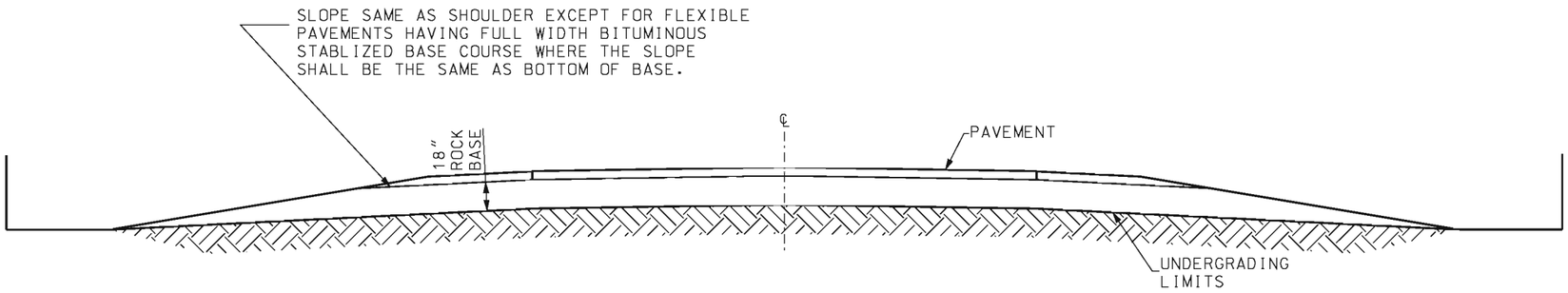

IN ROCK OVER ENTIRE WIDTH OF ROADBED WITH 18" ROCK BASE

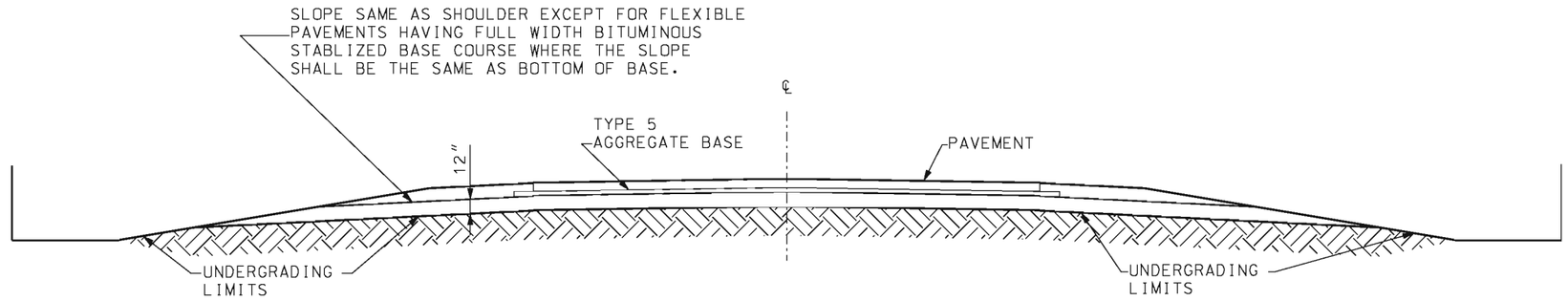

IN ROCK OVER ENTIRE WIDTH OF ROADBED WITH TYPE 5 AGGREGATE BASE

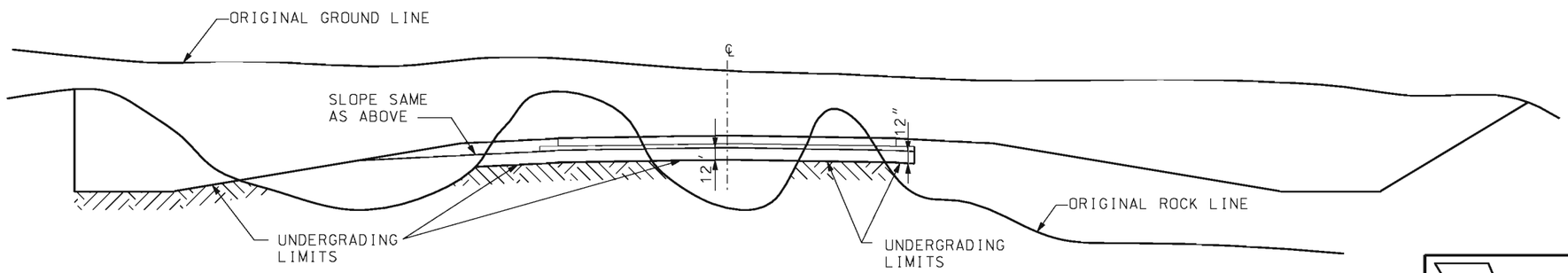

IN ROCK OVER PARTIAL WIDTH OF ROADBED

IF A SEAL IS PRESENT ON THIS SHEET IT HAS BEEN ELECTRONICALLY SEALED AND DATED.

MISSOURI HIGHWAYS AND TRANSPORTATION COMMISSION
105 WEST CAPITOL
JEFFERSON CITY, MO 65102
1-888-ASK-MODOT (1-888-275-6636)

STATE OF MISSOURI
KATHRYN PHILLIPS HARVEY
NUMBER PE-23751
PROFESSIONAL ENGINEER
THIS SHEET HAS BEEN SIGNED, SEALED AND DATED ELECTRONICALLY.

UNDERGRADING
TYPICAL DETAILS

DATE EFFECTIVE: 01/01/2004
DATE PREPARED: 8/21/2009

203.02F

SHEET NO. 1 OF 2

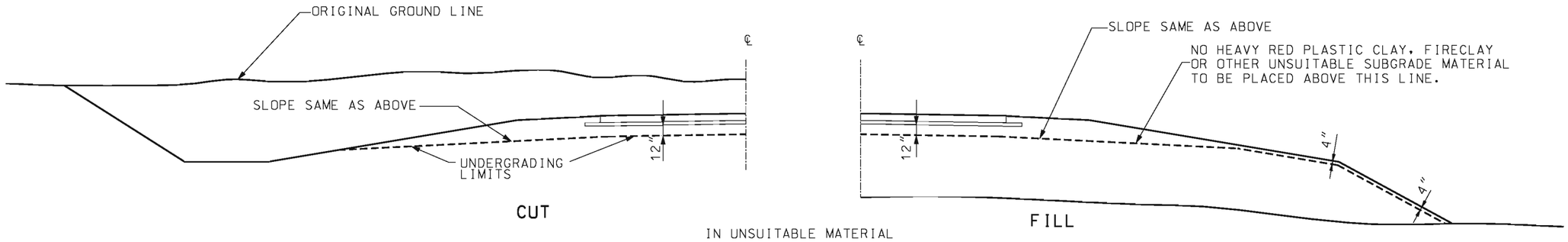

IN UNSUITABLE MATERIAL

UNDERGRADING LIMITS
(FLEXIBLE OR RIGID PAVEMENTS)

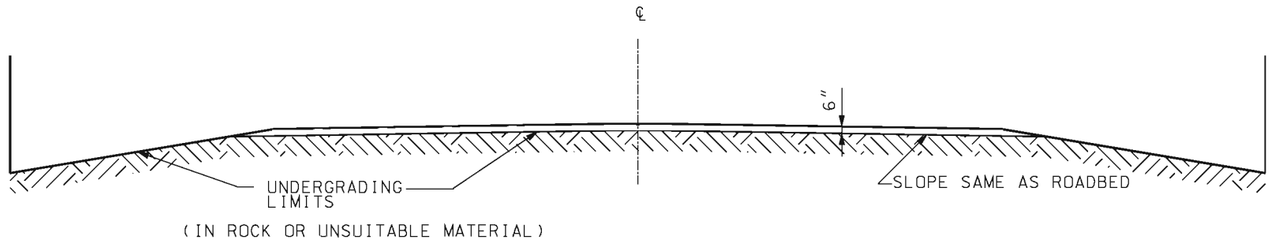

(IN ROCK OR UNSUITABLE MATERIAL)

UNDERGRADING LIMITS
(EARTH OR AGGREGATE TYPE SURFACE)

GENERAL NOTES:

MISSOURI HIGHWAYS AND TRANSPORTATION COMMISSION
105 WEST CAPITOL
JEFFERSON CITY, MO 65102
1-888-ASK-MODOT (1-888-275-6636)

STATE OF MISSOURI
KATHRYN PHILLIPS HARVEY
NUMBER PE-23751
PROFESSIONAL ENGINEER
THIS SHEET HAS BEEN SIGNED, SEALED AND DATED ELECTRONICALLY.

UNDERGRADING
TYPICAL DETAILS

DATE EFFECTIVE: 01/01/2004
DATE PREPARED: 8/21/2009

203.02F

SHEET NO.
2 OF 2

IF A SEAL IS PRESENT ON THIS SHEET IT HAS BEEN ELECTRONICALLY SEALED AND DATED.

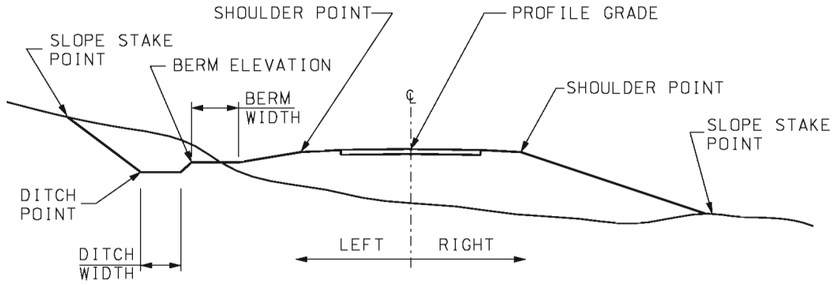

FIGURE A

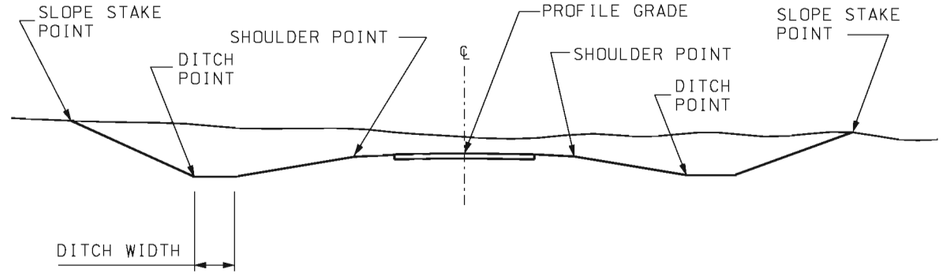

FIGURE B

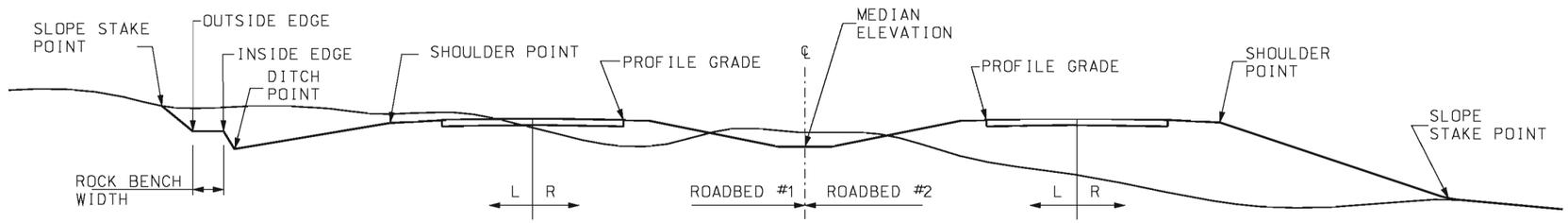

FIGURE C

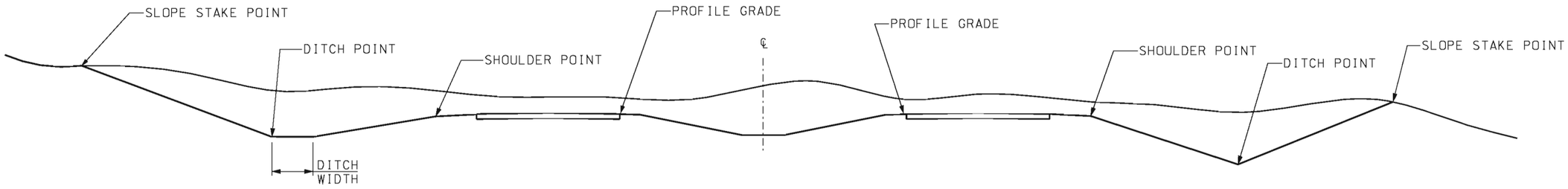

FIGURE D

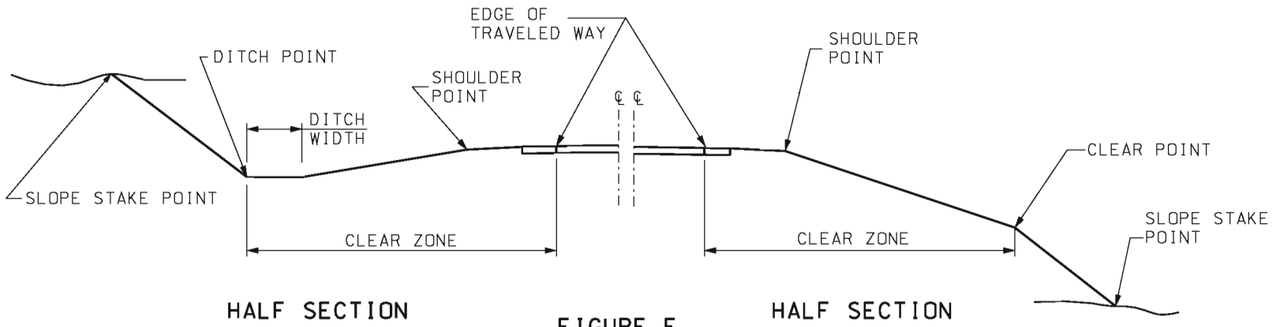

HALF SECTION CUT

FIGURE E

HALF SECTION CUT

IF A SEAL IS PRESENT ON THIS SHEET IT HAS BEEN ELECTRONICALLY SEALED AND DATED.

MISSOURI HIGHWAYS AND TRANSPORTATION COMMISSION
105 WEST CAPITOL
JEFFERSON CITY, MO 65102
1-888-ASK-MODOT (1-888-275-6636)

STATE OF MISSOURI
KATHRYN PHILLIPS HARVEY
NUMBER PE-23751
PROFESSIONAL ENGINEER
THIS SHEET HAS BEEN SIGNED, SEALED AND DATED ELECTRONICALLY.

TABULATED EARTHWORK AND SECTION DATA

DATE EFFECTIVE: 02/01/2009
DATE PREPARED: 12/18/2008

203.10D

SHEET NO. 1 OF 1

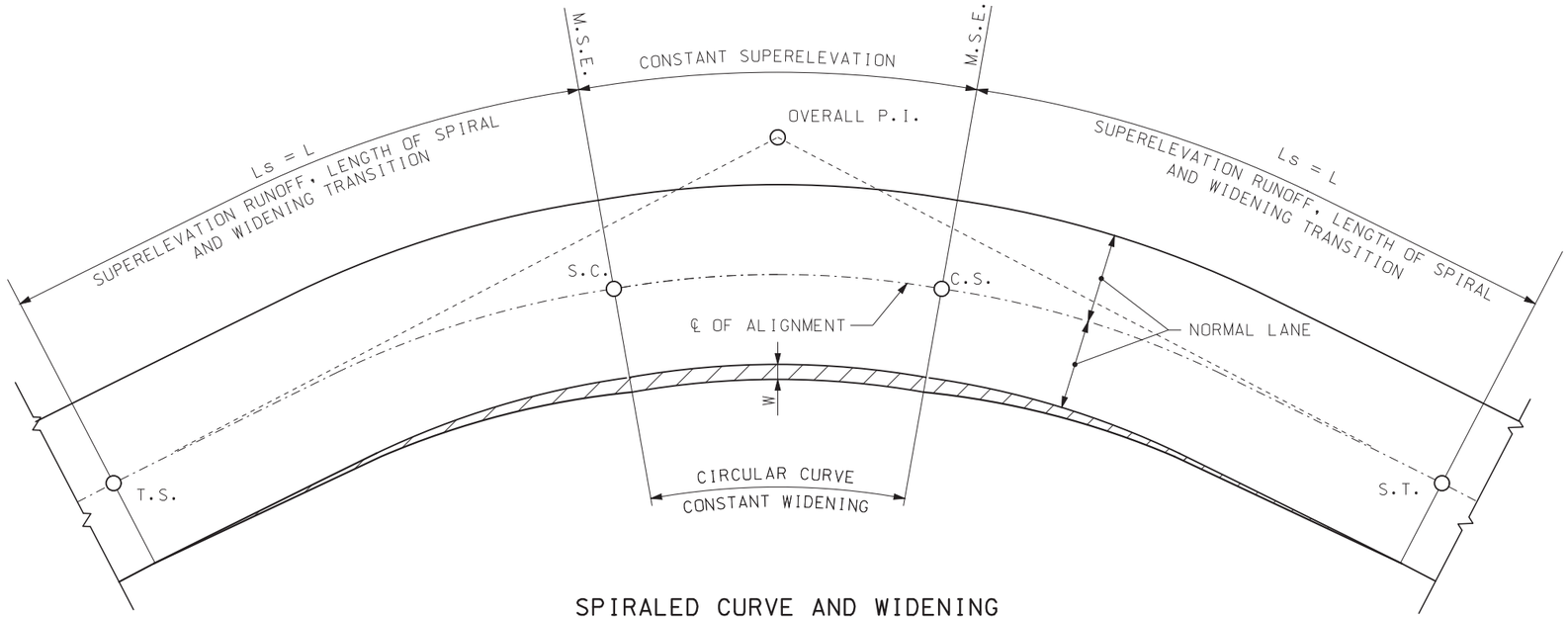

SPIRALED CURVE AND WIDENING TRANSITIONS

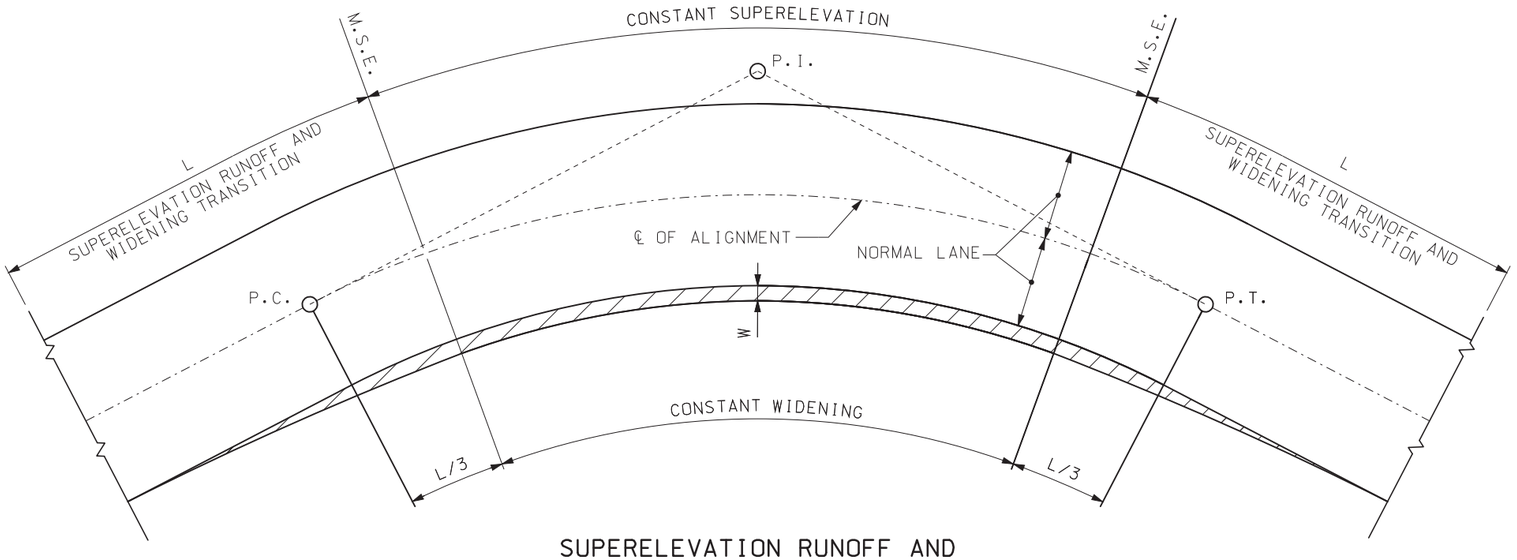

SUPERELEVATION RUNOFF AND WIDENING TRANSITIONS WITHOUT SPIRALS

MULTILANE FACTORS FOR "L"
1.0 LANE ROTATED (2 LANE ROADBED) = 1.00
1.5 LANE ROTATED (3 LANE ROADBED) = 1.25
2.0 LANE ROTATED (4 LANE ROADBED) = 1.50
2.5 LANE ROTATED (5 LANE ROADBED) = 1.75
3.0 LANE ROTATED (6 LANE ROADBED) = 2.00
3.5 LANE ROTATED (7 LANE ROADBED) = 2.25

MAXIMUM RADIUS FOR USE OF A SPIRAL CURVE TRANSITION	
DESIGN SPEED	MAXIMUM RADIUS (FT)
30	456
35	620
40	810
45	1025
50	1265
55	1531
60	1822
65	2138
70	2479

TABLE NOTE: THE EFFECT OF SPIRAL CURVE TRANSITION ON LATERAL ACCELERATION IS LIKELY TO BE NEGLIGIBLE FOR LARGER RADII.

GENERAL NOTES:

A PRACTICAL CONTROL FOR THE LENGTH OF SPIRAL "Ls" IS CONSIDERED TO BE THE SUPERELEVATION RUNOFF "L", SEE STANDARD PLANS 203.22 SHEET 1 OF 2.

"W" THE WIDENING FOR SURFACING AT INSIDE SHOULDERS, SEE STANDARD PLANS 203.22 SHEET 2 OF 2.

WIDENING TRANSITION VARIES IN DIRECT PROPORTION TO DISTANCE.

SPIRAL CURVES ARE USED ON ALL ROADWAYS THAT HAVE DESIGN TRAFFIC GREATER THAN 400 VEHICLES PER DAY, AND HAVE A RADIUS LESS THAN THE VALUES LISTED IN THE "MAXIUM RADIUS FOR USE OF A SPIRAL CURVE TRANSITION" TABLE.

MISSOURI HIGHWAYS AND TRANSPORTATION COMMISSION
105 WEST CAPITOL
JEFFERSON CITY, MO 65102
1-888-ASK-MODOT (1-888-275-6636)

STATE OF MISSOURI
ERIC E. SCHROETER
NUMBER PE-28411
PROFESSIONAL ENGINEER
THIS SHEET HAS BEEN SIGNED, SEALED AND DATED ELECTRONICALLY.

SUPERELEVATION SPIRALS AND WIDENING
UNDIVIDED HIGHWAYS

DATE EFFECTIVE: 07/01/2017
DATE PREPARED: 5/1/2017

203.20G

SHEET NO. 1 OF 4

IF A SEAL IS PRESENT ON THIS SHEET IT HAS BEEN ELECTRONICALLY SEALED AND DATED.

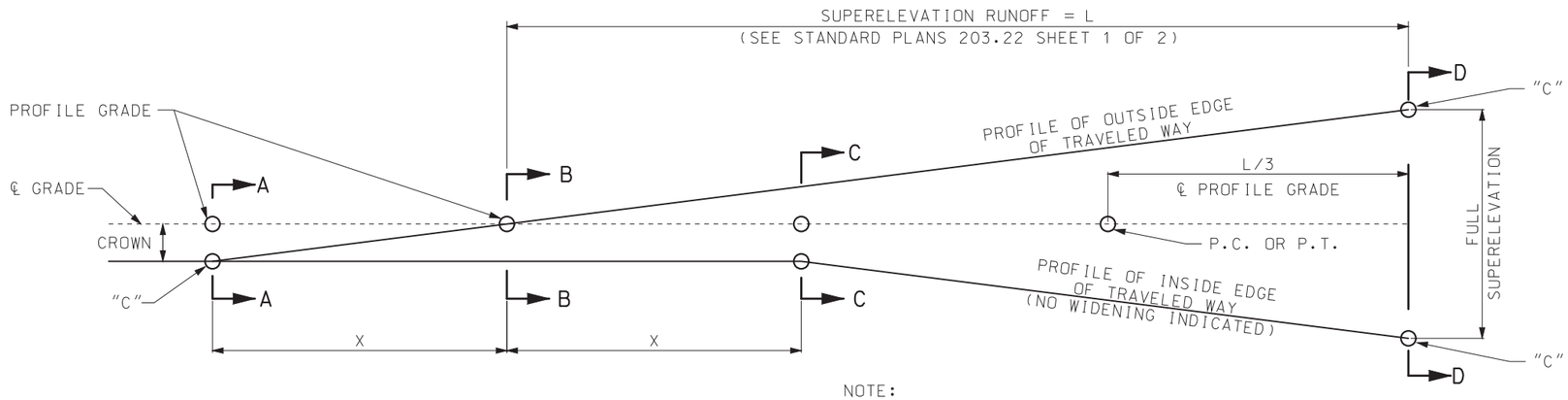

A-A TO B-B IS THE TANGENT RUNOUT.

$$X = \frac{L \times NC(\%)}{e(\%)}$$

NOTE:

SHORT VERTICAL CURVES MAY BE INSERTED AT POINTS "C" BY EYE ADJUSTMENTS OF STAKES OR FORMS IN THE FIELD.

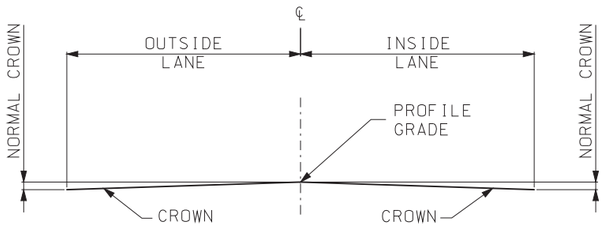

SECTION A-A

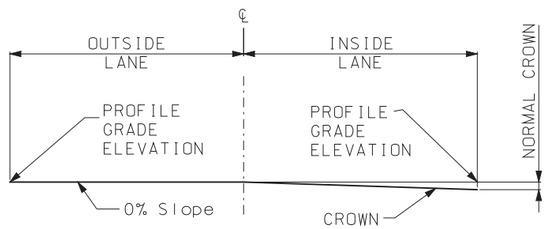

SECTION B-B

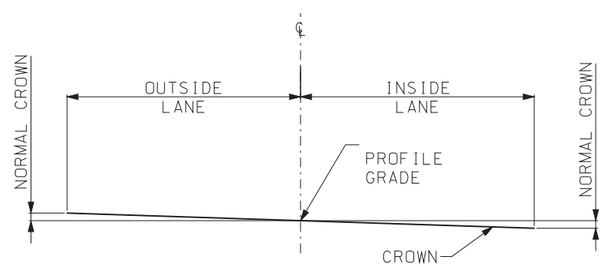

SECTION C-C

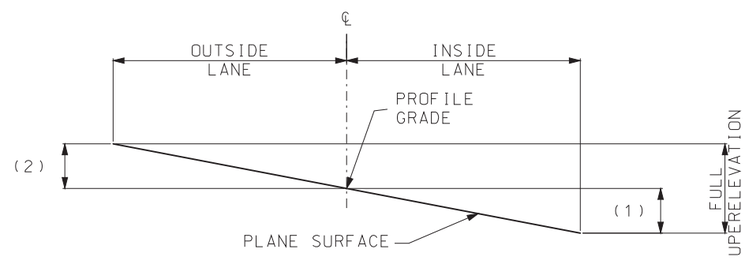

(1) FULL S.E. FOR ½ PAVEMENT WIDTH IF GREATER THAN CROWN SLOPE.

(2) FULL S.E. FOR ½ PAVEMENT WIDTH.

SECTION D-D

CASE NUMBER 1

(WHERE HIGH POINT OF TRAVELED WAY IS AT CENTERLINE ON TANGENT SECTION)
NOTE: USE FOR 2 LANE TRAFFIC ROADS ONLY. PAVEMENT REVOLVED ABOUT ITS ℄.

MISSOURI HIGHWAYS AND TRANSPORTATION COMMISSION
105 WEST CAPITOL
JEFFERSON CITY, MO 65102
1-888-ASK-MODOT (1-888-275-6636)

STATE OF MISSOURI
ERIC E. SCHROETER
NUMBER PE-28411
PROFESSIONAL ENGINEER

THIS SHEET HAS BEEN SIGNED, SEALED AND DATED ELECTRONICALLY.

SUPERELEVATION SPIRALS AND WIDENING
UNDIVIDED HIGHWAYS

DATE EFFECTIVE: 07/01/2017
DATE PREPARED: 5/1/2017

203.20G

SHEET NO. 2 OF 4

IF A SEAL IS PRESENT ON THIS SHEET IT HAS BEEN ELECTRONICALLY SEALED AND DATED.

NOTE:
SHORT VERTICAL CURVES MAY BE INSERTED AT POINTS "C" BY EYE ADJUSTMENTS OF STAKES OR FORMS IN THE FIELD.

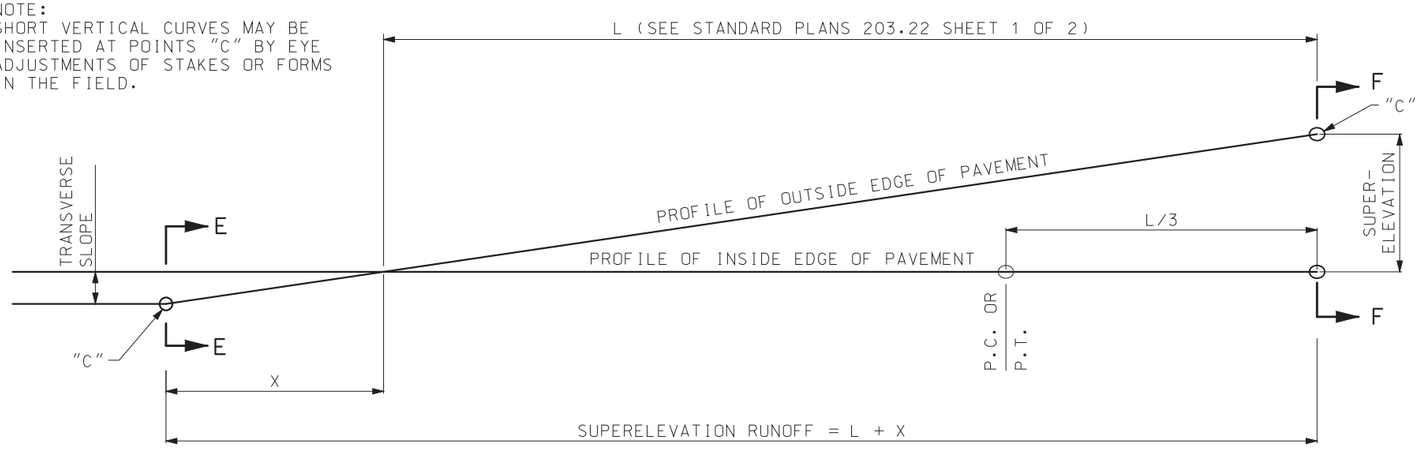

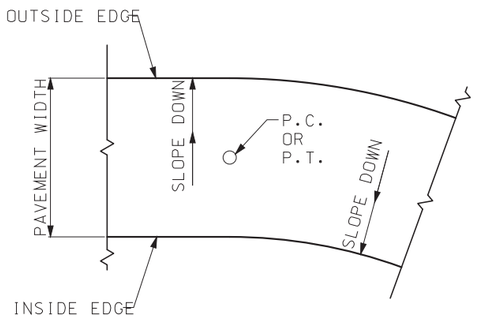

PLAN OF ALIGNMENT
FOR CASE NUMBER 2

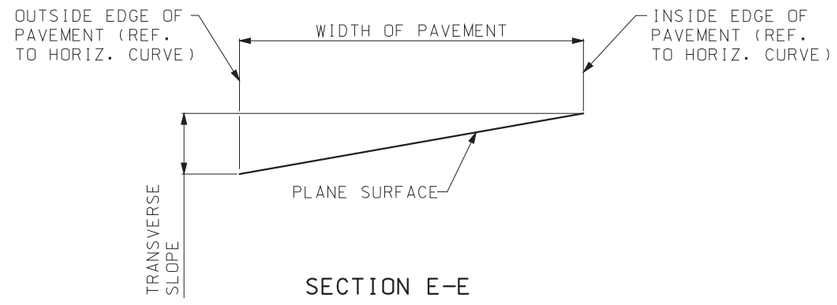

SECTION E-E

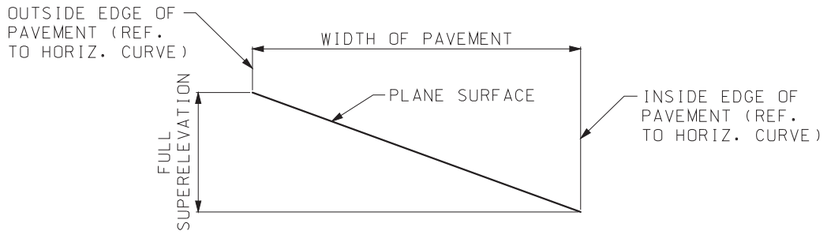

SECTION F-F

CASE NUMBER 2

(WHERE TRANSVERSE SLOPE ON TANGENT SECTION IS OPPOSITE TO SLOPE OF SUPERELEVATION)
NOTE: PAVEMENT REVOLVED ABOUT ITS INSIDE EDGE WITH REFERENCE TO THE HORIZONTAL CURVE WHICH IS BEING APPROACHED.

STRAIGHT LINE METHODS OF ATTAINING SUPERELEVATION

IF A SEAL IS PRESENT ON THIS SHEET IT HAS BEEN ELECTRONICALLY SEALED AND DATED.

MISSOURI HIGHWAYS AND TRANSPORTATION COMMISSION
105 WEST CAPITOL
JEFFERSON CITY, MO 65102
1-888-ASK-MODOT (1-888-275-6636)

STATE OF MISSOURI
ERIC E. SCHROETER
NUMBER PE-28411
PROFESSIONAL ENGINEER
THIS SHEET HAS BEEN SIGNED, SEALED AND DATED ELECTRONICALLY.

SUPERELEVATION
SPIRALS AND WIDENING
UNDIVIDED HIGHWAYS

DATE EFFECTIVE: 07/01/2017
DATE PREPARED: 5/1/2017

203.20G

SHEET NO.
3 OF 4

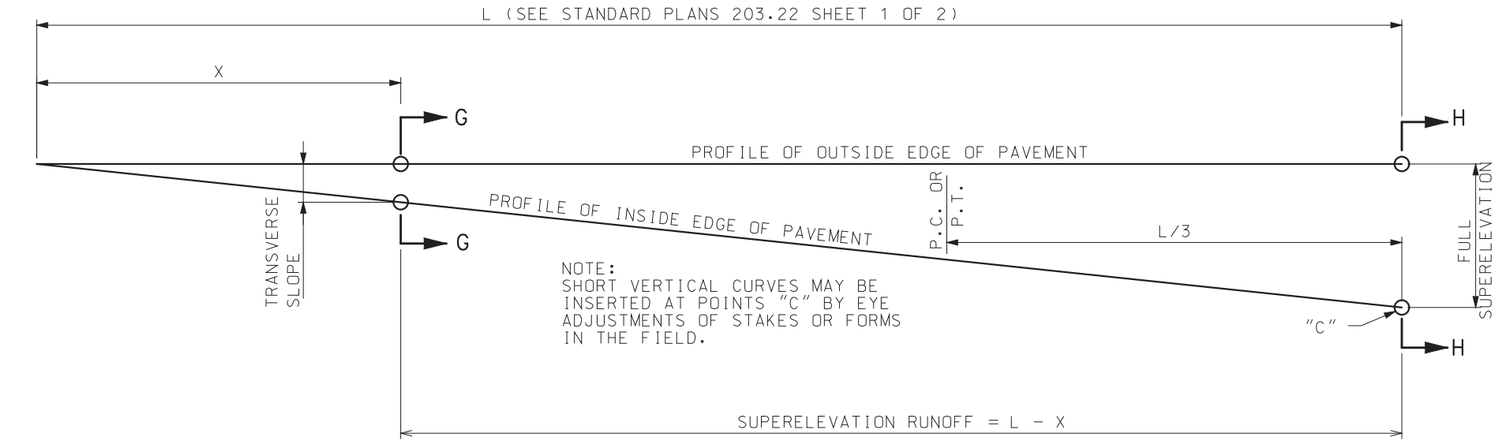

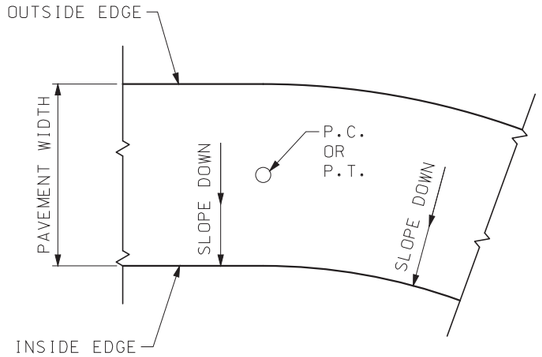

PLAN OF ALIGNMENT
FOR CASE NUMBER 3

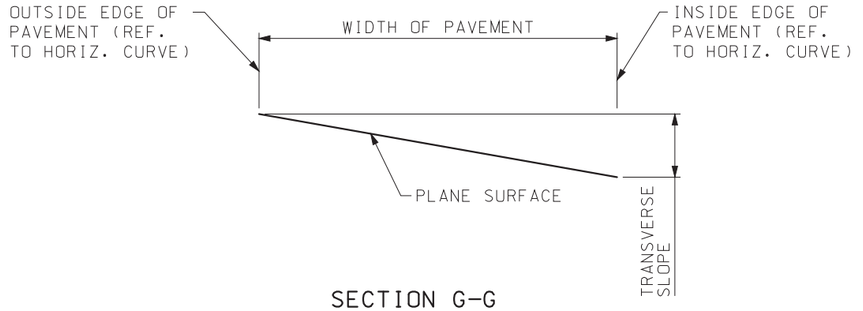

SECTION G-G

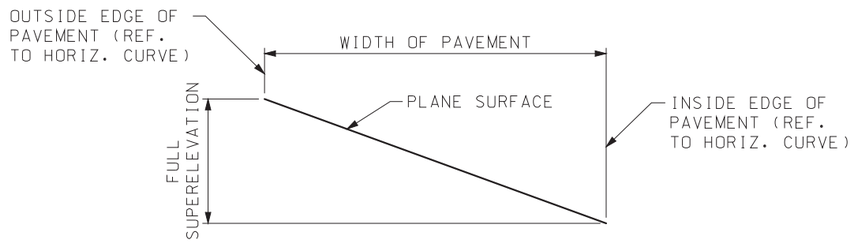

SECTION H-H

CASE NUMBER 3

(WHERE TRANSVERSE SLOPE ON TANGENT SECTION IS SAME DIRECTION AS SLOPE OF SUPERELEVATION)
NOTE: PAVEMENT REVOLVED ABOUT ITS OUTSIDE EDGE WITH REFERENCE TO THE HORIZONTAL CURVE WHICH IS BEING APPROACHED.

STRAIGHT LINE METHOD OF ATTAINING SUPERELEVATION

IF A SEAL IS PRESENT ON THIS SHEET IT HAS BEEN ELECTRONICALLY SEALED AND DATED.

MISSOURI HIGHWAYS AND TRANSPORTATION COMMISSION
105 WEST CAPITOL
JEFFERSON CITY, MO 65102
1-888-ASK-MODOT (1-888-275-6636)

STATE OF MISSOURI
ERIC E. SCHROETER
NUMBER PE-2841
PROFESSIONAL ENGINEER
THIS SHEET HAS BEEN SIGNED, SEALED AND DATED ELECTRONICALLY.

SUPERELEVATION SPIRALS AND WIDENING
UNDIVIDED HIGHWAYS

DATE EFFECTIVE:	DATE PREPARED:		SHEET NO.
07/01/2017	5/1/2017	203.20G	4 OF 4

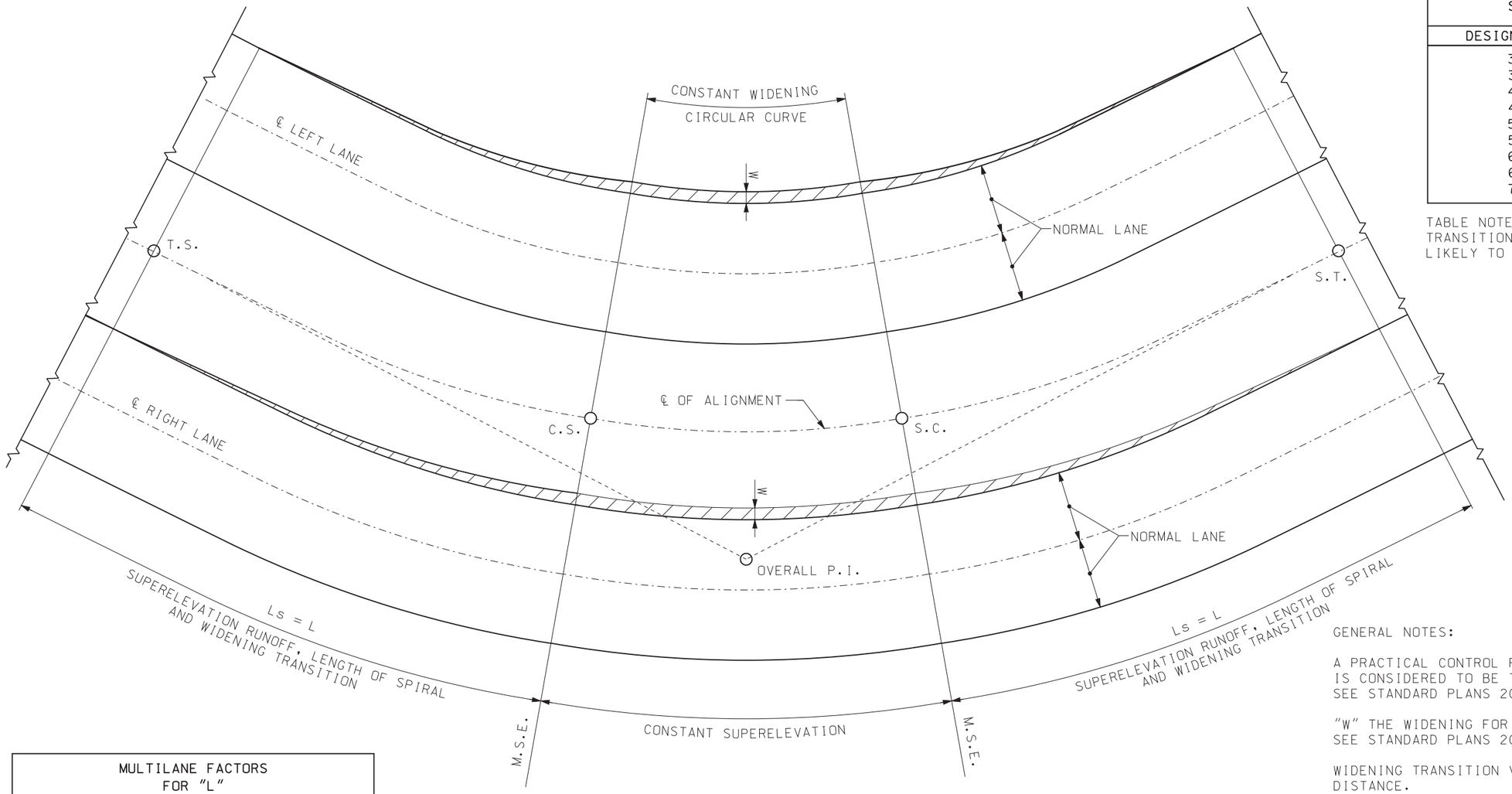

SPIRALED CURVE AND WIDENING TRANSITIONS

MAXIMUM RADIUS FOR USE OF A SPIRAL CURVE TRANSITION	
DESIGN SPEED	MAXIMUM RADIUS (FT)
30	456
35	620
40	810
45	1025
50	1265
55	1531
60	1822
65	2138
70	2479

TABLE NOTE: THE EFFECT OF SPIRAL CURVE TRANSITION ON LATERAL ACCELERATION IS LIKELY TO BE NEGLIGIBLE FOR LARGER RADII.

GENERAL NOTES:

A PRACTICAL CONTROL FOR THE LENGTH OF SPIRAL "Ls" IS CONSIDERED TO BE THE SUPERELEVATION RUNOFF "L", SEE STANDARD PLANS 203.22 SHEET 1 OF 2.

"W" THE WIDENING FOR SURFACING AT INSIDE SHOULDER, SEE STANDARD PLANS 203.22 SHEET 2 OF 2.

WIDENING TRANSITION VARIES IN DIRECT PROPORTION TO DISTANCE.

SPIRAL CURVES ARE USED ON ALL ROADWAYS THAT HAVE DESIGN TRAFFIC GREATER THAN 400 VEHICLES PER DAY, AND HAVE A RADIUS LESS THAN THE VALUES LISTED IN THE "MAXIUM RADIUS FOR USE OF A SPIRAL CURVE TRANSITION" TABLE.

MULTILANE FACTORS FOR "L"
1.0 LANE ROTATED (2 LANE ROADBED) = 1.00
1.5 LANE ROTATED (3 LANE ROADBED) = 1.25
2.0 LANE ROTATED (4 LANE ROADBED) = 1.50
2.5 LANE ROTATED (5 LANE ROADBED) = 1.75
3.0 LANE ROTATED (6 LANE ROADBED) = 2.00
3.5 LANE ROTATED (7 LANE ROADBED) = 2.25

EXAMPLE: A SIX LANE DIVIDED HIGHWAY (3 LANES IN EACH DIRECTION) ROTATED SEPARATELY ABOUT ITS MEDIAN EDGES WOULD USE THE SAME ADJUSTMENT VALES AS A SIX LANE UNDIVIDED HIGHWAY ROTATED ABOUT THE CENTERLINE.

BOTH CASES WOULD USE THE 3 LANE ROTATED ADJUSTMENT VALUE OF 2 TIMES THE VALUE OF ONE LANE ROTATED.

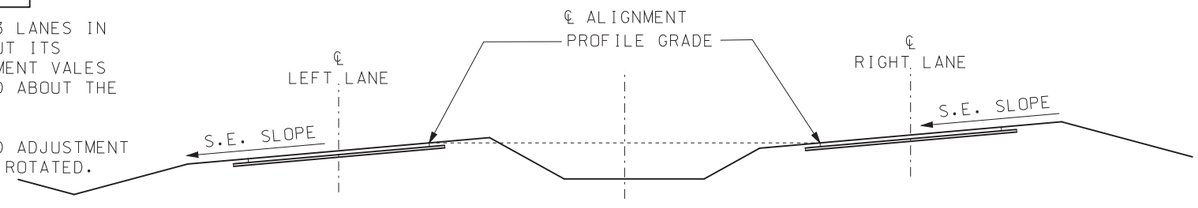

SECTION ON SUPERELEVATED CURVE
CURVE TO LEFT (ILLUSTRATED)

MISSOURI HIGHWAYS AND TRANSPORTATION COMMISSION
105 WEST CAPITOL
JEFFERSON CITY, MO 65102
1-888-ASK-MODOT (1-888-275-6636)

STATE OF MISSOURI
ERIC E. SCHROETER
NUMBER PE-28411
PROFESSIONAL ENGINEER
THIS SHEET HAS BEEN SIGNED, SEALED AND DATED ELECTRONICALLY.

SUPERELEVATION, SPIRALS AND WIDENING
DIVIDED HIGHWAYS

DATE EFFECTIVE: 07/01/2017
DATE PREPARED: 5/1/2017

203.21K

SHEET NO. 1 OF 3

IF A SEAL IS PRESENT ON THIS SHEET IT HAS BEEN ELECTRONICALLY SEALED AND DATED.

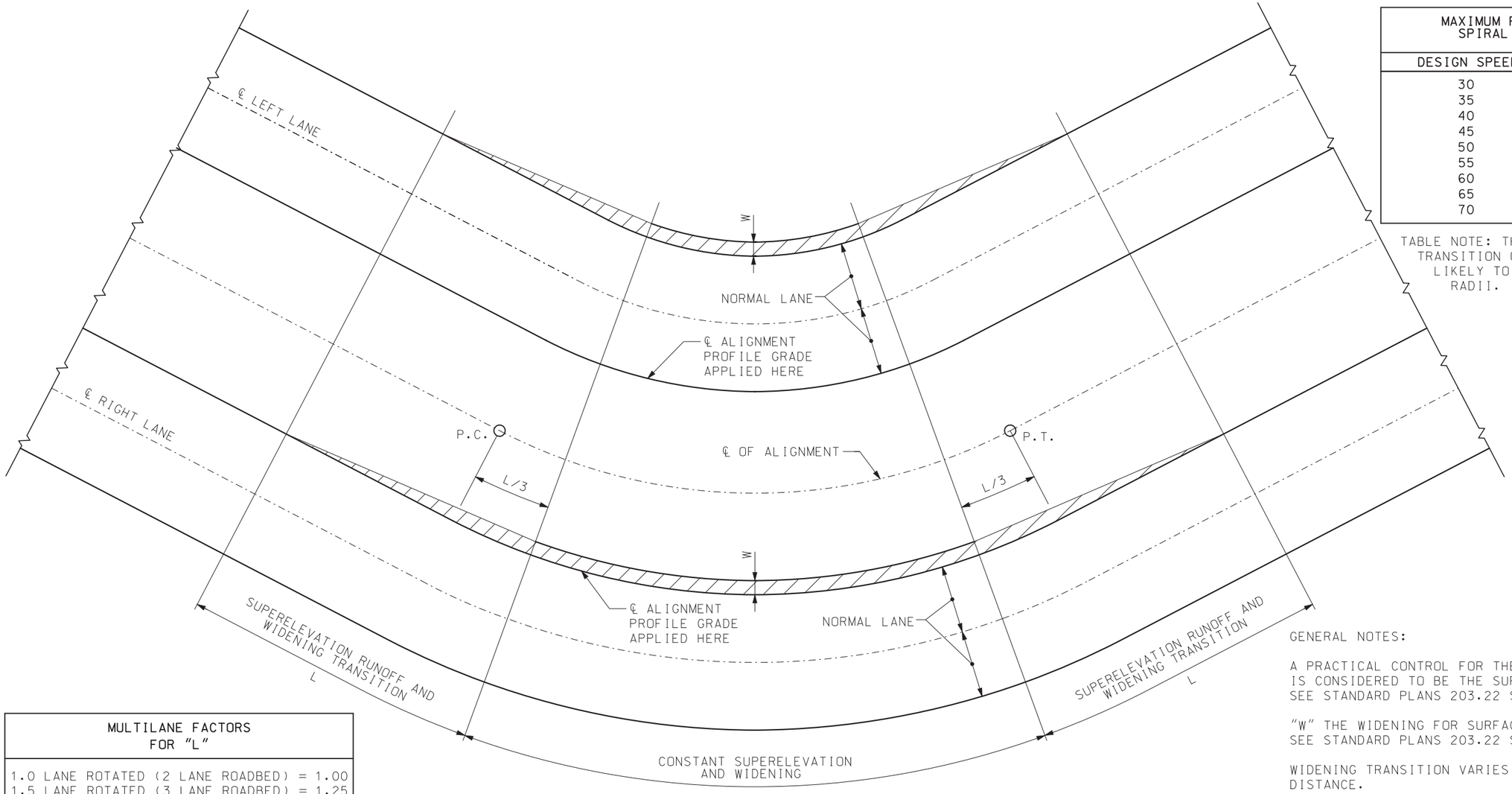

MAXIMUM RADIUS FOR USE OF A SPIRAL CURVE TRANSITION	
DESIGN SPEED	MAXIMUM RADIUS (FT)
30	456
35	620
40	810
45	1025
50	1265
55	1531
60	1822
65	2138
70	2479

TABLE NOTE: THE EFFECT OF SPIRAL CURVE TRANSITION ON LATERAL ACCELERATION IS LIKELY TO BE NEGLIGIBLE FOR LARGER RADII.

MULTILANE FACTORS FOR "L"
1.0 LANE ROTATED (2 LANE ROADBED) = 1.00
1.5 LANE ROTATED (3 LANE ROADBED) = 1.25
2.0 LANE ROTATED (4 LANE ROADBED) = 1.50
2.5 LANE ROTATED (5 LANE ROADBED) = 1.75
3.0 LANE ROTATED (6 LANE ROADBED) = 2.00
3.5 LANE ROTATED (7 LANE ROADBED) = 2.25

EXAMPLE: A SIX LANE DIVIDED HIGHWAY (3 LANES IN EACH DIRECTION) ROTATED SEPARATELY ABOUT ITS MEDIAN EDGES WOULD USE THE SAME ADJUSTMENT VALES AS A SIX LANE UNDIVIDED HIGHWAY ROTATED ABOUT THE CENTERLINE.

BOTH CASES WOULD USE THE 3 LANE ROTATED ADJUSTMENT VALUE OF 2 TIMES THE VALUE OF ONE LANE ROTATED.

SUPERELEVATION RUNOUT WITHOUT SPIRALS

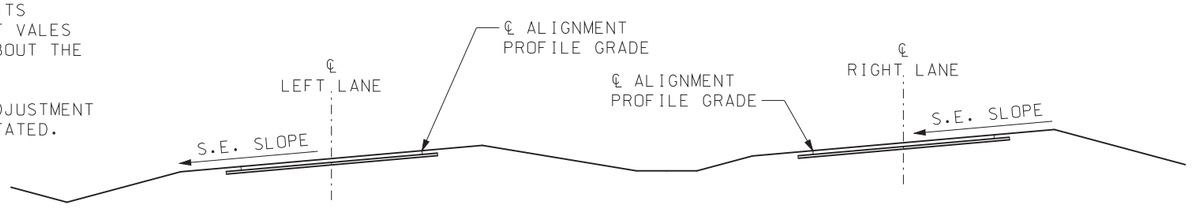

SECTION ON SUPERELEVATED CURVE
CURVE TO LEFT (ILLUSTRATED)

GENERAL NOTES:

A PRACTICAL CONTROL FOR THE LENGTH OF SPIRAL "Ls" IS CONSIDERED TO BE THE SUPERELEVATION RUNOFF "L", SEE STANDARD PLANS 203.22 SHEET 1 OF 2.

"W" THE WIDENING FOR SURFACING AT INSIDE SHOULDER, SEE STANDARD PLANS 203.22 SHEET 2 OF 2.

WIDENING TRANSITION VARIES IN DIRECT PROPORTION TO DISTANCE.

SPIRAL CURVES ARE USED ON ALL ROADWAYS THAT HAVE DESIGN TRAFFIC GREATER THAN 400 VEHICLES PER DAY, AND HAVE A RADIUS LESS THAN THE VALUES LISTED IN THE "MAXIUM RADIUS FOR USE OF A SPIRAL CURVE TRANSITION" TABLE.

MISSOURI HIGHWAYS AND TRANSPORTATION COMMISSION
105 WEST CAPITOL
JEFFERSON CITY, MO 65102
1-888-ASK-MODOT (1-888-275-6636)

STATE OF MISSOURI
ERIC E. SCHROETER
NUMBER PE-28411
PROFESSIONAL ENGINEER
THIS SHEET HAS BEEN SIGNED, SEALED AND DATED ELECTRONICALLY.

SUPERELEVATION, SPIRALS AND WIDENING
DIVIDED HIGHWAYS

DATE EFFECTIVE: 07/01/2017
DATE PREPARED: 5/1/2017

203.21K

SHEET NO. 2 OF 3

IF A SEAL IS PRESENT ON THIS SHEET IT HAS BEEN ELECTRONICALLY SEALED AND DATED.

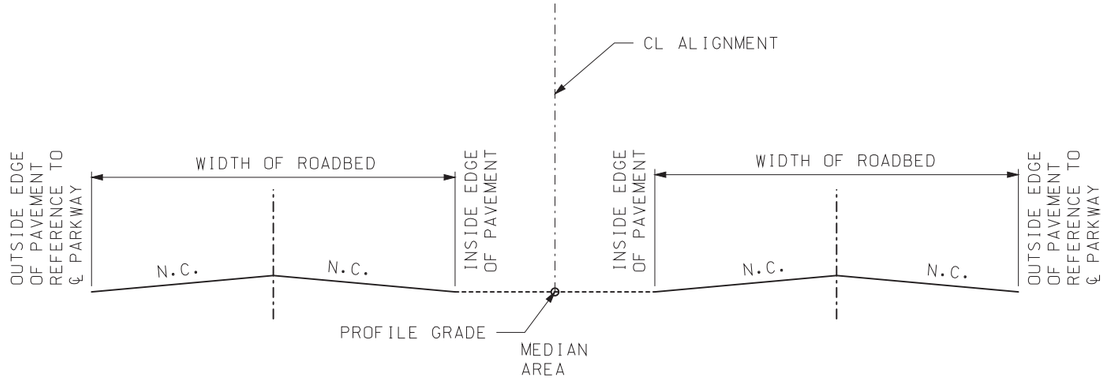

SECTION A–A

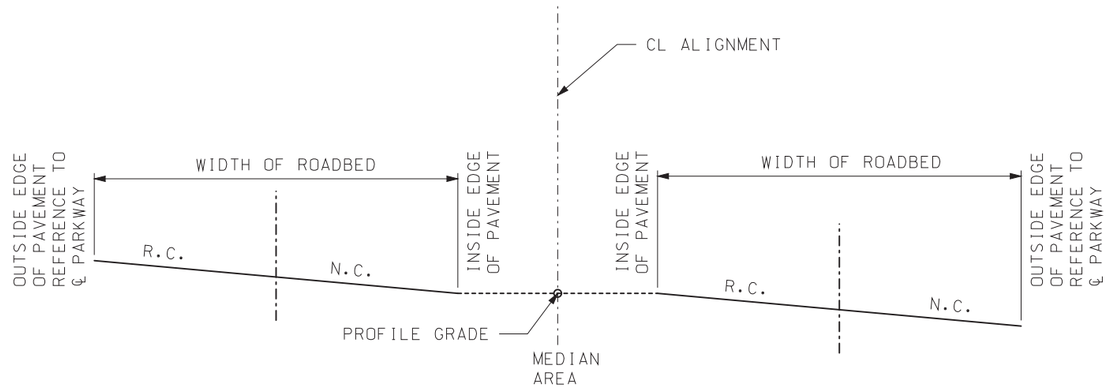

SECTION C–C
(CURVE TO RIGHT)

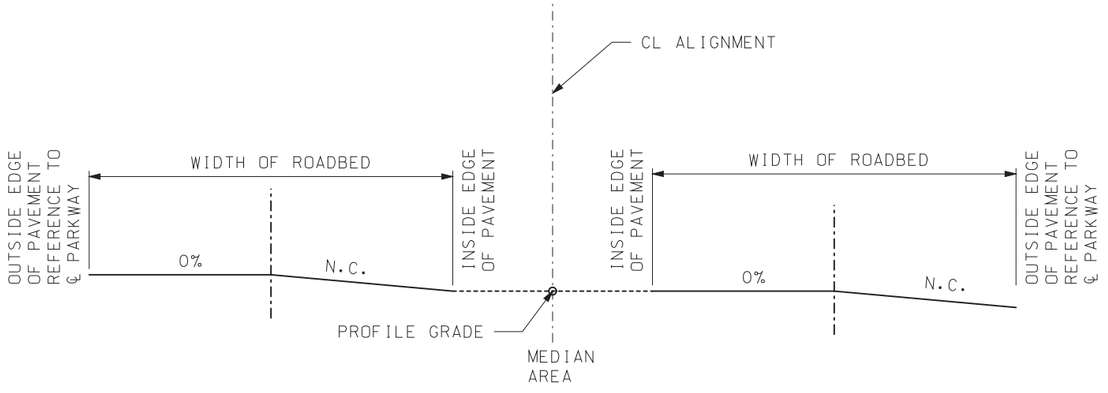

SECTION B–B
(CURVE TO RIGHT)

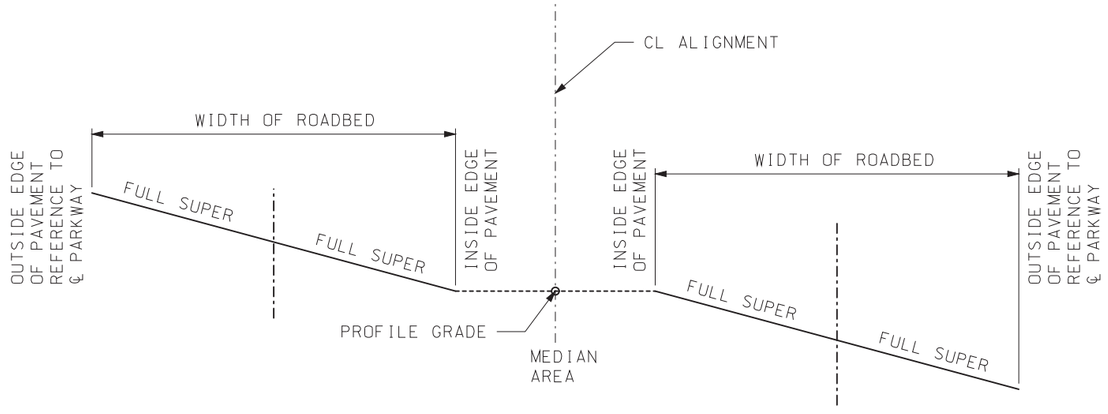

SECTION D–D
(CURVE TO RIGHT)

A–A TO B–B (E–E TO F–F) IS THE TANGENT RUNOUT.

$$X = \frac{L \times NC(\%)}{e(\%)}$$

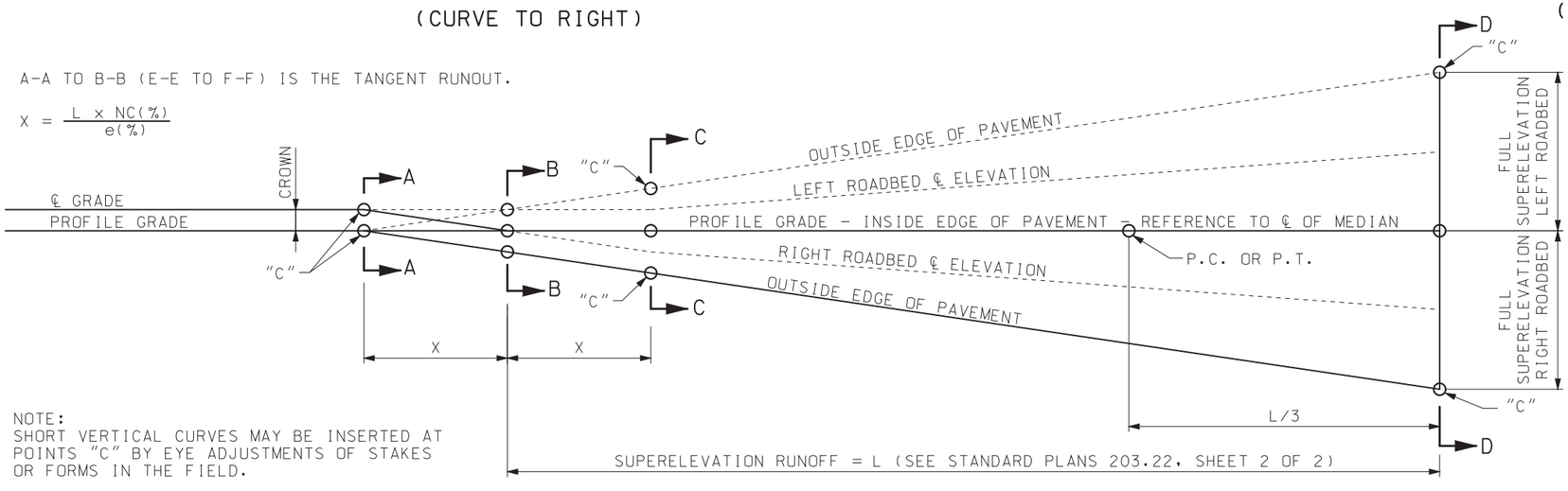

NOTE:
SHORT VERTICAL CURVES MAY BE INSERTED AT POINTS "C" BY EYE ADJUSTMENTS OF STAKES OR FORMS IN THE FIELD.

IF A SEAL IS PRESENT ON THIS SHEET IT HAS BEEN ELECTRONICALLY SEALED AND DATED.

MISSOURI HIGHWAYS AND TRANSPORTATION COMMISSION
105 WEST CAPITOL
JEFFERSON CITY, MO 65102
1-888-ASK-MODOT (1-888-275-6636)

STATE OF MISSOURI
ERIC E. SCHROETER
NUMBER PE-28411
PROFESSIONAL ENGINEER
THIS SHEET HAS BEEN SIGNED, SEALED AND DATED ELECTRONICALLY.

SUPERELEVATION, SPIRALS AND WIDENING
DIVIDED HIGHWAYS

DATE EFFECTIVE: 07/01/2017
DATE PREPARED: 5/1/2017

203.21K

SHEET NO. 3 OF 3

MINIMUM RADII FOR DESIGN SUPERELEVATION RATES, DESIGN SPEEDS, AND e_{max} = 4%

e%	DESIGN SPEED (MPH)																				
	30			35			40			45			50			55			60		
	RADIUS	L1	L2	RADIUS	L1	L2	RADIUS	L1	L2	RADIUS	L1	L2	RADIUS	L1	L2	RADIUS	L1	L2	RADIUS	L1	L2
NC	2,830	0	0	3,730	0	0	4,770	0	0	5,930	0	0	7,220	0	0	8,650	0	0	10,300	0	0
RC	1,880	36	55	2,490	39	58	3,220	41	62	4,040	44	67	4'940	48	72	5,950	51	77	7,080	53	80
2.2	1,580	40	60	2,120	43	64	2,760	46	58	3,480	49	73	4,280	53	79	5,180	56	84	6,190	59	88
2.4	1,270	44	65	1,760	46	70	2,340	50	74	2,980	53	80	3,690	58	86	4,500	61	92	5,410	64	96
2.6	1,000	47	71	1,420	50	75	1,930	54	81	2,490	58	87	3,130	62	94	3,870	66	100	4,700	69	104
2.8	817	51	76	1,170	54	81	1,620	58	87	2,100	62	93	2,660	67	101	3,310	71	107	4,060	75	112
3.0	681	55	82	982	58	87	1,370	62	93	1,800	67	100	2,290	72	108	2,860	77	115	3,530	80	120
3.2	576	58	87	835	62	93	1,180	66	99	1,550	71	107	1,980	77	115	2,490	82	123	3,090	85	128
3.4	490	62	93	714	66	99	1,010	70	106	1,340	76	113	1,720	82	122	2,170	87	130	2,700	91	136
3.6	416	65	98	610	70	105	865	74	112	1,150	80	120	1,480	86	130	1,880	92	138	2,350	96	144
3.8	348	69	104	512	74	110	730	79	118	970	84	127	1,260	91	137	1,600	97	146	2,010	101	152
4.0	250	73	109	371	77	116	533	83	124	711	89	133	926	96	144	1,190	102	153	1,500	107	160

MINIMUM RADII FOR DESIGN SUPERELEVATION RATES, DESIGN SPEEDS, AND e_{max} = 8%

e%	DESIGN SPEED (MPH)																								
	30			35			40			45			50			55			60			65			70		
	RADIUS	L1	L2	RADIUS	L1	L2	RADIUS	L1	L2	RADIUS	L1	L2	RADIUS	L1	L2	RADIUS	L1	L2	RADIUS	L1	L2	RADIUS	L1	L2	RADIUS	L1	L2
NC	3,240	0	0	4,260	0	0	5,410	0	0	6,710	0	0	8,150	0	0	9,720	0	0	11,500	0	0	12,900	0	0	14,500	0	0
RC	2,370	36	55	3,120	39	58	3,970	41	62	4,930	44	67	5,990	48	72	7,150	51	77	8,440	53	80	9,510	56	84	10,700	60	90
2.2	2,130	40	60	2,800	43	64	3,570	46	58	4,440	49	73	5,400	53	79	6,450	56	84	7,620	59	88	8,600	61	92	9,660	66	99
2.4	1,930	44	65	2,540	46	70	3,240	50	74	4,030	53	80	4,910	58	86	5,870	61	92	6,930	64	96	7,830	67	100	8,810	72	108
2.6	1,760	47	71	2,320	50	75	2,960	54	81	3,690	58	87	4,490	62	94	5,370	66	100	6,350	69	104	7,180	73	109	8,090	78	117
2.8	1,610	51	76	2,130	54	81	2,720	58	87	3,390	62	93	4,130	67	101	4,950	71	107	5,850	75	112	6,630	78	117	7,470	84	126
3.0	1,480	55	82	1,960	58	87	2,510	62	93	3,130	67	100	3,820	72	108	4,580	77	115	5,420	80	120	6,140	84	126	6,930	90	135
3.2	1,370	58	87	1,820	62	93	2,330	66	99	2,900	71	107	3,550	77	115	4,250	82	123	5,040	85	128	5,720	89	134	6,460	96	144
3.4	1,270	62	93	1,690	66	99	2,170	70	106	2,700	76	113	3,300	82	122	3,970	87	130	4,700	91	136	5,350	95	142	6,050	102	153
3.6	1,180	65	98	1,570	70	105	2,020	74	112	2,520	80	120	3,090	86	130	3,710	92	138	4,400	96	144	5,010	100	151	5,680	108	162
3.8	1,100	69	104	1,470	74	110	1,890	79	118	2,360	84	127	2,890	91	137	3,480	97	146	4,140	101	152	4,700	106	159	5,350	114	171
4.0	1,030	73	109	1,370	77	116	1,770	83	124	2,220	89	133	2,720	96	144	3,270	102	153	3,890	107	160	4,450	112	167	5,050	120	180
4.2	955	76	115	1,280	81	122	1,660	87	130	2,080	93	140	2,560	101	151	3,080	107	161	3,670	112	168	4,200	117	176	4,780	126	189
4.4	893	80	120	1,200	85	128	1,560	91	137	1,960	98	147	2,410	106	158	2,910	112	169	3,470	117	176	3,980	123	184	4,540	132	198
4.6	834	84	125	1,130	89	134	1,470	95	143	1,850	102	153	2,280	110	166	2,750	117	176	3,290	123	184	3,770	128	193	4,310	138	207
4.8	779	87	131	1,060	93	139	1,390	99	149	1,750	107	160	2,160	115	173	2,610	123	184	3,120	128	192	3,590	134	201	4,100	144	216
5.0	727	91	136	991	97	145	1,310	103	155	1,650	111	167	2,040	120	180	2,470	128	191	2,960	133	200	3,410	140	209	3,910	150	225
5.2	676	95	142	929	101	151	1,230	108	161	1,560	116	173	1,930	125	187	2,350	133	199	2,820	138	208	3,250	145	218	3,740	156	234
5.4	627	98	147	870	105	157	1,160	112	168	1,480	120	180	1,830	130	194	2,230	138	207	2,680	144	216	3,110	151	226	3,570	162	243
5.6	582	102	153	813	108	163	1,090	116	174	1,390	124	187	1,740	134	202	2,120	143	214	2,550	149	224	2,970	156	234	3,420	168	252
5.8	542	105	158	761	112	168	1,030	120	180	1,320	129	193	1,650	139	209	2,010	148	222	2,430	155	232	2,840	162	243	3,280	174	261
6.0	506	109	164	713	116	174	965	124	186	1,250	133	200	1,560	144	216	1,920	153	230	2,320	160	240	2,710	167	251	3,150	180	270
6.2	472	113	169	669	120	180	909	128	192	1,180	138	207	1,480	149	223	1,820	158	237	2,210	165	248	2,600	173	260	3,020	186	279
6.4	442	116	175	628	124	186	857	132	199	1,110	142	213	1,400	154	230	1,730	163	245	2,110	171	256	2,490	179	268	2,910	192	288
6.6	413	120	180	590	128	192	808	137	205	1,050	147	220	1,330	158	238	1,650	169	253	2,010	176	264	2,380	184	276	2,790	198	297
6.8	386	124	185	553	132	197	761	141	211	990	151	227	1,260	163	245	1,560	174	260	1,910	181	272	2,280	190	285	2,690	204	306
7.0	360	127	191	518	135	203	716	145	217	933	156	233	1,190	168	252	1,480	179	268	1,820	187	280	2,180	195	293	2,580	210	315
7.2	336	131	196	485	139	209	672	149	223	878	160	240	1,120	173	259	1,400	184	276	1,720	192	288	2,070	201	301	2,470	216	324
7.4	312	135	202	451	143	215	628	153	230	822	164	247	1,060	178	266	1,320	189	283	1,630	197	296	1,970	207	310	2,350	222	333
7.6	287	138	207	417	147	221	583	157	236	765	169	253	980	182	274	1,230	194	291	1,530	203	304	1,850	212	318	2,230	228	342
7.8	261	142	213	380	151	226	533	161	242	701	173	260	901	187	281	1,140	199	299	1,410	208	312	1,720	218	327	2,090	234	351
8.0	214	145	218	314	155	232	444	166	248	587	178	267	758	192	288	960	204	306	1,200	213	320	1,480	223	335	1,810	240	360

TABLE NOTES:

"NC" DENOTES NORMAL CROSS SLOPE.

"RC" DENOTES REMOVE ADVERSE CROSS SLOPE, SUPERELEVATE AT NORMAL CROSS SLOPE.

"e" DENOTES THE SUPERELEVATION IN PERCENT (%).

"L" THE LENGTH OF SUPERELEVATION RUNOFF AND WIDENING TRANSITION IN FEET FOR A 2 LANE ROADWAY.

THE L1 COLUMN IS FOR 1 LANE ROTATED
THE L2 COLUMN IS FOR 2 LANES ROTATED

1 LANE ROTATED IS TYPICALLY FOR A 2-LANE HIGHWAY
2 LANE ROTATED IS TYPICALLY FOR A 4-LANE HIGHWAY

WHEN USING ONE OF THE TABLES FOR A GIVEN RADIUS, INTERPOLATION IS NOT NECESSARY AS THE SUPERELEVATION RATE SHOULD BE DETERMINED FROM A RADIUS EQUAL TO, OR SLIGHTLY SMALLER THAN, THE REDII PROVIDED IN THE TABLE. THE RESULT IS A SUPERELEVATION RATE THAT IS ROUNDED UP TO THE NEAREST 0.2 OF A PERCENT.

EXAMPLE: A 50 MPH CURVE WITH A MAXIMUM SUPERELEVATION RATE OF 8 PERCENT, AND A RADIUS OF 1,910 FT, SHOULD USE THE RADIUS OF 1,830 FT TO OBTAIN A SUPERELEVATION RATE OF 5.4 PERCENT.

IF A SEAL IS PRESENT ON THIS SHEET IT HAS BEEN ELECTRONICALLY SEALED AND DATED.

MISSOURI HIGHWAYS AND TRANSPORTATION COMMISSION
105 WEST CAPITOL
JEFFERSON CITY, MO 65102
1-888-ASK-MODOT (1-888-275-6636)

STATE OF MISSOURI
ERIC E. SCHROETER
NUMBER PE-28411
PROFESSIONAL ENGINEER
THIS SHEET HAS BEEN SIGNED, SEALED AND DATED ELECTRONICALLY.

SUPERELEVATION, SPIRALS AND WIDENING

DATE EFFECTIVE: 07/01/2018
DATE PREPARED: 5/3/2018

203.22

SHEET NO. 1 OF 2

"W"

CALCULATED AND DESIGN VALUES FOR TRAVELED WAY WIDENING ON OPEN HIGHWAY CURVES
(TWOLANE HIGHWAYS, ONE-WAY OR TWO-WAY)[WB-67 ADJUSTMENT]

CURVE RADIUS (FT)	24′ ROADWAY WIDTH							22′ ROADWAY WIDTH							20′ ROADWAY WIDTH						
	DESIGN SPEED (MPH)							DESIGN SPEED (MPH)							DESIGN SPEED (MPH)						
	30	35	40	45	50	55	60	30	35	40	45	50	55	60	30	35	40	45	50	55	60
7000	0.1	0.1	0.1	0.1	0.1	0.1	0.1	0.8	0.8	0.9	0.9	1.0	1.1	1.1	1.8	1.8	1.9	1.9	2.0	2.1	2.1
6500	0.1	0.1	0.1	0.1	0.1	0.1	0.2	0.8	0.9	0.9	1.0	1.1	1.1	1.2	1.8	1.9	1.9	2.0	2.1	2.1	2.2
6000	0.1	0.1	0.1	0.1	0.1	0.2	0.3	0.8	0.9	1.0	1.0	1.1	1.2	1.2	1.8	1.9	2.0	2.0	2.1	2.2	2.3
5500	0.1	0.1	0.1	0.1	0.2	0.2	0.4	0.9	1.0	1.0	1.1	1.2	1.2	1.3	1.9	2.0	2.0	2.1	2.2	2.2	2.4
5000	0.1	0.1	0.1	0.2	0.2	0.3	0.5	1.0	1.0	1.1	1.2	1.2	1.3	1.4	2.0	2.0	2.1	2.2	2.2	2.3	2.5
4500	0.1	0.1	0.2	0.2	0.3	0.4	0.6	1.0	1.1	1.2	1.2	1.3	1.4	1.5	2.0	2.1	2.2	2.2	2.3	2.4	2.6
4000	0.1	0.2	0.3	0.3	0.4	0.5	0.7	1.1	1.2	1.3	1.3	1.4	1.5	1.6	2.1	2.2	2.3	2.3	2.4	2.5	2.7
3500	0.2	0.3	0.4	0.5	0.6	0.6	0.8	1.2	1.3	1.4	1.5	1.6	1.6	1.7	2.2	2.3	2.4	2.5	2.6	2.6	2.8
3000	0.4	0.5	0.5	0.6	0.7	0.8	0.9	1.4	1.5	1.5	1.6	1.7	1.8	1.9	2.4	2.5	2.5	2.6	2.7	2.8	2.9
2500	0.7	0.8	0.9	1.0	1.1	1.2	1.3	1.7	1.8	1.9	2.0	2.1	2.2	2.3	2.7	2.8	2.9	3.0	3.1	3.2	3.3
2000	0.9	1.1	1.2	1.3	1.4	1.5	1.6	1.9	2.1	2.2	2.3	2.4	2.5	2.6	2.9	3.1	3.2	3.3	3.4	3.5	3.6
1800	1.1	1.2	1.3	1.5	1.6	1.7	1.8	2.1	2.2	2.3	2.5	2.6	2.7	2.8	3.1	3.2	3.3	3.5	3.6	3.7	3.8
1600	1.3	1.4	1.5	1.7	1.8	1.9	2.0	2.3	2.4	2.5	2.7	2.8	2.9	3.0	3.3	3.4	3.5	3.7	3.8	3.9	4.0
1400	1.6	1.8	1.9	2.0	2.2	2.3	2.4	2.6	2.8	2.9	3.0	3.2	3.3	3.4	3.6	3.8	3.9	4.0	4.4	4.3	4.4
1200	2.0	2.1	2.2	2.4	2.5	2.7	2.8	3.0	3.1	3.2	3.4	3.5	3.7	3.8	4.0	4.1	4.2	4.4	4.5	4.7	4.8
1000	2.5	2.7	2.8	3.0	3.1	3.3	3.4	3.5	3.7	3.8	4.0	4.1	4.3	4.4	4.5	4.7	4.8	5.0	5.1	5.3	5.4
900	2.8	3.0	3.1	3.3	3.5	3.6		3.8	4.0	4.1	4.3	4.5	4.6		4.8	5.0	5.1	5.3	5.5	5.6	
800	3.2	3.4	3.6	3.8	4.0	4.1		4.2	4.4	4.6	4.8	5.0	5.1		5.2	5.4	5.6	5.8	6.0	6.1	
700	3.8	4.0	4.2	4.4	4.6			4.8	5.0	5.2	5.4	5.6			5.8	6.0	6.2	6.4	6.6		
600	4.5	4.7	4.9	5.1	5.3			5.5	5.7	5.9	6.1	6.3			6.5	6.7	6.9	7.1	7.3		
500	5.4	5.7	5.9	6.1				6.4	6.7	6.9	7.1				7.4	7.7	7.9	8.1			
450	6.1	6.3	6.6					7.1	7.3	7.6					8.1	8.3	8.6				
400	6.9	7.1	7.4					7.9	8.1	8.4					8.9	9.1	9.4				
350	7.9	8.1	8.4					8.9	9.1	9.4					9.9	10.1	10.4				
300	9.2	9.5						10.2	10.5						11.2	11.5					
250	11.2							12.2							13.2						
200	14.0							15.0							16.0						

TABLE NOTES:

"W" THE WIDENING IN FEET FOR SURFACING AT INSIDE SHOULDERS.

VALUES SHOWN ARE FOR WB-67 DESIGN VEHICLE AND REPRESENT WIDENING IN FEET.

VALUES LESS THAN 2.0 FEET MAY BE DISREGARDED.

FOR 3-LANE ROADWAYS, MULTIPLY ABOVE VALUES BY 1.5.

FOR 4-LANE ROADWAYS, MULTIPLY ABOVE VALUES BY 2.0.

MISSOURI HIGHWAYS AND TRANSPORTATION COMMISSION
105 WEST CAPITOL
JEFFERSON CITY, MO 65102
1-888-ASK-MODOT (1-888-275-6636)

STATE OF MISSOURI
ERIC E. SCHROETER
NUMBER PE-28411
PROFESSIONAL ENGINEER
THIS SHEET HAS BEEN SIGNED, SEALED AND DATED ELECTRONICALLY.

SUPERELEVATION, SPIRALS AND WIDENING

DATE EFFECTIVE: 07/01/2017
DATE PREPARED: 5/1/2017

203.22

SHEET NO. 2 OF 2

IF A SEAL IS PRESENT ON THIS SHEET IT HAS BEEN ELECTRONICALLY SEALED AND DATED.

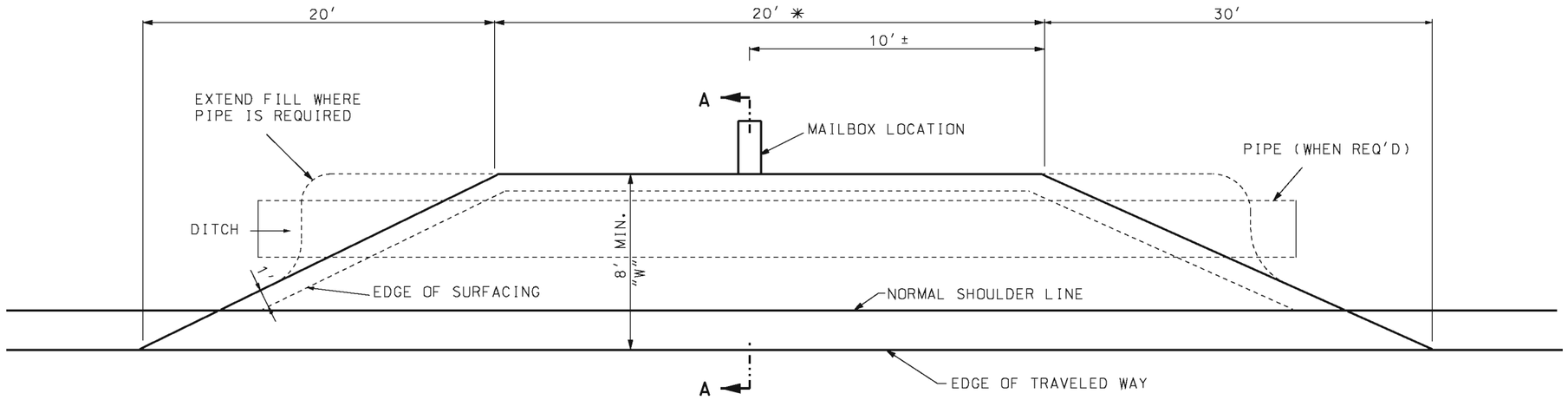

✳ ADD 2′ FOR EACH
ADDITIONAL MAILBOX

℄ PAVEMENT

℄ PAVEMENT

PLAN

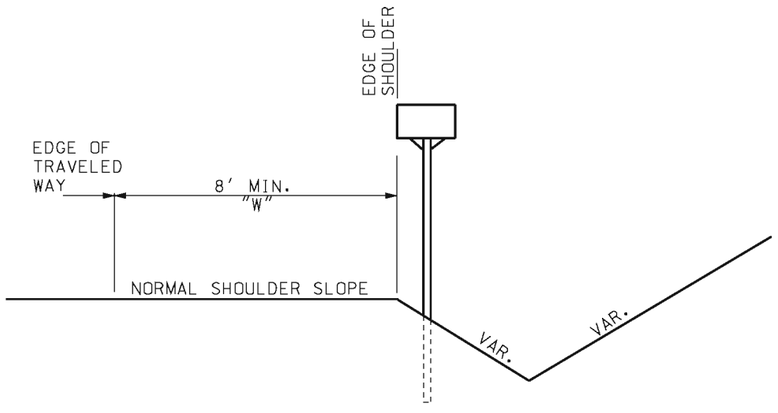

SECTION A-A
(WITHOUT PIPE)

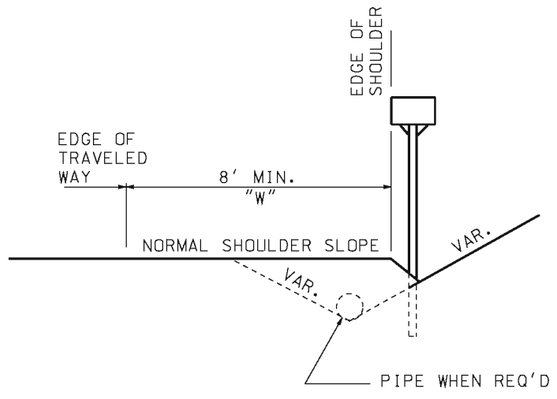

SECTION A-A
(WITH PIPE)

GENERAL NOTES:

IN NO CASE WILL "W" BE LESS THAN SHOULDER WIDTH.
"W" WILL BE 8′ UNLESS OTHERWISE NOTED ON THE PLANS.

WHEN ENTRANCES ARE ADJACENT TO MAILBOX TURNOUTS,
THE AREA AND SURFACING OF THE ENTRANCE MAY BE USED
FOR A PORTION OF THE MAILBOX TURNOUT.

MISSOURI HIGHWAYS AND TRANSPORTATION COMMISSION
105 WEST CAPITOL
JEFFERSON CITY, MO 65102
1-888-ASK-MODOT (1-888-275-6636)

STATE OF MISSOURI
KATHRYN PHILLIPS HARVEY
NUMBER PE-23751
PROFESSIONAL ENGINEER
THIS SHEET HAS BEEN SIGNED, SEALED AND DATED ELECTRONICALLY.

MAILBOX TURNOUTS

DATE EFFECTIVE: 08/01/1981
DATE PREPARED: 8/21/2009

203.35A

SHEET NO.
1 OF 1

IF A SEAL IS PRESENT ON THIS SHEET IT HAS BEEN ELECTRONICALLY SEALED AND DATED.

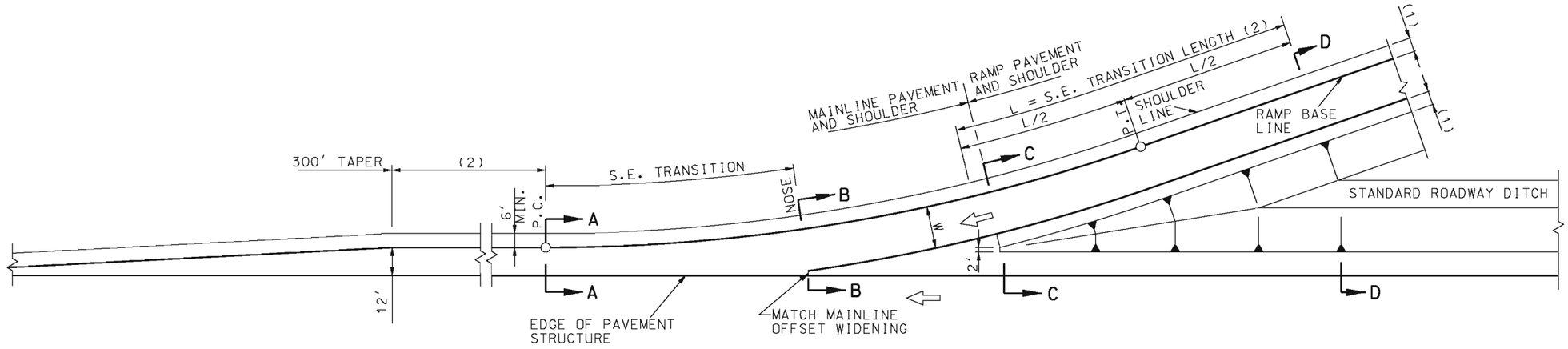

PLAN VIEW "ON" RAMPS

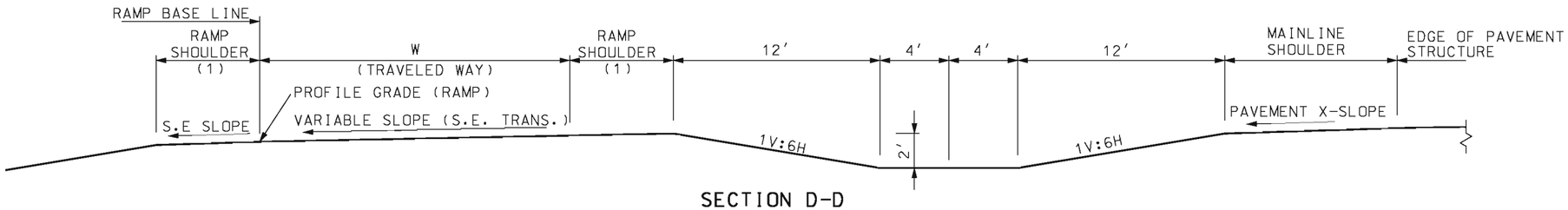

SECTION D-D

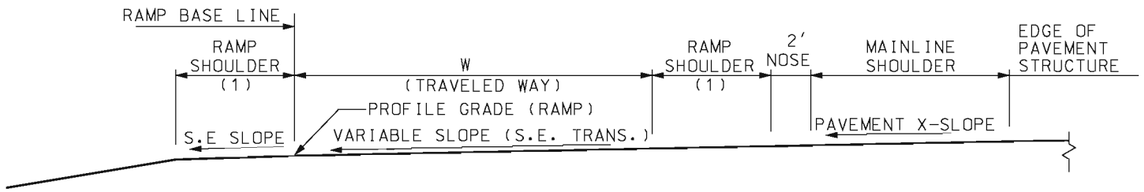

SECTION C-C

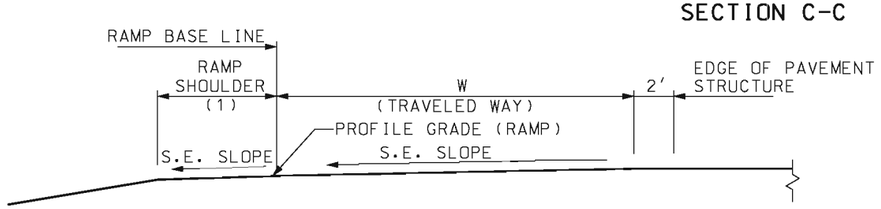

SECTION B-B

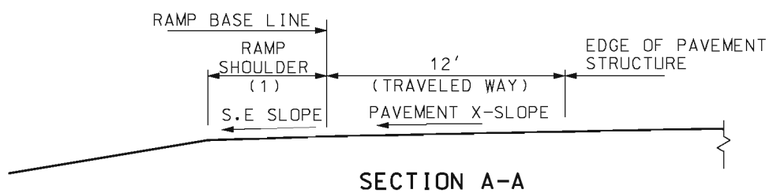

SECTION A-A

W	RAMP WIDTH
14'	ONE LANE, ONE WAY OPERATION WITH NO PROVISION FOR PASSING STALLED VEHICLES. DESIGN TRUCK VOLUMES > 5%
12'	ONE LANE, ONE WAY OPERATION WITH NO PROVISION FOR PASSING STALLED VEHICLES. DESIGN TRUCK VOLUMES ≤ 5%

NOTES:

(1) FOR RAMP SHOULDER WIDTH, SEE TYPICAL SECTIONS.

(2) SEE ROADWAY PLANS.

GENERAL NOTES:

SEE OTHER DRAWINGS FOR JOINT LAYOUTS AND STRIPING DETAILS.

THIS DRAWING IS FOR GENERAL INFORMATION ONLY. FOR ACTUAL CONSTRUCTION DETAILS AND PAVEMENT TYPES, SEE OTHER DRAWINGS.

MISSOURI HIGHWAYS AND TRANSPORTATION COMMISSION
105 WEST CAPITOL
JEFFERSON CITY, MO 65102
1-888-ASK-MODOT (1-888-275-6636)

STATE OF MISSOURI
KATHRYN PHILLIPS HARVEY
NUMBER PE-23751
PROFESSIONAL ENGINEER
THIS SHEET HAS BEEN SIGNED, SEALED AND DATED ELECTRONICALLY.

TYPICAL DETAILS ON AND OFF RAMPS

DIAMOND INTERCHANGES AND OUTER RAMPS OF CLOVERLEAF INTERCHANGES

DATE EFFECTIVE: 10/01/2007
DATE PREPARED: 8/21/2009

203.40G

SHEET NO. 1 OF 2

IF A SEAL IS PRESENT ON THIS SHEET IT HAS BEEN ELECTRONICALLY SEALED AND DATED.

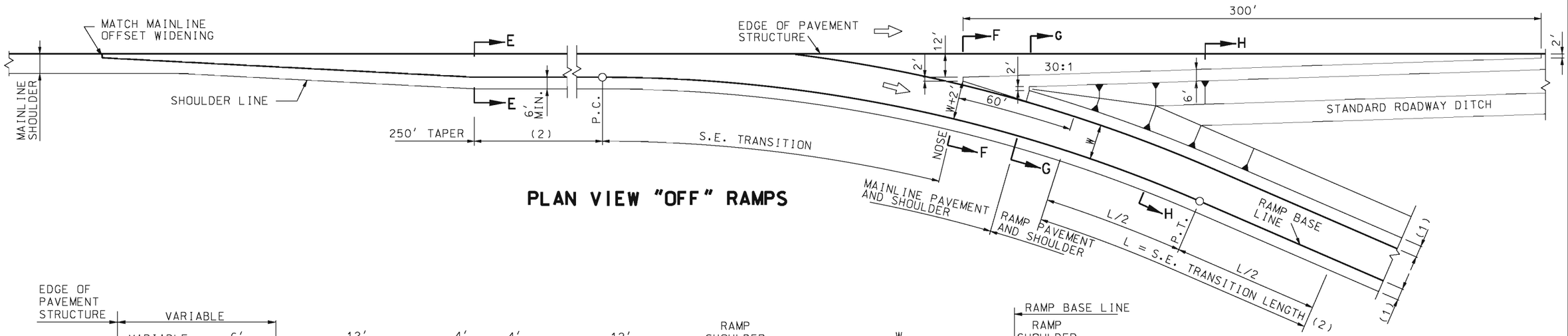

PLAN VIEW "OFF" RAMPS

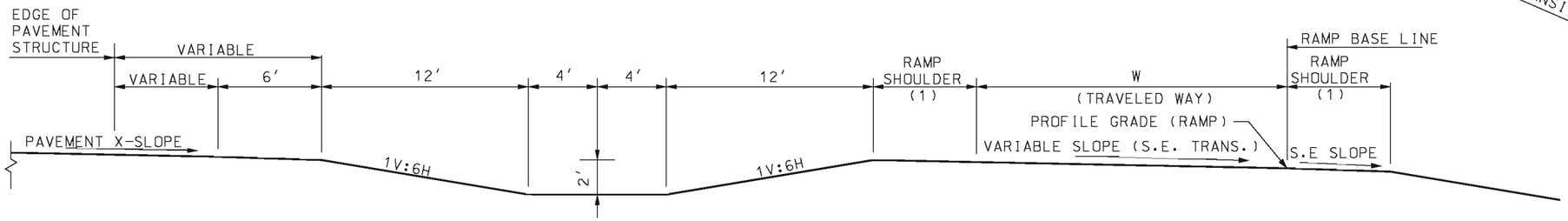

SECTION H-H

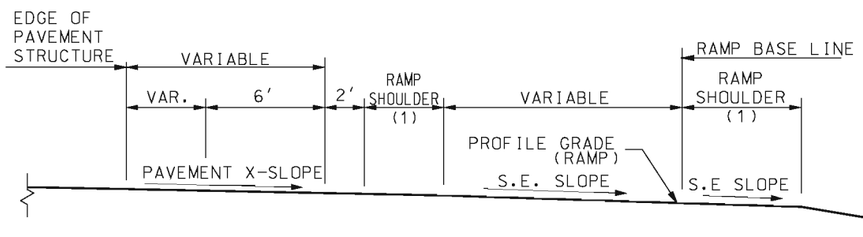

SECTION G-G

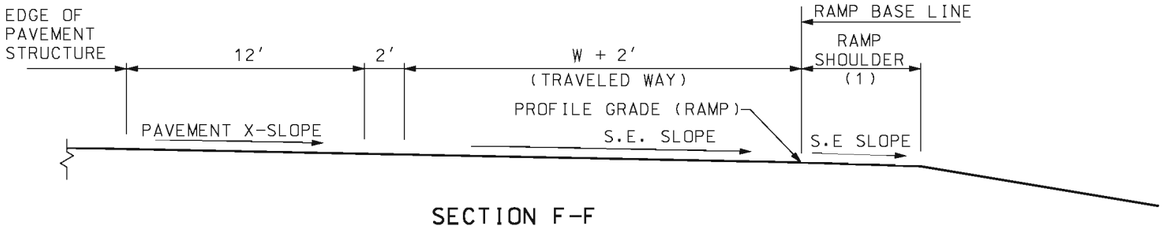

SECTION F-F

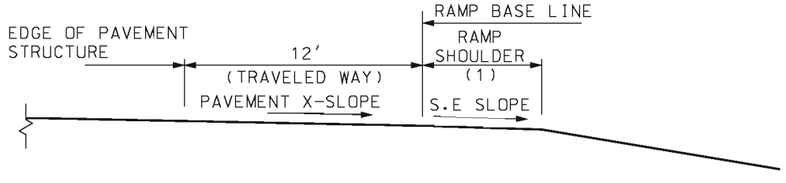

SECTION E-E

W	RAMP WIDTH
14'	ONE LANE, ONE WAY OPERATION WITH NO PROVISION FOR PASSING STALLED VEHICLES. DESIGN TRUCK VOLUMES > 5%
12'	ONE LANE, ONE WAY OPERATION WITH NO PROVISION FOR PASSING STALLED VEHICLES. DESIGN TRUCK VOLUMES ≤ 5%

NOTES:

(1) FOR RAMP SHOULDER WIDTH, SEE TYPICAL SECTIONS.

(2) SEE ROADWAY PLANS.

IF A SEAL IS PRESENT ON THIS SHEET IT HAS BEEN ELECTRONICALLY SEALED AND DATED.

MISSOURI HIGHWAYS AND TRANSPORTATION COMMISSION
105 WEST CAPITOL
JEFFERSON CITY, MO 65102
1-888-ASK-MODOT (1-888-275-6636)

STATE OF MISSOURI
KATHRYN PHILLIPS HARVEY
NUMBER PE-23751
PROFESSIONAL ENGINEER
THIS SHEET HAS BEEN SIGNED, SEALED AND DATED ELECTRONICALLY.

TYPICAL DETAILS ON AND OFF RAMPS

DIAMOND INTERCHANGES AND OUTER RAMPS OF CLOVERLEAF INTERCHANGES

DATE EFFECTIVE: 10/01/2007
DATE PREPARED: 8/21/2009

203.40G

SHEET NO. 2 OF 2

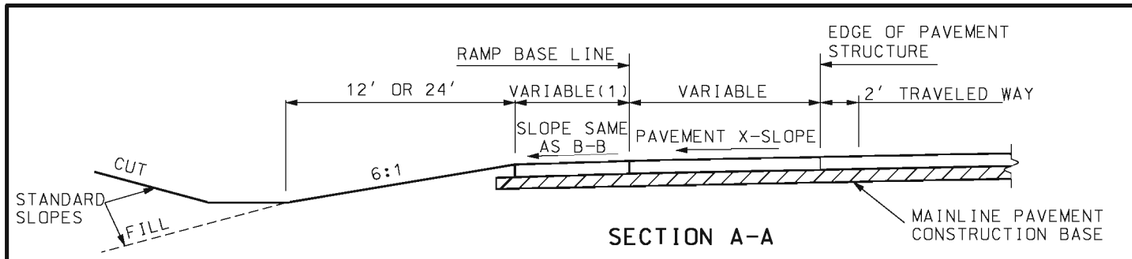

SECTION A-A

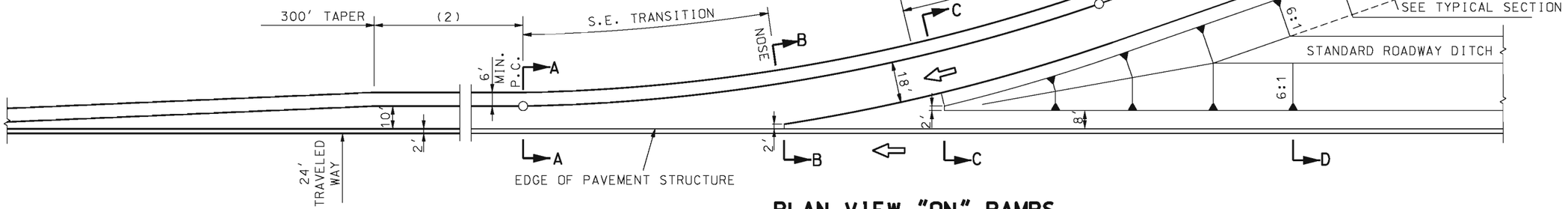

PLAN VIEW "ON" RAMPS

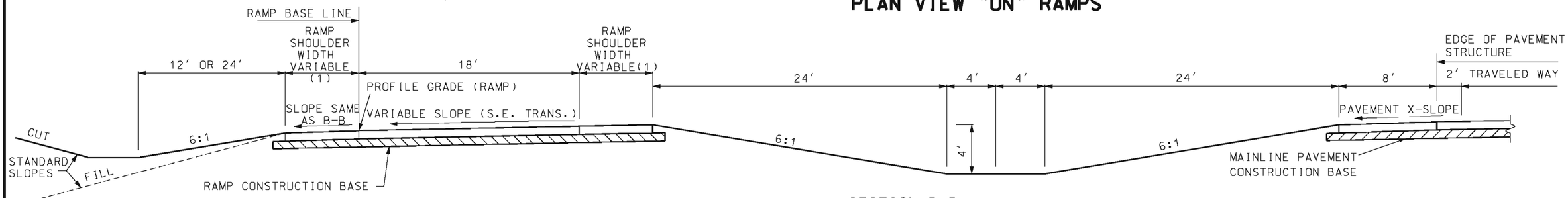

SECTION D-D

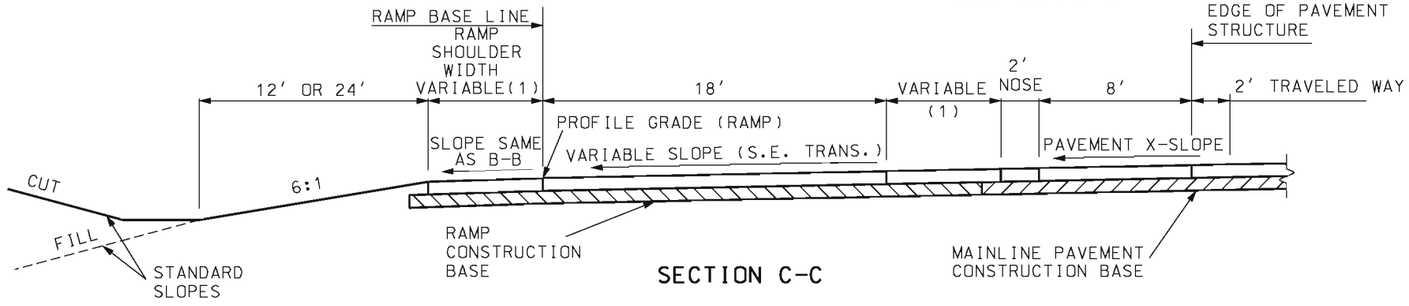

SECTION C-C

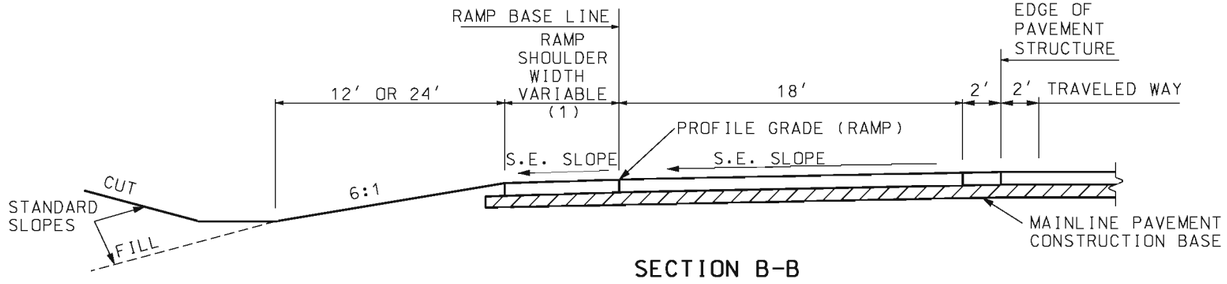

SECTION B-B

GENERAL NOTES:

SEE OTHER DRAWINGS FOR JOINT LAYOUTS AND STRIPING DETAILS.

THIS DRAWING IS FOR GENERAL INFORMATION ONLY. FOR ACTUAL CONSTRUCTION DETAILS AND PAVEMENT TYPES, SEE OTHER DRAWINGS.

(1) FOR RAMP SHOULDER WIDTH, SEE TYPICAL SECTIONS.

(2) SEE ROADWAY PLANS.

IF A SEAL IS PRESENT ON THIS SHEET IT HAS BEEN ELECTRONICALLY SEALED AND DATED.

MISSOURI HIGHWAYS AND TRANSPORTATION COMMISSION
105 WEST CAPITOL
JEFFERSON CITY, MO 65102
1-888-ASK-MODOT (1-888-275-6636)

STATE OF MISSOURI
KATHRYN PHILLIPS HARVEY
NUMBER PE-23751
PROFESSIONAL ENGINEER
THIS SHEET HAS BEEN SIGNED, SEALED AND DATED ELECTRONICALLY.

TYPICAL DETAILS ON AND OFF RAMPS

DIAMOND INTERCHANGES AND OUTER RAMPS OF CLOVERLEAF INTERCHANGES
(ROADWAYS WITH 6:1 FORESLOPES)
28 FOOT PAVEMENT STRUCTURE

DATE EFFECTIVE: 01/01/1995
DATE PREPARED: 8/21/2009

203.41F

SHEET NO. 1 OF 2

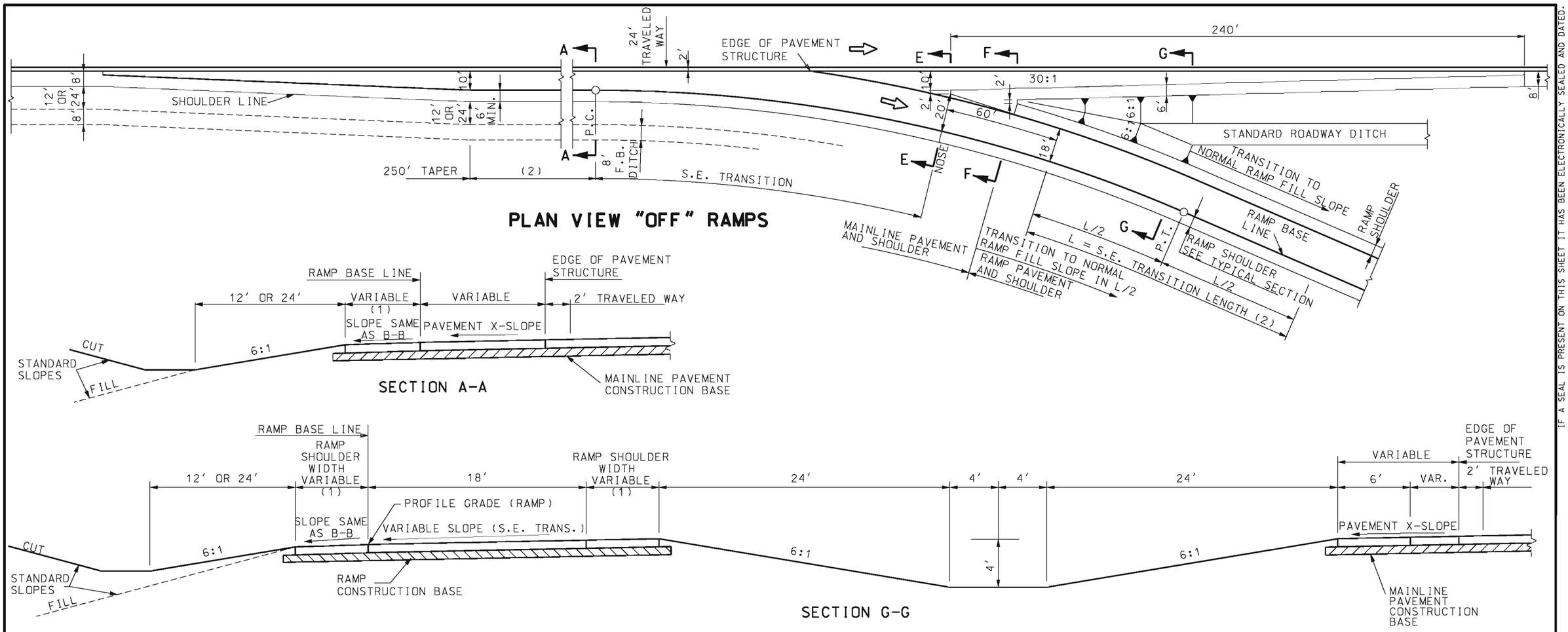

PLAN VIEW "OFF" RAMPS

SECTION A-A

SECTION G-G

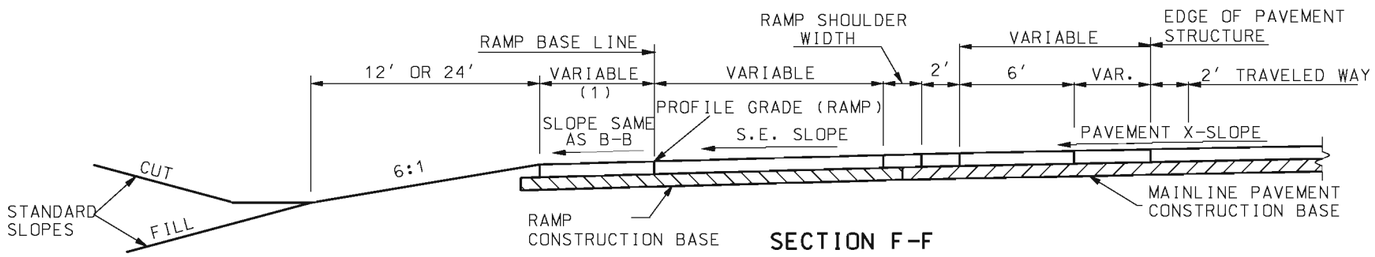

SECTION F-F

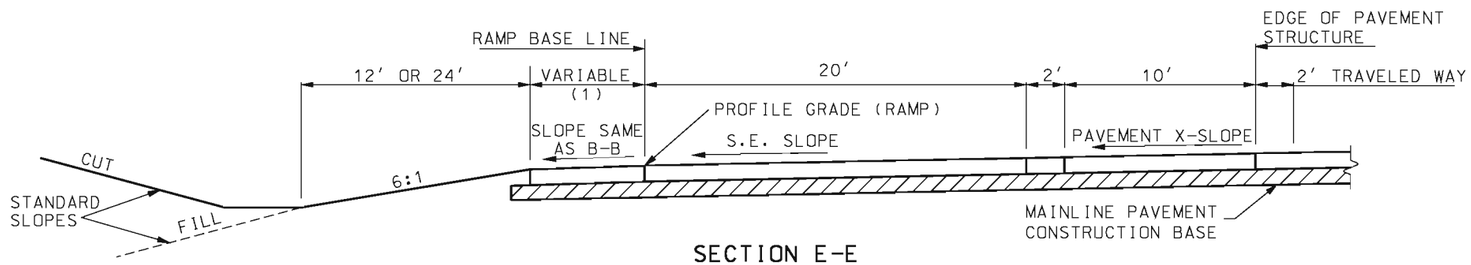

SECTION E-E

IF A SEAL IS PRESENT ON THIS SHEET IT HAS BEEN ELECTRONICALLY SEALED AND DATED.

MISSOURI HIGHWAYS AND TRANSPORTATION COMMISSION
105 WEST CAPITOL
JEFFERSON CITY, MO 65102
1-888-ASK-MODOT (1-888-275-6636)

STATE OF MISSOURI
KATHRYN PHILLIPS HARVEY
NUMBER PE-23751
PROFESSIONAL ENGINEER
THIS SHEET HAS BEEN SIGNED, SEALED AND DATED ELECTRONICALLY.

TYPICAL DETAILS ON AND OFF RAMPS

DIAMOND INTERCHANGES AND OUTER RAMPS OF CLOVERLEAF INTERCHANGES (ROADWAYS WITH 6:1 FORESLOPES) 28 FOOT PAVEMENT STRUCTURE

DATE EFFECTIVE: 01/01/1995
DATE PREPARED: 8/21/2009

203.41F

SHEET NO. 2 OF 2

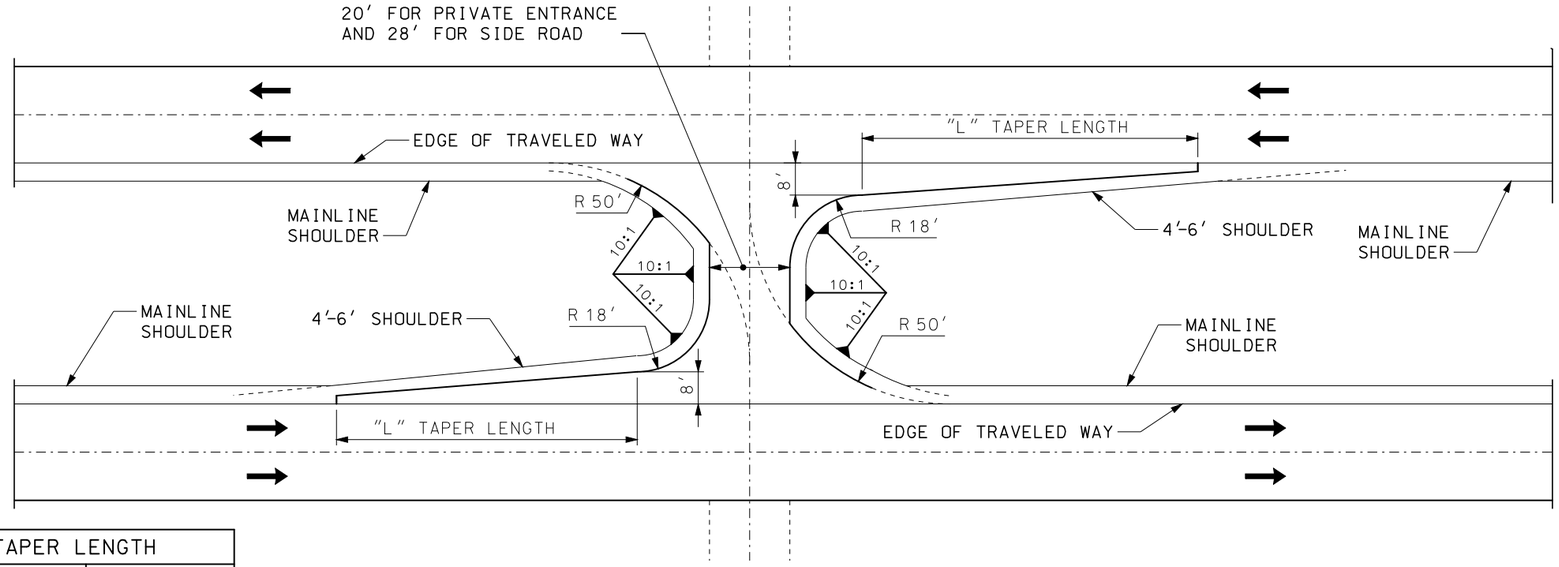

TAPER LENGTH	
DESIGN SPEED	"L"
≤ 40 MPH	112.5′
> 40 MPH	225′

FOR PRIVATE ENTRANCES, MINOR SIDE ROADS OR FIELD ENTRANCES

TYPE I MEDIAN OPENING

NOTES FOR TYPE I MEDIAN OPENINGS:

MEDIAN OPENINGS AND TAPERS SHALL BE CONSTRUCTED OF THE SAME MATERIAL AND THICKNESS AS THE TRAVELED WAY.

SHOULDERS ADJACENT TO THE MEDIAN OPENING AND TAPERS SHALL BE A2 SHOULDERS FOR INTERSTATE AND MAJOR ROADWAYS OR A3 SHOULDERS FOR LOW VOLUME MAJORS AND MINOR ROADS.

IN ADDITION TO THE IDENTIFIED SLOPES, SLOPES ADJACENT TO MEDIAN OPENING SHOULDERS SHALL NOT BE STEEPER THAN 5.5:1.

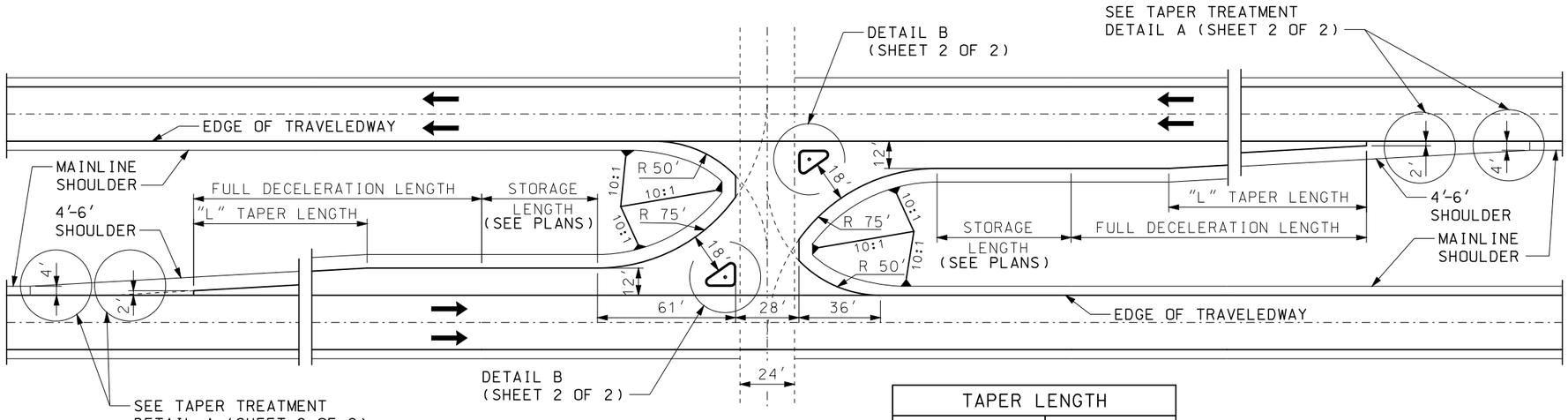

FULL DECELERATION LENGTH	
DESIGN SPEED	MINIMUM LENGTH
45 MPH	385 FT.
50 MPH	435 FT.
55 MPH	480 FT.
60 MPH	530 FT.
65 MPH	570 FT.
70 MPH	615 FT.

TAPER LENGTH	
DESIGN SPEED	"L"
≤ 40 MPH	125′
> 40 MPH	250′

FOR MAJOR SIDE ROADS, STATE ROUTES AND MAJOR COMMERCIAL ENTRANCES

TYPE II MEDIAN OPENING

NOTES FOR TYPE II MEDIAN OPENINGS:

MEDIAN OPENINGS AND TAPERS SHALL BE CONSTRUCTED OF THE SAME MATERIAL AND THICKNESS AS THE TRAVELED WAY.

SHOULDERS ADJACENT TO THE MEDIAN OPENING AND TAPERS SHALL BE A2 SHOULDERS FOR INTERSTATE AND MAJOR ROADWAYS OR A3 SHOULDERS FOR LOW VOLUME MAJORS AND MINOR ROADS.

IN ADDITION TO THE IDENTIFIED SLOPES, SLOPES ADJACENT TO MEDIAN OPENING SHOULDERS SHALL NOT BE STEEPER THAN 5.5:1.

MISSOURI HIGHWAYS AND TRANSPORTATION COMMISSION
105 WEST CAPITOL
JEFFERSON CITY, MO 65102
1-888-ASK-MODOT (1-888-275-6636)

STATE OF MISSOURI
ERIC E. SCHROETER
NUMBER PE-2841
PROFESSIONAL ENGINEER
THIS SHEET HAS BEEN SIGNED, SEALED AND DATED ELECTRONICALLY.

TYPICAL MEDIAN OPENING

DIVIDED HIGHWAYS

DATE EFFECTIVE: 04/01/2016
DATE PREPARED: 2/11/2016

203.50N

SHEET NO. 1 OF 2

IF A SEAL IS PRESENT ON THIS SHEET IT HAS BEEN ELECTRONICALLY SEALED AND DATED.

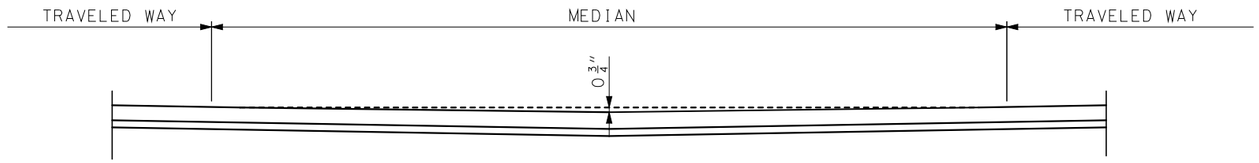

SECTION ALONG MEDIAN OPENING ℄

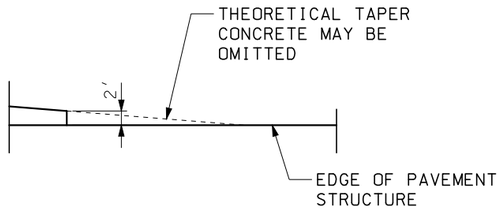

TAPER TREATMENT

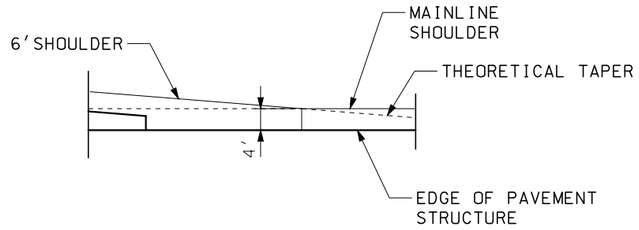

SHOULDER TAPER
TREATMENT

DETAIL A

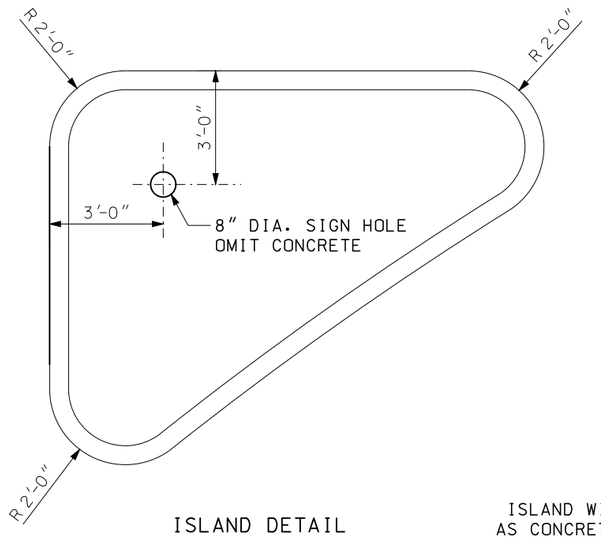

ISLAND DETAIL

ISLAND WILL BE PAID FOR
AS CONCRETE MEDIAN STRIP.

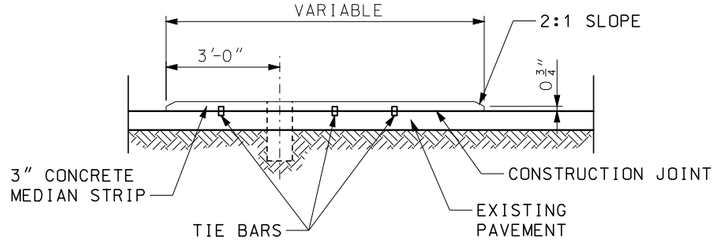

LOW PROFILE ISLAND DETAIL

DETAIL B

GENERAL NOTES:
FOR DETAILS ON CONCRETE MEDIAN STRIP CONSTRUCTION, SEE STANDARD PLAN 608.30.

MISSOURI HIGHWAYS AND TRANSPORTATION COMMISSION
105 WEST CAPITOL
JEFFERSON CITY, MO 65102
1-888-ASK-MODOT (1-888-275-6636)

STATE OF MISSOURI
ERIC E. SCHROETER
NUMBER PE-28411
PROFESSIONAL ENGINEER
THIS SHEET HAS BEEN SIGNED, SEALED AND DATED ELECTRONICALLY.

TYPICAL MEDIAN OPENING

DIVIDED HIGHWAYS

DATE EFFECTIVE: 04/01/2016
DATE PREPARED: 2/11/2016

203.50N

SHEET NO. 2 OF 2

IF A SEAL IS PRESENT ON THIS SHEET IT HAS BEEN ELECTRONICALLY SEALED AND DATED.

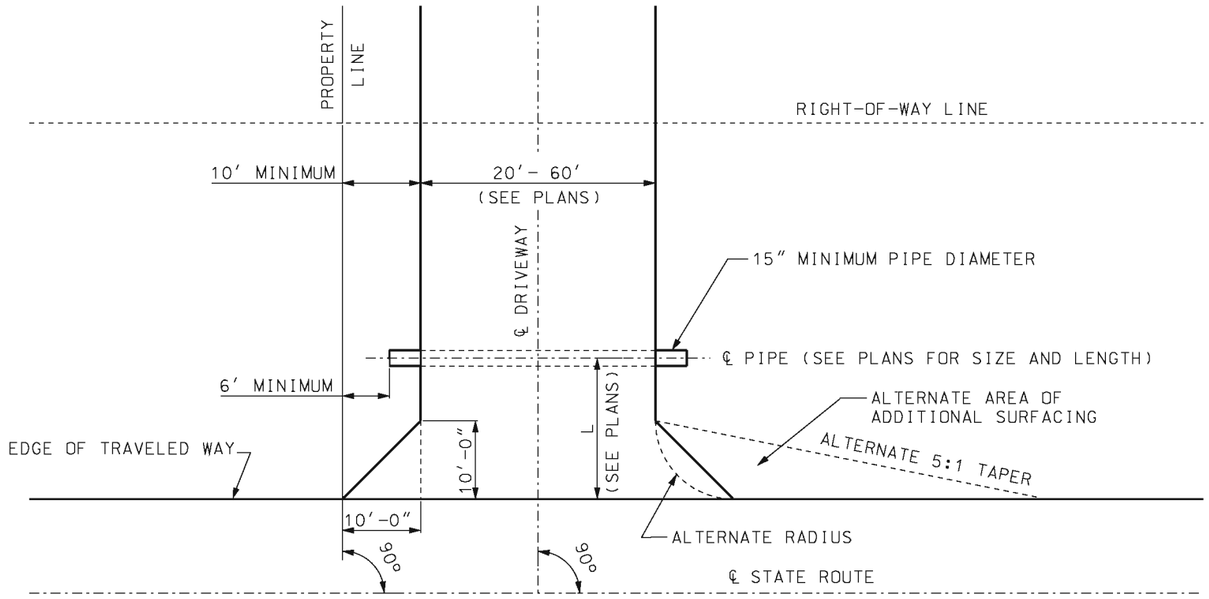

PLAN VIEW

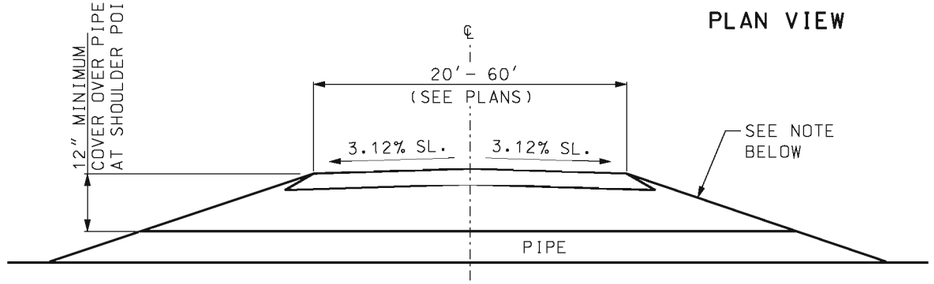

DRIVEWAY TYPICAL SECTION

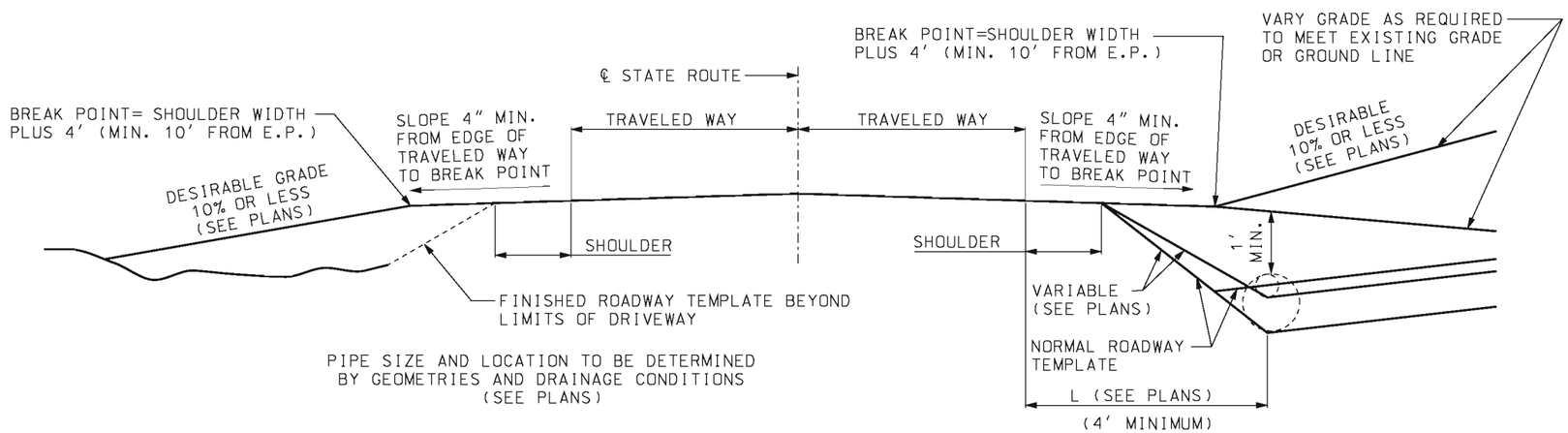

IN FILLS

IN CUTS

PROFILE VIEW

DRIVEWAY SIDE SLOPES: ✳

1 TO 1700 VEHICLES PER DAY ON STATE ROUTE USE 3:1 SLOPE (OR 6:1 SLOPE WHERE PRACTICABLE).

OVER 1700 VEHICLES PER DAY ON STATE ROUTE USE 6:1 SLOPE (OR FLATTER WHERE PRACTICABLE).

NOTE: RECOMMENDED WIDTH OF DRIVEWAY – 20′

✳ IN ORDER TO MINIMIZE THE USE OF 6:1 SLOPED END PIPE SECTIONS ON NEW CONSTRUCTION AND WHERE POSSIBLE ON EXISTING ROUTES. THE LOCATION OF DRAINAGE PIPE SHOULD BE BEYOND THE CLEAR ZONE DISTANCE AS SHOWN IN TABLE 3.1 OF THE 1988 EDITION OF "ROADSIDE DESIGN GUIDE".

GENERAL NOTES:

NO PART OF THE DRIVEWAY EXCLUDING TAPERS SHALL BE CONSTRUCTED BEYOND THE PROPERTY FRONTAGE.

SURFACING SHALL BE AS SHOWN ON THE PLANS OR PERMIT.

LENGTH OF PIPE SHALL BE DETERMINED BY DEPTH AND LOCATION OF DITCH. (MINIMUM 32′ LENGTH OF MINIMUM 15″ DIAMETER PIPE), SEE PLANS.

THIS DRAWING ILLUSTRATES DRIVEWAY DETAILS FOR MINIMUM SITUATIONS. TRAFFIC VOLUMES, SAFETY CONSIDERATIONS, LOCAL REQUIREMENTS, ETC., MAY DICTATE MORE EXTENSIVE IMPROVEMENTS THAN ILLUSTRATED.

MISSOURI HIGHWAYS AND TRANSPORTATION COMMISSION
105 WEST CAPITOL
JEFFERSON CITY, MO 65102
1-888-ASK-MODOT (1-888-275-6636)

STATE OF MISSOURI
KATHRYN PHILLIPS HARVEY
NUMBER PE-23751
PROFESSIONAL ENGINEER
THIS SHEET HAS BEEN SIGNED, SEALED AND DATED ELECTRONICALLY.

DRIVEWAY

TYPE I

DATE EFFECTIVE: 07/01/2004
DATE PREPARED: 8/21/2009

203.61A

SHEET NO. 1 OF 1

IF A SEAL IS PRESENT ON THIS SHEET IT HAS BEEN ELECTRONICALLY SEALED AND DATED.

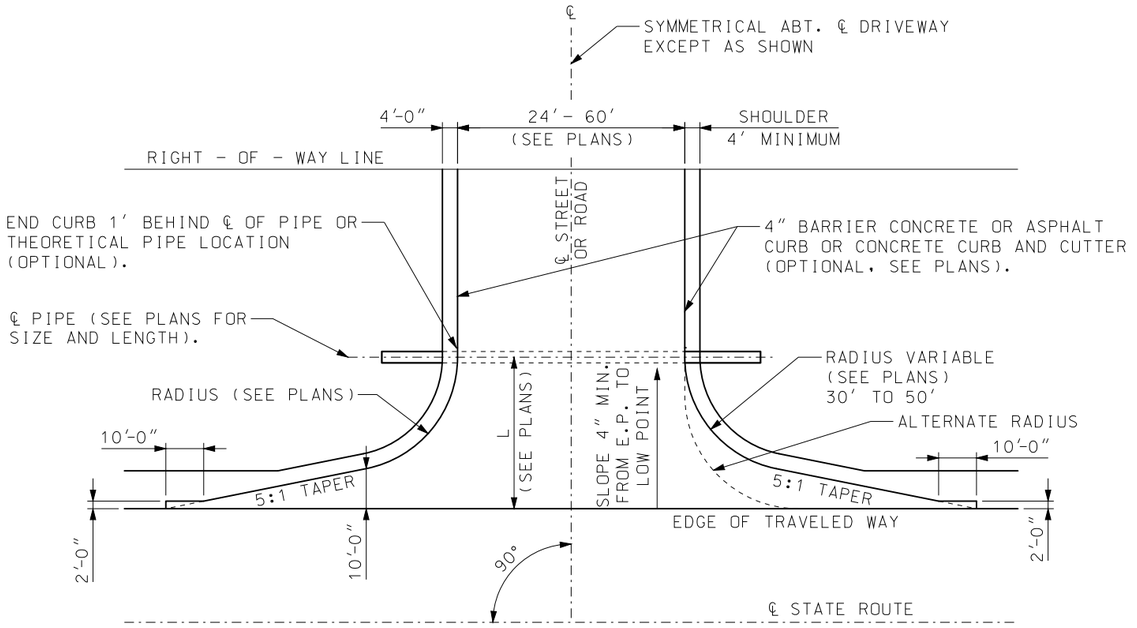

PLAN VIEW

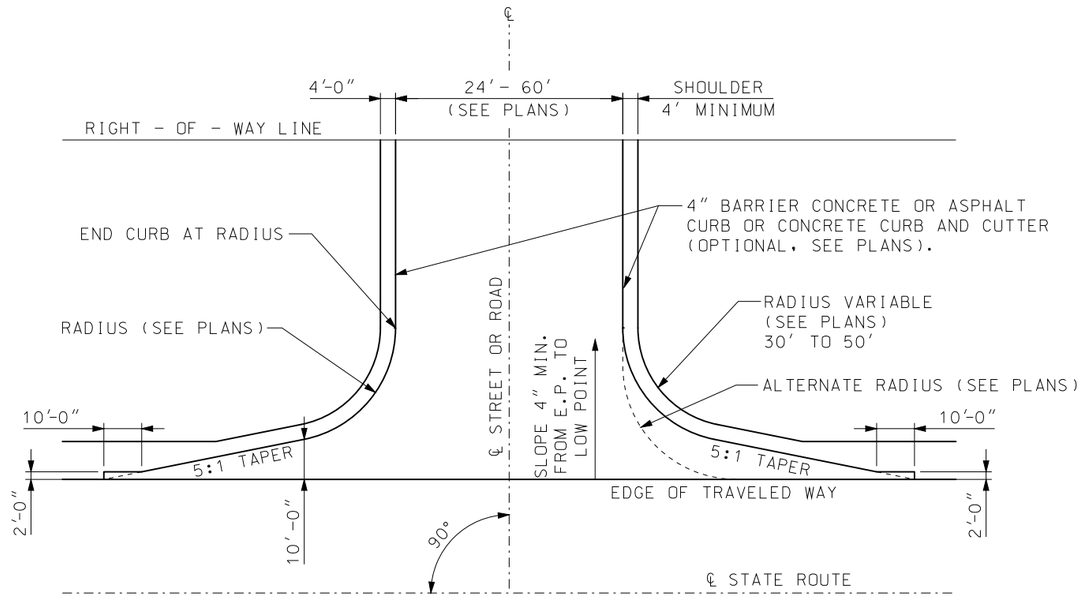

FILL SECTION OR CROWN SECTION
(WITHOUT PIPE)

PLAN VIEW

GENERAL NOTES:

RECOMMENDED WIDTH OF ROADWAY - 24' WITHOUT PARKING ON ROAD AND 32' WITH PARKING ON ROAD.

SURFACING SHALL BE AS SHOWN ON THE PLANS OR PERMIT.

LENGTH OF PIPE SHALL BE DETERMINED BY DEPTH AND LOCATION OF DITCH, (SEE PLANS).

IF A PAVED APPROACH IS REQUIRED, REFER TO STANDARD PLANS 608.00 FOR CONSTRUCTION DETAILS AND CONSTRUCT CURB (IF REQUIRED) TO MEET CURB ON PAVED APPROACH, TRANSITION REQUIRED FROM 4" CURB TO 6" CURB.

CURB OR CURB AND GUTTER BETWEEN RIGHT-OF-WAY LINE AND PIPE MAY MEET LOCAL AGENCY STANDARDS.

THIS DRAWING ILLUSTRATES DETAILS FOR MINIMUM SITUATIONS. TRAFFIC VOLUMES, SAFETY CONSIDERATIONS, DRAINAGE CONSIDERATIONS, LOCAL REQUIREMENTS, ETC., MAY DICTATE MORE EXTENSIVE IMPROVEMENTS THAN ILLUSTRATED.

PIPE SIZE AND LOCATION TO BE DETERMINED BY GEOMETRICS AND DRAINAGE CONDITIONS (SEE PLANS).

A MINIMUM 100-FOOT SIGHT DISTANCE TRIANGLE, MEASURED ALONG THE CENTERLINE OF THE INTERSECTING ROADWAYS, SHOULD BE PROVIDED.

IF A SEAL IS PRESENT ON THIS SHEET IT HAS BEEN ELECTRONICALLY SEALED AND DATED.

MISSOURI HIGHWAYS AND TRANSPORTATION COMMISSION
105 WEST CAPITOL
JEFFERSON CITY, MO 65102
1-888-ASK-MODOT (1-888-275-6636)

STATE OF MISSOURI
ERIC E. SCHROETER
NUMBER PE-28411
PROFESSIONAL ENGINEER
THIS SHEET HAS BEEN SIGNED, SEALED AND DATED ELECTRONICALLY.

DRIVEWAY
TYPE II

DATE EFFECTIVE: 04/01/2017
DATE PREPARED: 1/30/2017

203.62D

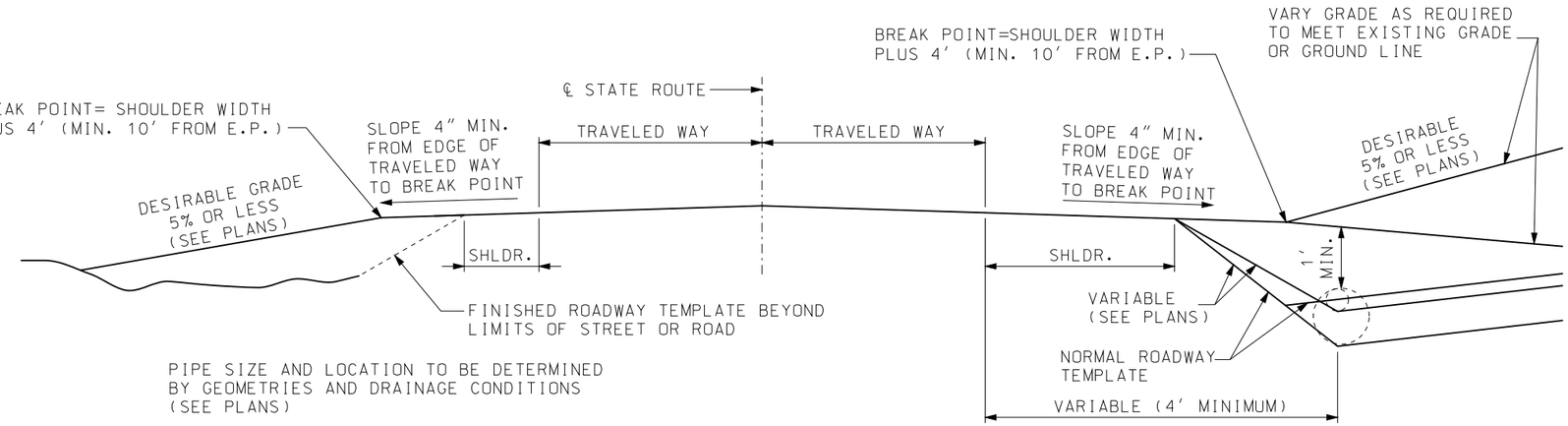

PROFILE

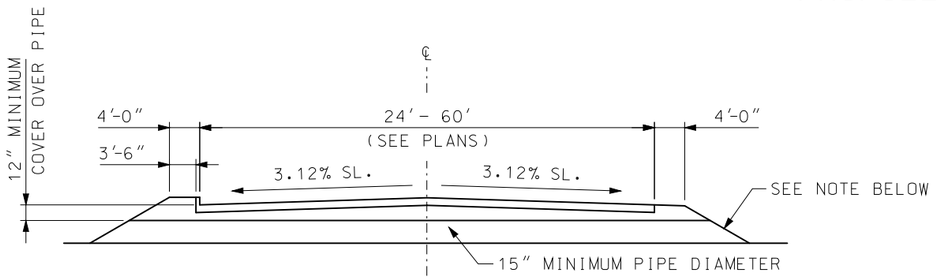

DRIVEWAY TYPICAL SECTION

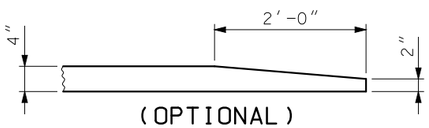

CURB TERMINUS
DETAIL

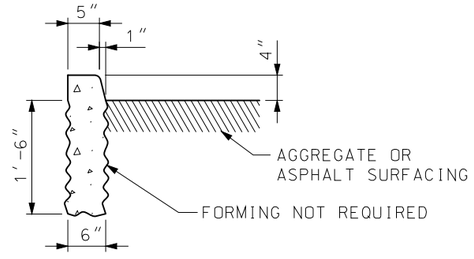

SECTION THRU 4" BARRIER CURB

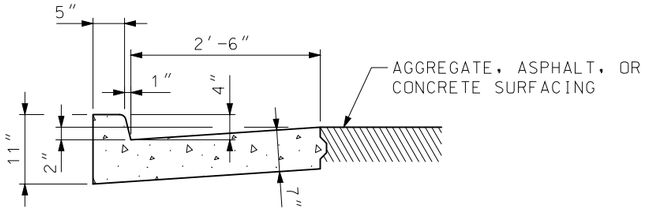

SECTION THRU CONCRETE
CURB AND GUTTER

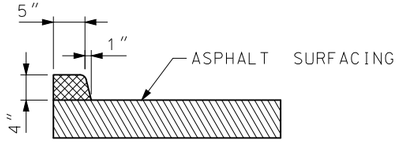

SECTION THRU 4" ASPHALT CURB

DRIVEWAY SIDE SLOPES: ✳

1 TO 1700 VEHICLES PER DAY ON STATE ROUTE USE 3:1 SLOPE
(OR 6:1 SLOPE WHERE PRACTICABLE).

OVER 1700 VEHICLES PER DAY ON STATE ROUTE USE 6:1 SLOPE
(OR FLATTER WHERE PRACTICABLE).

✳ IN ORDER TO MINIMIZE THE USE OF 6:1 SLOPED END PIPE SECTIONS ON NEW CONSTRUCTION AND WHERE POSSIBLE ON EXISTING ROUTES. THE LOCATION OF DRAINAGE PIPE SHOULD BE BEYOND THE CLEAR ZONE DISTANCE AS SHOWN IN TABLE 3.1 OF THE "ROADSIDE DESIGN GUIDE".

IF A SEAL IS PRESENT ON THIS SHEET IT HAS BEEN ELECTRONICALLY SEALED AND DATED.

MISSOURI HIGHWAYS AND TRANSPORTATION COMMISSION
105 WEST CAPITOL
JEFFERSON CITY, MO 65102
1-888-ASK-MODOT (1-888-275-6636)

STATE OF MISSOURI
ERIC E. SCHROETER
NUMBER PE-28411
PROFESSIONAL ENGINEER
THIS SHEET HAS BEEN SIGNED, SEALED AND DATED ELECTRONICALLY.

DRIVEWAY
TYPE II

DATE EFFECTIVE: 04/01/2017
DATE PREPARED: 1/30/2017

203.62D

SHEET NO.
2 OF 2

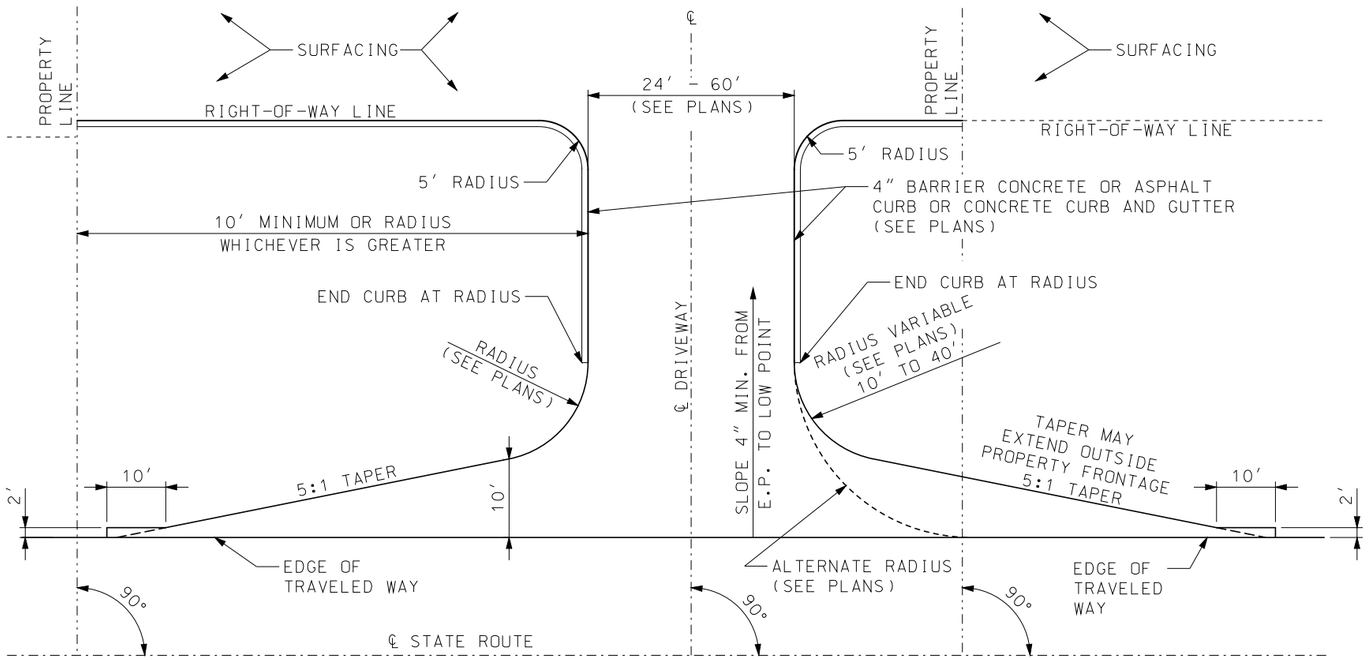

FILL SECTION OR CROWN SECTION (WITHOUT PIPE)
PLAN VIEW

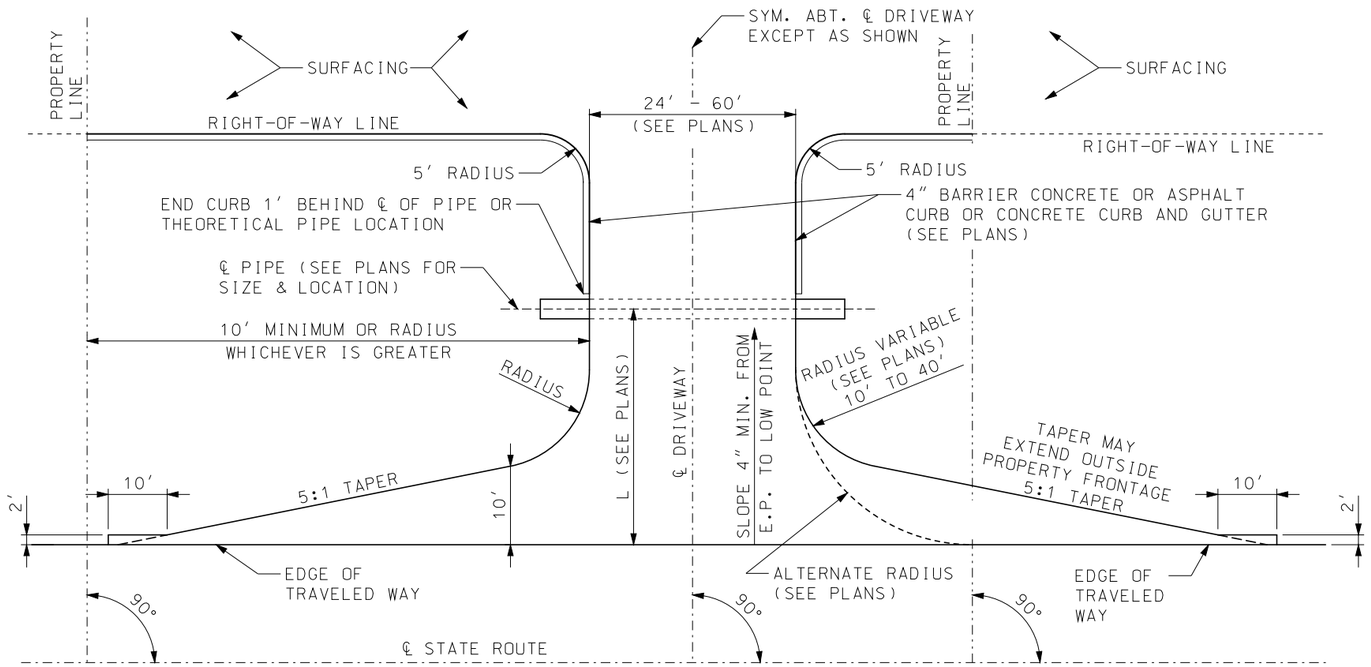

DITCH SECTION (WITH PIPE)
PLAN VIEW

GENERAL NOTES:

FOR LIGHT DUTY PAVEMENT (<3500 ADT) DRIVEWAY BEGINS AT EDGE OF PAVEMENT.

RECOMMENDED WIDTH OF DRIVEWAY - 40′. SKETCH OR PLAN REQUIRED.

NO PART OF THE DRIVEWAY EXCLUDING TAPERS SHALL BE CONSTRUCTED OUTSIDE OF THE PROPERTY FRONTAGE.

SURFACING SHALL BE AS SHOWN ON THE PLANS OR PERMIT.

LENGTH OF PIPE SHALL BE DETERMINED BY DEPTH AND LOCATION OF DITCH, (SEE PLANS).

IF A PAVED APPROACH IS REQUIRED, REFER TO STANDARD PLAN 608.00 FOR CONSTRUCTION DETAILS AND CONSTRUCT CURB (IF REQUIRED) TO MEET CURB ON PAVED APPROACH. TRANSITION REQUIRED FROM 4″ CURB TO 6″ CURB.

CURB OR CURB AND GUTTER BETWEEN RIGHT-OF-WAY LINE AND PIPE MAY MEET LOCAL AGENCY STANDARDS.

PIPE SIZE AND LOCATION TO BE DETERMINED BY GEOMETRICS AND DRAINAGE CONDITIONS (SEE PLANS).

THIS DRAWING ILLUSTRATES DRIVEWAY DETAILS FOR MINIMUM SITUATIONS. TRAFFIC VOLUMES, SAFETY CONSIDERATIONS, DRAINAGE CONSIDERATIONS, LOCAL REQUIREMENTS, ETC., MAY DICTATE MORE EXTENSIVE IMPROVEMENTS THAN ILLUSTRATED.

IF A SEAL IS PRESENT ON THIS SHEET IT HAS BEEN ELECTRONICALLY SEALED AND DATED.

MISSOURI HIGHWAYS AND TRANSPORTATION COMMISSION
105 WEST CAPITOL
JEFFERSON CITY, MO 65102
1-888-ASK-MODOT (1-888-275-6636)

STATE OF MISSOURI
ERIC E. SCHROETER
NUMBER PE-28411
PROFESSIONAL ENGINEER
THIS SHEET HAS BEEN SIGNED, SEALED AND DATED ELECTRONICALLY.

DRIVEWAY
TYPE III

DATE EFFECTIVE: 04/01/2017
DATE PREPARED: 1/30/2017

203.63B

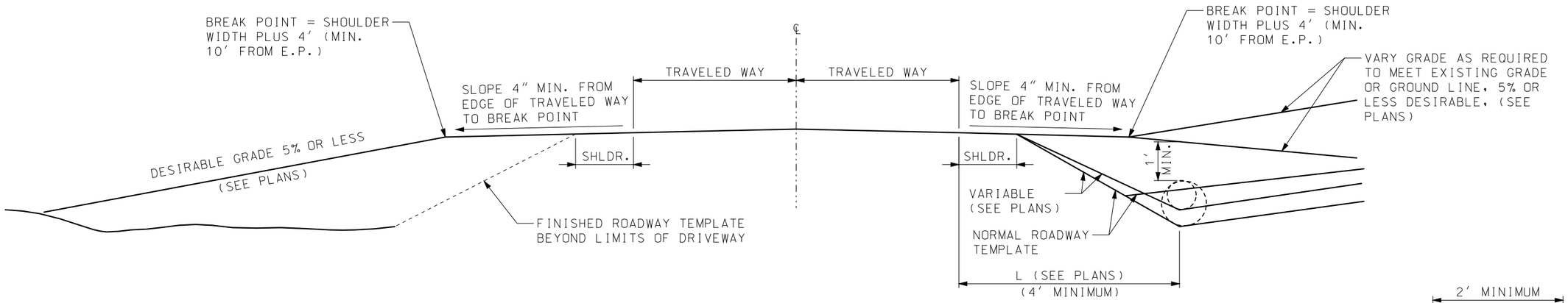

IN FILLS

PROFILE VIEW

IN CUTS

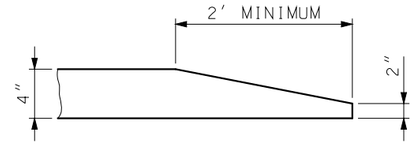

CURB TEMINUS DETAIL

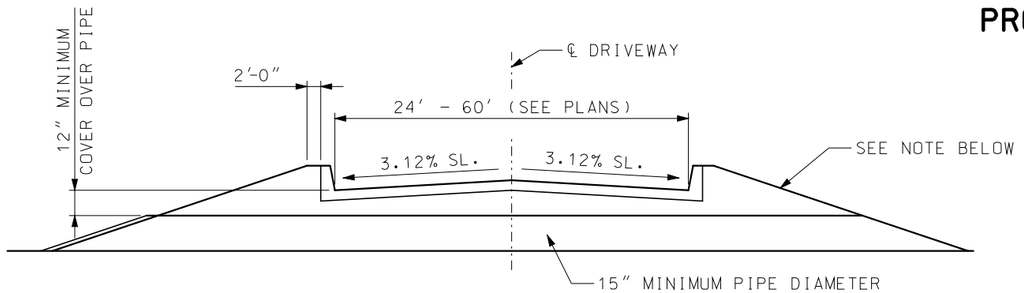

DRIVEWAY TYPICAL SECTION

DRIVEWAY SIDE SLOPES: ✳

1 TO 1700 VEHICLES PER DAY ON STATE ROUTE USE 3:1 SLOPE (OR 6:1 WHERE PRACTICABLE).
OVER 1700 VEHICLES PER DAY ON STATE ROUTE USE 6:1 SLOPE (OR FLATTER WHERE PRACTICABLE).

✳ IN ORDER TO MINIMIZE THE USE OF 6:1 SLOPED END PIPE SECTIONS ON NEW CONSTRUCTION AND WHERE POSSIBLE ON EXISTING ROUTES, THE LOCATION OF THE DRAINAGE PIPE SHOULD BE BEYOND THE CLEAR ZONE DISTANCE AS SHOWN IN TABLE 3.1 OF THE "ROADSIDE DESIGN GUIDE".

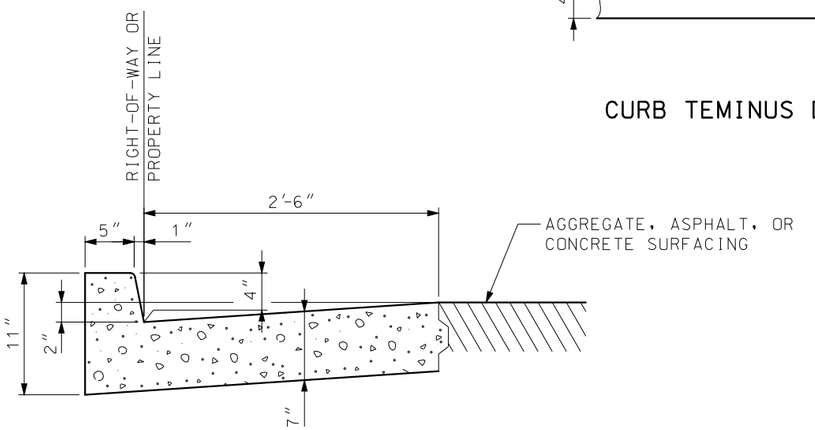

SECTION THROUGHCONCRETE CURB AND GUTTER

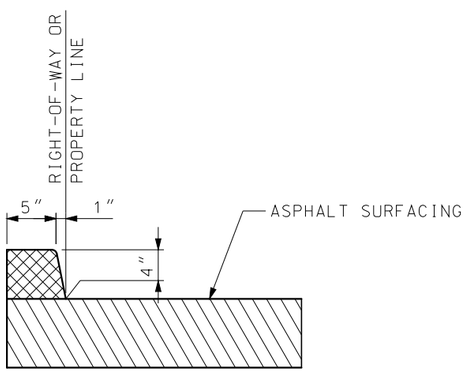

SECTION THRU 4″ ASPHALT CURB

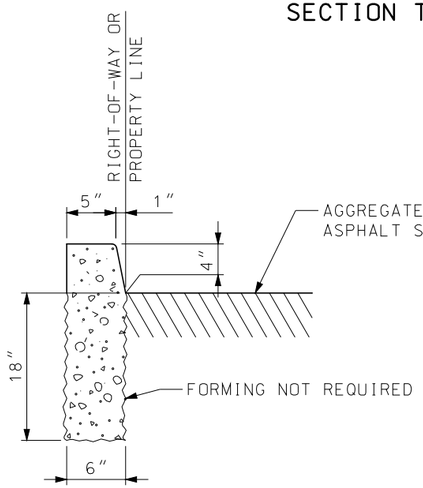

SECTION THROUGH 4″ BARRIER CURB

IF A SEAL IS PRESENT ON THIS SHEET IT HAS BEEN ELECTRONICALLY SEALED AND DATED.

MISSOURI HIGHWAYS AND TRANSPORTATION COMMISSION
105 WEST CAPITOL
JEFFERSON CITY, MO 65102
1-888-ASK-MODOT (1-888-275-6636)

STATE OF MISSOURI
ERIC E. SCHROETER
NUMBER PE-28411
PROFESSIONAL ENGINEER
THIS SHEET HAS BEEN SIGNED, SEALED AND DATED ELECTRONICALLY.

DRIVEWAY
TYPE III

DATE EFFECTIVE: 04/01/2017
DATE PREPARED: 1/30/2017

203.63B

SHEET NO. 2 OF 2

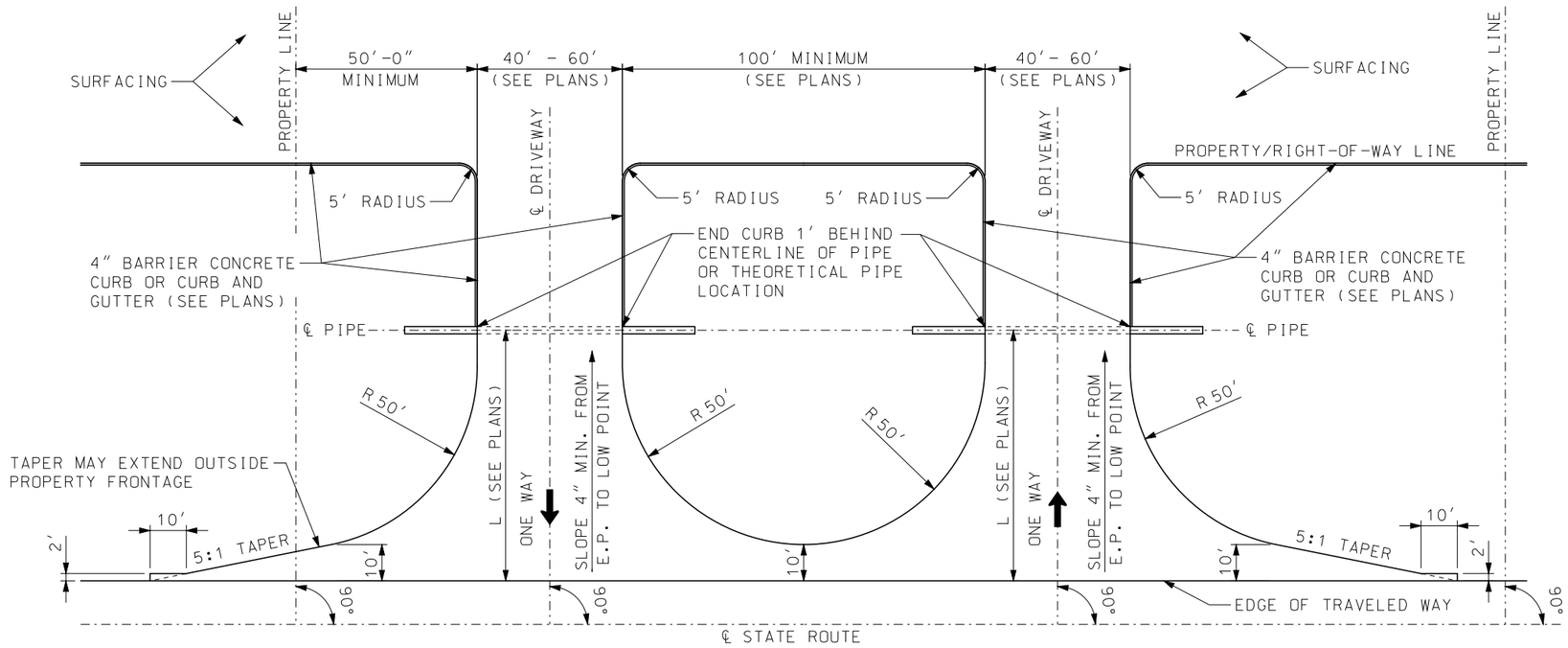

DITCH SECTION (WITH PIPE)

PLAN VIEW

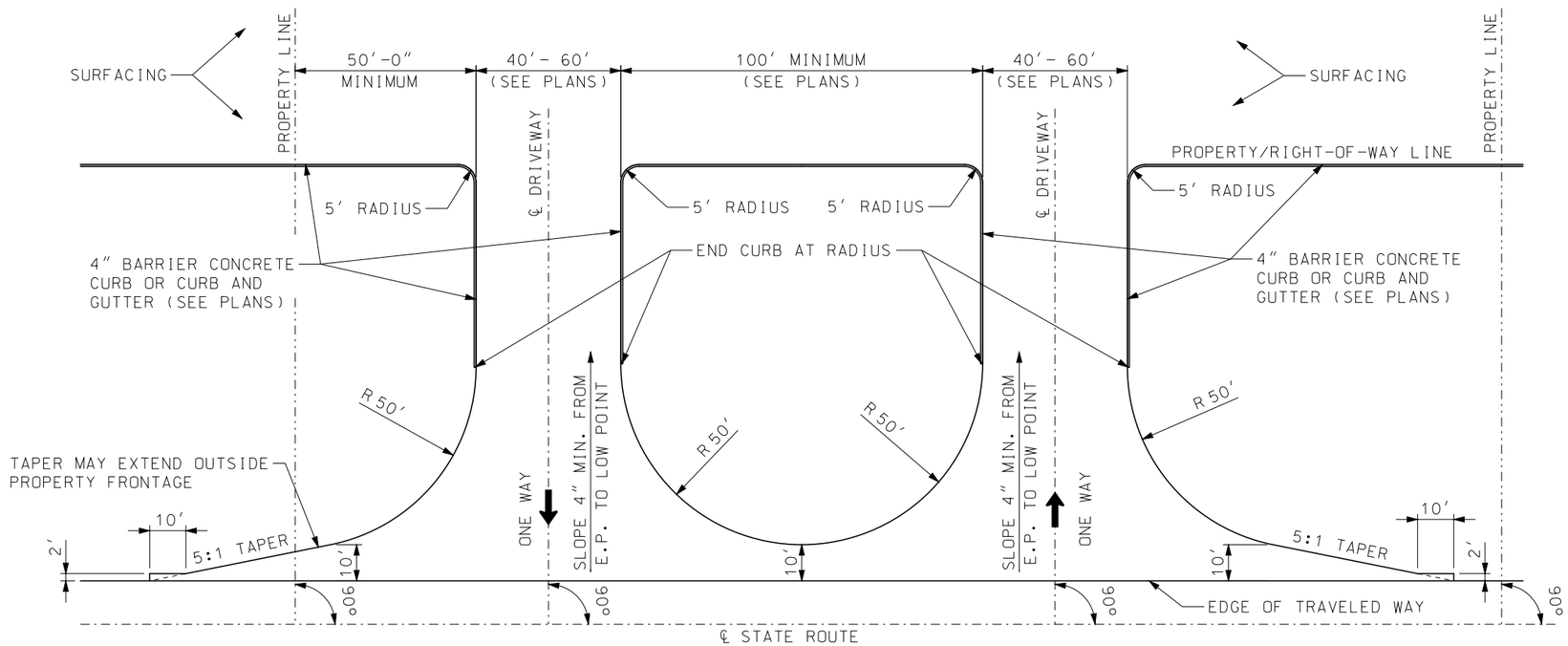

FILL SECTION OR CROWN SECTION (WITHOUT PIPE)

PLAN VIEW

GENERAL NOTES:

RECOMMENDED WIDTH OF ROADWAY - 40'.

NO PART OF THE DRIVEWAY EXCLUDING TAPERS SHALL BE CONSTRUCTED OUTSIDE OF THE PROPERTY FRONTAGE.

SURFACING SHALL BE AS SHOWN ON THE PLANS OR PERMIT.

LENGTH OF PIPE SHALL BE DETERMINED BY DEPTH AND LOCATION OF DITCH, (SEE PLANS).

IF A PAVED APPROACH IS REQUIRED, REFER TO STANDARD PLAN 608.00 FOR CONSTRUCTION DETAILS AND CONSTRUCT CURB (IF REQUIRED) TO MEET CURB ON PAVED APPROACH, TRANSITION REQUIRED FROM 4" CURB TO 6" CURB.

CURB OR CURB AND GUTTER BETWEEN RIGHT-OF-WAY LINE AND PIPE MAY MEET LOCAL AGENCY STANDARDS.

THE DRIVEWAY WIDTH SHALL BE DETERMINED AT THE TANGENT POINT OF THE RADIUS AND SIDE OF DRIVEWAY.

THIS DRAWING ILLUSTRATES DRIVEWAY DETAILS FOR MINIMUM SITUATIONS. TRAFFIC VOLUMES, SAFETY CONSIDERATIONS, DRAINAGE CONSIDERATIONS, LOCAL REQUIREMENTS, ETC., MAY DICTATE MORE EXTENSIVE IMPROVEMENTS THAN ILLUSTRATED.

PIPE SIZE AND LOCATION TO BE DETERMINED BY GEOMETRICS AND DRAINAGE CONDITIONS (SEE PLANS).

IF A SEAL IS PRESENT ON THIS SHEET IT HAS BEEN ELECTRONICALLY SEALED AND DATED.

MISSOURI HIGHWAYS AND TRANSPORTATION COMMISSION
105 WEST CAPITOL
JEFFERSON CITY, MO 65102
1-888-ASK-MODOT (1-888-275-6636)

STATE OF MISSOURI
ERIC E. SCHROETER
NUMBER PE-2011
PROFESSIONAL ENGINEER
THIS SHEET HAS BEEN SIGNED, SEALED AND DATED ELECTRONICALLY.

DRIVEWAY
TYPE IV

DATE EFFECTIVE: 04/01/2017
DATE PREPARED: 1/30/2017

203.64D

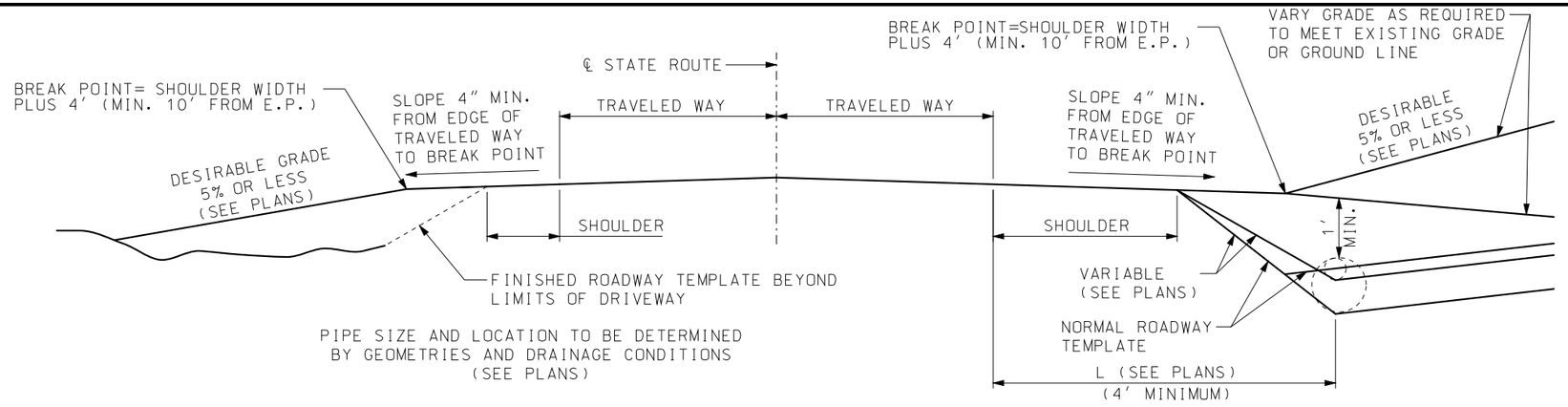

PROFILE

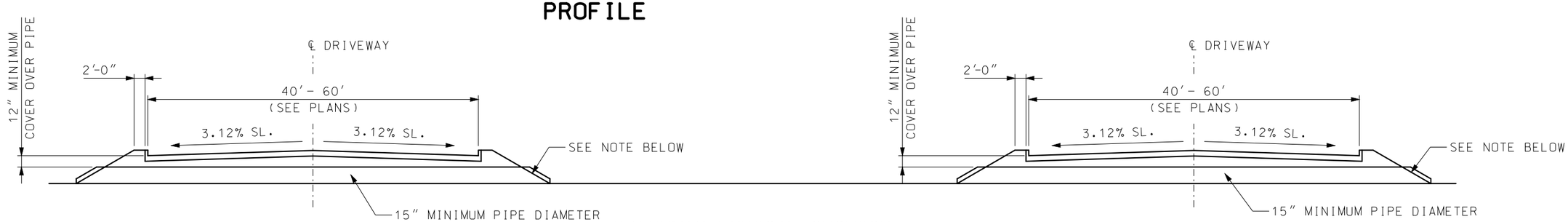

DRIVEWAY TYPICAL SECTION

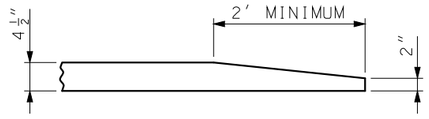

CURB TERMINUS DETAIL

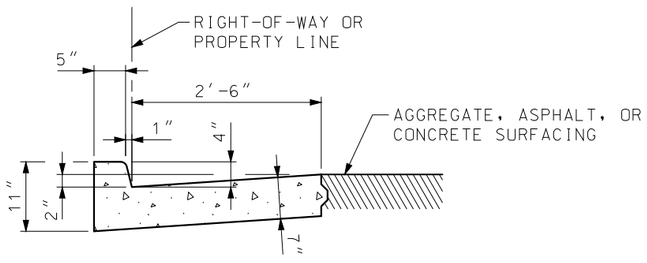

SECTION THRU CONCRETE CURB AND GUTTER

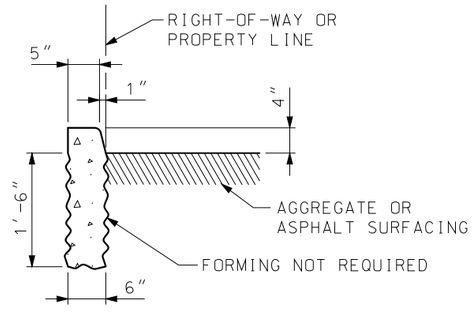

SECTION THRU 4" BARRIER CURB

DRIVEWAY SIDE SLOPES: ✳

1 TO 1700 VEHICLES PER DAY ON STATE ROUTE USE 3:1 SLOPE (OR 6:1 SLOPE WHERE PRACTICABLE).

OVER 1700 VEHICLES PER DAY ON STATE ROUTE USE 6:1 SLOPE (OR FLATTER WHERE PRACTICABLE).

✳ IN ORDER TO MINIMIZE THE USE OF 6:1 SLOPE AND PIPE SECTIONS ON NEW CONSTRUCTION OF DRAINAGE PIPE SHOULD BE BEYOND THE CLEAR ZONE DISTANCE AS SHOWN IN TABLE 3.1 OF THE "ROADSIDE DESIGN GUIDE".

MISSOURI HIGHWAYS AND TRANSPORTATION COMMISSION
105 WEST CAPITOL
JEFFERSON CITY, MO 65102
1-888-ASK-MODOT (1-888-275-6636)

STATE OF MISSOURI
ERIC E. SCHROETER
NUMBER PE-28411
PROFESSIONAL ENGINEER
THIS SHEET HAS BEEN SIGNED, SEALED AND DATED ELECTRONICALLY.

DRIVEWAY
TYPE IV

DATE EFFECTIVE: 04/01/2017
DATE PREPARED: 1/30/2017

203.64D

SHEET NO. 2 OF 2

IF A SEAL IS PRESENT ON THIS SHEET IT HAS BEEN ELECTRONICALLY SEALED AND DATED.

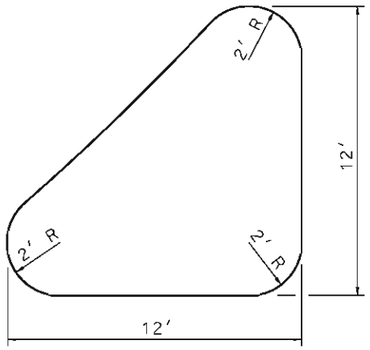

NOTE:

SEE STANDARD PLAN 203.50 FOR DETAILS OF LOW PROFILE ISLAND.

WHERE MINIMUM ISLAND CANNOT BE OBTAINED, OMIT ISLAND.

MINIMUM ISLAND DETAILS

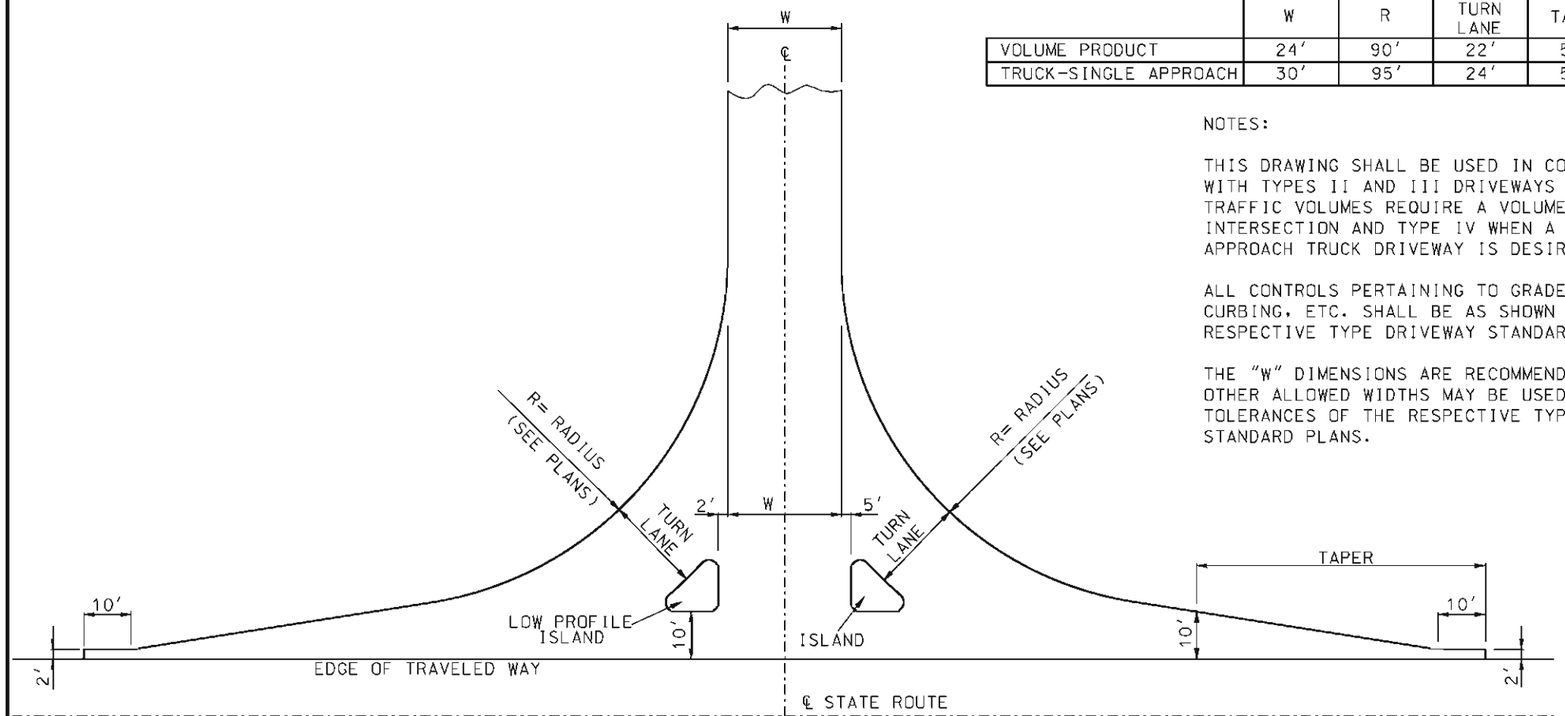

PLAN VIEW

	W	R	MIN. TURN LANE	TAPER
VOLUME PRODUCT	24'	90'	22'	5:1
TRUCK-SINGLE APPROACH	30'	95'	24'	5:1

NOTES:

THIS DRAWING SHALL BE USED IN CONJUNCTION WITH TYPES II AND III DRIVEWAYS WHEN TRAFFIC VOLUMES REQUIRE A VOLUME PRODUCT INTERSECTION AND TYPE IV WHEN A SINGLE APPROACH TRUCK DRIVEWAY IS DESIRED.

ALL CONTROLS PERTAINING TO GRADES, DRAINAGE, CURBING, ETC. SHALL BE AS SHOWN ON OTHER RESPECTIVE TYPE DRIVEWAY STANDARD PLANS.

THE "W" DIMENSIONS ARE RECOMMENDED WIDTH. OTHER ALLOWED WIDTHS MAY BE USED WITHIN TOLERANCES OF THE RESPECTIVE TYPE DRIVEWAY STANDARD PLANS.

GENERAL NOTES:

DETAILS SHOWN ON THIS SHEET ARE FOR RIGHT ANGLE APPROACHES.

TAPER LENGTHS ARE NOT APPLICABLE WHEN DECELERATION LANES ARE PROVIDED.

SIGNALIZED INTERSECTIONS AND INTERSECTIONS IN DEVELOPED AREAS MAY BE MODIFIED TO MEET EXISTING CONDITIONS.

THIS DRAWING ILLUSTRATES DRIVEWAY DETAILS FOR MINIMUM SITUATIONS. TRAFFIC VOLUMES, SAFETY CONSIDERATIONS, DRAINAGE CONSIDERATIONS, LOCAL REQUIREMENTS, ETC., MAY DICTATE MORE EXTENSIVE IMPROVEMENTS THAN ILLUSTRATED.

MISSOURI HIGHWAYS AND TRANSPORTATION COMMISSION
105 WEST CAPITOL
JEFFERSON CITY, MO 65102
1-888-ASK-MODOT (1-888-275-6636)

STATE OF MISSOURI
KATHRYN PHILLIPS HARVEY
NUMBER PE-23751
PROFESSIONAL ENGINEER
THIS SHEET HAS BEEN SIGNED, SEALED AND DATED ELECTRONICALLY

DRIVEWAY
TYPE V

DATE EFFECTIVE: 10/01/1998
DATE PREPARED: 8/21/2009

203.65A

SHEET NO. 1 OF 1

IF A SEAL IS PRESENT ON THIS SHEET IT HAS BEEN ELECTRONICALLY SEALED AND DATED.

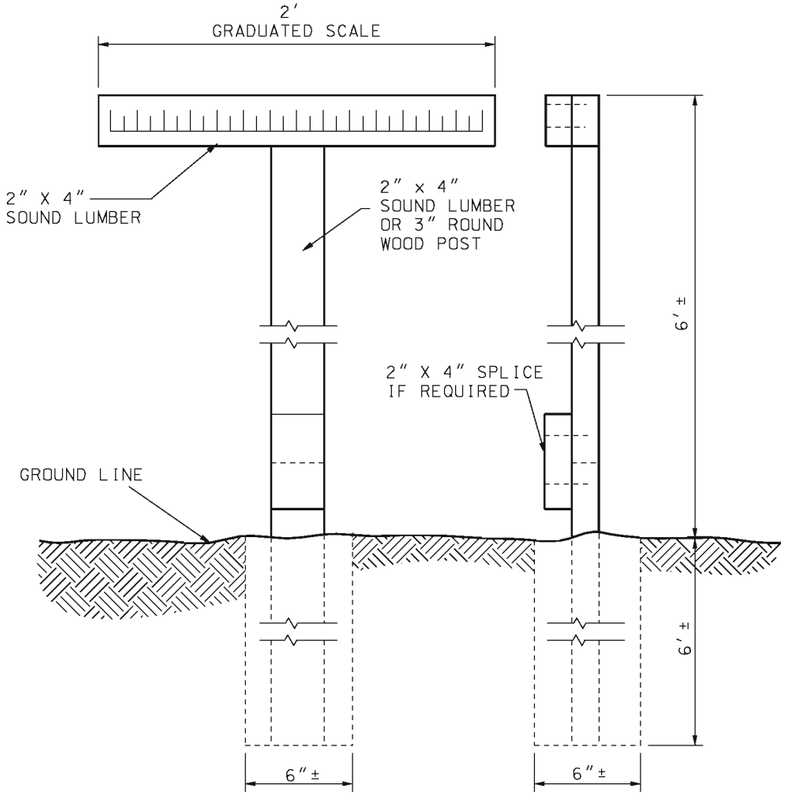

EMBANKMENT CONTROL STAKE

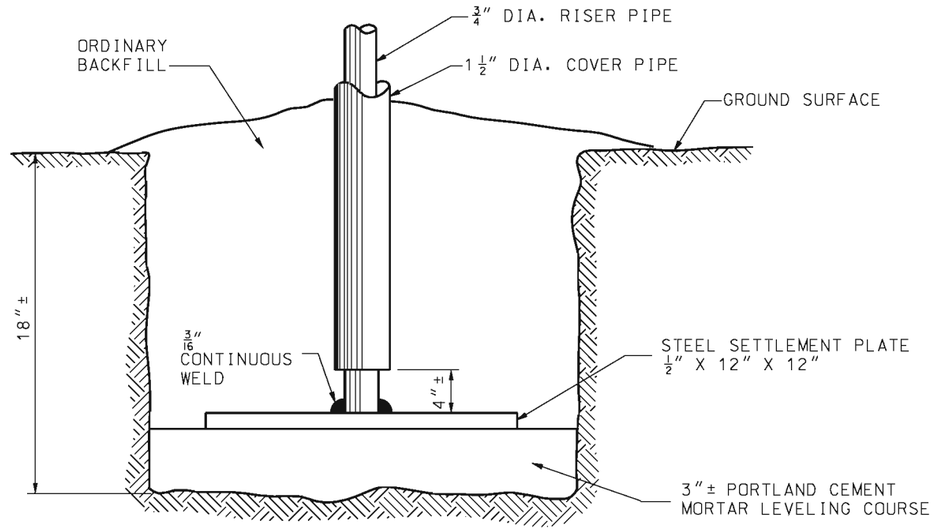

SETTLEMENT GAUGE

IF A SEAL IS PRESENT ON THIS SHEET IT HAS BEEN ELECTRONICALLY SEALED AND DATED.

MISSOURI HIGHWAYS AND TRANSPORTATION COMMISSION
105 WEST CAPITOL
JEFFERSON CITY, MO 65102
1-888-ASK-MODOT (1-888-275-6636)

STATE OF MISSOURI
KATHRYN PHILLIPS HARVEY
NUMBER PE-23751
PROFESSIONAL ENGINEER
THIS SHEET HAS BEEN SIGNED, SEALED AND DATED ELECTRONICALLY.

EMBANKMENT CONTROL
MEASURING DEVICES

DATE EFFECTIVE: 04/01/1983
DATE PREPARED: 8/21/2009

204.00D

SHEET NO.
1 OF 1

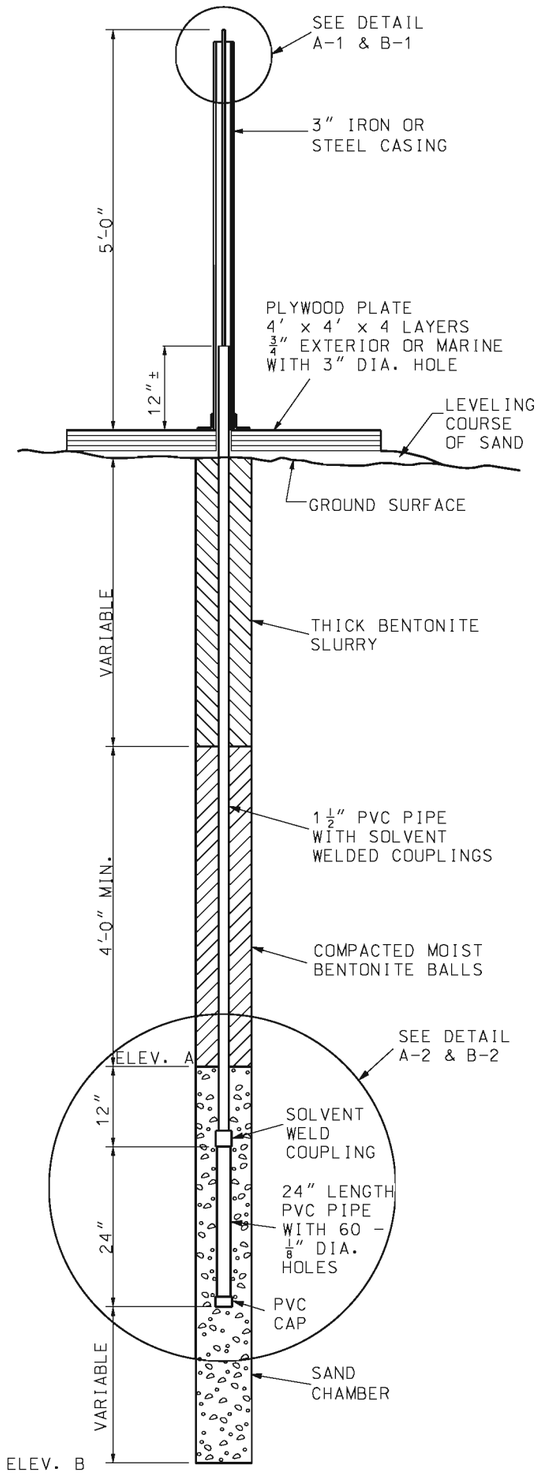

GENERAL

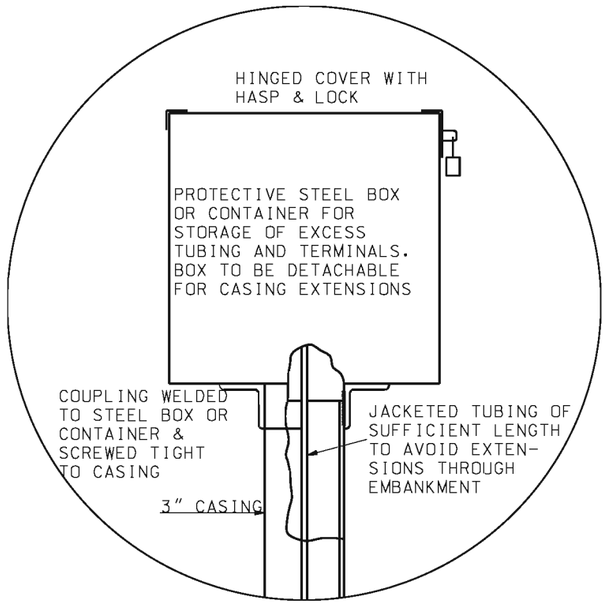

DETAIL A-1

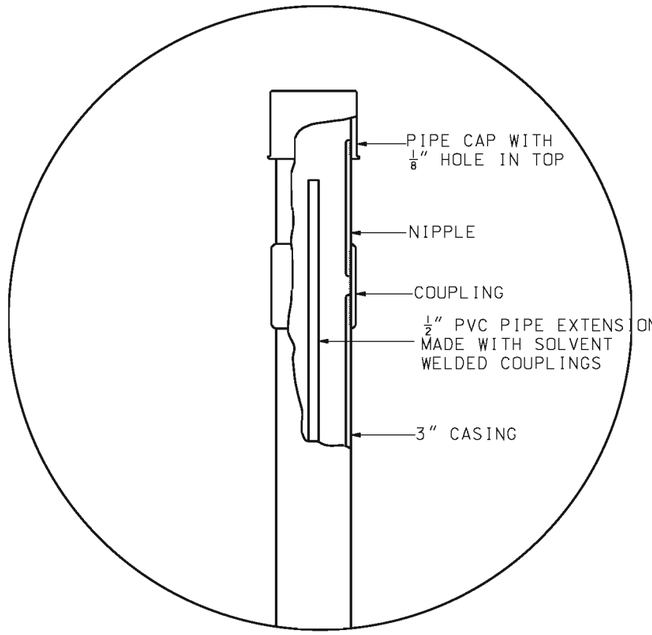

DETAIL B-1

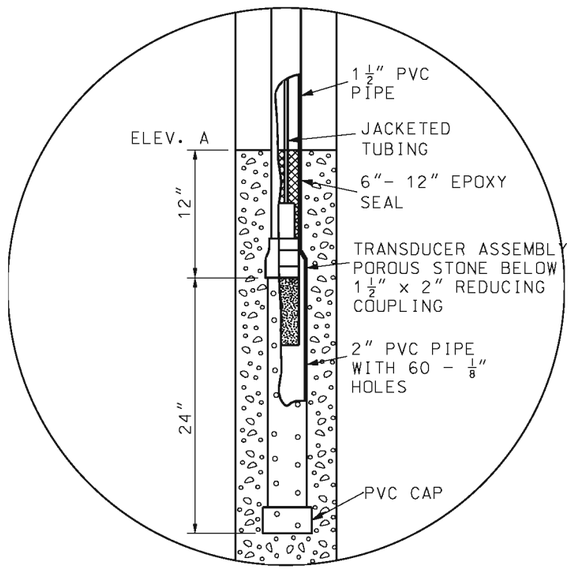

DETAIL A-2
TYPE A

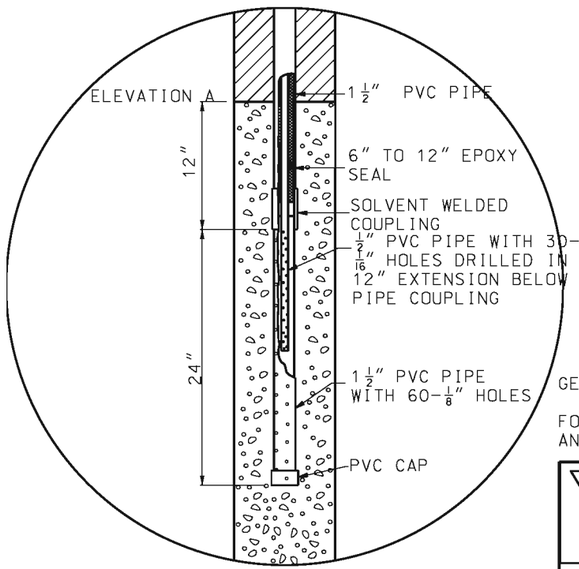

DETAIL B-2
TYPE B

GENERAL NOTES:

FOR ELEVATION A AND ELEVATION B STATION, LOCATIONS AND EMBANKMENT CONTROL LIMITS, SEE ROADWAY PLANS.

IF A SEAL IS PRESENT ON THIS SHEET IT HAS BEEN ELECTRONICALLY SEALED AND DATED.

MISSOURI HIGHWAYS AND TRANSPORTATION COMMISSION
105 WEST CAPITOL
JEFFERSON CITY, MO 65102
1-888-ASK-MODOT (1-888-275-6636)

STATE OF MISSOURI
KATHRYN PHILLIPS HARVEY
NUMBER PE-23751
PROFESSIONAL ENGINEER
THIS SHEET HAS BEEN SIGNED, SEALED AND DATED ELECTRONICALLY.

PORE PRESSURE MEASUREMENT DEVICES

DATE EFFECTIVE: 03/01/1996
DATE PREPARED: 8/21/2009

204.30

SHEET NO. 1 OF 1

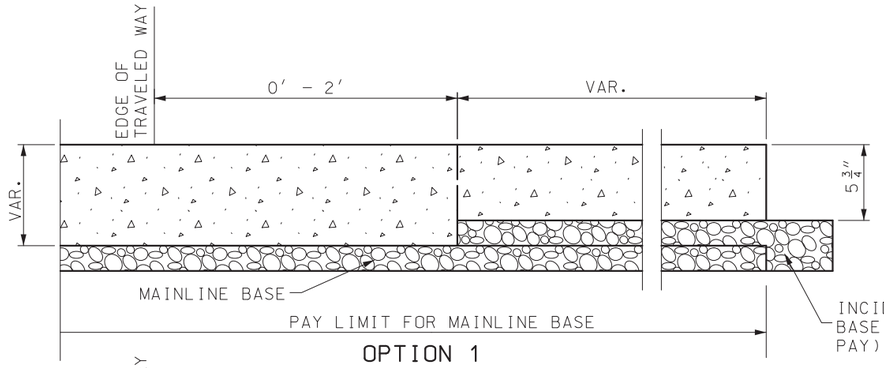

OPTION 1

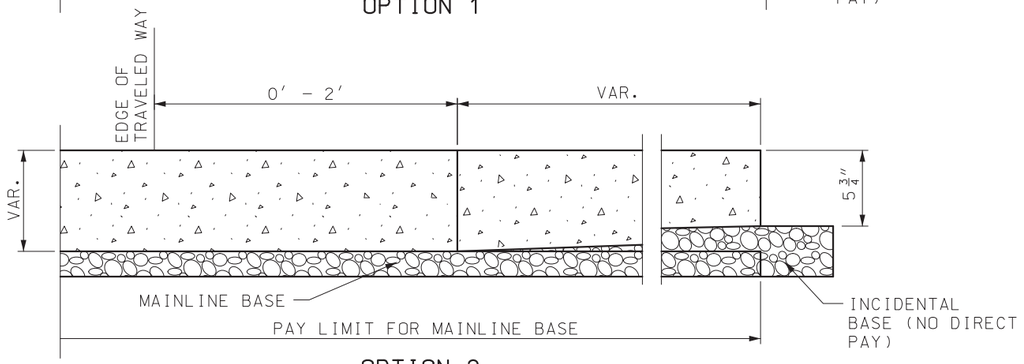

OPTION 2

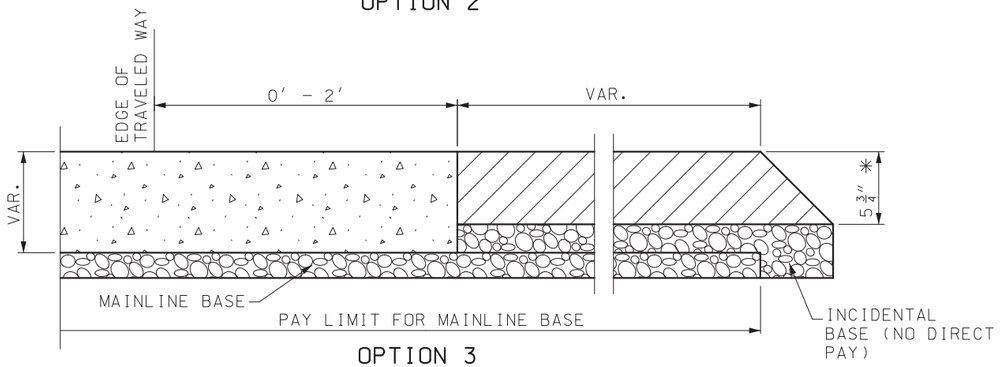

OPTION 3

PCC PAVEMENT

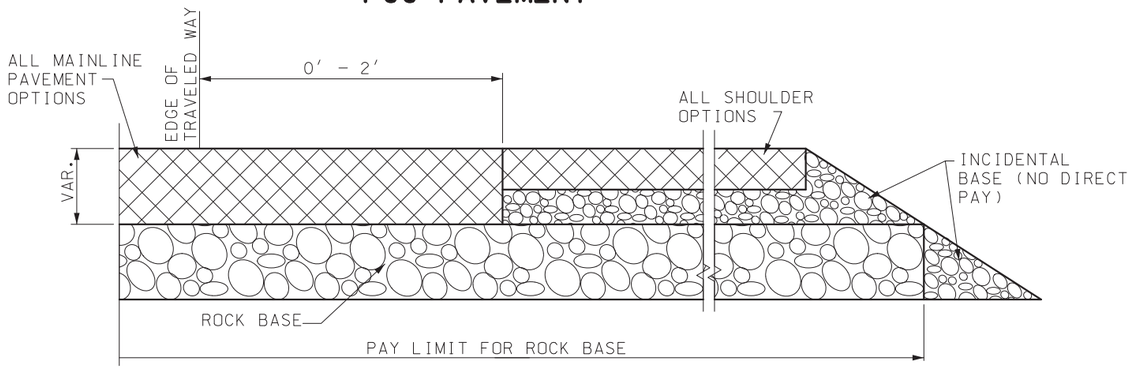

PAVEMENT ON ROCK BASE

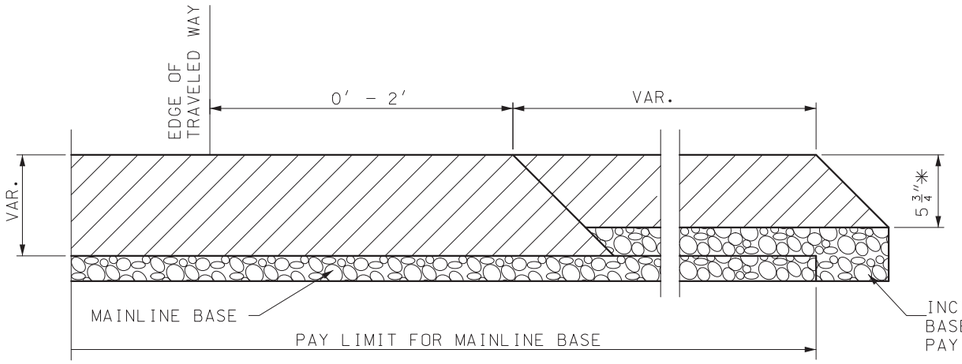

HMA PAVEMENT

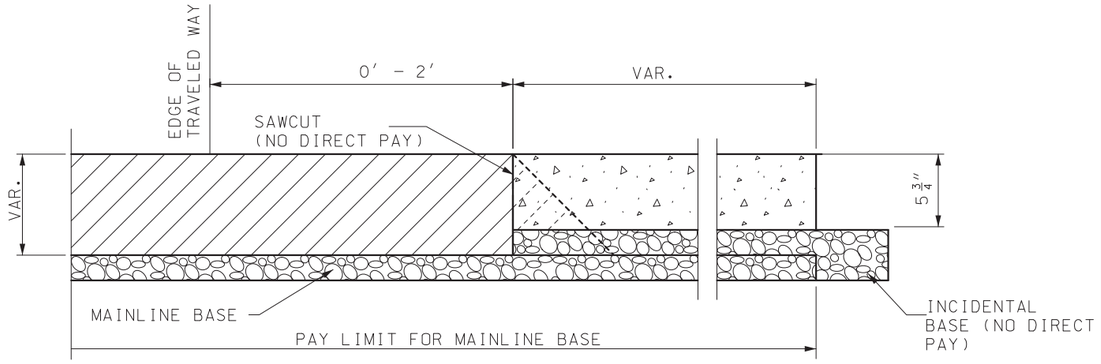

HMA PAVEMENT

RCC (ROLLER COMPACTED CONCRETE) OR
PCC (PORTLAND CEMENT CONCRETE)
HMA (HOT MIX ASPHALT)

BASE

* USE 1 3/4″ BP-1 OVER 4″ PMBB UNLESS OTHERWISE SPECIFIED ON THE PLANS.

GENERAL NOTE:

THE FINAL FINISH ON CONCRETE SHOULDERS MAY BE OBTAINED BY THE USE OF A DRAG CONSISTING OF A SEAMLESS STRIP OF DAMP BURLAP, COTTON FABRIC, PLASTIC TURF, OR OTHER SUITABLE MATERIAL CAPABLE OF PRODUCING A UNIFORM SURFACE OF GRITTY TEXTURE.

THE QUANTITY FOR ADDITIONAL BASE MATERIAL RESULTING FROM THE VARIABLE THICKNESS MATERIAL OR CONSTRUCTION METHOD OF TYPE A2 SHOULDER WILL BE CONSIDERED INCIDENTAL.

INCIDENTAL BASE SHALL CONSIST OF TYPE 1 OR 5 AGGREGATE FOR BASE, OR AN ALTERNATE MATERIAL THAT MEETS THE APPROVAL OF THE ENGINEER.

IF A SEAL IS PRESENT ON THIS SHEET IT HAS BEEN ELECTRONICALLY SEALED AND DATED.

MISSOURI HIGHWAYS AND TRANSPORTATION COMMISSION
105 WEST CAPITOL
JEFFERSON CITY, MO 65102
1-888-ASK-MODOT (1-888-275-6636)

STATE OF MISSOURI
ERIC E. SCHROETER
NUMBER PE-28411
PROFESSIONAL ENGINEER
THIS SHEET HAS BEEN SIGNED, SEALED AND DATED ELECTRONICALLY.

TYPE A2 SHOULDERS

DATE EFFECTIVE: 07/01/2018
DATE PREPARED: 5/3/2018

401.00C

SHEET NO. 1 OF 3

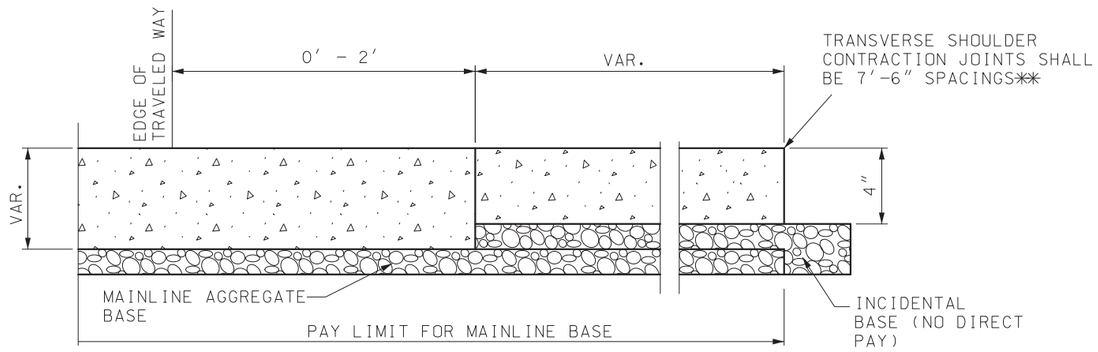

OPTION 1

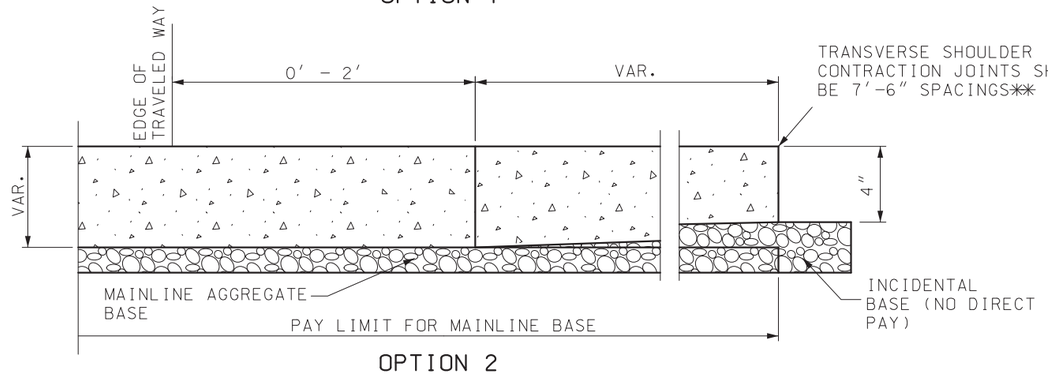

OPTION 2

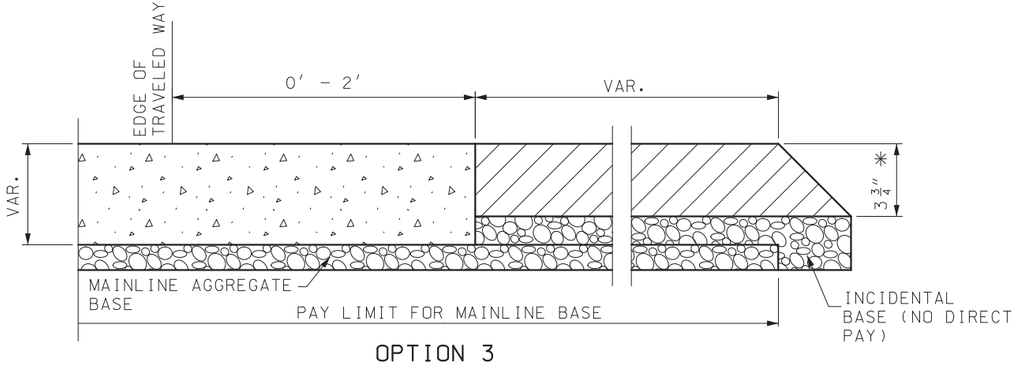

OPTION 3

PCC PAVEMENT

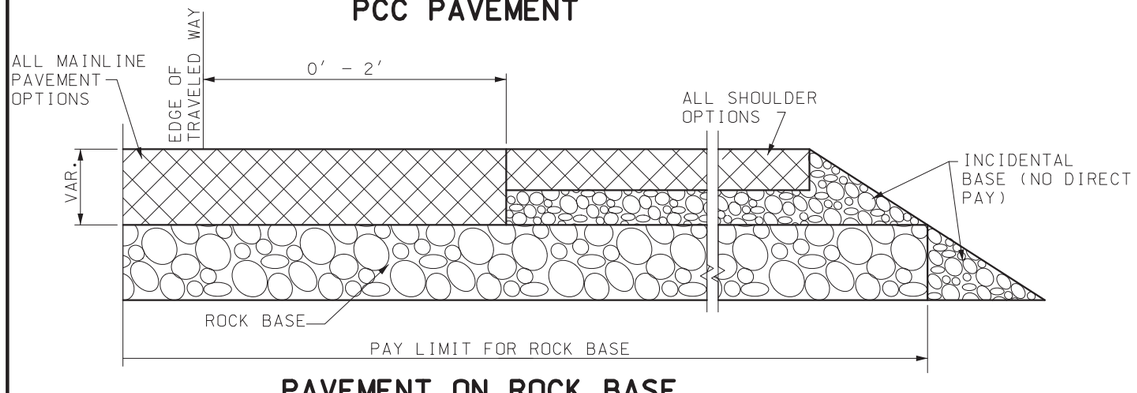

PAVEMENT ON ROCK BASE

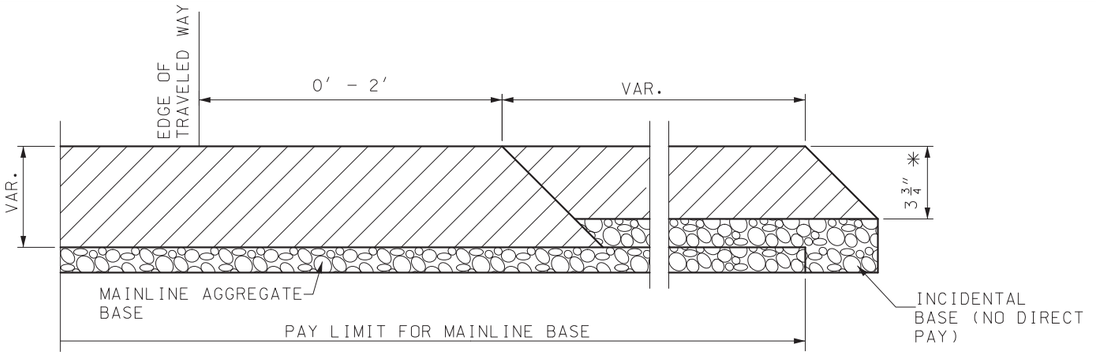

HMA PAVEMENT

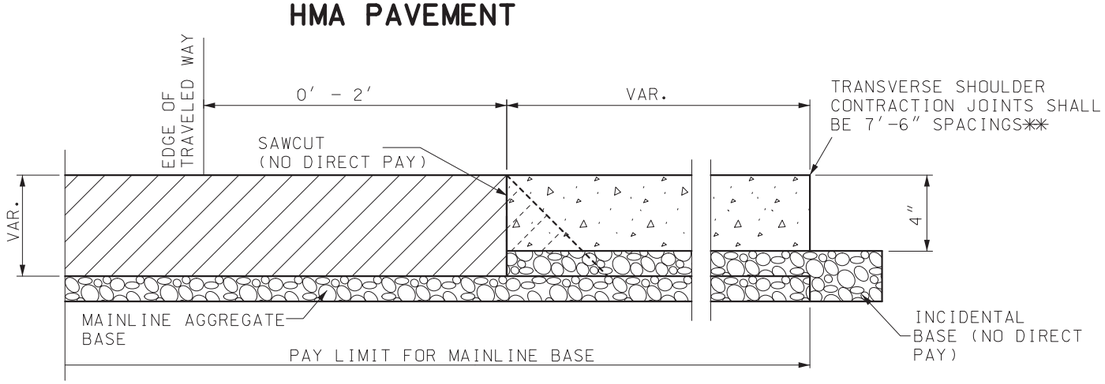

HMA PAVEMENT

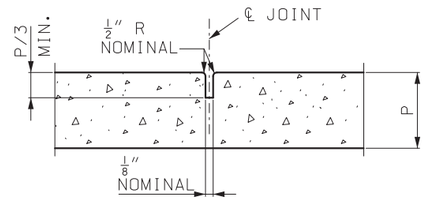

TOOL JOINT

P = SHOULDER THICKNESS

RCC (ROLLER COMPACTED CONCRETE) OR
PCC (PORTLAND CEMENT CONCRETE)
HMA (HOT MIX ASPHALT)

BASE

* USE 3 3/4″ BP-1 UNLESS OTHERWISE SPECIFIED ON THE PLANS.

** JOINT DEPTH SHALL BE P/3 AND MAY BE SAWED OR TOOLED.

GENERAL NOTE:

THE FINAL FINISH ON CONCRETE SHOULDERS MAY BE OBTAINED BY THE USE OF A DRAG CONSISTING OF A SEAMLESS STRIP OF DAMP BURLAP, COTTON FABRIC, PLASTIC TURF OR OTHER SUITABLE MATERIAL CAPABLE OF PRODUCING A UNIFORM SURFACE OF GRITTY TEXTURE.

THE QUANTITY FOR ADDITIONAL BASE MATERIAL RESULTING FROM THE VARIABLE THICKNESS MATERIAL OR CONSTRUCTION METHOD OF TYPE A3 SHOULDER WILL BE CONSIDERED INCIDENTAL.

INCIDENTAL BASE SHALL CONSIST OF TYPE 1 OR 5 AGGREGATE FOR BASE, OR AN ALTERNATE MATERIAL THAT MEETS THE APPROVAL OF THE ENGINEER.

IF A SEAL IS PRESENT ON THIS SHEET IT HAS BEEN ELECTRONICALLY SEALED AND DATED.

MISSOURI HIGHWAYS AND TRANSPORTATION COMMISSION
105 WEST CAPITOL
JEFFERSON CITY, MO 65102
1-888-ASK-MODOT (1-888-275-6636)

STATE OF MISSOURI
ERIC E. SCHROETER
NUMBER PE-28411
PROFESSIONAL ENGINEER
THIS SHEET HAS BEEN SIGNED, SEALED AND DATED ELECTRONICALLY.

TYPE A3 SHOULDERS

DATE EFFECTIVE: 07/01/2018
DATE PREPARED: 5/3/2018

401.00C

SHEET NO. 2 OF 3

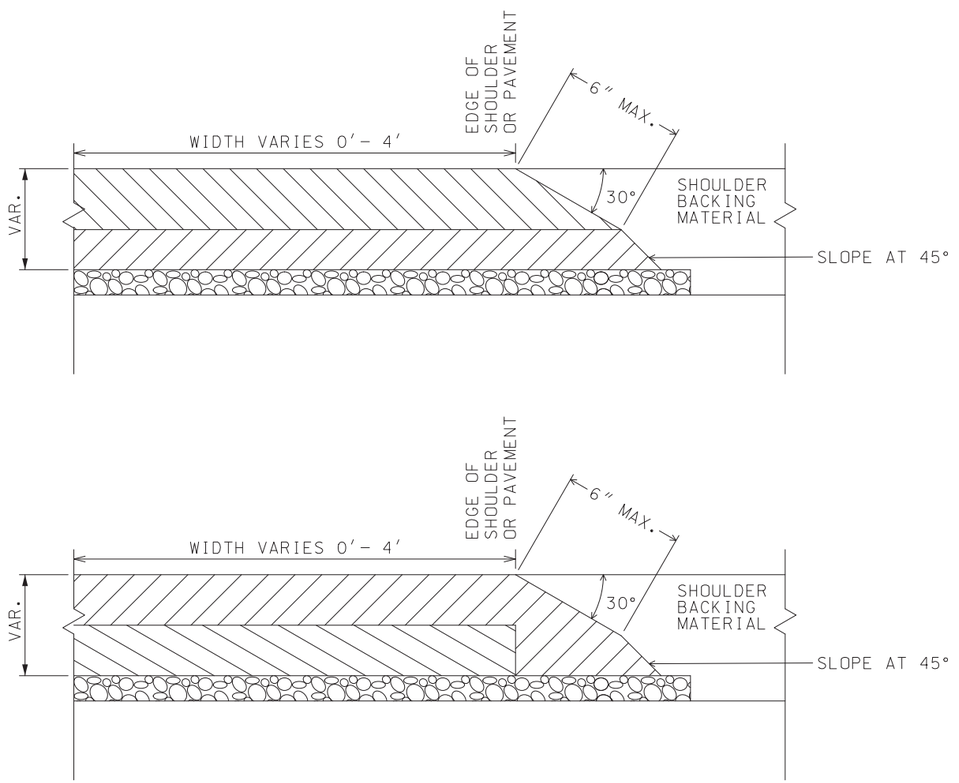

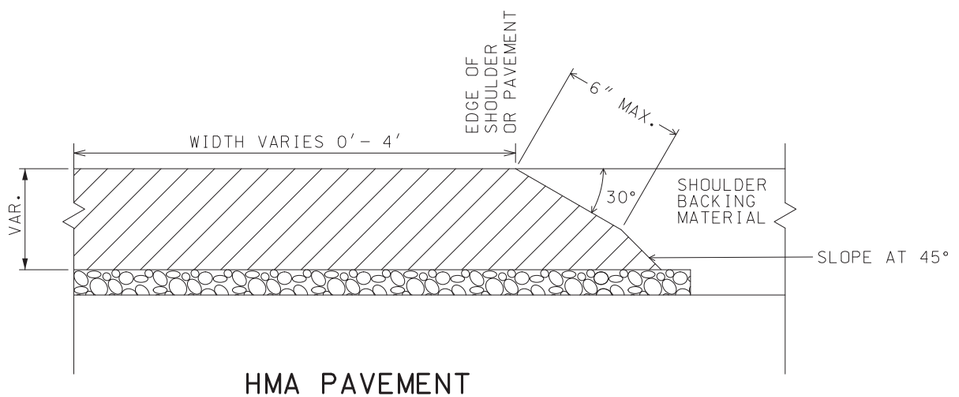

HMA PAVEMENT

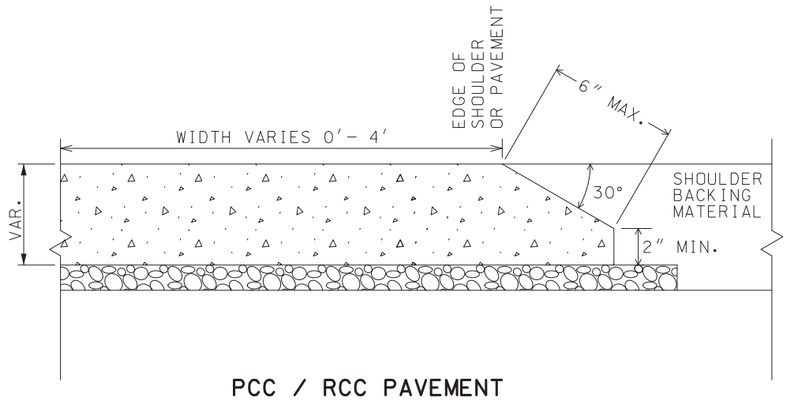

PCC / RCC PAVEMENT

RCC (ROLLER COMPACTED CONCRETE) OR PCC (PORTLAND CEMENT CONCRETE)

HMA (HOT MIX ASPHALT)

BASE MATERIAL (IF APPLICABLE)

GENERAL NOTES:

THE SAFETY EDGE^{SM} SHALL BE CONSTRUCTED AT A SLOPE OF 30° FROM THE HORIZONTAL. THE LENGTH, AS MEASURED ALONG THE SLOPE, SHALL BE APPROXIMATELY 2 TIMES THE DEPTH, UP TO A MAXIMUM LENGTH OF 6".

THE SAFETY EDGE^{SM} SHALL BE CONSTRUCTED MONOLITHICALLY WITH THE SHOULDER OR PAVEMENT.

THE SAFETY EDGE^{SM} SHALL BE BACKFILLED AS SHOWN.

REGARDLESS OF PAVEMENT TYPE, WHEN PAYMENT FOR PAVEMENT OR SHOULDER IS MADE PER SQUARE YARD, THE MATERIAL NECESSARY TO CONSTRUCT THE SAFETY EDGE^{SM} IS CONSIDERED INCIDENTAL TO THE PAVEMENT OR SHOULDER. NO MEASUREMENT WILL BE MADE FOR THE MATERIAL USED IN THE SAFETY EDGE^{SM} EXCEPT WHEN PAYMENT FOR PAVEMENT OR SHOULDER IS MADE IN VOLUME OR WEIGHT.

MISSOURI HIGHWAYS AND TRANSPORTATION COMMISSION
105 WEST CAPITOL
JEFFERSON CITY, MO 65102
1-888-ASK-MODOT (1-888-275-6636)

STATE OF MISSOURI
ERIC E. SCHROETER
NUMBER PE-28411
PROFESSIONAL ENGINEER
THIS SHEET HAS BEEN SIGNED, SEALED AND DATED ELECTRONICALLY.

SAFETY EDGE^{SM}

DATE EFFECTIVE: 07/01/2018
DATE PREPARED: 5/3/2018

401.00C

SHEET NO. 3 OF 3

IF A SEAL IS PRESENT ON THIS SHEET IT HAS BEEN ELECTRONICALLY SEALED AND DATED.

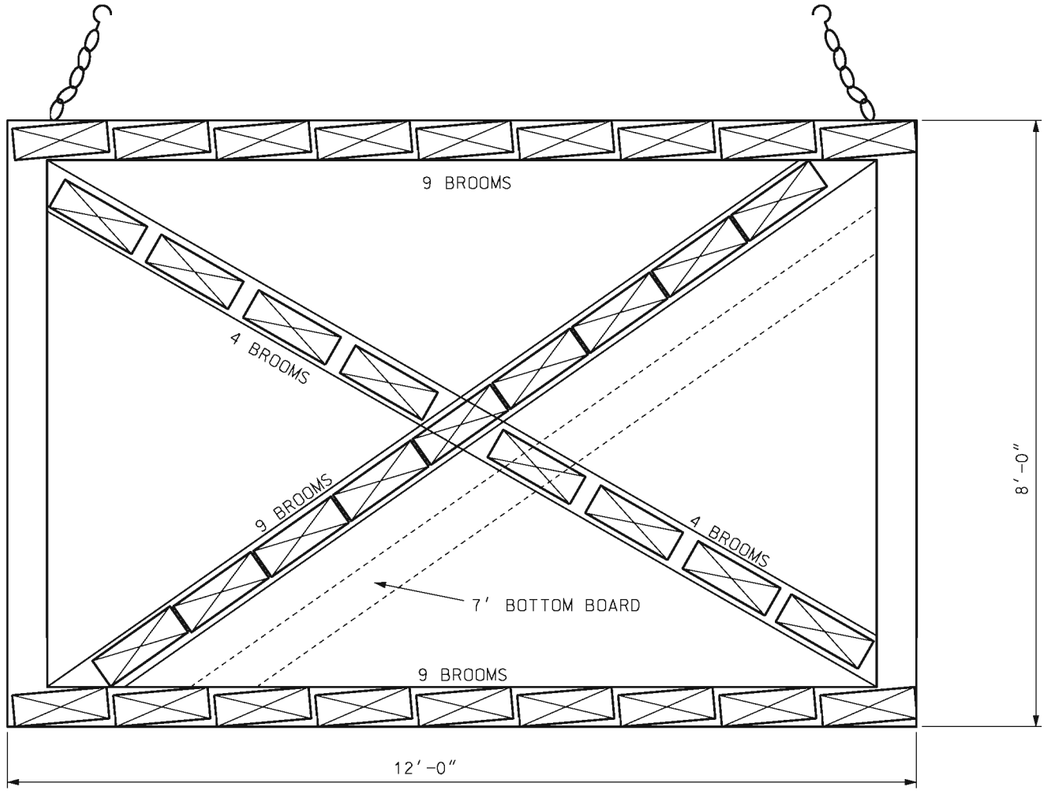

STREET BROOMS WITH NYLON BRISTLES

$\frac{3}{8}$" CHAIN WITH HOOKS

MISSOURI HIGHWAYS AND TRANSPORTATION COMMISSION
105 WEST CAPITOL
JEFFERSON CITY, MO 65102
1-888-ASK-MODOT (1-888-275-6636)

STATE OF MISSOURI
KATHRYN PHILLIPS HARVEY
NUMBER PE-23751
PROFESSIONAL ENGINEER

THIS SHEET HAS BEEN SIGNED, SEALED AND DATED ELECTRONICALLY.

SCRUB SEAL BROOM CONFIGURATION

DATE EFFECTIVE: 07/01/2004
DATE PREPARED: 8/21/2009

413.20

SHEET NO. 1 OF 1

IF A SEAL IS PRESENT ON THIS SHEET IT HAS BEEN ELECTRONICALLY SEALED AND DATED.

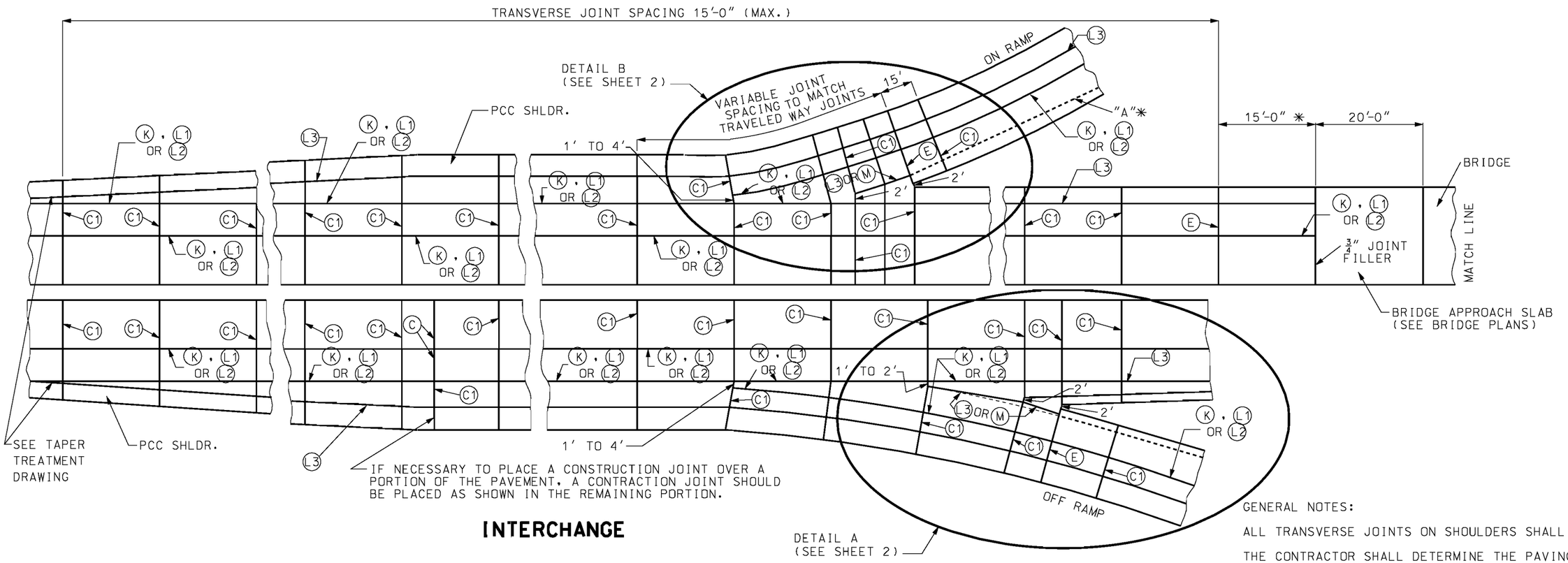

INTERCHANGE

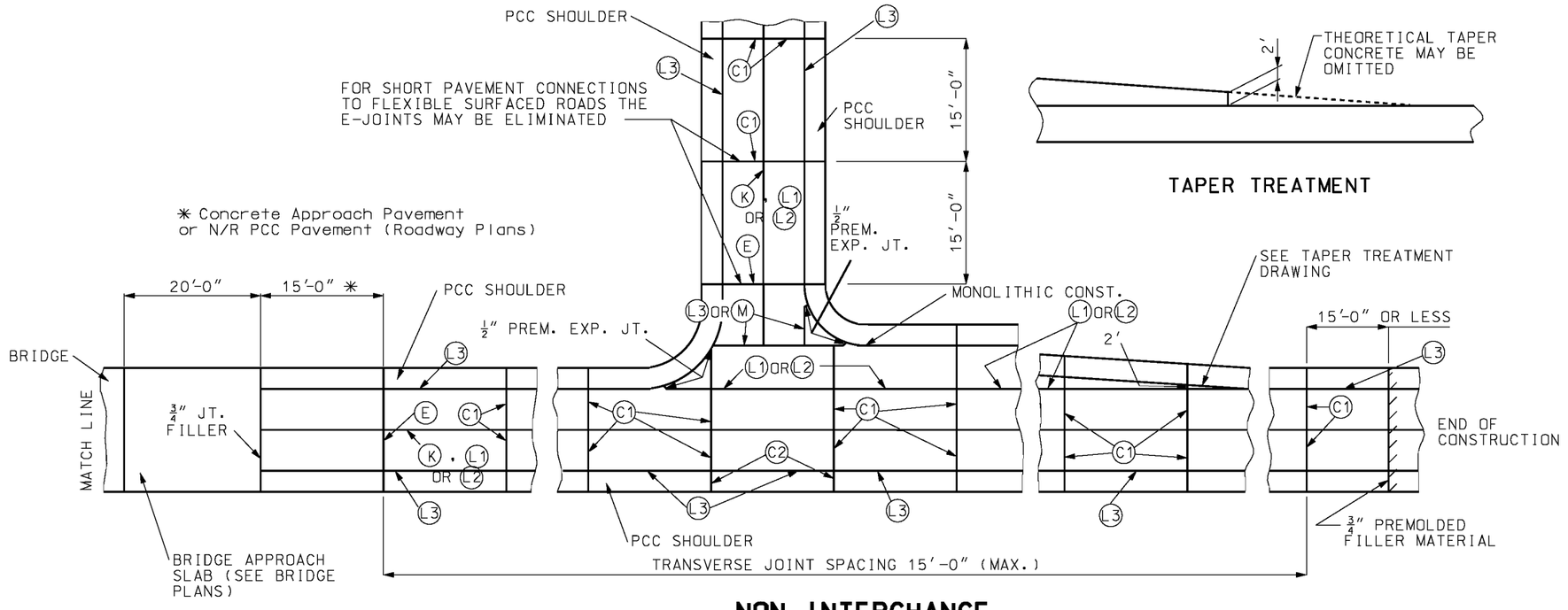

NON-INTERCHANGE

TAPER TREATMENT

GENERAL NOTES:

ALL TRANSVERSE JOINTS ON SHOULDERS SHALL BE (C2).

THE CONTRACTOR SHALL DETERMINE THE PAVING WIDTH.

(L3) SHALL BE USED BETWEEN PAVEMENT AND SHOULDER GREATER THAN 4'. THE INTERCHANGE WILL EXTEND FROM THE BEGINNING OF THE ACCELERATION/DECELERATION LANE TO THE GORE RETURN TAPER ON THE MAINLINE. THE INTERCHANGE WILL ALSO INCLUDE THE RAMPS UP TO THE BEGINNING OF THE RADIUS WITH THE ROAD INTERSECTING THE RAMP.

FOR JOINT DETAILS, SEE SHEETS NO. 3 & 4.

THE JOINT LAYOUT OF RAMPS IS TYPICAL FOR OUTER RAMPS OF CLOVERLEAF AND DIAMOND INTERCHANGES. SEE OTHER DRAWINGS FOR SPECIAL JOINT LAYOUTS.

JOINT SPACING SHOWN IS MAXIMUM AND IS TO BE REDUCED TO AVOID CONFLICT WITH ABUTTING STRUCTURES. JOINTS IN MULTI-LANE PAVEMENT ARE TO BE CONTINUOUS.

ALL SHOULDERS 4' OR LESS IN WIDTH CAST MONOLITHICALLY WITH THE ADJACENT LANE AND SHALL NOT HAVE A LONGITUDINAL JOINT OR TIE BARS.

MISSOURI HIGHWAYS AND TRANSPORTATION COMMISSION
105 WEST CAPITOL
JEFFERSON CITY, MO 65102
1-888-ASK-MODOT (1-888-275-6636)

STATE OF MISSOURI
ERIC E. SCHROETER
NUMBER PE-28411
PROFESSIONAL ENGINEER
THIS SHEET HAS BEEN SIGNED, SEALED AND DATED ELECTRONICALLY.

CONCRETE PAVEMENT AND BASE APPURTENANCES FOR 15' JOINT SPACING

DATE EFFECTIVE: 07/01/2015
DATE PREPARED: 5/29/2015

502.05N

SHEET NO. 1 OF 4

IF A SEAL IS PRESENT ON THIS SHEET IT HAS BEEN ELECTRONICALLY SEALED AND DATED.

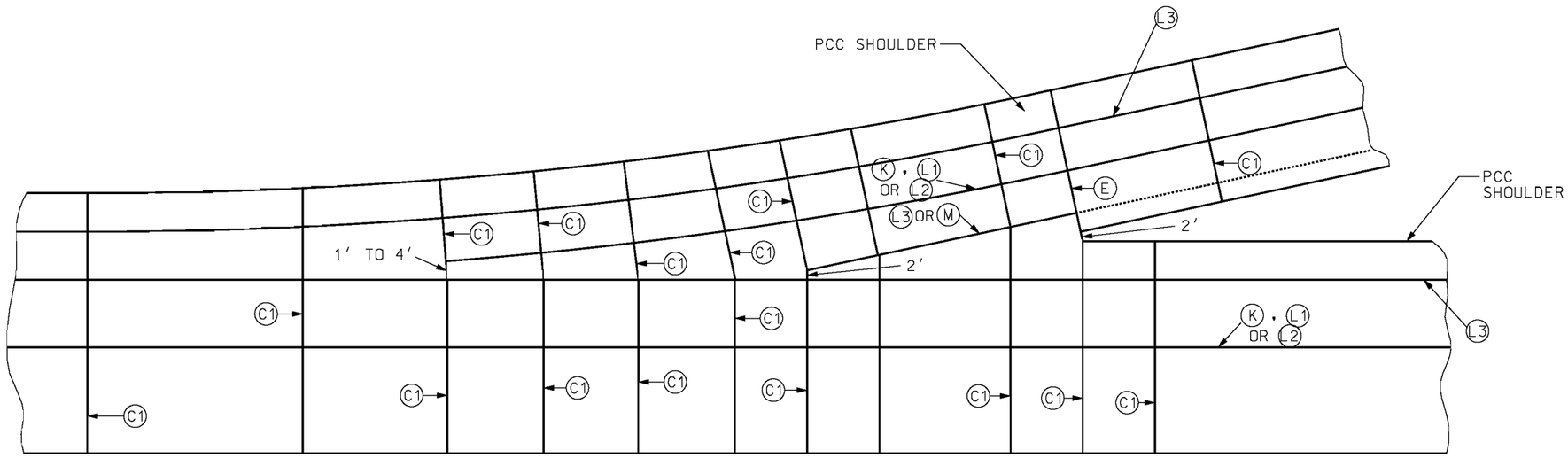

DETAIL B
(FROM SHEET 1 OF 4)

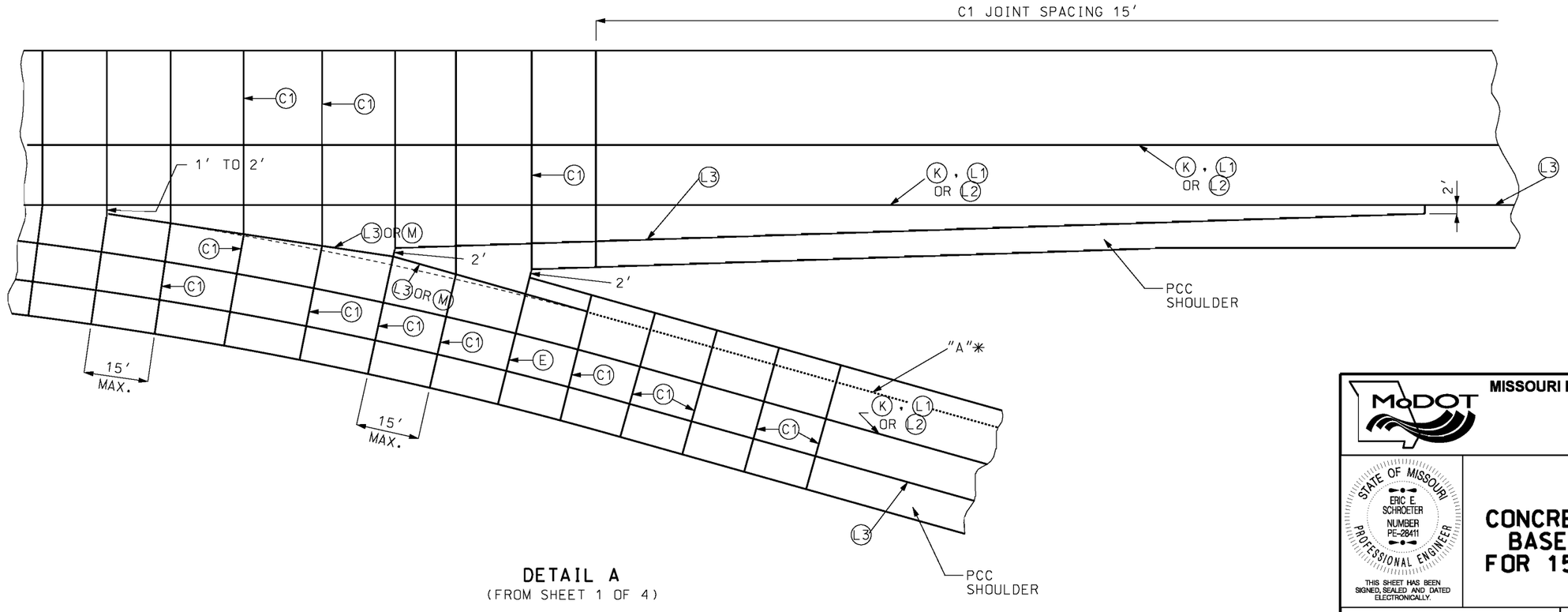

DETAIL A
(FROM SHEET 1 OF 4)

MISSOURI HIGHWAYS AND TRANSPORTATION COMMISSION
105 WEST CAPITOL
JEFFERSON CITY, MO 65102
1-888-ASK-MODOT (1-888-275-6636)

STATE OF MISSOURI
ERIC E. SCHROETER
NUMBER PE-28411
PROFESSIONAL ENGINEER
THIS SHEET HAS BEEN SIGNED, SEALED AND DATED ELECTRONICALLY.

CONCRETE PAVEMENT AND BASE APPURTENANCES FOR 15' JOINT SPACING

DATE EFFECTIVE: 07/01/2015
DATE PREPARED: 5/29/2015

502.05N

SHEET NO. 2 OF 4

IF A SEAL IS PRESENT ON THIS SHEET IT HAS BEEN ELECTRONICALLY SEALED AND DATED.

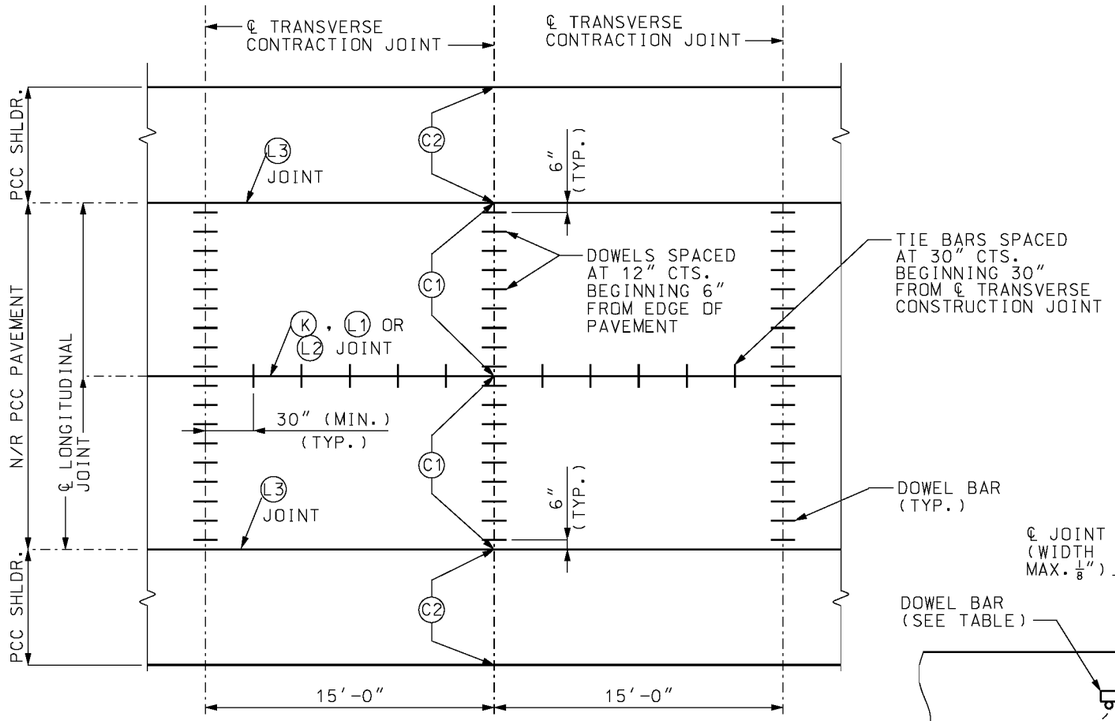

JOINT PLAN AND SPACING FOR CONTRACTION JOINTS (1)

(1) LONGITUDINAL JOINT NOT REQUIRED AT INSIDE SHOULDER ON DIVIDED HIGHWAYS OR AT INSIDE SHOULDER OF RAMPS . FOR 4' OR LESS INSIDE SHOULDERS, DOWELS ARE REQUIRED FOR THE FIRST TWO FEET ADJACENT TO THE TRAVEL LANE.

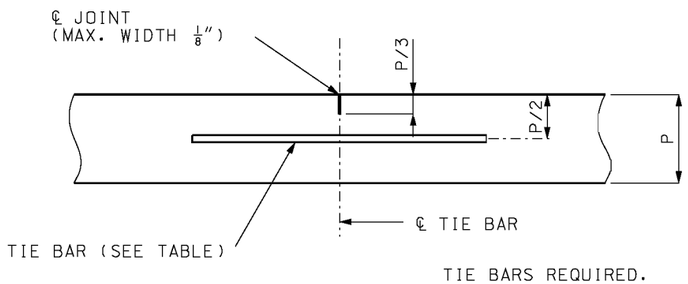

TIE BARS REQUIRED.

LONGITUDINAL JOINT (L1)

TIE BAR AND DOWEL TABLE				
PCCP THICKNESS (P)	DOWEL SIZE	TIE BAR SIZE	DOWEL SPACING	TIE BAR SPACING
LESS THAN 7"	NONE	#5X30"	NONE	30" CTR.-CTR.
7" TO 10"	1 1/4"X18"	#5X30"	12" CTR.-CTR.	30" CTR.-CTR.
GREATER THAN 10"	1 1/2"X18"	#6X40"	12" CTR.-CTR.	30" CTR.-CTR.

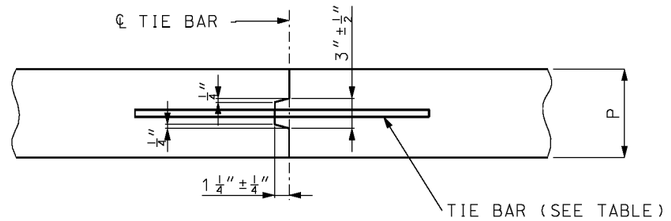

IF METAL IS USED TO FORM KEY DISCONTINUE STRIP FOR DISTANCE OF APPROXIMATELY 3" EACH SIDE OF TRANSVERSE JOINT.

TYPE (K) REQUIRES TIE BAR.

TYPE (M) CONSTRUCTED WITHOUT TIE BARS.

(K) AND (M) JOINTS SHALL NOT BE SAWED.

TONGUE AND GROOVE JOINTS (K) AND (M)

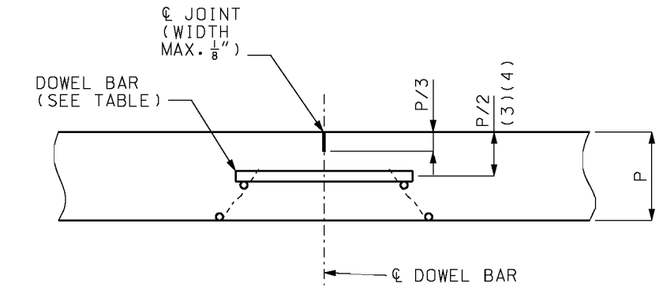

DOWELS REQUIRED. FOR PERMISSIBLE TYPES OF DOWELS SUPPORTING UNITS, SEE OTHER DRAWINGS.

TRANSVERSE CONTRACTION JOINTS FOR CONCRETE PAVEMENT OR BASE WIDENING SHALL MATCH EXISTING JOINTS.

TRANSVERSE CONTRACTION JOINT (C1) (2)

(2) DOWEL BARS ARE REQUIRED FOR ALL PAVEMENTS HAVING THE SAME THICKNESS AS THE TRAVELED WAY.
(3) FOR PAVEMENTS HAVING THICKNESS IN 1/2" INCREMENTS, DOWEL BASKETS SHALL BE P/2- 1/2".
(4) DOWEL BARS MAY BE PLACED BY MECHANICAL MEANS AT THE OPTION OF THE CONTRACTOR.

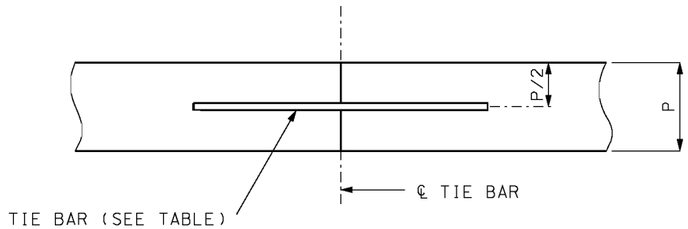

TIE BARS REQUIRED.

LONGITUDINAL CONSTRUCTION JOINT (L2)

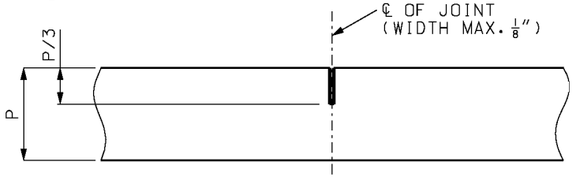

TRANSVERSE CONTRACTION JOINT (C2)

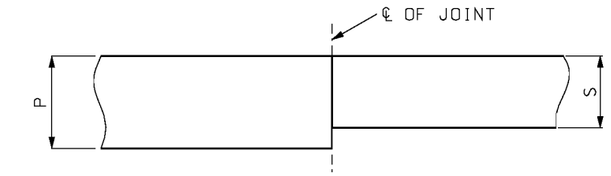

LONGITUDINAL CONSTRUCTION JOINT FOR SHOULDER (L3)

S = SHOULDER THICKNESS

GENERAL NOTES:

THE FINAL POSITION OF ALL DOWELS AND TIE BARS SHALL BE PERPENDICULAR TO THE PLANE OF THE JOINT AND PARALLEL TO THE SURFACE OF THE PAVEMENT AND PARALLEL TO EACH OTHER.

(L3) JOINT FOR FULL DEPTH OR PARTIAL DEPTH SHOULDERS.

MISSOURI HIGHWAYS AND TRANSPORTATION COMMISSION
105 WEST CAPITOL
JEFFERSON CITY, MO 65102
1-888-ASK-MODOT (1-888-275-6636)

STATE OF MISSOURI ERIC E. SCHROETER NUMBER PE-28411 PROFESSIONAL ENGINEER
THIS SHEET HAS BEEN SIGNED, SEALED AND DATED ELECTRONICALLY.

CONCRETE PAVEMENT AND BASE APPURTENANCES FOR 15' JOINT SPACING

DATE EFFECTIVE: 07/01/2015
DATE PREPARED: 5/29/2015

502.05N

SHEET NO. 3 OF 4

IF A SEAL IS PRESENT ON THIS SHEET IT HAS BEEN ELECTRONICALLY SEALED AND DATED.

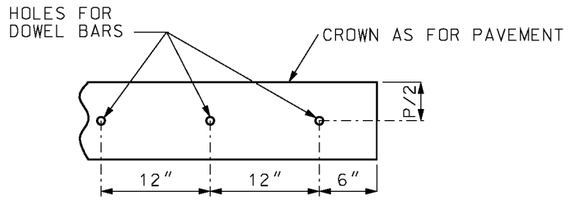

PART ELEVATION OF
HEADER PLANK

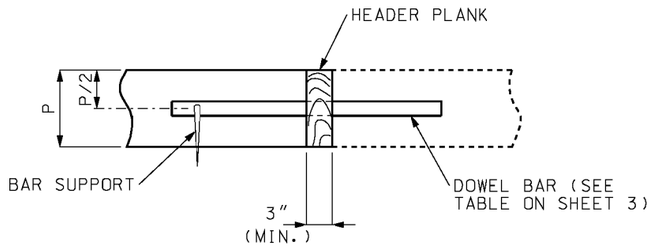

HEADER SECTION

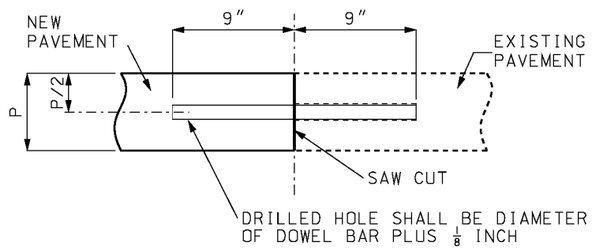

SAWED SECTION

THE HEADER BOARD SHALL BE SUFFICIENTLY RIGID TO PREVENT DISTORTION FROM THE TYPICAL SECTION AND MAINTAIN A STRAIGHT LINE FROM PAVEMENT EDGE TO PAVEMENT EDGE.

THE CONSTRUCTION JOINT MAY BE SAWED FULL DEPTH. HOLES FOR DOWEL BARS SHALL BE DRILLED AFTER THE CONCRETE HAS SUFFICIENT SET TO PREVENT DAMAGE. DOWEL BARS SHALL BE BONDED INTO THE HOLES.

BONDING FOR DOWEL BARS SHALL BE EPOXY OR POLYESTER BONDING AGENTS AS SPECIFIED IN SECTION 1039.

THE PORTION OF THE DOWEL OUTSIDE THE HOLE SHALL BE COATED WITH AN APPROVED LUBRICANT.

CONSTRUCTION JOINT (C)

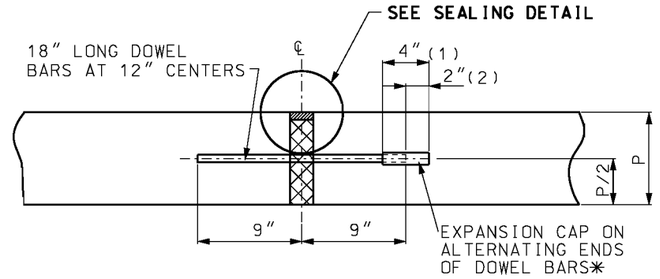

EXPANSION JOINTS (E)

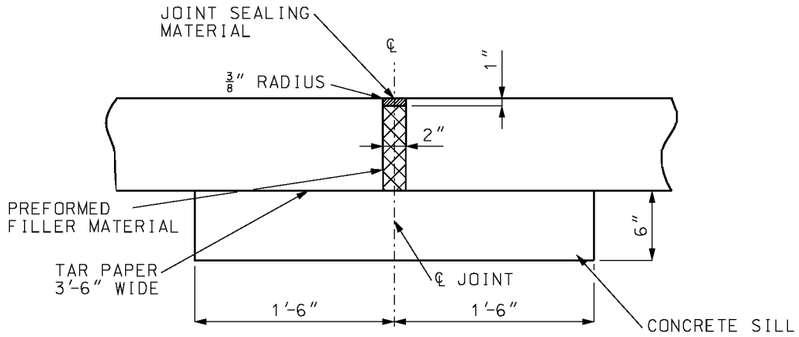

SILL SHALL EXTEND 18" BEYOND EACH EDGE OF THE PAVEMENT AND SHALL BE CONSTRUCTED OF CONCRETE REGARDLESS OF ADJACENT BASE MATERIAL.

ALTERNATE EXPANSION JOINTS (E)

(CONTRACTOR MAY SELECT EITHER EXPANSION JOINT (E))

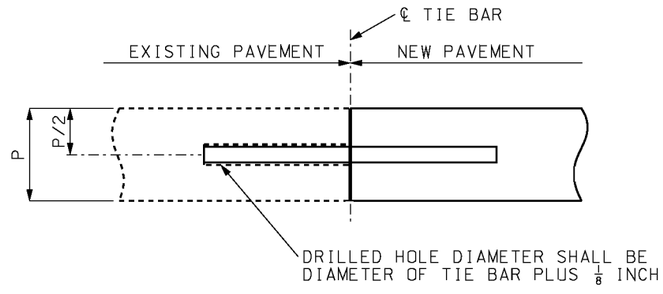

TIE BARS SHALL BE EPOXY COATED, DEFORMED REINFORCING BARS MEETING THE REQUIREMENTS OF SECTIONS 710 AND 1057.

BONDING FOR TIE BARS SHALL BE EPOXY OR POLYESTER BONDING AGENTS AS SPECIFIED IN SECTION 1039.

TIE BAR SIZE AND LENGTH SHALL BE BASED ON THE THICKNESS OF THE THINNER PAVEMENT OR SHOULDER TO BE TIED TOGETHER.

LONGITUDINAL CONSTRUCTION JOINT (EXISTING PAVEMENT) (L)

(1) LENGTH OF CAP

(2) GAP BETWEEN END OF CAP AND DOWEL.

* FOR EXPANSION JOINTS FORMED USING A CONSTRUCTION HEADER, THE EXPANSION CAPS SHALL BE INSTALLED ON THE EXPOSED END OF EACH BAR ONCE THE HEADER HAS BEEN REMOVED AND THE JOINT FILLER MATERIAL HAS BEEN INSTALLED.

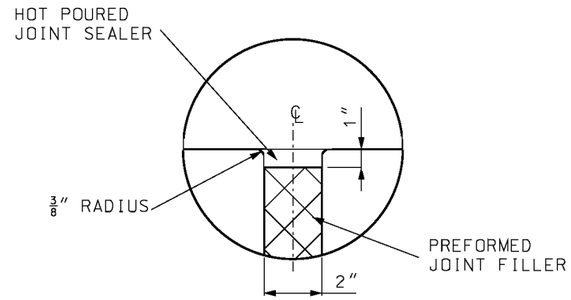

SEALING DETAIL

SEALING DETAIL

IF A SEAL IS PRESENT ON THIS SHEET IT HAS BEEN ELECTRONICALLY SEALED AND DATED.

MISSOURI HIGHWAYS AND TRANSPORTATION COMMISSION
105 WEST CAPITOL
JEFFERSON CITY, MO 65102
1-888-ASK-MODOT (1-888-275-6636)

STATE OF MISSOURI
ERIC E. SCHROETER
NUMBER PE-28411
PROFESSIONAL ENGINEER
THIS SHEET HAS BEEN SIGNED, SEALED AND DATED ELECTRONICALLY.

CONCRETE PAVEMENT AND BASE APPURTENANCES FOR 15' JOINT SPACING

DATE EFFECTIVE: 07/01/2015
DATE PREPARED: 5/29/2015

502.05N

SHEET NO.
4 OF 4

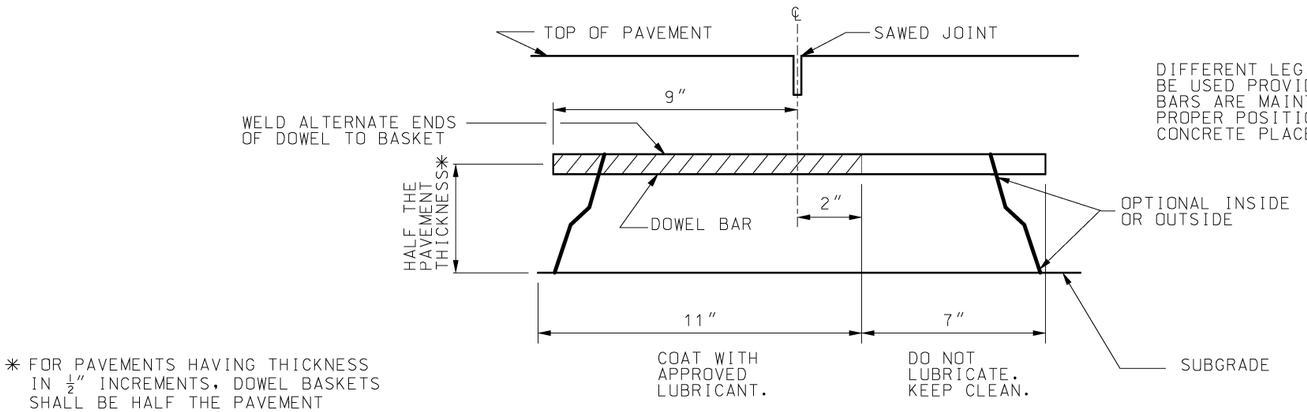

DIFFERENT LEG SHAPES MAY BE USED PROVIDED THE DOWEL BARS ARE MAINTAINED AT THE PROPER POSITION DURING CONCRETE PLACEMENT

* FOR PAVEMENTS HAVING THICKNESS IN $\frac{1}{2}$″ INCREMENTS, DOWEL BASKETS SHALL BE HALF THE PAVEMENT THICKNESS MINUS $\frac{1}{4}$″.

SECTION A-A

DOWEL BARS		
PAVEMENT THICKNESS	BAR SIZE	
	DIAMETER	LENGTH
10″ AND LESS	$1\frac{1}{4}$″	18″
GREATER THAN 10″	$1\frac{1}{2}$″	18″

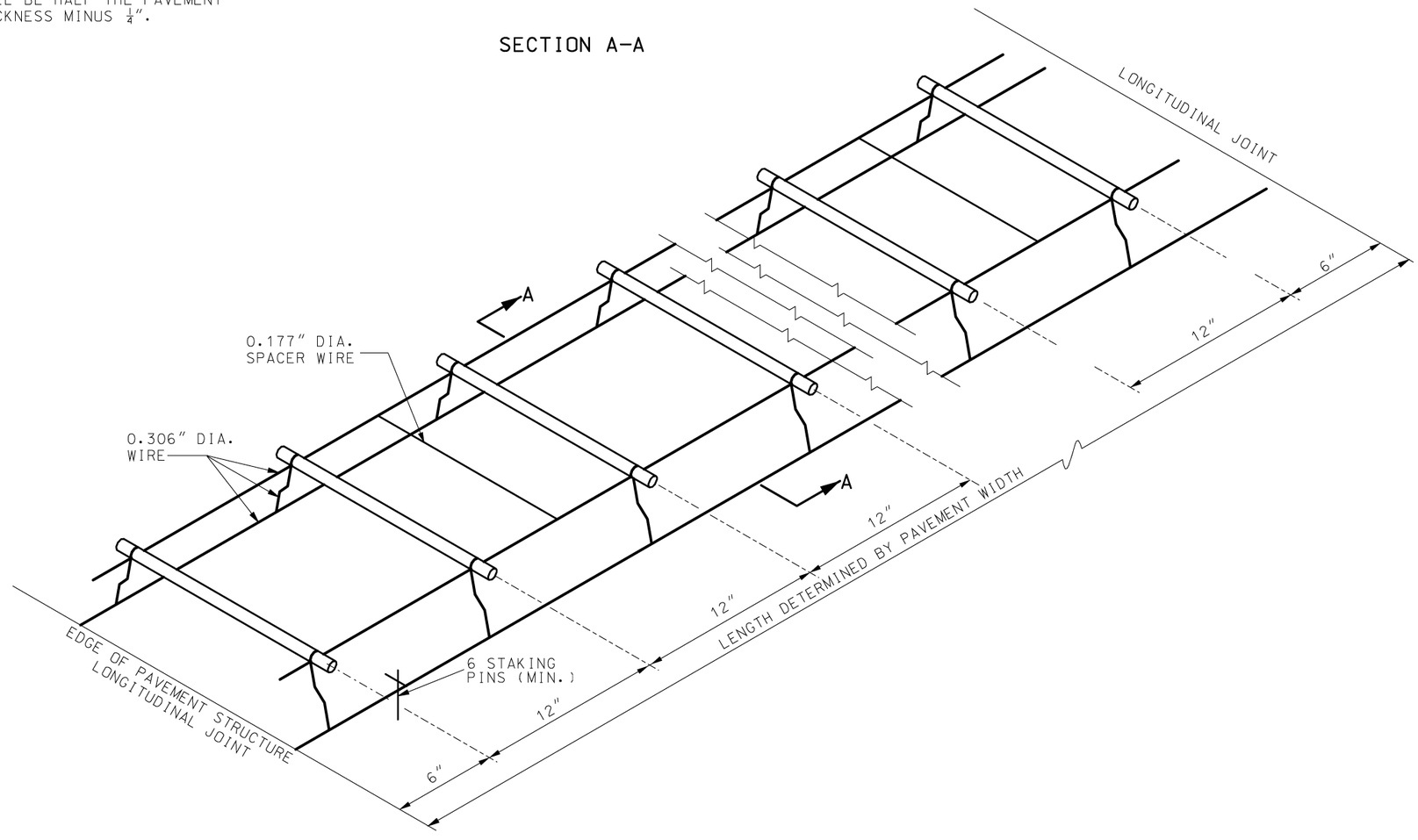

GENERAL NOTES:

THE DOWEL SUPPORTING UNITS SHALL BE FACTORY ASSEMBLED AND CAPABLE OF HOLDING THE DOWELS IN THEIR REQUIRED POSITIONS. IN THE COMPLETED JOINT INSTALLATION, DOWELS SHALL BE POSITIONED WITHIN 1/2″ OF THE VERTICAL AND HORIZONTAL PLANE AND IN THE LONGITUDINAL DIRECTION. THE SKEW TOLERANCE SHALL BE 1/4″.

THE FREE END OF EACH EPOXY COATED DOWEL SHALL BE MARKED WITH A SPOT OF PAINT AT LEAST ONE INCH IN DIAMETER AND CONTRASTING IN COLOR WITH THE EPOXY COATING.

WIRE SIZES SHOWN ARE MINIMUM REQUIRED.

WIRES, BARS OR CLIPS SHALL BE USED AS NECESSARY TO STRENGTHEN THE ASSEMBLIES.

THE DIAMETER OF THE SPACER WIRE SHALL NOT EXCEED 0.200″.

SPACER WIRE MAY BE CUT OR LEFT INTACT.

STAKING PINS SHALL BE FABRICATED FROM 0.306″ DIAMETER WIRE MINIMUM WITH A SUITABLE HOOK. STAKING PINS SHALL HAVE A MINIMUM LENGTH OF 12″ FOR DOWEL ASSEMBLIES UNLESS OTHERWISE DIRECTED BY THE ENGINEER.

MINOR VARIATIONS IN THE CONFIGURATION OF THE SUPPORT UNITS WILL BE ALLOWED.

MISSOURI HIGHWAYS AND TRANSPORTATION COMMISSION
105 WEST CAPITOL
JEFFERSON CITY, MO 65102
1-888-ASK-MODOT (1-888-275-6636)

STATE OF MISSOURI
ERIC E. SCHROETER
NUMBER PE-28411
PROFESSIONAL ENGINEER
THIS SHEET HAS BEEN SIGNED, SEALED AND DATED ELECTRONICALLY.

DOWEL SUPPORTING UNITS

APPROVED FOR USE
WITH TRANSVERSE JOINTS

DATE EFFECTIVE: 06/01/2010
DATE PREPARED: 10/30/2015

502.10K

SHEET NO. 1 OF 2

IF A SEAL IS PRESENT ON THIS SHEET IT HAS BEEN ELECTRONICALLY SEALED AND DATED.

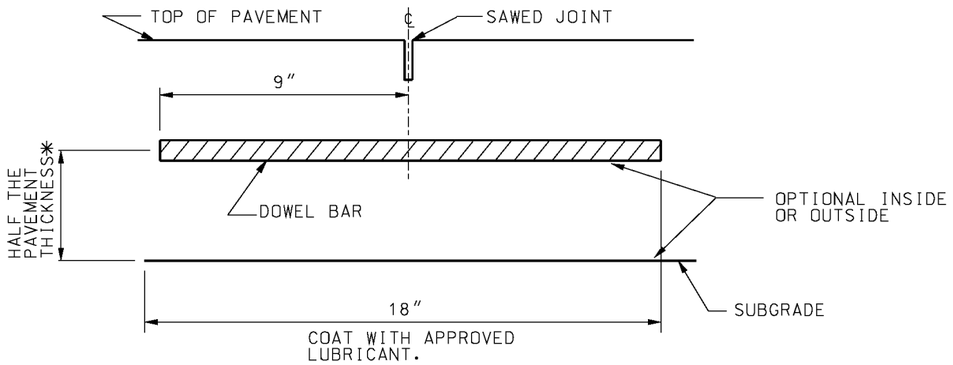

* FOR PAVEMENTS HAVING THICKNESS IN ½″ INCREMENTS, DOWEL SHALL BE PLACED HALF THE PAVEMENT THICKNESS MINUS ¼″.

SECTION C-C

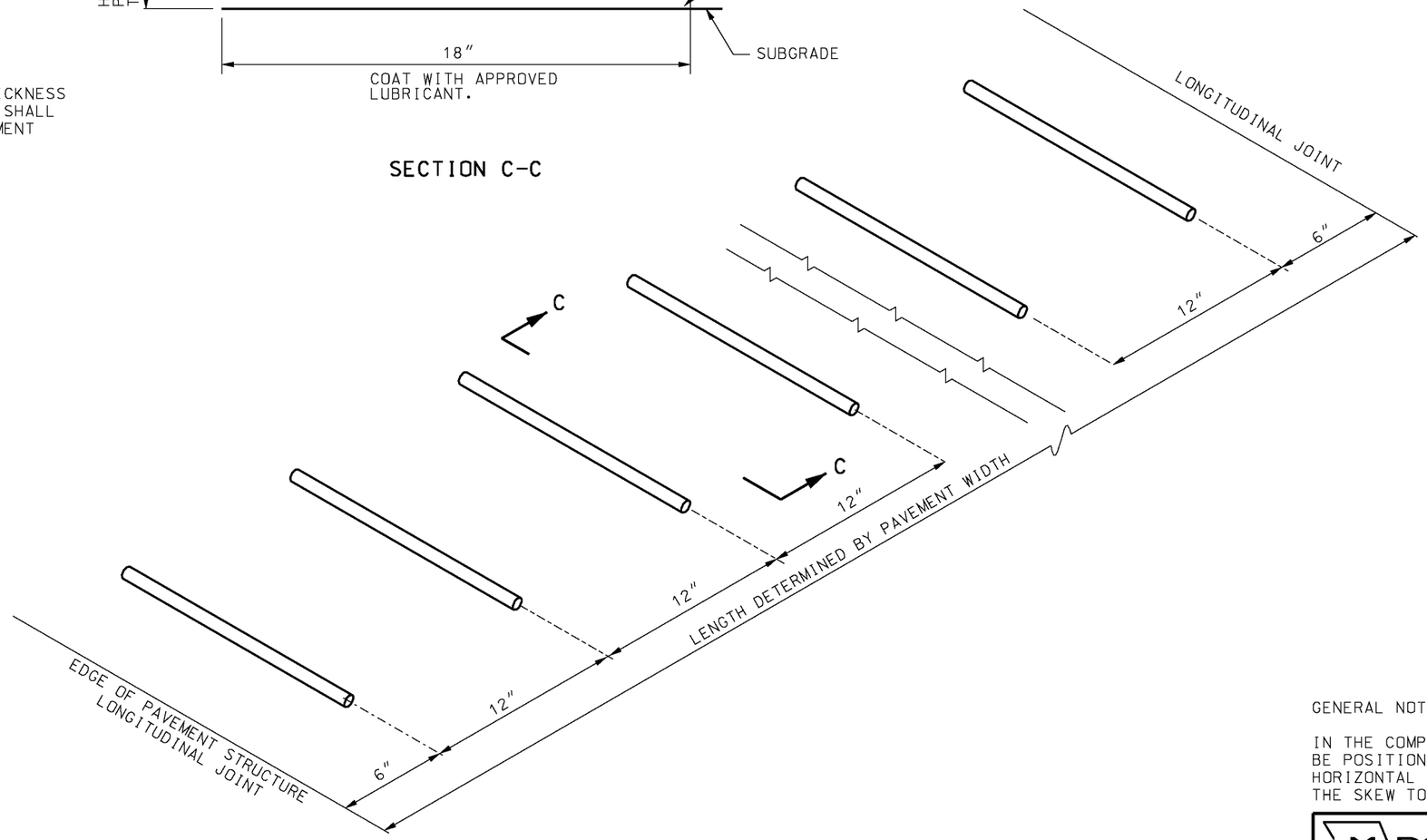

GENERAL NOTES:

IN THE COMPLETED JOINT INSTALLATION, DOWELS SHALL BE POSITIONED WITHIN 1/2″ OF THE VERTICAL AND HORIZONTAL PLANE AND IN THE LONGITUDINAL DIRECTION. THE SKEW TOLERANCE SHALL BE 1/4″.

MISSOURI HIGHWAYS AND TRANSPORTATION COMMISSION
105 WEST CAPITOL
JEFFERSON CITY, MO 65102
1-888-ASK-MODOT (1-888-275-6636)

STATE OF MISSOURI
ERIC E. SCHROETER
NUMBER PE-28411
PROFESSIONAL ENGINEER
THIS SHEET HAS BEEN SIGNED, SEALED AND DATED ELECTRONICALLY.

DOWEL SUPPORTING UNITS

MECHANICAL PLACEMENT

DATE EFFECTIVE:	06/01/2010	502.10K	SHEET NO.
DATE PREPARED:	5/29/2015		2 OF 2

IF A SEAL IS PRESENT ON THIS SHEET IT HAS BEEN ELECTRONICALLY SEALED AND DATED.

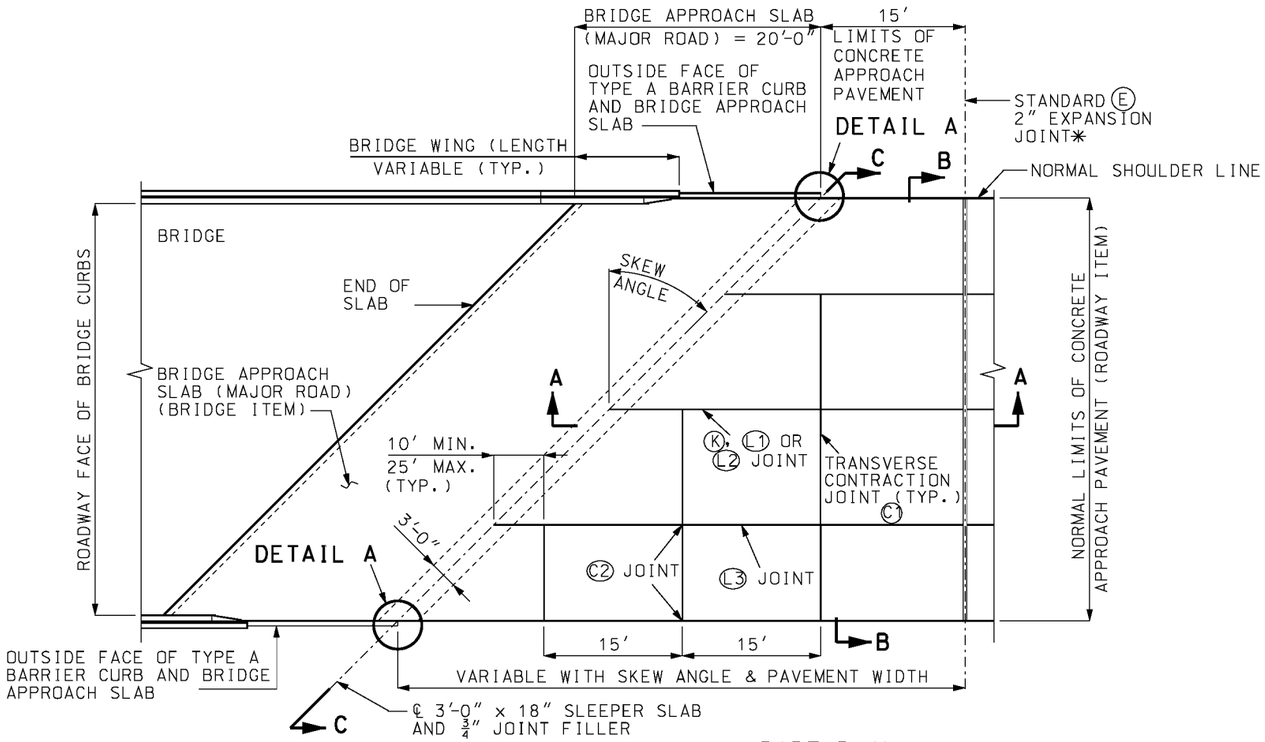

PART PLAN
(SKEWED)

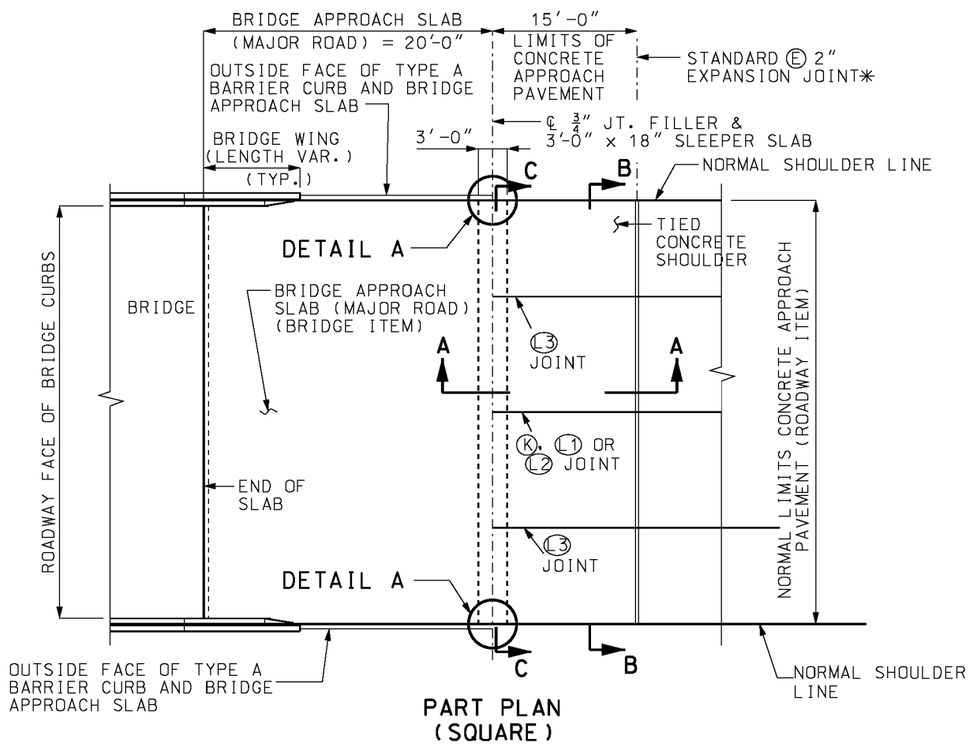

PART PLAN
(SQUARE)

SEE SHEET 2 OF 3 FOR DETAIL A.

FOR SECTIONS A-A, B-B AND C-C, SEE SHEET 3 OF 3.

* NOT REQUIRED WHEN ADJACENT PAVEMENT IS ASPHALT.

GENERAL NOTES:

TYPE A CURB IS TO BE CONSTRUCTED WITH CONCRETE APPROACH PAVEMENT ONLY WHEN DRAIN BASINS ARE REQUIRED. TYPE A CURBS WILL BE CONSIDERED AS INCIDENTAL, AND WILL BE INCLUDED IN THE PAYMENT FOR CONCRETE APPROACH PAVEMENT.

FOR SHOULDER PAVING AND DRAIN BASINS AT BRIDGE ENDS, SEE STANDARD DRAWING NUMBER 609.40.

FOR TYPE A BARRIER CURBS, STANDARD 2" EXPANSION JOINTS, LONGITUDINAL JOINTS AND TONGUE AND GROOVE JOINTS, SEE STANDARD DRAWINGS NO. 502.00 AND 609.00.

FOR BRIDGE APPROACH SLAB, SLEEPER SLAB, AND JOINT FILLER DETAILS, SEE BRIDGE PLANS.

A PRE-FORMED FIBER EXPANSION JOINT MATERIAL SHALL BE PLACED WITH CONCRETE APPROACH PAVEMENT AND MEET THE REQUIREMENTS OF SECTION 1057 OF THE STANDARD SPECIFICATION FOR HIGHWAY CONSTRUCTION.

COST OF FURNISHING AND PLACEMENT OF 4" TYPE 5 AGGREGATE BASE AND ¾" JOINT FILLER IS INCLUDED IN CONTRACT UNIT BID PRICE FOR CONCRETE APPROACH PAVEMENT.

MISSOURI HIGHWAYS AND TRANSPORTATION COMMISSION
105 WEST CAPITOL
JEFFERSON CITY, MO 65102
1-888-ASK-MODOT (1-888-275-6636)

STATE OF MISSOURI
ERIC E. SCHROETER
NUMBER PE-28411
PROFESSIONAL ENGINEER
THIS SHEET HAS BEEN SIGNED, SEALED AND DATED ELECTRONICALLY.

CONCRETE APPROACH PAVEMENT

FOR TWO-LANE PAVEMENTS (MAJOR ROAD)

DATE EFFECTIVE: 07/01/2015
DATE PREPARED: 5/29/2015

504.00J

SHEET NO. 1 OF 3

IF A SEAL IS PRESENT ON THIS SHEET IT HAS BEEN ELECTRONICALLY SEALED AND DATED.

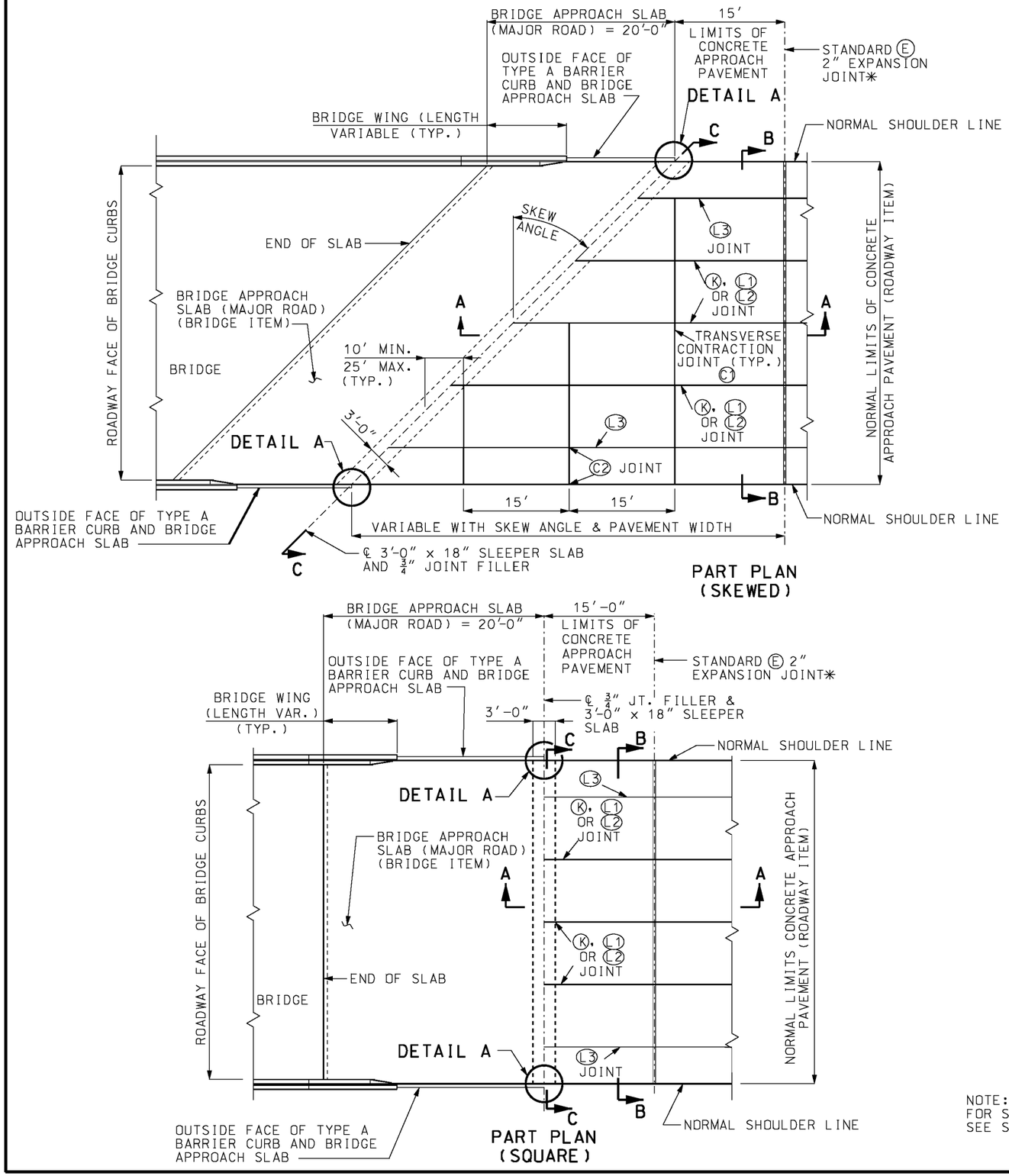

PART PLAN (SKEWED)

PART PLAN (SQUARE)

* NOT REQUIRED WHEN ADJACENT PAVEMENT IS ASPHALT.

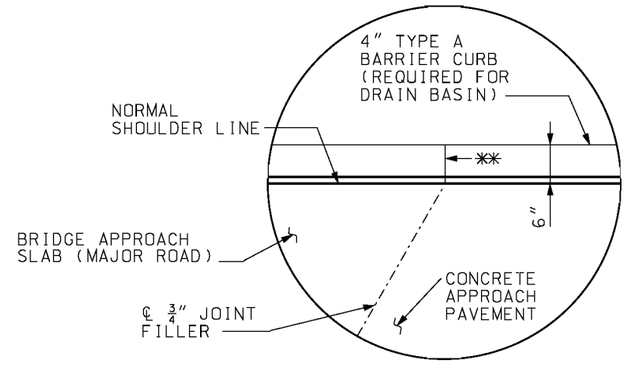

DETAIL A

** USE ¾" JOINT FILLER BETWEEN TYPE A CURBS

NOTE:
FOR SECTIONS A-A, B-B AND C-C, SEE SHEET 3 OF 3.

MISSOURI HIGHWAYS AND TRANSPORTATION COMMISSION
105 WEST CAPITOL
JEFFERSON CITY, MO 65102
1-888-ASK-MODOT (1-888-275-6636)

STATE OF MISSOURI
ERIC E. SCHROETER
NUMBER PE-28411
PROFESSIONAL ENGINEER
THIS SHEET HAS BEEN SIGNED, SEALED AND DATED ELECTRONICALLY.

CONCRETE APPROACH PAVEMENT
FOR MULTI-LANE PAVEMENTS (MAJOR ROAD)

DATE EFFECTIVE: 07/01/2015
DATE PREPARED: 5/29/2015

504.00J

SHEET NO. 2 OF 3

IF A SEAL IS PRESENT ON THIS SHEET IT HAS BEEN ELECTRONICALLY SEALED AND DATED.

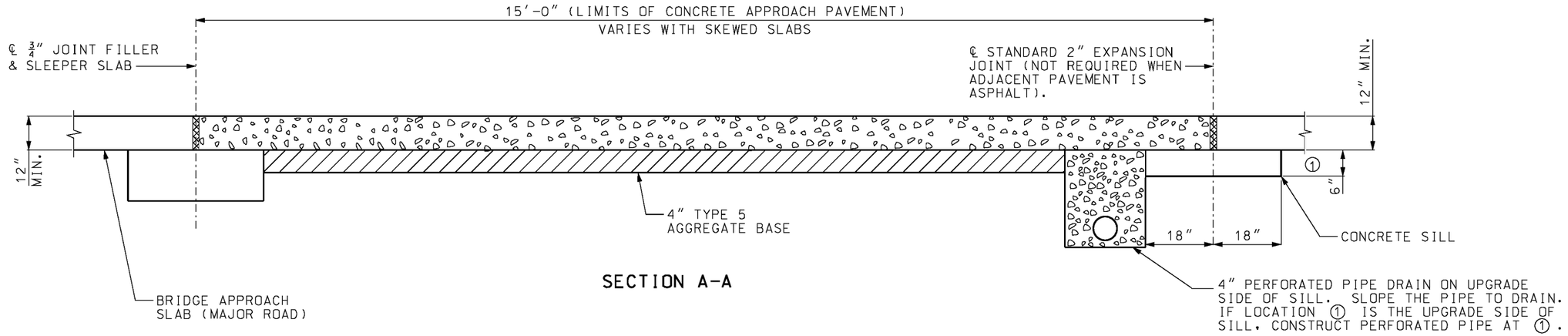

SECTION A-A

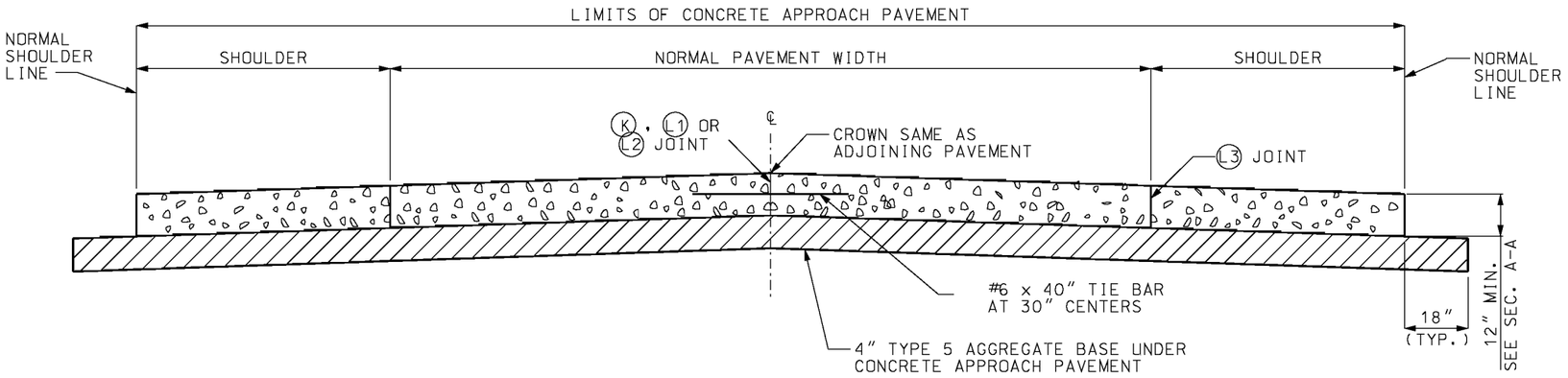

SECTION B-B

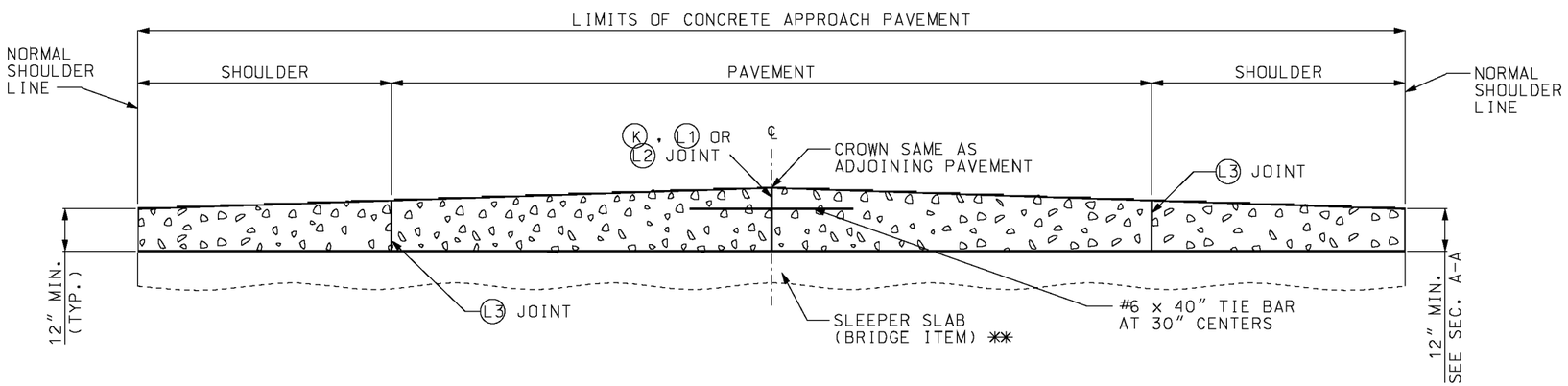

SECTION C-C

** TOP OF SLEEPER SLAB MAY BE FLAT OR CROWNED. SEE BRIDGE PLANS.

FOR LOCATIONS OF SECTIONS A-A, B-B AND C-C, SEE SHEETS 1 AND 2.

GENERAL NOTES:

SEE STANDARD DRAWING 605.10 FOR PIPE OUTLET DETAIL FROM SHOULDER POINT TO INSLOPE.

MISSOURI HIGHWAYS AND TRANSPORTATION COMMISSION
105 WEST CAPITOL
JEFFERSON CITY, MO 65102
1-888-ASK-MODOT (1-888-275-6636)

STATE OF MISSOURI
ERIC E. SCHROETER
NUMBER PE-28411
PROFESSIONAL ENGINEER
THIS SHEET HAS BEEN SIGNED, SEALED AND DATED ELECTRONICALLY.

CONCRETE APPROACH PAVEMENT (MAJOR ROAD)

DATE EFFECTIVE: 07/01/2015
DATE PREPARED: 5/29/2015

504.00J

SHEET NO. 3 OF 3

IF A SEAL IS PRESENT ON THIS SHEET IT HAS BEEN ELECTRONICALLY SEALED AND DATED.

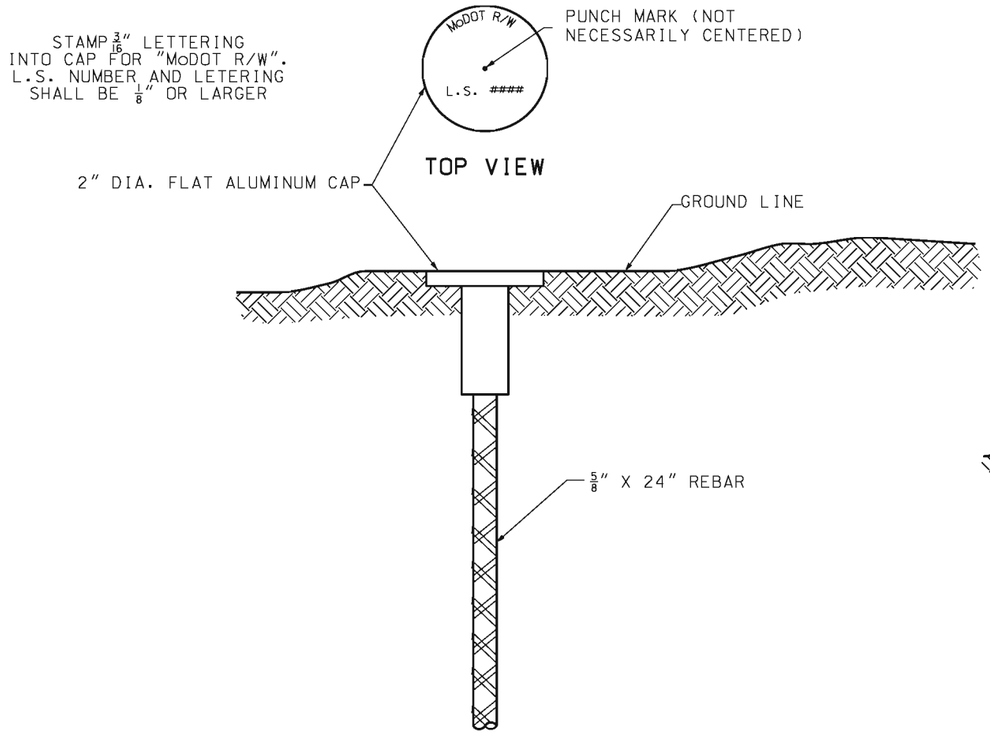

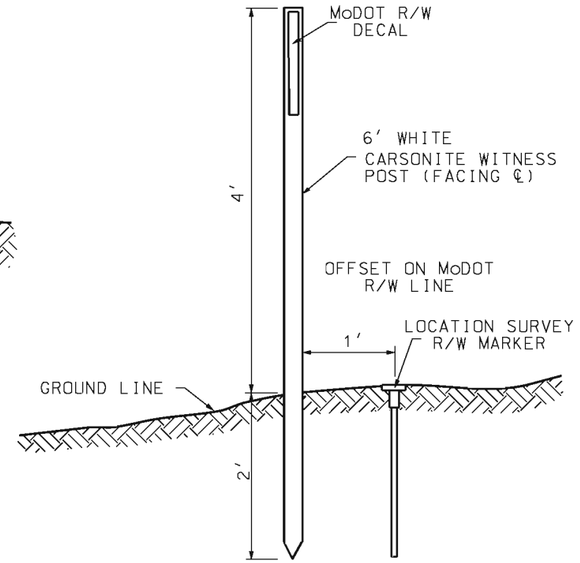

WITNESS POST

LOCATION SURVEY RIGHT-OF-WAY MARKER

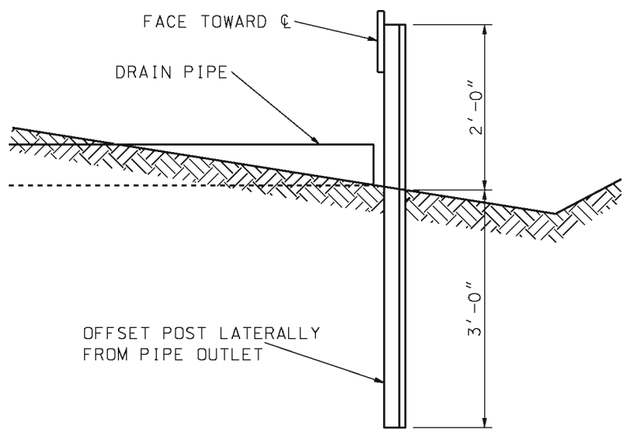

IN EARTH

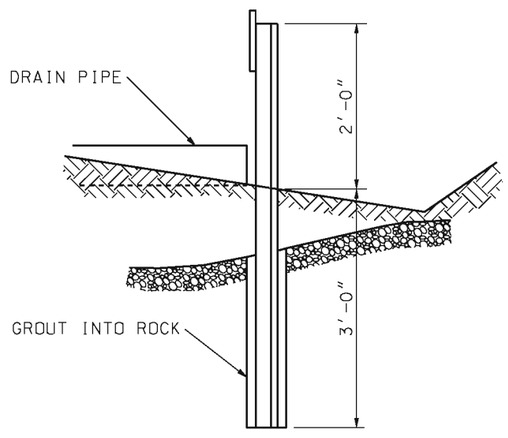

IN ROCK

DRAIN MARKER

GENERAL NOTES:

WHEN STEEL AND LOCATION SURVEY R/W MARKERS ARE NOT SUITABLE DUE TO NATURAL GROUND FEATURES OR MAN-MADE STRUCTURES, ALTERNATIVE MONUMENTATION (IN COMPLIANCE WITH THE APPROVED MONUMENTATION, AS SPECIFIED BY THE MISSOURI MINIMUM STANDARDS FOR PROPERTY BOUNDARY SURVEYS) MAY BE SET.

MISSOURI HIGHWAYS AND TRANSPORTATION COMMISSION
105 WEST CAPITOL
JEFFERSON CITY, MO 65102
1-888-ASK-MODOT (1-888-275-6636)

STATE OF MISSOURI
KATHRYN PHILLIPS HARVEY
NUMBER PE-23751
PROFESSIONAL ENGINEER
THIS SHEET HAS BEEN SIGNED, SEALED AND DATED ELECTRONICALLY.

RIGHT-OF-WAY AND DRAIN MARKERS

DATE EFFECTIVE: 01/01/2003
DATE PREPARED: 8/21/2009

602.00D

SHEET NO. 1 OF 2

IF A SEAL IS PRESENT ON THIS SHEET IT HAS BEEN ELECTRONICALLY SEALED AND DATED.

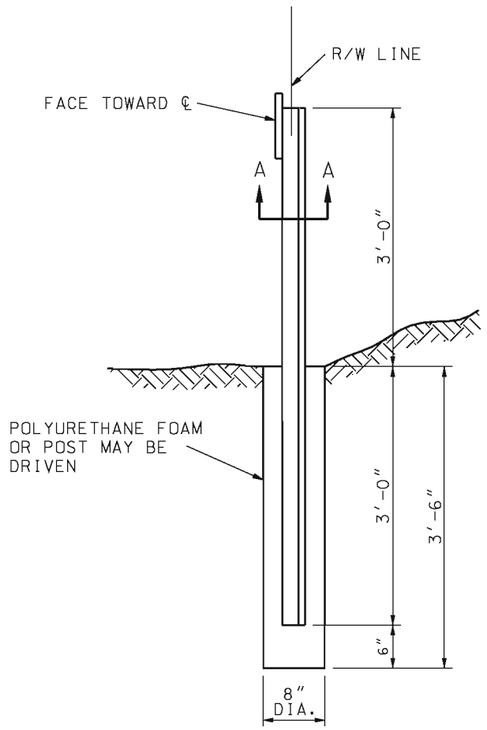

IN EARTH

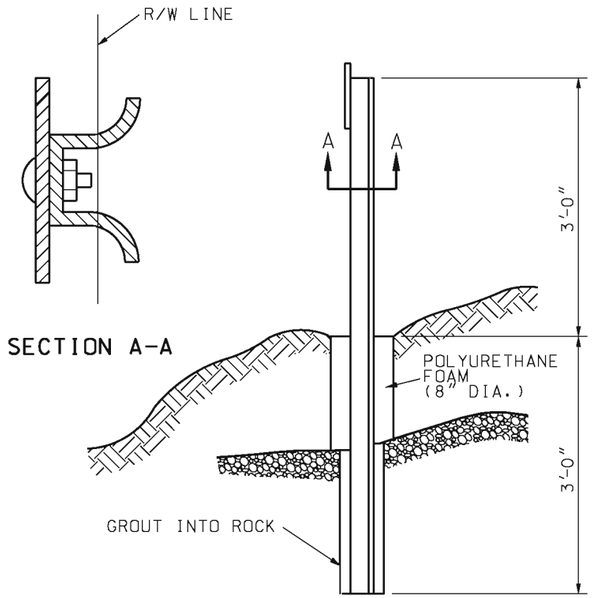

IN ROCK

STEEL RIGHT-OF-WAY MARKER

LEGEND

EXISTING	NEW	
▽		STEEL R/W MARKER
○	○	LOCATION SURVEY R/W MARKER
▭	▭	CONCRETE R/W MARKER
	X	DRAIN MARKER

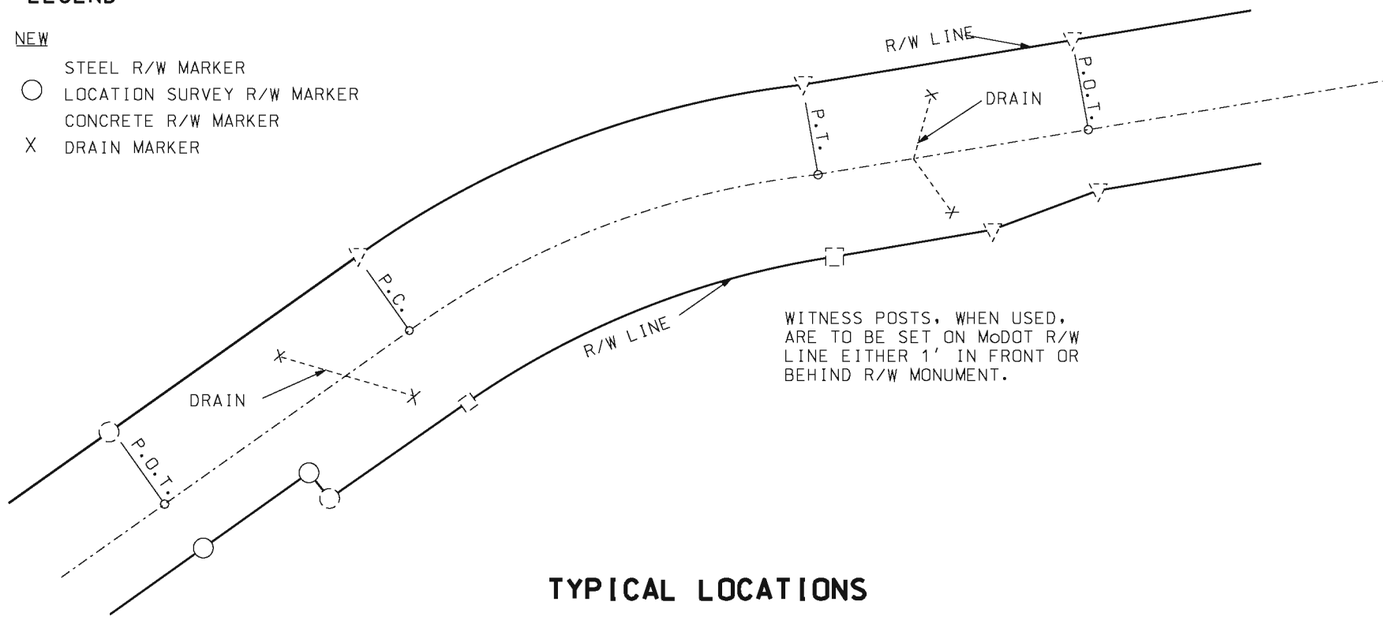

WITNESS POSTS, WHEN USED, ARE TO BE SET ON MoDOT R/W LINE EITHER 1' IN FRONT OR BEHIND R/W MONUMENT.

TYPICAL LOCATIONS

MISSOURI HIGHWAYS AND TRANSPORTATION COMMISSION
105 WEST CAPITOL
JEFFERSON CITY, MO 65102
1-888-ASK-MODOT (1-888-275-6636)

STATE OF MISSOURI
KATHRYN PHILLIPS HARVEY
NUMBER PE-23751
PROFESSIONAL ENGINEER
THIS SHEET HAS BEEN SIGNED, SEALED AND DATED ELECTRONICALLY.

RIGHT-OF-WAY AND DRAIN MARKERS

DATE EFFECTIVE: 01/01/2003
DATE PREPARED: 8/21/2009

602.00D

SHEET NO. 2 OF 2

IF A SEAL IS PRESENT ON THIS SHEET IT HAS BEEN ELECTRONICALLY SEALED AND DATED.

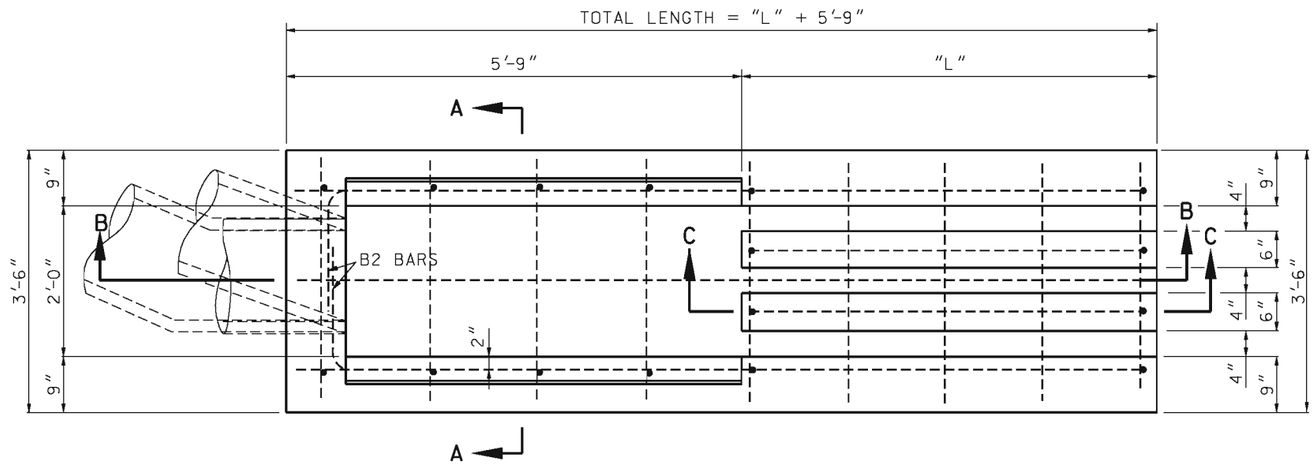

PLAN VIEW

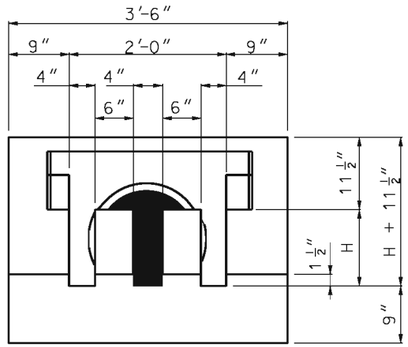

END SECTION

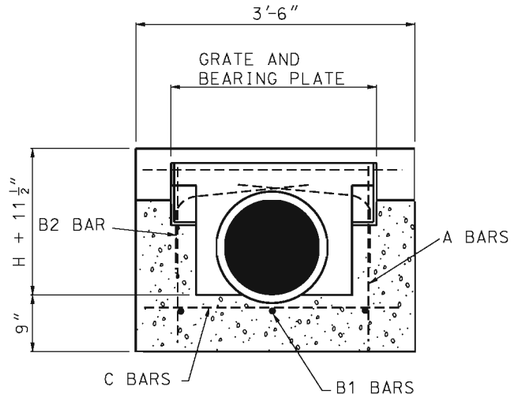

SECTION A-A

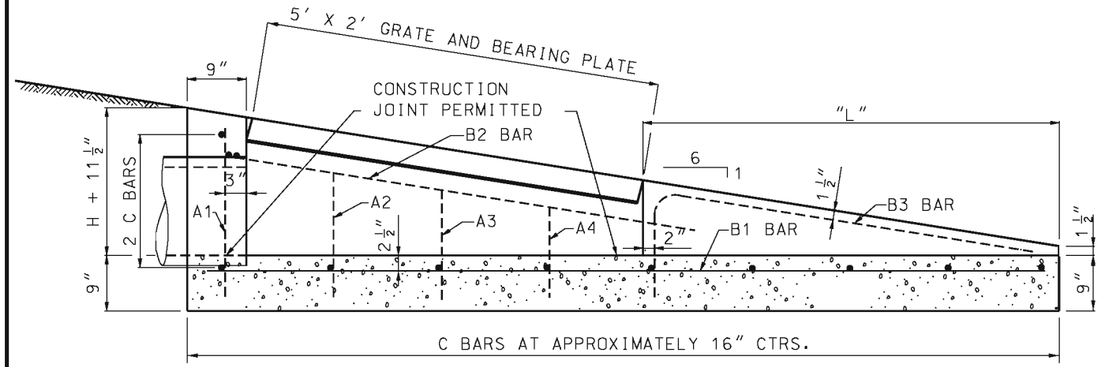

SECTION B-B

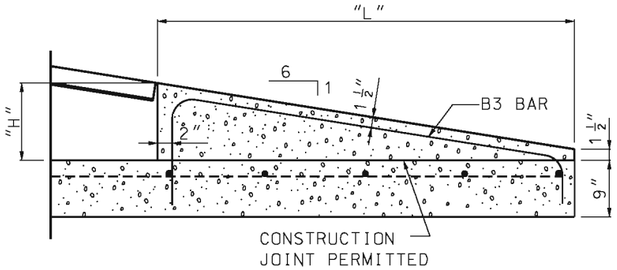

SECTION C-C

PIPE SIZE	DIMENSIONS			QUANTITIES		REINFORCING																							
						#4 A1 BARS		#4 A2 BARS		#4 A3 BARS		#4 A4 BARS		#4 B1 BARS		#4 B2 BARS				#4 B3 BARS						#4 C BARS	
	"H"	"L"	TOTAL LENGTH	CONC. C. Y.	STEEL LBS.	NO.	LENGTH	NO.	LENGTH	NO.	LENGTH	NO.	LENGTH	NO.	LENGTH	NO.	E	D	LENGTH	NO.	F	G	J	LENGTH	NO.	LENGTH
12"	9"	3'-9"	9'-6"	1.5	70	2	2'-0"	2	1'-6"	2	1'-3"	2	1'-0"	3	9'-3"	2	1'-5"	5'-8"	7'-6"	4	11"	5"	2'-11"	5'-0"	8	3'-3"
15"	1'-0"	5'-3"	11'-0"	1.8	80	2	2'-3"	2	1'-9"	2	1'-6"	2	1'-3"	3	10'-9"	2	1'-5"	5'-8"	7'-6"	4	1'-2"	5"	4'-5"	6'-9"	9	3'-3"
18"	1'-3"	6'-9"	12'-6"	2.2	90	2	2'-6"	2	2'-0"	2	1'-9"	2	1'-6"	3	12'-3"	2	1'-5"	5'-8"	7'-6"	4	1'-5"	5"	5'-11"	8'-6"	10	3'-3"
21"	1'-6"	8'-3"	14'-0"	2.6	100	2	2'-9"	2	2'-3"	2	2'-0"	2	1'-9"	3	13'-9"	2	1'-5"	5'-8"	7'-6"	4	1'-8"	5"	7'-5"	10'-3"	11	3'-3"
24"	1'-9"	9'-9"	15'-6"	3.0	110	2	3'-0"	2	2'-6"	2	2'-3"	2	2'-0"	3	15'-3"	2	1'-5"	5'-8"	7'-6"	4	1'-11"	5"	8'-11"	12'-0"	12	3'-3"

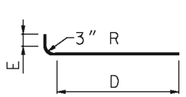

B2 BARS

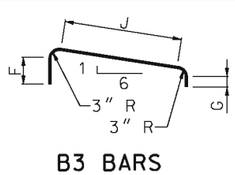

B3 BARS

BENDING DETAILS

GENERAL NOTES:

USE RIGHT ANGLE HEADWALL FOR ALL INSTALLATIONS. SKEW PIPE BY USING A BEVELED END OR ELBOW ON PIPE. IN SPECIAL CASES, HEADWALL MAY BE TURNED TO FIT PIPE SKEW AND 1V TO 6H SLOPE WARPED TO FIT HEADWALL.

ALL CONCRETE SHALL BE CLASS "B".

THIS DRAWING AND THE CONCRETE QUANTITIES SHOWN ARE BASED ON THE USE OF CONCRETE PIPE. QUANTITIES OF CONCRETE SHOWN WILL BE USED FOR PAYMENT REGARDLESS OF ANY QUANTITY CHANGES NECESSARY DUE TO THE USE OF ANY OTHER TYPE PIPE SPECIFIED OR PERMITTED.

FLOW LINE OF HEADWALL IS TO BE PLACED HORIZONTALLY.

PRECAST NOTES:

THE CONTRACTOR MAY, SUBJECT TO APPROVAL OF THE ENGINEER, FURNISH PRECAST UNITS IN LIEU OF CAST-IN-PLACE. IF A PRECAST UNIT IS FURNISHED, IT SHALL CONFORM IN ALL RESPECTS TO THE THE REQUIREMENTS FOR CAST-IN-PLACE UNITS INCLUDING DIMENSIONS AND REINFORCEMENT, EXCEPT THAT THE FORMS MAY BE TAPERED TO FACILITATE REMOVAL OF THE UNIT FROM THE FORMS. SHOP DRAWINGS OF THE PRECAST UNIT SHALL BE SUBMITTED FOR APPROVAL PRIOR TO FIRST USE OF THE PRECASTING FORMS.

MISSOURI HIGHWAYS AND TRANSPORTATION COMMISSION
105 WEST CAPITOL
JEFFERSON CITY, MO 65102
1-888-ASK-MODOT (1-888-275-6636)

STATE OF MISSOURI
DENNIS W. HECKMAN
NUMBER PE-27141
PROFESSIONAL ENGINEER
THIS SHEET HAS BEEN SIGNED, SEALED AND DATED ELECTRONICALLY.

PIPE CULVERT HEADWALLS
TYPE S
12" TO 24" DIAMETERS
- 1V:6H SLOPES

DATE EFFECTIVE: 08/01/2006
DATE PREPARED: 9/3/2009

604.05D

SHEET NO. 1 OF 2

IF A SEAL IS PRESENT ON THIS SHEET IT HAS BEEN ELECTRONICALLY SEALED AND DATED.

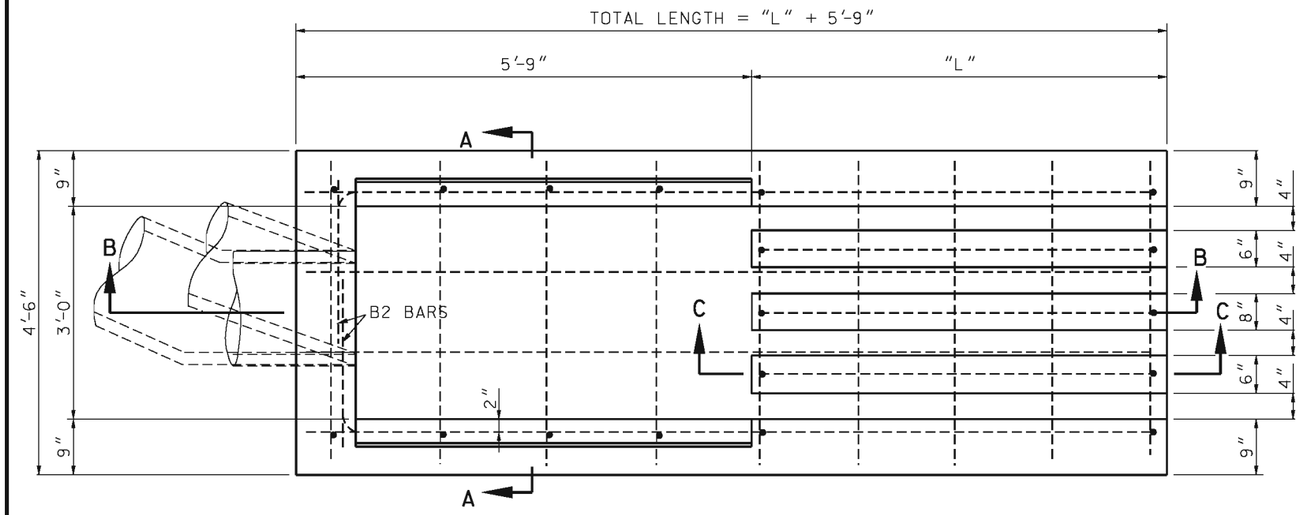

PLAN VIEW

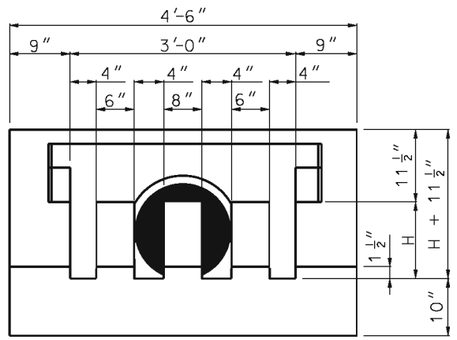

END SECTION

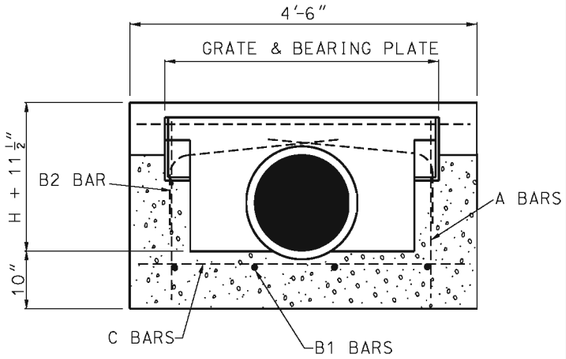

SECTION A-A

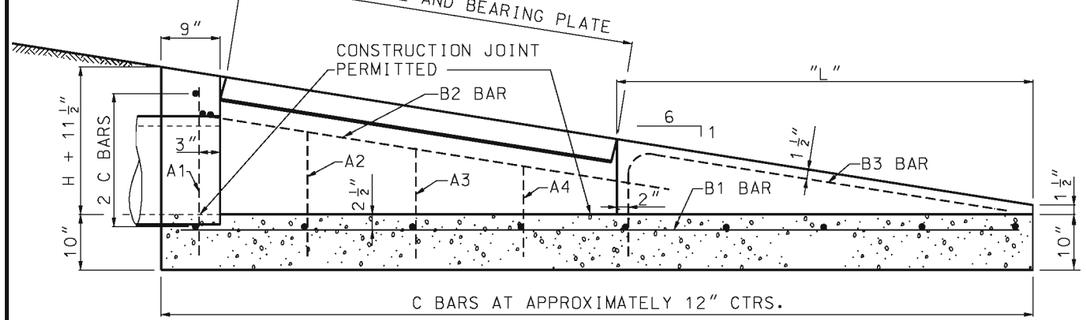

SECTION B-B

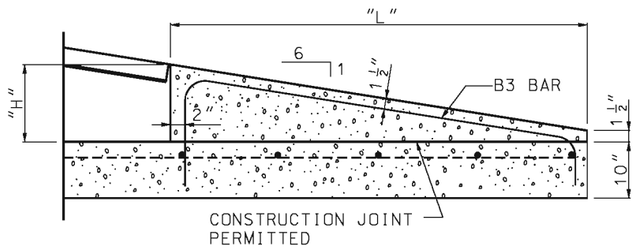

SECTION C-C

PIPE SIZE	DIMENSIONS			QUANTITIES		REINFORCING																						
	"H"	"L"	TOTAL LENGTH	CONC. C. Y.	STEEL LBS.	#4 A1 BARS		#4 A2 BARS		#4 A3 BARS		#4 A4 BARS		#4 B1 BARS		#4 B2 BARS				#4 B3 BARS						#4 C BARS	
						NO.	LENGTH	NO.	LENGTH	NO.	LENGTH	NO.	LENGTH	NO.	LENGTH	NO.	E	D	LENGTH	NO.	F	G	J	LENGTH	NO.	LENGTH
27"	2'-0"	11'-3"	17'-0"	4.5	160	2	3'-3"	2	2'-9"	2	2'-6"	2	2'-3"	4	16'-9"	2	1'-11"	5'-8"	8'-0"	5	2'-2"	5"	10'-5"	13'-9"	18	4'-3"
30"	2'-3"	12'-9"	18'-6"	5.0	170	2	3'-6"	2	3'-0"	2	2'-9"	2	2'-6"	4	18'-3"	2	1'-11"	5'-8"	8'-0"	5	2'-5"	5"	11'-11"	15'-6"	19	4'-3"
36"	2'-9"	15'-9"	21'-6"	6.1	200	2	4'-0"	2	3'-6"	2	3'-3"	2	3'-0"	4	21'-3"	2	1'-11"	5'-8"	8'-0"	5	2'-11"	5"	14'-11"	19'-0"	21	4'-3"

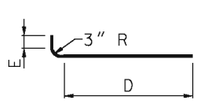

B2 BARS

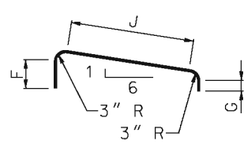

B3 BARS

BENDING DETAILS

GENERAL NOTES:

SEE GENERAL NOTES ON SHEET 1.

MISSOURI HIGHWAYS AND TRANSPORTATION COMMISSION
105 WEST CAPITOL
JEFFERSON CITY, MO 65102
1-888-ASK-MODOT (1-888-275-6636)

STATE OF MISSOURI
DENNIS W. HECKMAN
NUMBER PE-27141
PROFESSIONAL ENGINEER
THIS SHEET HAS BEEN SIGNED, SEALED AND DATED ELECTRONICALLY.

PIPE CULVERT HEADWALLS

TYPE S
27" TO 36" DIAMETERS
- 1V:6H SLOPES

DATE EFFECTIVE: 08/01/2006
DATE PREPARED: 9/3/2009

604.05D

SHEET NO. 2 OF 2

IF A SEAL IS PRESENT ON THIS SHEET IT HAS BEEN ELECTRONICALLY SEALED AND DATED.

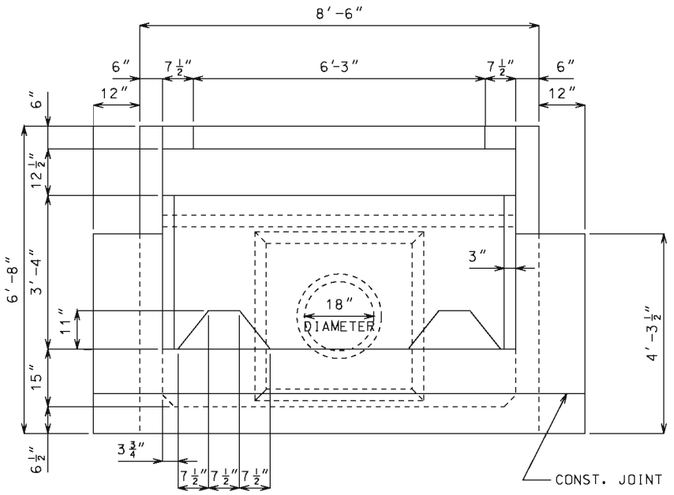

DOWNSTREAM ELEVATION

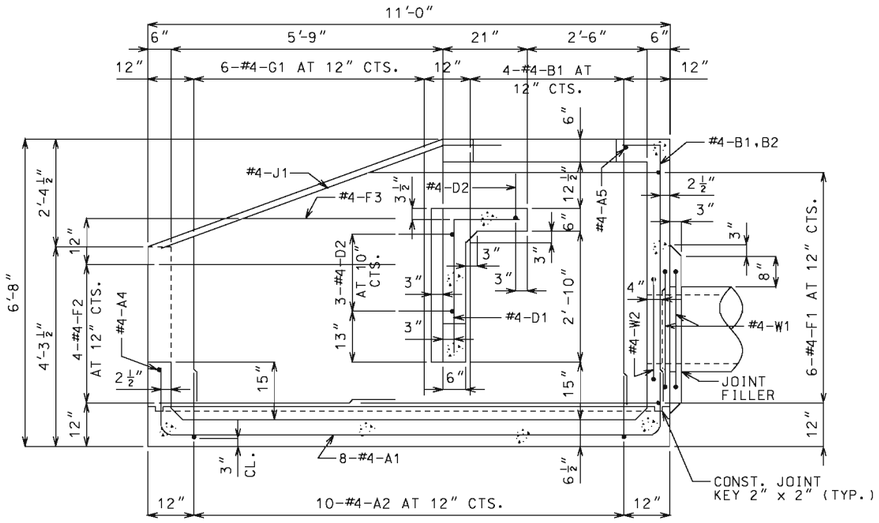

SECTION A – A

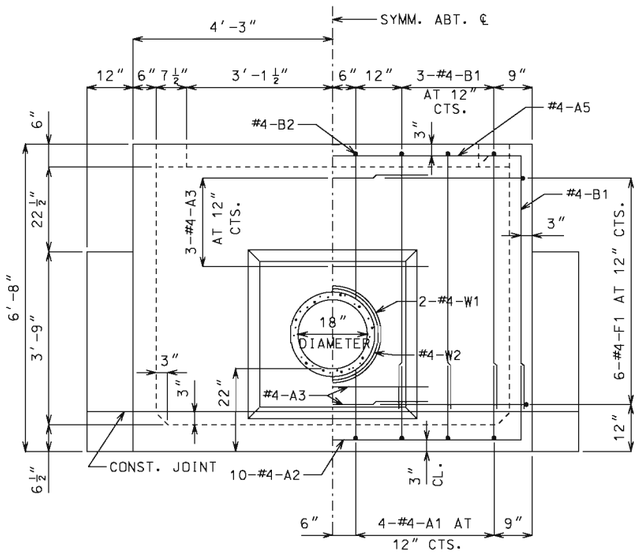

UPSTREAM ELEVATION

NOTE: BEND OR CUT A1 BARS IN FIELD TO CLEAR PIPE.

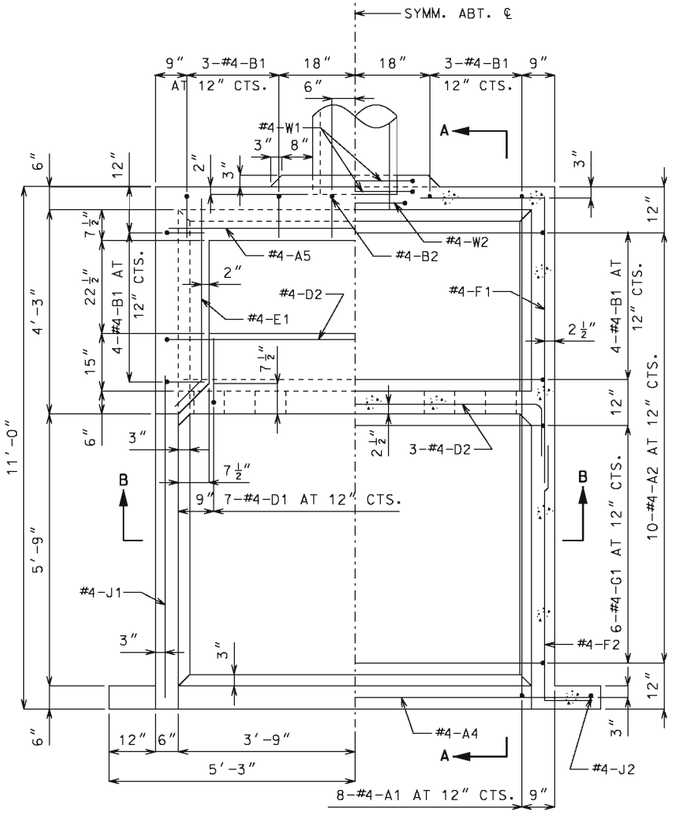

HALF PLAN HALF HORIZONTAL SECTION

GENERAL NOTES:

DESIGN UNIT STRESSES

CLASS B CONCRETE f′c = 3,000 psi
REINFORCING STEEL (GRADE 60) fy = 60,000 psi

REINFORCING STEEL

MINIMUM CLEARANCE TO REINFORCING STEEL SHALL BE 1½″ UNLESS SHOWN OTHERWISE.

DIMENSIONS

DRAWINGS ARE NOT TO SCALE. FOLLOW DIMENSIONS.

ESTIMATED QUANTITIES		
ITEM		TOTAL
CLASS B CONCRETE	CU. YD.	6.1
REINFORCING STEEL	LBS.	490

COMPLETE BILL OF REINFORCING STEEL

NO. REQ'D	MARK NO. SIZE	MARK	SHAPE NO.	NO. VARIES (V)	NO. EACH	DIMENSIONS B	C	D	E	F	H	K	NOMINAL LENGTH	ACTUAL LENGTH	WEIGHT
						FT. IN.	FT. IN.	FT. IN.	FT. IN.	FT. IN.	FT. IN.	FT. IN.	FT. IN.	FT. IN.	LBS.
8	4	A1	11				0-16¼	10-7	0-17¾				13-5	13-3	71
10	4	A2	11				0-18¼	8-0	0-18¼				11-1	10-10	72
5	4	A3	20			4-6							4-6	4-6	15
1	4	A4	20			10-3							10-3	10-3	7
1	4	A5	20			8-3							8-3	8-3	6
14	4	B1	19			5-9	0-9						6-6	6-4	59
2	4	B2	19			2-11	0-9						3-8	3-6	5
7	4	D1	19			2-11	0-16						4-3	4-2	19
4	4	D2	11				0-20½	8-0	0-20½				11-5	11-3	30
1	4	D3	15			2-1½	2-11½	2-1½	0-21⅜	0-13½	0-21⅜	0-13½	7-3	7-2	5
2	4	D4	14			0-12	0-6	2-1½			0-21⅜	0-13½	3-8	3-6	5
2	4	E1	23			0-13	4-0⅜				0-9⅜	0-9	5-1	5-1	7
12	4	F1	19			2-10½	6-4⅛						9-3	9-1	73
8	4	F2	19			0-13	5-9						6-10	6-9	36
2	4	F3	20			4-0							4-0	4-0	5
12	4	G1	20	V	2	5-8							5-8	5-8	
						3-9	(INCREMENT = 4⅜ INCHES)						3-9	3-9	38
2	4	J1	20			7-5							7-5	7-5	10
2	4	J2	19			3-10¾	2-1½						6-0	5-11	8
2	4	W1	16			2-4							8-2	8-2	11
1	4	W2	16			0-23							6-11	6-11	5

BENDING DIAGRAMS

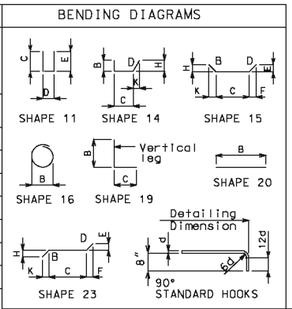

ALL STANDARD HOOKS AND BENDS OTHER THAN 180 DEG. TO BE BENT WITH SAME PROCEDURE AS FOR 90 DEG. STANDARD HOOKS.

HOOKS AND BENDS SHALL BE IN ACCORDANCE WITH THE PROCEDURES AS SHOWN ON THIS SHEET.

NOMINAL LENGTHS ARE BASED ON OUT TO OUT DIMENSIONS SHOWN IN BENDING DIAGRAMS AND ARE LISTED FOR FABRICATORS USE.

PAYWEIGHTS ARE BASED ON ACTUAL LENGTHS.

LENGTH = TOTAL LENGTHS ARE MEASURED ALONG CENTERLINE BAR TO THE NEAREST INCH.

V – BAR DIMENSIONS VARY IN EQUAL INCREMENTS BETWEEN DIMENSIONS SHOWN ON THIS LINE AND THE FOLLOWING LINE.

NO.EA. = NUMBER OF BARS OF EACH LENGTH.

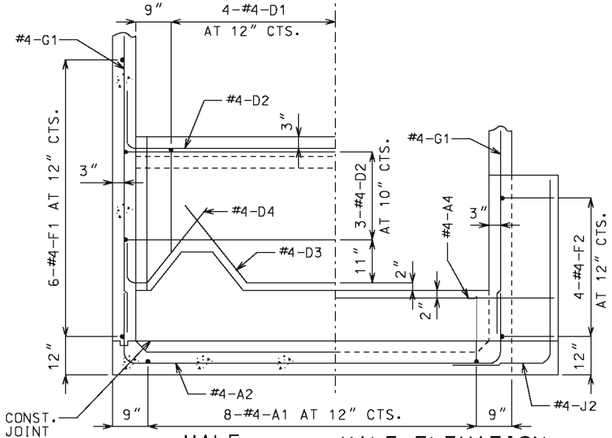

HALF SECTION B-B HALF ELEVATION OF LOWER BAFFLE AND WING

NOTE: BEND OR CUT D1 BARS IN FIELD TO CLEAR NOTCH IN BAFFLE WALL.

IF A SEAL IS PRESENT ON THIS SHEET IT HAS BEEN ELECTRONICALLY SEALED AND DATED.

MISSOURI HIGHWAYS AND TRANSPORTATION COMMISSION
105 WEST CAPITOL
JEFFERSON CITY, MO 65102
1-888-ASK-MODOT (1-888-275-6636)

STATE OF MISSOURI
DENNIS W. HECKMAN
NUMBER PE-27141
PROFESSIONAL ENGINEER
THIS SHEET HAS BEEN SIGNED, SEALED AND DATED ELECTRONICALLY.

PIPE CULVERT HEADWALL

ENERGY DISSIPATOR (IMPACT TYPE) FOR 18″ CONCRETE PIPE

DATE EFFECTIVE: 07/01/2001
DATE PREPARED: 9/3/2009

604.10E

SHEET NO. 1 OF 1

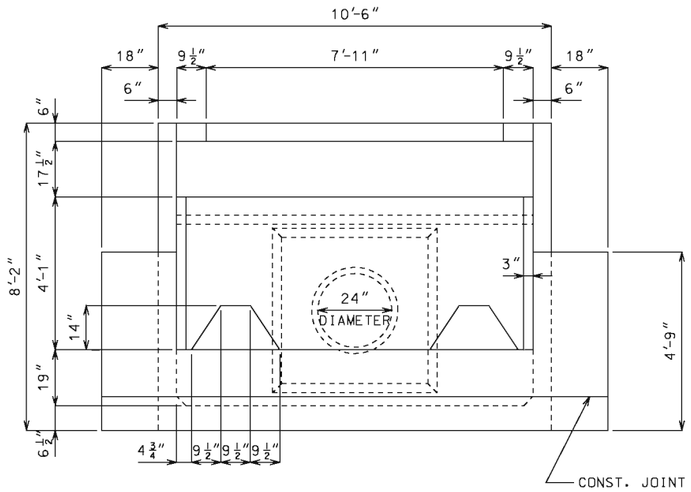

DOWNSTREAM ELEVATION

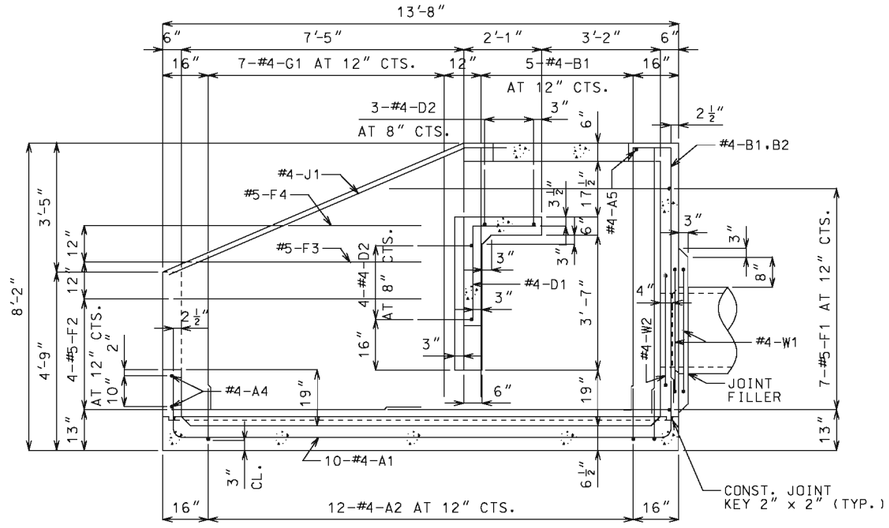

SECTION A – A

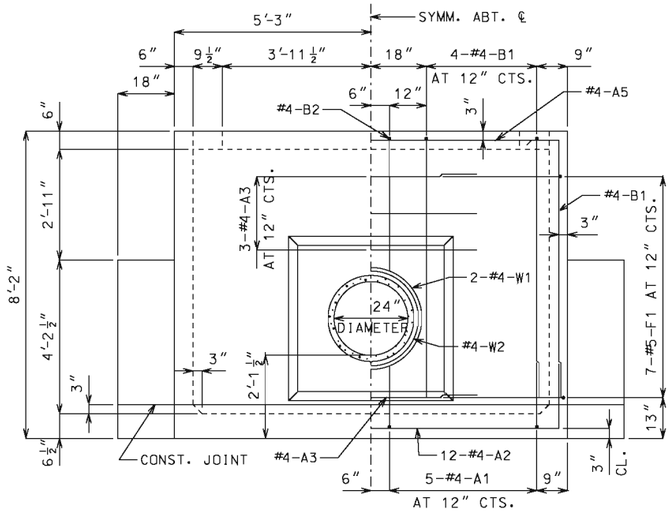

UPSTREAM ELEVATION

NOTE: BEND OR CUT A1 BARS IN FIELD TO CLEAR PIPE.

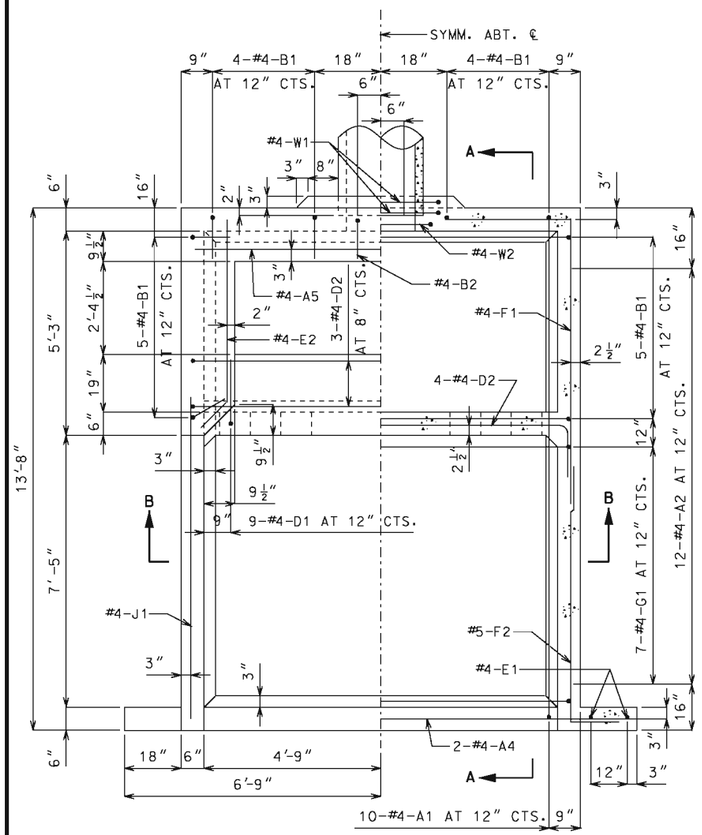

HALF PLAN HALF HORIZONTAL SECTION

GENERAL NOTES:

DESIGN UNIT STRESSES

CLASS B CONCRETE f'c = 3,000 psi
REINFORCING STEEL (GRADE 60) fy = 60,000 psi

REINFORCING STEEL

MINIMUM CLEARANCE TO REINFORCING STEEL SHALL BE 1½" UNLESS SHOWN OTHERWISE.

DIMENSIONS

DRAWINGS ARE NOT TO SCALE. FOLLOW DIMENSIONS.

ESTIMATED QUANTITIES		
ITEM		TOTAL
CLASS B CONCRETE	CU. YD.	9.5
REINFORCING STEEL	LBS.	820

COMPLETE BILL OF REINFORCING STEEL																
NO. REQ'D	MARK NO. SIZE	MARK NO. MARK	SHAPE NO.	VARIES (V)	NO. EACH	DIMENSIONS B	C	D	E	F	H	K	NOMINAL LENGTH	ACTUAL LENGTH	WEIGHT
						FT. IN.	FT. IN.	FT. IN.	FT. IN.	FT. IN.	FT. IN.	FT. IN.	FT. IN.	FT. IN.	LBS.
10	4	A1	11				0-20¼	13-2½	0-17¾				16-5	16-2	108
12	4	A2	11				0-18¾	10-0	0-18¾				13-2	12-11	104
4	4	A3	20			5-0							5-0	5-0	13
2	4	A4	20			13-3							13-3	13-3	18
1	4	A5	20			10-3							10-3	10-3	7
18	4	B1	19			7-1½	0-12						8-2	8-0	96
2	4	B2	19			3-8	0-10						4-6	4-5	6
9	4	D1	19			3-8	0-20½						5-5	5-3	32
7	4	D2	11				0-19	10-1	0-19				13-3	13-1	61
1	4	D3	15			2-9⅛	3-10	2-9⅛	2-3½	0-18½	2-3½	0-18½	9-4	9-3	6
2	4	D4	14			0-12	0-7	2-9⅛			2-3½	0-18½	4-4	4-2	6
4	4	E1	20			4-6							4-6	4-6	12
2	4	E2	23			0-17	5-0½				0-12	0-12	6-6	6-5	9
2	4	E3	20			2-8							2-8	2-8	4
14	5	F1	19			3-8	7-11						11-7	11-6	168
8	5	F2	19			0-19	7-0						8-7	8-6	71
2	5	F3	20			6-0							6-0	6-0	13
2	5	F4	20			3-9							3-9	3-9	8
14	4	G1	20	V	2	6-8							6-8	6-8	
						4-1	(INCREMENT = 5⅛ INCHES)						4-1	4-1	50
2	4	J1	20			9-6							9-6	9-6	13
2	4	W1	16			2-9							9-6	9-6	13
1	4	W2	16			2-5							8-6	8-6	6

BENDING DIAGRAMS

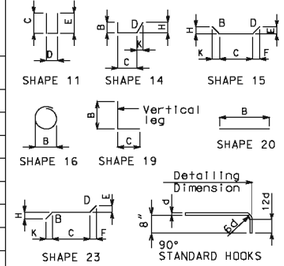

ALL STANDARD HOOKS AND BENDS OTHER THAN 180 DEG. TO BE BENT WITH SAME PROCEDURE AS FOR 90 DEG. STANDARD HOOKS.

HOOKS AND BENDS SHALL BE IN ACCORDANCE WITH THE PROCEDURES AS SHOWN ON THIS SHEET.

NOMINAL LENGTHS ARE BASED ON OUT TO OUT DIMENSIONS SHOWN IN BENDING DIAGRAMS AND ARE LISTED FOR FABRICATORS USE.

PAYWEIGHTS ARE BASED ON ACTUAL LENGTHS.

LENGTH = TOTAL LENGTHS ARE MEASURED ALONG CENTERLINE BAR TO THE NEAREST INCH.

V – BAR DIMENSIONS VARY IN EQUAL INCREMENTS BETWEEN DIMENSIONS SHOWN ON THIS LINE AND THE FOLLOWING LINE.

NO.EA. = NUMBER OF BARS OF EACH LENGTH.

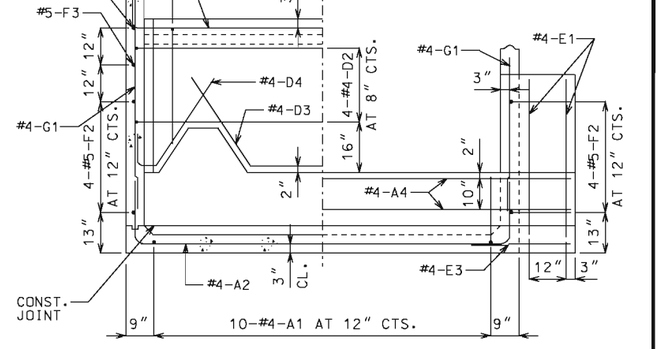

HALF SECTION B-B HALF ELEVATION OF LOWER BAFFLE AND WING

NOTE: BEND OR CUT D1 BARS IN FIELD TO CLEAR NOTCH IN BAFFLE WALL.

MISSOURI HIGHWAYS AND TRANSPORTATION COMMISSION
105 WEST CAPITOL
JEFFERSON CITY, MO 65102
1-888-ASK-MODOT (1-888-275-6636)

STATE OF MISSOURI
DENNIS W. HECKMAN
NUMBER PE-27141
PROFESSIONAL ENGINEER
THIS SHEET HAS BEEN SIGNED, SEALED AND DATED ELECTRONICALLY.

PIPE CULVERT HEADWALL
ENERGY DISSIPATOR (IMPACT TYPE) FOR 24" CONCRETE PIPE

DATE EFFECTIVE: 07/01/2001
DATE PREPARED: 9/3/2009

604.11E

SHEET NO. 1 OF 1

IF A SEAL IS PRESENT ON THIS SHEET IT HAS BEEN ELECTRONICALLY SEALED AND DATED.

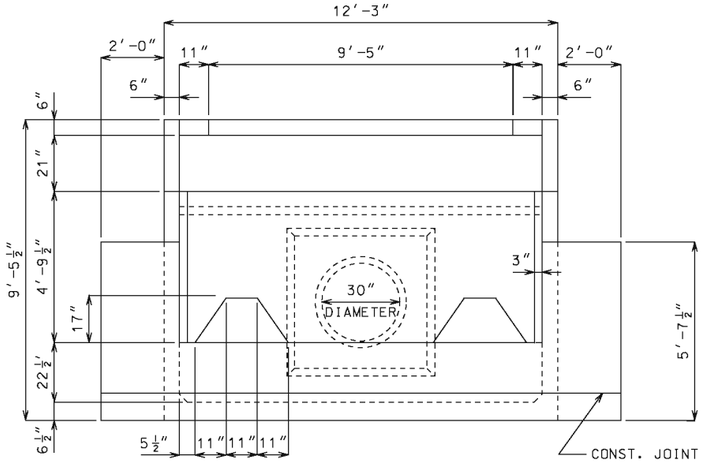

DOWNSTREAM ELEVATION

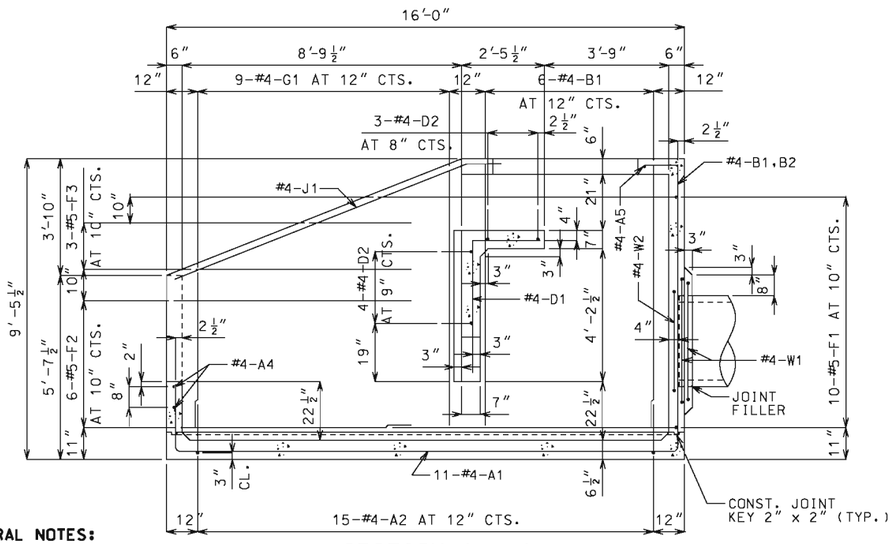

SECTION A – A

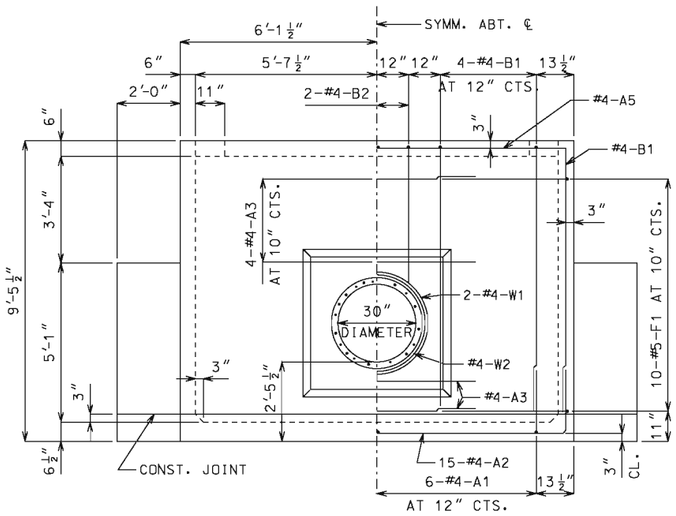

UPSTREAM ELEVATION

NOTE: BEND OR CUT A1 BARS IN FIELD TO CLEAR PIPE.

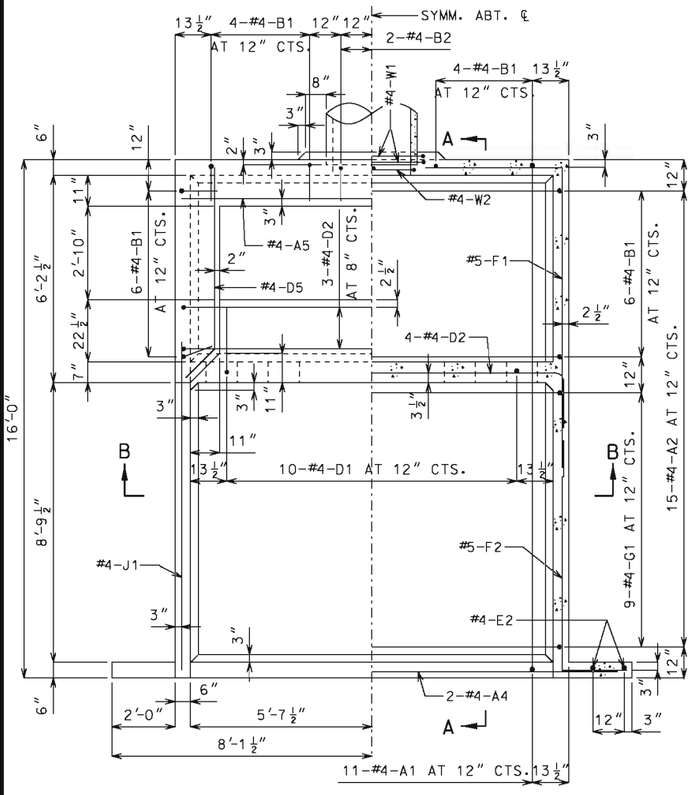

HALF PLAN HALF HORIZONTAL SECTION

GENERAL NOTES:

DESIGN UNIT STRESSES

CLASS B CONCRETE f′c = 3,000 psi
REINFORCING STEEL (GRADE 60) fy = 60,000 psi

REINFORCING STEEL

MINIMUM CLEARANCE TO REINFORCING STEEL SHALL BE 1½″ UNLESS SHOWN OTHERWISE.

DIMENSIONS

DRAWINGS ARE NOT TO SCALE. FOLLOW DIMENSIONS.

ESTIMATED QUANTITIES		
ITEM		TOTAL
CLASS B CONCRETE	CU. YD.	13.2
REINFORCING STEEL	LBS.	1,170

COMPLETE BILL OF REINFORCING STEEL

NO. REQ'D	MARK NO. SIZE	MARK	SHAPE NO.	VARIES (V)	NO. EACH	DIMENSIONS B	C	D	E	F	H	K	NOMINAL LENGTH	ACTUAL LENGTH	WEIGHT
						FT. IN.	FT. IN.	FT. IN.	FT. IN.	FT. IN.	FT. IN.	FT. IN.	FT. IN.	FT. IN.	LBS.
11	4	A1	11				2-0½	15-6	0-20½				19-3	19-1	140
15	4	A2	11				0-20½	11-10	0-20½				15-3	15-1	151
6	4	A3	20			5-4							5-4	5-4	21
2	4	A4	20			13-3							13-3	13-3	18
1	4	A5	20			11-9							11-9	11-9	8
20	4	B1	19			8-5½	0-13						9-7	9-5	126
3	4	B2	19			4-0	0-13						5-1	5-0	10
10	4	D1	19			4-4	2-0½						6-5	6-3	42
7	4	D2	11				0-12	11-10	0-12				13-10	13-8	64
1	4	D3	15			2-11	4-7	2-11	2-6	0-18	2-6	0-18	10-5	10-4	7
2	4	D4	14			0-12	0-7	3-0			2-6	0-20	4-7	4-5	6
2	4	D5	23			0-18⅜	5-7				0-13	0-13	7-1	7-1	9
2	4	E1	20			3-0							3-0	3-0	4
4	4	E2	20			5-3							5-3	5-3	14
20	5	F1	19			8-8⅜	4-2½						12-11	12-9	266
12	5	F2	19			2-1	8-1						10-2	10-1	126
6	5	F3	20	V	2	3-0⅞							3-1	3-1	
						7-0⅞	(INCREMENT = 24 INCHES)						7-1	7-1	32
18	4	G1	20	V	2	5-1⅜							5-1	5-1	
						8-5⅜	(INCREMENT = 5 INCHES)						8-5	8-5	81
2	4	J1	20			10-11							10-11	10-11	15
2	4	W1	16			3-6							11-10	11-10	16
1	4	W2	16			2-11							10-0	10-0	7

BENDING DIAGRAMS

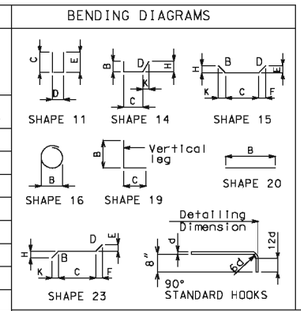

ALL STANDARD HOOKS AND BENDS OTHER THAN 180 DEG. TO BE BENT WITH SAME PROCEDURE AS FOR 90 DEG. STANDARD HOOKS.

HOOKS AND BENDS SHALL BE IN ACCORDANCE WITH THE PROCEDURES AS SHOWN ON THIS SHEET.

NOMINAL LENGTHS ARE BASED ON OUT TO OUT DIMENSIONS SHOWN IN BENDING DIAGRAMS AND ARE LISTED FOR FABRICATORS USE.

PAYWEIGHTS ARE BASED ON ACTUAL LENGTHS.

LENGTH = TOTAL LENGTHS ARE MEASURED ALONG CENTERLINE BAR TO THE NEAREST INCH.

V – BAR DIMENSIONS VARY IN EQUAL INCREMENTS BETWEEN DIMENSIONS SHOWN ON THIS LINE AND THE FOLLOWING LINE.

NO.EA. = NUMBER OF BARS OF EACH LENGTH.

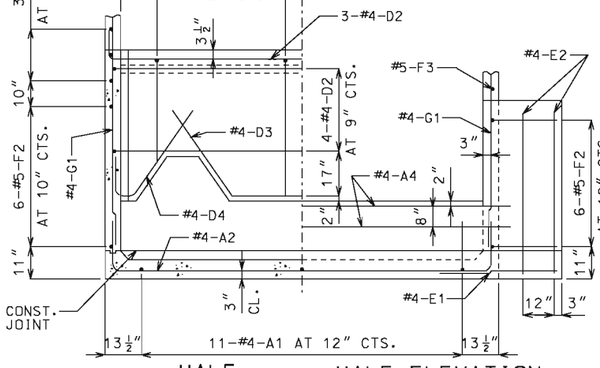

HALF SECTION B-B

HALF ELEVATION OF LOWER BAFFLE AND WING

NOTE: BEND OR CUT D1 BARS IN FIELD TO CLEAR NOTCH IN BAFFLE WALL.

MISSOURI HIGHWAYS AND TRANSPORTATION COMMISSION
105 WEST CAPITOL
JEFFERSON CITY, MO 65102
1-888-ASK-MODOT (1-888-275-6636)

STATE OF MISSOURI
DENNIS W. HECKMAN
NUMBER PE-27141
PROFESSIONAL ENGINEER
THIS SHEET HAS BEEN SIGNED, SEALED AND DATED ELECTRONICALLY.

PIPE CULVERT HEADWALL

ENERGY DISSIPATOR (IMPACT TYPE) FOR 30″ CONCRETE PIPE

DATE EFFECTIVE: 07/01/2001
DATE PREPARED: 9/3/2009

604.12E

SHEET NO. 1 OF 1

IF A SEAL IS PRESENT ON THIS SHEET IT HAS BEEN ELECTRONICALLY SEALED AND DATED.

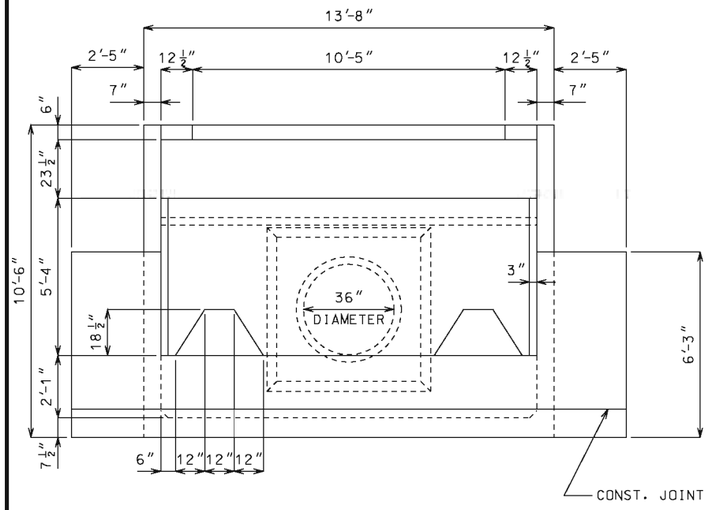

DOWNSTREAM ELEVATION

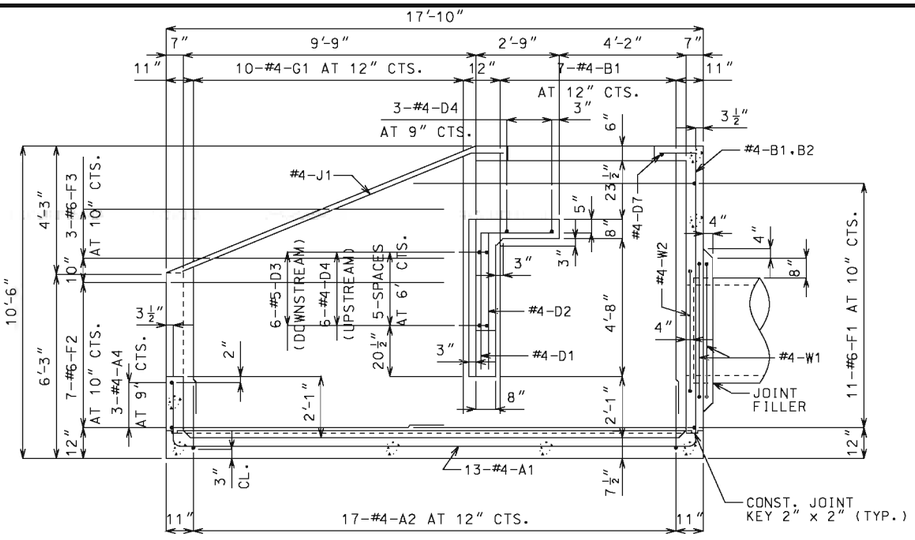

SECTION A - A

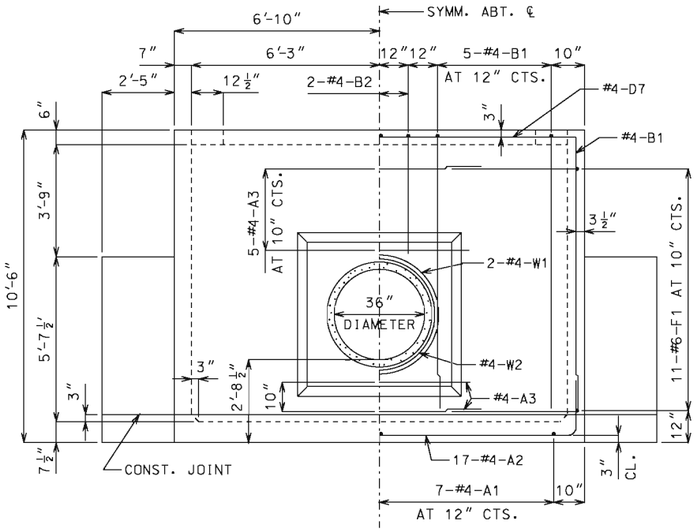

UPSTREAM ELEVATION

NOTE: BEND OR CUT A1 BARS IN FIELD TO CLEAR PIPE.

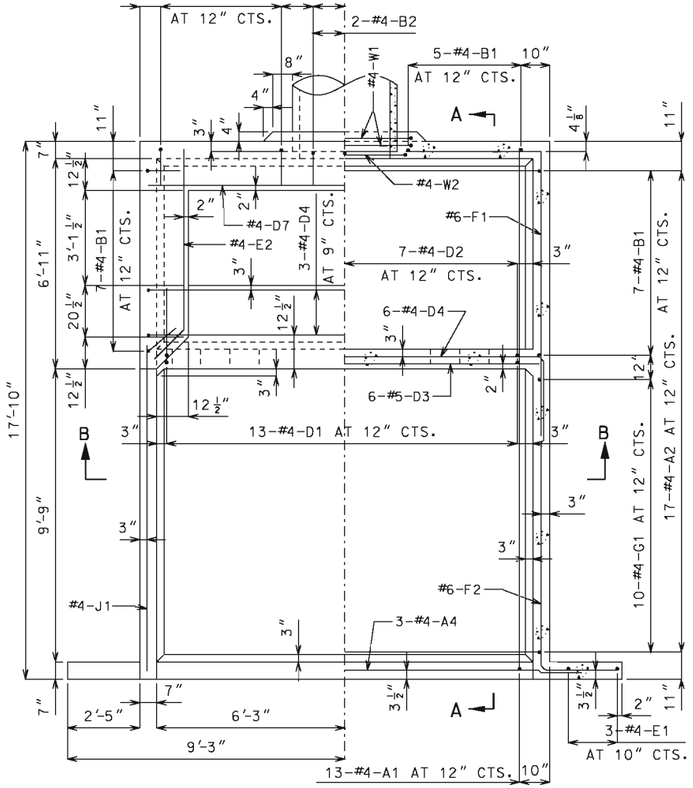

HALF PLAN HALF HORIZONTAL SECTION

GENERAL NOTES:

DESIGN UNIT STRESSES

CLASS B CONCRETE f'c = 3,000 psi
REINFORCING STEEL (GRADE 60) fy = 60,000 psi

REINFORCING STEEL

MINIMUM CLEARANCE TO REINFORCING STEEL SHALL BE 1½" UNLESS SHOWN OTHERWISE.

DIMENSIONS

DRAWINGS ARE NOT TO SCALE. FOLLOW DIMENSIONS.

ESTIMATED QUANTITIES		
ITEM		TOTAL
CLASS B CONCRETE	CU. YD.	19.0
REINFORCING STEEL	LBS.	1,870

COMPLETE BILL OF REINFORCING STEEL															
NO. REQ'D	MARK NO. SIZE	MARK	SHAPE NO.	VARIES (V)	NO. EACH	DIMENSIONS B	C	D	E	F	H	K	NOMINAL LENGTH	ACTUAL LENGTH	WEIGHT
						FT. IN.	FT. IN.	FT. IN.	FT. IN.	FT. IN.	FT. IN.	FT. IN.	FT. IN.	FT. IN.	LBS.
13	4	A1	11				2-2½	17-5½	2-4				22-0	21-10	190
17	4	A2	11				2-4	13-1	2-4				17-9	17-7	200
7	4	A3	20			5-11							5-11	5-11	28
3	4	A4	20			15-2							15-2	15-2	30
24	4	B1	19			8-7½	0-15						9-11	9-9	156
3	4	B2	19			4-2½	0-15						5-6	5-4	11
13	4	D1	19			4-11	2-5½						7-5	7-3	63
13	4	D2	20			4-11							4-11	4-11	43
6	5	D3	20			13-5							13-5	13-5	84
9	4	D4	11				0-12	13-2	0-12				15-2	15-0	90
4	4	D5	14			0-12	0-8¾	3-0			2-6	0-20	4-9	4-7	12
2	4	D6	15			3-0	5-4½	3-0	2-6	0-20	2-6	0-20	11-5	11-4	15
1	4	D7	20			13-5							13-5	13-5	9
6	4	E1	20			6-0							6-0	6-0	24
2	4	E2	15			0-22⅝	6-0				0-16	0-16	7-11	7-10	10
2	4	E3	20			3-7							3-7	3-7	5
22	6	F1	19			9-10½	4-7½						14-6	14-4	474
14	6	F2	19			9-2½	2-6½						11-9	11-7	244
6	6	F3	20	V	2	3-6							3-6	3-6	
						7-6	(INCREMENT = 24 INCHES)						7-6	7-6	50
20	4	G1	20	V	2	4-9							4-9	4-9	
						8-5½	(INCREMENT = 5 INCHES)						8-6	8-6	89
2	4	J1	20			12-0							12-0	12-0	16
2	4	W1	16			4-0½							13-7	13-7	18
1	4	W2	16			3-4½							11-6	11-6	8

BENDING DIAGRAMS

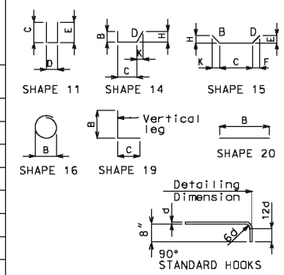

ALL STANDARD HOOKS AND BENDS OTHER THAN 180 DEG. TO BE BENT WITH SAME PROCEDURE AS FOR 90 DEG. STANDARD HOOKS.

HOOKS AND BENDS SHALL BE IN ACCORDANCE WITH THE PROCEDURES AS SHOWN ON THIS SHEET.

NOMINAL LENGTHS ARE BASED ON OUT TO OUT DIMENSIONS SHOWN IN BENDING DIAGRAMS AND ARE LISTED FOR FABRICATORS USE.

PAYWEIGHTS ARE BASED ON ACTUAL LENGTHS.

LENGTH = TOTAL LENGTHS ARE MEASURED ALONG CENTERLINE BAR TO THE NEAREST INCH.

V - BAR DIMENSIONS VARY IN EQUAL INCREMENTS BETWEEN DIMENSIONS SHOWN ON THIS LINE AND THE FOLLOWING LINE.

NO.EA. = NUMBER OF BARS OF EACH LENGTH.

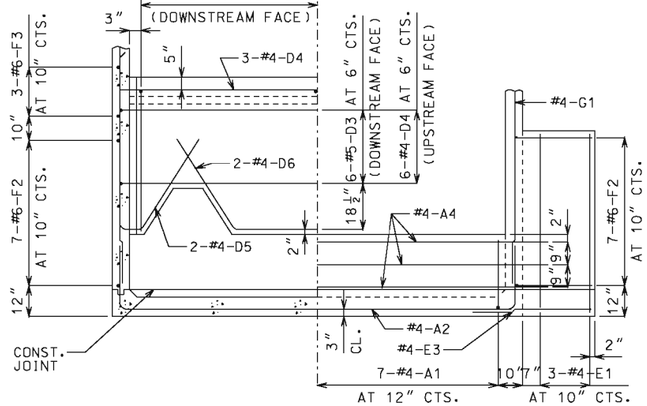

HALF SECTION B-B

HALF ELEVATION OF LOWER BAFFLE AND WING

NOTE: BEND OR CUT D1 AND D2 BARS IN FIELD TO CLEAR NOTCH IN BAFFLE WALL.

MISSOURI HIGHWAYS AND TRANSPORTATION COMMISSION
105 WEST CAPITOL
JEFFERSON CITY, MO 65102
1-888-ASK-MODOT (1-888-275-6636)

STATE OF MISSOURI
DENNIS W. HECKMAN
NUMBER PE-27141
PROFESSIONAL ENGINEER
THIS SHEET HAS BEEN SIGNED, SEALED AND DATED ELECTRONICALLY.

PIPE CULVERT HEADWALL

ENERGY DISSIPATOR (IMPACT TYPE) FOR 36" CONCRETE PIPE

DATE EFFECTIVE: 07/01/2001
DATE PREPARED: 9/3/2009

604.13E

SHEET NO. 1 OF 1

IF A SEAL IS PRESENT ON THIS SHEET IT HAS BEEN ELECTRONICALLY SEALED AND DATED.

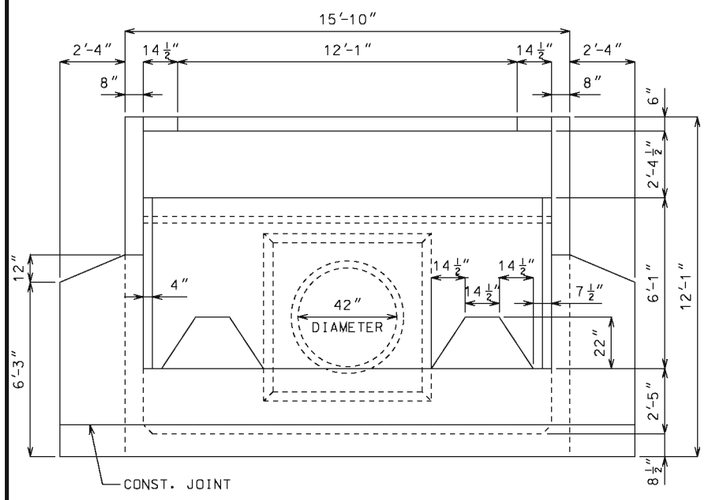

DOWNSTREAM ELEVATION

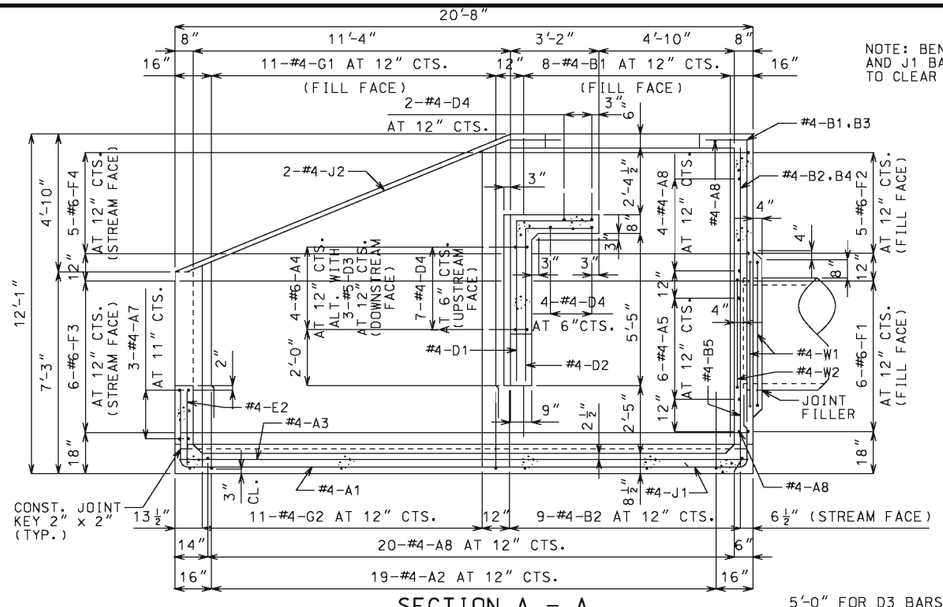

SECTION A – A

NOTE: BEND OR CUT A1 AND J1 BARS IN FIELD TO CLEAR PIPE.

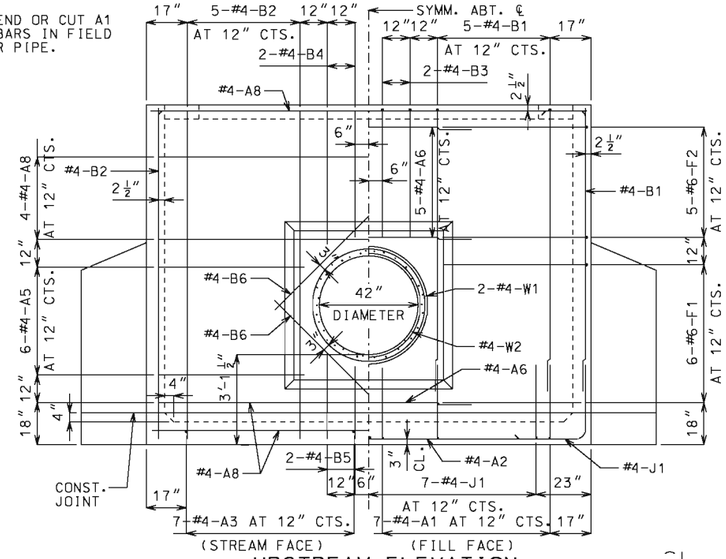

UPSTREAM ELEVATION

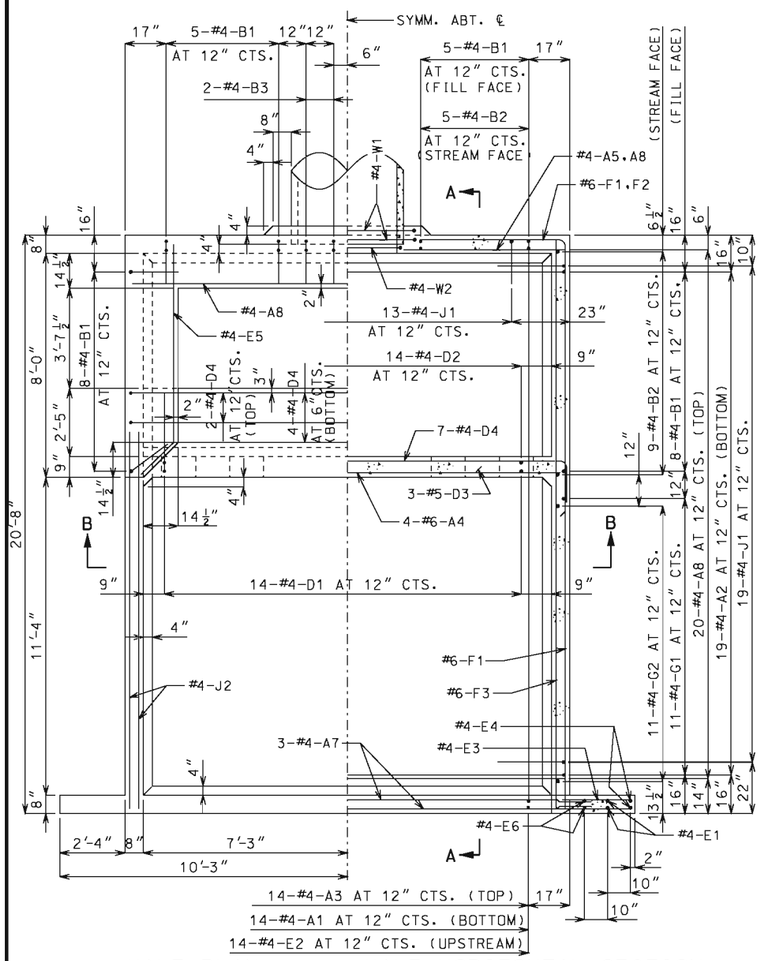

HALF PLAN HALF HORIZONTAL SECTION

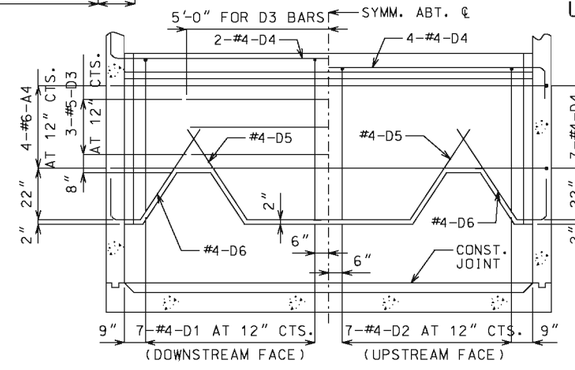

SECTION B-B

NOTE: BEND OR CUT D1 AND D2 BARS IN FIELD TO CLEAR NOTCH IN BAFFLE WALL.

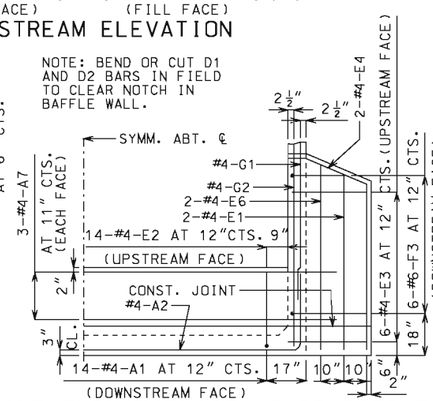

HALF ELEVATION OF LOWER BAFFLE AND WING

COMPLETE BILL OF REINFORCING STEEL

NO. REQ'D	MARK NO. SIZE	MARK	SHAPE NO.	NO. VARIES (V)	NO. EACH	DIMENSIONS B	C	D	E	F	H	K	NOMINAL LENGTH	ACTUAL LENGTH	WEIGHT
						FT. IN.	FT. IN.	FT. IN.	FT. IN.	FT. IN.	FT. IN.	FT. IN.	FT. IN.	FT. IN.	LBS.
14	4	A1	11				2-9	20-4	2-9				25-10	25-8	240
19	4	A2	11				2-10	15-7	2-10				21-3	21-1	268
14	4	A3	20			20-4							20-4	20-4	190
4	6	A4	20			15-7							15-7	15-7	94
12	4	A5	20			5-7							5-7	5-7	45
6	4	A6	20			6-5							6-5	6-5	26
6	4	A7	20			16-9							16-9	16-9	67
26	4	A8	20			15-7							15-7	15-7	271
26	4	B1	19			9-11½	0-19						11-7	11-5	198
28	4	B2	20			11-10							11-10	11-10	221
4	4	B3	19			4-10	0-19						6-5	6-4	17
4	4	B4	20			4-10							4-10	4-10	13
4	4	B5	20			2-6							2-6	2-6	7
4	4	B6	20			5-0							5-0	5-0	13
14	4	D1	19			5-9½	2-10½						8-8	8-7	80
14	4	D2	19			5-5½	2-6						8-0	7-10	73
3	5	D3	20			10-0							10-0	10-0	31
13	4	D4	11				0-12	15-7	0-12				17-7	17-5	151
2	4	D5	15			3-7⅜	5-10	3-7⅜	3-0½	2-0	3-0½	2-0	13-1	13-0	17
4	4	D6	14			0-12	0-13½	3-7⅜			3-0½	2-0	5-9	5-7	15
4	4	E1	20			6-5							6-5	6-5	17
14	4	E2	20			2-10							2-10	2-10	26
12	4	E3	20			2-9							2-9	2-9	22
4	4	E4	25			6-0	2-5	0-6½			0-11½	2-2½	8-11	8-10	24
2	4	E5	15			2-2⅞	7-3½				0-19	0-19	9-6	9-6	13
4	4	E6	20			6-9							6-9	6-9	18
12	6	F1	19			20-5	5-5½						25-11	25-9	464
10	6	F2	19	V	2	9-8	5-5½						15-2	15-0	
						19-6	5-5½		(INCREMENT = 29½)				25-0	24-10	299
12	6	F3	19			20-5	2-9						23-2	23-0	415
10	6	F4	20	V	2	9-8							9-8	9-8	
						19-6			(INCREMENT = 29½)				19-6	19-6	219
22	4	G1	20	V	2	5-7							5-7	5-7	
						9-6			(INCREMENT = 4⅜)				9-6	9-6	111
22	4	G2	20	V	2	7-7							7-7	7-7	
						11-6			(INCREMENT = 4⅜)				11-6	11-6	140
51	4	J1	19			3-3	3-3						6-6	6-5	219
4	4	J2	20			13-10							13-10	13-10	37
2	4	W1	16			4-7½							15-5	15-5	21
1	4	W2	16			3-10½							13-1	13-1	9

ESTIMATED QUANTITIES

ITEM		TOTAL
CLASS B CONCRETE	CU. YD.	28.2
REINFORCING STEEL	LBS.	4,090

BENDING DIAGRAMS

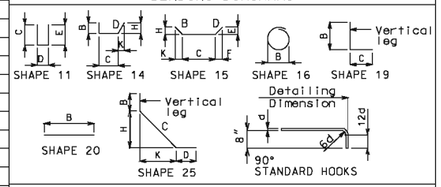

ALL STANDARD HOOKS AND BENDS OTHER THAN 180 DEG. TO BE BENT WITH SAME PROCEDURE AS FOR 90 DEG. STANDARD HOOKS.

HOOKS AND BENDS SHALL BE IN ACCORDANCE WITH THE PROCEDURES AS SHOWN ON THIS SHEET.

NOMINAL LENGTHS ARE BASED ON OUT TO OUT DIMENSIONS SHOWN IN BENDING DIAGRAMS AND ARE LISTED FOR FABRICATORS USE.

PAYWEIGHTS ARE BASED ON ACTUAL LENGTHS.

LENGTH = TOTAL LENGTHS ARE MEASURED ALONG CENTERLINE BAR TO THE NEAREST INCH.

V - BAR DIMENSIONS VARY IN EQUAL INCREMENTS BETWEEN DIMENSIONS SHOWN ON THIS LINE AND THE FOLLOWING LINE.

NO.EA. = NUMBER OF BARS OF EACH LENGTH.

GENERAL NOTES:

DESIGN UNIT STRESSES

CLASS B CONCRETE f'c = 3,000 psi
REINFORCING STEEL (GRADE 60) fy = 60,000 psi

REINFORCING STEEL

MINIMUM CLEARANCE TO REINFORCING STEEL

DIMENSIONS

DRAWINGS ARE NOT TO SCALE. FOLLOW DIMENSIONS.

IF A SEAL IS PRESENT ON THIS SHEET IT HAS BEEN ELECTRONICALLY SEALED AND DATED.

MISSOURI HIGHWAYS AND TRANSPORTATION COMMISSION
105 WEST CAPITOL
JEFFERSON CITY, MO 65102
1-888-ASK-MODOT (1-888-275-6636)

STATE OF MISSOURI
DENNIS W. HECKMAN
NUMBER PE-27141
PROFESSIONAL ENGINEER
THIS SHEET HAS BEEN SIGNED, SEALED AND DATED ELECTRONICALLY.

PIPE CULVERT HEADWALL

ENERGY DISSIPATOR (IMPACT TYPE) FOR 42" CONCRETE PIPE

DATE EFFECTIVE: 07/01/2001
DATE PREPARED: 9/3/2009

604.14E

SHEET NO. 1 OF 1

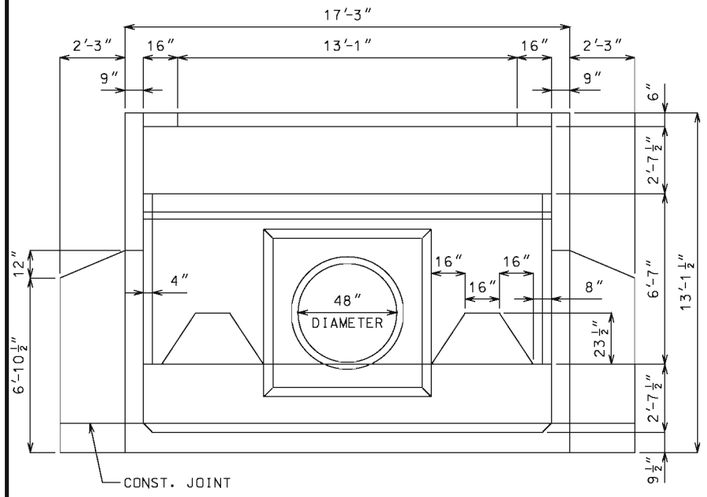

DOWNSTREAM ELEVATION

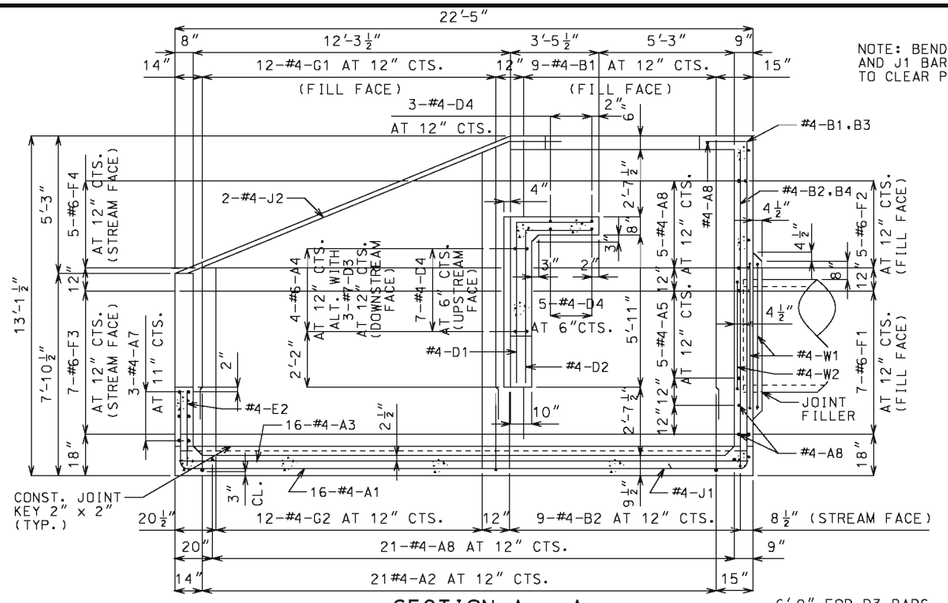

SECTION A - A

NOTE: BEND OR CUT A1 AND J1 BARS IN FIELD TO CLEAR PIPE.

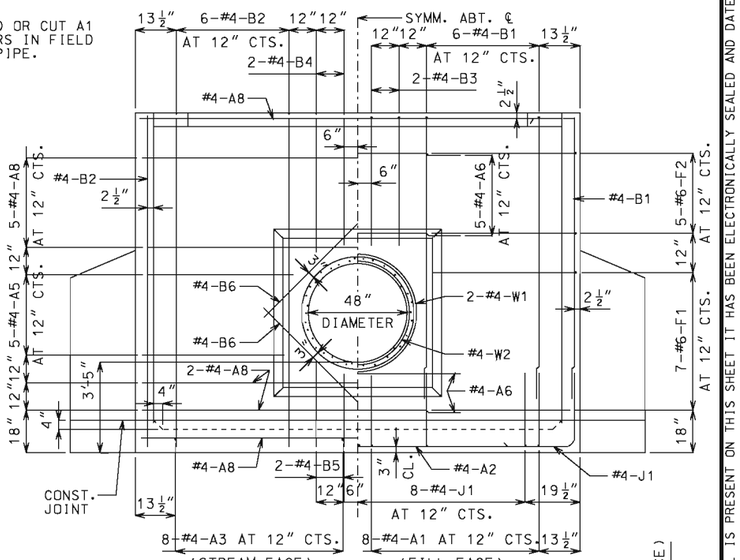

UPSTREAM ELEVATION

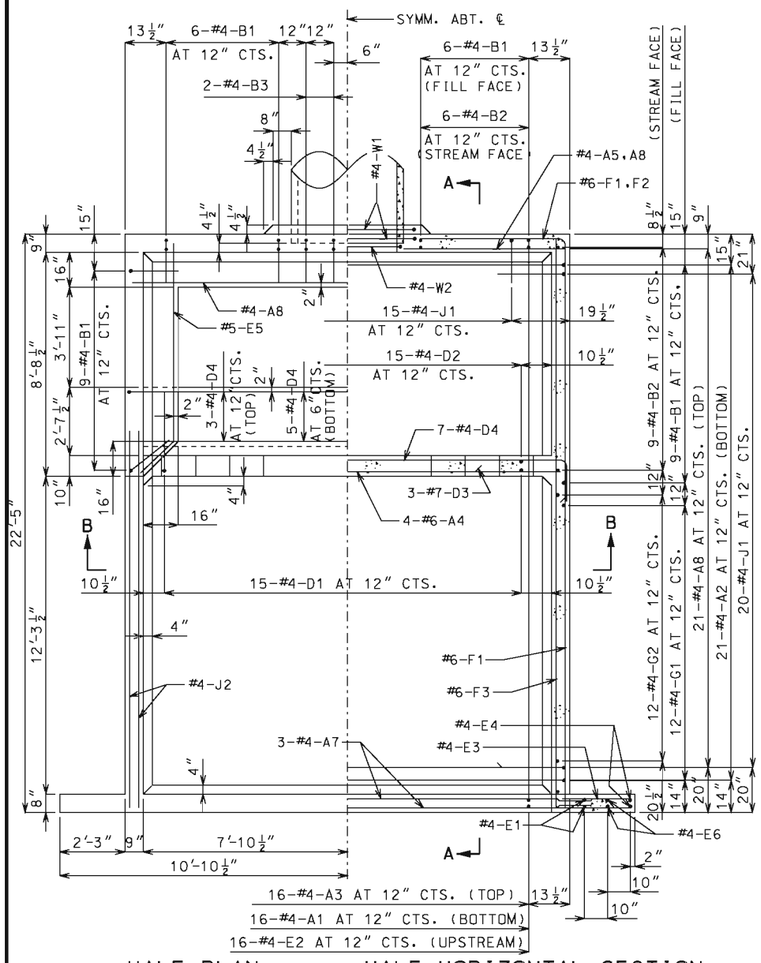

HALF PLAN HALF HORIZONTAL SECTION

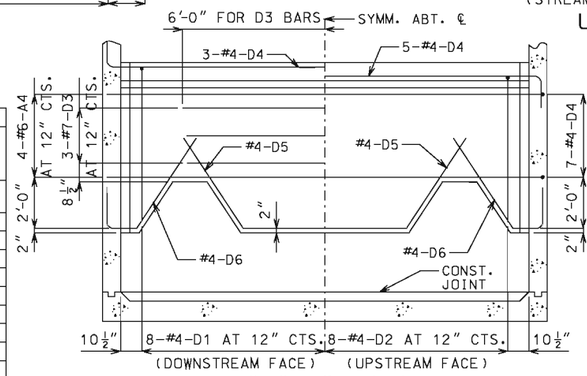

SECTION B-B

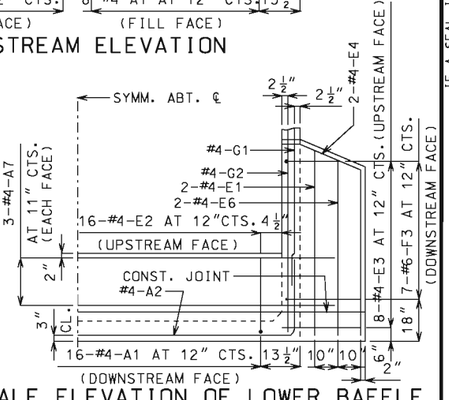

HALF ELEVATION OF LOWER BAFFLE AND WING

COMPLETE BILL OF REINFORCING STEEL

NO. REQ'D	MARK NO. SIZE	MARK	SHAPE NO.	VARIES (V) NO. EACH	DIMENSIONS B	C	D	E	F	H	K	NOMINAL LENGTH	ACTUAL LENGTH	WEIGHT
					FT. IN.	FT. IN.	FT. IN.	FT. IN.	FT. IN.	FT. IN.	FT. IN.	FT. IN.	FT. IN.	LBS.
16	4	A1	11			3-0½	22-1	3-0½				28-2	28-0	299
21	4	A2	11			3-1	16-11	3-1				23-1	22-11	321
16	4	A3	20		22-2							22-2	22-2	237
4	6	A4	20		17-0							17-0	17-0	102
10	4	A5	20		6-0							6-0	6-0	40
7	4	A6	20		7-1							7-1	7-1	33
6	4	A7	20		18-0							18-0	18-0	72
29	4	A8	20		17-0							17-0	17-0	329
30	4	B1	19		10-8½	0-21½						12-6	12-5	249
30	4	B2	20		12-10½							12-11	12-11	259
4	4	B3	19		5-0½	0-21½						6-10	6-9	18
4	4	B4	20		5-1							5-1	5-1	14
4	4	B5	20		2-10							2-10	2-10	8
4	4	B6	20		5-1							5-1	5-1	14
15	4	D1	19		6-3½	3-2½						9-6	9-5	94
15	4	D2	19		5-11	2-8						8-7	8-6	85
3	7	D3	20		12-0							12-0	12-0	74
15	4	D4	11			0-12	17-0	0-12				19-0	18-10	189
2	4	D5	15		3-9⅞	6-4	3-9⅞	3-1¾	2-2	3-1¾	2-2	14-0	13-11	19
4	4	D6	14		0-12	0-15	3-9⅞			3-1¾	2-2	6-1	5-11	16
4	4	E1	20		7-5							7-5	7-5	20
16	4	E2	20		3-2							3-2	3-2	34
16	4	E3	20		2-9							2-9	2-9	29
4	4	E4	25		6-8	2-2⅞	0-7½			0-10	2-1	9-6	9-6	25
2	5	E5	15		2-7⅛	7-11½				0-22	0-22	10-7	10-6	22
4	4	E6	20		7-1							7-1	7-1	19
14	6	F1	19	V 2	22-3	6-0						28-3	28-1	591
10	6	F2	19	V 2	10-8½	6-0						16-9	16-7	
					20-6½	6-0	(INCREMENT = 29½)					26-7	26-5	323
14	6	F3	19		22-3	2-9						25-0	24-10	522
10	6	F4	20	V 2	10-8½							10-9	10-7	
					20-6½		(INCREMENT = 29½)					20-7	20-7	233
24	4	G1	20	V 2	8-1							8-1	8-1	
					12-6½		(INCREMENT = 4⅞)					12-7	12-7	166
24	4	G2	20	V 2	8-4							8-4	8-4	
					12-9½		(INCREMENT = 4⅞)					12-10	12-10	170
55	4	J1	19		3-3	3-3						6-6	6-5	236
4	4	J2	20		14-10							14-10	14-10	40
2	4	W1	16		5-2½							17-3	17-3	23
1	4	W2	16		4-4½							14-7	14-7	10

ESTIMATED QUANTITIES

ITEM		TOTAL
CLASS B CONCRETE	CU. YD.	36.7
REINFORCING STEEL	LBS.	4,940

BENDING DIAGRAMS

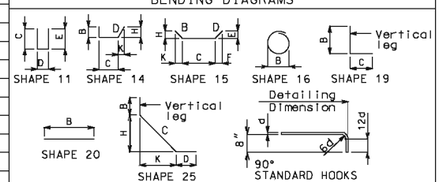

ALL STANDARD HOOKS AND BENDS OTHER THAN 180 DEG. TO BE BENT WITH SAME PROCEDURE AS FOR 90 DEG. STANDARD HOOKS.

HOOKS AND BENDS SHALL BE IN ACCORDANCE WITH THE PROCEDURES AS SHOWN ON THIS SHEET.

NOMINAL LENGTHS ARE BASED ON OUT TO OUT DIMENSIONS SHOWN IN BENDING DIAGRAMS AND ARE LISTED FOR FABRICATORS USE.

PAYWEIGHTS ARE BASED ON ACTUAL LENGTHS.

LENGTH = TOTAL LENGTHS ARE MEASURED ALONG CENTERLINE BAR TO THE NEAREST INCH.

V - BAR DIMENSIONS VARY IN EQUAL INCREMENTS BETWEEN DIMENSIONS SHOWN ON THIS LINE AND THE FOLLOWING LINE.

NO.EA. = NUMBER OF BARS OF EACH LENGTH.

GENERAL NOTES:

DESIGN UNIT STRESSES

CLASS B CONCRETE f'c = 3,000 psi
REINFORCING STEEL (GRADE 60) fy = 60,000 psi

REINFORCING STEEL

MINIMUM CLEARANCE TO REINFORCING STEEL SHALL BE 1½" UNLESS SHOWN OTHERWISE.

DIMENSIONS

DRAWINGS ARE NOT TO SCALE. FOLLOW DIMENSIONS.

IF A SEAL IS PRESENT ON THIS SHEET IT HAS BEEN ELECTRONICALLY SEALED AND DATED.

MISSOURI HIGHWAYS AND TRANSPORTATION COMMISSION
105 WEST CAPITOL
JEFFERSON CITY, MO 65102
1-888-ASK-MODOT (1-888-275-6636)

STATE OF MISSOURI
DENNIS W. HECKMAN
NUMBER PE-27141
PROFESSIONAL ENGINEER
THIS SHEET HAS BEEN SIGNED, SEALED AND DATED ELECTRONICALLY.

PIPE CULVERT HEADWALL
ENERGY DISSIPATOR (IMPACT TYPE) FOR 48" CONCRETE PIPE

DATE EFFECTIVE: 07/01/2001
DATE PREPARED: 9/3/2009

604.15E

SHEET NO. 1 OF 1

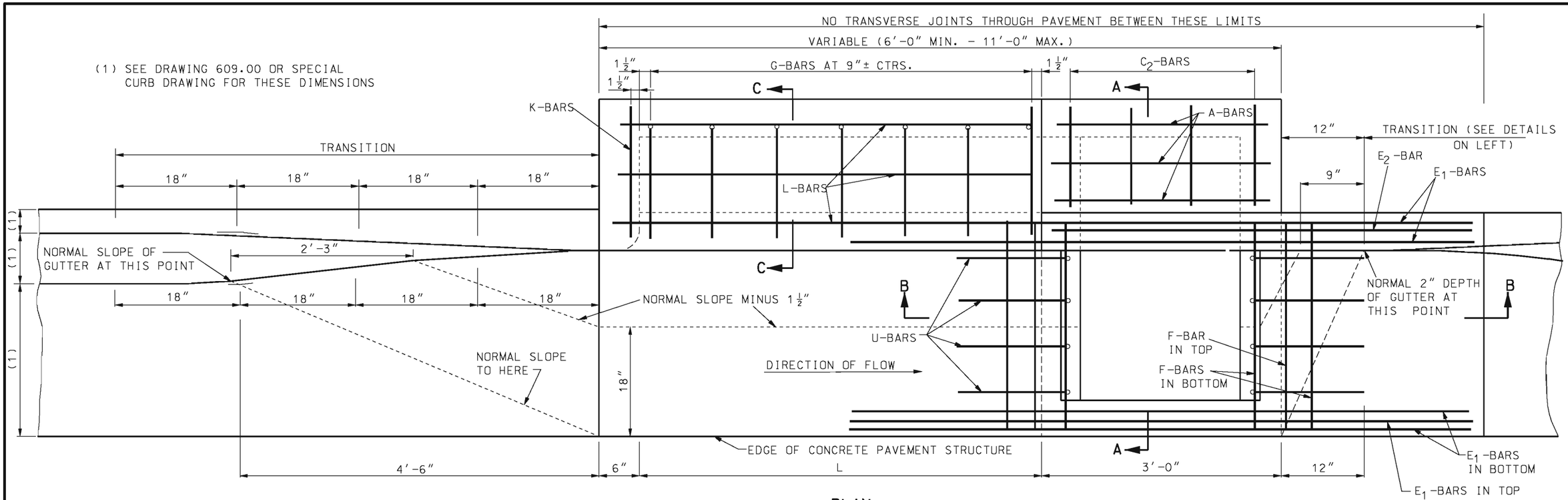

PLAN

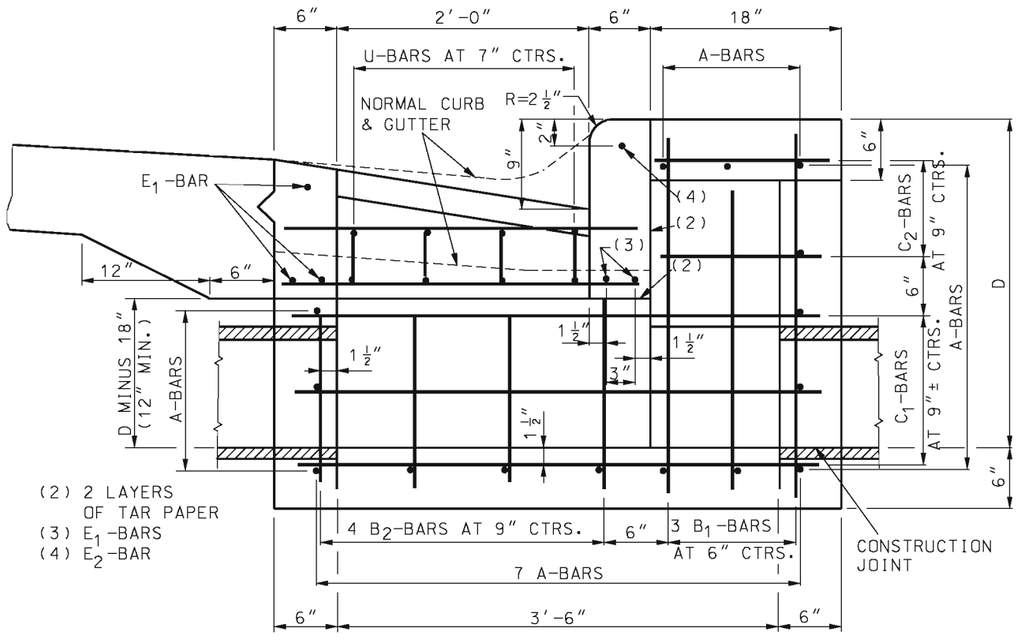

SECTION A-A
(INTAKE BOX)

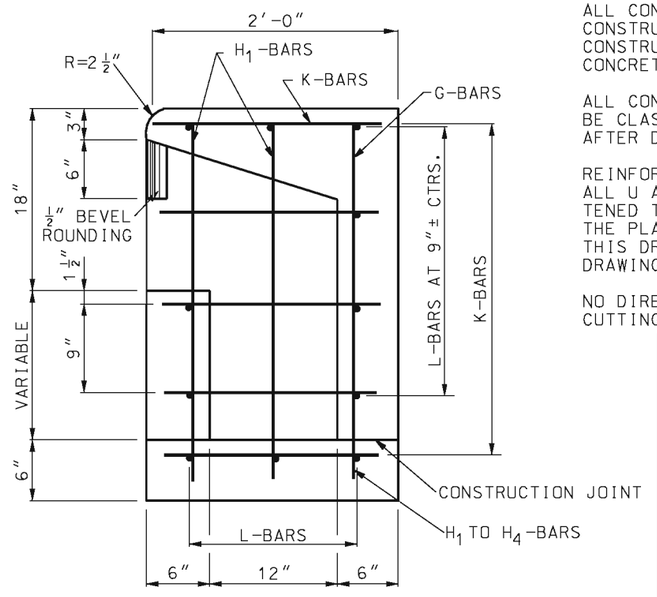

SECTION C-C
(EXTENSION)

GENERAL NOTES:

TOP OF DROP INLET WALLS SHALL BE LEVEL AND TO THE ELEVATION OF BOTTOM OF SLAB AT EDGE OF TRAVELED WAY OR BOTTOM OF CURB AND GUTTER AT DROP INLET.

ALL CONCRETE ABOVE THE TAR-PAPER SEPARATION JOINT IS TO BE CONSTRUCTED DURING PAVING OPERATIONS OR CURB AND GUTTER CONSTRUCTION: AND WILL BE PAID FOR AS SQUARE YARDS OF CONCRETE PAVEMENT OR LIEAR FEET OF CURB AND GUTTER.

ALL CONCRETE BELOW THE TAR-PAPER SEPARATION JOINTS SHALL BE CLASS "B" CONCRETE. CONCRETE IN INVERTS SHALL BE PLACED AFTER DROP INLET HAS BEEN CONSTRUCTED.

REINFORCING BARS SHALL BE CUT AND/OR BENT AT PIPE OPENINGS. ALL U AND F-BARS SHALL BE SECURELY TIED TOGETHER AND FASTENED TO SECURE AGAINST ANY POSSIBLE DISPLACEMENT DURING THE PLACING OF CONCRETE. THE REINFORCING STEEL SHOWN ON THIS DRAWING IS IN ADDITION TO ANY REINFORCING SHOWN ON DRAWINGS FOR CONCRETE PAVEMENT OR CURB AND GUTTER.

NO DIRECT PAYMENT WILL BE MADE FOR CUTTING PIPE NOR FOR CUTTING AND BENDING REINFORCING BARS.

IF A SEAL IS PRESENT ON THIS SHEET IT HAS BEEN ELECTRONICALLY SEALED AND DATED.

MISSOURI HIGHWAYS AND TRANSPORTATION COMMISSION
105 WEST CAPITOL
JEFFERSON CITY, MO 65102
1-888-ASK-MODOT (1-888-275-6636)

STATE OF MISSOURI
KATHRYN PHILLIPS HARVEY
NUMBER PE-23751
PROFESSIONAL ENGINEER
THIS SHEET HAS BEEN SIGNED, SEALED AND DATED ELECTRONICALLY.

DROP INLET
TYPE X

DATE EFFECTIVE: 04/01/1983
DATE PREPARED: 8/21/2009

604.29C

SHEET NO.
1 OF 2

BAR BILL – EXTENSION

LENGTH OF EXT. L		2′-6″		5′-0″		7′-6″	
MARK	SIZE	NO.	LENGTH	NO.	LENGTH	NO.	LENGTH
G	#5	4	3′-3″	7	3′-3″	10	3′-3″
H_1	#4	4	2′-6″	4	2′-6″	4	2′-6″
H_2	#4	2	2′-9″	3	2′-9″	3	2′-9″
H_3	#4			2	3′-0″	3	3′-0″
H_4	#4					2	3′-3″
H_5	#4	1	1′-0″	1	1′-0″	1	1′-0″
H_6	#4	2	1′-3″	3	1′-3″	3	1′-3″
H_7	#4			2	1′-6″	3	1′-6″
H_8	#4					2	1′-9″
K	#4	7	1′-9″	10	1′-9″	13	1′-9″
L	#4	11	2′-9″	11	5′-3″	11	7′-9″
DOWEL BAR	#4	8	1′-0″	9	1′-0″	10	1′-0″

CU. YDS. & LBS. ADDITIONS TO BE MADE FOR EACH EXTENSION

LENGTH	CU.YDS.	LBS.
2′-6″	0.39	60.0
5′-0″	0.70	101.4
7′-6″	1.04	143.8

CU. YDS. DEDUCTION TO BE MADE FOR PIPE OPENING

12″	15″	18″	24″
0.03	0.04	0.05	0.09

CONCRETE AND STEEL DEDUCTIONS TO BE MADE FOR EACH EXTENSION OPENING

9″ X 12″	12″ X 12″	15″ X 12″
0.01 C.Y.	0.02 C.Y.	0.02 C.Y.
2.5 LBS.	3.7 LBS.	4.0 LBS.

BAR BILL – INTAKE BOX

D	CONC. CU. YDS.	STEEL LBS.	A-BARS		B_1-BARS		B_2-BARS		C_1-BARS		C_2-BARS		E_1-BARS		E_2-BARS		F-BARS		U-BARS	
			TRANSVERSE IN BOTTOM WALLS & TOP		VERTICAL IN WALLS		VERTICAL IN WALLS		LONGITUDINAL IN BOTTOM AND SIDE		LONGITUDINAL IN SIDE AND TOP		LONGITUDINAL IN GUTTER		LONGITUDINAL IN GUTTER		TRANSVERSE IN GUTTER		IN GUTTER	
			NO.	LENGTH	NO.	LENGTH	NO.	LENGTH	NO.	LENGTH	NO.	LENGTH	NO.	LENGTH	NO.	LENGTH	NO.	LENGTH	NO.	LENGTH
2′-6″	0.82	131	15	2′-9″	8	2′-9″	10	1′-3″	8	4′-3″	6	1′-3″	5	7′-0″	1	4′-9″	6	2′-9″	8	2′-9″
2′-9″	0.88	134	15	2′-9″	8	3′-0″	10	1′-6″	8	4′-3″	6	1′-3″	5	7′-0″	1	4′-9″	6	2′-9″	8	2′-9″
3′-0″	0.94	137	15	2′-9″	8	3′-3″	10	1′-9″	8	4′-3″	6	1′-3″	5	7′-0″	1	4′-9″	6	2′-9″	8	2′-9″
3′-3″	1.00	140	15	2′-9″	8	3′-6″	10	2′-0″	8	4′-3″	6	1′-3″	5	7′-0″	1	4′-9″	6	2′-9″	8	2′-9″
3′-6″	1.06	152	17	2′-9″	8	3′-9″	10	2′-3″	10	4′-3″	6	1′-3″	5	7′-0″	1	4′-9″	6	2′-9″	8	2′-9″
3′-9″	1.12	155	17	2′-9″	8	4′-0″	10	2′-6″	10	4′-3″	6	1′-3″	5	7′-0″	1	4′-9″	6	2′-9″	8	2′-9″
4′-0″	1.18	158	17	2′-9″	8	4′-3″	10	2′-9″	10	4′-3″	6	1′-3″	5	7′-0″	1	4′-9″	6	2′-9″	8	2′-9″
4′-3″	1.24	170	19	2′-9″	8	4′-6″	10	3′-0″	12	4′-3″	6	1′-3″	5	7′-0″	1	4′-9″	6	2′-9″	8	2′-9″
4′-6″	1.30	173	19	2′-9″	8	4′-9″	10	3′-3″	12	4′-3″	6	1′-3″	5	7′-0″	1	4′-9″	6	2′-9″	8	2′-9″
4′-9″	1.36	176	19	2′-9″	8	5′-0″	10	3′-6″	12	4′-3″	6	1′-3″	5	7′-0″	1	4′-9″	6	2′-9″	8	2′-9″
5′-0″	1.42	189	21	2′-9″	8	5′-3″	10	3′-9″	14	4′-3″	6	1′-3″	5	7′-0″	1	4′-9″	6	2′-9″	8	2′-9″

CONCRETE QUANTITIES INCLUDE 0.15 CU.YDS. FOR INVERT | ALL BARS #4

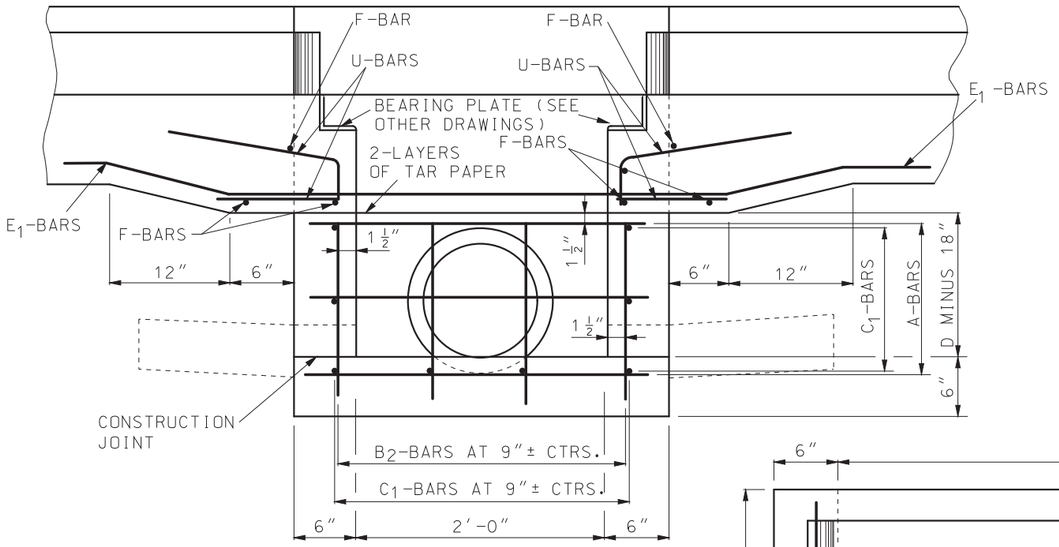

SECTION B-B

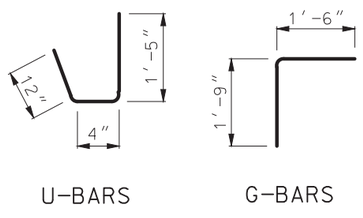

U-BARS G-BARS

BENDING DIAGRAMS

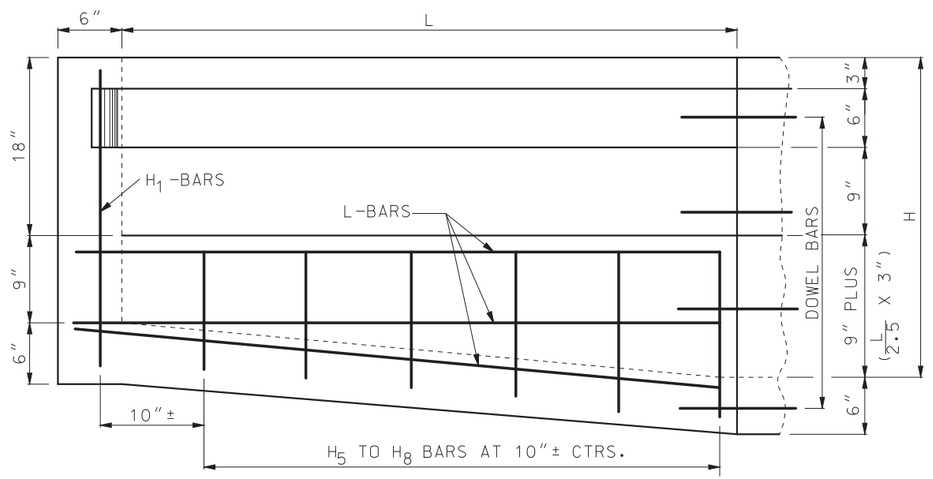

LONGITUDINAL SECTION
(EXTENSION)

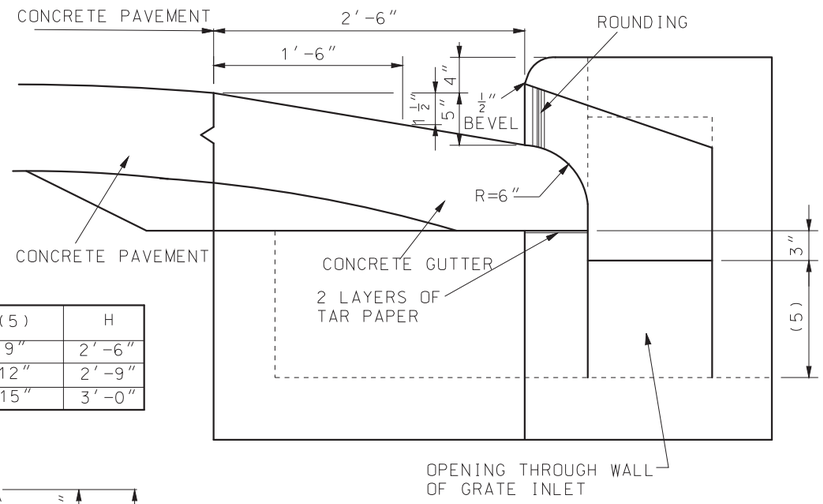

L	(5)	H
2′-6″	9″	2′-6″
5′-0″	12″	2′-9″
7′-6″	15″	3′-0″

SECTION SHOWING DETAILS OF OPENING AND DEPRESSION IN PAVEMENT OR GUTTER

IF A SEAL IS PRESENT ON THIS SHEET IT HAS BEEN ELECTRONICALLY SEALED AND DATED.

MISSOURI HIGHWAYS AND TRANSPORTATION COMMISSION
105 WEST CAPITOL
JEFFERSON CITY, MO 65102
1-888-ASK-MODOT (1-888-275-6636)

STATE OF MISSOURI
ERIC E. SCHROETER
NUMBER PE-28411
PROFESSIONAL ENGINEER
THIS SHEET HAS BEEN SIGNED, SEALED AND DATED ELECTRONICALLY.

DROP INLET

TYPE X

DATE EFFECTIVE: 04/01/1983
DATE PREPARED: 2/9/2018

604.29C

SHEET NO. 2 OF 2

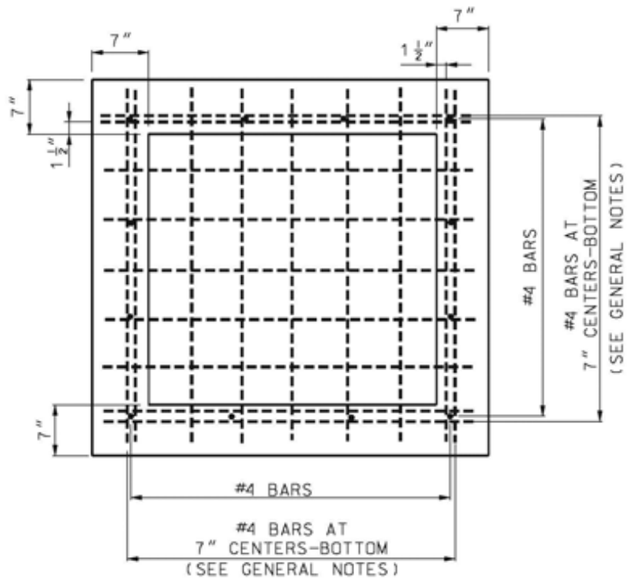

BASE PLAN

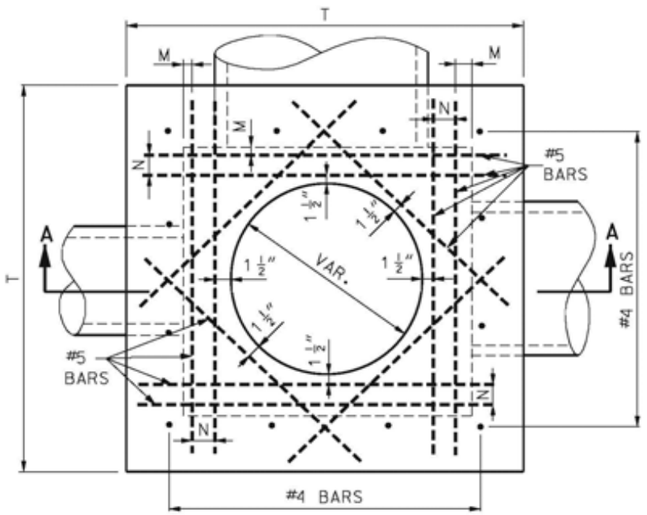

PLAN VIEW

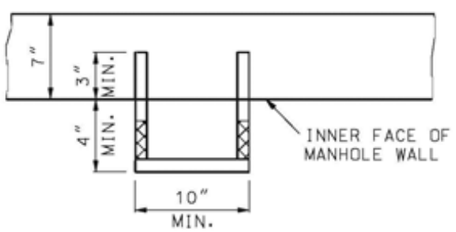

STEP INSTALLATION

STEPS SHALL BE PLACED AT VERTICAL INTERVALS OF 16" MAXIMUM IN ALL MANHOLES HAVING A DEPTH OF MORE THAN 4'-0". STEPS SHALL BEGIN AT AN ELEVATION 6" ABOVE THE TOP OF THE OUTLET PIPE.

STEPS SHALL BE SET LEVEL AND IN VERTICAL ALIGNMENT.

NO DIRECT PAYMENT WILL BE MADE FOR MANHOLE STEPS.

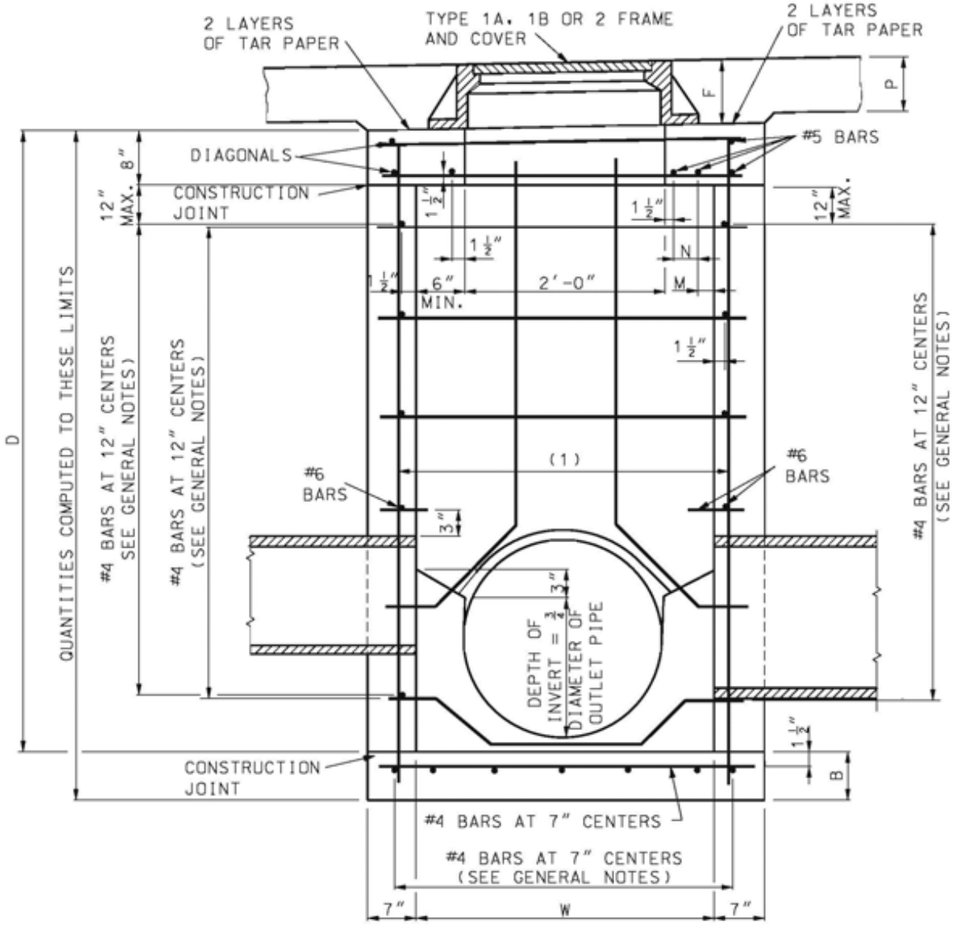

SECTION A-A

MANHOLE FRAME AND COVER IN PAVED AREAS USE TYPE 1. IN UNPAVED AREAS USED TYPE 1A OR 1B. NO CHANGE IN QUANTITIES REQUIRED FOR FRAME AND COVER DETAILS. SEE OTHER DRAWINGS.

(1) 4-#4 FOR 3'-0" OPENING
5-#4 FOR 3'-6" & 4'-0"
6-#4 FOR 4'-6" & 5'-0"

VARIABLE DIMENSIONS					
SIZE OF PIPE	W	T	B	M	N
≤ 24"	3'-0"	4'-2"	7"	VARIABLE	2½"
30"	3'-6"	4'-8"	7"		5½"
36"	4'-0"	5'-2"	7"		8"
42"	4'-6"	5'-8"	8"		5½"*
48"	5'-0"	6'-2"	8"		7"*
* 4-#5 BARS ADDED					

NOTES:
MINIMUM "D "SHALL BE THE OUTSIDE DIAMETER OF LARGEST PIPE ENTERING MANHOLE PLUS 16" CARRIED TO THE NEAREST 3".

HORIZONTAL AND VERTICAL BARS HORIZONTAL AND VERTICAL BARS AROUND PIPES.

GENERAL NOTES:

THE MAXIMUM DEPTH OF MANHOLE USING #4 HORIZONTAL BARS AT 12" CENTERS IS 20'.

OVER 20' DEPTH. HORIZONTAL BARS SHALL BE INCREASED TO A #5 BAR AT 10" CENTERS TO A MAXIMUM DEPTH OF 30'.

OVER 30' DEPTH WILL REQUIRE A SPECIAL DESIGN.

BOTTOM STEEL AT MORE THAN 20' DEPTH TO A MAXIMUM DEPTH OF 30' IS INCREASED TO #6 BARS AT 7" CENTERS.

MISSOURI HIGHWAYS AND TRANSPORTATION COMMISSION
105 WEST CAPITOL
JEFFERSON CITY, MO 65102
1-888-ASK-MODOT (1-888-275-6636)

STATE OF MISSOURI
KATHRYN PHILLIPS HARVEY
NUMBER PE-23751
PROFESSIONAL ENGINEER
THIS SHEET HAS BEEN SIGNED, SEALED AND DATED ELECTRONICALLY.

CONCRETE MANHOLES

DATE EFFECTIVE: 02-01-2009
DATE PREPARED: 8/26/2009

604.30G

SHEET NO. 1 OF 2

IF A SEAL IS PRESENT ON THIS SHEET IT HAS BEEN ELECTRONICALLY SEALED AND DATED.

FOR PIPE OPENINGS

	PIPE SIZES							
	12"	15"	18"	24"	30"	36"	42"	48"
CUBIC YARDS CONCRETE TO DEDUCT	0.03	0.04	0.06	0.11	0.16	0.23	0.31	0.40
ADDITIONAL STEEL REQUIRED FOR PIPE OPENING								
WIDTH OF WALL REQUIRED FOR PIPE				3'-0"	3'-6"	4'-0"	4'-6"	5'-0"
LENGTH OF #6 BAR REQUIRED				4'-0"	4'-6"	5'-0"	5'-6"	6'-0"
WEIGHT OF BAR LBS.				6.0	6.8	7.5	8.3	9.0

NOTE:
CONCRETE QUANTITIES IN TABLE INCLUDE INVERT. THE QUANTITY OF STEEL FOR 3" OF "D" IS NOT $\frac{1}{4}$ OF THAT FOR 1 FOOT OF "D", NEITHER IS THE QUANTITY FOR 6" OF "D" EQUAL TO $\frac{1}{2}$ THAT FOR 1 FOOT OF "D". SO USE QUANTITY IN 1 FOOT COLUMN FOR FULL FEET AND IN 3" COLUMN FOR FRACTIONAL FEET.

QUANTITIES

SIZE (W)		TO AND INCLUDING 20' DEPTH				20' TO AND INCLUDING 30' DEPTH		
		D= 3'-3"	D= 4'-3"	ADD OR SUBTRACT FOR EACH		ADD OR SUBTRACT FOR EACH		ADDITIONAL STEEL IN BOTTOM DIFFERENCE IN #4 AND #6 BARS
				1 FT.	3 IN.	1 FT.	3 IN.	
3'-0" X 3'-0"	C	1.62	1.93	0.31	0.08	0.31	0.08	
	S	157.90	176.80	18.60	2.00	20.64	5.16	30.14
3'-0" X 3'-6"	C	1.77	2.11	0.33	0.08	0.33	0.08	
	S	173.80	194.60	20.60	2.30	23.12	5.78	34.85
3'-0" X 4'-0"	C	1.93	2.28	0.35	0.09	0.35	0.09	
	S	187.10	208.60	21.30	2.30	24.27	6.07	39.56
3'-0" X 4'-6"	C	2.16	2.53	0.38	0.09	0.38	0.09	
	S	211.20	234.70	23.30	2.70	26.75	6.69	44.26
3'-0" X 5'-0"	C	2.32	2.71	0.40	0.10	0.40	0.10	
	S	219.60	243.80	24.00	2.70	27.90	6.97	48.97
3'-6" X 3'-6"	C	1.94	2.29	0.35	0.09	0.35	0.09	
	S	192.40	215.10	22.70	2.70	25.60	6.40	40.27
3'-6" X 4'-0"	C	2.10	2.48	0.38	0.09	0.38	0.09	
	S	204.30	227.70	23.40	2.70	26.75	6.69	45.69
3'-6" X 4'-6"	C	2.35	2.75	0.40	0.10	0.40	0.10	
	S	230.00	255.50	25.30	3.00	29.23	7.31	51.11
3'-6" X 5'-0"	C	2.53	2.95	0.42	0.10	0.42	0.10	
	S	240.90	267.10	26.00	3.00	30.38	7.60	56.53
4'-0" X 4'-0"	C	2.28	2.68	0.40	0.10	0.40	0.10	
	S	216.70	240.80	24.10	2.70	27.90	6.97	51.83
4'-0" X 4'-6"	C	2.55	2.97	0.42	0.10	0.42	0.10	
	S	246.40	272.60	26.00	3.00	30.38	7.60	57.96
4'-0" X 5'-0"	C	2.74	3.18	0.44	0.11	0.44	0.11	
	S	255.60	282.50	26.70	3.00	31.53	7.88	64.10
4'-6" X 4'-6"	C	2.75	3.19	0.44	0.11	0.44	0.11	
	S	276.80	304.90	28.00	3.30	32.86	8.22	64.81
4'-6" X 5'-0"	C	2.94	3.41	0.46	0.12	0.46	0.12	
	S	289.40	318.20	28.70	3.30	34.01	8.50	71.66
5'-0" X 5'-0"	C	3.15	3.64	0.48	0.12	0.48	0.12	
	S	299.80	329.30	29.40	3.30	35.16	8.79	79.23

TO AND INCLUDING 20-FOOT DEPTH

NOTE:
TO COMPUTE THE QUANTITIES FOR DEPTHS ("D") NOT SHOWN, REFER TO TABLE FOR THE SIZE OF MANHOLE REQUIRED. SUBTRACT THE "D" VALUE FROM THE TABLE AND THE "D" VALUE FROM THE PLANS. MULTIPLY THE VALUES SHOWN IN THE 1-FOOT COLUMN FROM THE TABLE WITH THE FULL ONE FOOT INCREMENTS FROM THE DIFFERENCE BETWEEN THE "D" FROM THE PLANS AND THE "D" FROM THE TABLE. MULTIPLY THE VALUES SHOWN IN THE 3" COLUMN FROM THE TABLE WITH THE REMAINING FRACTIONAL FOOT VALUES PER 3" INCREMENTS. FOLLOW THIS SAME PROCESS FOR THE STEEL CALCULATIONS. SEE THE EXPAMPLE BELOW:

FOR EXAMPLE: QUANTITIES FOR 3'-0" X 4'-0" MANHOLE WITH 6'-9" "D" HAVING ONE 18", ONE 24" AND ONE 36" PIPE OPENINGS ARE DETERMINED AS FOLLOWS:
"D" REQUIRED = 6'-9"
"D" GIVEN IN TABLE = 4'-3"
"D" ADDITIONAL = 2'-6"

2.76	CONCRETE	STEEL
FROM TABLE FOR 4'-3" "D"	2,28	208.6
ADD (2 X QUANTITIES FOR 1-FOOT)	0.70	42.6
ADD (6" = 2 X 3") (2 X QUANTITIES FOR 3")	0.18	255.8
SUBTOTAL	3.16	255.8
ADJUST QUANTITIES FOR THE PIPE OPENINGS (DEDUCT CONCRETE AND ADD STEEL FOR TWO 3' AND ONE 4' WALL)	-0.40	+19.5
TOTAL	2.76	275.3
USE	2.80	280.0

MORE THAN 20-FOOT TO AND INCLUDING 30-FOOT DEPTH

FIRST, COMPUTE QUANTITIES FOR 20-FOOT DEPTH FROM THE TABLE "TO AND INCLUDING 20-FOOT DEPTHS".

FOR EXAMPLE: QUANTITIES FOR 3'-0" X 4'-0" MANHOLE WITH 20'-0", "D" HAVING ONE 18", ONE 24" AND ONE 36" PIPE OPENINGS ARE DETERMINED AS FOLLOWS:

"D" REQUIRED = 20'-0"
"D" GIVEN IN TABLE = 4'-3"
"D" ADDITIONAL = 15'-9"

	CONCRETE	STEEL
FROM TABLE FOR 4'-3" "D"	2.28	208.6
ADD (15 X QUANTITIES FOR 1-FOOT)	5.25	319.9
ADD (9" = 3 X 3") (3 X QUANTITIES FOR 3")	0.27	6.9
SUBTOTAL	7.80	535.0
ADJUST QUANTITIES FOR THE PIPE OPENINGS (DEDUCT CONCRETE AND ADD STEEL FOR TWO 3' AND ONE 4' WALL)	-0.40	+19.5
TOTAL	7.40	554.5

SECOND, COMPUTE QUANTITIES FOR THE DEPTHS BEYOND 20 FEET TO A MAXIMUM OF 30 FEET, USING THE TABLE "20-FOOT TO AND INCLUDING 30-FOOT DEPTH", AND ADD TO THE QUANTITIES FOR 20-FOOT DEPTH. ALSO, ADD THE DIFFERENCE IN STEEL IN THE BOTTOM DUE TO THE INCREASE IN SIZE OF BARS FROM #4 TO #6 BARS ON 7-INCH CENTERS.

FOR EXAMPLE:
"D" REQUIRED = 30'-0"
"D" COMPUTED = 20'-0"
"D" ADDITIONAL = 10'-0"

	CONCRETE	STEEL
ADD CONCRETE (10 X QUANTITIES FOR 1-FOOT)	3.50	
ADD STEEL (10 X QUANTITIES FOR 1-FOOT)	242.70	
ADD STEEL (ADDITIONAL STEEL IN BOTTOM)		39.56
TOTAL (30-FOOT DEPTH)	10.90	836.76
USE	10.9	840.0

IF A SEAL IS PRESENT ON THIS SHEET IT HAS BEEN ELECTRONICALLY SEALED AND DATED.

MISSOURI HIGHWAYS AND TRANSPORTATION COMMISSION
105 WEST CAPITOL
JEFFERSON CITY, MO 65102
1-888-ASK-MODOT (1-888-275-6636)

STATE OF MISSOURI
KATHRYN PHILLIPS HARVEY
NUMBER PE-23751
PROFESSIONAL ENGINEER
THIS SHEET HAS BEEN SIGNED, SEALED AND DATED ELECTRONICALLY.

CONCRETE MANHOLES

DATE EFFECTIVE: 02-01-2009
DATE PREPARED: 8/26/2009

604.30G

SHEET NO. 2 OF 2

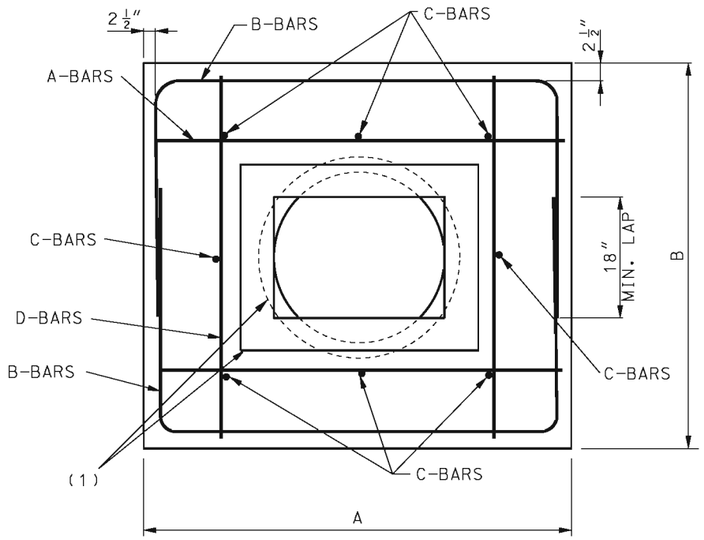

SECTION B-B

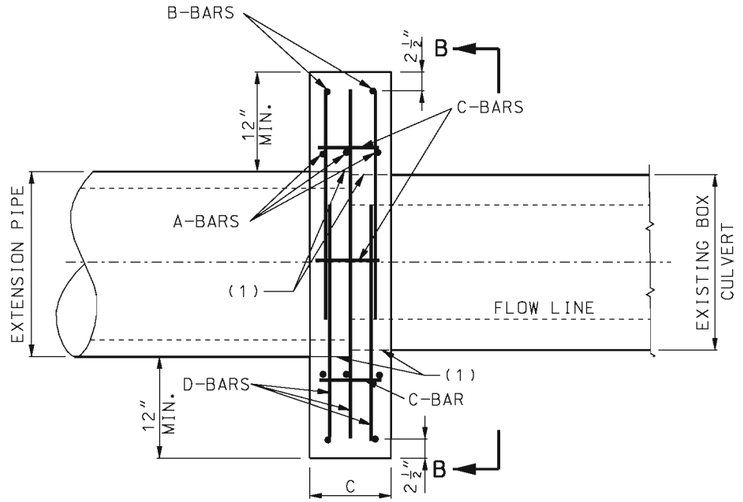

ELEVATION
(FOR BOX CULVERT TO PIPE)

TYPE C COLLAR

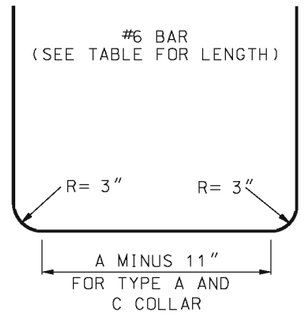

BENDING DIAGRAM FOR B-BARS

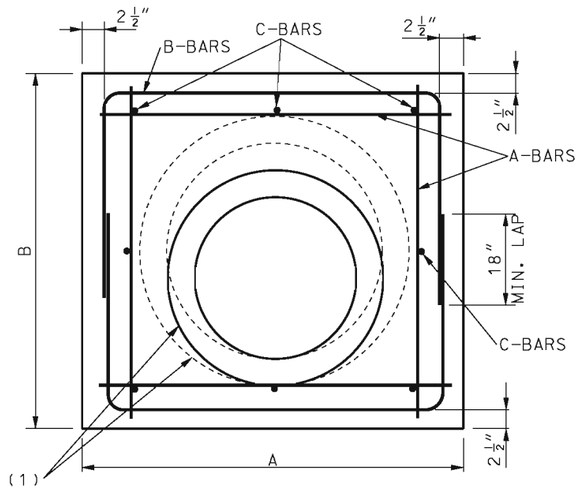

SECTION A-A

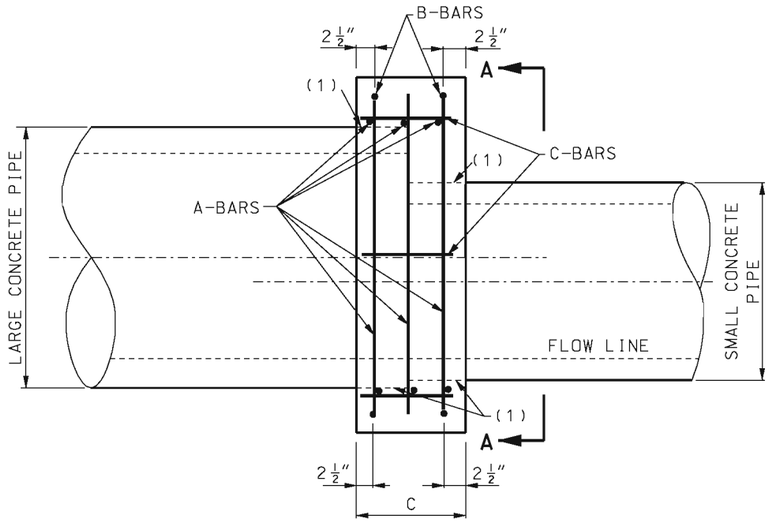

ELEVATION
(FOR CONCRETE PIPE
TO CONCRETE PIPE)

TYPE A COLLAR

(1) ONE LAYER COMMERCIALLY AVAILABLE
55-POUND ROLL ROOFING.

IF A SEAL IS PRESENT ON THIS SHEET IT HAS BEEN ELECTRONICALLY SEALED AND DATED.

MISSOURI HIGHWAYS AND TRANSPORTATION COMMISSION
105 WEST CAPITOL
JEFFERSON CITY, MO 65102
1-888-ASK-MODOT (1-888-275-6636)

STATE OF MISSOURI
KATHRYN PHILLIPS HARVEY
NUMBER PE-23751
PROFESSIONAL ENGINEER
THIS SHEET HAS BEEN SIGNED, SEALED AND DATED ELECTRONICALLY.

PIPE COLLARS

DATE EFFECTIVE: 10/01/2000
DATE PREPARED: 8/21/2009

604.40F

TABLE OF DIMENSIONS

SIZE OF PIPE		DIMENSIONS		LENGTH OF BARS			QUANTITIES	
LARGE (IN.)	SMALL (IN.)	A & B (FT.-IN.)	C (FT.-IN.)	A(#5) 12 REQUIRED (FT.-IN.)	B(#6) 4 REQUIRED (FT.-IN.)	C(#4) 8 REQUIRED (FT.-IN.)	CONCRETE (CU. YD.)	STEEL (LBS.)
12	12	2-8	1-0	2-5	5-10	0-9	0.21	70
15	12 15	3-0	1-0	2-9	6-6	0-9	0.27 0.25	77
18	12 15 18	3-3	1-0	3-0	7-0	0-9	0.33 0.32 0.30	84
21	12 15 18	3-6	1-0	3-3	7-6	0-9	0.36 0.34 0.33	90
24	15 18 24	3-10	1-0	3-6	8-2	0-9	0.44 0.40 0.36	97
30	18 24 30	4-5	1-4	4-2	9-4	1-0	0.71 0.66 0.60	114
36	24 30 36	5-0	1-4	4-9	10-6	1-0	0.88 0.79 0.76	128
42	30 36 42	5-7	1-4	5-4	11-8	1-0	1.05 0.98 0.89	142
48	36 42 48	6-2	1-4	6-0	12-10	1-0	1.22 1.13 1.03	158
54	42 48 54	7-1	1-8	6-9	14-8	1-6	2.02 1.90 1.76	181
60	48 54 60	7-8	1-8	7-5	15-10	1-6	2.27 2.13 1.97	196
66	54 60 66	8-3	2-0	8-0	17-0	1-9	3.04 2.85 2.65	210
72	60 66 72	8-10	2-0	7-7	18-2	1-9	3.36 3.16 2.93	225

TABLE OF DIMENSIONS

BOX SIZE (FT.)	PIPE SIZE (IN.)	DIMENSIONS			LENGTH OF BARS				QUANTITIES	
		A (FT.-IN.)	B (FT.-IN.)	C (FT.-IN.)	A(#5) 6 REQUIRED (FT.-IN.)	B(#6) 4 REQUIRED (FT.-IN.)	C(#4) 8 REQUIRED (FT.-IN.)	D(#5) 6 REQUIRED (FT.-IN.)	CONCRETE (CU.YD.)	STEEL (LBS.)
2 x 1½	24	5-1	4-9	1-0	4-10	10-4	0-9	4-6	0.65	124
2 x 2	30	5-3	5-3	1-4	5-0	11-0	1-0	5-0	0.93	134
3 x 2	36	6-1	5-10	1-4	5-10	12-5	1-0	5-7	1.16	151
3 x 3	42	6-5	6-5	1-4	6-0	13-4	1-0	6-0	1.29	162

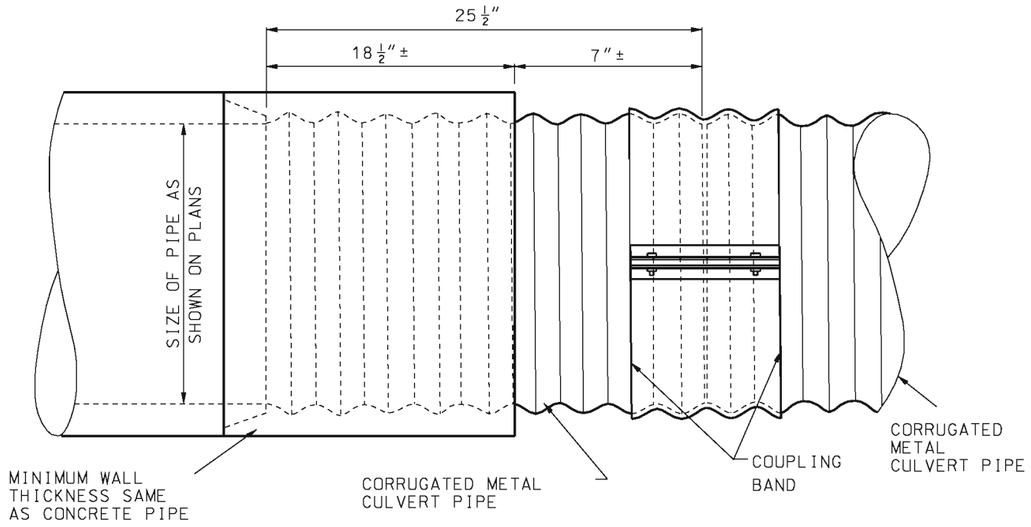

TYPE B COLLAR
(FOR CONCRETE PIPE TO CORRUGATED METAL PIPE)

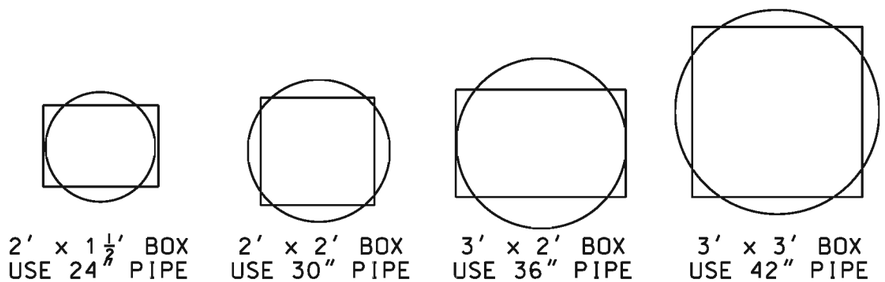

PIPE PLACEMENT

IF A SEAL IS PRESENT ON THIS SHEET IT HAS BEEN ELECTRONICALLY SEALED AND DATED.

MISSOURI HIGHWAYS AND TRANSPORTATION COMMISSION
105 WEST CAPITOL
JEFFERSON CITY, MO 65102
1-888-ASK-MODOT (1-888-275-6636)

STATE OF MISSOURI
KATHRYN PHILLIPS HARVEY
NUMBER PE-23751
PROFESSIONAL ENGINEER
THIS SHEET HAS BEEN SIGNED, SEALED AND DATED ELECTRONICALLY.

PIPE COLLARS

DATE EFFECTIVE: 10/01/2000
DATE PREPARED: 8/21/2009

604.40F

SHEET NO. 2 OF 2

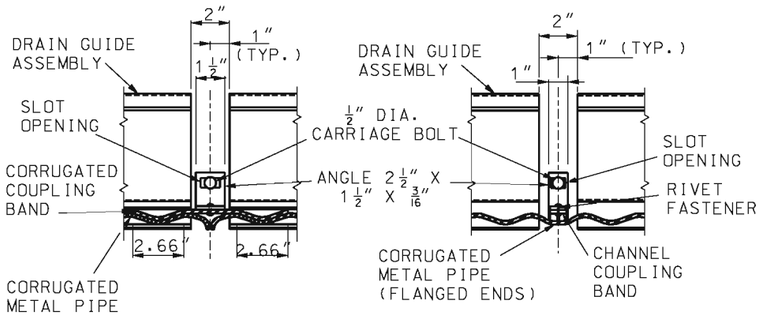

TYPE "A" TYPE "B"

JOINT CONNECTION SECTION

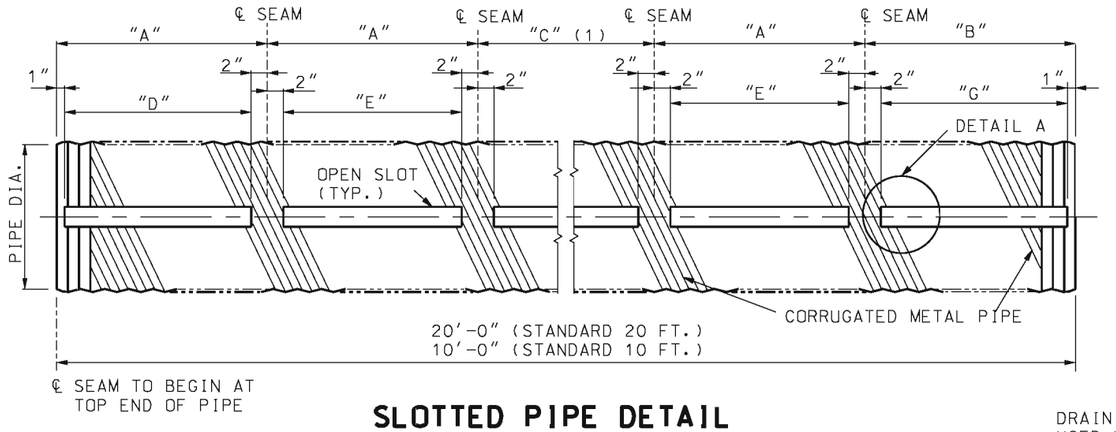

SLOTTED PIPE DETAIL

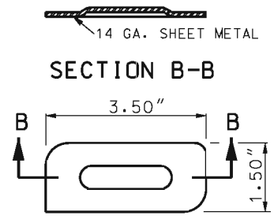

PLAN

LOCKING PLATE DETAIL

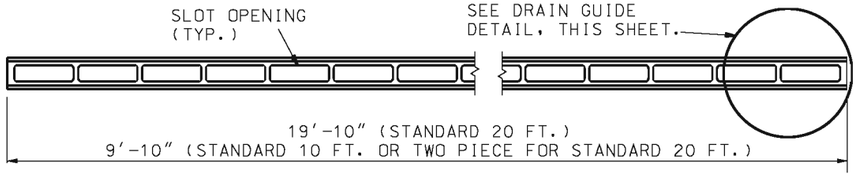

DRAIN GUIDE PLAN

DIMENSION SCHEDULE								LOCKING PLATES REQUIRED (3)	
PIPE DIAMETER	A	B_{10}	G_{10}	B_{20}	G_{20}	D	E	10 FT.	20 FT.
12"	31½"	25½"	22½"	19½"	16½"	28½"	27½"	9	17
15"	27½"	10"	7"	20"	17"	24½"	23½"	10	19
18"	26¼"	15"	12"	33	¾"	23¼"	22¼"	10	19
24"	25"	20"	17"	15"	12"	22"	21"	11	21
30"	24¾"	21"	18"	17¼"	14¼"	21¾"	20¾"	11	21
36"	24⅝"	21½"	18½"	18⅜"	15⅜"	21⅜"	20⅝"	11	21

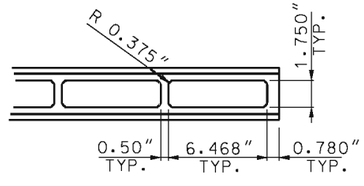

DRAIN GUIDE DETAIL



JOINT CONNECTION SECTION

(TYPICAL FOR JOINT CONNECTION SECTION TYPE "A" AND TYPE "B")

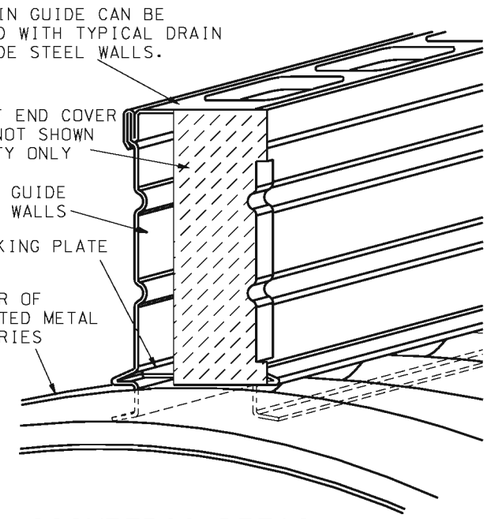

ISOMETRIC DETAIL

(1) FOR STANDARD 10 FT., 12" DIA. PIPE, "C" = 0. FOR ALL OTHER PIPE SIZES "C" IS IN MULTIPLES OF "A".
(2) LOCKING PLATE TO BE INSTALLED AT:
  A. EACH END OF DRAIN GUIDE.
  B. EACH SEAM.
  C. EACH MID-POINT OF OPEN SLOT.
(3) IN 20 FT. SECTION FOR TWO PIECE DRAIN GUIDE, INCREASE NUMBER OF LOCKING PLATES BY TWO.

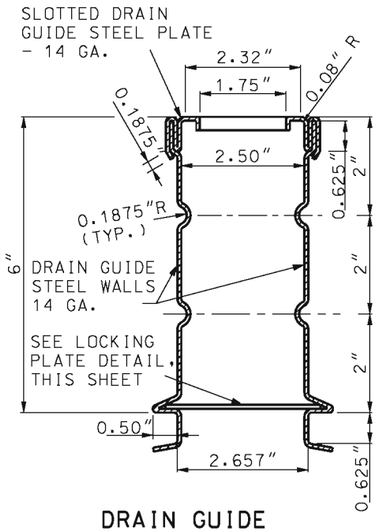

DRAIN GUIDE SECTION (TYP.)
DRAIN DETAILS

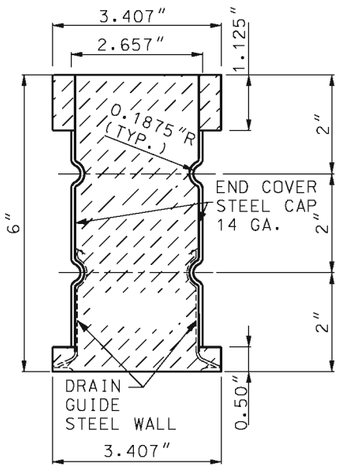

SECTION A-A
END COVER PLATE DETAIL

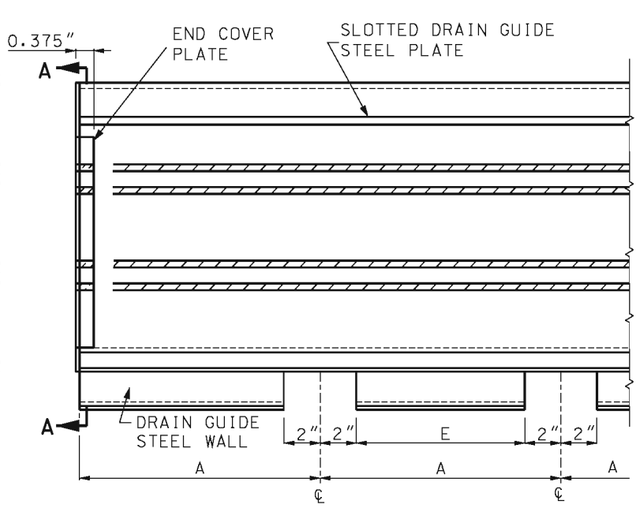

SIDE ELEVATION

TYPE A SLOTTED DRAIN
(FORMED SHEET)

CUT OUT SLOT FOR DRAIN GUIDE WALLS TO FIT OVER CORRUGATED METAL PIPE SEAMS (TYPICAL).

MISSOURI HIGHWAYS AND TRANSPORTATION COMMISSION
105 WEST CAPITOL
JEFFERSON CITY, MO 65102
1-888-ASK-MODOT (1-888-275-6636)

STATE OF MISSOURI
KATHRYN PHILLIPS HARVEY
NUMBER PE-23751
PROFESSIONAL ENGINEER
THIS SHEET HAS BEEN SIGNED, SEALED AND DATED ELECTRONICALLY.

SLOTTED DRAIN
TYPE A

DATE EFFECTIVE: 03/01/1994
DATE PREPARED: 8/21/2009

604.70

SHEET NO. 1 OF 2

IF A SEAL IS PRESENT ON THIS SHEET IT HAS BEEN ELECTRONICALLY SEALED AND DATED.

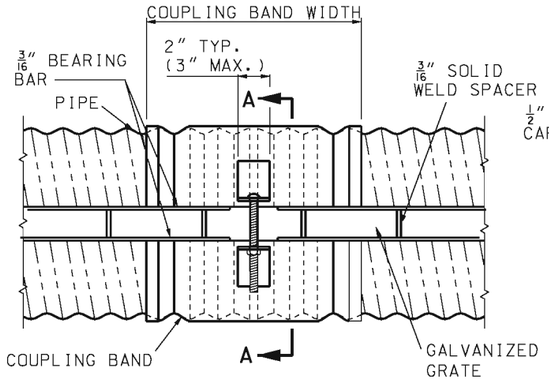

TOP VIEW

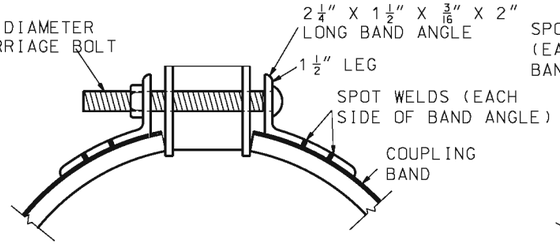

SECTION A-A

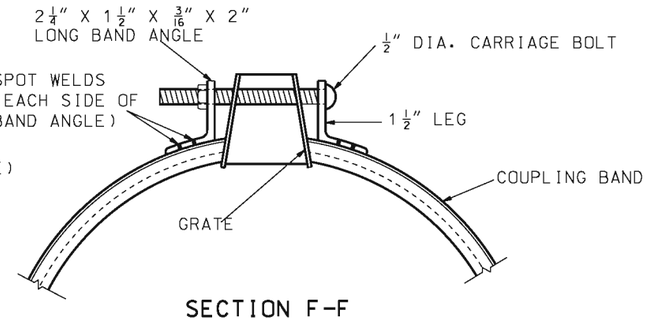

SECTION F-F

GRATE TYPE	"E"	"A"
C	2 1/2"	2 1/4"
C	6"	3"

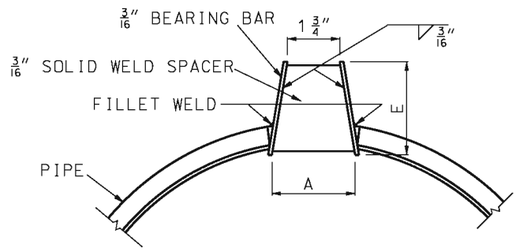

SECTION G-G

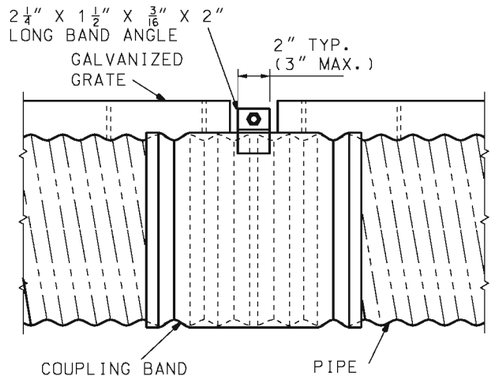

SIDE VIEW

TYPICAL COUPLING BAND

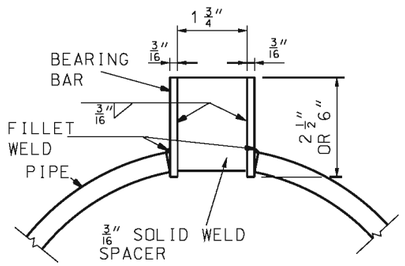

SECTION D-D

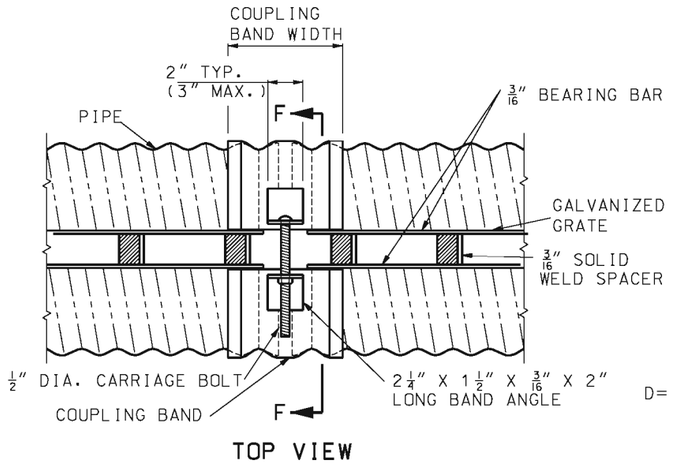

TOP VIEW

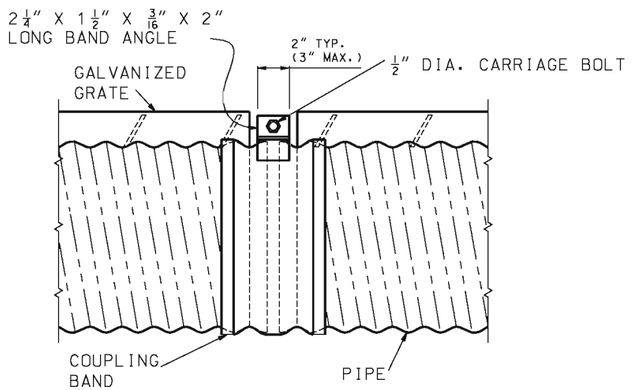

SIDE VIEW
TYPICAL COUPLING BAND

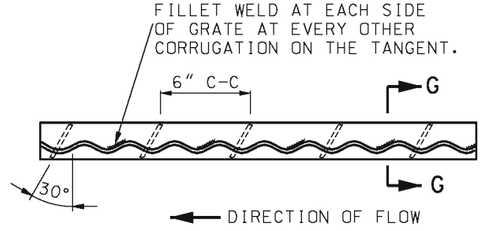

GRATE WELDING DETAIL

D= 12" 15" 18" 24" 30" 36"

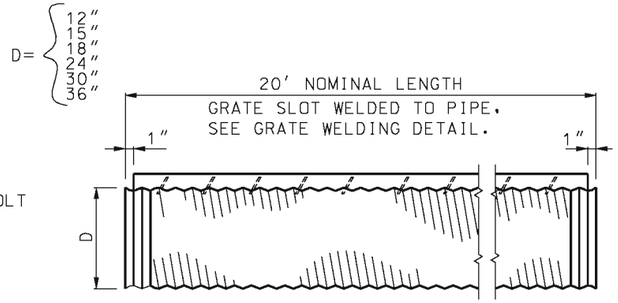

TYPICAL PIPE SECTION

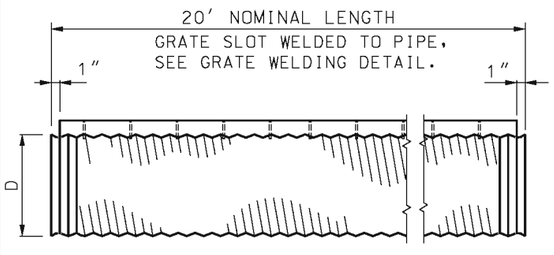

TYPICAL PIPE SECTION

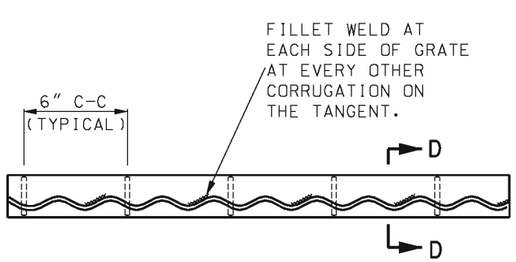

GRATE WELDING DETAIL

D= 12" 15" 18" 24" 30" 36"

STRUCTURAL STEEL SLOTTED DRAIN
(TYPE B)

STRUCTURAL STEEL SLOTTED DRAIN
(TYPE C)

IF A SEAL IS PRESENT ON THIS SHEET IT HAS BEEN ELECTRONICALLY SEALED AND DATED.

MISSOURI HIGHWAYS AND TRANSPORTATION COMMISSION
105 WEST CAPITOL
JEFFERSON CITY, MO 65102
1-888-ASK-MODOT (1-888-275-6636)

STATE OF MISSOURI
KATHRYN PHILLIPS HARVEY
NUMBER PE-23751
PROFESSIONAL ENGINEER
THIS SHEET HAS BEEN SIGNED, SEALED AND DATED ELECTRONICALLY.

SLOTTED DRAIN
TYPE B AND TYPE C

DATE EFFECTIVE: 03/01/1994
DATE PREPARED: 8/21/2009

604.70

SHEET NO. 2 OF 2

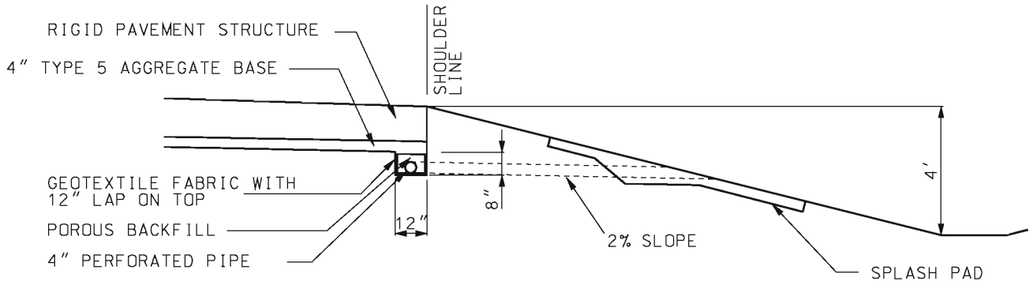

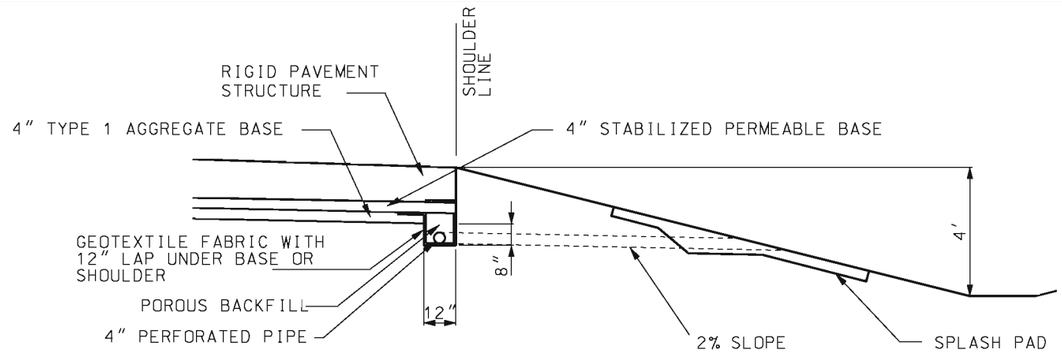

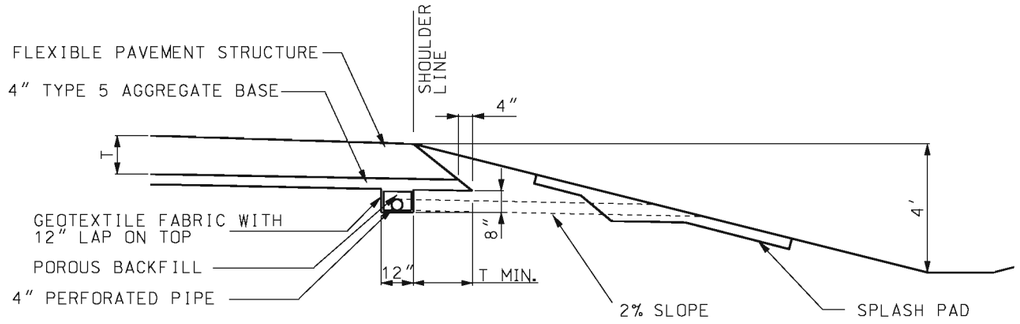

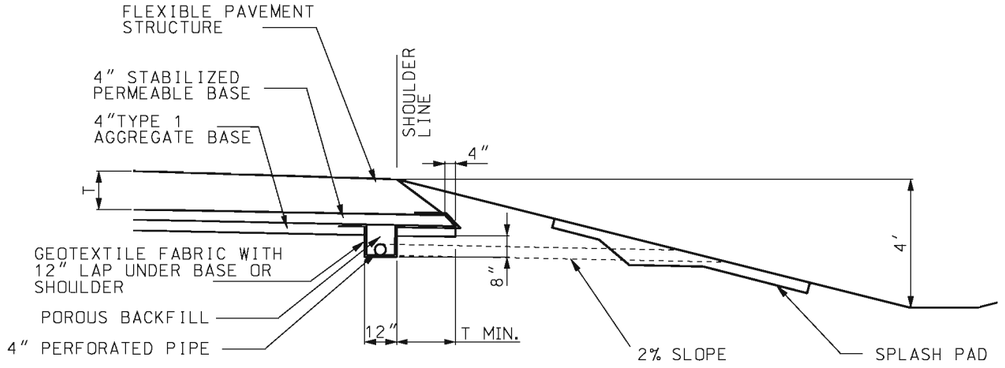

MEDIUM DUTY

HEAVY DUTY

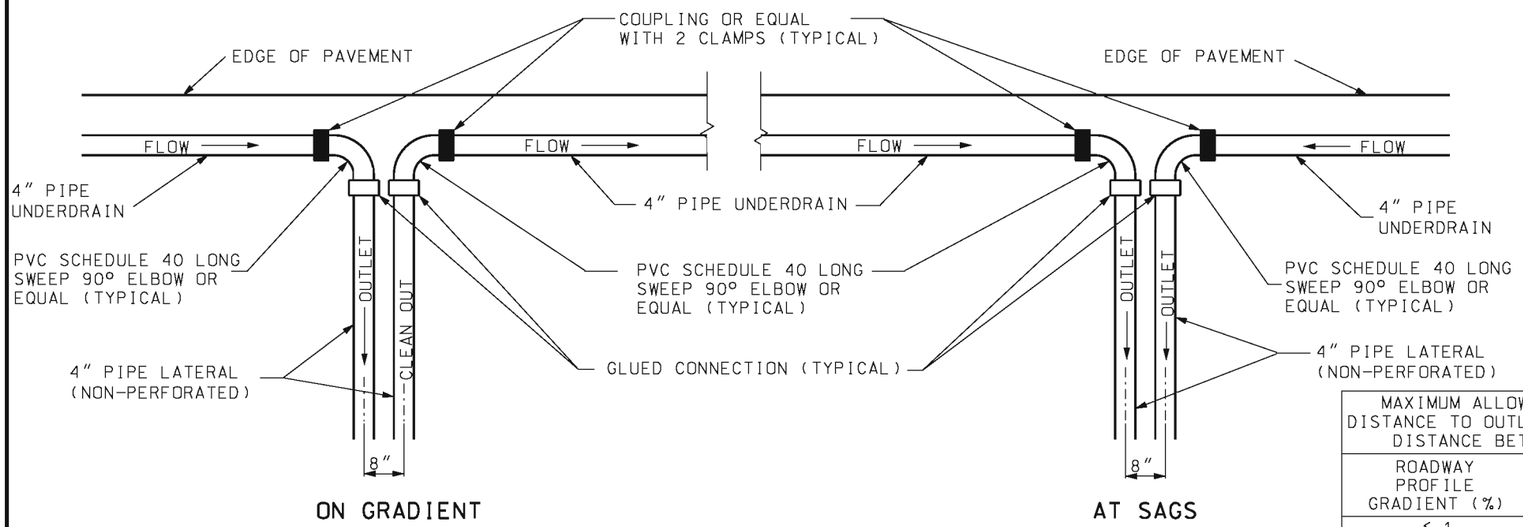

DETAIL OF PIPE AGGREGATE DRAIN OUTLETS

MAXIMUM ALLOWABLE DRAINAGE DISTANCE TO OUTLET OR SEPARATION DISTANCE BETWEEN OUTLETS	
ROADWAY PROFILE GRADIENT (%)	DISTANCE
≤ 1	250 FT.
> 1 AND ≤ 2	375 FT.
> 2	500 FT.

GENERAL NOTES:

ON SUPERELEVATED CURVES PLACE LONGITUDINAL UNDERDRAIN ON LOW SIDE ONLY.

CONSTRUCT OUTLETS AT LOW POINT OF SAG CURVE.

IF A SEAL IS PRESENT ON THIS SHEET IT HAS BEEN ELECTRONICALLY SEALED AND DATED.

MISSOURI HIGHWAYS AND TRANSPORTATION COMMISSION
105 WEST CAPITOL
JEFFERSON CITY, MO 65102
1-888-ASK-MODOT (1-888-275-6636)

STATE OF MISSOURI
KATHRYN PHILLIPS HARVEY
NUMBER PE-23751
PROFESSIONAL ENGINEER
THIS SHEET HAS BEEN SIGNED, SEALED AND DATED ELECTRONICALLY.

PAVEMENT UNDERDRAINAGE

PIPE AGGREGATE PAVEMENT EDGE DRAINS FOR FULL DEPTH SHOULDERS

DATE EFFECTIVE: 06/01/2013
DATE PREPARED: 4/1/2013

605.101

SHEET NO. 1 OF 4

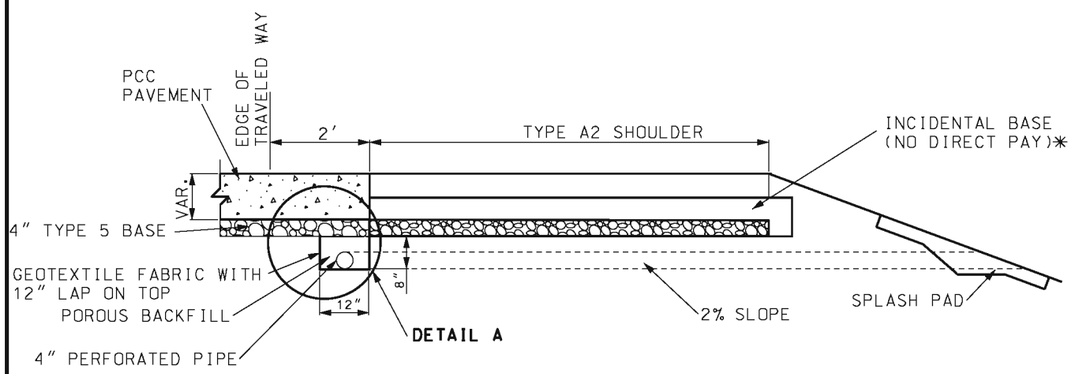

RIGID PAVEMENT WITH TYPE 5 BASE

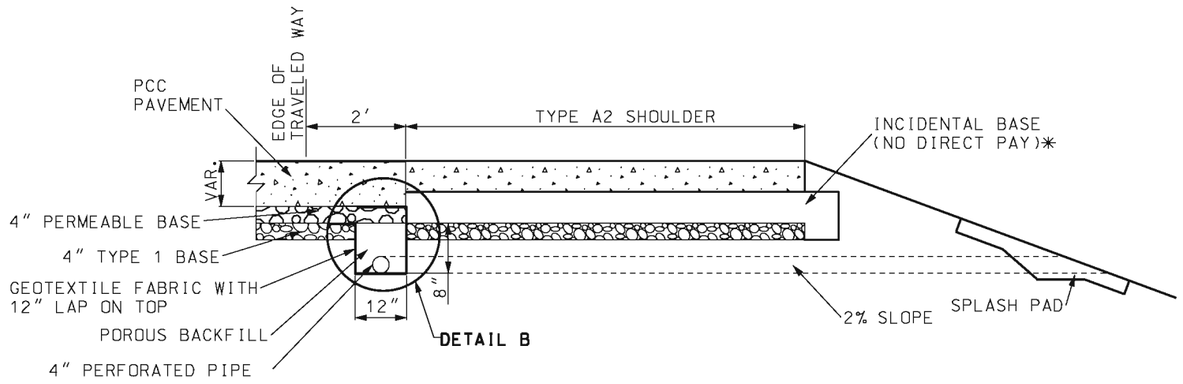

RIGID PAVEMENT WITH PERMEABLE BASE

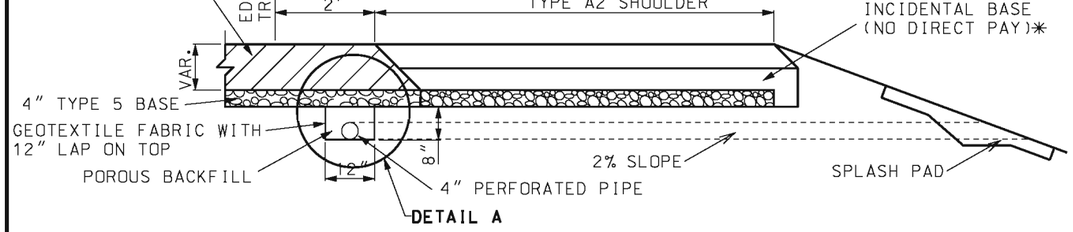

FLEXIBLE PAVEMENT WITH TYPE 5 BASE

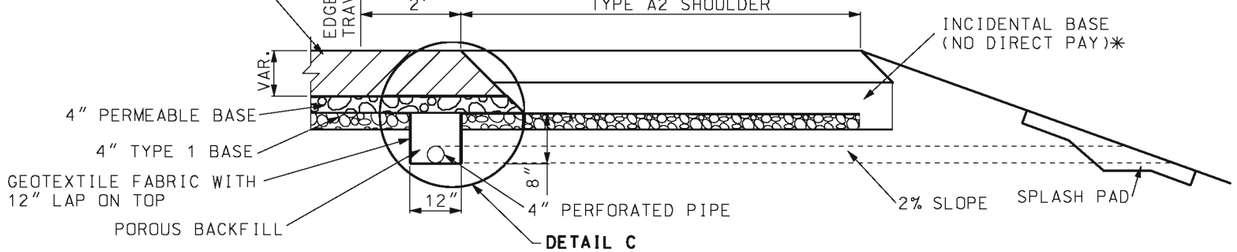

FLEXIBLE PAVEMENT WITH PERMEABLE BASE

PCC (PORTLAND CEMENT CONCRETE)

HMA (HOT MIX ASPHALT)

BASE

* BASE MATERIAL (ASPHALT MILLINGS, RECYCLED CONCRETE, TYPE 1 BASE, ETC.) APPROVED BY THE ENGINEER.

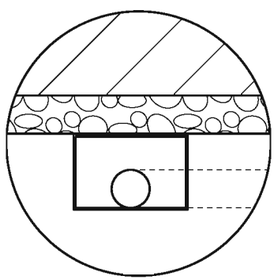

DETAIL A

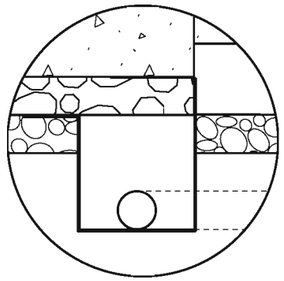

DETAIL B

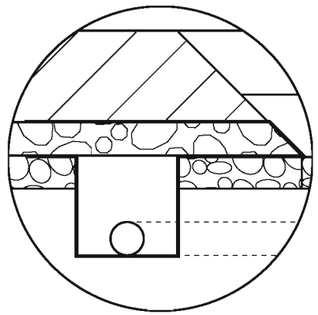

DETAIL C

GENERAL NOTES:

SEE DETAIL OF PIPE AGGREGATE DRAIN OUTLETS ON SHEET 1.

IF A SEAL IS PRESENT ON THIS SHEET IT HAS BEEN ELECTRONICALLY SEALED AND DATED.

MISSOURI HIGHWAYS AND TRANSPORTATION COMMISSION
105 WEST CAPITOL
JEFFERSON CITY, MO 65102
1-888-ASK-MODOT (1-888-275-6636)

STATE OF MISSOURI
KATHRYN PHILLIPS HARVEY
NUMBER PE-23751
PROFESSIONAL ENGINEER
THIS SHEET HAS BEEN SIGNED, SEALED, AND DATED ELECTRONICALLY.

PAVEMENT UNDERDRAINAGE

PIPE AGGREGATE PAVEMENT EDGE DRAINS FOR TYPE A2 SHOULDERS

DATE EFFECTIVE: 06/01/2013
DATE PREPARED: 4/1/2013

605.101

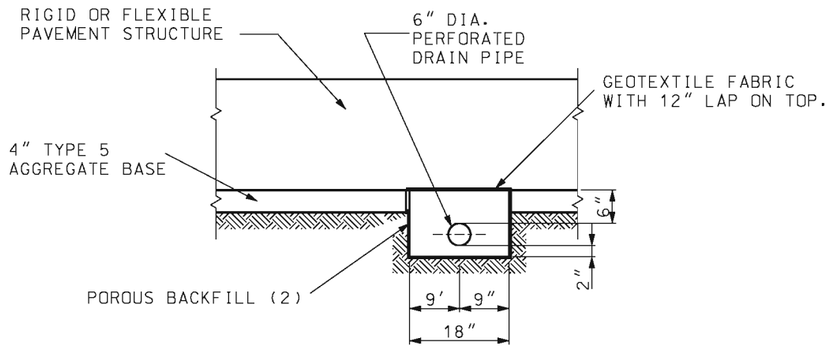

SECTION D-D
WITHOUT PERMEABLE BASE

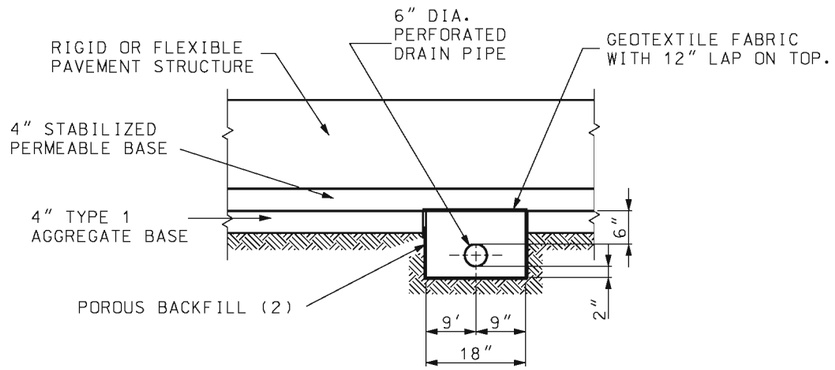

SECTION D-D
WITH PERMEABLE BASE

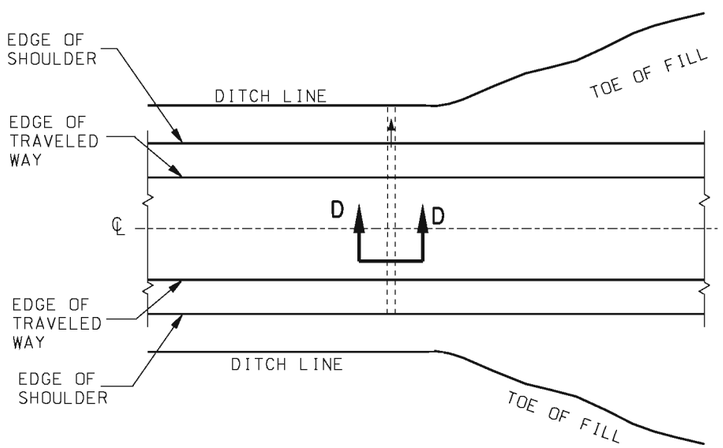

CROSS DRAIN

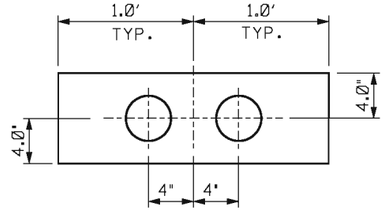

SECTION A-A

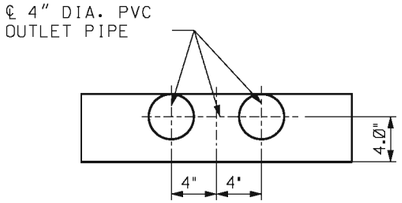

SECTION B-B

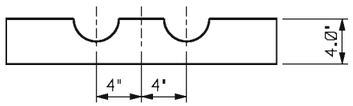

SECTION C-C

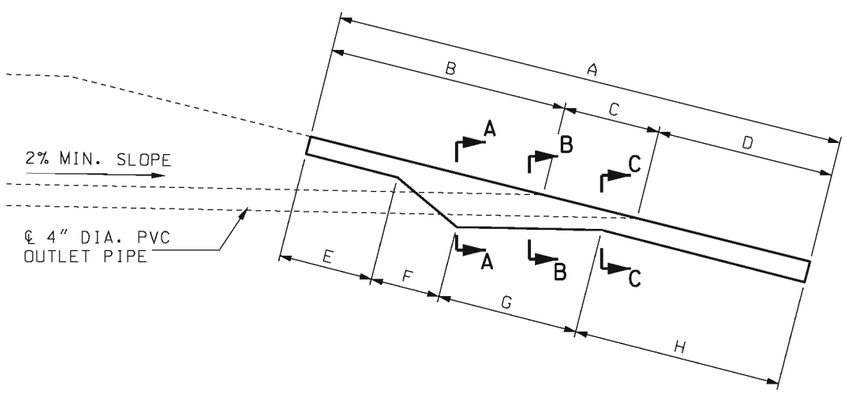

CONCRETE SPLASH PADS

ITEM	2:1	3:1	4:1	6:1
A	5.48'	6.19'	6.95'	8.58'
B	2.70'	3.07'	3.46'	4.28'
C	0.78'	1.12'	1.49'	2.30'
D	2.00'	2.00'	2.00'	2.00'
E	2.00'	2.00'	2.00'	2.00'
F	0.46'	0.61'	0.78'	1.18'
G	0.71'	1.07'	1.46'	2.27'
H	2.31'	2.51'	2.71'	3.13'
CONC.	0.15 C.Y.	0.17 C.Y.	0.20 C.Y.	0.25 C.Y.

GENERAL NOTES:

PRECAST CONCRETE SPLASH PADS MAY BE INSTALLED AS APPROVED BY THE ENGINEER.

TOP OF SPLASH PAD SHALL MATCH EXISTING CROSS SLOPE. CONSTRUCT BEND IN SPLASH PAD WHERE CROSS SLOPE CHANGES.

DIMENSIONS ARE APPROXIMATE AND CAN BE ADJUSTED AS DIRECTED BY THE ENGINEER.

MISSOURI HIGHWAYS AND TRANSPORTATION COMMISSION
105 WEST CAPITOL
JEFFERSON CITY, MO 65102
1-888-ASK-MODOT (1-888-275-6636)

STATE OF MISSOURI
KATHRYN PHILLIPS HARVEY
NUMBER PE-23751
PROFESSIONAL ENGINEER
THIS SHEET HAS BEEN SIGNED, SEALED AND DATED ELECTRONICALLY.

PAVEMENT UNDERDRAINAGE
CROSS DRAINS

DATE EFFECTIVE: 06/01/2013
DATE PREPARED: 4/1/2013

605.101

SHEET NO. 3 OF 4

IF A SEAL IS PRESENT ON THIS SHEET IT HAS BEEN ELECTRONICALLY SEALED AND DATED.

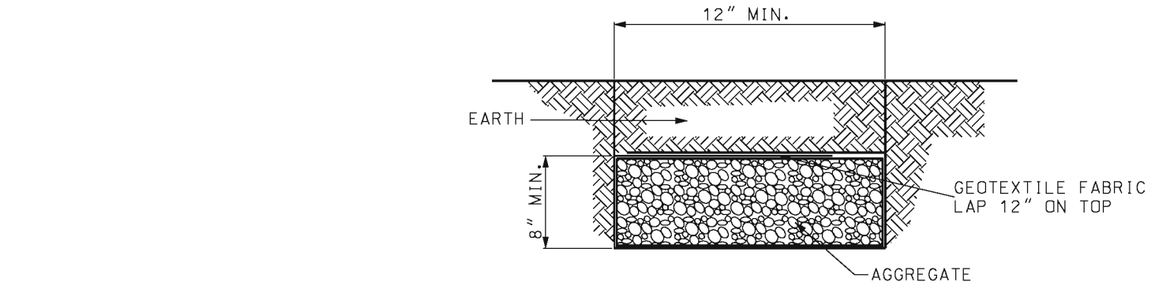

SECTION A-A

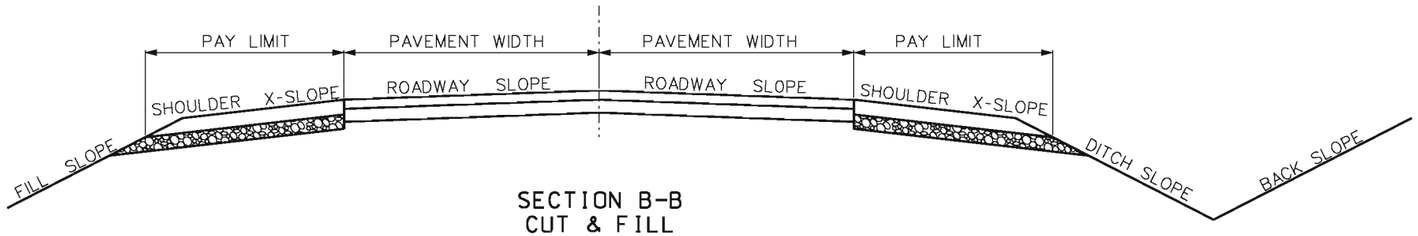

SECTION B-B
CUT & FILL
ELEVATION

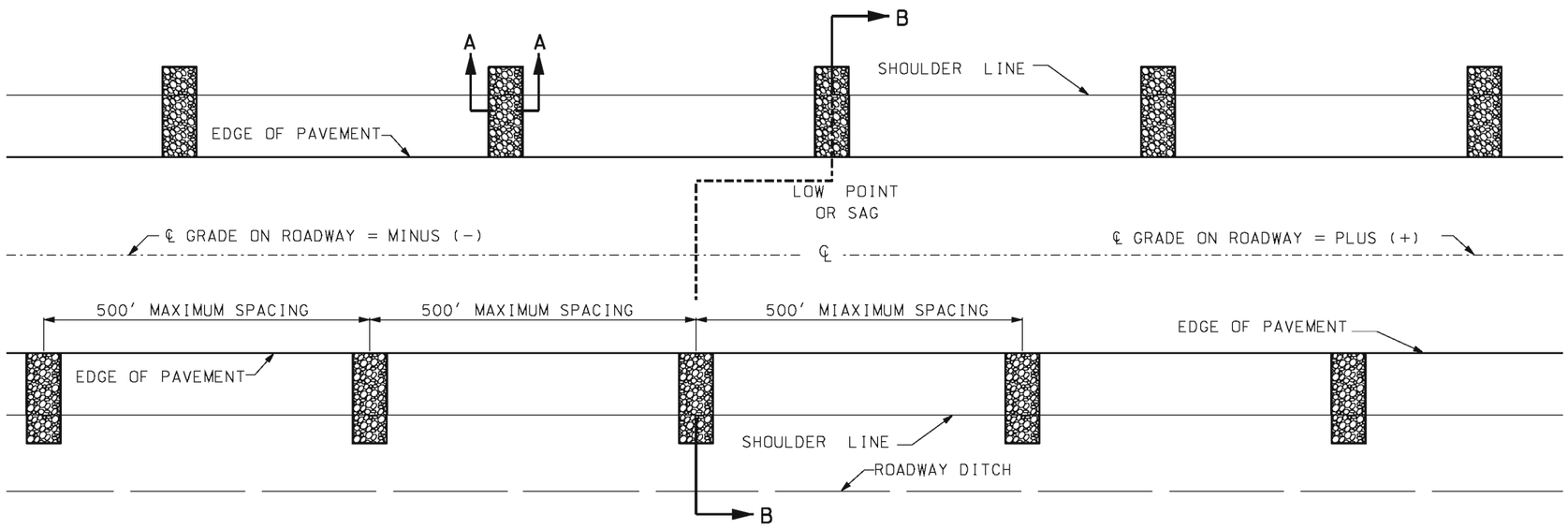

PLAN

GENERAL NOTES:

AGGREGATE UNDERDRAIN TO BE USED ONLY WHERE DESIGNATED ON PLANS.

AGGREGATE UNDERDRAIN SHALL BE PLACED AT THE LOW POINT OF THE SAG AND THE SPACING OF AGGREGATE UNDERDRAIN SHALL BE APPROX. 500'. AGGREGATE UNDERDRAINS WILL BE OMITTED ON THE CREST VERTICAL CURVES AND ON THE HIGH SIDE OF SUPERELEVATION. THE LOW SIDE OF SUPER-ELEVATION SPACING MAY BE DECREASED AS DIRECTED BY ENGINEER.

THE BOTTOM OF THE AGGREGATE DRAINS SHALL BE AT OR BELOW THE BOTTOM OF THE PAVEMENT'S AGGREGATE SUBBASE AT THE POINT OF CONTACT. THE TOP OF THE AGGREGATE DRAINS SHALL BE NO HIGHER THAN THE BOTTOM OF THE SHOULDER'S AGGREGATE BASE.

MISSOURI HIGHWAYS AND TRANSPORTATION COMMISSION
105 WEST CAPITOL
JEFFERSON CITY, MO 65102
1-888-ASK-MODOT (1-888-275-6636)

STATE OF MISSOURI
KATHRYN PHILLIPS HARVEY
NUMBER PE-2575I
PROFESSIONAL ENGINEER
THIS SHEET HAS BEEN SIGNED, SEALED AND DATED ELECTRONICALLY.

PAVEMENT UNDERDRAINAGE
AGGREGATE UNDERDRAINS

DATE EFFECTIVE: 06/01/2013
DATE PREPARED: 4/1/2013

605.101

SHEET NO. 4 OF 4

IF A SEAL IS PRESENT ON THIS SHEET IT HAS BEEN ELECTRONICALLY SEALED AND DATED.

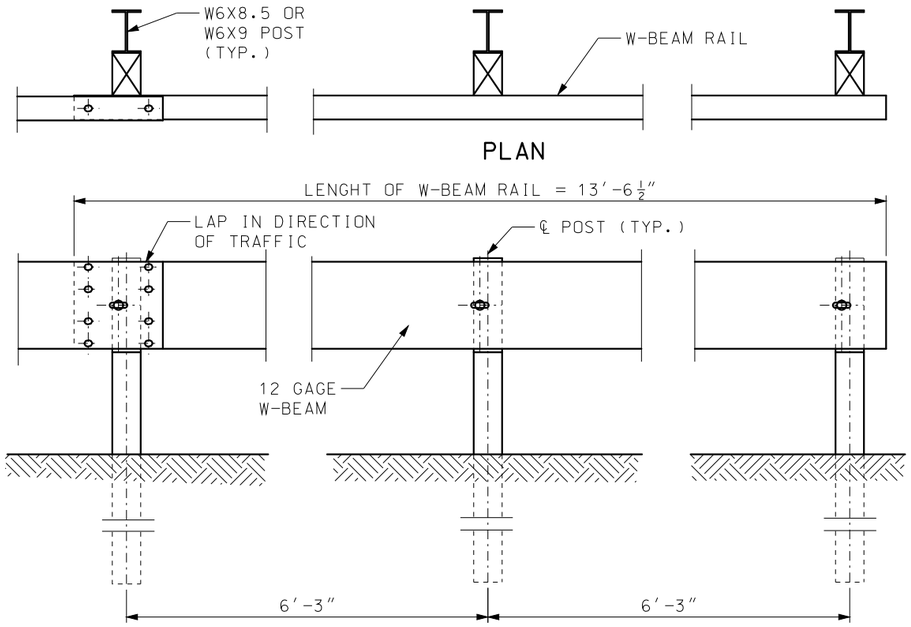

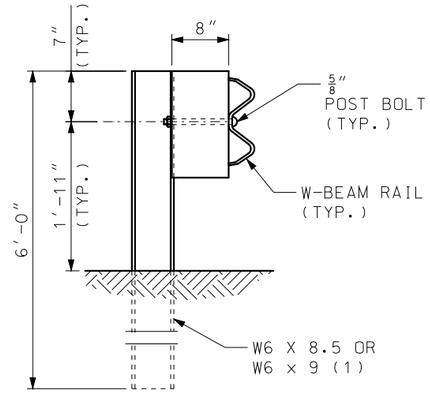

STEEL POST & WOOD OR
PLASTIC BLOCK

TYPE A GUARDRAIL

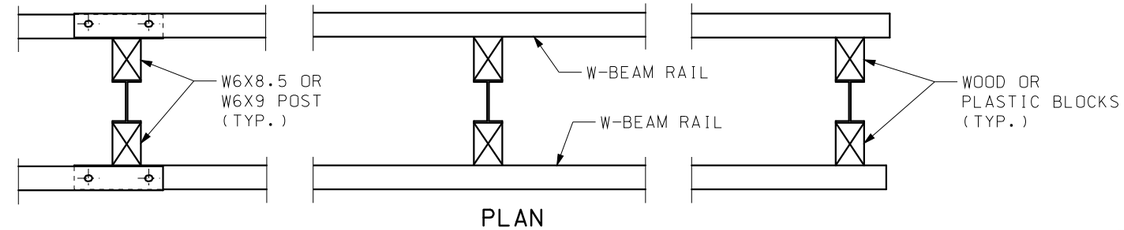

(1) THE CONTRACTOR MAY FURNISH EQUIVALENT SECTIONS FABRICATED FROM MATERIAL MEETING AND IN ACCORDANCE WITH SECTION 1040.

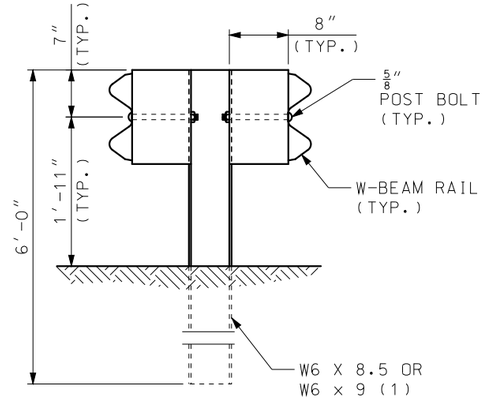

STEEL POST & WOOD OR PLASTIC
BLOCKS

GENERAL NOTES:
SEE SHEET NO. 5 OF 7 FOR POST AND BLOCK DETAILS.

TYPE B GUARDRIAL

MISSOURI HIGHWAYS AND TRANSPORTATION COMMISSION
105 WEST CAPITOL
JEFFERSON CITY, MO 65102
1-888-ASK-MODOT (1-888-275-6636)

STATE OF MISSOURI
ERIC E. SCHROETER
NUMBER PE-28411
PROFESSIONAL ENGINEER
THIS SHEET HAS BEEN SIGNED, SEALED AND DATED ELECTRONICALLY.

GUARDRAIL
TYPE A AND TYPE B

DATE EFFECTIVE: 01/01/2017
DATE PREPARED: 10/28/2016

606.00AY

SHEET NO.
1 OF 7

IF A SEAL IS PRESENT ON THIS SHEET IT HAS BEEN ELECTRONICALLY SEALED AND DATED.

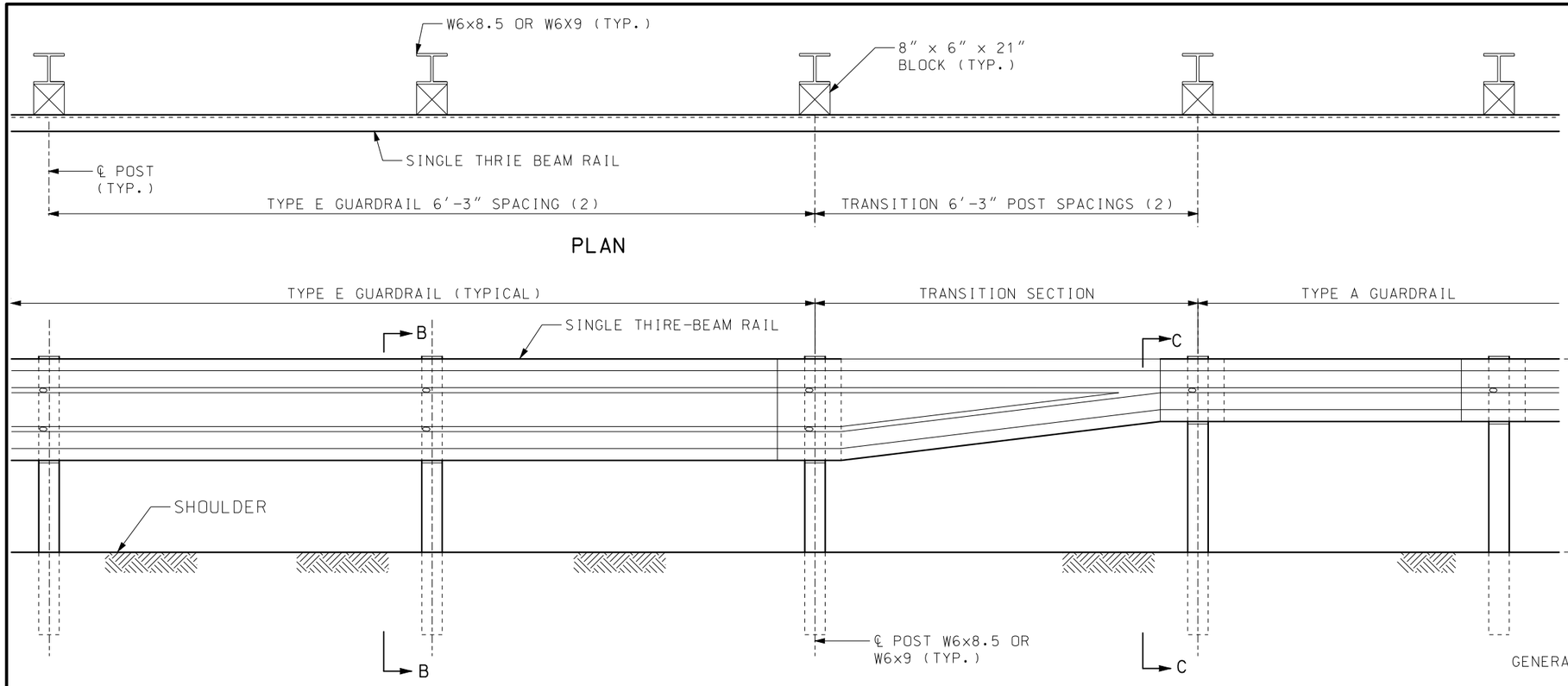

PLAN

(1) THE CONTRACTOR MAY FURNISH EQUIVALENT SECTIONS FABRICATED FROM MATERIAL MEETING AND IN ACCORDANCE WITH SEC 1040.

(2) IF THE TRANSITION IS CONNECTED TO A BRIDGE ANCHOR SECTION, POST SPACING FOR TYPE E GUARDRAIL AND THE TRANSITION SECTION SHALL BE 3'-1½" . FOR ALL OTHER CASES, POST SPACING SHALL BE 6'-3".

(3) TRANSITION FROM 31" TO 29" HEIGHT OVER 2-12.5' W-BEAMS OR 25'.

PART SECTION SHOWING TYPE E TO TYPE A GUARDRAIL TRANSITION

THE OVERALL NOMINAL DIMENSIONS SHOWN SHALL BE MET, ALTHOUGH THE SHAPE OF THE PLASTIC BLOCKS MAY VARY FROM THE SHAPE SHOWN, EXCEPT THE $\frac{7}{8}" \pm \frac{1}{4}"$ FLANGE AND THE OVERALL WIDTH DIMENSIONS MAY BE WAIVED IF APPROVED BY PROJECT OPERATIONS.

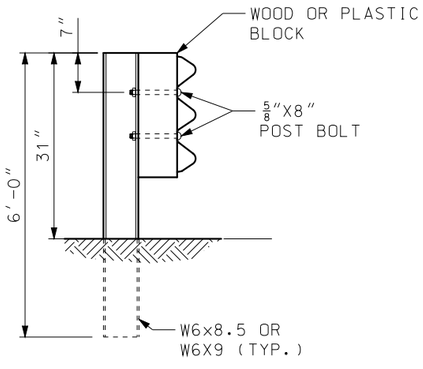

SECTION B–B

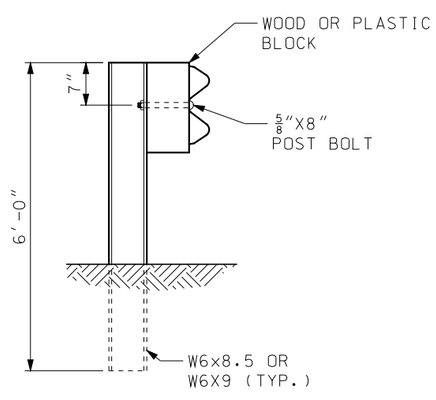

SECTION C–C

GENERAL NOTES:

TYPE E GUARDRAIL SHALL USE 6'-3" POST SPACING UNLESS 3'-1½" POST IS SPECIFIED.

THE THRIE BEAM RAIL FOR THE TYPE E GUARDRAIL AND THE TRANSITION SECTION SHALL BE MADE OF STEEL AND SHALL BE 12 GAGE.

FOR PROTECTIVE COATING AND MATERAL REQUIREMENTS, SEE SEC 1040 OF THE STANDARD SPECIFICATIONS.

SEE SHEET 7 OF 7 FOR REQUIREMENTS FOR SPECIAL INSTALLATIONS.

ALL DIMENSIONS ARE SUBJECT TO MANUFACTURING TOLERANCES EXCEPT WHERE ALLOWABLE TOLERANCES ARE SHOWN.

FOR DETAILS NOT SHOWN, SEE OTHER SHEETS OF THIS DRAWING.

MISSOURI HIGHWAYS AND TRANSPORTATION COMMISSION
105 WEST CAPITOL
JEFFERSON CITY, MO 65102
1-888-ASK-MODOT (1-888-275-6636)

STATE OF MISSOURI
ERIC E. SCHROETER
NUMBER PE-28411
PROFESSIONAL ENGINEER
THIS SHEET HAS BEEN SIGNED, SEALED AND DATED ELECTRONICALLY.

GUARDRAIL TYPE E

DATE EFFECTIVE: 01/01/2017
DATE PREPARED: 10/28/2016

606.00AY

SHEET NO. 2 OF 7

IF A SEAL IS PRESENT ON THIS SHEET IT HAS BEEN ELECTRONICALLY SEALED AND DATED.

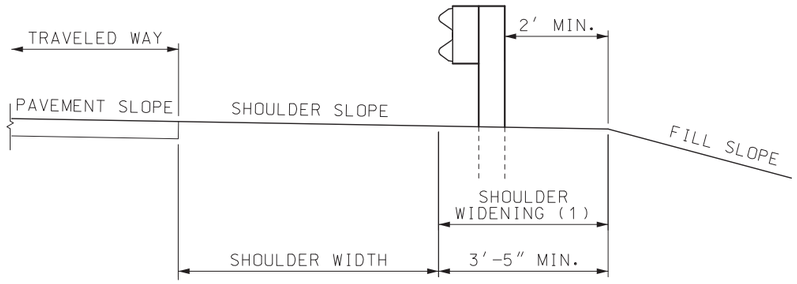

TYPCIAL SECTION

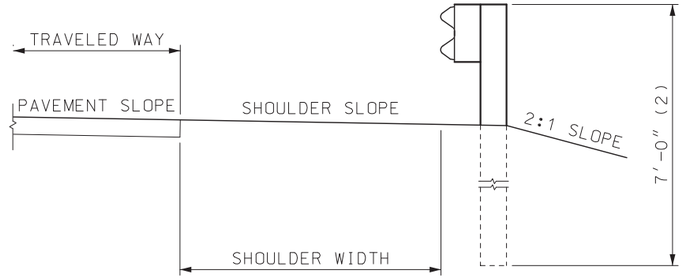

ALTERNATE TYPICAL SECTION AT SLOPE BREAKPOINT

(1) SHOULDER WIDENING SHALL CONSIST OF EMBANKMENT MATERIAL COMPACETED IN ACCORDANCE WITH SEC 203.4 OF THE STANDARD SPECIFICATIONS.

(2) POST SHALL BE SPACED AT 3′-1½″ ON CENTER.

(3) WHEN GUARDRAIL IS CONSTRUCTED OVER CURBS, THE CURBS SHALL BE CONSTRUCTED AS SHOWN.

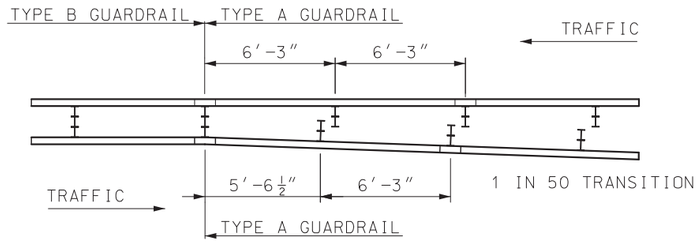

DETAIL FOR TRANSITIONING
BETWEEN TYPE A AND TYPE B GUARDRAIL

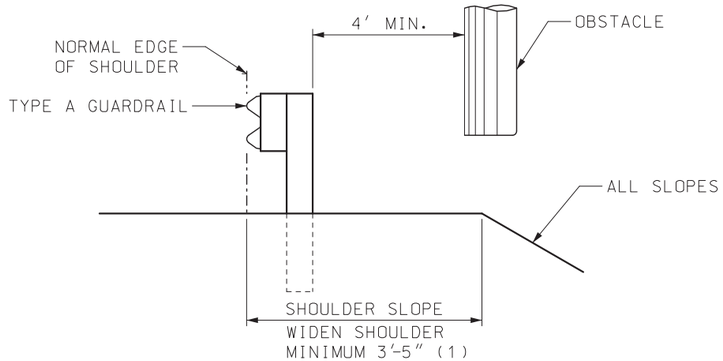

LOCATION OTHER THAN ℄ MEDIAN
LATERAL PLACEMENT OF GUARDRAIL
FOR SHOULDER INSTALLATION

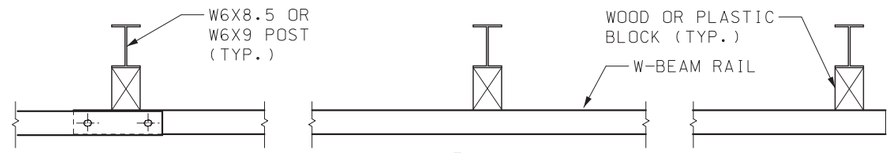

PLAN

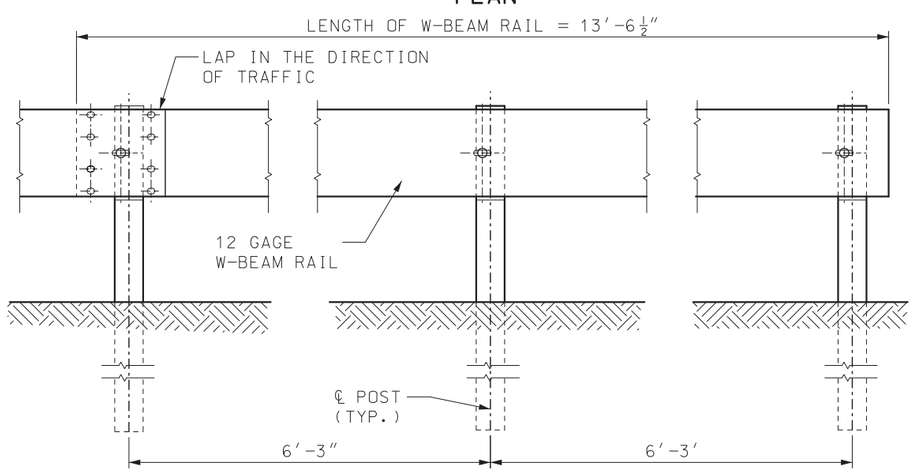

ELEVATION

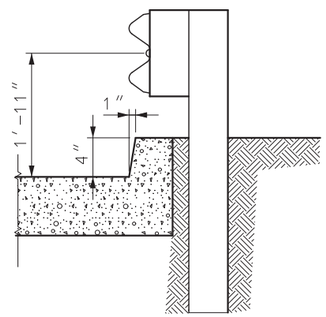

GUARDRAIL AT CURBS (3)

MISSOURI HIGHWAYS AND TRANSPORTATION COMMISSION
105 WEST CAPITOL
JEFFERSON CITY, MO 65102
1-888-ASK-MODOT (1-888-275-6636)

STATE OF MISSOURI
TRAVIS D. KOESTNER
NUMBER PE-30042
PROFESSIONAL ENGINEER
THIS SHEET HAS BEEN SIGNED, SEALED AND DATED ELECTRONICALLY.

GUARDARAIL LAYOUT

DATE EFFECTIVE: 07/01/2019
DATE PREPARED: 5/17/2019

606.00AY

SHEET NO. 3 OF 7

IF A SEAL IS PRESENT ON THIS SHEET IT HAS BEEN ELECTRONICALLY SEALED AND DATED.

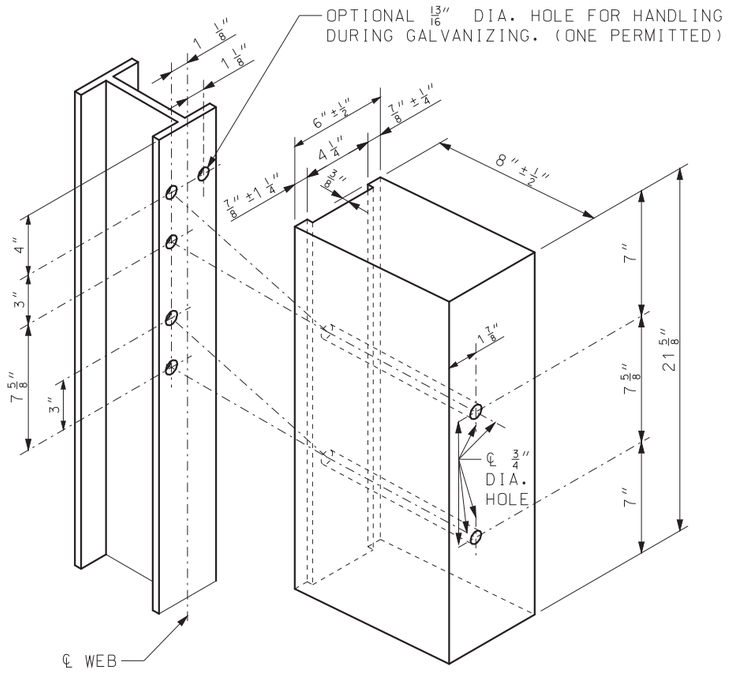

TYPE E
FOR STEEL POST & WOOD OR PLASTIC BLOCKS (1)

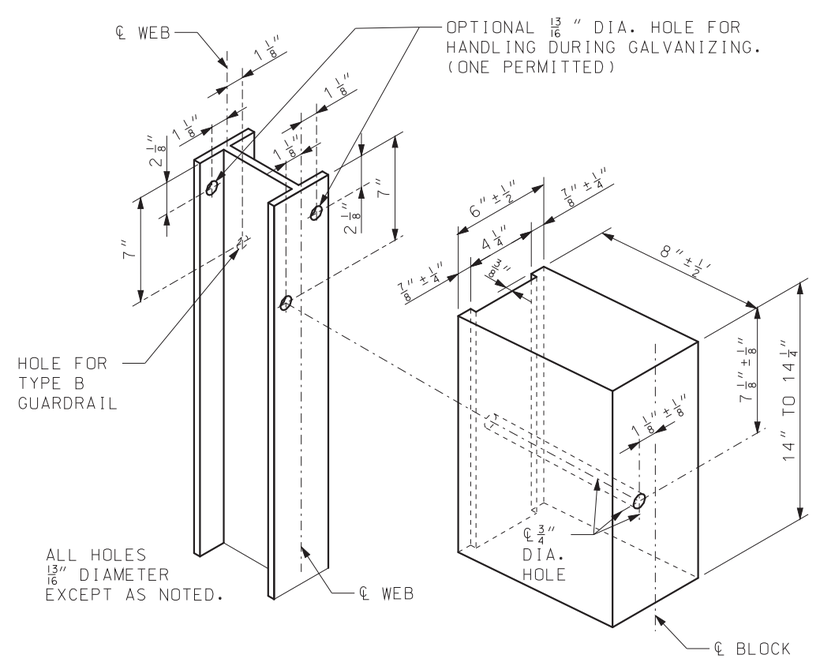

TYPE A AND TYPE B
FOR STEEL POST AND WOOD OR PLASTIC BLOCKS (1)

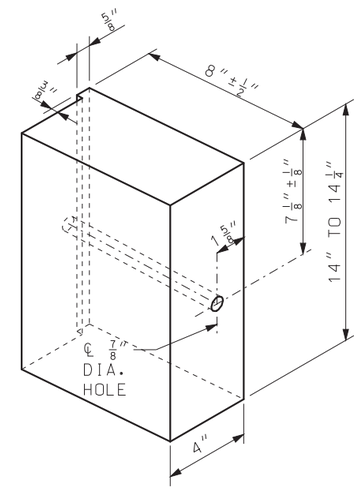

ALTERNATE DESIGN
FOR WOOD BLOCK

(1) THE OVERALL NOMINAL DIMENSIONS SHOWN SHALL BE MET, ALTHOUGH THE SHAPE OF THE PLASTIC BLOCKS MAY VARY FROM THE SHAPE SHOWN, EXCEPT THE 7/8" ±1/4" FLANGE AND THE OVERALL WIDTH DIMENSIONS MAY BE WAIVED IF APPROVED BY PROJECT OPERATIONS.

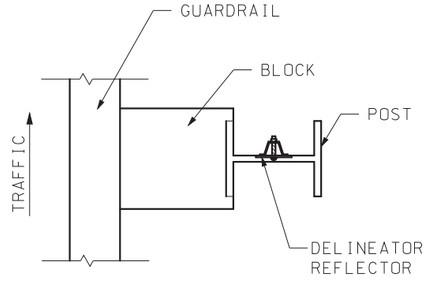

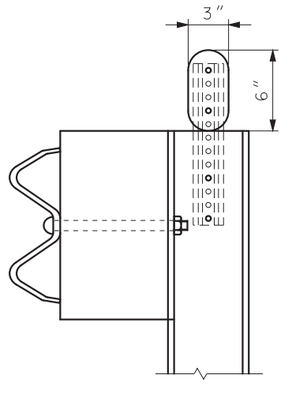

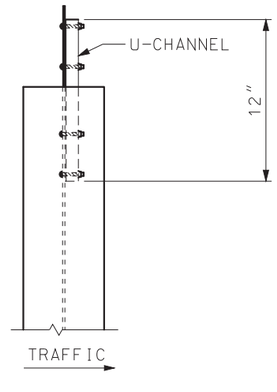

DELINEATORS ON NEW GUARDRAIL

GENERAL NOTES:

FOR GUARDRAIL DELINEATION DETAILS SEE STD PLAN 903.03.

MISSOURI HIGHWAYS AND TRANSPORTATION COMMISSION
105 WEST CAPITOL
JEFFERSON CITY, MO 65102
1-888-ASK-MODOT (1-888-275-6636)

STATE OF MISSOURI
ERIC E. SCHROETER
NUMBER PE-28411
PROFESSIONAL ENGINEER
THIS SHEET HAS BEEN SIGNED, SEALED AND DATED ELECTRONICALLY.

GUARDRAIL POST AND BLOCK

DATE EFFECTIVE: 04/01/2018
DATE PREPARED: 2/9/2018

606.00AY

SHEET NO. 4 OF 7

IF A SEAL IS PRESENT ON THIS SHEET IT HAS BEEN ELECTRONICALLY SEALED AND DATED.

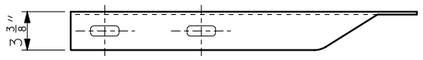

TOP VIEW

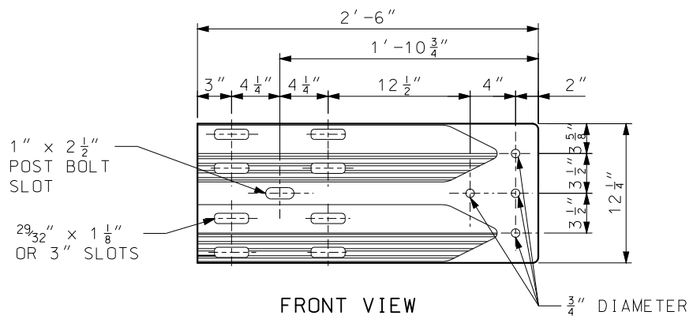

FRONT VIEW

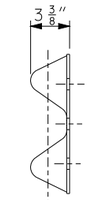

END VIEW

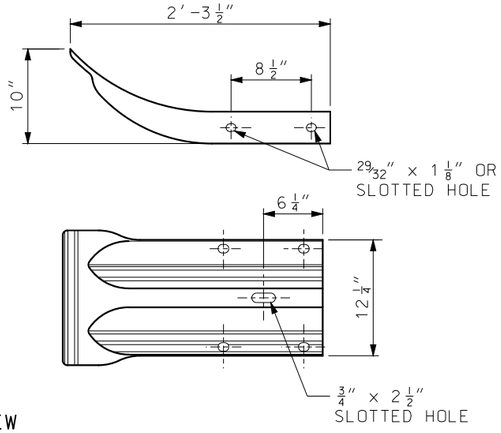

TERMIANL CONNECTOR

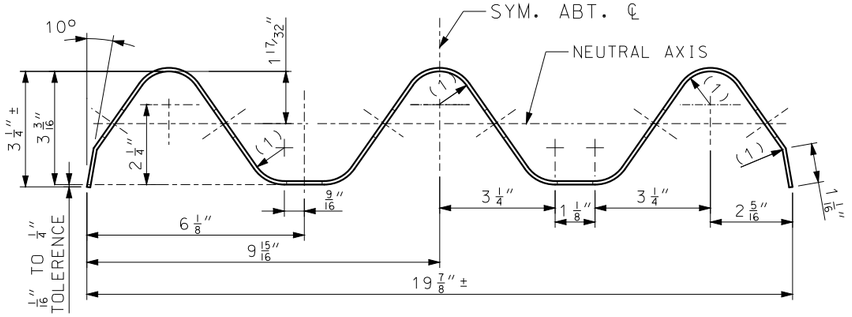

SECTION THROUGH THRIE BEAM RAIL

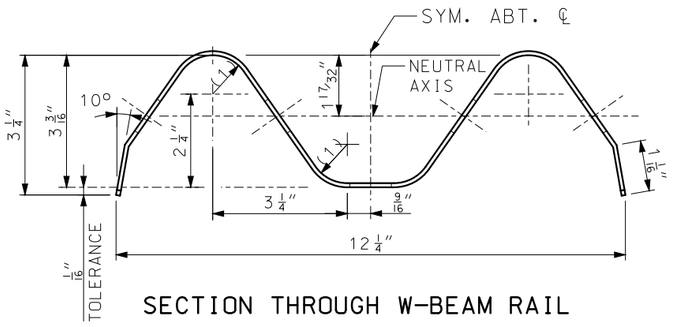

SECTION THROUGH W-BEAM RAIL

(1) 15/16″ RADIUS

(2) 2″ (TOLERANCE +1 1/4″, −1/4″)

END SECTION
12 GAGE

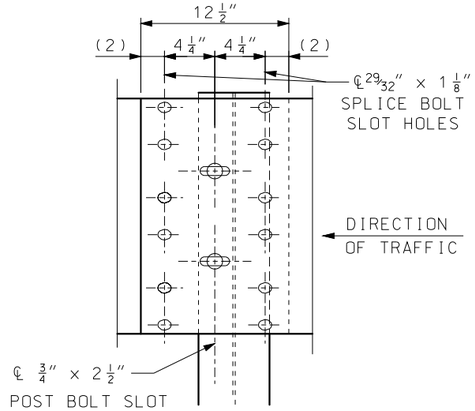

THRIE-BEAM SPLICE AT POST

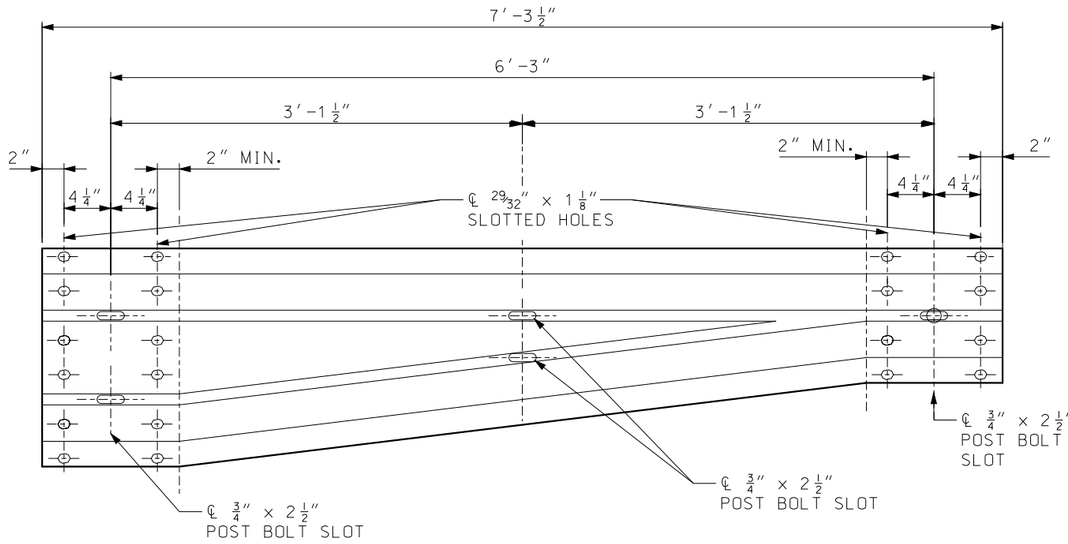

ELEVATION OF ASYMMETRICAL TRANSITION SECTION

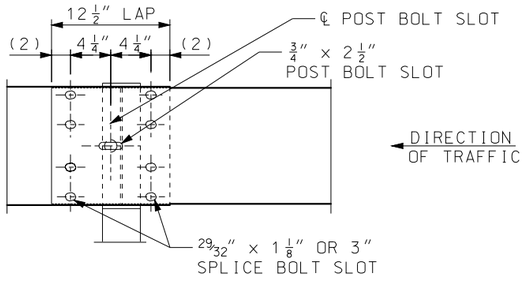

W-BEAM RAIL SPLICE AT POST

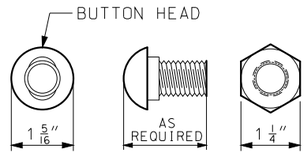

OVAL SHOULDER SHALL BE OF ADEQUATE HEIGHT, LENGTH & SHAPE TO PREVENT TURNING DURING INSTALLATION OR REMOVAL OF BOLT.

5/8″ POST OR SPLICE BOLT

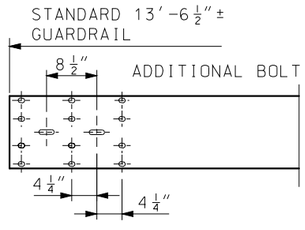

NOTE: PORTIONS OF BEAM WITH UNUSED BOLT SLOTS TO BE LAPPED BEHIND.

BEAM DETAILS SHOWING LOCATION OF ADDITIONAL BOLT SLOTS NECESSARY TO OBTAIN GUARDRAIL OFFSET.

MISSOURI HIGHWAYS AND TRANSPORTATION COMMISSION
105 WEST CAPITOL
JEFFERSON CITY, MO 65102
1-888-ASK-MODOT (1-888-275-6636)

STATE OF MISSOURI
ERIC E. SCHROETER
NUMBER PE-28411
PROFESSIONAL ENGINEER
THIS SHEET HAS BEEN SIGNED, SEALED AND DATED ELECTRONICALLY.

GUARDRAIL
RAIL ELEMENTS

DATE EFFECTIVE: 01/01/2017
DATE PREPARED: 10/28/2016

606.00AY

SHEET NO. 5 OF 7

IF A SEAL IS PRESENT ON THIS SHEET IT HAS BEEN ELECTRONICALLY SEALED AND DATED.

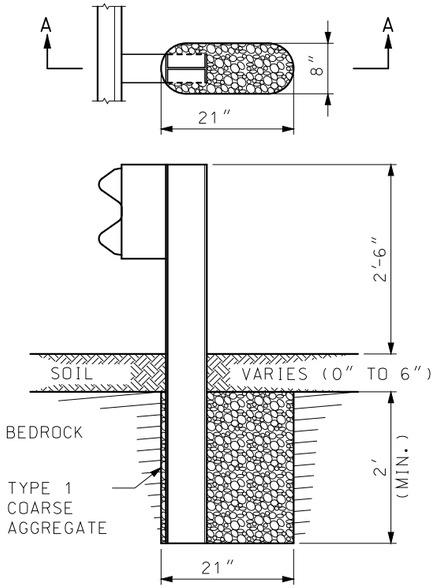

SECTION A–A
ROCK ENCOUNTERED
UP TO 6″ BENEATH SURFACE

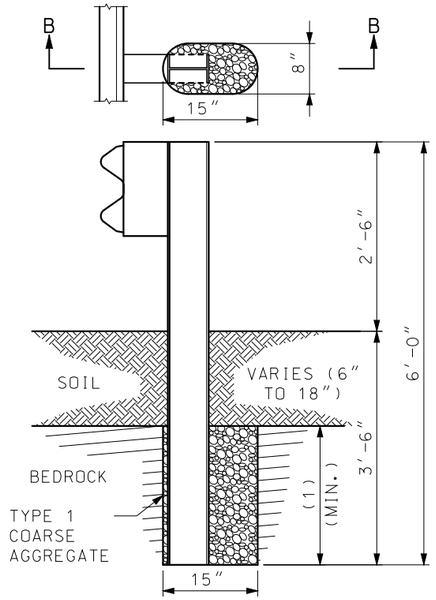

SECTION B–B
ROCK ENCOUNTERED
6″ TO 18″ BENEATH SURFACE

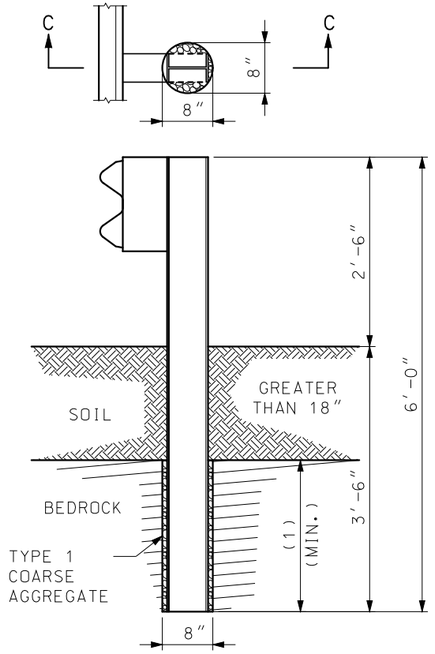

SECTION C–C
ROCK ENCOUNTERED MORE
THAN 18″ BENEATH SURFACE

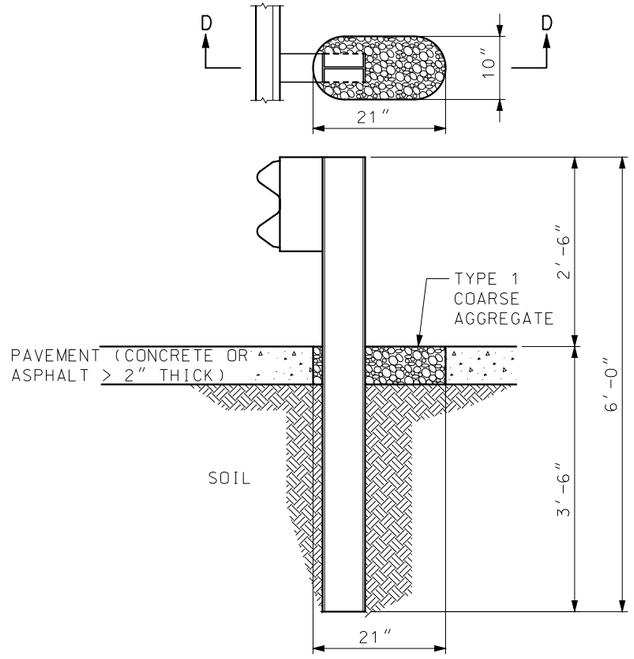

SECTION D–D
SETTING POST THROUGH PAVEMENT
(CONCRETE OR ASPHALT > 2″ THICK)

SETTING POST IN SOLID ROCK

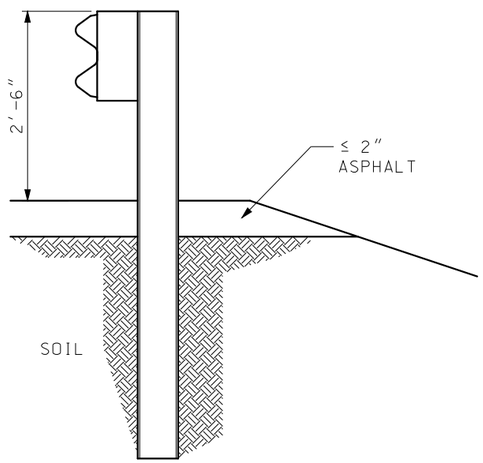

SETTING POST THROUGH ASPHALT ≤ 2″ THICK

(1) MINIMUM ROCK EMBEDMENT IS EQUAL TO FULL DEPTH POST EMBEDMENT MINUS SOIL DEPTH.

GENERAL NOTES:

HOLES IN SOLID ROCK SHALL PROVIDE A DIAMETER OF NOT LESS THAN 4 INCHES GREATER THAN THE MAXIMUM TRANSVERSE DIMENSION OF THE POST SECTION.

POST MAY BE SHORTER WHERE PLACED IN A MINIMUM 2 FEET OF SOLID ROCK. STEEL POSTS MAY BE FLAME OR SAW CUT. REPAIR OF CUT SHALL BE IN ACCORDANCE WITH SEC 712 OF THE STANDARD SPECIFICATIONS.

MISSOURI HIGHWAYS AND TRANSPORTATION COMMISSION
105 WEST CAPITOL
JEFFERSON CITY, MO 65102
1-888-ASK-MODOT (1-888-275-6636)

STATE OF MISSOURI
ERIC E. SCHROETER
NUMBER PE-28411
PROFESSIONAL ENGINEER
THIS SHEET HAS BEEN SIGNED, SEALED AND DATED ELECTRONICALLY.

GUARDRAIL
SPECIAL INSTALLATIONS

DATE EFFECTIVE: 01/01/2017
DATE PREPARED: 10/28/2016

606.00AY

SHEET NO.
6 OF 7

IF A SEAL IS PRESENT ON THIS SHEET IT HAS BEEN ELECTRONICALLY SEALED AND DATED.

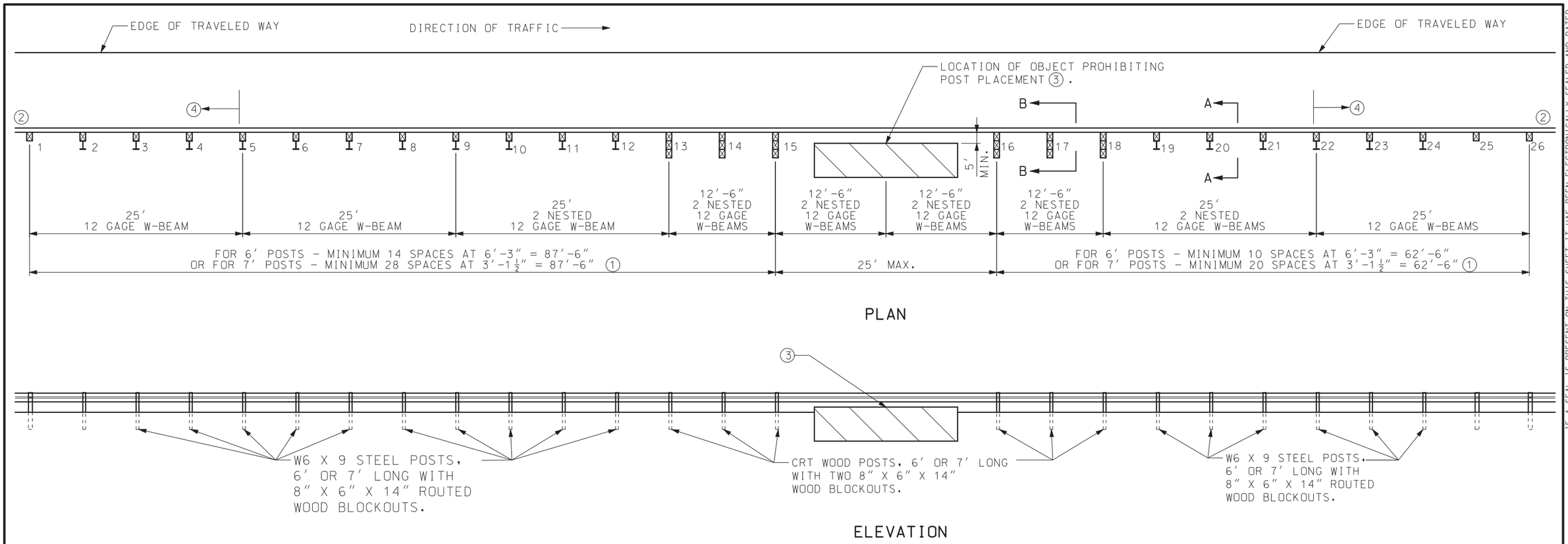

PLAN

ELEVATION

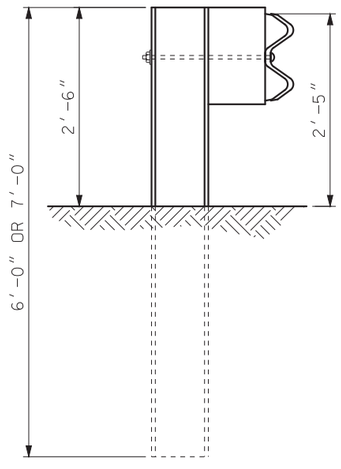

SECTION A-A

W6 X 9 STEEL POSTS, 6' OR 7' LONG WITH 8" X 6" X 14" ROUTED WOOD BLOCKOUTS POSTS 3 THROUGH 12 AND 19 THROUGH 24.

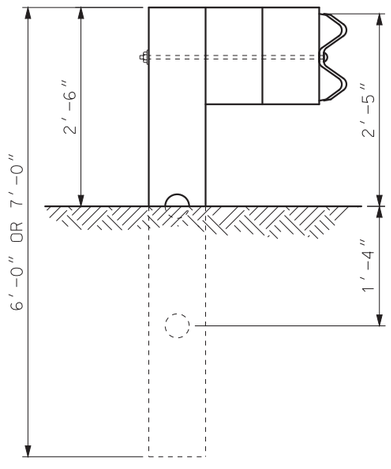

SECTION B-B

CRT WOOD POSTS, 6' OR 7' LONG WITH TWO 8" X 6" X 14" WOOD BLOCKOUTS POSTS 13 THROUGH 18.

(1) IF LOCATED WITHIN THE CLEAR ZONE OF A TWO-WAY ROADWAY, THE MINIMUM LENGTH IS 87'-6".

(2) ADDITIONAL GUARDRAIL AS REQUIRED, INCLUDING END TREATMENT.

(3) THE POST MAY BE SKIPPED DUE TO THE PRESENCE OF AN OBSTACLE SUCH AS A CULVERT.

(4) PLACE END TREATMENT NO CLOSER TO THE SKIPPED POST THAN POSTS 5 AND 22.

MISSOURI HIGHWAYS AND TRANSPORTATION COMMISSION
105 WEST CAPITOL
JEFFERSON CITY, MO 65102
1-888-ASK-MODOT (1-888-275-6636)

STATE OF MISSOURI
ERIC E. SCHROETER
NUMBER PE-28411
PROFESSIONAL ENGINEER
THIS SHEET HAS BEEN SIGNED, SEALED AND DATED ELECTRONICALLY.

GUARDRAIL
LONG-SPAN NESTED W-BEAM

DATE EFFECTIVE: 10/01/2017
DATE PREPARED: 8/8/2017

606.00AY

SHEET NO. 7 OF 7

IF A SEAL IS PRESENT ON THIS SHEET IT HAS BEEN ELECTRONICALLY SEALED AND DATED.

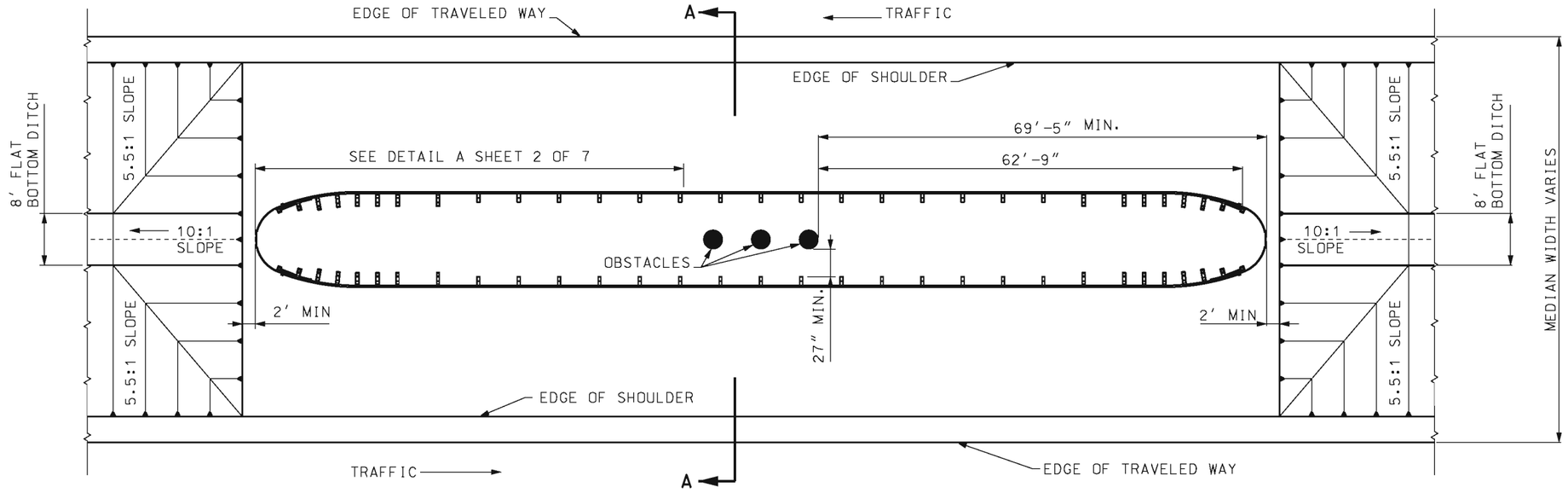

PIER AT ℄ OF MEDIAN
PLAN VIEW

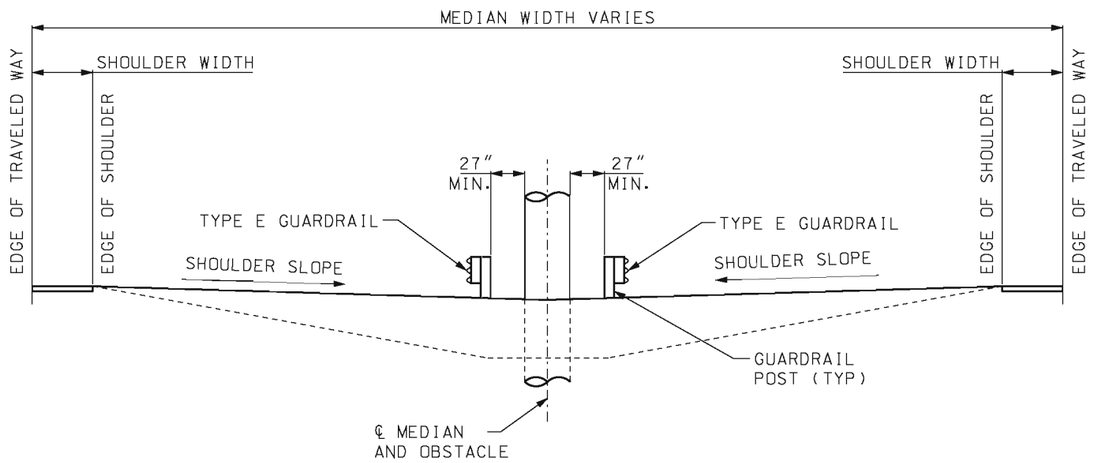

SECTION A-A

GENERAL NOTES:

WOOD POSTS AND WOOD BLOCKS MAY BE USED ON TYPE E GUARDRAIL.

THE BULLNOSE GUARDRAIL PAY ITEM INCLUDES THE STRUCTURE BETWEEN POST 10 AND THE NOSE. THE REMAINING GUARDRAIL WILL BE PAID FOR AS STANDARD GUARDRAIL ITEMS.

SUITABLE DRAINAGE MUST BE PROVIDED WHEN MEDIAN GRADING IMPEDES NORMAL FLOW.

MISSOURI HIGHWAYS AND TRANSPORTATION COMMISSION
105 WEST CAPITOL
JEFFERSON CITY, MO 65102
1-888-ASK-MODOT (1-888-275-6636)

STATE OF MISSOURI
KATHRYN PHILLIPS HARVEY
NUMBER PE-23751
PROFESSIONAL ENGINEER
THIS SHEET HAS BEEN SIGNED, SEALED AND DATED ELECTRONICALLY.

MEDIAN PIER PROTECTION
BULLNOSE GUARDRAIL SYSTEM

DATE EFFECTIVE: 08/01/2012
DATE PREPARED: 7/27/2012

606.01F

SHEET NO. 1 OF 9

IF A SEAL IS PRESENT ON THIS SHEET IT HAS BEEN ELECTRONICALLY SEALED AND DATED.

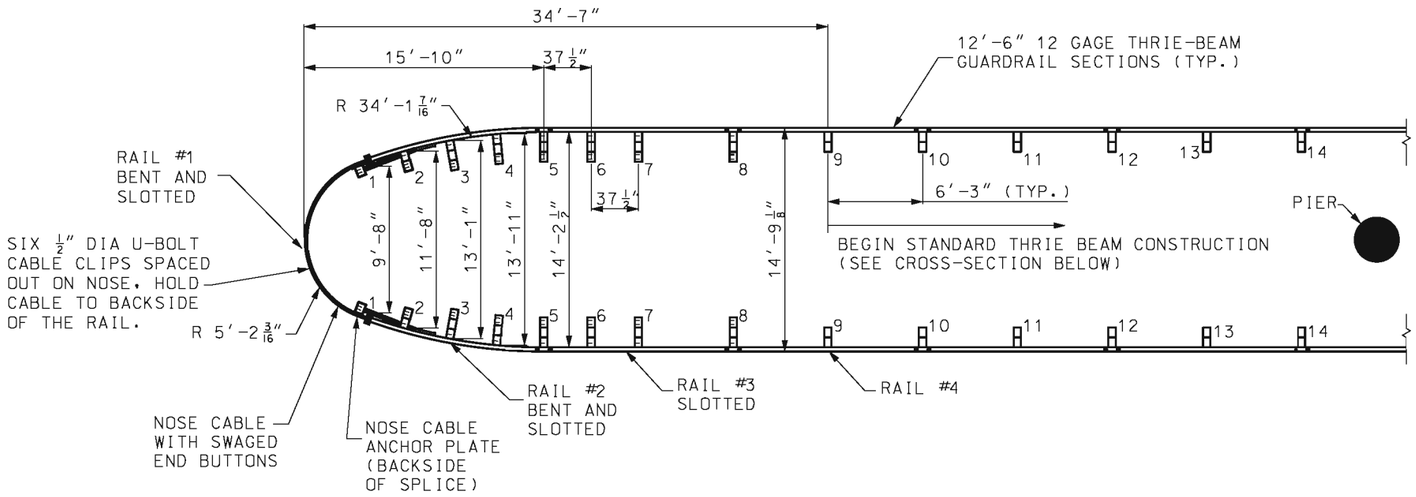

DETAIL A

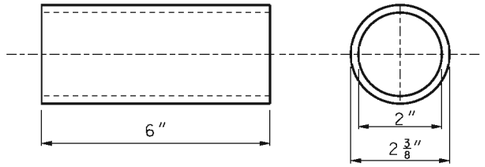

BREAKAWAY TERMINAL POST SLEEVE

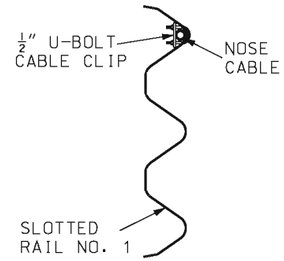

U-BOLT CABLE CLIP DETAIL

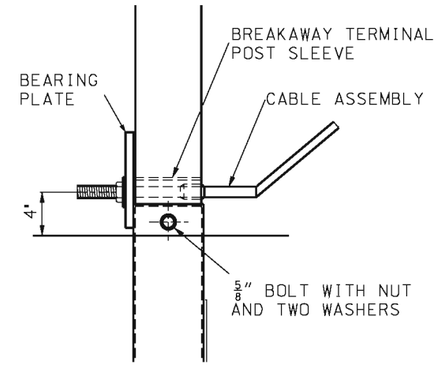

POST 1 DETAIL

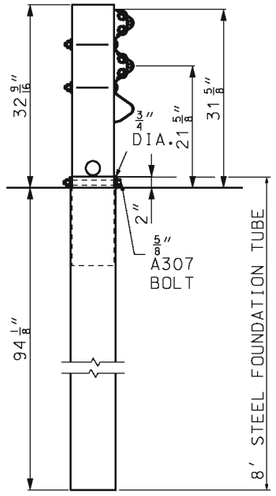

THRIE BEAM BCT POST WITH 96 1/16″ FOUNDATION TUBE POST 1

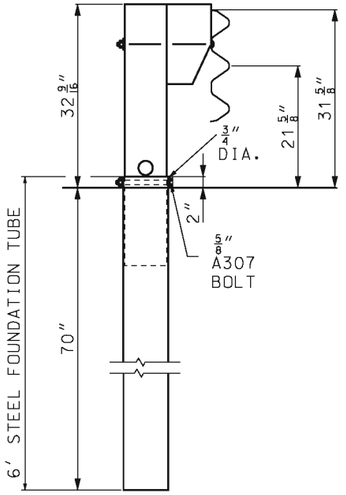

THRIE BEAM BCT POST WITH 72″ FOUNDATION TUBE AND 14″ TAPERED BLOCK POST 2

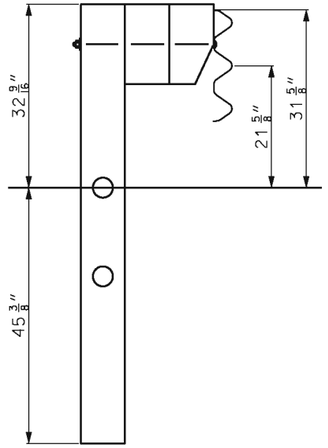

THRIE BEAM CRT POST 78″ LONG WITH 14″ BLOCK AND 14″ TAPERED BLOCK POSTS 3, 4, 5, 6, 7, 8

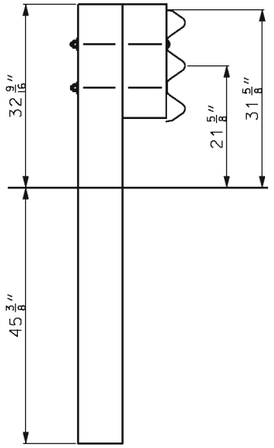

THRIE BEAM POST 78″ LONG WITH 14″ BLOCK POSTS 9 AND 10

POST DETAILS

GENERAL NOTE:

RAILS NUMBERS 1, 2, 3 AND 4 ARE TYPE E GUARDRAIL.
RAIL NUMBER 4 IS A STANDARD THRIE BEAM, NOT SLOTTED.

MISSOURI HIGHWAYS AND TRANSPORTATION COMMISSION
105 WEST CAPITOL
JEFFERSON CITY, MO 65102
1-888-ASK-MODOT (1-888-275-6636)

STATE OF MISSOURI
KATHRYN PHILLIPS HARVEY
NUMBER PE-23751
PROFESSIONAL ENGINEER
THIS SHEET HAS BEEN SIGNED, SEALED AND DATED ELECTRONICALLY.

MEDIAN PIER PROTECTION
BULLNOSE GUARDRAIL SYSTEM

DATE EFFECTIVE: 08/01/2012
DATE PREPARED: 7/27/2012

606.01F

SHEET NO. 2 OF 9

IF A SEAL IS PRESENT ON THIS SHEET IT HAS BEEN ELECTRONICALLY SEALED AND DATED.

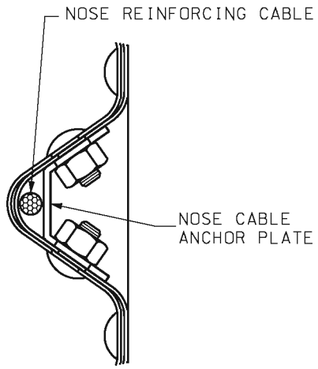

DETAIL B

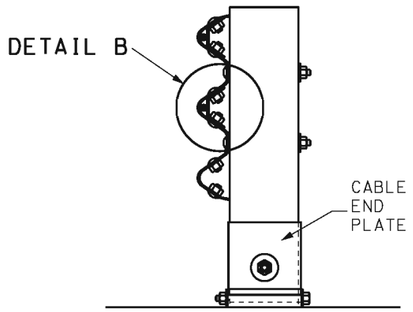

SECTION A-A

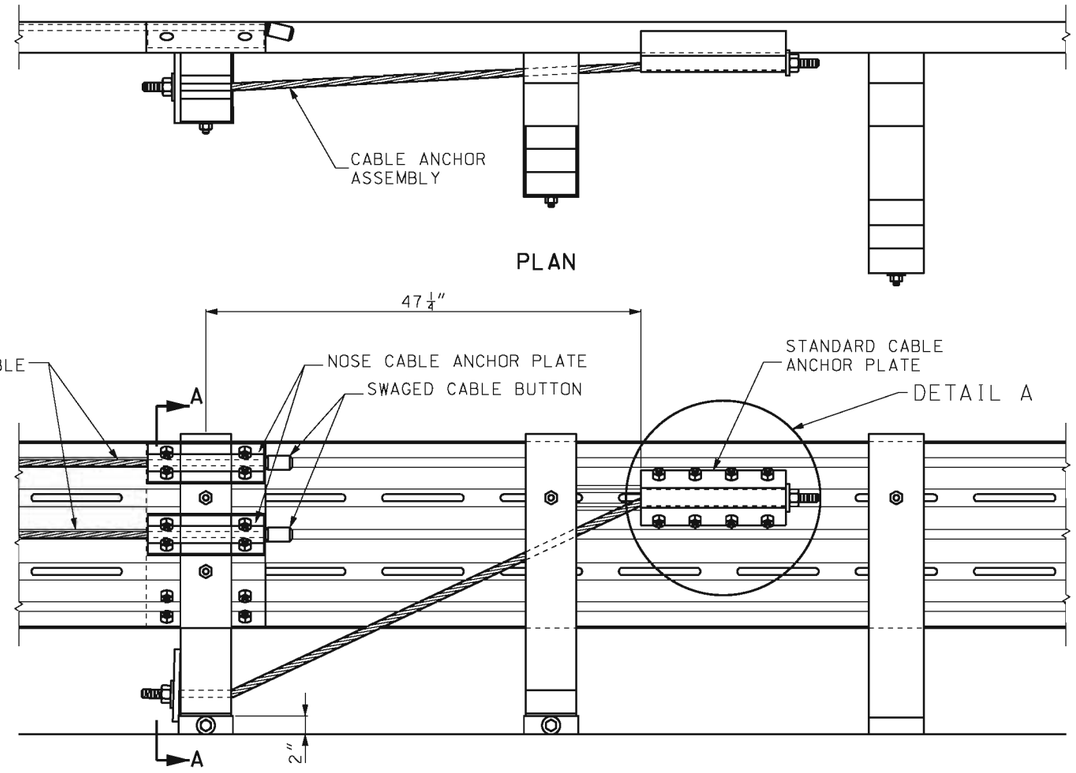

ELEVATION

CABLE ANCHOR ASSEMBLY

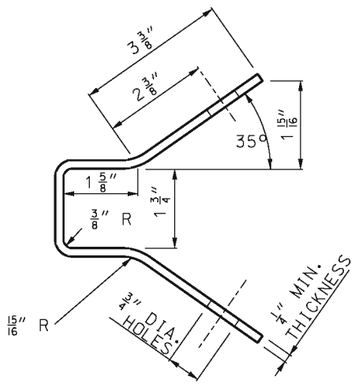

END VIEW

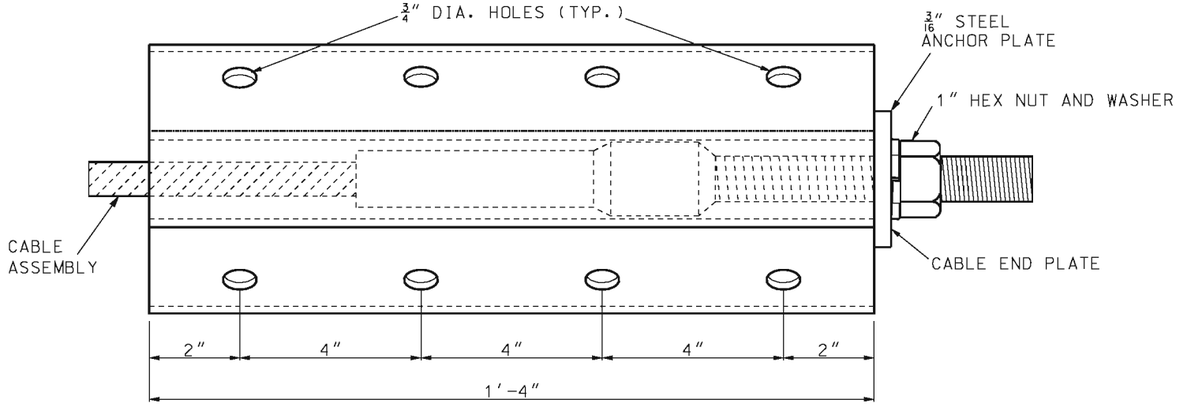

DETAIL A

IF A SEAL IS PRESENT ON THIS SHEET IT HAS BEEN ELECTRONICALLY SEALED AND DATED.

MISSOURI HIGHWAYS AND TRANSPORTATION COMMISSION
105 WEST CAPITOL
JEFFERSON CITY, MO 65102
1-888-ASK-MODOT (1-888-275-6636)

STATE OF MISSOURI
KATHRYN PHILLIPS HARVEY
NUMBER PE-23751
PROFESSIONAL ENGINEER
THIS SHEET HAS BEEN SIGNED, SEALED AND DATED ELECTRONICALLY.

MEDIAN PIER PROTECTION
BULLNOSE GUARDRAIL SYSTEM
CABLE ANCHOR

DATE EFFECTIVE: 08/01/2012
DATE PREPARED: 7/27/2012

606.01F

SHEET NO.
3 OF 9

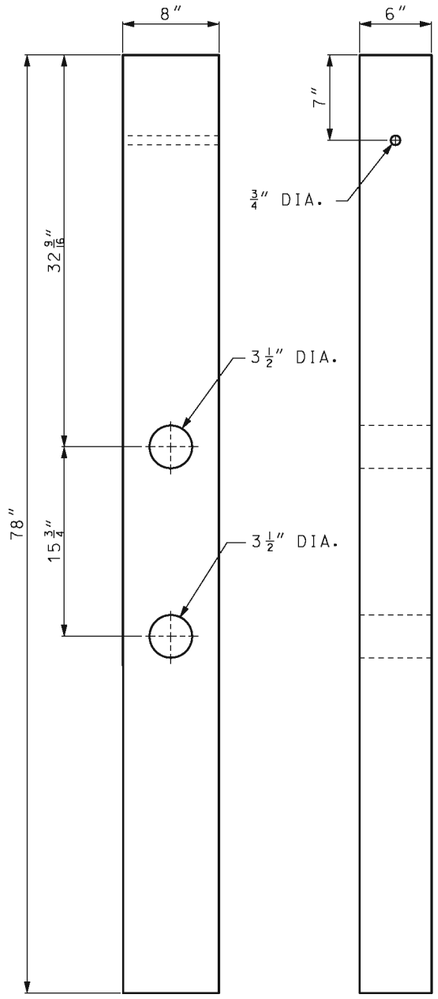

THRIE BEAM CRT POSTS

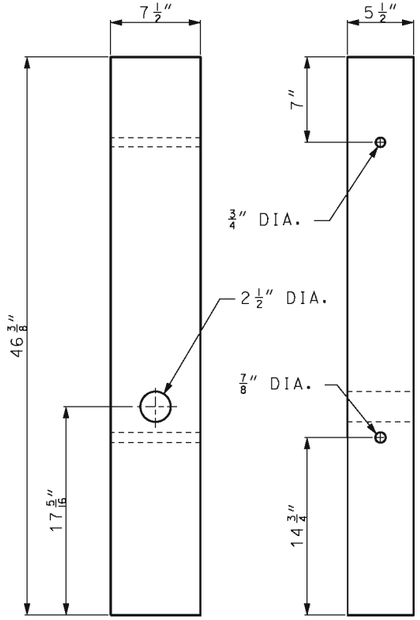

THRIE BEAM ANCHOR POSTS

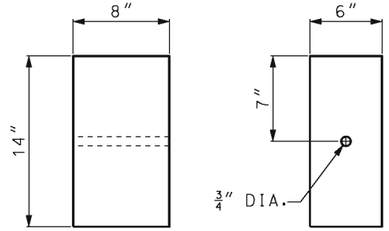

POSTS 2 THROUGH 8
STANDARD BLOCKS

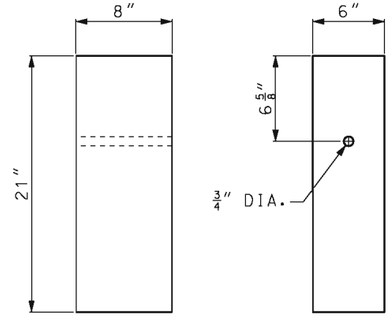

BLOCKS FOR POSTS 9 AND 10
STANDARD BLOCKS

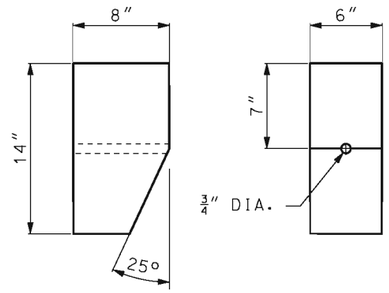

TAPERED BLOCK

IF A SEAL IS PRESENT ON THIS SHEET IT HAS BEEN ELECTRONICALLY SEALED AND DATED.

MISSOURI HIGHWAYS AND TRANSPORTATION COMMISSION
105 WEST CAPITOL
JEFFERSON CITY, MO 65102
1-888-ASK-MODOT (1-888-275-6636)

STATE OF MISSOURI
KATHRYN PHILLIPS HARVEY
NUMBER PE-23751
PROFESSIONAL ENGINEER
THIS SHEET HAS BEEN SIGNED, SEALED AND DATED ELECTRONICALLY.

MEDIAN PIER PROTECTION
BULLNOSE GUARDRAIL SYSTEM
POST AND BLOCKS

DATE EFFECTIVE: 08/01/2012
DATE PREPARED: 7/27/2012

606.01F

SHEET NO. 4 OF 9

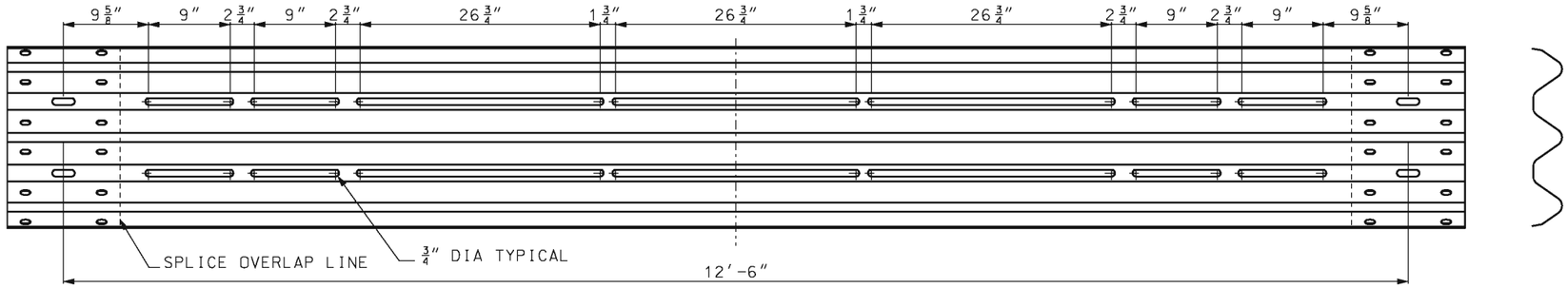

RAIL SECTION 1 (NOSE SECTION)

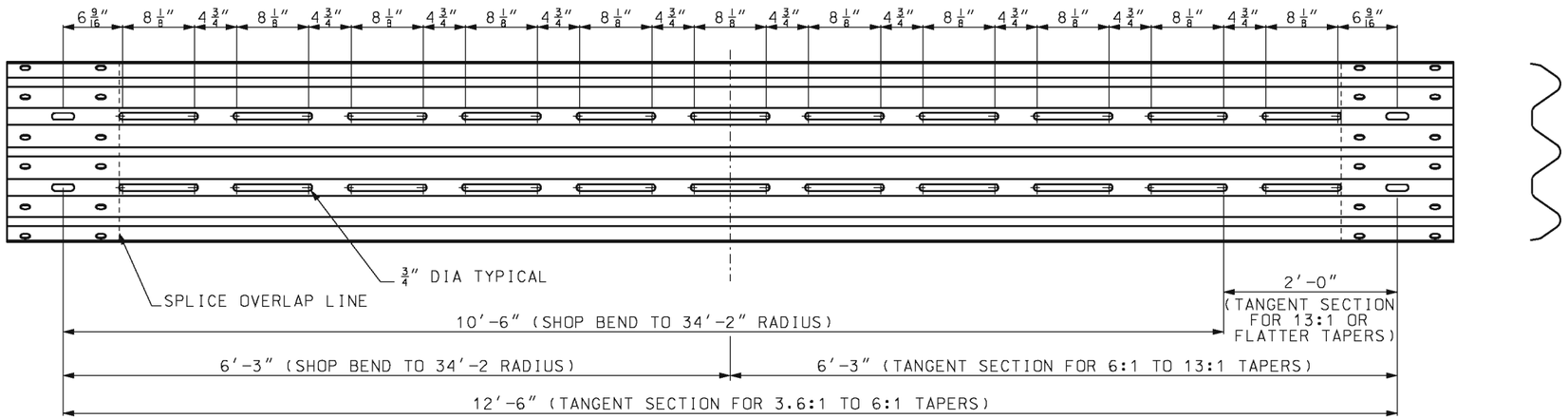

RAIL SECTION 2

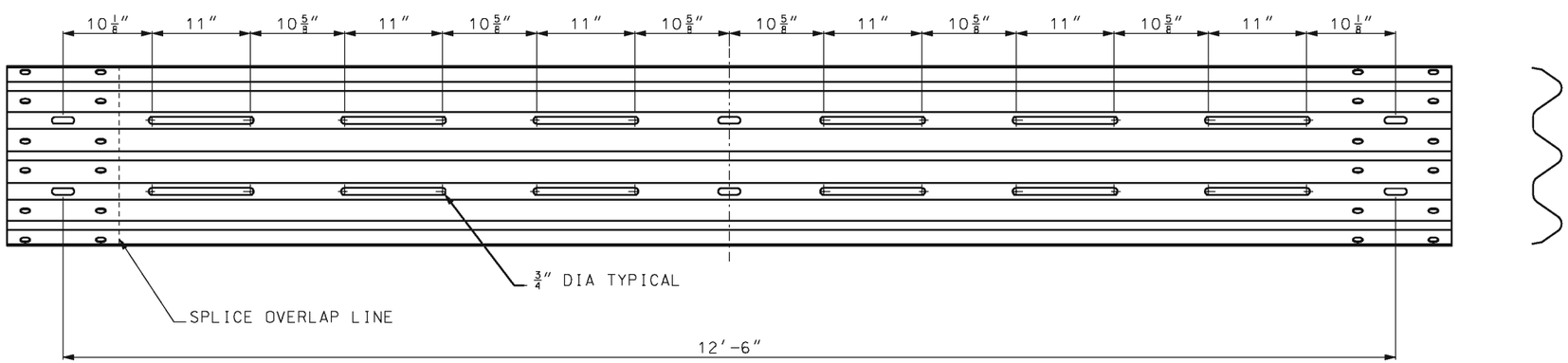

RAIL SECTION 3

IF A SEAL IS PRESENT ON THIS SHEET IT HAS BEEN ELECTRONICALLY SEALED AND DATED.

MISSOURI HIGHWAYS AND TRANSPORTATION COMMISSION
105 WEST CAPITOL
JEFFERSON CITY, MO 65102
1-888-ASK-MODOT (1-888-275-6636)

STATE OF MISSOURI
KATHRYN PHILLIPS HARVEY
NUMBER PE-23751
PROFESSIONAL ENGINEER
THIS SHEET HAS BEEN SIGNED, SEALED AND DATED ELECTRONICALLY.

MEDIAN PIER PROTECTION

BULLNOSE GUARDRAIL SYSTEM
RAIL SECTION 1, 2 AND 3

DATE EFFECTIVE: 08/01/2012
DATE PREPARED: 7/27/2012

606.01F

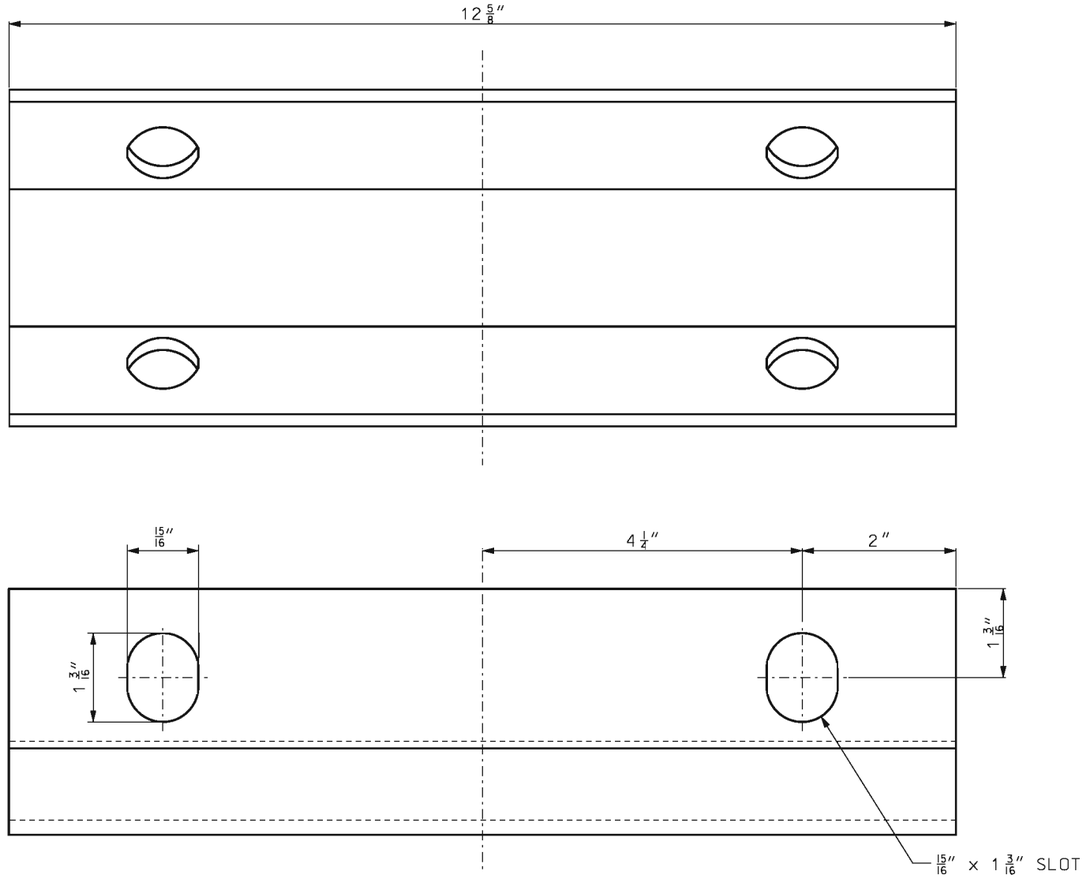

STEEL PLATE, A306
12 5/8" x 5 7/8" x 3/16"

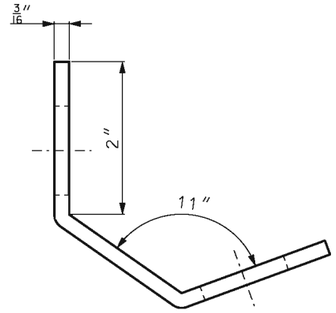

(1) STUD, THREADED ENTIRE LENGTH.

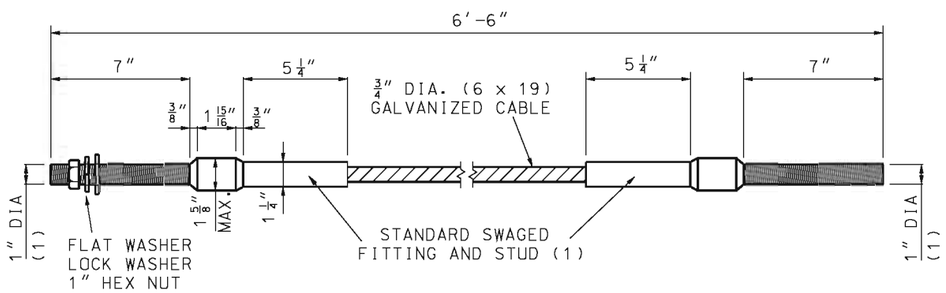

DETAIL OF CABLE ASSEMBLY

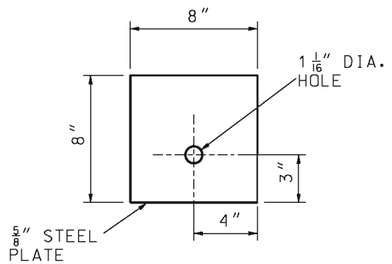

DETAIL OF STEEL BEARING PLATE

IF A SEAL IS PRESENT ON THIS SHEET IT HAS BEEN ELECTRONICALLY SEALED AND DATED.

MISSOURI HIGHWAYS AND TRANSPORTATION COMMISSION
105 WEST CAPITOL
JEFFERSON CITY, MO 65102
1-888-ASK-MODOT (1-888-275-6636)

STATE OF MISSOURI
KATHRYN PHILLIPS HARVEY
NUMBER PE-23751
PROFESSIONAL ENGINEER
THIS SHEET HAS BEEN SIGNED, SEALED AND DATED ELECTRONICALLY.

MEDIAN PIER PROTECTION
BULLNOSE GUARDRAILS SYSTEM PLATES AND CABLE ASSEMBLY

DATE EFFECTIVE: 08/01/2012
DATE PREPARED: 7/27/2012

606.01F

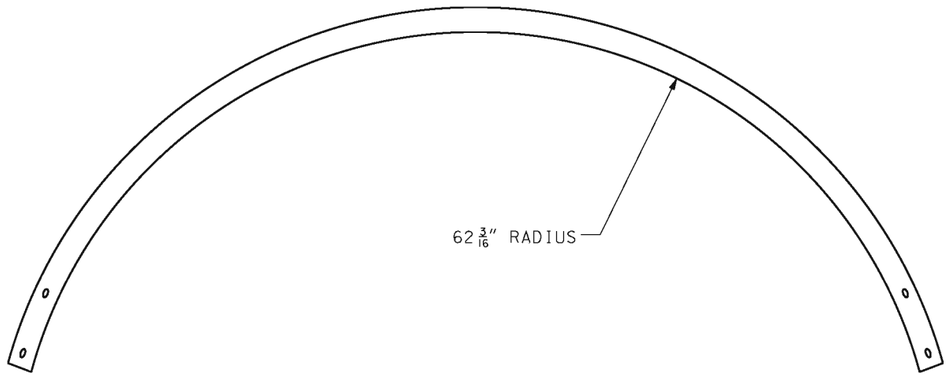

TOP VIEW, RAIL #1

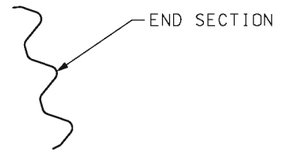

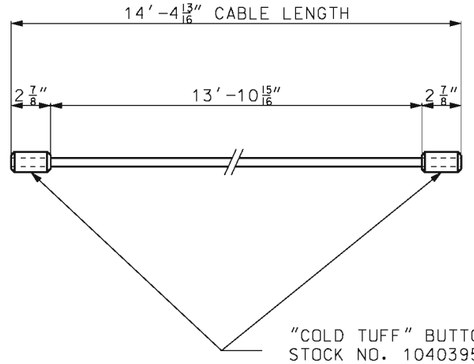

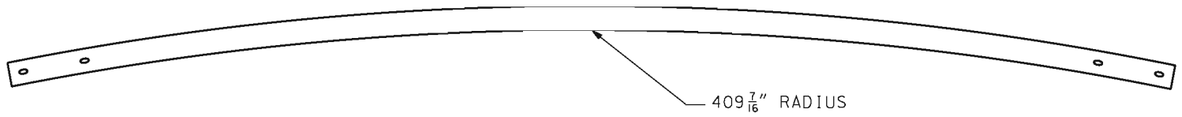

TOP VIEW, RAIL #2

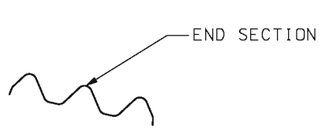

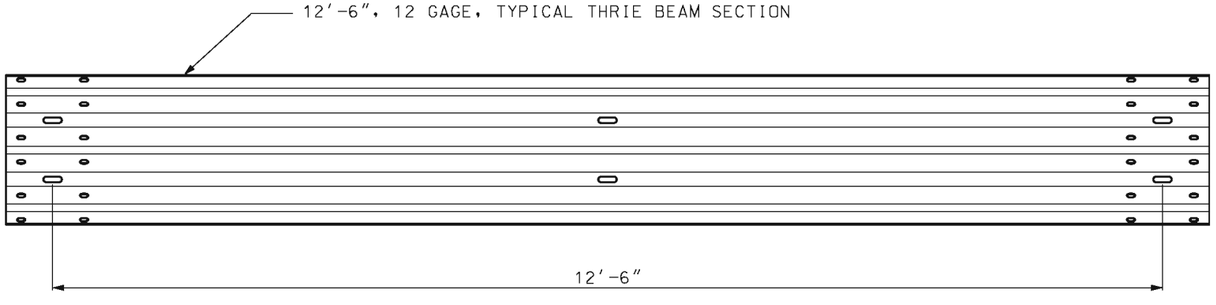

FRONT VIEW (UNBENT)

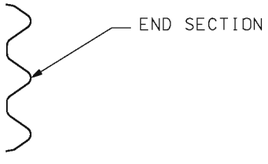

IF A SEAL IS PRESENT ON THIS SHEET IT HAS BEEN ELECTRONICALLY SEALED AND DATED.

MISSOURI HIGHWAYS AND TRANSPORTATION COMMISSION
105 WEST CAPITOL
JEFFERSON CITY, MO 65102
1-888-ASK-MODOT (1-888-275-6636)

STATE OF MISSOURI
KATHRYN PHILLIPS HARVEY
NUMBER PE-23751
PROFESSIONAL ENGINEER
THIS SHEET HAS BEEN SIGNED, SEALED AND DATED ELECTRONICALLY.

MEDIAN PIER PROTECTION
BULLNOSE GUARDRAIL SYSTEM
THRIE BEAM AND CABLE LENGTH

DATE EFFECTIVE: 08/01/2012
DATE PREPARED: 7/27/2012

606.01F

SHEET NO. 7 OF 9

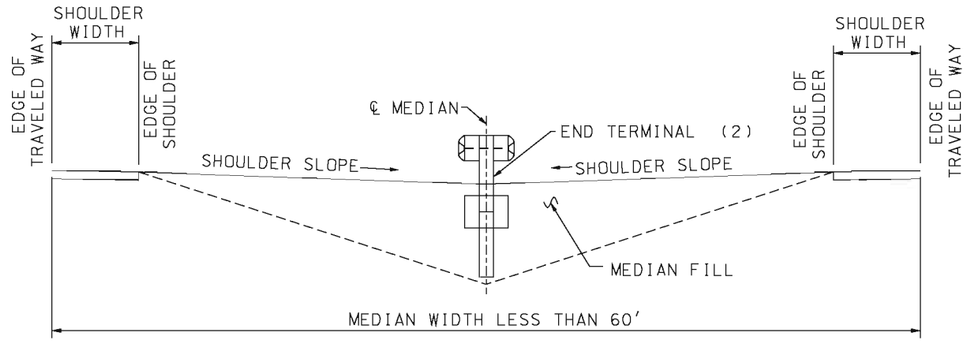

SECTION C-C

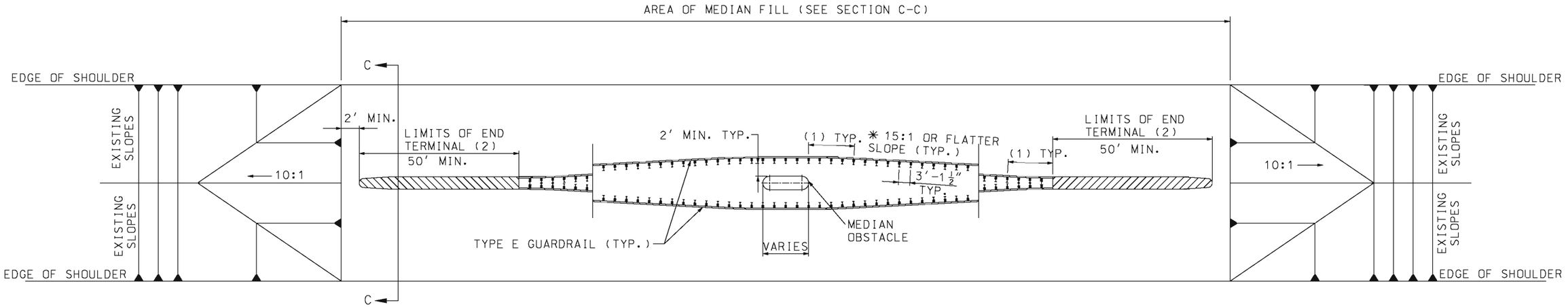

(1) TYPE E GUARDRAIL 12'-6" IN LENGTH AND FACTORY FORMED TO THE REQUIRED RADIUS.

(2) PAYMENT FOR THE END TERMINAL WILL BE CONSIDERED FULL COMPENSATION FOR ANY TRANSITION SECTIONS, BACKUP ASSEMBLIES, OR OTHER ITEMS NECESSARY FOR PROPER INSTALLATION AS REQUIRED BY THE MANUFACTURER.

✳ VARY SLOPE NO STEEPER THAN 15:1 TO UTILIZE A FULL 12.5' LENGTH OF GUARDRAIL WHEN ATTACHING TO THE CRASHWORTHY END TERMINAL.

GENERAL NOTES:

TYPE B CRASHWORTHY END TERMINAL SHALL BE LATEST VERSION AND SHALL BE INSTALLED ACCORDING TO MANUFACTURER'S RECOMENDATIONS.

MISSOURI HIGHWAYS AND TRANSPORTATION COMMISSION
105 WEST CAPITOL
JEFFERSON CITY, MO 65102
1-888-ASK-MODOT (1-888-275-6636)

STATE OF MISSOURI
KATHRYN PHILLIPS HARVEY
NUMBER PE-23751
PROFESSIONAL ENGINEER
THIS SHEET HAS BEEN SIGNED, SEALED AND DATED ELECTRONICALLY.

TYPE E MEDIAN PIER PROTECTION

MEDIAN LESS THAN 60'

DATE EFFECTIVE: 08/01/2012
DATE PREPARED: 7/27/2012

606.01F

SHEET NO. 8 OF 9

IF A SEAL IS PRESENT ON THIS SHEET IT HAS BEEN ELECTRONICALLY SEALED AND DATED.

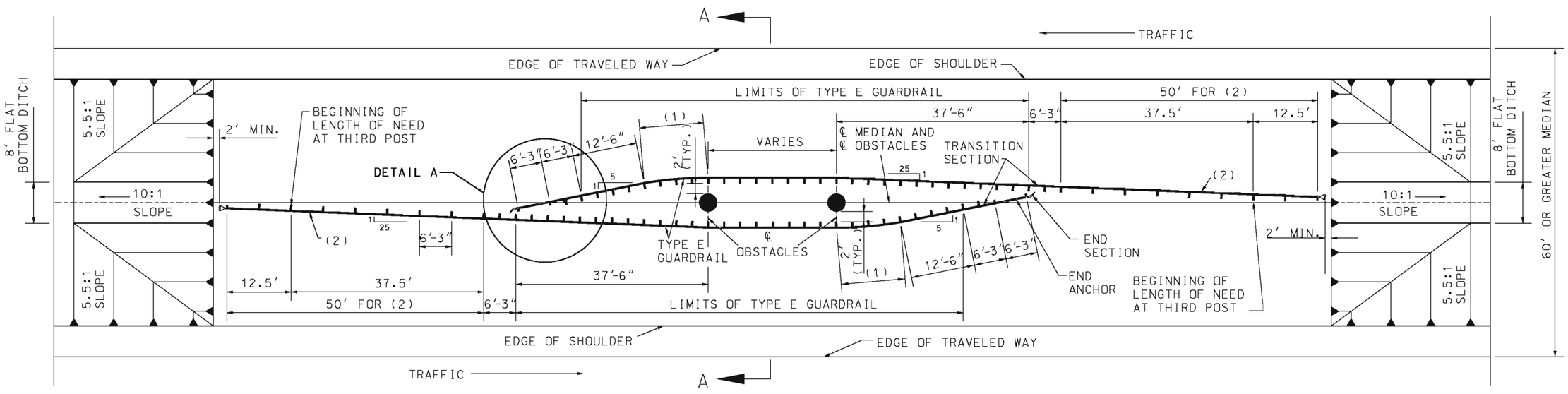

PIER AT ℄ OF MEDIAN

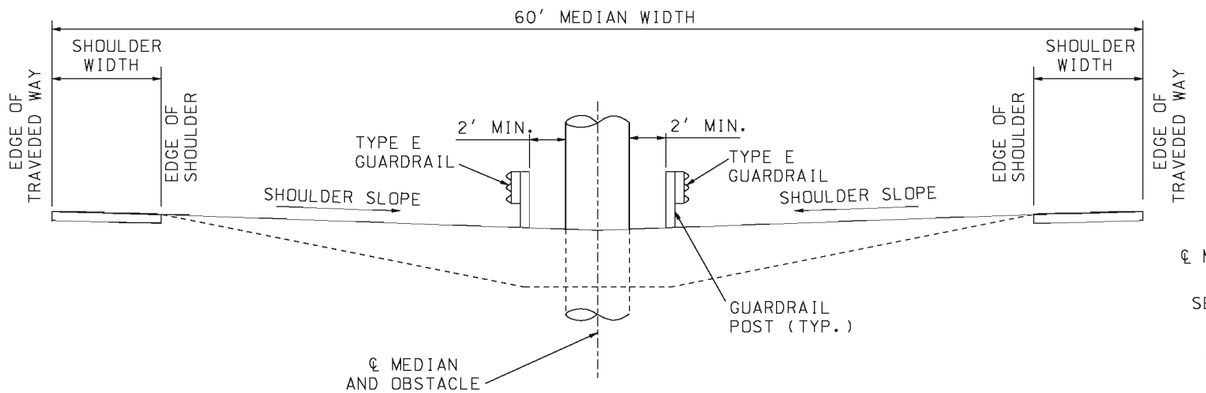

SECTION A-A

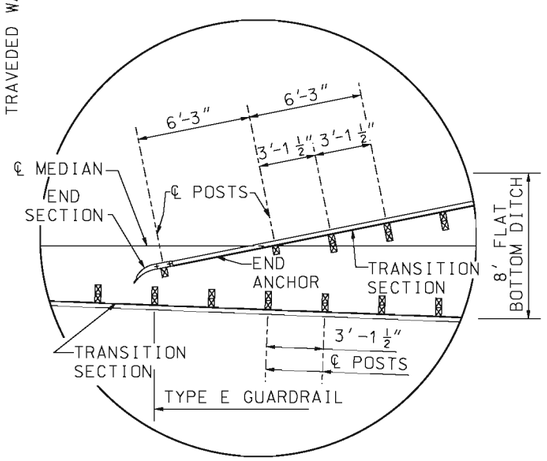

DETAIL A

(1) TYPE E GUARDRAIL IN THIS REGION SHALL BE 12'6" IN LENGTH AND FACTORY FORMED TO A 75' RADIUS.

(2) TYPE A NON-FLARED CRASHWORTHY END TREATMENT.

GENERAL NOTES:

WOOD POSTS AND WOOD BLOCKS MAY BE USED ON TYPE E GUARDRAIL. END ANCHOR SECTION TO BE USED ON TERMINAL END OF TYPE E GUARDRAIL.

END ANCHOR TO BE LOCATED EYOND THE LONGITUDINAL LIMITS OF TYPE A NON-FLARED CRASHWORTHY END TERMINAL.

TYPE A NON-FLARED CRASHWORTHY END TERMINAL SHALL BE THE LATEST VERSION AND SHALL BE INSTALLED ACCORDING TO MANUFACTURER'S RECOMMENDATIONS.

MISSOURI HIGHWAYS AND TRANSPORTATION COMMISSION
105 WEST CAPITOL
JEFFERSON CITY, MO 65102
1-888-ASK-MODOT (1-888-275-6636)

STATE OF MISSOURI
KATHRYN PHILLIPS HARVEY
NUMBER PE-23751
PROFESSIONAL ENGINEER
THIS SHEET HAS BEEN SIGNED, SEALED AND DATED ELECTRONICALLY.

TYPE E MEDIAN PIER PROTECTION

60' MEDIAN OR GREATER

DATE EFFECTIVE: 08/01/2012
DATE PREPARED: 7/27/2012

606.01F

SHEET NO. 9 OF 9

IF A SEAL IS PRESENT ON THIS SHEET IT HAS BEEN ELECTRONICALLY SEALED AND DATED.

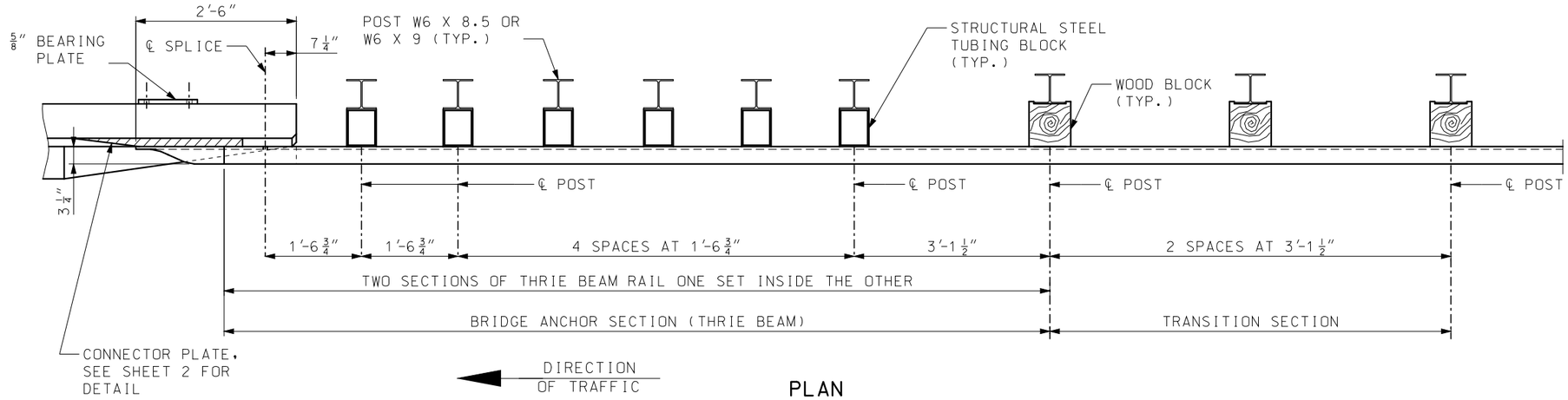

PLAN

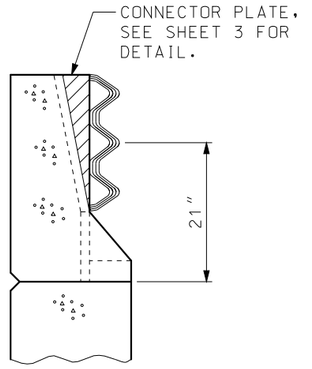

SECTION A-A

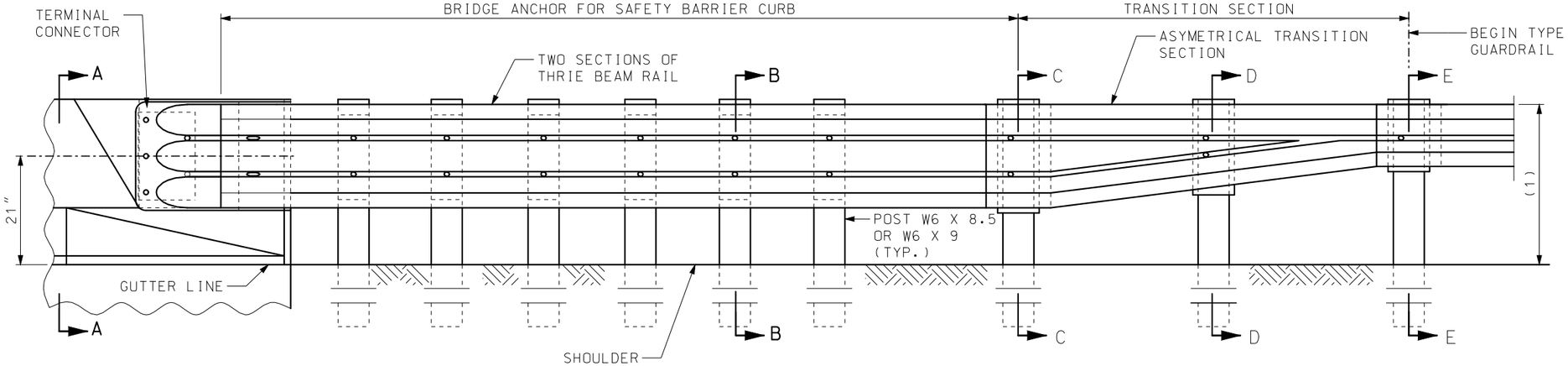

PART SECTION THRU SLAB AT END OF WING

(1) TRANSITION FROM 31" TO 29" HEIGHT OVER NEXT TWO UPSTREAM 12'-6" W-BEAM RAILS.

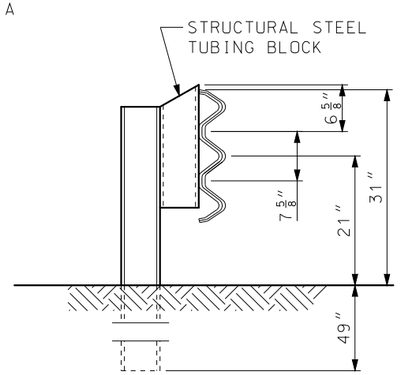

SECTION B-B

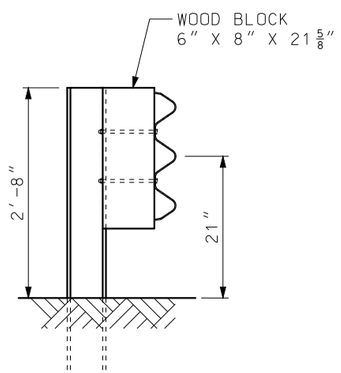

SECTION C-C

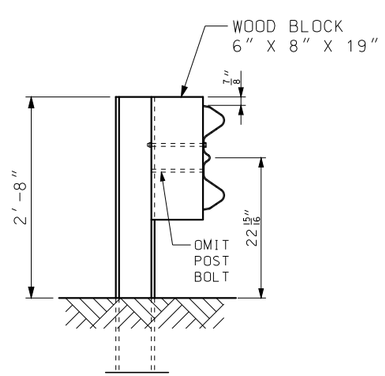

SECTION D-D

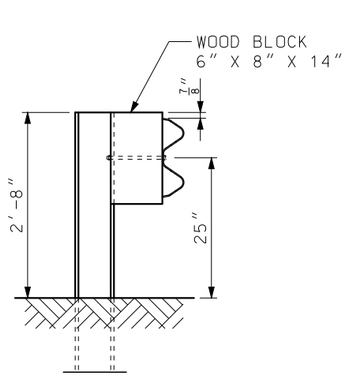

SECTION E-E

NOTES:

FOR GENERAL NOTES, SEE SHEET 3 OF 6

FOR DETAILS OF BLOCK ON STEEL POSTS, SEE SHEET 2 OF 6.

MISSOURI HIGHWAYS AND TRANSPORTATION COMMISSION
105 WEST CAPITOL
JEFFERSON CITY, MO 65102
1-888-ASK-MODOT (1-888-275-6636)

STATE OF MISSOURI
ERIC E. SCHROETER
NUMBER PE-28411
PROFESSIONAL ENGINEER
THIS SHEET HAS BEEN SIGNED, SEALED AND DATED ELECTRONICALLY.

BRIDGE ANCHOR SECTION

SAFETY BARRIER CURB ON BRIDGE

DATE EFFECTIVE: 07/01/2016
DATE PREPARED: 5/13/2016

606.22U

SHEET NO. 1 OF 6

IF A SEAL IS PRESENT ON THIS SHEET IT HAS BEEN ELECTRONICALLY SEALED AND DATED.

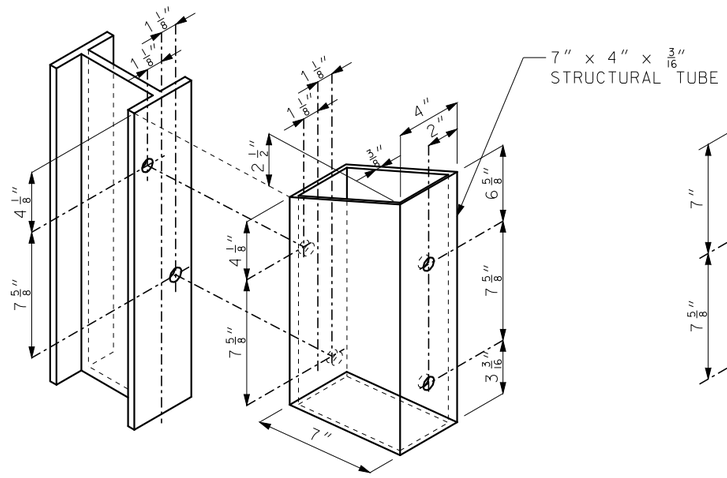

STRUCTURAL STEEL TUBING BLOCK DETAIL

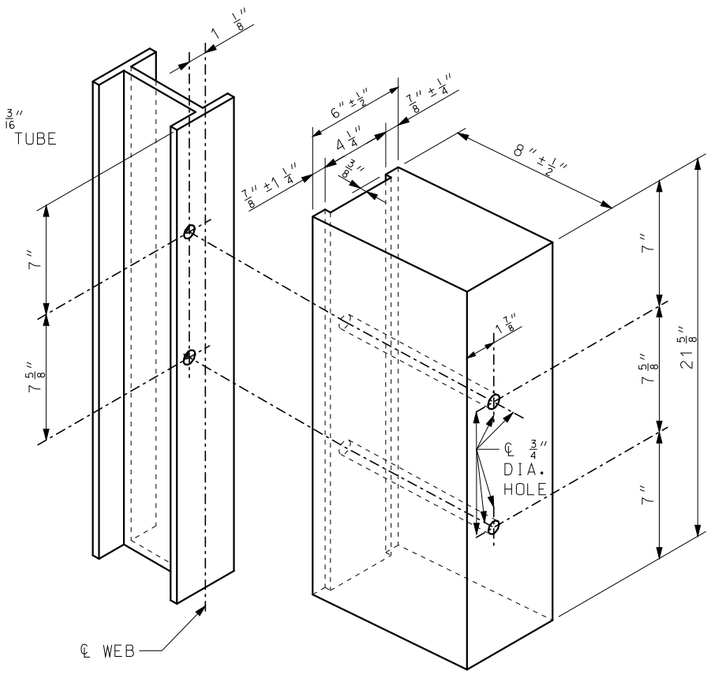

21 5/8" WOOD BLOCK DETAIL

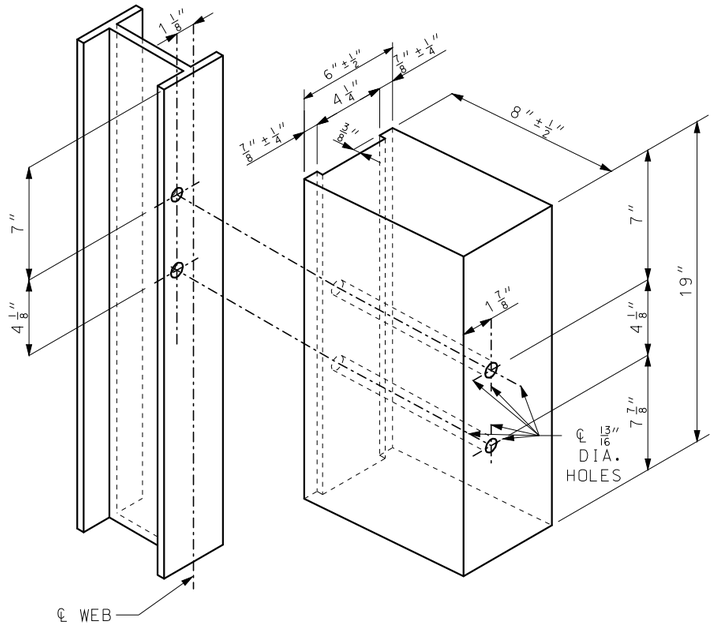

19" WOOD BLOCK DETAIL

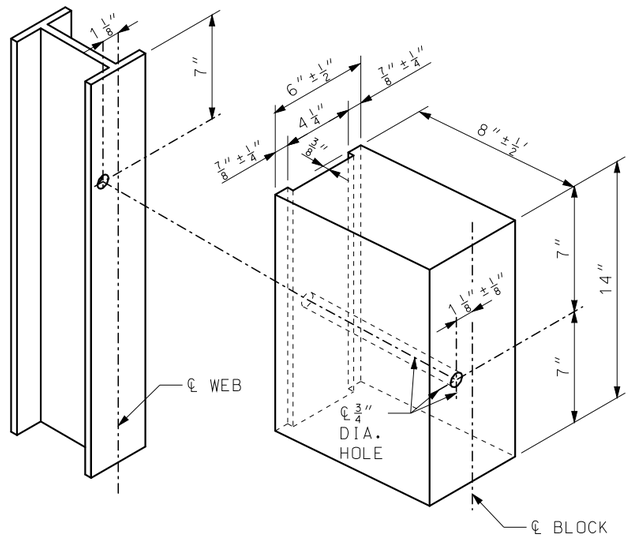

14" WOOD BLOCK DETAIL

ALL HOLES DRILLED OR PUNCHED 13/16" DIA.

IF A SEAL IS PRESENT ON THIS SHEET IT HAS BEEN ELECTRONICALLY SEALED AND DATED.

MISSOURI HIGHWAYS AND TRANSPORTATION COMMISSION
105 WEST CAPITOL
JEFFERSON CITY, MO 65102
1-888-ASK-MODOT (1-888-275-6636)

STATE OF MISSOURI
ERIC E. SCHROETER
NUMBER PE-28411
PROFESSIONAL ENGINEER
THIS SHEET HAS BEEN SIGNED, SEALED AND DATED ELECTRONICALLY.

BRIDGE ANCHOR SECTION

SAFETY BARRIER CURB ON BRIDGE

DATE EFFECTIVE: 07/01/2016
DATE PREPARED: 5/13/2016

606.22U

SHEET NO. 2 OF 6

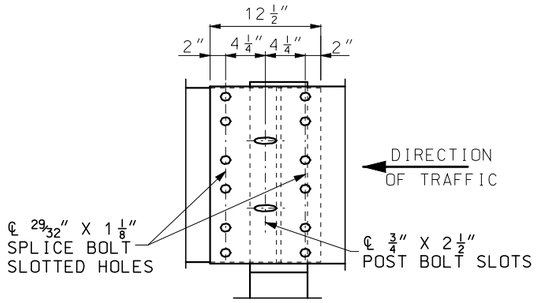

THRIE BEAM RAIL SPLICE AT POST

(1) THE CONTRACTOR MAY, AT HIS OPTION, FURNISH EQUIVALENT SECTIONS FABRICATED FROM MATERIAL MEETING AND IN ACCORDANCE WITH THE REQUIREMENTS OF ASTM A769 GRADE 36 OR 40. THE SECTIONS SHALL BE GALVANIZED AFTER FABRICATION IN ACCORDANCE WITH REQUIREMENTS OF AASHTO M 111.

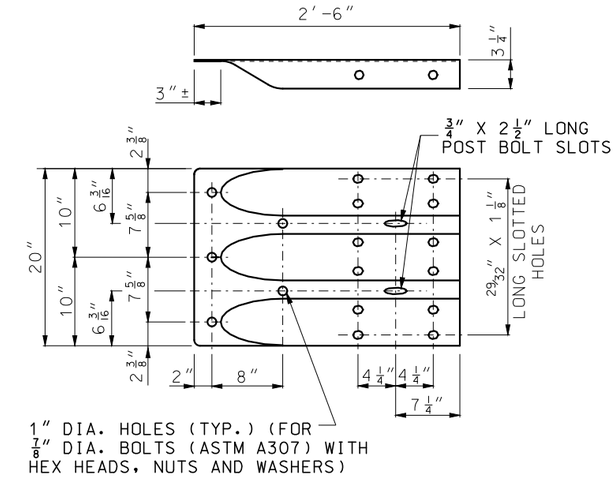

TERMINAL CONNECTOR

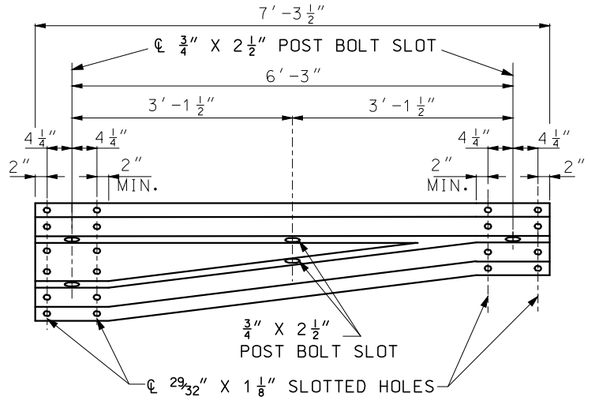

ASYMMETRICAL TRANSITION SECTION

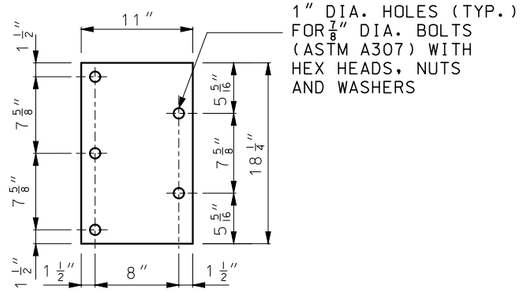

5/8" BEARING PLATE

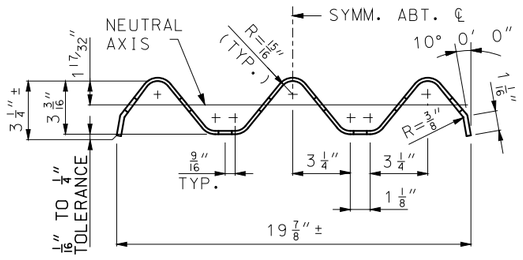

SECTION THROUGH THRIE BEAM RAIL

GENERAL NOTES:

DESIGN BASED ON NCHRP REPORT 350 TEST LEVEL 3.

THE THRIE BEAM RAIL, TERMINAL CONNECTOR AND THE TRANSITION SECTION FOR THE BRIDGE ANCHOR SECTION SHALL BE MADE OF STEEL AND SHLL BE 12 GAGE.

FOR PROTECTIVE COATING AND MATERIAL REQUIREMENTS, SEE SECTION 1040 OF THE STANDARD SPECIFICATIONS.

RAIL POSTS SHALL BE SET PERPENDICULAR TO THE ROADWAY PROFILE GRADE AND VERTICALLY IN CROSS SECTION.

WASHERS SHALL BE USED AT ALL POST BOLTS.

STRUCTURAL TUBING BLOCK SHALL BE FABRICATED FROM ASTM A500 BRADE B STEEL AND GALVANIZED.

USE 5/8" BUTTON-HEAD OVAL SHOULDER BOLTS WITH HEX NUTS AT ALL SLOTS (THICKNESS OF HEX NUTS = 3/8" MIN.).

THE BEARING PLATE SHALL BE FABRICATED FROM GRADE A36 STEEL AND GALVANIZED.

ALL LAP SPLICES, INCLUDING END SHOES, SHALL BE MADE IN THE DIRECTION OF TRAFFIC.

SEE STANDARD PLAN 606.00 FOR DETAILS NOT SHOWN.

THE COST OF FURNISHING, FABRICATING AND INSTALLING TRANSITION SECTION, COPLETE IN PLACE, WILL BE PAID FOR AT THE CONTRACT UNIT PRICE PER EACH.

THE COST OF FURNISHING FABRICATING AND INSTALLING BRIDGE ANCHOR SECTION (SAFETY BARRIER CURB), COMPLETE IN PLACE, WILL BE PAID FOR AT THE CONTRACT UNIT PRICE PER EACH.

IF A SEAL IS PRESENT ON THIS SHEET IT HAS BEEN ELECTRONICALLY SEALED AND DATED.

MISSOURI HIGHWAYS AND TRANSPORTATION COMMISSION
105 WEST CAPITOL
JEFFERSON CITY, MO 65102
1-888-ASK-MODOT (1-888-275-6636)

STATE OF MISSOURI
ERIC E. SCHROETER
NUMBER PE-2841
PROFESSIONAL ENGINEER
THIS SHEET HAS BEEN SIGNED, SEALED AND DATED ELECTRONICALLY.

BRIDGE ANCHOR SECTION

SAFETY BARRIER CURB ON BRIDGE

DATE EFFECTIVE: 07/01/2016
DATE PREPARED: 5/13/2016

606.22U

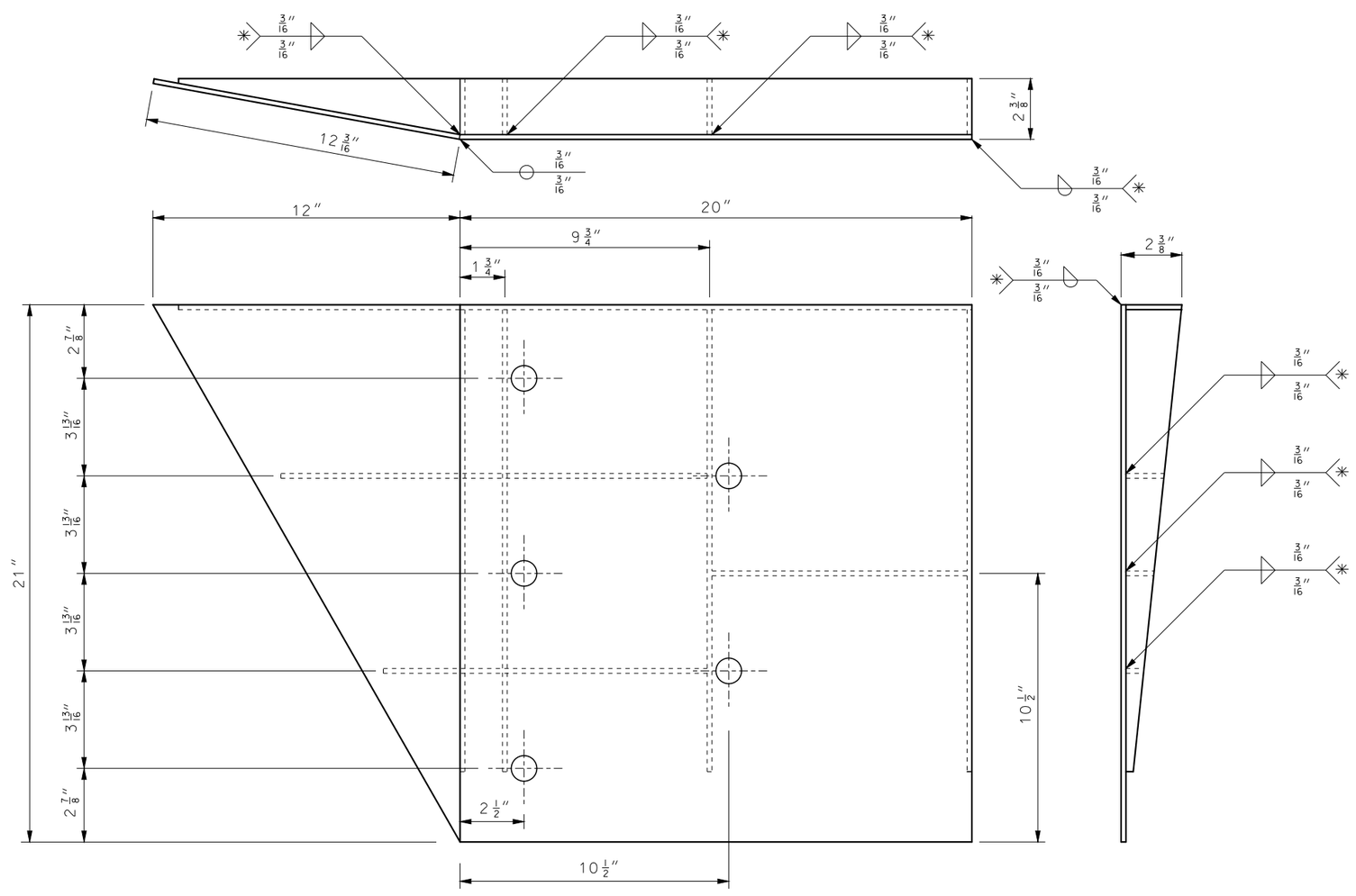

WELDING INSTRUCTION

✳ ALL FILLET WELDS SHALL BE 1" LONG SPACED AT 2".

GENERAL NOTES:

COVER PLATE PANELS ARE 4. 3/16" THICK.

ALL STIFFENERS ARE 1/4" THICK.

CONNECTOR PLATE SHALL BE FABRICATED FROM ASTM GRADE A36 STEEL AND GALVANIZED.

FOR GALVANIZED REQUIREMENTS, SEE SECTION 1040 OF THE STANDARD SPECIFICATIONS.

ALL HOLE DIAMETERS SHALL BE 1".

MISSOURI HIGHWAYS AND TRANSPORTATION COMMISSION
105 WEST CAPITOL
JEFFERSON CITY, MO 65102
1-888-ASK-MODOT (1-888-275-6636)

STATE OF MISSOURI
ERIC E. SCHROETER
NUMBER PE-28411
PROFESSIONAL ENGINEER
THIS SHEET HAS BEEN SIGNED, SEALED AND DATED ELECTRONICALLY.

BRIDGE ANCHOR SECTION
SAFETY BARRIER CURB ON BRIDGE (CONNECTOR PLATE DETAIL)

DATE EFFECTIVE: 07/01/2016
DATE PREPARED: 5/13/2016

606.22U

SHEET NO. 4 OF 6

IF A SEAL IS PRESENT ON THIS SHEET IT HAS BEEN ELECTRONICALLY SEALED AND DATED.

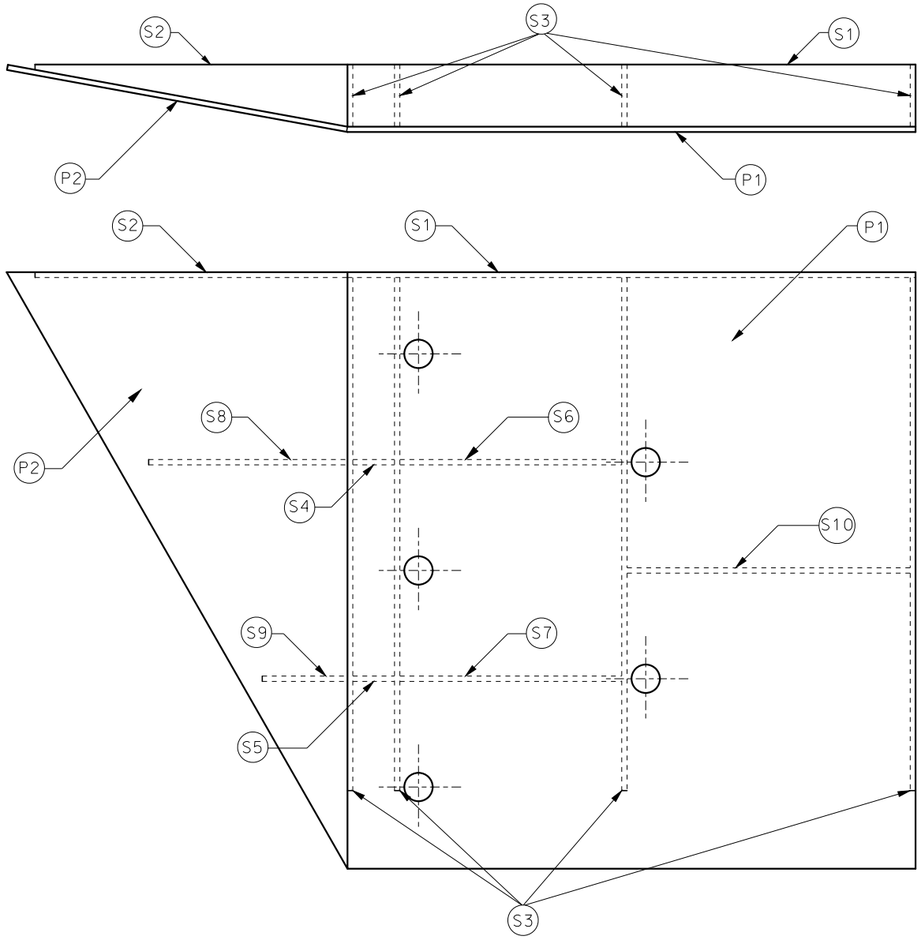

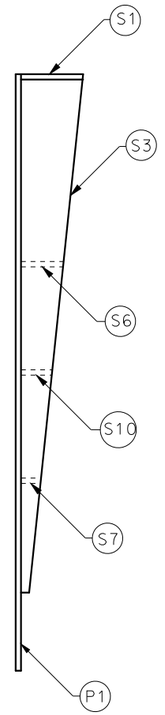

PLATE AND STIFFENER IDENTIFICATION

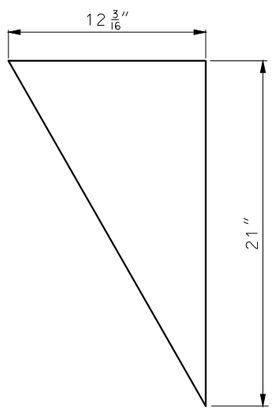

P2 COVER PLATE #2

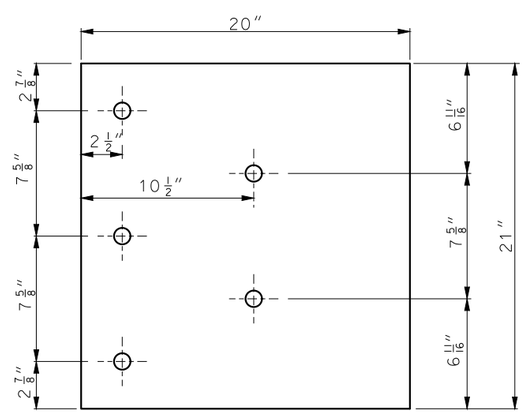

P1 COVER PLATE #1

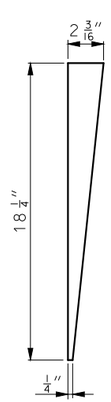

S3 STIFFENER #3: 4 EACH

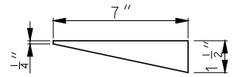

S8 STIFFENER #8: 1 EACH

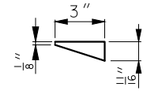

S9 STIFFENER #9: 1 EACH

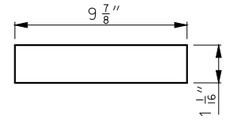

S10 STIFFENER #10: 1 EACH

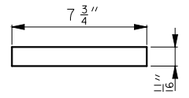

S7 STIFFENER #7: 1 EACH

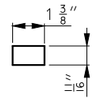

S5 STIFFENER #5: 1 EACH

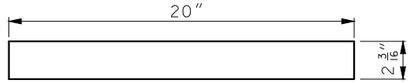

S1 STIFFENER #1: 1 EACH

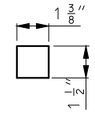

S4 STIFFENER #4: 1 EACH

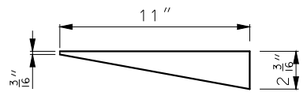

S2 STIFFENER #2: 1 EACH

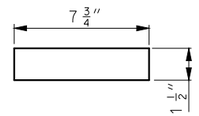

S6 STIFFENER #6: 1 EACH

IF A SEAL IS PRESENT ON THIS SHEET IT HAS BEEN ELECTRONICALLY SEALED AND DATED.

MISSOURI HIGHWAYS AND TRANSPORTATION COMMISSION
105 WEST CAPITOL
JEFFERSON CITY, MO 65102
1-888-ASK-MODOT (1-888-275-6636)

STATE OF MISSOURI
ERIC E. SCHROETER
NUMBER PE-28411
PROFESSIONAL ENGINEER
THIS SHEET HAS BEEN SIGNED, SEALED AND DATED ELECTRONICALLY.

BRIDGE ANCHOR SECTION

SAFETY BARRIER CURB ON BRIDGE (CONNECTOR PLATE DETAIL)

DATE EFFECTIVE: 07/01/2016
DATE PREPARED: 5/13/2016

606.22U

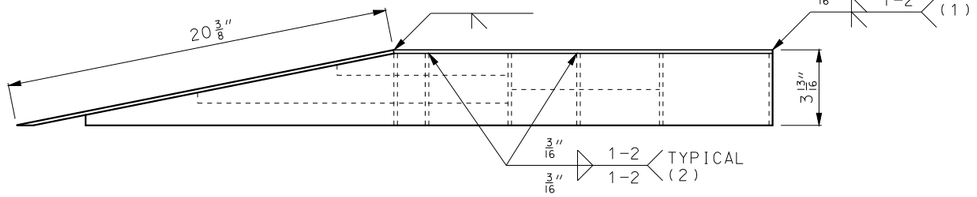

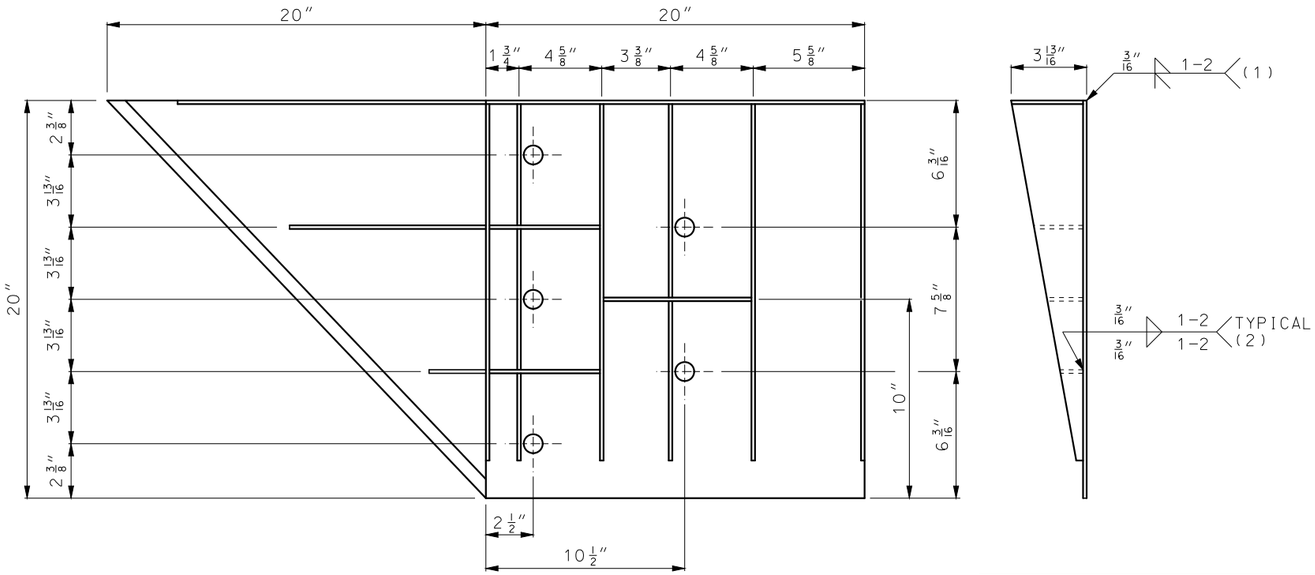

WELDING INSTRUCTION

(1) STIFFENERS LOCATED AT THE OUTSIDE EDGES OF THE COVER PLATES SHALL BE WELDED AS FOLLOWS:
SINGLE BEVEL GROOVE WELD ON EXTERNAL SIDES AND $\frac{3}{16}$" FILLET WELD BY 1" LONG SPACED AT 2" ON INTERNAL SIDES.

(2) STEFFENERS LOCATED ON THE INSIDE OF THE COVER PLATE SHALL BE WELDED AS FOLLOWS:
$\frac{3}{16}$" FILLET WELD BY 1" LONG SPACED AT 2".

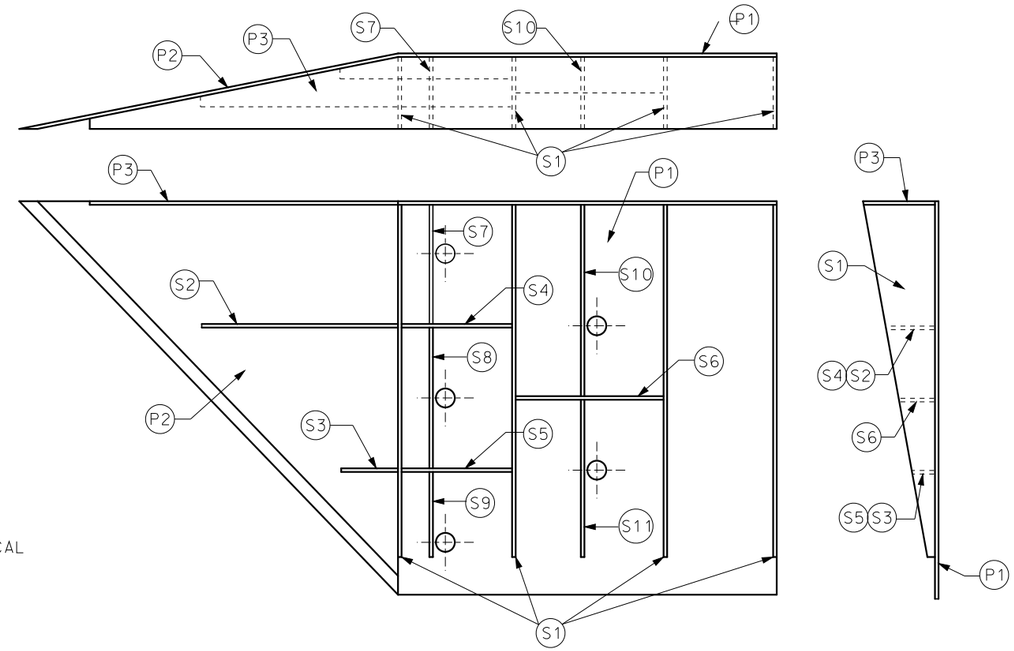

PLATE AND STIFFENER IDENTIFICATION

CONNECTOR PLATE DIMENSION (PER ASSEMBLY)				
PLATE	QUANTITY	SHAPE	SIZE (A x B x C x D)	THICKNESS
P1	1	B A	20" x 20"	$\frac{3}{16}$"
P2	1	B A C	20" x 20" x $28\frac{9}{16}$"	$\frac{3}{16}$"
P3	1	B A C D	39" x $3\frac{5}{8}$" x 20" x $19\frac{5}{16}$"	$\frac{3}{16}$"
S1	4	B A C	$18\frac{7}{16}$" x $3\frac{5}{8}$" x $18\frac{3}{4}$"	$\frac{1}{4}$"
S2	1	B A C D	$10\frac{1}{4}$" x $2\frac{7}{16}$" x $10\frac{3}{8}$" x $\frac{1}{2}$"	$\frac{1}{4}$"
S3	1	B A C D	3" x $1\frac{1}{16}$" x $3\frac{1}{8}$" x $\frac{1}{2}$"	$\frac{1}{4}$"
S4	1	B A	$6\frac{1}{8}$" x $2\frac{7}{16}$"	$\frac{1}{4}$"
S5	1	B A	$6\frac{1}{8}$" x $1\frac{1}{16}$"	$\frac{1}{4}$"
S6	1	B A	$7\frac{3}{4}$" x $1\frac{3}{4}$"	$\frac{1}{4}$"
S7	1	A D B C	$2\frac{9}{16}$" x 6" x $3\frac{5}{8}$" x $5\frac{7}{8}$"	$\frac{1}{4}$"
S8	1	A D B C	$1\frac{5}{32}$" x $7\frac{1}{2}$" x $2\frac{1}{2}$" x $7\frac{3}{8}$"	$\frac{1}{4}$"
S9	1	C A B	$6\frac{1}{16}$" x $6\frac{3}{16}$" x $1\frac{3}{32}$"	$\frac{1}{4}$"
S10	1	A D B C	$1\frac{7}{8}$" x $9\frac{7}{8}$" x $3\frac{5}{8}$" x $9\frac{11}{16}$"	$\frac{1}{4}$"
S11	1	C A B	$8\frac{1}{2}$" x $8\frac{3}{4}$" x $1\frac{13}{16}$"	$\frac{1}{4}$"

GENERAL NOTES:

COVER PLATE PANELS ARE $\frac{3}{16}$" THICK.

ALL STIFFENERS ARE $\frac{1}{4}$" THICK.

CONNECTOR PLATE SHALL BE FABRICATED FROM ASTM GRADE A36 STEEL AND GALVANIZED.

FOR GALVANIZED REQUIREMENTS, SEE SEC 1040 OF THE STANDARD SPECIFICATIONS.

ALL HOLE DIAMETERS SHALL BE 1".

MISSOURI HIGHWAYS AND TRANSPORTATION COMMISSION
105 WEST CAPITOL
JEFFERSON CITY, MO 65102
1-888-ASK-MODOT (1-888-275-6636)

STATE OF MISSOURI
ERIC E. SCHROETER
NUMBER PE-28411
PROFESSIONAL ENGINEER
THIS SHEET HAS BEEN SIGNED, SEALED AND DATED ELECTRONICALLY.

BRIDGE ANCHOR SECTION
SAFETY BARRIER CURB ON BRIDGE (CONNECTOR PLATE DETAIL) SINGLE SLOPE BARRIERS

DATE EFFECTIVE: 07/01/2016
DATE PREPARED: 5/13/2016

606.22U

SHEET NO. 6 OF 6

IF A SEAL IS PRESENT ON THIS SHEET IT HAS BEEN ELECTRONICALLY SEALED AND DATED.

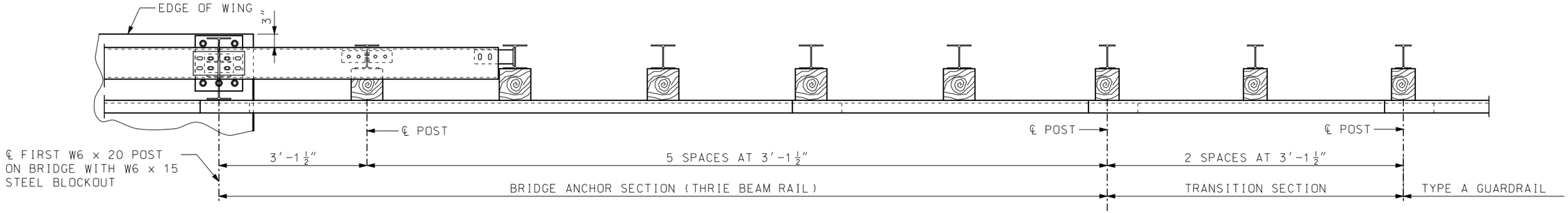

PLAN

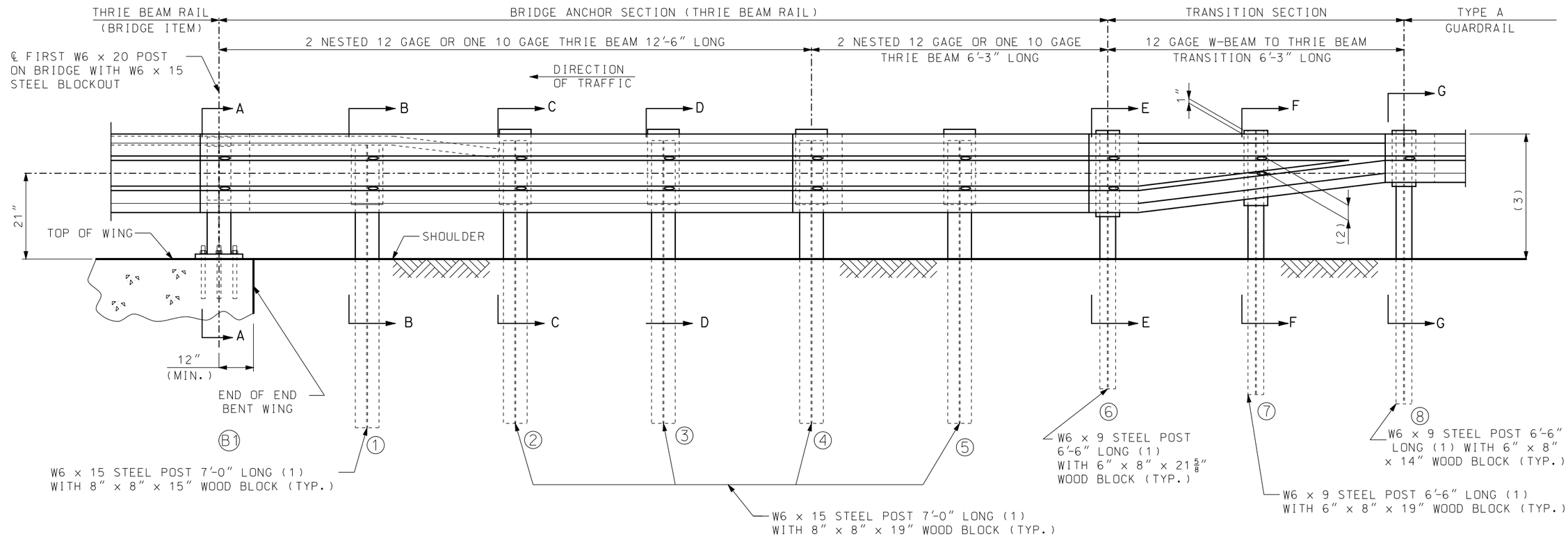

PART SECTION THROUGH SLAB AT END OF WING

NOTES:

FOR GENERAL NOTES, SEE SHEET 2 OF 5.

FOR POST DETAILS AND SECTION VIEWS, SEE SHEET 2 AND 3 OF 5.

(1) AT CONTRACTOR'S OPTION, EQUIVALENT SECTIONS MAY BE FABRICATED FROM MATERIAL MEETING AND IN ACCORDANCE WITH THE REQUIREMENTS OF ASTM A769 GRADE 36 OR 40. THE SECTIONS SHALL BE GALVANIZED AFTER FABRICATION IN ACCORDANCE WITH THE REQUIREMENTS OF AASHTO 111.

(2) VERIFY BY RAIL TRANSITION PRODUCER.

(3) TRANSITION FROM 31" TO 29" HEIGHT OVER NEXT TWO UPSTREAM 12′-6" W-BEAM RAILS.

MISSOURI HIGHWAYS AND TRANSPORTATION COMMISSION
105 WEST CAPITOL
JEFFERSON CITY, MO 65102
1-888-ASK-MODOT (1-888-275-6636)

STATE OF MISSOURI
ERIC E. SCHROETER
NUMBER PE-28411
PROFESSIONAL ENGINEER
THIS SHEET HAS BEEN SIGNED, SEALED AND DATED ELECTRONICALLY.

BRIDGE ANCHOR SECTION
(THRIE BEAM RAIL ON BRIDGE)

DATE EFFECTIVE: 7/01/016
DATE PREPARED: 5/13/2016

606.23J

SHEET NO. 1 OF 5

IF A SEAL IS PRESENT ON THIS SHEET IT HAS BEEN ELECTRONICALLY SEALED AND DATED.

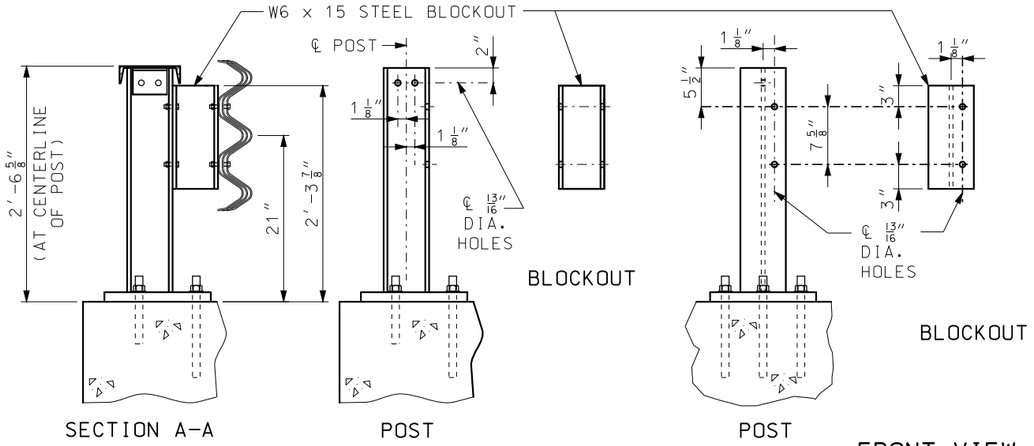

STEEL POST AND STEEL BLOCKOUT (B1)

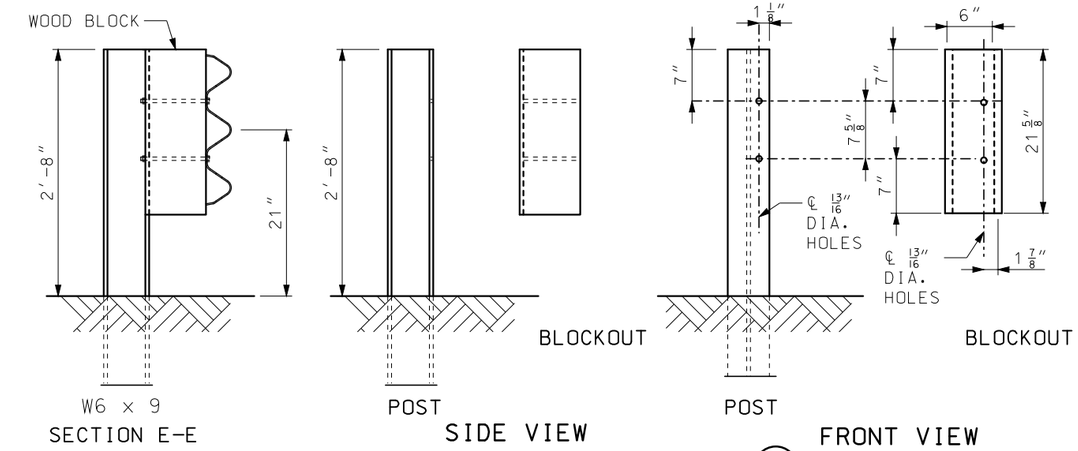

STEEL POST AND WOOD BLOCKOUT (6)

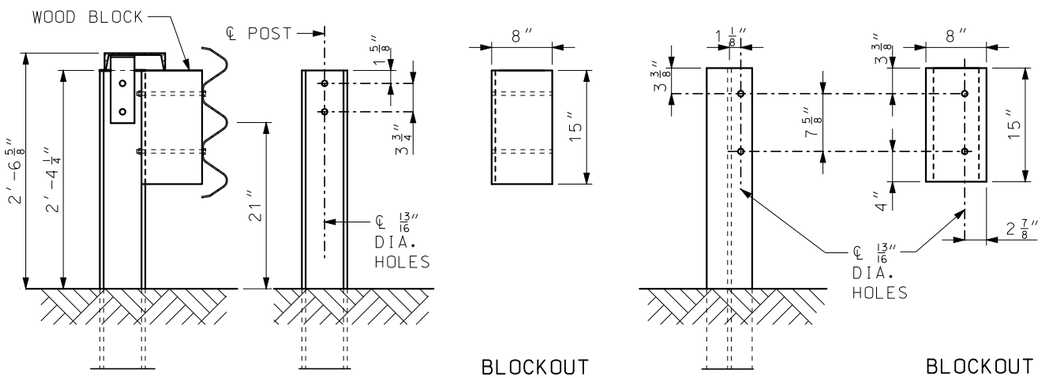

STEEL POST AND WOOD BLOCKOUT (1)

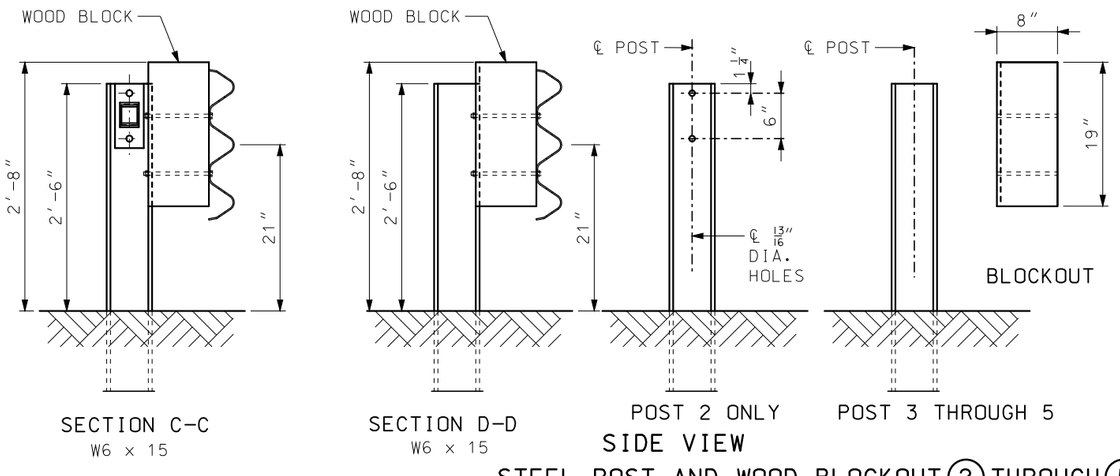

STEEL POST AND WOOD BLOCKOUT (2) THROUGH (5)

(2) VERIFY BY RAIL TRANSITION PRODUCER.

GENERAL NOTES:

DESIGN BASED UPON NCHRP REPORT 350 TEST LEVEL 3 (TL-3).

THE THRIE BEAM RAIL FOR THE BRIDGE ANCHOR SECTION SHALL BE 12 GAGE OR 10 GAGE AT THE CONTRACTOR'S OPTION, AND THE TRANSITION SECTION SHALL BE 12 GAGE.

FABRICATED STRUCTURAL STEEL SHALL BE ASTM A709 GRADE 36.

FOR PROTECTIVE COATING AND MATERIAL REQUIREMENTS, SEE SEC 1040 OF THE STANDARD SPECIFICATIONS.

RAIL POSTS SHALL BE SET PERPENDICULAR TO THE ROADWAY PROFILE GRADE AND VERTICALLY IN CROSS SECTION.

WASHERS SHALL BE USED AT ALL POST BOLTS.

USE 5/8″ BUTTON-HEAD, OVAL SHOULDER BOLTS WITH HEX NUTS (THICKNESS OF HEX NUTS = 3/4″ MIN.) AT ALL SLOTS.

ALL LAP SPLICES SHALL BE MADE IN THE DIRECTION OF TRAFFIC.

THE COST OF FURNISHING, FABRICATING AND INSTALLING TRANSITION SECTION, COMPLETE-IN-PLACE, SHALL BE PAID FOR AT THE CONTRACT UNIT PRICE PER EACH.

THE COST OF FURNISHING, FABRICATING AND INSTALLING BRIDGE ANCHOR SECTION (THRIE BEAM), COMPLETE-IN-PLACE, SHALL BE PAID FOR AT THE CONTRACT UNIT PRICE PER EACH.

FOR DETAILS NOT SHOWN, SEE BRIDGE THRIE BEAM RAIL SHEET.

IF A SEAL IS PRESENT ON THIS SHEET IT HAS BEEN ELECTRONICALLY SEALED AND DATED.

MISSOURI HIGHWAYS AND TRANSPORTATION COMMISSION
105 WEST CAPITOL
JEFFERSON CITY, MO 65102
1-888-ASK-MODOT (1-888-275-6636)

STATE OF MISSOURI
ERIC E. SCHROETER
NUMBER PE-28411
PROFESSIONAL ENGINEER
THIS SHEET HAS BEEN SIGNED, SEALED AND DATED ELECTRONICALLY.

BRIDGE ANCHOR SECTION
(THRIE BEAM RAIL ON BRIDGE)

DATE EFFECTIVE: 07/01/2016
DATE PREPARED: 5/13/2016

606.23J

SHEET NO. 2 OF 5

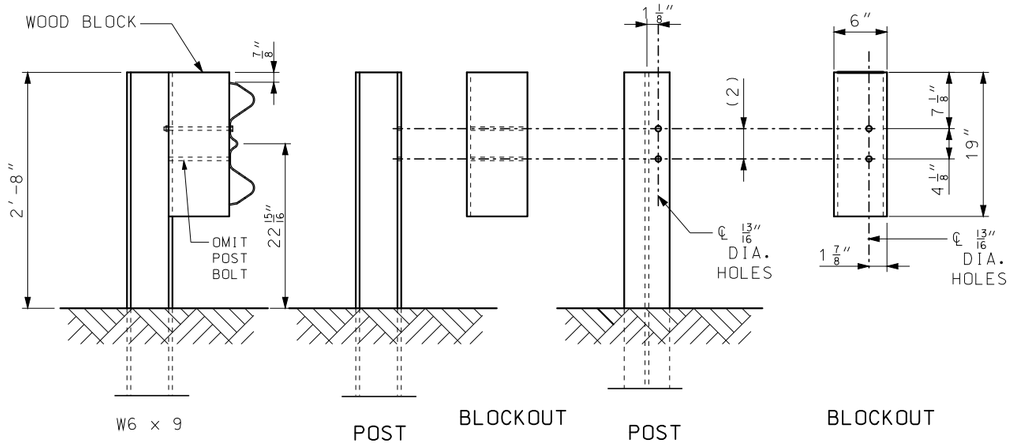

SECTION F–F SIDE VIEW FRONT VIEW

STEEL POST AND WOOD BLOCKOUT (7)

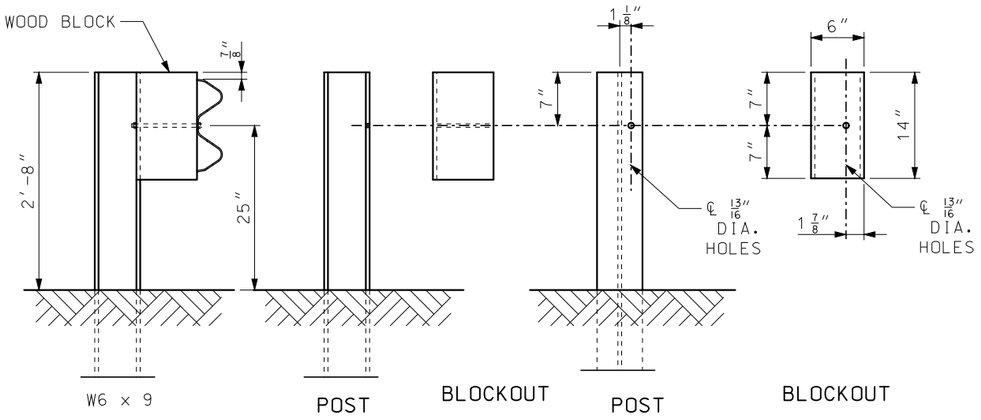

SECTION G–G SIDE VIEW FRONT VIEW

STEEL POST AND WOOD BLOCKOUT (8)

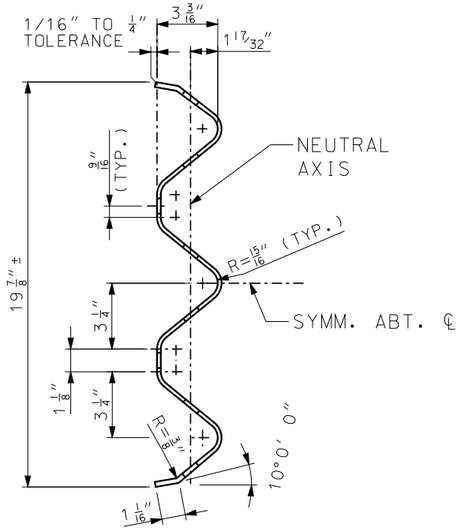

SECTION H–H

THROUGH THRIE BEAM RAIL

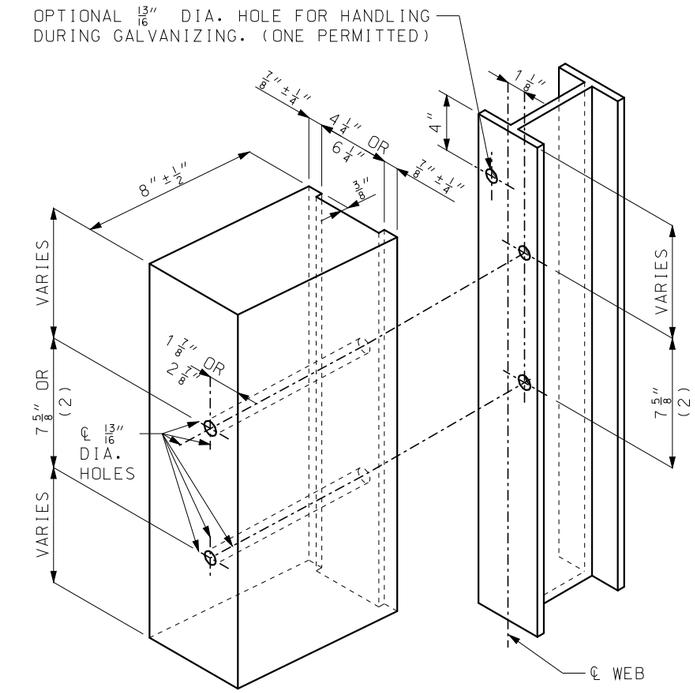

POST (7) – (2) VERIFY BY RAIL TRANSITION PRODUCER (SEE FRONT SHEET)
POST (8) – ONLY 1 HOLE REQUIRED
ALL HOLES 13/16" DIAMETER EXCEPT AS NOTED

HOLE PUNCHING DETAIL
FOR STEEL POST & WOOD BLOCKS (6" AND 8")

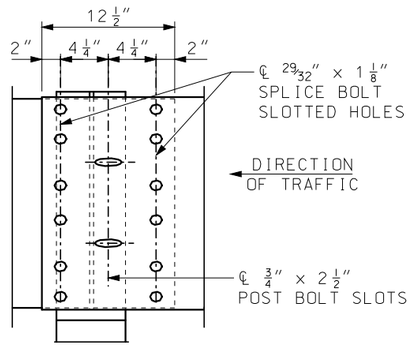

THRIE BEAM RAIL SPLICE AT POST

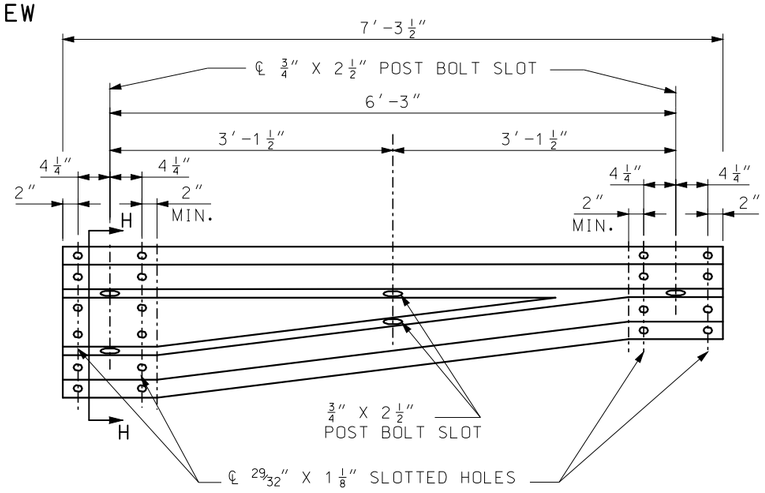

ASYMMETRICAL TRANSITION SECTION

IF A SEAL IS PRESENT ON THIS SHEET IT HAS BEEN ELECTRONICALLY SEALED AND DATED.

MISSOURI HIGHWAYS AND TRANSPORTATION COMMISSION
105 WEST CAPITOL
JEFFERSON CITY, MO 65102
1-888-ASK-MODOT (1-888-275-6636)

STATE OF MISSOURI
ERIC E. SCHROETER
NUMBER PE-28411
PROFESSIONAL ENGINEER
THIS SHEET HAS BEEN SIGNED, SEALED AND DATED ELECTRONICALLY.

BRIDGE ANCHOR SECTION
(THRIE BEAM RAIL ON BRIDGE)

DATE EFFECTIVE: 07/01/2016
DATE PREPARED: 5/13/2016

606.23J

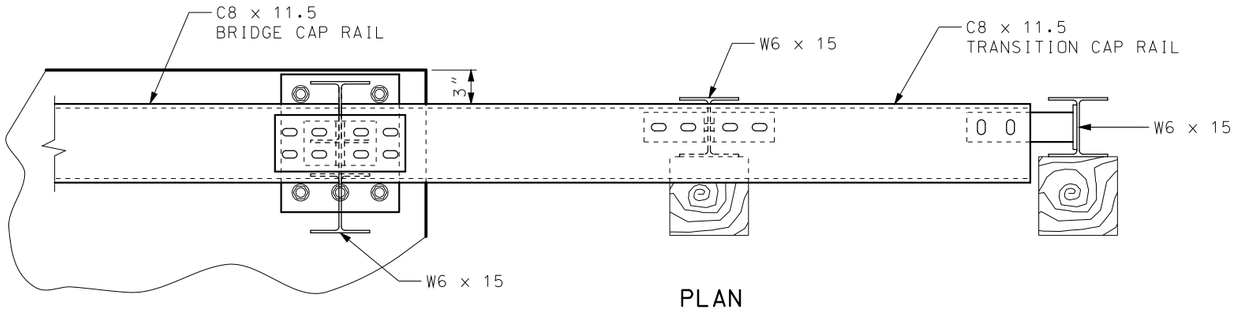

PLAN

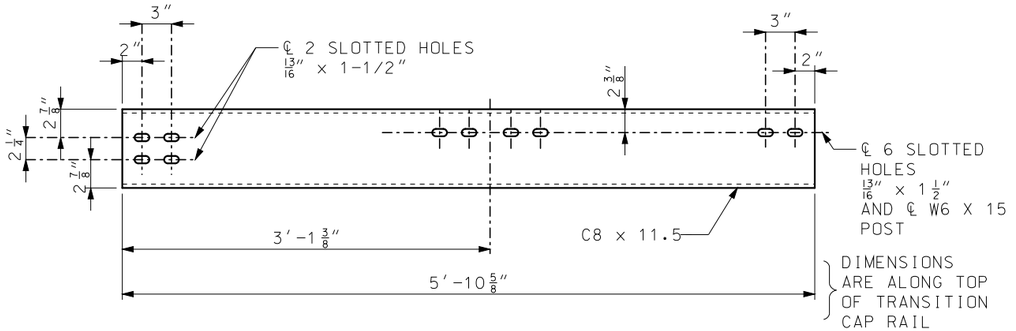

TOP VIEW (ALTERNATE 1)

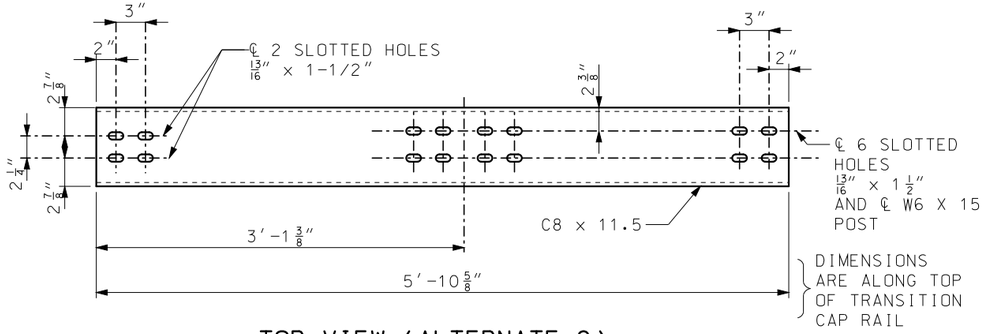

TOP VIEW (ALTERNATE 2)

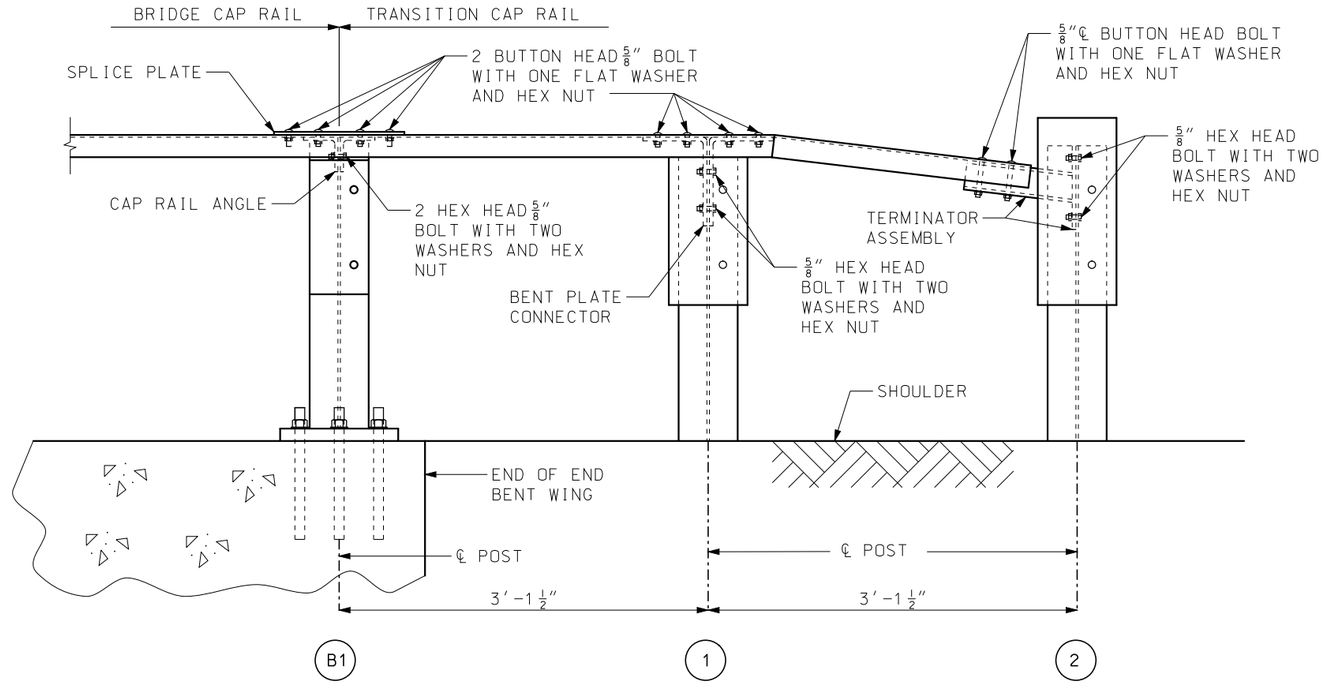

ELEVATION
(THRIE BEAM RAIL NOT SHOWN)

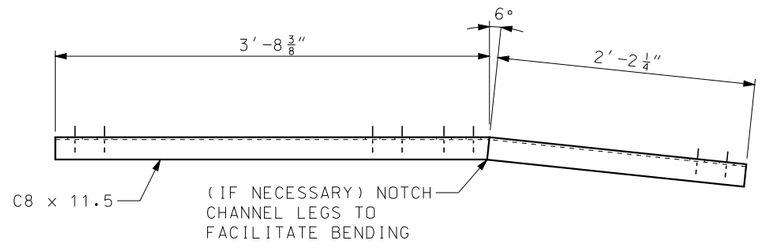

ELEVATION
TRANSITION CAP RAIL

GENERAL NOTES:

IF A SEAL IS PRESENT ON THIS SHEET IT HAS BEEN ELECTRONICALLY SEALED AND DATED.

MISSOURI HIGHWAYS AND TRANSPORTATION COMMISSION
105 WEST CAPITOL
JEFFERSON CITY, MO 65102
1-888-ASK-MODOT (1-888-275-6636)

STATE OF MISSOURI
ERIC E. SCHROETER
NUMBER PE-28411
PROFESSIONAL ENGINEER
THIS SHEET HAS BEEN SIGNED, SEALED AND DATED ELECTRONICALLY.

BRIDGE ANCHOR SECTION
(THRIE BEAM RAIL ON BRIDGE)

DATE EFFECTIVE: 07/01/2016
DATE PREPARED: 5/13/2016

606.23J

SHEET NO.
4 OF 5

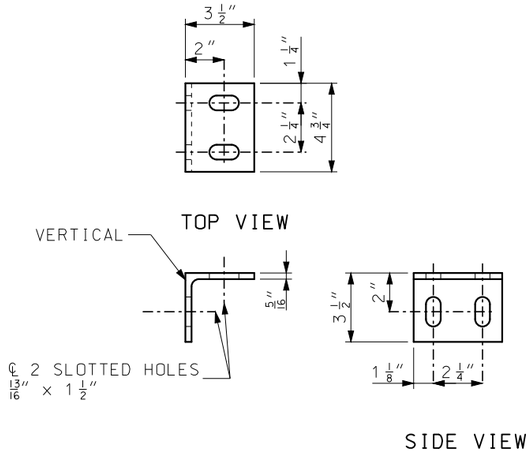

CAP RAIL ANGLE

∠ 3 1/2" × 3 1/2" × 5/16"

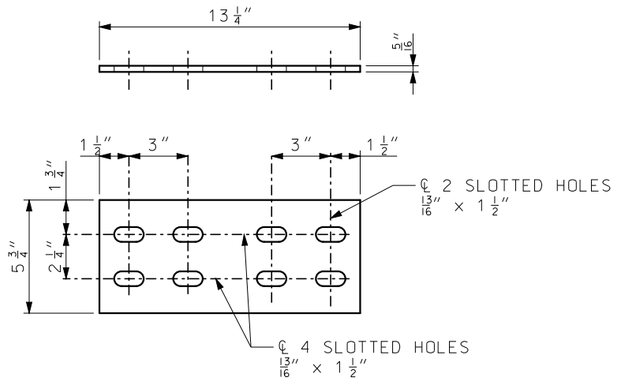

SPLICE PLATE

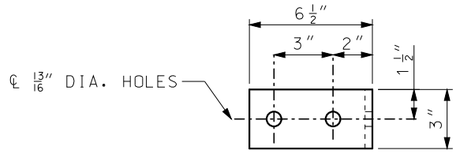

TOP VIEW

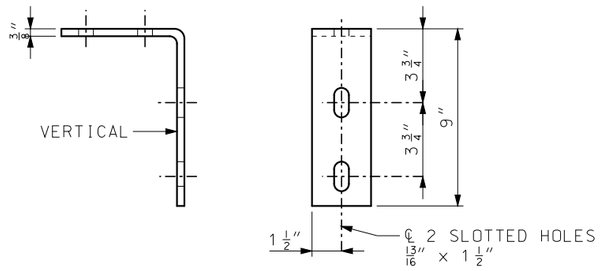

FRONT VIEW

SIDE VIEW

BENT PLATE CONNECTOR

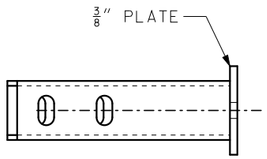

TOP VIEW

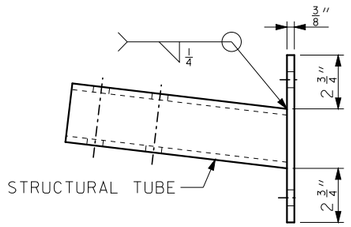

FRONT VIEW

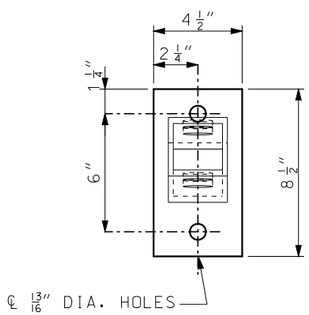

SIDE VIEW

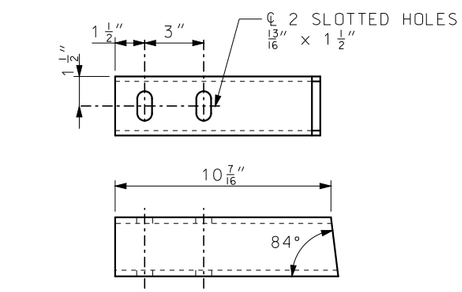

3/8" PLATE

STRUCTURAL TUBE

TS 3" × 3" × 5/16"

TERMINATOR ASSEMBLY

IF A SEAL IS PRESENT ON THIS SHEET IT HAS BEEN ELECTRONICALLY SEALED AND DATED.

MISSOURI HIGHWAYS AND TRANSPORTATION COMMISSION
105 WEST CAPITOL
JEFFERSON CITY, MO 65102
1-888-ASK-MODOT (1-888-275-6636)

STATE OF MISSOURI
ERIC E. SCHROETER
NUMBER PE-28411
PROFESSIONAL ENGINEER
THIS SHEET HAS BEEN SIGNED, SEALED AND DATED ELECTRONICALLY.

BRIDGE ANCHOR SECTION

(THRIE BEAM RAIL ON BRIDGE)

DATE EFFECTIVE: 07/01/2016
DATE PREPARED: 5/13/2016

606.23J

SHEET NO. 5 OF 5

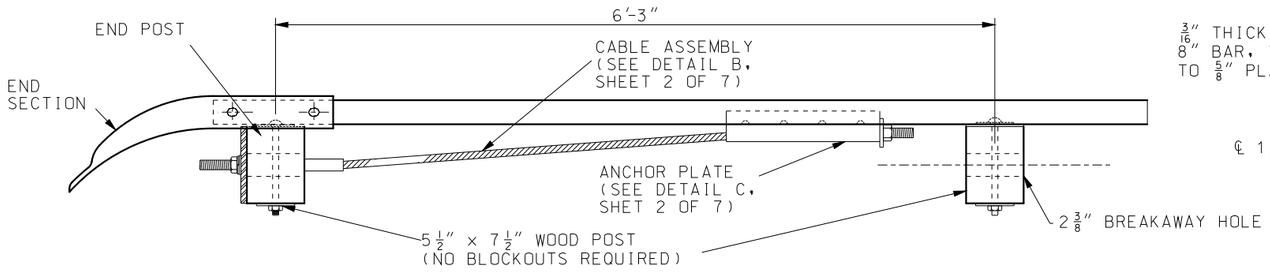

NOTE: FOR DETAILS OF END SECTION, SEE STD PLANS 606.00.

PLAN

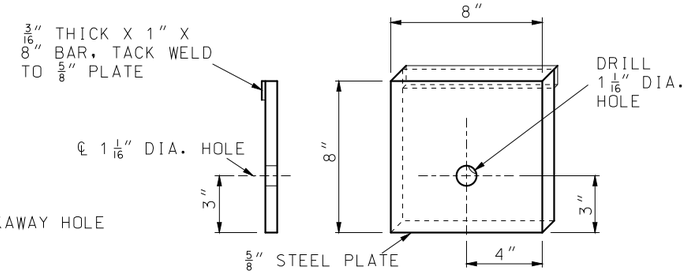

DETAIL OF
STEEL BEARING PLATE

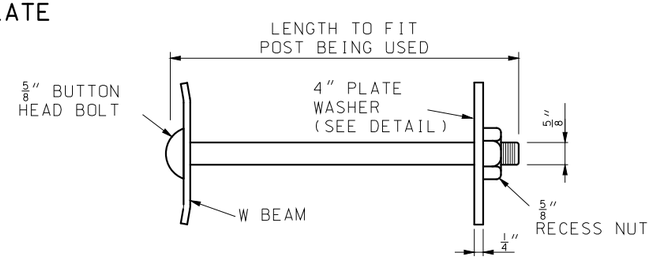

POST BOLT ASSEMBLY

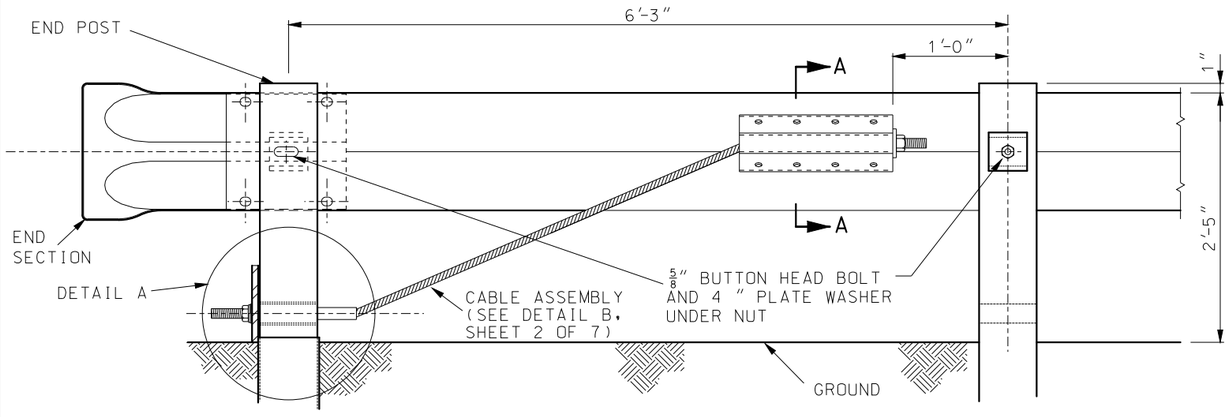

POST 1 ELEVATION (BACK SIDE) POST 2

END ANCHOR DETAILS

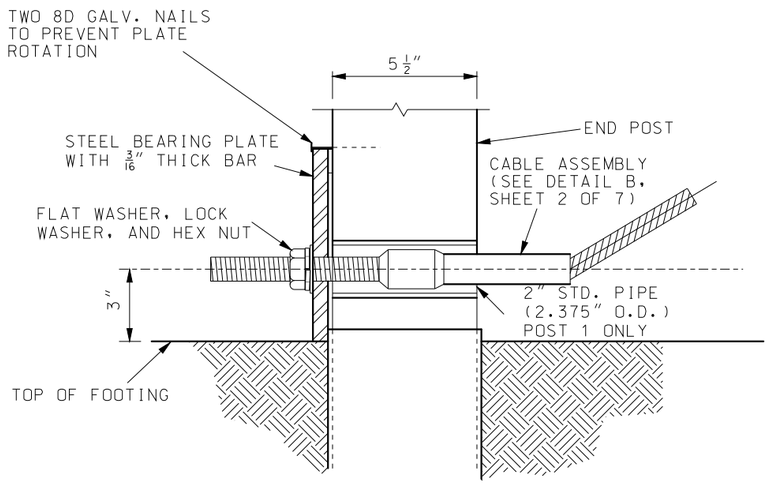

DETAIL A
(END POST DETAIL)

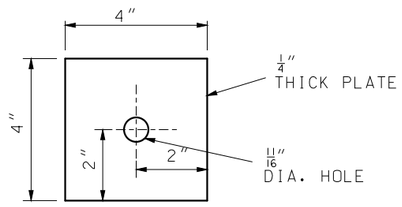

4" PLATE WASHER

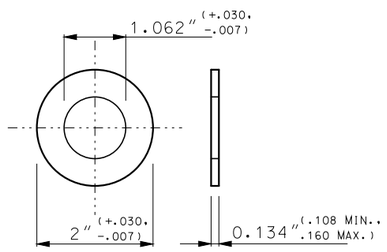

TYPE A WASHER

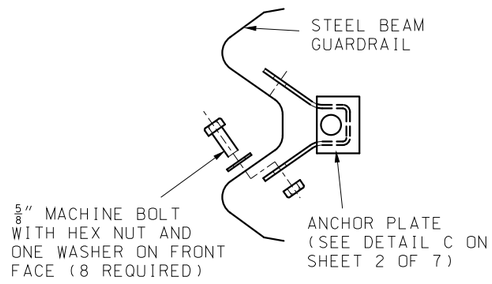

SECTION A-A

GENERAL NOTES:

END ANCHOR DETAILS SHOWN SHALL BE USED ONLY ON DOWN STREAM ENDS OF GUARDRAIL WHEN AN END ANCHOR IS REQUIRED.

THE DETAILS SHOWN ARE FOR AN END ANCHORAGE SYSTEM FOR GUARDRAIL. GUARDRAIL AND POSTS ARE PAID FOR SEPARATELY.

CABLE ASSEMBLY AND ANCHOR PLATE SHALL BE SUBJECT TO APPROVAL BY THE ENGINEER AND SHALL HAVE A MINIMUM BREAKING STRENGTH OF 20 TONS.

ALL FITTINGS AND HARDWARE REQUIRED SHALL BE GALVANIZED AFTER FABRICATION, SEE SECTION 1040 STANDARD SPECIFICATION.

WOOD POSTS 1 AND 2 SHALL BE 5 1/2" X 7 1/2".

SEE SHEET 3 FOR WOOD POST DETAILS.

MISSOURI HIGHWAYS AND TRANSPORTATION COMMISSION
105 WEST CAPITOL
JEFFERSON CITY, MO 65102
1-888-ASK-MODOT (1-888-275-6636)

STATE OF MISSOURI
ERIC E. SCHROETER
NUMBER PE-28411
PROFESSIONAL ENGINEER
THIS SHEET HAS BEEN SIGNED, SEALED AND DATED ELECTRONICALLY.

GUARDRAIL

TERMINAL ANCHOR ENDS

DATE EFFECTIVE: 04/01/2017
DATE PREPARED: 1/30/2017

606.30K

SHEET NO. 1 OF 7

IF A SEAL IS PRESENT ON THIS SHEET IT HAS BEEN ELECTRONICALLY SEALED AND DATED.

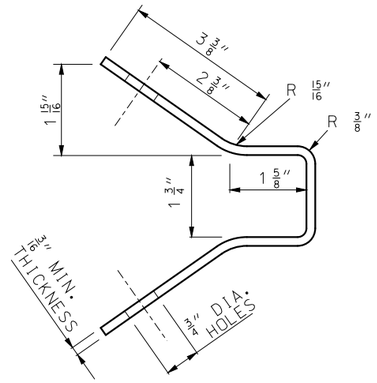

FABRICATION DETAIL

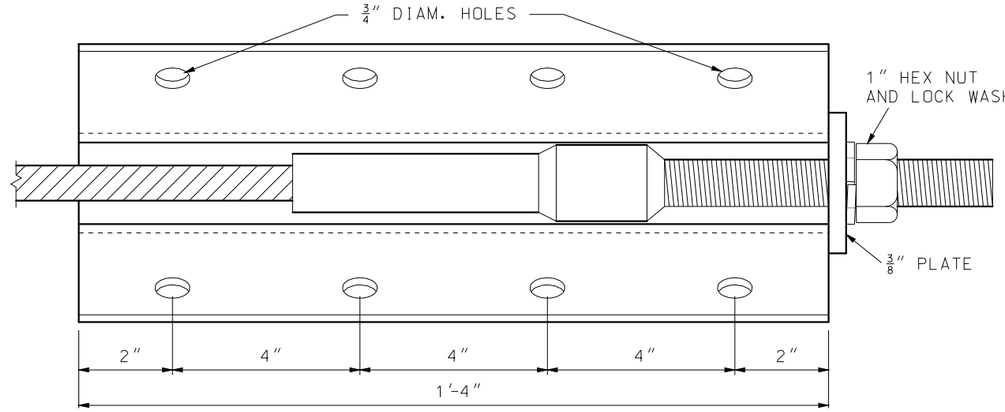

DETAIL C
ASSEMBLED VIEW
(ANCHOR PLATE)

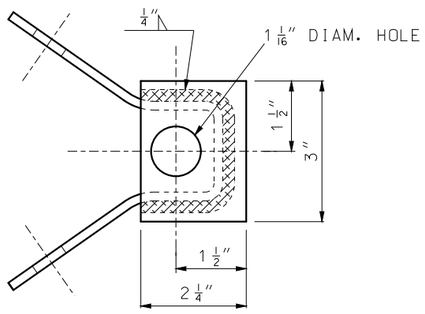

END VIEW

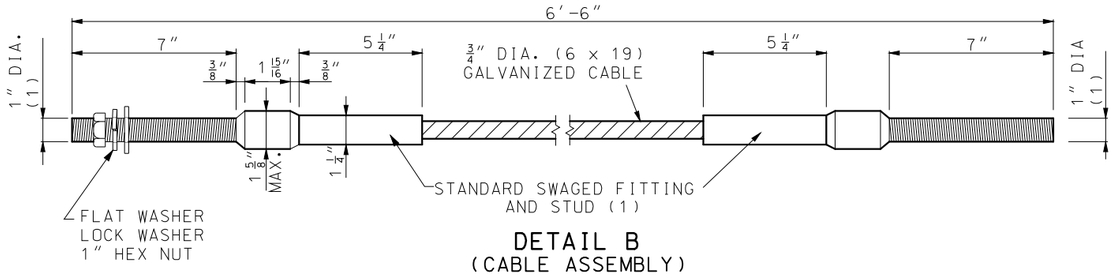

DETAIL B
(CABLE ASSEMBLY)

(1) STUD, THREADED ENTIRE LENGTH.
(2) 6'-3" SPACING FOR TYPE A OR B GUARDRAIL; 3'-1 1/2" SPACING FOR TYPE E GUARDRAIL.
(3) 27" MINIMUM BUT LESS THAN 4' FOR TYPE E GUARDRAIL; 4' MINIMUM FOR TYPE A GUARDRAIL.

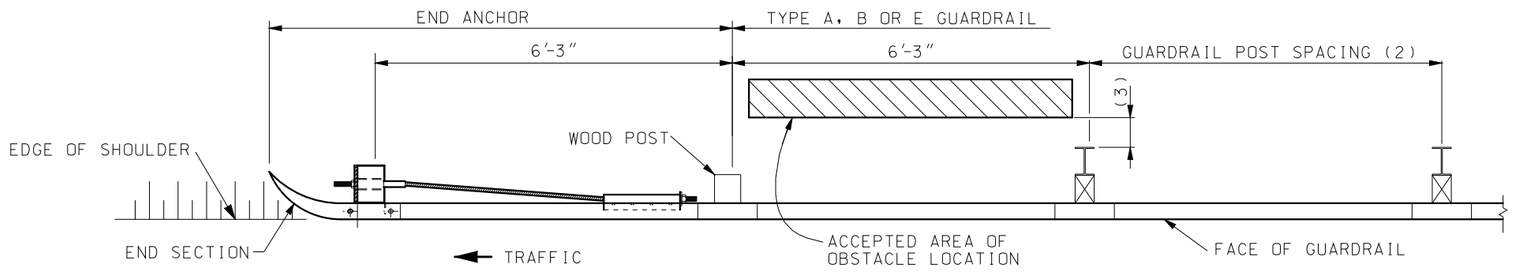

PLAN

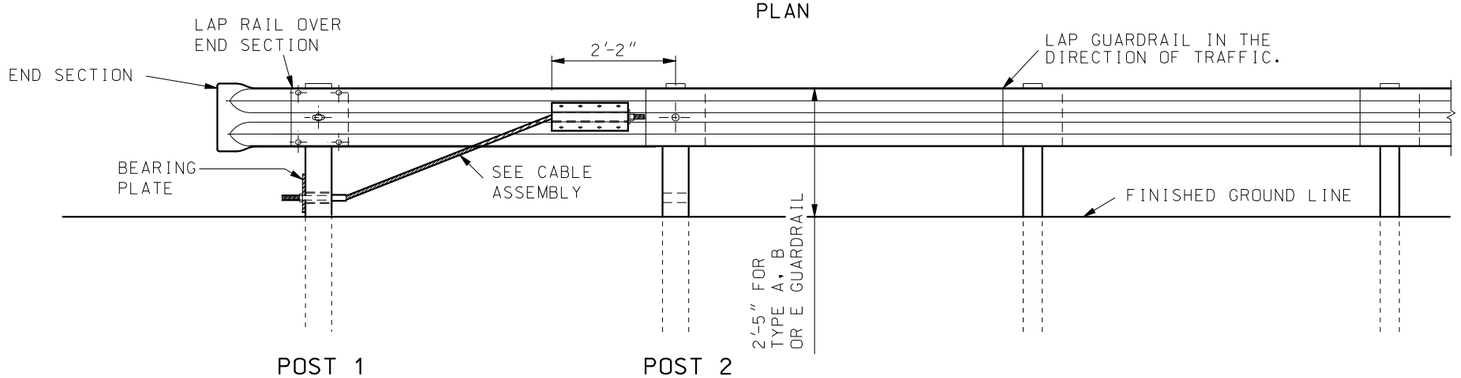

ELEVATION
END ANCHOR

IF A SEAL IS PRESENT ON THIS SHEET IT HAS BEEN ELECTRONICALLY SEALED AND DATED.

MISSOURI HIGHWAYS AND TRANSPORTATION COMMISSION
105 WEST CAPITOL
JEFFERSON CITY, MO 65102
1-888-ASK-MODOT (1-888-275-6636)

STATE OF MISSOURI
ERIC E. SCHROETER
NUMBER PE-28411
PROFESSIONAL ENGINEER
THIS SHEET HAS BEEN SIGNED, SEALED AND DATED ELECTRONICALLY.

GUARDRAIL

TERMINAL ANCHOR ENDS

DATE EFFECTIVE: 04/01/2017
DATE PREPARED: 1/30/2017

606.30K

SHEET NO. 2 OF 7

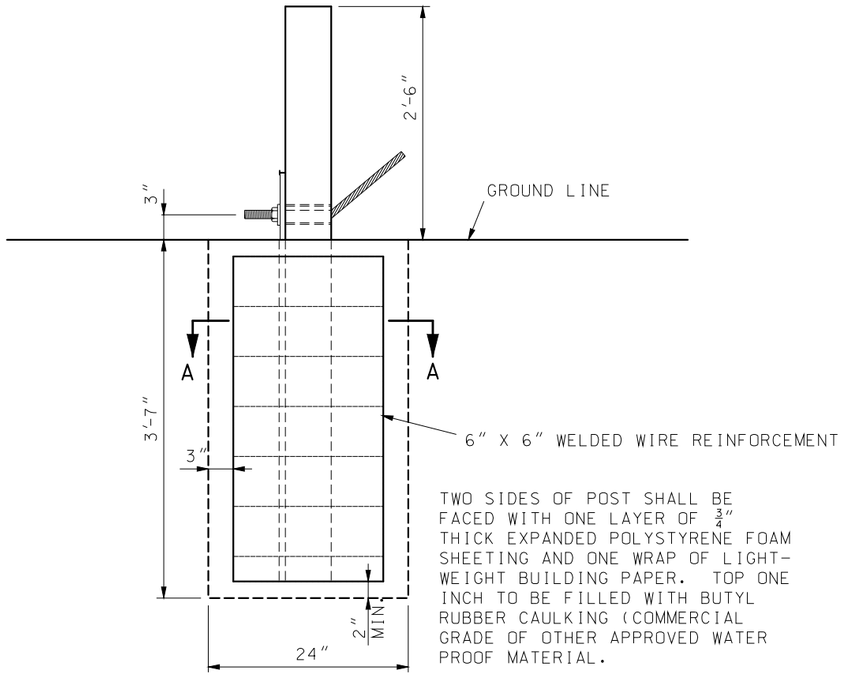

TWO SIDES OF POST SHALL BE FACED WITH ONE LAYER OF $\frac{3}{4}$" THICK EXPANDED POLYSTYRENE FOAM SHEETING AND ONE WRAP OF LIGHT-WEIGHT BUILDING PAPER. TOP ONE INCH TO BE FILLED WITH BUTYL RUBBER CAULKING (COMMERCIAL GRADE OF OTHER APPROVED WATER PROOF MATERIAL.

POST 1

CONCRETE FOUNDATION FOR END ANCHORS

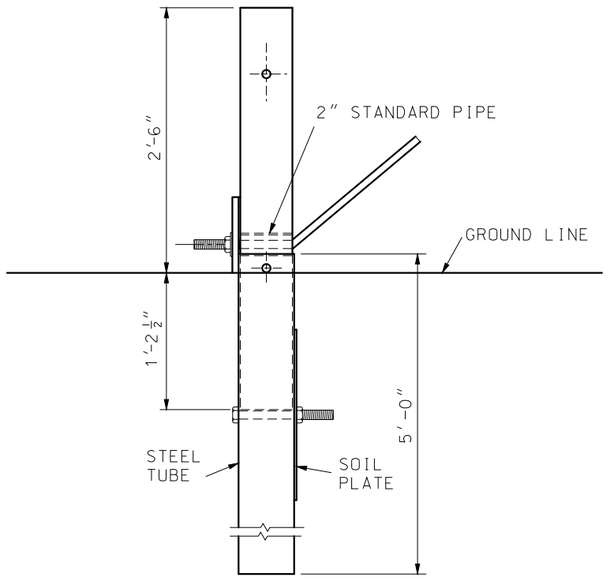

POST 1

STEEL TUBE FOUNDATION FOR END ANCHORS

BOLTS AND NUTS SHALL BE GALVANIZED IN ACCORDANCE WITH THE REQUIREMENTS OF AASHTO M232, OR THEY MAY BE MECHANICALLY GALVANIZED IN ACCORDANCE WITH AASHTO M232 CLASS C.

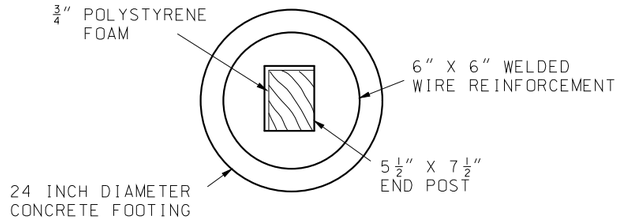

SECTION A–A
EXPANDED POLYSTYRENE FOAM INSTALLATION DETAIL

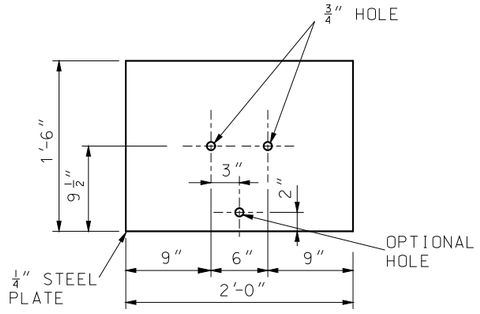

SOIL PLATE

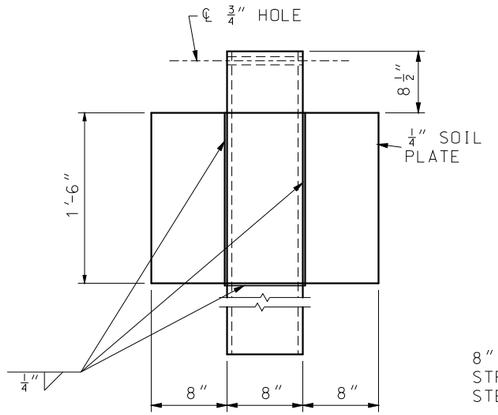

SHOP WELDED
SOIL PLATE CONNECTION

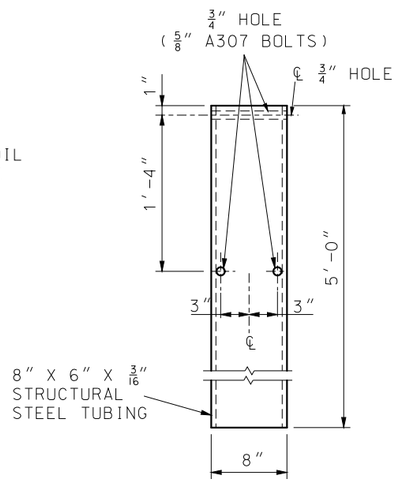

STEEL TUBE

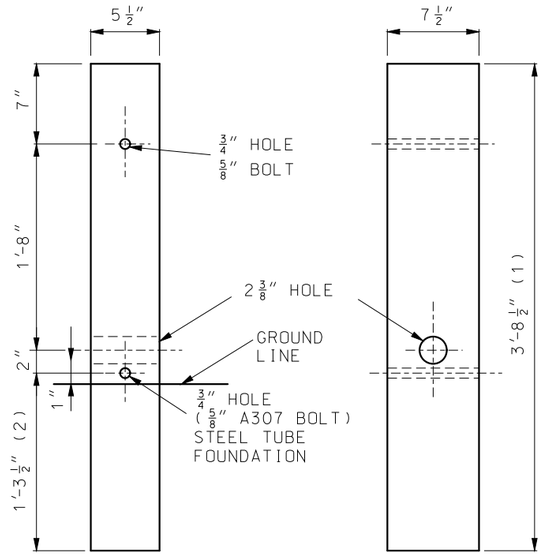

FRONT VIEW SIDE VIEW

WOOD BREAKAWAY POST
SEE SECTION 1050

(1) 5'-11 $\frac{1}{2}$" FOR CONCRETE FOUNDATION ALTERNATE.

(2) 3'-8 $\frac{1}{2}$" FOR CONCRETE FOUNDATION ALTERNATE.

GENERAL NOTES:

THE CONTRACTOR HAS THE OPTION TO INSTALL WOOD POST 1 AND 2 IN STEEL TUBE OR CONCRETE FOUNDATION.

TRIMMING OF WOOD POST MAY BE NECESSARY FOR STEEL TUBE FOUNDATION.

STEEL TUBE FOUNDATIONS SHALL BE DRILLED AND BACK-FILLED WITH A SUITABLE MATERIAL WHEN THE SOIL PLATE IS BOLTED, AS SHOWN, TO THE STEEL TUBE. STEEL TUBE FOUNDATION MAY BE DRIVEN WHEN THE SOIL PLATE IS WELDED, AS SHOWN, TO THE STEEL TUBE.

MISSOURI HIGHWAYS AND TRANSPORTATION COMMISSION
105 WEST CAPITOL
JEFFERSON CITY, MO 65102
1-888-ASK-MODOT (1-888-275-6636)

STATE OF MISSOURI
ERIC E. SCHROETER
NUMBER PE-28411
PROFESSIONAL ENGINEER
THIS SHEET HAS BEEN SIGNED, SEALED AND DATED ELECTRONICALLY.

GUARDRAIL
TERMINAL ANCHOR ENDS

DATE EFFECTIVE: 04/01/2017
DATE PREPARED: 1/30/2017

606.30K

SHEET NO. 3 OF 7

IF A SEAL IS PRESENT ON THIS SHEET IT HAS BEEN ELECTRONICALLY SEALED AND DATED.

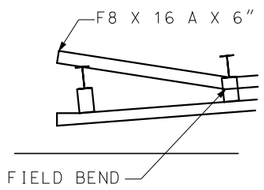

DETAIL A

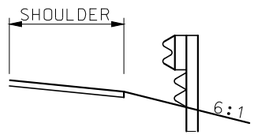

SECTION A-A

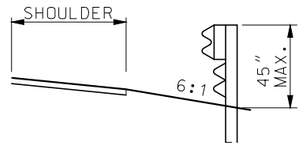

SECTION B-B
(WITH RUBRAIL)

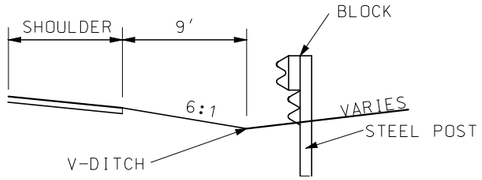

SECTION C-C
(WITH RUBRAIL)

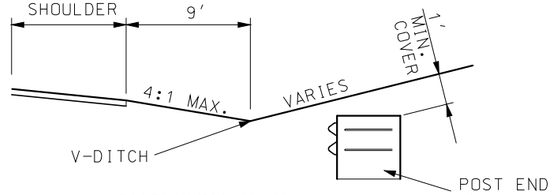

SECTION D-D

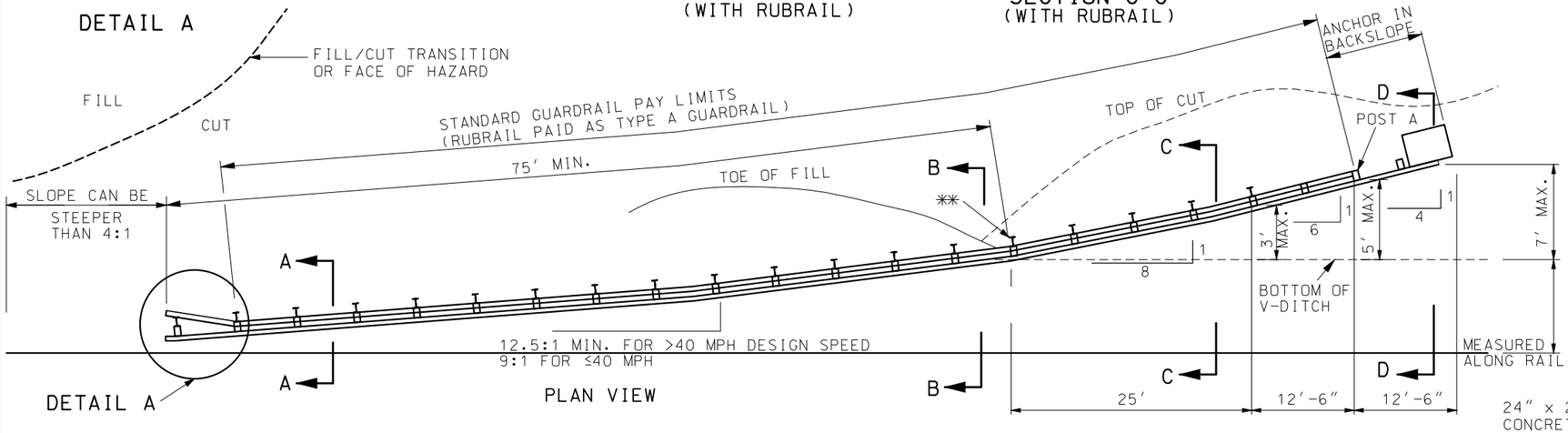

DETAIL A

PLAN VIEW

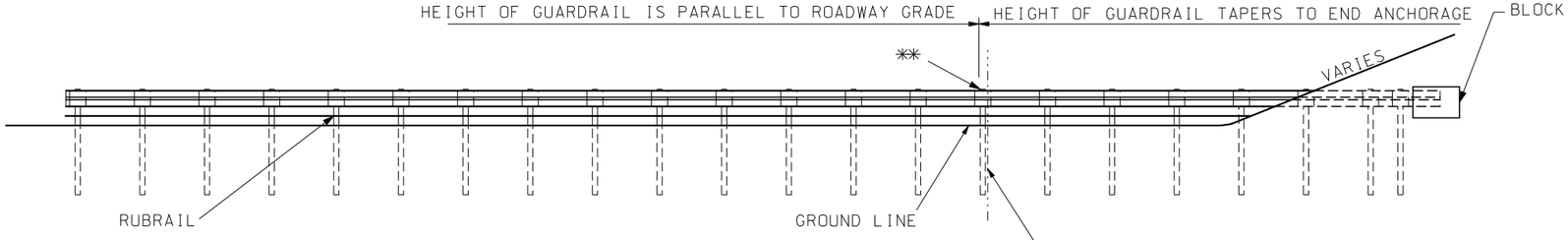

ELEVATION

ANCHORED IN BACKSLOPE GUARDRAIL

** THE POST BEHIND THE DITCHLINE MAY BE SHORTENED TO PROVIDE 48" MIN. EMBEDMENT.

COST OF SHAPING ROCK FACE FOR PLACING OF TERMINAL CONNECTOR, DRILLING HOLES, FURNISHING AND PLACING BOLTS, WASHERS, CAULKING, ANCHORS AND END SHOE TO BE INCLUDED IN THE PRICE OF GUARDRAIL ANCHOR, ROCK FACE.

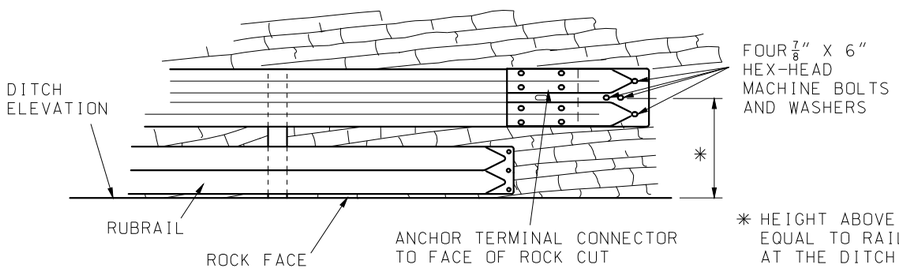

* HEIGHT ABOVE DITCH IS EQUAL TO RAIL ELEVATION AT THE DITCH CROSSING.

ROCK FACE GUARDRAIL ANCHOR

24" x 24" x 36" CONCRETE ANCHOR BLOCK

GENERAL NOTES:

FOR END ANCHOR DETAILS, SEE SHEET 1-3 OF 7.

EIGHT FOOT POST IS REQUIRED WITH RUBRAIL.

RUBRAIL BEGINS WHEN THE DISTANCE BETWEEN THE GUARD-RAIL AND THE GROUND IS 18" AND INCREASING.

END ANCHOR POSTS 1 AND 2 SHALL HAVE FOUNDATION TYPE AS SHOWN ON SHEET 3 OF 7.

THE CONTRACT UNIT PRICE FOR EMBEDDED GUARDRAIL ANCHOR SHALL INCLUDE THE CONCRETE ANCHOR. EXCAVATION AND BACKFILLING, OR TERMINAL CONNECTOR, AND ALL INCIDENTIAL HARDWARE AND WORK NECESSARY TO COMPLETE THE INSTALLATION.

THE GUARDRAIL SHALL EXTEND 50'± BEYOND THE DITCH LINE AND TERMINATE A MINIMUM OF 12 INCHES BELOW GROUND ELEVATION OF THE BACKSLOPE.

BLOCKOUTS WILL NOT BE REQUIRED FOR ANY POST WHICH WILL BE COMPLETELY BELOW GROUND. THE ALIGNMENT OF SUCH POSTS SHALL BE APPROVED BY THE ENGINEER.

SEE OTHER DRAWINGS AND STANDARD SPECIFICATIONS FOR MATERIAL AND CONSTRUCTION REQUIREMENTS NOT SHOWN.

IF A SEAL IS PRESENT ON THIS SHEET IT HAS BEEN ELECTRONICALLY SEALED AND DATED.

MISSOURI HIGHWAYS AND TRANSPORTATION COMMISSION
105 WEST CAPITOL
JEFFERSON CITY, MO 65102
1-888-ASK-MODOT (1-888-275-6636)

STATE OF MISSOURI
ERIC E. SCHROETER
NUMBER PE-28411
PROFESSIONAL ENGINEER
THIS SHEET HAS BEEN SIGNED, SEALED AND DATED ELECTRONICALLY.

GUARDRAIL
TERMINAL ENDS EMBEDDED AND ROCK FACE (V-DITCH STEEPER THAN 10:1, 4:1 MAX. FORESLOPE)

DATE EFFECTIVE: 04/01/2017
DATE PREPARED: 1/30/2017

606.30K

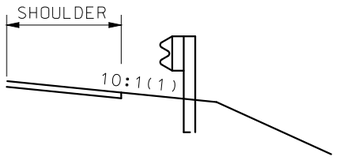

SECTION A-A

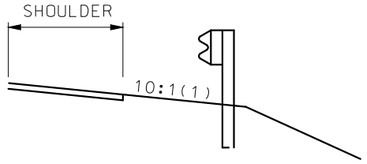

SECTION B-B

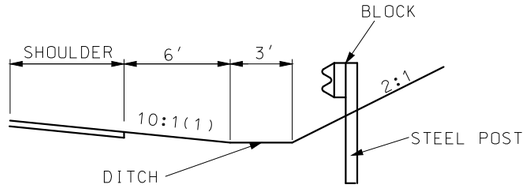

SECTION C-C

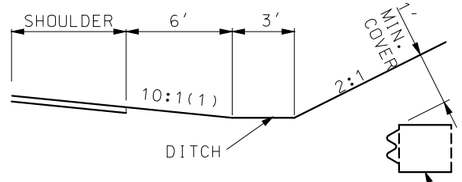

SECTION D-D

CONCRETE BLOCK ANCHOR
OR EMBEDDED STEEL POST

(1) MAX. CROSS SLOPE SHALL NOT EXCEED 6:1. RUBRAIL IS REQUIREDWHEN CROSS SLOPE EXCEEDS 10:1 OR WHEN THE DISTANCE BETWEENTHE GUARDRAIL AND THE GROUND IS 18" AND INCREASING.

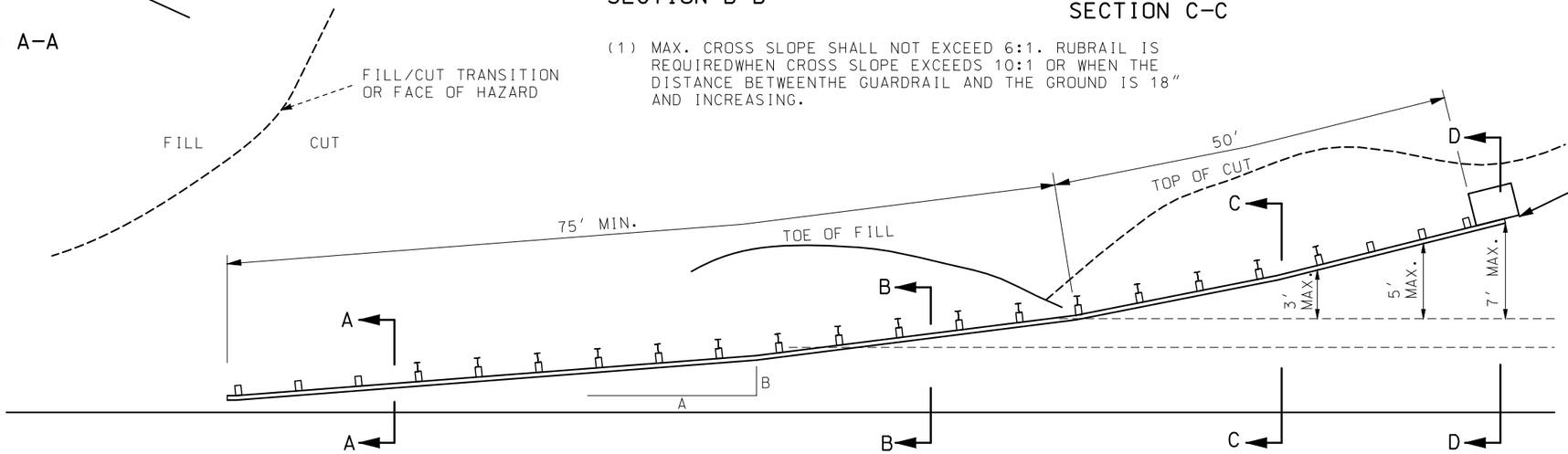

10:1 CROSS SLOPE	
DESIGN SPEED mph	A:B
70	15:1
60	13:1
55	12:1
50	11:1
45	10:1
40	9:1
30 OR LESS	7:1

STEEPER THAN 10:1 CROSS SLOPE (1)	
DESIGN SPEED mph	A:B
45-70	12.5:1
40	9:1
30 OR LESS	7:1

PLAN VIEW

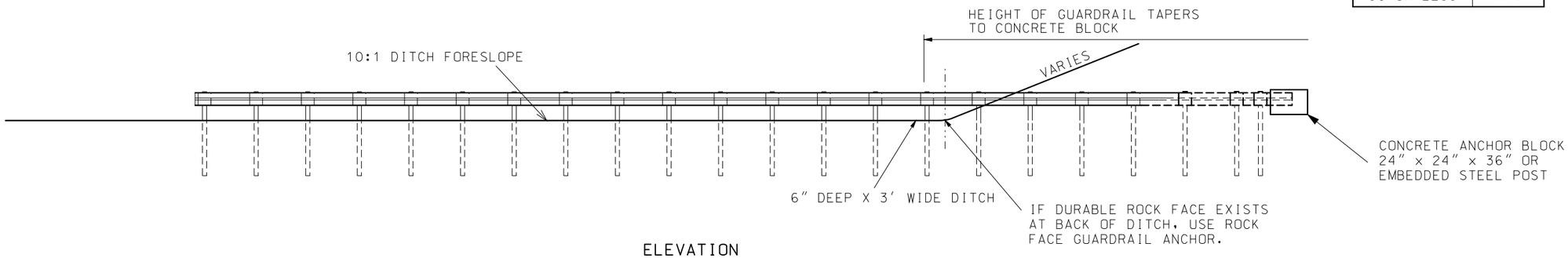

ELEVATION

ANCHORED IN BACKSLOPE GUARDRAIL

IF A SEAL IS PRESENT ON THIS SHEET IT HAS BEEN ELECTRONICALLY SEALED AND DATED.

MISSOURI HIGHWAYS AND TRANSPORTATION COMMISSION
105 WEST CAPITOL
JEFFERSON CITY, MO 65102
1-888-ASK-MODOT (1-888-275-6636)

STATE OF MISSOURI
ERIC E. SCHROETER
NUMBER PE-28411
PROFESSIONAL ENGINEER
THIS SHEET HAS BEEN SIGNED, SEALED AND DATED ELECTRONICALLY.

GUARDRAIL
EMBEDDED TERMINAL
ENDS (FLAT DITCH)

DATE EFFECTIVE: 04/01/2017
DATE PREPARED: 1/30/2017

606.30K

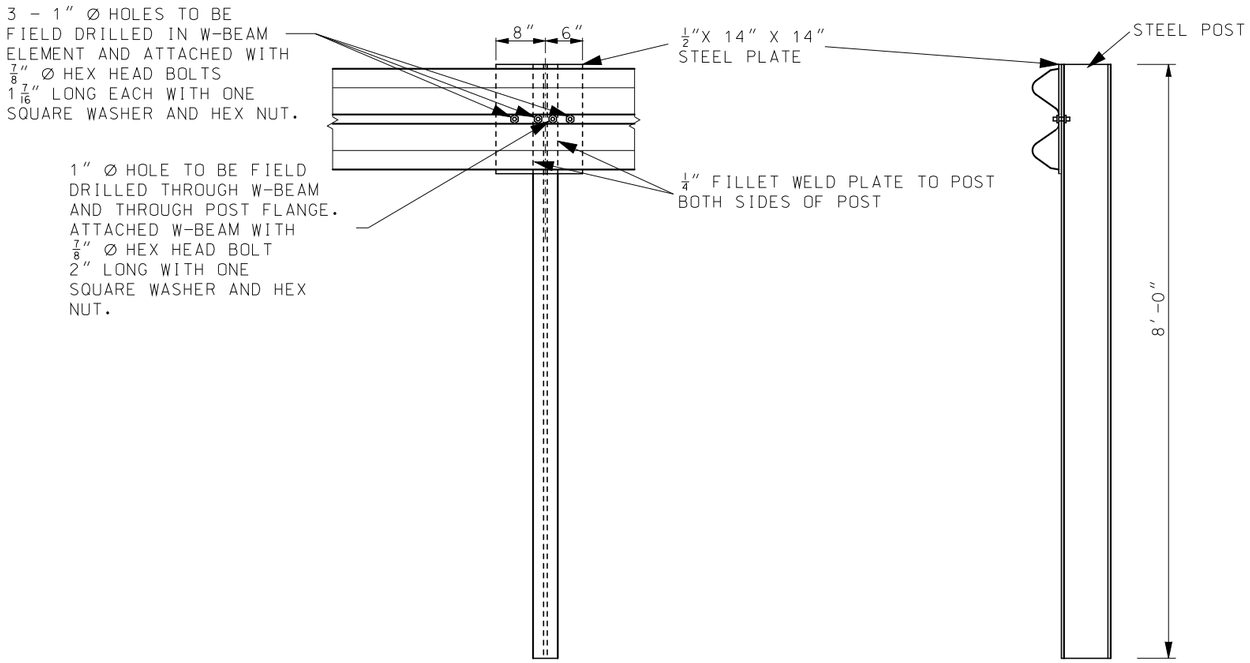

EMBEDDED STEEL POST

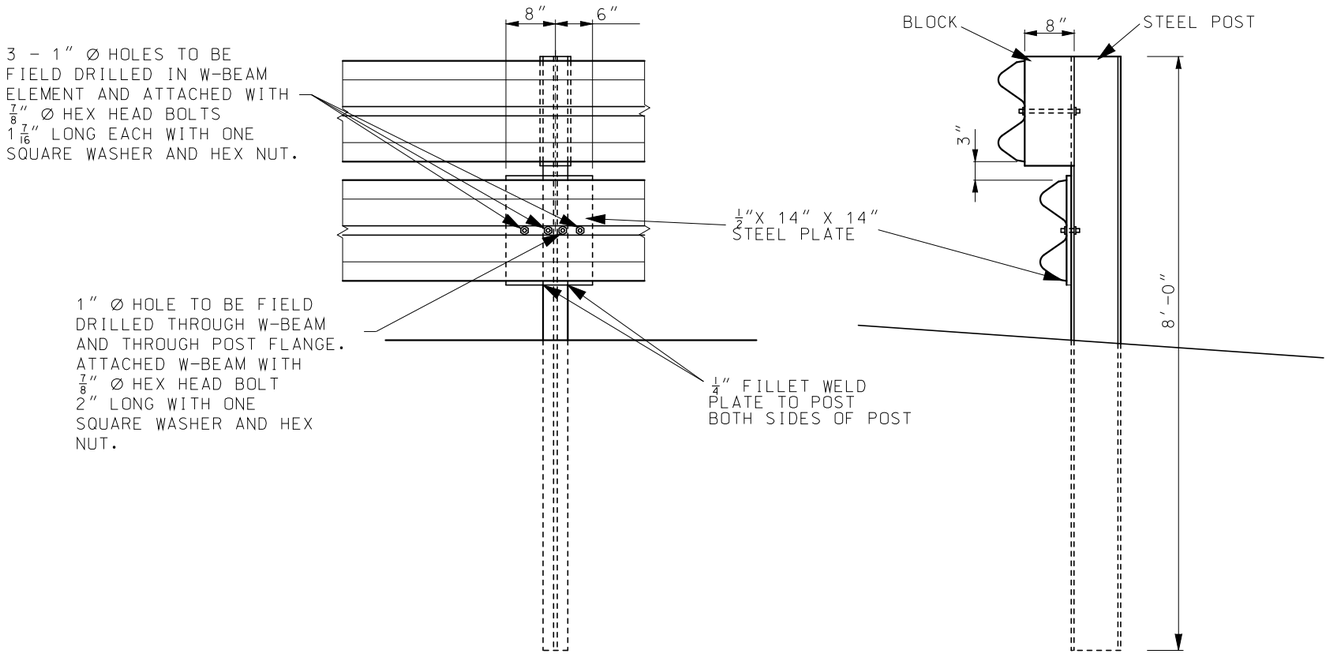

SPECIAL RUBRAIL TO POST CONNECTION AT POST A

IF A SEAL IS PRESENT ON THIS SHEET IT HAS BEEN ELECTRONICALLY SEALED AND DATED.

MISSOURI HIGHWAYS AND TRANSPORTATION COMMISSION
105 WEST CAPITOL
JEFFERSON CITY, MO 65102
1-888-ASK-MODOT (1-888-275-6636)

STATE OF MISSOURI
ERIC E. SCHROETER
NUMBER PE-28411
PROFESSIONAL ENGINEER
THIS SHEET HAS BEEN SIGNED, SEALED AND DATED ELECTRONICALLY.

GUARDRAIL
EMBEDDED ANCHOR TERMINAL ENDS (STEEL POST OPTION)

DATE EFFECTIVE: 04/01/2017
DATE PREPARED: 1/30/2017

606.30K

SHEET NO. 6 OF 7

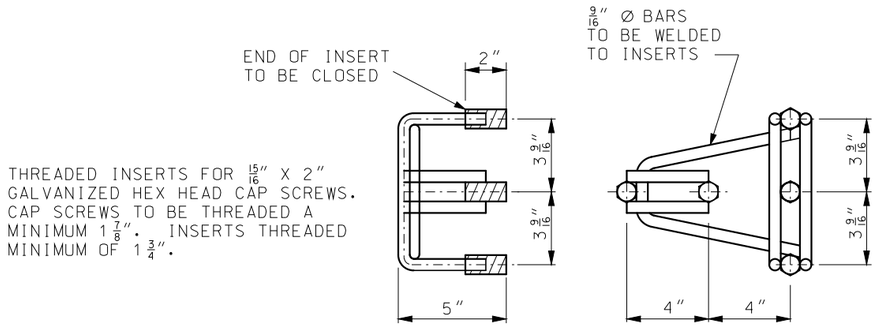

THREADED INSERTS FOR $\frac{15}{16}$″ X 2″ GALVANIZED HEX HEAD CAP SCREWS. CAP SCREWS TO BE THREADED A MINIMUM $1\frac{7}{8}$″. INSERTS THREADED MINIMUM OF $1\frac{3}{4}$″.

CONCRETE BLOCK ANCHOR ANCHOR ASSEMBLY

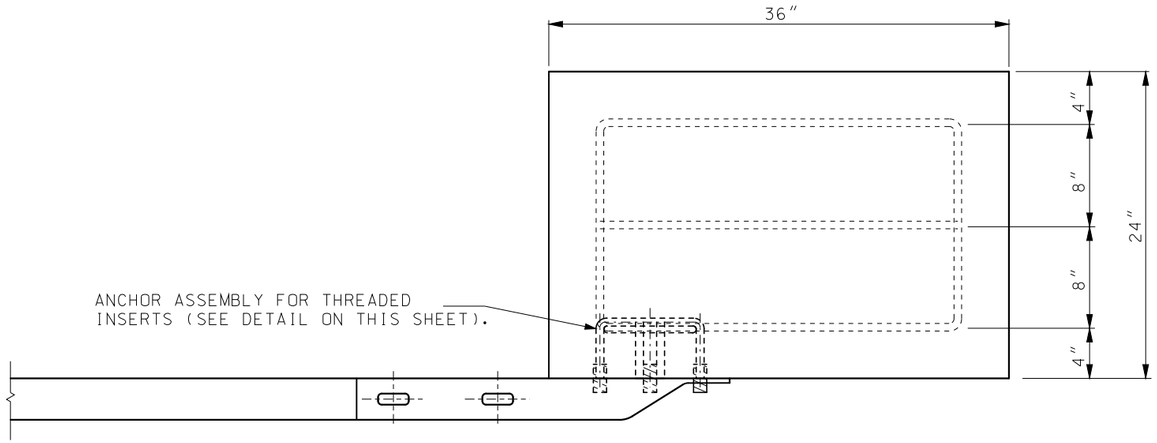

TOP VIEW

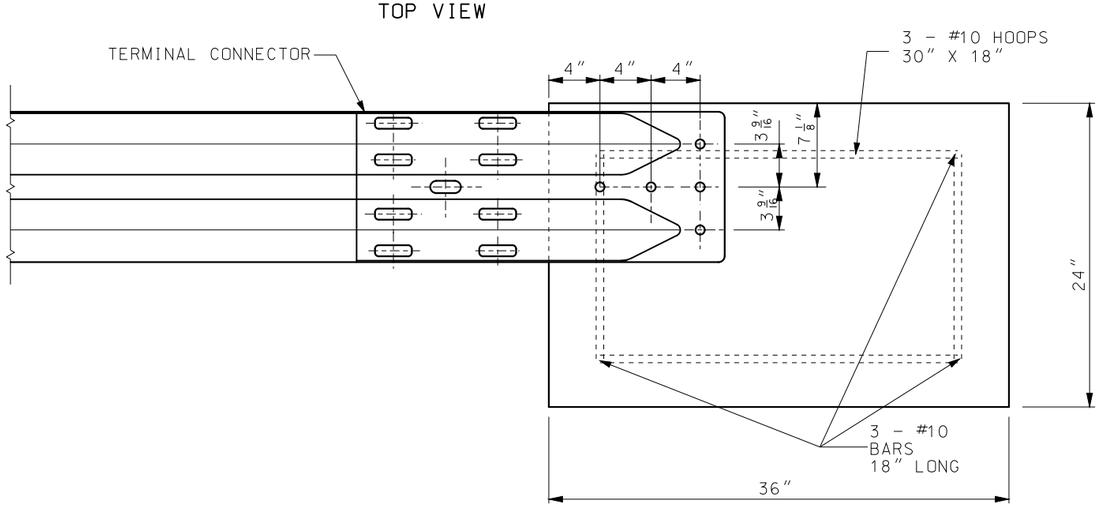

ELEVATION

CONCRETE BLOCK ANCHOR
(24″ X 24″ X 36″)

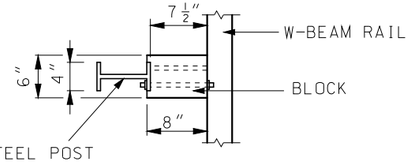

PLAN

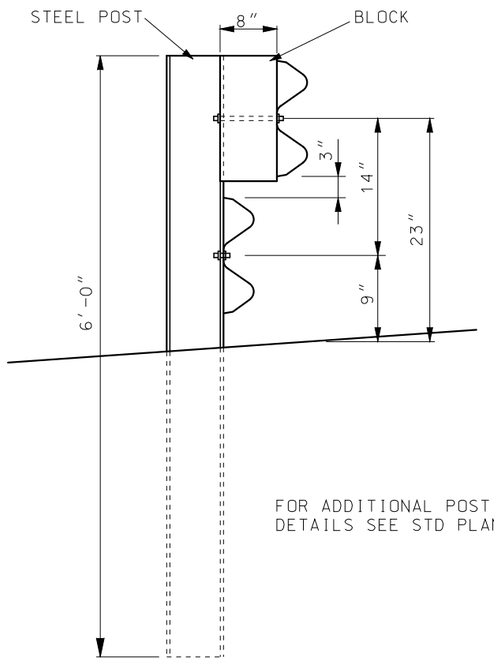

FOR ADDITIONAL POST AND BLOCK DETAILS SEE STD PLANS 606.00.

ELEVATION OF 6′ POST

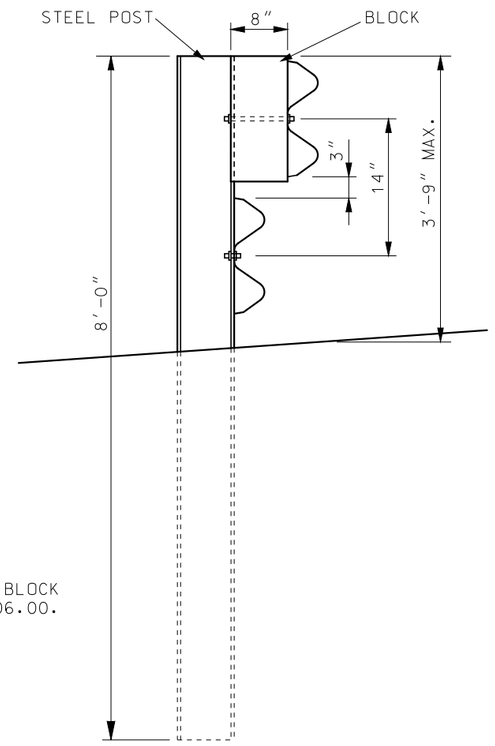

ELEVATION 8′ POST

STEEL POST AND BLOCK DETAIL

IF A SEAL IS PRESENT ON THIS SHEET IT HAS BEEN ELECTRONICALLY SEALED AND DATED.

MISSOURI HIGHWAYS AND TRANSPORTATION COMMISSION
105 WEST CAPITOL
JEFFERSON CITY, MO 65102
1-888-ASK-MODOT (1-888-275-6636)

STATE OF MISSOURI
ERIC E. SCHROETER
NUMBER PE-28411
PROFESSIONAL ENGINEER
THIS SHEET HAS BEEN SIGNED, SEALED AND DATED ELECTRONICALLY.

GUARDRAIL
EMBEDDED TERMINAL ENDS
GENERAL DETAILS

DATE EFFECTIVE: 04/01/2017
DATE PREPARED: 1/30/2017

606.30K

SHEET NO. 7 OF 7

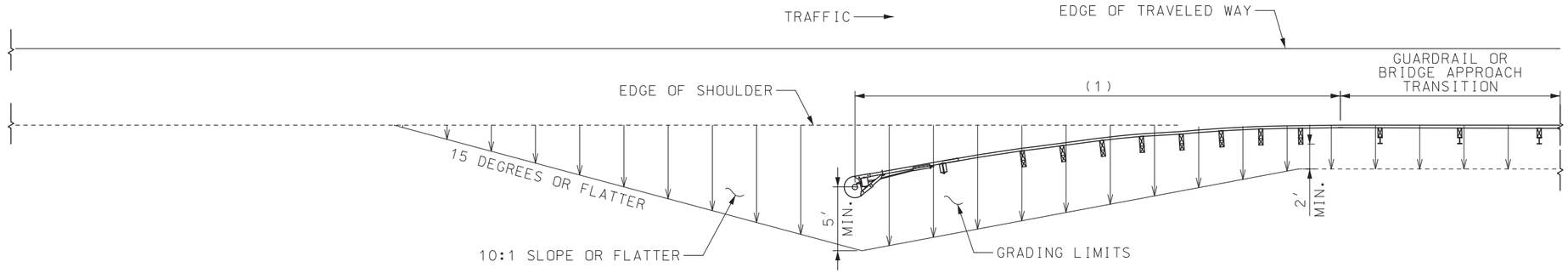

GRADING LIMITS FOR FLARED CRASHWORTHY END TERMINALS

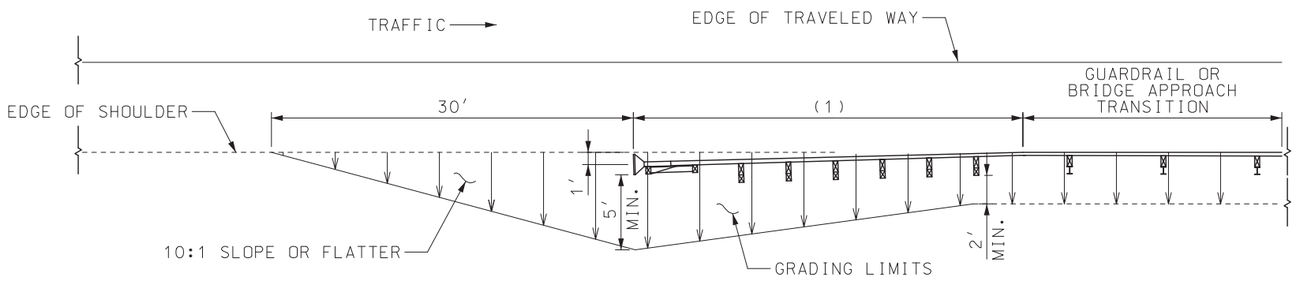

PREFERRED GRADING LIMITS FOR CRASHWORTHY END TERMINALS

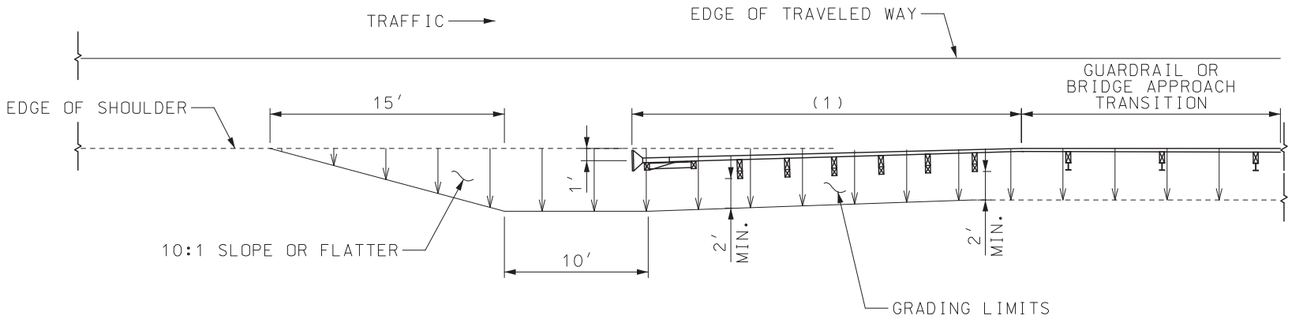

ALTERNATE GRADING LIMITS FOR CRASHWORTHY END TERMINALS

(1) APPROVED CRASHWORTHY END TERMINAL

GENERAL NOTES:

THE PREFERRED GRADING LIMITS SHALL BE USED WHEN INDICATED ON THE PLANS.

THE CONTRACTOR SHALL PROVIDE THE ENGINEER WITH APPROVED SHOP DRAWINGS OF THE APPROVED CRASH-WORTHY END TERMINAL.

END ANCHORS SHALL BE INSTALLED ON ENDS OF GUARDRAIL RUNS WHERE CRASHWORTHY END TERMINALS ARE NOT REQUIRED.

MISSOURI HIGHWAYS AND TRANSPORTATION COMMISSION
105 WEST CAPITOL
JEFFERSON CITY, MO 65102
1-888-ASK-MODOT (1-888-275-6636)

STATE OF MISSOURI
ERIC E. SCHROETER
NUMBER PE-28411
PROFESSIONAL ENGINEER
THIS SHEET HAS BEEN SIGNED, SEALED AND DATED ELECTRONICALLY.

CRASHWORTHY END TERMINALS TYPE A GRADING LIMITS

DATE EFFECTIVE: 04/01/2019
DATE PREPARED: 1/16/2019

606.31A

SHEET NO. 1 OF 1

IF A SEAL IS PRESENT ON THIS SHEET IT HAS BEEN ELECTRONICALLY SEALED AND DATED.

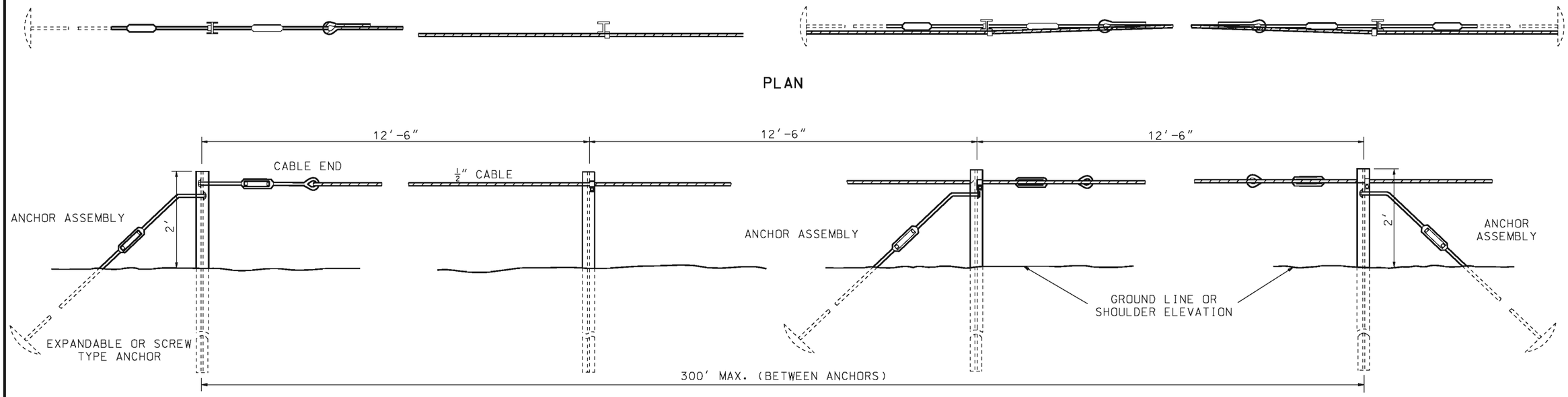

PLAN

END ANCHOR | LINE POST | INTERMEDIATE ANCHOR

ELEVATION

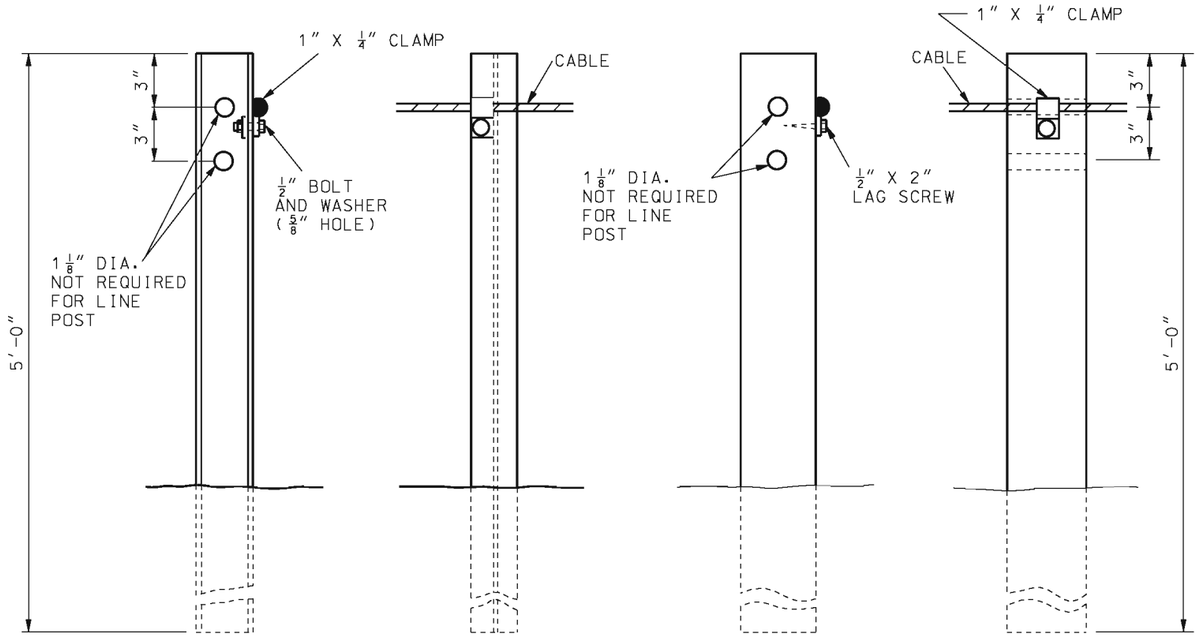

STEEL POST
(S3 X 5.7 STD. BEAM)

WOOD POST
(4″ X 4″ SQUARE OR 4″ ROUND)

POST DETAILS

IF A SEAL IS PRESENT ON THIS SHEET IT HAS BEEN ELECTRONICALLY SEALED AND DATED.

MISSOURI HIGHWAYS AND TRANSPORTATION COMMISSION
105 WEST CAPITOL
JEFFERSON CITY, MO 65102
1-888-ASK-MODOT (1-888-275-6636)

STATE OF MISSOURI
KATHRYN PHILLIPS HARVEY
NUMBER PE-23751
PROFESSIONAL ENGINEER
THIS SHEET HAS BEEN SIGNED, SEALED AND DATED ELECTRONICALLY.

ONE-STRAND ACCESS RESTRAINT CABLE

DATE EFFECTIVE: 07/01/2004
DATE PREPARED: 8/21/2009

606.40D

SHEET NO. 1 OF 2

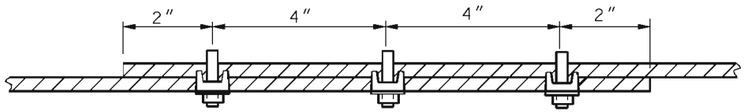

ACCESS-RESTRAINT CABLE GREATER THAN 300 FEET IN LENGTH REQUIRES AN INTERMEDIATE ANCHOR AS SHOWN.

SPLICE DETAIL

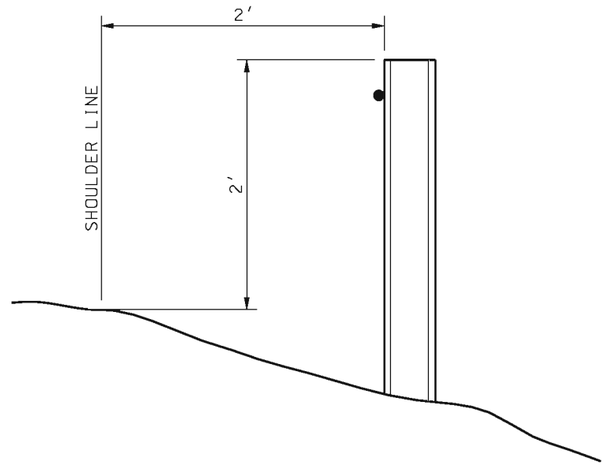

TYPICAL LOCATION SHOULDER INSTALLATION

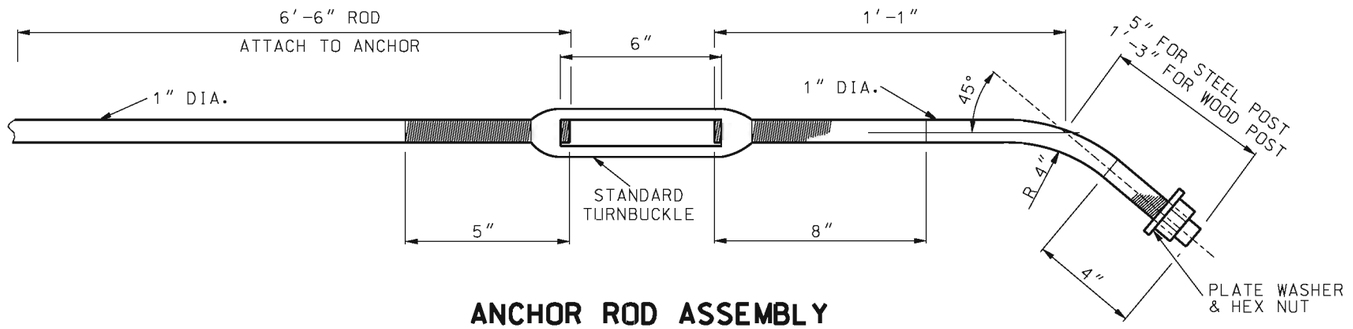

ANCHOR ROD ASSEMBLY

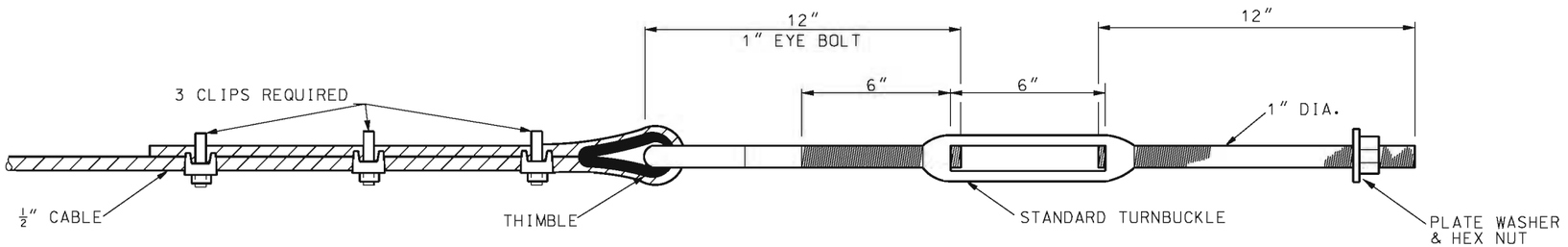

CABLE END

IF A SEAL IS PRESENT ON THIS SHEET IT HAS BEEN ELECTRONICALLY SEALED AND DATED.

MISSOURI HIGHWAYS AND TRANSPORTATION COMMISSION
105 WEST CAPITOL
JEFFERSON CITY, MO 65102
1-888-ASK-MODOT (1-888-275-6636)

STATE OF MISSOURI
KATHRYN PHILLIPS HARVEY
NUMBER PE-23751
PROFESSIONAL ENGINEER
THIS SHEET HAS BEEN SIGNED, SEALED AND DATED ELECTRONICALLY.

ONE-STRAND ACCESS RESTRAINT CABLE

DATE EFFECTIVE: 07/01/2004
DATE PREPARED: 8/21/2009

606.40D

SHEET NO. 2 OF 2

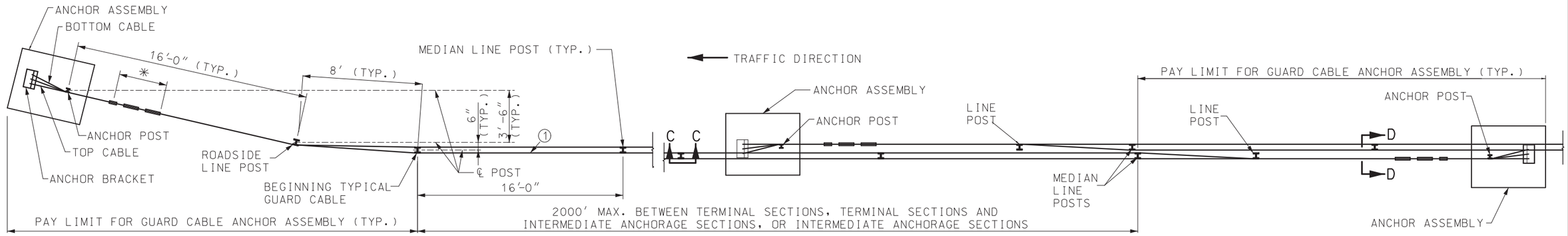

TYPICAL TERMINAL SECTION

TRAFFIC DIRECTION →

TYPICAL INTERMEDIATE TERMINAL SECTIONS

MEDIAN INSTALLATION PLAN

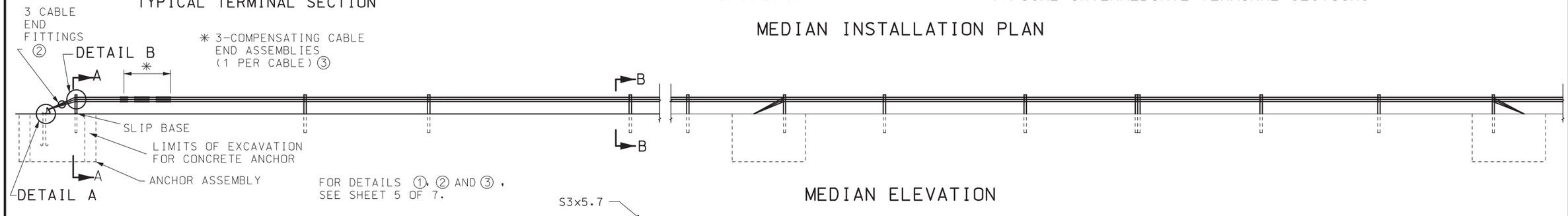

MEDIAN ELEVATION

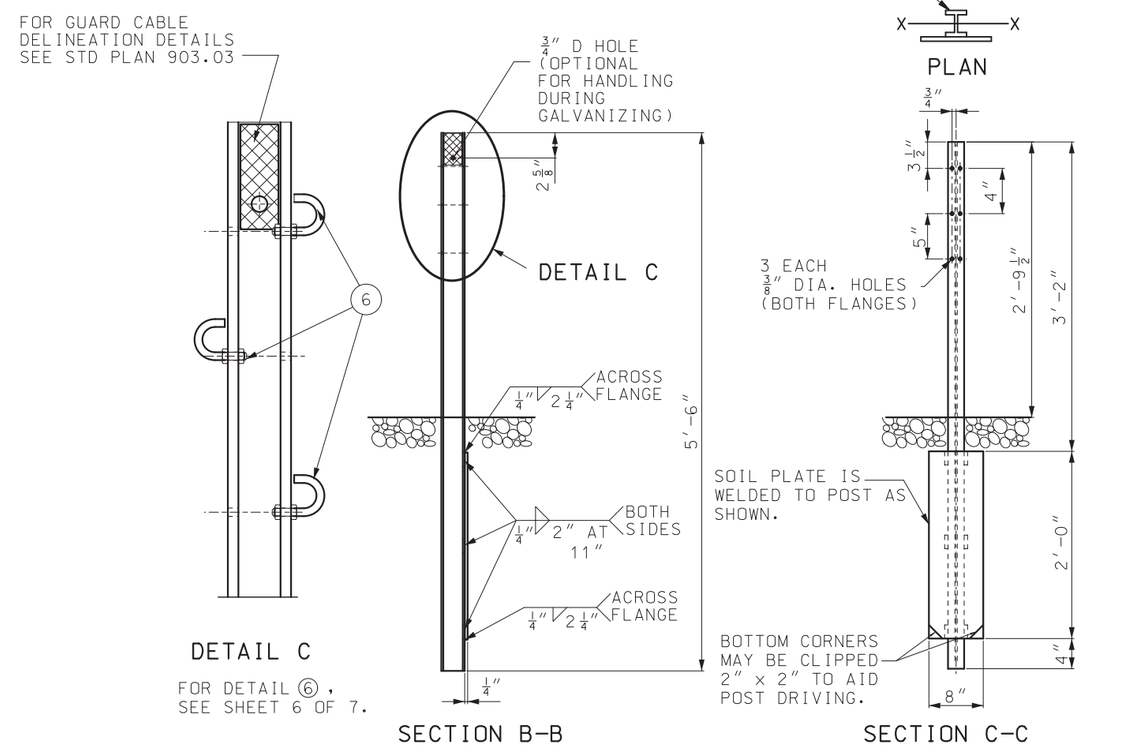

LINE POST AND WELDED SOIL PLATE

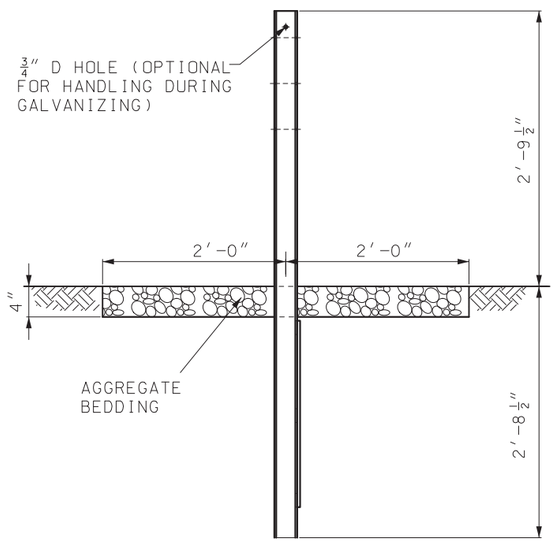

SECTION D-D

GENERAL NOTES:

IN THE EVENT THE NORMAL 16' POST SPACING WOULD PLACE A POST ON A DROP INLET, THE SPACING OF THE TWO POSTS IMMEDIATELY PRECEDING THE INLET SHALL BE REDUCED SUCH THAT THE FOLLOWING POST CLEARS THE INLET. EACH SUBSEQUENT POST SHALL BE SPACED AT 16'. IN NO CASE SHALL THE SPACING EXCEED 16'.

IN THE EVENT A LONGITUDINAL MEDIAN PIPE IS ENCOUNTERED THE CABLE SHALL BE PLACED PARALLEL TO THE PIPE AT A MINIMUM OFFSET OF 12". THE OFFSET SHALL BE ACHIEVED BY A MINIMUM 16:1 TAPER ON THE UPSTREAM AND DOWNSTREAM END OF THE PIPE.

FOR SECTION A-A AND DETAIL B, SEE SHEET 4 OF 7.

FOR GUARD CABLE DELINEATION DETAILS SEE STD PLAN 903.03.

MISSOURI HIGHWAYS AND TRANSPORTATION COMMISSION
105 WEST CAPITOL
JEFFERSON CITY, MO 65102
1-888-ASK-MODOT (1-888-275-6636)

STATE OF MISSOURI
ERIC E. SCHROETER
NUMBER PE-2011
PROFESSIONAL ENGINEER
THIS SHEET HAS BEEN SIGNED, SEALED AND DATED ELECTRONICALLY.

THREE-STRAND GUARD CABLE
MEDIAN APPLICATION

DATE EFFECTIVE: 04/01/2019
DATE PREPARED: 1/16/2019

606.41L

SHEET NO. 1 OF 7

IF A SEAL IS PRESENT ON THIS SHEET IT HAS BEEN ELECTRONICALLY SEALED AND DATED.

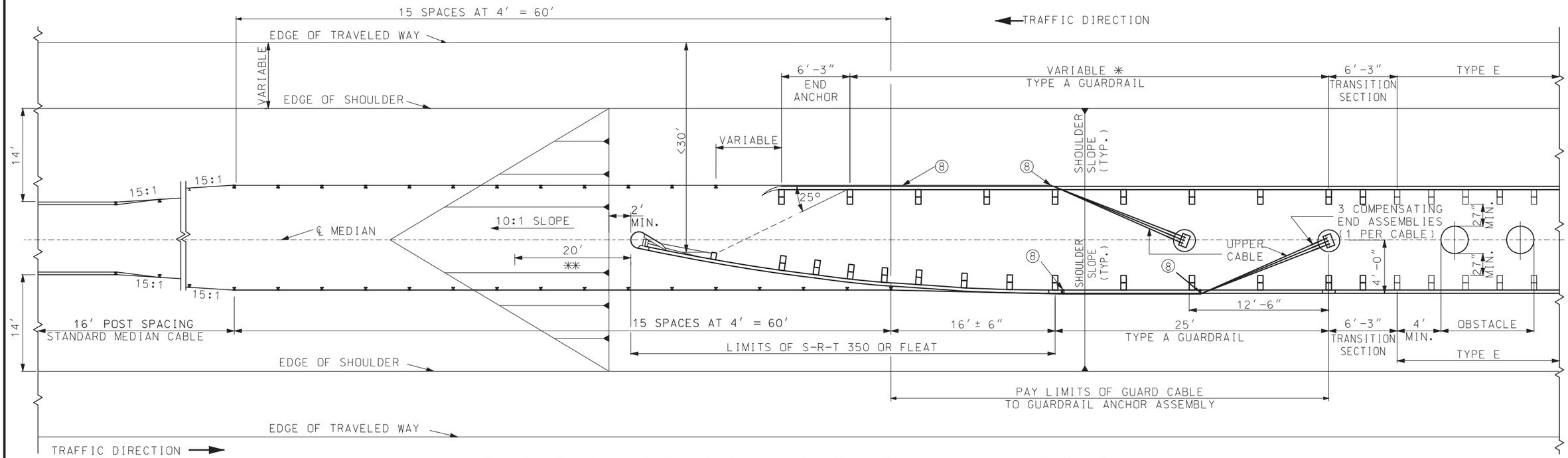

GUARD CABLE TO GUARDRAIL TRANSITION AT MEDIAN OBSTACLE

✳ VARY LENGTH TO ACHIEVE 25° DEFLECTION TO SECOND POST OF S-R-T 350 OR FLEAT.

✳✳ IF GUARD CABLE IS USED WITH BULLNOSE GUARDRAIL SYSTEM, OR A CRASHWORTHY END TERMINAL ON A MEDIAN LESS THAN 60′ IN WIDTH, THE CABLE ANCHORAGE SHALL BE PLACED ON THE MEDIAN CENTERLINE 20′ FROM THE NOSE OF THE CRASHWORTHY END TERMINAL OR BULLNOSE GUARDRAIL SYSTEM.

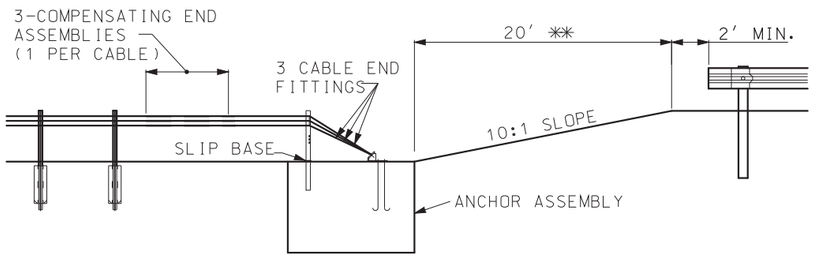

PROFILE OF TRANSITION AT MEDIAN OBSTACLE WITH BULLNOSE OR IN A MEDIAN NARROWER THAN 60′

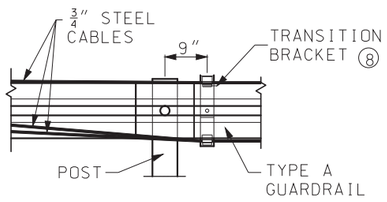

DETAIL C

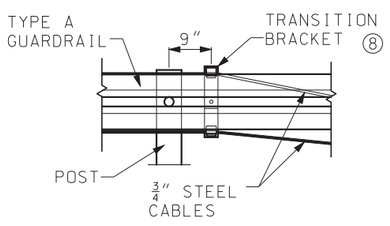

DETAIL D

FOR DETAIL ⑧
SEE SHEET 6 OF 7.

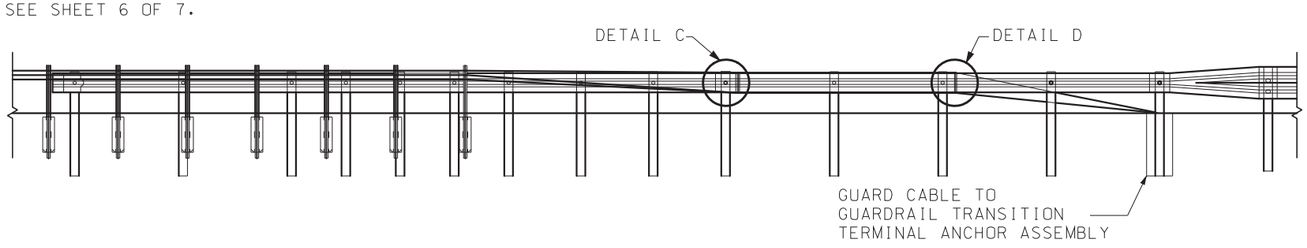

TYPICAL GUARD CABLE TO GUARDRAIL TRANSITION ELEVATION

GENERAL NOTES:

WHEN GUARD CABLE IS LOCATED ALONG THE MEDIAN CENTERLINE NEAR A BRIDGE END OR CONCRETE BARRIER, IT SHALL BE ANCHORED BEHIND THE GUARDRAIL ASSEMBLY WITH THE GUARD CABLE ANCHOR ASSEMBLY. THE GUARD CABLE ANCHOR SHALL BE CONSTRUCTED SO THAT IT IS PROTECTED BY THE GUARDRAIL.

THIS DRAWING DEPICTS OPTIONS FOR THE ATTACHMENT OF GUARD CABLE TO GUARDRAIL. IT DOES NOT INDICATE THAT TWO RUNS OF CABLE ARE REQUIRED.

SUITABLE DRAINAGE MUST BE PROVIDED WHEN MEDIAN GRADING IMPEDES NORMAL FLOW.

IF A SEAL IS PRESENT ON THIS SHEET IT HAS BEEN ELECTRONICALLY SEALED AND DATED.

MISSOURI HIGHWAYS AND TRANSPORTATION COMMISSION
105 WEST CAPITOL
JEFFERSON CITY, MO 65102
1-888-ASK-MODOT (1-888-275-6636)

STATE OF MISSOURI
ERIC E. SCHROETER
NUMBER PE-28411
PROFESSIONAL ENGINEER
THIS SHEET HAS BEEN SIGNED, SEALED AND DATED ELECTRONICALLY.

THREE-STRAND GUARD CABLE

DATE EFFECTIVE: 07/01/2017
DATE PREPARED: 5/1/2017

606.41L

SHEET NO. 2 OF 7

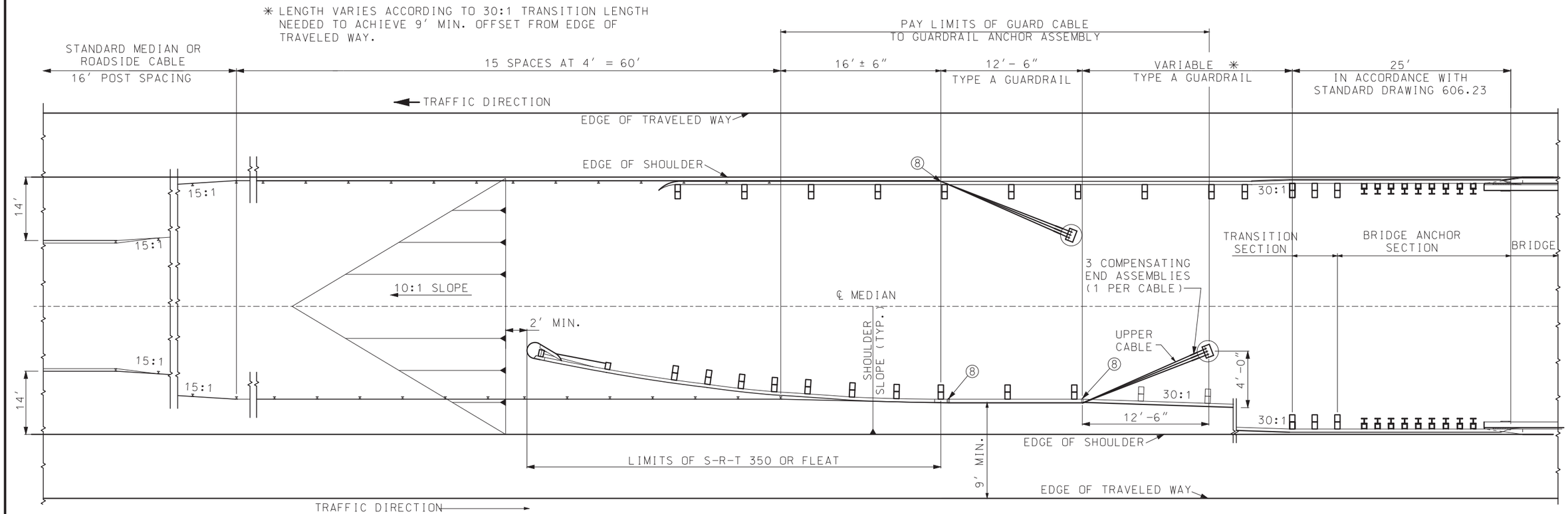

GUARD CABLE TO GUARDRAIL TRANSITION AT MEDIAN BRIDGE END

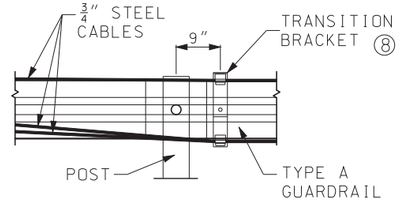

DETAIL C

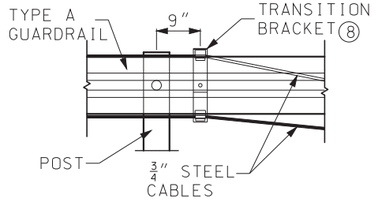

DETAIL D

FOR DETAIL ⑧
SEE SHEET 6 OF 7.

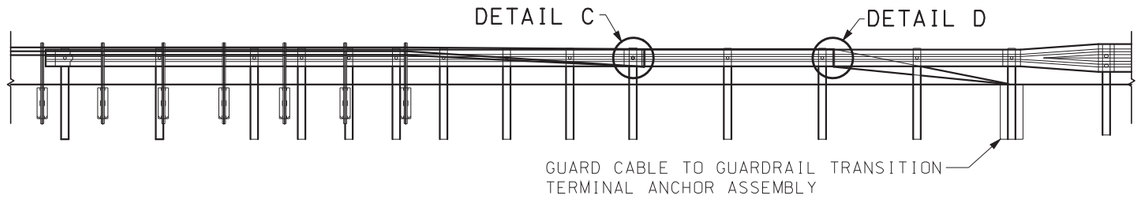

TYPICAL GUARD CABLE TO GUARDRAIL TRANSITION ELEVATION

GENERAL NOTES:

WHEN GUARD CABLE IS LOCATED ALONG THE MEDIAN CENTER-LINE NEAR A BRIDGE END OR CONCRETE BARRIER, IT SHALL BE ANCHORED BEHIND THE GUARDRAIL ASSEMBLY WITH THE GUARD CABLE ANCHOR ASSEMBLY. THE GUARD CABLE ANCHOR SHALL BE CONSTRUCTED SO THAT IT IS PROTECTED BY THE GUARDRAIL.

THIS DRAWING DEPICTS OPTIONS FOR THE ATTACHMENT OF GUARD CABLE TO GUARDRAIL. IT DOES NOT INDICATE THAT TWO RUNS OF CABLE ARE REQUIRED.

SUITABLE DRAINAGE MUST BE PROVIDED WHEN MEDIAN GRADING IMPEDES NORMAL FLOW.

MISSOURI HIGHWAYS AND TRANSPORTATION COMMISSION
105 WEST CAPITOL
JEFFERSON CITY, MO 65102
1-888-ASK-MODOT (1-888-275-6636)

STATE OF MISSOURI
ERIC E. SCHROETER
NUMBER PE-28411
PROFESSIONAL ENGINEER
THIS SHEET HAS BEEN SIGNED, SEALED AND DATED ELECTRONICALLY.

THREE-STRAND GUARD CABLE

DATE EFFECTIVE: 07/01/2017
DATE PREPARED: 5/1/2017

606.41L

SHEET NO. 3 OF 7

IF A SEAL IS PRESENT ON THIS SHEET IT HAS BEEN ELECTRONICALLY SEALED AND DATED.

STANDARDIZED HARDWARE	
(1)	WIRE ROPE
(2)	CABLE END FITTING
(3)	COMPENSATING CABLE END ASSEMBLY
(4)	ANCHOR BRACKET
(5)	U-BOLT CABLE CLIPS
(6)	CABLE HOOK BOLT AND NUT
(7)	HOOKED ANCHOR BOLT AND NUTS
(8)	CABLE TRANSITION BRACKET

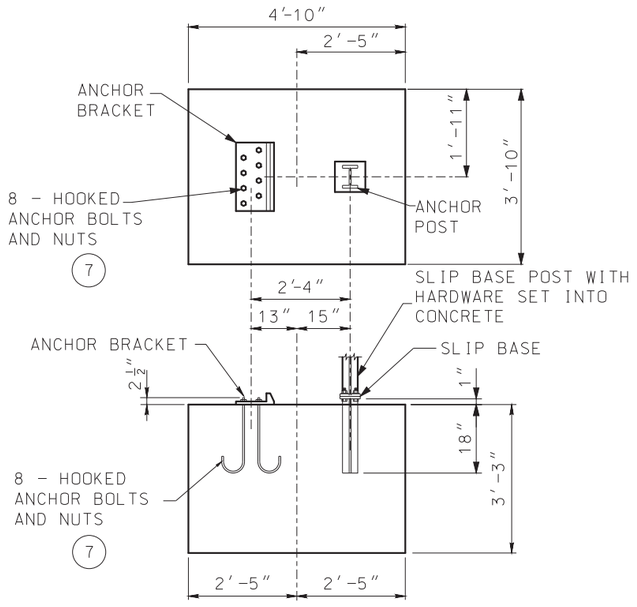

MEDIAN AND ROADSIDE CABLE

NOTES:
1. PLACE ANCHORS SO THE TOPS ARE LEVEL; WARP SLOPE TO FIT.
2. THE CONCRETE ANCHOR BLOCK DOES NOT REQUIRE REINFORCEMENT.

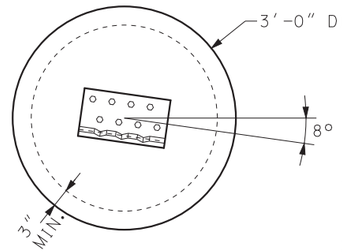

NOTES:
1. REINFORCEMENT CONSISTS OF NO. 3 BARS PLACED AS SHOWN.
2. TOP SLOPE TO MATCH ADJACENT CROSS SLOPE.

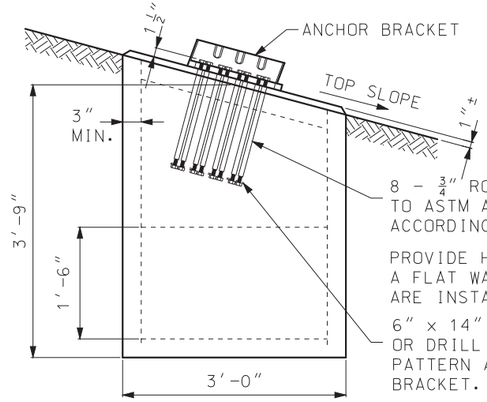

8 - ¾" ROUND x 18" LONG STEEL RODS CONFORMING TO ASTM A449 WITH THE TOP 6" OF THE RODS GALVANIZED ACCORDING TO ASTM A153.

PROVIDE HEAVY HEX NUTS AT EACH END OF EACH ROD PLUS A FLAT WASHER AT THE TOP END. AFTER THE TOP NUTS ARE INSTALLED, PUNCH THE THREADS TO PREVENT ROTATION.

6" x 14" x ¼" PLATE - PUNCH OR DRILL TO THE SAME PLAN PATTERN AS THE CABLE ANCHOR BRACKET.

GUARD CABLE TO GUARDRAIL TRANSITION

GENERAL NOTES:

FOR ARRANGEMENT OF SPRING AND COMPENSATING CABLE END ASSEMBLIES AND TURNBUCKLE CABLE END ASSEMBLIES, THE FOLLOWING CRITERIA SHALL APPLY: LENGTH OF CABLE RUNS TO 1000' - USE COMPENSATING CABLE END ASSEMBLY ON ONE END AND THE TURNBUCKLE CABLE END ASSEMBLY ON THE OTHER END OF EACH INDIVIDUAL CABLE. FOR LENGTHS LONGER THAN 1000' AND UP TO AND INCLUDING 2000' - USE COMPENSATING CABLE END ASSEMBLY ON EACH END OF THE INDIVIDUAL CABLE.

PRIOR TO FINAL ACCEPTANCE BY THE ENGINEER, THE FOLLOWING PROCEDURES SHALL BE USED TO TIGHTEN THE TURNBUCKLES. DEPENDING ON THE TEMPERATURE AT THE TIME OF THE ADJUSTMENT IN ACCORDANCE WITH THE FOLLOWING TABLE:

TEMPERATURE (°F)	SPRING COMPRESSION FROM UNLOADED POSITION IN EACH SPRING
120 TO 100	1"
99 TO 80	1½"
79 TO 60	2"
59 TO 40	2½"
39 TO 20	3"
19 TO 0	3½"
-1 TO -20	4"

THE SPECIFICATIONS AND DIMENSIONS OF ALL HARDWARE AND FITTINGS SHALL COMPLY WITH AASHTO-AGC-ARTBA JOINT COMMITTEE TASK FORCE 13 REPORT, A GUIDE TO STANDARDIZED HIGHWAY BARRIER HARDWARE.

TERMINAL ANCHOR ASSEMBLY

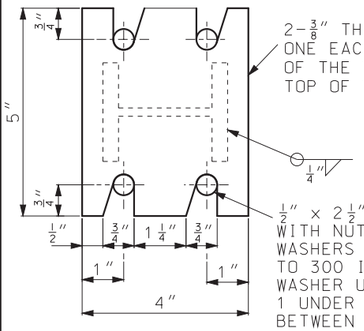

2-⅜" THICK PLATES WELD ONE EACH TO THE BOTTOM OF THE TOP POST AND THE TOP OF THE BOTTOM POST.

½" x 2½" LONG BOLTS WITH NUTS AND 3-WASHERS TORQUED TO 300 IN-LBS (1) WASHER UNDER HEAD, 1 UNDER NUT, AND 1 BETWEEN PLATES)

SLIP BASE PLATE

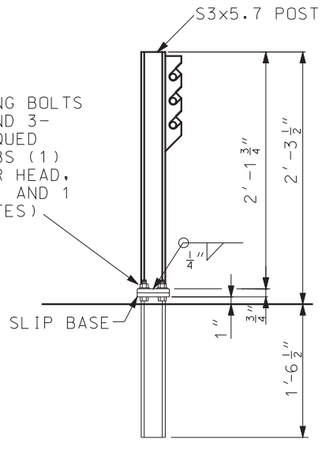

SECTION A-A
ANCHOR POST

NOTES:
1. LINE POST CABLE SPACING SHALL BE TRANSITIONED TO 3" BETWEEN THE TWO LINE POSTS IMMEDIATELY PRECEDING THE ANCHOR POST.
2. CABLES PLACED ON BOTH POST FACES SHALL BE TRANSITIONED TO THE FRONT FACE BETWEEN THE TWO LINE POSTS IMMEDIATELY PRECEDING THE ANCHOR POST.

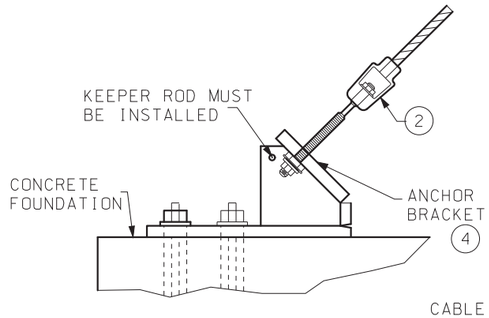

DETAIL A
ANCHOR BRACKET
DETAIL FROM SHEET 1.

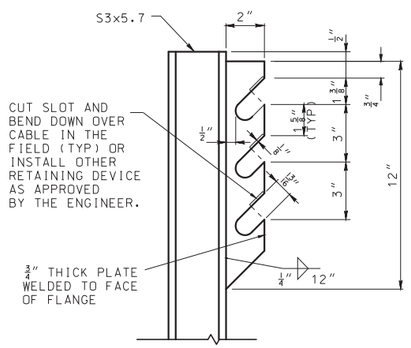

CABLE SUPPORT

FOR DETAILS ② AND ④, SEE SHEET 5 OF 7.

FOR DETAIL ⑤ AND ⑦, SEE SHEET 6 OF 7.

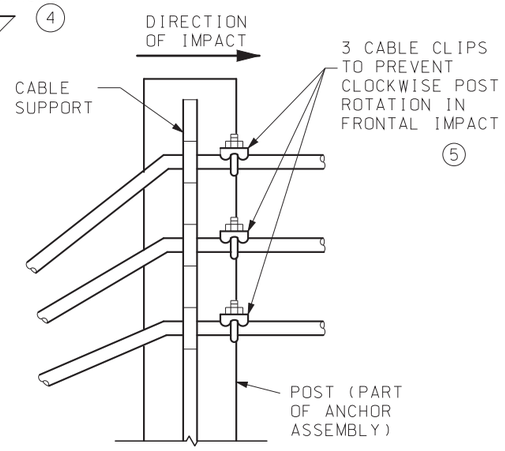

DETAIL B
CABLE CLIPS
DETAIL FROM SHEET 1.

MISSOURI HIGHWAYS AND TRANSPORTATION COMMISSION
105 WEST CAPITOL
JEFFERSON CITY, MO 65102
1-888-ASK-MODOT (1-888-275-6636)

STATE OF MISSOURI
ERIC E. SCHROETER
NUMBER PE-28411
PROFESSIONAL ENGINEER
THIS SHEET HAS BEEN SIGNED, SEALED AND DATED ELECTRONICALLY.

THREE-STRAND GUARD CABLE

DATE EFFECTIVE: 07/01/2017
DATE PREPARED: 5/1/2017

606.41L

SHEET NO. 4 OF 7

IF A SEAL IS PRESENT ON THIS SHEET IT HAS BEEN ELECTRONICALLY SEALED AND DATED.

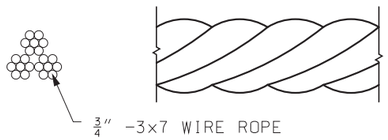

① WIRE ROPE

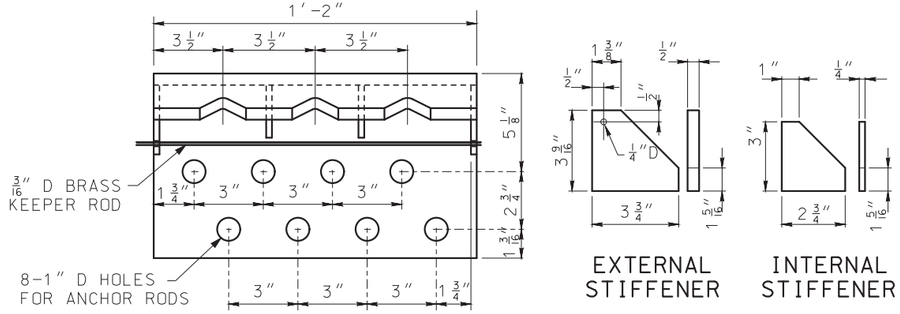

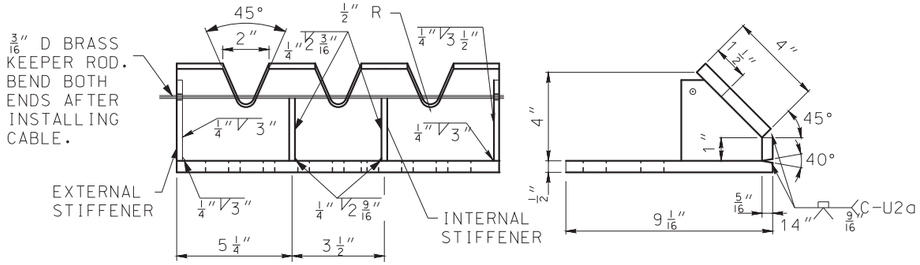

MEDIAN AND ROADSIDE CABLE

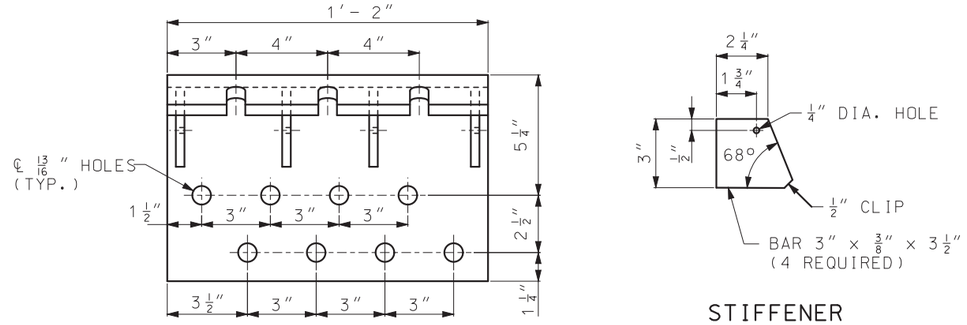

GUARD CABLE TO GUARDRAIL TRANSITION

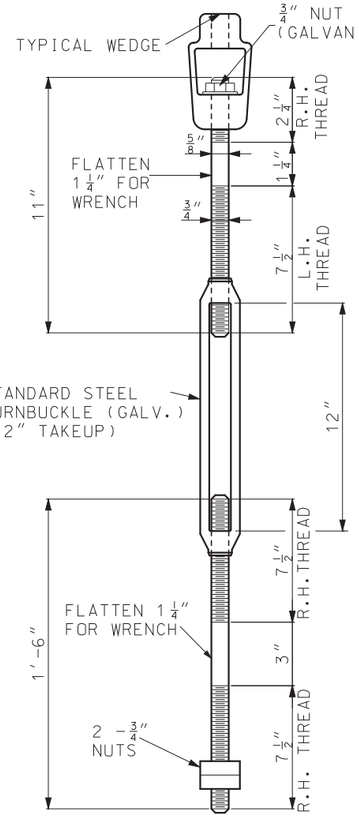

TURNBUCKLE CABLE END ASSEMBLY

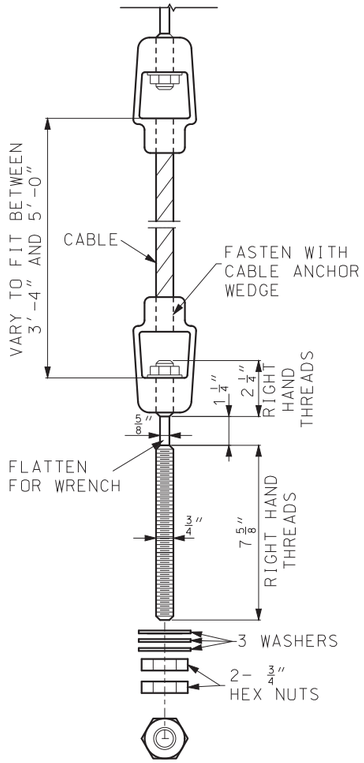

CABLE END FITTING

② CABLE END FITTINGS

④ ANCHOR BRACKET

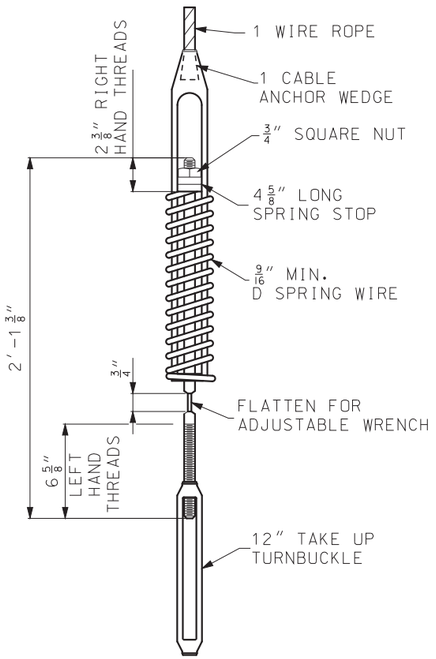

③ COMPENSATING CABLE END ASSEMBLY

GENERAL NOTES:

AT ALL LOCATIONS WHERE THE CABLE IS CONNECTED TO A CABLE SOCKET WITH A WEDGE TYPE CONNECTION, ONE WIRE OF THE WIRE ROPE SHALL BE CRIMPED OVER THE BASE OF THE WEDGE TO HOLD IT FIRMLY IN PLACE.

THE SPECIFICATIONS AND DIMENSIONS OF ALL HARDWARE AND FITTINGS SHALL COMPLY WITH AASHTO-AGC-ARTBA JOINT TASK FORCE 13 REPORT, A GUIDE TO STANDARDIZED HIGHWAY BARRIER HARDWARE.

MISSOURI HIGHWAYS AND TRANSPORTATION COMMISSION
105 WEST CAPITOL
JEFFERSON CITY, MO 65102
1-888-ASK-MODOT (1-888-275-6636)

STATE OF MISSOURI
ERIC E. SCHROETER
NUMBER PE-28411
PROFESSIONAL ENGINEER
THIS SHEET HAS BEEN SIGNED, SEALED AND DATED ELECTRONICALLY.

THREE-STRAND GUARD CABLE

DATE EFFECTIVE: 07/01/2017
DATE PREPARED: 5/1/2017

606.41L

SHEET NO. 5 OF 7

IF A SEAL IS PRESENT ON THIS SHEET IT HAS BEEN ELECTRONICALLY SEALED AND DATED.

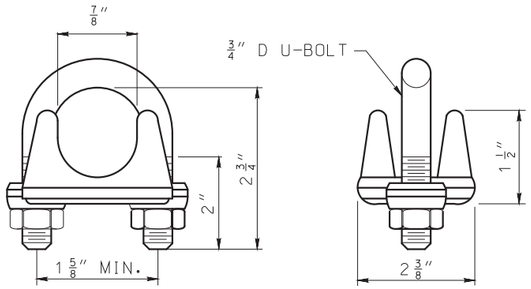

⑤ U-BOLT CABLE CLIPS

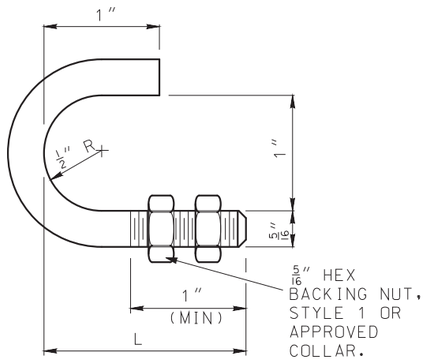

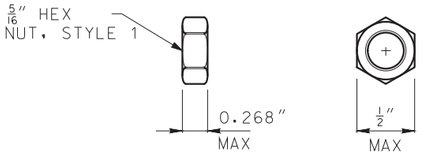

⑥ CABLE HOOK BOLT AND NUT

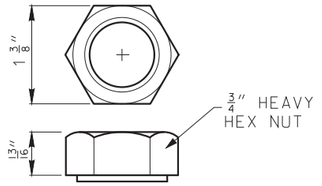

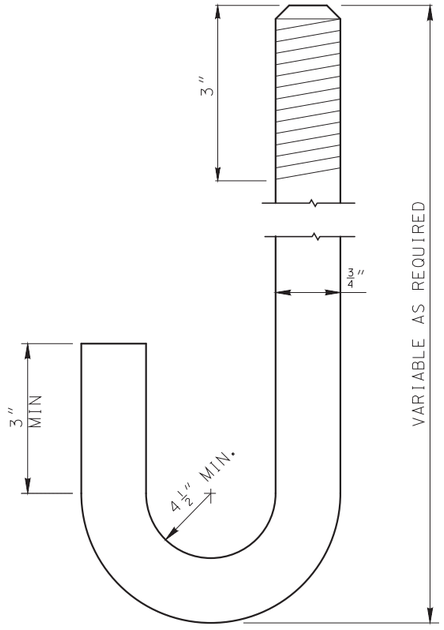

⑦ 25" HOOKED ANCHOR BOLT AND NUT

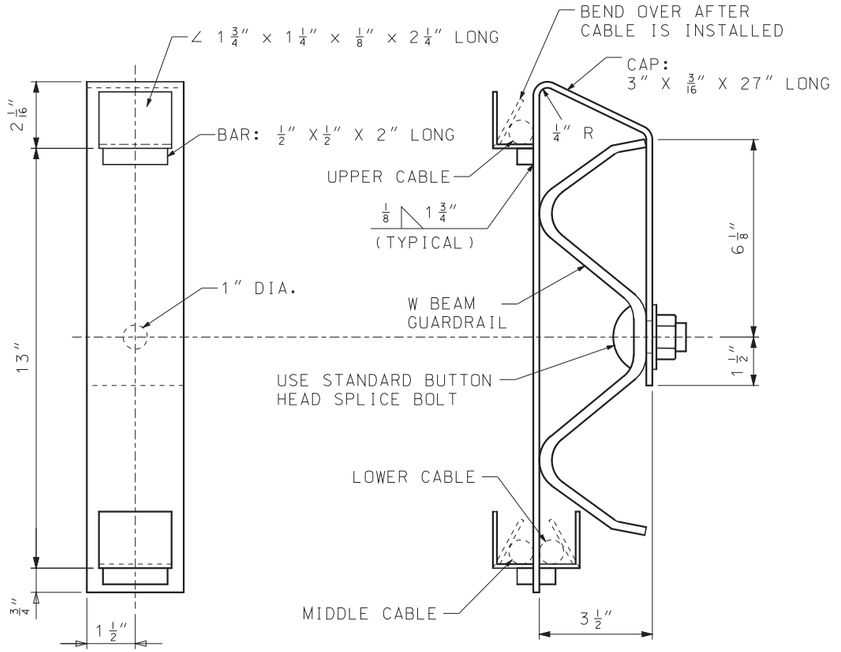

⑧ CABLE TRANSITION BRACKET

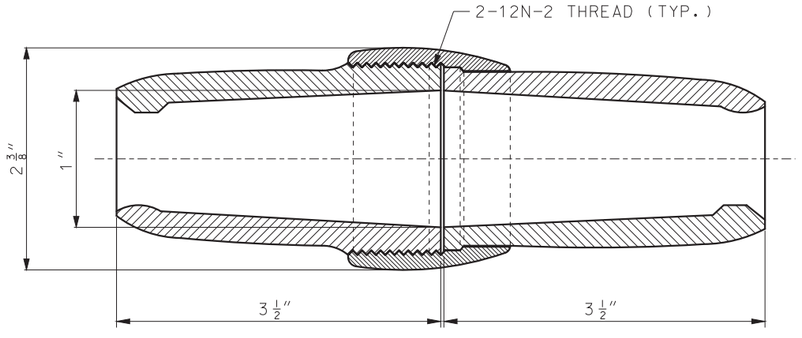

NOTE:
FITTING SPLICE SHALLDEVELOP THE FULL STRENGTH OF THE CABLE (25,000 LB.).

CABLE SPLICE

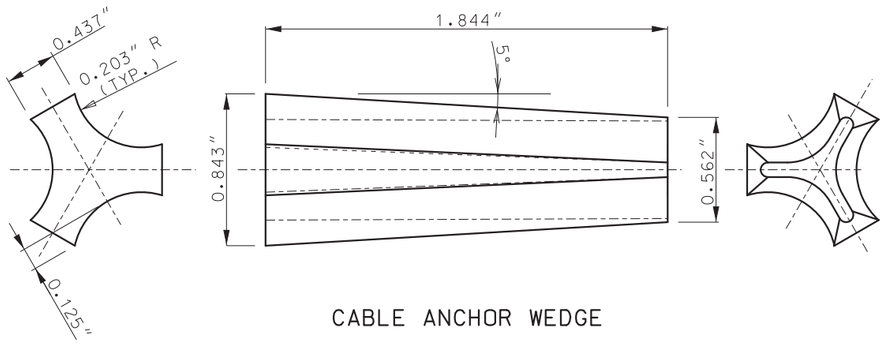

CABLE ANCHOR WEDGE

IF A SEAL IS PRESENT ON THIS SHEET IT HAS BEEN ELECTRONICALLY SEALED AND DATED.

MISSOURI HIGHWAYS AND TRANSPORTATION COMMISSION
105 WEST CAPITOL
JEFFERSON CITY, MO 65102
1-888-ASK-MODOT (1-888-275-6636)

STATE OF MISSOURI
ERIC E. SCHROETER
NUMBER PE-28411
PROFESSIONAL ENGINEER
THIS SHEET HAS BEEN SIGNED, SEALED AND DATED ELECTRONICALLY.

THREE-STRAND GUARD CABLE

DATE EFFECTIVE: 07/01/2017
DATE PREPARED: 5/1/2017

606.41L

SHEET NO. 6 OF 7

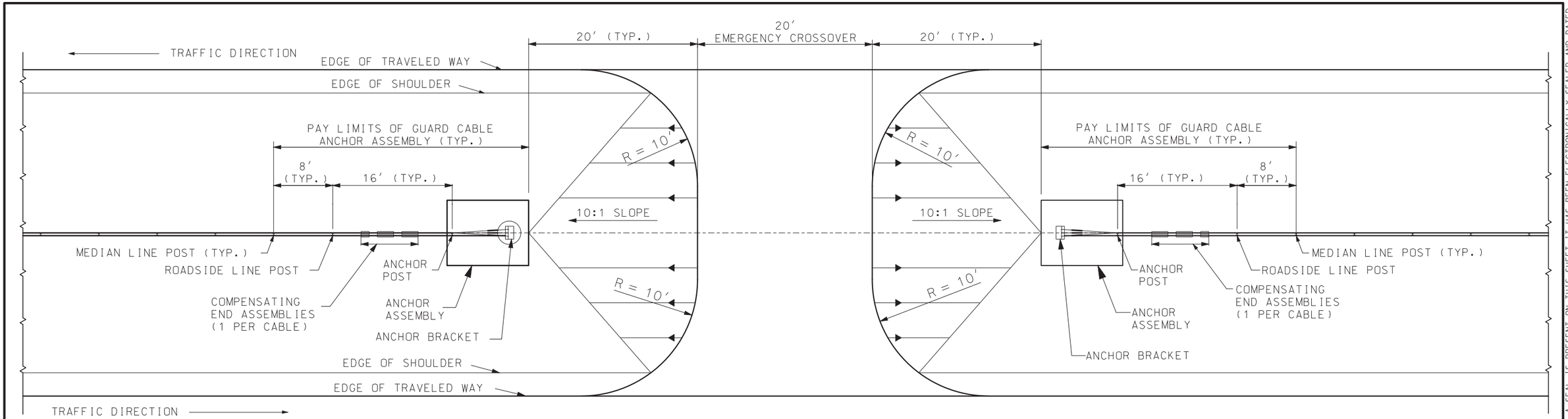

PLAN

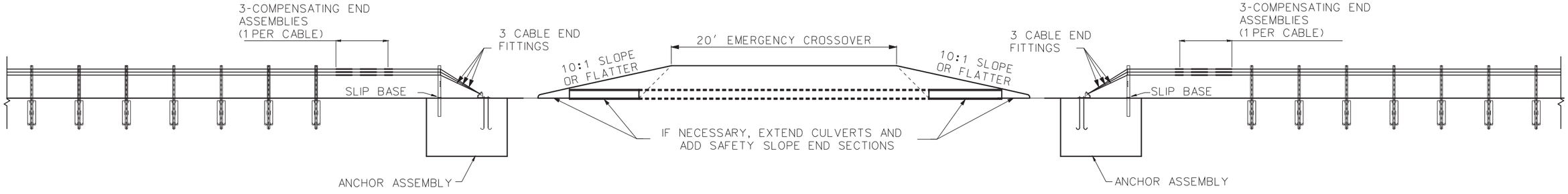

PROFILE

IF A SEAL IS PRESENT ON THIS SHEET IT HAS BEEN ELECTRONICALLY SEALED AND DATED.

MISSOURI HIGHWAYS AND TRANSPORTATION COMMISSION

105 WEST CAPITOL
JEFFERSON CITY, MO 65102
1-888-ASK-MODOT (1-888-275-6636)

STATE OF MISSOURI
ERIC E. SCHROETER
NUMBER PE-28411
PROFESSIONAL ENGINEER

THIS SHEET HAS BEEN SIGNED, SEALED AND DATED ELECTRONICALLY.

THREE-STRAND GUARD CABLE TRANSITION AT MEDIAN OPENING

DATE EFFECTIVE: 10/01/2017
DATE PREPARED: 8/8/2017

606.41L

SHEET NO. 7 OF 7

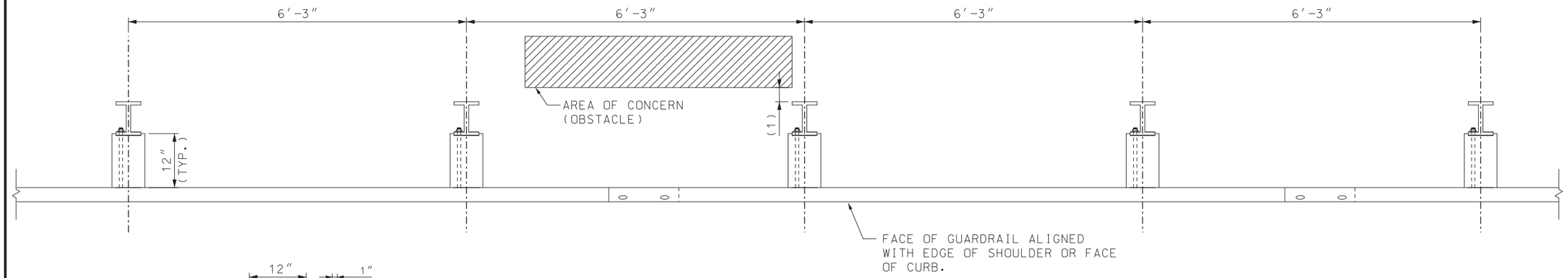

PLAN VIEW

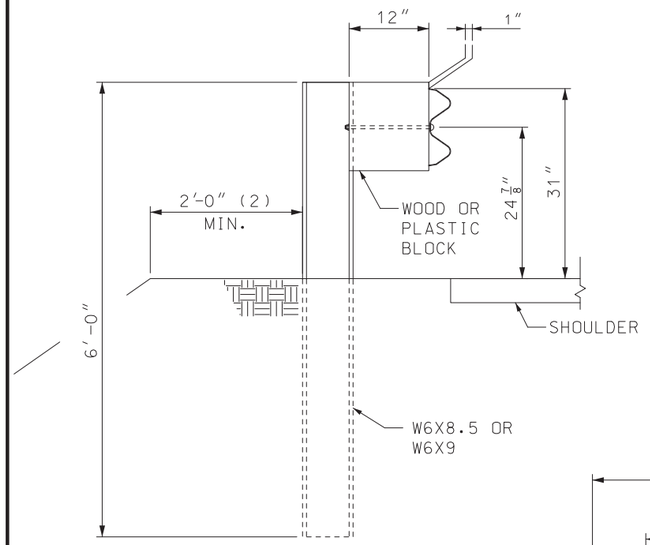

SECTION A-A

(1) 2′-6″ MINIMUM CLEARANCE TO THE FACE OF OBSTACLE WITH 6′-3″ POST SPACINGS, 2′-0″ MINIMUM CLEARANCE TO THE FACE OF OBSTACLE WITH 3′-1 1/2″ POST SPACINGS, OR 1′-6″ MINIMUM CLEARANCE TO THE FACE OF OBSTACLE WITH 1′-6 3/4″ POST SPACINGS. SEE SHEET 4 OF 8 FOR POST SPACING DETAILS.

(2) WHEN SITE CONSTRAINTS PROHIBIT OR EMBANKMENT CANNOT BE CONSTRUCTED TO PROVIDE A MINIMUM OF 2 FEET BETWEEN THE BACK OF THE GUARDRAIL POST AND SLOPE BREAK POINT, 8 FOOT POSTS SHALL BE USED (SEE SHEET 6 OF 8).

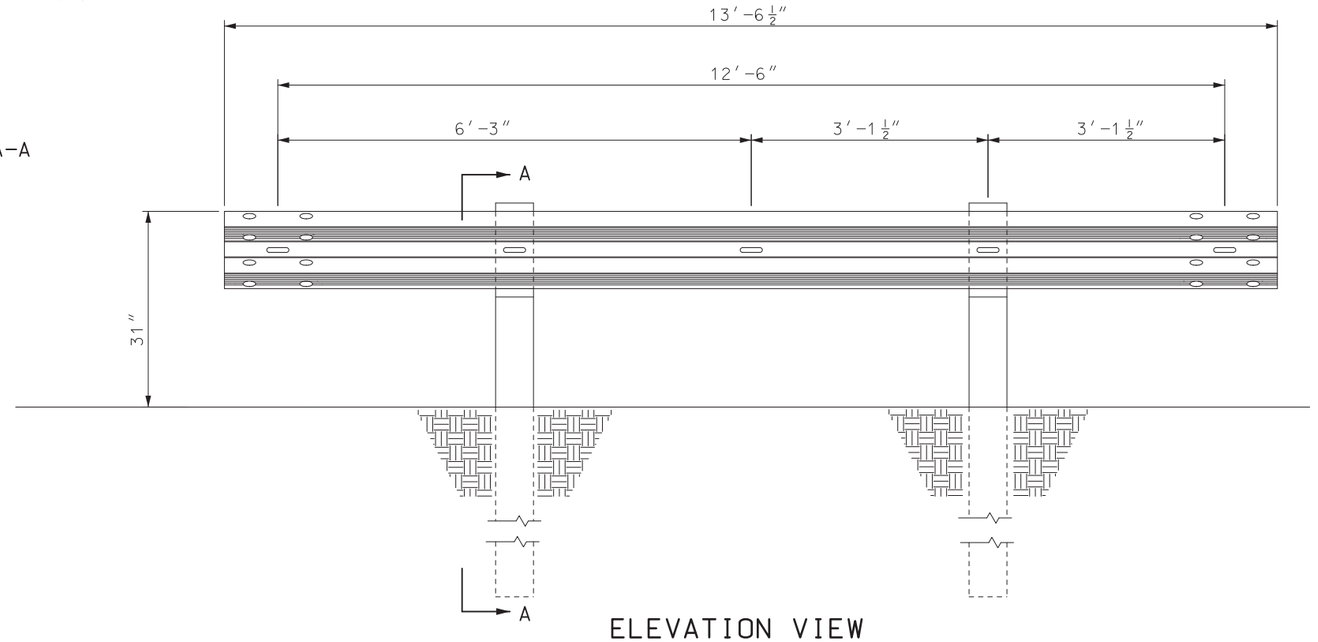

ELEVATION VIEW

GENERAL NOTES:

FOR INITIAL INSTALLATION, CONSTRUCT THE GUARDRAIL WITHIN 1″ OF THE STANDARD 31″ HEIGHT TO THE TOP OF W-BEAM RAIL. WHEN SUBSEQUENT PROJECTS, SUCH AS RESURFACINGS, AFFECT THE HEIGHT OF EXISTING GUARDRAIL, ADJUSTMENT IS NOT REQUIRED IF THE FINISHED HEIGHT IS WITHIN 3″ OF THE STANDARD HEIGHT.

THE STANDARD POST LENGTH IS 6′-0″ (+3″,-0″ TOLERANCE).

THE SUBSTITUTION OF 8 FOOT POSTS IN LIEU OF REQUIRED GRADING, TO CONSTRUCT LESS THAN THE DESIGNED TYPICAL SECTION, SHALL NOT BE ALLOWED.

REFER TO AASHTO M 180 FOR DIMENSIONAL DETAILS OF W-BEAM, RELATED BUFFER AND END SECTIONS, BEAM SPLICES, POST AND SPLICE BOLTS, NUTS, AND TYPE 1 W-BEAM TO THRIE BEAM TRANSITION SECTIONS.

BEAM WASHERS ARE NOT TO BE USED. BOLT GRADE SHALL BE ASTM A307.

UNLESS OTHERWISE SPECIFIED, W-BEAM RAIL IS 12 GAUGE STEEL WITH AN EFFECTIVE LENGTH OF 12′-6″ OR 25′-0″, WITH 29/32″ X 1 1/8″ SPLICE BOLT SLOTS, AND 3/4″ X 1/2″ POST BOLT SLOTS ON 3′-1 1/2″ CENTERS REGARDLESS OF POST SPACING.

FOR PROTECTIVE COATING AND MATERIAL REQUIREMENTS, SEE SEC 1040 OF THE STANDARD SPECIFICATIONS.

LAP SPLICES BETWEEN TWO RAILS OR BETWEEN A RAIL AND TERMINAL CONNECTOR IN THE DIRECTION OF TRAFFIC. LAP THE FLARED END SECTIONS IN THE DIRECTION OF TRAFFIC.

IF A SEAL IS PRESENT ON THIS SHEET IT HAS BEEN ELECTRONICALLY SEALED AND DATED.

MISSOURI HIGHWAYS AND TRANSPORTATION COMMISSION
105 WEST CAPITOL
JEFFERSON CITY, MO 65102
1-888-ASK-MODOT (1-888-275-6636)

STATE OF MISSOURI
ERIC E. SCHROETER
NUMBER PE-28411
PROFESSIONAL ENGINEER
THIS SHEET HAS BEEN SIGNED, SEALED AND DATED ELECTRONICALLY.

MIDWEST GUARDRAIL SYSTEM (MGS) GUARDRAIL

DATE EFFECTIVE: 01/01/2019
DATE PREPARED: 10/17/2018

606.50D

SHEET NO. 1 OF 8

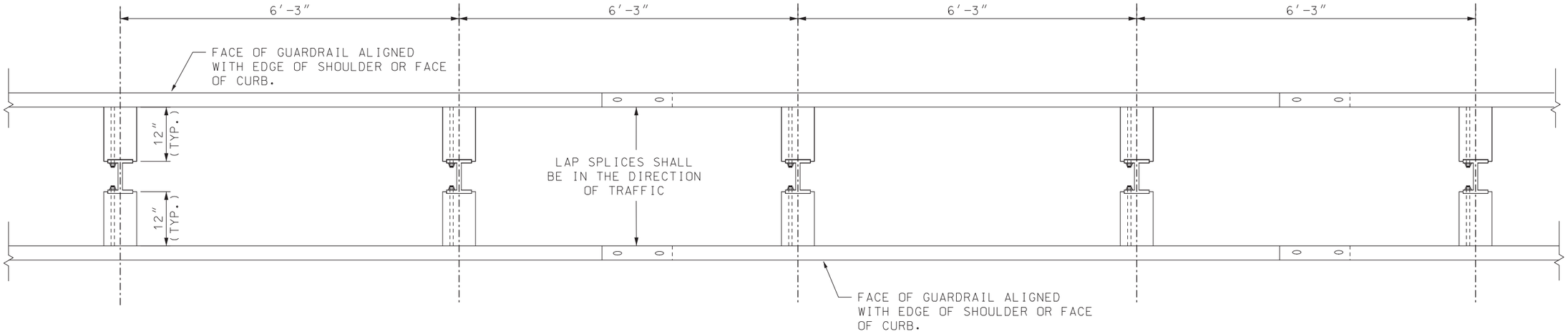

PLAN VIEW

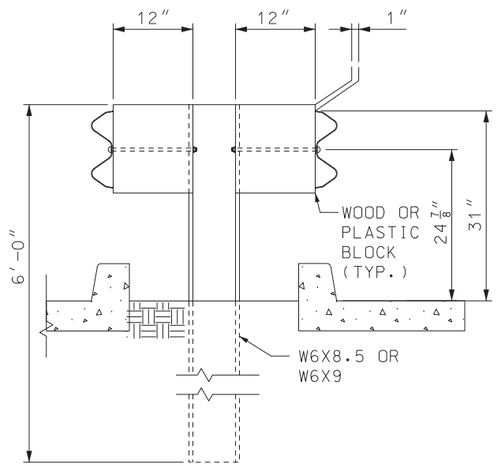

SECTION A-A

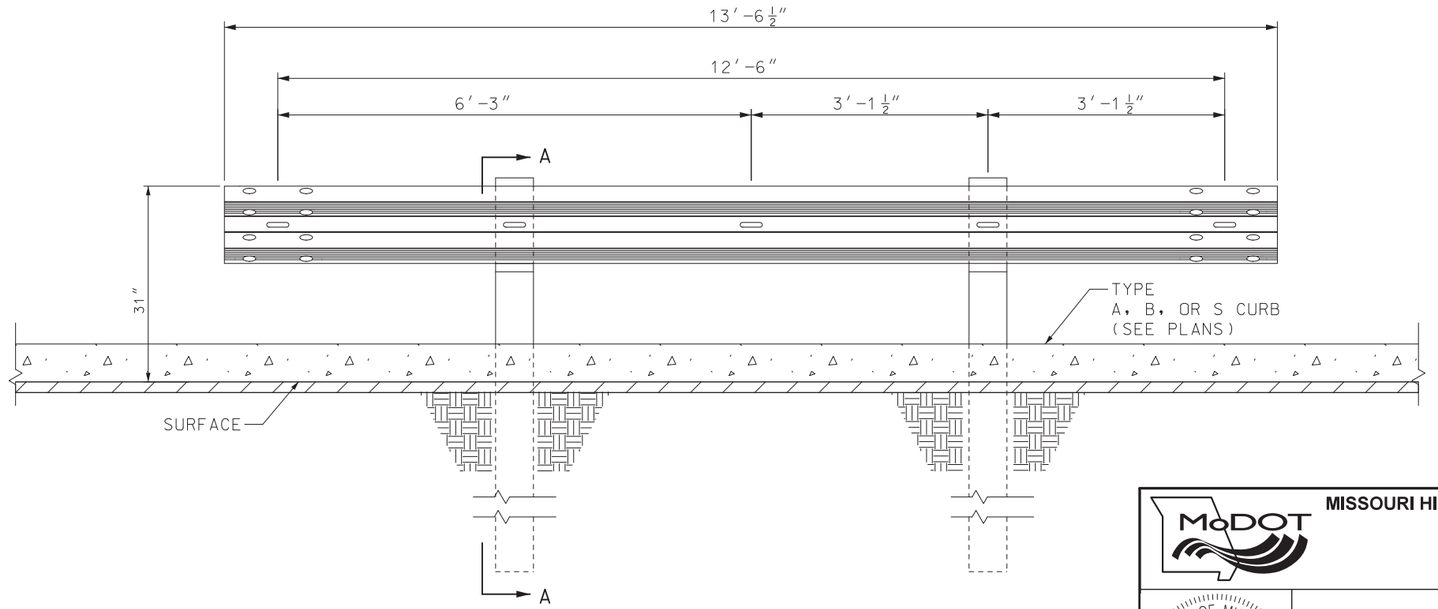

ELEVATION VIEW

IF A SEAL IS PRESENT ON THIS SHEET IT HAS BEEN ELECTRONICALLY SEALED AND DATED.

MISSOURI HIGHWAYS AND TRANSPORTATION COMMISSION
105 WEST CAPITOL
JEFFERSON CITY, MO 65102
1-888-ASK-MODOT (1-888-275-6636)

STATE OF MISSOURI
ERIC E. SCHROETER
NUMBER PE-2841
PROFESSIONAL ENGINEER
THIS SHEET HAS BEEN SIGNED, SEALED AND DATED ELECTRONICALLY.

MIDWEST GUARDRAIL SYSTEM (MGS) DOUBLE FACED GUARDRAIL

DATE EFFECTIVE: 01/01/2019
DATE PREPARED: 10/17/2018

606.50D

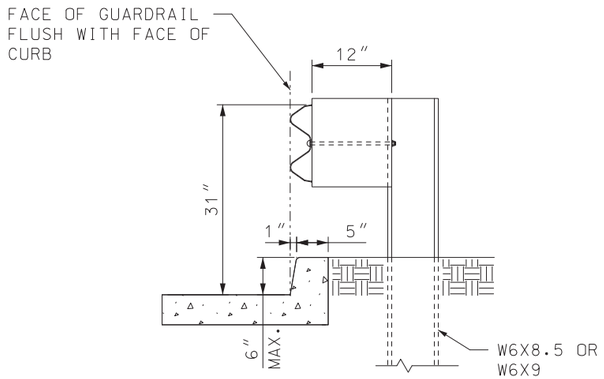

MGS GUARDRAIL AT CURB

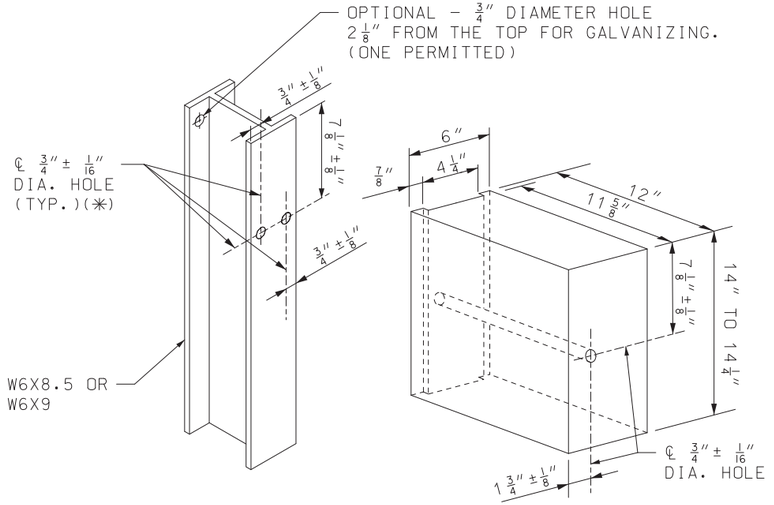

FOR STEEL POST AND NOTCHED WOOD OR PLASTIC BLOCK

HOLE PUNCHING DETAIL

(✳) TWO HOLES CAN BE PROVIDED ON EACH FLANGE OF POST, ONLY ONE IS REQUIRED FOR FLANGE OF POST THAT HAS A BLOCK ATTACHMENT.

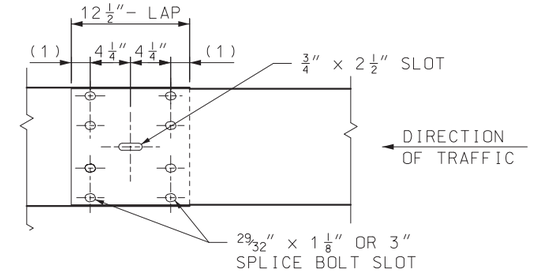

(1) 2″ (TOLERANCE +1 1/4″, – 1/4 ″)

RAIL ELEMENT SPLICE DETAIL

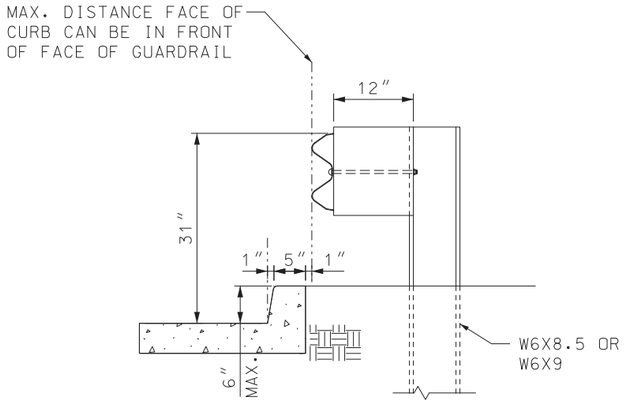

ALTERNATE MGS AT CURB

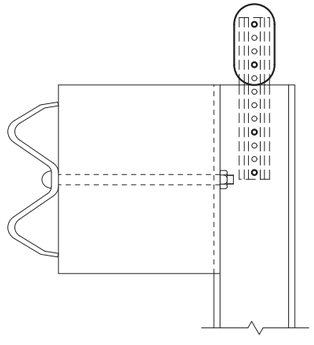

DELINEATORS ON GUARDRAIL

GENERAL NOTES:

FOR GUARDRAIL DELINEATION DETAILS SEE STD PLAN 903.03.

MISSOURI HIGHWAYS AND TRANSPORTATION COMMISSION
105 WEST CAPITOL
JEFFERSON CITY, MO 65102
1-888-ASK-MODOT (1-888-275-6636)

STATE OF MISSOURI
ERIC E. SCHROETER
NUMBER PE-28411
PROFESSIONAL ENGINEER
THIS SHEET HAS BEEN SIGNED, SEALED AND DATED ELECTRONICALLY.

MIDWEST GUARDRAIL SYSTEM (MGS) POST AND BLOCK

DATE EFFECTIVE: 01/01/2019
DATE PREPARED: 10/17/2018

606.50D

SHEET NO. 3 OF 8

IF A SEAL IS PRESENT ON THIS SHEET IT HAS BEEN ELECTRONICALLY SEALED AND DATED.

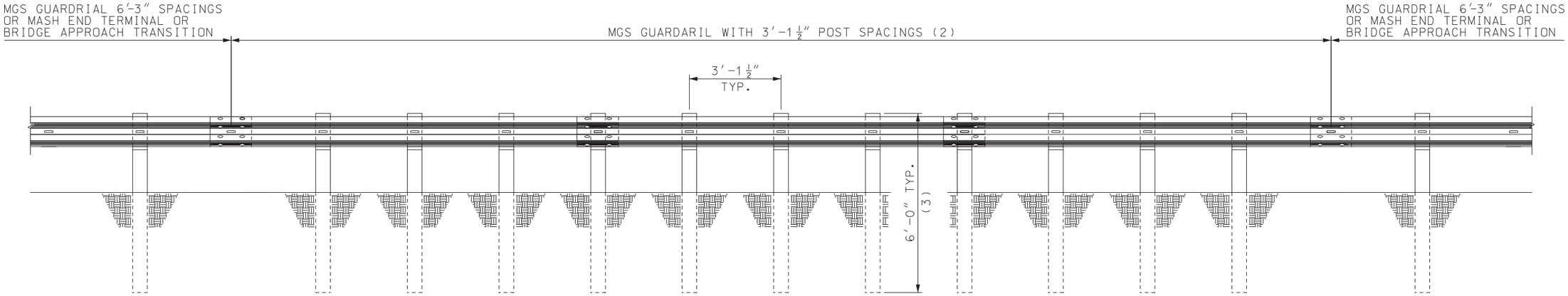

MGS GUARDRAIL WITH 3'-1 1/2" POST SPACING

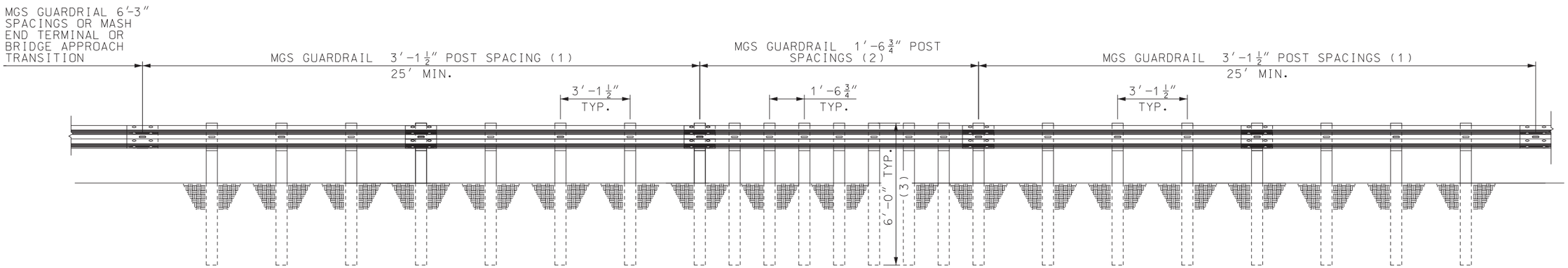

MGS GUARDRAIL WITH 1'-6 3/4" POST SPACING

(1) 25 FEET OF MGS 3'-1 1/2" POST SPACING GUARDRAIL IS REQIRED ON APPROACH AND DEPARTURE ENDS OF 1'-6 3/4" POST SPACING MGS GUARDRAIL.

(2) USE AS MANY SEGMENTS AS NECESSARY TO SHIELD THE AREA OF CONCERN.

(3) REDUCED POST SPACING SHALL USE 6'-0" POSTS MAX. ANY DEVIATION OF 6'-0" POSTS WILL ONLY BE ALLOWED IN ACCORDANCE WITH SPECIAL INSTALLATIONS AS SHOWN ON SHEET 5 OF 8.

GENERAL NOTES:

8' POSTS CANNOT BE USED WHEN:
- POST SPACING IS LESS THAN 6'-3"
- WITHIN CRASHWORTHY END TERMINALS (SEE MANUFACTURERS DRAWINGS)
- WITHIN VERTICAL BARRIER TRANSITIONS (606.60)
- WITHIN BRIDGE APPROACH TRANSITIONS (606.70)

MISSOURI HIGHWAYS AND TRANSPORTATION COMMISSION
105 WEST CAPITOL
JEFFERSON CITY, MO 65102
1-888-ASK-MODOT (1-888-275-6636)

STATE OF MISSOURI
ERIC E. SCHROETER
NUMBER PE-2841
PROFESSIONAL ENGINEER
THIS SHEET HAS BEEN SIGNED, SEALED AND DATED ELECTRONICALLY.

MIDWEST GUARDRAIL SYSTEM (MGS) REDUCED POST SPACINGS

DATE EFFECTIVE: 01/01/2019
DATE PREPARED: 10/17/2018

606.50D

SHEET NO. 4 OF 8

IF A SEAL IS PRESENT ON THIS SHEET IT HAS BEEN ELECTRONICALLY SEALED AND DATED.

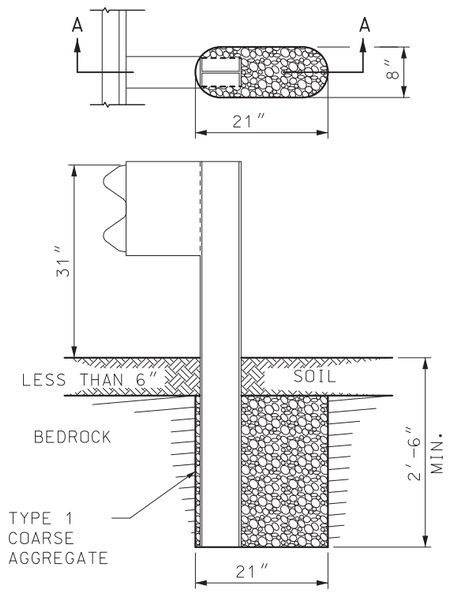

SECTION A-A

ROCK ENCOUNTERED
UP TO 6″ BENEATH SURFACE

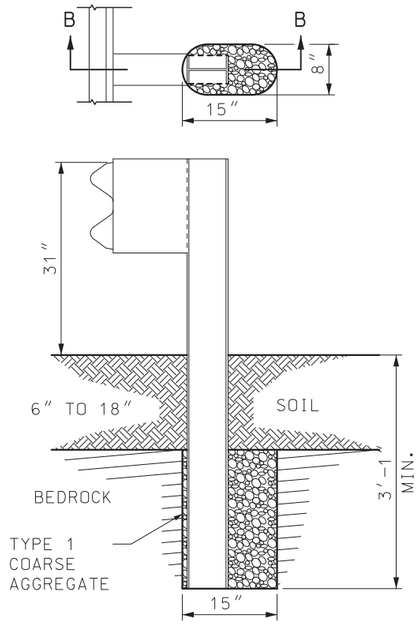

SECTION B-B

ROCK ENCOUNTERED
6″ TO 18″ BENEATH SURFACE

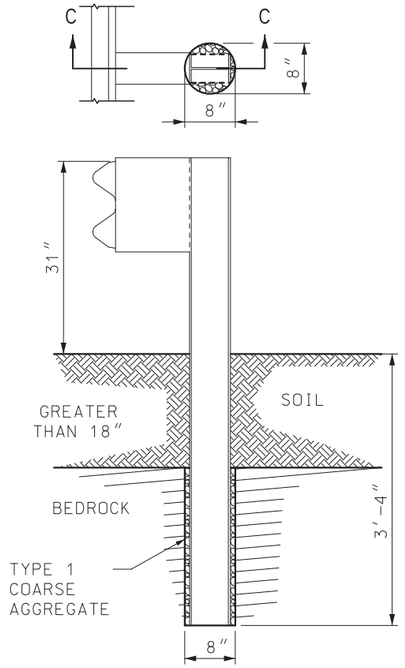

SECTION C-C

ROCK ENCOUNTERED MORE
THAN 18″ BENEATH SURFACE

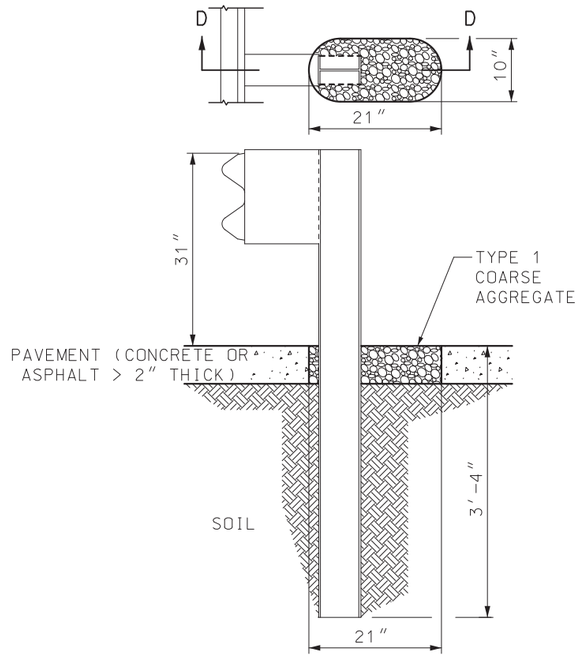

SECTION D-D

SETTING POST THROUGH PAVEMENT
(CONCRETE OR ASPHALT > 2″ THICK)

SETTING POST IN SOLID ROCK

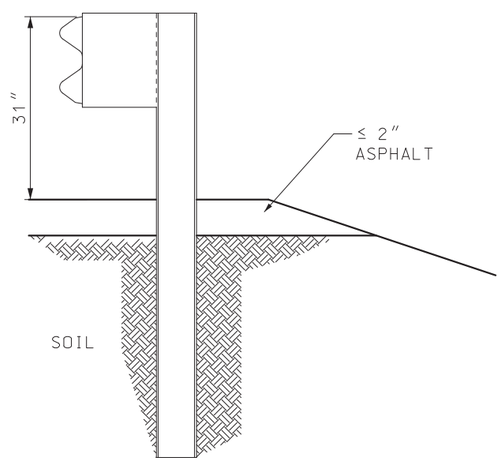

SETTING POST THROUGH ASPHALT ≤ 2″ THICK

GENERAL NOTES:

HOLES IN SOLID ROCK SHALL PROVIDE A DIAMETER OF NOT LESS THAN 4 INCHES GREATER THAN THE MAXIMUM TRANSVERSE DIMENSION OF THE POST SECTION.

POST MAY BE SHORTER WHERE PLACED IN 2 FEET OF SOLID ROCK. STEEL POSTS MAY BE FLAME OR SAW CUT. REPAIR OF CUT SHALL BE IN ACCORDANCE WITH SEC 712 OF THE STANDARD SPECIFICATIONS.

MISSOURI HIGHWAYS AND TRANSPORTATION COMMISSION
105 WEST CAPITOL
JEFFERSON CITY, MO 65102
1-888-ASK-MODOT (1-888-275-6636)

STATE OF MISSOURI
ERIC E. SCHROETER
NUMBER PE-28411
PROFESSIONAL ENGINEER
THIS SHEET HAS BEEN SIGNED, SEALED AND DATED ELECTRONICALLY.

MIDWEST GUARDRAIL SYSTEM (MGS) SPECIAL INSTALLATIONS

DATE EFFECTIVE: 01/01/2019
DATE PREPARED: 10/17/2018

606.50D

SHEET NO. 5 OF 8

IF A SEAL IS PRESENT ON THIS SHEET IT HAS BEEN ELECTRONICALLY SEALED AND DATED.

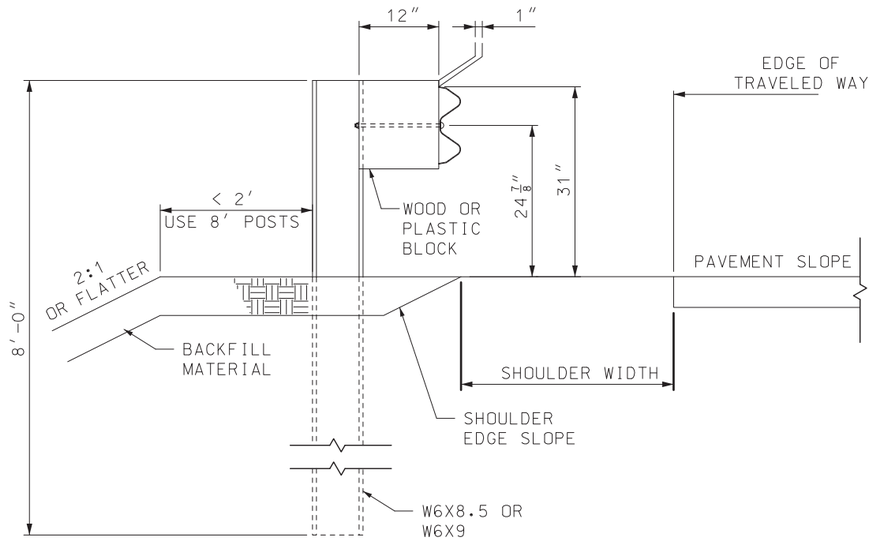

SECTION A–A
8′ STEEL POST

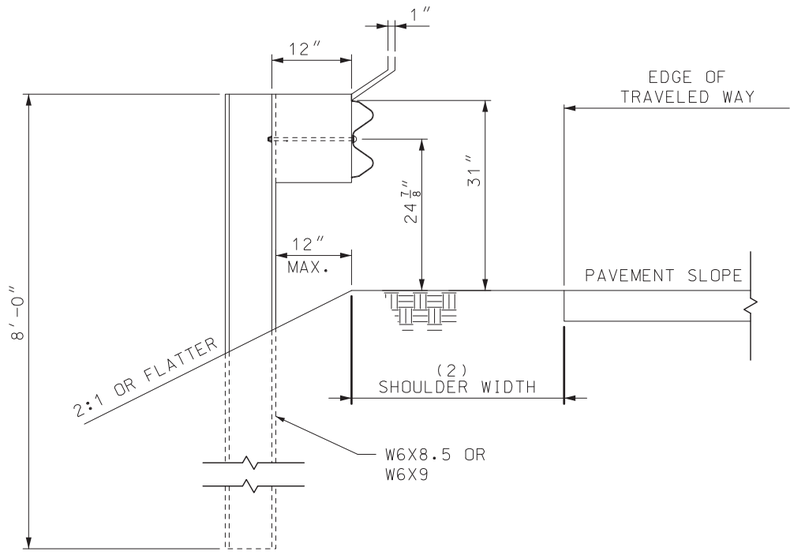

ALTERNATE SECTION A–A
MAXIMUM LATERAL PLACEMENT OF
8′ STEEL POSTS ADJACENT TO
SLOPES

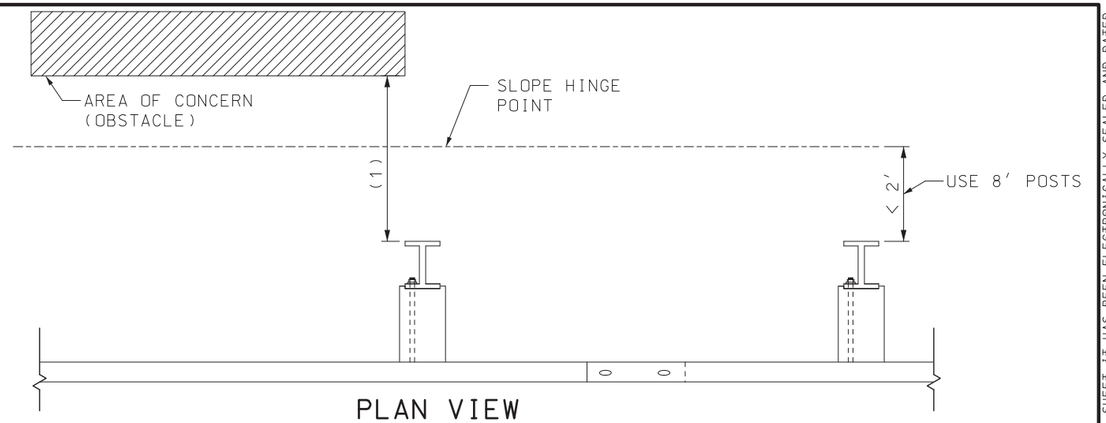

PLAN VIEW

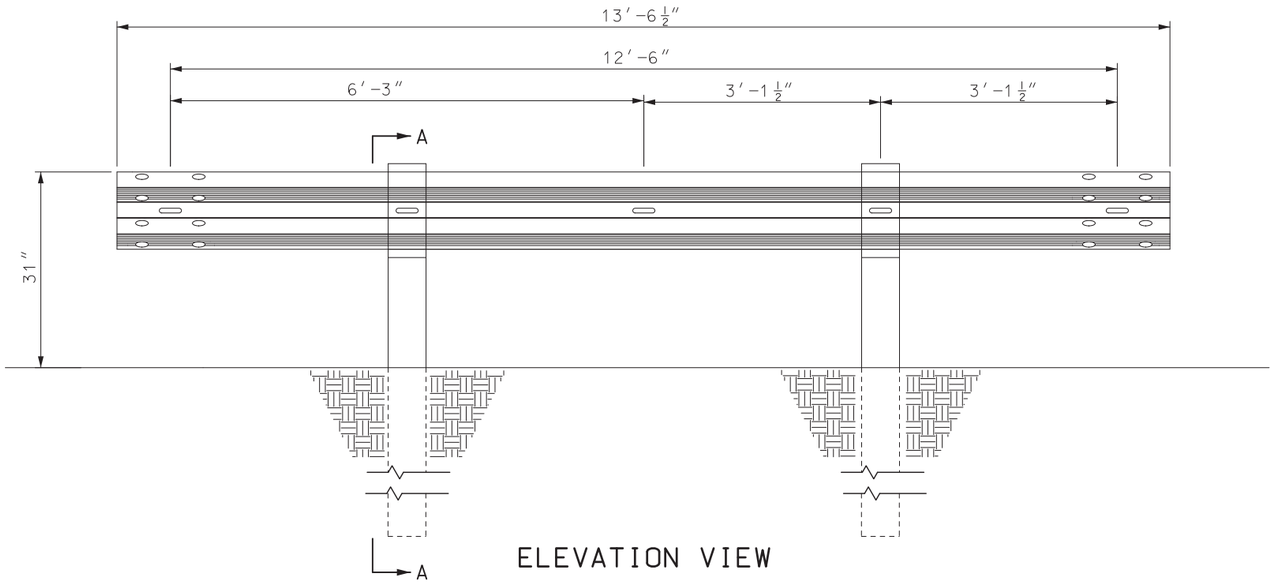

ELEVATION VIEW

(1) 3′-6″ MINIMUM CLEARANCE TO THE FACE OF OBSTACLE WITH 8′ POSTS ADJACENT TO A 2:1 SLOPE.

(2) WHERE THERE IS NOT SUFFICIENT EMBANKMENT BEYOND THE SHOULDER TO PLACE THE GUARDRAIL POST, THE POSTS MAY BE PLACED A MAXIMUM OF 12″ BEYOND THE SLOPE BREAK POINT OF A 2:1 OR FLATTER SLOPE.

GENERAL NOTES:

SEE STD. PLAN 606.81 FOR SITE GRADING REQUIREMENTS FOR CRASHWORTHY END TERMINALS.

8 FOOT POSTS SHALL BE USED WHEN LESS THAN 2 FEET OF EMBANKMENT IS PRESENT BETWEEN THE BACK OF THE GUARDRAIL POST AND THE SLOPE BREAK POINT. THE SUBSTITUTION OF 8 FOOT POSTS IN LIEU OF REQUIRED GRADING, TO CONSTRUCT LESS THAN THE DESIGNED TYPICAL SECTION, SHALL NOT BE ALLOWED.

IF A SEAL IS PRESENT ON THIS SHEET IT HAS BEEN ELECTRONICALLY SEALED AND DATED.

MISSOURI HIGHWAYS AND TRANSPORTATION COMMISSION
105 WEST CAPITOL
JEFFERSON CITY, MO 65102
1-888-ASK-MODOT (1-888-275-6636)

STATE OF MISSOURI
ERIC E. SCHROETER
NUMBER PE-28411
PROFESSIONAL ENGINEER
THIS SHEET HAS BEEN SIGNED, SEALED AND DATED ELECTRONICALLY.

MIDWEST GUARDRAIL SYSTEM (MGS) 8 FT. POST

DATE EFFECTIVE: 01/01/2019
DATE PREPARED: 10/17/2018

606.50D

SHEET NO. 6 OF 8

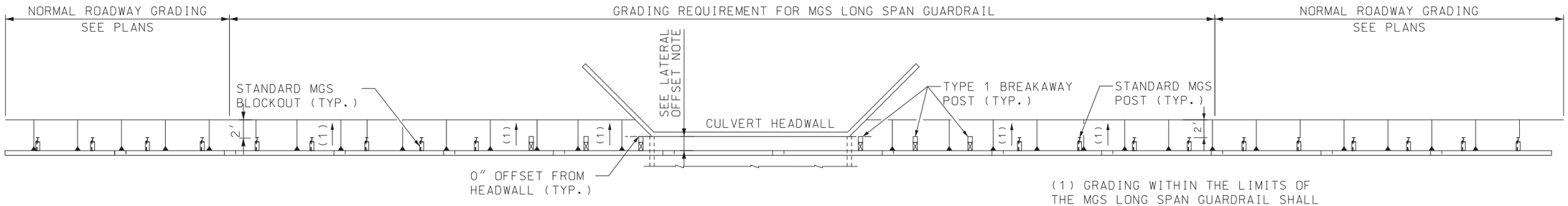

PLAN VIEW

(1) GRADING WITHIN THE LIMITS OF THE MGS LONG SPAN GUARDRAIL SHALL BE THE SAME CROSS SLOPE AS SHOULDER.

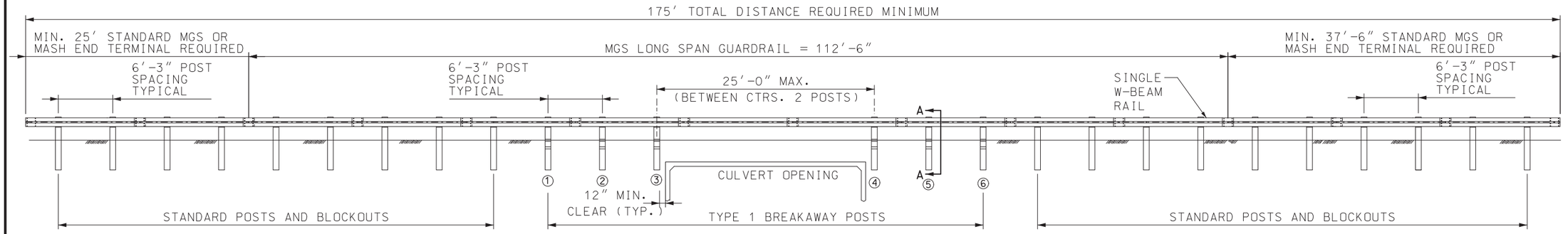

ELEVATION VIEW

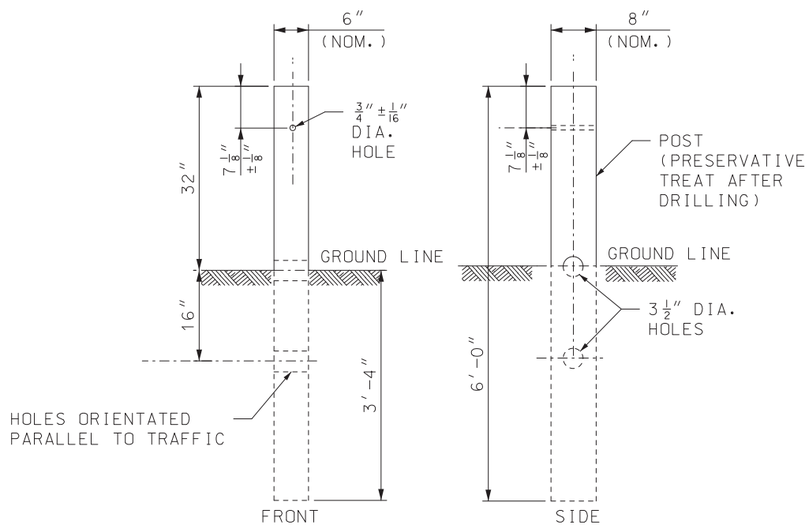

TYPE 1 BREAKAWAY WOOD POST

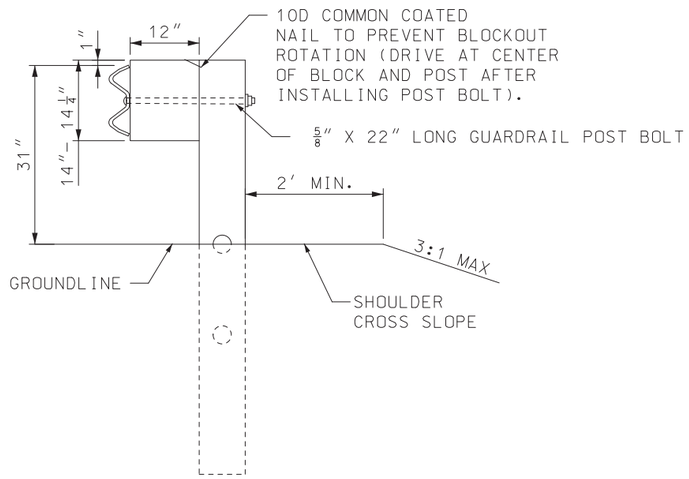

SECTION A-A

NOTES:
A MINIMUM LENGTH OF STANDARD MGS GUARDRAIL OR AN END TERMINAL IS REQUIRED BEFORE THE 112'-6" OF MGS LONG SPAN AND AFTER TO MAINTAIN STABILITY IN THE SYSTEM. 8'POSTS MAY BE USED OUTSIDE THE GRADING LIMITS SHOWN.

USE TYPE 1 BREAKAWAY WOOD POST FOR POSTS NO. 1-6. ALL OTHER POSTS SHALL BE W6X8.5 OR W6X9 STEEL POSTS.

WHEN THE HEADWALL IS FLUSH WITH THE GRADE, THE BACK OF THE POST CAN BE ALIGNED WITH THE NEAR SIDE OF THE HEADWALL. BUT IF THE HEADWALL CONTINUES ABOVE GRADE, THE SYSTEM SHOULD BE OFFSET 8' FROM THE FIXED OBJECT.

FOR LOCATIONS WHERE A GUARDRAIL FLARE IS DESIRED, THE SYSTEM SHOULD REMAIN TANGENT FOR 50'-0" BEFORE POST 1 OR AFTER POST 6, AT WHICH POINT THE GUARDRAIL MAY FLARE AT A MAXIMUM TAPER RATE OF 7:1.

ALL POSTS, BLOCK, RAILS, AND HARDWARE SHALL COMPLY WITH SEC 606, MGS GUARDRAIL AND AS DETAILED ON THIS STANDARD.

MISSOURI HIGHWAYS AND TRANSPORTATION COMMISSION
105 WEST CAPITOL
JEFFERSON CITY, MO 65102
1-888-ASK-MODOT (1-888-275-6636)

STATE OF MISSOURI
ERIC E. SCHROETER
NUMBER PE-28411
PROFESSIONAL ENGINEER
THIS SHEET HAS BEEN SIGNED, SEALED AND DATED ELECTRONICALLY.

MIDWEST GUARDRAIL SYSTEM (MGS) LONG SPAN GUARDRAIL

DATE EFFECTIVE: 01/01/2019
DATE PREPARED: 10/17/2018

606.50D

SHEET NO. 7 OF 8

IF A SEAL IS PRESENT ON THIS SHEET IT HAS BEEN ELECTRONICALLY SEALED AND DATED.

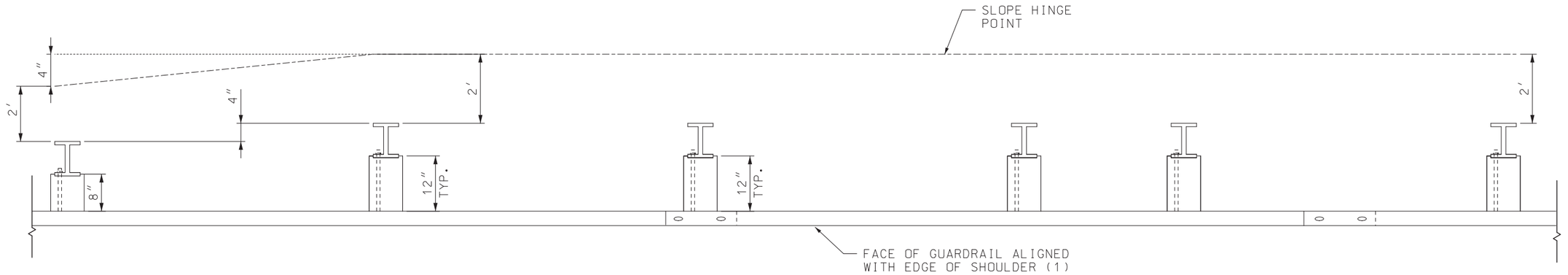

PLAN VIEW

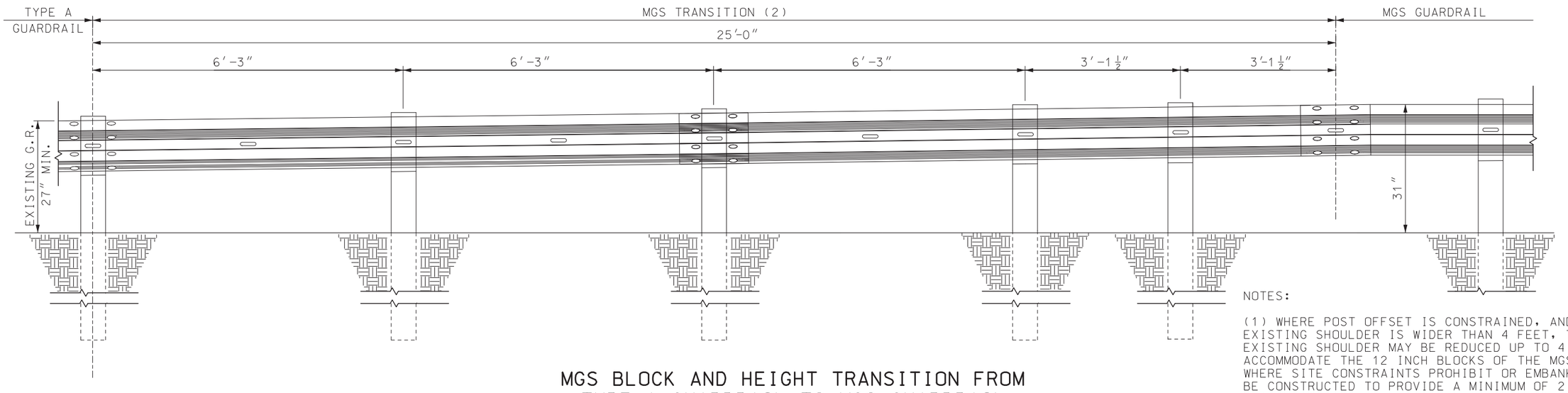

MGS BLOCK AND HEIGHT TRANSITION FROM TYPE A GUARDRAIL TO MGS GUARDRAIL

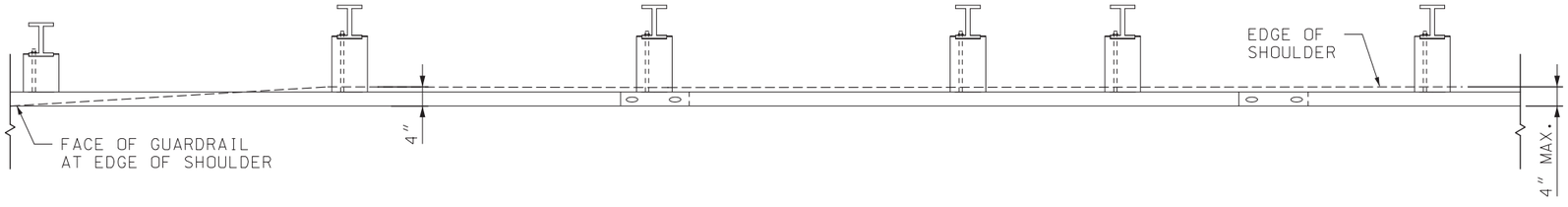

ALTERNATE PLAN VIEW – ALIGNMENT TAPER

SEE NOTE (1)

NOTES:

(1) WHERE POST OFFSET IS CONSTRAINED, AND WHEN THE EXISTING SHOULDER IS WIDER THAN 4 FEET, THE EXISTING SHOULDER MAY BE REDUCED UP TO 4 INCHES TO ACCOMMODATE THE 12 INCH BLOCKS OF THE MGS GUARDRAIL. WHERE SITE CONSTRAINTS PROHIBIT OR EMBANKMENT CANNOT BE CONSTRUCTED TO PROVIDE A MINIMUM OF 2 FEET BETWEEN THE BACK OF THE GUARDRAIL POST AND SLOPE BREAK POINT, 8 FOOT POSTS SHALL BE USED (SEE SHEET 6 OF 8). THE SUBSTITUTION OF 8 FOOT POSTS FOR REQUIRED GRADING SHALL NOT BE ALLOWED.

(2) MGS TRANSITION FROM TYPE A GUARDRAIL SHALL BE COMPLETED OUTSIDE THE 50′ MGS END TERMINAL LIMITS.

IF A SEAL IS PRESENT ON THIS SHEET IT HAS BEEN ELECTRONICALLY SEALED AND DATED.

MISSOURI HIGHWAYS AND TRANSPORTATION COMMISSION
105 WEST CAPITOL
JEFFERSON CITY, MO 65102
1-888-ASK-MODOT (1-888-275-6636)

STATE OF MISSOURI
ERIC E. SCHROETER
NUMBER PE-28411
PROFESSIONAL ENGINEER
THIS SHEET HAS BEEN SIGNED, SEALED AND DATED ELECTRONICALLY.

MIDWEST GUARDRAIL SYSTEM (MGS) BLOCK AND HEIGHT TRANSITION

DATE EFFECTIVE: 01/01/2019
DATE PREPARED: 10/17/2018

606.50D

SHEET NO. 8 OF 8

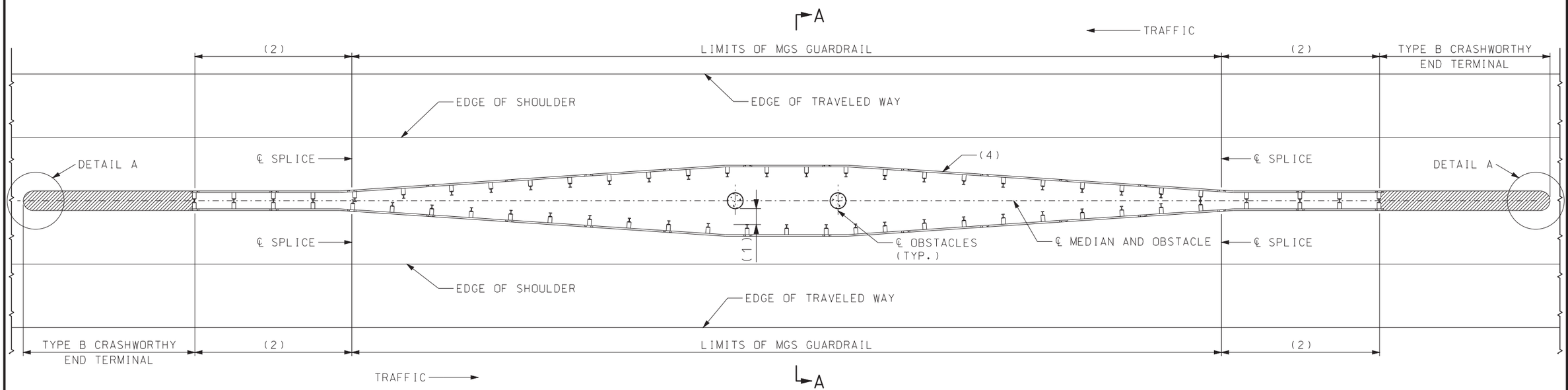

PIER AT ℄ MEDIAN

(1) 3′-0″ MINIMUM CLEARANCE TO THE FACE OF OBSTACLE WITH 6′-3″ POST SPACING IS PREFERRED
2′-0″ MINIMUM CLEARANCE USE 3′-1 $\frac{1}{2}$″ POST SPACING
1′-6″ MINIMUM CLEARANCE USE 1′-6 $\frac{3}{4}$″ POST SPACING
SEE STD. PLANS 606.50 FOR POST SPACING DETAILS.

(2) TRANSITION DOUBLE FACED GUARDRAIL HEIGHT AND WIDTH IF NEEDED FOR TYPE B CRASHWORTHY END TERMINAL PER MANUFACTURE'S REQUIREMENTS. SEE STD. PLANS 606.50 FOR HEIGHT TRANSITION DETAILS.

(3) CONTINUE 10:1 SLOPE TO OBSTACLE OR A MINIMUM OF 2′ PAST THE BACK OF THE GUARDRAIL POST.

(4) 15:1 FLARE RATE OR AS RECOMMENDED BY TABLE 5-9 OF THE LATEST VERSION OF THE "ROADSIDE DESIGN GUIDE".

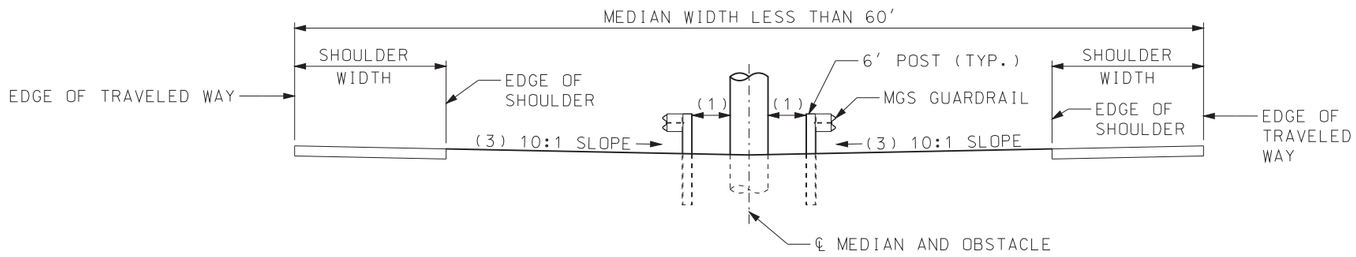

SECTION A–A

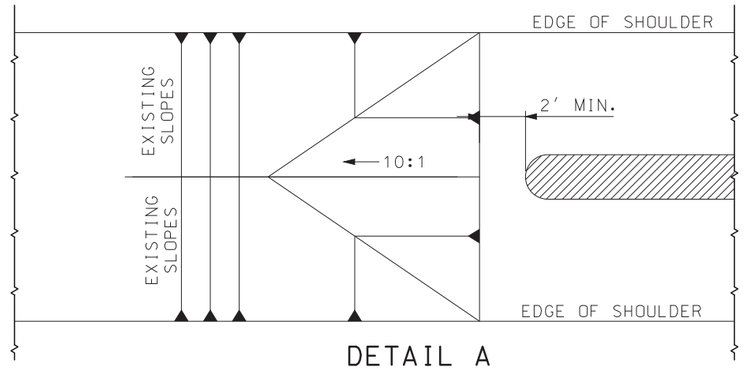

DETAIL A
(GRADING LIMITS)

GENERAL NOTE:

TYPE B CRASHWORTHY END TERMINAL SHALL BE MGS COMPATIBLE, LATEST VERSION AND SHALL BE INSTALLED ACCORDING TO MANUFACTURER'S RECOMMENDATIONS.

IF A SEAL IS PRESENT ON THIS SHEET IT HAS BEEN ELECTRONICALLY SEALED AND DATED.

MISSOURI HIGHWAYS AND TRANSPORTATION COMMISSION
105 WEST CAPITOL
JEFFERSON CITY, MO 65102
1-888-ASK-MODOT (1-888-275-6636)

STATE OF MISSOURI
ERIC E. SCHROETER
NUMBER PE-28411
PROFESSIONAL ENGINEER
THIS SHEET HAS BEEN SIGNED, SEALED AND DATED ELECTRONICALLY.

MGS GUARDRAIL MEDIAN PIER PROTECTION

MEDIAN LESS THAN 60′

DATE EFFECTIVE: 10/01/2017
DATE PREPARED: 8/8/2017

606.51

SHEET NO. 1 OF 2

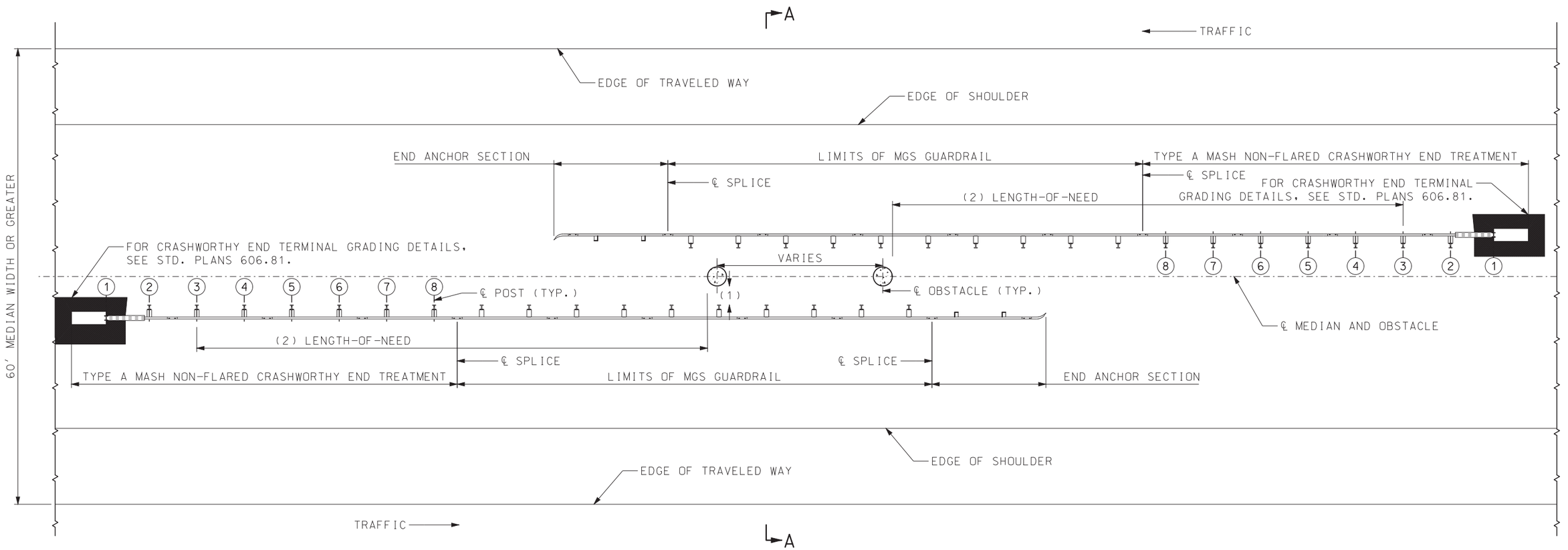

PIER AT ℄ MEDIAN

(1) 3'-0" MINIMUM CLEARANCE TO THE FACE OF OBSTACLE WITH 6'-3" POST SPACING IS PREFERRED
2'-0" MINIMUM CLEARANCE USE 3'-11#2" POST SPACING
1'-6" MINIMUM CLEARANCE USE 1'-63#4" POST SPACING
SEE STD. PLANS 606.50 FOR POST SPACING DETAILS.

(2) FOR LENGTH-OF-NEED, SEE THE LATEST VERSION OF THE "ROADSIDE DESIGN GUIDE 5.6.4 LENGTH-OF-NEED".

(3) CONTINUE 10:1 SLOPE TO OBSTACLE OR A MINIMUM OF 2' PAST THE BACK OF THE GUARDRAIL POST.

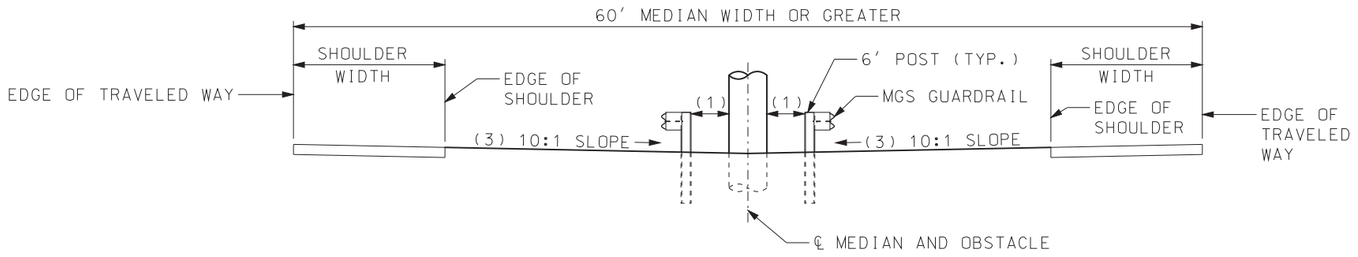

SECTION A-A

GENERAL NOTE:
MEDIAN WIDTHS GREATER THAN 60' THAT THE PIER OBSTACLES ARE BEYOND THE CLEAR-ZONE DO NOT REQUIRE MEDIAN PIER PROTECTION. FOR CLEAR-ZONE DISTANCES, SEE THE LASTEST VERSION OF THE "ROADSIDE DESIGN GUIDE 3.1 THE CLEAR-ZONE CONCEPT".

TYPE A NON-FLARED CRASHWORTHY END TERMAINAL SHALL BE THE LATEST VERSION AND SHALL BE INSTALLED ACCORDING TO MANUFACTURER'S RECOMMENDATIONS.

MISSOURI HIGHWAYS AND TRANSPORTATION COMMISSION
105 WEST CAPITOL
JEFFERSON CITY, MO 65102
1-888-ASK-MODOT (1-888-275-6636)

STATE OF MISSOURI
ERIC E. SCHROETER
NUMBER PE-28411
PROFESSIONAL ENGINEER
THIS SHEET HAS BEEN SIGNED, SEALED AND DATED ELECTRONICALLY.

MGS GUARDRAIL MEDIAN PIER PROTECTION

60' MEDIAN OR GREATER

DATE EFFECTIVE: 04/01/2018
DATE PREPARED: 2/9/2018

606.51

SHEET NO. 2 OF 2

IF A SEAL IS PRESENT ON THIS SHEET IT HAS BEEN ELECTRONICALLY SEALED AND DATED.

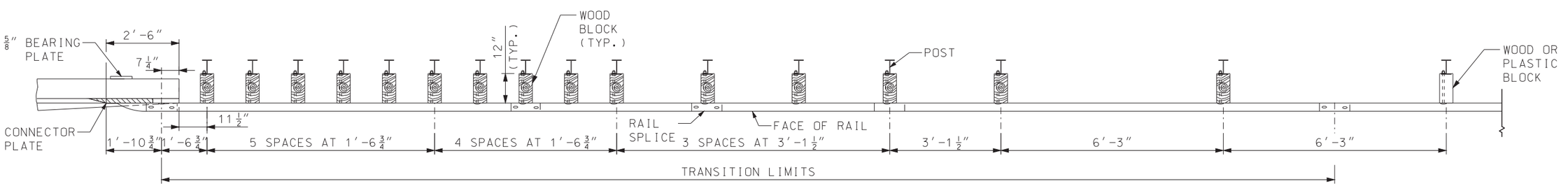

PLAN VIEW

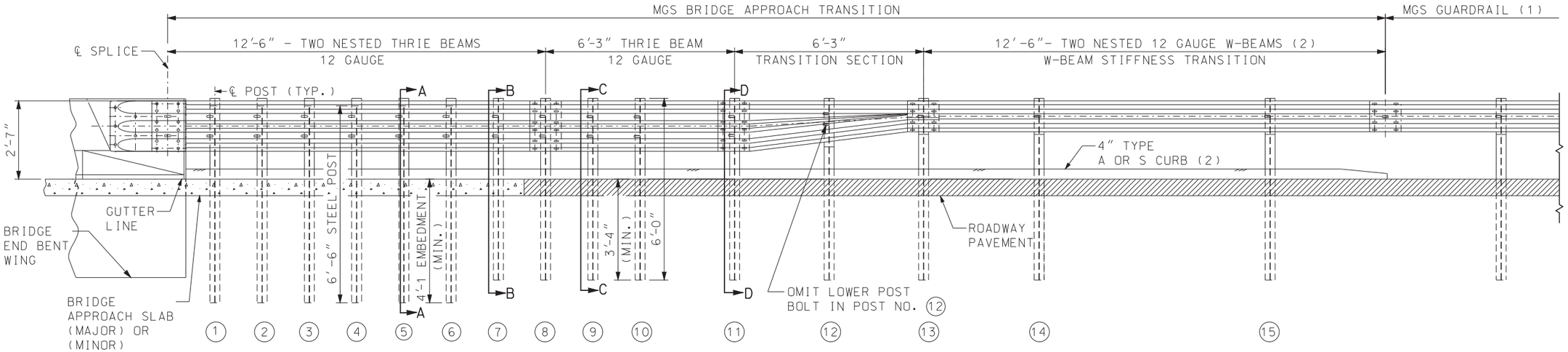

BRIDGE APPROACH TRANSITION (EXTENDED CURB)(2)

GENERAL NOTES:
MGS GUARDRAIL SHALL BE TANGENTIAL WITH BRIDGE APPROACH TRANSITION FOR 12'-6" BEYOND THE TWO NESTED W-BEAM STIFFNESS TRANSITION AND 25'-0" BEYOND THRIE BEAM TRANSITION SECTION.

AT THE CONTRACTORS OPTION, A SINGLE 18'-9" PIECE OF THRIE BEAM MAY BE SUBSTITUTED FOR ONE OF THE 12'-6" PANELS AND THE 6'-3" SECTION AS SHOWN.

FOR PROTECTIVE COATING AND MATERIAL REQUIREMENTS, SEE SEC 1040 OF THE STANDARD SPECIFICATIONS.

RAIL POSTS SHALL BE SET PERPENDICULAR TO THE ROADWAY PROFILE GRADE AND VERTICALLY IN CROSS SECTION.

USE 5/8" BUTTON-HEAD OVAL SHOULDER BOLTS WITH HEX NUTS AT ALL SLOTS (THICKNESS OF HEX NUTS = 3/8" MIN.).

THE BEARING PLATE SHALL BE FABRICATED FROM GRADE A36 STEEL AND GALVANIZED.

ALL LAP SPLICES, INCLUDING END SHOES, SHALL BE MADE IN THE DIRECTION OF TRAFFIC.

THE COST OF FURNISHING, FABRICATING AND INSTALLING BRIDGE APPROACH TRANSITION (EXTENDED CURB), COMPLETE IN PLACE, WILL BE PAID FOR AT THE CONTRACT UNIT PRICE PER EACH.

THE CONTRACTOR MAY, AT THEIR OPTION, FURNISH EQUIVALENT SECTIONS FABRICATED FROM MATERIAL MEETING AND IN ACCORDANCE WITH THE REQUIREMENTS OF ASTM A769 GRADE 36 OR 40. THE SECTIONS SHALL BE GALVANIZED AFTER FABRICATION IN ACCORDANCE WITH REQUIREMENTS OF AASHTO M 111.

(1) PLACE THE FIRST POST OF THE MGS 6'-3" PAST THE LAST POST OF THE BRIDGE APPROACH TRANSITION TO KEEP POSTS OFFSET FROM THE RAIL SPLICES.

(2) WHERE CURB EXTENDS UPSTREAM OF POST NO. (11) FOR DRAINAGE PURPOSES, A STIFFNESS TRANSITION CONSISTING OF AN EXTRA 12'-6" BEAM OF 12 GAUGE W-BEAM MUST BE NESTED PRIOR TO THE TRANSITION SECTION (UPSTREAM OF POST NO. (13)). THE CURB SHALL BE EXTENDED TO THE END OF THE 12'-6" 12 GAUGE W-BEAM STIFFNESS TRANSITION SEE STD. PLAN 609.40 FOR DETAILS. WHEN CURBS DO NOT EXTEND UPSTREAM OF POST NO. (11), PAY FOR A BRIDGE APPROACH TRANSITION (REGULAR CURB/NO CURB). FOR DETAILS OF BRIDGE APPROACH TRANSITION (REGULAR CURB/NO CURB), SEE SHEET 2 OF 6.

MISSOURI HIGHWAYS AND TRANSPORTATION COMMISSION
105 WEST CAPITOL
JEFFERSON CITY, MO 65102
1-888-ASK-MODOT (1-888-275-6636)

STATE OF MISSOURI
ERIC E. SCHROETER
NUMBER PE-28411
PROFESSIONAL ENGINEER
THIS SHEET HAS BEEN SIGNED, SEALED AND DATED ELECTRONICALLY.

MIDWEST GUARDRAIL SYSTEM (MGS) VERTICAL BARRIER TRANSITIONS

DATE EFFECTIVE: 04/01/2018
DATE PREPARED: 2/9/2018

606.60B

SHEET NO. 1 OF 6

IF A SEAL IS PRESENT ON THIS SHEET IT HAS BEEN ELECTRONICALLY SEALED AND DATED.

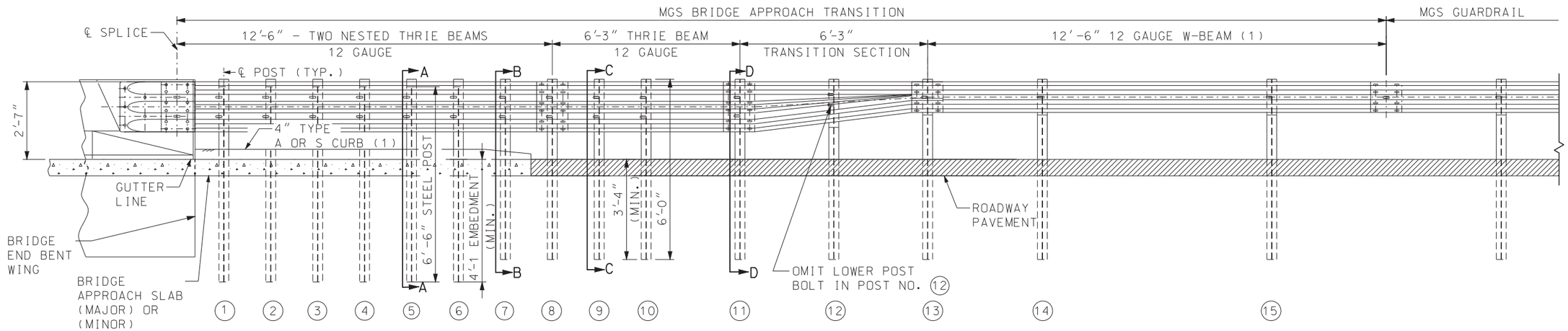

BRIDGE APPROACH TRANSITION (WITH REGULAR LENGTH CURB OR NO CURB)(1)

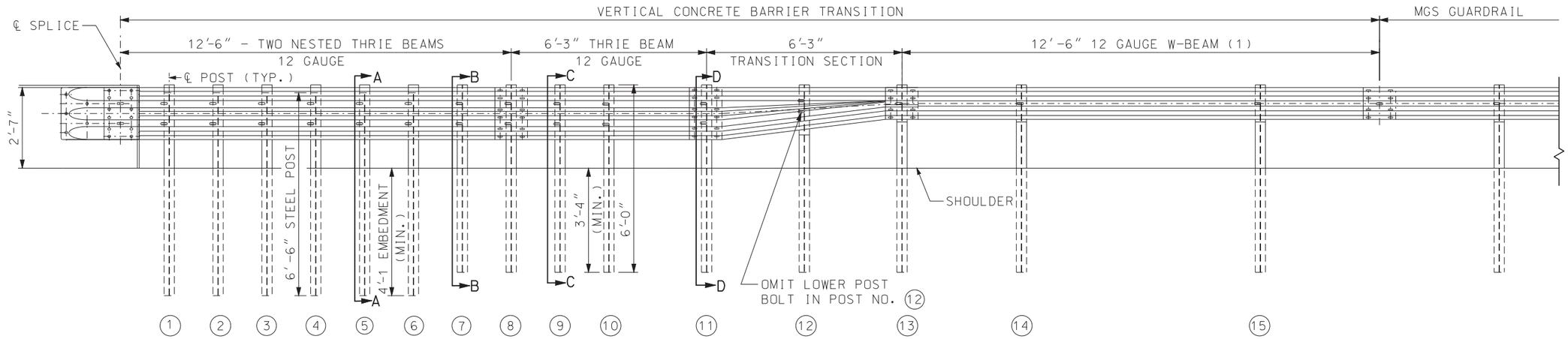

VERTICAL CONCRETE BARRIER TRANSITION (REGULAR LENGTH CURB OR NO CURB)(1)

(VIEW SHOWN WITHOUT CURB)

GENERAL NOTES:
SEE SHEET 1 FOR ADDITIONAL NOTES NOT INCLUDED ON THIS SHEET.

THE COST OF FURNISHING, FABRICATING AND INSTALLING BRIDGE APPROACH TRANSITION (REGULAR/NO CURB), COMPLETE IN PLACE, WILL BE PAID FOR AT THE CONTRACT UNIT PRICE PER EACH.

(1) WHERE CURB EXTENDS UPSTREAM OF POST NO. (11) FOR DRAINAGE PURPOSES, A STIFFNESS TRANSITION CONSISTING OF AN EXTRA 12'-6" BEAM OF 12 GAUGE W-BEAM MUST BE NESTED PRIOR TO THE TRANSITION SECTION (UPSTREAM OF POST NO. (13)). THE CURB SHALL BE EXTENDED TO THE END OF THE 12'-6" 12 GAUGE W-BEAM STIFFNESS TRANSITION SEE STD. PLAN 609.40 FOR DETAILS. IF CURB EXTENDS BEYOND POST NO. (11), PAY FOR A BRIDGE APPROACH TRANSITION (EXTENDED CURB).

MISSOURI HIGHWAYS AND TRANSPORTATION COMMISSION
105 WEST CAPITOL
JEFFERSON CITY, MO 65102
1-888-ASK-MODOT (1-888-275-6636)

STATE OF MISSOURI
ERIC E. SCHROETER
NUMBER PE-28411
PROFESSIONAL ENGINEER
THIS SHEET HAS BEEN SIGNED, SEALED AND DATED ELECTRONICALLY.

MIDWEST GUARDRAIL SYSTEM (MGS) VERTICAL BARRIER TRANSITIONS

DATE EFFECTIVE: 07/01/2017
DATE PREPARED: 5/1/2017

606.60B

SHEET NO. 2 OF 6

IF A SEAL IS PRESENT ON THIS SHEET IT HAS BEEN ELECTRONICALLY SEALED AND DATED.

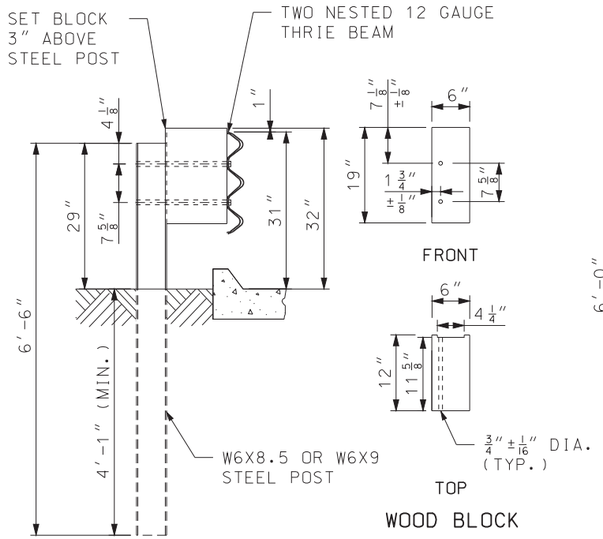

SECTION A-A

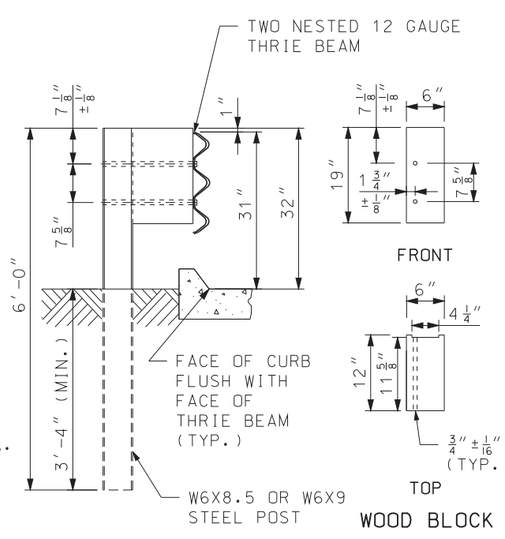

SECTION B-B

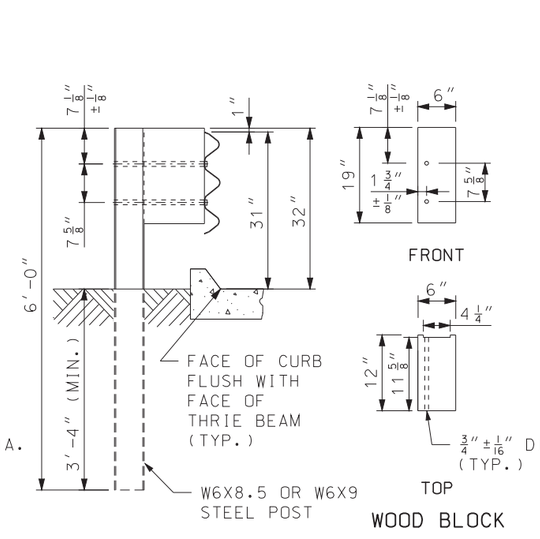

SECTION C-C

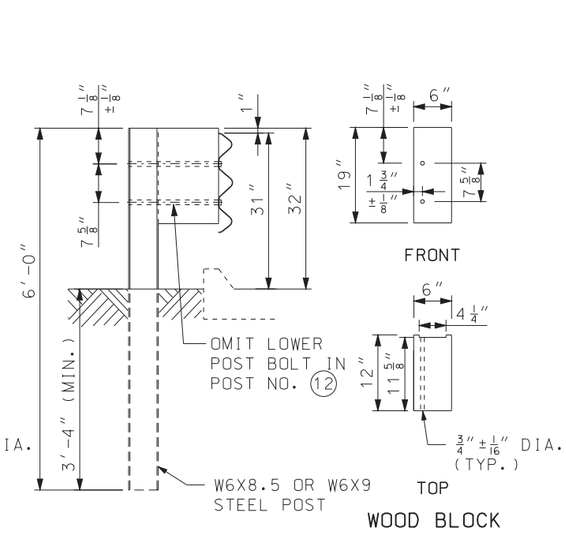

SECTION D-D

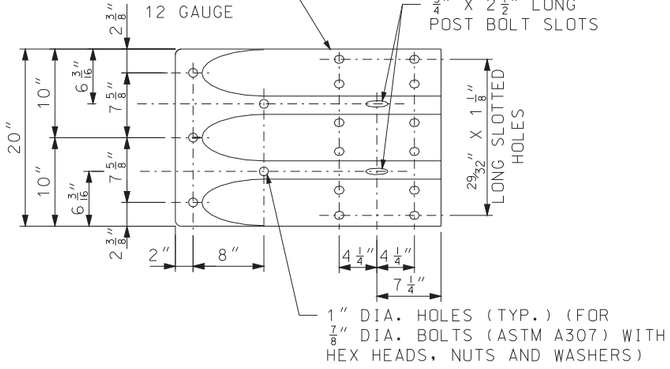

TERMINAL CONNECTOR

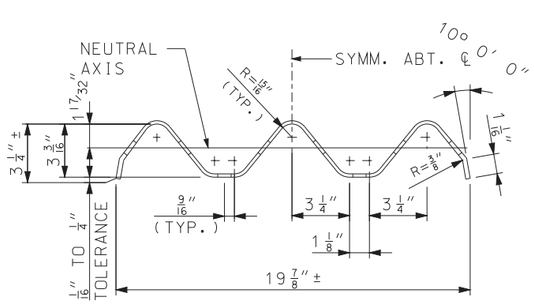

SECTION THROUGH THRIE BEAM RAIL

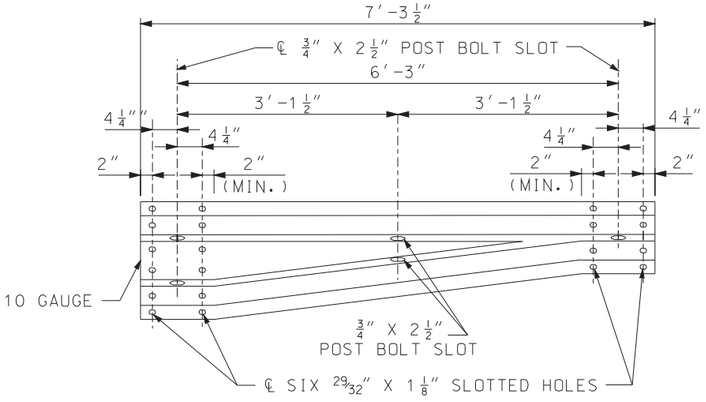

TRANSITION SECTION

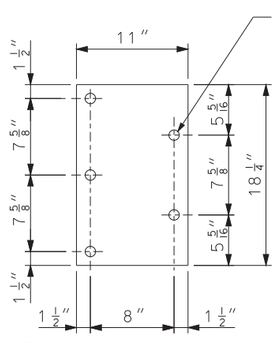

⅝" BEARING PLATE

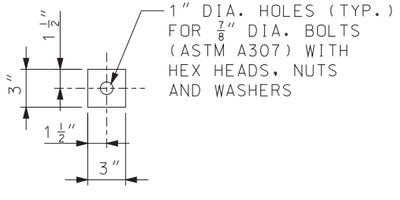

OPTIONAL ⅝" BEARING PLATE
(5 REQUIRED)

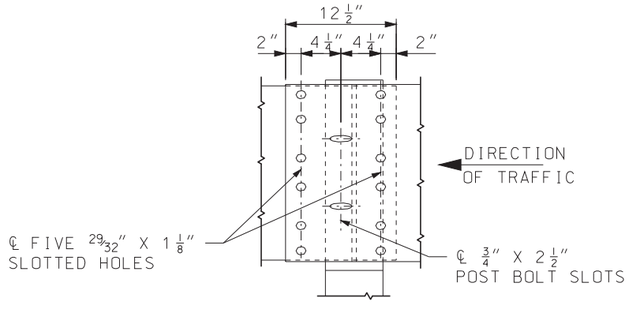

THRIE BEAM RAIL SPLICE AT POST

IF A SEAL IS PRESENT ON THIS SHEET IT HAS BEEN ELECTRONICALLY SEALED AND DATED.

MISSOURI HIGHWAYS AND TRANSPORTATION COMMISSION
105 WEST CAPITOL
JEFFERSON CITY, MO 65102
1-888-ASK-MODOT (1-888-275-6636)

STATE OF MISSOURI
ERIC E. SCHROETER
NUMBER PE-28411
PROFESSIONAL ENGINEER
THIS SHEET HAS BEEN SIGNED, SEALED AND DATED ELECTRONICALLY.

MIDWEST GUARDRAIL SYSTEM (MGS)

VERTICAL BARRIER TRANSITIONS

DATE EFFECTIVE: 07/01/2017
DATE PREPARED: 5/1/2017

606.60B

SHEET NO. 3 OF 6

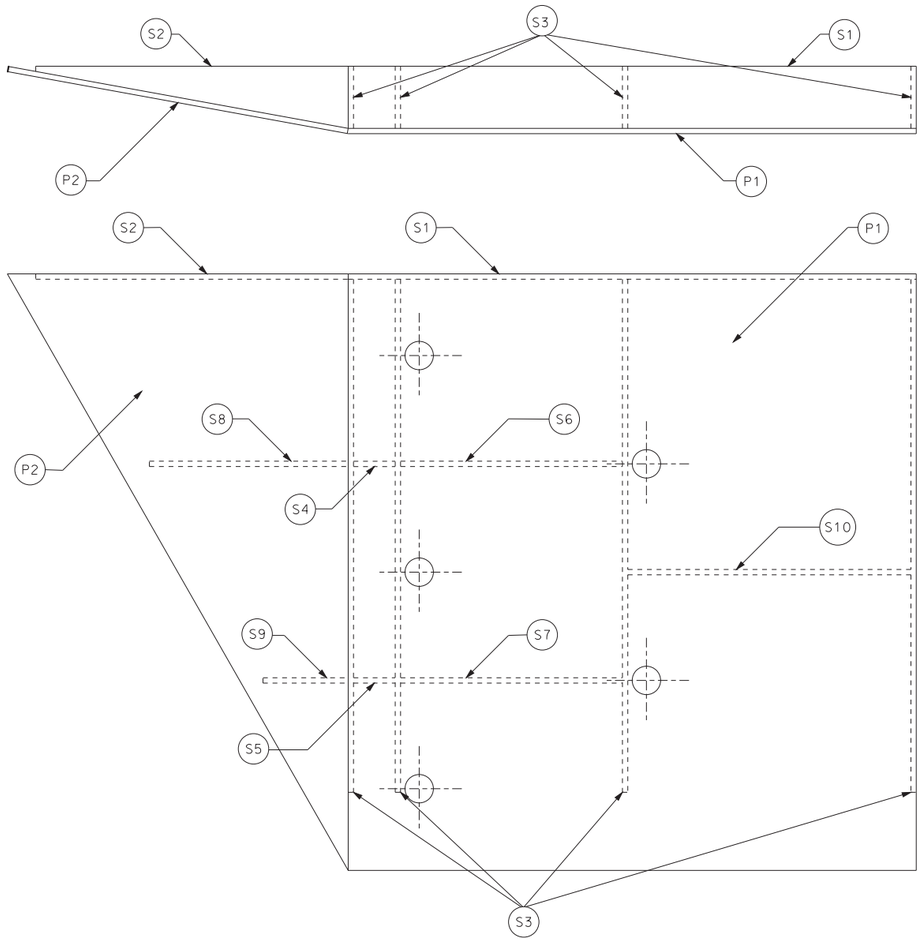

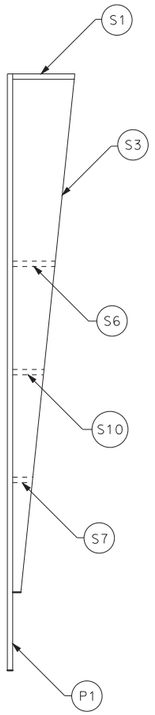

PLATE AND STIFFENER IDENTIFICATION

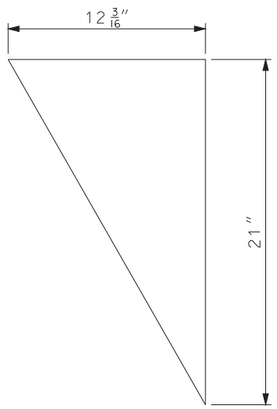

(P2) COVER PLATE #2

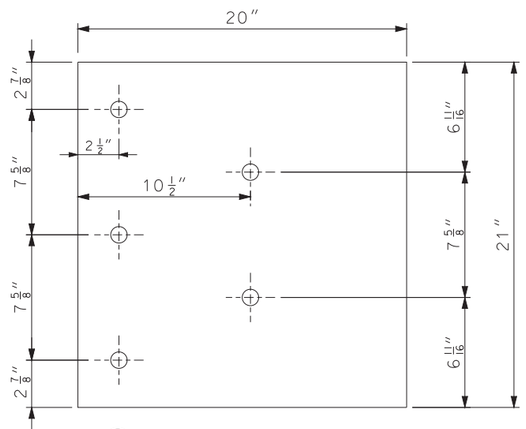

(P1) COVER PLATE #1

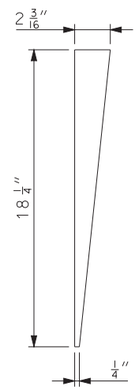

(S3) STIFFENER #3: 4 EACH

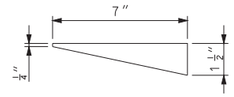

(S8) STIFFENER #8: 1 EACH

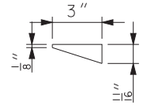

(S9) STIFFENER #9: 1 EACH

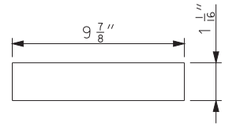

(S10) STIFFENER #10: 1 EACH

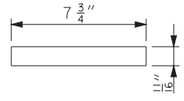

(S7) STIFFENER #7: 1 EACH

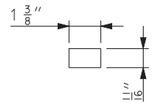

(S5) STIFFENER #5: 1 EACH

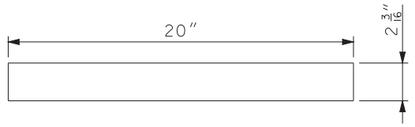

(S1) STIFFENER #1: 1 EACH

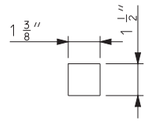

(S4) STIFFENER #4: 1 EACH

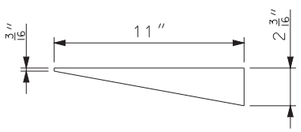

(S2) STIFFENER #2: 1 EACH

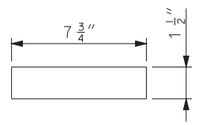

(S6) STIFFENER #6: 1 EACH

IF A SEAL IS PRESENT ON THIS SHEET IT HAS BEEN ELECTRONICALLY SEALED AND DATED.

MISSOURI HIGHWAYS AND TRANSPORTATION COMMISSION
105 WEST CAPITOL
JEFFERSON CITY, MO 65102
1-888-ASK-MODOT (1-888-275-6636)

STATE OF MISSOURI
ERIC E. SCHROETER
NUMBER PE-28411
PROFESSIONAL ENGINEER
THIS SHEET HAS BEEN SIGNED, SEALED AND DATED ELECTRONICALLY.

MIDWEST GUARDRAIL SYSTEM (MGS) VERTICAL BARRIER TRANSITIONS (CONNECTOR PLATE DETAIL)

DATE EFFECTIVE: 07/01/2017
DATE PREPARED: 5/1/2017

606.60B

SHEET NO. 4 OF 6

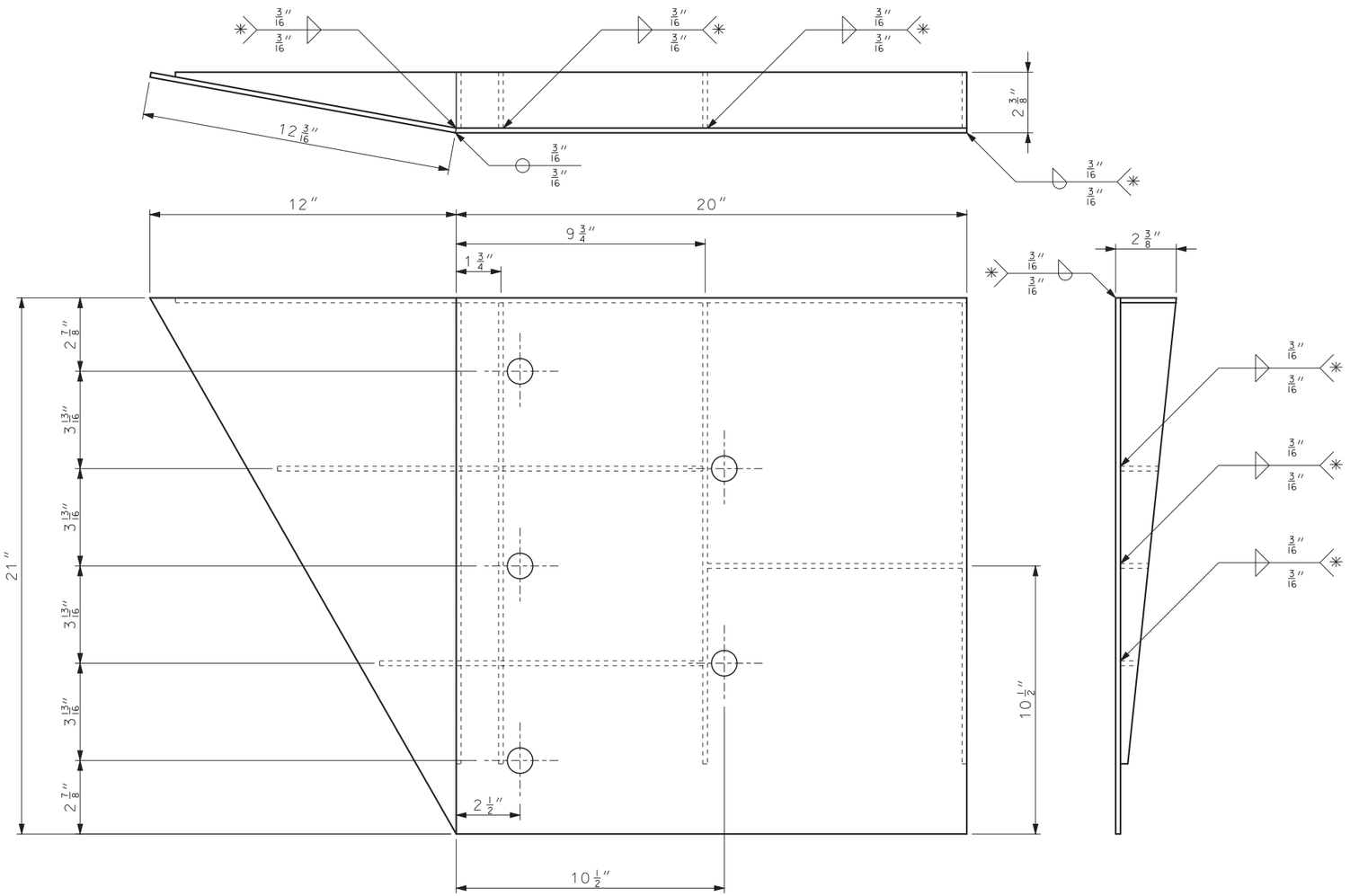

WELDING INSTRUCTION

✳ ALL FILLET WELDS SHALL BE 1" LONG SPACED AT 2".

GENERAL NOTES:

COVER PLATE PANELS ARE $\frac{3}{16}$" THICK.

ALL STIFFENERS ARE $\frac{1}{4}$" THICK.

CONNECTOR PLATE SHALL BE FABRICATED FROM ASTM GRADE A36 STEEL AND GALVANIZED.

FOR GALVANIZED REQUIREMENTS, SEE SECTION 1040 OF THE STANDARD SPECIFICATIONS.

ALL HOLE DIAMETERS SHALL BE 1".

MISSOURI HIGHWAYS AND TRANSPORTATION COMMISSION
105 WEST CAPITOL
JEFFERSON CITY, MO 65102
1-888-ASK-MODOT (1-888-275-6636)

STATE OF MISSOURI
ERIC E. SCHROETER
NUMBER PE-28411
PROFESSIONAL ENGINEER
THIS SHEET HAS BEEN SIGNED, SEALED AND DATED ELECTRONICALLY.

MIDWEST GUARDRAIL SYSTEM (MGS) VERTICAL BARRIER TRANSITIONS (CONNECTOR PLATE DETAIL)

DATE EFFECTIVE: 07/01/2017
DATE PREPARED: 5/1/2017

606.60B

SHEET NO. 5 OF 6

IF A SEAL IS PRESENT ON THIS SHEET IT HAS BEEN ELECTRONICALLY SEALED AND DATED.

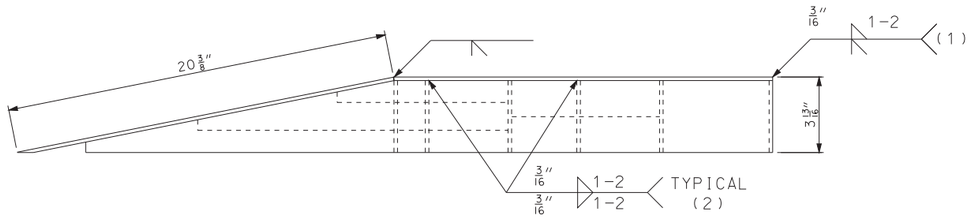

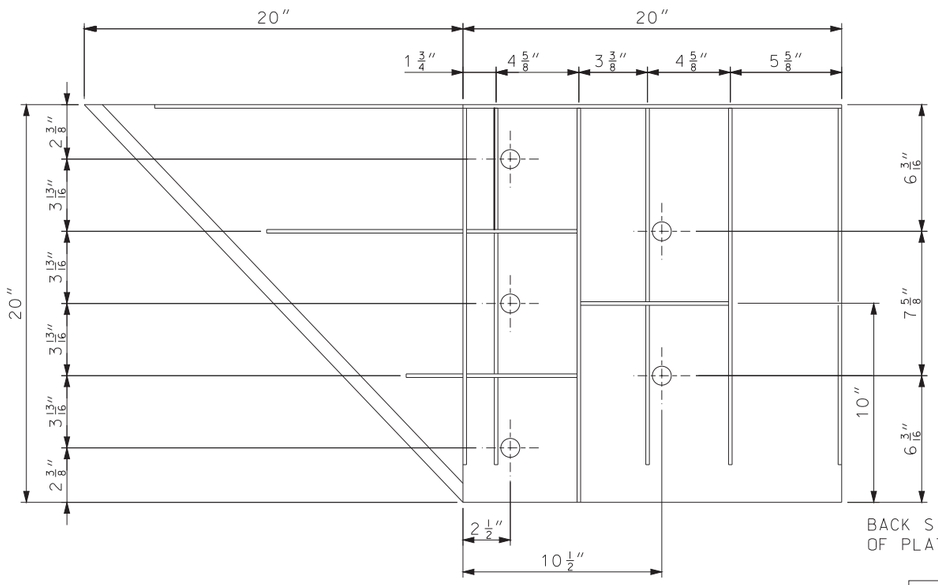

WELDING INSTRUCTION

(VIEWED FROM BACK SIDE OF PLATE)

(1) STIFFENERS LOCATED AT THE OUTSIDE EDGES OF THE COVER PLATES SHALL BE WELDED AS FOLLOWS:
SINGLE BEVEL GROOVE WELD ON EXTERNAL SIDES AND 3/16" FILLET WELD BY 1" LONG SPACED AT 2" ON INTERNAL SIDES.

(2) STEFFENERS LOCATED ON THE INSIDE OF THE COVER PLATE SHALL BE WELDED AS FOLLOWS:
3/16" FILLET WELD BY 1" LONG SPACED AT 2".

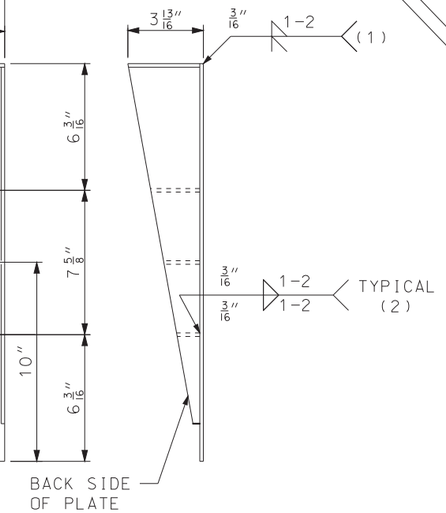

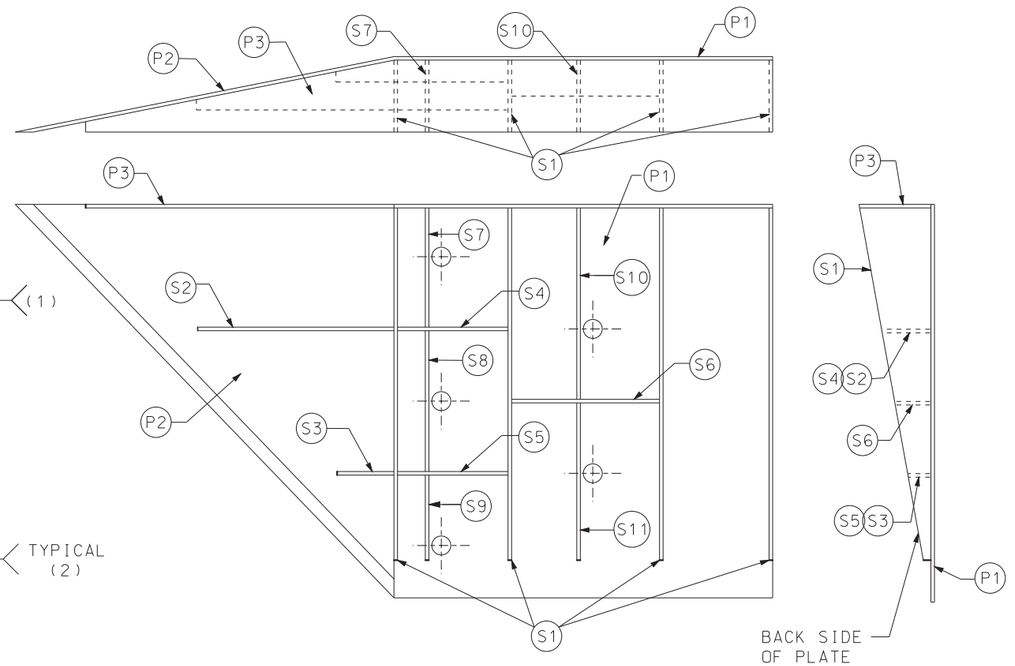

PLATE AND STIFFENER IDENTIFICATION

(VIEWED FROM BACK SIDE OF PLATE)

CONNECTOR PLATE DIMENSION (PER ASSEMBLY)				
PLATE	QUANTITY	SHAPE	SIZE (A × B × C × D)	THICKNESS
P1	1	A, B	20" × 20"	3/16"
P2	1	A, B, C	20" × 20" × 28 9/16"	3/16"
P3	1	A, B, C, D	39" × 3 5/8" × 20" × 19 5/16"	3/16"
S1	4	A, B, C, D	18 7/16" × 3 5/8" × 18 3/4"	1/4"
S2	1	A, B, C, D	10 1/4" × 2 7/16" × 10 3/8" × 1/2"	1/4"
S3	1	A, B, C, D	3" × 1 1/16" × 3 1/8" × 1/2"	1/4"
S4	1	A, B	6 1/8" × 2 7/16"	1/4"
S5	1	A, B	6 1/8" × 1 1/16"	1/4"
S6	1	A, B	7 3/4" × 1 3/4"	1/4"
S7	1	A, B, C, D	2 9/16" × 6" × 3 5/8" × 5 7/8"	1/4"
S8	1	A, B, C, D	1 5/32" × 7 1/2" × 2 1/2" × 7 3/8"	1/4"
S9	1	A, B, C	6 1/16" × 6 3/16" × 1 3/32"	1/4"
S10	1	A, B, C, D	1 7/8" × 9 7/8" × 3 5/8" × 9 11/16"	1/4"
S11	1	A, B, C, D	8 1/2" × 8 3/4" × 1 13/16"	1/4"

GENERAL NOTES:

COVER PLATE PANELS ARE 3/16" THICK.

ALL STIFFENERS ARE 1/4" THICK.

CONNECTOR PLATE SHALL BE FABRICATED FROM ASTM GRADE A36 STEEL AND GALVANIZED.

FOR GALVANIZED REQUIREMENTS, SEE SEC 1040 OF THE STANDARD SPECIFICATIONS.

ALL HOLE DIAMETERS SHALL BE 1".

IF A SEAL IS PRESENT ON THIS SHEET IT HAS BEEN ELECTRONICALLY SEALED AND DATED.

MISSOURI HIGHWAYS AND TRANSPORTATION COMMISSION
105 WEST CAPITOL
JEFFERSON CITY, MO 65102
1-888-ASK-MODOT (1-888-275-6636)

STATE OF MISSOURI
ERIC E. SCHROETER
NUMBER PE-28411
PROFESSIONAL ENGINEER
THIS SHEET HAS BEEN SIGNED, SEALED AND DATED ELECTRONICALLY.

MIDWEST GUARDRAIL SYSTEM (MGS) VERTICAL BARRIER TRANSITIONS (CONNECTOR PLATE DETAIL) SINGLE SLOPE BARRIERS

DATE EFFECTIVE: 07/01/2017
DATE PREPARED: 5/1/2017

606.60B

SHEET NO. 6 OF 6

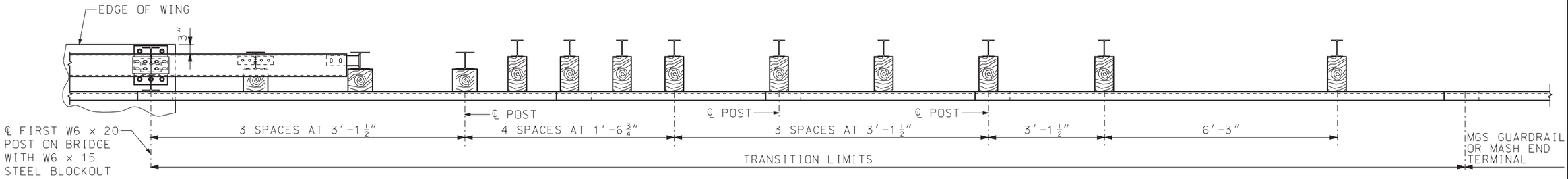

PLAN

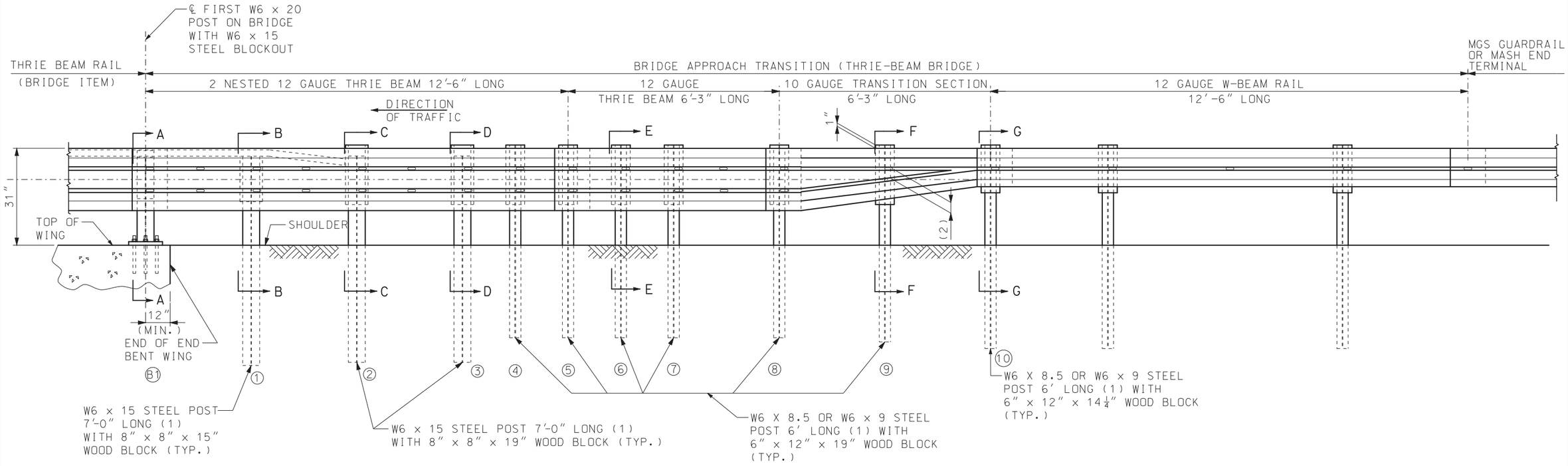

PART SECTION THROUGH SLAB AT END OF WING

NOTES:

FOR GENERAL NOTES, SEE SHEET 2 OF 5.

FOR POST DETAILS AND SECTION VIEWS, SEE SHEET 2 AND 3 OF 5.

(1) AT CONTRACTOR'S OPTION, EQUIVALENT SECTIONS MAY BE FABRICATED FROM MATERIAL MEETING AND IN ACCORDANCE WITH THE REQUIREMENTS OF ASTM A769 GRADE 36 OR 40. THE SECTIONS SHALL BE GALVANIZED AFTER FABRICATION IN ACCORDANCE WITH THE REQUIREMENTS OF AASHTO 111.

(2) VERIFY BY RAIL TRANSITION PRODUCER.

MISSOURI HIGHWAYS AND TRANSPORTATION COMMISSION
105 WEST CAPITOL
JEFFERSON CITY, MO 65102
1-888-ASK-MODOT (1-888-275-6636)

STATE OF MISSOURI
ERIC E. SCHROETER
NUMBER PE-28411
PROFESSIONAL ENGINEER
THIS SHEET HAS BEEN SIGNED, SEALED AND DATED ELECTRONICALLY.

MIDWEST GUARDRAIL SYSTEM (MGS) BRIDGE APPROACH TRANSITION (THRIE BEAM ON BRIDGE)

DATE EFFECTIVE: 07/01/2017
DATE PREPARED: 5/1/2017

606.70B

SHEET NO. 1 OF 5

IF A SEAL IS PRESENT ON THIS SHEET IT HAS BEEN ELECTRONICALLY SEALED AND DATED.

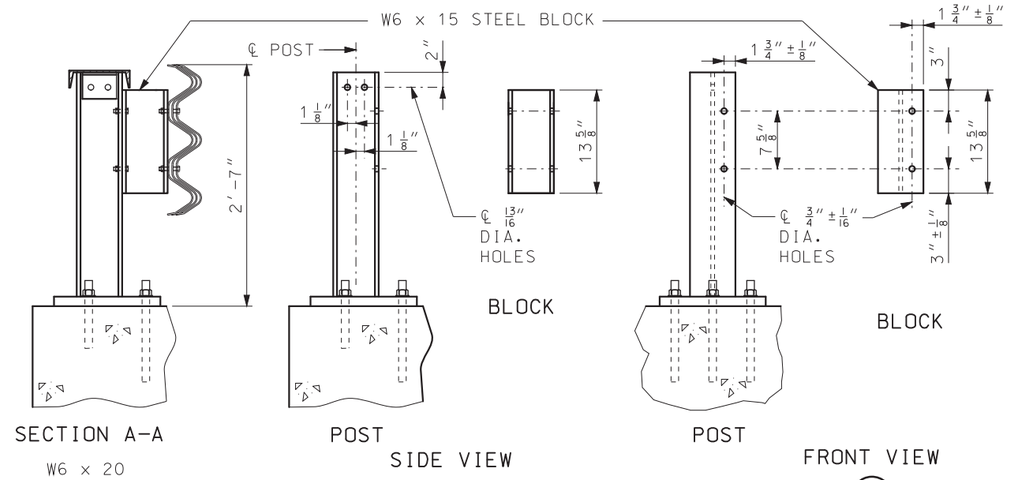

STEEL POST AND STEEL BLOCK (B1)

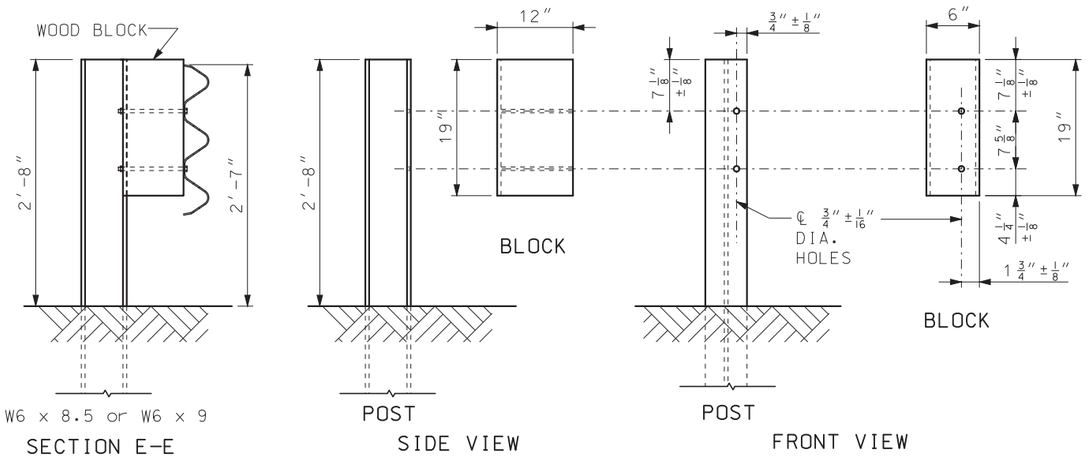

STEEL POST AND WOOD BLOCK (4) THROUGH (8)

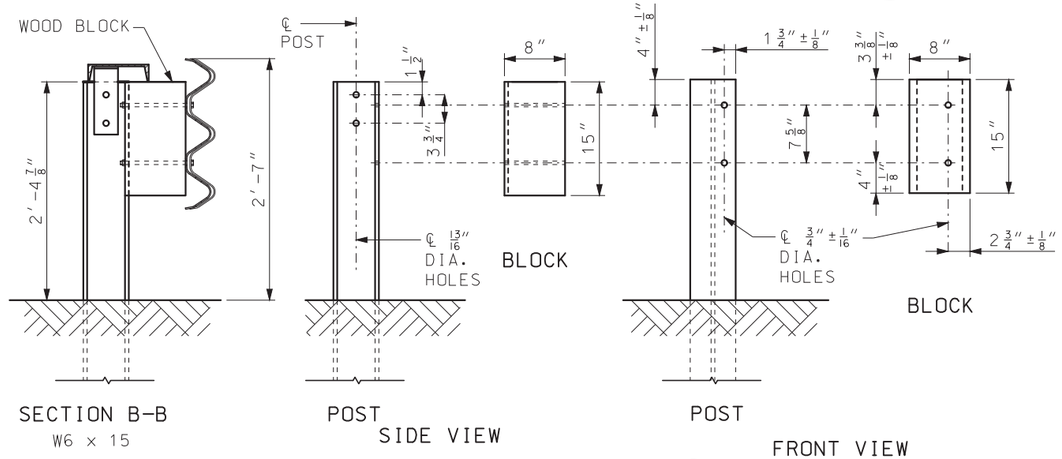

STEEL POST AND WOOD BLOCK (1)

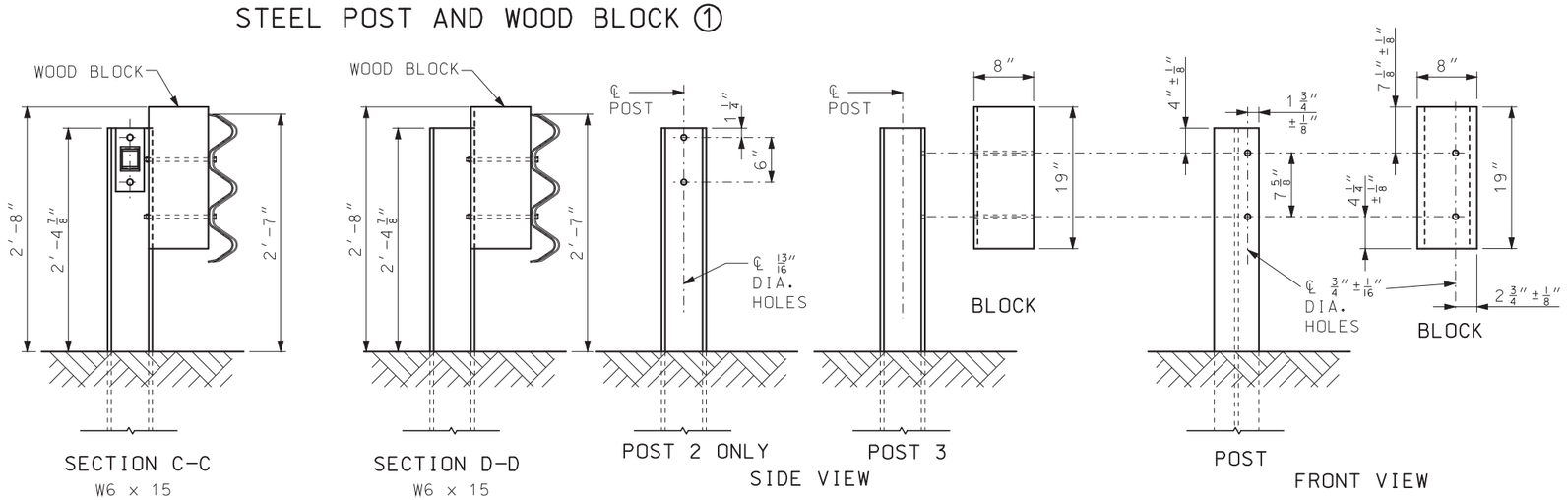

STEEL POST AND WOOD BLOCK (2) and (3)

GENERAL NOTES:

DESIGN BASED UPON MASH TEST LEVEL 3 (TL-3).

FABRICATED STRUCTURAL STEEL SHALL BE ASTM A709 GRADE 36.

FOR PROTECTIVE COATING AND MATERIAL REQUIREMENTS, SEE SEC 1040 OF THE STANDARD SPECIFICATIONS.

RAIL POSTS SHALL BE SET PERPENDICULAR TO THE ROADWAY PROFILE GRADE AND VERTICALLY IN CROSS SECTION.

USE 5/8" BUTTON-HEAD, OVAL SHOULDER BOLTS WITH HEX NUTS (THICKNESS OF HEX NUTS = 3/8" MIN.) AT ALL SLOTS.

ALL LAP SPLICES SHALL BE MADE IN THE DIRECTION OF TRAFFIC.

THE COST OF FURNISHING, FABRICATING AND INSTALLING TRANSITION SECTION, COMPLETE-IN-PLACE, SHALL BE PAID FOR AT THE CONTRACT UNIT PRICE PER EACH.

THE COST OF FURNISHING, FABRICATING AND INSTALLING BRIDGE ANCHOR SECTION (THRIE BEAM), COMPLETE-IN-PLACE, SHALL BE PAID FOR AT THE CONTRACT UNIT PRICE PER EACH.

FOR DETAILS NOT SHOWN, SEE BRIDGE THRIE BEAM RAIL SHEET.

IF A SEAL IS PRESENT ON THIS SHEET IT HAS BEEN ELECTRONICALLY SEALED AND DATED.

MISSOURI HIGHWAYS AND TRANSPORTATION COMMISSION
105 WEST CAPITOL
JEFFERSON CITY, MO 65102
1-888-ASK-MODOT (1-888-275-6636)

STATE OF MISSOURI
ERIC E. SCHROETER
NUMBER PE-28411
PROFESSIONAL ENGINEER
THIS SHEET HAS BEEN SIGNED, SEALED AND DATED ELECTRONICALLY.

MIDWEST GUARDRAIL SYSTEM (MGS) BRIDGE APPROACH TRANSITION (THRIE BEAM ON BRIDGE)

DATE EFFECTIVE: 07/01/2017
DATE PREPARED: 5/1/2017

606.70B

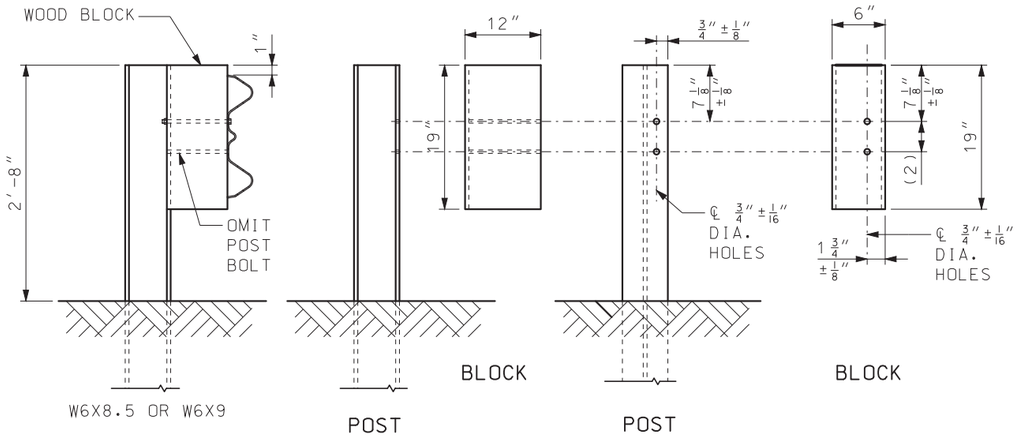

STEEL POST AND WOOD BLOCK ⑨

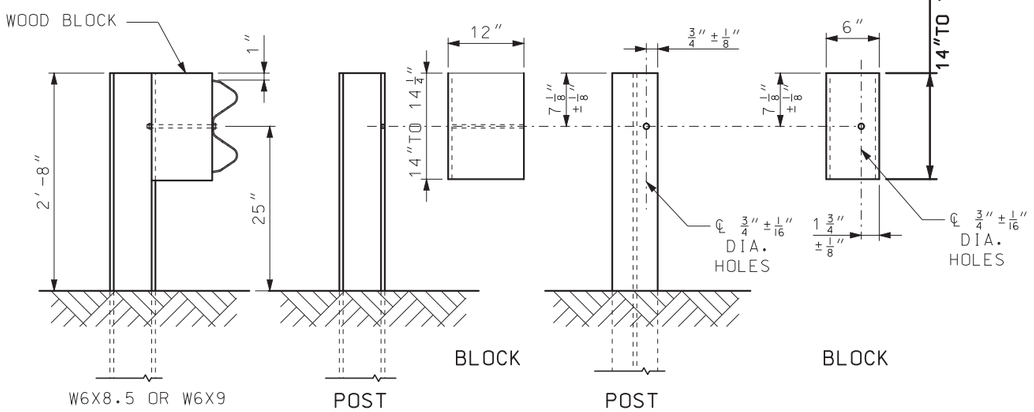

STEEL POST AND WOOD BLOCK ⑩

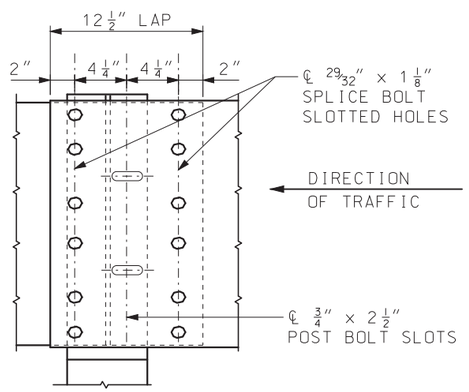

THRIE BEAM RAIL SPLICE AT POST

(2) VERIFY BY RAIL TRANSITION PRODUCER.

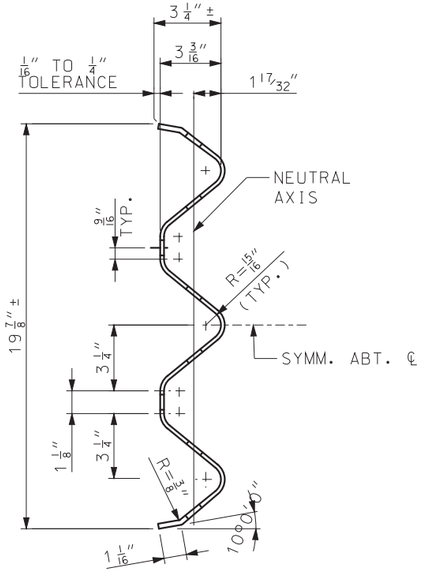

SECTION H-H

THROUGH THRIE BEAM RAIL

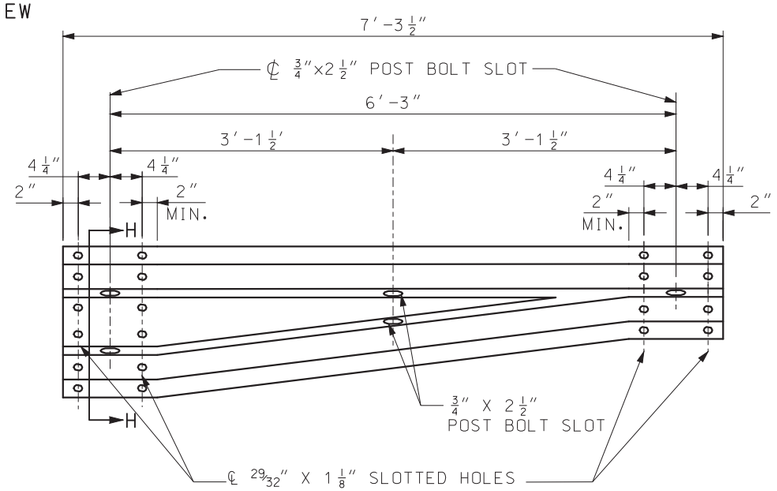

ASYMMETRICAL TRANSITION SECTION

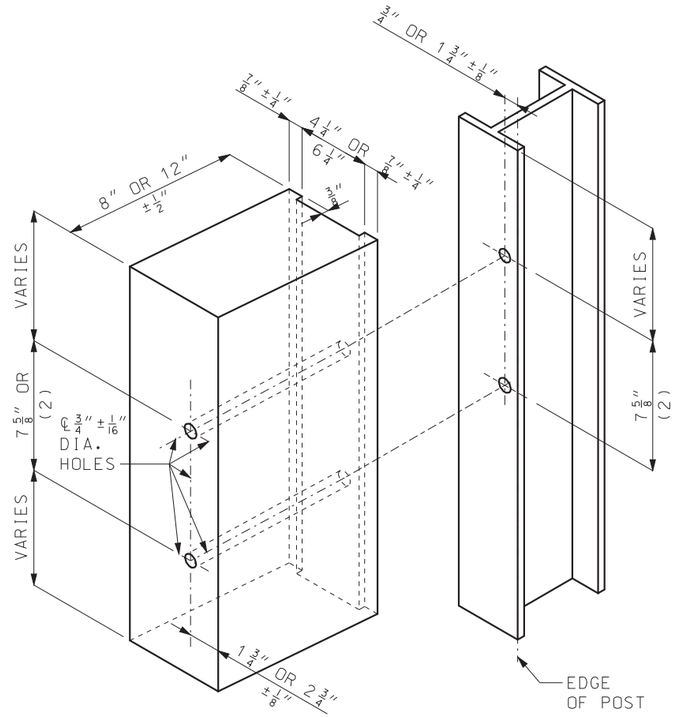

POST ⑨ - (2) VERIFY BY RAIL TRANSITION PRODUCER (SEE FRONT SHEET)
POST ⑩ - ONLY 1 HOLE REQUIRED
ALL HOLES $\frac{3}{4}$" ± $\frac{1}{16}$" DIAMETER EXCEPT AS NOTED

HOLE PUNCHING DETAIL

FOR STEEL POST & WOOD BLOCKS (6" AND 8")

IF A SEAL IS PRESENT ON THIS SHEET IT HAS BEEN ELECTRONICALLY SEALED AND DATED.

MISSOURI HIGHWAYS AND TRANSPORTATION COMMISSION
105 WEST CAPITOL
JEFFERSON CITY, MO 65102
1-888-ASK-MODOT (1-888-275-6636)

STATE OF MISSOURI
ERIC E. SCHROETER
NUMBER PE-28411
PROFESSIONAL ENGINEER
THIS SHEET HAS BEEN SIGNED, SEALED AND DATED ELECTRONICALLY.

MIDWEST GUARDRAIL SYSTEM (MGS) BRIDGE APPROACH TRANSITION (THRIE BEAM ON BRIDGE)

DATE EFFECTIVE: 04/01/2018
DATE PREPARED: 2/9/2018

606.70B

SHEET NO. 3 OF 5

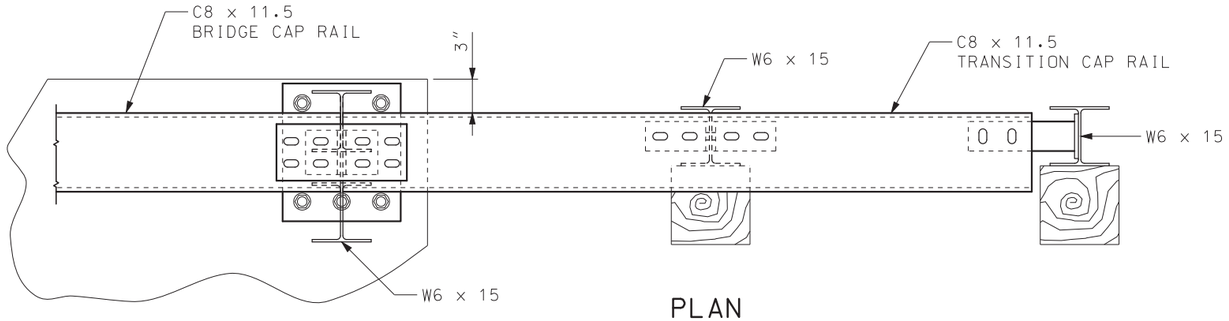

PLAN

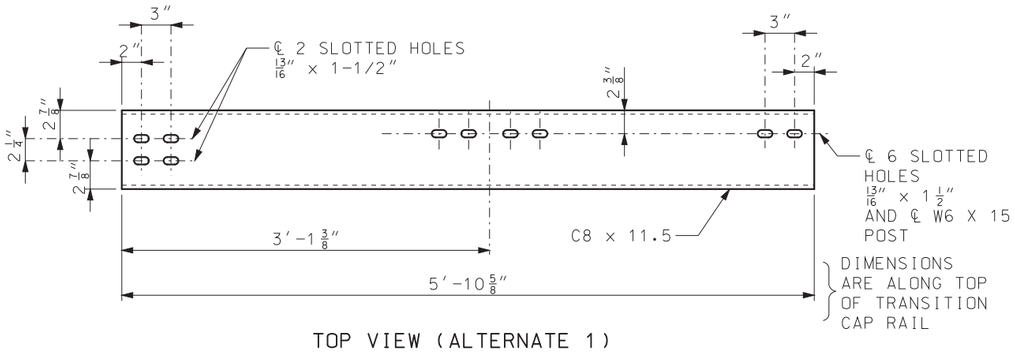

TOP VIEW (ALTERNATE 1)

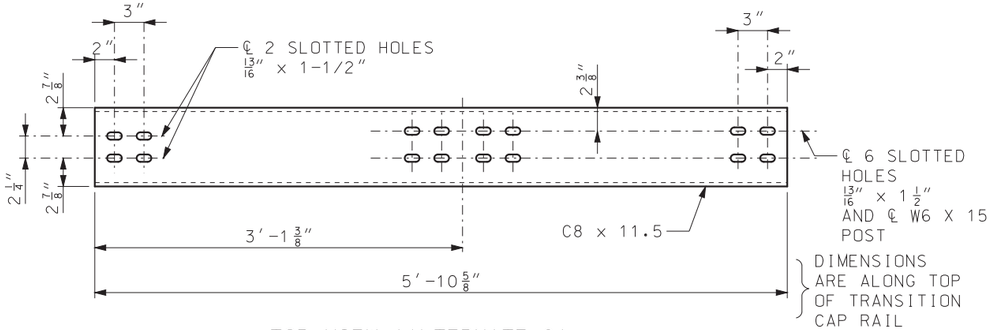

TOP VIEW (ALTERNATE 2)

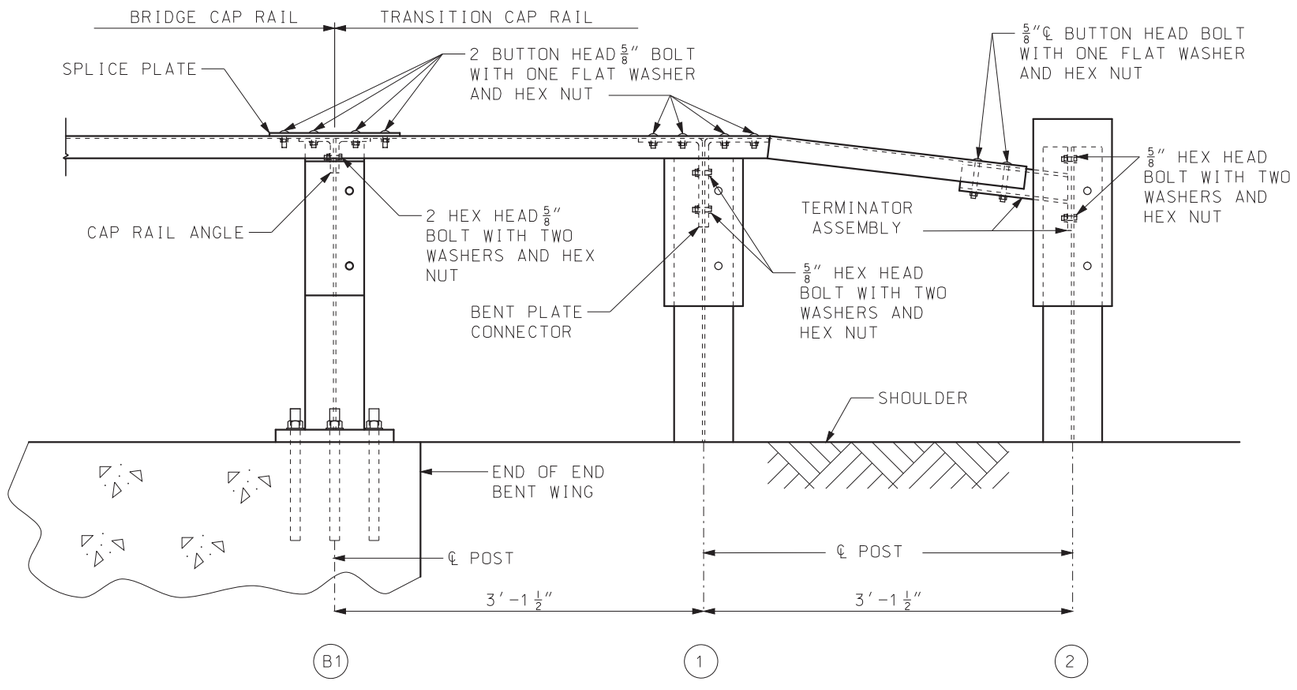

ELEVATION
(THRIE BEAM RAIL NOT SHOWN)

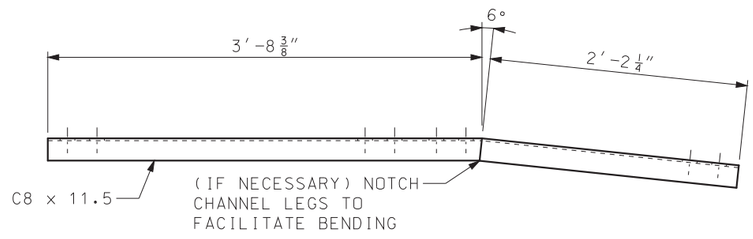

ELEVATION
TRANSITION CAP RAIL

IF A SEAL IS PRESENT ON THIS SHEET IT HAS BEEN ELECTRONICALLY SEALED AND DATED.

MISSOURI HIGHWAYS AND TRANSPORTATION COMMISSION
105 WEST CAPITOL
JEFFERSON CITY, MO 65102
1-888-ASK-MODOT (1-888-275-6636)

STATE OF MISSOURI
ERIC E. SCHROETER
NUMBER PE-28411
PROFESSIONAL ENGINEER
THIS SHEET HAS BEEN SIGNED, SEALED AND DATED ELECTRONICALLY.

MIDWEST GUARDRAIL SYSTEM (MGS) BRIDGE APPROACH TRANSITION (THRIE BEAM ON BRIDGE)

DATE EFFECTIVE: 07/01/2017
DATE PREPARED: 5/1/2017

606.70B

SHEET NO. 4 OF 5

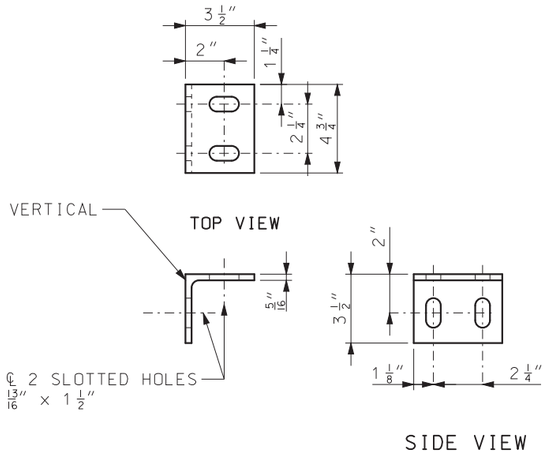

CAP RAIL ANGLE

∠ 3 1/2" × 3 1/2" × 5/16"

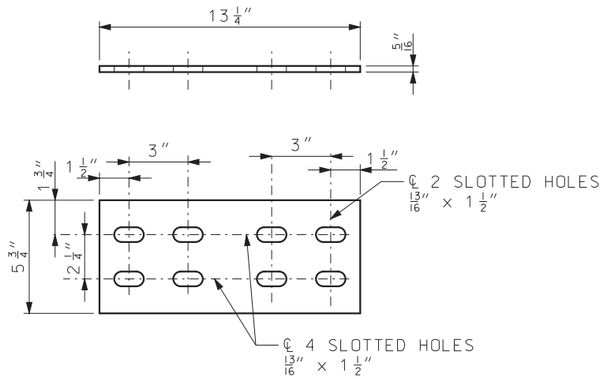

SPLICE PLATE

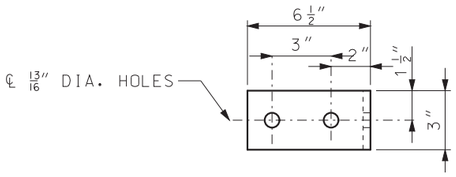

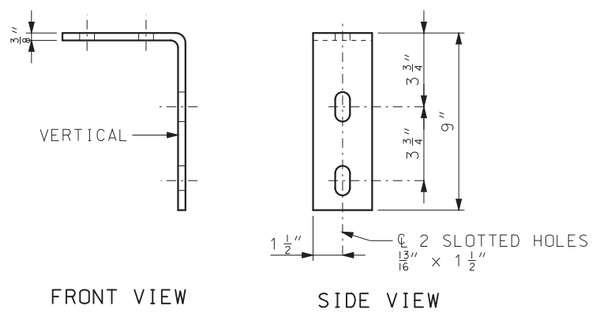

BENT PLATE CONNECTOR

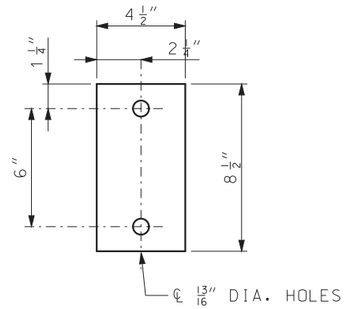

3/8" PLATE

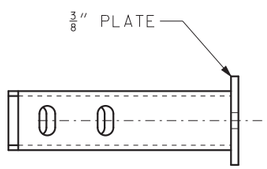

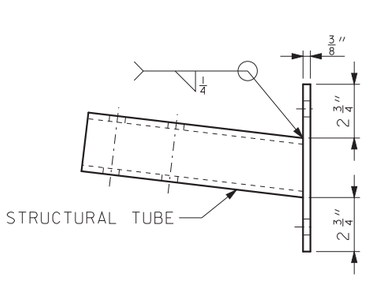

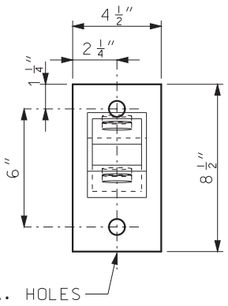

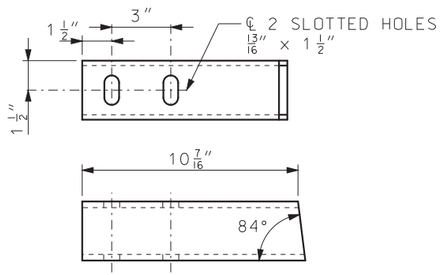

STRUCTURAL TUBE

TS 3" × 3" × 5/16"

TERMINATOR ASSEMBLY

IF A SEAL IS PRESENT ON THIS SHEET IT HAS BEEN ELECTRONICALLY SEALED AND DATED.

MISSOURI HIGHWAYS AND TRANSPORTATION COMMISSION
105 WEST CAPITOL
JEFFERSON CITY, MO 65102
1-888-ASK-MODOT (1-888-275-6636)

STATE OF MISSOURI
ERIC E. SCHROETER
NUMBER PE-28411
PROFESSIONAL ENGINEER
THIS SHEET HAS BEEN SIGNED, SEALED AND DATED ELECTRONICALLY.

MIDWEST GUARDRAIL SYSTEM (MGS) BRIDGE APPROACH TRANSITION (THRIE BEAM ON BRIDGE)

DATE EFFECTIVE: 07/01/2017
DATE PREPARED: 5/1/2017

606.70B

SHEET NO. 5 OF 5

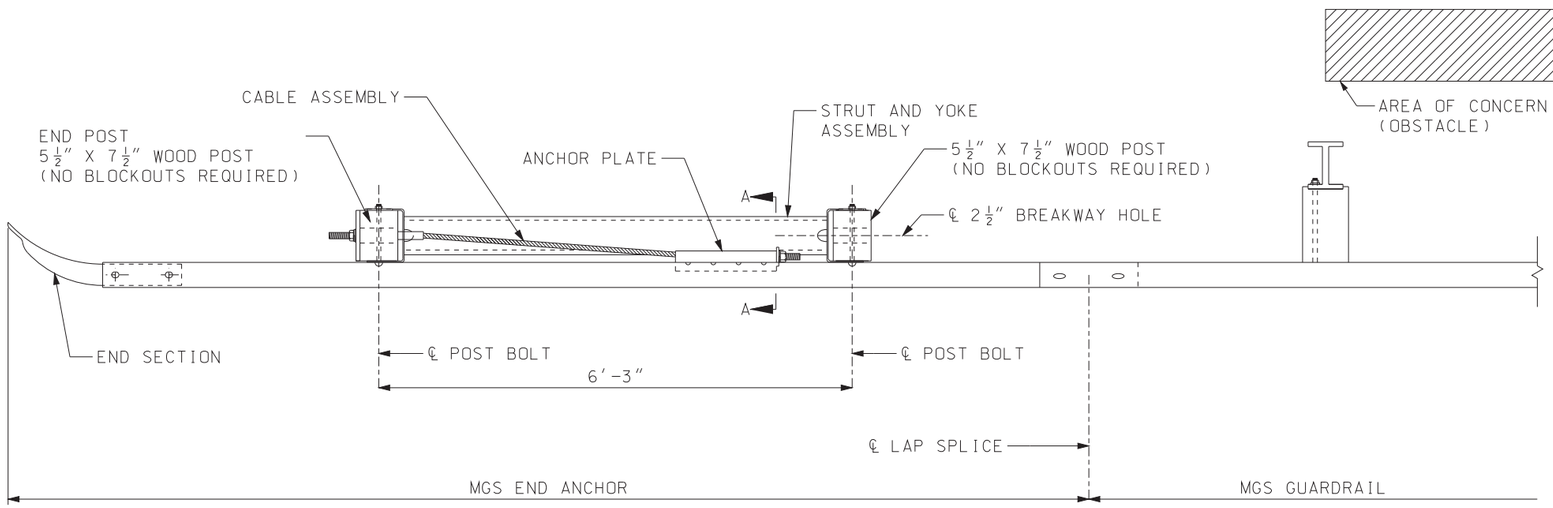

PLAN VIEW

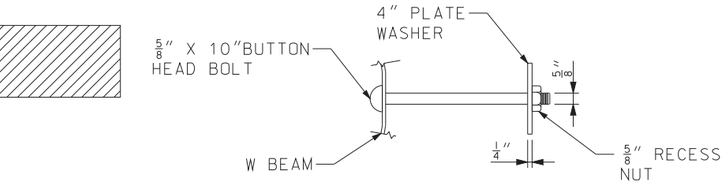

POST BOLT AT W-BEAM

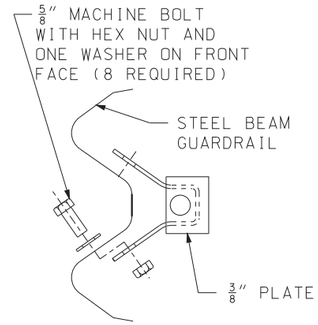

SECTION A-A

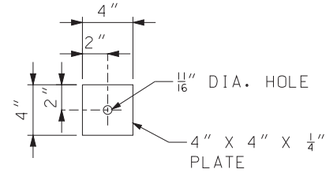

4" PLATE WASHER

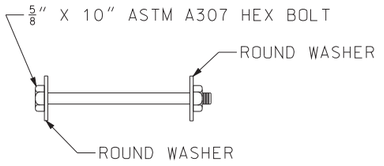

POST BOLT AT YOKE

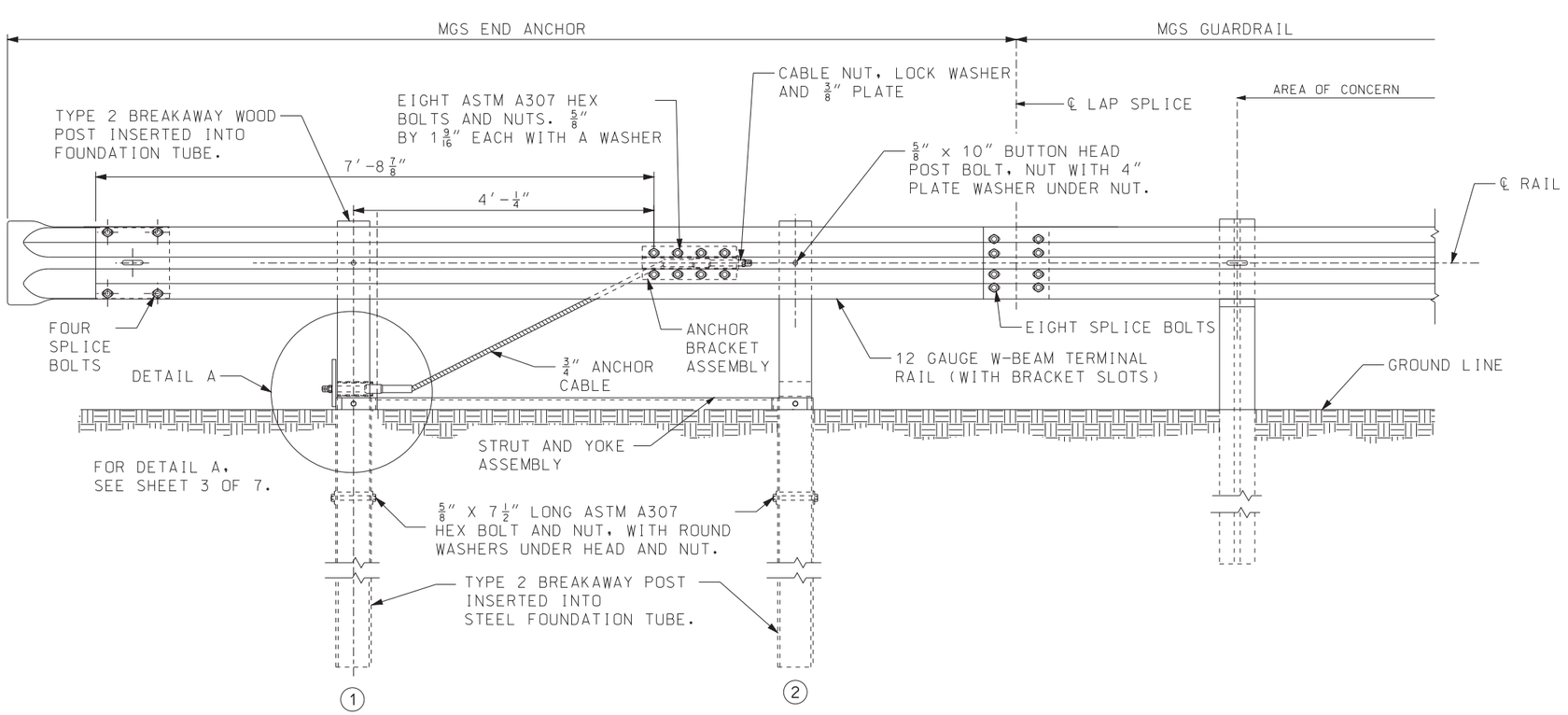

ELEVATION VIEW

GENERAL NOTES:

END ANCHOR DETAILS SHOWN SHALL BE USED ONLY ON DOWNSTREAM ENDS OF GUARDRAIL WHEN AN END ANCHOR IS REQUIRED.

THE DETAILS SHOWN ARE FOR AN END ANCHORAGE SYSTEM FOR GUARDRAIL.

CABLE ASSEMBLY AND ANCHOR PLATE SHALL HAVE A MINIMUM BREAKING STRENGTH OF 20 TONS.

ALL FITTINGS AND HARDWARE REQUIRED SHALL BE GALVANIZED IN ACCORDANCE WITH SECTION 1040.

WOOD POSTS (1) AND (2) SHALL BE 5½" X 7½".

SEE SHEET NO. 2 OF 7 FOR WOOD POST DETAILS.

MISSOURI HIGHWAYS AND TRANSPORTATION COMMISSION
105 WEST CAPITOL
JEFFERSON CITY, MO 65102
1-888-ASK-MODOT (1-888-275-6636)

STATE OF MISSOURI
ERIC E. SCHROETER
NUMBER PE-28411
PROFESSIONAL ENGINEER
THIS SHEET HAS BEEN SIGNED, SEALED AND DATED ELECTRONICALLY.

MIDWEST GUARDRAIL SYSTEM (MGS) TERMINAL ANCHOR ENDS

DATE EFFECTIVE: 07/01/2017
DATE PREPARED: 5/1/2017

606.80C

SHEET NO. 1 OF 7

IF A SEAL IS PRESENT ON THIS SHEET IT HAS BEEN ELECTRONICALLY SEALED AND DATED.

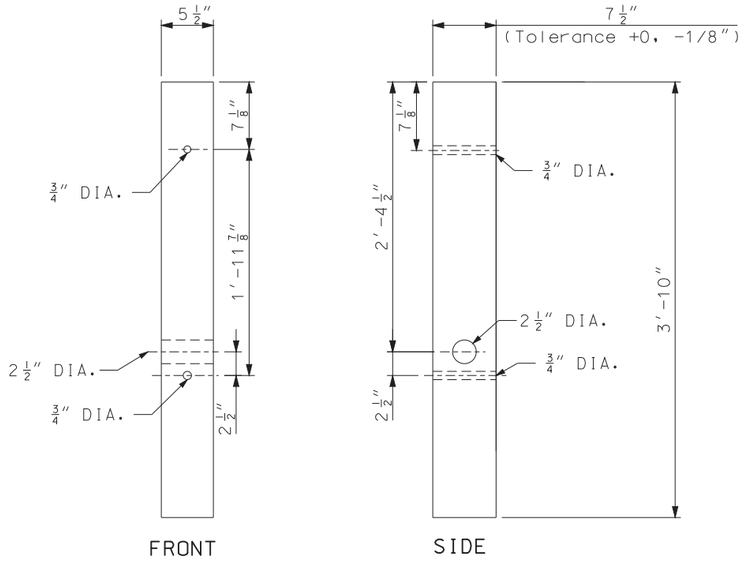

TYPE 2 BREAKAWAY WOOD POST

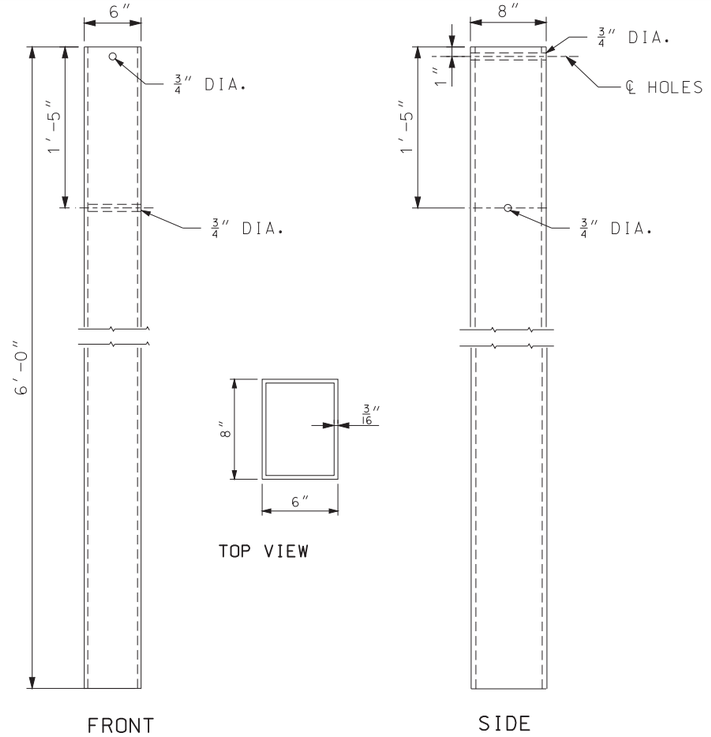

STEEL GROUND FOUNDATION TUBE

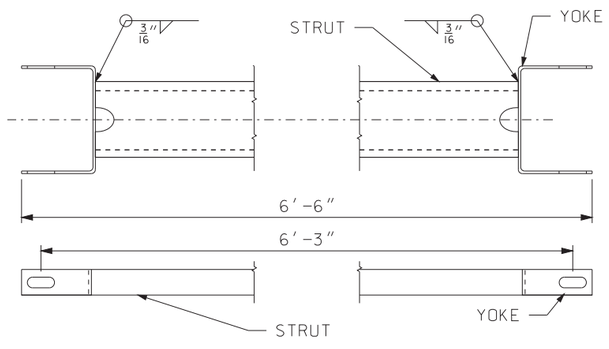

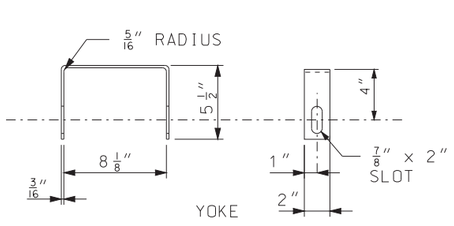

TWO REQUIRED IN ASSEMBLY

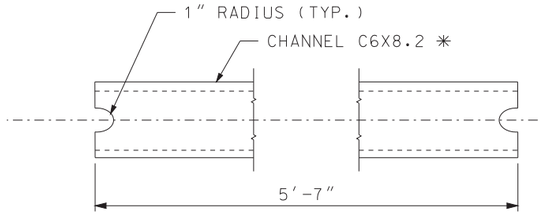

STRUT

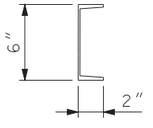

* A 6" X 3" 10 GAUGE BENT PLATE STRUT MAY BE SUBSTITUTED FOR THE C-CHANNEL

STRUT AND YOKE ASSEMBLY

MISSOURI HIGHWAYS AND TRANSPORTATION COMMISSION
105 WEST CAPITOL
JEFFERSON CITY, MO 65102
1-888-ASK-MODOT (1-888-275-6636)

STATE OF MISSOURI
ERIC E. SCHROETER
NUMBER PE-28411
PROFESSIONAL ENGINEER
THIS SHEET HAS BEEN SIGNED, SEALED AND DATED ELECTRONICALLY.

MIDWEST GUARDRAIL SYSTEM (MGS) TERMINAL ANCHOR ENDS

DATE EFFECTIVE: 07/01/2017
DATE PREPARED: 5/1/2017

606.80C

SHEET NO. 2 OF 7

IF A SEAL IS PRESENT ON THIS SHEET IT HAS BEEN ELECTRONICALLY SEALED AND DATED.

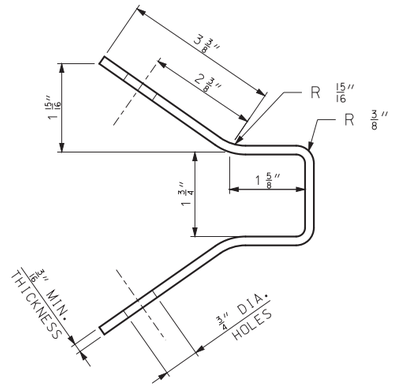

FABRICATION DETAIL

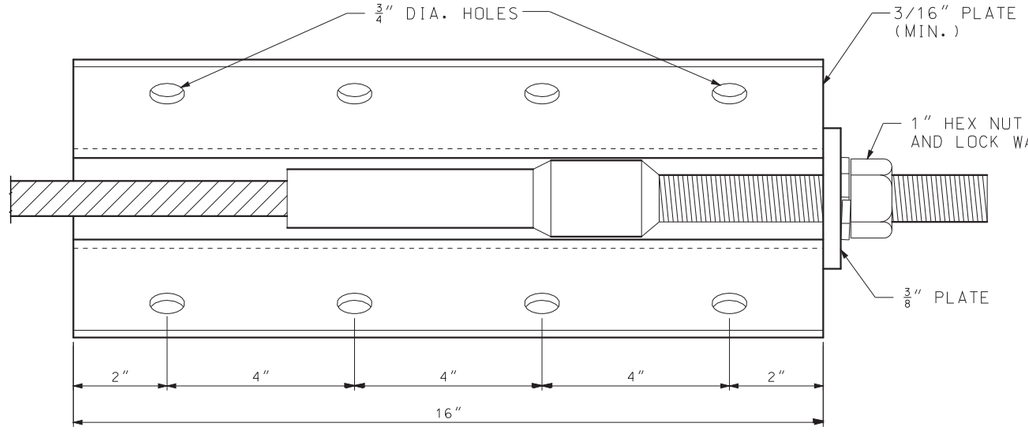

ASSEMBLED VIEW
ANCHOR BRACKET

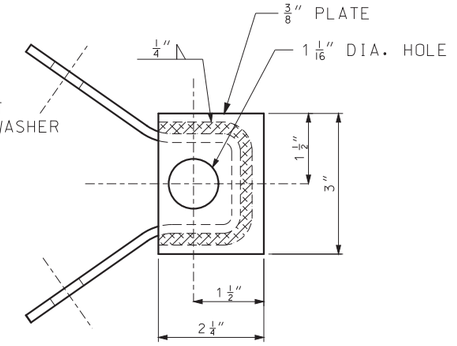

END VIEW

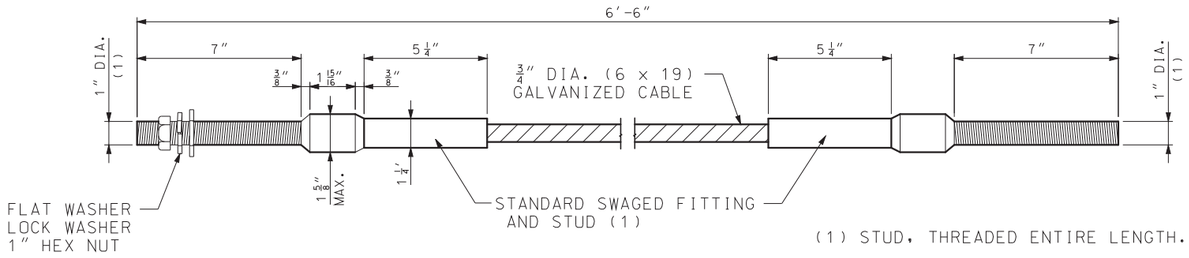

(1) STUD, THREADED ENTIRE LENGTH.

CABLE ASSEMBLY

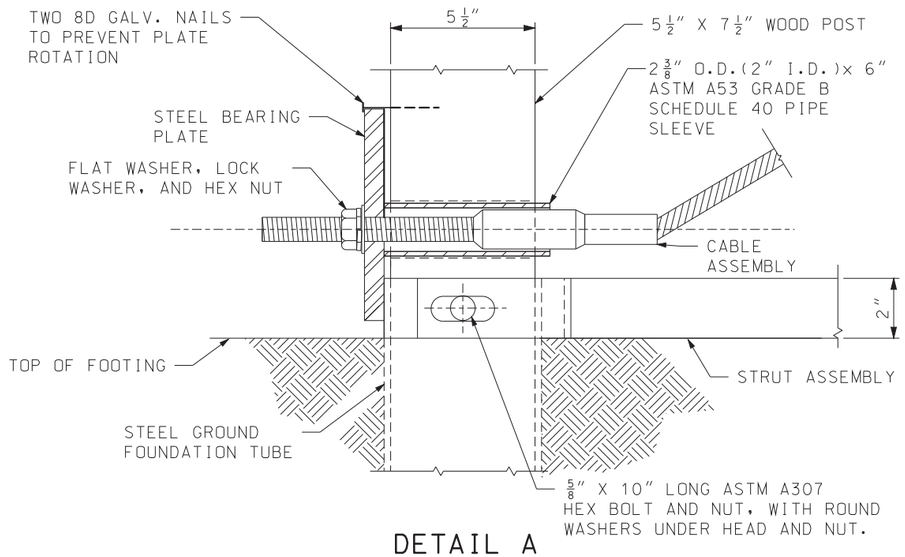

DETAIL A
(END POST DETAIL)

FOR LOCATION OF DETAIL A, SEE SHEET 1 OF 7.

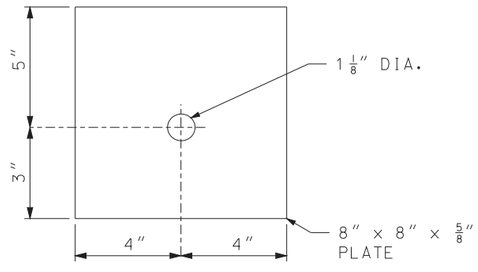

STEEL BEARING PLATE

IF A SEAL IS PRESENT ON THIS SHEET IT HAS BEEN ELECTRONICALLY SEALED AND DATED.

MISSOURI HIGHWAYS AND TRANSPORTATION COMMISSION
105 WEST CAPITOL
JEFFERSON CITY, MO 65102
1-888-ASK-MODOT (1-888-275-6636)

STATE OF MISSOURI
ERIC E. SCHROETER
NUMBER PE-28411
PROFESSIONAL ENGINEER
THIS SHEET HAS BEEN SIGNED, SEALED AND DATED ELECTRONICALLY.

MIDWEST GUARDRAIL SYSTEM (MGS) TERMINAL ANCHOR ENDS

DATE EFFECTIVE: 07/01/2017
DATE PREPARED: 5/1/2017

606.80C

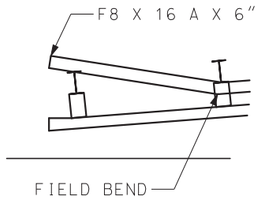

DETAIL A

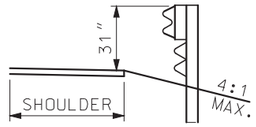

SECTION A-A

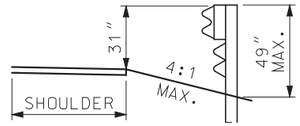

SECTION B-B

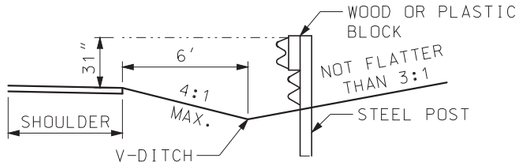

SECTION C-C

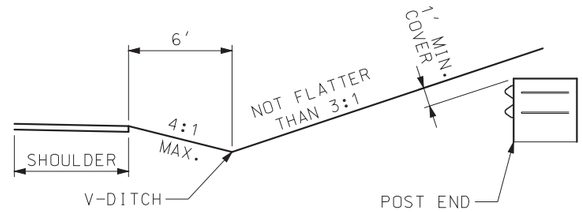

SECTION D-D

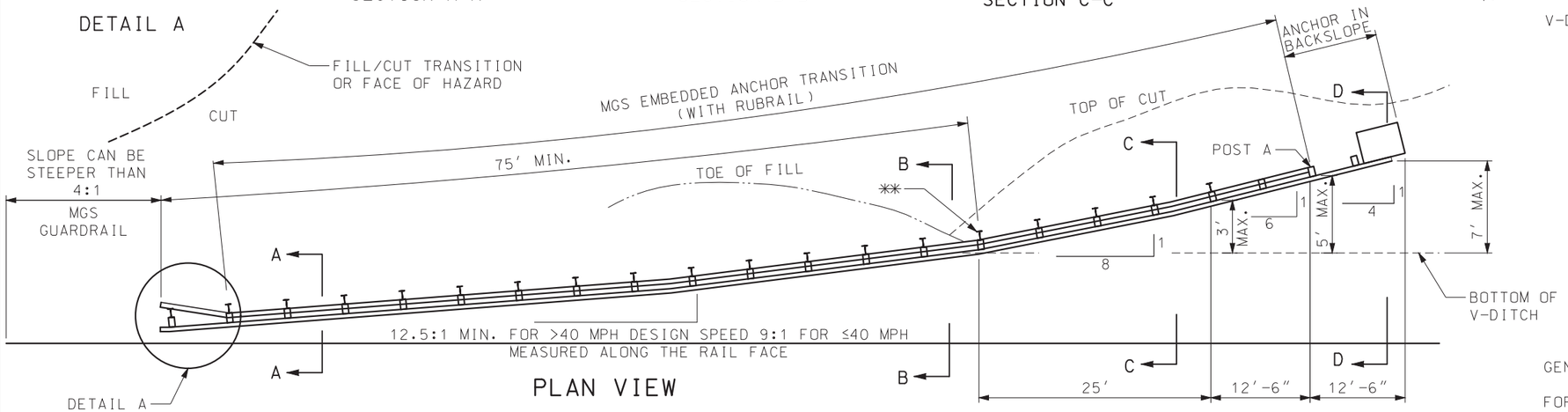

PLAN VIEW

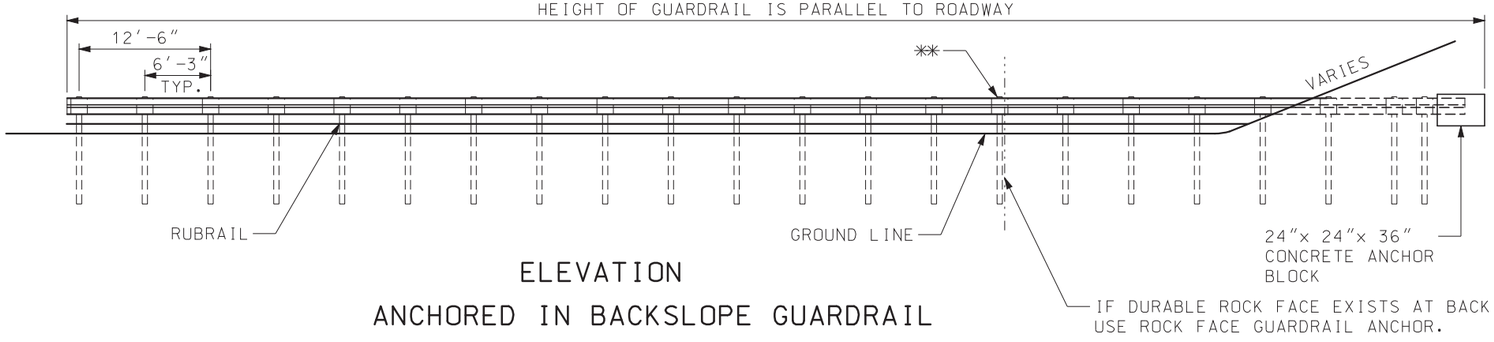

ELEVATION

ANCHORED IN BACKSLOPE GUARDRAIL

** THE POST BEHIND THE DITCHLINE MAY BE SHORTENED TO PROVIDE 48" MIN. EMBEDMENT.

COST OF SHAPING ROCK FACE FOR PLACING OF TERMINAL CONNECTOR, DRILLING HOLES, FURNISHING AND PLACING BOLTS, WASHERS, CAULKING, ANCHORS AND END SHOE TO BE INCLUDED IN THE PRICE OF GUARDRAIL ANCHOR, ROCK FACE.

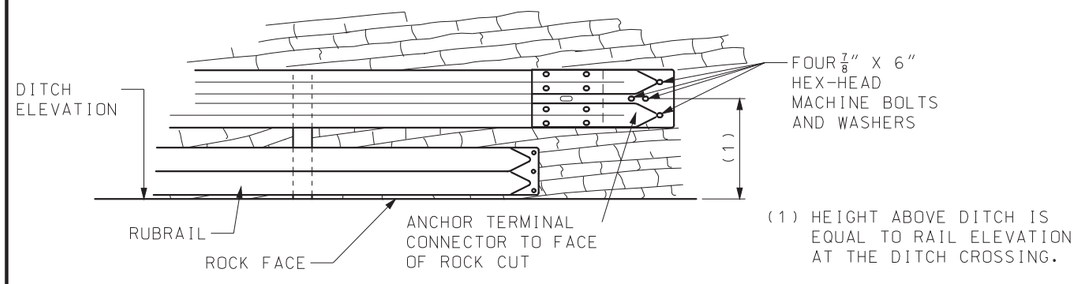

(1) HEIGHT ABOVE DITCH IS EQUAL TO RAIL ELEVATION AT THE DITCH CROSSING.

ROCK FACE GUARDRAIL ANCHOR

GENERAL NOTES:

FOR END ANCHOR DETAILS, SEE SHEET 1-3 OF 7.

RUBRAIL BEGINS WHEN THE DISTANCE BETWEEN THE GUARD-RAIL AND THE GROUND IS 18" AND INCREASING.

END ANCHOR POSTS 1 AND 2 SHALL HAVE FOUNDATION TYPE AS SHOWN ON SHEET 3 OF 7.

THE CONTRACT UNIT PRICE FOR EMBEDDED GUARDRAIL ANCHOR SHALL INCLUDE THE CONCRETE ANCHOR. EXCAVATION AND BACKFILLING, OR TERMINAL CONNECTOR, AND ALL INCIDENTIAL HARDWARE AND WORK NECESSARY TO COMPLETE THE INSTALLATION.

THE EMBEDED ANCHOR TRANSITION SHALL EXTEND 50'± BEYOND THE DITCH LINE AND TERMINATE A MINIMUM OF 12 INCHES BELOW GROUND ELEVATION OF THE BACKSLOPE.

BLOCKOUTS WILL NOT BE REQUIRED FOR ANY POST WHICH WILL BE COMPLETELY BELOW GROUND. THE ALIGNMENT OF SUCH POSTS SHALL BE APPROVED BY THE ENGINEER.

SEE OTHER DRAWINGS AND STANDARD SPECIFICATIONS FOR MATERIAL AND CONSTRUCTION REQUIREMENTS NOT SHOWN.

IF A SEAL IS PRESENT ON THIS SHEET IT HAS BEEN ELECTRONICALLY SEALED AND DATED.

MISSOURI HIGHWAYS AND TRANSPORTATION COMMISSION
105 WEST CAPITOL
JEFFERSON CITY, MO 65102
1-888-ASK-MODOT (1-888-275-6636)

STATE OF MISSOURI
ERIC E. SCHROETER
NUMBER PE-28411
PROFESSIONAL ENGINEER
THIS SHEET HAS BEEN SIGNED, SEALED AND DATED ELECTRONICALLY.

MIDWEST GUARDRAIL SYSTEM (MGS) TERMINAL ENDS EMBEDDED AND ROCK FACE (V-DITCH STEEPER THAN 10:1, 4:1 MAX. FORESLOPE)

DATE EFFECTIVE: 07/01/2017
DATE PREPARED: 5/1/2017

606.80C

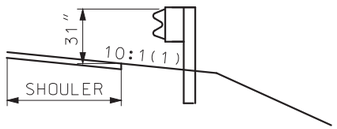

SECTION A-A

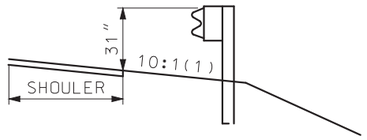

SECTION B-B

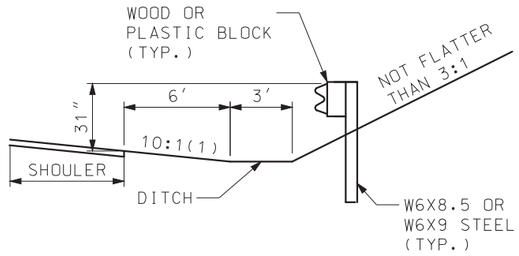

SECTION C-C

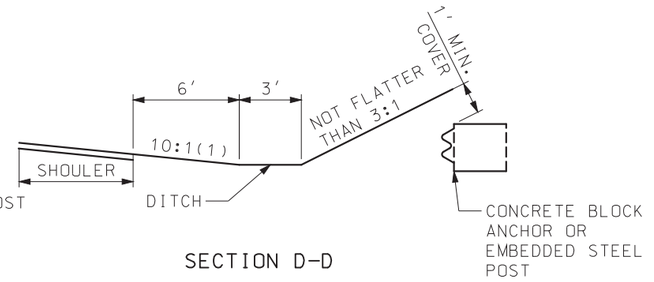

SECTION D-D

(1) MAX. CROSS SLOPE SHALL NOT EXCEED 4:1. RUBRAIL IS REQUIRED WHEN CROSS SLOPE EXCEEDS 10:1 OR WHEN THE DISTANCE BETWEEN THE GUARDRAIL AND THE GROUND IS 18" AND INCREASING.

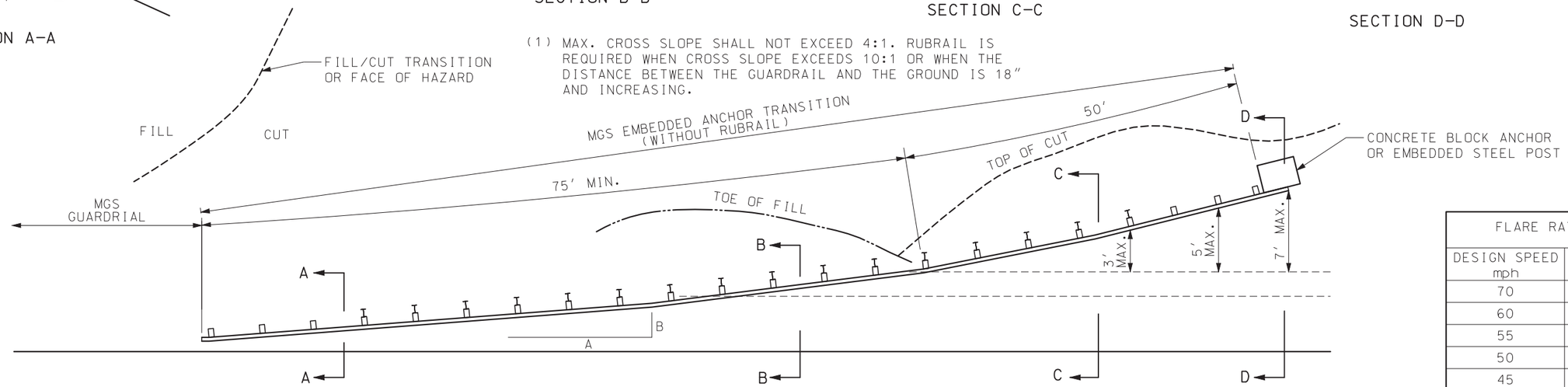

PLAN VIEW

FLARE RATE	
DESIGN SPEED mph	A:B
70	15:1
60	13:1
55	12:1
50	11:1
45	10:1
40	9:1
30 OR LESS	7:1

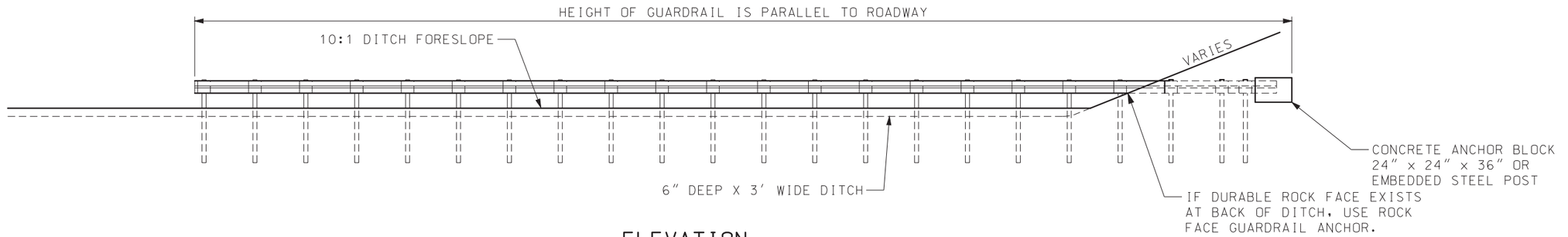

ELEVATION
ANCHORED IN BACKSLOPE GUARDRAIL

IF A SEAL IS PRESENT ON THIS SHEET IT HAS BEEN ELECTRONICALLY SEALED AND DATED.

MISSOURI HIGHWAYS AND TRANSPORTATION COMMISSION
105 WEST CAPITOL
JEFFERSON CITY, MO 65102
1-888-ASK-MODOT (1-888-275-6636)

STATE OF MISSOURI
ERIC E. SCHROETER
NUMBER PE-28411
PROFESSIONAL ENGINEER
THIS SHEET HAS BEEN SIGNED, SEALED AND DATED ELECTRONICALLY.

MIDWEST GUARDRAIL SYSTEM (MGS) EMBEDED ANCHOR TRANSITION EMBEDDED TERMINAL ENDS (FLAT DITCH)

DATE EFFECTIVE: 07/01/2017
DATE PREPARED: 5/1/2017

606.80C

SHEET NO. 5 OF 7

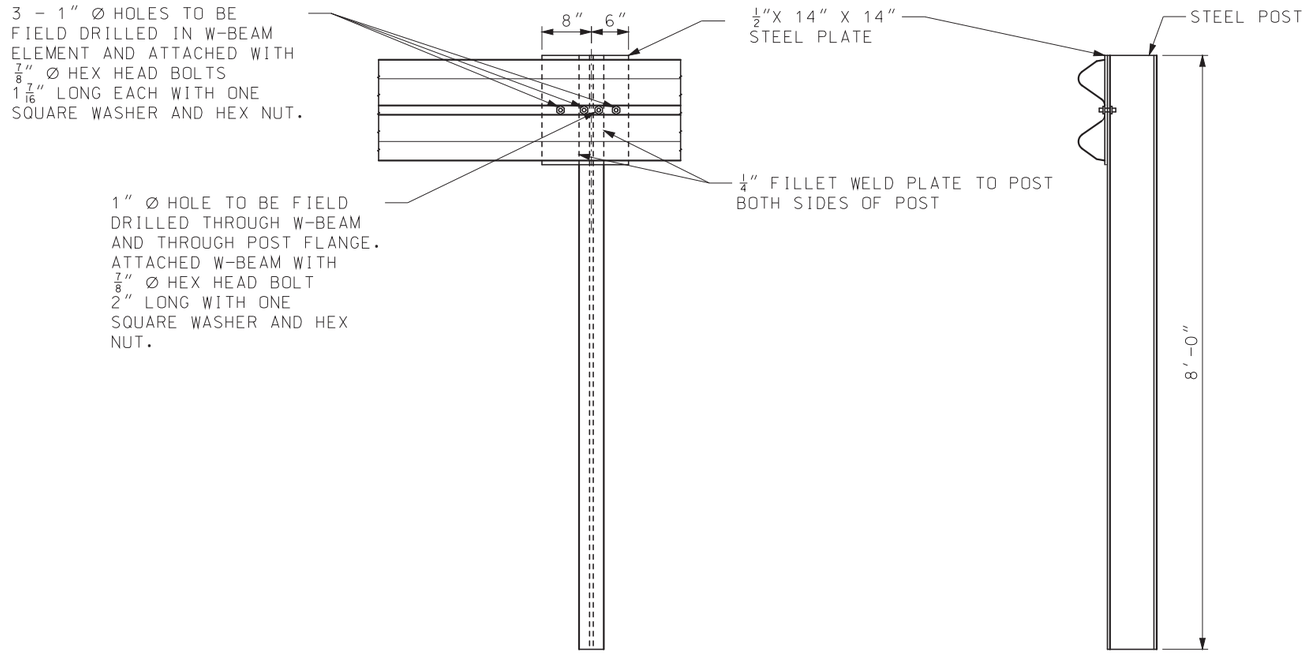

EMBEDDED STEEL POST

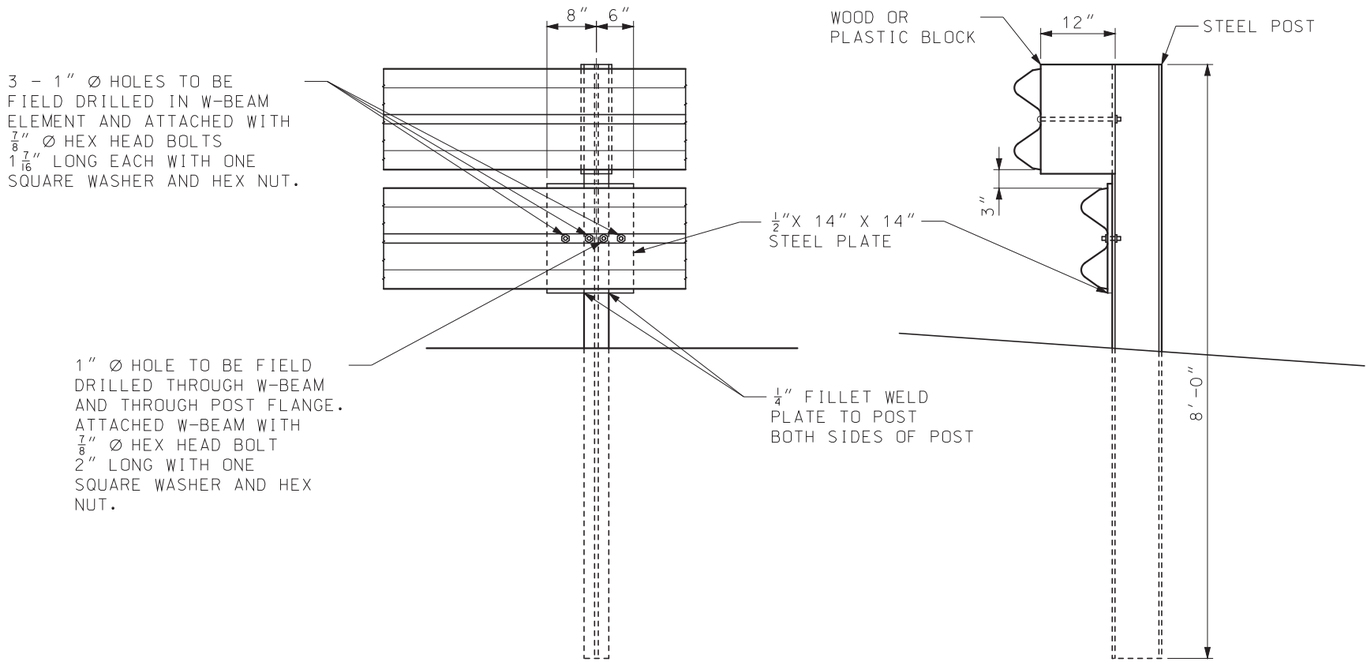

SPECIAL RUBRAIL TO POST CONNECTION AT POST A

IF A SEAL IS PRESENT ON THIS SHEET IT HAS BEEN ELECTRONICALLY SEALED AND DATED.

MISSOURI HIGHWAYS AND TRANSPORTATION COMMISSION
105 WEST CAPITOL
JEFFERSON CITY, MO 65102
1-888-ASK-MODOT (1-888-275-6636)

STATE OF MISSOURI
ERIC E. SCHROETER
NUMBER PE-28411
PROFESSIONAL ENGINEER
THIS SHEET HAS BEEN SIGNED, SEALED AND DATED ELECTRONICALLY.

MIDWEST GUARDRAIL SYSTEM (MGS) EMBEDDED ANCHOR TERMINAL ENDS (STEEL POST OPTION)

DATE EFFECTIVE: 07/01/2017
DATE PREPARED: 5/1/2017

606.80C

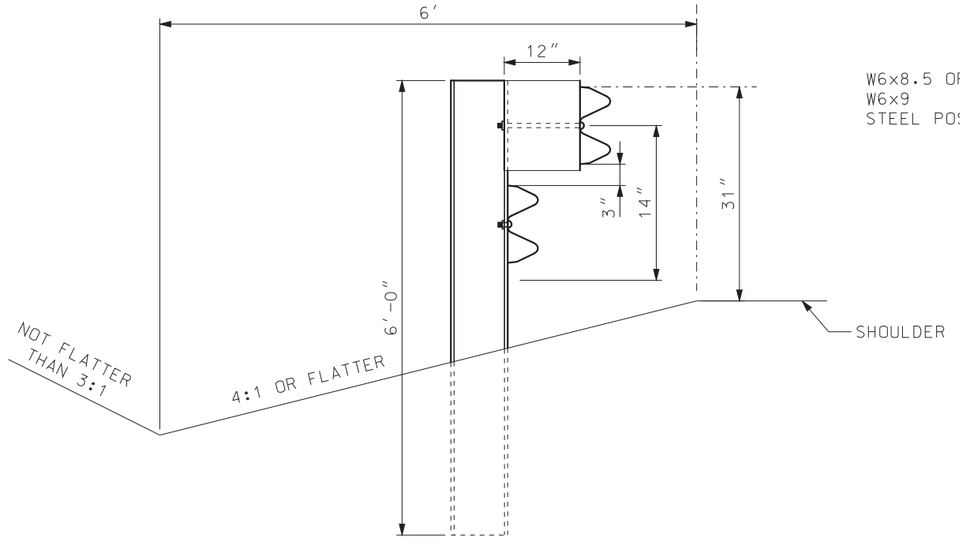

ELEVATION OF 6′ STEEL POST AND BLOCK

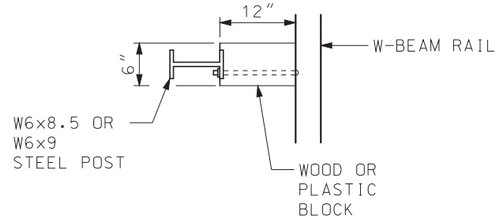

PLAN VIEW

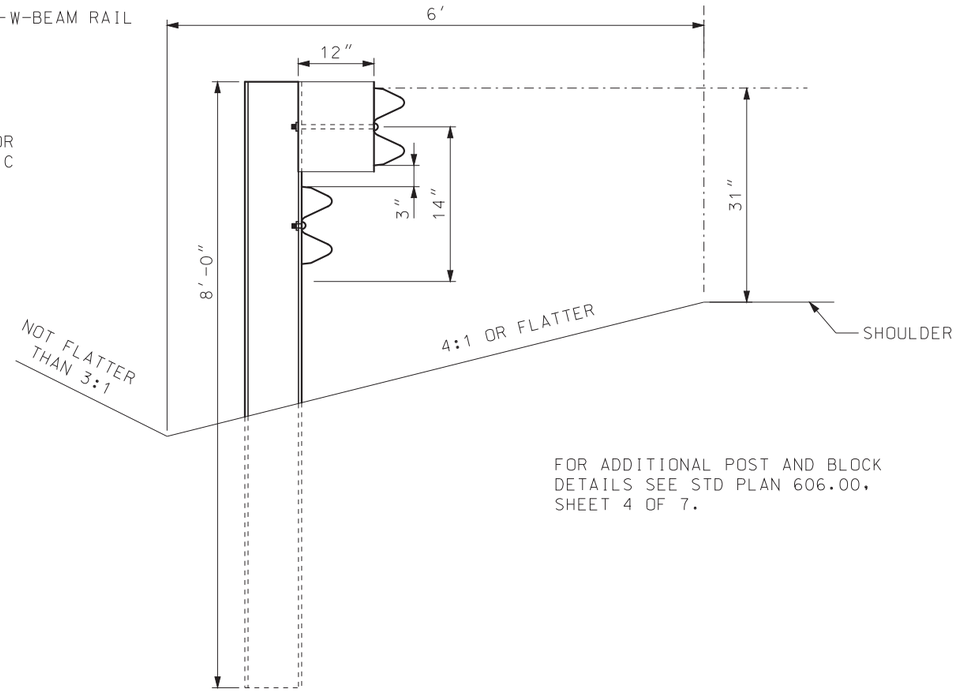

FOR ADDITIONAL POST AND BLOCK DETAILS SEE STD PLAN 606.00, SHEET 4 OF 7.

ELEVATION 8′ STEEL POST AND BLOCK

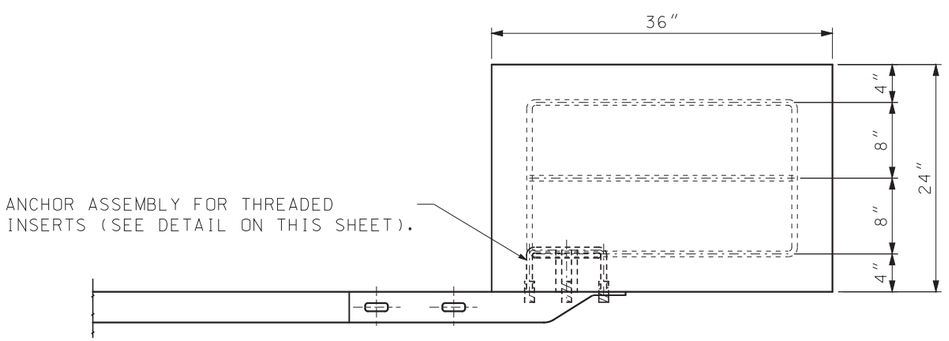

TOP VIEW

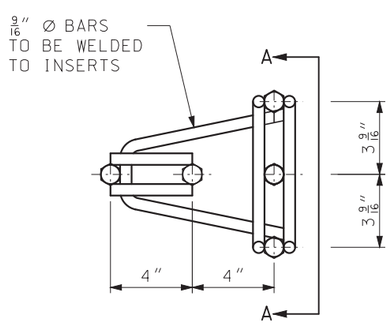

CONCRETE BLOCK ANCHOR ANCHOR ASSEMBLY

THREADED INSERTS FOR 15/16″ X 2″ GALVANIZED HEX HEAD CAP SCREWS. CAP SCREWS TO BE THREADED A MINIMUM 1 7/8″. INSERTS THREADED MINIMUM OF 1 3/4″.

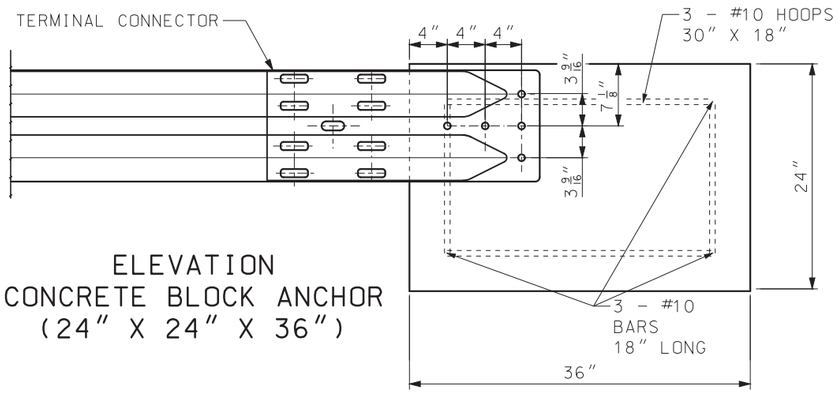

ELEVATION CONCRETE BLOCK ANCHOR (24″ X 24″ X 36″)

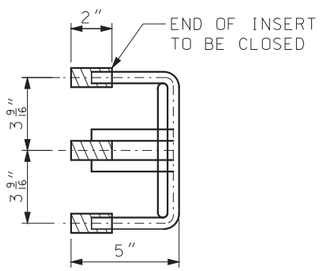

SECTION A–A

MISSOURI HIGHWAYS AND TRANSPORTATION COMMISSION
105 WEST CAPITOL
JEFFERSON CITY, MO 65102
1-888-ASK-MODOT (1-888-275-6636)

STATE OF MISSOURI
ERIC E. SCHROETER
NUMBER PE-28411
PROFESSIONAL ENGINEER
THIS SHEET HAS BEEN SIGNED, SEALED AND DATED ELECTRONICALLY.

MIDWEST GUARDRAIL SYSTEM (MGS) EMBEDDED TERMINAL ENDS GENERAL DETAILS

DATE EFFECTIVE: 07/01/2017
DATE PREPARED: 5/1/2017

606.80C

SHEET NO. 7 OF 7

IF A SEAL IS PRESENT ON THIS SHEET IT HAS BEEN ELECTRONICALLY SEALED AND DATED.

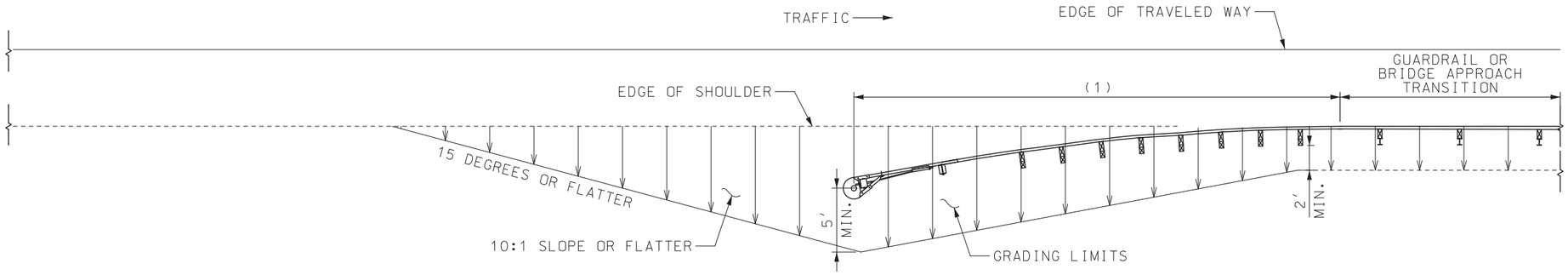

GRADING LIMITS FOR FLARED CRASHWORTHY END TERMINALS

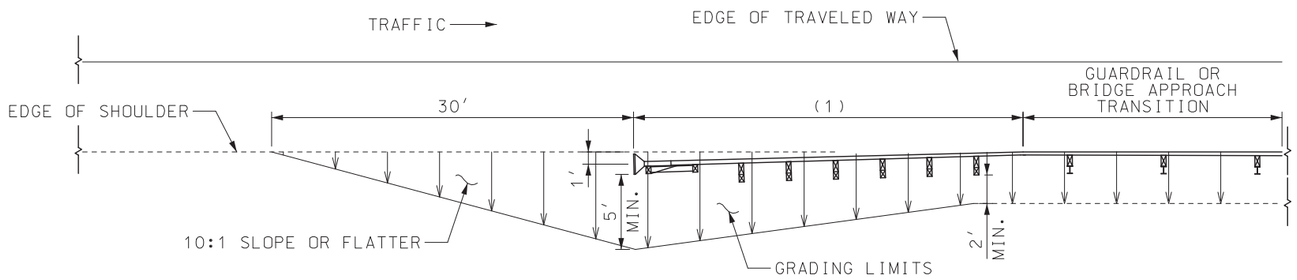

PREFERRED GRADING LIMITS FOR CRASHWORTHY END TERMINALS

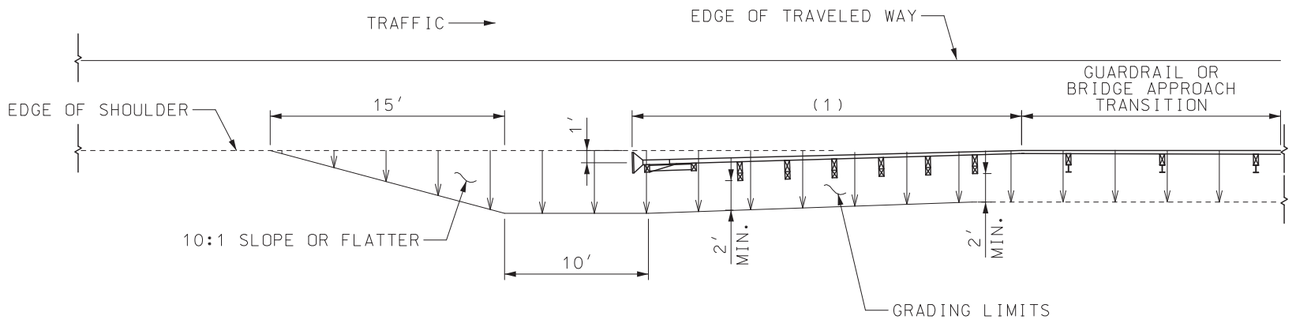

ALTERNATE GRADING LIMITS FOR CRASHWORTHY END TERMINALS

(1) APPROVED CRASHWORTHY END TERMINAL

GENERAL NOTES:

THE PREFERRED GRADING LIMITS SHALL BE USED WHEN INDICATED ON THE PLANS.

THE CONTRACTOR SHALL PROVIDE THE ENGINEER WITH APPROVED SHOP DRAWINGS OF THE MASH APPROVED CRASHWORTHY END TERMINAL.

END ANCHORS SHALL BE INSTALLED ON ENDS OF GUARDRAIL RUNS WHERE CRASHWORTHY END TERMINALS ARE NOT REQUIRED.

MISSOURI HIGHWAYS AND TRANSPORTATION COMMISSION
105 WEST CAPITOL
JEFFERSON CITY, MO 65102
1-888-ASK-MODOT (1-888-275-6636)

STATE OF MISSOURI
ERIC E. SCHROETER
NUMBER PE-28411
PROFESSIONAL ENGINEER
THIS SHEET HAS BEEN SIGNED, SEALED AND DATED ELECTRONICALLY.

MASH CRASHWORTHY END TERMINALS TYPE A GRADING LIMITS

DATE EFFECTIVE: 04/01/2019
DATE PREPARED: 1/16/2019

606.81A

SHEET NO. 1 OF 1

IF A SEAL IS PRESENT ON THIS SHEET IT HAS BEEN ELECTRONICALLY SEALED AND DATED.

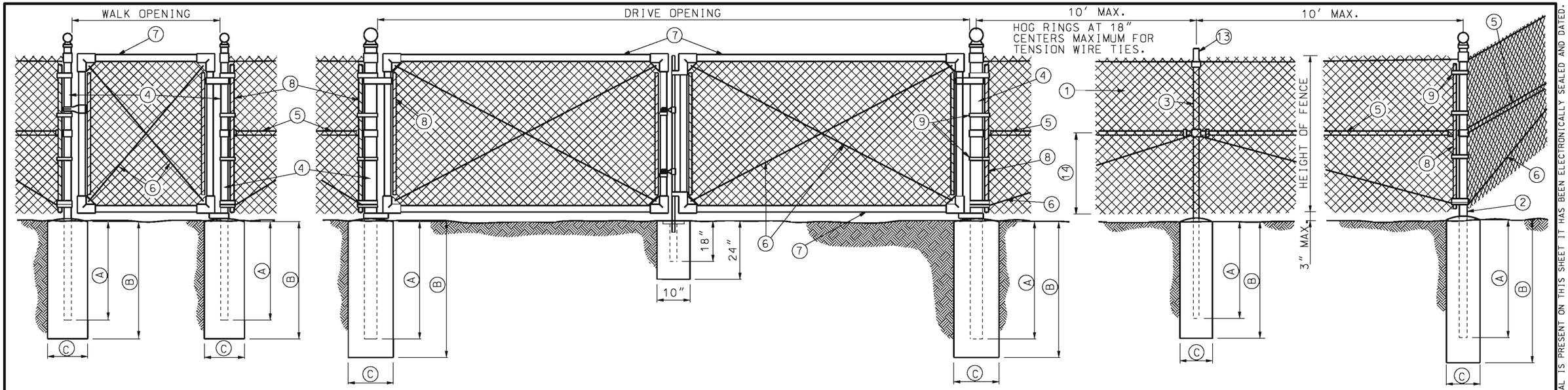

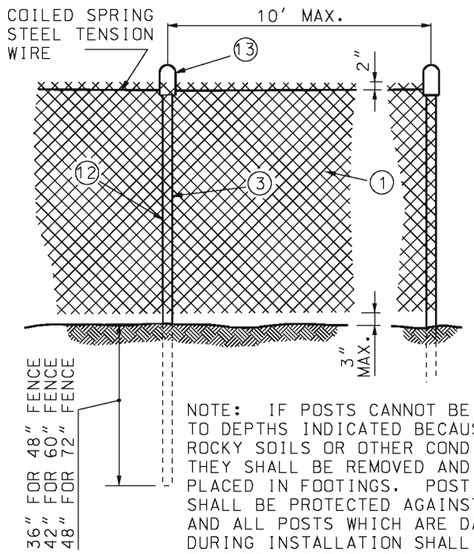

NOTE: IF POSTS CANNOT BE DRIVEN TO DEPTHS INDICATED BECAUSE OF ROCKY SOILS OR OTHER CONDITIONS, THEY SHALL BE REMOVED AND RE-PLACED IN FOOTINGS. POST TOPS SHALL BE PROTECTED AGAINST DAMAGE AND ALL POSTS WHICH ARE DAMAGED DURING INSTALLATION SHALL BE REMOVED AND REPLACED.

ALTERNATE LINE POST ANCHORAGE (DRIVEN)

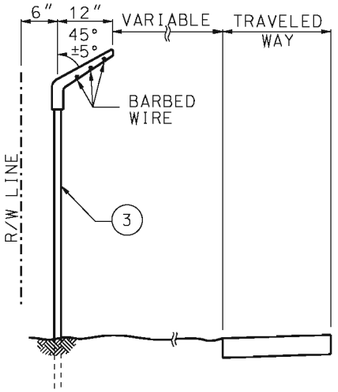

BARBED WIRE EXTENSION BRACKET

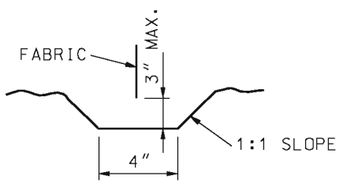

TYPICAL TRENCH DETAILS

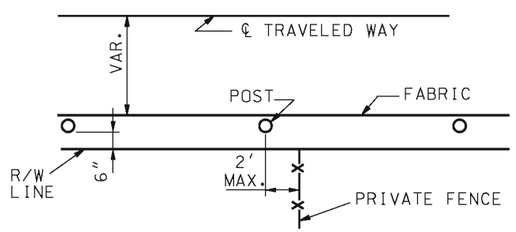

TYPICAL LOCATION

LEGEND

1. FABRIC
2. END, CORNER OR PULL POST
3. LINE POST
4. GATE POST
5. BRACE
6. TRUSS ROD
7. GATE FRAME
8. STRETCHER BAR $\frac{1}{4}$" X $\frac{3}{4}$" PLATE
9. STRETCHER BAR BAND
10. END OR CORNER CLAMP
11. POST TOPS (OTHER THAN LINE POSTS)
12. FABRIC TIES
13. LINE POST TOPS WITH OR WITHOUT TOP RAILS
14. ONE-HALF FABRIC HEIGHT OR AS RECOMMENDED BY MANUFACTURER

MINIMUM DEPTH FOR SETTING POSTS

DESCRIPTION		HEIGHT OF FENCE 48" SIZE (IN.)	60" SIZE (IN.)	72" SIZE (IN.)
② END CORNER & PULL POST	(A)	30"	36"	36"
	(B)	36"	42"	42"
	(C)	10"	12"	12"
③ LINE POST	(A)	24"	27"	36"
	(B)	30"	36"	42"
	(C)	10"	12"	12"
④ GATE POST	(A)	30"	36"	36"
	(B)	36"	42"	42"
	(C)	10"	12"	12"

MINIMUM SIZE FOR FENCE HARDWARE

	WIDTH	SIZE (IN.)	LBS/FT.
② END CORNER OR PULL POST	N/A	$2\frac{1}{2}$ DIA.	5.79
③ LINE POST	N/A	2" DIA.	3.65
④ GATE POST (SINGLE GATE OR 1 LEAF OF DOUBLE)	≤ 6'	$2\frac{1}{2}$ DIA.	5.79
	≤ 13'	$3\frac{1}{2}$ DIA.	9.10
	≤ 18'	6 DIA.	18.97
	> 18'	8 DIA.	24.70
⑤ BRACE	N/A	$1\frac{1}{4}$ DIA.	2.27
⑥ TRUSS ROD	N/A	$\frac{3}{8}$	–
⑦ GATE FRAME	N/A	$1\frac{1}{2}$ DIA.	2.72

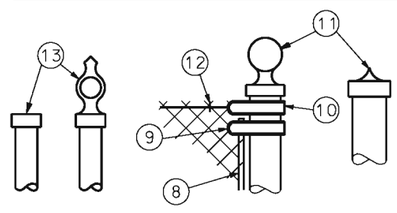

POST TOPS TO BE PRESSURE FITTED OR SCREWED. POST TOPS MAY BE ELIMINATED FOR ALL POSTS EXCEPT PIPE POSTS. IF POST TOPS ARE ELIMINATED, POST LENGTH SHALL BE INCREASED 3".

POST TOPS

WIRE SIZE AND HEIGHT OF FABRIC			
SPECIFIED DIAMETER			HEIGHT OF FABRIC INCHES
INCHES	GAGE	MESH INCHES	
0.120	11	2	36, 42
0.148	9	2	48, 60
0.192	6	2	72, 84

GENERAL NOTES:

WEIGHTS OF MATERIALS SHOWN IN TABLE ARE FOR ASTM F 1043, GROUP IA. SIZES SHOWN ARE FOR STEEL AND ALUMINUM. EQUIVALENT ASTM F 1043 ALTERNATIVES MAY BE USED.

PULL POSTS SHALL BE USED AT SHARP BREAKS IN VERTICAL GRADE OR AT APPROXIMATE 500' CENTERS ON STRAIGHT RUNS OR AS DIRECTED BY THE ENGINEER.

DRILLED HOLES © IN SOLID ROCK SHALL PROVIDE A DIAMETER OF NOT LESS THAN 2" GREATER THAN THE MAXIMUM TRANSVERSE DIMENSION OF THE POST SECTION.

ALL POSTS SHALL HAVE PROVISIONS TO SECURELY HOLD THE TOP TENSION WIRE IN POSITION AND ALLOW FOR REMOVAL AND REPLACEMENT OF A POST WITHOUT DAMAGING THE TOP TENSION WIRE.

THE MESH SIZE SHALL BE 2 INCHES $\pm\frac{1}{8}$ IN. MEASURED IN EITHER DIRECTION AS THE MINIMUM CLEAR DISTANCE BETWEEN THE WIRES FORMING THE PARALLEL SIDES OF THE MESH.

IF A SEAL IS PRESENT ON THIS SHEET IT HAS BEEN ELECTRONICALLY SEALED AND DATED.

MISSOURI HIGHWAYS AND TRANSPORTATION COMMISSION
105 WEST CAPITOL
JEFFERSON CITY, MO 65102
1-888-ASK-MODOT (1-888-275-6636)

STATE OF MISSOURI
KATHRYN PHILLIPS HARVEY
NUMBER PE-23751
PROFESSIONAL ENGINEER
THIS SHEET HAS BEEN SIGNED, SEALED AND DATED ELECTRONICALLY.

CHAIN-LINK FENCE

DATE EFFECTIVE: 02/01/2007
DATE PREPARED: 8/21/2009

607.10V

SHEET NO. 1 OF 1

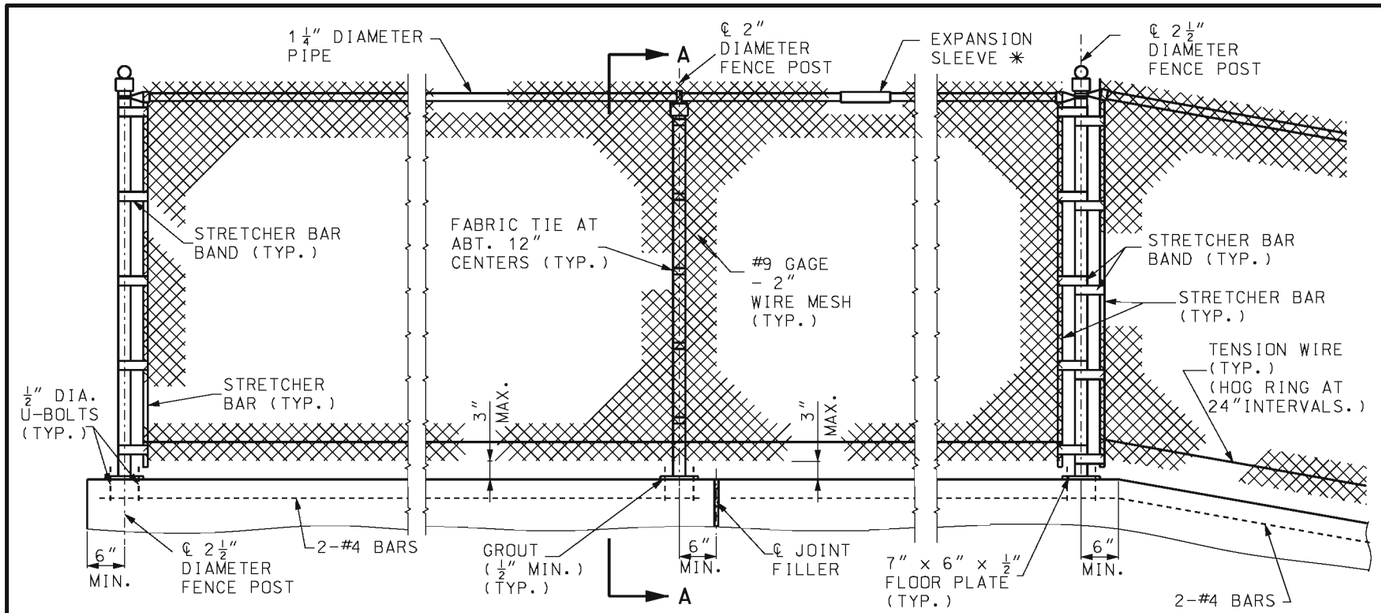

TERMINAL POST LINE POST PULL POST

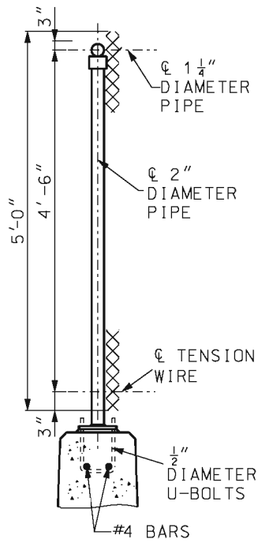

SECTION A-A

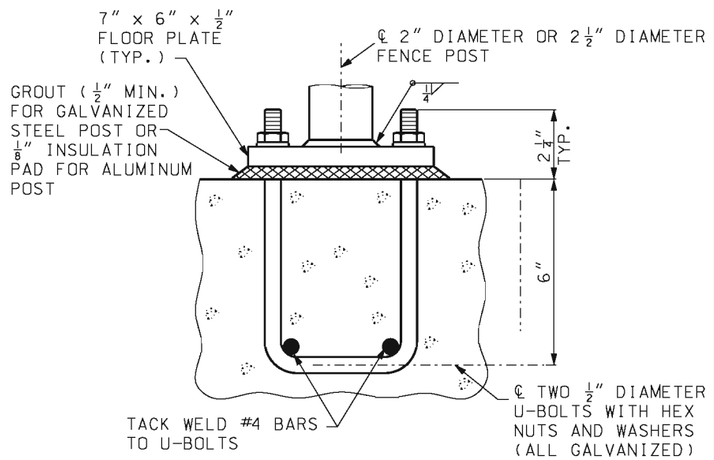

TYPICAL FENCE POST CONNECTION

* PLACE EXPANSION SLEEVE AT ABOUT 30'-0" CENTERS WITH AT LEAST ONE EXPANSION SLEEVE BETWEEN PULL POSTS.

PART ELEVATION (TYPICAL)

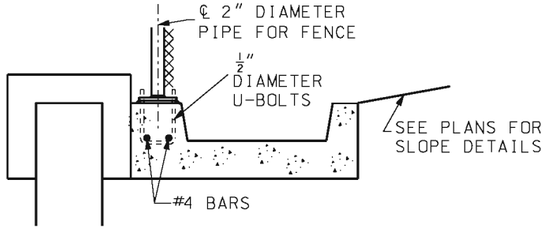

ALTERNATE SECTION A-A FOR MSE WALLS

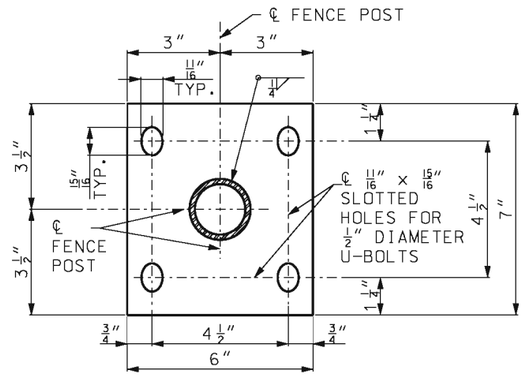

PLAN OF FLOOR PLATE

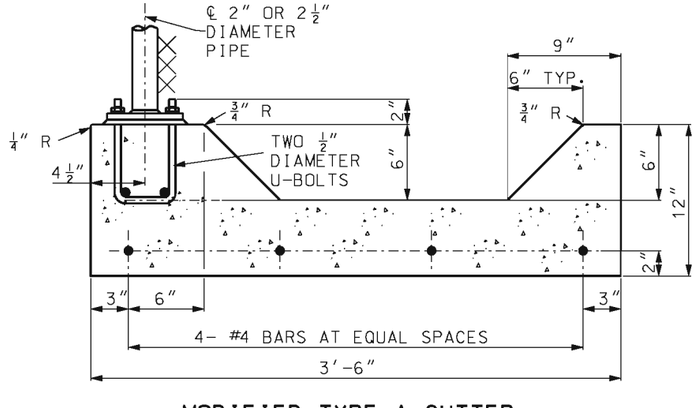

MODIFIED TYPE A GUTTER

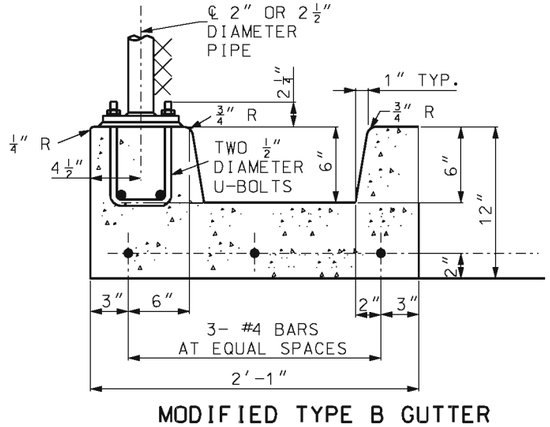

MODIFIED TYPE B GUTTER

FENCE CONNECTION FOR MSE WALLS

GENERAL NOTES:

PAYMENT FOR U-BOLTS WITH NUTS, WASHERS, AND #4 BARS WILL BE CONSIDERED COMPLETELY COVERED BY THE CONTRACT UNIT PRICE FOR CHAIN-LINK FENCE (RETAINING WALLS).

PULL POST SHALL BE USED AT SHARP BREAKS IN VERTICAL GRADE OR AT APPROXIMATE 100'-0" CENTERS ON STRAIGHT RUNS.

THE CHAIN-LINK FENCE SHALL BE IN ACCORDANCE WITH APPLICABLE PARTS OF SEC. 607.

MAXIMUM POST SPACING IN HORIZONTAL DIRECTION SHALL BE 10'-0".

MISSOURI HIGHWAYS AND TRANSPORTATION COMMISSION
105 WEST CAPITOL
JEFFERSON CITY, MO 65102
1-888-ASK-MODOT (1-888-275-6636)

STATE OF MISSOURI
KATHRYN PHILLIPS HARVEY
NUMBER PE-23751
PROFESSIONAL ENGINEER
THIS SHEET HAS BEEN SIGNED, SEALED AND DATED ELECTRONICALLY.

CHAIN-LINK FENCE FOR RETAINING WALLS

DATE EFFECTIVE: 06/01/2009
DATE PREPARED: 4/30/2009

607.11H

SHEET NO. 1 OF 1

IF A SEAL IS PRESENT ON THIS SHEET IT HAS BEEN ELECTRONICALLY SEALED AND DATED.

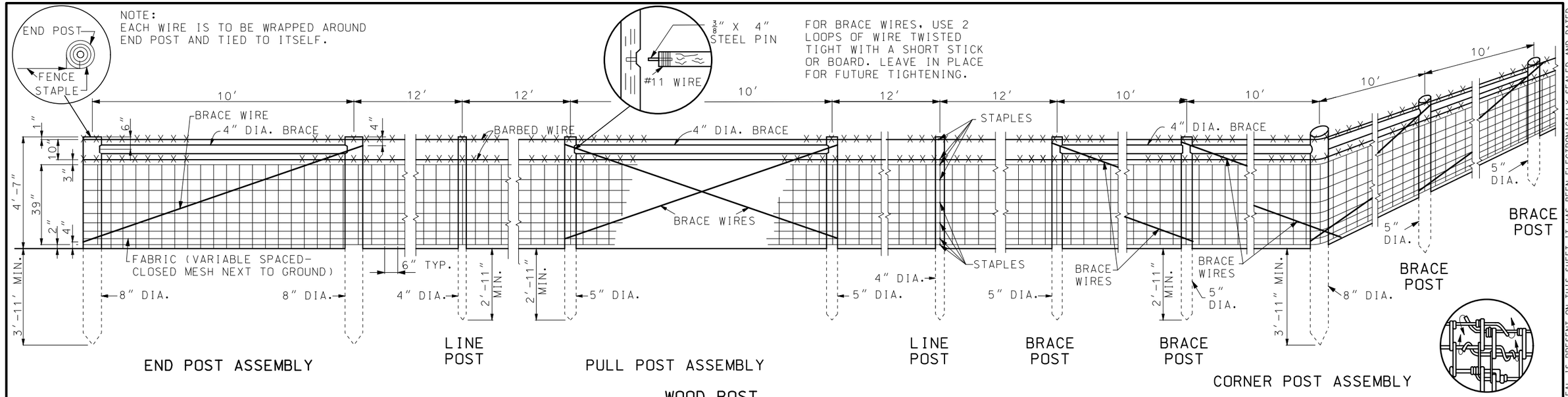

TYPICAL FENCE LOCATION

GATE OPENING	GATE POST SIZE	#/FT.
≤ 6'	2" DIA.	3.65
≤13'	2½" DIA.	5.79
≤18'	3½" DIA.	9.10
>18'	6" DIA.	18.97
GATE FRAME	1½" DIA.	2.72

1. BRACES
2. WIRE TIES
3. 3.8" ADJUSTABLE TRUSS RODS.

GENERAL NOTES:

STEEL LINE POSTS SHALL BE OF AN APPROVED "U", "Y", "T" OR CHANNEL SECTION, NOTCHED OR STUDDED WITH AN ANCHOR PLATE. POST PUNCHED WITH HOLES OR SELF FASTENING LUGS WILL NOT BE PERMITTED.

STAPLES SHALL BE SCREW SHANK TYPE OR EQUIVALENT (1¼" MINIMUM LENGTH).

STRETCHED FABRIC AND BARBED WIRE ON OUTSIDE OF POST ON CORNERS AND CURVES.

ATTACHMENT OF FABRIC TO STEEL LINE POSTS IN ACCORDANCE WITH MANUFACTURE'S RECOMMENDATION.

GATES FOR WOVEN WIRE FENCE SHALL BE IN ACCORDANCE WITH SEC 607.20 AND 1043.3.6 OF THE STANDARD SPECIFICATIONS. EXCEPT THE FILLER SHALL BE WOVEN WIRE FABRIC OF THE SAME KIND AS USED FOR THE FENCE.

SINGLE LEAF GATES REQUIRE UP TO 12" OPENING. DOUBLE LEAF GATES REQUIRE OVER 12" OPENING. DIRECTION OF SWING OF GATES SHALL BE AS INDICATED ON THE PLANS OR AS DIRECTED BY THE ENGINEER.

MISSOURI HIGHWAYS AND TRANSPORTATION COMMISSION
105 WEST CAPITOL
JEFFERSON CITY, MO 65102
1-888-ASK-MODOT (1-888-275-6636)

STATE OF MISSOURI
ERIC E. SCHROETER
NUMBER PE-28411
PROFESSIONAL ENGINEER
THIS SHEET HAS BEEN SIGNED, SEALED AND DATED ELECTRONICALLY.

WOVEN WIRE FENCE

DATE EFFECTIVE: 07/01/2016
DATE PREPARED: 5/13/2016

607.20G

SHEET NO. 1 OF 2

IF A SEAL IS PRESENT ON THIS SHEET IT HAS BEEN ELECTRONICALLY SEALED AND DATED.

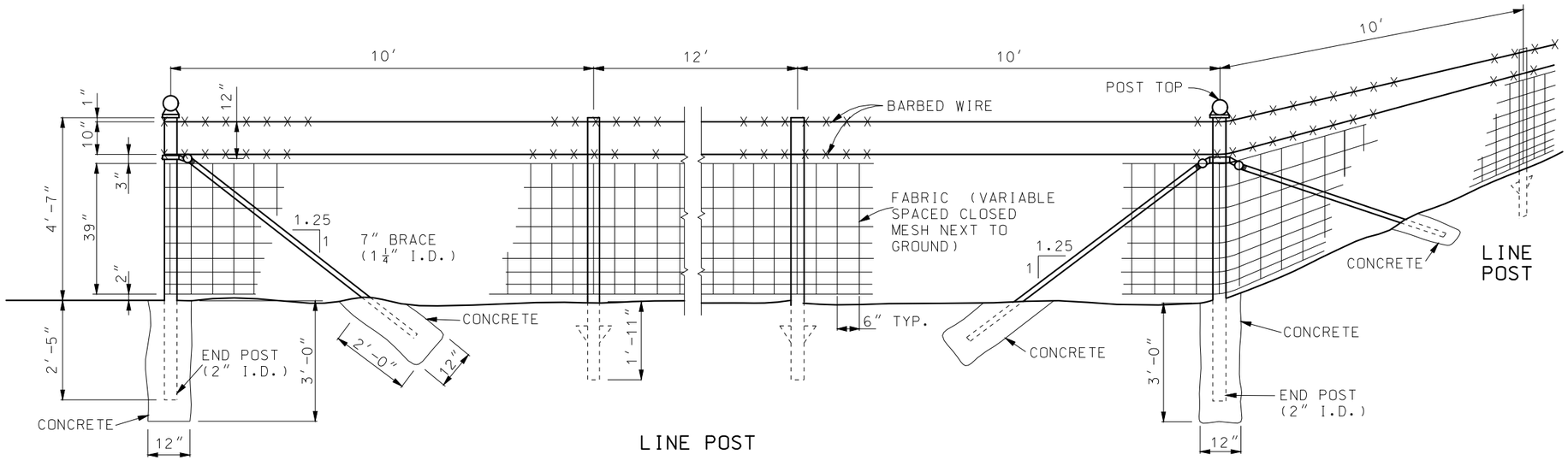

END POST ASSEMBLY

LINE POST

STEEL POST

CORNER OR PULL POST ASSEMBLY

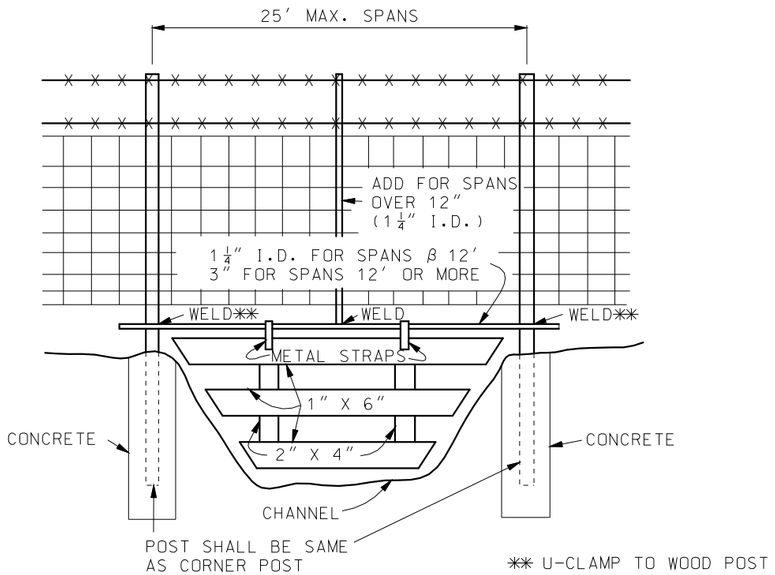

TYPICAL
WATER CROSSING GATE

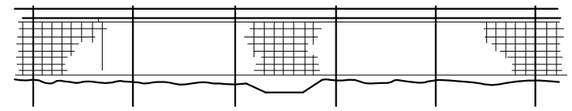

ROADWAY DITCHES OR SMALL SHALLOW CHANNELS
(SPAN WITH NORMAL LINE POST SPACING)

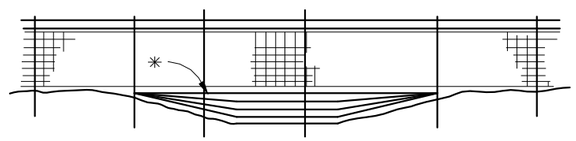

POORLY DEFINED CHANNELS (SMALL DRAINAGE AREAS)

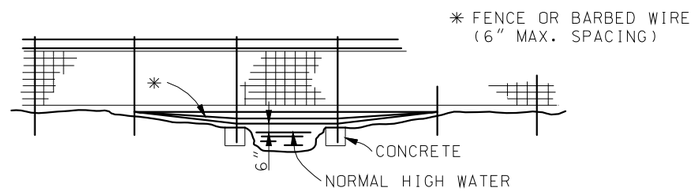

WELL DEFINED CHANNELS (LARGE DRAINAGE AREAS)

TYPICAL FENCING AT
CHANNEL CROSSING

IF A SEAL IS PRESENT ON THIS SHEET IT HAS BEEN ELECTRONICALLY SEALED AND DATED.

MISSOURI HIGHWAYS AND TRANSPORTATION COMMISSION
105 WEST CAPITOL
JEFFERSON CITY, MO 65102
1-888-ASK-MODOT (1-888-275-6636)

STATE OF MISSOURI
ERIC E. SCHROETER
NUMBER PE-28411
PROFESSIONAL ENGINEER
THIS SHEET HAS BEEN SIGNED, SEALED AND DATED ELECTRONICALLY.

WOVEN WIRE FENCE

DATE EFFECTIVE: 07/01/2016
DATE PREPARED: 5/13/2016

607.20G

SHEET NO.
2 OF 2

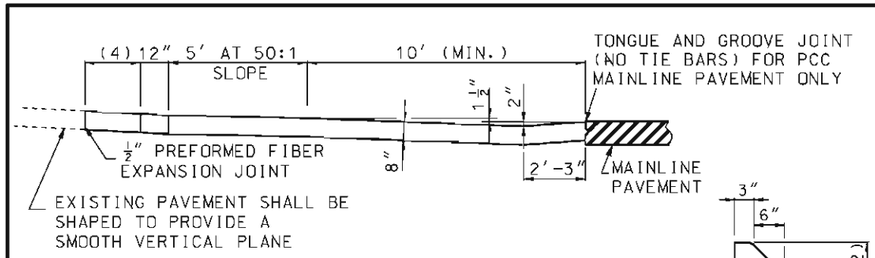

SECTION A-A

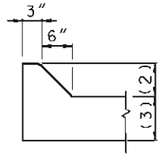

SECTION B-B

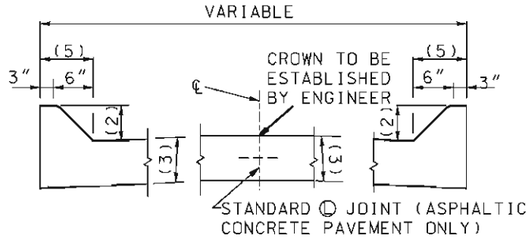

SECTION C-C

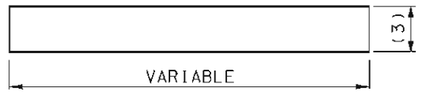

SECTION D-D

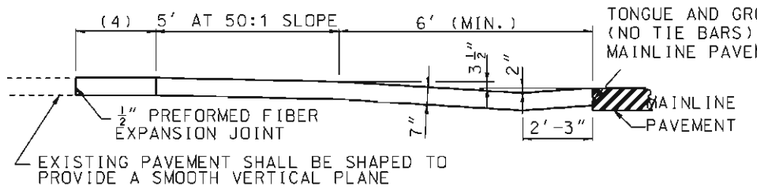

SECTION E-E

(1) THE NUMBER OF Ⓛ JOINTS SHOWN IN PAVED APPROACH ARE FOR ILLUSTRATIVE PURPOSES ONLY. JOINTS PLACED IN PAVED APPROACHES SHALL MATCH THE Ⓒ1 PAVEMENT TRANSVERSE MAINLINE PAVEMENT JOINT LOCATION.
(2) 6" – EXCEPT WHERE VARIED TO MEET EXISTING IMPROVEMENTS.
(3) 8" NRCCP – FOR STREET, SIDEROAD, ALLEY OR COMMERCIAL APPROACHES. 7" NRPCCP – FOR PRIVATE APPROACHES.
(4) EXTEND WHERE REQUIRED TO MEET EXISTING PAVEMENT.
(5) VARY TO MEET EXISTING IMPROVEMENTS.

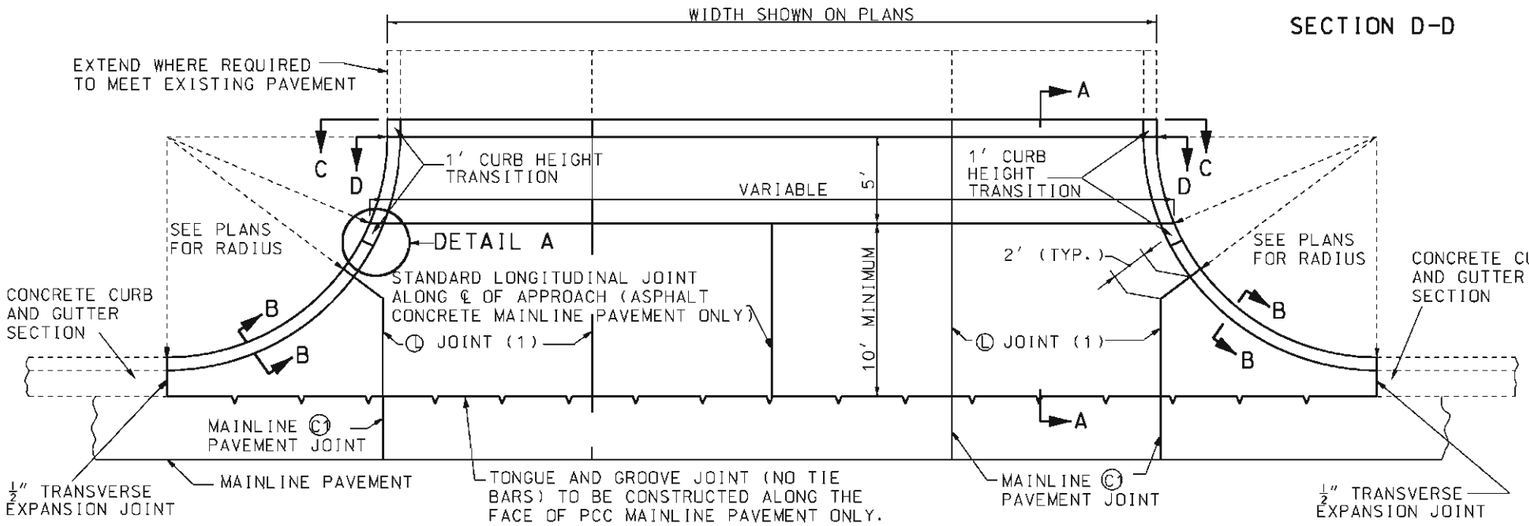

PLAN OF STREET, SIDEROAD, ALLEY OR COMMERCIAL APPROACHES

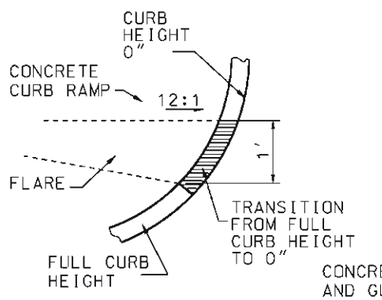

DETAIL A

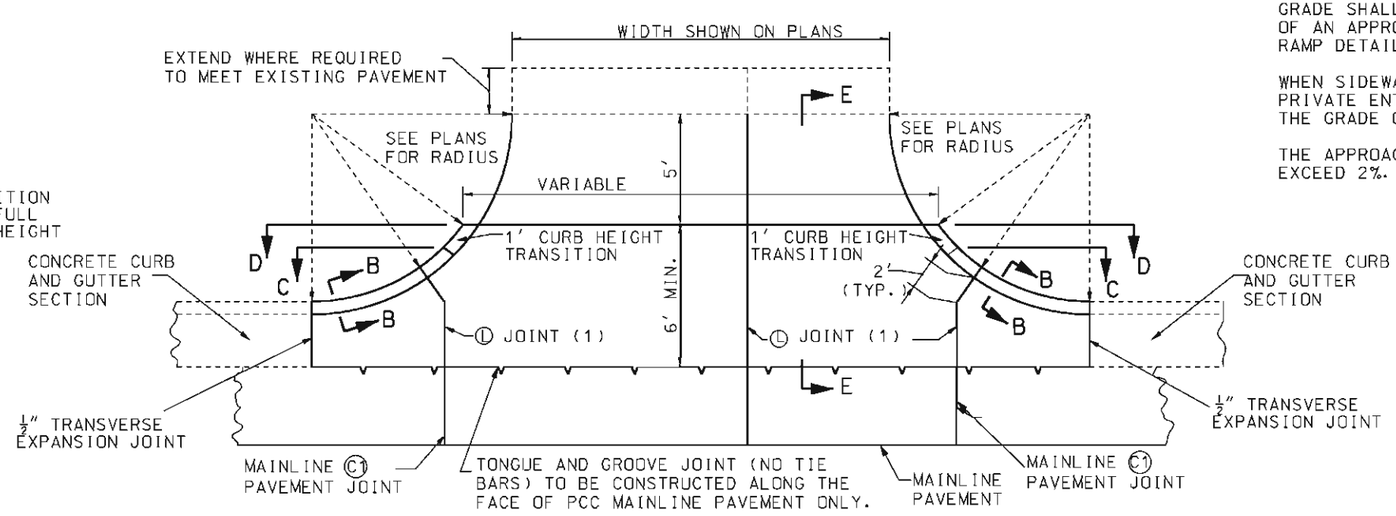

PLAN OF PRIVATE APPROACHES

GENERAL NOTES:

WHERE PAVED APPROACH MEETS EXISTING CONCRETE PAVEMENT OR SIDEWALK, PLACE ½" PREFORMED FIBER EXPANSION JOINT, CUT TO TEMPLATE, THROUGH NEW CONCRETE AND 1' FROM JUNCTION WITH EXISTING CONCRETE, OR ALONG INSIDE EDGE OF SIDEWALK. WHERE PAVED APPROACH MEETS EXISTING BITUMINOUS CONSTRUCTION, OMIT JOINT.

SEE STANDARD PLAN 608.10 FOR CONCRETE CURB RAMPS.

SEE STANDARD PLAN 502.05 FOR JOINT DETAILS.

SEE STANDARD PLAN 609.00 FOR TRANSVERSE EXPANSION JOINT DETAILS.

WHERE DRAINAGE IS NOT TO BE CARRIED ACROSS THE PAVED APPROACH, SECTION A-A SHALL BE MODIFIED TO ELIMINATE THE "DIP" AND SHALL BE CROWNED AS DIRECTED BY THE ENGINEER.

IF SIDEWALKS ARE NOT INCLUDED IN CONSTRUCTION OF PAVED APPROACH, PLACE GROUND COVER, AS SHOWN ON PLANS, BEHIND CURB THROUGH RADIUS. GROUND COVER SHALL CONFORM TO FINISHED GRADING FOR CURB RAMP.

HAND FINISHING PERMITTED ON PAVED APPROACH.

WHEN SIDEWALKS ARE PRESENT ADJACENT TO THE PAVED APPROACHES OF STREETS, SIDEROADS, ALLEYS OR COMMERCIAL ENTRANCES, THE SIDEWALK GRADE SHALL BE TRANSITIONED TO THE GRADE OF THE APPROACH BY WAY OF AN APPROPRIATE RAMP AS SHOWN ON THE PLANS. SEE 608.10 FOR RAMP DETAILS.

WHEN SIDEWALKS ARE PRESENT ADJACENT TO THE PAVED APPROACHES OF PRIVATE ENTRANCES, THE APPROACH GRADE SHALL BE TRANSITIONED TO THE GRADE OF THE SIDEWALK.

THE APPROACH GRADE THROUGH THE LIMITS OF A SIDEWALK SHALL NOT EXCEED 2%.

IF A SEAL IS PRESENT ON THIS SHEET IT HAS BEEN ELECTRONICALLY SEALED AND DATED.

MISSOURI HIGHWAYS AND TRANSPORTATION COMMISSION
105 WEST CAPITOL
JEFFERSON CITY, MO 65102
1-888-ASK-MODOT (1-888-275-6636)

STATE OF MISSOURI
KATHRYN PHILLIPS HARVEY
NUMBER PE-23751
PROFESSIONAL ENGINEER
THIS SHEET HAS BEEN SIGNED, SEALED AND DATED ELECTRONICALLY

PAVED APPROACHES
ADJOINING CURB AND GUTTER SECTIONS

DATE EFFECTIVE: 10/01/2009
DATE PREPARED: 8/26/2009

608.00H

SHEET NO. 1 OF 2

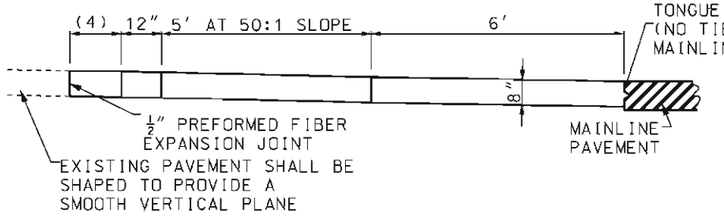

SECTION F-F

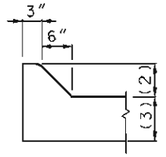

SECTION G-G

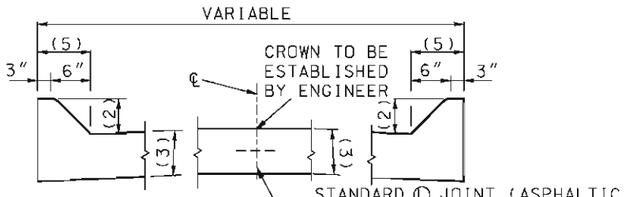

SECTION H-H

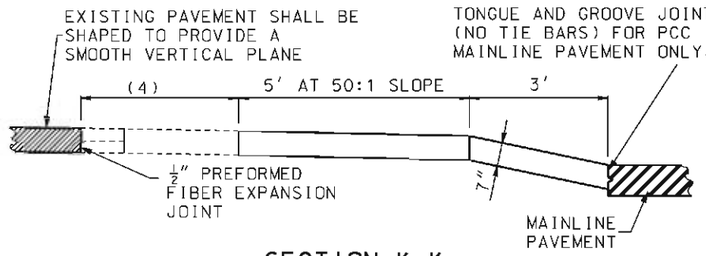

SECTION K-K

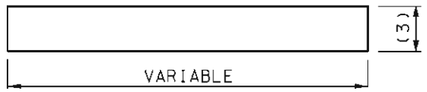

SECTION J-J

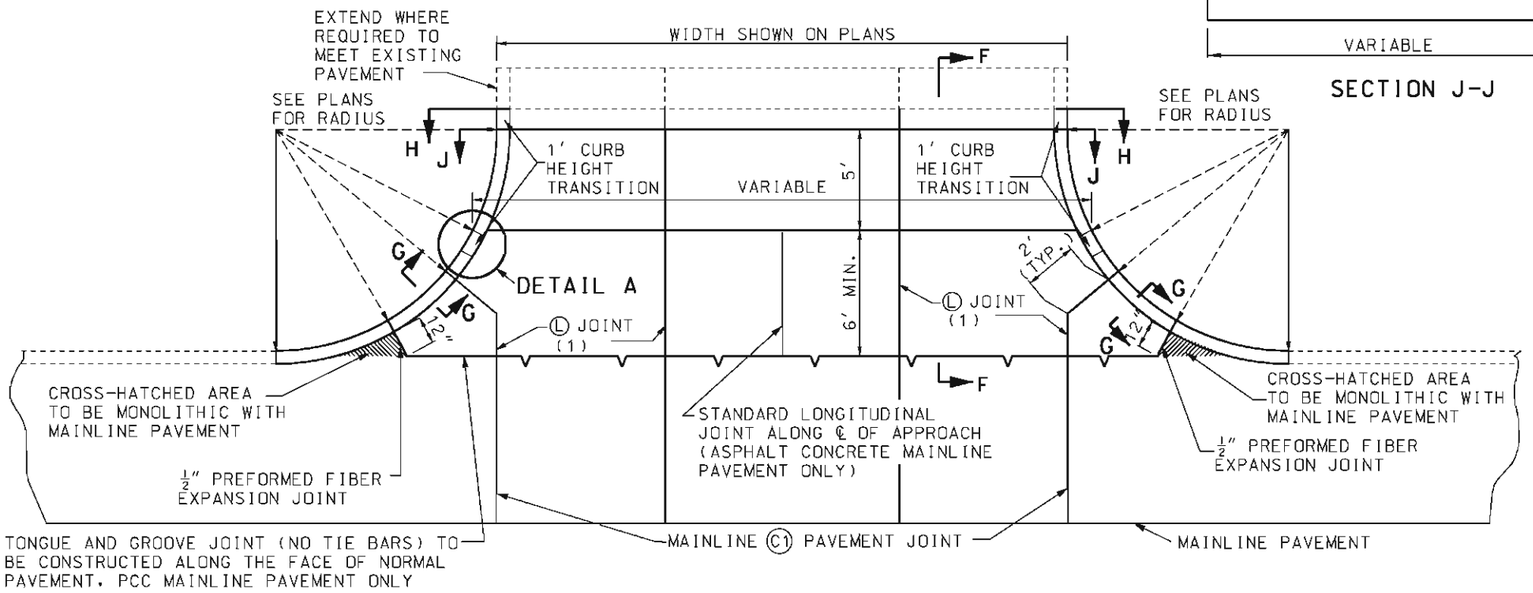

PLAN OF STREET, SIDEROAD, ALLEY OR COMMERCIAL APPROACHES

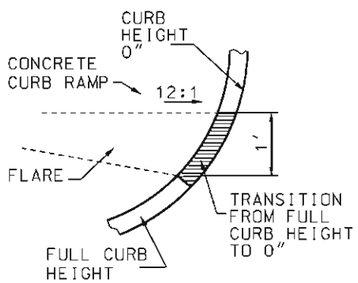

DETAIL A

PLAN OF PRIVATE APPROACHES

(1) THE NUMBER OF Ⓛ JOINTS SHOWN IN PAVED APPROACH ARE FOR ILLUSTRATIVE PURPOSES ONLY. JOINTS PLACED IN PAVED APPROACHES SHALL MATCH THE Ⓒ1 PAVEMENT TRANSVERSE MAINLINE PAVEMENT JOINT LOCATION.
(2) 6" - EXCEPT WHERE VARIED TO MEET EXISTING IMPROVEMENTS.
(3) 8" NRCCP - FOR STREET, SIDEROAD, ALLEY OR COMMERCIAL APPROACHES. 7" NRPCCP - FOR PRIVATE APPROACHES.
(4) EXTEND WHERE REQUIRED TO MEET EXISTING PAVEMENT.
(5) VARY TO MEET EXISTING IMPROVEMENTS.

GENERAL NOTES:

WHERE PAVED APPROACH MEETS EXISTING PCC PAVEMENT OR SIDEWALK, PLACE ½" PREFORMED FIBER EXPANSION JOINT, CUT TO TEMPLATE, THROUGH NEW CONCRETE AND 1' FROM JUNCTION WITH EXISTING CONCRETE, OR ALONG INSIDE EDGE OF SIDEWALK. WHERE PAVED APPROACH MEETS EXISTING BITUMINOUS CONSTRUCTION, OMIT JOINT.

SEE STANDARD PLAN 608.10 FOR CONCRETE CURB RAMPS.

SEE STANDARD PLAN 502.05 FOR JOINT DETAILS.

(SECTION F-F) ELEVATION OF CENTER OF PAVED APPROACH, AT A POINT 6' FROM EDGE OF NORMAL PAVEMENT SHALL NOT VARY MORE THAN 2" FROM ELEVATION OF MAINLINE PAVEMENT AT CENTERLINE OF PAVED APPROACH.

IF SIDEWALKS ARE NOT INCLUDED IN CONSTRUCTION OR PAVED APPROACH, PLACE GROUND COVER, AS SHOWN ON PLANS, BEHIND CURB THROUGH RADIUS. GROUND COVER SHALL CONFORM TO FINISHED GRADING FOR CURB RAMP.

HAND FINISHING PERMITTED ON PAVED APPROACH.

WHEN SIDEWALKS ARE PRESENT ADJACENT TO THE PAVED APPROACHES OF STREETS, SIDEROADS, ALLEYS OR COMMERCIAL ENTRANCES, THE SIDEWALK GRADE SHALL BE TRANSITIONED TO THE GRADE OF THE APPROACH BY WAY OF AN APPROPRIATE RAMP AS SHOWN ON THE PLANS. SEE 608.10 FOR RAMP DETAILS.

WHEN SIDEWALKS ARE PRESENT ADJACENT TO THE PAVED APPROACHES OF PRIVATE ENTRANCES, THE APPROACH GRADE SHALL BE TRANSITIONED TO THE GRADE OF THE SIDEWALK.

THE APPROACH GRADE THROUGH THE LIMITS OF A SIDEWALK SHALL NOT EXCEED 2%.

IF A SEAL IS PRESENT ON THIS SHEET IT HAS BEEN ELECTRONICALLY SEALED AND DATED.

MISSOURI HIGHWAYS AND TRANSPORTATION COMMISSION
105 WEST CAPITOL
JEFFERSON CITY, MO 65102
1-888-ASK-MODOT (1-888-275-6636)

STATE OF MISSOURI
KATHRYN PHILLIPS HARVEY
NUMBER PE-23751
PROFESSIONAL ENGINEER
THIS SHEET HAS BEEN SIGNED, SEALED AND DATED ELECTRONICALLY

PAVED APPROACHES
NOT ADJOINING CURB AND GUTTER SECTIONS

DATE EFFECTIVE:	10/01/2009	608.00H	SHEET NO.
DATE PREPARED:	8/26/2009		2 OF 2

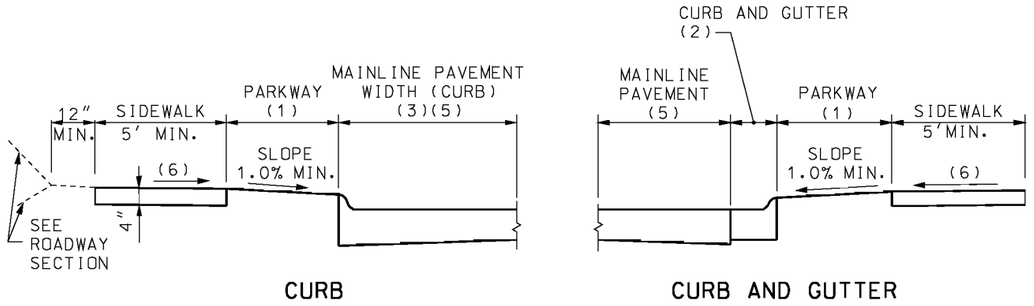

CURB CURB AND GUTTER

TYPICAL SIDEWALK WITH PARKWAY 2' OR MORE

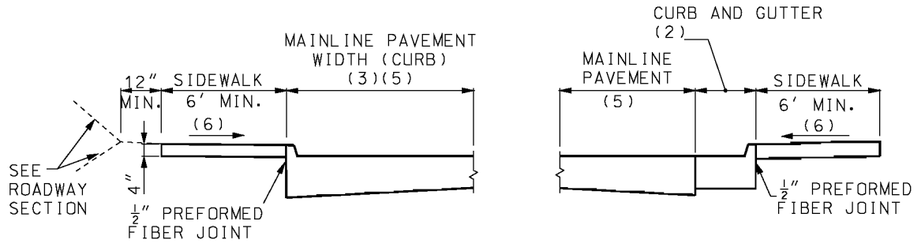

CURB CURB AND GUTTER

TYPICAL SIDEWALK WITH NO PARKWAY

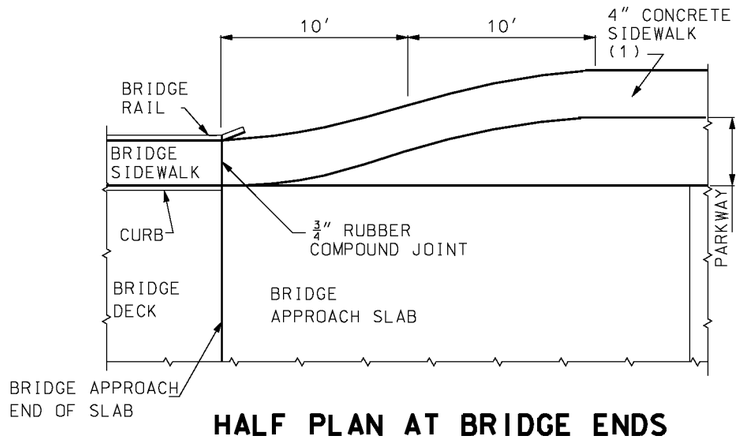

HALF PLAN AT BRIDGE ENDS

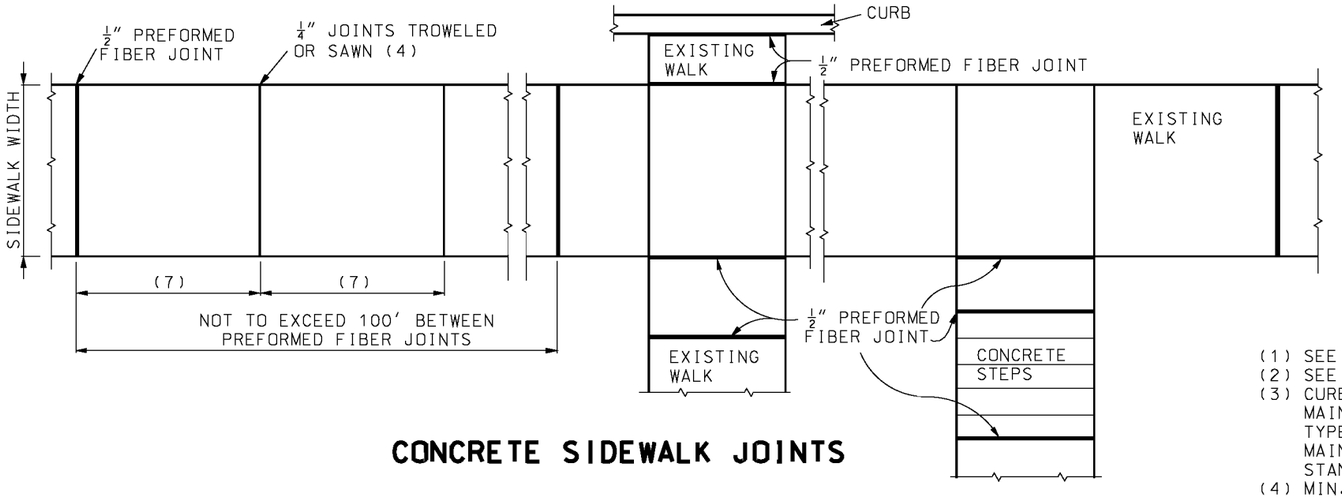

CONCRETE SIDEWALK JOINTS

(1) SEE PLANS FOR WIDTH
(2) SEE STANDARD 608.00
(3) CURB TO BE MONOLITHIC WITH PCC MAINLINE PAVEMENT. CURB TO BE TYPE S WITH ASPHALT CONCRETE MAINLINE PAVEMENT. SEE STANDARD PLAN 609.00.
(4) MIN. ½" DEPTH JOINT.
(5) SEE TYPICAL PAVEMENT SECTION
(6) SLOPE 1.0% (2.0% MAX.)
(7) SPACING EQUAL TO WIDTH OF WALK

GENERAL NOTES:

ALL AREAS OF THE PEDESTRIAN ACCESS ROUTE MUST BE COMPLIANT WITH THE AMERICANS WITH DISABLILITES ACT - GUIDELINES FOR ACCESSIBLE PUBLIC RIGHTS OF WAY. EXCEPTIONS MUST BE APPROVED BY THE ENGINEER. ALL OTHER AREAS OF NON-COMPLIANCE SHALL BE REMOVED AND CORRECTED AT THE CONTRACTOR'S EXPENSE.

THE SURFACES OF PEDESTRIAN ACCESS ROUTES AND ELEMENTS, AND SPACES REQUIRED TO CONNECT TO PEDESTRIAN ACCESS ROUTES, SHALL BE FIRM, STABLE, SLIP RESISTANT, AND SHALL NOT POND WATER.

WHERE SIDEWALKS ARE LESS THAN 5 FT., 5 FT. X 5 FT. PASSING SPACES EVERY 200 FT. SHALL BE PROVIDED AND ARE PERMITTED TO OVERLAP PEDESTRIAN ACCESS ROUTES.

THE CROSS SLOPE OF THE CONTINUOUS PEDESTRIAN ACCESS ROUTE THROUGH ENTRANCES, ALLEYS, AND SIDEROAD CONNECTIONS WITH STOP OR YIELD CONTROL SHALL BE 1.00% TO FACILITATE DRAINAGE (2.00% MAX.).

WHERE PEDESTRIAN ACCESS ROUTES ARE CONTAINED WITHIN PEDESTRIAN STREET CROSSINGS WITHOUT YIELD OR STOP CONTROL, THE CROSS SLOPE OF THE PEDESTRIAN ACCESS ROUTE SHALL BE 5.00% MAXIMUM.

WHERE PEDESTRIAN ACCESS ROUTES ARE CONTAINED WITHIN MIDBLOCK PEDESTRIAN STREET CROSSINGS, THE CROSS SLOPE OF THE PEDESTRIAN ACCESS ROUTE SHALL BE PERMITTED TO EQUAL THE STREET OR HIGHWAY GRADE.

STORMWATER INLETS, SIGNS, POSTS, MANHOLE COVERS, PULL BOXES AND OTHER ACCESS LIDS SHOULD BE AVOIDED WITHIN THE SIDEWALK. IF SUCH A LOCATION IS NECESSARY, THE FEATURE MUST MEET ADA STANDARDS.

THE RUNNING GRADE OF A SIDEWALK SHALL NOT EXCEED 5.0% UNLESS IT IS MATCHING THE GRADE OF THE ADJACENT ROADWAY.

PEDESTRIAN ACCESS ROUTE SHALL CONTINUE ACROSS RESIDENTIAL AND COMMERCIAL ENTRANCES, ALLEYS, AND SIDEROAD CONNECTIONS.

IF A SEAL IS PRESENT ON THIS SHEET IT HAS BEEN ELECTRONICALLY SEALED AND DATED.

MISSOURI HIGHWAYS AND TRANSPORTATION COMMISSION
105 WEST CAPITOL
JEFFERSON CITY, MO 65102
1-888-ASK-MODOT (1-888-275-6636)

STATE OF MISSOURI
ERIC E. SCHROETER
NUMBER PE-2841
PROFESSIONAL ENGINEER
THIS SHEET HAS BEEN SIGNED, SEALED AND DATED ELECTRONICALLY.

CONCRETE SIDEWALK

DATE EFFECTIVE: 04/01/2015
DATE PREPARED: 2/20/2015

608.10P

SHEET NO. 1 OF 1

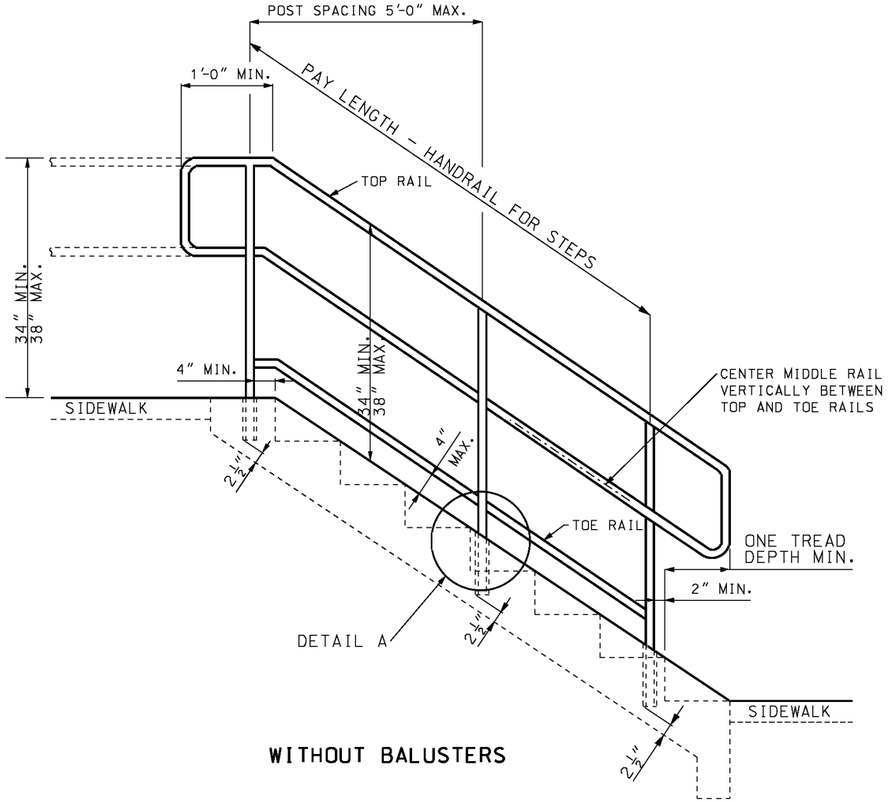

WITHOUT BALUSTERS

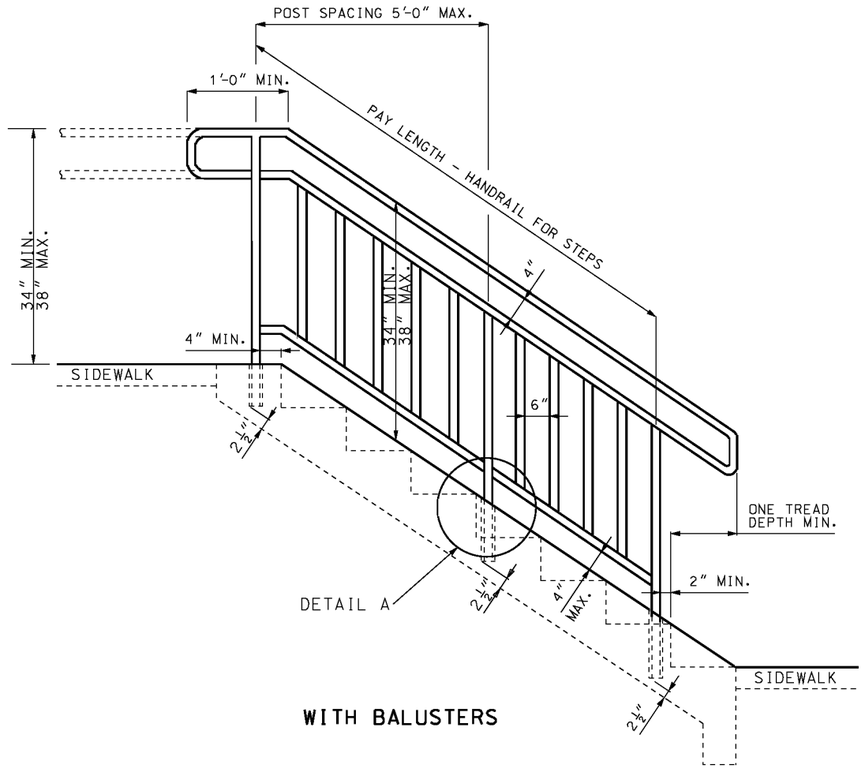

WITH BALUSTERS

RAILING & POST SPECIFICATIONS			
TYPE	SIZE (DIA.)	WEIGHT (LBS./FT.)	
		ALUM.	STEEL
ROUND	1½"	0.940	2.72
SQUARE	2" X 2"	1.3094	4.31

STEP DIMENSIONS				
SLOPE	TREAD	RISE	X	Y
1:1.5	10½"	7"	10 3/16"	5¼"
1:2	12"	6"	10⅜"	5 9/16"
1:3	14¼"	4¾"	9½"	5¼"

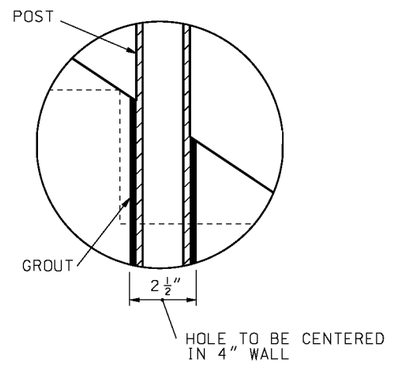

DETAIL A

SAFETY RAIL DETAILS

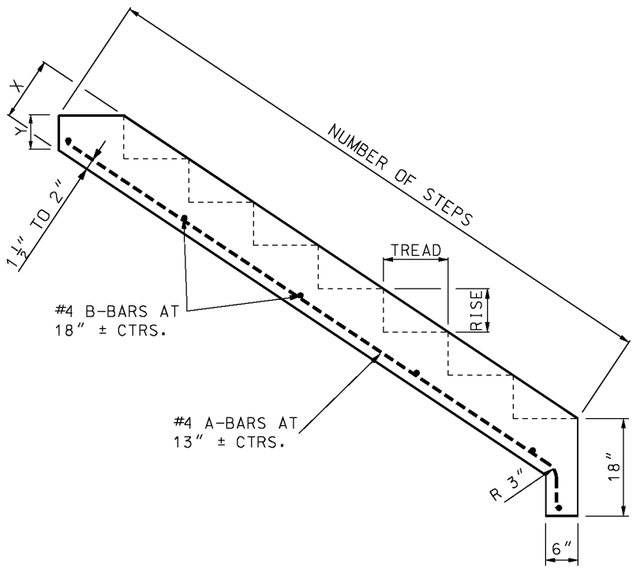

SIDE ELEVATION

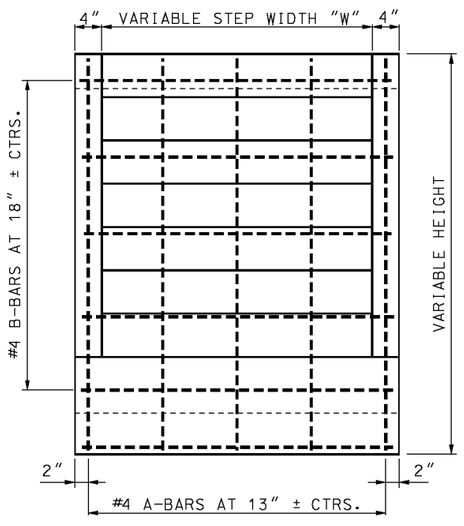

FRONT ELEVATION

STAIRWAY STEP DETAILS

GENERAL NOTES:

STAIRWAY SHALL HAVE SAFETY RAILS AT BOTH SIDES OF ALL STEPS.

RAILINGS AND POSTS MAY BE EITHER ROUND OR SQUARE STEEL OF GOOD COMMERCIAL WELDABLE QUALITY OR ALUMINUM ALLOY 6061-T6 OR 6063-T6.

STEEL RAILINGS AND POSTS SHALL BE GALVANIZED AFTER FABRICATION IN ACCORDANCE WITH AASHTO M111.

ALL JOINTS SHALL BE CONTINUOUS WELDED AND GROUND SMOOTH.

ALL RAILING SHALL HAVE A 1/4" WEEP HOLE NEAR ALL INTERSECTING RAILING CONNECTIONS.

MISSOURI HIGHWAYS AND TRANSPORTATION COMMISSION
105 WEST CAPITOL
JEFFERSON CITY, MO 65102
1-888-ASK-MODOT (1-888-275-6636)

STATE OF MISSOURI
ERIC E. SCHROETER
NUMBER PE-28411
PROFESSIONAL ENGINEER
THIS SHEET HAS BEEN SIGNED, SEALED AND DATED ELECTRONICALLY.

CONCRETE STAIRS

DATE EFFECTIVE: 04/01/2015
DATE PREPARED: 2/20/2015

608.20E

SHEET NO. 1 OF 2

IF A SEAL IS PRESENT ON THIS SHEET IT HAS BEEN ELECTRONICALLY SEALED AND DATED.

QUANTITIES FOR CONCRETE STEPS

CONCRETE C.Y. STEEL LB.

		10½" TREAD					1:1.5 SLOPE			7" RISE				
W	NO. STEPS	2	3	4	5	6	7	8	9	10	11	12	13	14
2'	CONC.	0.20	0.29	0.38	0.47	0.56	0.65	0.74	0.83	0.92	1.01	1.10	1.19	1.28
	STEEL	10	13	16	20	24	28	30	34	38	42	46	48	52
3'	CONC.	0.27	0.39	0.51	0.63	0.75	0.88	1.00	1.12	1.24	1.36	1.48	1.60	1.73
	STEEL	13	18	21	27	32	38	41	46	52	57	63	65	71
4'	CONC.	0.34	0.49	0.64	0.80	0.95	1.10	1.25	1.40	1.56	1.71	1.86	2.01	2.17
	STEEL	17	23	27	34	41	48	52	59	66	73	80	83	90
5'	CONC.	0.41	0.59	0.78	0.96	1.14	1.33	1.51	1.69	1.88	2.06	2.24	2.42	2.61
	STEEL	21	28	33	42	50	59	63	71	80	88	97	101	109
6'	CONC.	0.48	0.70	0.91	1.12	1.34	1.55	1.77	1.98	2.19	2.41	2.62	2.84	3.05
	STEEL	24	33	39	49	59	69	74	84	94	104	114	118	128
		12" TREAD					1:2 SLOPE			6" RISE				
W	NO. STEPS	2	3	4	5	6	7	8	9	10	11	12	13	14
2'	CONC.	0.18	0.26	0.33	0.41	0.49	0.56	0.64	0.72	0.80	0.87	0.95	1.03	1.10
	STEEL	10	12	16	19	23	25	29	33	36	39	42	46	50
3'	CONC.	0.25	0.35	0.45	0.56	0.66	0.76	0.87	0.97	1.07	1.18	1.28	1.38	1.49
	STEEL	13	16	21	26	32	34	39	45	50	53	58	63	68
4'	CONC.	0.31	0.44	0.57	0.70	0.83	0.96	1.09	1.22	1.35	1.48	1.61	1.74	1.87
	STEEL	17	20	27	33	40	44	50	57	63	67	73	81	87
5'	CONC.	0.38	0.53	0.69	0.85	1.00	1.16	1.31	1.47	1.63	1.78	1.94	2.10	2.25
	STEEL	21	25	33	41	49	53	61	69	77	82	89	98	105
6'	CONC.	0.44	0.62	0.81	0.99	1.17	1.36	1.54	1.72	1.90	2.09	2.27	2.45	2.64
	STEEL	24	29	39	48	58	62	71	81	90	96	105	115	124
		14¼" TREAD					1:3 SLOPE			4¾" RISE				
W	NO. STEPS	2	3	4	5	6	7	8	9	10	11	12	13	14
2'	CONC.	0.19	0.27	0.35	0.43	0.51	0.59	0.68	0.76	0.84	0.92	1.00	1.08	1.16
	STEEL	10	14	18	21	25	29	33	37	41	43	47	51	55
3'	CONC.	0.26	0.37	0.48	0.59	0.70	0.80	0.91	1.02	1.13	1.24	1.35	1.46	1.56
	STEEL	14	19	25	28	34	39	45	50	56	59	65	70	76
4'	CONC.	0.33	0.47	0.61	0.74	0.88	1.02	1.15	1.29	1.42	1.56	1.70	1.83	1.97
	STEEL	18	25	32	36	43	50	57	64	71	75	82	89	96
5'	CONC.	0.40	0.57	0.73	0.90	1.06	1.22	1.39	1.55	1.72	1.88	2.05	2.21	2.38
	STEEL	22	30	39	44	52	61	69	78	86	91	100	108	117
6'	CONC.	0.47	0.66	0.86	1.05	1.24	1.43	1.63	1.82	2.01	2.21	2.40	2.59	2.78
	STEEL	25	35	45	51	61	71	81	91	101	107	117	127	137

IF A SEAL IS PRESENT ON THIS SHEET IT HAS BEEN ELECTRONICALLY SEALED AND DATED.

MISSOURI HIGHWAYS AND TRANSPORTATION COMMISSION
105 WEST CAPITOL
JEFFERSON CITY, MO 65102
1-888-ASK-MODOT (1-888-275-6636)

STATE OF MISSOURI
ERIC E. SCHROETER
NUMBER PE-28411
PROFESSIONAL ENGINEER
THIS SHEET HAS BEEN SIGNED, SEALED AND DATED ELECTRONICALLY.

CONCRETE STAIRS

DATE EFFECTIVE: 04/01/2015
DATE PREPARED: 2/20/2015

608.20E

SHEET NO.
2 OF 2

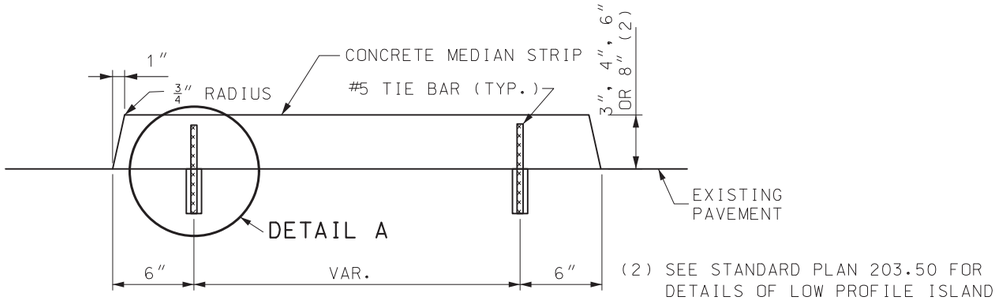

SECTION A–A
CONCRETE MEDIAN STRIP

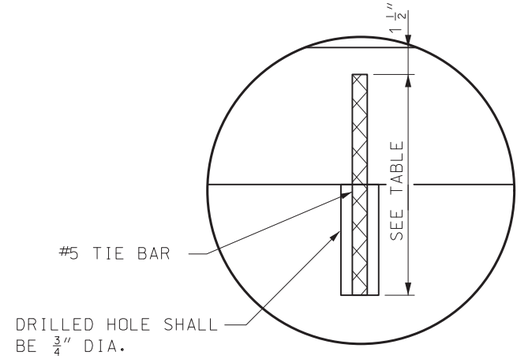

DETAIL A

MEDIAN HEIGTH	BAR LENGTH
3″	8″
4″	9″
6″	11″
8″	13″

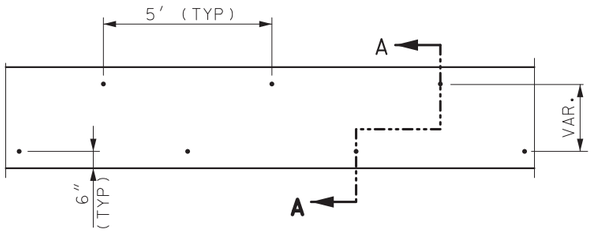

TIE BAR LOCATIONS FOR
CONCRETE MEDIAN STRIP

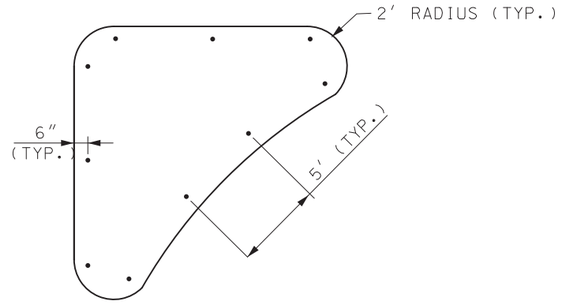

TIE BAR LOCATIONS FOR
CONCRETE MEDIAN STRIP (ISLAND)

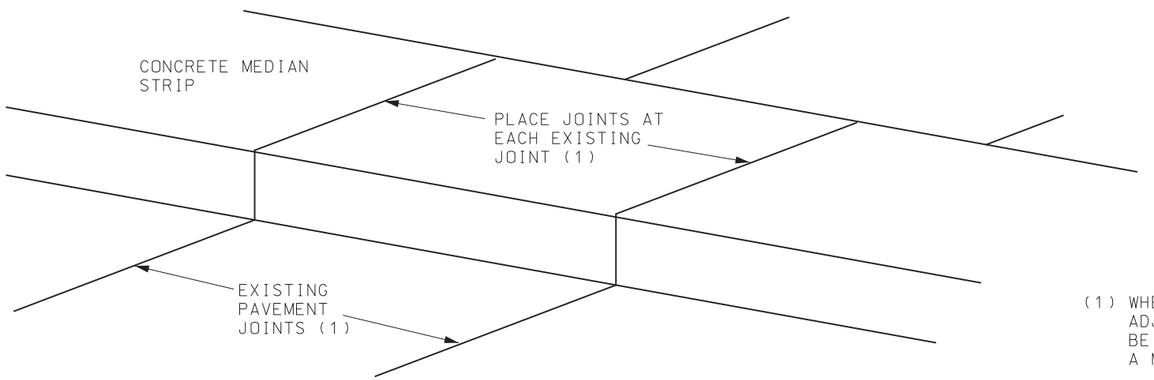

CONCRETE MEDIAN STRIP JOINT LOCATION

(1) WHEN THERE ARE NO VISIBLE JOINTS IN THE ADJACENT PAVEMENT. THE JOINT SPACING WILL BE EQUAL TO THE MEDIAN STRIP WIDTH, WITH A MINIMUM SPACING OF 10′.

GENERAL NOTES:

TIE BARS SHALL BE EPOXY COATED, DEFORMED REINFORCING BARS MEETING THE REQUIREMENTS OF SECTION 710 AND 1057.

BONDING FOR TIE BARS SHALL BE EPOXY OR POLYESTER BONDING AGENTS AS SPECIFIED IN SECTION 1039.

THE FACE OF THE MEDIAN MAY BE CONSTRUCTED WITHOUT BATTER WHEN CONSTRUCTED ON A RADIUS OF 6′ OR LESS.

WHEN CONCRETE MEDIANS ARE CONSTRUCTED DIRECTLY BENEATH GUARDRAIL, THE MEDIAN HEIGHT WILL BE 4″.

MISSOURI HIGHWAYS AND TRANSPORTATION COMMISSION
105 WEST CAPITOL
JEFFERSON CITY, MO 65102
1-888-ASK-MODOT (1-888-275-6636)

STATE OF MISSOURI
ERIC E. SCHROETER
NUMBER PE-28411
PROFESSIONAL ENGINEER
THIS SHEET HAS BEEN SIGNED, SEALED AND DATED ELECTRONICALLY.

CONCRETE MEDIAN STRIP

DATE EFFECTIVE: 10/01/2018
DATE PREPARED: 10/17/2018

608.30A

SHEET NO.
1 OF 1

IF A SEAL IS PRESENT ON THIS SHEET IT HAS BEEN ELECTRONICALLY SEALED AND DATED.

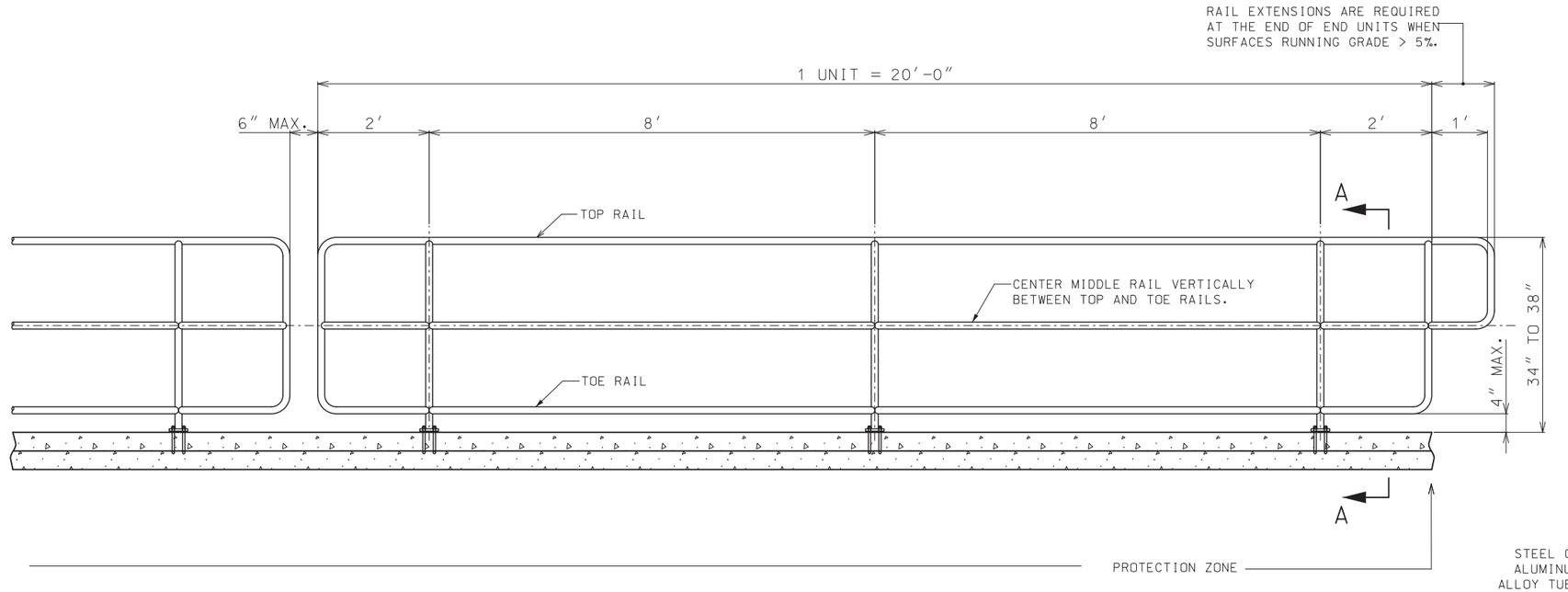

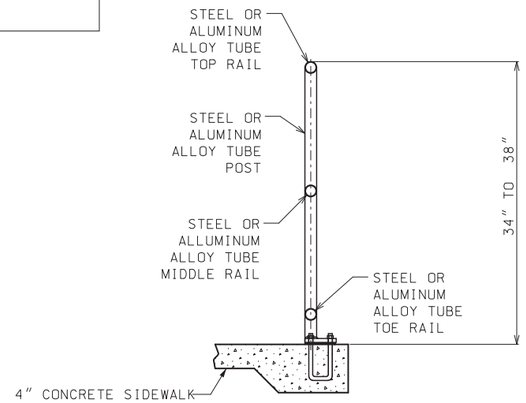

HANDRAILING

SIDEWALK HANDRAILING WITHOUT BALUSTERS

✳ CROSS SLOPE: 1.0 % MIN. – 2.0 % MAX.

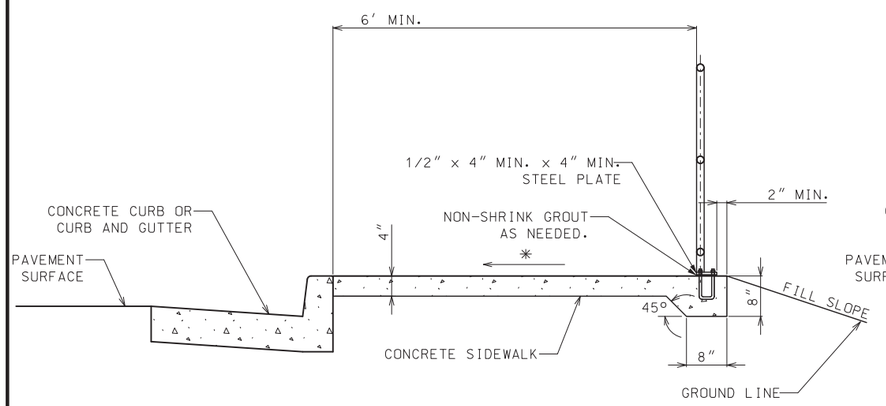

SIDEWALK WITHOUT BUFFER STRIP
(SECTION A–A)

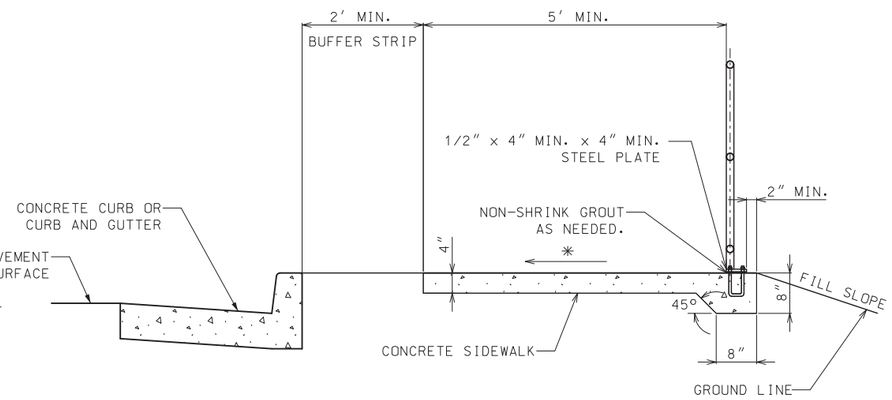

SIDEWALK WITH BUFFER STRIP
(SECTION A–A)

FOR GENERAL NOTES AND HANDRAILING REQUIREMENTS ON FILL SLOPES SEE SHEET 3 OF 4

MISSOURI HIGHWAYS AND TRANSPORTATION COMMISSION
105 WEST CAPITOL
JEFFERSON CITY, MO 65102
1-888-ASK-MODOT (1-888-275-6636)

STATE OF MISSOURI
ERIC E. SCHROETER
NUMBER PE-2841
PROFESSIONAL ENGINEER
THIS SHEET HAS BEEN SIGNED, SEALED AND DATED ELECTRONICALLY.

HANDRAILING

DATE EFFECTIVE: 07/01/2018
DATE PREPARED: 5/3/2018

608.40

SHEET NO. 1 OF 4

IF A SEAL IS PRESENT ON THIS SHEET IT HAS BEEN ELECTRONICALLY SEALED AND DATED.

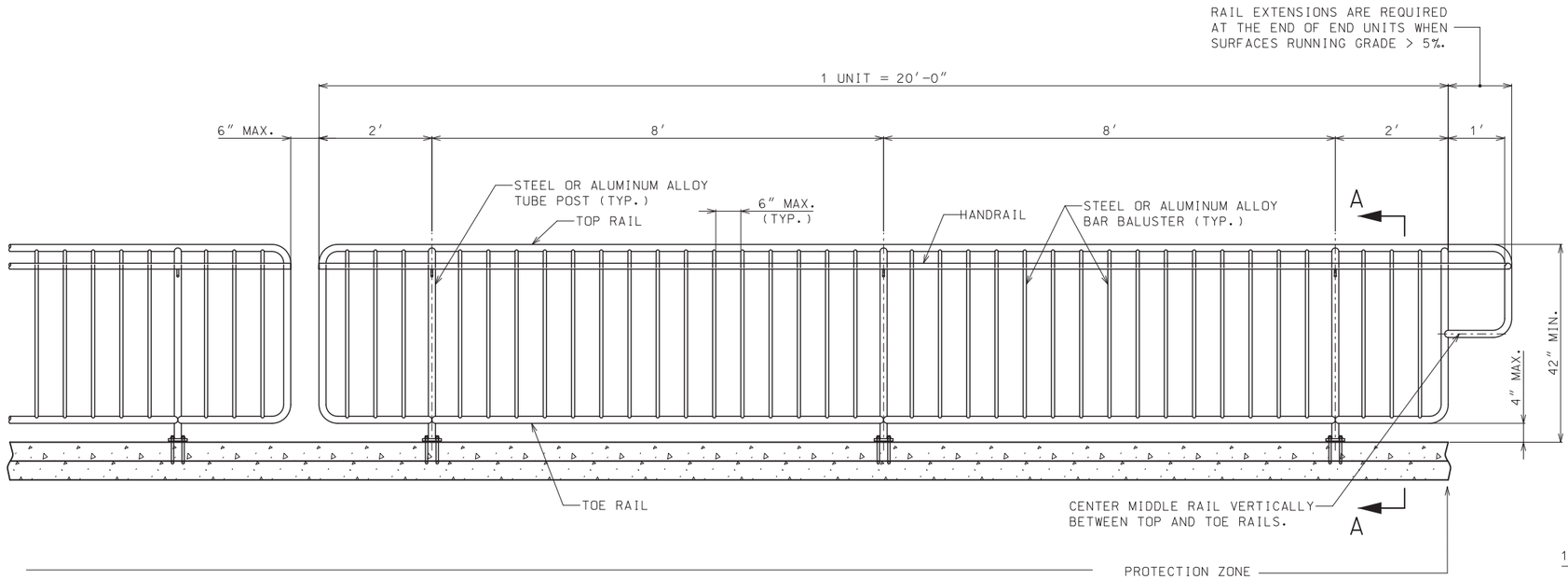

SIDEWALK SAFETY RAIL WITH BALUSTERS AND HANDRAIL

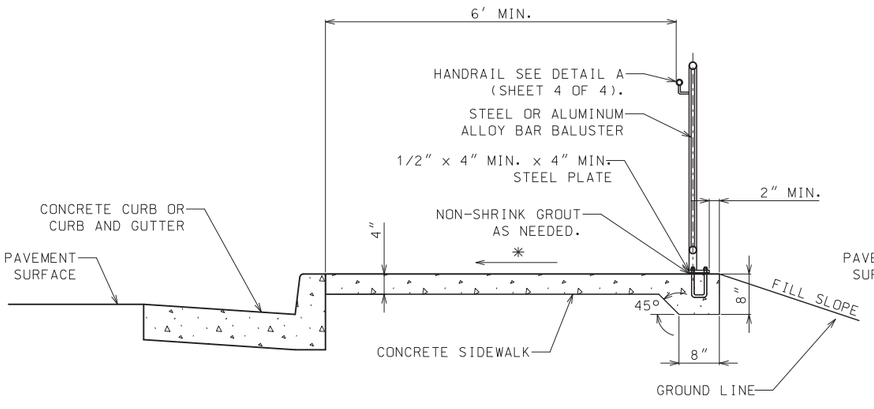

SIDEWALK WITHOUT BUFFER STRIP
(SECTION A-A)

✳ CROSS SLOPE: 1.0 % MIN. – 2.0 % MAX.

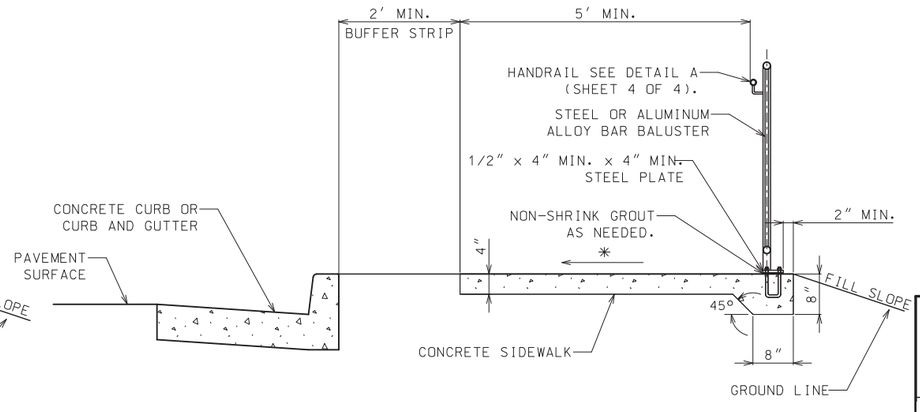

SIDEWALK WITH BUFFER STRIP
(SECTION A-A)

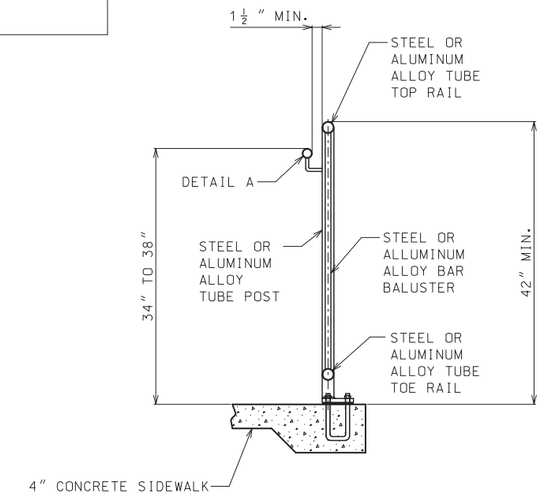

SAFETY RAIL WITH HANDRAIL

FOR GENERAL NOTES AND HANDRAIL REQUIREMENTS ON FILL SLOPES SEE SHEET 3 OF 4.

IF A SEAL IS PRESENT ON THIS SHEET IT HAS BEEN ELECTRONICALLY SEALED AND DATED.

MISSOURI HIGHWAYS AND TRANSPORTATION COMMISSION
105 WEST CAPITOL
JEFFERSON CITY, MO 65102
1-888-ASK-MODOT (1-888-275-6636)

STATE OF MISSOURI
ERIC E. SCHROETER
NUMBER PE-28411
PROFESSIONAL ENGINEER
THIS SHEET HAS BEEN SIGNED, SEALED AND DATED ELECTRONICALLY.

HANDRAILING

DATE EFFECTIVE: 07/01/2018
DATE PREPARED: 5/3/2018

608.40

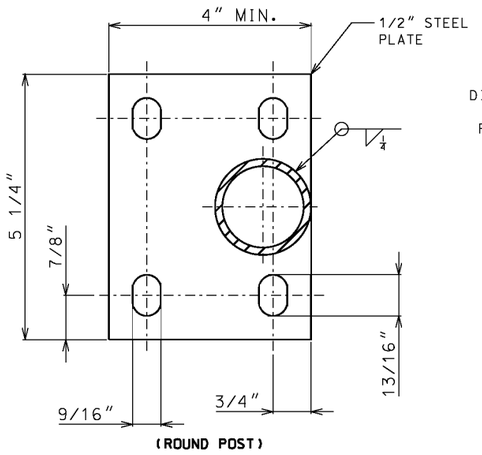

(ROUND POST)

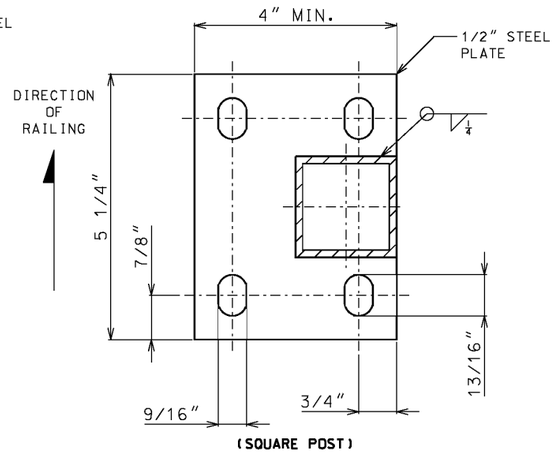

(SQUARE POST)

MOUNTING PLATE DETAIL (PLAN VIEW)

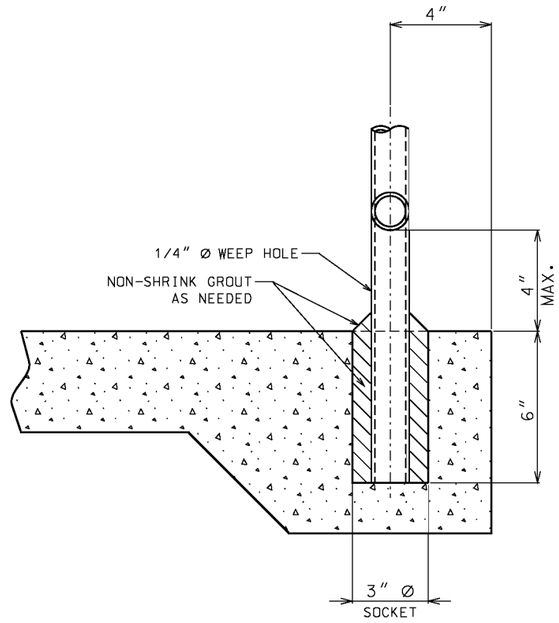

SOCKET MOUNTING DETAIL

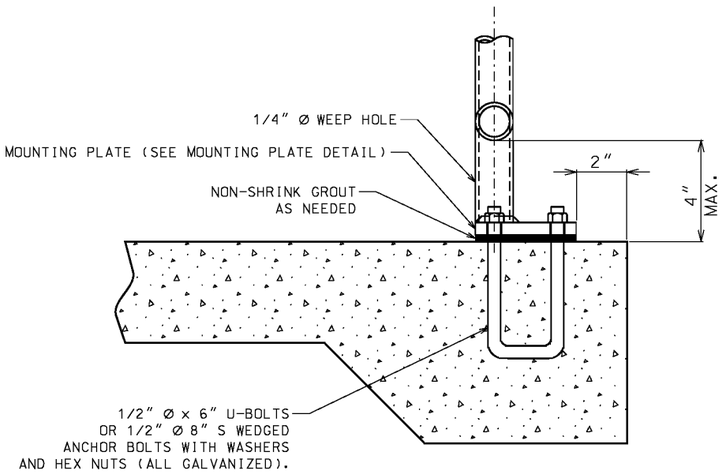

PLATE MOUNTING DETAIL

HANDRAIL REQUIREMENTS		
FILL SLOPE	FILL HEIGHT	HANDRAIL
(1V:3H) OR FLATTER	———	NOT REQUIRED
(1V:3H) OR STEEPER	$\geq$ 6 FT.	REQUIRED
(1V:2H) OR STEEPER	$\geq$ 4 FT.	REQUIRED
(1V:1H) OR STEEPER	$\geq$ 1 FT.	REQUIRED

GENERAL NOTES:

RAILINGS AND POSTS MAY BE EITHER ROUND OR SQUARE STEEL OF GOOD COMMERCIAL WELDABLE QUALITY OR ALUMINUM ALLOY 6061-T6 OR 6063-T6.

STEEL RAILINGS AND POSTS SHALL BE GALVANIZED AFTER FABRICATION IN ACCORDANCE WITH AASHTO M111.

ALL JOINTS SHALL BE CONTINUOUS WELDED AND GROUND SMOOTH.

METAL SAFETY RAIL MUST BE COMPLIANT WITH THE "AMERICAN'S WITH DISABLILITIES ACT ACCESSIBILITY GUIDELINES (ADAAG)". EXCEPTIONS MUST BE APPROVED BY THE ENGINEER. ALL OTHER AREAS OF NON-COMPLIANCE SHALL BE REMOVED AND CORRECTED AT THE CONTRACTOR'S EXPENSE.

ALL POSTS SHALL HAVE A 1/4" WEEP HOLE IMMEDIATELY ABOVE THE MOUNTING PLATE.

WHEN INSTALLED THE POSTS SHALL BE PLUMB AND RAILINGS SHALL MATCH THE SLOPE OF THE SIDEWALK.

RAILING AND POST SPECIFICATION				
DESCRIPTION	TYPE	SIZE (DIA.)	WEIGHT (LBS. / FT.)	
			ALUM.	STEEL
RAILING & POST	ROUND	1 1/2"	0.940	2.720
	SQUARE	2" X 2"	1.3094	4.310
BALUSTER	ROUND	1/2"	0.2312	0.668
	RECT.	3/8" X 1/2" STL.	———	0.6375
	SQUARE	1/2" X 1/2" ALUM.	0.2944	———

MISSOURI HIGHWAYS AND TRANSPORTATION COMMISSION
105 WEST CAPITOL
JEFFERSON CITY, MO 65102
1-888-ASK-MODOT (1-888-275-6636)

STATE OF MISSOURI
ERIC E. SCHROETER
NUMBER PE-28411
PROFESSIONAL ENGINEER
THIS SHEET HAS BEEN SIGNED, SEALED AND DATED ELECTRONICALLY.

HANDRAILING

DATE EFFECTIVE: 04/01/2015
DATE PREPARED: 2/20/2015

608.40

SHEET NO. 3 OF 4

IF A SEAL IS PRESENT ON THIS SHEET IT HAS BEEN ELECTRONICALLY SEALED AND DATED.

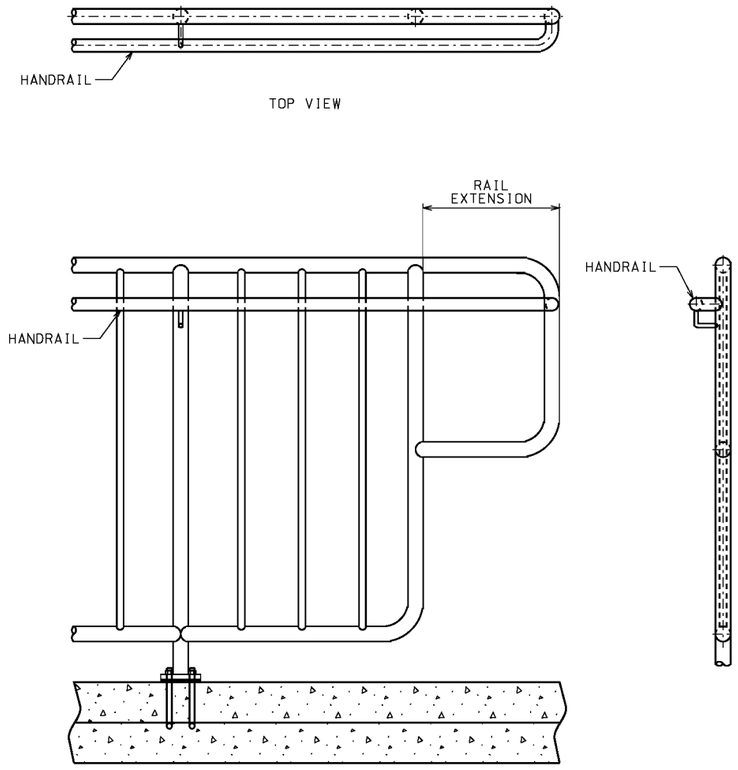

HANDRAIL AND EXTENSION CONNECTION

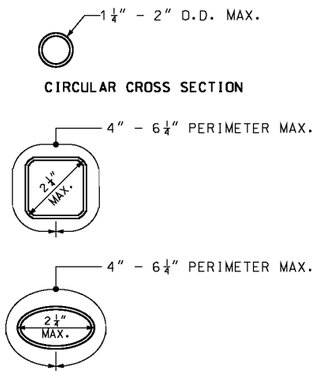

HANDRAIL GRIPPING SURFACES

HANDRAIL NOTES:

HANDRAILS SHALL BE STEEL OF GOOD COMMERCIAL WELDABLE QUALITY OR ALUMINUM ALLOY 6061-T6 OR 6063-T6.

HANDRAILS SHALL BE GALVANIZED AFTER FABRICATION IN ACCORDANCE WITH AASHTO M111.

HANDRAILS SHALL BE AT A CONSISTENT HEIGHT ABOVE WALKING SURFACES.

HANDRAIL GRIPPING SURFACES SHALL BE CONTINUOUS ALONG THEIR LENGTH AND SHALL NOT BE OBSTRUCTED ALONG THEIR TOPS OR SIDES.

THE BOTTOMS OF HANDRAIL GRIPPING SURFACES SHALL NOT BE OBSTRUCTED FOR MORE THAN 20 PERCENT OF THEIR LENGTH.

WHERE HANDRAILS ARE PROVIDED ALONG WALKING SURFACES WITH SLOPES NOT STEEPER THAN 1:20, THE BOTTOMS OF HANDRAIL GRIPPING SURFACES SHALL BE PERMITTED TO BE OBSTRUCTED ALONG THEIR ENTIRE LENGTH WHERE THEY ARE INTEGRAL TO CRASH RAILS OR BUMPER GUARDS.

THE DISTANCE BETWEEN HORIZONTAL PROJECTIONS AND THE BOTTOM OF THE GRIPPING SURFACE SHALL BE PERMITTED TO BE REDUCED BY $\frac{1}{8}$" FOR EACH $\frac{1}{2}$" OF ADDITIONAL HANDRAIL PERIMETER DIMENSION THAT EXCEEDS 4".

HANDRAIL SURFACES AND ANY SURFACES ADJACENT TO THEM SHALL BE FREE OF SHARP OR ABRASIVE ELEMENTS AND SHALL HAVE ROUNDED EDGES.

HANDRAILS SHALL NOT ROTATE WITHIN THEIR FITTINGS.

DETAIL A - HANDRAIL

MISSOURI HIGHWAYS AND TRANSPORTATION COMMISSION
105 WEST CAPITOL
JEFFERSON CITY, MO 65102
1-888-ASK-MODOT (1-888-275-6636)

STATE OF MISSOURI
ERIC E. SCHROETER
NUMBER PE-28411
PROFESSIONAL ENGINEER
THIS SHEET HAS BEEN SIGNED, SEALED AND DATED ELECTRONICALLY.

HANDRAILING

DATE EFFECTIVE: 04/01/2015
DATE PREPARED: 2/20/2015

608.40

SHEET NO. 4 OF 4

IF A SEAL IS PRESENT ON THIS SHEET IT HAS BEEN ELECTRONICALLY SEALED AND DATED.

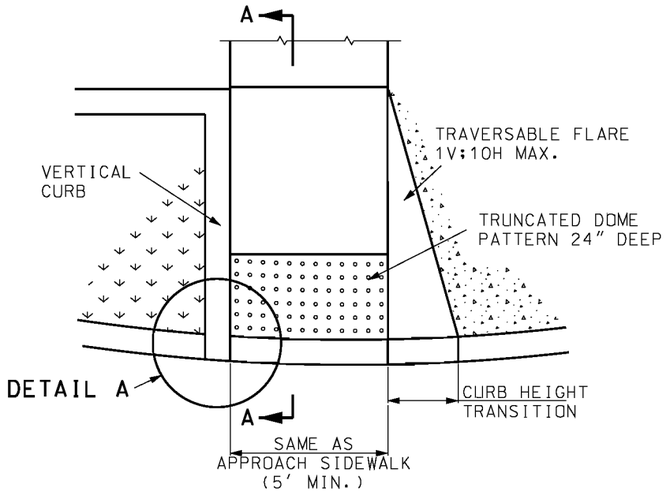

CURB RAMP DETAIL

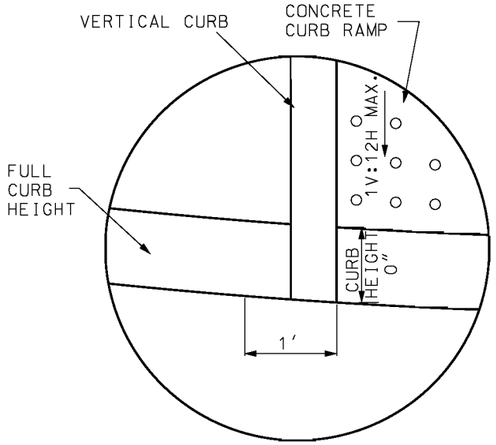

DETAIL A

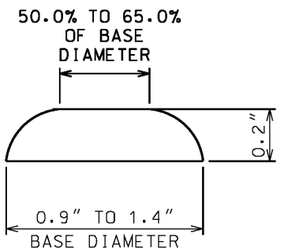

TRUNCATED DOMES
CROSS SECTION

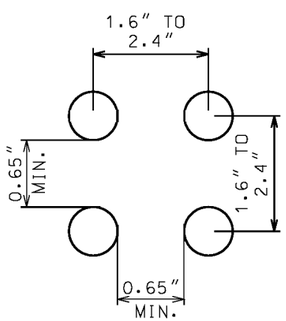

TRUNCATED DOMES
SPACING

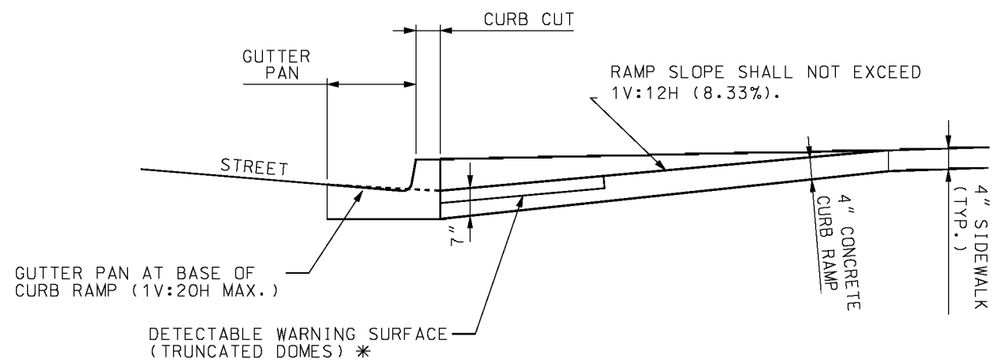

SECTION A-A

* SOME DETECTABLE WARNING PRODUCTS REQUIRE A CONCRETE BORDER FOR PROPER INSTALLATION. THE CONCRETE BORDER SHALL NOT EXCEED 2 INCH PER SIDE.

GENERAL NOTES:

ALL AREAS OF THE PEDESTRIAN ACCESS ROUTE MUST BE COMPLIANT WITH THE AMERICANS WITH DISABLILITES ACT - GUIDELINES FOR ACCESSIBLE PUBLIC RIGHTS OF WAY". EXCEPTIONS MUST BE APPROVED BY THE ENGINEER. ALL OTHER AREAS OF NON-COMPLIANCE SHALL BE REMOVED AND CORRECTED AT THE CONTRACTOR'S EXPENSE.

THE SURFACES OF PEDESTRIAN ACCESS ROUTES AND ELEMENTS, AND SPACES REQUIRED TO CONNECT TO PEDESTRIAN ACCESS ROUTES, SHALL BE FIRM, STABLE, SLIP RESISTANT, AND SHALL NOT POND WATER.

SIDEWALK, RAMP AND LANDING CROSS SLOPES SHALL BE 1.00% TO FACILITATE DRAINAGE (2.00% MAX.).

THE CROSS SLOPE OF THE CONTINUOUS PEDESTRIAN ACCESS ROUTE THROUGH ENTRANCES, ALLEYS, AND SIDEROAD CONNECTIONS WITH STOP OR YIELD CONTROL SHALL BE 1.00% TO FACILITATE DRAINAGE (2.00% MAX.).

WHERE PEDESTRIAN ACCESS ROUTES ARE CONTAINED WITHIN PEDESTRIAN STREET CROSSINGS WITHOUT YIELD OR STOP CONTROL, THE CROSS SLOPE OF THE PEDESTRIAN ACCESS ROUTE SHALL BE 5.00% MAXIMUM.

WHERE PEDESTRIAN ACCESS ROUTES ARE CONTAINED WITHIN MIDBLOCK PEDESTRIAN STREET CROSSINGS, THE CROSS SLOPE OF THE PEDESTRIAN ACCESS ROUTE SHALL BE PERMITTED TO EQUAL THE STREET OR HIGHWAY GRADE.

30"x 48" CLEAR SPACE SHALL BE PROVIDED CENTERED ON THE PEDESTRIAN PUSH BUTTON.

BEYOND THE BOTTOM GRADE BREAK OF A CURB RAMP, A CLEAR SPACE 4'MINIMUM BY 4'MINIMUM SHALL BE PROVIDED WITHIN THE WIDTH OF THE PEDESTRIAN STREET CROSSING AND WHOLLY OUTSIDE THE PARALLEL VEHICLE TRAVEL LANE.

SIDE FLARES OF CURB RAMPS, IN THE PATH OF PEDESTRIAN TRAVEL (TRAVERSABLE), SHALL NOT EXCEED A SLOPE OF 1V:10H. SIDE FLARES OUTSIDE THE PEDESTRIAN PATH (NONTRAVERSABLE) MAY BE VERTICAL.

TRANSITION FROM SIDEWALK OR CURB RAMP TO GUTTER TO ROADWAY SHALL BE FLUSH.

DETECTABLE WARNING SURFACES (TRUNCATED DOMES) SHALL BE PREFORMED AND INSTALLED AS PER MANUFACTURER'S RECOMENDATIONS. STAMPED CONCRETE WILL NOT BE ACCEPTED.

THE DETECTABLE WARNING SURFACE SHALL CONTRAST VISUALLY WITH ADJOINING SURFACES, EITHER LIGHT-ON-DARK OR DARK-ON-LIGHT. TRUNCATED DOMES SHALL SPAN THE FULL WIDTH OF THE RAMP OR LANDING 24" DEEP.

DETECTABLE WARNING SURFACES SHALL BE ALIGNED PERPENDICULAR OR RADIAL TO THE BREAK BETWEEN THE RAMP, LANDING OR BLENDED TRANSITION, AND THE STREET.

WHERE THE BOTTOM GRADE BREAK OF A CURB RAMP IS LESS THAN 5' FROM THE BACK OF CURB, DETECTABLE WARNINGS SHALL BE LOCATED ON THE RAMP SURFACE AT THE BACK OF THE CURB. WHERE THE GRADE BREAK IS GREATER THAN 5' FROM THE BACK OF CURB, THE DETECTABLE WARNING SHALL BE LOCATED ON THE LOWER LANDING.

IF A SEAL IS PRESENT ON THIS SHEET IT HAS BEEN ELECTRONICALLY SEALED AND DATED.

MISSOURI HIGHWAYS AND TRANSPORTATION COMMISSION
105 WEST CAPITOL
JEFFERSON CITY, MO 65102
1-888-ASK-MODOT (1-888-275-6636)

STATE OF MISSOURI
ERIC E. SCHROETER
NUMBER PE-28411
PROFESSIONAL ENGINEER
THIS SHEET HAS BEEN SIGNED, SEALED AND DATED ELECTRONICALLY.

CURB RAMPS

DATE EFFECTIVE: 04/01/2015
DATE PREPARED: 5/29/2015

608.50

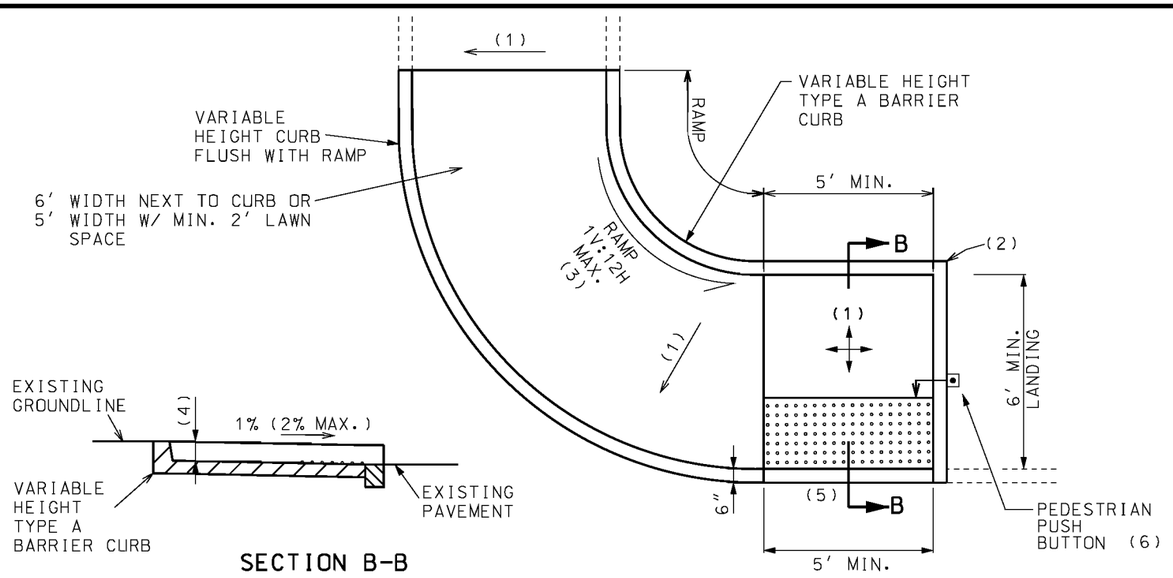

SECTION B-B

TYPE 1 PARALLEL

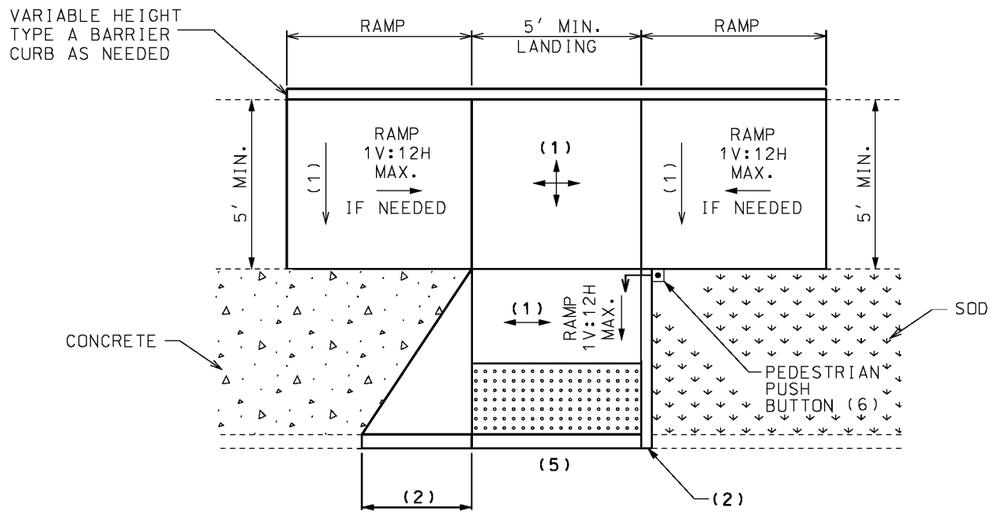

COMPOUND PERPENDICULAR

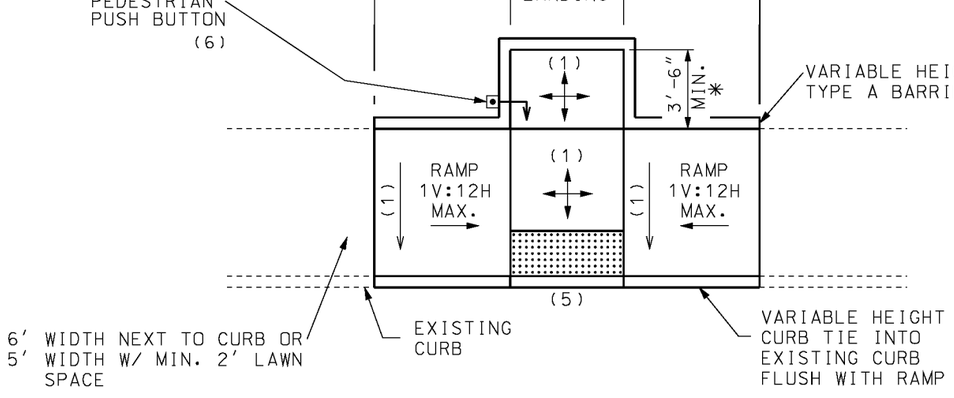

* - OMIT 3'-6" X 5' LANDING IF NO PEDESTRIAN PUSH BUTTON

TYPE 2 PARALLEL

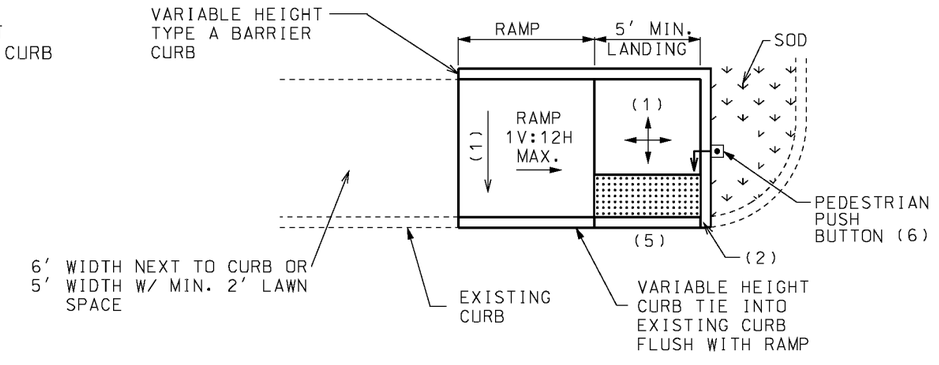

TYPE 3 PARALLEL

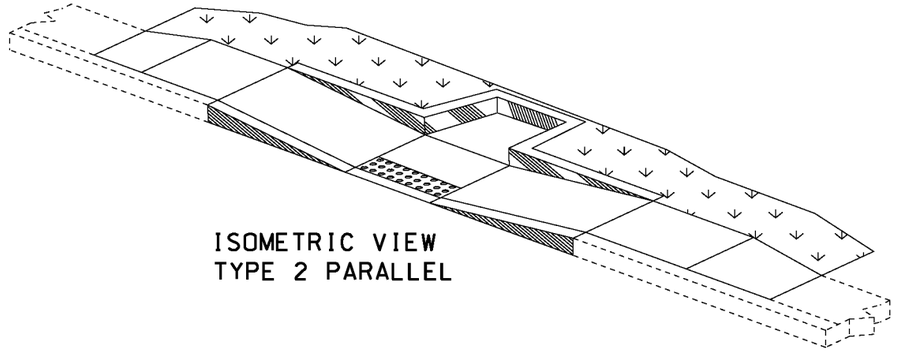

ISOMETRIC VIEW
TYPE 2 PARALLEL

GENERAL NOTES:

(1) 1.0% (2.0% MAX.) OR ROAD GRADE EXCEPTION
(2) VARIABLE HEIGHT VERTICAL CURB . IF TRAVERSABLE USE A MAX. 1V:10H FLARE MEASURED PARALLEL TO THE CURB LINE.
(3) ENSURE THAT THE INSIDE EDGE OF CURVED RAMPS MAINTAIN AN 8.3% (1V:12H) MAXIMUM SLOPE.
(4) HEIGHT VARIES TO MEET EXISTING GROUND.
(5) THE COUNTER SLOPE OF THE GUTTER OR STREET AT THE FOOT OF CURB RAMP RUNS, BLENDED TRANSITIONS, AND TURNING SPACES SHALL BE 5% MAXIMUM.
(6) THE FACE OF PEDESTRIAN PUSH BUTTONS SHALL BE 0" OFFSET FOR FRONT APPROACH AND 10" MAX. FOR SIDE APPROACH TO THE CURB FACE.

IF A SEAL IS PRESENT ON THIS SHEET IT HAS BEEN ELECTRONICALLY SEALED AND DATED.

MISSOURI HIGHWAYS AND TRANSPORTATION COMMISSION
105 WEST CAPITOL
JEFFERSON CITY, MO 65102
1-888-ASK-MODOT (1-888-275-6636)

STATE OF MISSOURI
ERIC E. SCHROETER
NUMBER PE-28411
PROFESSIONAL ENGINEER
THIS SHEET HAS BEEN SIGNED, SEALED AND DATED ELECTRONICALLY.

CURB RAMPS

DATE EFFECTIVE: 04/01/2015
DATE PREPARED: 2/20/2015

608.50

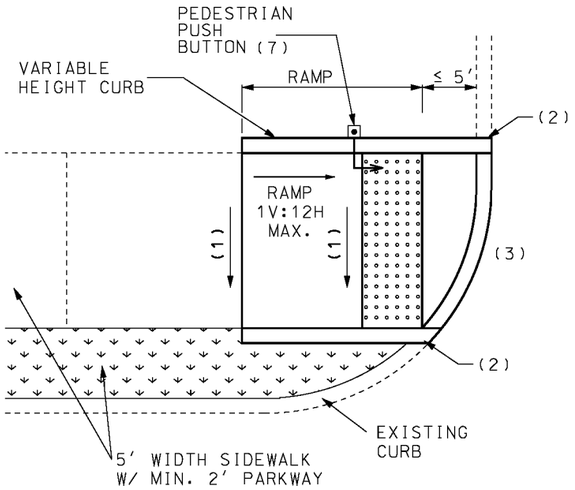

SMALL RADIUS PERPENDICULAR

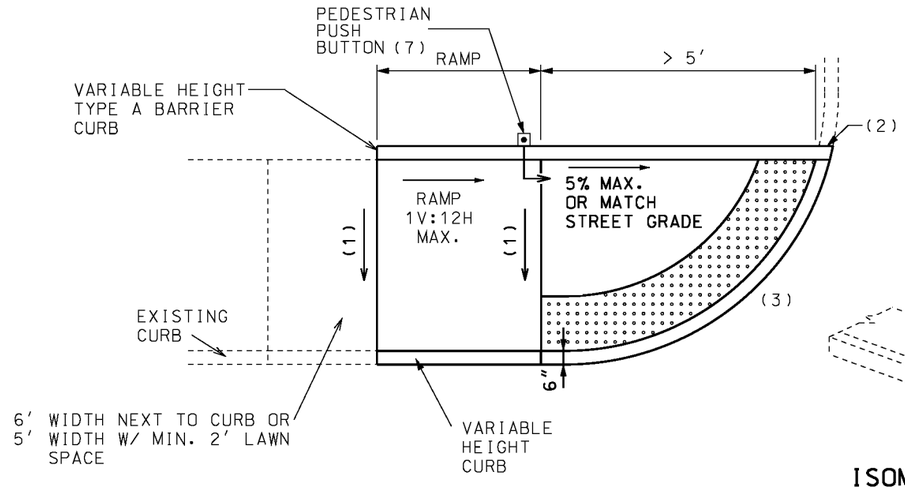

LARGE RADIUS PERPENDICULAR

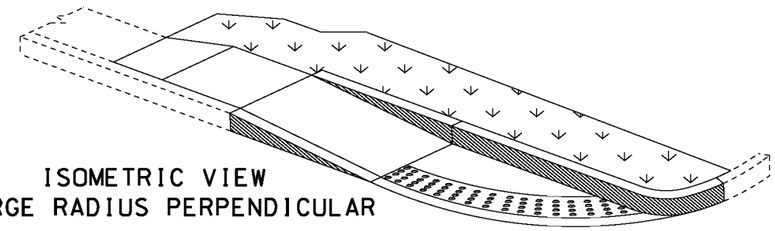

ISOMETRIC VIEW
LARGE RADIUS PERPENDICULAR

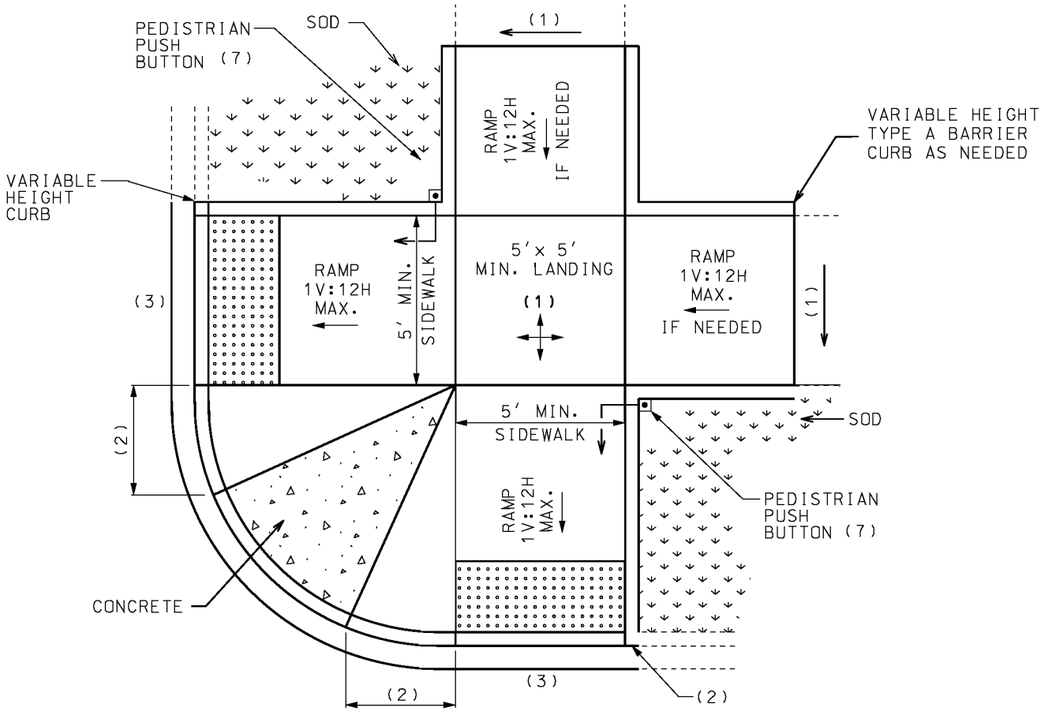

DUAL PERPENDICULAR

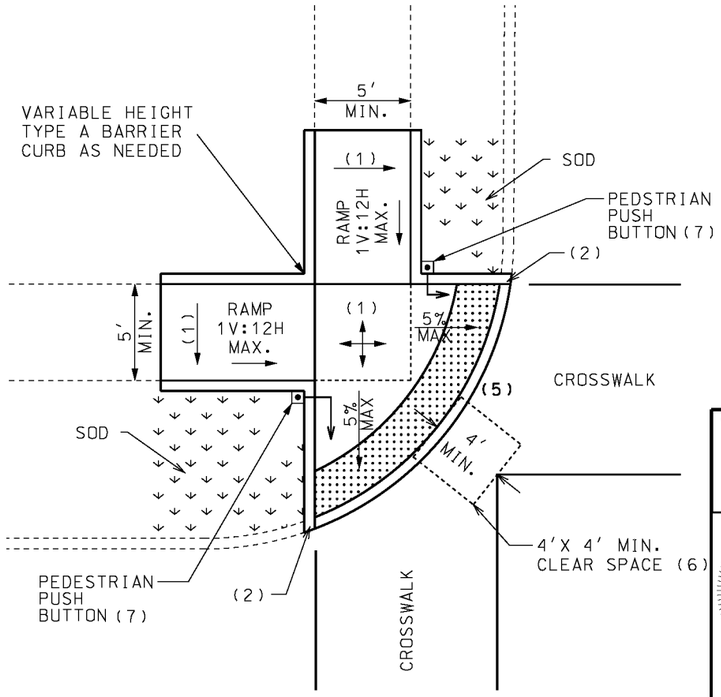

BLENDED TRANSITION

GENERAL NOTES:

(1) 1.0% MINIMUM, 2.0% MAXIMUM.
(2) VERTICAL OR 1' FLARE. IF TRAVERSABLE USE A MAX. 1V:10H FLARE MEASURED PARALLEL TO THE CURB LINE.
(3) ENSURE THAT THE INSIDE EDGE OF CURVED RAMPS MAINTAIN AN 8.3% (1V:12H) MAXIMUM SLOPE.
(4) HEIGHT VARIES TO MEET EXISTING GROUND.
(5) THE COUNTER SLOPE OF THE GUTTER OR STREET AT THE FOOT OF CURB RAMP RUNS,BLENDED TRANSITIONS, AND TURNING SPACES SHALL BE 5% MAXIMUM.
(6) BEYOND THE BOTTOM GRADE BREAK, A CLEAR SPACE 4'X 4' MINIMUM SHALL BE PROVIDED WITHIN THE WIDTH OF THE PEDESTRIAN STREET CROSSING AND WHOLLY OUTSIDE THE PARALLEL VEHICLE TRAVEL LANE.
(7) THE FACE OF PEDESTRIAN PUSH BUTTONS SHALL BE 0" OFFSET FOR FRONT APPROACH AND 10" MAX. FOR SIDE APPROACH TO THE CURB FACE.

MISSOURI HIGHWAYS AND TRANSPORTATION COMMISSION
105 WEST CAPITOL
JEFFERSON CITY, MO 65102
1-888-ASK-MODOT (1-888-275-6636)

STATE OF MISSOURI
ERIC E. SCHROETER
NUMBER PE-28411
PROFESSIONAL ENGINEER
THIS SHEET HAS BEEN SIGNED, SEALED AND DATED ELECTRONICALLY.

CURB RAMPS

DATE EFFECTIVE: 04/01/2015
DATE PREPARED: 2/20/2015

608.50

SHEET NO. 3 of 4

IF A SEAL IS PRESENT ON THIS SHEET IT HAS BEEN ELECTRONICALLY SEALED AND DATED.

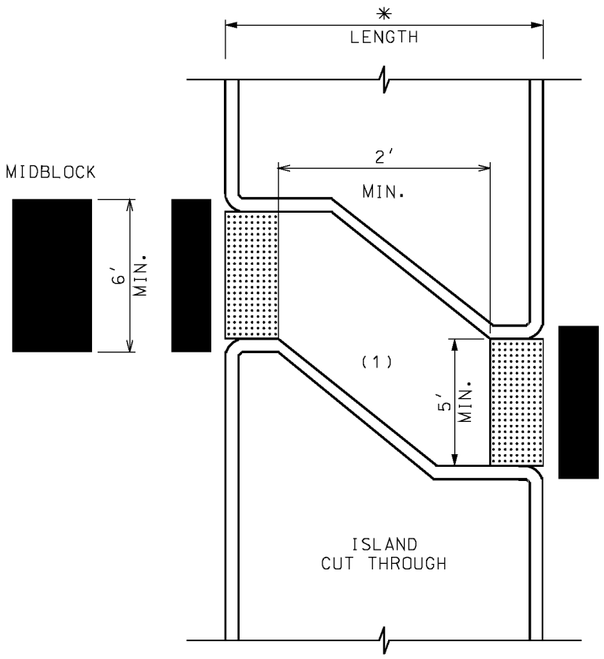

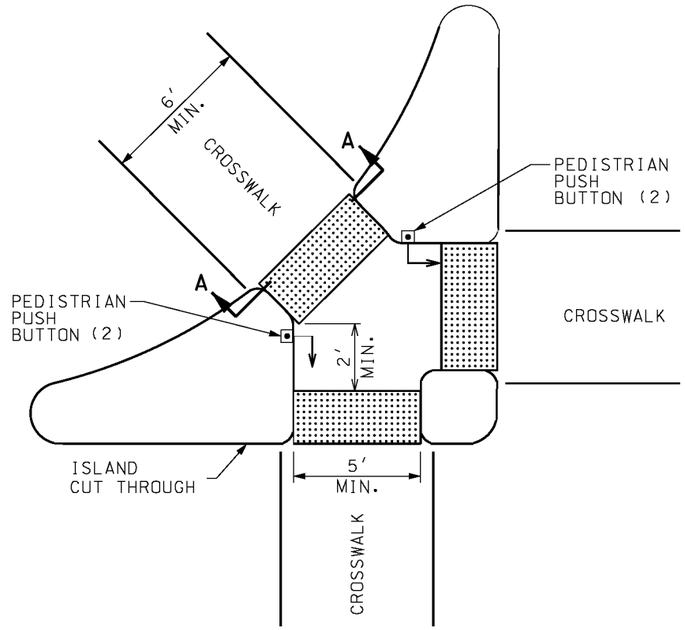

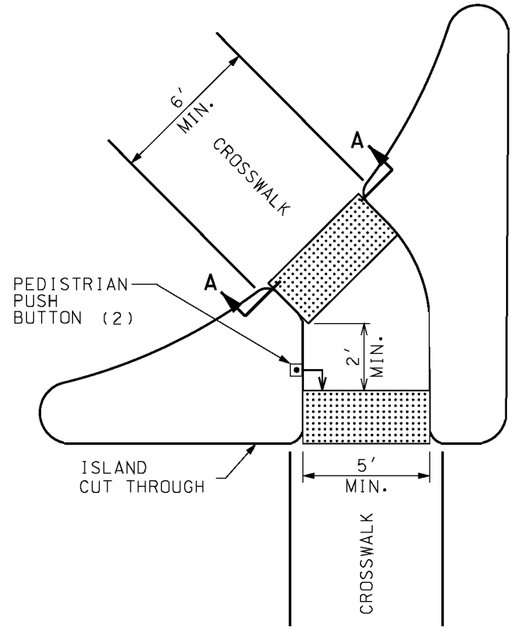

(2) PEDESTRIAN PUSH BUTTONS SHALL BE 0" OFFSET FOR FRONT APPROACH AND 10" MAX. FOR SIDE APPROACH TO THE CURB FACE.

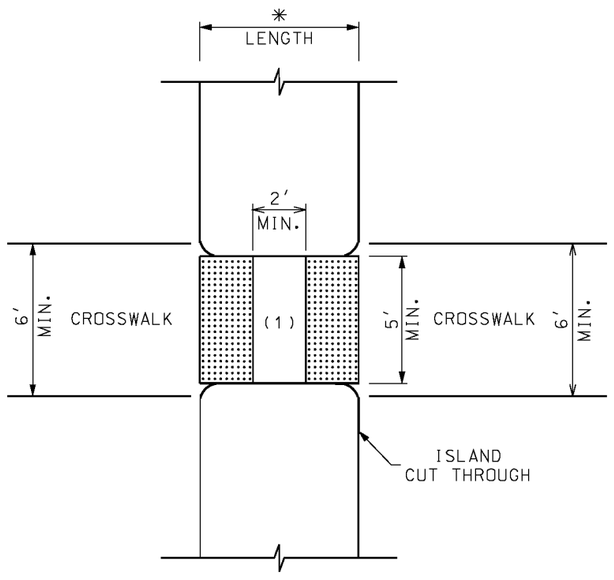

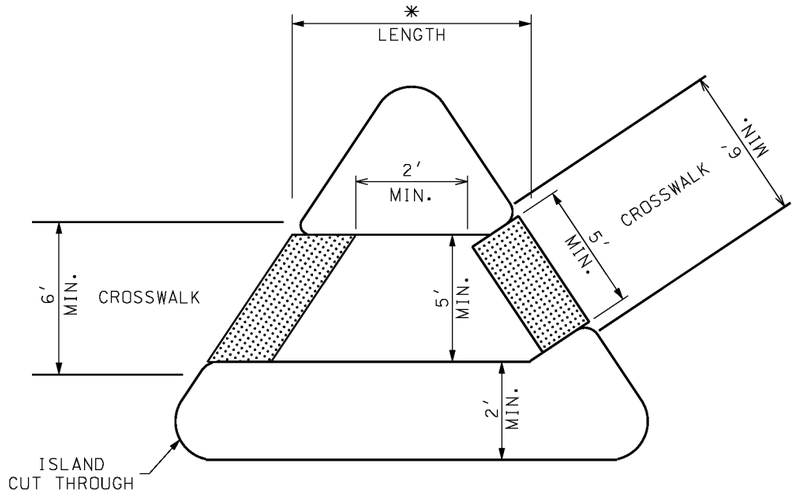

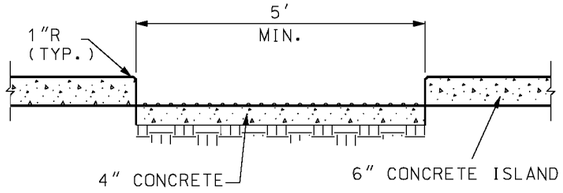

SECTION A-A
ISLAND CUT THROUGH TYPICAL

RAMP OR CUT-THROUGH DEPENDING ON ISLAND WIDTH. IF RAMPED, PROVIDE 4′ MINIMUM LANDING AND SLOPE RAMPS AT 1V:12H MAX.

RAMP MUST BE CONSTRUCTED TO DRAIN TO THE OUTSIDE.

* DETECTABLE WARNING SURFACES SHALL BE OMITTED IF LENGTH IS < 6′, BECAUSE REFUGE SPACE IS DEEMED TOO SMALL.

(1) DETECTABLE WARNING SURFACES SHALL BE PLACED AT THE EDGES OF THE PEDESTRIAN ISLAND AND SHALL BE SEPARATED BY 2′ MIN. LENGTH OF SURFACE WITHOUT DETECTABLE WARNINGS.

ISLAND CUT THROUGHS

MISSOURI HIGHWAYS AND TRANSPORTATION COMMISSION
105 WEST CAPITOL
JEFFERSON CITY, MO 65102
1-888-ASK-MODOT (1-888-275-6636)

STATE OF MISSOURI
ERIC E. SCHROETER
NUMBER PE-28411
PROFESSIONAL ENGINEER
THIS SHEET HAS BEEN SIGNED, SEALED AND DATED ELECTRONICALLY.

CURB RAMPS

DATE EFFECTIVE: 04/01/2015
DATE PREPARED: 2/20/2015

608.50

SHEET NO. 4 of 4

IF A SEAL IS PRESENT ON THIS SHEET IT HAS BEEN ELECTRONICALLY SEALED AND DATED.

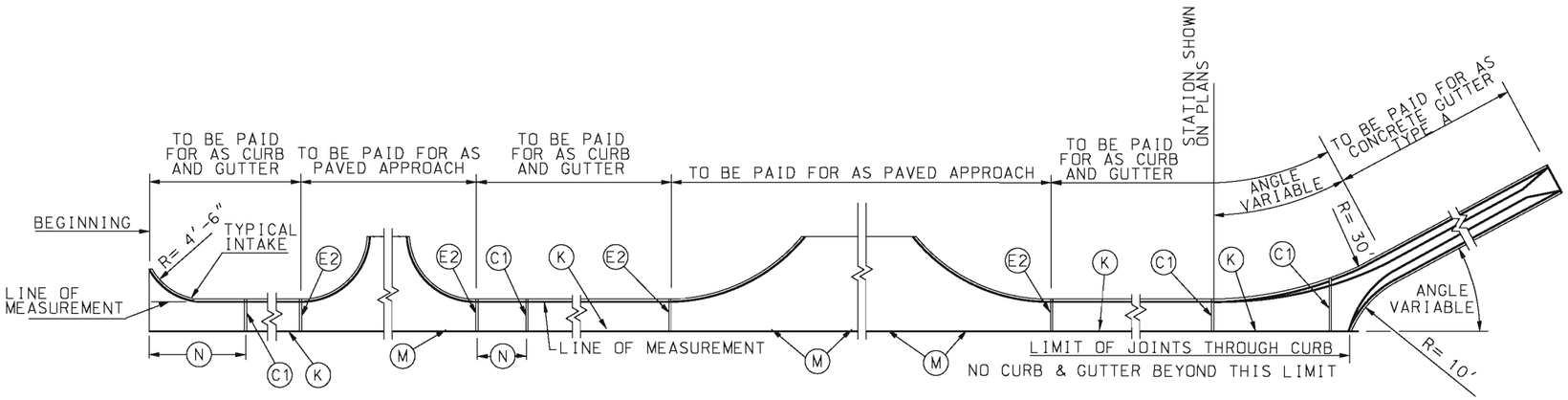

PLAN OF MEASUREMENT OF CURB & GUTTER AND JOINT PLAN

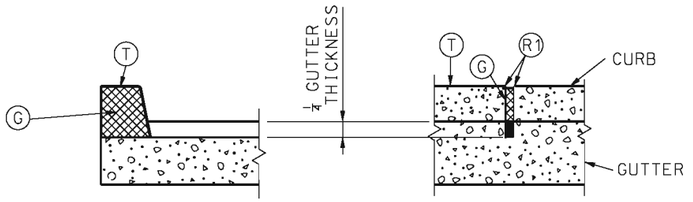

C1 JOINT

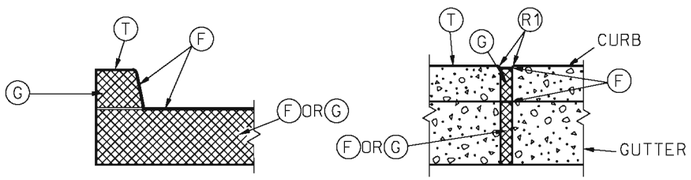

E2 JOINT

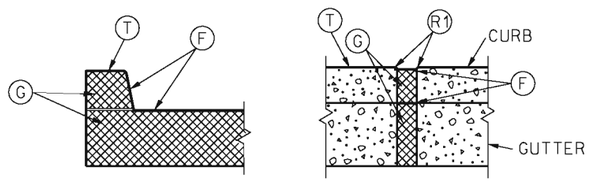

E1 JOINT

LEGEND

- (C1) 1/8" MAXIMUM WIDTH TRANSVERSE CONTRACTION JOINT (PREFORMED OR SAWED).
- (E1) 2" TRANSVERSE EXPANSION JOINT. (PREFORMED OR SAWED)
- (E2) 1/2" TRANSVERSE EXPANSION JOINT. (PREFORMED OR SAWED)
- (F) FILLER FOR JOINTS - HOT POURED.
- (G) PREFORMED JOINT FILLER MATERIAL.
- (K) TONGUE & GROOVE JOINT WITH TIE BAR - SEE DETAIL.
- (M) TONGUE & GROOVE JOINT WITHOUT TIE BARS - SEE DETAIL.
- (N) NOT LESS THAN 10' OR MORE THAN 30'.
- (T) TOP OF CURB.
- (R1) ROUND TO 1/4" RADIUS. (EXCEPT FOR SAWED JOINTS)

GNERAL NOTES:

A MINIMUM 4" TYPE 1 OR 5 AGGREGATE BASE SHALL BE PLACED BENEATH ALL CURB AND GUTTER SECTIONS AND INCLUDED WITHIN THE MAINLINE BASE PAY LIMITS.

WHEN CURBS ARE CONSTRUCTED DIRECTLY BENEATH GUARDRAIL, CURB HEIGHT SHALL BE 4 INCH BARRIER CURB, AS SHOWN ON STANDARD PLAN 606.00.

CURB, GUTTER AND CURB AND CUTTER CONSTRUCTED ALONG AND ATTACHED TO CONCRETE PAVEMENT OR BASE SHALL HAVE:

1. JOINT (C1) ONE-QUARTER DEPTH OF CURB AND GUTTER THICKNESS AS A CONTINUATION OF EACH CONTRACTION JOINT IN THE BASE OR PAVEMENT.
2. JOINT (E1) AS CONTINUATION OF 2" EXPANSION JOINT (E) IN THE CONCRETE BASE OR PAVEMENT SHALL EXTEND AND CONTINUE THROUGH THE CURB, CUTTER AND CURB AND GUTTER.
3. JOINT (E2) THROUGH CURB AND CURB AND CUTTER AT THE BEGINNING AND END OF EACH PAVED APPROACH.

CURB, CURB AND GUTTER AND GUTTER CONSTRUCTED APART OR SEPARATED FROM CONCRETE BASE OR PAVEMENT OR AS A FORM FOR ASPHALTIC CONCRETE PAVEMENT SHALL HAVE A JOINT (E2) ENTIRELY THROUGH THE CURB, CURB AND GUTTER AND GUTTER, AT THE BEGINNING AND END OF EACH "PAVED APPROACH" AND A JOINT (C1) TO 1/4 DEPTH OF CURB AND GUTTER THICKNESS AT INTERVALS OF 30 FEET BETWEEN APPROACHES.

JOINTS (E1) AND (E2) THROUGH CURB SHALL BE FILLED WITH PREFORMED FILLER MATERIAL AND SEALED WITH HOT POURED FILLER FOR JOINTS.

JOINT (E1) IN GUTTER SHALL BE FILLED WITH PREFORMED FILLER AND SEALED WITH HOT FILLER MATERIAL.

JOINT (E2) IN GUTTER SHALL BE FILLED WITH PREFORMED FILLER AND SEALED WITH FILLER OR FILLED WITH HOT POURED FILLER.

PREFORMED FILLER MATERIAL SHALL BE PLACED TO PROVIDE 1" HOT POURED FILLER FOR JOINTS.

THE BARRIER CLASS CURBS MAY BE CONSTRUCTED WITHOUT BATTER WHEN CONSTRUCTED ON A RADIUS OF 6 FEET OR LESS. THE (R2) WILL BE REQUIRED.

WHERE A SIDEWALK INTERSECTS A CURB. THE SIDEWALK SHALL BE RAMPED NO STEEPER THAN 12:1 SLOPE TO PROVIDED ACCESS FOR WHEELCHAIR ACROSS APPROACHES.

WHEN ALLOWED BY THE ENGINEER, TYPES A AND B GUTTER MAY BE PRECAST TO CONFORM TO THE DIMENSIONS SHOWN. THE PRECASTER SHALL SUBMIT SHOP DRAWINGS INDICATING THE SECTION LENGTH. SECTION CONNECTION, AND PROPOSED JOINT SEALING SYSTEM. WHEN PRECAST SECTIONS CANNOT CONFORM TO ANY VERTICAL OR HORIZONTAL CURVE DESIGNATED ON THE PLANS. THE GUTTER SHALL BE CAST-IN-PLACE. A COMBINATION OF CAST-IN-PLACE AND PRECAST GUTTER MAY BE PERMITTED.

IF A SEAL IS PRESENT ON THIS SHEET IT HAS BEEN ELECTRONICALLY SEALED AND DATED.

MISSOURI HIGHWAYS AND TRANSPORTATION COMMISSION
105 WEST CAPITOL
JEFFERSON CITY, MO 65102
1-888-ASK-MODOT (1-888-275-6636)

STATE OF MISSOURI
KATHRYN PHILLIPS HARVEY
NUMBER PE-23751
PROFESSIONAL ENGINEER
THIS SHEET HAS BEEN SIGNED, SEALED AND DATED ELECTRONICALLY.

CONCRETE CURB, CURB AND GUTTER AND GUTTER

DATE EFFECTIVE: 08/01/2008
DATE PREPARED: 12/29/2011

609.00P

SHEET NO. 1 OF 2

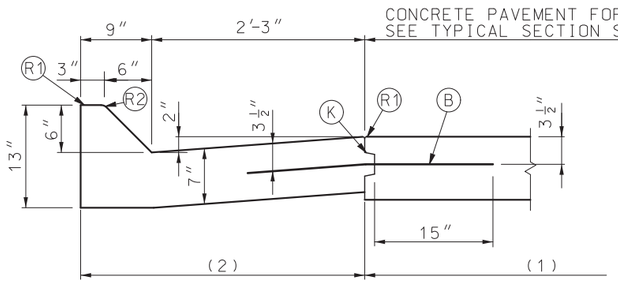

TYPE A
(MOUNTABLE)

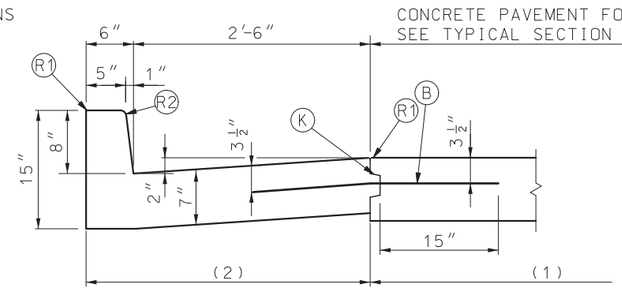

TYPE B
(BARRIER)

CURB & GUTTER

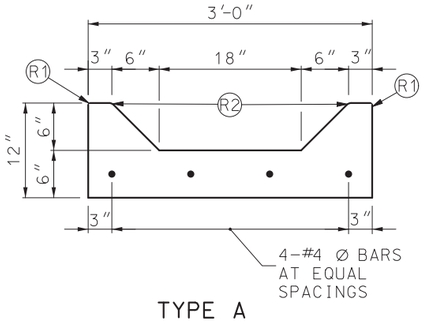

TYPE A

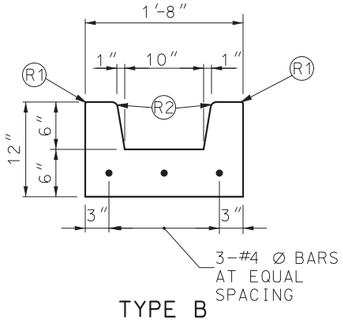

TYPE B

GUTTERS

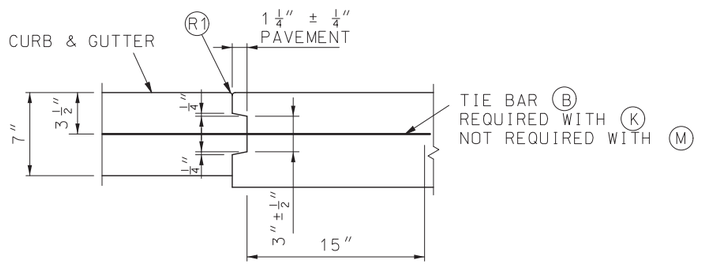

THRU TONGUE & GROOVE JOINT

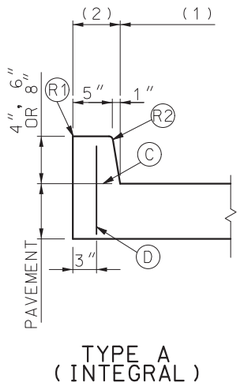

TYPE A
(INTEGRAL)

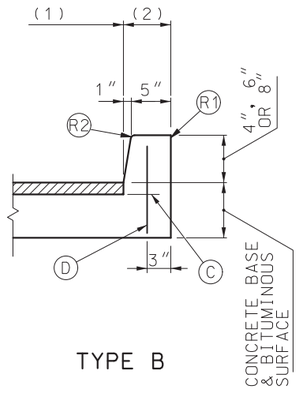

TYPE B

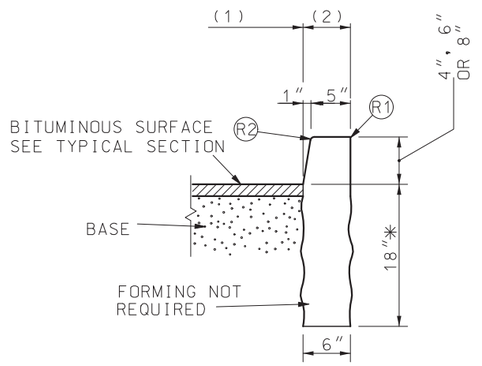

TYPE S
(SEPARATED)

✳ DEPTH MAY BE REDUCED IF KEYED 6″ IN ROCK

BARRIER CURBS

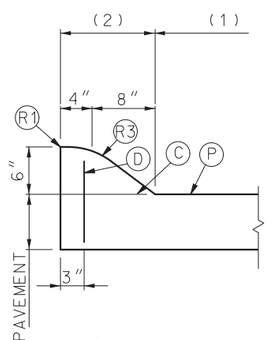

TYPE M
(INTEGRAL)

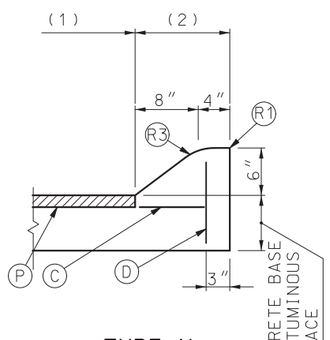

TYPE N
(INTEGRAL)

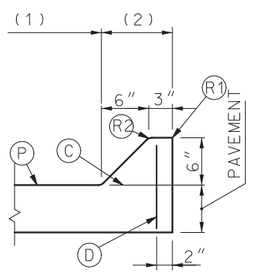

TYPE O
(INTEGRAL)

MOUNTABLE CURBS

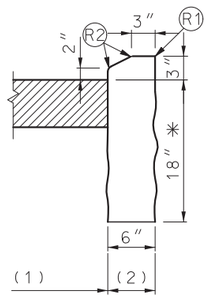

TYPE F
(SEPARATED)

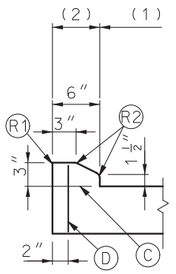

TYPE E
(INTEGRAL)

BEGINNING AND ENDINGS OF INTROCUCED LOW PROFILE CURBS SHALL UTILIZE CURB HEIGHT RUNOUT FORM 0 INCH TO 3 INCHES IN 5 FEET PAYMENT. LENGTH SHALL INCLUDE TAPERS.

✳ DEPTH MAY BE REDUCED IF KEYED 6″ IN ROCK.

LOW PROFILE CURB

LEGEND

(B) TIE BARS – 30″ X #5 Ø AT 30″ CTRS.

(C) PERMISSIBLE CONSTRUCTION JOINT. IF CONSTRUCTED IN THIS MANNER TIE BARS MUST BE USED.

(D) #4 Ø TIE BAR AT 24″ CENTERS LENGTH OF THE TIE BARS EQUALS THICKNESS OF PAVEMENT PLUS HEIGHT OF CURB, LESS 3 INCHES.

(K) TONGUE & GROOVE JOINT WITH TIE BAR – SEE DETAIL.

(P) TOP OF PAVEMENT OR CONCRETE BASE.

(R1) ROUND TO ¼″ RADIUS. (EXCEPT FOR SAWED JOINTS)

(R2) ROUND TO ¾″ RADIUS.

(R3) CONSTRUCT TO 9″ RADIUS

(1) PAY LIMIT FOR PAVEMENT

(2) PAY LIMIT FOR CURB, OR CURB & GUTTER.

MISSOURI HIGHWAYS AND TRANSPORTATION COMMISSION
105 WEST CAPITOL
JEFFERSON CITY, MO 65102
1-888-ASK-MODOT (1-888-275-6636)

STATE OF MISSOURI
ERIC E. SCHROETER
NUMBER PE-28411
PROFESSIONAL ENGINEER
THIS SHEET HAS BEEN SIGNED, SEALED AND DATED ELECTRONICALLY.

CONCRETE CURB, CURB AND GUTTER AND GUTTER

DATE EFFECTIVE: 07/01/2018
DATE PREPARED: 5/3/2018

609.00P

SHEET NO. 2 OF 2

IF A SEAL IS PRESENT ON THIS SHEET IT HAS BEEN ELECTRONICALLY SEALED AND DATED.

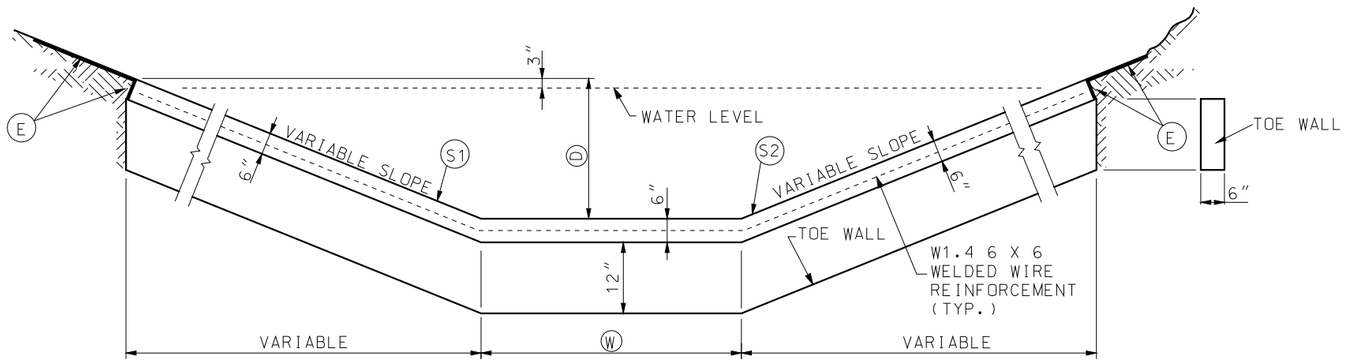

SECTION THROUGH DITCH
(SHOWING TOE WALL)

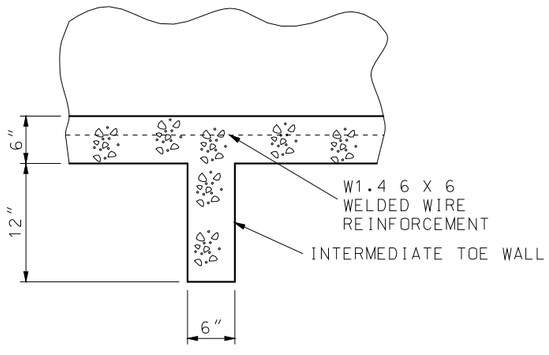

SECTION A-A

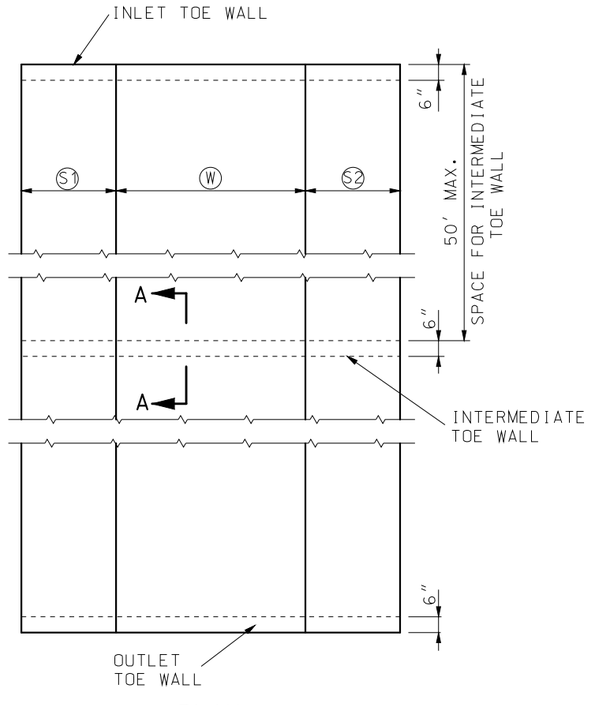

PLAN

LEGEND

(D) VERTICAL PAVED DITCH HEIGHT.

(E) SOD, GEOTEXTILE FABRIC, OR EROSION CONTROL MAT, IF REQUIRED.

(S1) THE WIDTH OF THE STEEPER SIDEWALL OF ALL DITCHES.

(S2) THE WIDTH OF THE FLATTER SIDEWALL OF ALL DITCHES.

(W) THE WIDTH OF THE BOTTOM OF A FLAT BOTTOM DITCH

GENERAL NOTES:

STEEL WELDED WIRE REINFORCEMENT SHALL BE IN ACCORDANCE WITH SEC 1036.3.3.

SOD, GEOTEXTILE FABRIC, OR EROSION CONTROL MATS SHALL BE USED ALONG THE SIDES IF SHOWN ON THE PLANS, OR AS DIRECTED BY THE ENGINEER.

TOE WALLS SHALL BE CONSTRUCTED AT INLET AND OUTLET ENDS OF PAVED DITCHES AND AT 50' MAXIMUM SPACING FOR INTERMEDIATE TOE WALLS.

MISSOURI HIGHWAYS AND TRANSPORTATION COMMISSION
105 WEST CAPITOL
JEFFERSON CITY, MO 65102
1-888-ASK-MODOT (1-888-275-6636)

STATE OF MISSOURI
ERIC E. SCHROETER
NUMBER PE-28411
PROFESSIONAL ENGINEER
THIS SHEET HAS BEEN SIGNED, SEALED AND DATED ELECTRONICALLY.

PAVED DITCHES

DATE EFFECTIVE: 07/01/2016
DATE PREPARED: 5/13/2016

609.15D

SHEET NO.
1 OF 1

IF A SEAL IS PRESENT ON THIS SHEET IT HAS BEEN ELECTRONICALLY SEALED AND DATED.

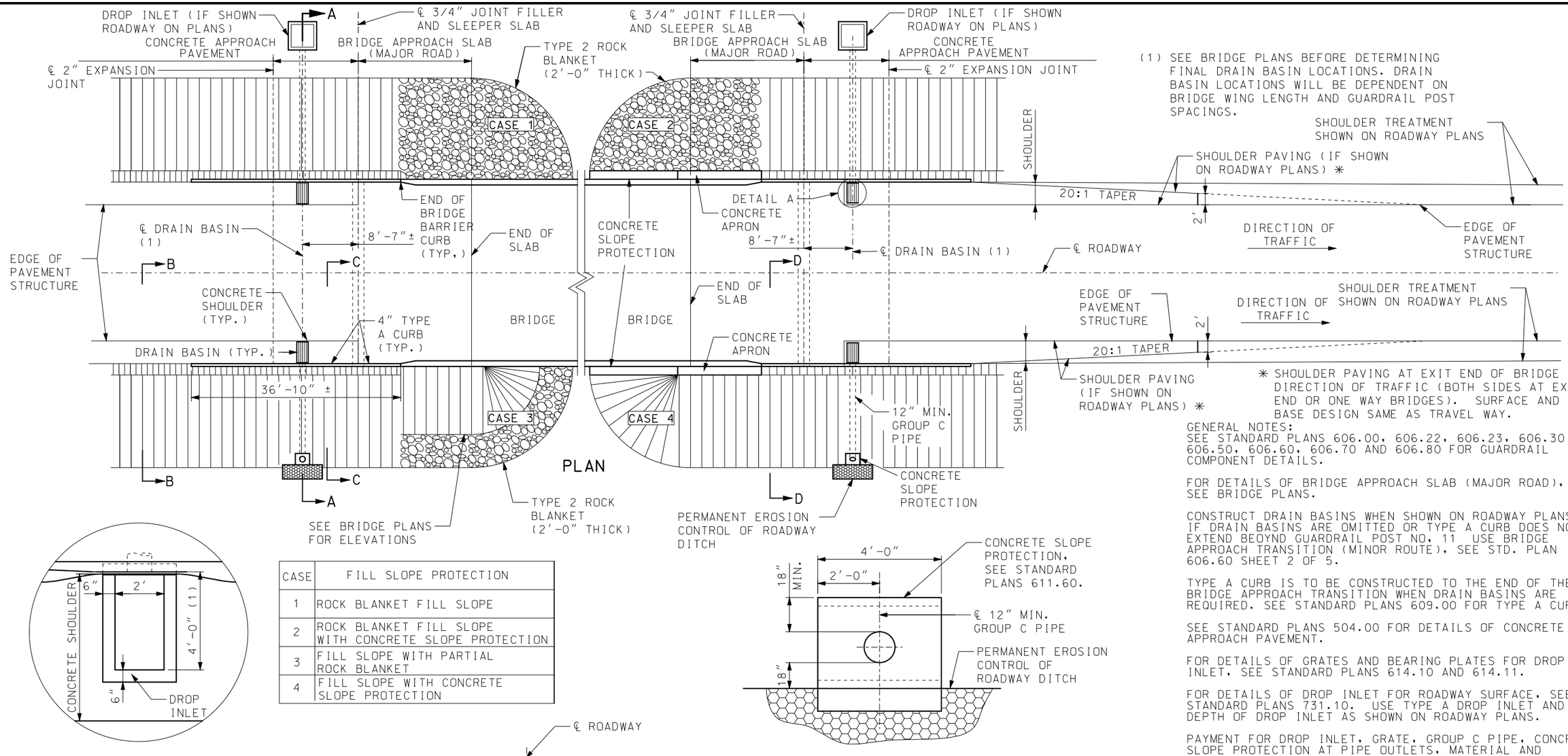

CASE	FILL SLOPE PROTECTION
1	ROCK BLANKET FILL SLOPE
2	ROCK BLANKET FILL SLOPE WITH CONCRETE SLOPE PROTECTION
3	FILL SLOPE WITH PARTIAL ROCK BLANKET
4	FILL SLOPE WITH CONCRETE SLOPE PROTECTION

DETAIL A

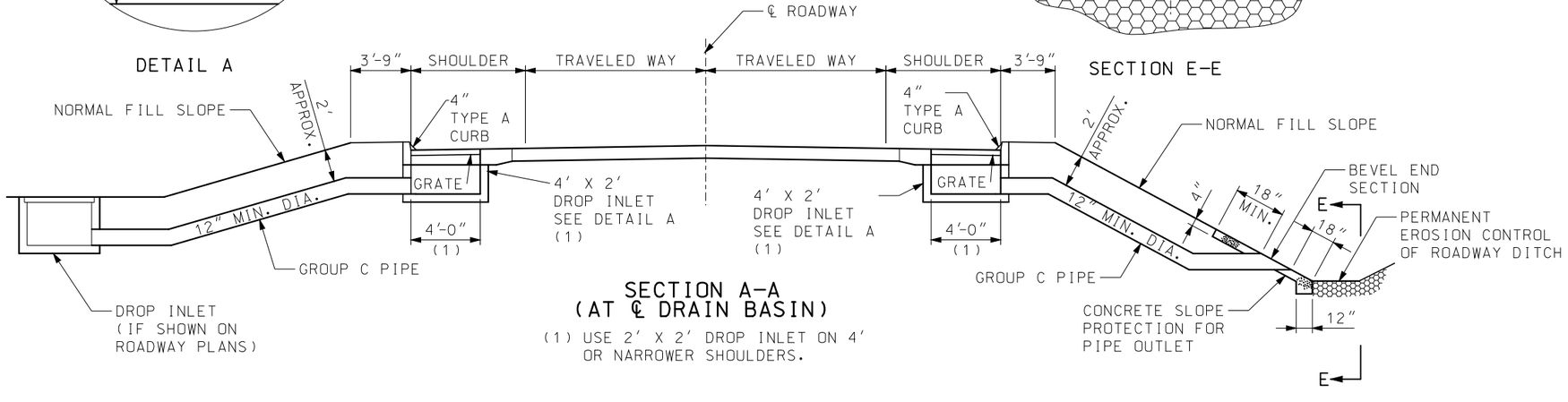

SECTION E-E

SECTION A-A
(AT ℄ DRAIN BASIN)

(1) USE 2' X 2' DROP INLET ON 4' OR NARROWER SHOULDERS.

GENERAL NOTES:
SEE STANDARD PLANS 606.00, 606.22, 606.23, 606.30 606.50, 606.60, 606.70 AND 606.80 FOR GUARDRAIL COMPONENT DETAILS.

FOR DETAILS OF BRIDGE APPROACH SLAB (MAJOR ROAD), SEE BRIDGE PLANS.

CONSTRUCT DRAIN BASINS WHEN SHOWN ON ROADWAY PLANS. IF DRAIN BASINS ARE OMITTED OR TYPE A CURB DOES NOT EXTEND BEOYND GUARDRAIL POST NO. 11 USE BRIDGE APPROACH TRANSITION (MINOR ROUTE), SEE STD. PLAN 606.60 SHEET 2 OF 5.

TYPE A CURB IS TO BE CONSTRUCTED TO THE END OF THE BRIDGE APPROACH TRANSITION WHEN DRAIN BASINS ARE REQUIRED. SEE STANDARD PLANS 609.00 FOR TYPE A CURB.

SEE STANDARD PLANS 504.00 FOR DETAILS OF CONCRETE APPROACH PAVEMENT.

FOR DETAILS OF GRATES AND BEARING PLATES FOR DROP INLET, SEE STANDARD PLANS 614.10 AND 614.11.

FOR DETAILS OF DROP INLET FOR ROADWAY SURFACE, SEE STANDARD PLANS 731.10. USE TYPE A DROP INLET AND USE DEPTH OF DROP INLET AS SHOWN ON ROADWAY PLANS.

PAYMENT FOR DROP INLET, GRATE, GROUP C PIPE, CONCRETE SLOPE PROTECTION AT PIPE OUTLETS, MATERIAL AND INSTALLATION WILL BE PAID FOR AT THE CONTRACT UNIT PRICE FOR DRAIN BASIN PER EACH.

FOR DETAILS OF SECTION B-B, C-C AND D-D, SEE SHEET 2 OF 3.

MISSOURI HIGHWAYS AND TRANSPORTATION COMMISSION
105 WEST CAPITOL
JEFFERSON CITY, MO 65102
1-888-ASK-MODOT (1-888-275-6636)

STATE OF MISSOURI
ERIC E. SCHROETER
NUMBER PE-28411
PROFESSIONAL ENGINEER
THIS SHEET HAS BEEN SIGNED, SEALED AND DATED ELECTRONICALLY.

DRAIN BASIN, SHOULDER PAVING AND FILL SLOPES AT BRIDGE ENDS (MAJOR ROAD)

DATE EFFECTIVE: 01/01/2017
DATE PREPARED: 11/2/2016

609.40S

SHEET NO. 1 OF 3

IF A SEAL IS PRESENT ON THIS SHEET IT HAS BEEN ELECTRONICALLY SEALED AND DATED.

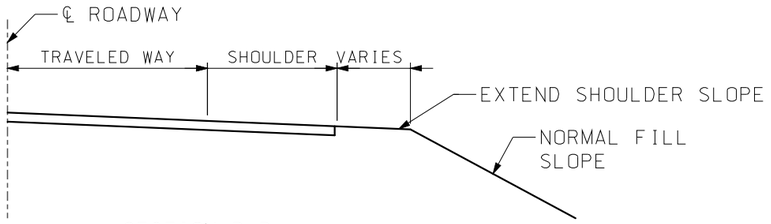

SECTION B–B

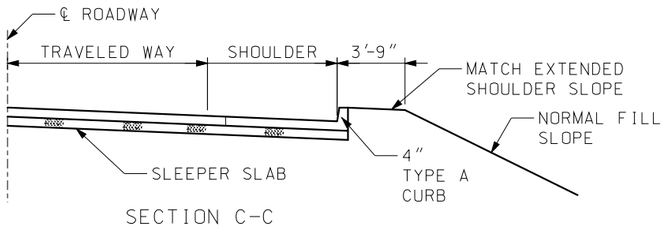

SECTION C–C

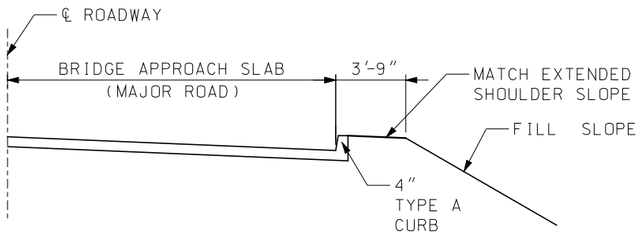

SECTION D–D

NOTE: FOR DETAILS NOT SHOWN, SEE OTHER SECTIONS.

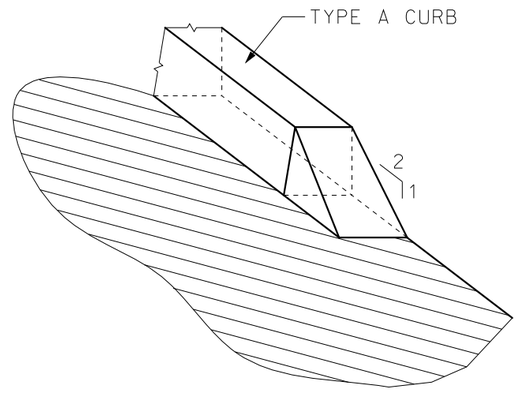

TYPE A CURB
TRANSITION DETAIL

GENERAL NOTE:

FOR LOCATION OF SEC. B–B, C–C AND D–D, SEE SHEET 1 OF 3.

MISSOURI HIGHWAYS AND TRANSPORTATION COMMISSION
105 WEST CAPITOL
JEFFERSON CITY, MO 65102
1-888-ASK-MODOT (1-888-275-6636)

STATE OF MISSOURI
ERIC E. SCHROETER
NUMBER PE-28411
PROFESSIONAL ENGINEER
THIS SHEET HAS BEEN SIGNED, SEALED AND DATED ELECTRONICALLY.

DRAIN BASIN, SHOULDER PAVING AND FILL SLOPE AT BRIDGE ENDS (MAJOR ROAD)

DATE EFFECTIVE: 01/01/2017
DATE PREPARED: 11/2/2016

609.40S

SHEET NO. 2 OF 3

IF A SEAL IS PRESENT ON THIS SHEET IT HAS BEEN ELECTRONICALLY SEALED AND DATED.

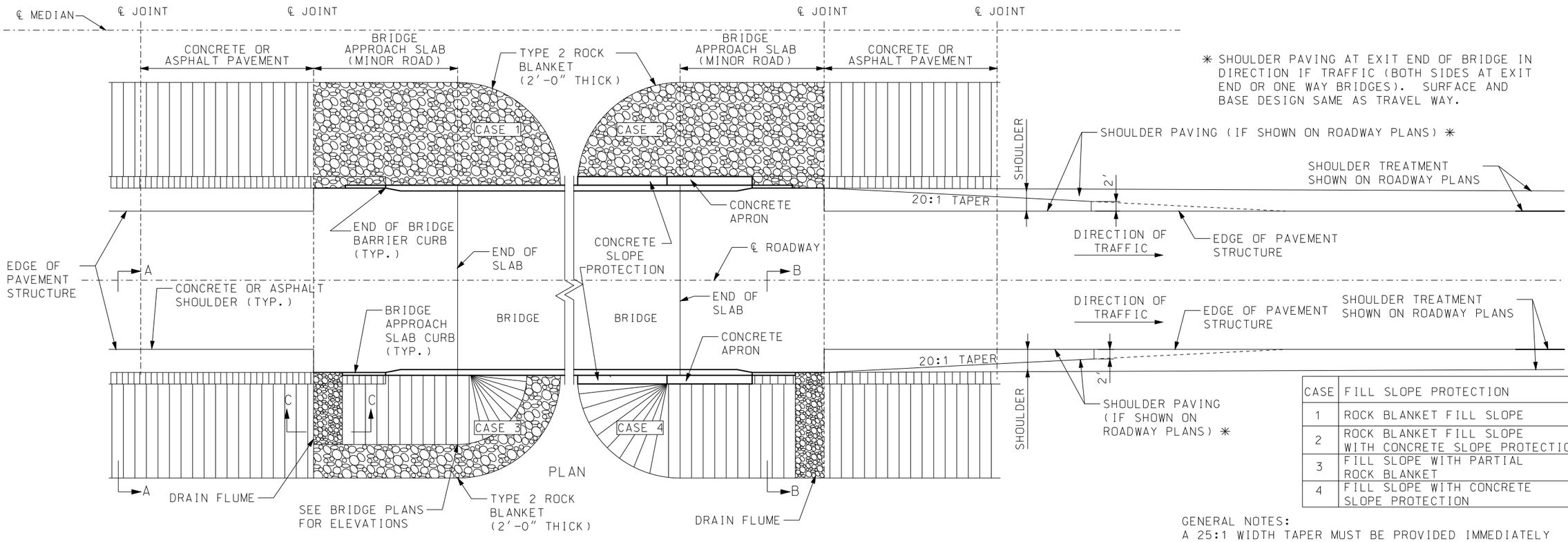

CASE	FILL SLOPE PROTECTION
1	ROCK BLANKET FILL SLOPE
2	ROCK BLANKET FILL SLOPE WITH CONCRETE SLOPE PROTECTION
3	FILL SLOPE WITH PARTIAL ROCK BLANKET
4	FILL SLOPE WITH CONCRETE SLOPE PROTECTION

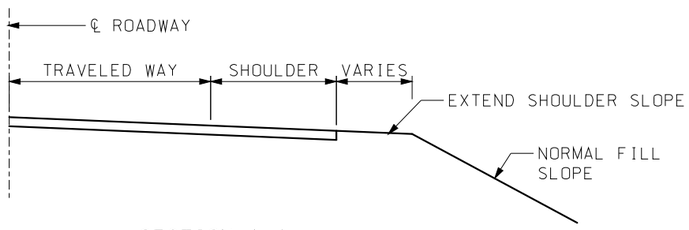

SECTION A-A

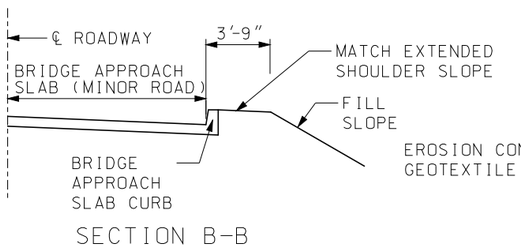

SECTION B-B

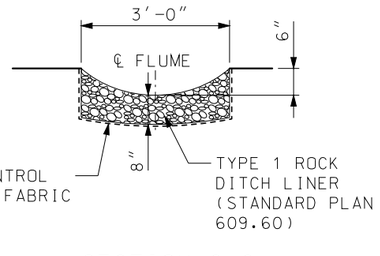

SECTION C-C

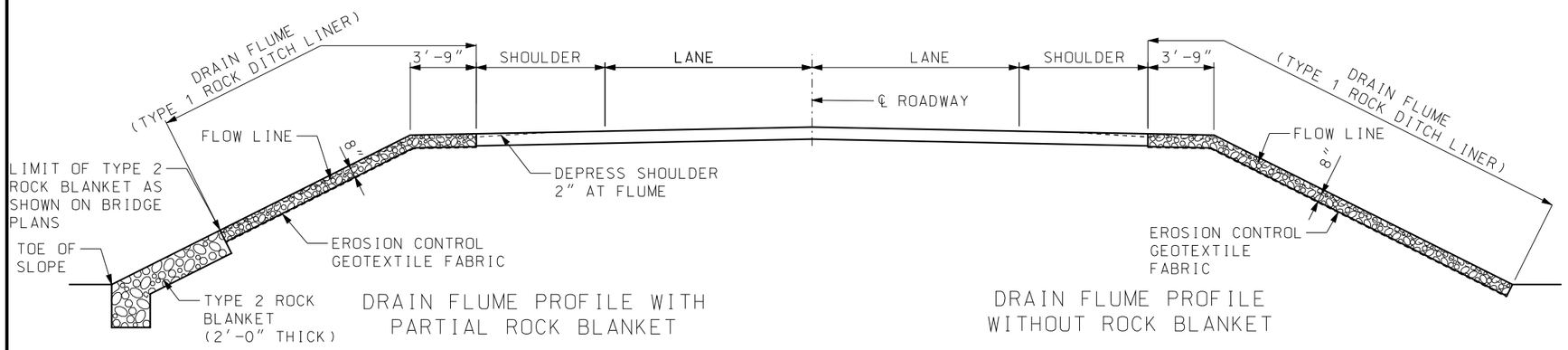

DRAIN FLUME PROFILE WITH PARTIAL ROCK BLANKET

DRAIN FLUME PROFILE WITHOUT ROCK BLANKET

GENERAL NOTES:
A 25:1 WIDTH TAPER MUST BE PROVIDED IMMEDIATELY BEYOND THE LIMITS OF CURB AS SHOWN IN ORDER TO TRANSITION ROADWAY WIDTH TO WIDTH BETWEEN GUARDRAIL FACES ON PAVEMENT.

SEE STANDARD PLANS 606.00, 606.22, 606.23, 606.30, 606.50, 606.60, 606.70 AND 606.80 FOR DETAILS OF GUARDRAILS AND BRIDGE ANCHOR SECTIONS.

FOR DETAILS OF BRIDGE APPROACH SLAB (MINOR ROAD), SEE BRIDGE PLANS.

CONSTRUCT DRAIN FLUMES AND OR FILL SLOPE PROTECTION WHEN SHOWN ON ROADWAY PLANS.

PAYMENT FOR FURNISHING ALL MATERIALS, LABOR AND EXCAVATION NECESSARY TO CONSTRUCT THE DRAIN FLUMES, INCLUDING THE PERMANENT EROSION CONTROL GEOTEXTILE, COMPLETE-IN-PLACE, WILL BE CONSIDERED COMPLETELY COVERED BY THE CONTRACT UNIT PRICE FOR TYPE 1 ROCK DITCH LINER.

MISSOURI HIGHWAYS AND TRANSPORTATION COMMISSION
105 WEST CAPITOL
JEFFERSON CITY, MO 65102
1-888-ASK-MODOT (1-888-275-6636)

STATE OF MISSOURI
ERIC E. SCHROETER
NUMBER PE-28411
PROFESSIONAL ENGINEER
THIS SHEET HAS BEEN SIGNED, SEALED AND DATED ELECTRONICALLY.

DRAIN FLUME, SHOULDER PAVING AND FILL SLOPES AT BRIDGE ENDS (MINOR ROAD)

DATE EFFECTIVE: 01/01/2017
DATE PREPARED: 11/2/2016

609.40S

SHEET NO. 3 OF 3

IF A SEAL IS PRESENT ON THIS SHEET IT HAS BEEN ELECTRONICALLY SEALED AND DATED.

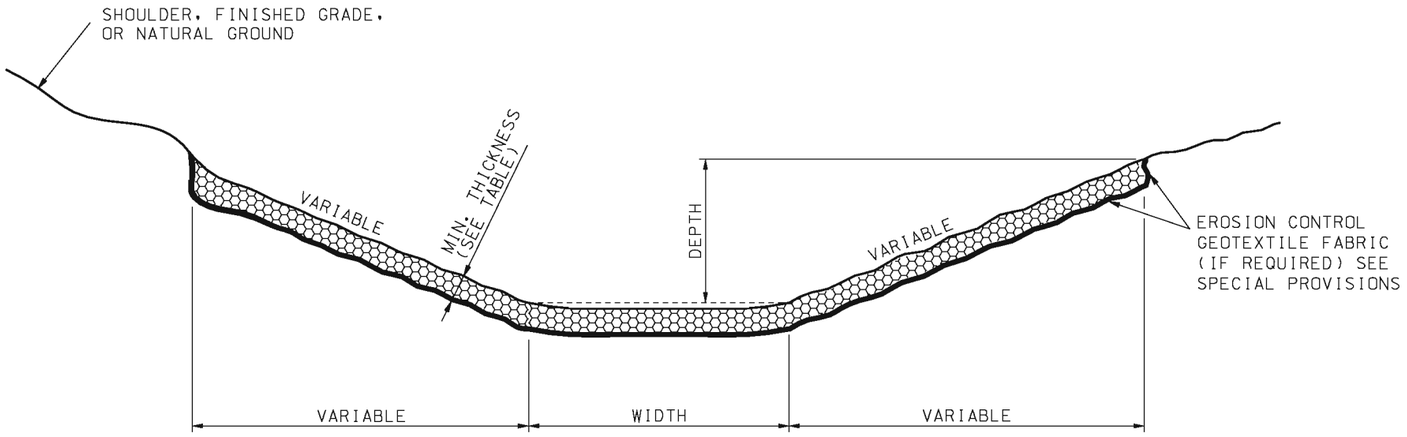

FLAT BOTTOM DITCH
WITHOUT BEDDING MATERIAL

TYPE	ROCK DITCH LINER MIN. THICKNESS	BEDDING MATERIAL MIN. THICKNESS
1	8″	--
2	12″	--
3	22″	8″
4	30″	12″

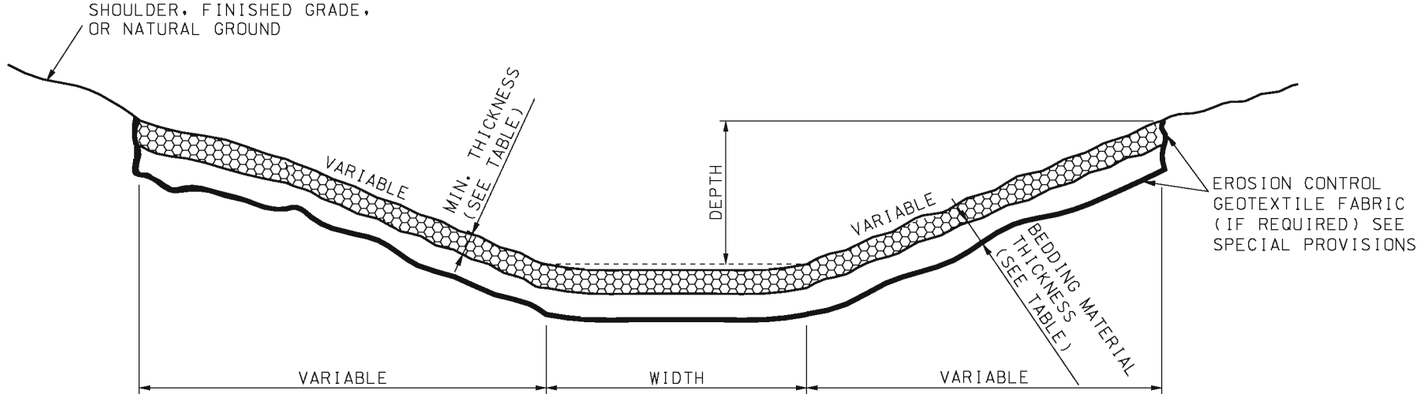

FLAT BOTTOM DITCH
WITH BEDDING MATERIAL

TYPICAL DITCH LINER DETAILS

IF A SEAL IS PRESENT ON THIS SHEET IT HAS BEEN ELECTRONICALLY SEALED AND DATED.

MISSOURI HIGHWAYS AND TRANSPORTATION COMMISSION
105 WEST CAPITOL
JEFFERSON CITY, MO 65102
1-888-ASK-MODOT (1-888-275-6636)

STATE OF MISSOURI
KATHRYN PHILLIPS HARVEY
NUMBER PE-23751
PROFESSIONAL ENGINEER
THIS SHEET HAS BEEN SIGNED, SEALED AND DATED ELECTRONICALLY.

ROCK DITCH LINER

DATE EFFECTIVE: 03/01/1993
DATE PREPARED: 8/21/2009

609.60C

SHEET NO. 1 OF 1

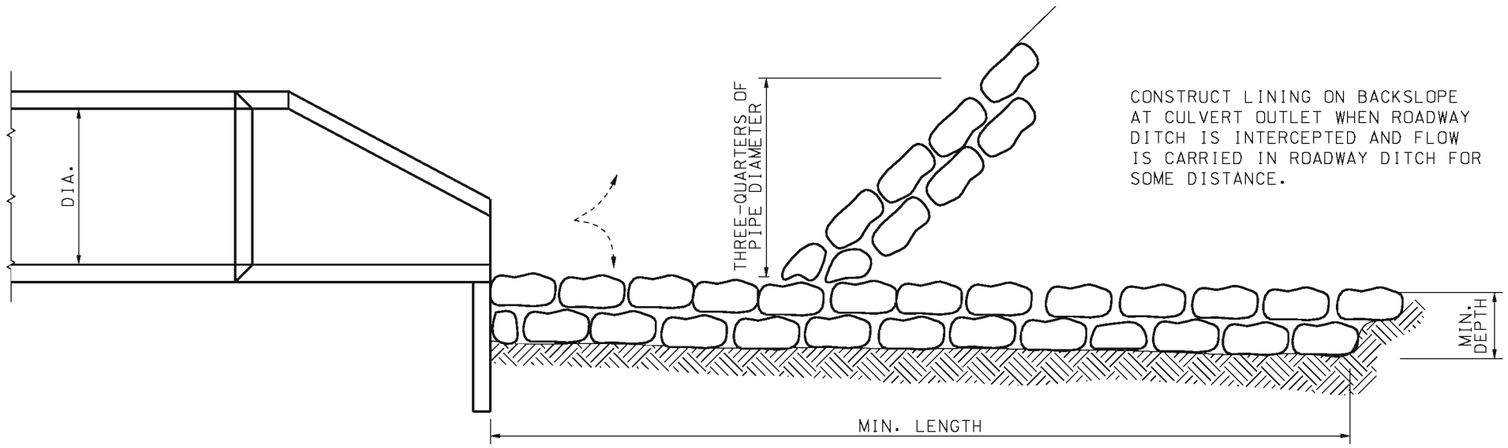

CONSTRUCT LINING ON BACKSLOPE AT CULVERT OUTLET WHEN ROADWAY DITCH IS INTERCEPTED AND FLOW IS CARRIED IN ROADWAY DITCH FOR SOME DISTANCE.

SIDE VIEW

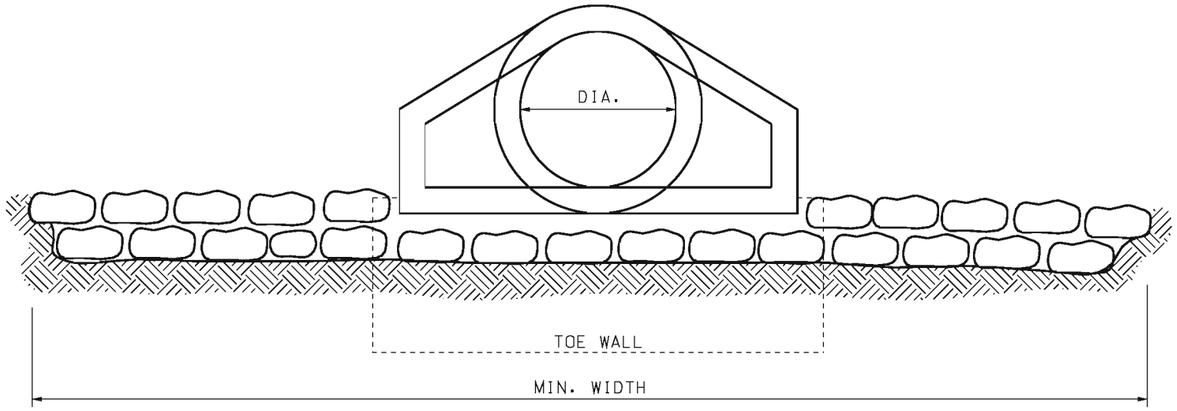

END VIEW

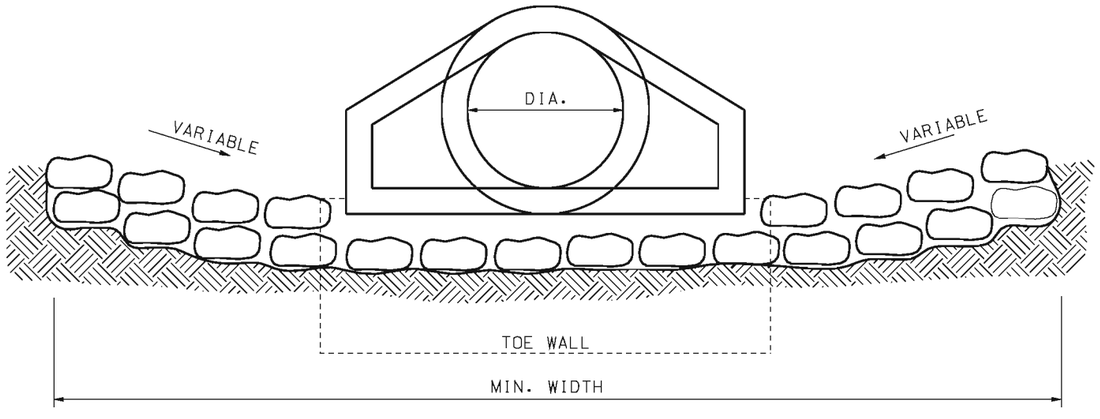

END VIEW
(ALTERNATE METHOD)

ROCK LINING FOR CULVERT OUTLETS

CULVERT SIZE, DIA (IN.)	MINIMUN DEPTH AND WIDTH (FT.)	MINIMUM LENGHT (FT.)	ROCK LINING (CU.YD.)	EQUIVALENT PIPE ARCH CULVERT (APPROX.)	EQUIVALENT CONCRETE BOX CULVERT (APPROX.)
18	1 X 4	12	2		
24	1 X 6	14	3		2′ X 1½′
30	1 X 7	16	4	B-5	2′ X 2′
36	1.5 X 9	18	9	B-6	3′ X 2′
42	2 X 10	20	15	B-7	3′ X 3′
48	2 X 12	20	18	B-8	4′ X 3′
54	2 X 13.5	22	22	B-9	4′ X 4′
60	2 X 15	25	28	B-10	5′ X 4′
66	2 X 18	25	33	B-11	5′ X 5′
72	2 X 20	30	44	B-12	5′ X 6′
84	2.5 X 25	35	81		6′ X 6′
96	2.5 X 30	40	111		7′ X 7′
108	3 X 32	40	142		8′ X 8′

GENERAL NOTES:

THE DIMENSIONS SHOWN IN THE TABLE CAN BE APPLIED TO BOX OR ARCH CULVERTS OF EQUIVALENT WATERWAY AREA.

MISSOURI HIGHWAYS AND TRANSPORTATION COMMISSION
105 WEST CAPITOL
JEFFERSON CITY, MO 65102
1-888-ASK-MODOT (1-888-275-6636)

STATE OF MISSOURI
KATHRYN PHILLIPS HARVEY
NUMBER PE-23751
PROFESSIONAL ENGINEER
THIS SHEET HAS BEEN SIGNED, SEALED AND DATED ELECTRONICALLY.

ROCK LINING FOR CULVERT OUTLET

DATE EFFECTIVE: 10/01/1981
DATE PREPARED: 8/21/2009

609.70C

SHEET NO. 1 OF 1

IF A SEAL IS PRESENT ON THIS SHEET IT HAS BEEN ELECTRONICALLY SEALED AND DATED.

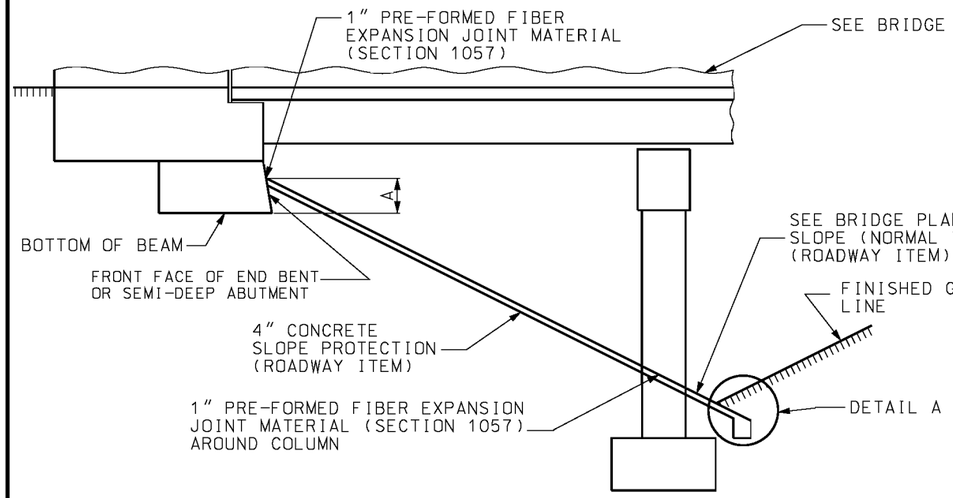

ELEVATION
(STRAIGHT SLOPE TYPE)

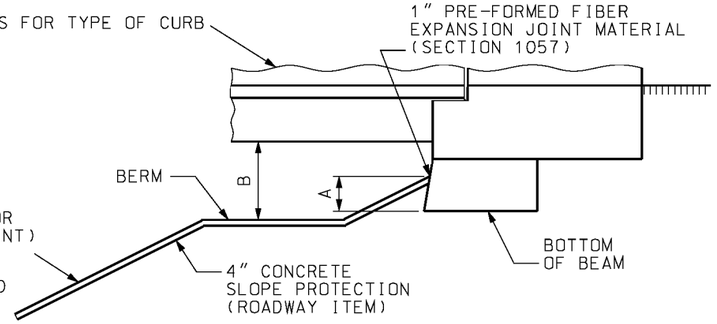

ELEVATION
(USE ON STRUCTURES WITHOUT PASSIVE PRESSURE BERM)

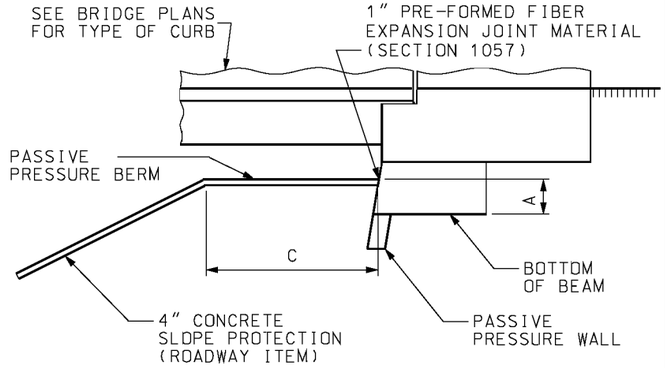

ELEVATION
(USE ON STRUCTURES WITH PASSIVE PRESSURE BERM)

A – SEE BRIDGE PLANS

B – BERM SHALL BE CONSTRUCTED TO ELEVATION SHOWN ON PLANS WITH A MINIMUM OF 4'-0" BELOW BOTTOM OF SUPERSTRUCTURE.

C – DIMENSION OF BERM (SEE BRIDGE PLANS).

(1) SLOPE $\frac{1}{4}$" PER FOOT MINIMUM.
(2) PROTECTION SHALL BE PLACED IN CONTINUOUS PANELS FROM TOE OF THE SLOPE TO THE TOP OF THE SLOPE.
(3) SLOPE PROTECTION SHALL FOLLOW THE CONTOUR OF THE FINAL ROADWAY FILL.

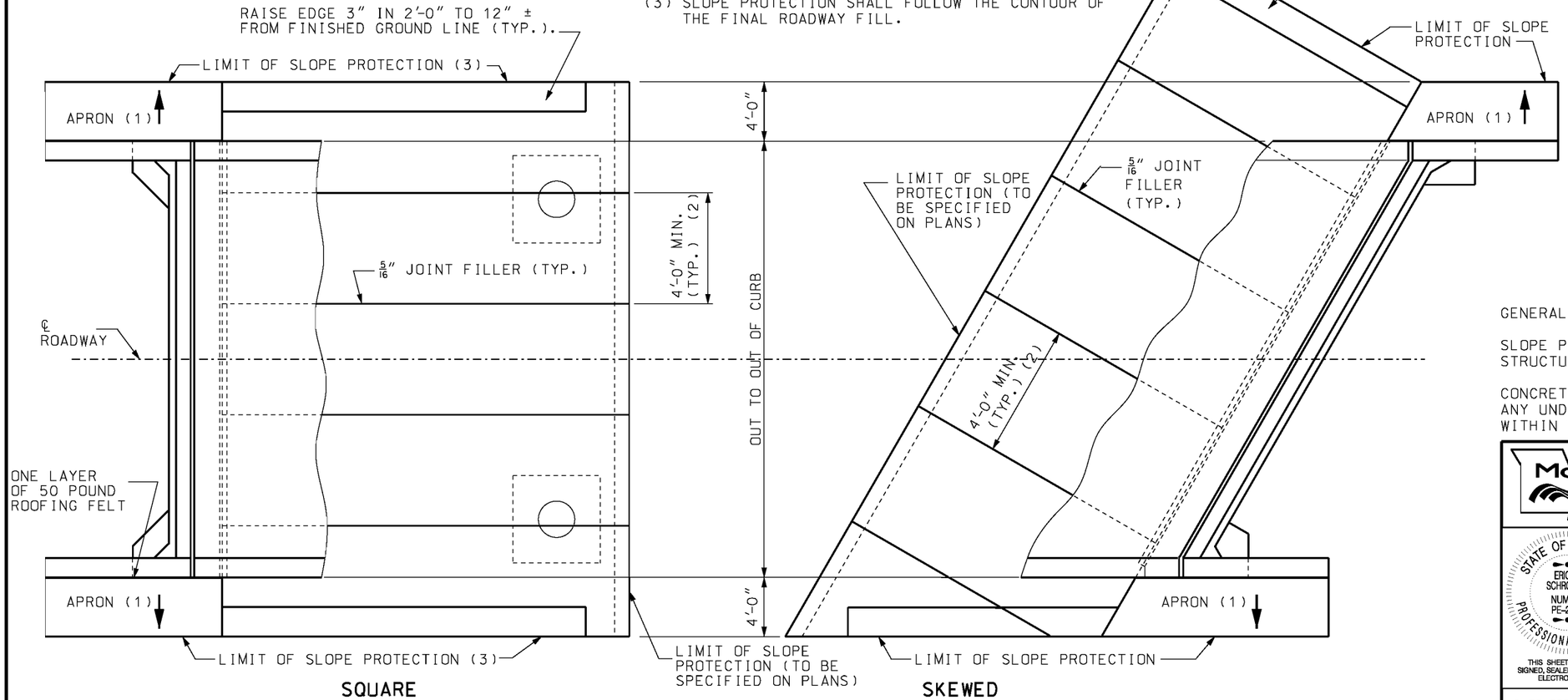

PART PLAN

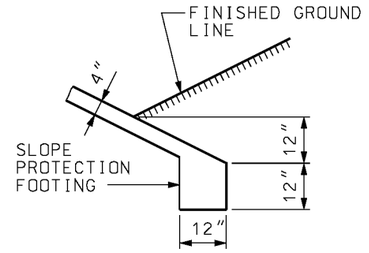

DETAIL A

NOTE:
IF SLOPE PROTECTION FOOTING FALLS ON OR AROUND OTHER FOOTINGS, ONE LAYER OF 50# ROOFING FELT SHALLBE PLACED BETWEEN CONTACT SURFACES OF FOOTINGS.

GENERAL NOTES:

SLOPE PROTECTION SHALL BE MADE CONTINUOUS BETWEEN STRUCTURES WHEN MEDIAN IS 60' OR LESS.

CONCRETE SLOPE PROTECTION SHALL BE FORMED AROUND ANY UNDISTURBED ROCK THAT IS PERMITTED TO REMAIN WITHIN THE SLOPE PROTECTION AREA.

MISSOURI HIGHWAYS AND TRANSPORTATION COMMISSION
105 WEST CAPITOL
JEFFERSON CITY, MO 65102
1-888-ASK-MODOT (1-888-275-6636)

STATE OF MISSOURI
ERIC E. SCHROETER
NUMBER PE-28411
PROFESSIONAL ENGINEER
THIS SHEET HAS BEEN SIGNED, SEALED AND DATED ELECTRONICALLY.

CONCRETE SLOPE PROTECTION

DATE EFFECTIVE: 07/01/2015
DATE PREPARED: 5/29/2015

611.60R

SHEET NO. 1 OF 1

IF A SEAL IS PRESENT ON THIS SHEET IT HAS BEEN ELECTRONICALLY SEALED AND DATED.

ATTENUATOR LAYOUT:

ALL SAND FILLED ATTENUATORS SHOULD MEET MANUFACTURER'S RECOMMENDATIONS FOR THE ARRAY AND SAND WEIGHT.

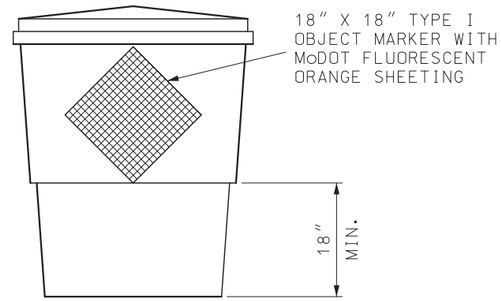

TYPE I OBJECT MARKER PLACEMENT FOR TEMPORARY INSTALLATIONS

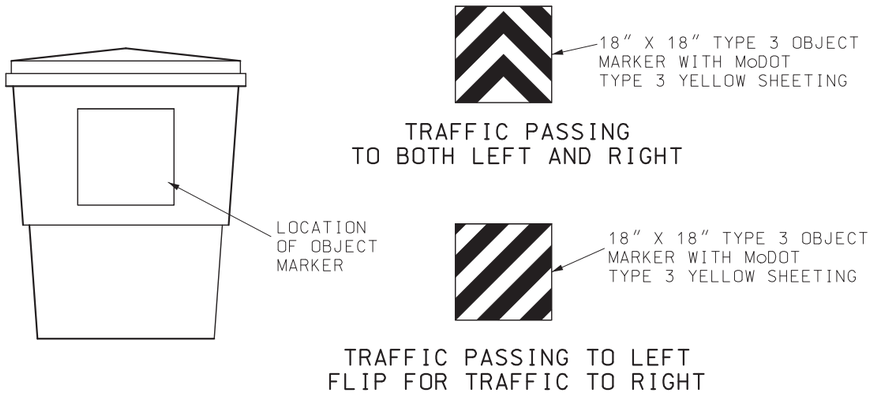

TYPE 3 OBJECT MARKER PLACEMENT FOR PERMANENT INSTALLATIONS

GENERAL NOTES:

OBJECT MARKERS SHALL BE CENTERED VERTICALLY OR PLACED AS DIRECTED BY THE ENGINEER.

MISSOURI HIGHWAYS AND TRANSPORTATION COMMISSION
105 WEST CAPITOL
JEFFERSON CITY, MO 65102
1-888-ASK-MODOT (1-888-275-6636)

STATE OF MISSOURI
ERIC E. SCHROETER
NUMBER PE-28411
PROFESSIONAL ENGINEER
THIS SHEET HAS BEEN SIGNED, SEALED AND DATED ELECTRONICALLY.

SAND FILLED IMPACT ATTENUATORS

DATE EFFECTIVE: 10/01/2018
DATE PREPARED: 7/31/2018

612.20E

SHEET NO. 1 OF 1

IF A SEAL IS PRESENT ON THIS SHEET IT HAS BEEN ELECTRONICALLY SEALED AND DATED.

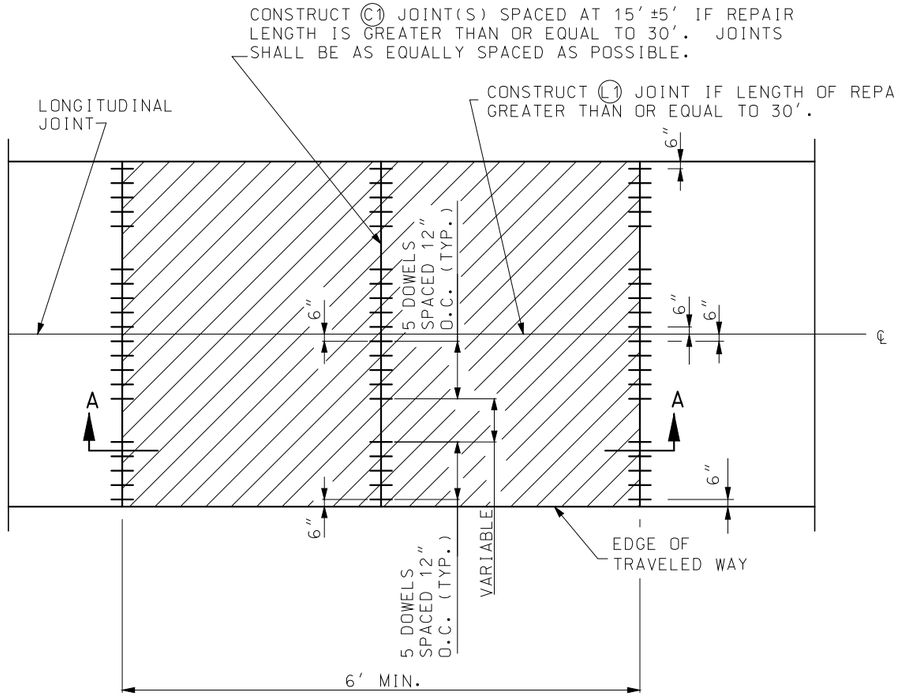

TWO OR MORE LANES

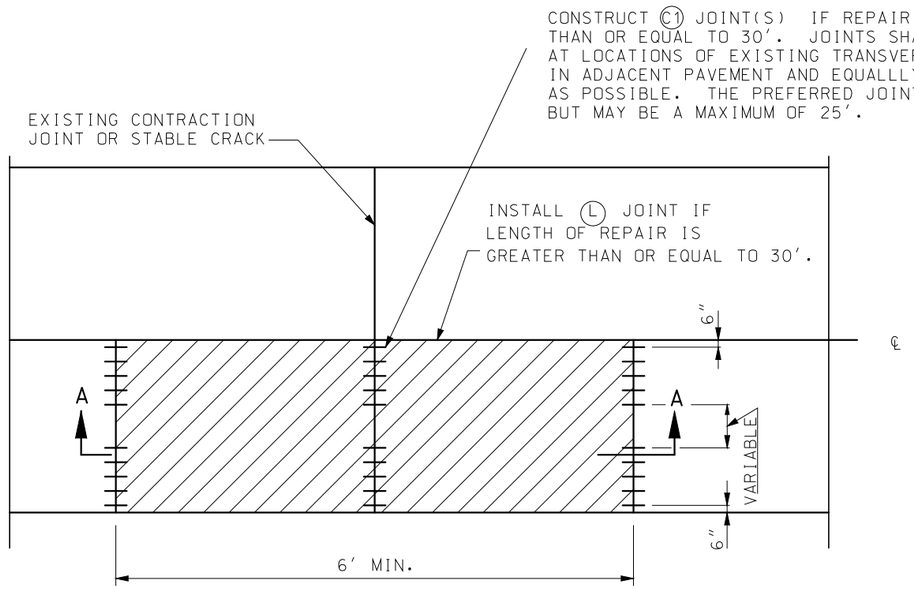

ONE LANE

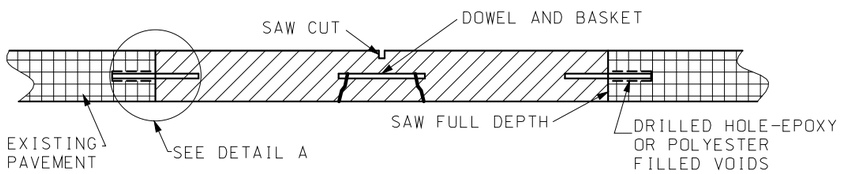

SECTION A–A

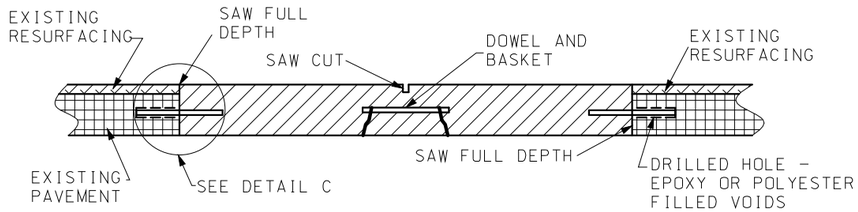

SECTION A–A ALTERNATE
WITH ASPHALT OVERLAY

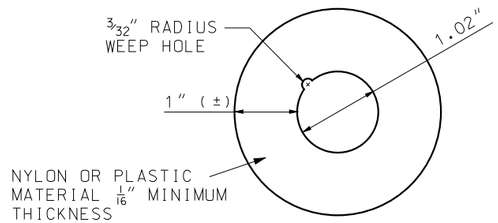

DETAIL B
THIN CIRCULAR DISK

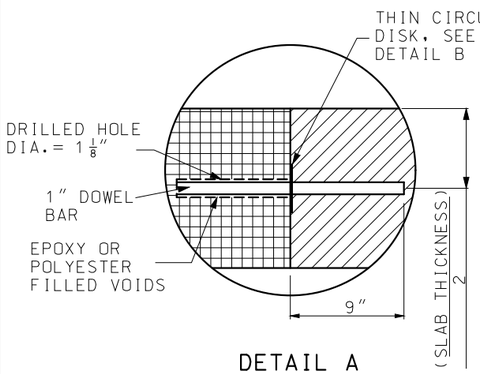

DETAIL A

1. SMOOTH EPOXY COATED DOWELS SHALL BE USED IN ALL FULL DEPTH PAVEMENT REPAIR TRANSVERSE JOINTS.
2. THE ANCHORING MATERIAL (EPOXY OR POLYESTER) SHALL BE PLACED TO THE BACK OF THE PREDRILLED HOLE BEFORE INSERTING THE DOWEL BAR.
3. THE DOWEL IS INSERTED INTO THE HOLE WITH A TWISTING MOTION SO THAT THE MATERIAL IN THE BACK OF THE HOLE IS FORCED UP AND AROUND THE BAR.
4. EXPOSED END OF DOWEL SHALL BE COATED WITH A THIN UNIFORM COAT OF GRAPHITE GREASE. DOWEL BASKET ASSEMBLIES SHALL BE CONSTRUCTED IN ACCORDANCE WITH STANDARD PLAN 502.10. IN LIEU OF GRAPHITE GREASE, THE DOWEL BAR BASKET SUPPLIER MAY PROVIDE COMPLETED BASKET UNITS PRE-DIPPED IN AN APPROVED BONDBREAKER.
5. REPAIR ONLY ONE LANE AT A TIME.

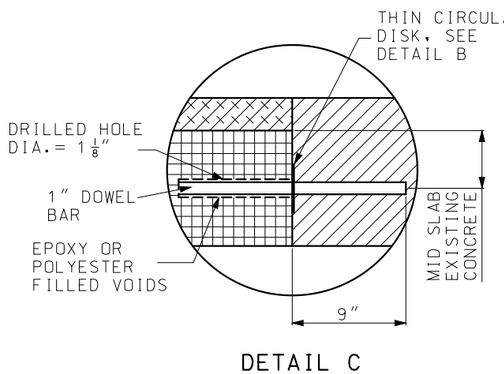

DETAIL C

GENERAL NOTES:

ALL SAW CUTS SHALL BE MADE WITH A DIAMOND SAW EXCEPT THE CENTER RELIEF CUT.

FOR DETAILS OF TYPE C, L AND L1 JOINTS. SEE STANDARD PLAN 502.05.

NON-REINFORCED AND REINFORCED PORTLAND CEMENT CONCRETE

MISSOURI HIGHWAYS AND TRANSPORTATION COMMISSION
105 WEST CAPITOL
JEFFERSON CITY, MO 65102
1-888-ASK-MODOT (1-888-275-6636)

STATE OF MISSOURI
ERIC E. SCHROETER
NUMBER PE-2841
PROFESSIONAL ENGINEER
THIS SHEET HAS BEEN SIGNED, SEALED AND DATED ELECTRONICALLY.

PAVEMENT REPAIR
FULL DEPTH

DATE EFFECTIVE: 04/01/2017
DATE PREPARED: 1/30/2017

613.00S

SHEET NO. 1 OF 4

IF A SEAL IS PRESENT ON THIS SHEET IT HAS BEEN ELECTRONICALLY SEALED AND DATED.

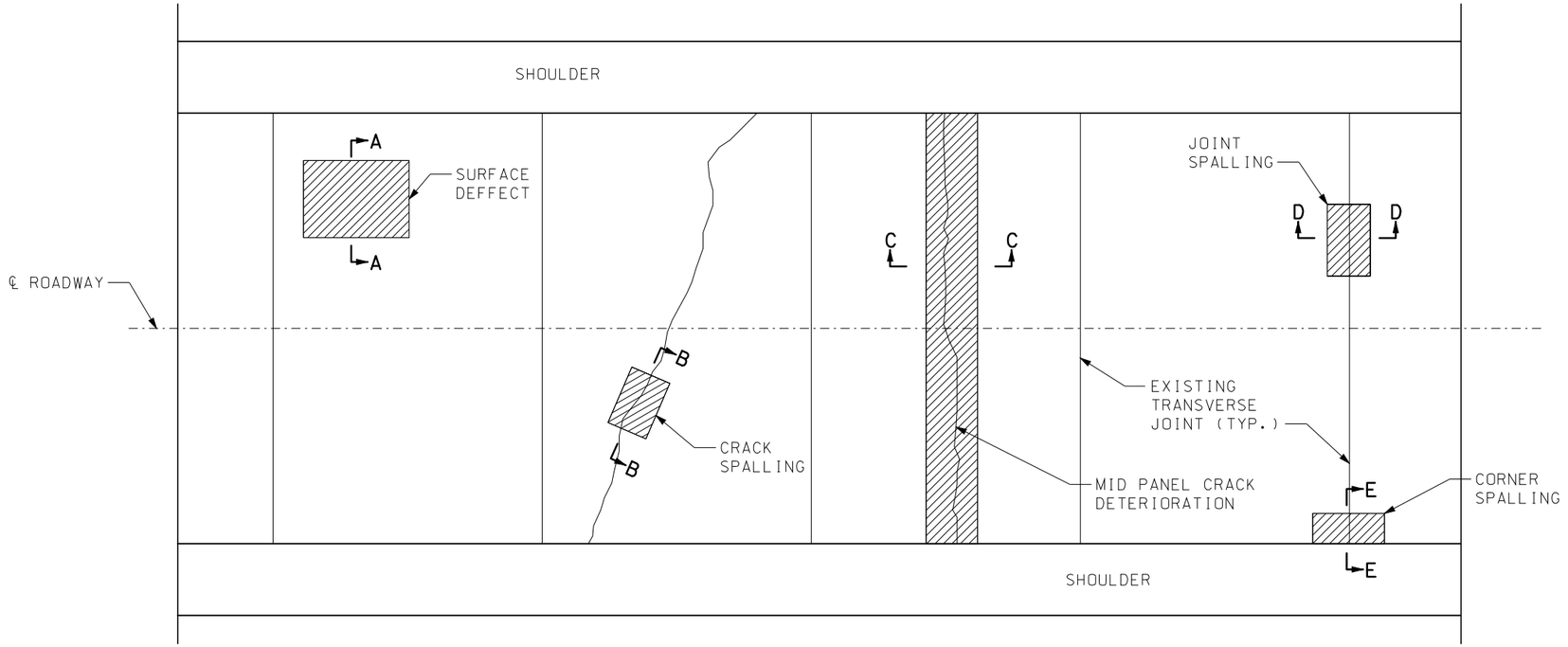

PLAN VIEW

1. REMOVE ALL CONCRETE, TO LIMITS SHOWN, TO MAX. OF $\frac{1}{2}$ THE PAVEMENT DEPTH OR TOP OF DOWELS BY MILLING.
2. PLACE COMPRESSIBLE INSERT IN JOINT OR CRACK. INSERT SHALL BE THICKNESS OF JOINT OR CRACK WIDTH, BUT NOT LESS THAN $\frac{1}{4}$".
3. CHIP VERTICAL REPAIR EDGES AT APPROXIMATE 1:1 SLOPE.
4. PLACE $\frac{1}{8}$" MIN. COMPRESSIBLE INSERT ADJACENT TO LONGITUDINAL LANE OR SHOULDER JOINT.
5. EXPOSED SURFACE SHALL BE CLEANED BY SANDBLASTING, SHOTBLASTING, OR HIGH PRESSURE WATER BLASTING.
6. EXPOSED SURFACE OF DOWEL BARS SHALL BE COATED WITH AN APPROVED BONDBREAKER.

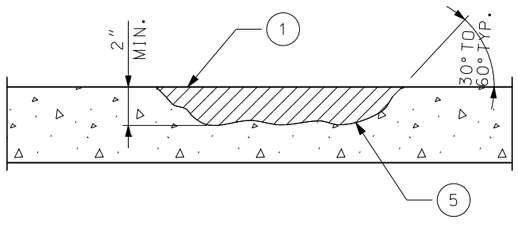

SECTION A-A

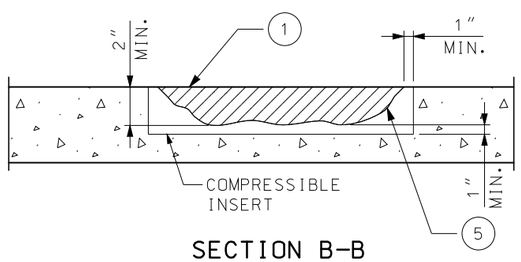

SECTION B-B

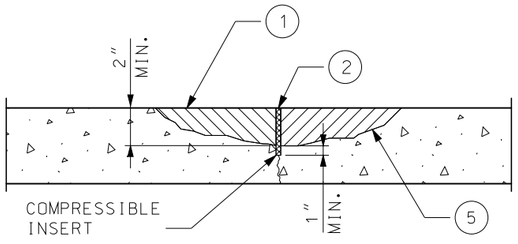

SECTION C-C

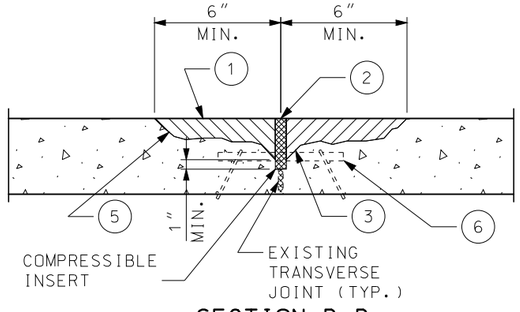

SECTION D-D

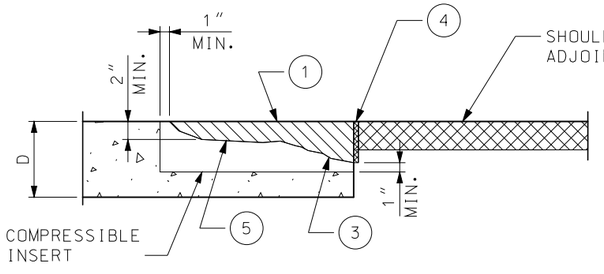

SECTION E-E

AREA TO BE REMOVED

IF A SEAL IS PRESENT ON THIS SHEET IT HAS BEEN ELECTRONICALLY SEALED AND DATED.

MISSOURI HIGHWAYS AND TRANSPORTATION COMMISSION
105 WEST CAPITOL
JEFFERSON CITY, MO 65102
1-888-ASK-MODOT (1-888-275-6636)

STATE OF MISSOURI
ERIC E. SCHROETER
NUMBER PE-28411
PROFESSIONAL ENGINEER
THIS SHEET HAS BEEN SIGNED, SEALED AND DATED ELECTRONICALLY.

PAVEMENT REPAIR

PARTIAL DEPTH
CLASS A

DATE EFFECTIVE: 04/01/2017
DATE PREPARED: 1/30/2017

613.00S

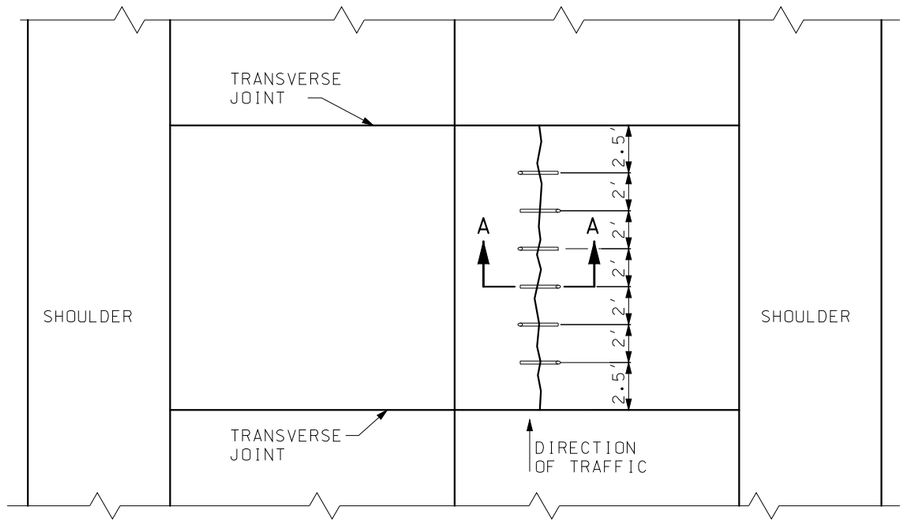

CROSS STITCHING PLAN

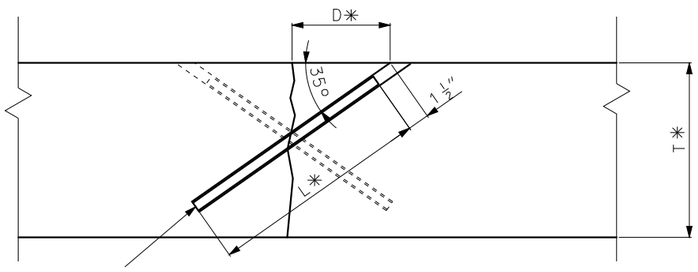

* SEE TABLE

T	SLAB THICKNESS (IN)	8	9	10	11	12
D	DISTANCE TO HOLE (IN)	5 3/4	6 1/2	7 1/4	8 1/2	8 1/2
L	LENGTH OF BAR (IN)	8 1/2	11	12 1/2	14	16

SECTION A-A

GENERAL NOTES:

AT EACH REPAIR LOCATION, HOLES SHALL BE DRILLED AT 35° ANGLES TO THE PAVEMENT SURFACE, PERPENDICULAR TO THE CRACK. THE DRILL BIT DIAMETER SHALL NOT EXCEED 1 1/8".

DRILLING SHALL ALTERNATE BACK AND FORTH ON EITHER SIDE OF THE LONGITUDINAL JOINT FROM HOLE TO HOLE.

DRILLED HOLES SHALL NOT PENETRATE THROUGH THE SLAB BOTTOM.

DRILLED HOLES SHALL BE CLEANED OF LOOSE DEBRIS AND DUST. EPOXY OR POLYESTER BONDING AGENTS FOR DOWELS, MEETING THE MATERIAL REQUIREMENTS OF SECTION 1039, SHALL BE INJECTED OR POURED INTO EACH HOLE. A CROSS-STITCH BAR SHALL BE INSERTED IN EACH HOLE SUCH THAT THE EPOXY MATERIAL IS EVENLY DISTRIBUTED AROUND THE BAR AND EXTRUDING FROM THE SURFACE OPENING. EACH BAR SHALL BE INSERTED FAR ENOUGH TO ALLOW 1 1/2" OF COVER AS SHOWN IN THE PROFILE DETAIL.

THE SURFACE SHALL HAVE ALL EXCESS EPOXY REMOVED AND HAVE A FLUSH FINISH.

GENERAL NOTES:

IF A SEAL IS PRESENT ON THIS SHEET IT HAS BEEN ELECTRONICALLY SEALED AND DATED.

MISSOURI HIGHWAYS AND TRANSPORTATION COMMISSION
105 WEST CAPITOL
JEFFERSON CITY, MO 65102
1-888-ASK-MODOT (1-888-275-6636)

STATE OF MISSOURI
ERIC E. SCHROETER
NUMBER PE-2841
PROFESSIONAL ENGINEER
THIS SHEET HAS BEEN SIGNED, SEALED AND DATED ELECTRONICALLY.

PAVEMENT REPAIR

CROSS STITCHING

DATE EFFECTIVE: 04/01/2017
DATE PREPARED: 1/30/2017

613.00S

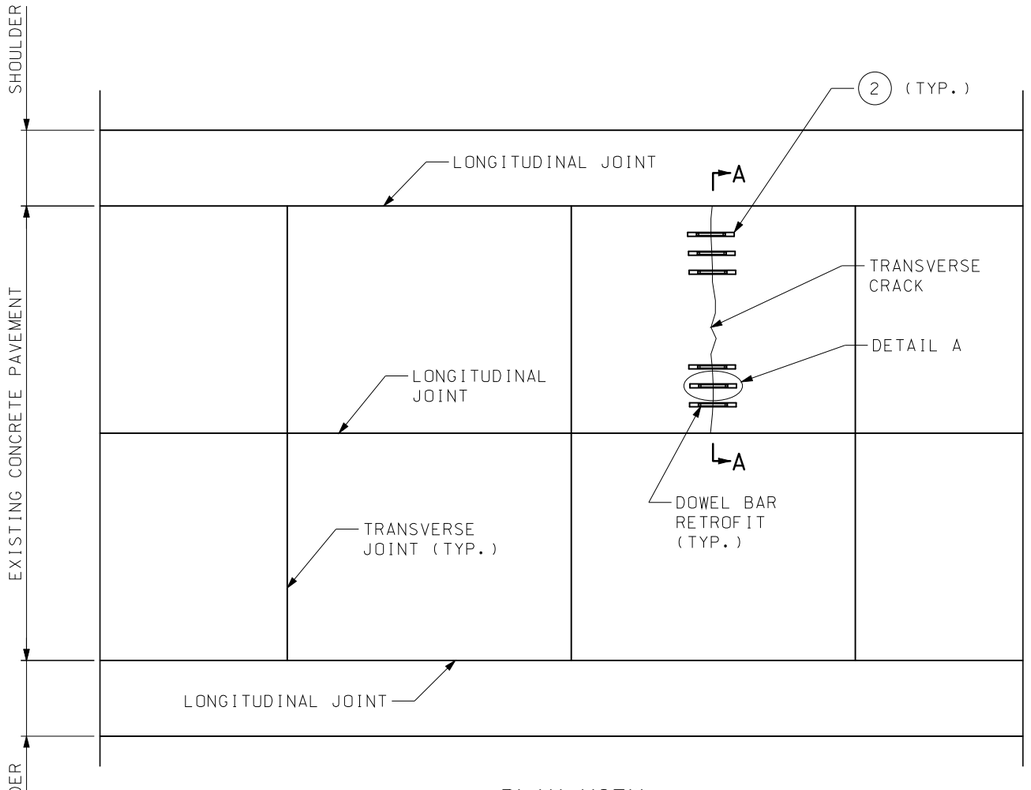

PLAN VIEW

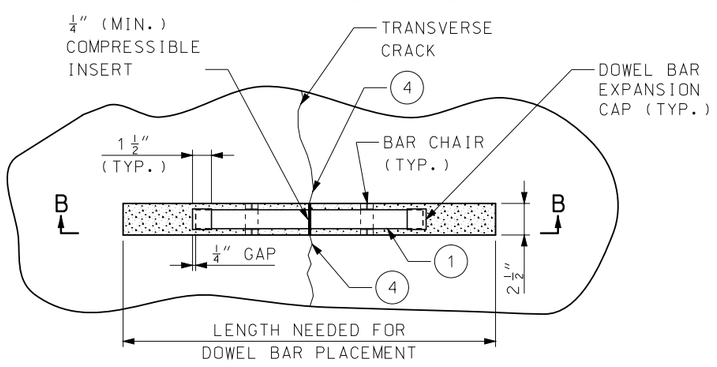

DETAIL A

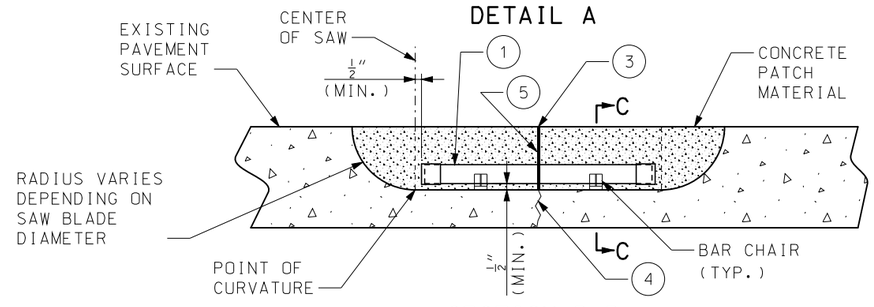

SECTION B-B

1. 1½" DIAMETER DOWEL BAR X 18" LENGTH.
2. DOWEL BAR SLOTS SHALL BE PARALLEL TO ROADWAY.
3. TOP OF COMPRESSIBLE INSERT SHALL BE FLUSH WITH PAVEMENT SURFACE.
4. CRACK PERIMETER IN SLOT SHALL BE SEALED WITH SILICONE.
5. COMPRESSIBLE INSERT SHALL BE PLACED AT MIDDLE OF DOWEL BAR.

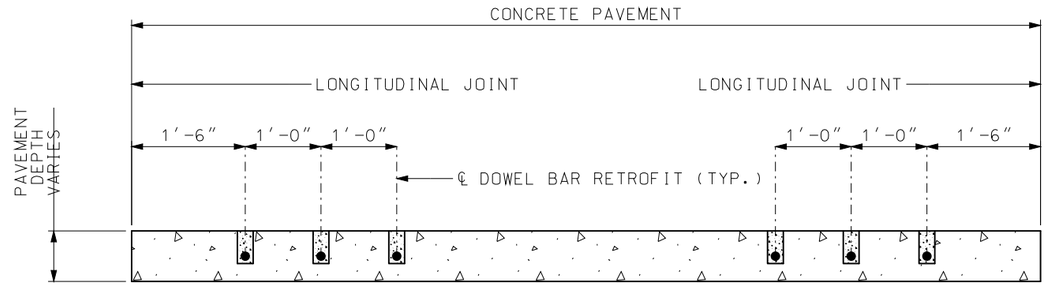

SECTION A-A

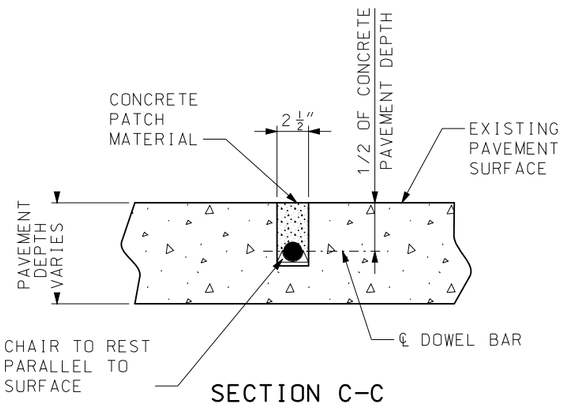

SECTION C-C

MISSOURI HIGHWAYS AND TRANSPORTATION COMMISSION
105 WEST CAPITOL
JEFFERSON CITY, MO 65102
1-888-ASK-MODOT (1-888-275-6636)

STATE OF MISSOURI
ERIC E. SCHROETER
NUMBER PE-28411
PROFESSIONAL ENGINEER
THIS SHEET HAS BEEN SIGNED, SEALED AND DATED ELECTRONICALLY.

PAVEMENT REPAIR

DOWEL BAR RETROFIT

DATE EFFECTIVE: 04/01/2017
DATE PREPARED: 1/30/2017

613.00S

SHEET NO. 4 OF 4

IF A SEAL IS PRESENT ON THIS SHEET IT HAS BEEN ELECTRONICALLY SEALED AND DATED.

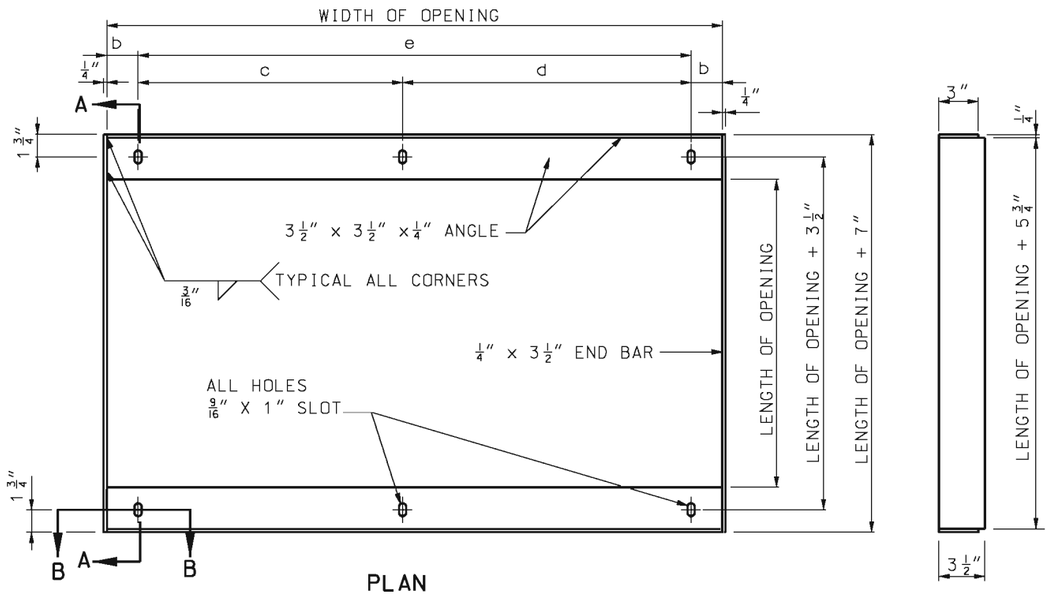

PLAN

BEARING PLATE

END VIEW OF BEARING BAR

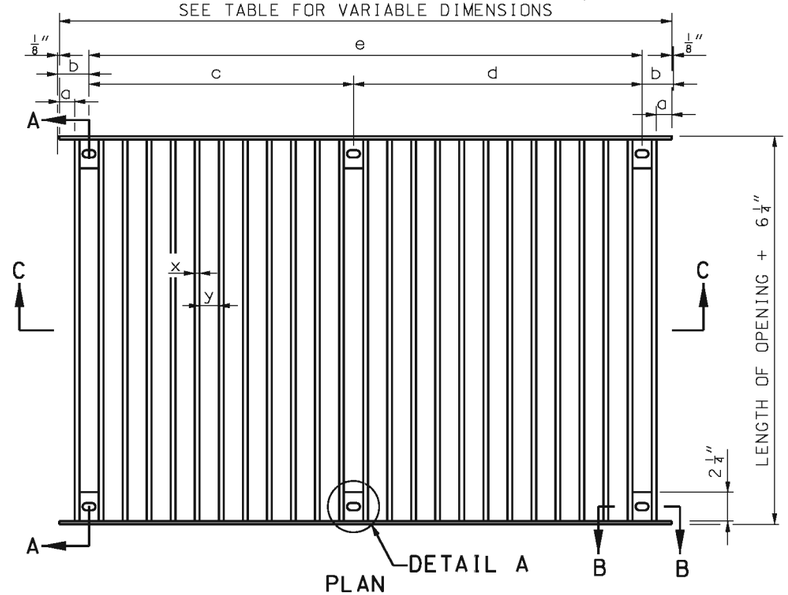

PLAN

SECTION C-C

GRATE

SECTION B-B

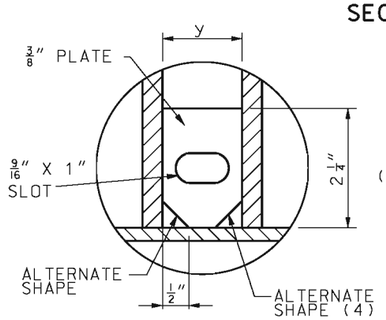

DETAIL A

(4) OTHER ALTERNATE SHAPES ARE ALLOWED, UPON APPROVAL, PROVIDED 4 LINEAR INCHES WELD IS MAINTAINED SYMETRICALLY AROUND THE PLATE AND THE NOMINAL DIMENSIONS OF THE PLATE AND SLOT ARE MAINTAINED.

WEIGHT AND DIMENSIONS DATA

OPENING		WEIGHT (1) LBS.	BEARING BARS				DIMENSIONS					REMARKS
WIDTH	LENGTH		x	y	LENGTH	NUMBER	a	b	c	d	e	
3'-0"	2'-0"	190	3/8"	3"	2'-5 3/4"	11	13/16"	2 13/16"			2'-6 3/8"	USE WITH TYPE S-1 INLETS AND TYPE S HEADWALLS
3'-0"	3'-0"	330	5/8"	3"	3'-5 3/4"	10	1 1/4"	3 1/2"			2'-5"	
5'-0"	2'-0"	300	3/8"	3"	2'-5 3/4"	18	1"	3"	2'-3"	2'-3"		
5'-0"	3'-0"	550	5/8"	3"	3'-5 3/4"	17	9/16"	2 13/16"	2'-1 3/8"	2'-5"		
3'-1"	2'-1"	200	3/8"	3"	2'-6 3/4"	11	1 5/16"	3 5/16"			2'-6 3/8"	USE WITH TYPE S-2 AND TYPE S-3 INLETS ONLY
3'-1"	3'-1"	340	5/8"	3"	3'-6 3/4"	10	1 3/4"	4"			2'-5"	
5'-1"	2'-1"	310	3/8"	3"	2'-6 3/4"	18	1 1/2"	3 1/2"	2'-3"	2'-3"		
5'-1"	3'-1"	560	5/8"	3"	3'-6 3/4"	17	1 1/16"	3 5/16"	2'-1 3/8"	2'-5"		

(1) THE WEIGHT OF THE GRATE AND BEARING PLATE INCLUDES THE BOLTS, NUTS, AND WASHERS AND SHALL BE AS SHOWN WITH A TOLERANCE OF 5 PERCENT.

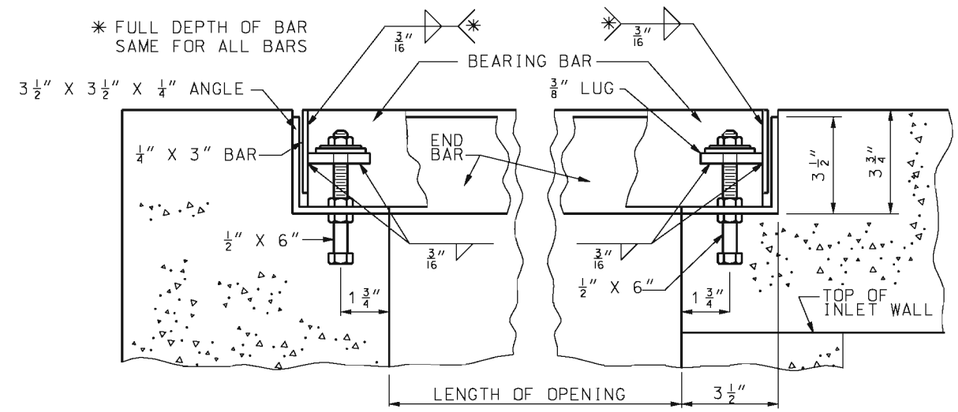

SECTION A-A

GENERAL NOTES:

WHEN BOLTS ARE CUT IN THE FIELD, THREADS MUST BE CLEANED TO PERMIT THE FINAL NUT TO RUN FREELY ON THE BOLT.

THE WELDING REQUIREMENTS SHOWN ON THIS DRAWING ARE FOR PAINTED GRATES AND BEARING PLATES. IF GALVANIZED, ALL TIGHTLY CONTACTING SURFACES SHALL BE COMPLETELY SEALED, ON ALL SIDES BY WELDING, PRIOR TO GALVANIZING.

MISSOURI HIGHWAYS AND TRANSPORTATION COMMISSION
105 WEST CAPITOL
JEFFERSON CITY, MO 65102
1-888-ASK-MODOT (1-888-275-6636)

STATE OF MISSOURI
KATHRYN PHILLIPS HARVEY
NUMBER PE-23751
PROFESSIONAL ENGINEER
THIS SHEET HAS BEEN SIGNED, SEALED AND DATED ELECTRONICALLY.

GRATES AND BEARING PLATES

DATE EFFECTIVE: 12/01/2005
DATE PREPARED: 8/21/2009

614.10T

SHEET NO.
1 OF 1

IF A SEAL IS PRESENT ON THIS SHEET IT HAS BEEN ELECTRONICALLY SEALED AND DATED.

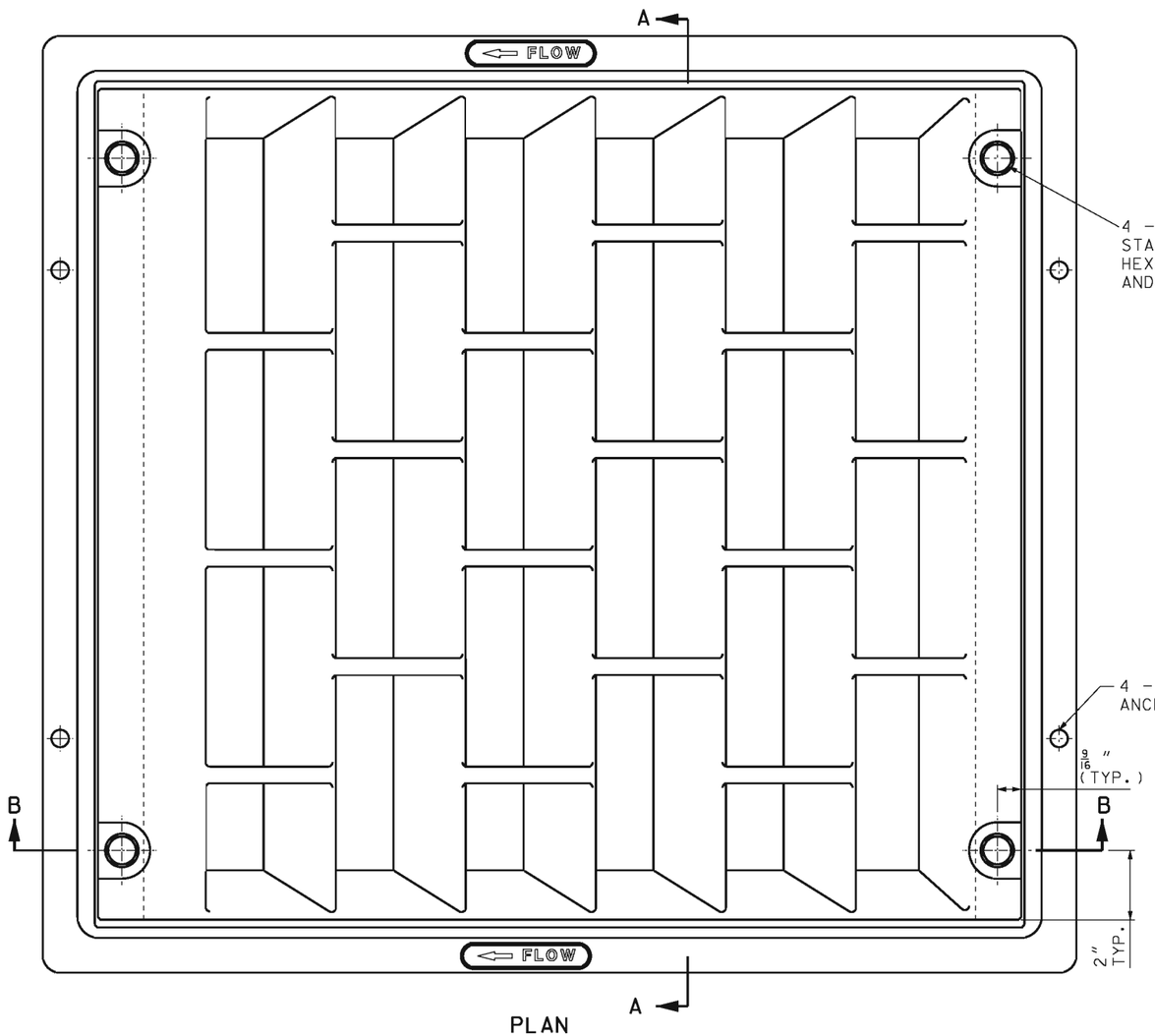

PLAN

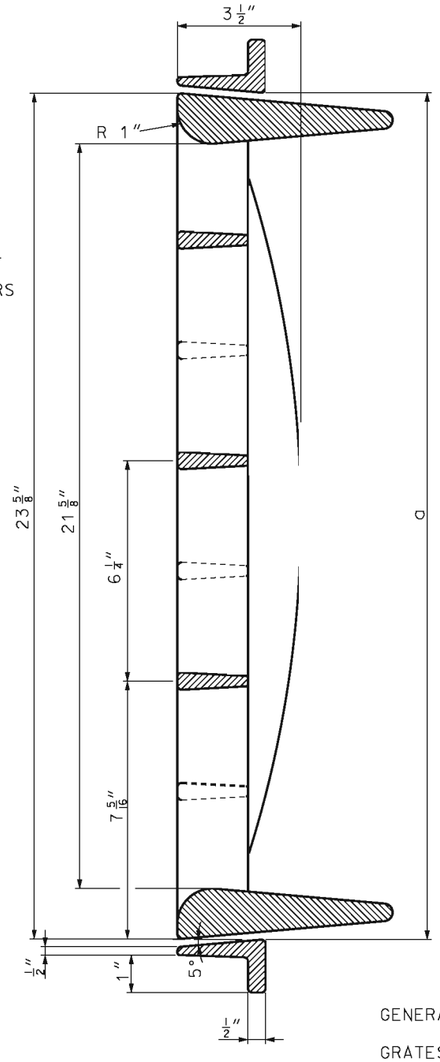

SECTION A-A

NOMINAL DIMENSIONS AND WEIGHTS					
OPENING				NUMBER OF	
WIDTH	LENGTH	d	WEIGHT (LB.)	ANCHOR BOLTS	STAINLESS STEEL BOLTS
2'-0"	2'-0"	24"	200	4	4
4'-0"	2'-0"	48"	348	8	8

NOTE: TWO 2' X 2' GRATES MAY BE USED IN LIEU OF SINGLE 4' X 2' GRATES.

INSTALLATION INSTRUCTIONS:

DRILL AND TAP FRAME.

INSTALL ½" DIA. BOLTS WITHOUT WASHERS BEFORE CONCRETE POUR TO FORM ½" ± BOLT EXTENSION INTO CONCRETE BELOW FRAME. LUBRICATE EXPOSED THREADS.

AFTER CONCRETE HARDENS SUFFICIENTLY, FINAL INSTALLATION SHALL REMOVE AND REINSTALL ½" DIA. BOLTS AND LOCK WASHERS THROUGH GRATE AND FRAME. TORQUE ½" DIA. BOLTS TO 35-40 FT. LB. APPLY THREAD ADHESIVE TO ALL ½" DIA. STAINLESS STEEL BOLTS.

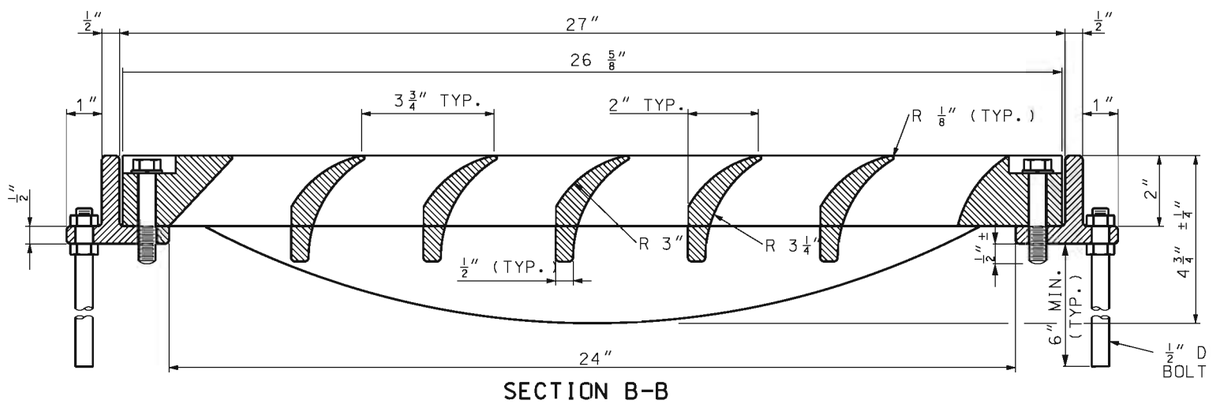

SECTION B-B

(*) ½" DIA. ANCHOR BOLTS, NUTS, AND WASHERS SHALL BE GALVANIZED IN ACCORDANCE WITH AASHTO M 232 OR SHALL BE MECHANICALLY GALVANIZED. IF MECHANICALLY GALVANIZED, THE COATING THICKNESS, ADHERENCE AND QUALITY REQUIREMENTS SHALL BE IN ACCORDANCE WITH AASHTO M 232, CLASS C. DAMAGED SPELTER COATING SHALL BE REPAIRED IN ACCORDANCE WITH SEC 1081.

GENERAL NOTES:

GRATES TO BE CONSTRUCTED OF CAST GRAY IRON AND MEET REQUIREMENTS OF AASHTO M 306. MINOR VARIATIONS IN VANE SHAPE TO MEET MANUFACTURER'S STANDARD PRACTICE ARE PERMITTED.

MINIMUM CLEAR OPEN AREA: 2.10 SQUARE FEET.

IF A SEAL IS PRESENT ON THIS SHEET IT HAS BEEN ELECTRONICALLY SEALED AND DATED.

MISSOURI HIGHWAYS AND TRANSPORTATION COMMISSION
105 WEST CAPITOL
JEFFERSON CITY, MO 65102
1-888-ASK-MODOT (1-888-275-6636)

STATE OF MISSOURI
KATHRYN PHILLIPS HARVEY
NUMBER PE-23751
PROFESSIONAL ENGINEER
THIS SHEET HAS BEEN SIGNED, SEALED, AND DATED ELECTRONICALLY.

CURVED VANE GRATE AND FRAME

DATE EFFECTIVE: 06/01/2010
DATE PREPARED: 7/3/2013

614.11C

SHEET NO. 1 OF 1

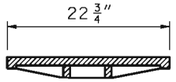

SECTION A-A

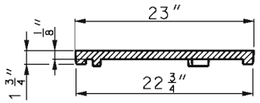

SECTION C-C

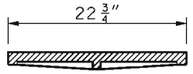

SECTION E-E

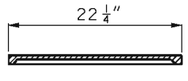

SECTION G-G

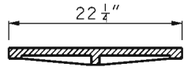

SECTION I-I

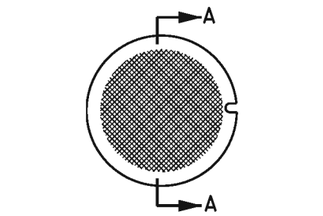

PLAN

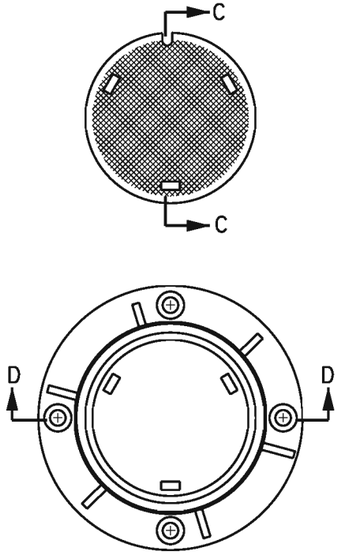

PLAN

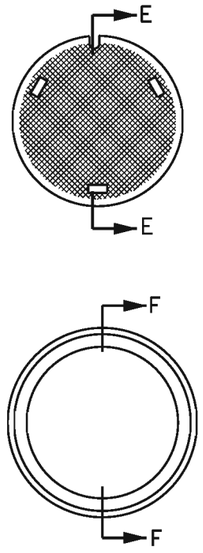

PLAN

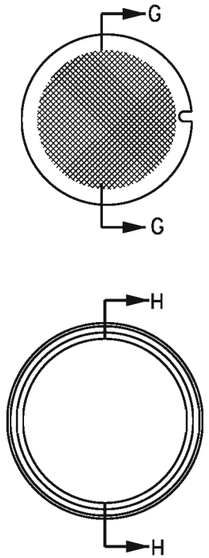

PLAN

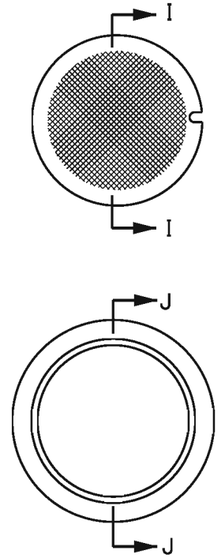

PLAN

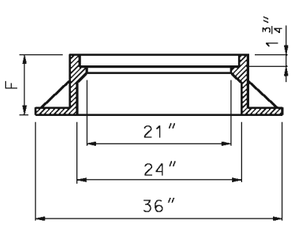

SECTION B-B

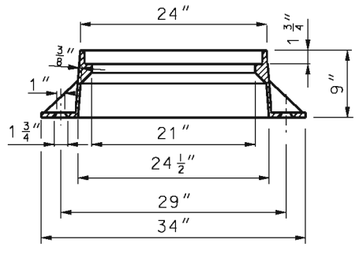

SECTION D-D

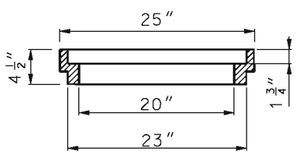

SECTION F-F

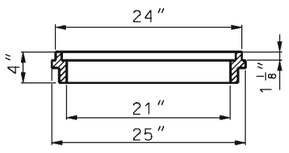

SECTION H-H

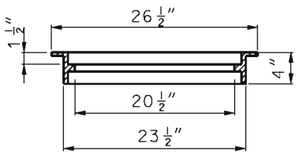

SECTION J-J

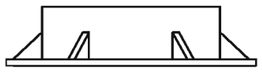

ELEVATION

TYPE 1A AND 1B

APPROXIMATE WEIGHT OF
FRAME AND COVER
TYPE 1A 540 LBS.
TYPE 1B 570 LBS.

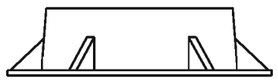

ELEVATION

TYPE 1C

APPROXIMATE WEIGHT OF
FRAME AND COVER 290 LBS.

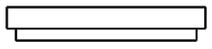

ELEVATION

TYPE 2

APPROXIMATE WEIGHT OF
FRAME AND COVER 250 LBS.

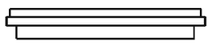

ELEVATION

TYPE 3

APPROXIMATE WEIGHT OF
FRAME AND COVER 115 LBS.

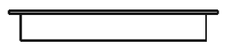

ELEVATION

TYPE 4

APPROXIMATE WEIGHT OF
FRAME AND COVER 160 LBS.

GENERAL NOTES:

TYPE 1A:
WHEN "P" (PAVEMENT THICKNESS) IS 8" USE MANHOLE FRAME WITH 9" HEIGHT (F) APPROXIMATE WEIGHT OF FRAME AND COVER, 540 LBS., CLASS 35 CASTING.

TYPE 1B:
WHEN "P" (PAVEMENT THICKNESS) IS 9" OR 10", USE MANHOLE FRAME WITH 10" HEIGHT (F) APPROXIMATE WEIGHT OF FRAME AND COVER, 570 LBS., CLASS 35 CASTING.

TYPE1C:
TYPE 1C MANHOLE FRAME AND COVER WILL BE ACCEPTED AS AN ALTERNATE TO TYPE 1A OR TYPE 1B. APPROXIMATE WEIGHT OF FRAME AND COVER, 290 LBS..

FOR "P" GREATER THAN 10" ADJUSTING RINGS COMBINED WITH MANHOLE FRAMES WITH "F" EQUAL TO 9" OR 10" SHALL BE USED TO MATCH THE PAVEMENT THICKNESS.

THE PRICE BID FOR MANHOLE FRAME AND COVER SHALL INCLUDE THE NUMBER OF ADJUSTING RINGS REQUIRED TO MATCH PAVEMENT THICKNESS.

WHEN SPECIFIED, USE A LOCK TYPE FRAME AND COVER WITH A MINIMUM OF 3 LOCK BLOCKS AND BOLTS.

MANHOLE ADJUSTING RINGS SHALL BE SECURED TO EITHER THE FRAME OR PAVEMENT TO PREVENT MOVEMENT UNDER TRAFFIC.

A CHECKERED DESIGN TOP SHALL BE FURNISHED.

MISSOURI HIGHWAYS AND TRANSPORTATION COMMISSION
105 WEST CAPITOL
JEFFERSON CITY, MO 65102
1-888-ASK-MODOT (1-888-275-6636)

STATE OF MISSOURI
KATHRYN PHILLIPS HARVEY
NUMBER PE-23751
PROFESSIONAL ENGINEER
THIS SHEET HAS BEEN SIGNED, SEALED AND DATED ELECTRONICALLY.

MANHOLE FRAMES AND COVERS

DATE EFFECTIVE: 03/01/1996
DATE PREPARED: 8/21/2009

614.30E

SHEET NO. 1 OF 2

IF A SEAL IS PRESENT ON THIS SHEET IT HAS BEEN ELECTRONICALLY SEALED AND DATED.

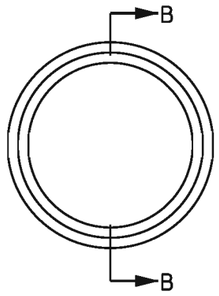

PLAN

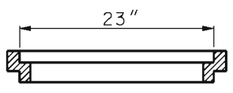

SECTION B-B

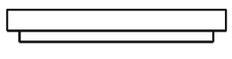

ELEVATION

ADJUSTING RING
SOLID OR ADJUSTABLE

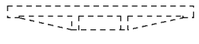

COVER

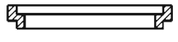

ADJUSTING RING

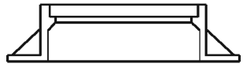

FRAME

INSTALLATION DETAILS

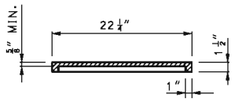

SECTION A-A

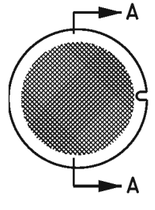

APPROXIMATE WEIGHT OF
FRAME AND COVER 150 LBS.

ALTERNATE
TYPE 4 COVER

IF A SEAL IS PRESENT ON THIS SHEET IT HAS BEEN ELECTRONICALLY SEALED AND DATED.

MISSOURI HIGHWAYS AND TRANSPORTATION COMMISSION
105 WEST CAPITOL
JEFFERSON CITY, MO 65102
1-888-ASK-MODOT (1-888-275-6636)

STATE OF MISSOURI
KATHRYN PHILLIPS HARVEY
NUMBER PE-23751
PROFESSIONAL ENGINEER
THIS SHEET HAS BEEN SIGNED, SEALED AND DATED ELECTRONICALLY.

MANHOLE FRAMES AND COVERS

DATE EFFECTIVE: 03/01/1996
DATE PREPARED: 8/21/2009

614.30E

SHEET NO. 2 OF 2

TABLE A
WORK ZONE SIGN MOUNTING REQUIREMENTS

TYPE	SIGN SUPPORT	SIGN SUBSTRATE	MINIMUM MOUNTING HEIGHT(3)	USAGE LIMITATIONS	COMMENTS
POST	PERFORATED SQUARE STEEL TUBE U-CHANNEL WOOD	RIGID	5′ RURAL UNDIVIDED HIGHWAYS 7′ RURAL DIVIDED HIGHWAYS 7′ URBAN HIGHWAYS	NONE	POSTS SHALL BE FREE OF ANY BRACING AND EXTEND NO FURTHER ABOVE THE SIGN EXCEPT AS NEEDED FOR WARNING LIGHT ATTACHMENT. FOR DETAILS OF POST INSTALLATION DETAILS SEE SHEET NO. 2 OF 9. GALVANIZATION OF POSTS WILL NOT BE REQUIRED.
TYPE 1 PORTABLE	SKID FOLD-UP STAND	RIGID	5′ RURAL UNDIVIDED HIGHWAYS 7′ RURAL DIVIDED HIGHWAYS 7′ URBAN HIGHWAYS	PERMITTED ONLY WHERE POST MOUNTING IS NOT FEASIBLE.	SYSTEMS SHALL COMPLY WITH CRASH TEST REQUIREMENTS OF NCHRP 350 TEST LEVEL 3 AND MAY BE PLACED ADJACENT TO OR WITHIN THE ROADWAY PROVIDED A MINIMUM LATERAL CLEARANCE OF 3 FEET, MEASURED HORIZONTALLY FROM THE EDGE OF THE SIGN TO THE EDGE OF DESIGNATED TRAVELED WAY, IS MAINTAINED.
TYPE 2 PORTABLE	EASEL FOLD-UP STAND SELF-DRIVING POST TYPE III MOVABLE BARRICADE SKID	FLEXIBLE RIGID	12″(4)	PERMITTED ONLY FOR INSTALLATION UP TO 3 DAYS(5). WHERE SIGNS ARE OBSCURED BY OTHER OBJECTS (I.E., TRAFFIC CONTROL DEVICES, PARKED VEHICLES, BARRIER, VEGETATION, ETC.) OR INSTALLED ON MULTI-LANE UNDIVIDED FACILITIES OR MULTI-LANE DIVIDED FACILITIES WITH 3 OR MORE LANES IN ONE DIRECTION, MOUNTING HEIGHTS SHALL BE AS SPECIFIED FOR POST-MOUNTED SIGNS.	SYSTEMS SHALL COMPLY WITH CRASH TEST REQUIREMENTS OF NCHRP 350 TEST LEVEL 3 AND MAY BE PLACE ADJACENT TO OR WITHIN ROADWAY PROVIDED A MINIMUM LATERAL CLEARANCE OF 3 FEET, MEASURED HORIZONTALLY FROM THE EDGE OF THE SIGN TO THE EDGE OF THE DESIGNATED TRAVELED WAY, IS MAINTAINED.
BARRIER	CONCRETE TRAFFIC BARRIER GUARDRAIL	FLEXIBLE RIGID	5′ RURAL UNDIVIDED HIGHWAYS 7′ RURAL DIVIDED HIGHWAYS 7′ URBAN HIGHWAYS	PERMITTED ONLY WHERE LONGITUDINAL BARRIER IS PRESENT.	SYSTEMS SHALL PROVIDE POSITIVE CONNECTION TO THE BARRIER AND MINIMIZE POTENTIAL FOR VEHICLE SNAGGING.
VEHICLE	PAVEMENT MARKING EQUIPMENT PILOT CAR PROTECTIVE VEHICLE	FLEXIBLE RIGID	48″ (6)	PERMITTED ONLY IN PILOT CAR OR MOVING OPERATIONS.	

(3) MEASURED FROM THE BOTTOM OF THE SIGN TO THE NEAR EDGE OF THE PAVEMENT.
(4) MOUNTING HEIGHTS FOR REGULATORY AND GUIDE SIGNS SHALL BE AS SPECIFIED FOR POST-MOUNTED SIGNS.
(5) SIGNS MOUNTED ON TYPE III BARRICADES, GORE EXIT SIGN, AND SIGNS FOR CROSWALK/SIDEWALKCLOSURES MAY BE LEFT IN PLACE FOR MORE THAN 3 DAYS.
(6) DEVIATIONS AS APPROVED BY THE ENGINEER.

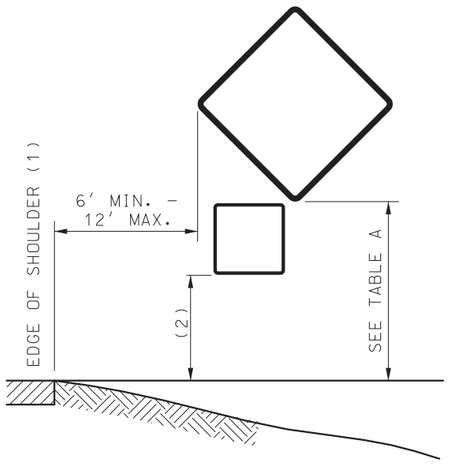

(1) EDGE OF TRAVELED WAY WHERE THERE IS NO PAVED OR STABILIZED SHOULDER.
(2) ONE-FOOT LESS THAN MOUNTING HEIGHT NOTED IN TABLE A.

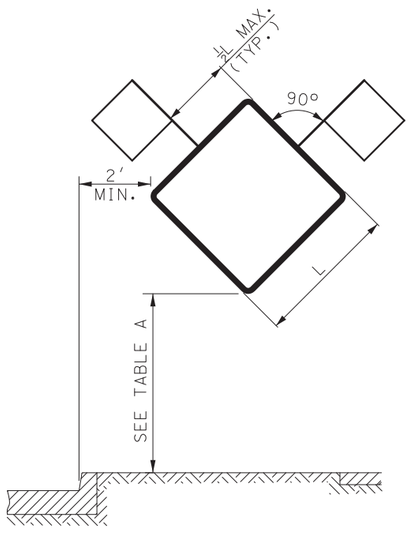

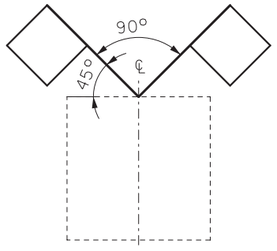

HEIGHT AND LATERAL LOCATIONS FOR POST AND PORTABLE SIGN MOUNTING

GENERAL NOTES:

LONGITUDINAL SPACING OF SIGNS SHOWN IN THE PLANS ARE PREFERRED MINIMUMS, BUT MAY BE ADJUSTED TO MEET EXISTING FIELD CONDITIONS WITH APPROVAL FROM THE ENGINEER.

SIGNS SHALL NOT BE MOUNTED IN OR ON CHANNELIZERS.

ALL POSTS AND SIGNS SHALL BE INSTALLED AND MAINTAINED IN A PLUMB POSITION.

CONSTRUCTION SIGNS SHALL NOT BE LOCATED ON SIDEWALKS, BICYCLE LANES, OR AREAS DESIGNATED FOR PEDESTRIAN OR BICYCLE TRAFFIC.

MISSOURI HIGHWAYS AND TRANSPORTATION COMMISSION
105 WEST CAPITOL
JEFFERSON CITY, MO 65102
1-888-ASK-MODOT (1-888-275-6636)

STATE OF MISSOURI
TRAVIS D. KOESTNER
NUMBER PE-30042
PROFESSIONAL ENGINEER
THIS SHEET HAS BEEN SIGNED, SEALED AND DATED ELECTRONICALLY.

TEMPORARY TRAFFIC CONTROL DEVICES
SIGN MOUNTING REQUIREMENTS

DATE EFFECTIVE: 07/01/2019
DATE PREPARED: 5/17/2019

616.10AV

SHEET NO. 1 OF 9

IF A SEAL IS PRESENT ON THIS SHEET IT HAS BEEN ELECTRONICALLY SEALED AND DATED.

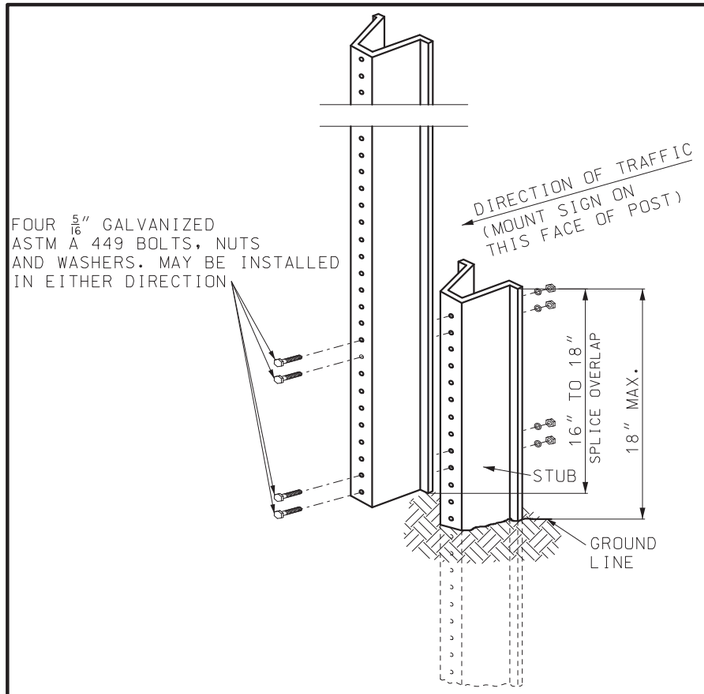

U-CHANNEL POST DETAIL

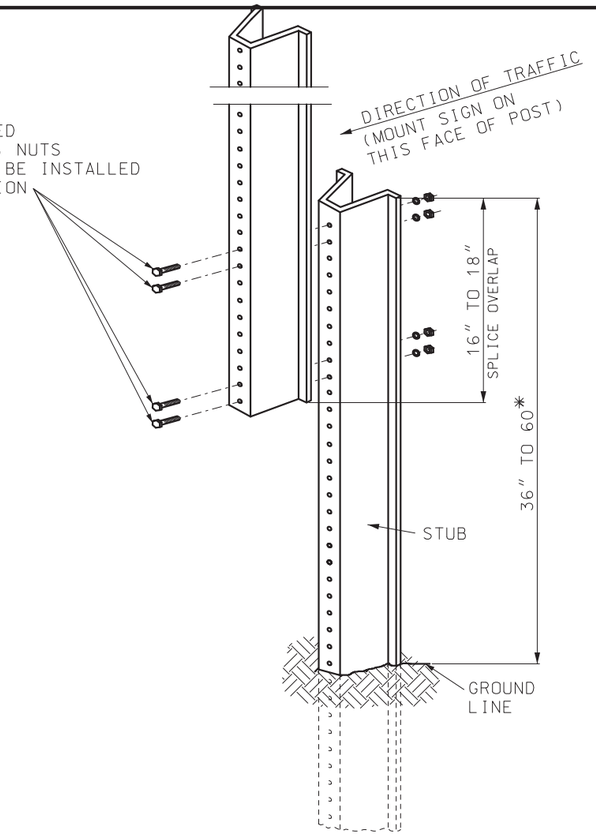

OPTIONAL U-CHANNEL POST DETAIL

POST TYPE

SIGN AREA (SQ.FT.)	U-CHANNEL	WOOD	PERFORATED SQUARE STEEL TUBING
≤ 10	1 – 3.0 LB./FT.*	1 – 4" X 4"*	1 – 2" 12 GA.*
> 10 ≤ 16	2 – 3.0 LB./FT.	2 – 4" X 4" 1 – 4" X 6"*	2 – 2" 12 GA. 1 – 2½" 12 GA.
> 16 ≤ 24	2 – 3.0 LB./FT.	2 – 4" X 6"	3 – 2" 12 GA.**
> 24 ≤ 30	3 – 3.0 LB./FT.	2 – 4" X 6"	N/A
> 30 ≤ 50	N/A	2 – 6" X 6"	N/A

* SIGNS GREATER THAN 4 FEET IN WIDTH, EXCEPT DIAMOND SHAPE SIGNS, REQUIRE TWO POSTS.

** REQUIRES SLIP BASE PER MANUFACTURER'S RECOMMENDATION.

USE OF SPLICE IS OPTIONAL.

SPLICE OVERLAP SHALL BE POSITION ENTIRELY BETWEEN GROUND LINE AND 18" ABOVE GROUND LINE OR BETWEEN 18" AND 60" ABOVE GROUND LINE.

* IF A PLAQUE IS USED, NEITHER THE SIGN NOR PLAQUE SHALL BE POSITIONED WITHIN THE SPLICE OVERLAP AREA.

ONLY ONE SPLICE WILL BE ALLOWED PER POST.

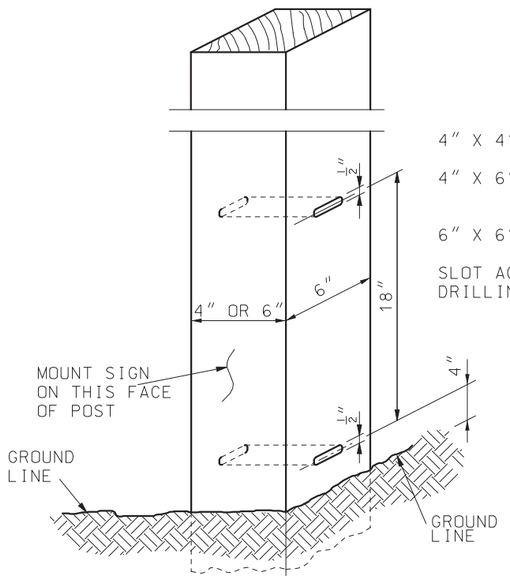

4" X 4" WOOD POST – NO SLOTS OR HOLES REQUIRED

4" X 6" WOOD POST – 1½" X ½" SLOT ON 6" SIDE OR 1½" DIA. HOLE ON 6" SIDE

6" X 6" WOOD POST – 2" X ½" SLOT OR 2" DIA. HOLE

SLOT ACROSS NEUTRAL AXIS FORMED BY SUCCESSIVE DRILLING WITH ½" BIT.

WOOD POST DETAIL

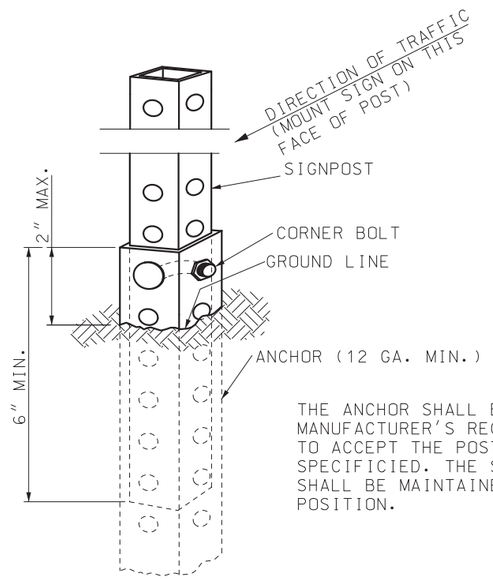

THE ANCHOR SHALL BE SIZED AS PER MANUFACTURER'S RECOMMENDATIONS TO ACCEPT THE POST SIZE SPECIFICIED. THE SIGN ASSEMBLY SHALL BE MAINTAINED IN A PLUMB POSITION.

PERFORATED SQUARE STEEL TUBE POST DETAIL

THE SIGN POST MAY BE ATTACHED TO THE ANCHOR WITH A CORNER BOLT OR STRAIGHT BOLT PER MANUFACTURER'S SPECIFICATION.

GENERAL NOTES:

ALL POSTS SHALL BE EMBEDDED A MINIMUM OF 3 FEET.

AT THE ENGINEER DISCRETION A FLUORESCENT PAINT SHALL BE APPLIED HEAVILY TO BOTH SIDES OF U-CHANNEL POST STUB FOR A LENGTH OF AT LEAST 6 INCHES BELOW THE TOP OF THE STUB.

MISSOURI HIGHWAYS AND TRANSPORTATION COMMISSION
105 WEST CAPITOL
JEFFERSON CITY, MO 65102
1-888-ASK-MODOT (1-888-275-6636)

STATE OF MISSOURI
TRAVIS D. KOESTNER
NUMBER PE-30042
PROFESSIONAL ENGINEER
THIS SHEET HAS BEEN SIGNED, SEALED AND DATED ELECTRONICALLY.

TEMPORARY TRAFFIC CONTROL DEVICES POST INSTALLATION DETAILS

DATE EFFECTIVE: 07/01/2019
DATE PREPARED: 5/17/2019

616.10AV

SHEET NO. 2 OF 9

IF A SEAL IS PRESENT ON THIS SHEET IT HAS BEEN ELECTRONICALLY SEALED AND DATED.

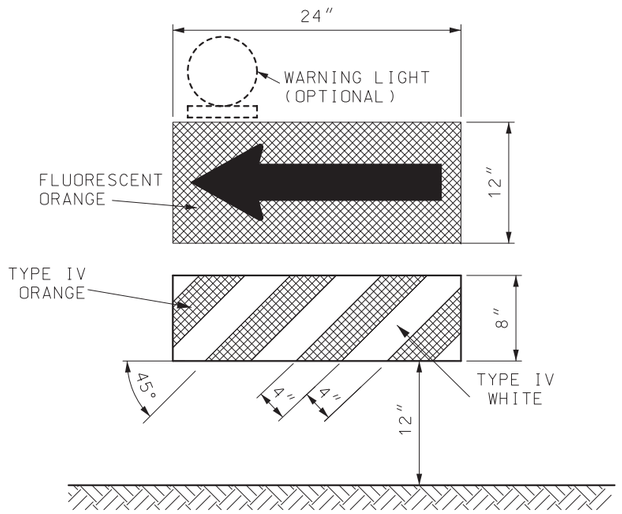

DIRECTION INDICATOR BARRICADE

VERTICAL DIMENSIONS DO NOT INCLUDE PROJECTIONS DESIGNED FOR EASE OF HANDLING.

DIRECTION INDICATOR BARRICADES SHALL NOT BE USED IN SHIFTING TAPERS UNLESS SHOWN ON THE PLANS.

THE PANELS SHALL BE SECURELY ATTACHED TO A SUPPORT THAT IS PORTABLE, CAPABLE OF REMAINING UPRIGHT AND ENTIRELY FREE STANDING.

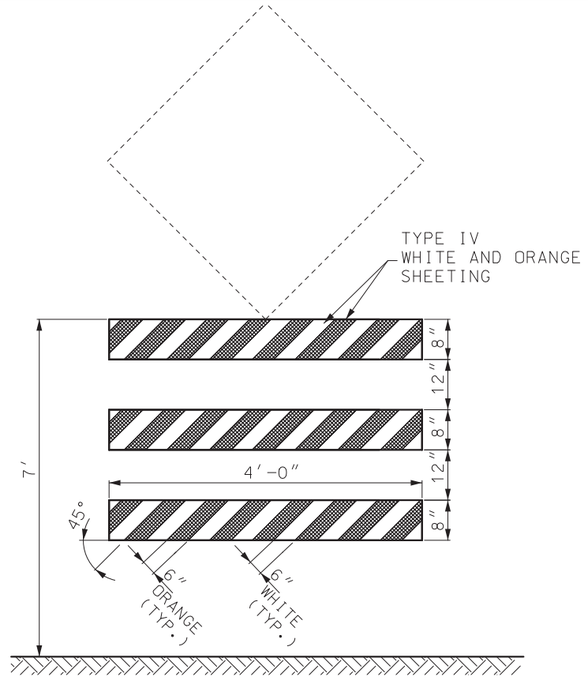

ADVANCE WARNING RAIL SYSTEM

MAXIMUM WEIGHT OF SIGN SHALL NOT EXCEED 25 LBS.

THE SIGN AND RAIL SYSTEM MAY BE MOUNTED AS TWO SEPARATE CRASHWORTHY DEVICES. THE RAIL SYSTEM SHALL BE LOCATED DIRECTLY IN FRONT OF THE SIGN WITH 7 TO 10 FEET SEPARATING THE TWO DEVICES.

WHERE MARKING IS NOT PROVIDED ON THE BACKSIDE, STRIPS OF 3″ WIDE MODOT TYPE 7 ORANGE SHEETING MAY BE APPLIED TO THE ENDS OF EACH RAIL TO HELP DELINEATE THE DEVICE.

WHITE AND ORANGE REFLECTIVE SHEETING SHALL BE IN ACCORDANCE WITH SEC 1042.2.7.4.

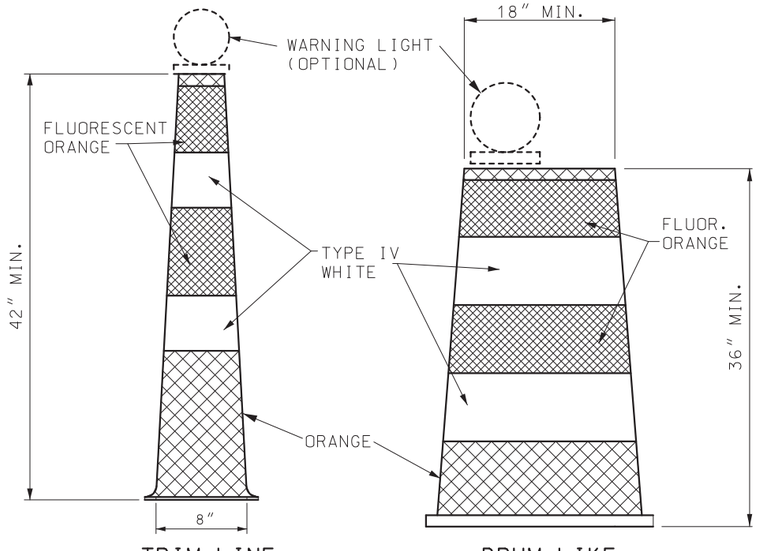

CHANNELIZERS

WHITE, ORANGE, AND FLUORESCENT ORANGE REFLECTIVE SHEETING SHALL BE IN ACCORDANCE WITH SEC 1042.2.7.3.

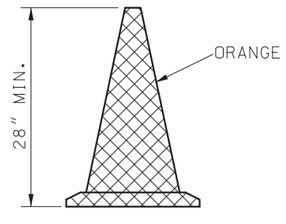

CONE

CONES SHALL MAINTAIN THEIR SHAPE UPON EXPOSURE TO NORMAL WORK CONDITIONS.

CONES SHALL BE USED DURING DAYLIGHT HOURS ONLY.

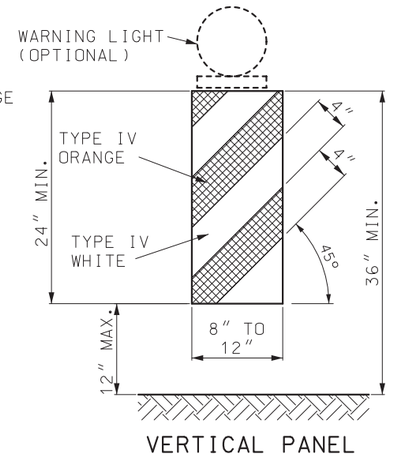

VERTICAL PANEL

VERTICAL PANELS SHALL BE SECURELY ATTACHED TO A SUPPORT THAT IS PORTABLE, CAPABLE OF REMAINING UPRIGHT AND ENTIRELY FREE STANDING.

STRIPES ON TRIM-LINE CHANNELIZERS SHALL BE 6″ TO 8″.
STRIPES ON DRUM-LIKE CHANNELIZERS SHALL BE 4″ TO 6″.

GENERAL NOTES:

WHITE, ORANGE, AND FLUORESCENT ORANGE REFLECTIVE SHEETING SHALL BE IN ACCORDANCE WITH SEC 1042.2.7.

BALLAST FOR TRAFFIC CONTROL DEVICES SHALL CONFORM TO MANUFACTURERS' RECOMMENDATION FOR FIELD CONDITIONS WHEN APPLICABLE.

IF USED, THE WARNING LIGHT UNIT AND BATTERY COMPARTMENT SHALL BE FURNISHED BY THE DEVICE MANUFACTURER OR OTHERWISE MEET THE MANUFACTURER'S RECOMMENDATIONS FOR DESIGN AND WILL BE REQUIRED ON ALL DEVICES IN THE SERIES.

WARNING LIGHTS SHALL BE IN ACCORDANCE WITH SEC 1063.5.

UPON APPROVAL OF THE ENGINEER, THE CONTRACTOR MAY, AT NO ADDITIONAL COST, USE DRUM-LIKE CHANNELIZERS IN LIEU OF TRIM-LINE CHANNELIZERS TO PROVIDE LONGITUDINAL CHANNELIZATION WITHIN THE ACTIVITY AREA WHERE NO RAMPS, INTERSECTIONS OR LIMITED LATERAL CLEARANCE EXISTS.

UPON APPROVAL OF THE ENGINEER, THE CONTRACTOR MAY, AT NO ADDITIONAL COST, USE DIRECTION INDICATOR BARRICADES IN LIEU OF TRIM-LINE CHANNELIZERS IN MERGING TAPERS.

UPON APPROVAL OF THE ENGINEER, THE CONTRACTOR MAY, AT NO ADDITIONAL COST, USE VERTICAL PANELS IN LIEU OF TRIM-LINE CHANNELIZERS TO PROVIDE LONGITUDINAL CHANNELIZATION WITHIN THE ACTIVITY AREA.

UPON APPROVAL OF THE ENGINEER, THE CONTRACTOR MAY, AT NO ADDITIONAL COST, USE CONES IN LIEU OF TRIM-LINE CHANNELIZERS DURING DAYTIME OPERATIONS ON MINOR ROUTES.

PANEL AND RAIL MARKINGS FOR TRAFFIC DELINEATION SHALL SLOPE DOWNWARD TOWARD THE INTENDED DIRECTION OF TRAVEL. ILLUSTRATIONS SHOWN ARE FOR INSTANCES WHERE TRAFFIC MOVES TO THE LEFT, REVERSE CONFIGURATIONS SHALL BE USED FOR TRAFFIC MOVEMENTS TO THE RIGHT. MARKINGS SHALL ONLY BE APPLIED TO THE FRONT OF EACH RAIL OR PANEL, OR MAY BE APPLIED TO BOTH THE FRONT AND BACK PROVIDING THE MARKING ON THE BACK DOES NOT CONFLICT WITH INTENDED OPPOSING TRAFFIC MOVEMENT.

IF A SEAL IS PRESENT ON THIS SHEET IT HAS BEEN ELECTRONICALLY SEALED AND DATED.

MISSOURI HIGHWAYS AND TRANSPORTATION COMMISSION
105 WEST CAPITOL
JEFFERSON CITY, MO 65102
1-888-ASK-MODOT (1-888-275-6636)

STATE OF MISSOURI
TRAVIS D. KOESTNER
NUMBER PE-30042
PROFESSIONAL ENGINEER
THIS SHEET HAS BEEN SIGNED, SEALED AND DATED ELECTRONICALLY.

TEMPORARY TRAFFIC CONTROL DEVICES
CHANNELIZERS AND DIRECTION INDICATOR BARRICADE

DATE EFFECTIVE: 07/01/2019
DATE PREPARED: 5/17/2019

616.10AV

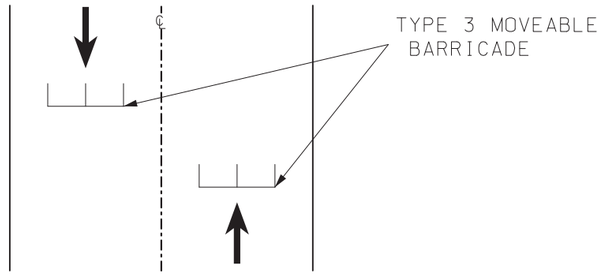

RETROREFLECTIVE MARKING ON TYPE 3 BARRICADES SHALL BE ON BOTH SIDES OF EACH RAIL AND DIRECT TRAFFIC MOVEMENT APPROPRIATELY TO ALLOW VEHICLES TO PASS THROUGH

SOFT CLOSURE
PLAN VIEW

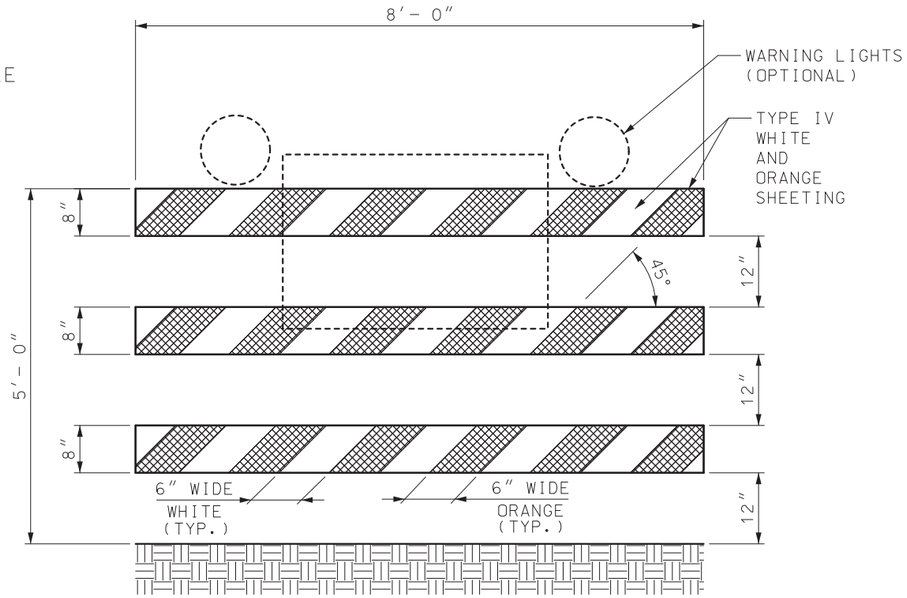

EXAMPLE 1

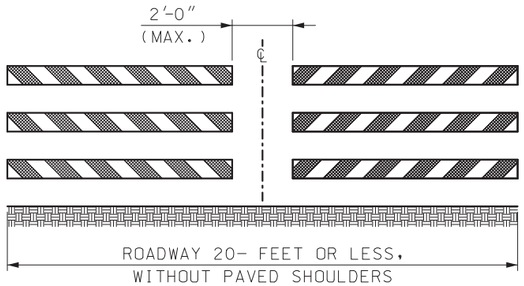

EXAMPLE 2

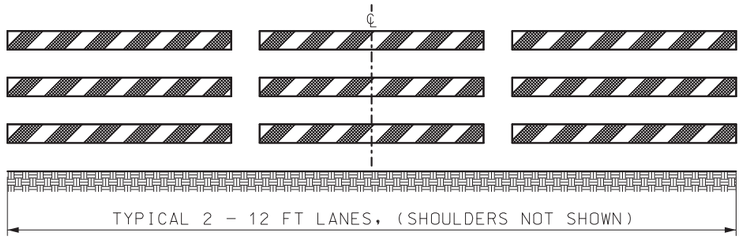

EXAMPLE SHOWS STRIPES SLOPING TO DIRECT
VEHICULAR MOVEMENT TOWARD THE LEFT

EXAMPLE 3

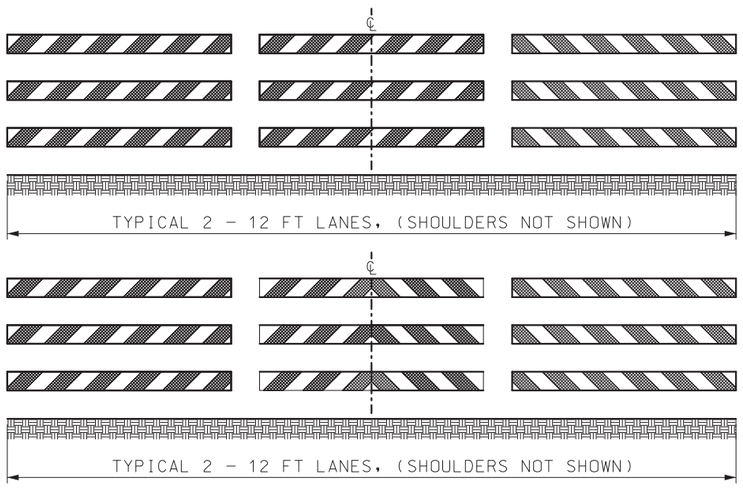

EXAMPLE 4

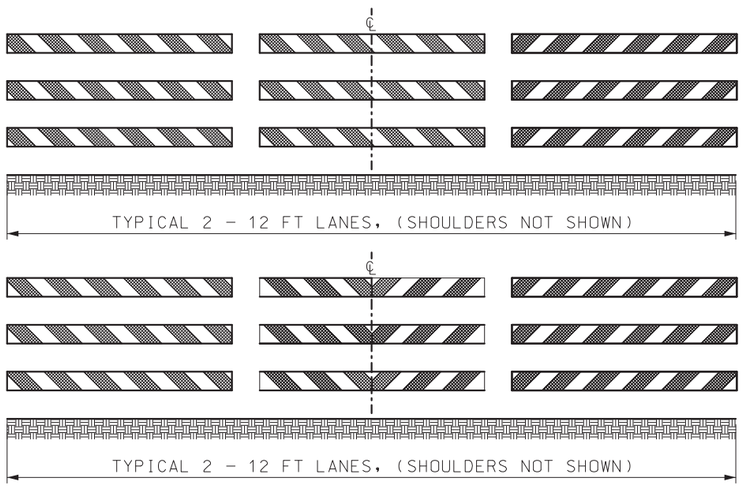

EXAMPLE 5

EXAMPLE 1 – ONE TYPE 3 MOVABLE BARRICADE WILL BE REQUIRED TO COMPLETELY CLOSE EACH 8′ OF PAVEMENT. PAVED SHOULDERS SHALL BE INCLUDED IN THE AREA TO BE CLOSED.

SIGNS SHALL BE LIGHT WEIGHT (ROLL-UP OR PLASTIC) AND SHOULD NOT OBSCURE MORE THAN 50 PERCENT OF THE TOP 2 RAILS OR 33 PERCENT OF ALL THREE RAILS.

WARNING LIGHTS SHALL BE LIGHT WEIGHT (3.3 LBS. OR LESS) OR HAVE BATTERY PACK MOUNTED NO HIGHER THAN 18-INCH AND SHALL NOT COVER ANY PORTION OF THE BARRICADE FACE.

IF WARNING LIGHTS ARE USED,THE LIGHTS SHOULD BE INSTALLED ON THE BARRICADES IN THE DIRECTION OF TRAFFIC.

IF SIGNS OR LIGHTS CANNOT MEET THE ABOVE REQUIREMENTS, THEY SHALL BE MOUNTED ON SEPARATE CRASHWORTHY DEVICES AT HEIGHTS SPECIFIED FOR POST MOUNTED SIGNS, LOCATED IN TABLE A ON SHEET 1. THE BARRICADE SHALL BE LOCATED IN FRONT OF THE SIGNS OR LIGHTS WITH 7 TO 10 FEET SEPARATING THE DEVICES.

TYPE 3 MOVABLE BARRICADES SHALL BE ENTIRELY FREE STANDING AND PORTABLE. MARKING SHALL ONLY BE APPLIED TO THE FRONT OF EACH RAIL OR MAY BE APPLIED TO BOTH THE FRONT AND THE BACK OF EACH RAIL PROVIDED THE MARKING ON THE BACK DOES NOT CONFLICT WITH INTENDED OPPOSING TRAFFIC MOVEMENT.

WHITE AND ORANGE REFLECTIVE SHEETING SHALL BE IN ACCORDANCE WITH SEC 104.2.7.4.

EXAMPLE 2 – FOR PAVED ROADWAYS WITH A WIDTH OF 20-FEET OR LESS AND WITHOUT PAVED SHOULDERS, TWO BARRICADES ARE ACCEPTABLE.

EXAMPLE 3 – WHERE BARRICADES EXTEND ENTIRELY ACROSS A ROADWAY, STRIPES SLOPE DOWNWARD IN THE DIRECTION TOWARD WHICH ROAD USERS MUST TURN.

EXAMPLE 4 – WHERE BOTH RIGHT AND LEFT TURNS ARE PROVIDED, STRIPES SLOPE DOWNWARD IN BOTH DIRECTIONS FROM THE CENTER OF THE BARRICADE OR BARRICADES.

EXAMPLE 5 – WHERE NO TURNS ARE INTENDED, STRIPES POSITIONED TO SLOPE DOWNARD TOWARD THE CENTER OF THE BARRICADE OR BARRICADES.

IF A SEAL IS PRESENT ON THIS SHEET IT HAS BEEN ELECTRONICALLY SEALED AND DATED.

MISSOURI HIGHWAYS AND TRANSPORTATION COMMISSION
105 WEST CAPITOL
JEFFERSON CITY, MO 65102
1-888-ASK-MODOT (1-888-275-6636)

STATE OF MISSOURI
TRAVIS D. KOESTNER
NUMBER PE-30042
PROFESSIONAL ENGINEER
THIS SHEET HAS BEEN SIGNED, SEALED AND DATED ELECTRONICALLY.

TEMPORARY TRAFFIC CONTROL DEVICES

TYPE 3 MOVABLE BARRICADE

DATE EFFECTIVE: 07/01/2019
DATE PREPARED: 5/17/2019

616.10AV

SHEET NO.
4 OF 9

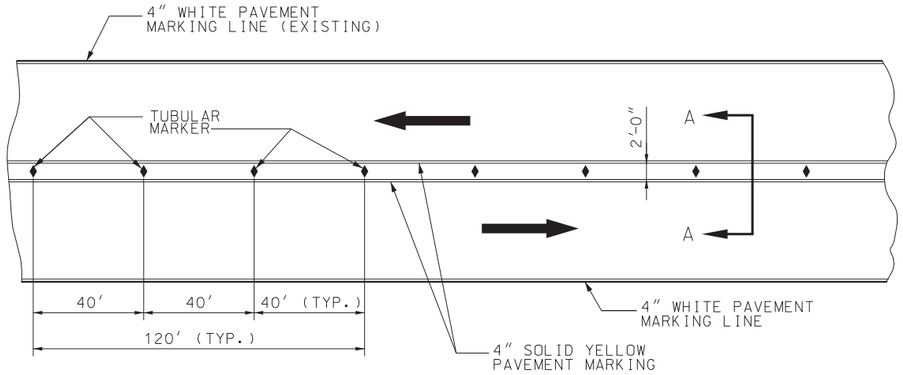

TWO LANE / TWO WAY TRAFFIC DELINEATION PLAN FOR DIVIDED HIGHWAY

IF RAISED PAVEMENT MARKERS ARE PRESENT, THE LENSES SHALL BE REMOVED OR COVERED TO THE SATISFACTION OF THE ENGINEER.

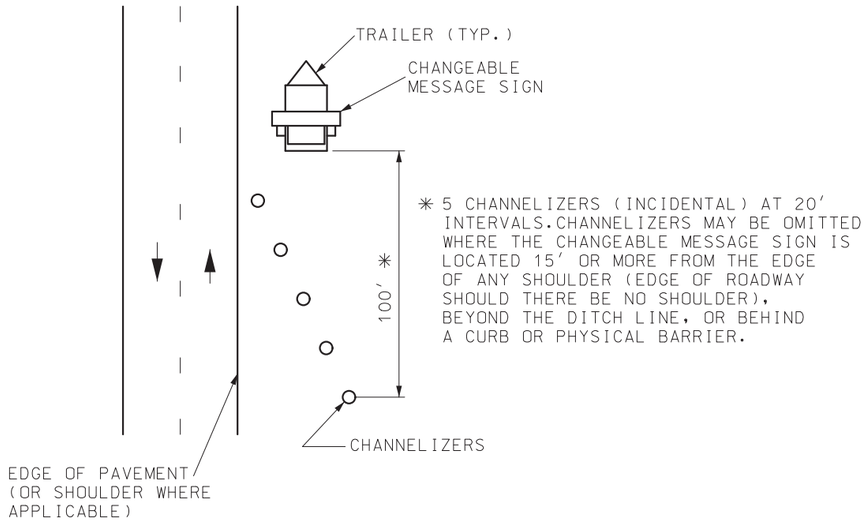

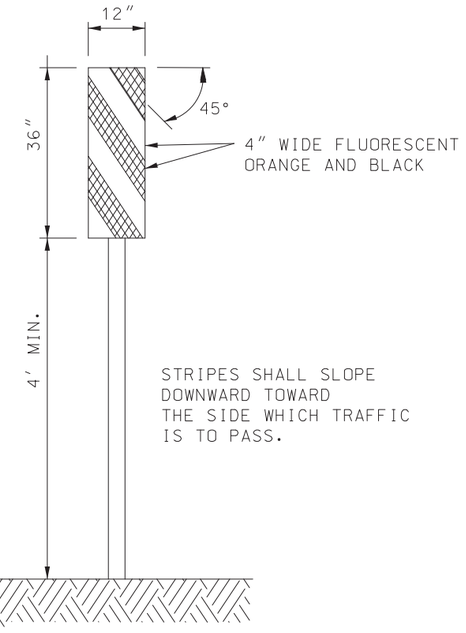

TYPE 3 OBJECT MARKERS

FLUORESCENT ORANGE REFLECTIVE SHEETING SHALL BE IN ACCORDANCE WITH SEC 1042.2.7.

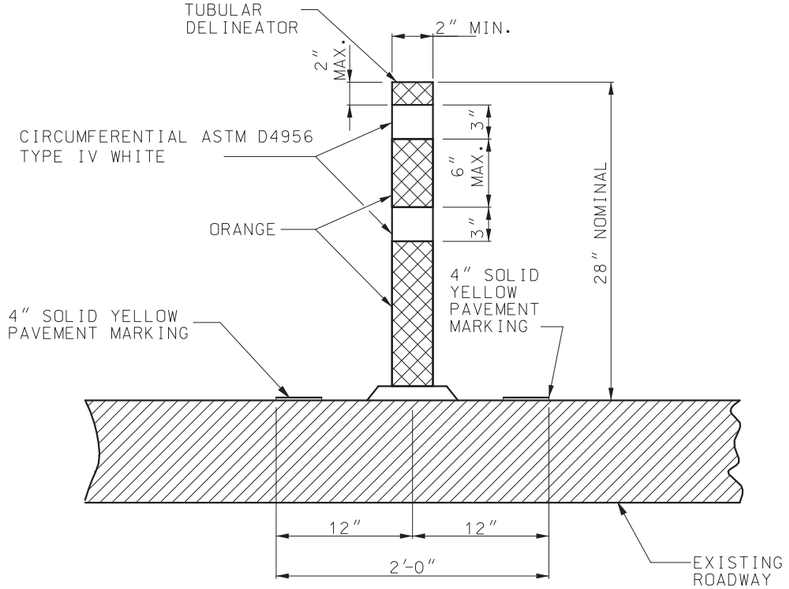

SECTION A–A
TUBULAR DELINEATOR DETAIL

AN ADHESIVE, IN ACCORDANCE WITH THE MANUFACTURER'S RECOMMENDATIONS, SHALL BE USED TO APPLY THE TUBULAR DELINEATOR TO THE ROADWAY SURFACE. THE ADHESIVE SHALL PERMIT EASY REMOVAL OF THE TUBULAR DELINEATOR WITHOUT DAMAGE TO THE ROADWAY SURFACE.

REFLECTIVE SHEETING APPLIED TO TUBULAR DELINEATORS SHALL BE IN ACCORDANCE WITH SEC 1042.2.7.5.

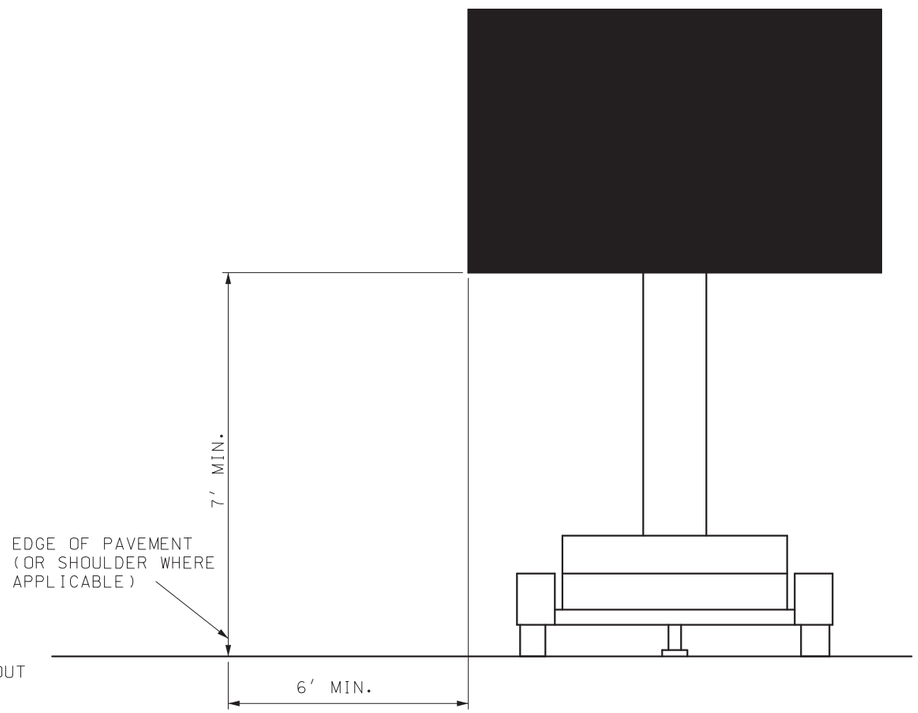

CHANGEABLE MESSAGE SIGN

MISSOURI HIGHWAYS AND TRANSPORTATION COMMISSION
105 WEST CAPITOL
JEFFERSON CITY, MO 65102
1-888-ASK-MODOT (1-888-275-6636)

STATE OF MISSOURI
TRAVIS D. KOESTNER
NUMBER PE-30042
PROFESSIONAL ENGINEER
THIS SHEET HAS BEEN SIGNED, SEALED AND DATED ELECTRONICALLY.

TEMPORARY TRAFFIC CONTROL DEVICES

DATE EFFECTIVE: 07/01/2019
DATE PREPARED: 5/17/2019

616.10AV

SHEET NO. 5 OF 9

IF A SEAL IS PRESENT ON THIS SHEET IT HAS BEEN ELECTRONICALLY SEALED AND DATED.

WARNING SIGNS

SIGN	SIZE (IN.)	AREA (SQ. FT.)	SHEETING	COLOR SYM. LEG. BRD.	COLOR BACK GROUND	DESIGNATION	DESCRIPTION
EO5-2	48X36	12.00	ASTM 9 OR 11	BK	FL. OR	SHF	EXIT OPEN (3)
EO5-2a	48X36	12.00	ASTM 9 OR 11	BK	FL. OR	SHF	EXIT CLOSED
WO1-1L	48X48	16.00	ASTM 9 OR 11	BK	FL. OR	SHF	TURN (SYMBOL LEFT ARROW)
WO1-1R	48X48	16.00	ASTM 9 OR 11	BK	FL. OR	SHF	TURN (SYMBOL RIGHT ARROW)
WO1-2L	48X48	16.00	ASTM 9 OR 11	BK	FL. OR	SHF	CURVE (SYMBOL LEFT ARROW)
WO1-2R	48X48	16.00	ASTM 9 OR 11	BK	FL. OR	SHF	CURVE (SYMBOL RIGHT ARROW)
WO1-3L	48X48	16.00	ASTM 9 OR 11	BK	FL. OR	SHF	REVERSE TURN (SYMBOL LEFT ARROW)
WO1-3R	48X48	16.00	ASTM 9 OR 11	BK	FL. OR	SHF	REVERSE TURN (SYMBOL RIGHT ARROW)
WO1-4L	48X48	16.00	ASTM 9 OR 11	BK	FL. OR	SHF	REVERSE CURVE (SYMBOL LEFT ARROW)
WO1-4R	48X48	16.00	ASTM 9 OR 11	BK	FL. OR	SHF	REVERSE CURVE (SYMBOL RIGHT ARROW)
WO1-4bL	48X48	16.00	ASTM 9 OR 11	BK	FL. OR	SHF	DOUBLE ARROW REVERSE CURVE (SYMBOL LEFT ARROWS) (2)
WO1-4bR	48X48	16.00	ASTM 9 OR 11	BK	FL. OR	SHF	DOUBLE ARROW REVERSE CURVE (SYMBOL RIGHT ARROWS) (2)
WO1-4cL	48X48	16.00	ASTM 9 OR 11	BK	FL. OR	SHF	TRIPLE ARROW REVERSE CURVE (SYMBOL LEFT ARROWS) (2)
WO1-4cR	48X48	16.00	ASTM 9 OR 11	BK	FL. OR	SHF	TRIPLE ARROW REVERSE CURVE (SYMBOL RIGHT ARROWS) (2)
WO1-6	60X30	12.50	ASTM 9 OR 11	BK	FL. OR	SHF	HORIZONTAL ARROW (SYMBOL)
WO1-6a	72X36	18.00	ASTM 9 OR 11	BK	FL. OR	SHF	HORIZONTAL ARROW (SYMBOL ON PERMANENT BARRICADE) (1)
WO1-7	60X30	12.50	ASTM 9 OR 11	BK	FL. OR	SHF	DOUBLE HEAD HORIZONTAL ARROW (SYMBOL)
WO1-7a	72X36	18.00	ASTM 9 OR 11	BK	FL. OR	SHF	DOUBLE HEAD HORIZONTAL ARROW (SYMBOL ON PERMANENT BARRICADE)(1)
WO1-8	18X24	3.00	ASTM 9 OR 11	BK	FL. OR	SHF	CHEVRON (SYMBOL)
WO1-8a	30X36	7.50	ASTM 9 OR 11	BK	FL. OR	SHF	CHEVRON (SYMBOL FOR DIVIDED HIGHWAYS)
WO3-1	48X48	16.00	ASTM 9 OR 11	BK	FL. OR	SHF	STOP AHEAD (SYMBOL)
WO3-2	48X48	16.00	ASTM 9 OR 11	BK	FL. OR	SHF	YIELD AHEAD (SYMBOL)
WO3-3	48X48	16.00	ASTM 9 OR 11	BK	FL. OR	SHF	SIGNAL AHEAD (SYMBOL)
WO3-4	48X48	16.00	ASTM 9 OR 11	BK	FL. OR	SHF	BE PREPARED TO STOP
WO3-5	48X48	16.00	ASTM 9 OR 11	BK	FL. OR	SHF	SPEED LIMIT AHEAD
WO4-1L	48X48	16.00	ASTM 9 OR 11	BK	FL. OR	SHF	MERGE (SYMBOL FROM LEFT)
WO4-1R	48X48	16.00	ASTM 9 OR 11	BK	FL. OR	SHF	MERGE (SYMBOL FROM RIGHT)
WO4-1a(L)	48X48	16.00	ASTM 9 OR 11	BK	FL. OR	SHF	MERGE (ARROW SYMBOL) (3)
WO4-1a(R)	48X48	16.00	ASTM 9 OR 11	BK	FL. OR	SHF	MERGE (ARROW SYMBOL) (3)
WO5-1	48X48	16.00	ASTM 9 OR 11	BK	FL. OR	SHF	ROAD/BRIDGE/RAMP NARROWS (4)
WO5-3	48X48	16.00	ASTM 9 OR 11	BK	FL. OR	SHF	ONE LANE BRIDGE
WO5-5	48X48	16.00	ASTM 9 OR 11	BK	FL. OR	SHF	NARROW LANES (3)
WO6-1	48X48	16.00	ASTM 9 OR 11	BK	FL. OR	SHF	DIVIDED HIGHWAY (SYMBOL)
WO6-2	48X48	16.00	ASTM 9 OR 11	BK	FL. OR	SHF	DIVIDED HIGHWAY END (SYMBOL)
WO6-3	48X48	16.00	ASTM 9 OR 11	BK	FL. OR	SHF	TWO WAY TRAFFIC (SYMBOL)
WO7-3a	30X24	5.00	ASTM 9 OR 11	BK	FL. OR	SHF	NEXT XX MILES (PLAQUE)
WO8-1	48X48	16.00	ASTM 9 OR 11	BK	FL. OR	SHF	BUMP
WO8-2	48X48	16.00	ASTM 9 OR 11	BK	FL. OR	SHF	DIP
WO8-3	48X48	16.00	ASTM 9 OR 11	BK	FL. OR	SHF	PAVEMENT ENDS
WO8-4	48X48	16.00	ASTM 9 OR 11	BK	FL. OR	SHF	SOFT SHOULDER
WO8-5	48X48	16.00	ASTM 9 OR 11	BK	FL. OR	SHF	SLIPPERY WHEN WET (SYMBOL)
WO8-6	48X48	16.00	ASTM 9 OR 11	BK	FL. OR	SHF	TRUCK CROSSING WITH FLAGS
WO8-6c	48X48	16.00	ASTM 9 OR 11	BK	FL. OR	SHF	TRUCK ENTRANCE (3)
WO8-7a	36X36	9.00	ASTM 9 OR 11	BK	FL. OR	SHF	FRESH OIL/LOOSE GRAVEL (3)
WO8-9	48X48	16.00	ASTM 9 OR 11	BK	FL. OR	SHF	LOW SHOULDER
WO8-11	48X48	16.00	ASTM 9 OR 11	BK	FL. OR	SHF	UNEVEN LANES
WO8-12	48X48	16.00	ASTM 9 OR 11	BK	FL. OR	SHF	NO CENTER LINE
WO8-15	48X48	16.00	ASTM 9 OR 11	BK	FL. OR	SHF	GROOVED PAVEMENT
WO8-15p	30X24	5.00	ASTM 9 OR 11	BK	FL. OR	SHF	MOTORCYCLE (PLAQUE)
WO8-17(L)	48X48	16.00	ASTM 9 OR 11	BK	FL. OR	SHF	SHOULDER DROP-OFF (SYMBOL LEFT)
WO8-17(R)	48X48	16.00	ASTM 9 OR 11	BK	FL. OR	SHF	SHOULDER DROP OFF (SYMBOL RIGHT) (4)
WO8-17p	30X24	5.00	ASTM 9 OR 11	BK	FL. OR	SHF	SHOULDER DROP-OFF (PLAQUE)
W10-1	42 RND.	9.62	ASTM 9 OR 11	BK	FL. YL	SHF	RAILROAD CROSSING
WO12-1	24X24	4.00	ASTM 9 OR 11	BK	FL. OR	SHF	DOUBLE DOWN ARROW (SYMBOL)
WO12-2	48X48	16.00	ASTM 9 OR 11	BK	FL. OR	SHF	LOW CLEARANCE (SYMBOL)
WO12-2x	24X18	3.00	ASTM 9 OR 11	BK	FL. OR	SHF	LOW CLEARANCE (PLAQUE) (3)
WO12-2a	84X24	14.00	ASTM 9 OR 11	BK	FL. OR	SHF	OVERHEAD LOW CLEARANCE (FEET AND INCHES) (3)
SPECIAL	120X60	50.00	ASTM 9 OR 11	BK	FL. OR	SHF	LOW CLEARANCE XX FT XX IN XX MILES AHEAD (3)
SPECIAL	120X60	50.00	ASTM 9 OR 11	BK	FL. OR	SHF	WIDTH RESTRICTION XX FT XX IN XX MILES AHEAD (3)
WO13-1	30X30	6.25	ASTM 9 OR 11	BK	FL. OR	SHF	ADVISORY SPEED (PLAQUE)
WO16-2	30X24	5.00	ASTM 9 OR 11	BK	FL. OR	SHF	XXX FEET (PLAQUE)
WO16-3	30X24	5.00	ASTM 9 OR 11	BK	FL. OR	SHF	X MILE (PLAQUE)
WO20-1	48X48	16.00	ASTM 9 OR 11	BK	FL. OR	SHF	ROAD/BRIDGE/RAMP WORK AHEAD (4)
WO20-2	48X48	16.00	ASTM 9 OR 11	BK	FL. OR	SHF	DETOUR AHEAD

(1) SIGN DEPICTION, ARROW, BORDERS AND SPACING SHALL BE IN ACCORDANCE WITH THE LATEST EDITION OF "STANDARD HIGHWAY SIGNS" BY THE U.S. DEPARTMENT OF TRANSPORTATION - FHWA.

(2) REFER TO THE LATEST EDITION OF MUTCD PART VI BY THE U.S. DEPARTMENT OF TRANSPORTATION - FHWA FOR SIGN DEPICTION. ARROW, BORDERS AND SPACING SHALL CONFORM TO THE GUIDELINES SET FORTH IN THE LATEST EDITION OF "STANDARD HIGHWAY SIGNS" BY THE U.S. DEPARTMENT OF TRANSPORTATION - FHWA.

(3) ARROW, BORDERS AND SPACING SHALL BE IN ACCORDANCE WITH THE LATEST EDITION OF "STANDARD HIGHWAY SIGNS" BY THE U.S. DEPARTMENT OF TRANSPORTATION - FHWA.

(4) USE OF A SUPPLEMENTAL PLATE FOR LINE 1 IS ACCEPTABLE.

(5) PLAQUE AND APPLICABLE REGULATORY SIGN MAY BE MANUFACTURED AS ONE SIGN.

(6) SHF REFER TO STD. 903.02 SHEET 1 OF 8

GENERAL NOTES:

SIGN LAYOUTS SHALL BE IN ACCORDANCE WITH THE LATEST EDITION OF "STANDARD HIGHWAY SIGNS" BY THE U.S. DEPARTMENT OF TRANSPORTATION - FHWA, UNLESS SPECIFIED OTHERWISE.

SIGN DIMENSIONS SHOWN ARE MINIMUM. NO ADDITIONAL PAYMENT WILL BE MADE IF CONTRACTORS USE LARGER SIGNS.

NO ADDITIONAL PAYMENT WILL BE MADE FOR PLATES.

ALL PLAQUES SHALL HAVE A BORDER. PLATES SHALL NOT HAVE A BORDER.

IF A SEAL IS PRESENT ON THIS SHEET IT HAS BEEN ELECTRONICALLY SEALED AND DATED.

MISSOURI HIGHWAYS AND TRANSPORTATION COMMISSION
105 WEST CAPITOL
JEFFERSON CITY, MO 65102
1-888-ASK-MODOT (1-888-275-6636)

STATE OF MISSOURI
TRAVIS D. KOESTNER
NUMBER PE-30042
PROFESSIONAL ENGINEER
THIS SHEET HAS BEEN SIGNED, SEALED AND DATED ELECTRONICALLY.

TEMPORARY TRAFFIC CONTROL DEVICES
WARNING SIGNS

DATE EFFECTIVE: 07/01/2019
DATE PREPARED: 5/17/2019

616.10AV

SHEET NO. 6 OF 9

WARNING SIGNS

SIGN	SIZE (IN.)	AREA (SQ. FT.)	SHEETING	COLOR SYM. LEG. BRD.	COLOR BACK GROUND	DESIGNATION	DESCRIPTION
W020-3	48X48	16.00	ASTM 9 OR 11	BK	FL. OR	SHF	ROAD CLOSED AHEAD
W020-4	48X48	16.00	ASTM 9 OR 11	BK	FL. OR	SHF	ONE LANE ROAD AHEAD
W020-5	48X48	16.00	ASTM 9 OR 11	BK	FL. OR	SHF	RIGHT/CENTER/LEFT LANE CLOSED AHEAD (4)
W020-5a	48X48	16.00	ASTM 9 OR 11	BK	FL. OR	SHF	2 RIGHT/CENTER/LEFT LANES CLOSED AHEAD (4)
W020-6a	48X48	16.00	ASTM 9 OR 11	BK	FL. OR	SHF	RIGHT/CENTER/LEFT LANE CLOSED (3)(4)
W020-7	48X48	16.00	ASTM 9 OR 11	BK	FL. OR	SHF	FLAGGER (SYMBOL) WITH FLAGS
W021-5	48X48	16.00	ASTM 9 OR 11	BK	FL. OR	SHF	SHOULDER WORK AHEAD (3)
W021-5a	48X48	16.00	ASTM 9 OR 11	BK	FL. OR	SHF	RIGHT/LEFT SHOULDER CLOSED
W021-5b	48X48	16.00	ASTM 9 OR 11	BK	FL. OR	SHF	RIGHT/LEFT SHOULDER CLOSED AHEAD
W022-1	48X48	16.00	ASTM 9 OR 11	BK	FL. OR	SHF	BLASTING ZONE AHEAD
W022-2	42X36	10.50	ASTM 9 OR 11	BK	FL. OR	SHF	TURN OFF 2-WAY RADIO AND PHONE
W022-3	42X36	10.50	ASTM 9 OR 11	BK	FL. OR	SHF	END BLASTING ZONE

GUIDE SIGNS

E05-1	36X48	12.00	ASTM 9 OR 11	BK	FL. OR	SHF	GORE EXIT (3)
G020-1	60X24	10.00	ASTM 9 OR 11	BK	FL. OR	SHF	ROAD WORK NEXT XX MILES
G020-2	48X24	8.00	ASTM 9 OR 11	BK	FL. OR	SHF	END ROAD WORK
G020-4	36X18	4.50	ASTM 9 OR 11	BK	FL. OR	SHF	PILOT CAR FOLLOW ME - REAR VEHICLE MOUNT SIGN
G020-4a	42X30	8.75	ASTM 9 OR 11	BK	FL. OR	SHF	PILOT CAR IN USE WAIT & FOLLOW - STATE ROUTE SIGN
G020-4a	18X12	1.50	ASTM 9 OR 11	BK	FL. OR	SHF	PILOT CAR IN USE WAIT & FOLLOW - NON-STATE ROUTE SIGN
G020-5aP	36X24	6.00	ASTM 9 OR 11	BK	FL. OR	SHF	WORK ZONE (PLAQUE) (3) (5)
G022-1	15X21	2.19	ASTM 9 OR 11	BK	FL. OR	SHF	WET PAINT (ARROW PIVOTS) (3)
M04-8a	24X18	3.00	ASTM 9 OR 11	BK	FL. OR	SHF	END DETOUR
M04-9L	48X36	12.00	ASTM 9 OR 11	BK	FL. OR	SHF	DETOUR (LEFT ARROW)
M04-9R	48X36	12.00	ASTM 9 OR 11	BK	FL. OR	SHF	DETOUR (RIGHT ARROW)
M04-9P	48X12	4.00	ASTM 9 OR 11	BK	FL. OR	SHF	STREET NAME (PLAQUE)
M04-10L	48X18	6.00	ASTM 9 OR 11	BK	FL. OR	SHF	DETOUR (ARROW LEFT)
M04-10R	48X18	6.00	ASTM 9 OR 11	BK	FL. OR	SHF	DETOUR (ARROW RIGHT)

REGULATORY SIGNS

R1-1	48X48	13.25	ASTM 4	WH	RD	SH	STOP
R1-2	48 TRI.	6.93	ASTM 4	RD	WH	SH	YIELD
R1-2a	36X36	9.00	ASTM 4	BK	WH	SH	TO ONCOMING TRAFFIC (PLAQUE)
R1-3p	30X12	2.50	ASTM 4	WH	RD	SH	ALL WAY (PLAQUE)
R2-1	36X48	12.00	ASTM 4	BK	WH	SH	SPEED LIMIT XX
R3-1	48X48	16.00	ASTM 4	BK/RD	WH	SH	NO RIGHT TURN (SYMBOL)
R3-2	48X48	16.00	ASTM 4	BK/RD	WH	SH	NO LEFT TURN (SYMBOL)
R3-3	36X36	9.00	ASTM 4	BK	WH	SH	NO TURNS
R3-4	48X48	16.00	ASTM 4	BK/RD	WH	SH	NO U-TURN (SYMBOL)
R3-7L	30X30	6.25	ASTM 4	BK	WH	SH	LEFT LANE MUST TURN LEFT
R3-7R	30X30	6.25	ASTM 4	BK	WH	SH	RIGHT LANE MUST TURN RIGHT
R4-1	36X48	12.00	ASTM 4	BK	WH	SH	DO NOT PASS
R4-2	36X48	12.00	ASTM 4	BK	WH	SH	PASS WITH CARE
R4-7a	36X48	12.00	ASTM 4	BK	WH	SH	KEEP RIGHT (HORIZONTAL ARROW)
R4-8a	36X48	12.00	ASTM 4	BK	WH	SH	KEEP LEFT (HORIZONTAL ARROW)
R5-1	30X30	6.25	ASTM 4	RD	WH	SH	DO NOT ENTER
R5-1a	36X24	6.00	ASTM 4	WH	RD	SH	WRONG WAY
R6-1L	54X18	6.75	ASTM 4	BK	WH	SH	ONE WAY ARROW (LEFT)
R6-1R	54X18	6.75	ASTM 4	BK	WH	SH	ONE WAY ARROW (RIGHT)
R6-2L	24X30	5.00	ASTM 4	BK	WH	SH	ONE WAY (LEFT)
R6-2R	24X30	5.00	ASTM 4	BK	WH	SH	ONE WAY (RIGHT)
R10-6	24X36	6.00	ASTM 4	BK	WH	SH	STOP HERE ON RED (45° ARROW)
R11-2	48X30	10.00	ASTM 4	BK	WH	SH	ROAD CLOSED
R11-3a	60X30	12.50	ASTM 4	BK	WH	SH	ROAD CLOSED XX MILES AHEAD LOCAL TRAFFIC ONLY
R11-4	60X30	12.50	ASTM 4	BK	WH	SH	ROAD CLOSED TO THRU TRAFFIC
CONST-3A	60X48	20.00	ASTM 4	BK	WH/ FL. OR	SH	FINE SIGN (3)
CONST-3X	56X12	4.67	ASTM 4	BK	WH	SH	SPEEDING/PASSING (PLATE) (3)

SPECIAL SIGNS

CONST-7	72X36	18.00	ASTM 4	WH/BL	BK/FL.OR	SH	RATE OUR WORK ZONE
CONST-7	48X24	8.00	ASTM 4	WH/BL	BK/FL.OR	SH	RATE OUR WORK ZONE
CONST-8	48X36	12.00	ASTM 9 OR 11	BK	FL.OR	SHF	WORK ZONE NO PHONE ZONE

(1) SIGN DEPICTION, ARROW, BORDERS AND SPACING SHALL BE IN ACCORDANCE WITH THE LATEST EDITION OF "STANDARD HIGHWAY SIGNS" BY THE U.S. DEPARTMENT OF TRANSPORTATION - FHWA.

(2) REFER TO THE LATEST EDITION OF MUTCD PART VI BY THE U.S. DEPARTMENT OF TRANSPORTATION - FHWA FOR SIGN DEPICTION. ARROW, BORDERS AND SPACING SHALL CONFORM TO THE GUIDELINES SET FORTH IN THE LATEST EDITION OF "STANDARD HIGHWAY SIGNS" BY THE U.S. DEPARTMENT OF TRANSPORTATION - FHWA.

(3) ARROW, BORDERS AND SPACING SHALL BE IN ACCORDANCE WITH THE LATEST EDITION OF "STANDARD HIGHWAY SIGNS" BY THE U.S. DEPARTMENT OF TRANSPORTATION - FHWA.

(4) USE OF A SUPPLEMENTAL PLATE FOR LINE 1 IS ACCEPTABLE.

(5) PLAQUE AND APPLICABLE REGULATORY SIGN MAY BE MANUFACTURED AS ONE SIGN.

(6) SH REFER TO STD. 903.02 SHEET 1 OF 8

(7) SHF REFER TO STD. 903.02 SHEET 1 OF 8

GENERAL NOTES:

SIGN LAYOUTS SHALL BE IN ACCORDANCE WITH THE LATEST EDITION OF "STANDARD HIGHWAY SIGNS" BY THE U.S. DEPARTMENT OF TRANSPORTATION - FHWA, UNLESS SPECIFIED OTHERWISE.

SIGN DIMENSIONS SHOWN ARE MINIMUM. NO ADDITIONAL PAYMENT WILL BE MADE IF CONTRACTORS USE LARGER SIGNS.

NO ADDITIONAL PAYMENT WILL BE MADE FOR PLATES.

ALL PLAQUES SHALL HAVE A BORDER. PLATES SHALL NOT HAVE A BORDER.

IF A SEAL IS PRESENT ON THIS SHEET IT HAS BEEN ELECTRONICALLY SEALED AND DATED.

MISSOURI HIGHWAYS AND TRANSPORTATION COMMISSION
105 WEST CAPITOL
JEFFERSON CITY, MO 65102
1-888-ASK-MODOT (1-888-275-6636)

STATE OF MISSOURI
TRAVIS D. KOESTNER
NUMBER PE-30042
PROFESSIONAL ENGINEER
THIS SHEET HAS BEEN SIGNED, SEALED AND DATED ELECTRONICALLY.

TEMPORARY TRAFFIC CONTROL DEVICES

WARNING, GUIDE AND REGULATORY SIGNS

DATE EFFECTIVE: 07/01/2019
DATE PREPARED: 5/17/2019

616.10AV



W05-5 (3)

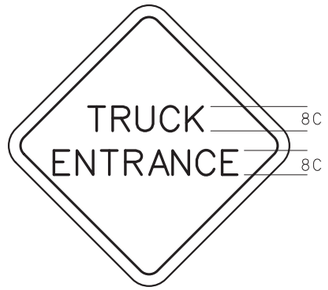

W08-6c (3)

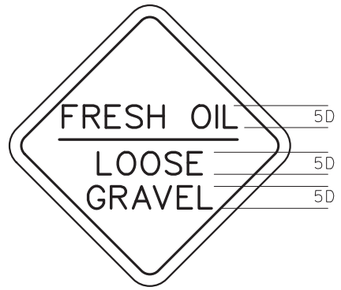

W08-7a (3)

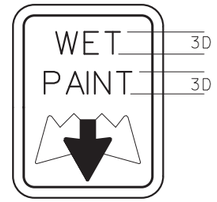

G022-1 (3)

(1) SIGN DEPICTION, ARROW, BORDERS AND SPACING SHALL BE IN ACCORDANCE WITH THE LATEST EDITION OF "STANDARD HIGHWAY SIGNS" BY THE U.S. DEPARTMENT OF TRANSPORTATION - FHWA.

(2) REFER TO THE LATEST EDITION OF MUTCD PART VI BY THE U.S. DEPARTMENT OF TRANSPORTATION - FHWA FOR SIGN DEPICTION. ARROW, BORDERS AND SPACING SHALL CONFORM TO THE GUIDELINES SET FORTH IN THE LATEST EDITION OF "STANDARD HIGHWAY SIGNS" BY THE U.S. DEPARTMENT OF TRANSPORTATION - FHWA.

(3) ARROW, BORDERS AND SPACING SHALL BE IN ACCORDANCE WITH THE LATEST EDITION OF "STANDARD HIGHWAY SIGNS" BY THE U.S. DEPARTMENT OF TRANSPORTATION - FHWA.

(4) USE OF A SUPPLEMENTAL PLATE FOR LINE 1 IS ACCEPTABLE.

(5) PLAQUE AND APPLICABLE REGULATORY SIGN MAY BE MANUFACTURED AS ONE SIGN.

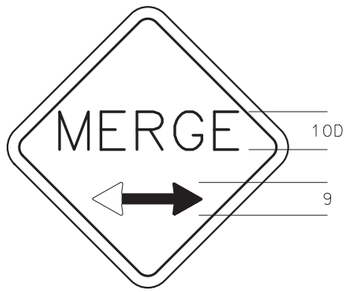

W04-1a

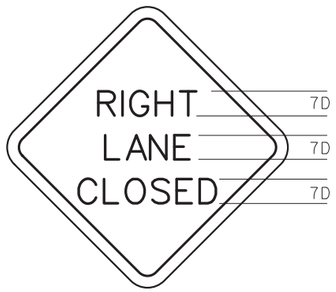

W020-6a (3)(4)

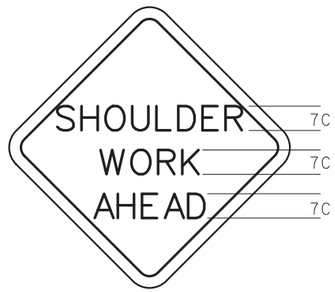

W021-5 (3)

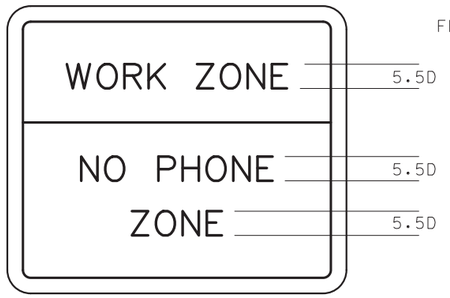

CONST-8 (3)

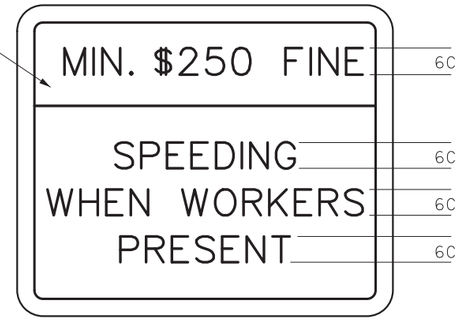

CONST-3A (3)

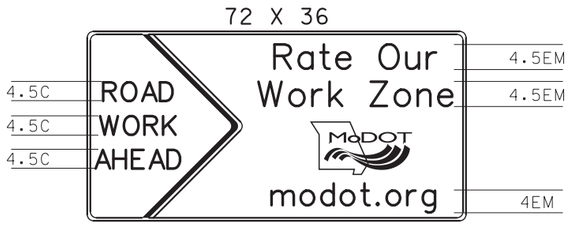

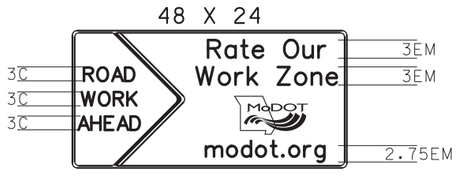

CONST-7



CONST-3X (3)

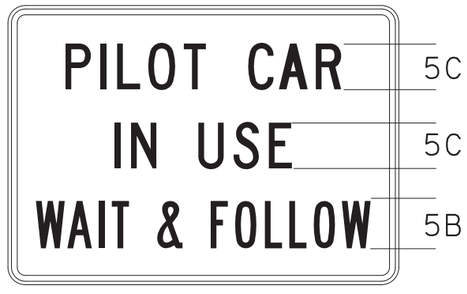

G020-4a (3)
42X30

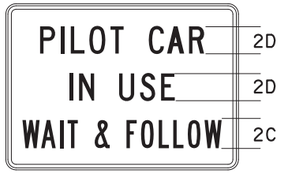

G020-4a (3)(4)
18X12

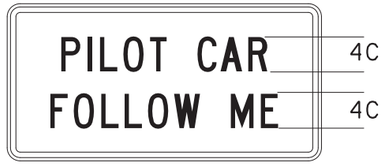

G020-4 (3)
36X18



W012-5 (3)



W012-4 (3)

GENERAL NOTES:

SIGN LAYOUTS SHALL BE IN ACCORDANCE WITH THE LATEST EDITION OF "STANDARD HIGHWAY SIGNS" BY THE U.S. DEPARTMENT OF TRANSPORTATION - FHWA UNLESS SPECIFIED OTHERWISE.

SIGN DIMENSIONS SHOWN ARE MINIMUM. NO ADDITIONAL PAYMENT WILL BE MADE IF CONTRACTORS USE LARGER SIGNS.

NO ADDITIONAL PAYMENT WILL BE MADE FOR PLATES.

ALL PLAQUES SHALL HAVE A BORDER. PLATES SHALL NOT HAVE A BORDER.

LETTER DIMENSIONS SHALL BE AS SHOWN.

MISSOURI HIGHWAYS AND TRANSPORTATION COMMISSION
105 WEST CAPITOL
JEFFERSON CITY, MO 65102
1-888-ASK-MODOT (1-888-275-6636)

STATE OF MISSOURI
TRAVIS D. KOESTNER
NUMBER PE-30042
PROFESSIONAL ENGINEER
THIS SHEET HAS BEEN SIGNED, SEALED AND DATED ELECTRONICALLY.

TEMPORARY TRAFFIC CONTROL DEVICES

DATE EFFECTIVE: 07/01/2019
DATE PREPARED: 5/17/2019

616.10AV

IF A SEAL IS PRESENT ON THIS SHEET IT HAS BEEN ELECTRONICALLY SEALED AND DATED.

LEGEND

- ○ – BOATS KEEP OUT (SIGN)
- ● – BOATS KEEP OUT (BUOY)
- ▲ – NO WAKE (BUOY)

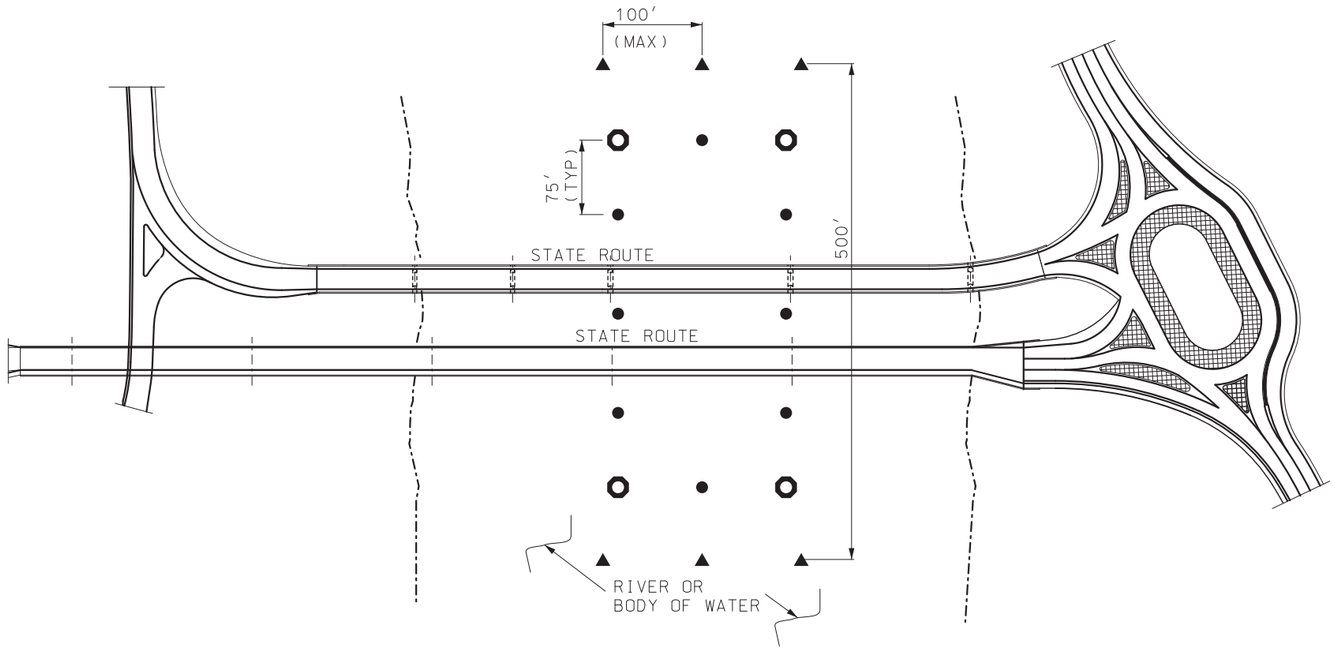

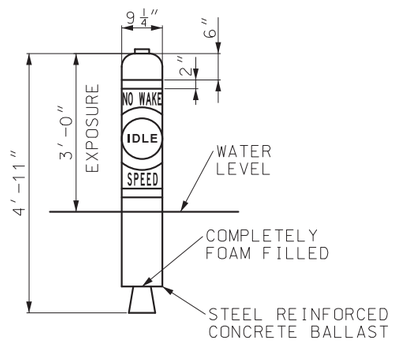

51 POUND ANCHOR
TACKLE PERMITTED

RESTRICTED AREA BUOY
("NO WAKE")
(6 REQUIRED – ROADWAY ITEM)

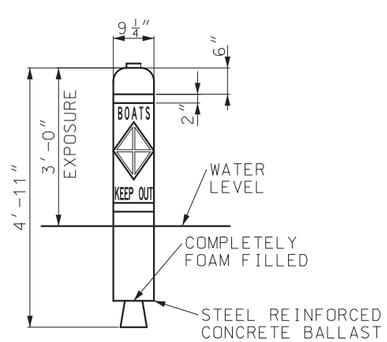

51 POUND ANCHOR
TACKLE PERMITTED

CONTROLLED AREA BUOY
("BOATS KEEP OUT")
(8 REQUIRED – ROADWAY ITEM)

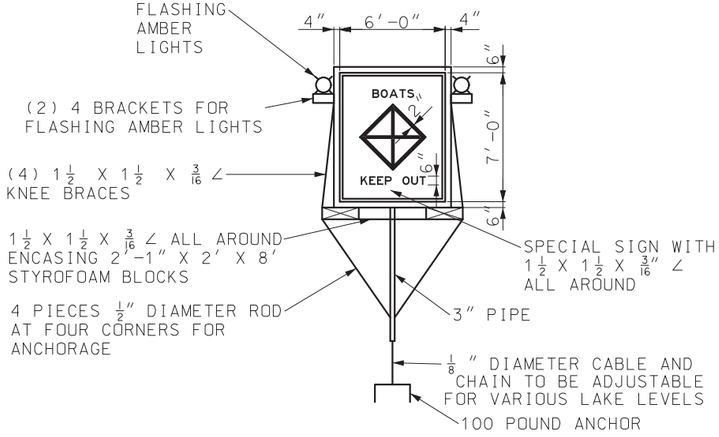

SPECIAL SIGN ASSEMBLY
("BOATS KEEP OUT")
(4 REQUIRED – ROADWAY ITEM)

GENERAL NOTES:

INFORMATION SHOWN IS SCHEMATIC ONLY. FINAL LOCATION AND NUMBER OF SIGNS AND BUOYS IS SUBJECT TO APPROVAL OF MISSOURI STATE WATER PATROL

THE DETAILS SHOWN ARE FOR BIDDING PURPOSES ONLY. ALL MATERIALS AND LABOR NECESSARY TO INSTALL AND REMOVE

SIGNS SHALL BE INCIDENTAL TO OTHER ITEMS

THE CONTRACTOR IS RESPONSIBLE FOR BUOY MAINTENANCE THROUGHOUT CONSTRUCTION AND FOR DETERMINING ANTICIPATED WATER LEVELS DURING CONSTRUCTION. EACH SIGN AND BUOY SHALL BE ANCHORED TO BOTTOM OF LAKE.

SIGNS SHALL BE DOUBLE FACED

EACH SIGN SHALL BE EQUIPPED WITH TWO (2) FLASHING LIGHT UNITS WITH AMBER LENS. FLASHING LIGHT UNITS SHALL BE FURNISHED AND MAINTAINED BY THE CONTRACTOR

ALL LETTERING TO BE BLACK IN COLOR IN BLOCK FORM.

FOR OTHER INFORMATION AND LOCATION OF SIGNS AND BUOYS SEE SPECIAL PROVISIONS.

SCHEMATIC SHOWN IS FOR ONE NAVIGATIONAL SPAN. FOR WORK ON OTHER SPANS MOVE APPROPRIATE SIGNS WITH NO DIRECT PAY

COLOR:
- BACKGROUND – WHITE
- LEGEND – BLACK
- 2″ REFLECTIVE BAND AND SYMBOL – INTERNATIONAL ORANGE

IF A SEAL IS PRESENT ON THIS SHEET IT HAS BEEN ELECTRONICALLY SEALED AND DATED.

MISSOURI HIGHWAYS AND TRANSPORTATION COMMISSION
105 WEST CAPITOL
JEFFERSON CITY, MO 65102
1-888-ASK-MODOT (1-888-275-6636)

STATE OF MISSOURI
TRAVIS D. KOESTNER
NUMBER PE-30042
PROFESSIONAL ENGINEER
THIS SHEET HAS BEEN SIGNED, SEALED AND DATED ELECTRONICALLY.

TEMPORARY TRAFFIC CONTROL DEVICES

TRAFFIC CONTROL FOR WATERWAYS

DATE EFFECTIVE: 07/01/2019
DATE PREPARED: 5/17/2019

616.10AV

SHEET NO. 9 OF 9

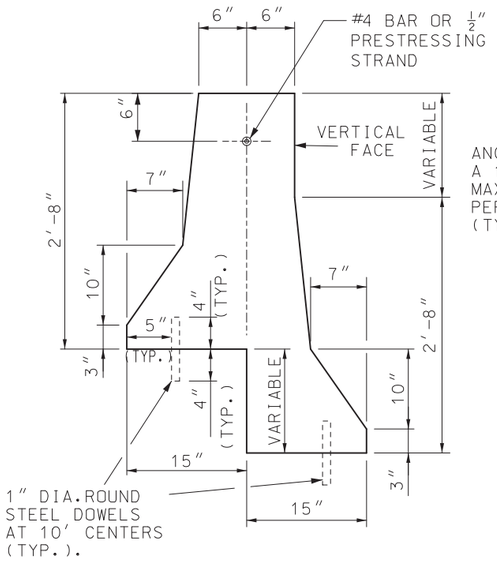

TYPICAL VIEW
BARRIER FOR
STEPPED PAVEMENT

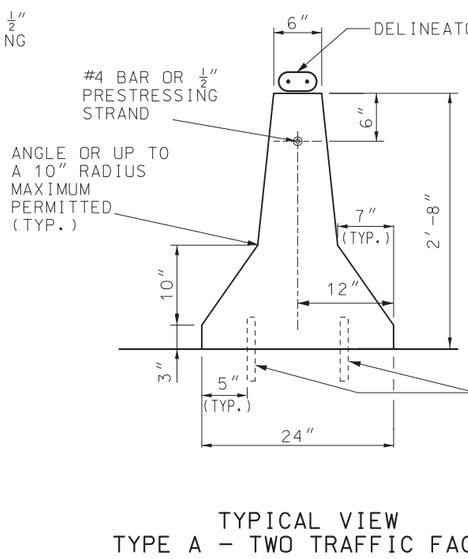

TYPICAL VIEW
TYPE A – TWO TRAFFIC FACES

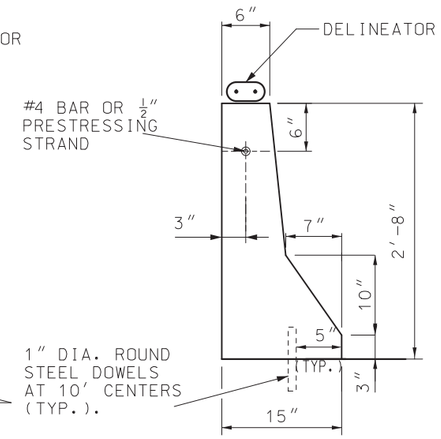

TYPICAL VIEW
TYPE B – ONE TRAFFIC FACE

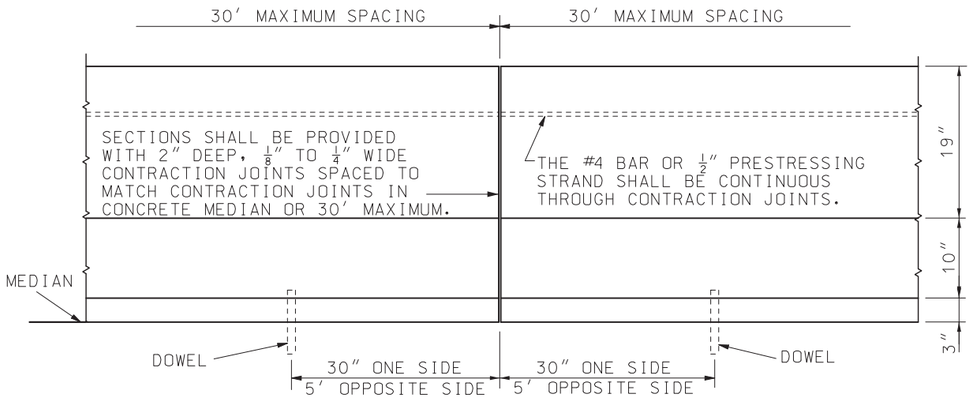

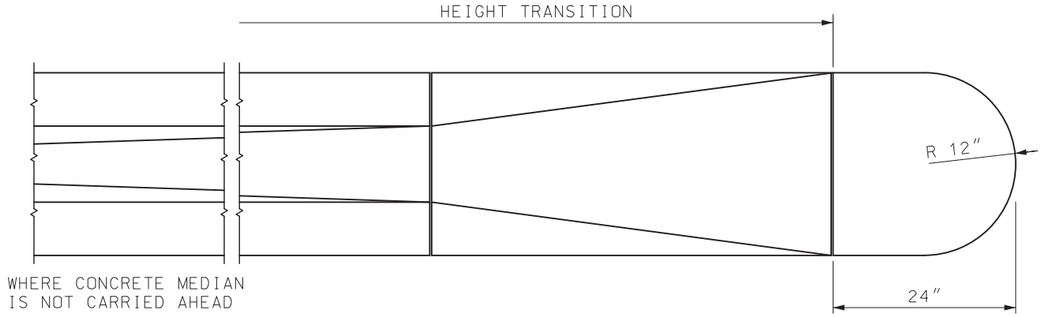

PLAN

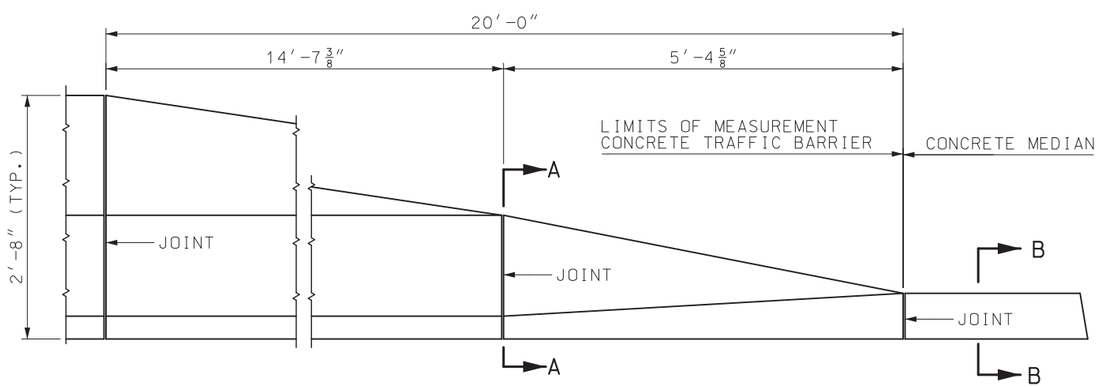

ELEVATION
BARRIER HEIGHT TRANSITION

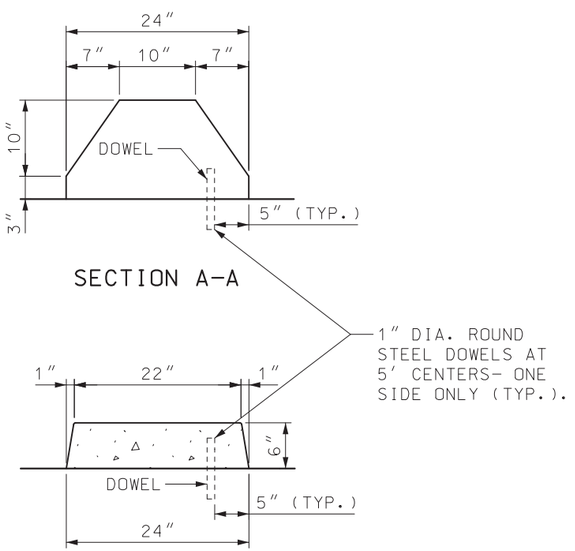

SECTION A–A

SECTION B–B

GENERAL NOTES:

HEIGHT TRANSITIONS SHALL NOT BE USED IN LOCATIONS WHERE THE POSTED SPEED IS GREATER THAN 35 MPH.

ALL TOP AND END EDGES SHALL BE CHAMFERED ¾ INCH.

EXPANSION JOINTS SHALL BE PROVIDED IN THE BARRIER TO MATCH EXPANSION JOINTS IN PAVEMENT.

FOR CONCRETE TRAFFIC BARRIER DELINEATION DETAILS SEE STD PLAN 903.03.

#8 REINFORCING BARS WITH AN EPOXY ANCHOR SYSTEM MAY BE SUBSTITUTED FOR SMOOTH 1″ DIAMETER ROUND STEEL DOWELS.

MISSOURI HIGHWAYS AND TRANSPORTATION COMMISSION
105 WEST CAPITOL
JEFFERSON CITY, MO 65102
1-888-ASK-MODOT (1-888-275-6636)

STATE OF MISSOURI
ERIC E. SCHROETER
NUMBER PE-28411
PROFESSIONAL ENGINEER
THIS SHEET HAS BEEN SIGNED, SEALED AND DATED ELECTRONICALLY.

PERMANENT CONCRETE TRAFFIC BARRIER

TYPE A AND B

DATE EFFECTIVE: 01/01/2019
DATE PREPARED: 10/17/2018

617.10L

SHEET NO.
1 OF 11

IF A SEAL IS PRESENT ON THIS SHEET IT HAS BEEN ELECTRONICALLY SEALED AND DATED.

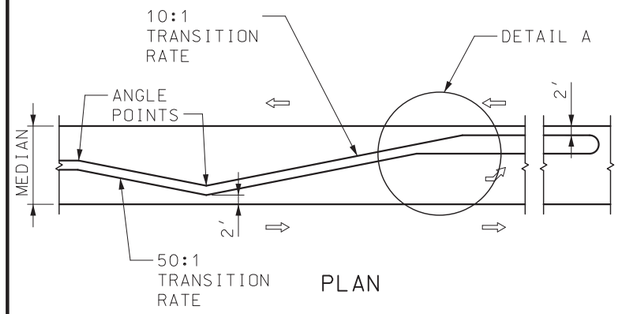

PLAN

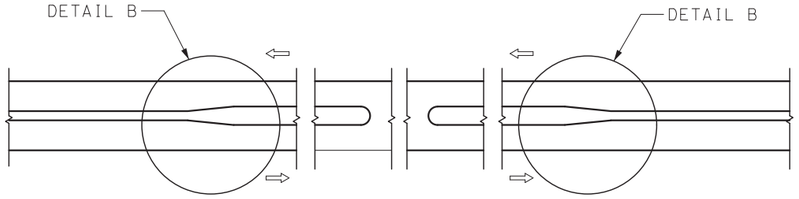

PLAN

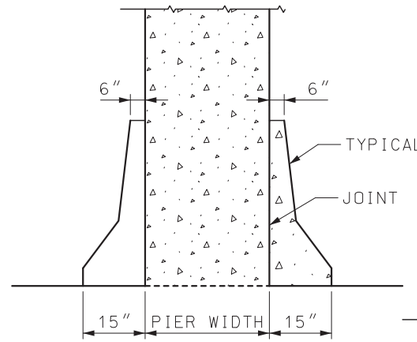

SECTION C-C

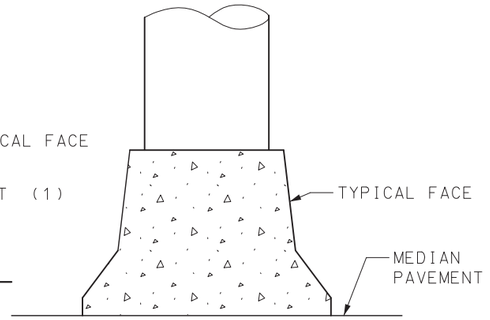

SEE SECTION C-C FOR DIMENSIONS

SECTION B-B

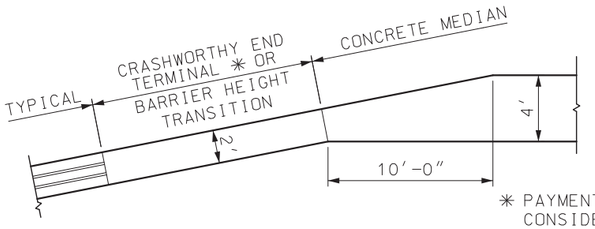

DETAIL A

LEFT TURN LANE TRANSITION

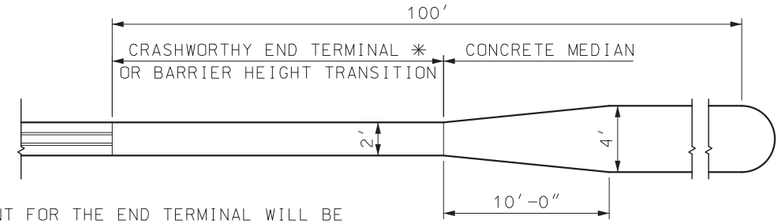

* PAYMENT FOR THE END TERMINAL WILL BE CONSIDERED FULL COMPENSATION FOR END TERMINAL, BACKUP ASSEMBLIES, AND OTHER ITEMS NECESSARY FOR PROPER INSTALLATION AS REQUIRED BY THE MANUFACTURER.

DETAIL B

MEDIAN OPENING TRANSITION

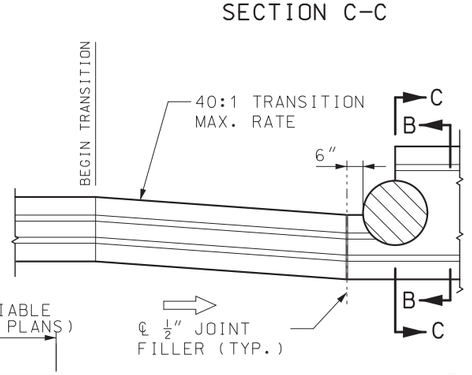

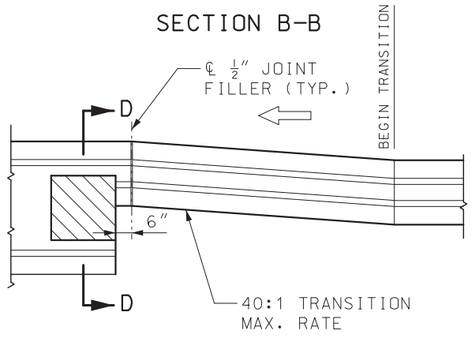

PLAN

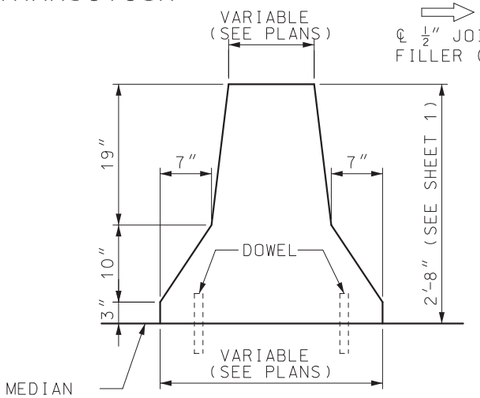

SECTION A-A

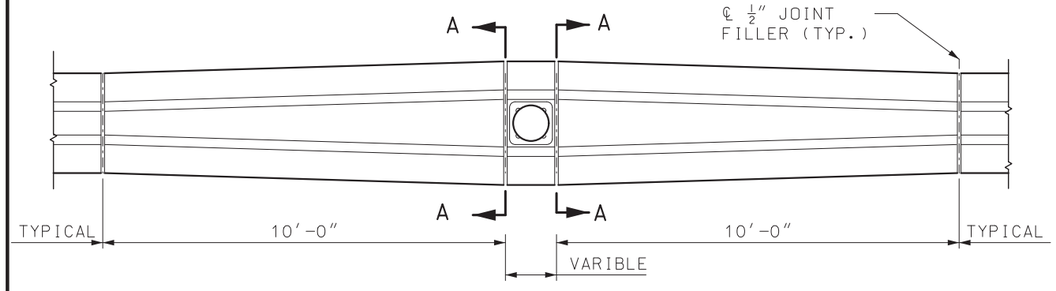

PLAN

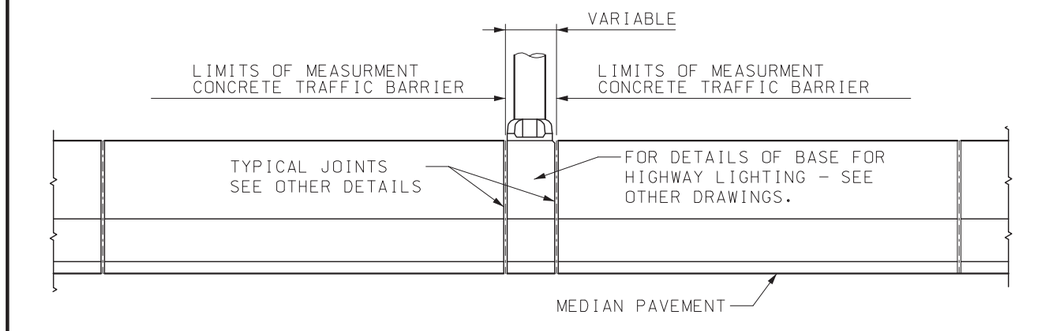

ELEVATION

TRANSITION DETAILS FOR MEDIAN LIGHTING

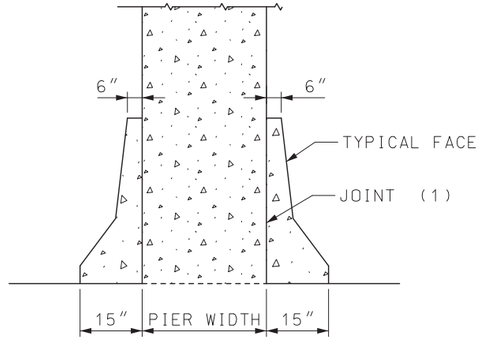

SECTION D-D

PLAN

TRANSITION DETAILS FOR
PIER PROTECTION

(1) 1 IN. JOINT WITH JOINT FILLER AND SEALER

GENERAL NOTES:

FOR DETAILS AND LOCATION OF DOWELS, SEE SHEET 1.

#8 REINFORCING BARS WITH AN EPOXY ANCHOR SYSTEM MAY BE SUBSTITUTED FOR SMOOTH 1" DIAMETER ROUND STEEL DOWELS.

MISSOURI HIGHWAYS AND TRANSPORTATION COMMISSION
105 WEST CAPITOL
JEFFERSON CITY, MO 65102
1-888-ASK-MODOT (1-888-275-6636)

STATE OF MISSOURI
ERIC E. SCHROETER
NUMBER PE-2841
PROFESSIONAL ENGINEER
THIS SHEET HAS BEEN SIGNED, SEALED AND DATED ELECTRONICALLY.

PERMANENT CONCRETE TRAFFIC BARRIER
TYPE A AND B

DATE EFFECTIVE: 01/01/2019
DATE PREPARED: 10/17/2018

617.10L

SHEET NO. 2 OF 11

IF A SEAL IS PRESENT ON THIS SHEET IT HAS BEEN ELECTRONICALLY SEALED AND DATED.

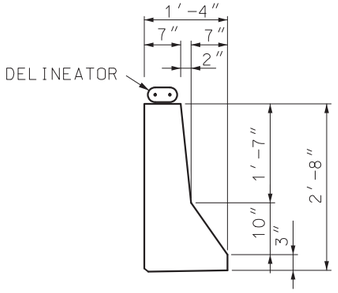

TYPE B (MODIFIED)
TYPICAL SECTION

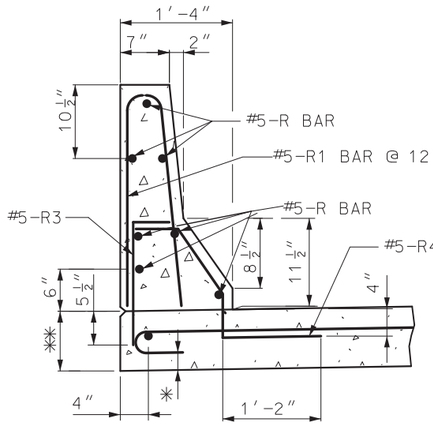

PART SECTION THROUGH
UPPER BARRIER

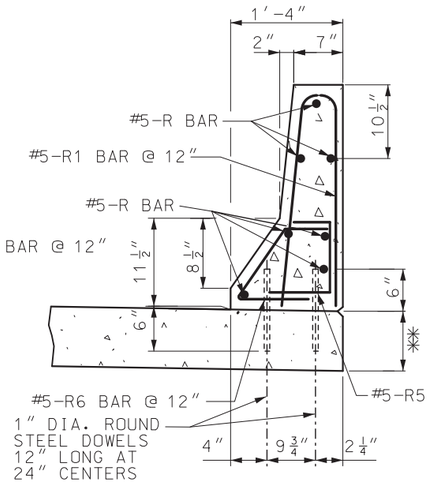

PART SECTION THROUGH
LOWER BARRIER

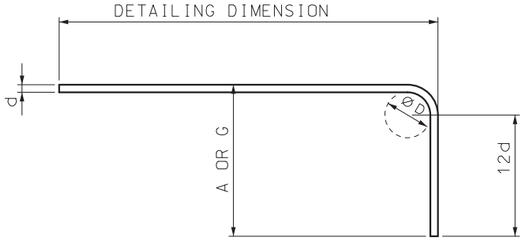

90° HOOKS

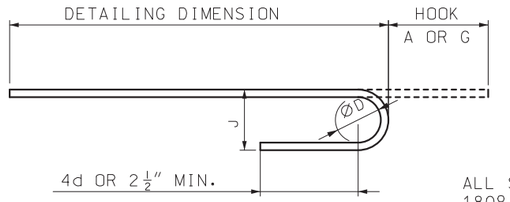

180° HOOKS

ALL STANDARD HOOKS AND BENDS OTHER THAN 180° TO BE BENT WITH THE SAME PROCEDURE AS FOR 90° STANDARD HOOKS.

END HOOK DIMENSIONS				
BAR SIZE	D (IN.)	ALL GRADES		
		180° HOOKS		90° HOOKS
		A OR G	J	A OR G
#5	3¾″	7″	5″	10″
#6	4½″	8″	6″	12″

TABLE A TRANSVERSE PAVEMENT REINFORCEMENT	
PAVEMENT THICKNESS **	BAR SIZE & SPACING
8″	#5 @ 5″ *
9″	#5 @ 6″ *
10″	#5 @ 8″
11″	#5 @ 9″
≥ 12″	#6 @ 12″

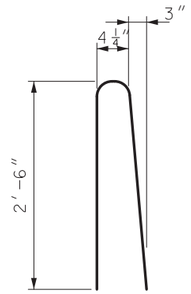

#5-R1

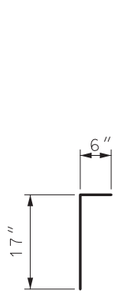

#5-R3

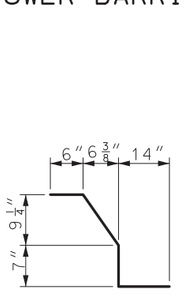

#5-R4

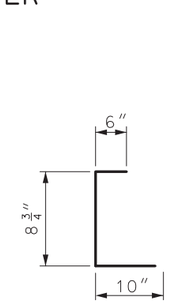

#5-R5

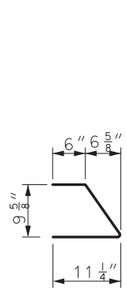

#5-R6

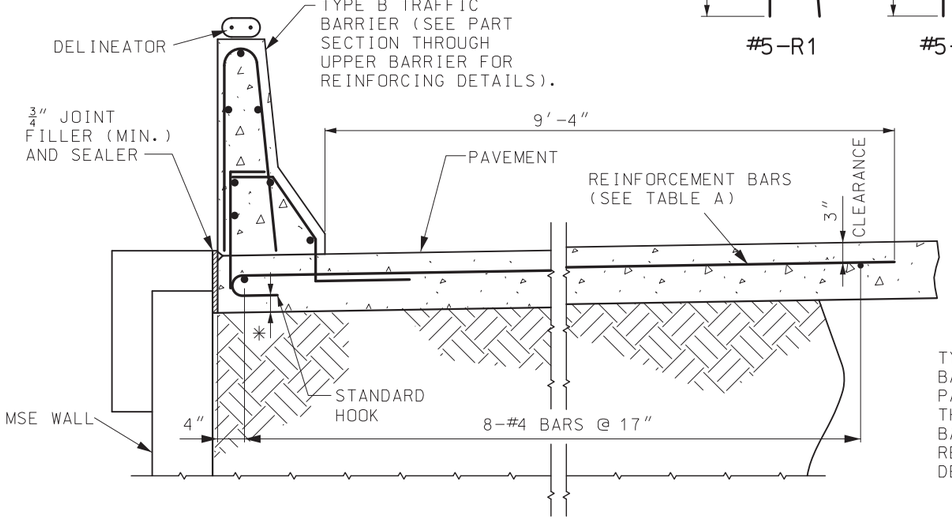

TYPE B TRAFFIC BARRIER ON TOP OF MSE WALL

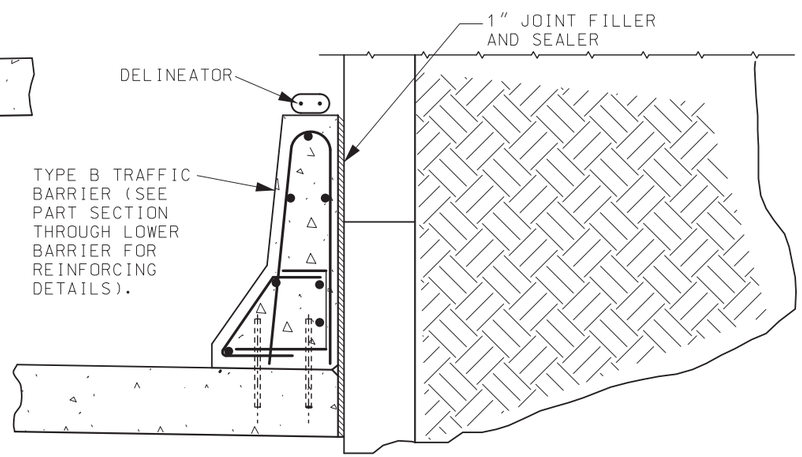

TYPE B TRAFFIC BARRIER AT THE SIDE OF MSE WALL

NOTES:

ALL REINFORCEMENT SHALL BE GRADE 60 EPOXY COATED.

NO DIRECT PAYMENT WILL BE MADE FOR REINFORCING STEEL.

MINIMUM CLEARANCE TO REINFORCING STEEL SHALL BE 1½″, UNLESS OTHERWISE SHOWN.

TYPE B (MODIFIED) SHALL BE USED ONLY AT LOCATIONS SHOWN IN PLANS.

FOR CONCRETE TRAFFIC BARRIER DELINEATION DETAILS SEE STD PLAN 903.03.

#8 REINFORCING BARS WITH AN EPOXY ANCHOR SYSTEM MAY BE SUBSTITUTED FOR SMOOTH 1″ DIAMETER ROUND STEEL DOWELS.

* TILT TRANSVERSE PAVEMENT REINFORCEMENT HOOKS FROM VERTICAL ALIGNMENT TO MAINTAIN 1½″ MINIMUM CLEARANCE.

** SEE ROADWAY PAVEMENT DESIGN.

MISSOURI HIGHWAYS AND TRANSPORTATION COMMISSION
105 WEST CAPITOL
JEFFERSON CITY, MO 65102
1-888-ASK-MODOT (1-888-275-6636)

STATE OF MISSOURI
ERIC E. SCHROETER
NUMBER PE-28411
PROFESSIONAL ENGINEER
THIS SHEET HAS BEEN SIGNED, SEALED AND DATED ELECTRONICALLY.

PERMANENT CONCRETE TRAFFIC BARRIER AT MSE WALL TYPE B MODIFIED

DATE EFFECTIVE: 01/01/2019
DATE PREPARED: 10/17/2018

617.10L

SHEET NO. 3 OF 11

IF A SEAL IS PRESENT ON THIS SHEET IT HAS BEEN ELECTRONICALLY SEALED AND DATED.

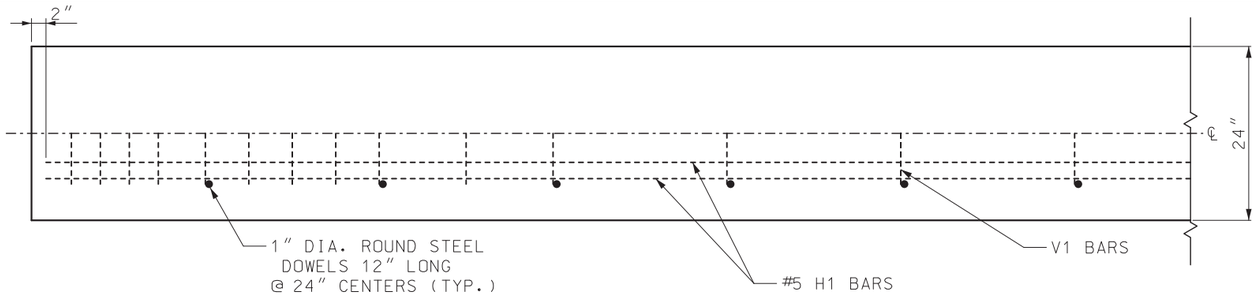

PLAN VIEW
(SYMMETRICAL ABOUT CENTERLINE)

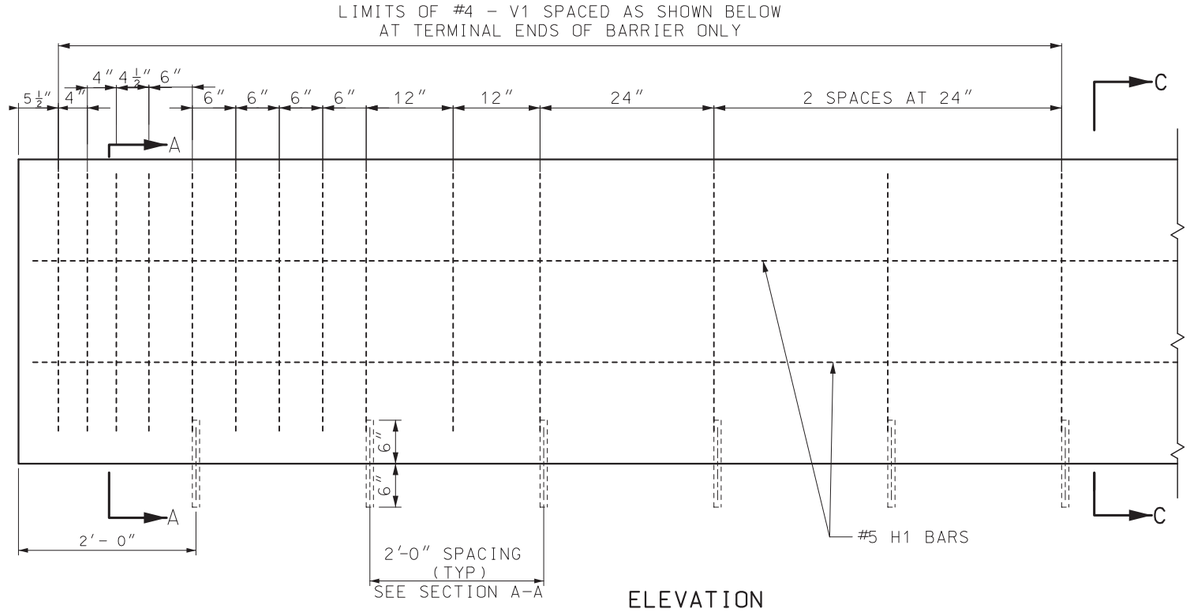

ELEVATION

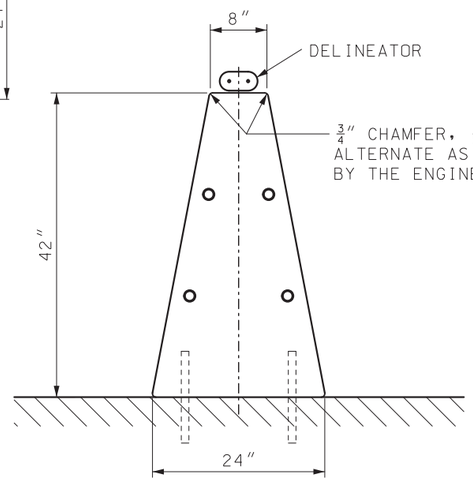

TYPE C
TYPICAL SECTION

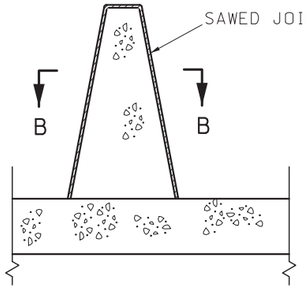

SECTION THROUGH SAWED JOINT

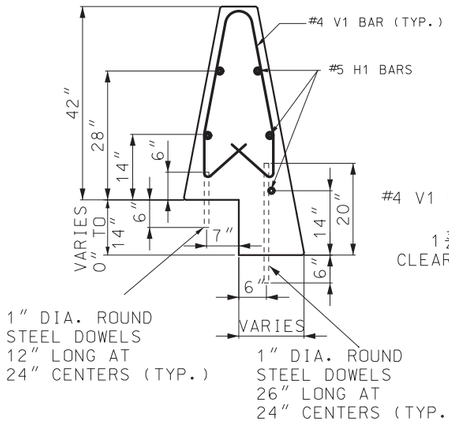

SECTION A–A
(STEPPED PAVEMENT)

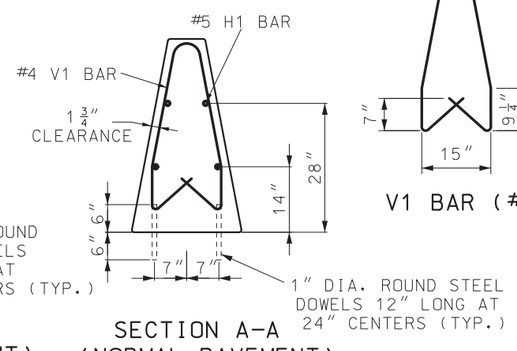

SECTION A–A
(NORMAL PAVEMENT)

V1 BAR (#4)

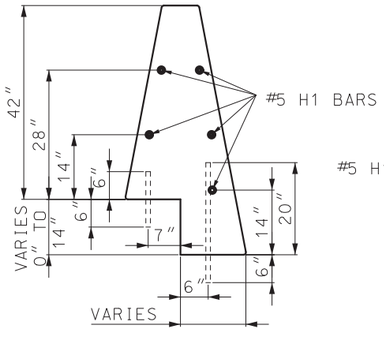

SECTION C–C
(STEPPED PAVEMENT)

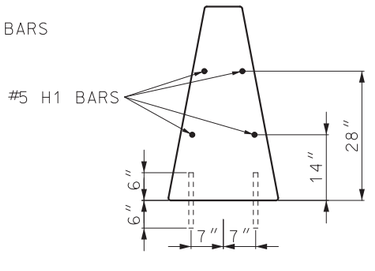

SECTION C–C
(NORMAL PAVEMENT)

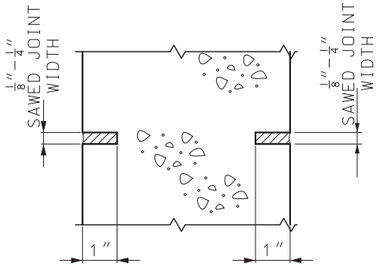

SECTION B–B

NOTES:

ALL REINFORCEMENT SHALL BE GRADE 60 EPOXY COATED.

BAR SPLICES SHALL BE A MINIMUM OF 24 TIMES THE NOMINAL DIAMETER OF THE BAR.

ANY REINFORCING BAR INSTALLATION METHOD DEVISED BY THE CONTRACTOR AND APPROVED BY THE ENGINEER THAT WILL ASSURE THE LONGITUDINAL REINFORCING STEEL WILL BE POSITIONED ±½ INCH AS DIMENSIONED WILL BE SATISFACTORY.

THE CONTRACTOR HAS THE OPTION TO SLIP-FORM THE BARRIER. IN WHICH CASE, ADDITIONAL REINFORCEMENT MAY BE TIED TO THE UPPER TWO-THIRDS OF THE REINFORCING CAGE TO PROVIDE BRACING.

ANCHORING DOWELS MAY BE OMITTED WHEN THE PLANS SPECIFY A MINIMUM 1¾″ PAVEMENT SURFACE TO BE PLACED ABUTTING BOTH BARRIER FACES.

SAWED JOINTS SHALL BE LOCATED AT PAVEMENT TRANSVERSE JOINTS.

#8 REINFORCING BARS WITH AN EPOXY ANCHOR SYSTEM MAY BE SUBSTITUTED FOR SMOOTH 1″ DIAMETER ROUND STEEL DOWELS.

FOR CONCRETE TRAFFIC BARRIER DELINEATION DETAILS SEE STD PLAN 903.03.

REINFORCING DETAILS

IF A SEAL IS PRESENT ON THIS SHEET IT HAS BEEN ELECTRONICALLY SEALED AND DATED.

MISSOURI HIGHWAYS AND TRANSPORTATION COMMISSION
105 WEST CAPITOL
JEFFERSON CITY, MO 65102
1-888-ASK-MODOT (1-888-275-6636)

STATE OF MISSOURI
ERIC E. SCHROETER
NUMBER PE-28411
PROFESSIONAL ENGINEER
THIS SHEET HAS BEEN SIGNED, SEALED AND DATED ELECTRONICALLY.

PERMANENT CONCRETE TRAFFIC BARRIER
TYPE C

DATE EFFECTIVE: 01/01/2019
DATE PREPARED: 10/17/2018

617.10L

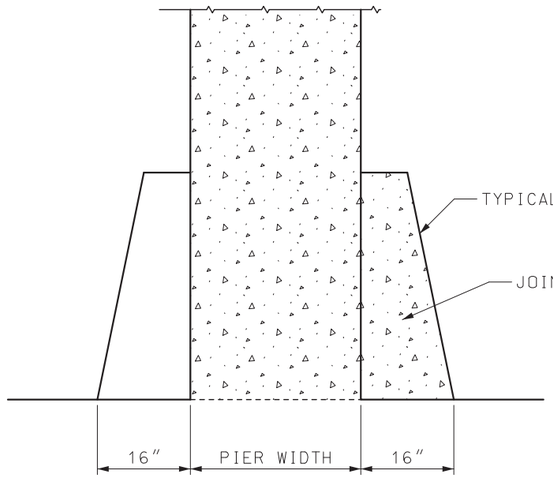

SECTION A–A

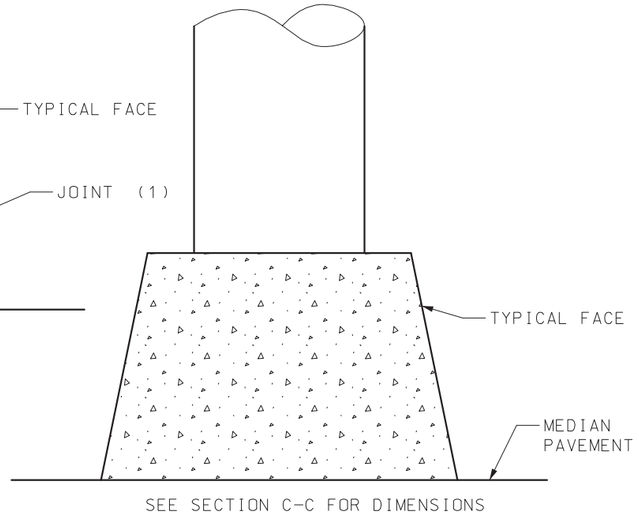

SEE SECTION C–C FOR DIMENSIONS

SECTION B–B

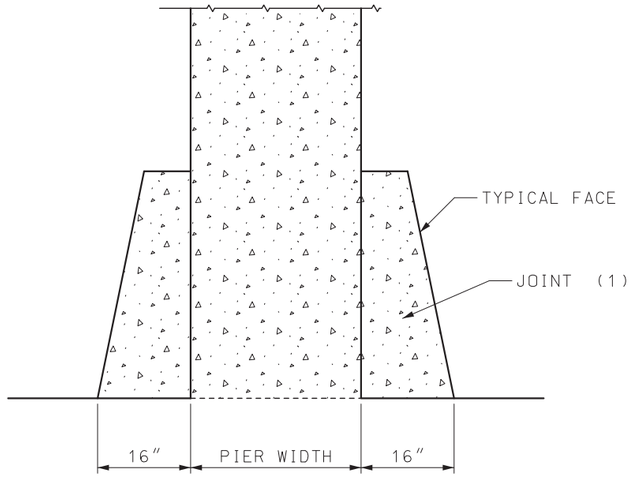

SECTION C–C

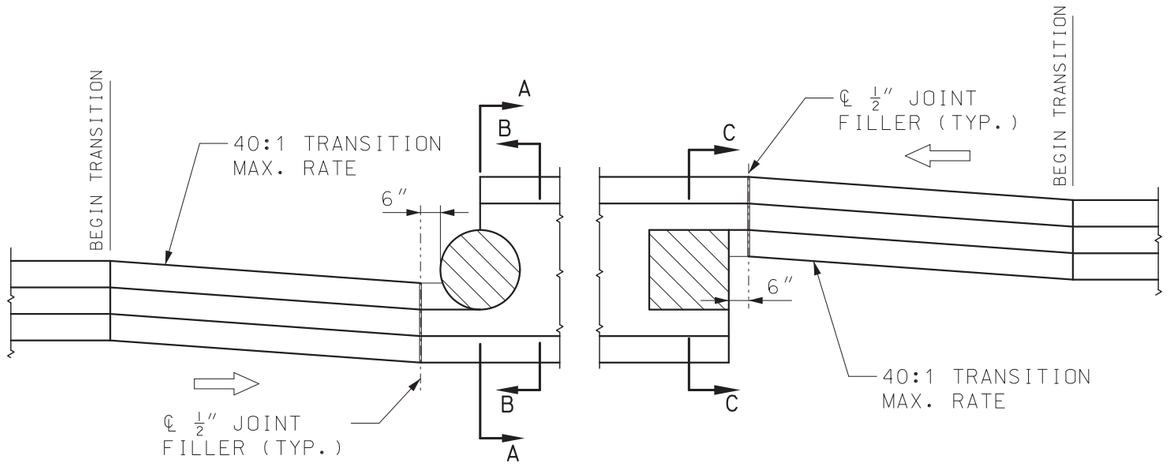

PLAN

TRANSITION DETAILS FOR PIER PROTECTION

(1) 1 IN. JOINT WITH JOINT FILLER AND SEALER

IF A SEAL IS PRESENT ON THIS SHEET IT HAS BEEN ELECTRONICALLY SEALED AND DATED.

MISSOURI HIGHWAYS AND TRANSPORTATION COMMISSION
105 WEST CAPITOL
JEFFERSON CITY, MO 65102
1-888-ASK-MODOT (1-888-275-6636)

STATE OF MISSOURI
ERIC E. SCHROETER
NUMBER PE-28411
PROFESSIONAL ENGINEER
THIS SHEET HAS BEEN SIGNED, SEALED AND DATED ELECTRONICALLY.

PERMANENT CONCRETE TRAFFIC BARRIER
TYPE C

DATE EFFECTIVE: 01/01/2019
DATE PREPARED: 10/17/2018

617.10L

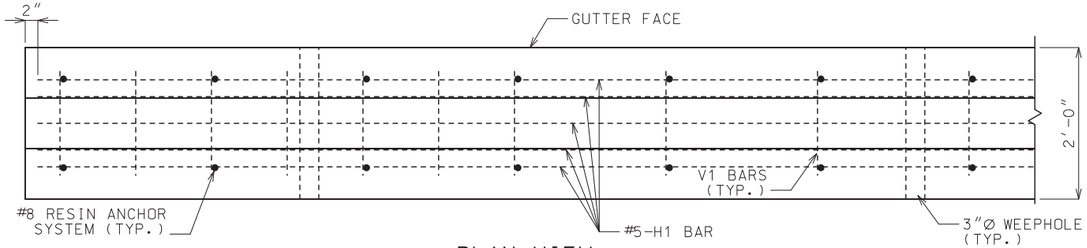

PLAN VIEW
NOTE: GUTTER NOT SHOWN FOR CLARITY.

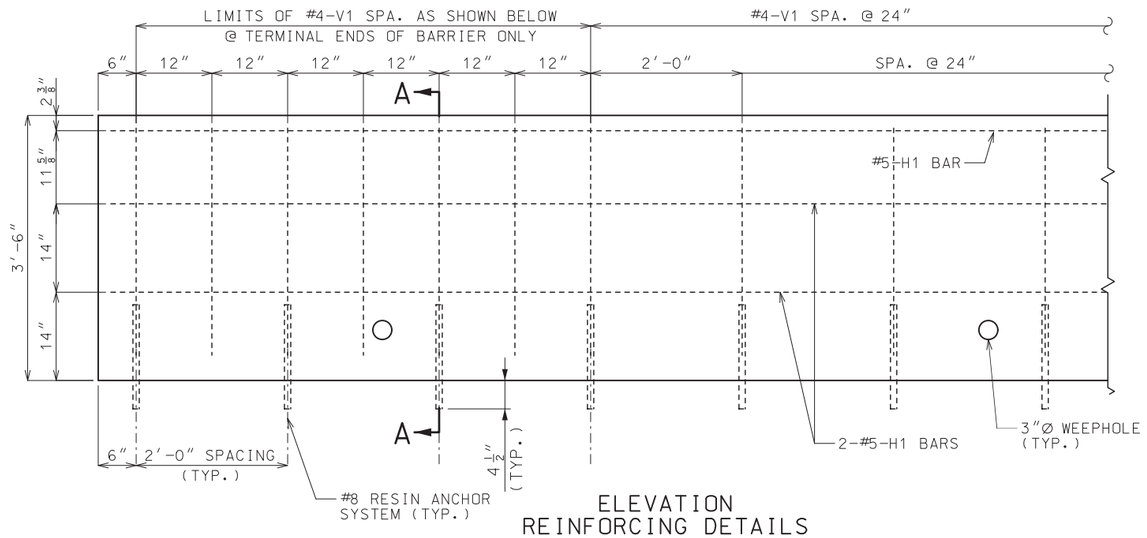

ELEVATION
REINFORCING DETAILS

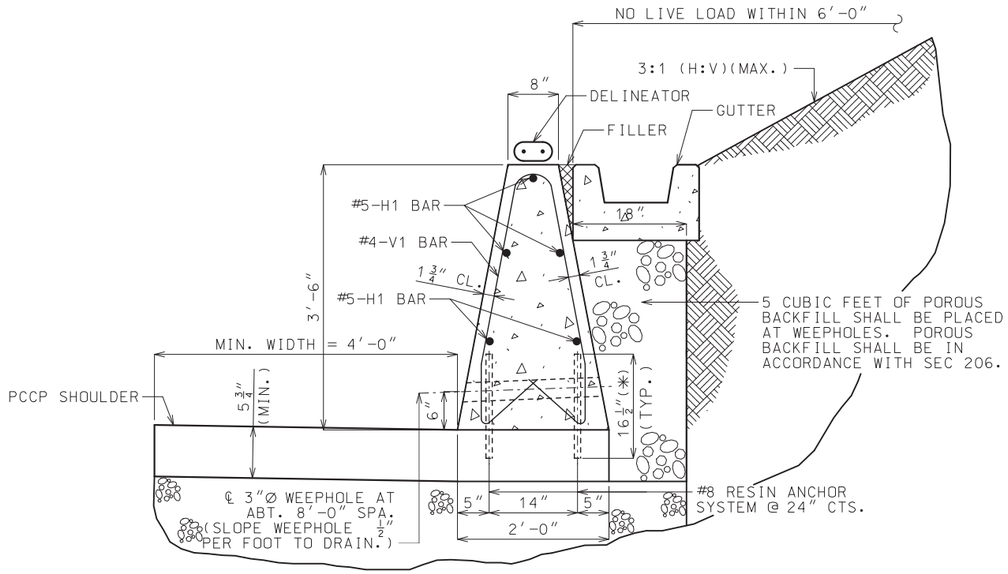

(*) EMBED ANCHOR 4 1/2" INTO PCCP SHOULDER.

SECTION A-A
(FOR SLOPING AND NONSLOPING BACKSLOPE)

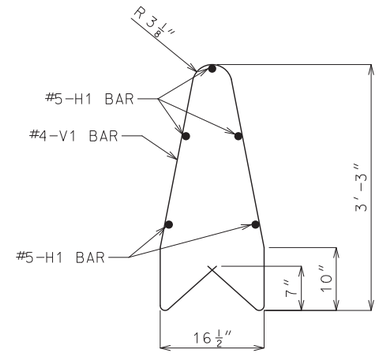

PART SECTION OF
#4-V1 BAR

GENERAL NOTES:

CONCRETE SHALL BE CLASS B F'C = 4,000 PSI.

ALL REINFORCEMENT SHALL BE GRADE 60 EPOXY COATED.

ANGLE OF INTERNAL FRICTION, ΦF ≥ 27° FOR BACKFILL MATERIAL.

MINIMUM CLEARANCE TO REINFORCING STEEL SHALL BE 1½", UNLESS OTHERWISE SHOWN.

BAR SPLICES SHALL BE A MINIMUM OF 24 TIMES THE NOMINAL DIAMETER OR THE BAR.

ANY METHOD DEVISED BY THE CONTRACTOR AND APPROVED BY THE ENGINEER THAT WILL ASSURE THE LONGITUDINAL REINFORCING STEEL WILL BE POSITIONED ±1/2 INCH AS DIMENSIONED WILL BE SATISFACTORY.

THE CONTRACTOR HAS THE OPTION TO SLIP-FORM THE BARRIER. IN WHICH CASE, ADDITIONAL REINFORCEMENT MAY BE TIED TO THE UPPER TWO-THIRDS OF THE REINFORCING CAGE TO PROVIDE BRACING.

THIS BARRIER SHALL NOT BE USED TO SUPPORT HIGHWAY LIGHTING POLES.

THIS BARRIER SHALL NOT BE USED FOR BRIDGE ROADWAY APPLICATIONS.

SAWED JOINTS SHALL BE SPACED AT 15'-0". SEE MISSOURI STANDARD PLANS FOR SAWED JOINT DETAIL.

TYPE C BARRIER MODIFIED RETAINING WALL WITH NONMOMENT SLAB SHALL BE USED ONLY AT LOCATIONS SHOWN ON PLANS.

FOR CONCRETE TRAFFIC BARRIER DELINEATION DETAILS SEE STD PLAN 903.03.

RESIN ANCHOR SYSTEM SHALL BE DRILLED IN THE PAVEMENT.

WHEN BARRIER HEIGHT EXCEEDS 42" OR SLOPE EXCEEDS 3:1 (H:V) OR LIVE LOAD IS WITHIN 6'-0", CONTACT BRIDGE DIVISION FOR SPECIAL DESIGN.

IF A SEAL IS PRESENT ON THIS SHEET IT HAS BEEN ELECTRONICALLY SEALED AND DATED.

MISSOURI HIGHWAYS AND TRANSPORTATION COMMISSION
105 WEST CAPITOL
JEFFERSON CITY, MO 65102
1-888-ASK-MODOT (1-888-275-6636)

STATE OF MISSOURI
ERIC E. SCHROETER
NUMBER PE-28411
PROFESSIONAL ENGINEER
THIS SHEET HAS BEEN SIGNED, SEALED AND DATED ELECTRONICALLY.

PERMANENT CONCRETE TRAFFIC BARRIER

TYPE C AS RETAINING WALL

DATE EFFECTIVE: 01/01/2019
DATE PREPARED: 10/17/2018

617.10L

SHEET NO. 6 OF 11

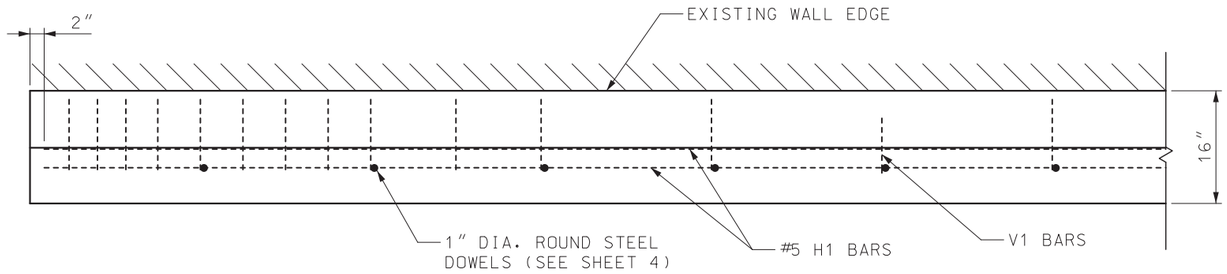

PLAN VIEW

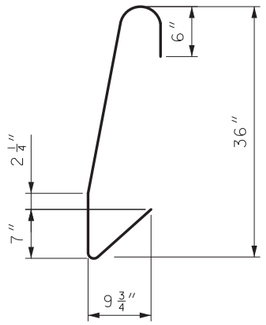

V1 BAR (#4)

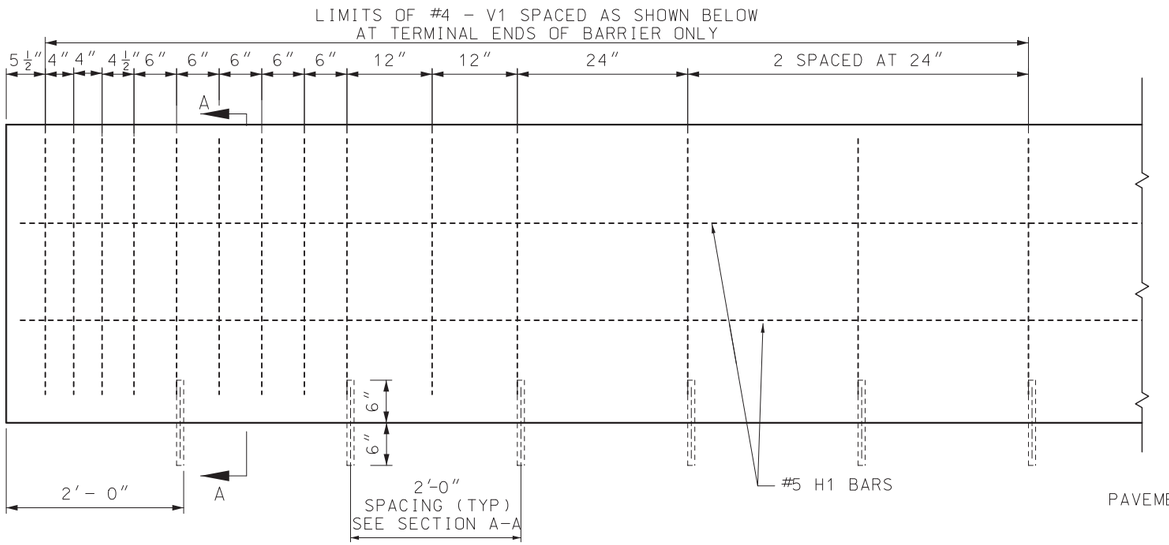

ELEVATION

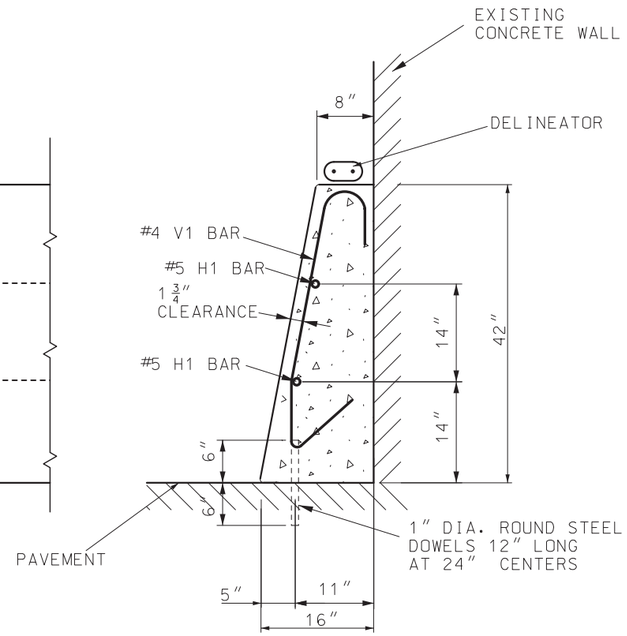

SECTION A–A

REINFORCING DETAILS

NOTES:

ALL REINFORCEMENT SHALL BE GRADE 60 EPOXY COATED.

BAR SPLICES SHALL BE A MINIMUM OF 24 TIMES THE NOMINAL DIAMETER OF THE BAR.

ANY METHOD DEVISED BY THE CONTRACTOR AND APPROVED BY THE ENGINEER THAT WILL ASSURE THE LONGITUDINAL REINFORCING STEEL WILL BE POSITIONED ± 1/2 INCH AS DIMENSIONED WILL BE SATISFACTORY.

THE CONTRACTOR HAS THE OPTION TO SLIP-FORM THE BARRIER. IN WHICH CASE, ADDITIONAL REINFORCEMENT MAY BE TIED TO THE UPPER TWO-THIRDS OF THE REINFORCING CAGE TO PROVIDE BRACING.

THIS BARRIER SHALL NOT BE USED TO SUPPORT HIGHWAY LIGHTING POLES.

THIS BARRIER SHALL NOT BE USED FOR BRIDGE ROADWAY APPLICATIONS.

SAWED JOINTS SHALL BE LOCATED AT PAVEMENT TRANSVERSE JOINTS.

TYPE D SHALL BE USED ONLY AT LOCATIONS SHOWN ON PLANS.

#8 REINFORCING BARS WITH AN EPOXY ANCHOR SYSTEM MAY BE SUBSTITUTED FOR SMOOTH 1″ DIAMETER ROUND STEEL DOWELS.

FOR CONCRETE TRAFFIC BARRIER DELINEATION DETAILS SEE STD PLAN 903.03.

MISSOURI HIGHWAYS AND TRANSPORTATION COMMISSION
105 WEST CAPITOL
JEFFERSON CITY, MO 65102
1-888-ASK-MODOT (1-888-275-6636)

STATE OF MISSOURI
ERIC E. SCHROETER
NUMBER PE-2841
PROFESSIONAL ENGINEER
THIS SHEET HAS BEEN SIGNED, SEALED AND DATED ELECTRONICALLY.

PERMANENT CONCRETE TRAFFIC BARRIER
TYPE D

DATE EFFECTIVE: 01/01/2019
DATE PREPARED: 10/17/2018

617.10L

SHEET NO. 7 OF 11

IF A SEAL IS PRESENT ON THIS SHEET IT HAS BEEN ELECTRONICALLY SEALED AND DATED.

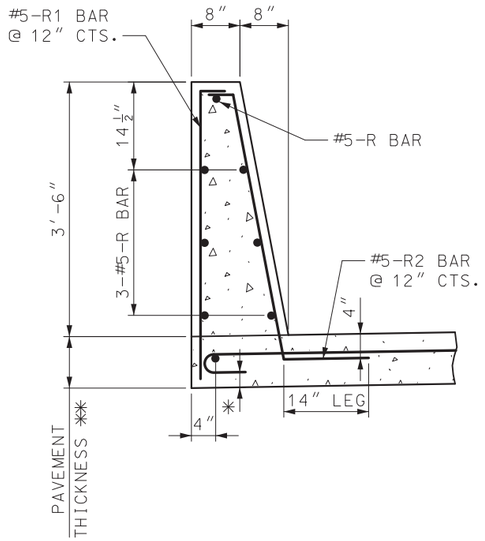

PART SECTION THROUGH BARRIER

TABLE A TRANSVERSE PAVEMENT REINFORCEMENT	
PAVEMENT THICKNESS **	BAR SIZE & SPACING
8"	#5 @ 4"*
9"	#5 @ 5"*
10"	#5 @ 6"
11"	#5 @ 7"
12"	#6 @ 12"
≥ 13"	#6 @ 12"

NOTES:

ALL REINFORCEMENT SHALL BE GRADE 60 EPOXY COATED.

NO DIRECT PAYMENT WILL BE MADE FOR REINFORCING STEEL.

MINIMUM CLEARANCE TO REINFORCING STEEL SHALL BE 1½", UNLESS OTHERWISE SHOWN.

* TILT TRANSVERSE PAVEMENT REINFORCEMENT HOOKS FROM VERTICAL ALIGNMENT TO MAINTAIN 1½" MINIMUM CLEARANCE.

** SEE ROADWAY PAVEMENT DESIGN.

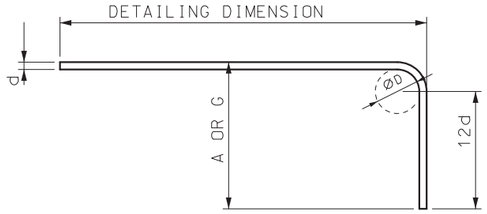

90° HOOKS

END HOOK DIMENSIONS				
BAR SIZE	D (IN.)	ALL GRADES		
		180° HOOKS		90° HOOKS
		A OR G	J	A OR G
#5	3¾"	7"	5"	10"
#6	4½"	8"	6"	12"

ALL STANDARD HOOKS AND BENDS OTHER THAN 180° TO BE BENT WITH THE SAME PROCEDURE AS FOR 90° STANDARD HOOKS.

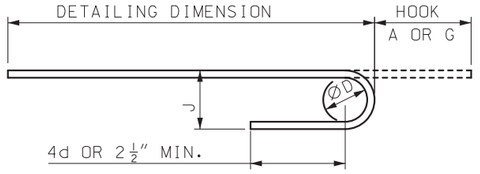

180° HOOKS

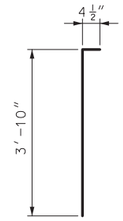

#5 R1

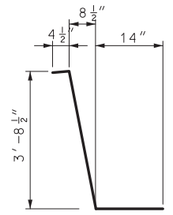

#5 R2

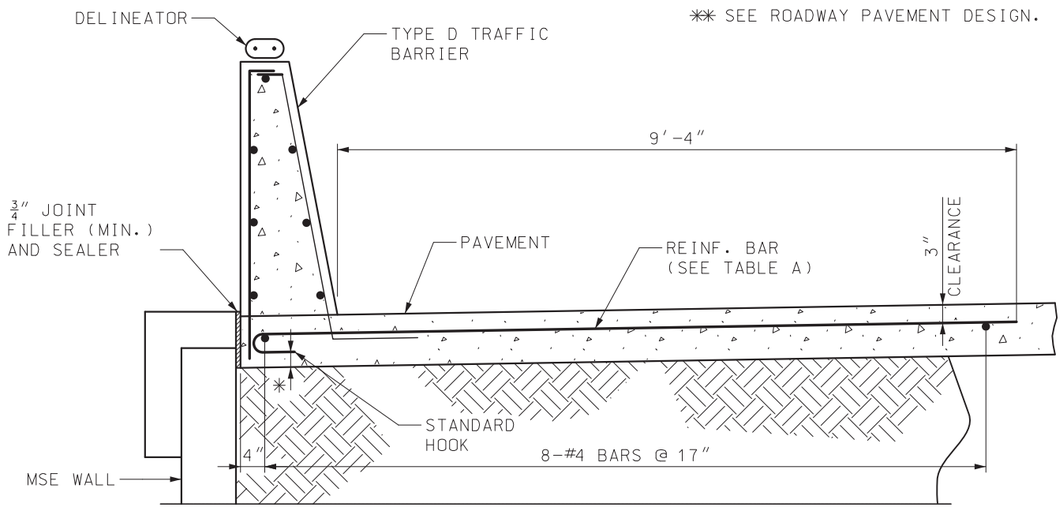

TYPE D (MSE WALL) TRAFFIC BARRIER ON TOP OF MSE WALL

NOTES:

TYPE D SHALL BE USED ONLY AT LOCATIONS SHOWN ON PLANS.

FOR CONCRETE TRAFFIC BARRIER DELINEATION DETAILS SEE STD PLAN 903.03.

IF A SEAL IS PRESENT ON THIS SHEET IT HAS BEEN ELECTRONICALLY SEALED AND DATED.

MISSOURI HIGHWAYS AND TRANSPORTATION COMMISSION
105 WEST CAPITOL
JEFFERSON CITY, MO 65102
1-888-ASK-MODOT (1-888-275-6636)

STATE OF MISSOURI
ERIC E. SCHROETER
NUMBER PE-28411
PROFESSIONAL ENGINEER
THIS SHEET HAS BEEN SIGNED, SEALED AND DATED ELECTRONICALLY.

PERMANENT CONCRETE TRAFFIC BARRIER

TYPE D ATOP MSE WALL

DATE EFFECTIVE: 01/01/2019
DATE PREPARED: 10/17/2018

617.10L

SHEET NO. 8 OF 11

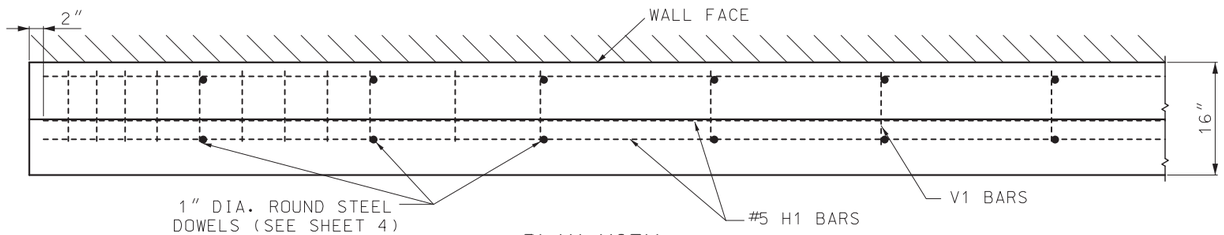

PLAN VIEW

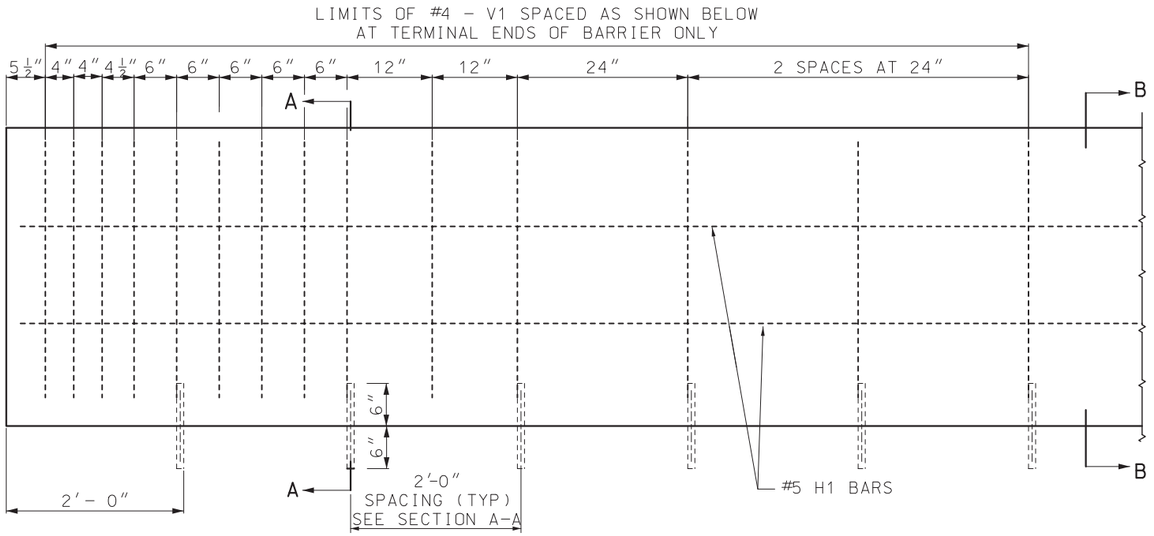

ELEVATION

REINFORCING DETAILS

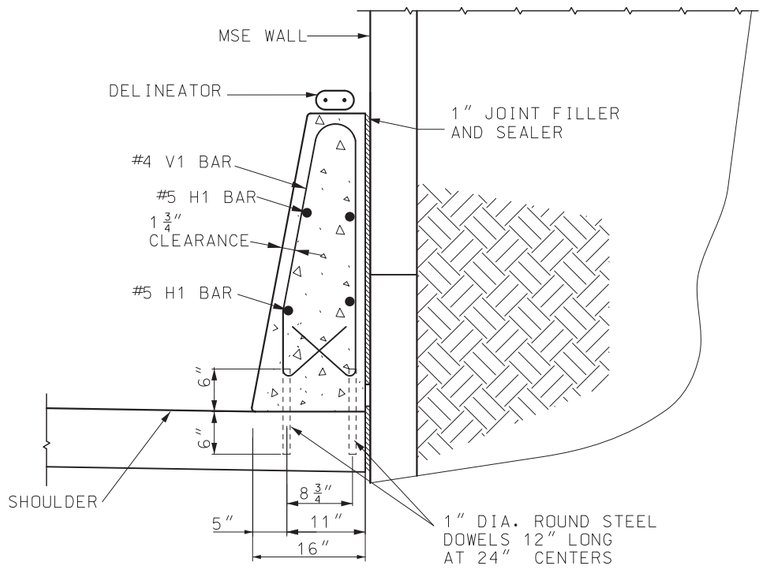

SECTION A–A

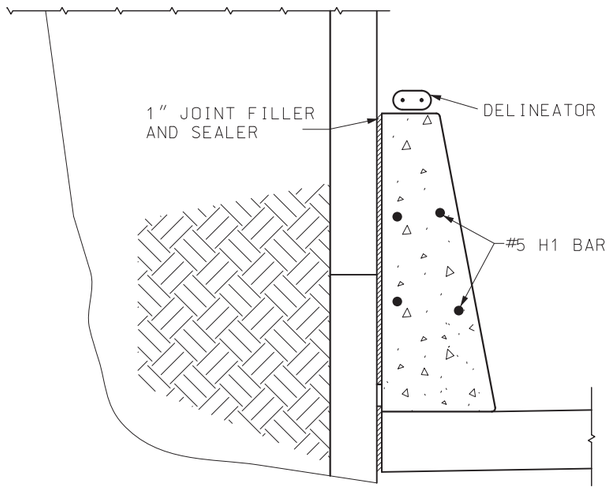

SECTION B–B

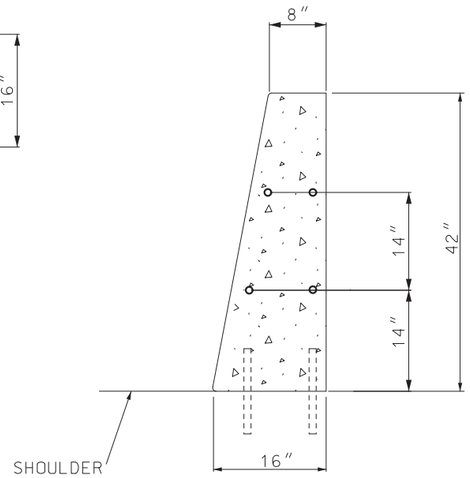

TYPE D TYPICAL SECTION

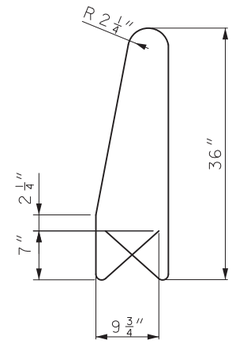

V1 BAR (#4)

NOTES:

ALL REINFORCEMENT SHALL BE GRADE 60 EPOXY COATED.

BAR SPLICES SHALL BE A MINIMUM OF 24 TIMES THE NOMINAL DIAMETER OF THE BAR.

MINIMUM CLEARANCE TO REINFORCING STEEL SHALL BE 1½″, UNLESS OTHERWISE SHOWN.

ANY METHOD DEVISED BY THE CONTRACTOR AND APPROVED BY THE ENGINEER THAT WILL ASSURE THE LONGITUDINAL REINFORCING STEEL WILL BE POSITIONED ± ½ INCH AS DIMENSIONED WILL BE SATISFACTORY.

THE CONTRACTOR HAS THE OPTION TO SLIP-FORM THE BARRIER. IN WHICH CASE, ADDITIONAL REINFORCEMENT MAY BE TIED TO THE UPPER TWO-THIRDS OF THE REINFORCING CAGE TO PROVIDE BRACING.

THIS BARRIER SHALL NOT BE USED TO SUPPORT HIGHWAY LIGHTING POLES.

THIS BARRIER SHALL NOT BE USED FOR BRIDGE ROADWAY APPLICATIONS.

SAWED JOINTS SHALL BE SPACED AT 15′-0″. SEE STANDARD PLANS FOR SAWED JOINT DETAIL

TYPE D BARRIER SHALL BE USED ONLY AT LOCATIONS SHOWN ON PLANS.

#8 REINFORCING BARS WITH AN EPOXY ANCHOR SYSTEM MAY BE SUBSTITUTED FOR SMOOTH 1″ DIAMETER ROUND STEEL DOWELS.

FOR CONCRETE TRAFFIC BARRIER DELINEATION DETAILS SEE STD PLAN 903.03.

MISSOURI HIGHWAYS AND TRANSPORTATION COMMISSION
105 WEST CAPITOL
JEFFERSON CITY, MO 65102
1-888-ASK-MODOT (1-888-275-6636)

STATE OF MISSOURI
ERIC E. SCHROETER
NUMBER PE-28411
PROFESSIONAL ENGINEER
THIS SHEET HAS BEEN SIGNED, SEALED AND DATED ELECTRONICALLY.

PERMANENT CONCRETE TRAFFIC BARRIER

TYPE D BESIDE MSE WALL

DATE EFFECTIVE: 01/01/2019
DATE PREPARED: 10/17/2018

617.10L

SHEET NO. 9 OF 11

IF A SEAL IS PRESENT ON THIS SHEET IT HAS BEEN ELECTRONICALLY SEALED AND DATED.

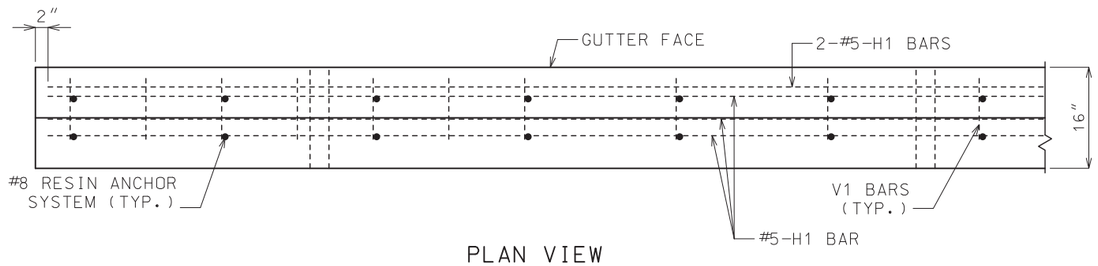

PLAN VIEW

NOTE: GUTTER NOT SHOWN FOR CLARITY.

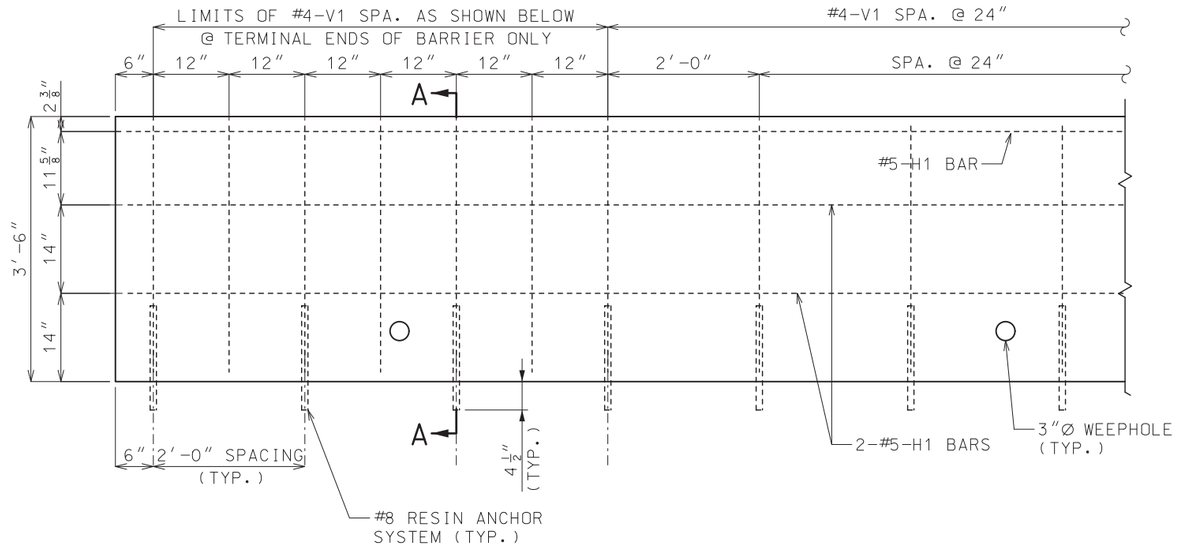

ELEVATION
REINFORCING DETAILS

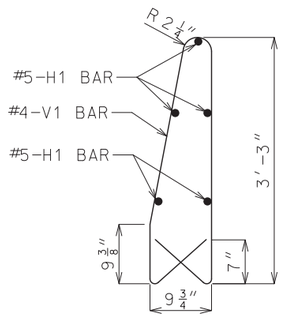

PART SECTION OF
#4-V1 BAR

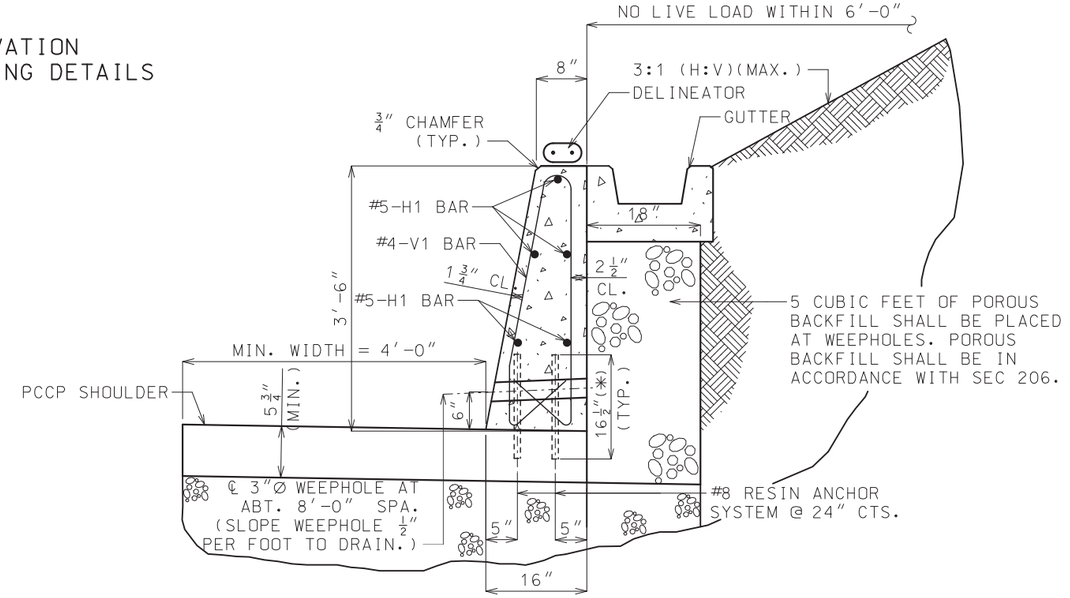

SECTION A-A
(FOR SLOPING AND NONSLOPING BACKSLOPE)

(*) EMBED ANCHOR 4 1/2″ INTO PCCP SHOULDER.

GENERAL NOTES:

CONCRETE SHALL BE CLASS B f′c = 4,000 PSI.

ALL REINFORCEMENT SHALL BE GRADE 60 EPOXY COATED.

ANGLE OF INTERNAL FRICTION, ϕf ≥ 30° FOR BACKFILL MATERIAL.

MINIMUM CLEARANCE TO REINFORCING STEEL SHALL BE 1-1/2″, UNLESS OTHERWISE SHOWN.

BAR SPLICES SHALL BE A MINIMUM OF 24 TIMES THE NOMINAL DIAMETER OR THE BAR.

ANY METHOD DEVISED BY THE CONTRACTOR AND APPROVED BY THE ENGINEER THAT WILL ASSURE THE LONGITUDINAL REFORCING STEEL WILL BE POSITIONED ±1/2 INCH AS DIMENSIONED WILL BE SATISFACTORY.

THE CONTRACTOR HAS THE OPTION TO SLIP-FORM THE BARRIER. IN WHICH CASE, ADDITIONAL REINFORCEMENT MAY BE TIED TO THE UPPER TWO-THIRDS OF THE REINFORCING CAGE TO PROVIDE BRACING.

THIS BARRIER SHALL NOT BE USED TO SUPPORT HIGHWAY LIGHTING POLES.

THIS BARRIER SHALL NOT BE USED FOR BRIDGE ROADWAY APPLICATION.

SAWED JOINTS SHALL BE SPACED AT 15′-0″. SEE MISSOURI STANDARD PLANS FOR SAWED JOINT DETAIL.

TYPE D BARRIER MODIFIED RETAINING WALL WITH NONMOMENT SLAB SHALL BE USED ONLY AT LOCATIONS SHOWN ON PLANS.

FOR CONCRETE TRAFFIC BARRIER DELINEATION DETAILS SEE STD PLAN 903.03.

RESIN ANCHOR SYSTEM SHALL BE DRILLED IN THE PAVEMENT.

WHEN BARRIER HEIGHT EXCEEDS 42″ OR SLOPE EXCEEDS 3:1 (H:V) OR LIVE LOAD IS WITHIN 6′-0″, CONTACT BRIDGE DIVISION FOR SPECIAL DESIGN.

IF A SEAL IS PRESENT ON THIS SHEET IT HAS BEEN ELECTRONICALLY SEALED AND DATED.

MISSOURI HIGHWAYS AND TRANSPORTATION COMMISSION
105 WEST CAPITOL
JEFFERSON CITY, MO 65102
1-888-ASK-MODOT (1-888-275-6636)

STATE OF MISSOURI
ERIC E. SCHROETER
NUMBER PE-28411
PROFESSIONAL ENGINEER
THIS SHEET HAS BEEN SIGNED, SEALED AND DATED ELECTRONICALLY.

PERMANENT CONCRETE TRAFFIC BARRIER

TYPE D AS RETAINING WALL

DATE EFFECTIVE: 01/01/2019
DATE PREPARED: 10/17/2018

617.10L

SHEET NO. 10 OF 11

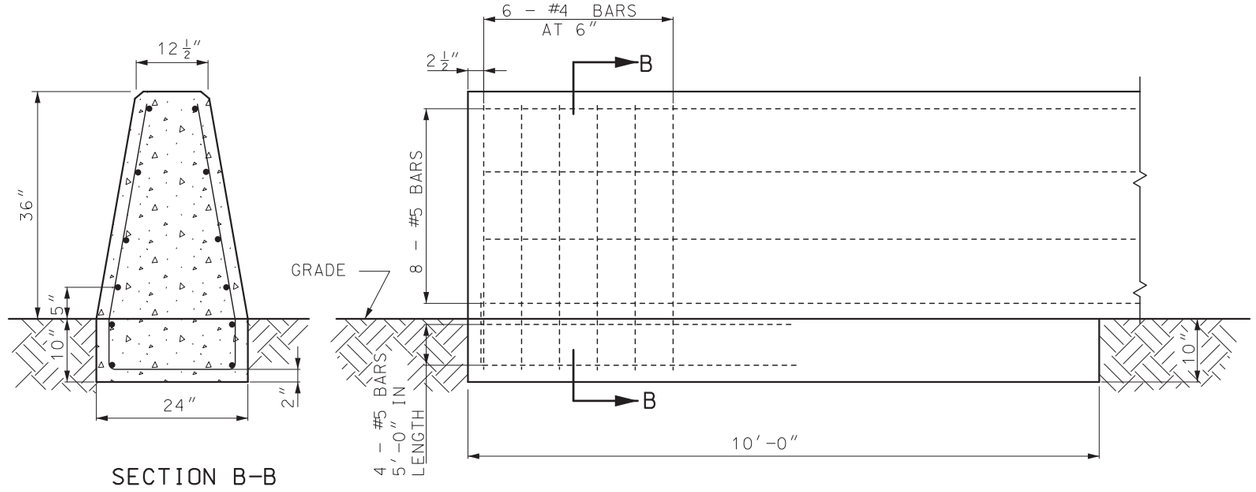

SECTION B–B

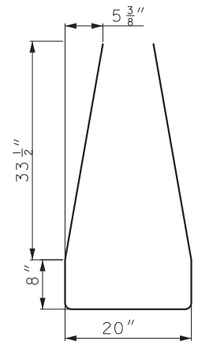

#4 BARS

CONCRETE BARRIER END ANCHORAGE ON GRADE

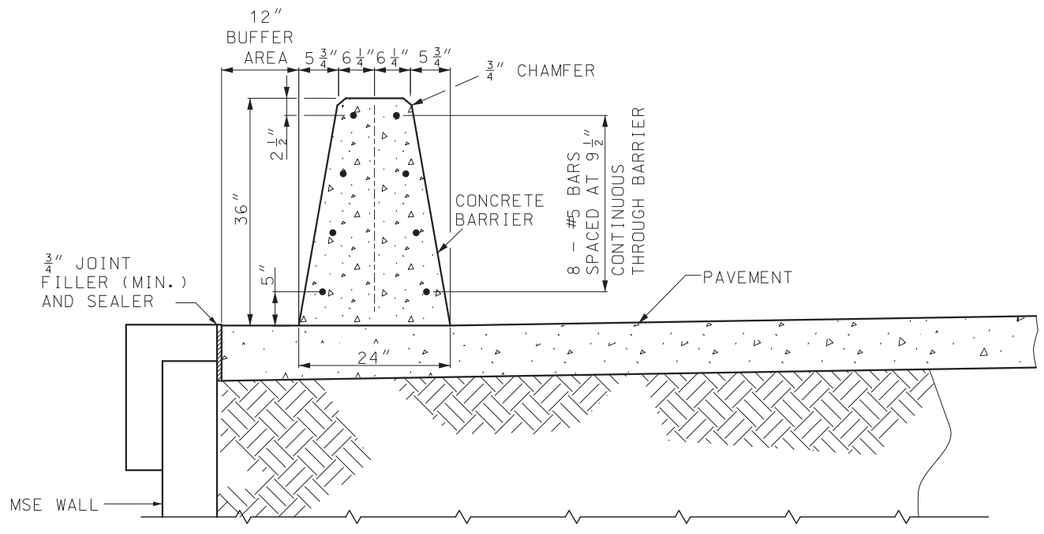

TRAFFIC BARRIER ON TOP OF MSE WALL

GENERAL NOTES:

ALL REINFORCEMENT SHALL BE GRADE 60 EPOXY COATED.

MINIMUM CLEARANCE TO REINFORCING STEEL SHALL BE 1 1/2″, UNLESS OTHERWISE SHOWN.

A 12″ BUFFER REQUIRED WITHIN THE LIMITS OF THE TRAFFIC BARRIER EXCLUDING THE END ANCHORAGE SECTIONS.

FOR CONCRETE TRAFFIC BARRIER DELINEATION DETAILS SEE STD PLAN 903.03.

PAVEMENT SURFACE DIFFERENTIAL SHALL NOT EXCEED 1 1/2″.

BAR SPLICES SHALL BE A MINIMUM OF 24 TIMES THE NOMINAL DIAMETER OF THE BAR.

MISSOURI HIGHWAYS AND TRANSPORTATION COMMISSION
105 WEST CAPITOL
JEFFERSON CITY, MO 65102
1-888-ASK-MODOT (1-888-275-6636)

STATE OF MISSOURI
ERIC E. SCHROETER
NUMBER PE-28411
PROFESSIONAL ENGINEER
THIS SHEET HAS BEEN SIGNED, SEALED AND DATED ELECTRONICALLY.

PERMANENT CONCRETE TRAFFIC BARRIER

TYPE E ATOP MSE WALL

DATE EFFECTIVE: 01/01/2019
DATE PREPARED: 10/17/2018

617.10L

SHEET NO. 11OF 11

IF A SEAL IS PRESENT ON THIS SHEET IT HAS BEEN ELECTRONICALLY SEALED AND DATED.

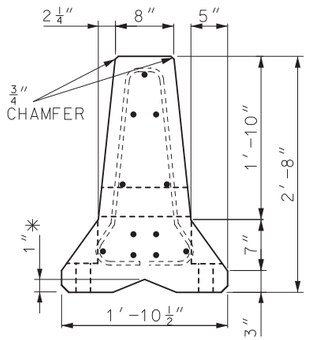

SECTION B-B
* V-NOTCH OPTIONAL

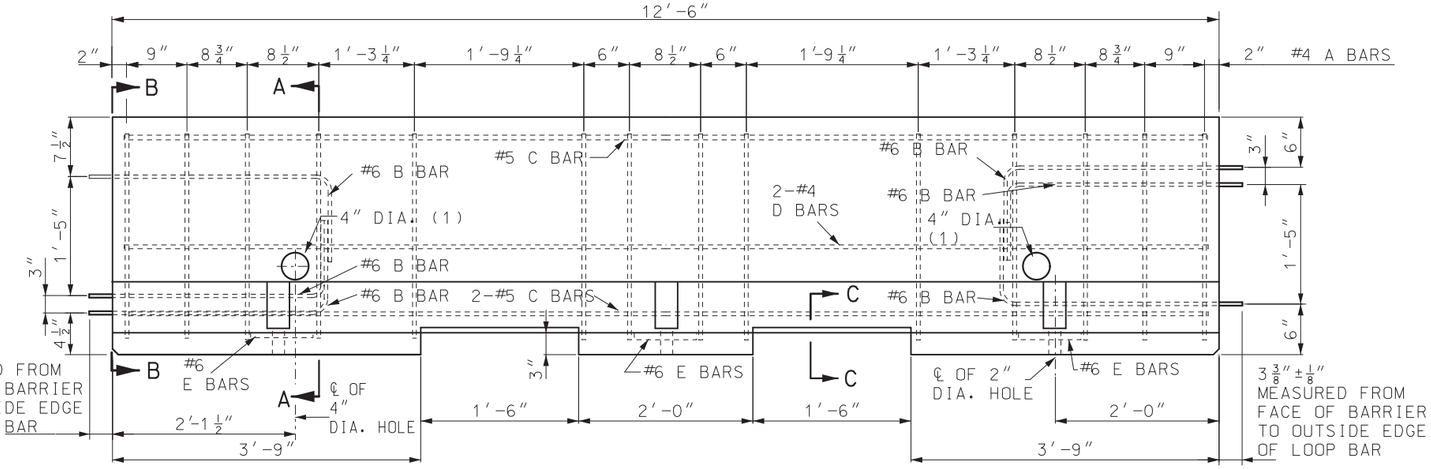

(1) 4 INCH DIAMETER - 11 GAUGE STEEL ROUND MECHANICAL TUBING SLEEVE. THESE HOLES ARE OPTIONAL.

ELEVATION VIEW

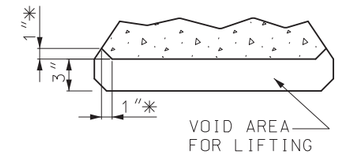

PART SECTION C-C
LIFTING SLOT DETAIL
* RADIUS EDGER TO PREVENT SPALLING

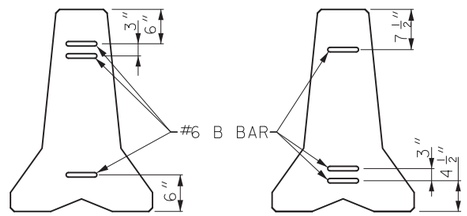

ALTERNATING END VIEWS FOR BARRIER LOOP CONNECTION

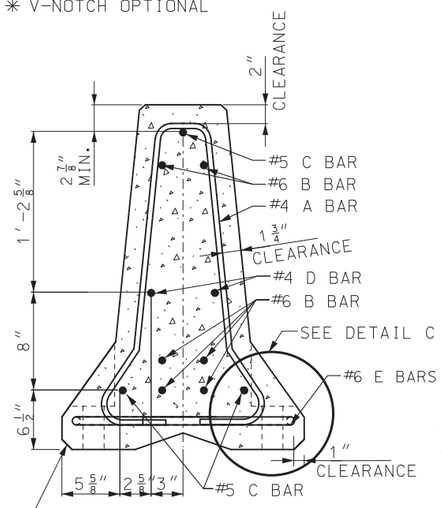

SECTION A-A
STIRRUP PLACEMENT
WITH BAR REINFORCEMENT

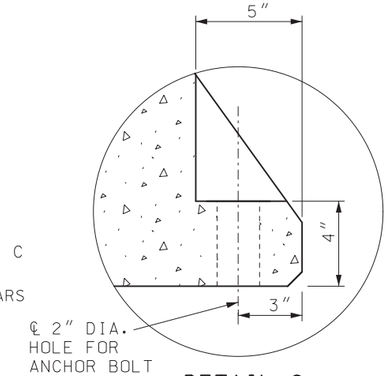

DETAIL C

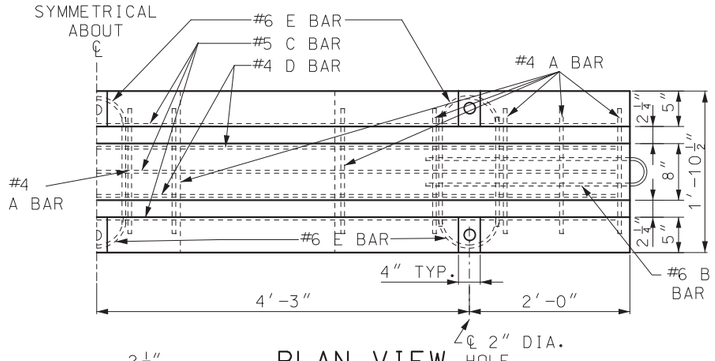

PLAN VIEW

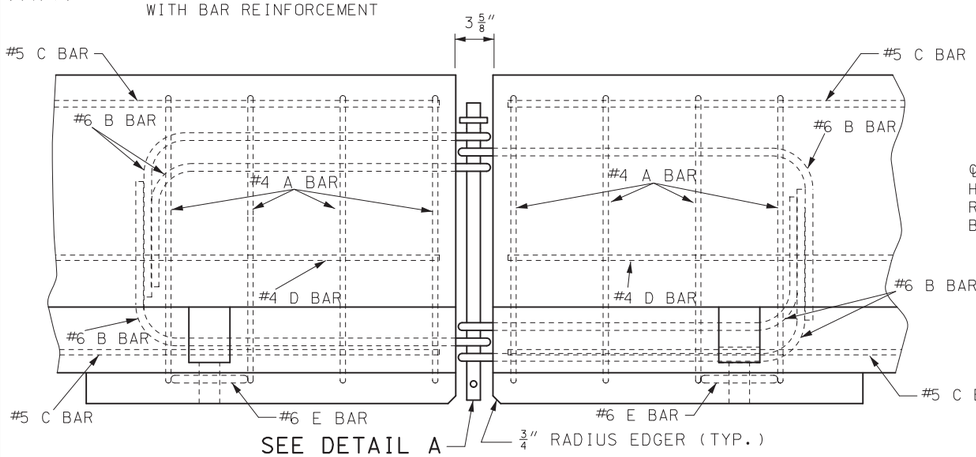

SEE DETAIL A
DETAILS OF BARRIER CONNECTION

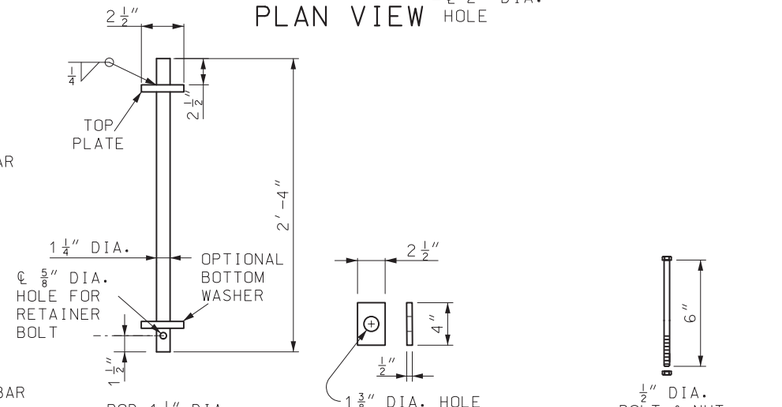

CONNECTION ROD (A36)

TOP PLATE & BOTTOM WASHER (A36)

RETAINER BOLT AND NUT (SAE GRADE 8)

NOTE: RETAINER BOLT AND BOTTOM WASHER AT CONTRACTOR'S OPTION.

DETAIL A
CONNECTION ROD ASSEMBLY

GENERAL NOTES:

ALL REINFORCING SHALL MEET REQUIREMENTS OF CRSI EXCEPT WHERE SHOWN ON PLANS.

REINFORCING STEEL CLEARANCE TO EDGE OF CONCRETE SHALL BE 1 3/4" UNLESS OTHERWISE SHOWN.

AT NO TIME SHALL THE BARRIERS BE LIFTED OR MOVED BY USE OF THE LOOP BARS.

THE SECTION FURNISHED SHALL COMPLY WITH DIMENSIONS SHOWN, AS APPROVED BY THE ENGINEER.

SEE SHEET 3 FOR DELINEATOR DETAILS.

IF A SEAL IS PRESENT ON THIS SHEET IT HAS BEEN ELECTRONICALLY SEALED AND DATED.

MISSOURI HIGHWAYS AND TRANSPORTATION COMMISSION
105 WEST CAPITOL
JEFFERSON CITY, MO 65102
1-888-ASK-MODOT (1-888-275-6636)

STATE OF MISSOURI
ERIC E. SCHROETER
NUMBER PE-28411
PROFESSIONAL ENGINEER
THIS SHEET HAS BEEN SIGNED, SEALED AND DATED ELECTRONICALLY.

TEMPORARY CONCRETE TRAFFIC BARRIER
TYPE F

DATE EFFECTIVE: 01/01/2018
DATE PREPARED: 5/14/2018

617.20E

SHEET NO. 1 OF 8

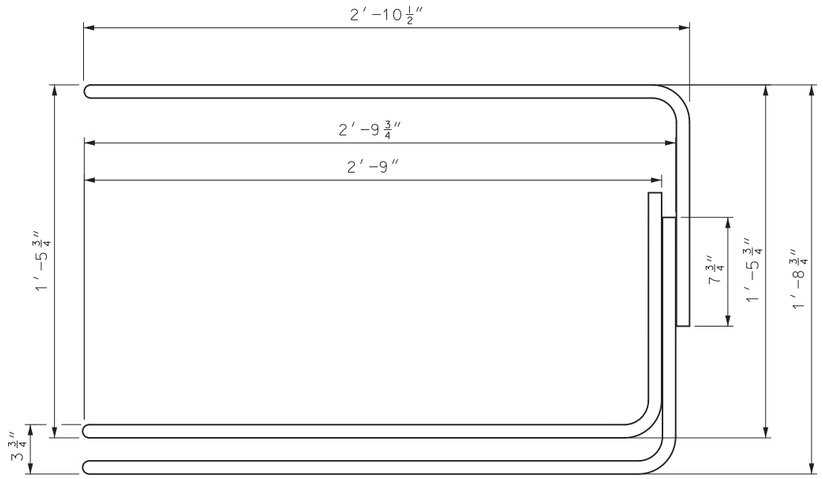

#6 B BAR ELEVATION

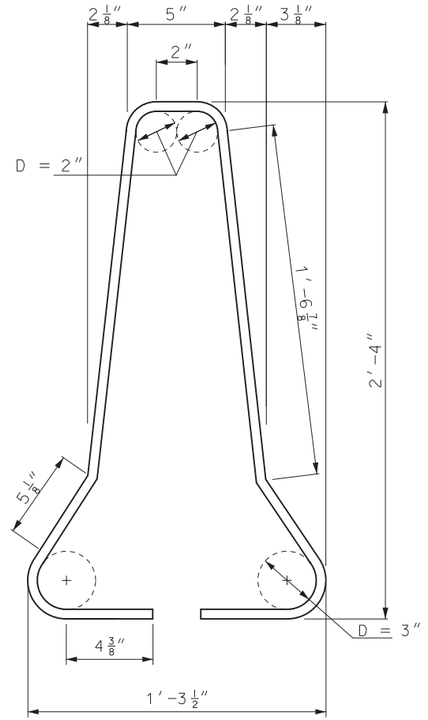

#4 A BARS

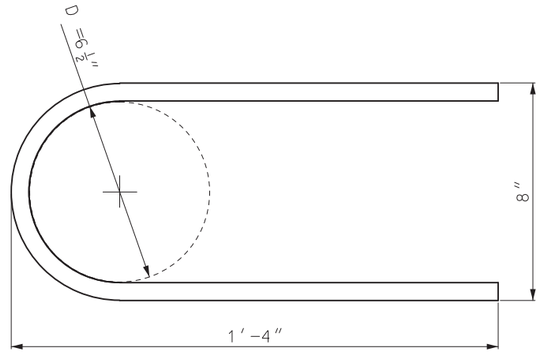

#6 E BAR

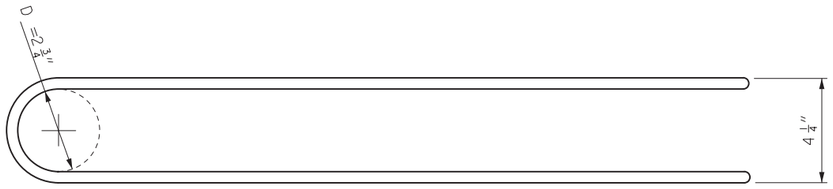

#6 B BAR PLAN

REINFORCING BARS PER 12′- 6″ BARRIER SECTION					
MARK	BAR SIZE	NO. OF BARS	SHAPE OF EACH	LENGTH EACH (NOM.)	WEIGHT
A	4	14		6′-5″	60.8 lbs
C	5	3		12′-2″	38.1 lbs
D	4	2		12′-2″	16.3 lbs
E	6	6		2′-11″	26.3 lbs
LOOP ASSEMBLY					
B	6	6		7′-10″	70.5 lbs

CONCRETE VOLUME 1.3 CU YDS APPROXIMATE WEIGHT 5601 LBS.

GENERAL NOTE:

DIMENSIONS ARE OUT TO OUT OF BARS UNLESS OTHERWISE NOTED.

IF A SEAL IS PRESENT ON THIS SHEET IT HAS BEEN ELECTRONICALLY SEALED AND DATED.

MISSOURI HIGHWAYS AND TRANSPORTATION COMMISSION
105 WEST CAPITOL
JEFFERSON CITY, MO 65102
1-888-ASK-MODOT (1-888-275-6636)

STATE OF MISSOURI
ERIC E. SCHROETER
NUMBER PE-28411
PROFESSIONAL ENGINEER
THIS SHEET HAS BEEN SIGNED, SEALED AND DATED ELECTRONICALLY.

TEMPORARY CONCRETE TRAFFIC BARRIER
TYPE F

DATE EFFECTIVE: 10/01/2015
DATE PREPARED: 5/14/2018

617.20E

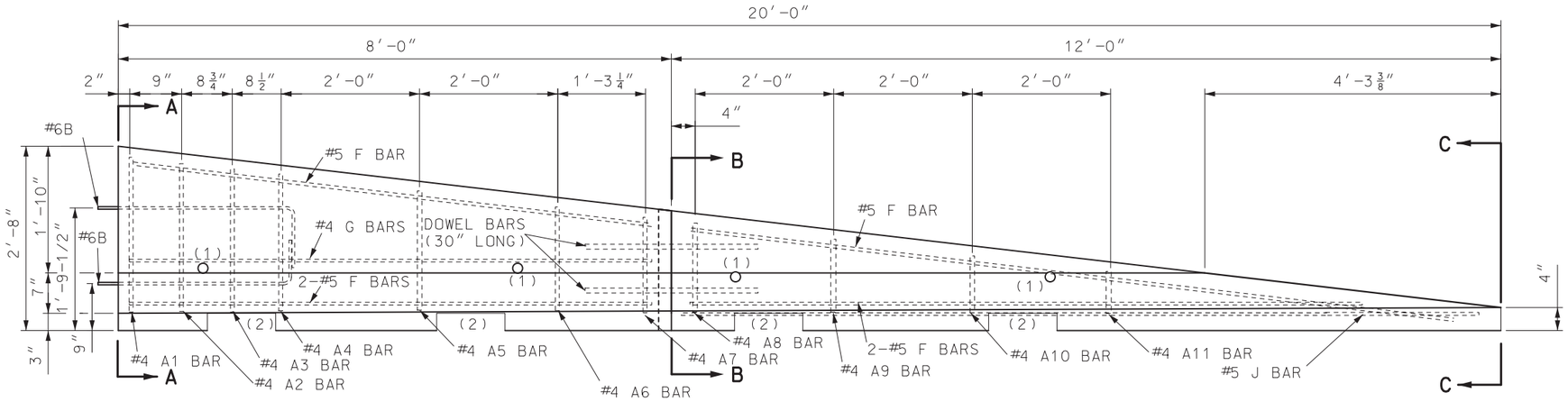

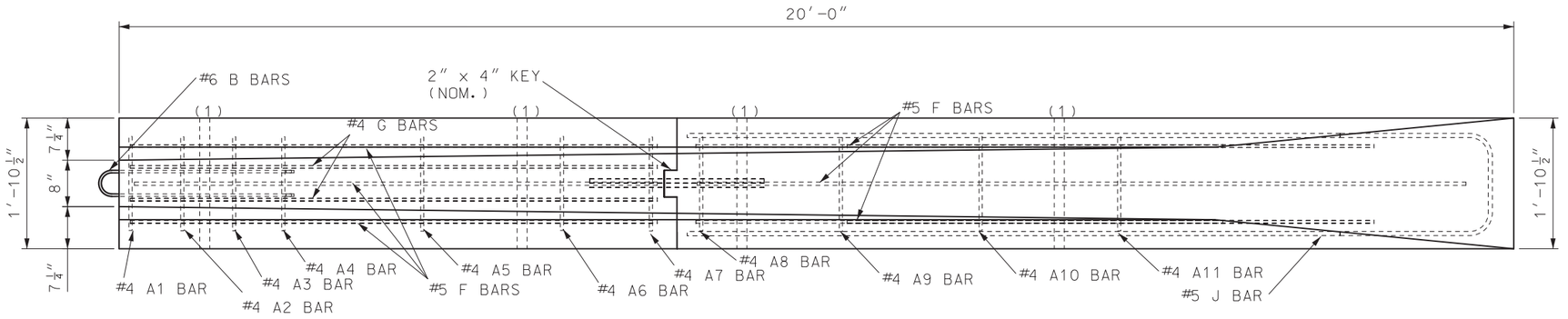

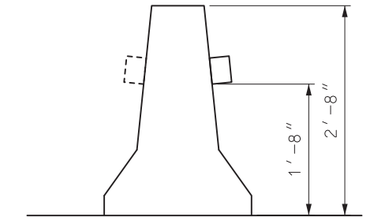

TRAFFIC BARRIER DELINEATORS

REFLECTIVE SHEETING APPLIED TO TRAFFIC BARRIER DELINEATORS SHALL BE IN ACCORDANCE WITH SEC 1042.2.7.5.

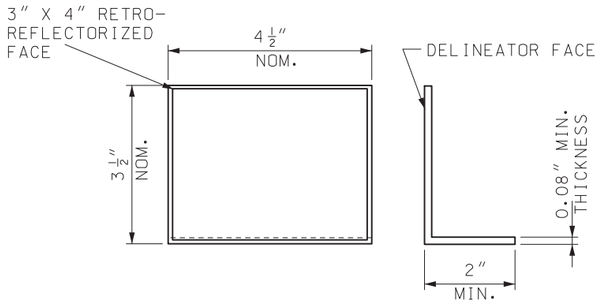

DELINEATOR

GENERAL NOTES:

REINFORCING STEEL CLEARANCE TO EDGE OF CONCRETE SHALL BE 1¾″ UNLESS OTHERWISE SHOWN.

HEIGHT TRANSITIONS SHALL NOT BE USED ON INTERSTATE ROUTES OR IN LOCATIONS WHERE THE POSTED SPEED PRIOR TO CONSTRUCTION IS GREATER THAN 35 MPH.

AT NO TIME SHALL THE BARRIERS BE LIFTED OR MOVED BY USE OF THE LOOP BARS.

RETAINER BOLT AND NUT MUST BE USED WITH TRANSITION BARRIER.

AT THE OPTION OF THE CONTRACTOR, HEIGHT TRANSITIONS MAY BE MANUFACTURED IN ONE SECTION. THE PLANS FOR REINFORCEMENT ACROSS JOINT SHALL BE APPROVED BY THE ENGINEER PRIOR TO MANUFACTURE.

PRECAST BARRIER HEIGHT TRANSITION
(TEMPORARY INSTALLATIONS ONLY)

(1) OPTIONAL 4 INCH DIAMETER, 11 GUAGE STEEL ROUND MECHANICAL TUBING SLEEVE FOR LIFT HOLE ALLOWED. THE LOCATION OF THE HOLE MAY VARY TO ACCOMMODATE THE DIFFERING WEIGHT DISTRIBUTIONS OF TRANSITION SECTIONS.

(2) 3″ X 1′-0″ SLOTS FOR LIFTING – TWO PER SECTION. LOCATION TO BE DETERMINED BY CONTRACTOR.

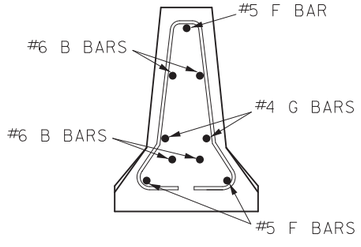

SECTION A–A

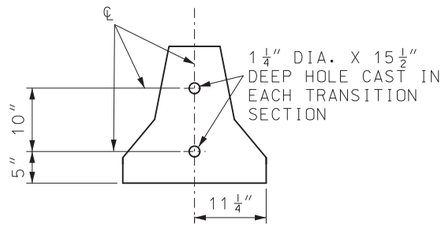

SECTION B–B

NOTE: SECTIONS TO BE CONNECTED WITH TWO– 1″ DIA. BARS OR #8 REINFORCING BARS 30″ LONG IN 1¼″ DIA. HOLES AS SHOWN.

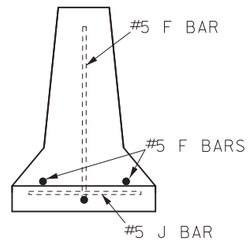

SECTION C–C

MISSOURI HIGHWAYS AND TRANSPORTATION COMMISSION
105 WEST CAPITOL
JEFFERSON CITY, MO 65102
1-888-ASK-MODOT (1-888-275-6636)

STATE OF MISSOURI
TRAVIS D. KOESTNER
NUMBER PE-30042
PROFESSIONAL ENGINEER
THIS SHEET HAS BEEN SIGNED, SEALED AND DATED ELECTRONICALLY.

TEMPORARY CONCRETE TRAFFIC BARRIER
TYPE F HEIGHT TRANSITIONS

DATE EFFECTIVE: 07/01/2019
DATE PREPARED: 5/17/2019

617.20E

SHEET NO. 3 OF 8

IF A SEAL IS PRESENT ON THIS SHEET IT HAS BEEN ELECTRONICALLY SEALED AND DATED.

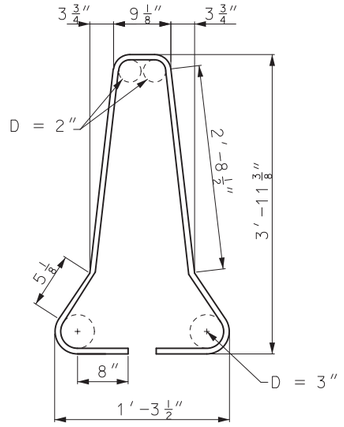

#4 A1 BAR

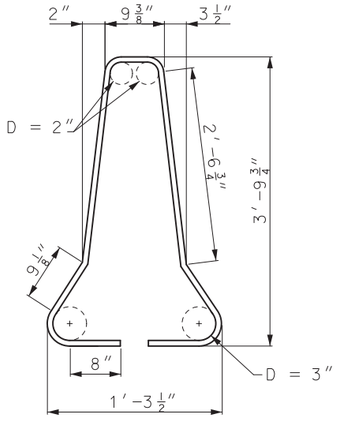

#4 A2 BAR

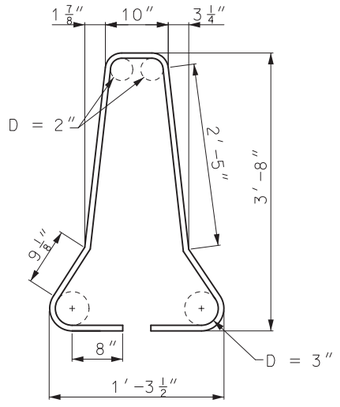

#4 A3 BAR

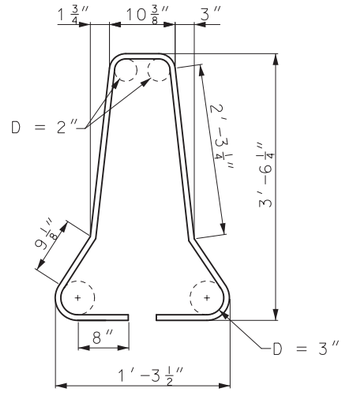

#4 A4 BAR

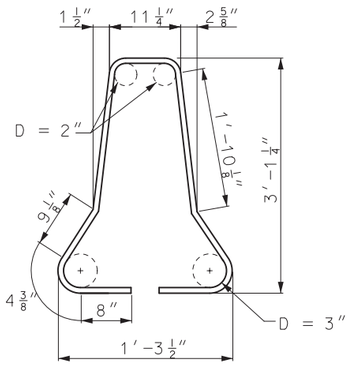

#4 A5 BAR

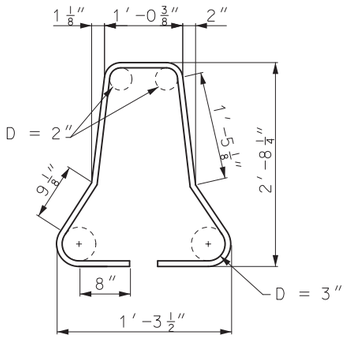

#4 A6 BAR

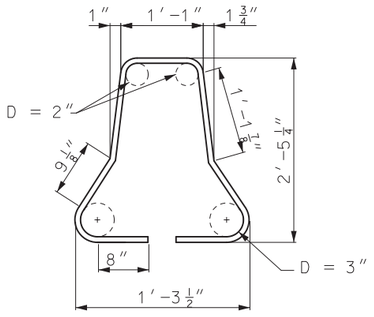

#4 A7 BAR

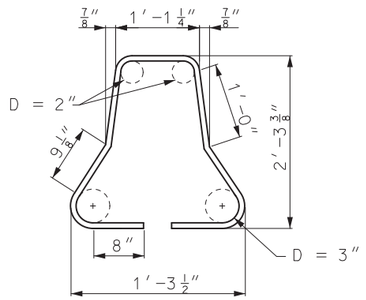

#4 A8 BAR

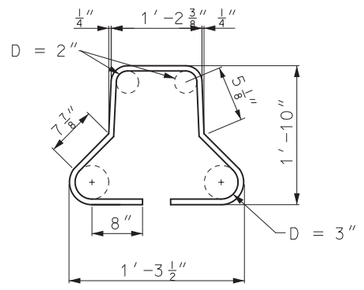

#4 A9 BAR

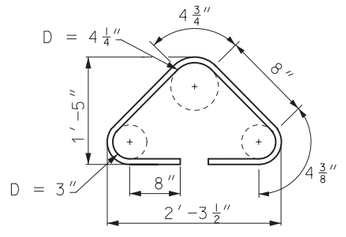

#4 A10 BAR

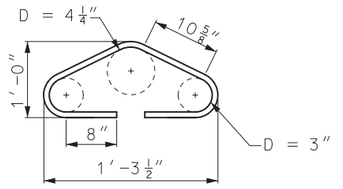

#4 A11 BAR

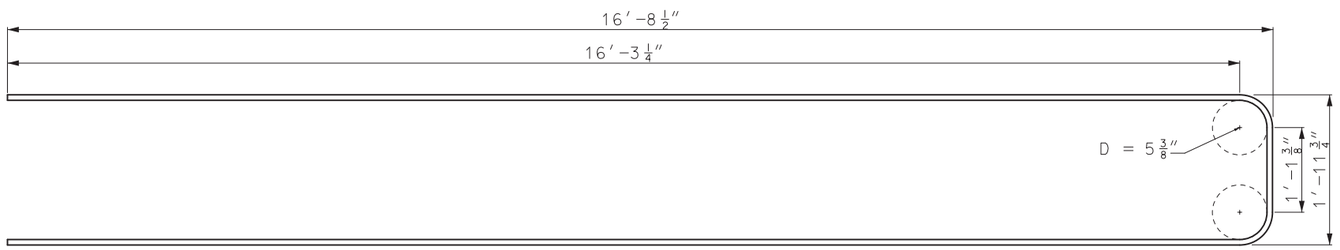

#5 J BAR

NOTE: FOR DETAILS OF B BARS, SEE SHEET 2 OF 6.

GENERAL NOTES:

DIMENSIONS ARE OUT TO OUT OF BARS UNLESS OTHERWISE NOTED.

MISSOURI HIGHWAYS AND TRANSPORTATION COMMISSION
105 WEST CAPITOL
JEFFERSON CITY, MO 65102
1-888-ASK-MODOT (1-888-275-6636)

STATE OF MISSOURI
ERIC E. SCHROETER
NUMBER PE-28411
PROFESSIONAL ENGINEER
THIS SHEET HAS BEEN SIGNED, SEALED AND DATED ELECTRONICALLY.

TEMPORARY CONCRETE TRAFFIC BARRIER
TYPE F HEIGHT TRANSITIONS

DATE EFFECTIVE: 10/01/2015
DATE PREPARED: 5/14/2018

617.20E

SHEET NO. 4 OF 8

IF A SEAL IS PRESENT ON THIS SHEET IT HAS BEEN ELECTRONICALLY SEALED AND DATED.

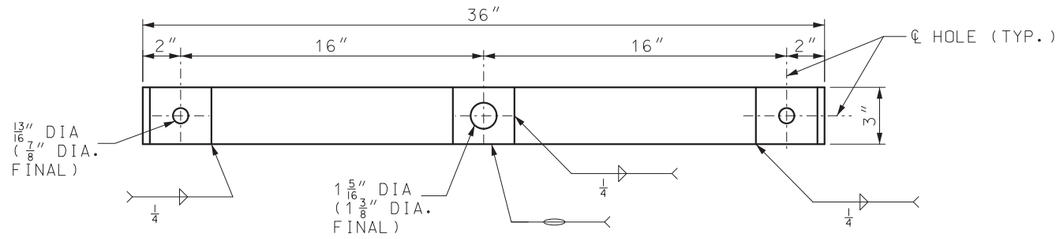

PLAN OF TIE-DOWN STRAP

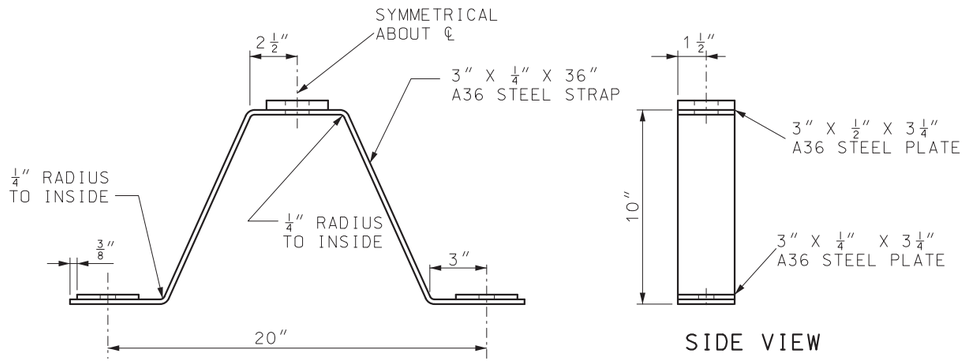

SIDE VIEW

DETAILS OF TYPE F TEMPORARY BARRIER TIE-DOWN STRAP

(1) TIE-DOWN STRAP ANCHOR SHALL BE ONE OF THE FOLLOWING:

$\frac{3}{4}$″ DROP IN ANCHOR WITH A $3\frac{1}{4}$″ EMBEDMENT AND $\frac{3}{4}$″ DIA. X $1\frac{3}{4}$″ LONG GRADE 5 BOLT.

RED HEAD LARGE DIAMETER TAPCON (LDT) $\frac{3}{4}$″ X $4\frac{1}{2}$″ LONG WITH A 4″ EMBEDMENT.

SIMPSON TITEN HD $\frac{3}{4}$″ DIA. X 5″ LONG WITH A $4\frac{1}{2}$″ EMBEDMENT.

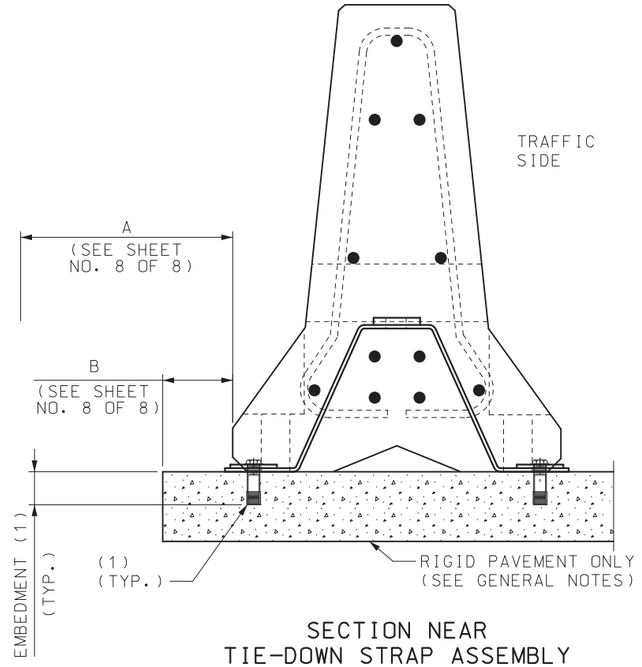

SECTION NEAR
TIE-DOWN STRAP ASSEMBLY

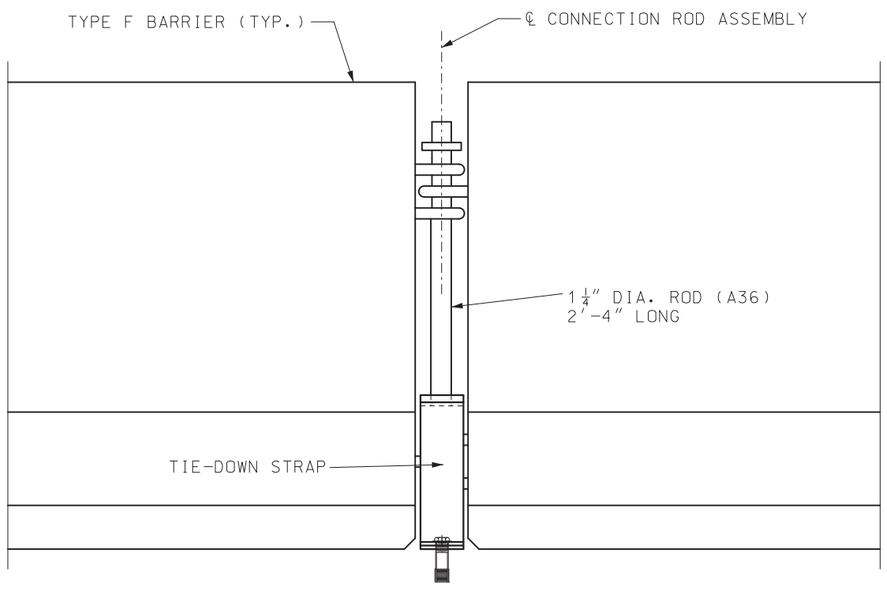

PART ELEVATION OF BARRIER

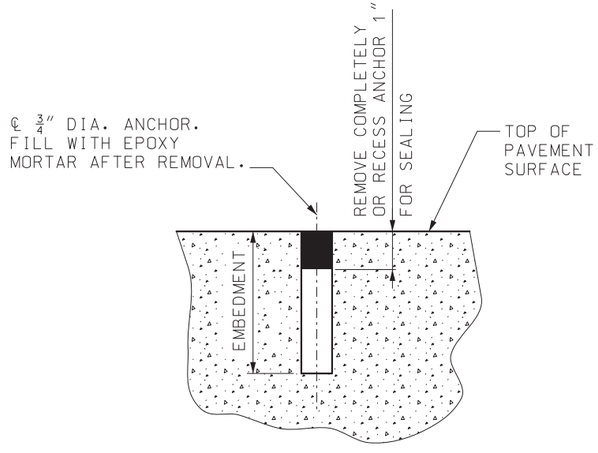

DETAIL SHOWING SEALING OF HOLES
AFTER REMOVAL OF TIE-DOWN BOLTS

GENERAL NOTES:

TIE-DOWN STRAP SYSTEMS ARE ONLY APPLICABLE ON RIGID PAVEMENTS.

CONTRACTOR SHALL VERIFY ALL DIMENSIONS IN FIELD BEFORE ORDERING NEW MATERIAL.

SEE OTHER SHEETS FOR DETAILS NOT SHOWN.

MISSOURI HIGHWAYS AND TRANSPORTATION COMMISSION
105 WEST CAPITOL
JEFFERSON CITY, MO 65102
1-888-ASK-MODOT (1-888-275-6636)

STATE OF MISSOURI
ERIC E. SCHROETER
NUMBER PE-28411
PROFESSIONAL ENGINEER
THIS SHEET HAS BEEN SIGNED, SEALED AND DATED ELECTRONICALLY.

TEMPORARY CONCRETE TRAFFIC BARRIER
ANCHORED
(TIE-DOWN STRAP SYSTEM)

DATE EFFECTIVE: 07/01/2018
DATE PREPARED: 5/3/2018

617.20E

SHEET NO. 5 OF 8

IF A SEAL IS PRESENT ON THIS SHEET IT HAS BEEN ELECTRONICALLY SEALED AND DATED.

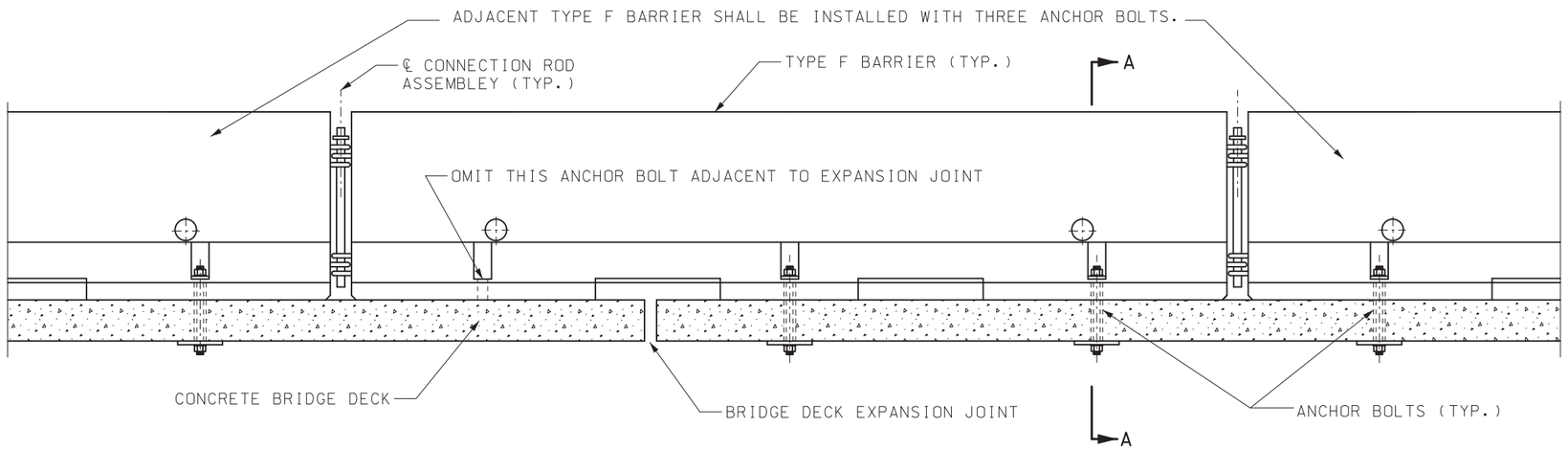

BOLT THROUGH DECK AT THERMAL EXPANSION JOINTS

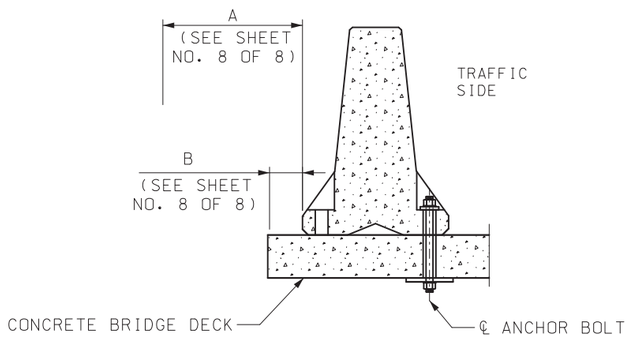

SECTION A–A

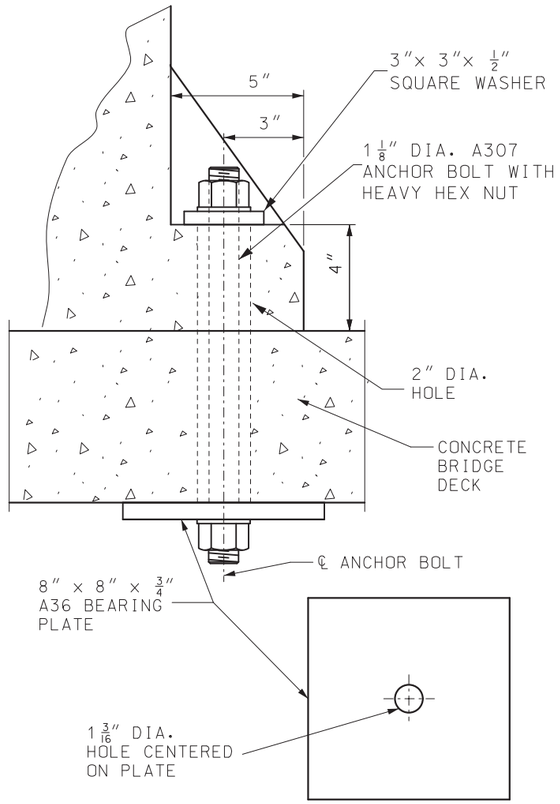

BOLT THROUGH DECK DETAIL

GENERAL NOTES:

ANCHOR BOLT SYSTEMS ARE ONLY APPLICABLE ON BRIDGE DECKS AND RIGID PAVEMENTS.

CONTRACTOR SHALL VERIFY ALL DIMENSIONS IN FIELD BEFORE ORDERING NEW MATERIAL.

SEE OTHER SHEETS FOR DETAILS NOT SHOWN.

AFTER REMOVAL OF ANCHOR BOLTS HOLES SHALL BE FILLED WITH QUALIFIED SPECIAL MORTAR IN ACCORDANCE WITH SEC 704.

MISSOURI HIGHWAYS AND TRANSPORTATION COMMISSION
105 WEST CAPITOL
JEFFERSON CITY, MO 65102
1-888-ASK-MODOT (1-888-275-6636)

STATE OF MISSOURI
ERIC E. SCHROETER
NUMBER PE-28411
PROFESSIONAL ENGINEER
THIS SHEET HAS BEEN SIGNED, SEALED AND DATED ELECTRONICALLY.

TEMPORARY CONCRETE TRAFFIC BARRIER
ANCHORED (BOLT SYSTEM)

DATE EFFECTIVE: 10/01/2015
DATE PREPARED: 5/14/2018

617.20E

SHEET NO. 6 OF 8

IF A SEAL IS PRESENT ON THIS SHEET IT HAS BEEN ELECTRONICALLY SEALED AND DATED.

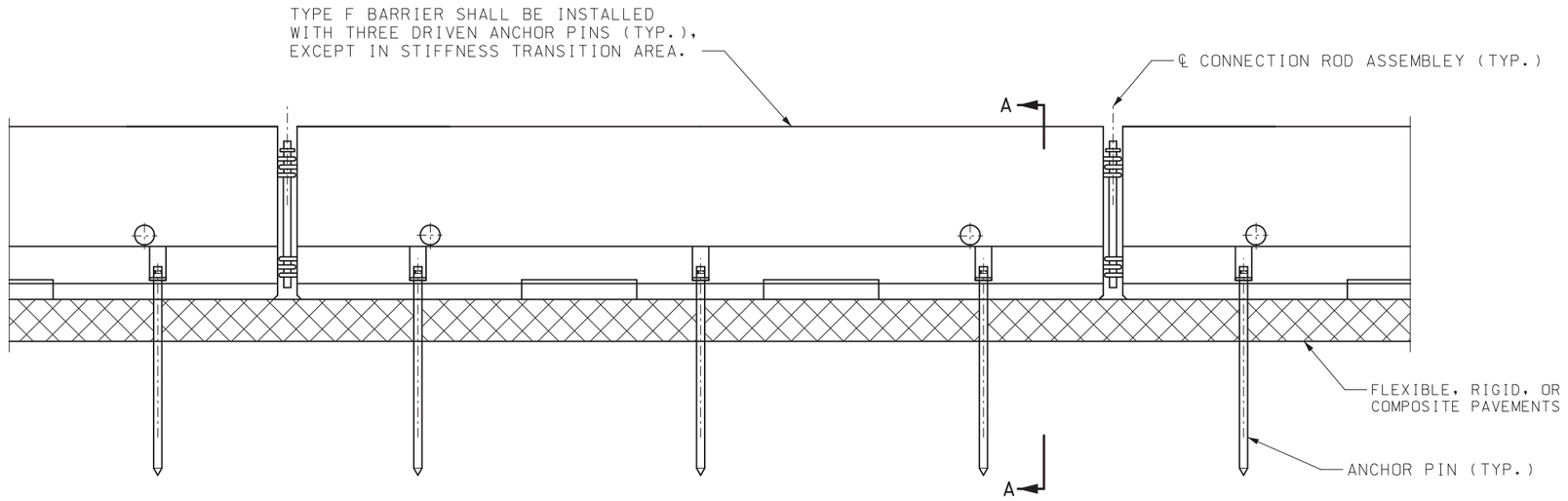

ELEVATION OF BARRIER WITH ANCHOR PINS

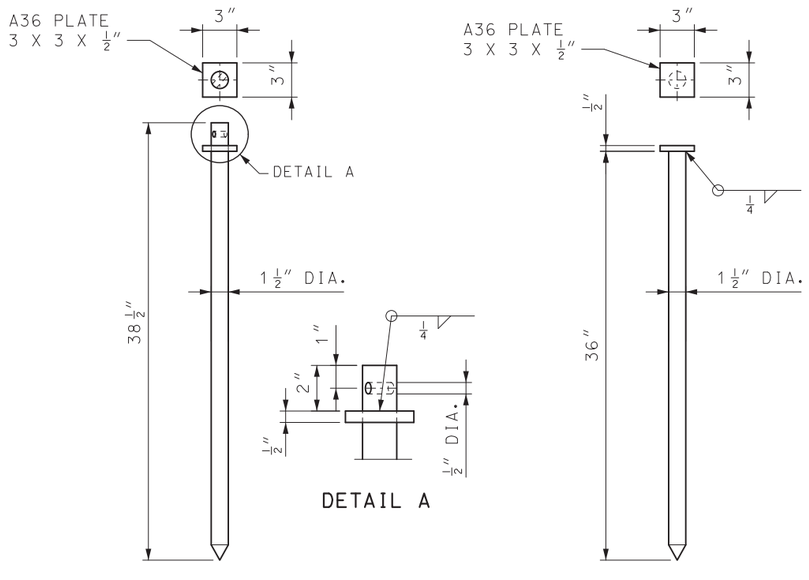

DETAIL A

(OPTIONAL)

DRIVEN ANCHOR PIN (A36)

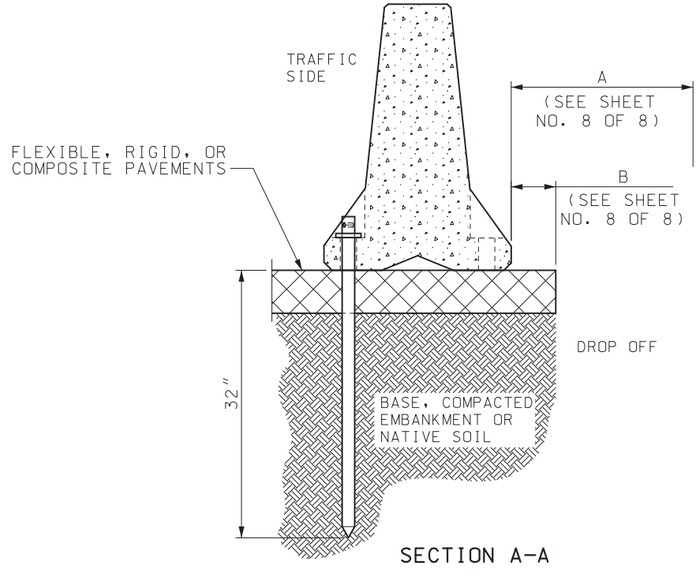

SECTION A-A

GENERAL NOTES:

CONTRACTOR SHALL VERIFY ALL DIMENSIONS IN FIELD BEFORE ORDERING NEW MATERIAL.

WHERE EXISTING FLEXIBLE PAVEMENT OR RIGID PAVEMENT IS NOT PRESENT A 2" THICK X 30" WIDE MINIMUM ASPHALT PAD SHALL BE CONSTRUCTED.

COST OF FURNISHING AND INSTALLING THE ASPHALT PAD COMPLETE-IN-PLACE WILL BE CONSIDERED INCIDENTAL TO OTHER PAY ITEMS.

SEE OTHER SHEETS FOR DETAILS NOT SHOWN.

AFTER REMOVAL OF ANCHOR PINS HOLES SHALL BE FILLED WITH QUALIFIED SPECIAL MORTAR IN ACCORDANCE WITH SEC 704.

MISSOURI HIGHWAYS AND TRANSPORTATION COMMISSION
105 WEST CAPITOL
JEFFERSON CITY, MO 65102
1-888-ASK-MODOT (1-888-275-6636)

STATE OF MISSOURI
ERIC E. SCHROETER
NUMBER PE-28411
PROFESSIONAL ENGINEER
THIS SHEET HAS BEEN SIGNED, SEALED AND DATED ELECTRONICALLY.

TEMPORARY CONCRETE TRAFFIC BARRIER

ANCHORED (PIN SYSTEM)

DATE EFFECTIVE: 07/01/2018
DATE PREPARED: 5/3/2018

617.20E

SHEET NO. 7 OF 8

IF A SEAL IS PRESENT ON THIS SHEET IT HAS BEEN ELECTRONICALLY SEALED AND DATED.

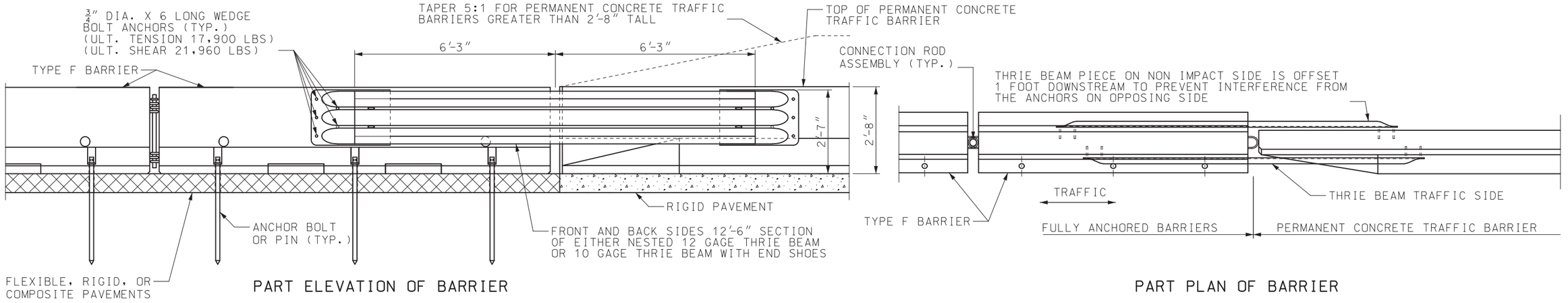

PART ELEVATION OF BARRIER

PART PLAN OF BARRIER

STIFFNESS TRANSITION FROM FULLY ANCHORED BARRIER WITH BOLTS OR PINS TO PERMANENT CONCRETE TRAFFIC BARRIER

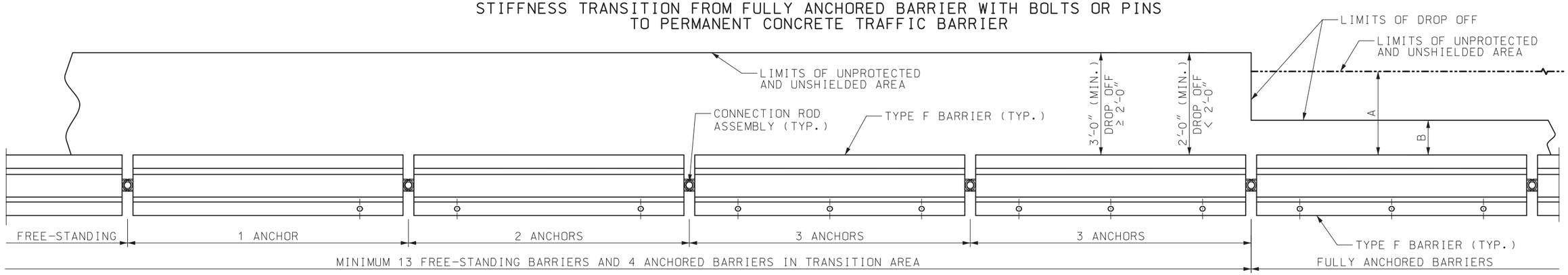

PLAN OF STIFFNESS TRANSITION FROM FREE-STANDING BARRIERS TO FULLY ANCHORED BARRIER WITH BOLTS OR PINS

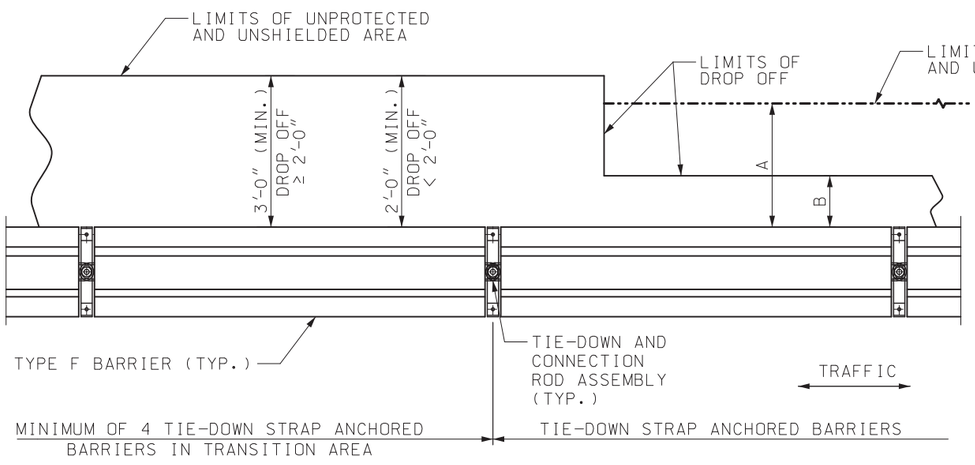

STIFFNESS TRANSITION FOR BARRIER ANCHORED WITH TIE-DOWN STRAPS

(13 FREE-STANDING BARRIERS NOT REQUIRED)

LIMITS OF UNPROTECTED AND UNSHIELDED AREA	
6" ≤ A < 2'	ANCHOR EACH BARRIER WITH 3 ANCHOR BOLTS OR PINS
2' ≤ A < 3'	ANCHOR WITH BOLTS, PINS, OR TIE-DOWN STRAPS
A ≥ 3'	NO ANCHORAGE REQUIRED UNLESS SHOWN ON PLANS

EDGE OF DROP OFF	
1" ≤ B < 6"	ANCHOR EACH BARRIER WITH 3 ANCHOR BOLTS OR PINS
6" ≤ B < 2'	ANCHOR WITH BOLTS, PINS, OR TIE-DOWN STRAPS
B ≥ 2'	NO ANCHORAGE REQUIRED UNLESS SHOWN ON PLANS

NOTE: TEMPORARY CONCRETE TRAFFIC BARRIER MUST MEET BOTH A AND B DIMENSIONS, UNLESS OTHERWISE SHOWN ON PLANS.

GENERAL NOTES:
CONTRACTOR SHALL VERIFY ALL DIMENSIONS IN FIELD BEFORE ORDERING NEW MATERIAL.

COST OF FURNISHING AND INSTALLING THE ANCHOR BOLT SYSTEM, ANCHOR PINS SYSTEM, TIE-DOWN STRAP SYSTEM AND THRIE BEAM COMPLETE-IN-PLACE WILL BE CONSIDERED INCIDENTAL TO OTHER PAY ITEMS.

ALL TYPE F BARRIERS SHALL BE CONNECTED TO ADJACENT TYPE F BARRIERS WITH CONNECTION ROD ASSEMBLY, AND PULLED TIGHT DURING INSTALLATION TO REMOVE SLACK TO PROVIDE LONGITUDINAL TENSION DURING IMPACT.

AFTER REMOVAL OF ANCHORS HOLES SHALL BE FILLED WITH QUALIFIED SPECIAL MORTAR IN ACCORDANCE WITH SEC 704.

SEE OTHER SHEETS FOR DETAILS NOT SHOWN.

MISSOURI HIGHWAYS AND TRANSPORTATION COMMISSION
105 WEST CAPITOL
JEFFERSON CITY, MO 65102
1-888-ASK-MODOT (1-888-275-6636)

STATE OF MISSOURI
ERIC E. SCHROETER
NUMBER PE-2841
PROFESSIONAL ENGINEER
THIS SHEET HAS BEEN SIGNED, SEALED AND DATED ELECTRONICALLY.

TEMPORARY CONCRETE TRAFFIC BARRIER
STIFFNESS TRANSITION

DATE EFFECTIVE: 07/01/2018
DATE PREPARED: 5/3/2018

617.20E

SHEET NO. 8 OF 8

IF A SEAL IS PRESENT ON THIS SHEET IT HAS BEEN ELECTRONICALLY SEALED AND DATED.

	CROSS SECTION	CONDITION		TREATMENT	SIGN	
		DIFFERENTIAL	TIME		MAINLINE (1)	SIDE ROAD (2)
EDGE DROP-OFF	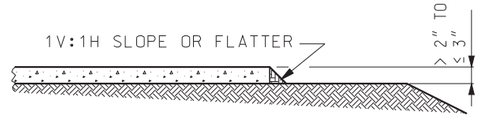	PAVEMENT EDGE DIFFERENTIAL > 2" TO ≤ 3"	NON-WORKING HOURS	WEDGE SLOPE TO 1V:1H OR FLATTER	 WO8-17 (3)(4) WO8-17p (6)	NO SIGNS REQUIRED
			WORKING HOURS	NO EDGE TREATMENT REQUIRED		
	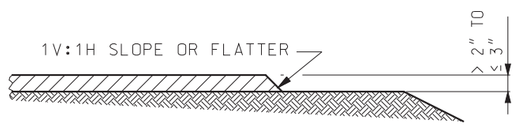	PAVEMENT EDGE DIFFERENTIAL > 2" TO ≤ 3"	NON-WORKING HOURS	WEDGE SLOPE TO 1V:1H OR FLATTER	 WO8-17 (3)(4) WO8-17p (6)	NO SIGNS REQUIRED
			WORKING HOURS	NO EDGE TREATMENT REQUIRED		
	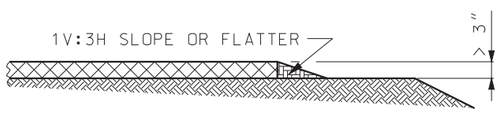	PAVEMENT EDGE DIFFERENTIAL > 3"	NON-WORKING HOURS	WEDGE SLOPE TO 1V:3H OR FLATTER	 WO8-17 (3)(4) WO8-17p (6)	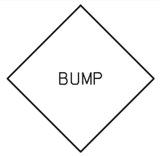 WO8-1 (3)
			WORKING HOURS	DELINEATE DIFFERENTIAL WITH CHANNELIZERS		
	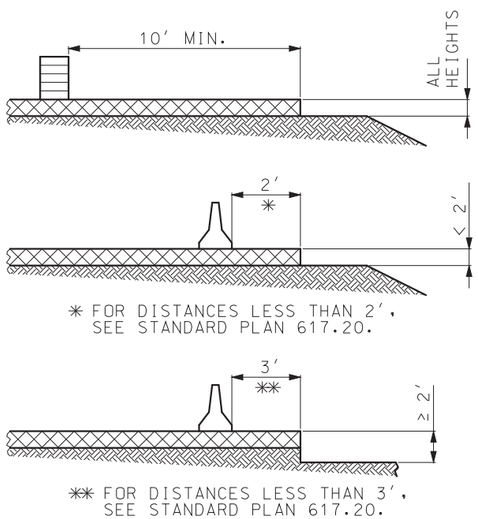	ANY PAVEMENT EDGE OR LANE LINE DIFFERENTIAL	NON-WORKING AND WORKING HOURS WHERE PLANS REQUIRE ADJACENT LANE CLOSURE WITH CHANNELIZATION OR PARTIAL LANE CLOSURE WITH BARRIER.	NO EDGE TREATMENT REQUIRED	NO SIGNS REQUIRED	NO SIGNS REQUIRED
LANE DIFFERENTIAL	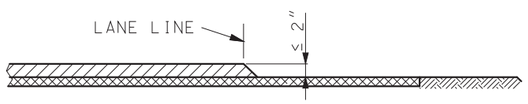	LANE LINE DIFFERENTIAL ≤ 2"	NON-WORKING AND WORKING HOURS	NO EDGE TREATMENT REQUIRED	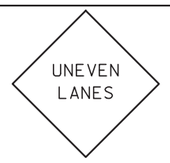 WO8-11 (5)	NO SIGNS REQUIRED
	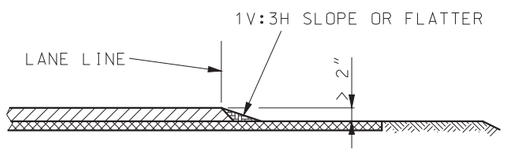	LANE LINE DIFFERENTIAL > 2"	NON-WORKING AND WORKING HOURS WHERE LANES OPEN TO TRAFFIC	WEDGE SLOPE TO 1V:3H OR FLATTER	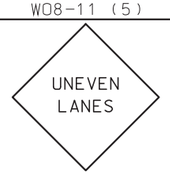 WO8-11 (5)	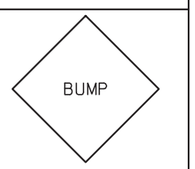 WO8-1
			NON-WORKING AND WORKING HOURS WHERE LANE CLOSED TO TRAFFIC	DELINEATE DIFFERENTIAL WITH CHANNELIZERS		

(1) SIGNS SHALL BE SPACED AT APPROXIMATELY ONE MILE INTERVALS AND LOCATED WITHIN 150 FT. BEYOND ANY STATE ROADS. WHEN A SIGN PLACED AT THE ONE MILE INTERVAL FALLS WITHIN 1/2 MILE OF A SIGN PLACED AFTER AN INTERSECTION, THE SIGN PLACED AT THE 1/2 MILE INTERVAL MAY BE OMITTED. WHEN SHOULDER DROP-OFF SIGNS WITH UNEVEN LANES ARE BOTH SPECIFIED, ALTERNATING SIGN MESSAGES SHALL BE USED AT 1 MILE SPACINGS.

(2) ON SIDE ROADS WITH POSTED SPEED OF 45 MPH OR GREATER, SIGNS SHALL BE PLACED 150 FT. IN ADVANCE OF INTERSECTION WITH MAINLINE.

(3) SIGNS SHALL BE LOCATED ON THE SIDE OF THE ROADWAY WHERE THE PAVEMENT EDGE DIFFERENTIAL EXISTS.

(4) SIGNS TO REMAIN VISIBLE UNTIL SHOULDER SHAPING IS COMPLETE.

(5) SIGNS SHALL BE LOCATED ON RIGHT SIDE OF NON-DIVIDED HIGHWAYS AND ON BOTH SIDES OF DIVIDED HIGHWAYS WHERE A LANE LINE DIFFERENTIAL EXISTS.

(6) WHEN THE SHOULDER DROP-OFF SIGNS ARE IN PLACE FOR GREATER THAN THREE DAYS, THE SHOULDER DROP-OFF PLAQUE SHOULD BE USED IN ADDITION WITH THE SHOULDER DROP-OFF SIGN.

LEGEND

- RIGID PAVEMENT
- FLEXIBLE PAVEMENT
- ALL PAVEMENT TYPES

GENERAL NOTES:

SIGNS SHALL BE VISIBLE TO TRAFFIC ONLY WHEN AND WHERE CONDITIONS EXIST.

FOR ADDITIONAL SIGN SPACING AND DETAILS SEE STANDARD PLAN 620.10.

MISSOURI HIGHWAYS AND TRANSPORTATION COMMISSION
105 WEST CAPITOL
JEFFERSON CITY, MO 65102
1-888-ASK-MODOT (1-888-275-6636)

STATE OF MISSOURI
ERIC E. SCHROETER
NUMBER PE-28411
PROFESSIONAL ENGINEER
THIS SHEET HAS BEEN SIGNED, SEALED AND DATED ELECTRONICALLY.

PAVEMENT EDGE TREATMENT

DATE EFFECTIVE: 10/01/2017
DATE PREPARED: 8/8/2017

619.10J

SHEET NO. 1 OF 1

IF A SEAL IS PRESENT ON THIS SHEET IT HAS BEEN ELECTRONICALLY SEALED AND DATED.

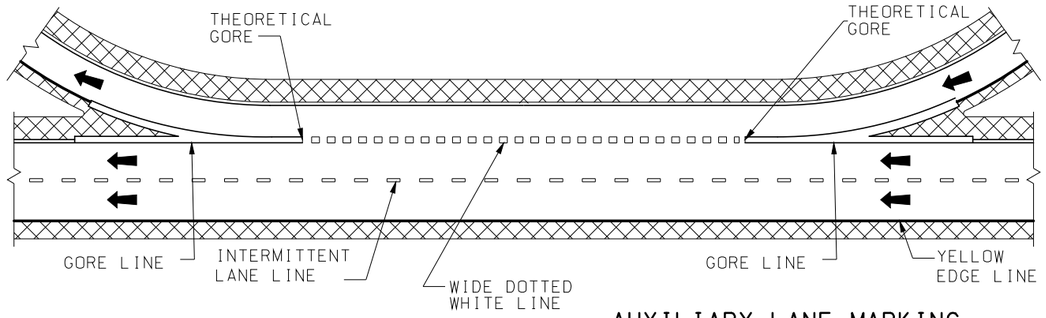

AUXILIARY LANE MARKING

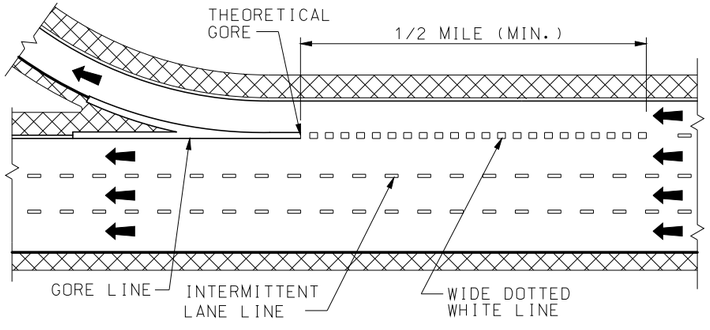

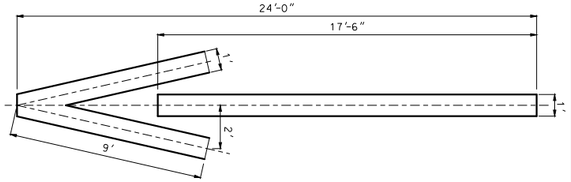

FIRST ARROW 25' FROM CROSSROAD OR STOP LINE.

MAXIMUM 3 ARROWS AT 100' INTERVALS.

ON MULTI-LANE RAMP USE ARROW IN EACH LANE.

WRONG WAY ARROWS ARE NOT USED WHEN RAMP HAS LANE USE CONTROL ARROWS.

OFF RAMP WRONG WAY ARROW

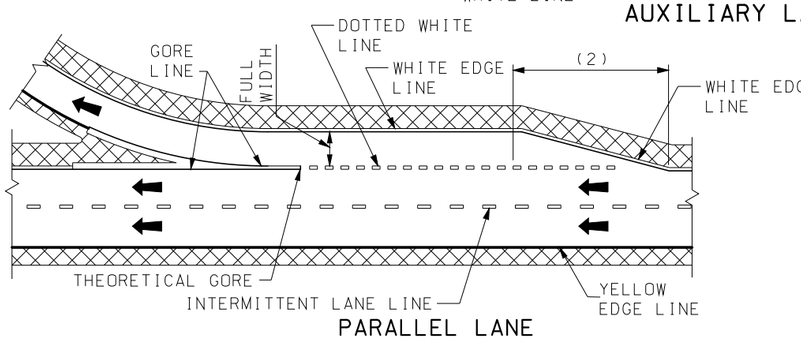

PARALLEL LANE

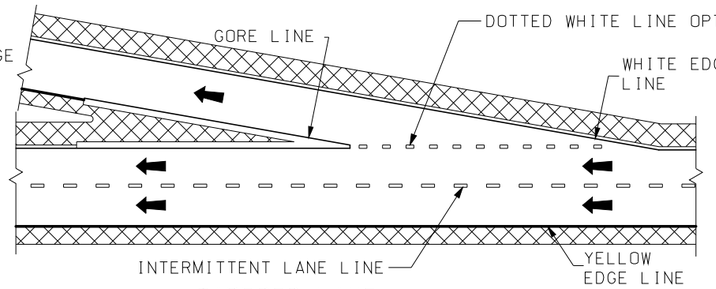

TAPERED LANE

EXIT RAMP MARKING

A = LENGTH OF ACCERLERATION LANE PLUS TAPER.

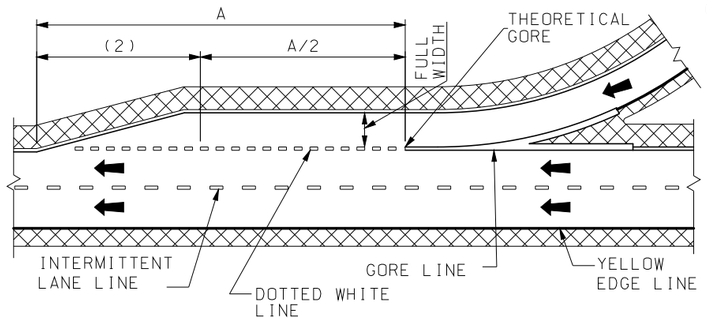

PARALLEL LANE

(2) DOTTED WHITE LINE OPTIONAL LOCATED WITHIN TAPER AREA.

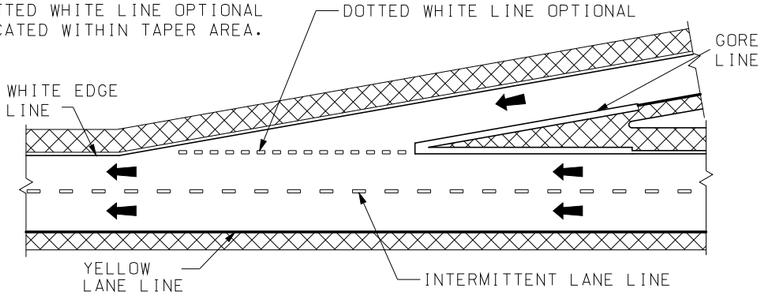

TAPERED LANE

ENTRANCE RAMP MARKING

L = LENGTH OF TAPER IN FEET.

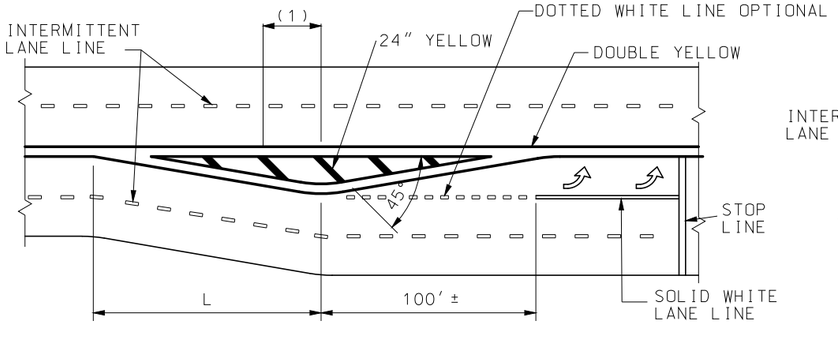

MEDIAN ISLAND MARKING

(1) 50' (TYP.) SPACE BETWEEN BARS. A MINIMUM OF 3 BARS ARE REQUIRED. IF NECESSARY, THE DISTANCE BETWEEN THE BARS SHALL BE DECREASED TO INSTALL 3 BARS.

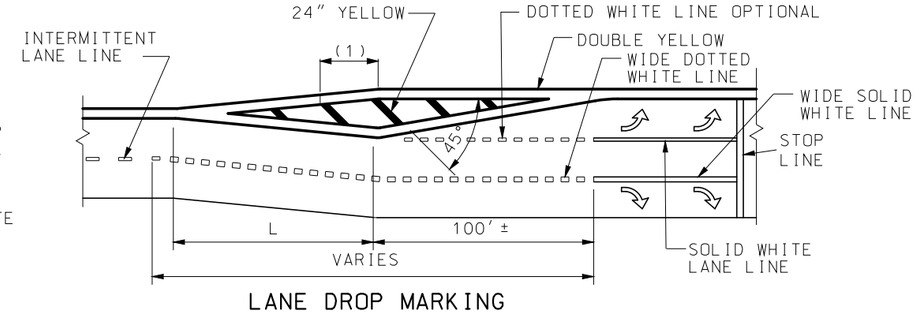

LANE DROP MARKING

GENERAL NOTES:

DOTTED LINES SHALL BE 3 FEET IN LENGTH SEPARATED BY 9 FOOT GAPS.

REFER TO THE STANDARD PLAN 626.00 WHEN INSTALLING PAVEMENT MARKINGS OVER RUMBLE STRIPS.

WIDE LINES ARE TWICE THE WIDTH OF NORMAL LINES.

LANE LINES SHALL BE AN INTERMITTENT OR SOLID WHITE.

INTERMITTENT LINES SHALL BE 10 FEET IN LENGTH SEPARATED BY 30 FOOT GAPS.

EDGELINES SHALL BE CONTINUOUS SOLID WHITE OR YELLOW LINES. RIGHT SIDE EDGELINES SHALL BE SOLID WHITE. MEDIAN OR LEFT SIDE EDGELINES ON DIVIDED HIGHWAYS AND ON THE LEFT SIDE OF RAMPS SHALL BE SOLID YELLOW. EDGELINES SHALL BE CONTINUOUS ACROSS DRIVEWAYS AND MINOR INTERSECTING ROADS.

"NO PASSING" LINES SHALL BE CONTINUOUS SOLID YELLOW.

"NO PASSING" LINES SHALL BE PLACED AS SHOWN IN "LINE DETAIL". "NO PASSING" LINES ON A TWO-LANE, TWO-WAY HIGHWAY WHEN PASSING IS PROHIBITED IN EACH DIRECTION SHALL BE PLACED 4 INCHES APART AND THE INTERMITTENT CENTERLINE SHALL BE OMITTED.

STOP LINES SHALL BE A SOLID WHITE TRANSVERSE LINE 24 INCHES WIDE, LOCATED AT LEAST 4 FEET FROM THE NEAREST EDGE OF THE INTERSECTING ROADWAY.

CROSSWALK LINES SHALL BE SOLID WHITE TRANSVERSE LINES 6 INCHES WIDE AT LEAST 6 FEET APART. CROSSWALK LINES ON THE INTERSECTION SIDE OF THE CROSSWALK SHALL MEET AT THE CURB.

GORE LINES SHALL BE A SOLID WHITE LINE WITH A WIDTH TWICE THAT OF THE EDGELINE.

ARROWS AND WORD SYMBOLS SHALL BE SOLID WHITE.

IF A SEAL IS PRESENT ON THIS SHEET IT HAS BEEN ELECTRONICALLY SEALED AND DATED.

MISSOURI HIGHWAYS AND TRANSPORTATION COMMISSION
105 WEST CAPITOL
JEFFERSON CITY, MO 65102
1-888-ASK-MODOT (1-888-275-6636)

STATE OF MISSOURI
ERIC E. SCHROETER
NUMBER PE-2841
PROFESSIONAL ENGINEER
THIS SHEET HAS BEEN SIGNED, SEALED AND DATED ELECTRONICALLY.

PAVEMENT MARKING

DATE EFFECTIVE: 10/01/2016
DATE PREPARED: 8/17/2016

620.00L

SHEET NO. 1 OF 5

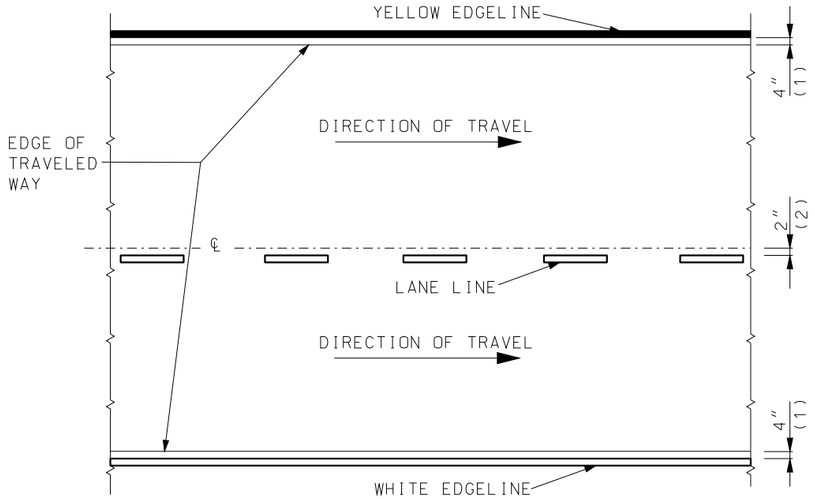

DIVIDED PAVEMENT

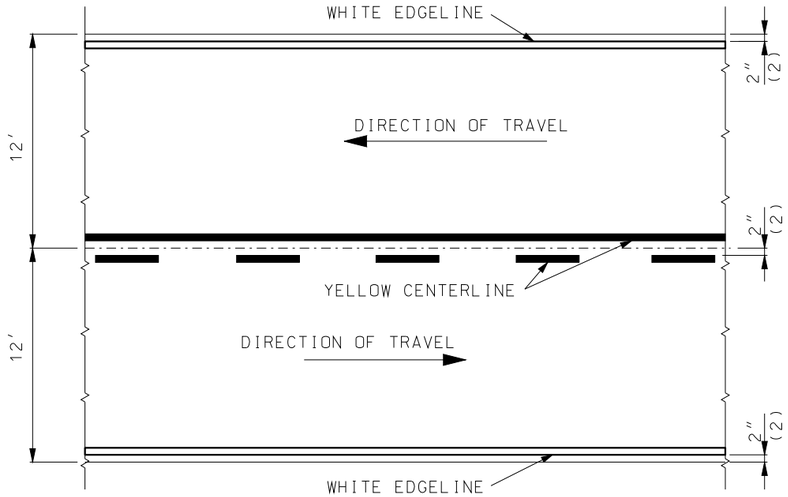

TWO-LANE TWO-WAY

TYPICAL STRIPING OFFSETS
WITHOUT RUMBLE STRIPES

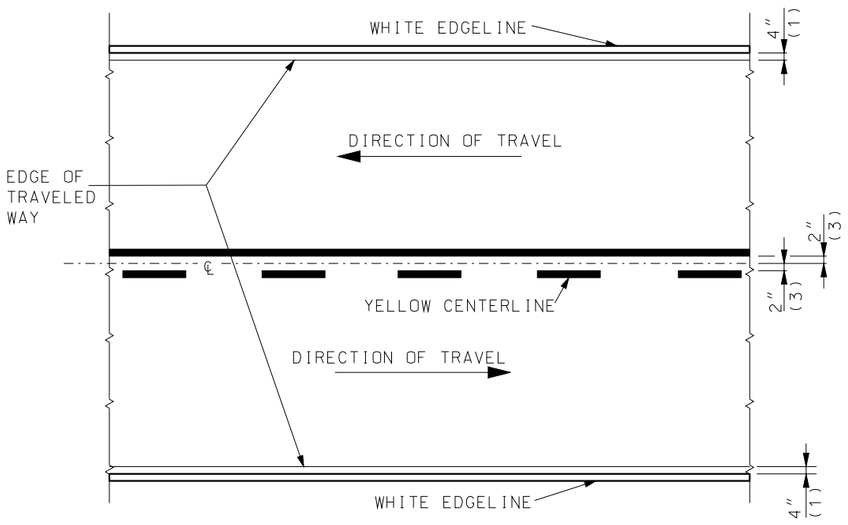

TWO-LANE TWO-WAY

TYPICAL STRIPING OFFSETS
FOR RUMBLE STRIPES

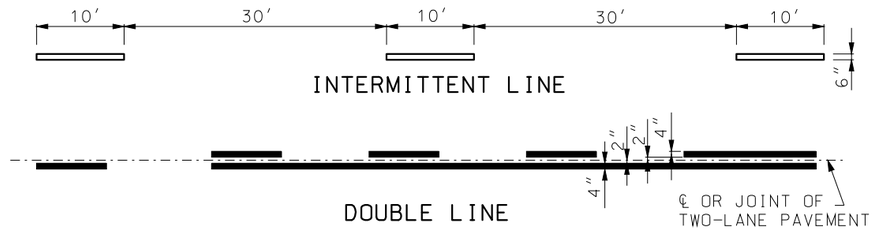

DOUBLE LINE
LINE DETAIL

LEGEND
WHITE LINE
YELLOW LINE

(1) OFFSET FROM EDGE OF TRAVELED WAY (TYP.)
(2) OFFSET FROM JOINT (TYP.)
(3) OFFSET FROM CENTERLINE (TYP.)

IF A SEAL IS PRESENT ON THIS SHEET IT HAS BEEN ELECTRONICALLY SEALED AND DATED.

MISSOURI HIGHWAYS AND TRANSPORTATION COMMISSION
105 WEST CAPITOL
JEFFERSON CITY, MO 65102
1-888-ASK-MODOT (1-888-275-6636)

STATE OF MISSOURI
ERIC E. SCHROETER
NUMBER PE-28411
PROFESSIONAL ENGINEER
THIS SHEET HAS BEEN SIGNED, SEALED AND DATED ELECTRONICALLY.

PAVEMENT MARKING

DATE EFFECTIVE: 10/01/2016
DATE PREPARED: 8/17/2016

620.00L

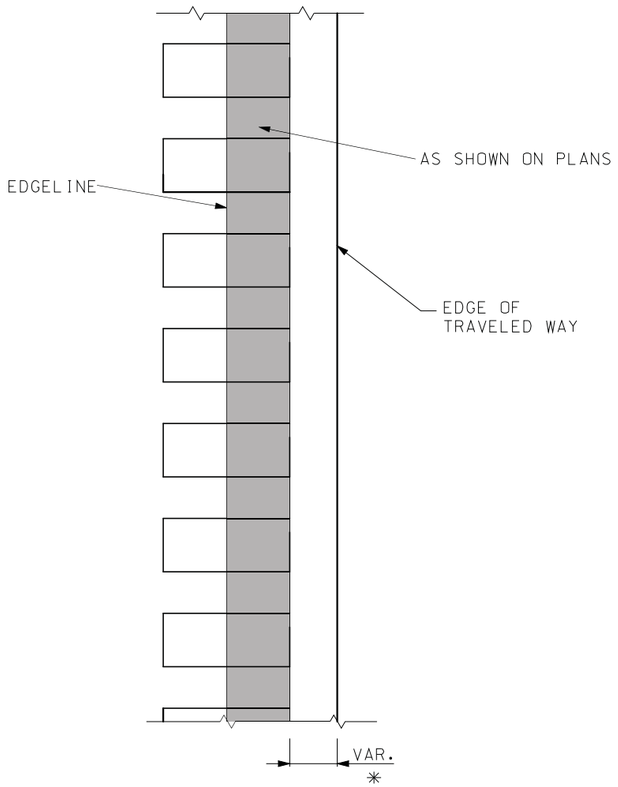

FOR SHOULDERS

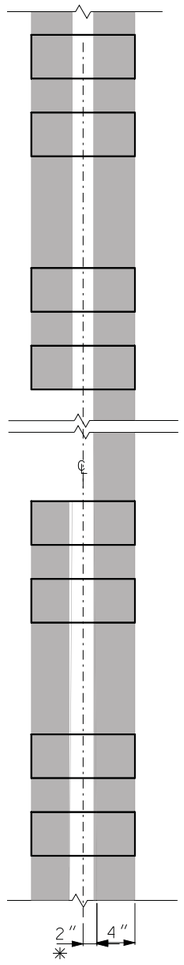

2 WAY 2 LANE
(SEE TYPICAL STRIPING
FOR RUMBLESTRIPS)

✳ = LATERAL DEVIATION SHALL NOT EXCEED ONE INCH IN 100 FEET.

IF A SEAL IS PRESENT ON THIS SHEET IT HAS BEEN ELECTRONICALLY SEALED AND DATED.

MISSOURI HIGHWAYS AND TRANSPORTATION COMMISSION
105 WEST CAPITOL
JEFFERSON CITY, MO 65102
1-888-ASK-MODOT (1-888-275-6636)

STATE OF MISSOURI
ERIC E. SCHROETER
NUMBER PE-28411
PROFESSIONAL ENGINEER
THIS SHEET HAS BEEN SIGNED, SEALED AND DATED ELECTRONICALLY.

PAVEMENT MARKING STRIPING THROUGH RUMBLE STRIPS

DATE EFFECTIVE: 10/01/2016
DATE PREPARED: 8/17/2016

620.00L

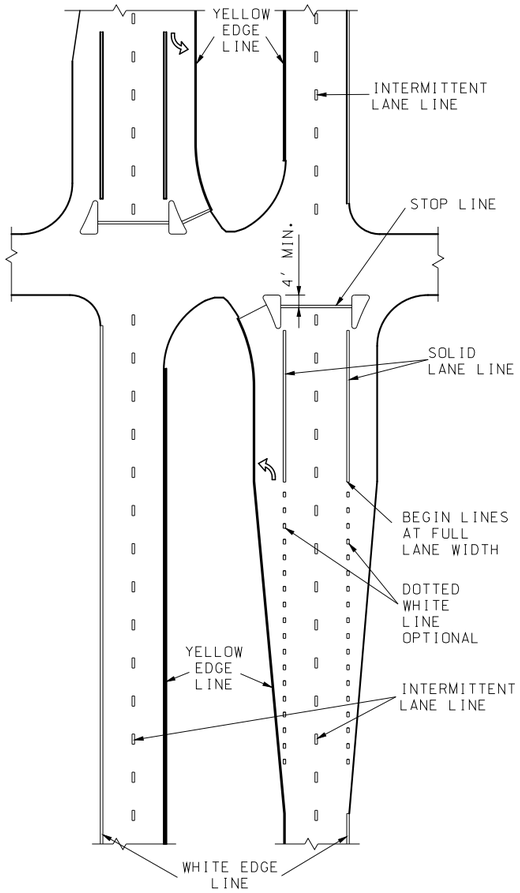

SIGNALIZED GRADE
INTERSECTION MARKING

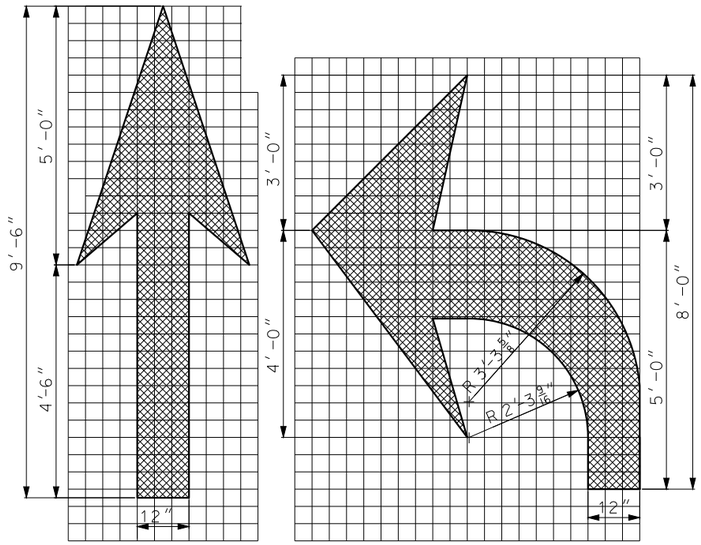

ARROW MARKINGS

TWO LANE USE CONTROL ARROWS FOR FIRST 200 FEET WITH ONE ADDITIONAL ARROW EVERY 400 FEET OF MANDATORY MOVEMENT LANE. FIRST ARROW 75 FEET FROM STOP LINE.

FISH-HOOK ARROW
ROUNDABOUT APPROACH
MARKINGS

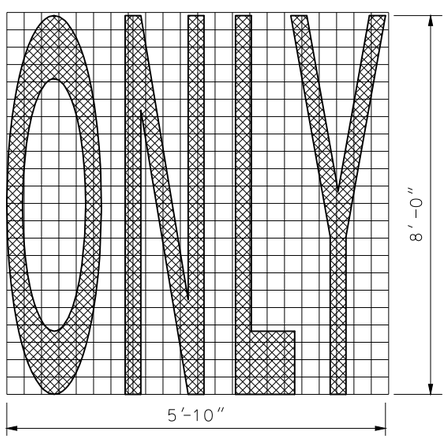

WORD MARKING
ELONGATED WORD & SYMBOL

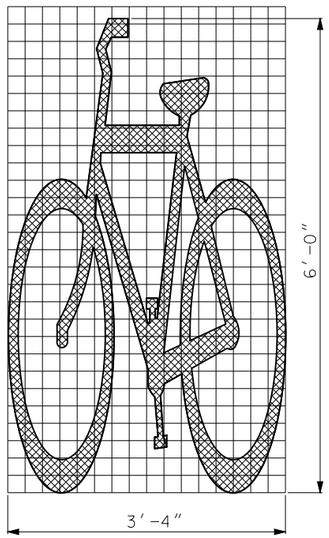

BICYCLE SYMBOL

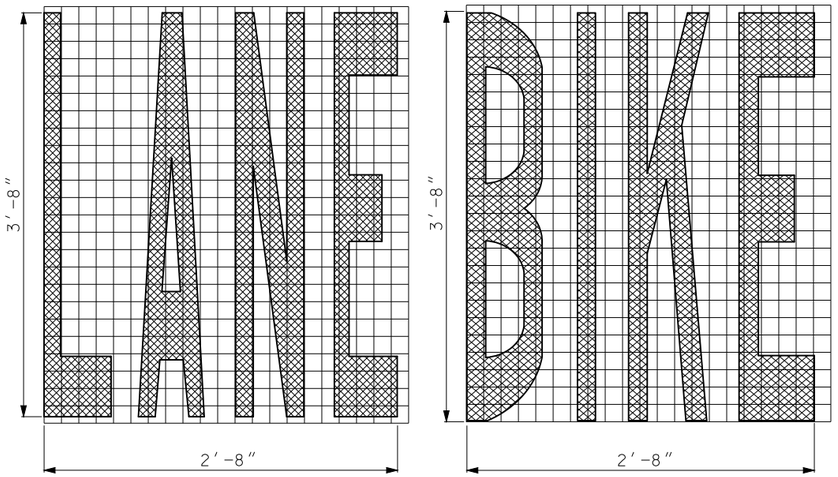

WORD MARKING
ELONGATED WORD & SYMBOL

IF A SEAL IS PRESENT ON THIS SHEET IT HAS BEEN ELECTRONICALLY SEALED AND DATED.

MISSOURI HIGHWAYS AND TRANSPORTATION COMMISSION
105 WEST CAPITOL
JEFFERSON CITY, MO 65102
1-888-ASK-MODOT (1-888-275-6636)

STATE OF MISSOURI
ERIC E. SCHROETER
NUMBER PE-28411
PROFESSIONAL ENGINEER
THIS SHEET HAS BEEN SIGNED, SEALED AND DATED ELECTRONICALLY.

PAVEMENT MARKING

DATE EFFECTIVE: 10/01/2016
DATE PREPARED: 8/17/2016

620.00L

SHEET NO.
4 OF 5

1. STOP LINES SHALL BE PLACED 90° TO THE ROADWAY.
2. IF RAILROAD GATE IS PRESENT THE STOP LINE SHALL BE 8′ FROM GATE.

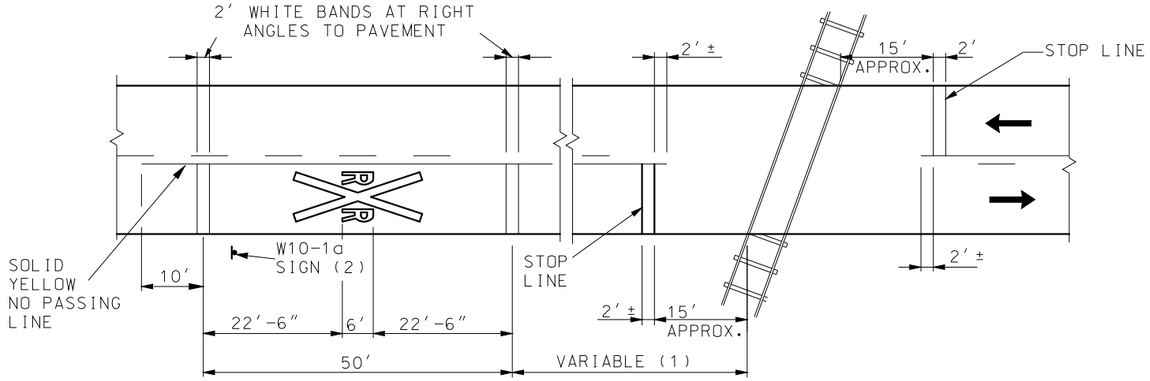

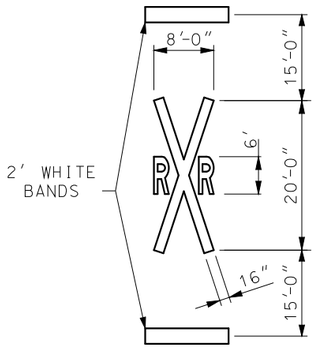

SYMBOL DETAIL

PAVEMENT DETAIL

(1) THE DISTANCE FROM THE RAILROAD CROSSING MARKING TO THE NEAREST TRACK WILL VARY ACCORDING TO THE APPROACH SPEED AND THE SIGHT DISTANCE OF THE VEHICULAR TRAFFIC APPROACHING, BUT SHALL BE NO LESS THAN 50 FEET.
A THREE-LANE ROADWAY SHALL BE MARKED WITH A CENTERLINE FOR TWO-LANE APPROACH OPERATION ON THE APPROACH TO A CROSSING. ON MULTI-LANE ROADWAYS THE TRANSVERSE BANDS SHALL EXTEND ACROSS ALL APPROACH LANES, AND INDIVIDUAL "R X R" SYMBOLS SHALL BE USED IN EACH APPROACH LANE.

(2) PLACEMENT OF W10-1a SIGN BY OTHERS.

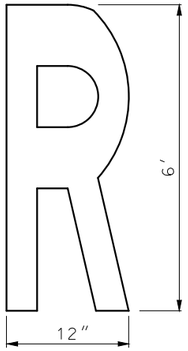

LETTER DETAIL

RAILROAD GRADE CROSSING

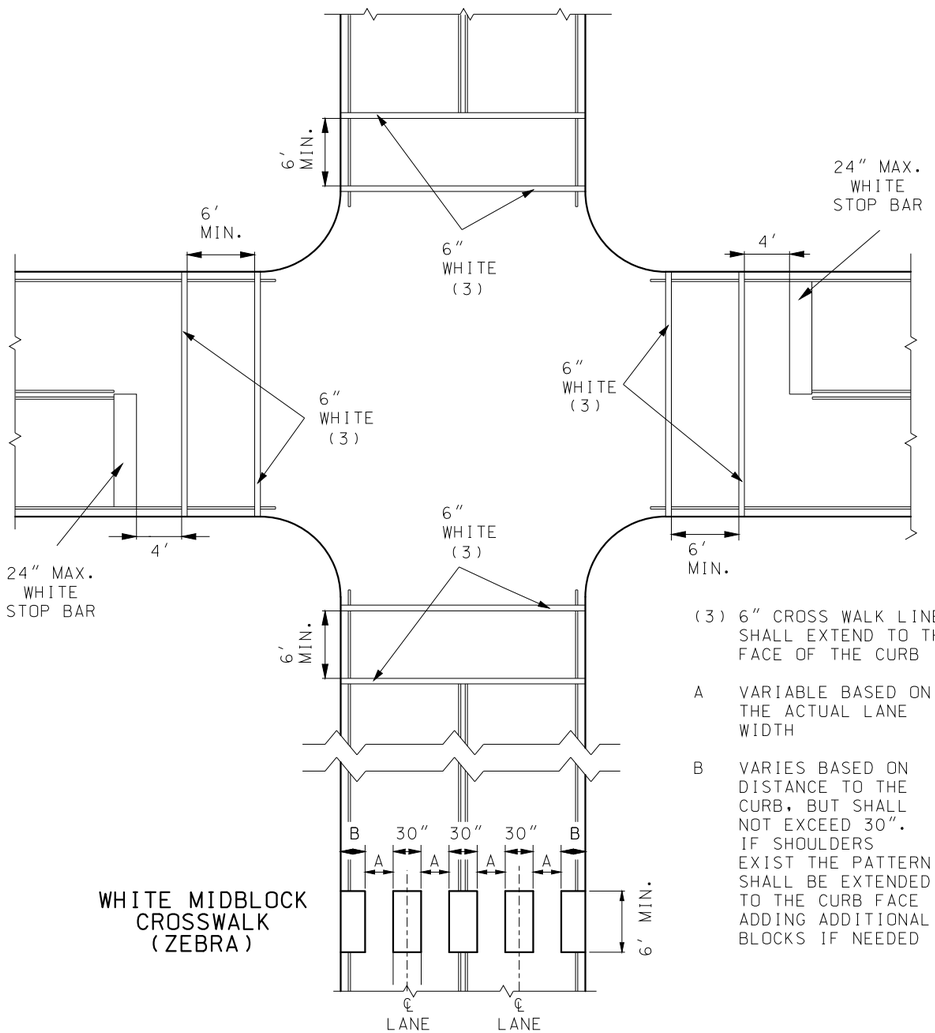

WHITE MIDBLOCK CROSSWALK (ZEBRA)

(3) 6″ CROSS WALK LINE SHALL EXTEND TO THE FACE OF THE CURB

A VARIABLE BASED ON THE ACTUAL LANE WIDTH

B VARIES BASED ON DISTANCE TO THE CURB, BUT SHALL NOT EXCEED 30″. IF SHOULDERS EXIST THE PATTERN SHALL BE EXTENDED TO THE CURB FACE ADDING ADDITIONAL BLOCKS IF NEEDED

PEDESTRIAN CROSSWALKS

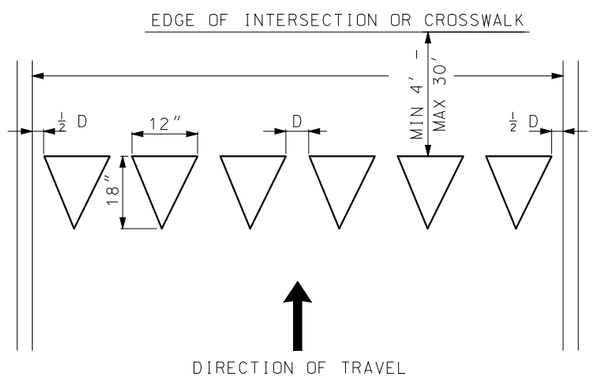

WHITE YIELD LINE TRIANGLES

D = 3″ TO 12″

TRIANGLES SHALL BE UNIFORMLY SPACED AND COVER THE COMPLETE WIDTH OF THE TRAVEL LANE. SPACING SHALL BE ADJUSTED SO THERE ARE NO PARTIAL TRIANGLES WITHIN THE YIELD MARKING.

MISSOURI HIGHWAYS AND TRANSPORTATION COMMISSION
105 WEST CAPITOL
JEFFERSON CITY, MO 65102
1-888-ASK-MODOT (1-888-275-6636)

STATE OF MISSOURI
ERIC E. SCHROETER
NUMBER PE-28411
PROFESSIONAL ENGINEER
THIS SHEET HAS BEEN SIGNED, SEALED AND DATED ELECTRONICALLY.

PAVEMENT MARKING

DATE EFFECTIVE: 10/01/2016
DATE PREPARED: 8/17/2016

620.00L

SHEET NO. 5 OF 5

IF A SEAL IS PRESENT ON THIS SHEET IT HAS BEEN ELECTRONICALLY SEALED AND DATED.

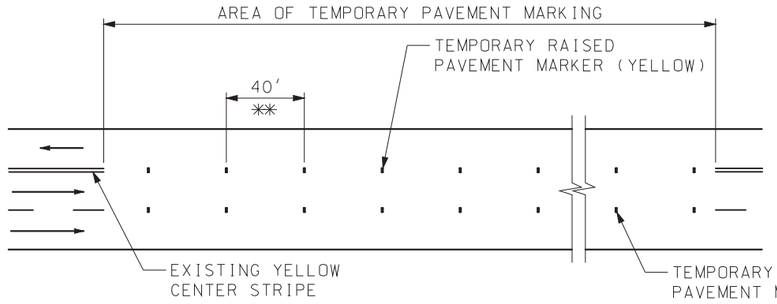

TWO-WAY MARKING WITH DOUBLE YELLOW PROHIBITTED PASSING MARKING SECTION

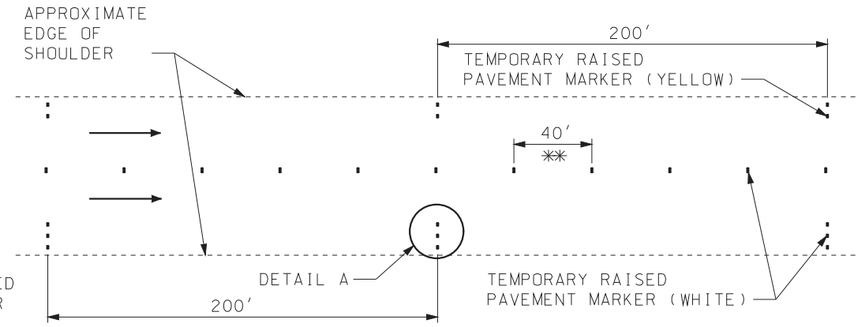

EDGE LINES AND LANE LINES ON MULTILANE DIVIDED SECTIONS

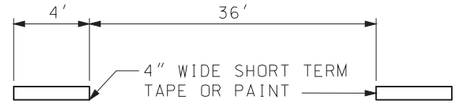

** OPTIONAL TEMPORARY PAVEMENT MARKING DETAIL FOR INTERMEDIATE LIFTS

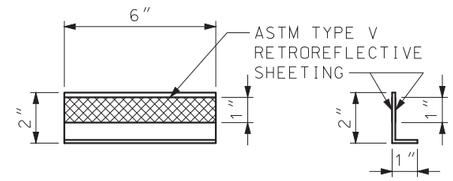

ELEVATION SIDE

TYPICAL TEMPORARY RAISED PAVEMENT MARKER DETAIL

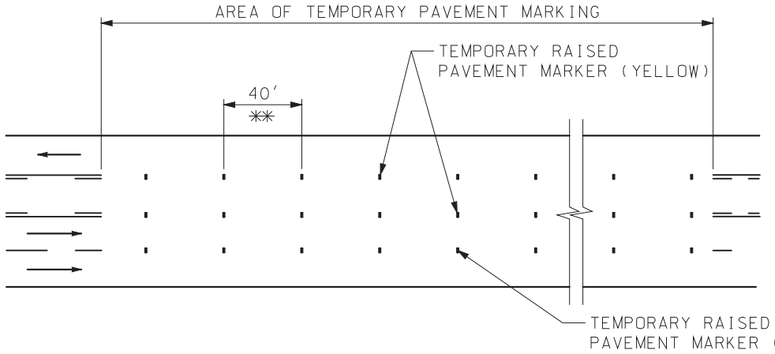

TWO-WAY WITH LEFT-TURN LANE MARKING SECTION

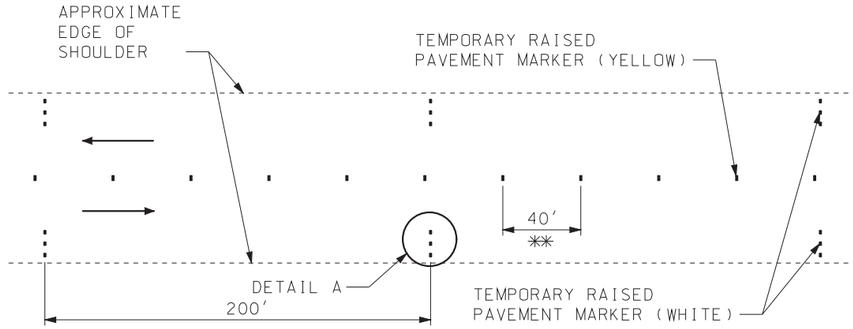

EDGE LINES AND CENTERLINE ON TWO-WAY SECTIONS WITH PAVED SHOULDERS GREATER THAN 4 FEET WIDE

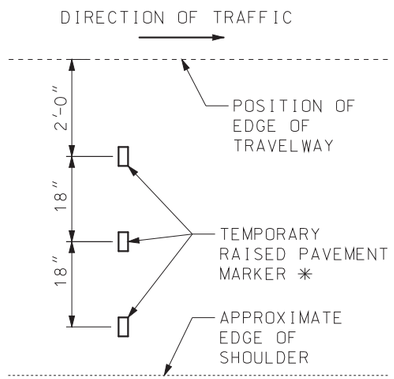

DETAIL A

* THREE TEMPORARY RAISED PAVEMENT MARKERS SHALL BE USED IF SHOULDER IS 6′OR WIDER. OTHERWISE, USE TWO TEMPORARY RAISED PAVEMENT MARKERS.

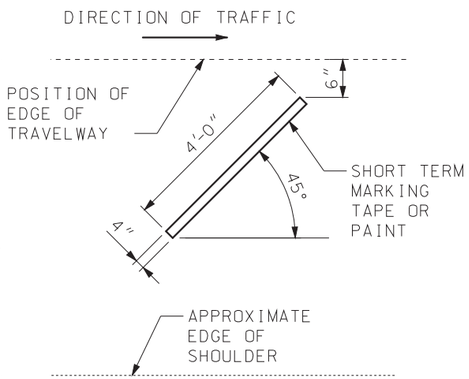

OPTIONAL DETAIL A FOR INTERMEDIATE LIFT

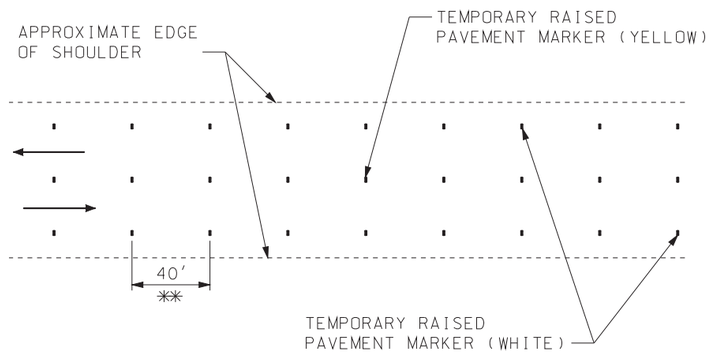

EDGE LINES AND CENTERLINE ON TWO-WAY SECTIONS WITH PAVED SHOULDERS 4 FEET WIDE OR LESS, AGGREGATE OR EARTH SHOULDERS OR NO SHOULDERS

GENERAL NOTES:

TEMPORARY PAVEMENT MARKING IS REQUIRED WHEN 200 CONSECUTIVE LINEAR FEET OR MORE OF PERMANENT PAVEMENT MARKING HAS BEEN OBLITERATED, OR AS DIRECTED BY THE ENGINEER.

TEMPORARY RAISED PAVEMENT MARKERS (TRPMS), OR THE OPTIONAL 4"X 4′ SHORT TERM TAPE OR PAINT, WHEN ALLOWED, SHALL BE MAINTAINED IN PLACE AND RETROREFLECTIVE UNTIL THE PERMANENT PAVEMENT MARKINGS ARE INSTALLED. MISSING OR NON-REFLECTIVE MARKINGS SHALL BE REPLACED AT NO ADDITIONAL COST TO THE COMMISSION WHEN 10% OR MORE ARE DEFICIENT WITHIN ONE MILE OR WHEN 4 OR MORE CONSECUTIVE MARKINGS ARE DEFICIENT.

FOR INTERMEDIATE LIFTS, 4"X 4′ SHORT TERM TAPE OR TEMPORARY PAINT MAY BE USED IN LIEU OF TRPMS.

TRPMS USED ON INTERMEDIATE LIFTS SHALL BE REMOVED PRIOR TO PLACEMENT OF THE NEXT LIFT.

ALL TEMPORARY MARKINGS SHALL BE REMOVED BY THE CONTRACTOR AFTER INSTALLATION OF PERMANENT MARKINGS, EXCEPT WHEN PERMANENT MARKINGS ARE TO BE INSTALLED BY OTHERS.

TEMPORARY TAPE SHALL NOT BE USED FOR TEMPORARY MARKING ON THE FINAL SURFACE EXCEPT WHEN SPECIFIED IN THE PLANS.

MISSOURI HIGHWAYS AND TRANSPORTATION COMMISSION
105 WEST CAPITOL
JEFFERSON CITY, MO 65102
1-888-ASK-MODOT (1-888-275-6636)

STATE OF MISSOURI
ERIC E. SCHROETER
NUMBER PE-28411
PROFESSIONAL ENGINEER
THIS SHEET HAS BEEN SIGNED, SEALED AND DATED ELECTRONICALLY.

TEMPORARY PAVEMENT MARKING
TEMPORARY PAVEMENT MARKING

DATE EFFECTIVE: 07/01/2017
DATE PREPARED: 5/1/2017

620.10G

SHEET NO. 1 OF 5

IF A SEAL IS PRESENT ON THIS SHEET IT HAS BEEN ELECTRONICALLY SEALED AND DATED.

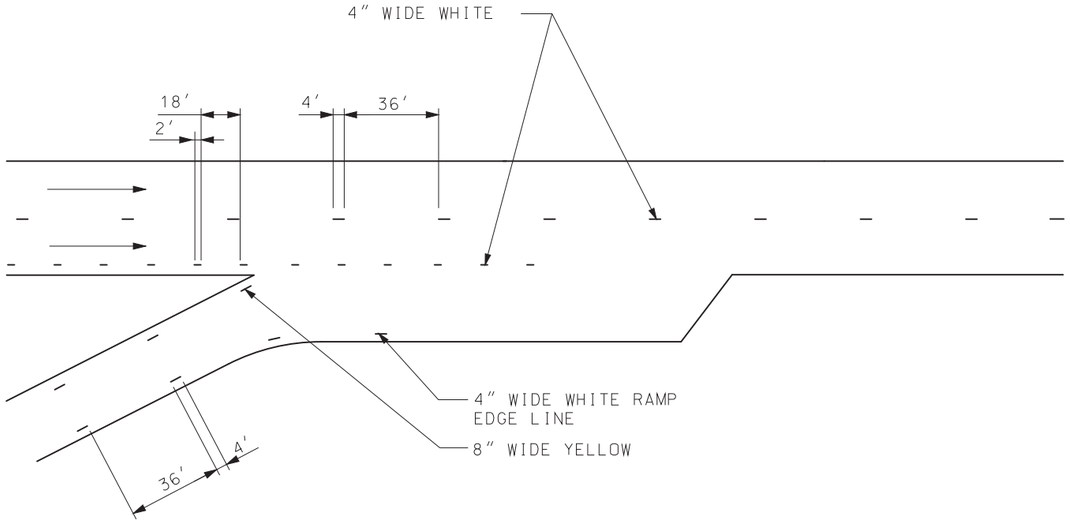

ENTRANCE RAMP

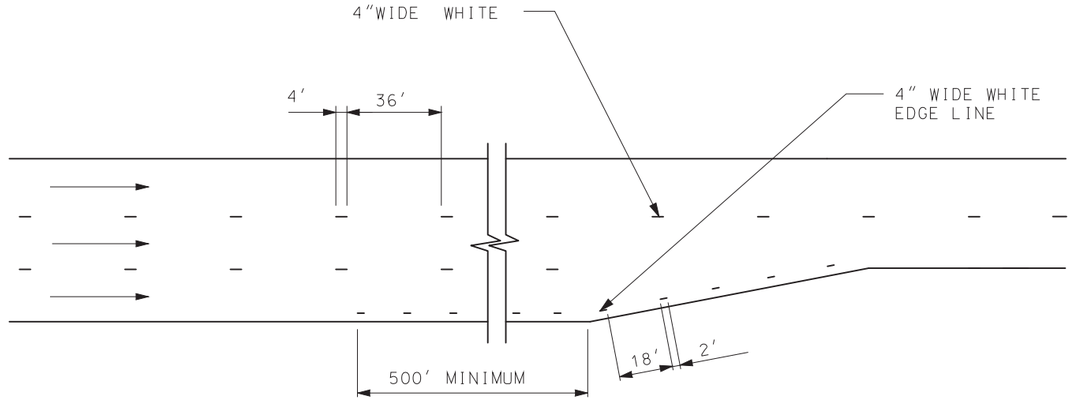

LANE TRANSITION

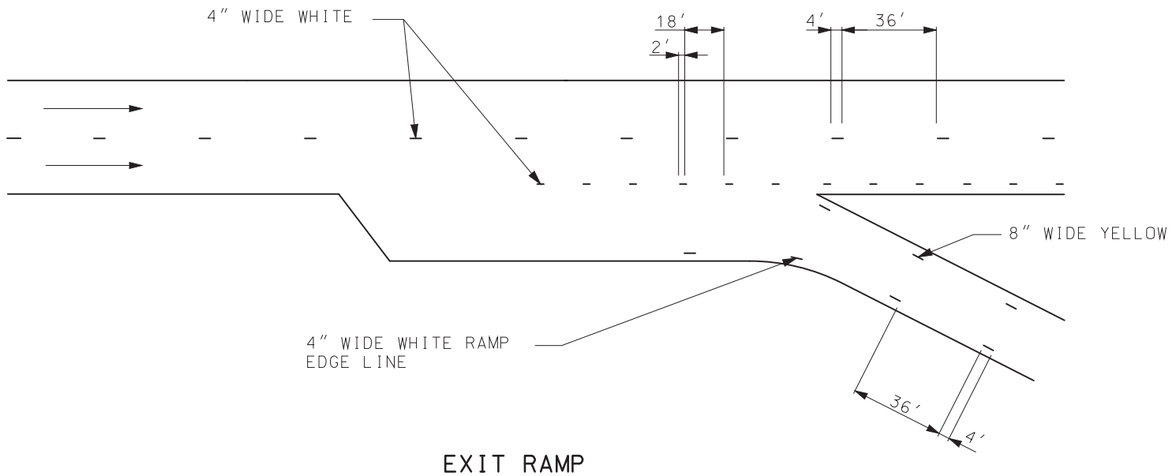

EXIT RAMP

GENERAL NOTES:

TEMPORARY PAVEMENT MARKING IN INTERSECTIONS, RAMPS GORES AND OTHER TRANSITION AREAS USE AN INTERMITTENT MARKING OF 2 FEET LONG AT A CYCLE OF 20 FEET.

LIMITS OF TEPORARY GORE MARKING ARE THE SAME AS THE EXISTING GORE LINES.

MISSOURI HIGHWAYS AND TRANSPORTATION COMMISSION
105 WEST CAPITOL
JEFFERSON CITY, MO 65102
1-888-ASK-MODOT (1-888-275-6636)

STATE OF MISSOURI
ERIC E. SCHROETER
NUMBER PE-28411
PROFESSIONAL ENGINEER
THIS SHEET HAS BEEN SIGNED, SEALED AND DATED ELECTRONICALLY.

TEMPORARY PAVEMENT MARKING
LANE TRANSITION AND RAMP AREAS

DATE EFFECTIVE: 07/01/2017
DATE PREPARED: 5/1/2017

620.10G

SHEET NO. 2 OF 5

IF A SEAL IS PRESENT ON THIS SHEET IT HAS BEEN ELECTRONICALLY SEALED AND DATED.

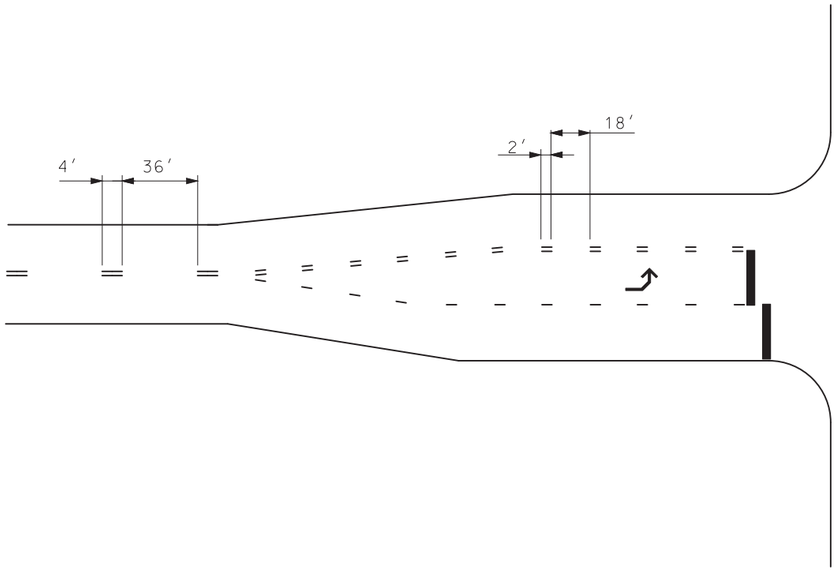

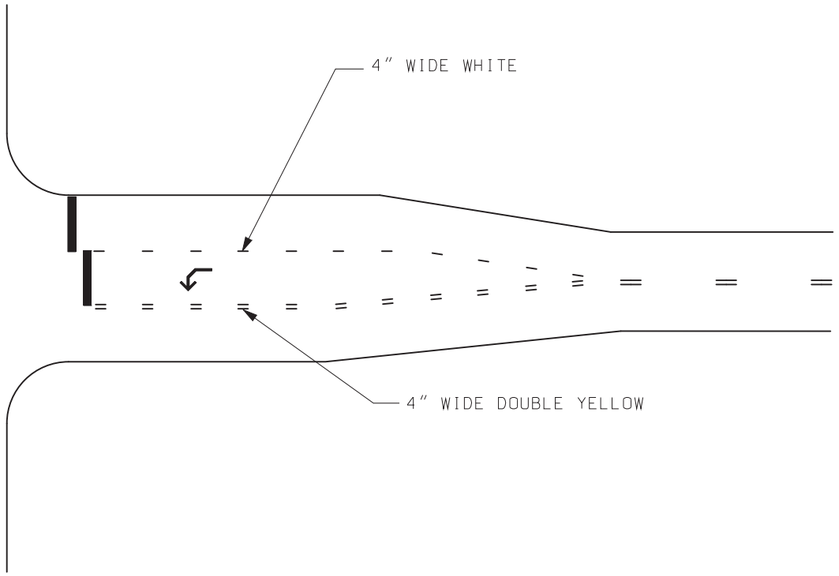

PLAN VIEW



TEMPORARY STOP BAR DETAIL (WHITE)

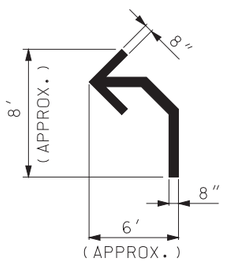

TEMPORARY ARROW DETAIL (WHITE)

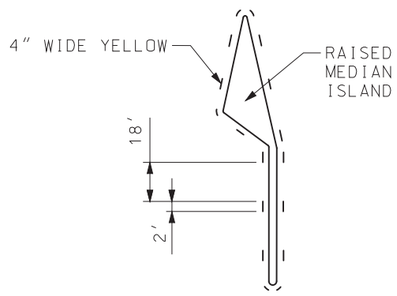

RAISED DIVISIONAL ISLAND

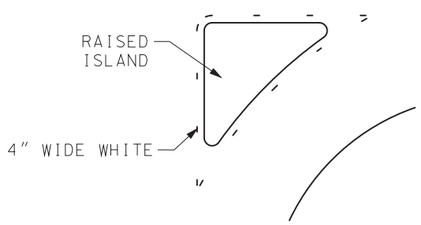

RAISED CHANNELIZING ISLAND

GENERAL NOTES:

TEMPORARY ARROWS AND STOP BARS ARE REQUIRED WHEN GOEMETRIC MODIFICATIONS DURING CONSTRUCTION CREATE LANE CONFIGURATIONS DIFFERENT THAN EXISTING, OR THE EXISTING PAVEMENT MARKING INCLUDES THEM.

YELLOW AND WHITE TEMPORARY MARKING AROUND ISLANDS ONLY REQUIRED WHEN THE ISLAND CURB IS NOT PAINTED.

TEMPORARY PAVEMENT MARKING IN INTERSECTIONS, RAMP GORES AND OTHER TRANSITION AREAS USE AN INTERMITTENT MARKING 2′ LONG AT A CYCLE OF 20′.

MISSOURI HIGHWAYS AND TRANSPORTATION COMMISSION
105 WEST CAPITOL
JEFFERSON CITY, MO 65102
1-888-ASK-MODOT (1-888-275-6636)

STATE OF MISSOURI
ERIC E. SCHROETER
NUMBER PE-2841
PROFESSIONAL ENGINEER
THIS SHEET HAS BEEN SIGNED, SEALED AND DATED ELECTRONICALLY.

TEMPORARY PAVEMENT MARKING
INTERSECTIONS

DATE EFFECTIVE: 07/01/2017
DATE PREPARED: 5/1/2017

620.10G

SHEET NO. 3 OF 5

IF A SEAL IS PRESENT ON THIS SHEET IT HAS BEEN ELECTRONICALLY SEALED AND DATED.

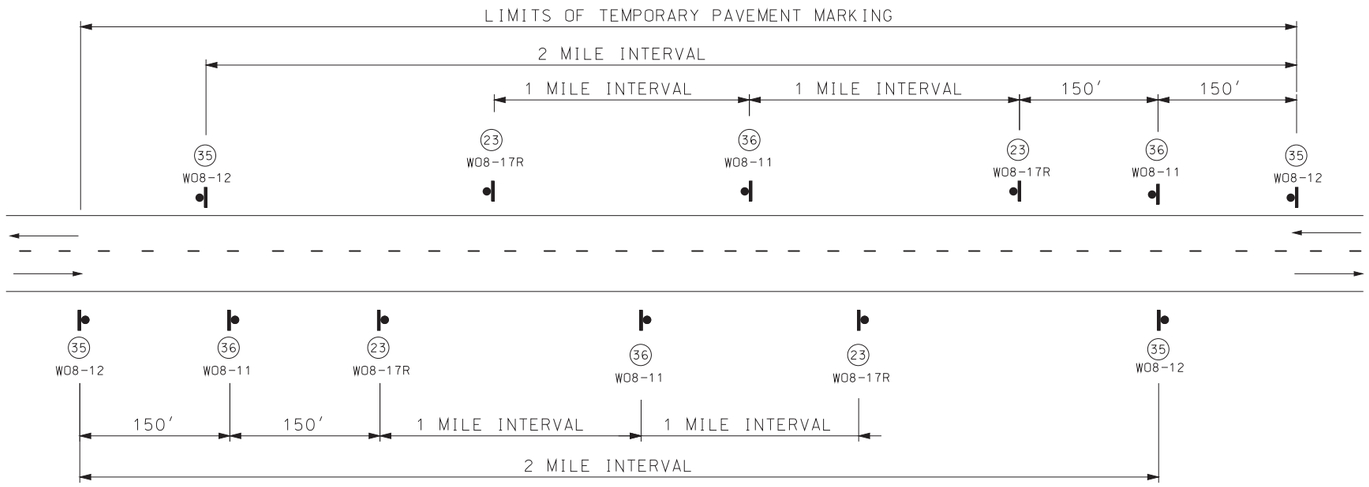

SIGN SPACING FOR MAINLINE

(DETAIL SHOWN IS BASED ON A PROJECT MEETING ALL CONDITIONS: NO CENTER STRIPE, UNEVEN LANES, SHOULDER DROP-OFF AND BUMP.)
WHEN BOTH UNEVEN LANES AND SHOULDER DROP-OFF SIGNS ARE USED, BOTH SIGHS SHALL STAY IN PLACE UNTIL BOTH CONDITIONS NO LONGER EXIST.
IF ONLY ONE CONDITION EXISTS (UNEVEN LANES OR SHOULDER DROP-OFF), THE SIGN SPACING SHALL BE AT 1 MILE INTERVALS.

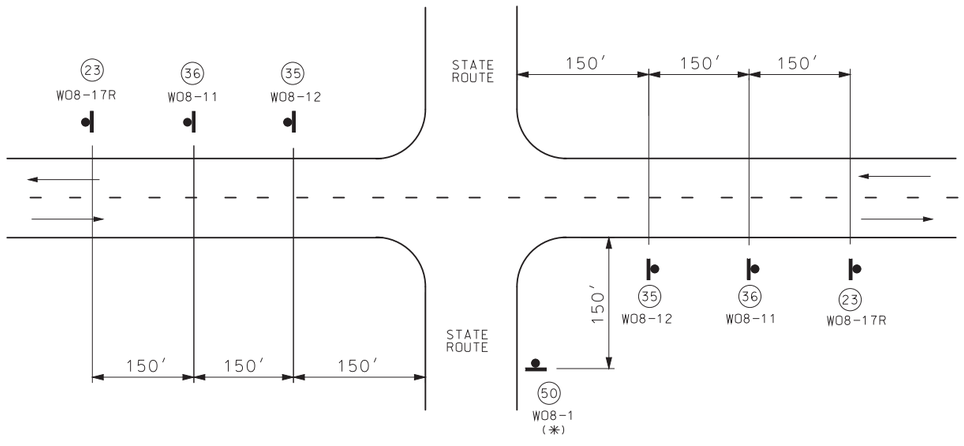

SIGN SPACING AT STATE ROUTE INTERSECTIONS

(*) BUMP SIGN SHOULD BE IN ACCORDANCE WITH STANDARD PLAN 619.10.



W08-17R
W08-17p
23



W08-1
50
(*)



W08-11
36



W08-12
35

GENERAL NOTES:

FOR DETAILS OF TEMPORARY PAVEMENT MARKING, SEE SHEET 1 OF 5.

SIGN (35) AND TEMPORARY PAVEMENT MARKING INSTALLED WHERE CENTERLINE STRIPING HAS BEEN COVERED OR REMOVED. SIGNS ARE TO REMAIN IN PLACE UNTIL THE PERMANENT CENTERLINE PAVEMENT MARKINGS ARE IN PLACE. SIGNS SHALL BE COVERED OR REMOVED WHEN PAVEMENT CENTERLINE MARKING HAS BEEN INSTALLED.

SIGN (35) IS PLACED AT APPROXIMATELY TWO-MILE INTERVALS AND AT STATE ROUTE JUNCTIONS. WHEN THE INSTALLATION AT A JUNCTION IS WITHIN ONE-EIGHTH MILE OF THE NORMAL MAINLINE SIGN (35), THE LATTER MAY BE ELIMINATED.

ALL SIGNS SHALL BE POST MOUNTED AND IN ACCORDANCE WITH STANDARD PLAN 616.10 AND 903.03.

WHEN SHOULDER DROP-OFF SIGNS ARE IN PLACE FOR GREATER THAN THREE DAYS, THE SHOULDER DROP-OFF PLAQUE SHOULD BE USED IN ADDITION WITH THE SHOULDER DROP-OFF SIGN.

MISSOURI HIGHWAYS AND TRANSPORTATION COMMISSION
105 WEST CAPITOL
JEFFERSON CITY, MO 65102
1-888-ASK-MODOT (1-888-275-6636)

STATE OF MISSOURI
ERIC E. SCHROETER
NUMBER PE-28411
PROFESSIONAL ENGINEER
THIS SHEET HAS BEEN SIGNED, SEALED AND DATED ELECTRONICALLY.

TEMPORARY PAVEMENT MARKING

TWO-LANE TWO-WAY HIGHWAY

DATE EFFECTIVE: 07/01/2017
DATE PREPARED: 5/1/2017

620.10G

SHEET NO. 4 OF 5

IF A SEAL IS PRESENT ON THIS SHEET IT HAS BEEN ELECTRONICALLY SEALED AND DATED.

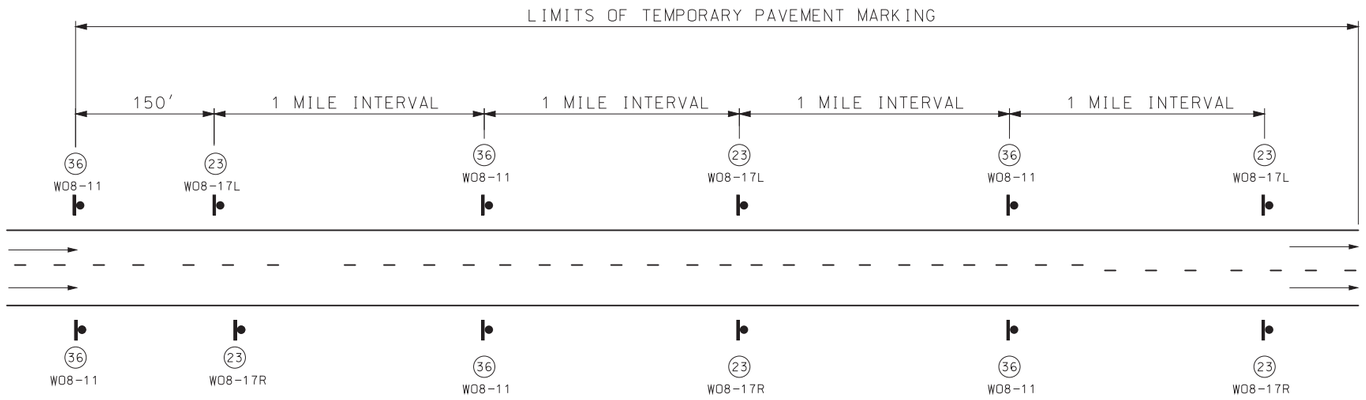

SIGN SPACING FOR DIVIDED OR MULTI-LANE HIGHWAY

(DETAIL SHOWN IS BASED ON A PROJECT MEETING CONDITIONS OF UNEVEN LANES AND SHOULDER DROP-OFF.)
WHEN BOTH UNEVEN LANES AND SHOULDER DROP-OFF SIGNS ARE USED, BOTH SIGNS SHALL STAY IN PLACE UNTIL BOTH CONDITIONS NO LONGER EXISTS.
WHEN ONLY ONE CONDITION EXISTS (UNEVEN LANES OR SHOULDER DROP-OFF), SIGN SPACING SHALL BE AT 1 MILE INTERVALS

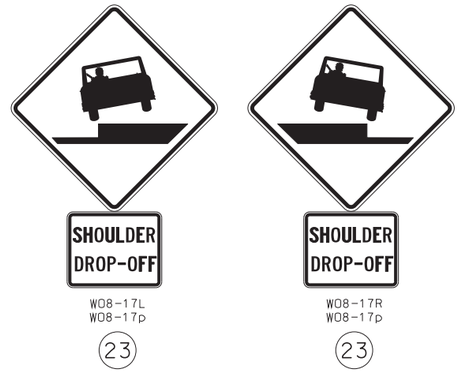

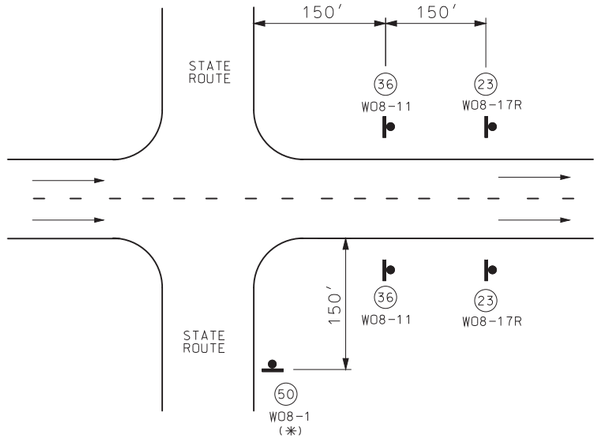

SIGN SPACING AT STATE ROUTE INTERSECTIONS

(*) BUMP SIGN SHOULD BE IN ACCORDANCE WITH STANDARD PLAN 619.10.

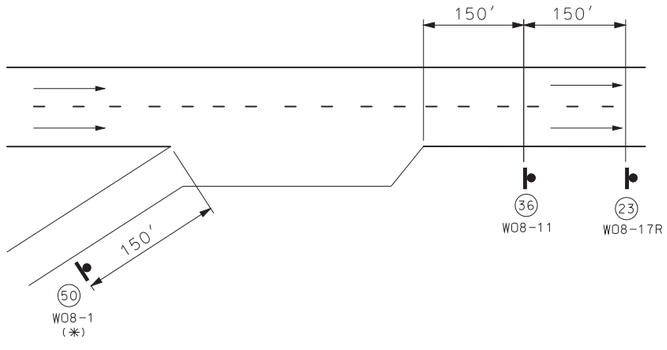

SIGN SPACING AT RAMPS

(*) BUMP SIGN SHOULD BE IN ACCORDANCE WITH STANDARD PLAN 619.10.

GENERAL NOTES:

FOR DETAILS OF TEMPORARY PAVEMENT MARKING, SEE SHEET 1 OF 5.

ALL SIGNS SHALL BE POST MOUNTED AND IN ACCORDANCE WITH STANDARD PLANS 616.10 AND 903.03.

WHEN SHOULDER DROP-OFF SIGNS ARE IN PLACE FOR GREATER THAN THREE DAYS, THE SHOULDER DROP-OFF PLAQUE SHOULD BE USED IN ADDITION WITH THE SHOULDER DROP-OFF SIGN.

MISSOURI HIGHWAYS AND TRANSPORTATION COMMISSION
105 WEST CAPITOL
JEFFERSON CITY, MO 65102
1-888-ASK-MODOT (1-888-275-6636)

STATE OF MISSOURI
ERIC E. SCHROETER
NUMBER PE-28411
PROFESSIONAL ENGINEER
THIS SHEET HAS BEEN SIGNED, SEALED AND DATED ELECTRONICALLY.

TEMPORARY PAVEMENT MARKING
DIVIDED AND MULTI-LANE HIGHWAYS

DATE EFFECTIVE: 07/01/2017
DATE PREPARED: 5/1/2017

620.10G

SHEET NO. 5 OF 5

IF A SEAL IS PRESENT ON THIS SHEET IT HAS BEEN ELECTRONICALLY SEALED AND DATED.

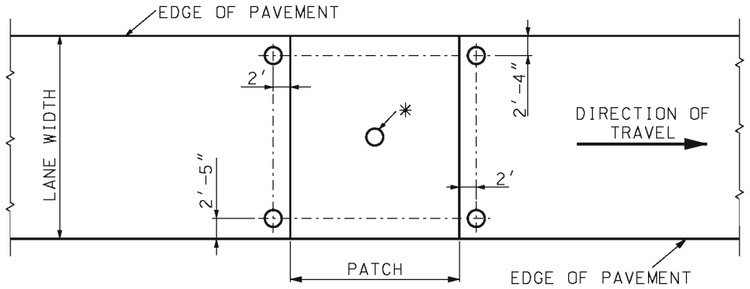

PATCH

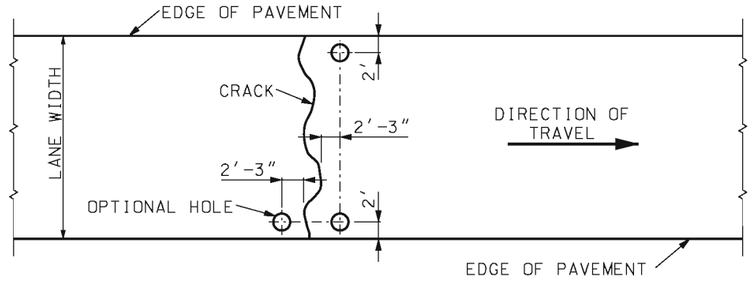

CRACK

✳ THIS HOLE SHOULD ONLY BE USED ON PATCHES EXISTING PRIOR TO CONSTRUCTION. THE HOLE SHOULD BE LOCATED CLOSE TO THE CENTER OF THE PATCH. BY USING THIS HOLE, THE TWO HOLES LOCATED AT THE SHOULDER COULD BE ELIMINATED.

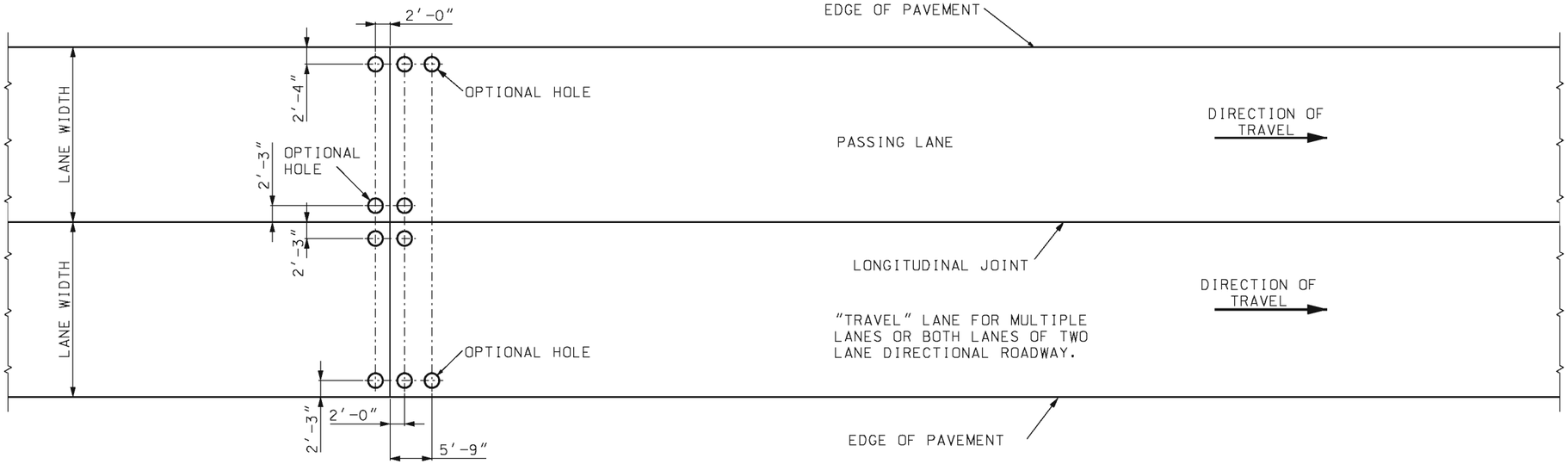

JOINT

IF A SEAL IS PRESENT ON THIS SHEET IT HAS BEEN ELECTRONICALLY SEALED AND DATED.

MISSOURI HIGHWAYS AND TRANSPORTATION COMMISSION
105 WEST CAPITOL
JEFFERSON CITY, MO 65102
1-888-ASK-MODOT (1-888-275-6636)

STATE OF MISSOURI
KATHRYN PHILLIPS HARVEY
NUMBER PE-23751
PROFESSIONAL ENGINEER
THIS SHEET HAS BEEN SIGNED, SEALED AND DATED ELECTRONICALLY.

HOLE PATTERN FOR PAVEMENT SLAB STABILIZATION

DATE EFFECTIVE: 10/01/1998
DATE PREPARED: 8/21/2009

625.00

SHEET NO. 1 OF 1

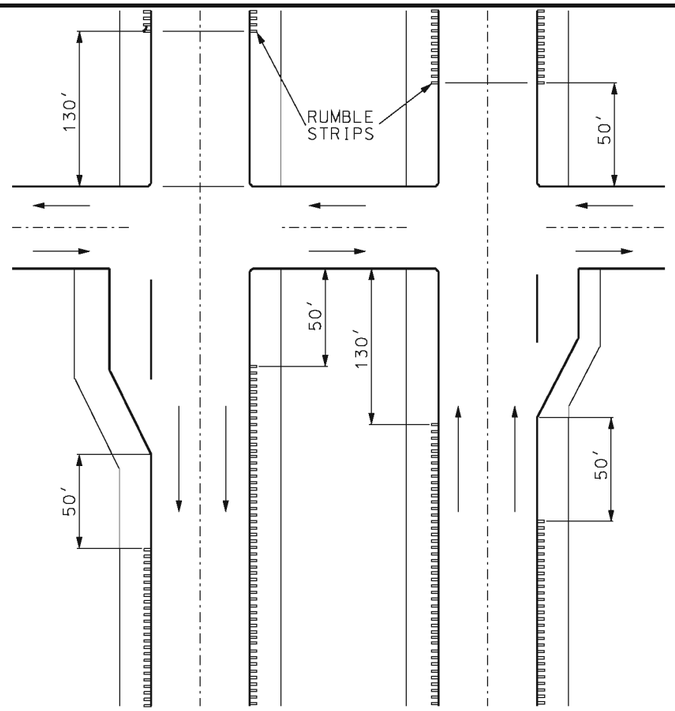

EXPRESSWAY DIVIDED

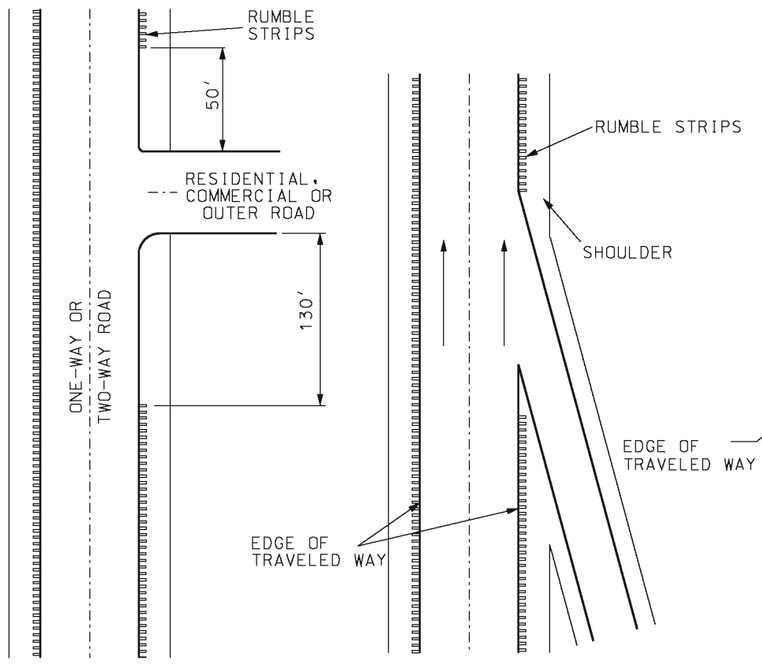

INTERSECTIONS

ACCELERATION LANE SHOWN

ACCELERATION OR DECELERATION LANE

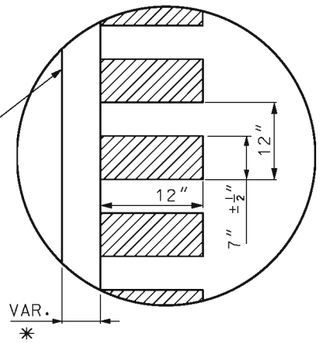

RUMBLE STRIP PLAN VIEW

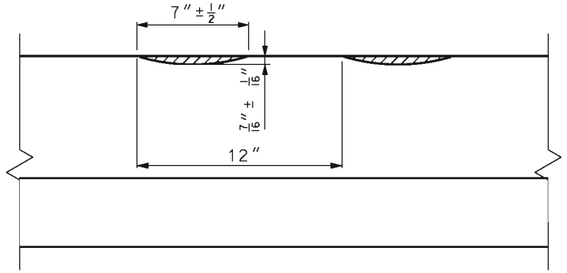

RUMBLE STRIP CROSS SECTION VIEW

RUMBLE STRIP LAYOUTS

14′ PAVEMENT STRUCTURES, ALL SHOULDER TYPES	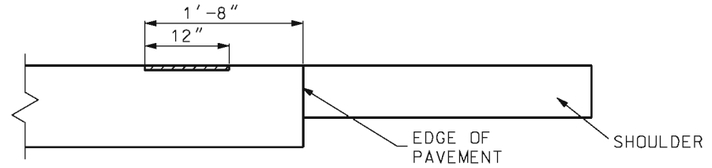
13′ PAVEMENT STRUCTURES, ALL SHOULDER TYPES	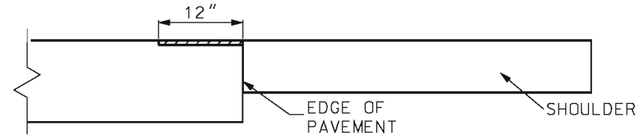
PAVEMENT STRUCTURES ≤ 12′ WITH A2 SHOULDER	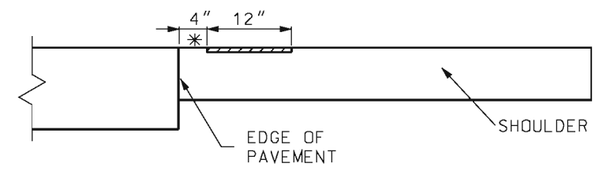
PAVEMENT STRUCTURES ≤ 12′ WITH A3 SHOULDER	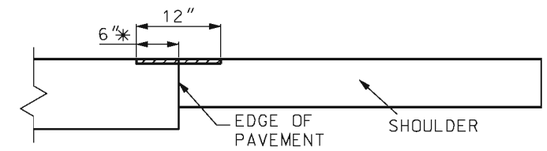
PAVEMENT STRUCTURES ≤ 12′ WITH EARTH OR AGGREGATE SHOULDERS	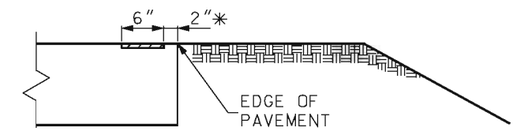

✳ = LATERAL DEVIATION SHALL NOT EXCEED ONE INCH IN 100 FEET.

GENERAL NOTES:

SEE STAMDARD PLAN 620.00 FOR PAVEMENT MARKING.

RUMBLE STRIPS SHALL BE OMITTED IF SHOULDERS ARE LESS THAN 2′ WIDE.

ALL RUMBLE STRIPS SHALL BE MILLED.

RUMBLE STRIPS SHALL NOT BE MILLED ONTO TRANSVERSE JOINTS.

RUMBLE STRIPS SHALL NOT BE PLACED ON BRIDGES.

IF A SEAL IS PRESENT ON THIS SHEET IT HAS BEEN ELECTRONICALLY SEALED AND DATED.

MISSOURI HIGHWAYS AND TRANSPORTATION COMMISSION
105 WEST CAPITOL
JEFFERSON CITY, MO 65102
1-888-ASK-MODOT (1-888-275-6636)

STATE OF MISSOURI
KATHRYN PHILLIPS HARVEY
NUMBER PE-23751
PROFESSIONAL ENGINEER
THIS SHEET HAS BEEN SIGNED, SEALED AND DATED ELECTRONICALLY.

RUMBLE STRIPS

SHOULDER

DATE EFFECTIVE: 04/01/2009
DATE PREPARED: 2/20/2009

626.00H

SHEET NO. 1 OF 2

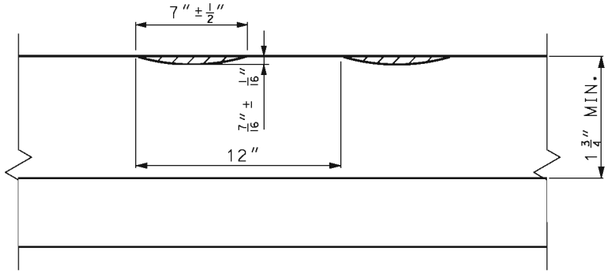

SECTION C-C

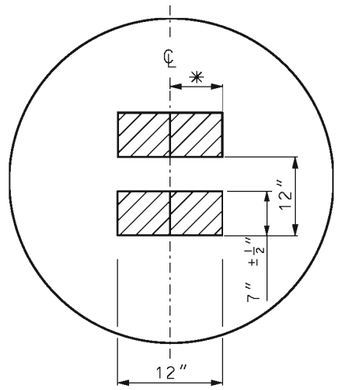

DETAIL B

✳ = LATERAL DEVIATION SHALL NOT EXCEED ONE INCH IN 100 FEET.

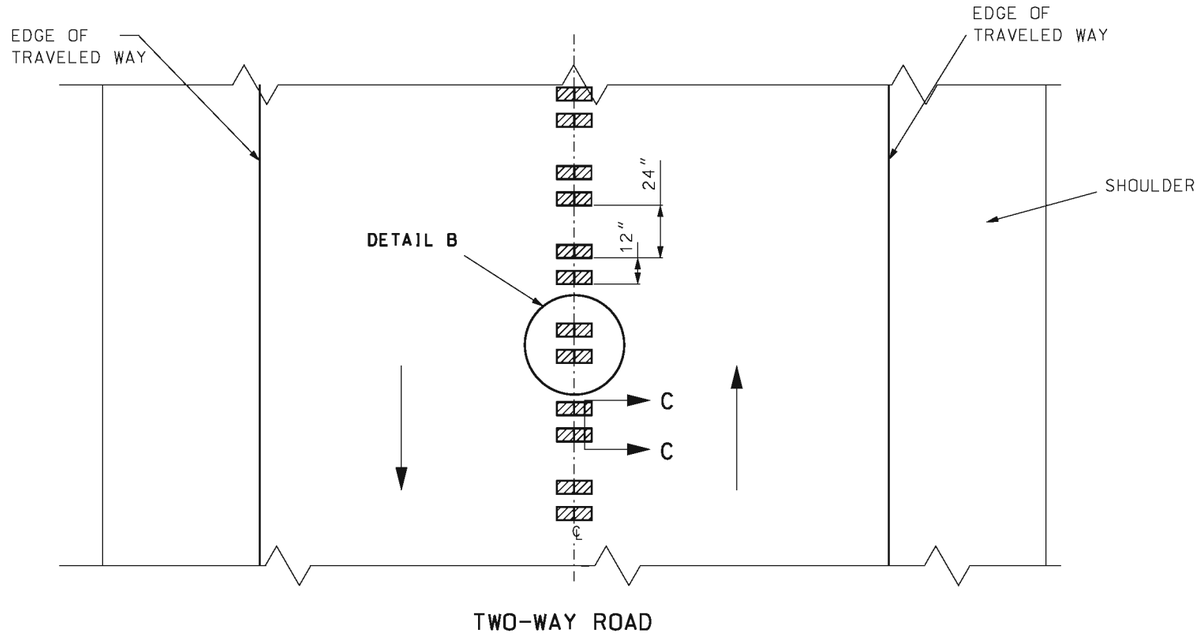

TWO-WAY ROAD

GENERAL NOTES:

SEE STANDARD PLAN 620.00 FOR PAVEMENT MARKING.

RUMBLE STRIPS SHALL NOT BE PLACED ON BRIDGES.

ALL RUMBLE STRIPS SHALL BE MILLED.

CENTERLINE RUMBLE STRIPS SHALL BE CONTINUOUS THROUGH CONNECTIONS OF SIDEROADS WITH NO LEFT TURN LANES.

DISCONTINUE CENTERLINE RUMBLE STRIPS THROUGH THE LIMITS OF ALL LEFT TURN LANES, INCLUDING ANY LANE TAPER SECTIONS.

MISSOURI HIGHWAYS AND TRANSPORTATION COMMISSION
105 WEST CAPITOL
JEFFERSON CITY, MO 65102
1-888-ASK-MODOT (1-888-275-6636)

STATE OF MISSOURI
KATHRYN PHILLIPS HARVEY
NUMBER PE-23751
PROFESSIONAL ENGINEER
THIS SHEET HAS BEEN SIGNED, SEALED AND DATED ELECTRONICALLY.

RUMBLE STRIPS
CENTERLINE

DATE EFFECTIVE: 04/01/2009
DATE PREPARED: 2/20/2009

626.00H

SHEET NO. 2 OF 2

IF A SEAL IS PRESENT ON THIS SHEET IT HAS BEEN ELECTRONICALLY SEALED AND DATED.

CONSTRUCTION JOINT KEY NOT SHOWN FOR CLARITY. SEE SHEET 3 OF 3 FOR DETAILS.

IF UNSUITABLE MATERIAL IS ENCOUNTERED, EXCAVATION OF UNSUITABLE MATERIAL AND FURNISHING AND PLACING OF GRANULAR BACKFILL SHALL BE IN ACCORDANCE WITH SEC 206.

IF ANY PART OF THE BARREL IS EXPOSED, THE ROADWAY FILL SHALL BE WARPED TO PROVIDE 12 INCHES MINIMUM COVER.

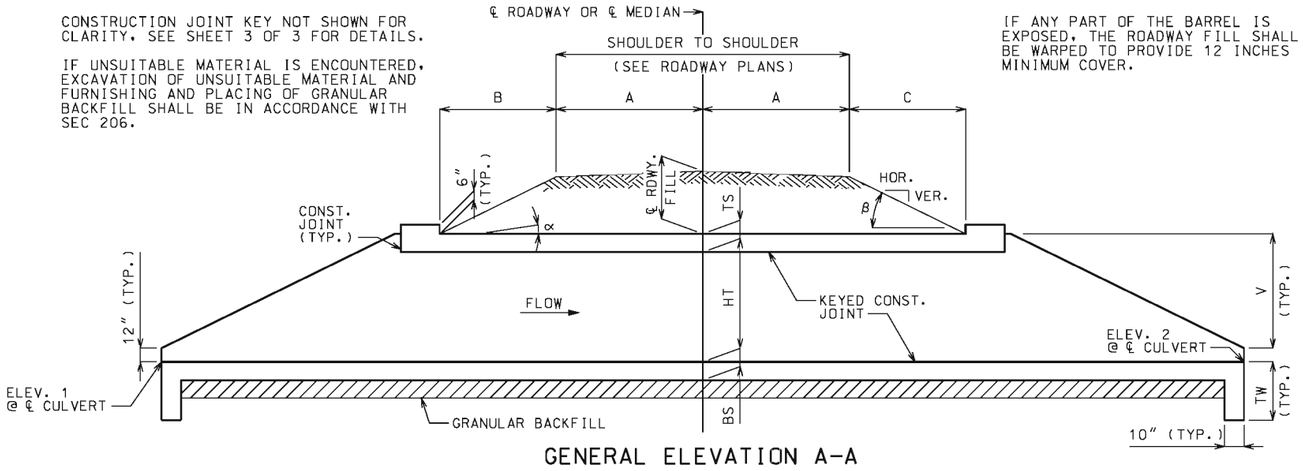

GENERAL ELEVATION A-A

CHANNEL BOTTOM SHALL BE GRADED WITHIN RIGHT OF WAY FOR TRANSITION OF CHANNEL BED TO CULVERT OPENINGS. CHANNEL BANKS SHALL BE TAPERED TO MATCH CULVERT OPENINGS.

EQUATIONS FOR COMPUTING ∝, β, B AND C

∝ = ANGLE OF BARREL SLOPE WITH HORIZONTAL NORMAL TO ℄ ROADWAY OR ℄ MEDIAN = $\text{ARCTAN}\left(\frac{\text{ELEV. 1} - \text{ELEV. 2}}{W}\right)$

β = ANGLE OF FILL SLOPE WITH HORIZONTAL NORMAL TO ℄ ROADWAY OR ℄ MEDIAN = $\text{ARCTAN}\left(\frac{\text{VER.}}{\text{HOR.}}\right)$

B = HORIZONTAL DISTANCE FROM UPSTREAM EDGE OF SHOULDER TO UPSTREAM HEADWALL NORMAL TO ℄ ROADWAY OR ℄ MEDIAN = $\frac{\text{℄ RDWY. FILL} + A(CS) - A(\text{TAN}\alpha)}{\text{TAN}\beta + \text{TAN}\alpha}$

C = HORIZONTAL DISTANCE FROM DOWNSTREAM EDGE OF SHOULDER TO DOWNSTREAM HEADWALL NORMAL TO ℄ ROADWAY OR ℄ MEDIAN = $\frac{\text{℄ RDWY. FILL} + A(CS) + A(\text{TAN}\alpha)}{\text{TAN}\beta - \text{TAN}\alpha}$

CS = CROSS SLOPE OF EACH PART OF ROADWAY INCLUDING CROWN, LANES AND SHOULDERS. CS IS POSITIVE IF RISING AND NEGATIVE IF FALLING AWAY FROM ℄ ROADWAY OR ℄ MEDIAN.

THE TERM "A(CS)" IS THE DIFFERENCE IN ELEVATION BETWEEN ℄ ROADWAY OR ℄ MEDIAN AND THE TOP OF THE FILL SLOPE NORMAL TO ℄ ROADWAY OR ℄ MEDIAN. THIS TERM SHALL BE ADJUSTED FOR UNSYMMETRICAL AND NONSTANDARD ROADWAYS.

TO ACCOUNT FOR A VARYING PROFILE GRADE THE ℄ ROADWAY FILL SHALL BE BASED ON STATIONS THAT CORRESPOND TO THE CORNERS OF THE INSIDE FACE OF THE HEADWALLS THAT PRODUCE MAXIMUM VALUES FOR B AND C.

SEE ROADWAY PLANS FOR SLOPES, ℄ ROADWAY FILL AND ELEVATIONS 1 AND 2. ELEVATIONS 1 AND 2 CORRESPOND TO UPPER AND LOWER FLOW LINE ELEVATIONS AND MAY BE BELOW THE NATURAL STREAM BOTTOM DUE TO ENVIRONMENTAL REQUIREMENTS.

LAYOUT DIMENSIONS

VARIABLE	DIMENSION
∝	SEE EQUATIONS
β	SEE EQUATIONS
B	SEE EQUATIONS
C	SEE EQUATIONS
E	G + 23"
F	S + 2TX
G	2V
V	HT + TS - 12"
W	2A + B + C + 2E
TW	MAX{3'-4" OR (BS + 12")}

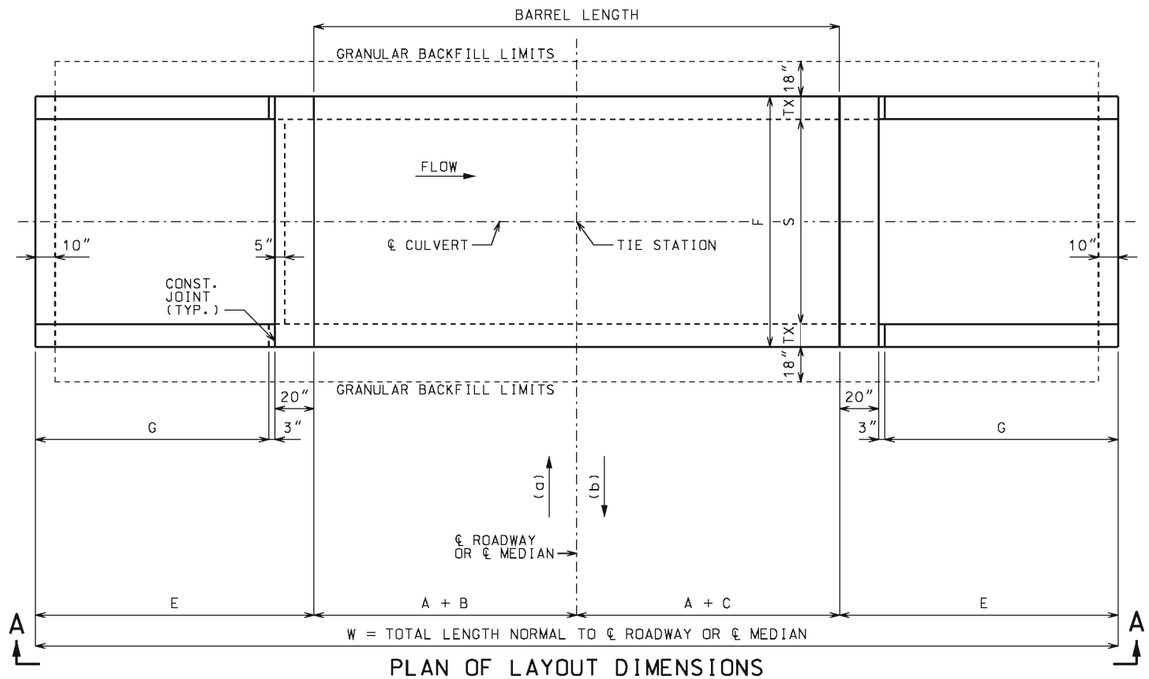

PLAN OF LAYOUT DIMENSIONS

(a) AHEAD STATION WHERE STREAM FLOWS LEFT TO RIGHT. (b) AHEAD STATION WHERE STREAM FLOWS RIGHT TO LEFT.

GENERAL NOTES:

DESIGN SPECIFICATIONS:
2010 AASHTO LRFD BRIDGE DESIGN SPECFICATIONS AND 2010 INTERIM REVISIONS

DESIGN LOADING:
VEHICULAR = HL-93 MINUS LANE LOAD, EARTH = 120 LB/CF
EQUIVALENT FLUID PRESSURE = 30 LB/CF (MIN.), 60 LB/CF (MAX.)

DESIGN UNIT STRESSES:
CLASS B-1 CONCRETE (BOX CULVERT) f'c = 4,000 PSI
REINFORCING STEEL (GRADE 60) fy = 60,000 PSI

MISCELLANEOUS:
FOR REINFORCEMENT DETAILS, SEE SHEET 2 OF 3. FOR SECTION DETAILS, SEE SHEET 3 OF 3. FOR MEMBER THICKNESS, SEE 703.17.

DRAWING NOT TO SCALE. FOLLOW DIMENSIONS.

DIMENSIONS ARE IN INCHES UNLESS OTHERWISE NOTED.

WHEN ALTERNATE PRECAST CONCRETE BOX CULVERT SECTIONS ARE USED, THE MINIMUM DISTANCE FROM INSIDE FACE OF HEADWALLS TO PRECAST SECTIONS MEASURED ALONG THE SHORTEST WALL SHALL BE 3 FEET. REINFORCEMENT AND DIMENSIONS FOR WINGS AND HEADWALLS SHALL BE IN ACCORDANCE WITH MISSOURI STANDARD PLANS.

MISSOURI HIGHWAYS AND TRANSPORTATION COMMISSION
105 WEST CAPITOL
JEFFERSON CITY, MO 65102
1-888-ASK-MODOT (1-888-275-6636)

STATE OF MISSOURI
DENNIS W. HECKMAN
NUMBER PE-27141
PROFESSIONAL ENGINEER
THIS SHEET HAS BEEN SIGNED, SEALED AND DATED ELECTRONICALLY.

CONCRETE SINGLE BOX CULVERT

SKEW: SQUARED
WINGS: STRAIGHT

LAYOUT

DATE EFFECTIVE: 07/01/2015
DATE PREPARED: 5/13/2015

703.10J

SHEET NO. 1 OF 3

IF A SEAL IS PRESENT ON THIS SHEET IT HAS BEEN ELECTRONICALLY SEALED AND DATED.

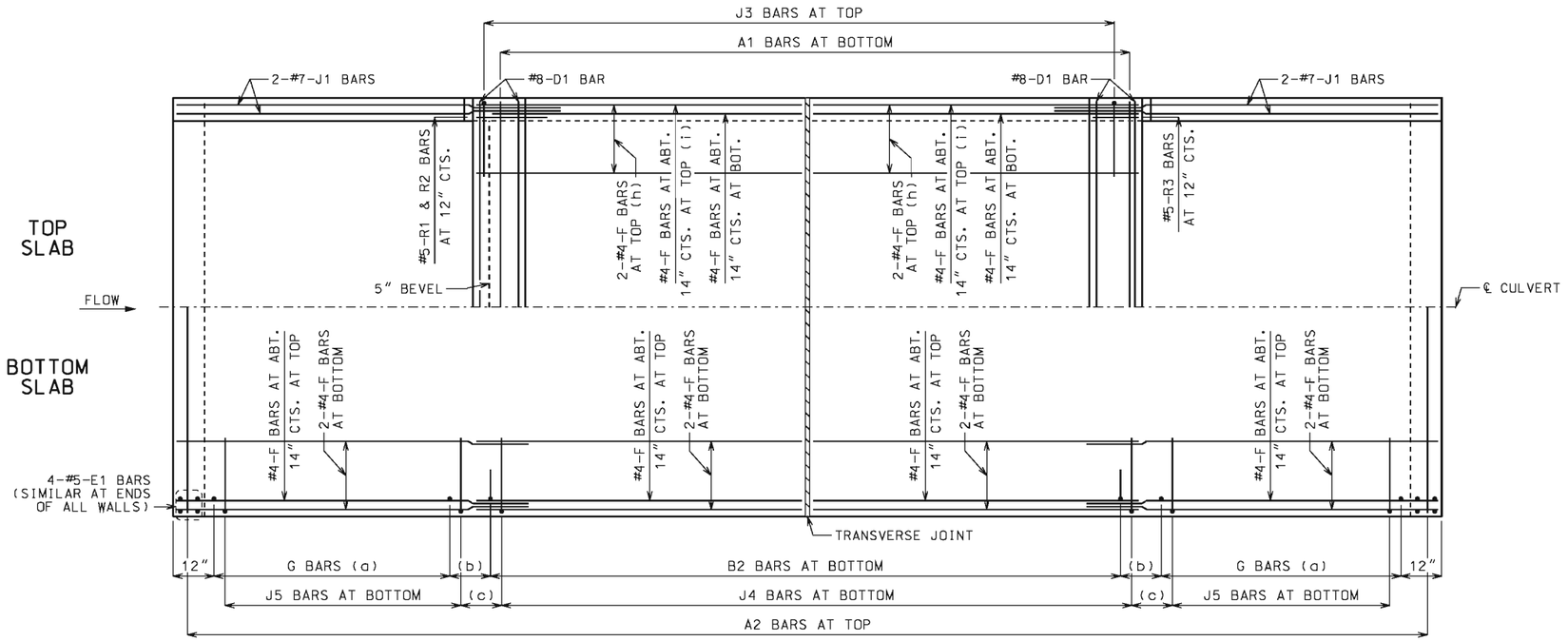

HALF PLANS

HALF PLANS ARE SYMMETRICAL ABOUT ℄ CULVERT.

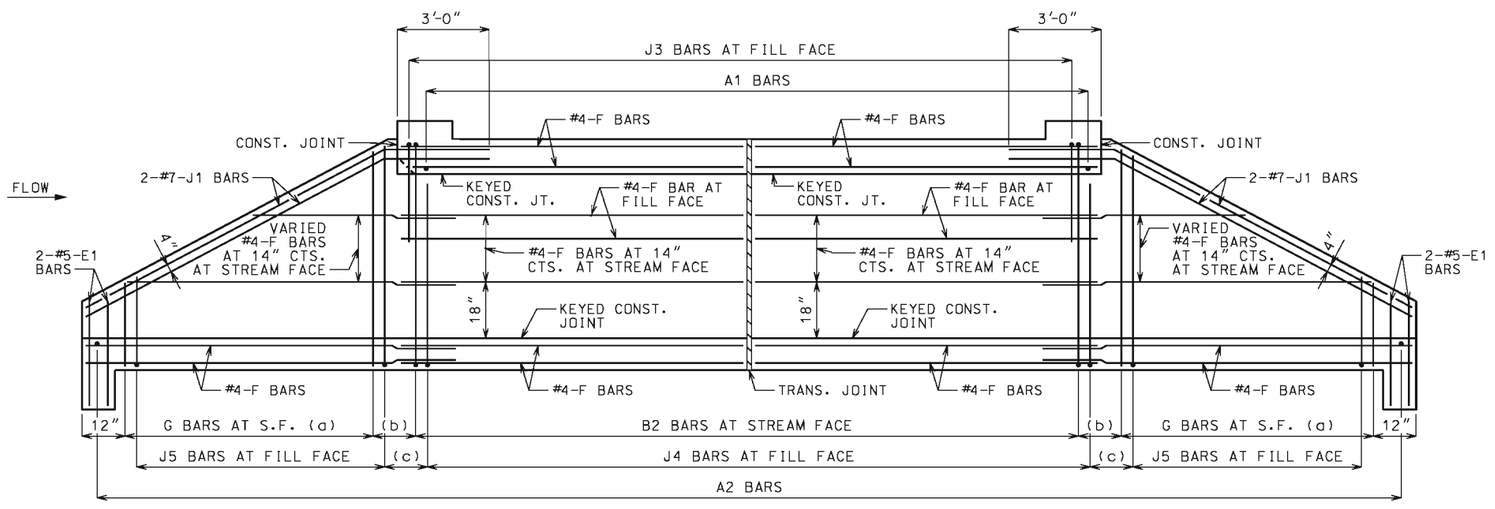

ELEVATION

J1 BARS MAY BE BENT IN FIELD OR SHOP.

LAYING OUT TRANVERSE JOINTS

UNLESS SHOWN ON ROADWAY OR BRIDGE PLANS

USE A TRANSVERSE JOINT WHEN BARREL LENGTH IS OVER 80 FEET. USE ADDITIONAL JOINTS TO LIMIT CUT SECTION LENGTH AND END SECTION BARREL LENGTH MEASURED ALONG CENTERLINE OF CULVERT TO 50 FEET.

MINIMUM END SECTION LENGTH SHALL BE 3 FEET MEASURED ALONG THE SHORTEST WALL FROM THE INSIDE FACE OF HEADWALL TO THE TRANSVERSE JOINT.

TO AVOID LOCATING TRANSVERSE JOINTS UNDER A TRAVELED WAY WITH DESIGN FILLS 2 FEET OR LESS THE FOLLOWING SHALL APPLY:

BARREL LENGTH UP TO 90 FEET WITHOUT A TRANSVERSE JOINT

CUT SECTION LENGTHS UP TO 60 FEET

WHEN BARREL AND CUT SECTION LENGTH RESTRICTIONS REQUIRE TRANSVERSE JOINTS TO BE LOCATED UNDER A TRAVELED WAY WITH DESIGN FILLS 2 FEET OR LESS, THE JOINTS SHALL BE LOCATED TO MINIMIZE THE LENGTH OF JOINT UNDER THE TRAVELED WAY.

TRAVELED WAY IS THE ROADWAY WIDTH MINUS SHOULDER WIDTHS.

FOR CUT SECTION DETAILS, SEE 703.16.

GENERAL NOTES:

FOR SECTIONS THRU BARREL, WINGS AND HEADWALLS, SEE SHEET 3 OF 3. FOR BAR SIZES, SPACING AND DIMENSIONS OF ALL REINFORCEMENT EXCEPT J5 BARS, SEE 703.17. FOR J5 BARS, SEE 703.37.

CONSTRUCTION JOINT KEY NOT SHOWN FOR CLARITY IN HALF PLANS AND ELEVATION. SEE SHEET 3 OF 3 FOR DETAILS.

DRAWING NOT TO SCALE. FOLLOW DIMENSIONS.

MINIMUM CLEARANCE TO REINFORCING STEEL SHALL BE 1½".

LAP LONGITUDINAL BARS A MINIMUM OF 23" AT SPLICES.

BEVELED HEADWALL SHALL BE LOCATED AT UPSTREAM END.

(a) SAME SIZE AND SPACING AS B2 BARS

(b) VARIES, 12" MAXIMUM

(c) J4 BAR SPACING

(d) NOT SPECIFIED ON THIS SHEET

(e) NOT SPECIFIED ON THIS SHEET

(f) NOT SPECIFIED ON THIS SHEET

(g) NOT SPECIFIED ON THIS SHEET

(h) FOR DESIGN FILLS OVER 2'-0"

(i) FOR DESIGN FILLS 2'-0" OR LESS

MISSOURI HIGHWAYS AND TRANSPORTATION COMMISSION
105 WEST CAPITOL
JEFFERSON CITY, MO 65102
1-888-ASK-MODOT (1-888-275-6636)

STATE OF MISSOURI
DENNIS W. HECKMAN
NUMBER PE-27141
PROFESSIONAL ENGINEER
THIS SHEET HAS BEEN SIGNED, SEALED AND DATED ELECTRONICALLY.

CONCRETE SINGLE BOX CULVERT

SKEW: SQUARED
WINGS: STRAIGHT

REINFORCEMENT

DATE EFFECTIVE: 07/01/2015
DATE PREPARED: 5/13/2015

703.10J

SHEET NO. 2 OF 3

IF A SEAL IS PRESENT ON THIS SHEET IT HAS BEEN ELECTRONICALLY SEALED AND DATED.

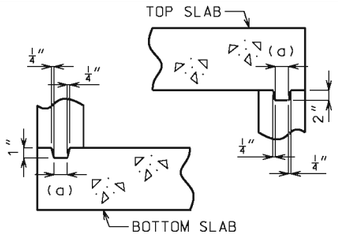

KEYED CONSTRUCTION JOINT

(a) APPROXIMATELY ONE-THIRD OF WALL THICKNESS

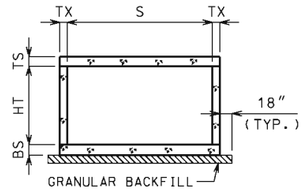

GRANULAR BACKFILL LIMITS AND MEMBER DIMENSIONS

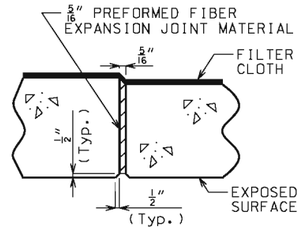

TRANSVERSE JOINT THRU BARREL

PREFORMED FIBER EXPANSION JOINT MATERIAL IN ACCORDANCE WITH SEC 1057 SHALL BE SECURELY STITCHED TO ONE FACE OF THE CONCRETE WITH 10 GAGE COPPER WIRE OR 12 GAGE SOFT DRAWN GALVANIZED STEEL WIRE.

FILTER CLOTH 3 FEET IN WIDTH AND DOUBLE THICKNESS SHALL BE CENTERED ON TRANSVERSE JOINTS IN TOP SLAB AND SIDEWALLS WITH EDGES SEALED WITH MASTIC OR TWO SIDED TAPE. FILTER CLOTH SHALL BE A SUBSURFACE DRAINAGE GEOTEXTILE IN ACCORDANCE WITH SEC 1011. COST OF FURNISHING AND INSTALLING FILTER CLOTH WILL BE CONSIDERED COMPLETELY COVERED BY THE CONTRACT UNIT PRICE FOR OTHER ITEMS.

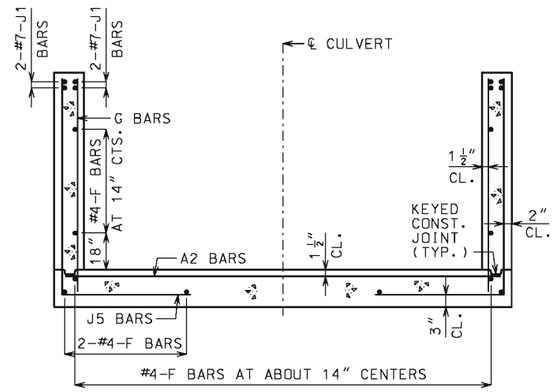

UPSTREAM AND DOWNSTREAM WINGS REINFORCEMENT

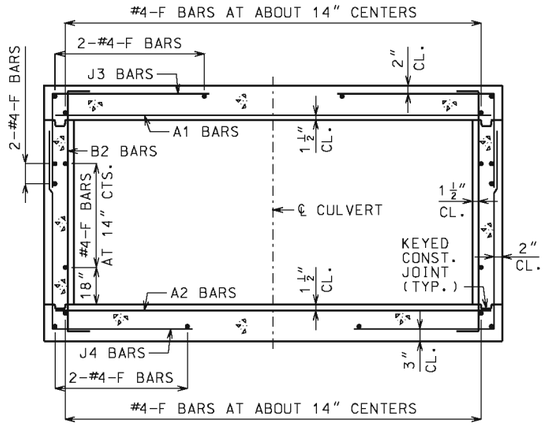

BARREL REINFORCEMENT

FOR DESIGN FILLS OVER 2'-0"

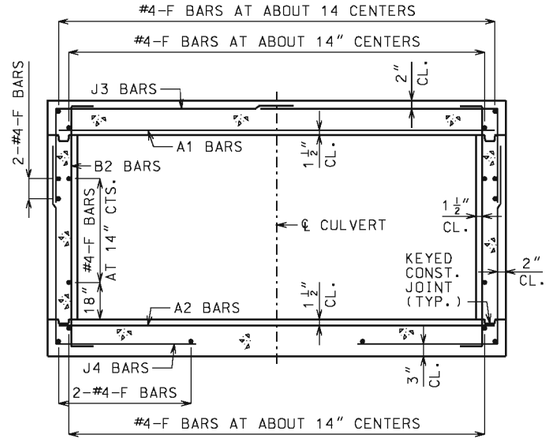

BARREL REINFORCEMENT

FOR DESIGN FILLS 2'-0" OR LESS

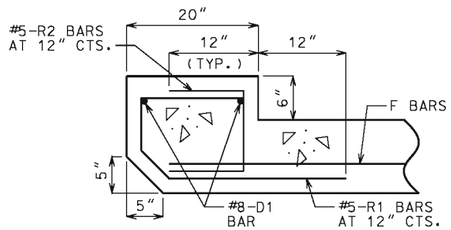

UPSTREAM HEADWALL REINFORCEMENT

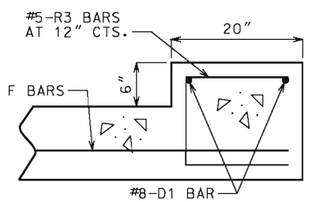

DOWNSTREAM HEADWALL REINFORCEMENT

GENERAL NOTES:

FOR MEMBER THICKNESS AND FOR BAR SIZES, SPACING AND DIMENSIONS OF ALL REINFORCEMENT EXCEPT J5 BARS, SEE 703.17. FOR J5 BARS, SEE 703.37.

BARREL AND WINGS SECTIONS ARE SYMMETRICAL ABOUT AND NORMAL TO ℄ CULVERT. HEADWALL SECTIONS ARE NORMAL TO LONG DIRECTION OF HEADWALL.

DRAWING NOT TO SCALE. FOLLOW DIMENSIONS.

MINIMUM CLEARANCE TO REINFORCING STEEL SHALL BE 1½".

MISSOURI HIGHWAYS AND TRANSPORTATION COMMISSION
105 WEST CAPITOL
JEFFERSON CITY, MO 65102
1-888-ASK-MODOT (1-888-275-6636)

STATE OF MISSOURI
DENNIS W. HECKMAN
NUMBER PE-27141
PROFESSIONAL ENGINEER
THIS SHEET HAS BEEN SIGNED, SEALED AND DATED ELECTRONICALLY.

CONCRETE SINGLE BOX CULVERT

SKEW: SQUARED
WINGS: STRAIGHT

SECTIONS

DATE EFFECTIVE: 07/01/2015
DATE PREPARED: 5/13/2015

703.10J

SHEET NO. 3 OF 3

IF A SEAL IS PRESENT ON THIS SHEET IT HAS BEEN ELECTRONICALLY SEALED AND DATED.

CONSTRUCTION JOINT KEY NOT SHOWN FOR CLARITY. SEE SHEET 3 OF 3 FOR DETAILS.

IF UNSUITABLE MATERIAL IS ENCOUNTERED, EXCAVATION OF UNSUITABLE MATERIAL AND FURNISHING AND PLACING OF GRANULAR BACKFILL SHALL BE IN ACCORDANCE WITH SEC 206.

IF ANY PART OF THE BARREL IS EXPOSED, THE ROADWAY FILL SHALL BE WARPED TO PROVIDE 12 INCHES MINIMUM COVER.

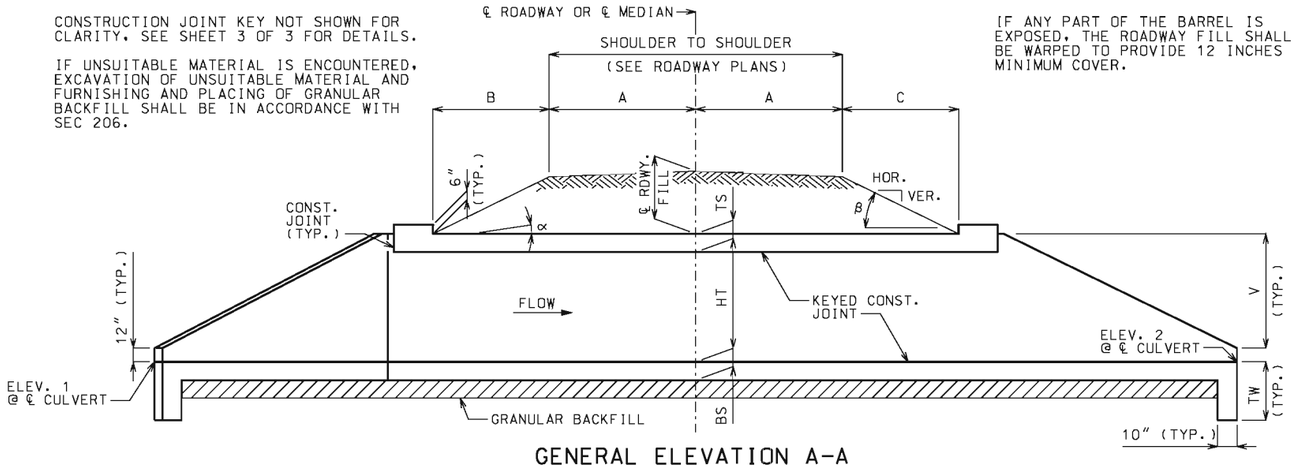

GENERAL ELEVATION A-A

CHANNEL BOTTOM SHALL BE GRADED WITHIN RIGHT OF WAY FOR TRANSITION OF CHANNEL BED TO CULVERT OPENINGS. CHANNEL BANKS SHALL BE TAPERED TO MATCH CULVERT OPENINGS.

EQUATIONS FOR COMPUTING ∝, β, B AND C

∝ = ANGLE OF BARREL SLOPE WITH HORIZONTAL NORMAL TO ℄ ROADWAY OR ℄ MEDIAN = $\text{ARCTAN}\left(\frac{\text{ELEV. 1} - \text{ELEV. 2}}{W}\right)$

β = ANGLE OF FILL SLOPE WITH HORIZONTAL NORMAL TO ℄ ROADWAY OR ℄ MEDIAN = $\text{ARCTAN}\left(\frac{\text{VER.}}{\text{HOR.}}\right)$

B = HORIZONTAL DISTANCE FROM UPSTREAM EDGE OF SHOULDER TO UPSTREAM HEADWALL NORMAL TO ℄ ROADWAY OR ℄ MEDIAN = $\frac{\text{℄ RDWY. FILL} + A(CS) - A(\tan\alpha)}{\tan\beta + \tan\alpha}$

C = HORIZONTAL DISTANCE FROM DOWNSTREAM EDGE OF SHOULDER TO DOWNSTREAM HEADWALL NORMAL TO ℄ ROADWAY OR ℄ MEDIAN = $\frac{\text{℄ RDWY. FILL} + A(CS) + A(\tan\alpha)}{\tan\beta - \tan\alpha}$

CS = CROSS SLOPE OF EACH PART OF ROADWAY INCLUDING CROWN, LANES AND SHOULDERS. CS IS POSITIVE IF RISING AND NEGATIVE IF FALLING AWAY FROM ℄ ROADWAY OR ℄ MEDIAN.

THE TERM "A(CS)" IS THE DIFFERENCE IN ELEVATION BETWEEN ℄ ROADWAY OR ℄ MEDIAN AND THE TOP OF THE FILL SLOPE NORMAL TO ℄ ROADWAY OR ℄ MEDIAN. THIS TERM SHALL BE ADJUSTED FOR UNSYMMETRICAL AND NONSTANDARD ROADWAYS.

TO ACCOUNT FOR A VARYING PROFILE GRADE THE ℄ ROADWAY FILL SHALL BE BASED ON STATIONS THAT CORRESPOND TO THE CORNERS OF THE INSIDE FACE OF THE HEADWALLS THAT PRODUCE MAXIMUM VALUES FOR B AND C.

SEE ROADWAY PLANS FOR SLOPES, ℄ ROADWAY FILL AND ELEVATIONS 1 AND 2. ELEVATIONS 1 AND 2 CORRESPOND TO UPPER AND LOWER FLOW LINE ELEVATIONS AND MAY BE BELOW THE NATURAL STREAM BOTTOM DUE TO ENVIRONMENTAL REQUIREMENTS.

LAYOUT DIMENSIONS

VARIABLE	DIMENSION	VARIABLE	DIMENSION
∝	SEE EQUATIONS	P	2V(SEC 20°)
β	SEE EQUATIONS	Q	TX(COS 20°)
B	SEE EQUATIONS	R	P(COS 20°)
C	SEE EQUATIONS	U	(R + M)(TAN 20°)
D	R + M + N + 20"	V	HT + TS - 12"
E	G + 23"	W	2A + B + C + D + E
F	S + 2TX	Y	TX(SIN 20°)
G	2V	KK	S/2 + U
M	N(COS 20°)	TW	MAX{3'-4" OR (BS + 12")}
N	3" + TX(TAN 10°)		

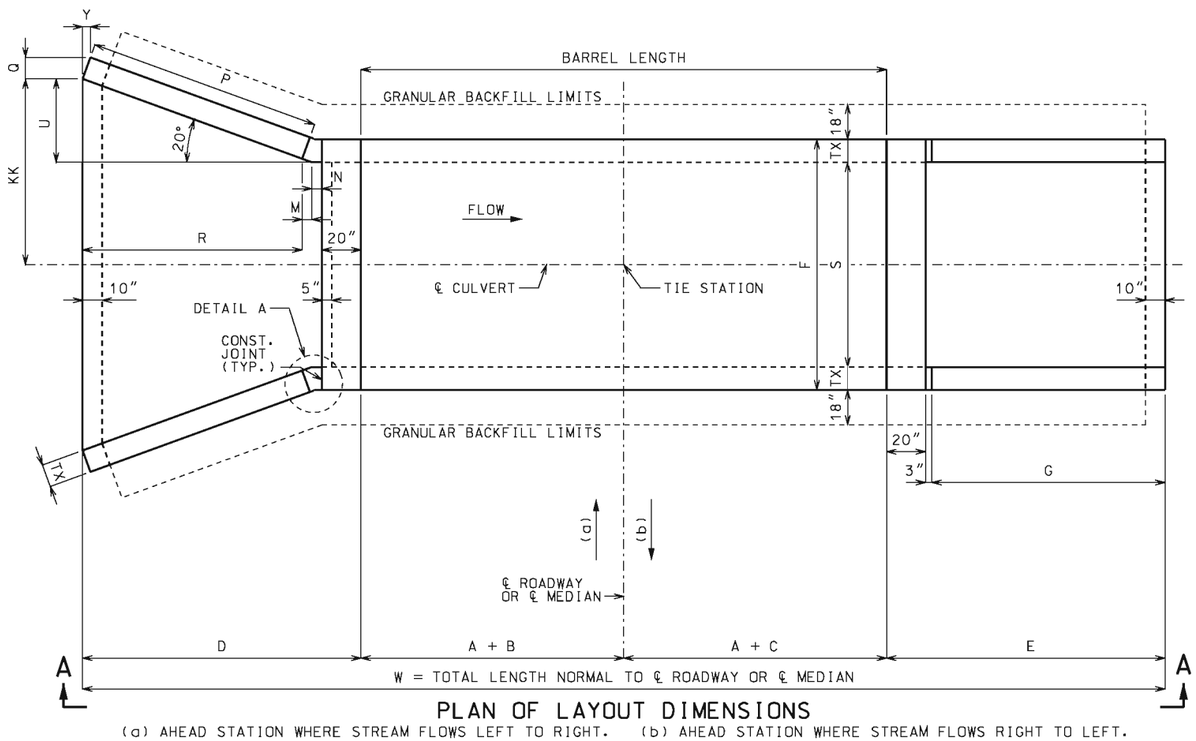

PLAN OF LAYOUT DIMENSIONS

(a) AHEAD STATION WHERE STREAM FLOWS LEFT TO RIGHT. (b) AHEAD STATION WHERE STREAM FLOWS RIGHT TO LEFT.

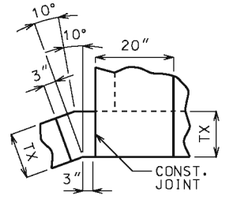

DETAIL A

GENERAL NOTES:

DESIGN SPECIFICATIONS:
2010 AASHTO LRFD BRIDGE DESIGN SPECFICATIONS AND 2010 INTERIM REVISIONS

DESIGN LOADING:
VEHICULAR = HL-93 MINUS LANE LOAD, EARTH = 120 LB/CF
EQUIVALENT FLUID PRESSURE = 30 LB/CF (MIN.), 60 LB/CF (MAX.)

DESIGN UNIT STRESSES:
CLASS B-1 CONCRETE (BOX CULVERT) f'c = 4,000 PSI
REINFORCING STEEL (GRADE 60) fy = 60,000 PSI

MISCELLANEOUS:
FOR REINFORCEMENT DETAILS, SEE SHEET 2 OF 3. FOR SECTION DETAILS, SEE SHEET 3 OF 3. FOR MEMBER THICKNESS, SEE 703.17.

DRAWING NOT TO SCALE. FOLLOW DIMENSIONS.

DIMENSIONS ARE IN INCHES UNLESS OTHERWISE NOTED.

WHEN ALTERNATE PRECAST CONCRETE BOX CULVERT SECTIONS ARE USED, THE MINIMUM DISTANCE FROM INSIDE FACE OF HEADWALLS TO PRECAST SECTIONS MEASURED ALONG THE SHORTEST WALL SHALL BE 3 FEET. REINFORCEMENT AND DIMENSIONS FOR WINGS AND HEADWALLS SHALL BE IN ACCORDANCE WITH MISSOURI STANDARD PLANS.

MISSOURI HIGHWAYS AND TRANSPORTATION COMMISSION
105 WEST CAPITOL
JEFFERSON CITY, MO 65102
1-888-ASK-MODOT (1-888-275-6636)

STATE OF MISSOURI
DENNIS W. HECKMAN
NUMBER PE-27141
PROFESSIONAL ENGINEER
THIS SHEET HAS BEEN SIGNED, SEALED AND DATED ELECTRONICALLY.

CONCRETE SINGLE BOX CULVERT

SKEW: SQUARED
WINGS: FLARED

LAYOUT

DATE EFFECTIVE: 07/01/2015
DATE PREPARED: 5/13/2015

703.11J

SHEET NO. 1 OF 3

IF A SEAL IS PRESENT ON THIS SHEET IT HAS BEEN ELECTRONICALLY SEALED AND DATED.

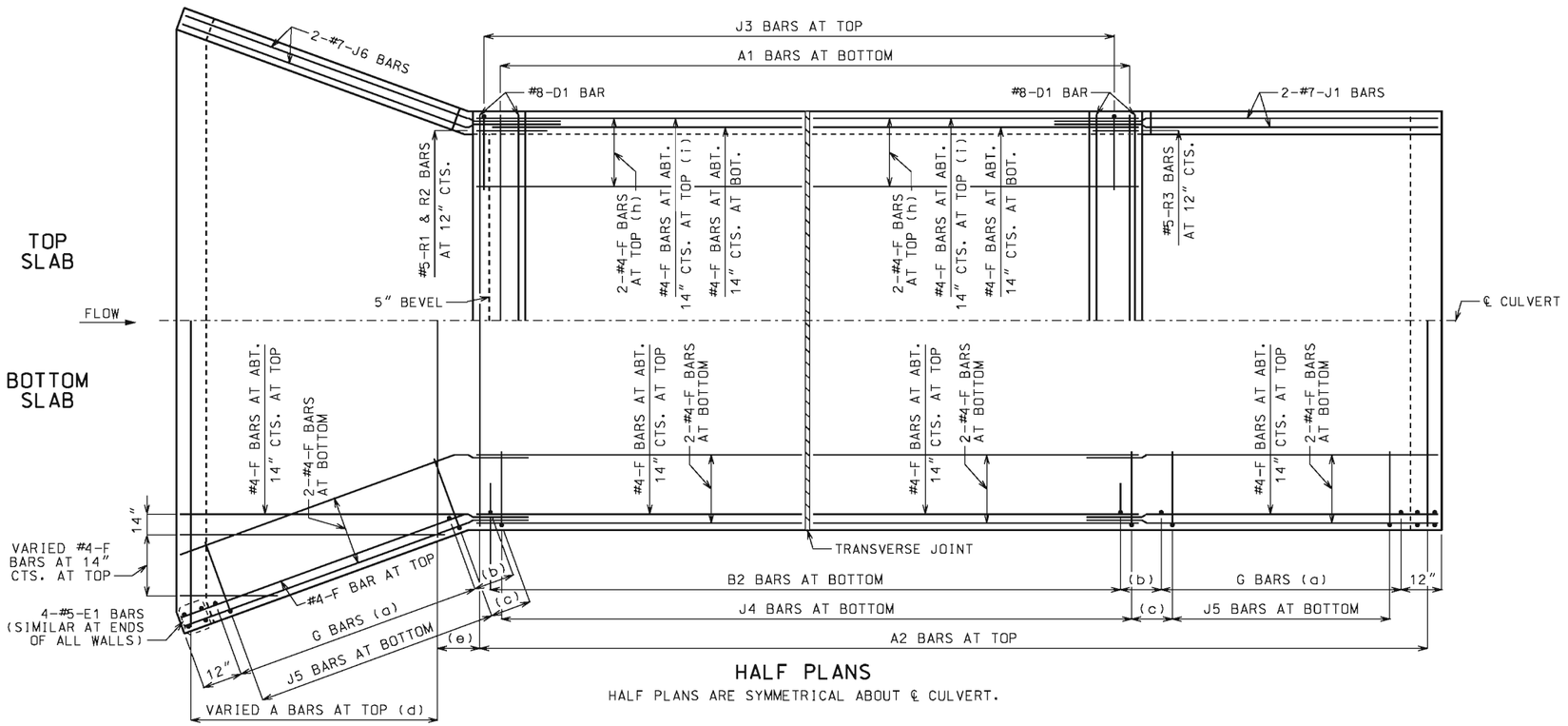

HALF PLANS

HALF PLANS ARE SYMMETRICAL ABOUT ℄ CULVERT.

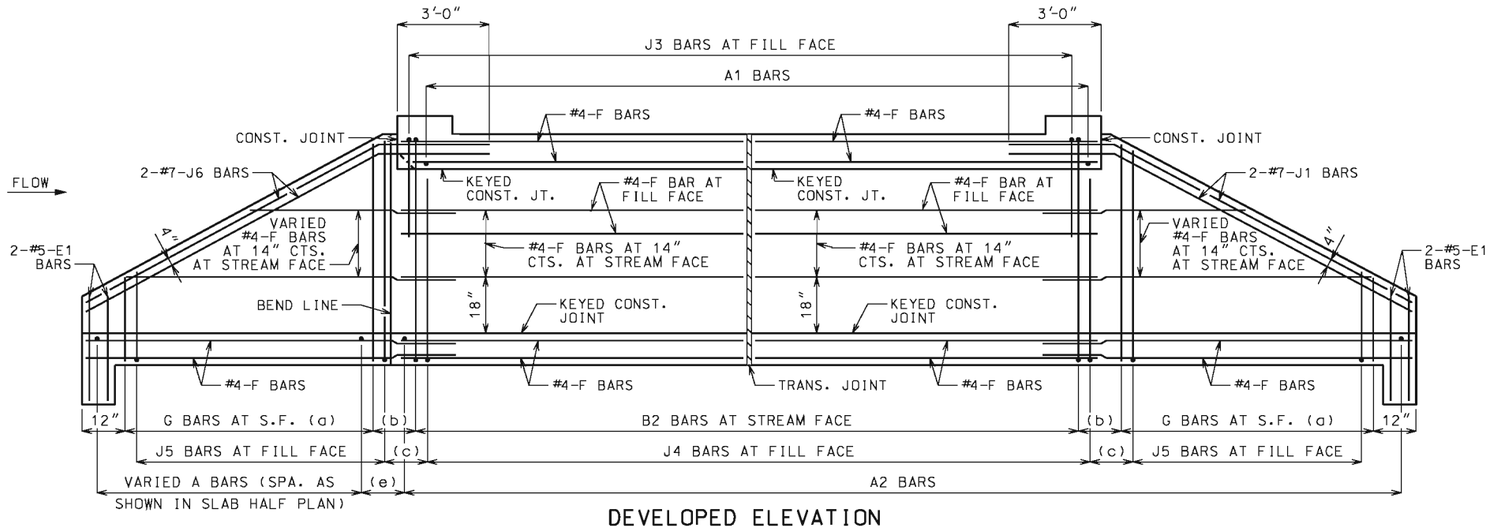

DEVELOPED ELEVATION

J1 AND J6 BARS MAY BE BENT IN FIELD OR SHOP.

LAYING OUT TRANVERSE JOINTS

UNLESS SHOWN ON ROADWAY OR BRIDGE PLANS

USE A TRANSVERSE JOINT WHEN BARREL LENGTH IS OVER 80 FEET. USE ADDITIONAL JOINTS TO LIMIT CUT SECTION LENGTH AND END SECTION BARREL LENGTH MEASURED ALONG CENTERLINE OF CULVERT TO 50 FEET.

MINIMUM END SECTION LENGTH SHALL BE 3 FEET MEASURED ALONG THE SHORTEST WALL FROM THE INSIDE FACE OF HEADWALL TO THE TRANSVERSE JOINT.

TO AVOID LOCATING TRANSVERSE JOINTS UNDER A TRAVELED WAY WITH DESIGN FILLS 2 FEET OR LESS THE FOLLOWING SHALL APPLY:

BARREL LENGTH UP TO 90 FEET WITHOUT A TRANSVERSE JOINT

CUT SECTION LENGTHS UP TO 60 FEET

WHEN BARREL AND CUT SECTION LENGTH RESTRICTIONS REQUIRE TRANSVERSE JOINTS TO BE LOCATED UNDER A TRAVELED WAY WITH DESIGN FILLS 2 FEET OR LESS, THE JOINTS SHALL BE LOCATED TO MINIMIZE THE LENGTH OF JOINT UNDER THE TRAVELED WAY.

TRAVELED WAY IS THE ROADWAY WIDTH MINUS SHOULDER WIDTHS.

FOR CUT SECTION DETAILS, SEE 703.16.

GENERAL NOTES:

FOR SECTIONS THRU BARREL, WINGS AND HEADWALLS, SEE SHEET 3 OF 3. FOR BAR SIZES, SPACING AND DIMENSIONS OF ALL REINFORCEMENT EXCEPT J5 BARS, SEE 703.17. FOR J5 BARS, SEE 703.37.

CONSTRUCTION JOINT KEY NOT SHOWN FOR CLARITY IN HALF PLANS AND ELEVATION. SEE SHEET 3 OF 3 FOR DETAILS.

DRAWING NOT TO SCALE. FOLLOW DIMENSIONS.

MINIMUM CLEARANCE TO REINFORCING STEEL SHALL BE 1½".

LAP LONGITUDINAL BARS A MINIMUM OF 23" AT SPLICES.

BEVELED HEADWALL SHALL BE LOCATED AT UPSTREAM END.

(a) SAME SIZE AND SPACING AS B2 BARS

(b) VARIES, 12" MAXIMUM

(c) J4 BAR SPACING

(d) SAME SIZE AND SPACING AS B2 BARS

(e) A2 BAR SPACING

(f) NOT SPECIFIED ON THIS SHEET

(g) NOT SPECIFIED ON THIS SHEET

(h) FOR DESIGN FILLS OVER 2'-0"

(i) FOR DESIGN FILLS 2'-0" OR LESS

MISSOURI HIGHWAYS AND TRANSPORTATION COMMISSION
105 WEST CAPITOL
JEFFERSON CITY, MO 65102
1-888-ASK-MODOT (1-888-275-6636)

STATE OF MISSOURI
DENNIS W. HECKMAN
NUMBER PE-27141
PROFESSIONAL ENGINEER
THIS SHEET HAS BEEN SIGNED, SEALED AND DATED ELECTRONICALLY.

CONCRETE SINGLE BOX CULVERT

SKEW: SQUARED
WINGS: FLARED

REINFORCEMENT

DATE EFFECTIVE: 07/01/2015
DATE PREPARED: 5/13/2015

703.11J

SHEET NO. 2 OF 3

IF A SEAL IS PRESENT ON THIS SHEET IT HAS BEEN ELECTRONICALLY SEALED AND DATED.

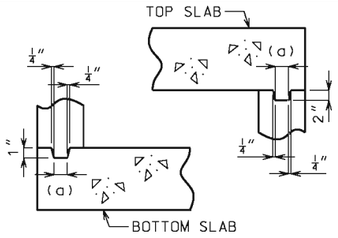

KEYED CONSTRUCTION JOINT

(a) APPROXIMATELY ONE-THIRD OF WALL THICKNESS

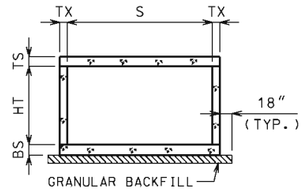

GRANULAR BACKFILL LIMITS AND MEMBER DIMENSIONS

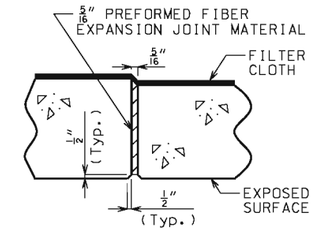

TRANSVERSE JOINT THRU BARREL

PREFORMED FIBER EXPANSION JOINT MATERIAL IN ACCORDANCE WITH SEC 1057 SHALL BE SECURELY STITCHED TO ONE FACE OF THE CONCRETE WITH 10 GAGE COPPER WIRE OR 12 GAGE SOFT DRAWN GALVANIZED STEEL WIRE.

FILTER CLOTH 3 FEET IN WIDTH AND DOUBLE THICKNESS SHALL BE CENTERED ON TRANSVERSE JOINTS IN TOP SLAB AND SIDEWALLS WITH EDGES SEALED WITH MASTIC OR TWO SIDED TAPE. FILTER CLOTH SHALL BE A SUBSURFACE DRAINAGE GEOTEXTILE IN ACCORDANCE WITH SEC 1011. COST OF FURNISHING AND INSTALLING FILTER CLOTH WILL BE CONSIDERED COMPLETELY COVERED BY THE CONTRACT UNIT PRICE FOR OTHER ITEMS.

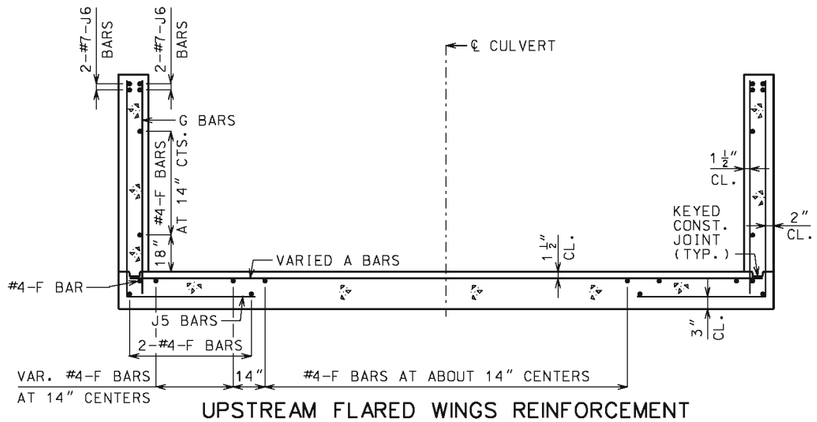

UPSTREAM FLARED WINGS REINFORCEMENT

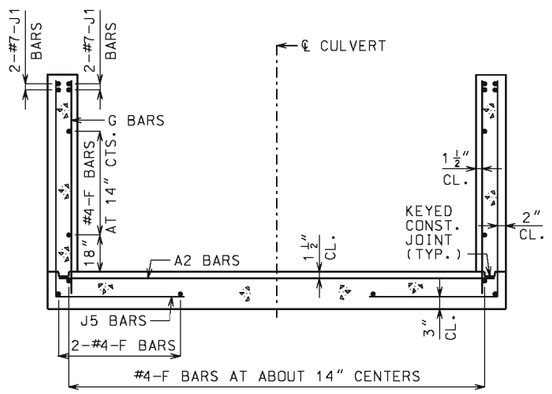

DOWNSTREAM WINGS REINFORCEMENT

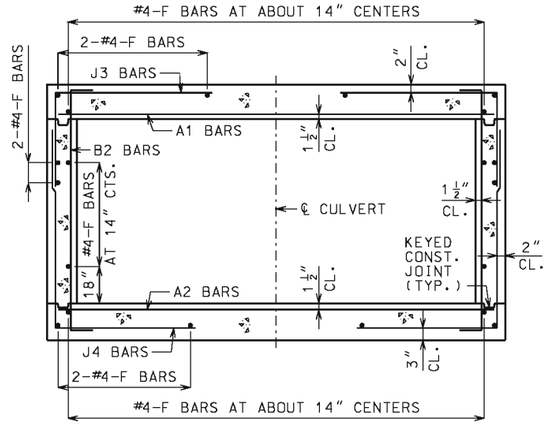

BARREL REINFORCEMENT

FOR DESIGN FILLS OVER 2'-0"

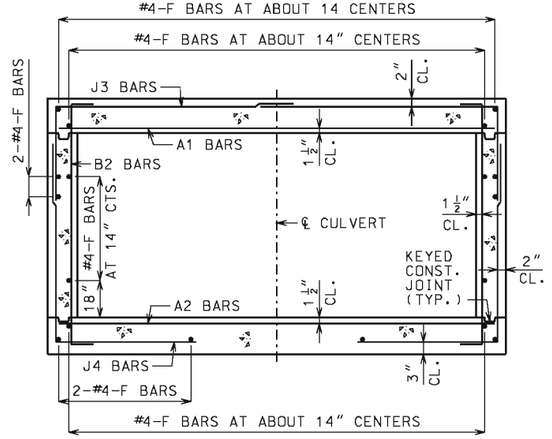

BARREL REINFORCEMENT

FOR DESIGN FILLS 2'-0" OR LESS

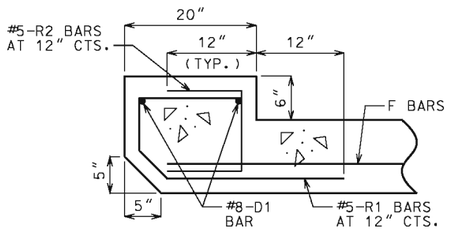

UPSTREAM HEADWALL REINFORCEMENT

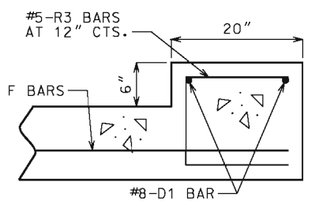

DOWNSTREAM HEADWALL REINFORCEMENT

GENERAL NOTES:

FOR MEMBER THICKNESS AND FOR BAR SIZES, SPACING AND DIMENSIONS OF ALL REINFORCEMENT EXCEPT J5 BARS, SEE 703.17. FOR J5 BARS, SEE 703.37.

BARREL AND WINGS SECTIONS ARE SYMMETRICAL ABOUT AND NORMAL TO ℄ CULVERT. HEADWALL SECTIONS ARE NORMAL TO LONG DIRECTION OF HEADWALL.

DRAWING NOT TO SCALE. FOLLOW DIMENSIONS.

MINIMUM CLEARANCE TO REINFORCING STEEL SHALL BE 1½".

MISSOURI HIGHWAYS AND TRANSPORTATION COMMISSION
105 WEST CAPITOL
JEFFERSON CITY, MO 65102
1-888-ASK-MODOT (1-888-275-6636)

STATE OF MISSOURI
DENNIS W. HECKMAN
NUMBER PE-27141
PROFESSIONAL ENGINEER
THIS SHEET HAS BEEN SIGNED, SEALED AND DATED ELECTRONICALLY.

CONCRETE SINGLE BOX CULVERT

SKEW: SQUARED
WINGS: FLARED

SECTIONS

DATE EFFECTIVE: 07/01/2015
DATE PREPARED: 5/13/2015

703.11J

SHEET NO. 3 OF 3

IF A SEAL IS PRESENT ON THIS SHEET IT HAS BEEN ELECTRONICALLY SEALED AND DATED.

CONSTRUCTION JOINT KEY NOT SHOWN FOR CLARITY. SEE SHEET 3 OF 3 FOR DETAILS.

IF UNSUITABLE MATERIAL IS ENCOUNTERED, EXCAVATION OF UNSUITABLE MATERIAL AND FURNISHING AND PLACING OF GRANULAR BACKFILL SHALL BE IN ACCORDANCE WITH SEC 206.

IF ANY PART OF THE BARREL IS EXPOSED, THE ROADWAY FILL SHALL BE WARPED TO PROVIDE 12 INCHES MINIMUM COVER.

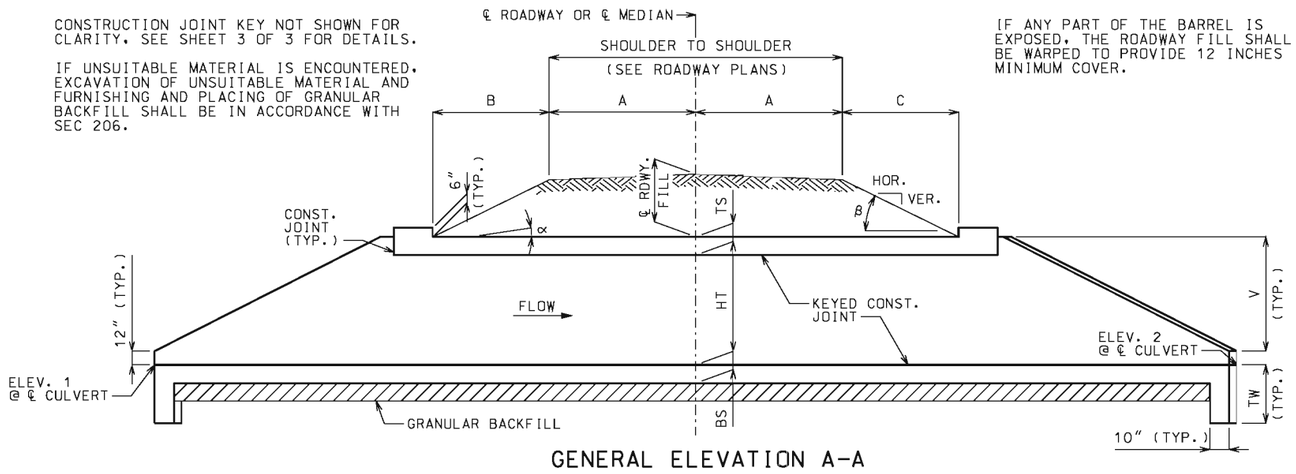

GENERAL ELEVATION A-A

CHANNEL BOTTOM SHALL BE GRADED WITHIN RIGHT OF WAY FOR TRANSITION OF CHANNEL BED TO CULVERT OPENINGS. CHANNEL BANKS SHALL BE TAPERED TO MATCH CULVERT OPENINGS.

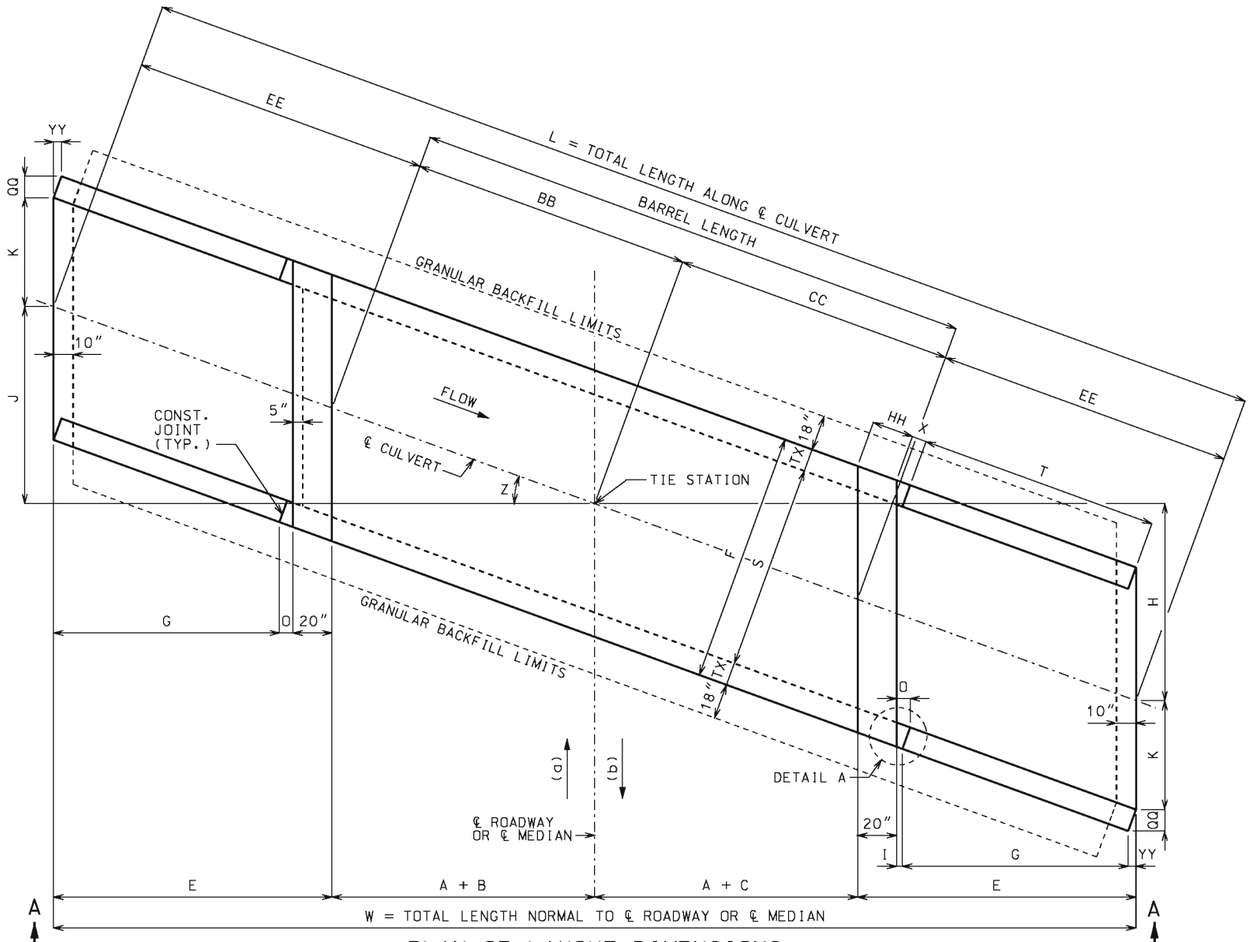

PLAN OF LAYOUT DIMENSIONS

(a) AHEAD STATION WHERE STREAM FLOWS LEFT TO RIGHT. (b) AHEAD STATION WHERE STREAM FLOWS RIGHT TO LEFT.

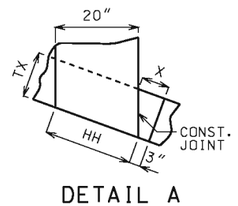

DETAIL A

EQUATIONS FOR COMPUTING ∝, β, B AND C

∝ = ANGLE OF BARREL SLOPE WITH HORIZONTAL NORMAL TO ℄ ROADWAY OR ℄ MEDIAN = $\arctan\left(\frac{\text{ELEV. 1} - \text{ELEV. 2}}{W}\right)$

β = ANGLE OF FILL SLOPE WITH HORIZONTAL NORMAL TO ℄ ROADWAY OR ℄ MEDIAN = $\arctan\left(\frac{\text{VER.}}{\text{HOR.}}\right)$

B = HORIZONTAL DISTANCE FROM UPSTREAM EDGE OF SHOULDER TO UPSTREAM HEADWALL NORMAL TO ℄ ROADWAY OR ℄ MEDIAN = $\frac{\text{℄ RDWY. FILL} + A(CS) - A(\tan\alpha)}{\tan\beta + \tan\alpha}$

C = HORIZONTAL DISTANCE FROM DOWNSTREAM EDGE OF SHOULDER TO DOWNSTREAM HEADWALL NORMAL TO ℄ ROADWAY OR ℄ MEDIAN = $\frac{\text{℄ RDWY. FILL} + A(CS) + A(\tan\alpha)}{\tan\beta - \tan\alpha}$

CS = CROSS SLOPE OF EACH PART OF ROADWAY INCLUDING CROWN, LANES AND SHOULDERS. CS IS POSITIVE IF RISING AND NEGATIVE IF FALLING AWAY FROM ℄ ROADWAY OR ℄ MEDIAN.

THE TERM "A(CS)" IS THE DIFFERENCE IN ELEVATION BETWEEN ℄ ROADWAY OR ℄ MEDIAN AND THE TOP OF THE FILL SLOPE NORMAL TO ℄ ROADWAY OR ℄ MEDIAN. THIS TERM SHALL BE ADJUSTED FOR UNSYMMETRICAL AND NONSTANDARD ROADWAYS.

TO ACCOUNT FOR A VARYING PROFILE GRADE THE ℄ ROADWAY FILL SHALL BE BASED ON STATIONS THAT CORRESPOND TO THE CORNERS OF THE INSIDE FACE OF THE HEADWALLS THAT PRODUCE MAXIMUM VALUES FOR B AND C.

SEE ROADWAY PLANS FOR SLOPES, ℄ ROADWAY FILL AND ELEVATIONS 1 AND 2. ELEVATIONS 1 AND 2 CORRESPOND TO UPPER AND LOWER FLOW LINE ELEVATIONS AND MAY BE BELOW THE NATURAL STREAM BOTTOM DUE TO ENVIRONMENTAL REQUIREMENTS.

LAYOUT DIMENSIONS

VARIABLE	DIMENSION	VARIABLE	DIMENSION
∝	SEE EQUATIONS	T	G(SEC Z)
β	SEE EQUATIONS	V	HT + TS - 12"
B	SEE EQUATIONS	W	2A + B + C + 2E
C	SEE EQUATIONS	X	3" + TX(TAN Z)
E	G + O + 20"	Z	SKEW ANGLE
F	S + 2TX	BB	(A + B)(SEC Z)
G	2V	CC	(A + C)(SEC Z)
H	(A + C + E)(TAN Z)	EE	E(SEC Z)
I	3"(COS Z)	HH	20"(SEC Z)
J	(A + B + E)(TAN Z)	QQ	TX(COS Z)
K	S(SEC Z)/2	YY	TX(SIN Z)
L	2EE + BB + CC	TW	MAX{3'-4" OR (BS + 12")}
O	I + YY		

GENERAL NOTES:

DESIGN SPECIFICATIONS:
2010 AASHTO LRFD BRIDGE DESIGN SPECFICATIONS AND 2010 INTERIM REVISIONS

DESIGN LOADING:
VEHICULAR = HL-93 MINUS LANE LOAD, EARTH = 120 LB/CF
EQUIVALENT FLUID PRESSURE = 30 LB/CF (MIN.), 60 LB/CF (MAX.)

DESIGN UNIT STRESSES:
CLASS B-1 CONCRETE (BOX CULVERT) f'c = 4,000 PSI
REINFORCING STEEL (GRADE 60) fy = 60,000 PSI

MISCELLANEOUS:
FOR REINFORCEMENT DETAILS, SEE SHEET 2 OF 3. FOR SECTION DETAILS, SEE SHEET 3 OF 3. FOR MEMBER THICKNESS, SEE 703.17.

DRAWING NOT TO SCALE. FOLLOW DIMENSIONS.

DIMENSIONS ARE IN INCHES UNLESS OTHERWISE NOTED.

WHEN ALTERNATE PRECAST CONCRETE BOX CULVERT SECTIONS ARE USED, THE MINIMUM DISTANCE FROM INSIDE FACE OF HEADWALLS TO PRECAST SECTIONS MEASURED ALONG THE SHORTEST WALL SHALL BE 3 FEET. REINFORCEMENT AND DIMENSIONS FOR WINGS AND HEADWALLS SHALL BE IN ACCORDANCE WITH MISSOURI STANDARD PLANS.

MISSOURI HIGHWAYS AND TRANSPORTATION COMMISSION
105 WEST CAPITOL
JEFFERSON CITY, MO 65102
1-888-ASK-MODOT (1-888-275-6636)

STATE OF MISSOURI
DENNIS W. HECKMAN
NUMBER PE-27141
PROFESSIONAL ENGINEER
THIS SHEET HAS BEEN SIGNED, SEALED AND DATED ELECTRONICALLY.

CONCRETE SINGLE BOX CULVERT

SKEW: LEFT ADVANCE
WINGS: STRAIGHT

LAYOUT

DATE EFFECTIVE: 07/01/2015
DATE PREPARED: 5/13/2015

703.12J

SHEET NO. 1 OF 3

IF A SEAL IS PRESENT ON THIS SHEET IT HAS BEEN ELECTRONICALLY SEALED AND DATED.

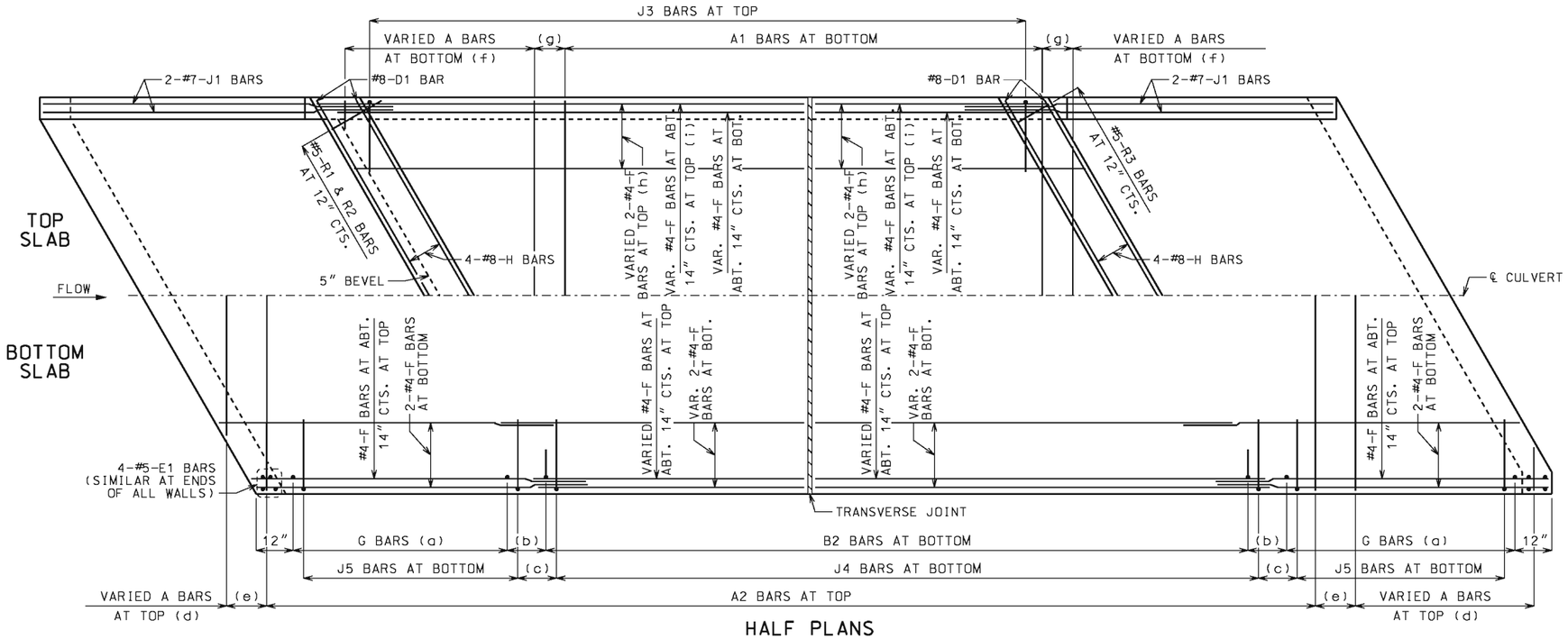

HALF PLANS

HALF PLANS ARE SYMMETRICAL ABOUT ℄ CULVERT.

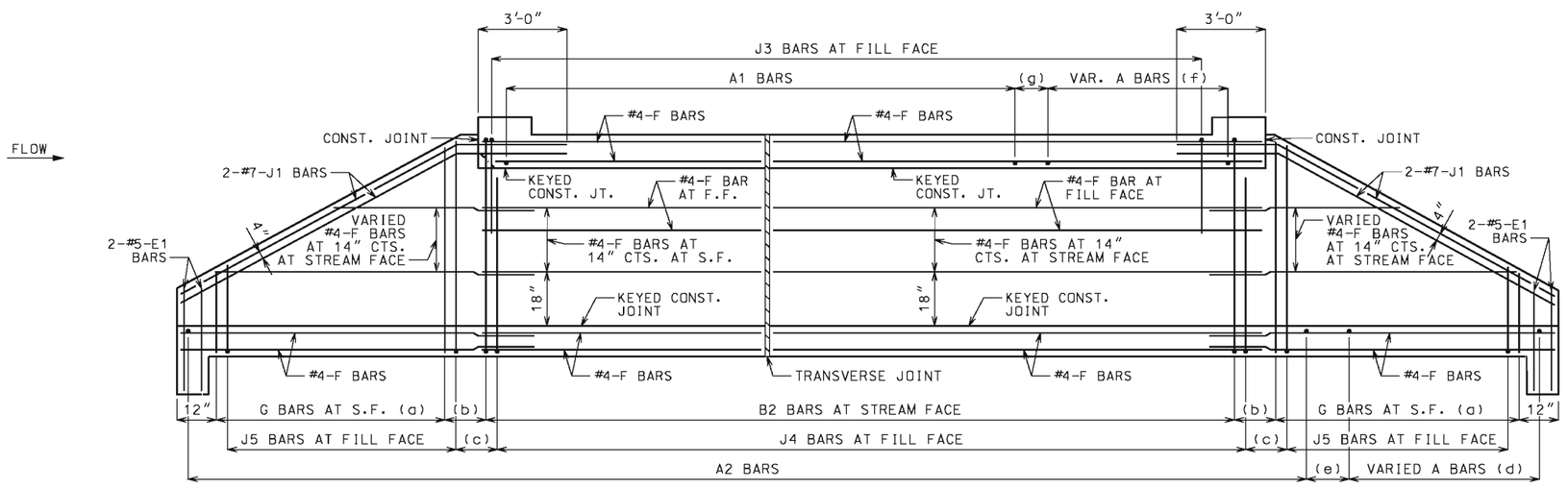

ELEVATION

J1 BARS MAY BE BENT IN FIELD OR SHOP.

LAYING OUT TRANVERSE JOINTS

UNLESS SHOWN ON ROADWAY OR BRIDGE PLANS

USE A TRANSVERSE JOINT WHEN BARREL LENGTH IS OVER 80 FEET. USE ADDITIONAL JOINTS TO LIMIT CUT SECTION LENGTH AND END SECTION BARREL LENGTH MEASURED ALONG CENTERLINE OF CULVERT TO 50 FEET.

MINIMUM END SECTION LENGTH SHALL BE 3 FEET MEASURED ALONG THE SHORTEST WALL FROM THE INSIDE FACE OF HEADWALL TO THE TRANSVERSE JOINT.

TO AVOID LOCATING TRANSVERSE JOINTS UNDER A TRAVELED WAY WITH DESIGN FILLS 2 FEET OR LESS THE FOLLOWING SHALL APPLY:

BARREL LENGTH UP TO 90 FEET WITHOUT A TRANSVERSE JOINT

CUT SECTION LENGTHS UP TO 60 FEET

WHEN BARREL AND CUT SECTION LENGTH RESTRICTIONS REQUIRE TRANSVERSE JOINTS TO BE LOCATED UNDER A TRAVELED WAY WITH DESIGN FILLS 2 FEET OR LESS, THE JOINTS SHALL BE LOCATED TO MINIMIZE THE LENGTH OF JOINT UNDER THE TRAVELED WAY.

TRAVELED WAY IS THE ROADWAY WIDTH MINUS SHOULDER WIDTHS.

FOR CUT SECTION DETAILS, SEE 703.16.

GENERAL NOTES:

FOR SECTIONS THRU BARREL, WINGS AND HEADWALLS, SEE SHEET 3 OF 3. FOR BAR SIZES, SPACING AND DIMENSIONS OF ALL REINFORCEMENT EXCEPT J5 BARS, SEE 703.17. FOR J5 BARS, SEE 703.37.

CONSTRUCTION JOINT KEY NOT SHOWN FOR CLARITY IN HALF PLANS AND ELEVATION. SEE SHEET 3 OF 3 FOR DETAILS.

DRAWING NOT TO SCALE. FOLLOW DIMENSIONS.

MINIMUM CLEARANCE TO REINFORCING STEEL SHALL BE 1½".

LAP LONGITUDINAL BARS A MINIMUM OF 23" AT SPLICES.

BEVELED HEADWALL SHALL BE LOCATED AT UPSTREAM END.

(a) SAME SIZE AND SPACING AS B2 BARS

(b) VARIES, 12" MAXIMUM

(c) J4 BAR SPACING

(d) SAME SIZE AND SPACING AS A2 BARS

(e) A2 BAR SPACING

(f) SAME SIZE AND SPACING AS A1 BARS

(g) A1 BAR SPACING

(h) FOR DESIGN FILLS OVER 2'-0"

(i) FOR DESIGN FILLS 2'-0" OR LESS

IF A SEAL IS PRESENT ON THIS SHEET IT HAS BEEN ELECTRONICALLY SEALED AND DATED.

MISSOURI HIGHWAYS AND TRANSPORTATION COMMISSION
105 WEST CAPITOL
JEFFERSON CITY, MO 65102
1-888-ASK-MODOT (1-888-275-6636)

STATE OF MISSOURI
DENNIS W. HECKMAN
NUMBER PE-27141
PROFESSIONAL ENGINEER
THIS SHEET HAS BEEN SIGNED, SEALED AND DATED ELECTRONICALLY.

CONCRETE SINGLE BOX CULVERT

SKEW: LEFT ADVANCE
WINGS: STRAIGHT

REINFORCEMENT

DATE EFFECTIVE: 07/01/2015
DATE PREPARED: 5/13/2015

703.12J

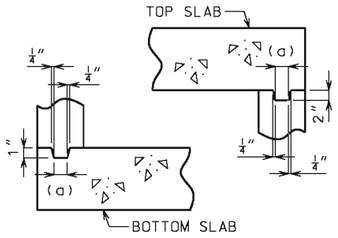

KEYED CONSTRUCTION JOINT

(a) APPROXIMATELY ONE-THIRD OF WALL THICKNESS

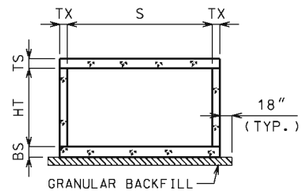

GRANULAR BACKFILL LIMITS AND MEMBER DIMENSIONS

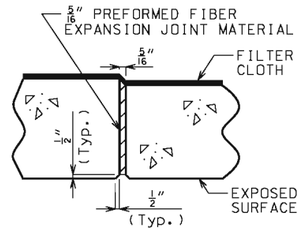

TRANSVERSE JOINT THRU BARREL

PREFORMED FIBER EXPANSION JOINT MATERIAL IN ACCORDANCE WITH SEC 1057 SHALL BE SECURELY STITCHED TO ONE FACE OF THE CONCRETE WITH 10 GAGE COPPER WIRE OR 12 GAGE SOFT DRAWN GALVANIZED STEEL WIRE.

FILTER CLOTH 3 FEET IN WIDTH AND DOUBLE THICKNESS SHALL BE CENTERED ON TRANSVERSE JOINTS IN TOP SLAB AND SIDEWALLS WITH EDGES SEALED WITH MASTIC OR TWO SIDED TAPE. FILTER CLOTH SHALL BE A SUBSURFACE DRAINAGE GEOTEXTILE IN ACCORDANCE WITH SEC 1011. COST OF FURNISHING AND INSTALLING FILTER CLOTH WILL BE CONSIDERED COMPLETELY COVERED BY THE CONTRACT UNIT PRICE FOR OTHER ITEMS.

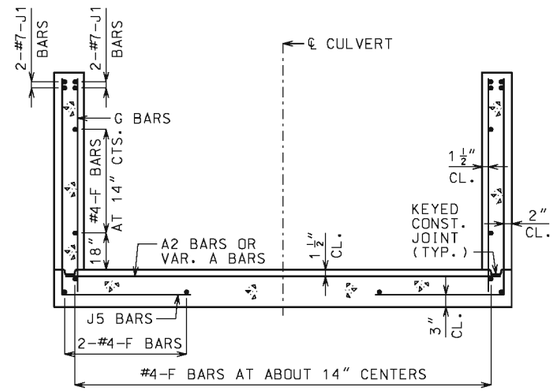

UPSTREAM AND DOWNSTREAM WINGS REINFORCEMENT

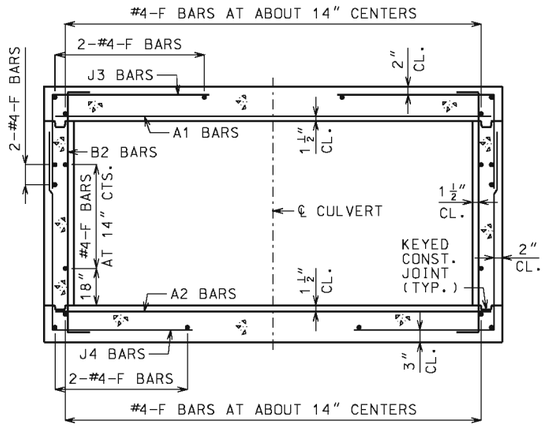

BARREL REINFORCEMENT

FOR DESIGN FILLS OVER 2'-0"

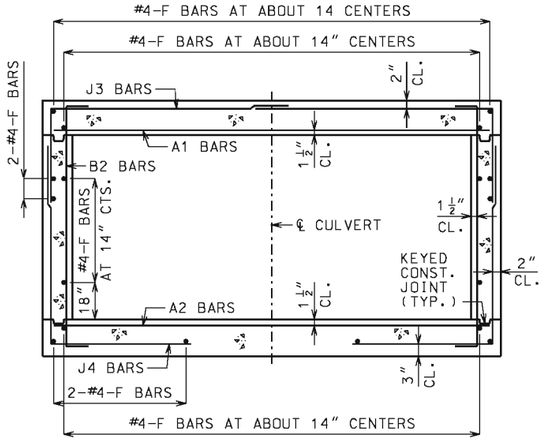

BARREL REINFORCEMENT

FOR DESIGN FILLS 2'-0" OR LESS

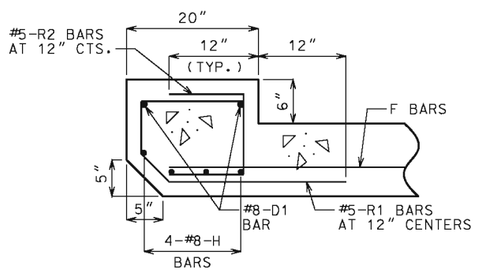

UPSTREAM HEADWALL REINFORCEMENT

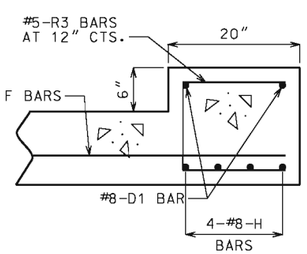

DOWNSTREAM HEADWALL REINFORCEMENT

GENERAL NOTES:

FOR MEMBER THICKNESS AND FOR BAR SIZES, SPACING AND DIMENSIONS OF ALL REINFORCEMENT EXCEPT J5 BARS, SEE 703.17. FOR J5 BARS, SEE 703.37.

BARREL AND WINGS SECTIONS ARE SYMMETRICAL ABOUT AND NORMAL TO ℄ CULVERT. HEADWALL SECTIONS ARE NORMAL TO LONG DIRECTION OF HEADWALL.

DRAWING NOT TO SCALE. FOLLOW DIMENSIONS.

MINIMUM CLEARANCE TO REINFORCING STEEL SHALL BE 1 1/2".

MISSOURI HIGHWAYS AND TRANSPORTATION COMMISSION
105 WEST CAPITOL
JEFFERSON CITY, MO 65102
1-888-ASK-MODOT (1-888-275-6636)

STATE OF MISSOURI
DENNIS W. HECKMAN
NUMBER PE-27141
PROFESSIONAL ENGINEER
THIS SHEET HAS BEEN SIGNED, SEALED AND DATED ELECTRONICALLY.

CONCRETE SINGLE BOX CULVERT

SKEW: LEFT ADVANCE
WINGS: STRAIGHT

SECTIONS

DATE EFFECTIVE: 07/01/2015
DATE PREPARED: 5/13/2015

703.12J

SHEET NO. 3 OF 3

IF A SEAL IS PRESENT ON THIS SHEET IT HAS BEEN ELECTRONICALLY SEALED AND DATED.

CONSTRUCTION JOINT KEY NOT SHOWN FOR CLARITY. SEE SHEET 3 OF 3 FOR DETAILS.

IF UNSUITABLE MATERIAL IS ENCOUNTERED, EXCAVATION OF UNSUITABLE MATERIAL AND FURNISHING AND PLACING OF GRANULAR BACKFILL SHALL BE IN ACCORDANCE WITH SEC 206.

IF ANY PART OF THE BARREL IS EXPOSED, THE ROADWAY FILL SHALL BE WARPED TO PROVIDE 12 INCHES MINIMUM COVER.

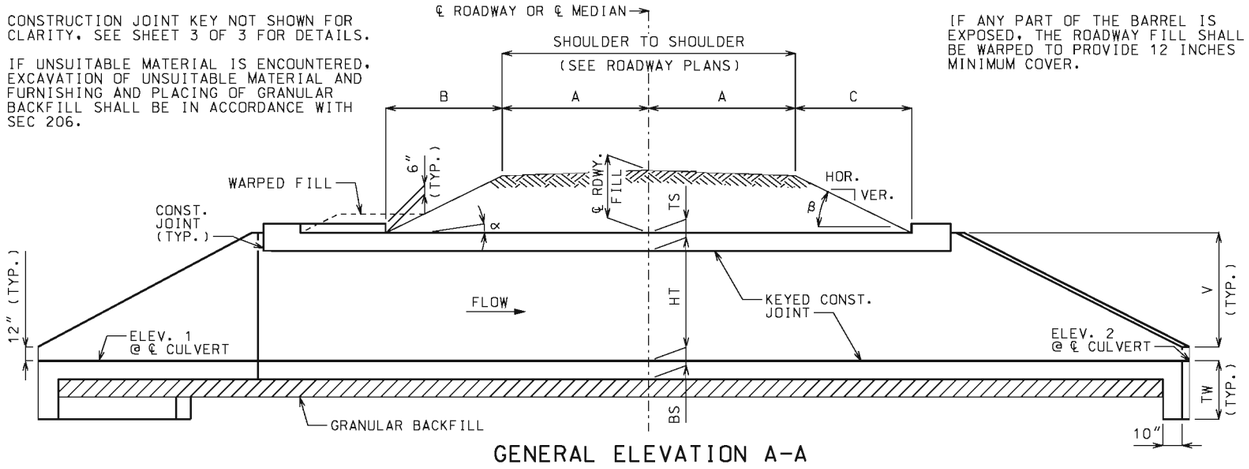

GENERAL ELEVATION A-A

CHANNEL BOTTOM SHALL BE GRADED WITHIN RIGHT OF WAY FOR TRANSITION OF CHANNEL BED TO CULVERT OPENINGS. CHANNEL BANKS SHALL BE TAPERED TO MATCH CULVERT OPENINGS.

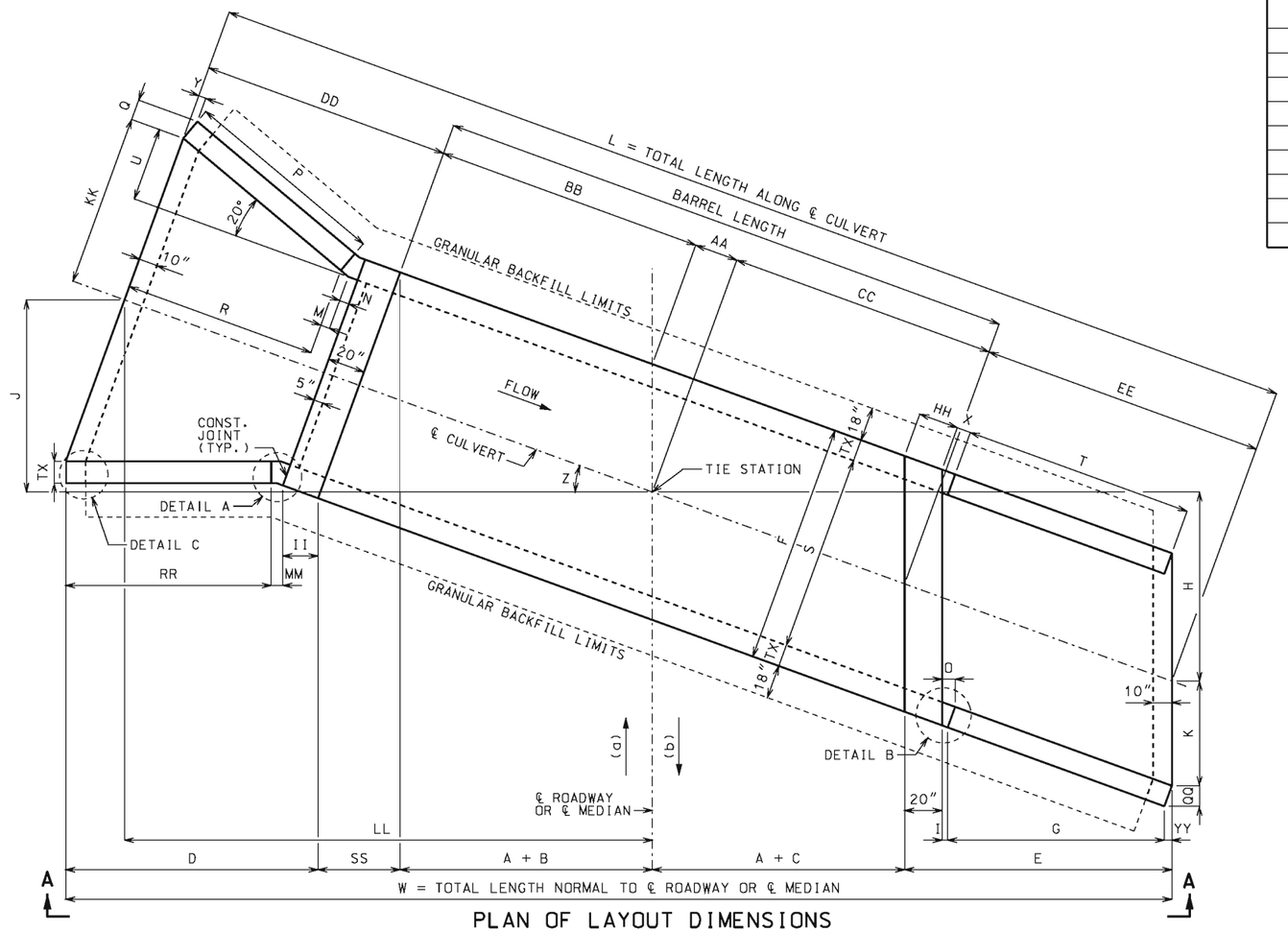

PLAN OF LAYOUT DIMENSIONS

(a) AHEAD STATION WHERE STREAM FLOWS LEFT TO RIGHT. (b) AHEAD STATION WHERE STREAM FLOWS RIGHT TO LEFT.

EQUATIONS FOR COMPUTING ∝, β, B AND C

∝ = ANGLE OF BARREL SLOPE WITH HORIZONTAL NORMAL TO ℄ ROADWAY OR ℄ MEDIAN = $\text{ARCTAN}\left(\frac{\text{ELEV. 1} - \text{ELEV. 2}}{\text{LL+A+C+E}}\right)$

β = ANGLE OF FILL SLOPE WITH HORIZONTAL NORMAL TO ℄ ROADWAY OR ℄ MEDIAN = $\text{ARCTAN}\left(\frac{\text{VER.}}{\text{HOR.}}\right)$

B = HORIZONTAL DISTANCE FROM UPSTREAM EDGE OF SHOULDER TO UPSTREAM HEADWALL NORMAL TO ℄ ROADWAY OR ℄ MEDIAN = $\frac{\text{℄ RDWY. FILL} + \text{A(CS)} - \text{A(TAN}\alpha)}{\text{TAN}\beta + \text{TAN}\alpha}$

C = HORIZONTAL DISTANCE FROM DOWNSTREAM EDGE OF SHOULDER TO DOWNSTREAM HEADWALL NORMAL TO ℄ ROADWAY OR ℄ MEDIAN = $\frac{\text{℄ RDWY. FILL} + \text{A(CS)} + \text{A(TAN}\alpha)}{\text{TAN}\beta - \text{TAN}\alpha}$

CS = CROSS SLOPE OF EACH PART OF ROADWAY INCLUDING CROWN, LANES AND SHOULDERS. CS IS POSITIVE IF RISING AND NEGATIVE IF FALLING AWAY FROM ℄ ROADWAY OR ℄ MEDIAN.

THE TERM "A(CS)" IS THE DIFFERENCE IN ELEVATION BETWEEN ℄ ROADWAY OR ℄ MEDIAN AND THE TOP OF THE FILL SLOPE NORMAL TO ℄ ROADWAY OR ℄ MEDIAN. THIS TERM SHALL BE ADJUSTED FOR UNSYMMETRICAL AND NONSTANDARD ROADWAYS.

TO ACCOUNT FOR A VARYING PROFILE GRADE THE ℄ ROADWAY FILL SHALL BE BASED ON STATIONS THAT CORRESPOND TO THE CORNERS OF THE INSIDE FACE OF THE HEADWALLS THAT PRODUCE MAXIMUM VALUES FOR B AND C.

SEE ROADWAY PLANS FOR SLOPES, ℄ ROADWAY FILL AND ELEVATIONS 1 AND 2. ELEVATIONS 1 AND 2 CORRESPOND TO UPPER AND LOWER FLOW LINE ELEVATIONS AND MAY BE BELOW THE NATURAL STREAM BOTTOM DUE TO ENVIRONMENTAL REQUIREMENTS.

LAYOUT DIMENSIONS

VARIABLE	DIMENSION	VARIABLE	DIMENSION	VARIABLE	DIMENSION
∝	SEE EQUATIONS	N	3" + TX(TAN 10°)	CC	(A + C)(SEC Z)
β	SEE EQUATIONS	O	I + YY	DD	R + M + N + 20"
B	SEE EQUATIONS	P	2V[SEC(Z + 20°)]	EE	E(SEC Z)
C	SEE EQUATIONS	Q	TX(COS 20°)	HH	20"(SEC Z)
D	Z ≥ 20°: II + MM + RR	R	P(COS 20°)	II	20"(COS Z)
	Z < 20°: II + MM + RR + TT	T	G(SEC Z)	KK	S/2 + U
E	G + O + 20"	U	(R + M)(TAN 20°)	LL	(AA + BB + DD)(COS Z)
F	S + 2TX	V	HT + TS − 12"	MM	3"[COS Z + COS(Z − 20°)]
G	2V	W	2A + B + C + D + E + SS	QQ	TX(COS Z)
H	(A + C + E)(TAN Z)	X	3" + TX(TAN Z)	RR	P[COS (Z − 20°)]
I	3"(COS Z)	Y	TX(SIN 20°)	SS	F(SIN Z)
J	(AA + BB + DD)(SIN Z)	Z	SKEW ANGLE	TT	TX[SIN(20° − Z)]
K	S(SEC Z)/2	AA	F(TAN Z)/2	YY	TX(SIN Z)
L	AA + BB + CC + DD + EE	BB	(A + B)(SEC Z)	TW	MAX{3'-4" OR (BS + 12")}
M	N(COS 20°)				

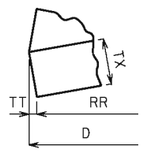

DETAIL C
For Z < 20°

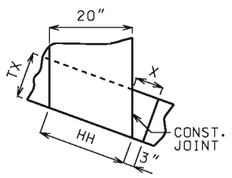

DETAIL B

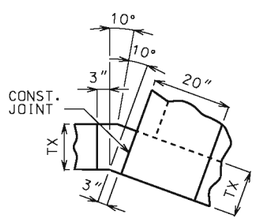

DETAIL A

GENERAL NOTES:

DESIGN SPECIFICATIONS:
2010 AASHTO LRFD BRIDGE DESIGN SPECFICATIONS AND 2010 INTERIM REVISIONS

DESIGN LOADING:
VEHICULAR = HL-93 MINUS LANE LOAD, EARTH = 120 LB/CF
EQUIVALENT FLUID PRESSURE = 30 LB/CF (MIN.), 60 LB/CF (MAX.)

DESIGN UNIT STRESSES:
CLASS B-1 CONCRETE (BOX CULVERT) f'c = 4,000 PSI
REINFORCING STEEL (GRADE 60) fy = 60,000 PSI

MISCELLANEOUS:
FOR REINFORCEMENT DETAILS, SEE SHEET 2 OF 3. FOR SECTION DETAILS, SEE SHEET 3 OF 3. FOR MEMBER THICKNESS, SEE 703.17.

DRAWING NOT TO SCALE. FOLLOW DIMENSIONS.

DIMENSIONS ARE IN INCHES UNLESS OTHERWISE NOTED.

WHEN ALTERNATE PRECAST CONCRETE BOX CULVERT SECTIONS ARE USED, THE MINIMUM DISTANCE FROM INSIDE FACE OF HEADWALLS TO PRECAST SECTIONS MEASURED ALONG THE SHORTEST WALL SHALL BE 3 FEET. REINFORCEMENT AND DIMENSIONS FOR WINGS AND HEADWALLS SHALL BE IN ACCORDANCE WITH MISSOURI STANDARD PLANS.

MISSOURI HIGHWAYS AND TRANSPORTATION COMMISSION
105 WEST CAPITOL
JEFFERSON CITY, MO 65102
1-888-ASK-MODOT (1-888-275-6636)

STATE OF MISSOURI
DENNIS W. HECKMAN
NUMBER PE-27141
PROFESSIONAL ENGINEER
THIS SHEET HAS BEEN SIGNED, SEALED AND DATED ELECTRONICALLY.

CONCRETE SINGLE BOX CULVERT

SKEW: LEFT ADVANCE
WINGS: FLARED

LAYOUT

DATE EFFECTIVE: 07/01/2015
DATE PREPARED: 5/13/2015

703.13J

SHEET NO. 1 OF 3

IF A SEAL IS PRESENT ON THIS SHEET IT HAS BEEN ELECTRONICALLY SEALED AND DATED.

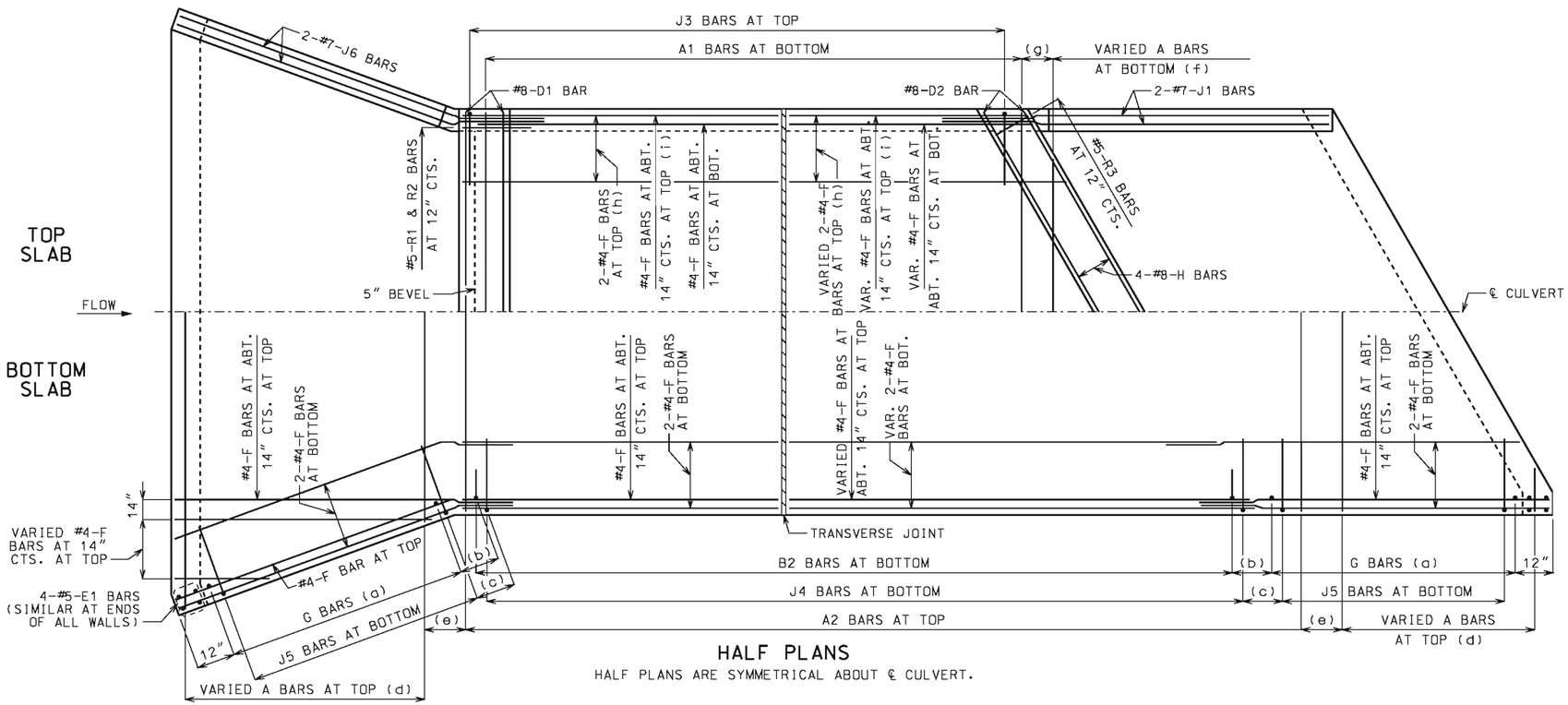

HALF PLANS

HALF PLANS ARE SYMMETRICAL ABOUT ℄ CULVERT.

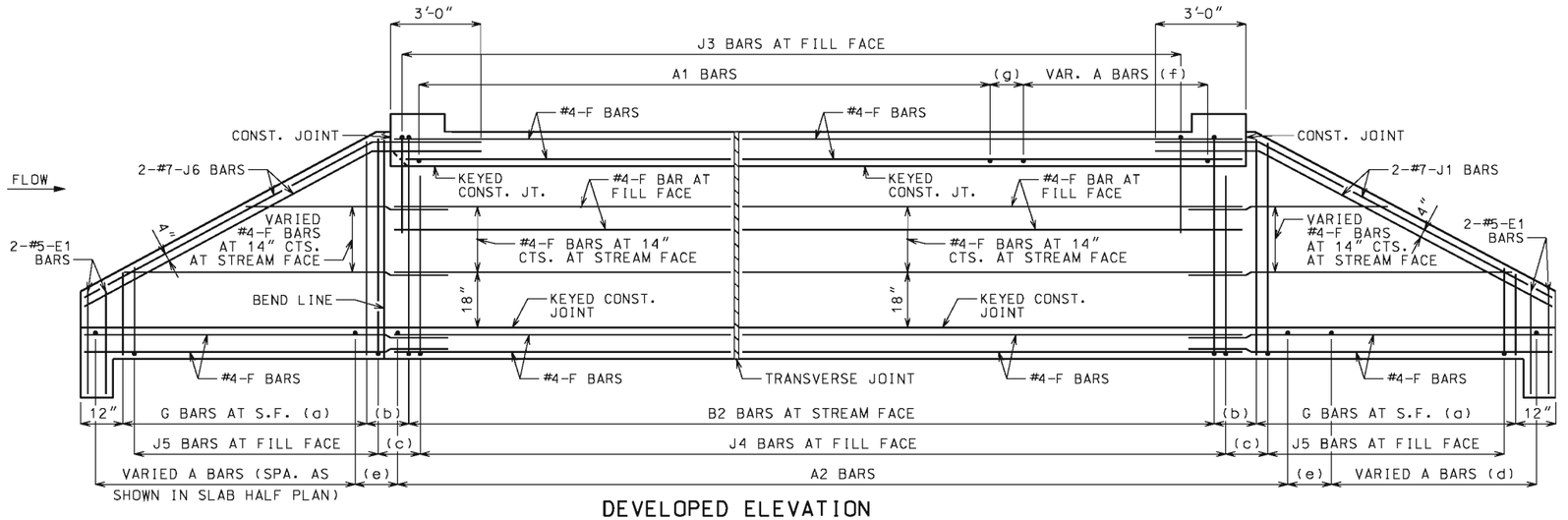

DEVELOPED ELEVATION

J1 AND J6 BARS MAY BE BENT IN FIELD OR SHOP.

LAYING OUT TRANVERSE JOINTS

UNLESS SHOWN ON ROADWAY OR BRIDGE PLANS

USE A TRANSVERSE JOINT WHEN BARREL LENGTH IS OVER 80 FEET. USE ADDITIONAL JOINTS TO LIMIT CUT SECTION LENGTH AND END SECTION BARREL LENGTH MEASURED ALONG CENTERLINE OF CULVERT TO 50 FEET.

MINIMUM END SECTION LENGTH SHALL BE 3 FEET MEASURED ALONG THE SHORTEST WALL FROM THE INSIDE FACE OF HEADWALL TO THE TRANSVERSE JOINT.

TO AVOID LOCATING TRANSVERSE JOINTS UNDER A TRAVELED WAY WITH DESIGN FILLS 2 FEET OR LESS THE FOLLOWING SHALL APPLY:

BARREL LENGTH UP TO 90 FEET WITHOUT A TRANSVERSE JOINT

CUT SECTION LENGTHS UP TO 60 FEET

WHEN BARREL AND CUT SECTION LENGTH RESTRICTIONS REQUIRE TRANSVERSE JOINTS TO BE LOCATED UNDER A TRAVELED WAY WITH DESIGN FILLS 2 FEET OR LESS, THE JOINTS SHALL BE LOCATED TO MINIMIZE THE LENGTH OF JOINT UNDER THE TRAVELED WAY.

TRAVELED WAY IS THE ROADWAY WIDTH MINUS SHOULDER WIDTHS.

FOR CUT SECTION DETAILS, SEE 703.16.

GENERAL NOTES:

FOR SECTIONS THRU BARREL, WINGS AND HEADWALLS, SEE SHEET 3 OF 3. FOR BAR SIZES, SPACING AND DIMENSIONS OF ALL REINFORCEMENT EXCEPT J5 BARS, SEE 703.17. FOR J5 BARS, SEE 703.37.

CONSTRUCTION JOINT KEY NOT SHOWN FOR CLARITY IN HALF PLANS AND ELEVATION. SEE SHEET 3 OF 3 FOR DETAILS.

DRAWING NOT TO SCALE. FOLLOW DIMENSIONS.

MINIMUM CLEARANCE TO REINFORCING STEEL SHALL BE 1½".

LAP LONGITUDINAL BARS A MINIMUM OF 23" AT SPLICES.

BEVELED HEADWALL SHALL BE LOCATED AT UPSTREAM END.

(a) SAME SIZE AND SPACING AS B2 BARS

(b) VARIES, 12" MAXIMUM

(c) J4 BAR SPACING

(d) SAME SIZE AND SPACING AS A2 BARS

(e) A2 BAR SPACING

(f) SAME SIZE AND SPACING AS A1 BARS

(g) A1 BAR SPACING

(h) FOR DESIGN FILLS OVER 2'-0"

(i) FOR DESIGN FILLS 2'-0" OR LESS

MISSOURI HIGHWAYS AND TRANSPORTATION COMMISSION
105 WEST CAPITOL
JEFFERSON CITY, MO 65102
1-888-ASK-MODOT (1-888-275-6636)

STATE OF MISSOURI
DENNIS W. HECKMAN
NUMBER PE-27141
PROFESSIONAL ENGINEER
THIS SHEET HAS BEEN SIGNED, SEALED AND DATED ELECTRONICALLY.

CONCRETE SINGLE BOX CULVERT

SKEW: LEFT ADVANCE
WINGS: FLARED

REINFORCEMENT

DATE EFFECTIVE: 07/01/2015
DATE PREPARED: 5/13/2015

703.13J

SHEET NO. 2 OF 3

IF A SEAL IS PRESENT ON THIS SHEET IT HAS BEEN ELECTRONICALLY SEALED AND DATED.

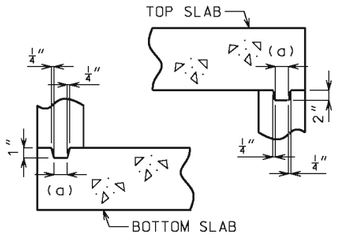

KEYED CONSTRUCTION JOINT

(a) APPROXIMATELY ONE-THIRD OF WALL THICKNESS

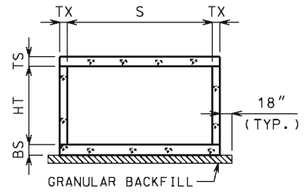

GRANULAR BACKFILL LIMITS AND MEMBER DIMENSIONS

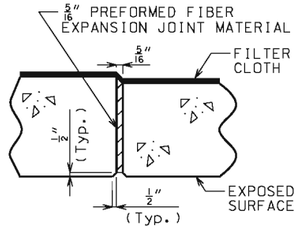

TRANSVERSE JOINT THRU BARREL

PREFORMED FIBER EXPANSION JOINT MATERIAL IN ACCORDANCE WITH SEC 1057 SHALL BE SECURELY STITCHED TO ONE FACE OF THE CONCRETE WITH 10 GAGE COPPER WIRE OR 12 GAGE SOFT DRAWN GALVANIZED STEEL WIRE.

FILTER CLOTH 3 FEET IN WIDTH AND DOUBLE THICKNESS SHALL BE CENTERED ON TRANSVERSE JOINTS IN TOP SLAB AND SIDEWALLS WITH EDGES SEALED WITH MASTIC OR TWO SIDED TAPE. FILTER CLOTH SHALL BE A SUBSURFACE DRAINAGE GEOTEXTILE IN ACCORDANCE WITH SEC 1011. COST OF FURNISHING AND INSTALLING FILTER CLOTH WILL BE CONSIDERED COMPLETELY COVERED BY THE CONTRACT UNIT PRICE FOR OTHER ITEMS.

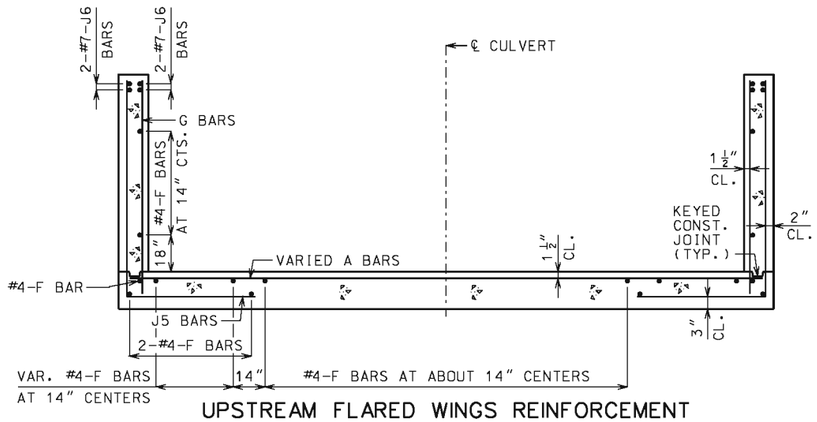

UPSTREAM FLARED WINGS REINFORCEMENT

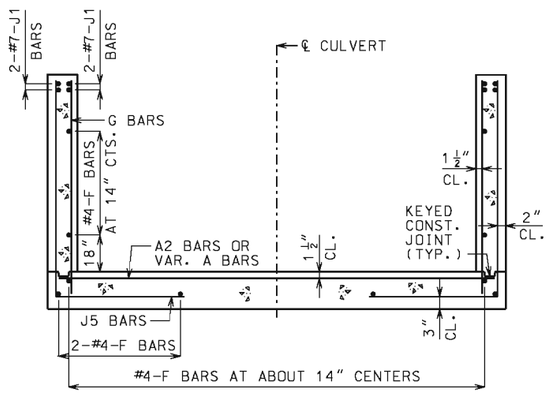

DOWNSTREAM WINGS REINFORCEMENT

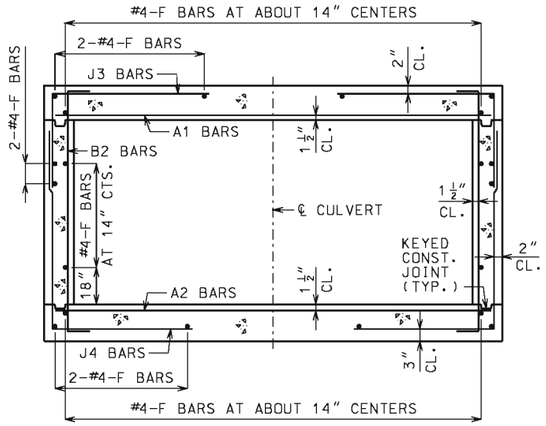

BARREL REINFORCEMENT

FOR DESIGN FILLS OVER 2'-0"

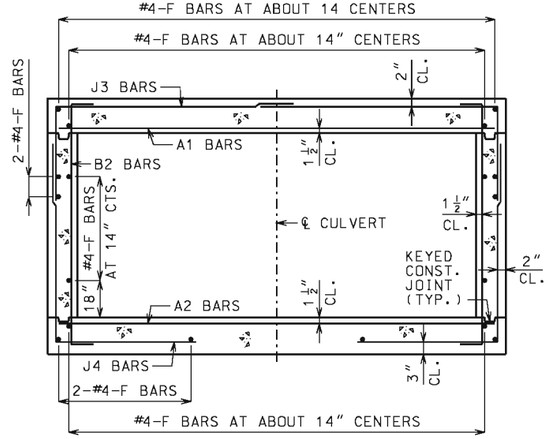

BARREL REINFORCEMENT

FOR DESIGN FILLS 2'-0" OR LESS

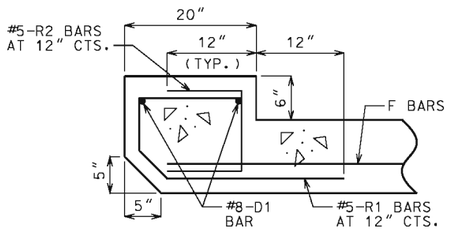

UPSTREAM HEADWALL REINFORCEMENT

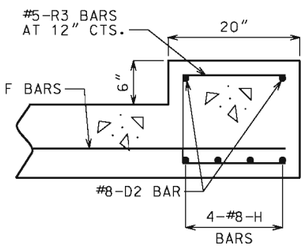

DOWNSTREAM HEADWALL REINFORCEMENT

GENERAL NOTES:

FOR MEMBER THICKNESS AND FOR BAR SIZES, SPACING AND DIMENSIONS OF ALL REINFORCEMENT EXCEPT J5 BARS, SEE 703.17. FOR J5 BARS, SEE 703.37.

BARREL AND WINGS SECTIONS ARE SYMMETRICAL ABOUT AND NORMAL TO ℄ CULVERT. HEADWALL SECTIONS ARE NORMAL TO LONG DIRECTION OF HEADWALL.

DRAWING NOT TO SCALE. FOLLOW DIMENSIONS.

MINIMUM CLEARANCE TO REINFORCING STEEL SHALL BE 1½".

MISSOURI HIGHWAYS AND TRANSPORTATION COMMISSION
105 WEST CAPITOL
JEFFERSON CITY, MO 65102
1-888-ASK-MODOT (1-888-275-6636)

STATE OF MISSOURI
DENNIS W. HECKMAN
NUMBER PE-27141
PROFESSIONAL ENGINEER
THIS SHEET HAS BEEN SIGNED, SEALED AND DATED ELECTRONICALLY.

CONCRETE SINGLE BOX CULVERT

SKEW: LEFT ADVANCE
WINGS: FLARED

SECTIONS

DATE EFFECTIVE: 07/01/2015
DATE PREPARED: 5/13/2015

703.13J

SHEET NO. 3 OF 3

IF A SEAL IS PRESENT ON THIS SHEET IT HAS BEEN ELECTRONICALLY SEALED AND DATED.

CONSTRUCTION JOINT KEY NOT SHOWN FOR CLARITY. SEE SHEET 3 OF 3 FOR DETAILS.

IF UNSUITABLE MATERIAL IS ENCOUNTERED, EXCAVATION OF UNSUITABLE MATERIAL AND FURNISHING AND PLACING OF GRANULAR BACKFILL SHALL BE IN ACCORDANCE WITH SEC 206.

IF ANY PART OF THE BARREL IS EXPOSED, THE ROADWAY FILL SHALL BE WARPED TO PROVIDE 12 INCHES MINIMUM COVER.

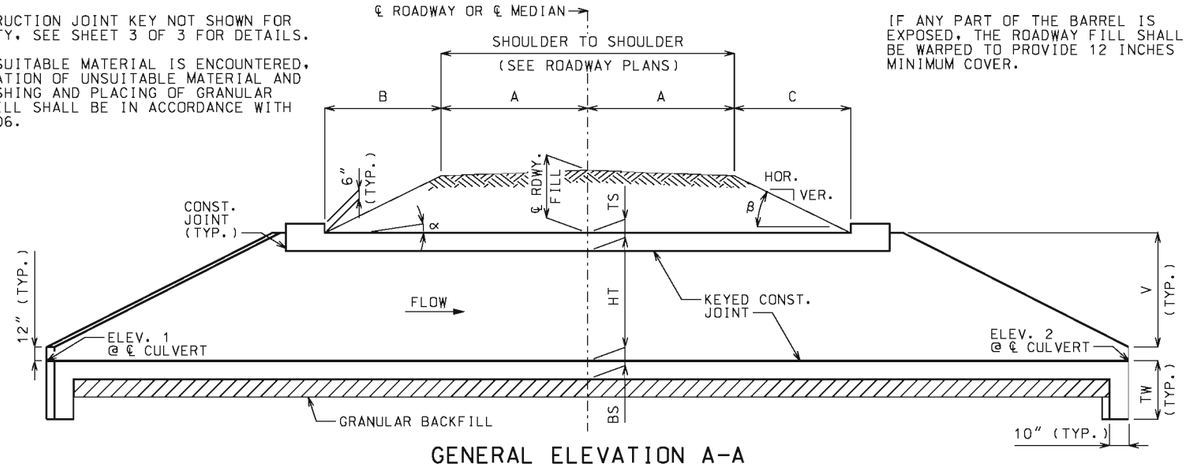

GENERAL ELEVATION A-A

CHANNEL BOTTOM SHALL BE GRADED WITHIN RIGHT OF WAY FOR TRANSITION OF CHANNEL BED TO CULVERT OPENINGS. CHANNEL BANKS SHALL BE TAPERED TO MATCH CULVERT OPENINGS.

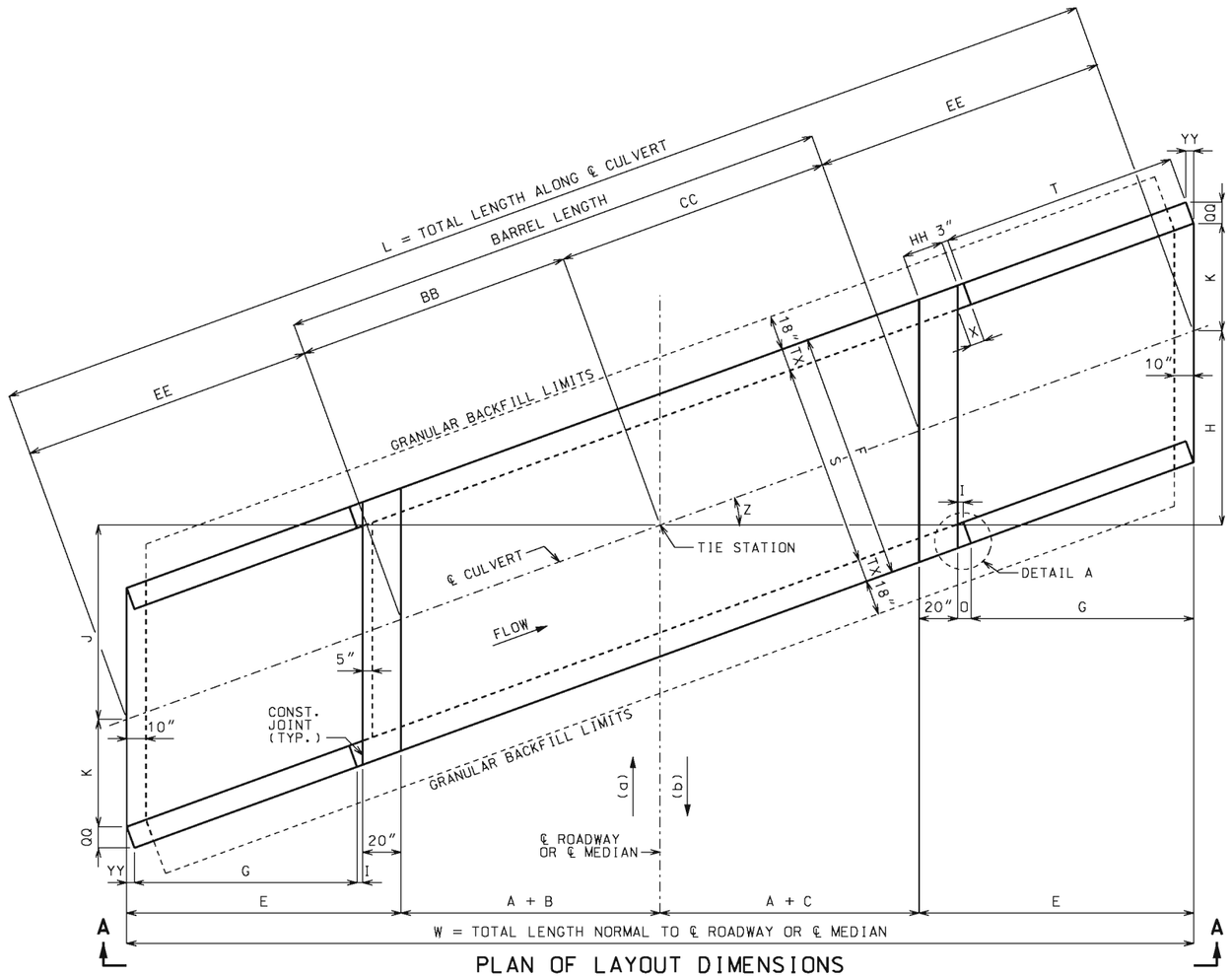

PLAN OF LAYOUT DIMENSIONS

(a) AHEAD STATION WHERE STREAM FLOWS LEFT TO RIGHT. (b) AHEAD STATION WHERE STREAM FLOWS RIGHT TO LEFT.

EQUATIONS FOR COMPUTING ∝, β, B AND C

∝ = ANGLE OF BARREL SLOPE WITH HORIZONTAL NORMAL TO ℄ ROADWAY OR ℄ MEDIAN = $\arctan\left(\frac{\text{ELEV. 1} - \text{ELEV. 2}}{W}\right)$

β = ANGLE OF FILL SLOPE WITH HORIZONTAL NORMAL TO ℄ ROADWAY OR ℄ MEDIAN = $\arctan\left(\frac{\text{VER.}}{\text{HOR.}}\right)$

B = HORIZONTAL DISTANCE FROM UPSTREAM EDGE OF SHOULDER TO UPSTREAM HEADWALL NORMAL TO ℄ ROADWAY OR ℄ MEDIAN = $\frac{\text{℄ RDWY. FILL} + A(CS) - A(TAN\propto)}{TAN\beta + TAN\propto}$

C = HORIZONTAL DISTANCE FROM DOWNSTREAM EDGE OF SHOULDER TO DOWNSTREAM HEADWALL NORMAL TO ℄ ROADWAY OR ℄ MEDIAN = $\frac{\text{℄ RDWY. FILL} + A(CS) + A(TAN\propto)}{TAN\beta - TAN\propto}$

CS = CROSS SLOPE OF EACH PART OF ROADWAY INCLUDING CROWN, LANES AND SHOULDERS. CS IS POSITIVE IF RISING AND NEGATIVE IF FALLING AWAY FROM ℄ ROADWAY OR ℄ MEDIAN.

THE TERM "A(CS)" IS THE DIFFERENCE IN ELEVATION BETWEEN ℄ ROADWAY OR ℄ MEDIAN AND THE TOP OF THE FILL SLOPE NORMAL TO ℄ ROADWAY OR ℄ MEDIAN. THIS TERM SHALL BE ADJUSTED FOR UNSYMMETRICAL AND NONSTANDARD ROADWAYS.

TO ACCOUNT FOR A VARYING PROFILE GRADE THE ℄ ROADWAY FILL SHALL BE BASED ON STATIONS THAT CORRESPOND TO THE CORNERS OF THE INSIDE FACE OF THE HEADWALLS THAT PRODUCE MAXIMUM VALUES FOR B AND C.

SEE ROADWAY PLANS FOR SLOPES, ℄ ROADWAY FILL AND ELEVATIONS 1 AND 2. ELEVATIONS 1 AND 2 CORRESPOND TO UPPER AND LOWER FLOW LINE ELEVATIONS AND MAY BE BELOW THE NATURAL STREAM BOTTOM DUE TO ENVIRONMENTAL REQUIREMENTS.

LAYOUT DIMENSIONS

VARIABLE	DIMENSION	VARIABLE	DIMENSION
∝	SEE EQUATIONS	T	G(SEC Z)
β	SEE EQUATIONS	V	HT + TS - 12"
B	SEE EQUATIONS	W	2A + B + C + 2E
C	SEE EQUATIONS	X	3" + TX(TAN Z)
E	G + O + 20"	Z	SKEW ANGLE
F	S + 2TX	BB	(A + B)(SEC Z)
G	2V	CC	(A + C)(SEC Z)
H	(A + C + E)(TAN Z)	EE	E(SEC Z)
I	3"(COS Z)	HH	20"(SEC Z)
J	(A + B + E)(TAN Z)	QQ	TX(COS Z)
K	S(SEC Z)/2	YY	TX(SIN Z)
L	2EE + BB + CC	TW	MAX{3'-4" OR (BS + 12")}
O	I + YY		

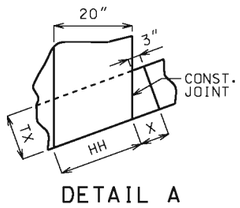

DETAIL A

GENERAL NOTES:

DESIGN SPECIFICATIONS:
2010 AASHTO LRFD BRIDGE DESIGN SPECFICATIONS AND 2010 INTERIM REVISIONS

DESIGN LOADING:
VEHICULAR = HL-93 MINUS LANE LOAD, EARTH = 120 LB/CF
EQUIVALENT FLUID PRESSURE = 30 LB/CF (MIN.), 60 LB/CF (MAX.)

DESIGN UNIT STRESSES:
CLASS B-1 CONCRETE (BOX CULVERT) f'c = 4,000 PSI
REINFORCING STEEL (GRADE 60) fy = 60,000 PSI

MISCELLANEOUS:
FOR REINFORCEMENT DETAILS, SEE SHEET 2 OF 3. FOR SECTION DETAILS, SEE SHEET 3 OF 3. FOR MEMBER THICKNESS, SEE 703.17.

DRAWING NOT TO SCALE. FOLLOW DIMENSIONS.

DIMENSIONS ARE IN INCHES UNLESS OTHERWISE NOTED.

WHEN ALTERNATE PRECAST CONCRETE BOX CULVERT SECTIONS ARE USED, THE MINIMUM DISTANCE FROM INSIDE FACE OF HEADWALLS TO PRECAST SECTIONS MEASURED ALONG THE SHORTEST WALL SHALL BE 3 FEET. REINFORCEMENT AND DIMENSIONS FOR WINGS AND HEADWALLS SHALL BE IN ACCORDANCE WITH MISSOURI STANDARD PLANS.

MISSOURI HIGHWAYS AND TRANSPORTATION COMMISSION
105 WEST CAPITOL
JEFFERSON CITY, MO 65102
1-888-ASK-MODOT (1-888-275-6636)

STATE OF MISSOURI
DENNIS W. HECKMAN
NUMBER PE-27141
PROFESSIONAL ENGINEER
THIS SHEET HAS BEEN SIGNED, SEALED AND DATED ELECTRONICALLY.

CONCRETE SINGLE BOX CULVERT

SKEW: RIGHT ADVANCE
WINGS: STRAIGHT

LAYOUT

DATE EFFECTIVE: 07/01/2015
DATE PREPARED: 5/13/2015

703.14J

SHEET NO. 1 OF 3

IF A SEAL IS PRESENT ON THIS SHEET IT HAS BEEN ELECTRONICALLY SEALED AND DATED.

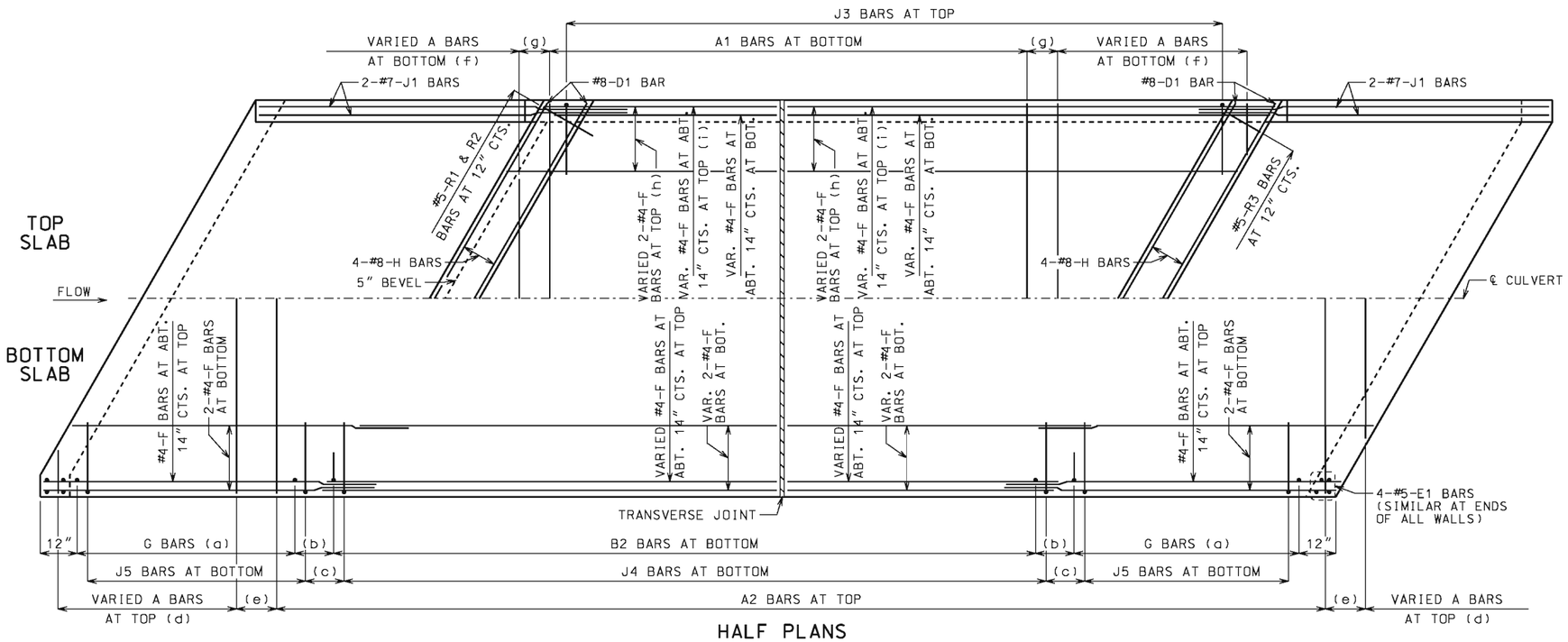

HALF PLANS

HALF PLANS ARE SYMMETRICAL ABOUT ℄ CULVERT.

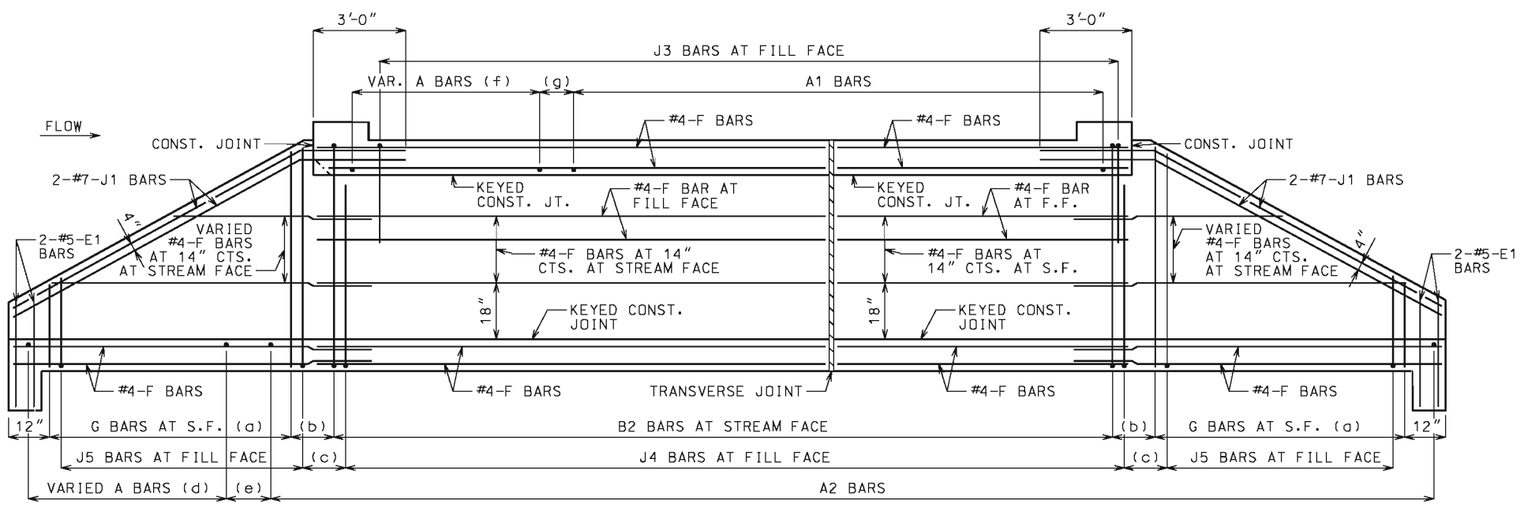

ELEVATION

J1 BARS MAY BE BENT IN FIELD OR SHOP.

LAYING OUT TRANVERSE JOINTS

UNLESS SHOWN ON ROADWAY OR BRIDGE PLANS

USE A TRANSVERSE JOINT WHEN BARREL LENGTH IS OVER 80 FEET. USE ADDITIONAL JOINTS TO LIMIT CUT SECTION LENGTH AND END SECTION BARREL LENGTH MEASURED ALONG CENTERLINE OF CULVERT TO 50 FEET.

MINIMUM END SECTION LENGTH SHALL BE 3 FEET MEASURED ALONG THE SHORTEST WALL FROM THE INSIDE FACE OF HEADWALL TO THE TRANSVERSE JOINT.

TO AVOID LOCATING TRANSVERSE JOINTS UNDER A TRAVELED WAY WITH DESIGN FILLS 2 FEET OR LESS THE FOLLOWING SHALL APPLY:

BARREL LENGTH UP TO 90 FEET WITHOUT A TRANSVERSE JOINT

CUT SECTION LENGTHS UP TO 60 FEET

WHEN BARREL AND CUT SECTION LENGTH RESTRICTIONS REQUIRE TRANSVERSE JOINTS TO BE LOCATED UNDER A TRAVELED WAY WITH DESIGN FILLS 2 FEET OR LESS, THE JOINTS SHALL BE LOCATED TO MINIMIZE THE LENGTH OF JOINT UNDER THE TRAVELED WAY.

TRAVELED WAY IS THE ROADWAY WIDTH MINUS SHOULDER WIDTHS.

FOR CUT SECTION DETAILS, SEE 703.16.

GENERAL NOTES:

FOR SECTIONS THRU BARREL, WINGS AND HEADWALLS, SEE SHEET 3 OF 3. FOR BAR SIZES, SPACING AND DIMENSIONS OF ALL REINFORCEMENT EXCEPT J5 BARS, SEE 703.17. FOR J5 BARS, SEE 703.37.

CONSTRUCTION JOINT KEY NOT SHOWN FOR CLARITY IN HALF PLANS AND ELEVATION. SEE SHEET 3 OF 3 FOR DETAILS.

DRAWING NOT TO SCALE. FOLLOW DIMENSIONS.

MINIMUM CLEARANCE TO REINFORCING STEEL SHALL BE 1½".

LAP LONGITUDINAL BARS A MINIMUM OF 23" AT SPLICES.

BEVELED HEADWALL SHALL BE LOCATED AT UPSTREAM END.

(a) SAME SIZE AND SPACING AS B2 BARS

(b) VARIES, 12" MAXIMUM

(c) J4 BAR SPACING

(d) SAME SIZE AND SPACING AS A2 BARS

(e) A2 BAR SPACING

(f) SAME SIZE AND SPACING AS A1 BARS

(g) A1 BAR SPACING

(h) FOR DESIGN FILLS OVER 2'-0"

(i) FOR DESIGN FILLS 2'-0" OR LESS

MISSOURI HIGHWAYS AND TRANSPORTATION COMMISSION
105 WEST CAPITOL
JEFFERSON CITY, MO 65102
1-888-ASK-MODOT (1-888-275-6636)

STATE OF MISSOURI
DENNIS W. HECKMAN
NUMBER PE-27141
PROFESSIONAL ENGINEER
THIS SHEET HAS BEEN SIGNED, SEALED AND DATED ELECTRONICALLY.

CONCRETE SINGLE BOX CULVERT

SKEW: RIGHT ADVANCE
WINGS: STRAIGHT

REINFORCEMENT

DATE EFFECTIVE: 07/01/2015
DATE PREPARED: 5/13/2015

703.14J

SHEET NO. 2 OF 3

IF A SEAL IS PRESENT ON THIS SHEET IT HAS BEEN ELECTRONICALLY SEALED AND DATED.

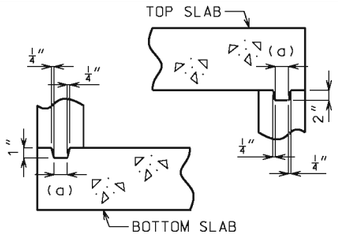

KEYED CONSTRUCTION JOINT

(a) APPROXIMATELY ONE-THIRD OF WALL THICKNESS

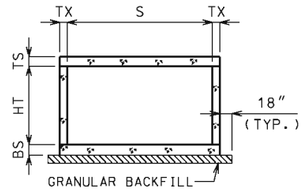

GRANULAR BACKFILL LIMITS AND MEMBER DIMENSIONS

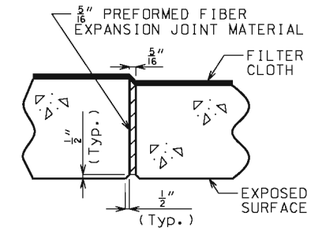

TRANSVERSE JOINT THRU BARREL

PREFORMED FIBER EXPANSION JOINT MATERIAL IN ACCORDANCE WITH SEC 1057 SHALL BE SECURELY STITCHED TO ONE FACE OF THE CONCRETE WITH 10 GAGE COPPER WIRE OR 12 GAGE SOFT DRAWN GALVANIZED STEEL WIRE.

FILTER CLOTH 3 FEET IN WIDTH AND DOUBLE THICKNESS SHALL BE CENTERED ON TRANSVERSE JOINTS IN TOP SLAB AND SIDEWALLS WITH EDGES SEALED WITH MASTIC OR TWO SIDED TAPE. FILTER CLOTH SHALL BE A SUBSURFACE DRAINAGE GEOTEXTILE IN ACCORDANCE WITH SEC 1011. COST OF FURNISHING AND INSTALLING FILTER CLOTH WILL BE CONSIDERED COMPLETELY COVERED BY THE CONTRACT UNIT PRICE FOR OTHER ITEMS.

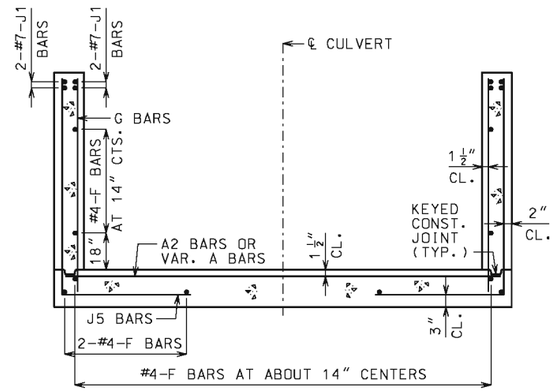

UPSTREAM AND DOWNSTREAM WINGS REINFORCEMENT

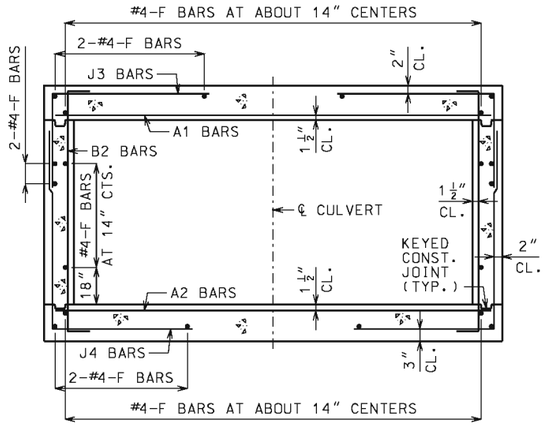

BARREL REINFORCEMENT

FOR DESIGN FILLS OVER 2'-0"

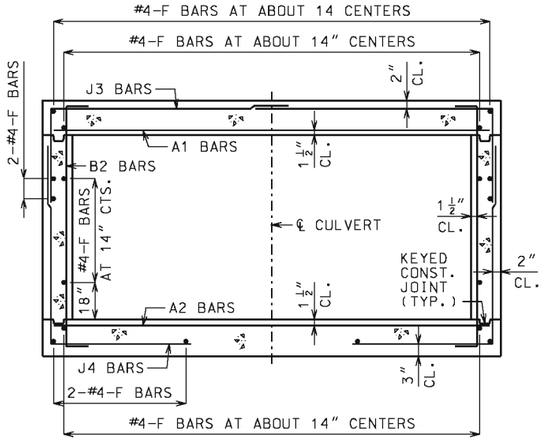

BARREL REINFORCEMENT

FOR DESIGN FILLS 2'-0" OR LESS

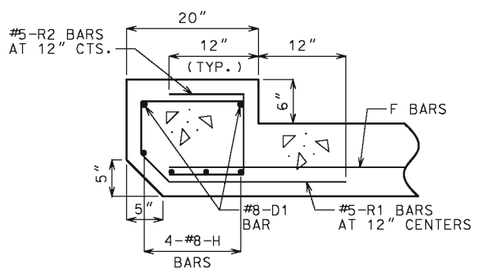

UPSTREAM HEADWALL REINFORCEMENT

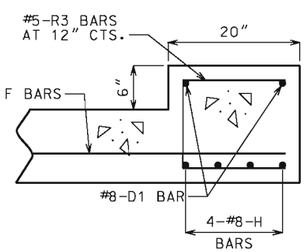

DOWNSTREAM HEADWALL REINFORCEMENT

GENERAL NOTES:

FOR MEMBER THICKNESS AND FOR BAR SIZES, SPACING AND DIMENSIONS OF ALL REINFORCEMENT EXCEPT J5 BARS, SEE 703.17. FOR J5 BARS, SEE 703.37.

BARREL AND WINGS SECTIONS ARE SYMMETRICAL ABOUT AND NORMAL TO ℄ CULVERT. HEADWALL SECTIONS ARE NORMAL TO LONG DIRECTION OF HEADWALL.

DRAWING NOT TO SCALE. FOLLOW DIMENSIONS.

MINIMUM CLEARANCE TO REINFORCING STEEL SHALL BE 1 1/2".

MISSOURI HIGHWAYS AND TRANSPORTATION COMMISSION
105 WEST CAPITOL
JEFFERSON CITY, MO 65102
1-888-ASK-MODOT (1-888-275-6636)

STATE OF MISSOURI
DENNIS W. HECKMAN
NUMBER PE-27141
PROFESSIONAL ENGINEER
THIS SHEET HAS BEEN SIGNED, SEALED AND DATED ELECTRONICALLY.

CONCRETE SINGLE BOX CULVERT

SKEW: RIGHT ADVANCE
WINGS: STRAIGHT

SECTIONS

DATE EFFECTIVE: 07/01/2015
DATE PREPARED: 5/13/2015

703.14J

SHEET NO. 3 OF 3

IF A SEAL IS PRESENT ON THIS SHEET IT HAS BEEN ELECTRONICALLY SEALED AND DATED.

CONSTRUCTION JOINT KEY NOT SHOWN FOR CLARITY. SEE SHEET 3 OF 3 FOR DETAILS.

IF UNSUITABLE MATERIAL IS ENCOUNTERED, EXCAVATION OF UNSUITABLE MATERIAL AND FURNISHING AND PLACING OF GRANULAR BACKFILL SHALL BE IN ACCORDANCE WITH SEC 206.

IF ANY PART OF THE BARREL IS EXPOSED, THE ROADWAY FILL SHALL BE WARPED TO PROVIDE 12 INCHES MINIMUM COVER.

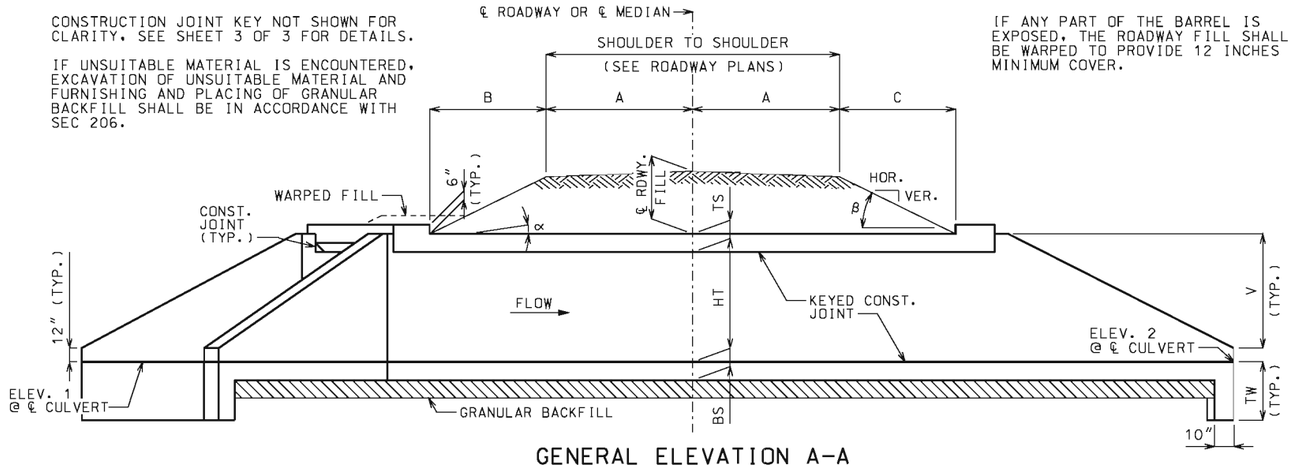

GENERAL ELEVATION A-A

CHANNEL BOTTOM SHALL BE GRADED WITHIN RIGHT OF WAY FOR TRANSITION OF CHANNEL BED TO CULVERT OPENINGS. CHANNEL BANKS SHALL BE TAPERED TO MATCH CULVERT OPENINGS.

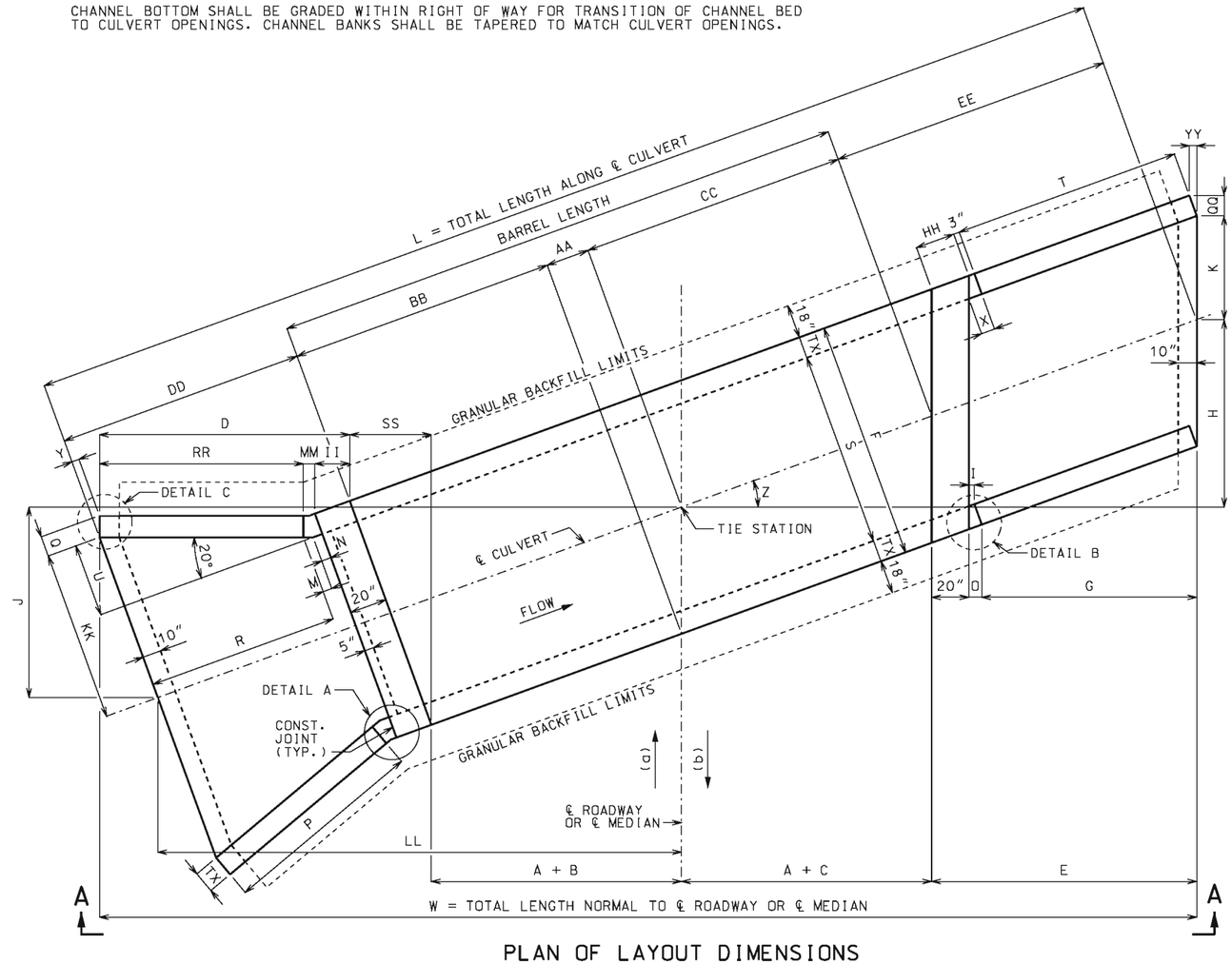

PLAN OF LAYOUT DIMENSIONS

(a) AHEAD STATION WHERE STREAM FLOWS LEFT TO RIGHT. (b) AHEAD STATION WHERE STREAM FLOWS RIGHT TO LEFT.

EQUATIONS FOR COMPUTING ∝, β, B AND C

∝ = ANGLE OF BARREL SLOPE WITH HORIZONTAL NORMAL TO ℄ ROADWAY OR ℄ MEDIAN = $\arctan\left(\frac{\text{ELEV. 1 - ELEV. 2}}{\text{A + C + E + LL}}\right)$

β = ANGLE OF FILL SLOPE WITH HORIZONTAL NORMAL TO ℄ ROADWAY OR ℄ MEDIAN = $\arctan\left(\frac{\text{VER.}}{\text{HOR.}}\right)$

B = HORIZONTAL DISTANCE FROM UPSTREAM EDGE OF SHOULDER TO UPSTREAM HEADWALL NORMAL TO ℄ ROADWAY OR ℄ MEDIAN = $\frac{\text{℄ RDWY. FILL + A(CS) - A(TAN}\propto)}{\text{TAN}\beta + \text{TAN}\propto}$

C = HORIZONTAL DISTANCE FROM DOWNSTREAM EDGE OF SHOULDER TO DOWNSTREAM HEADWALL NORMAL TO ℄ ROADWAY OR ℄ MEDIAN = $\frac{\text{℄ RDWY. FILL + A(CS) + A(TAN}\propto)}{\text{TAN}\beta - \text{TAN}\propto}$

CS = CROSS SLOPE OF EACH PART OF ROADWAY INCLUDING CROWN, LANES AND SHOULDERS. CS IS POSITIVE IF RISING AND NEGATIVE IF FALLING AWAY FROM ℄ ROADWAY OR ℄ MEDIAN.

THE TERM "A(CS)" IS THE DIFFERENCE IN ELEVATION BETWEEN ℄ ROADWAY OR ℄ MEDIAN AND THE TOP OF THE FILL SLOPE NORMAL TO ℄ ROADWAY OR ℄ MEDIAN. THIS TERM SHALL BE ADJUSTED FOR UNSYMMETRICAL AND NONSTANDARD ROADWAYS.

TO ACCOUNT FOR A VARYING PROFILE GRADE THE ℄ ROADWAY FILL SHALL BE BASED ON STATIONS THAT CORRESPOND TO THE CORNERS OF THE INSIDE FACE OF THE HEADWALLS THAT PRODUCE MAXIMUM VALUES FOR B AND C.

SEE ROADWAY PLANS FOR SLOPES, ℄ ROADWAY FILL AND ELEVATIONS 1 AND 2. ELEVATIONS 1 AND 2 CORRESPOND TO UPPER AND LOWER FLOW LINE ELEVATIONS AND MAY BE BELOW THE NATURAL STREAM BOTTOM DUE TO ENVIRONMENTAL REQUIREMENTS.

LAYOUT DIMENSIONS

VARIABLE	DIMENSION	VARIABLE	DIMENSION	VARIABLE	DIMENSION
∝	SEE EQUATIONS	N	3" + TX(TAN 10°)	CC	(A + C)(SEC Z)
β	SEE EQUATIONS	O	I + YY	DD	R + M + N + 20"
B	SEE EQUATIONS	P	2V[SEC(Z + 20°)]	EE	E(SEC Z)
C	SEE EQUATIONS	Q	TX(COS 20°)	HH	20"(SEC Z)
D	Z ≥ 20°: II + MM + RR	R	P(COS 20°)	II	20"(COS Z)
	Z < 20°: II + MM + RR + TT	T	G(SEC Z)	KK	S/2 + U
E	G + O + 20"	U	(R + M)(TAN 20°)	LL	(AA + BB + DD)(COS Z)
F	S + 2TX	V	HT + TS - 12"	MM	3"[COS Z + COS(Z - 20°)]
G	2V	W	2A + B + C + D + E + SS	QQ	TX(COS Z)
H	(A + C + E)(TAN Z)	X	3" + TX(TAN Z)	RR	P[COS (Z - 20°)]
I	3"(COS Z)	Y	TX(SIN 20°)	SS	F(SIN Z)
J	(AA + BB + DD)(SIN Z)	Z	SKEW ANGLE	TT	TX[SIN(20°- Z)]
K	S(SEC Z)/2	AA	F(TAN Z)/2	YY	TX(SIN Z)
L	AA + BB + CC + DD + EE	BB	(A + B)(SEC Z)	TW	MAX{3'-4" OR (BS + 12")}
M	N(COS 20°)				

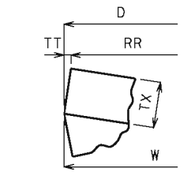

DETAIL C
For Z < 20°

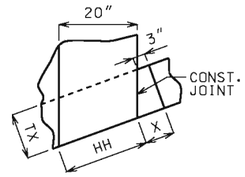

DETAIL B

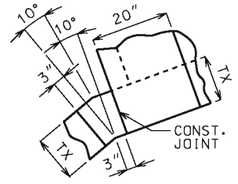

DETAIL A

GENERAL NOTES:

DESIGN SPECIFICATIONS:
2010 AASHTO LRFD BRIDGE DESIGN SPECFICATIONS AND 2010 INTERIM REVISIONS

DESIGN LOADING:
VEHICULAR = HL-93 MINUS LANE LOAD, EARTH = 120 LB/CF
EQUIVALENT FLUID PRESSURE = 30 LB/CF (MIN.), 60 LB/CF (MAX.)

DESIGN UNIT STRESSES:
CLASS B-1 CONCRETE (BOX CULVERT) f'c = 4,000 PSI
REINFORCING STEEL (GRADE 60) fy = 60,000 PSI

MISCELLANEOUS:
FOR REINFORCEMENT DETAILS, SEE SHEET 2 OF 3. FOR SECTION DETAILS, SEE SHEET 3 OF 3. FOR MEMBER THICKNESS, SEE 703.17.

DRAWING NOT TO SCALE. FOLLOW DIMENSIONS.

DIMENSIONS ARE IN INCHES UNLESS OTHERWISE NOTED.

WHEN ALTERNATE PRECAST CONCRETE BOX CULVERT SECTIONS ARE USED, THE MINIMUM DISTANCE FROM INSIDE FACE OF HEADWALLS TO PRECAST SECTIONS MEASURED ALONG THE SHORTEST WALL SHALL BE 3 FEET. REINFORCEMENT AND DIMENSIONS FOR WINGS AND HEADWALLS SHALL BE IN ACCORDANCE WITH MISSOURI STANDARD PLANS.

MISSOURI HIGHWAYS AND TRANSPORTATION COMMISSION
105 WEST CAPITOL
JEFFERSON CITY, MO 65102
1-888-ASK-MODOT (1-888-275-6636)

STATE OF MISSOURI
DENNIS W. HECKMAN
NUMBER PE-27141
PROFESSIONAL ENGINEER
THIS SHEET HAS BEEN SIGNED, SEALED AND DATED ELECTRONICALLY.

CONCRETE SINGLE BOX CULVERT

SKEW: RIGHT ADVANCE
WINGS: FLARED

LAYOUT

DATE EFFECTIVE: 07/01/2015
DATE PREPARED: 6/4/2015

703.15E

SHEET NO. 1 OF 3

IF A SEAL IS PRESENT ON THIS SHEET IT HAS BEEN ELECTRONICALLY SEALED AND DATED.

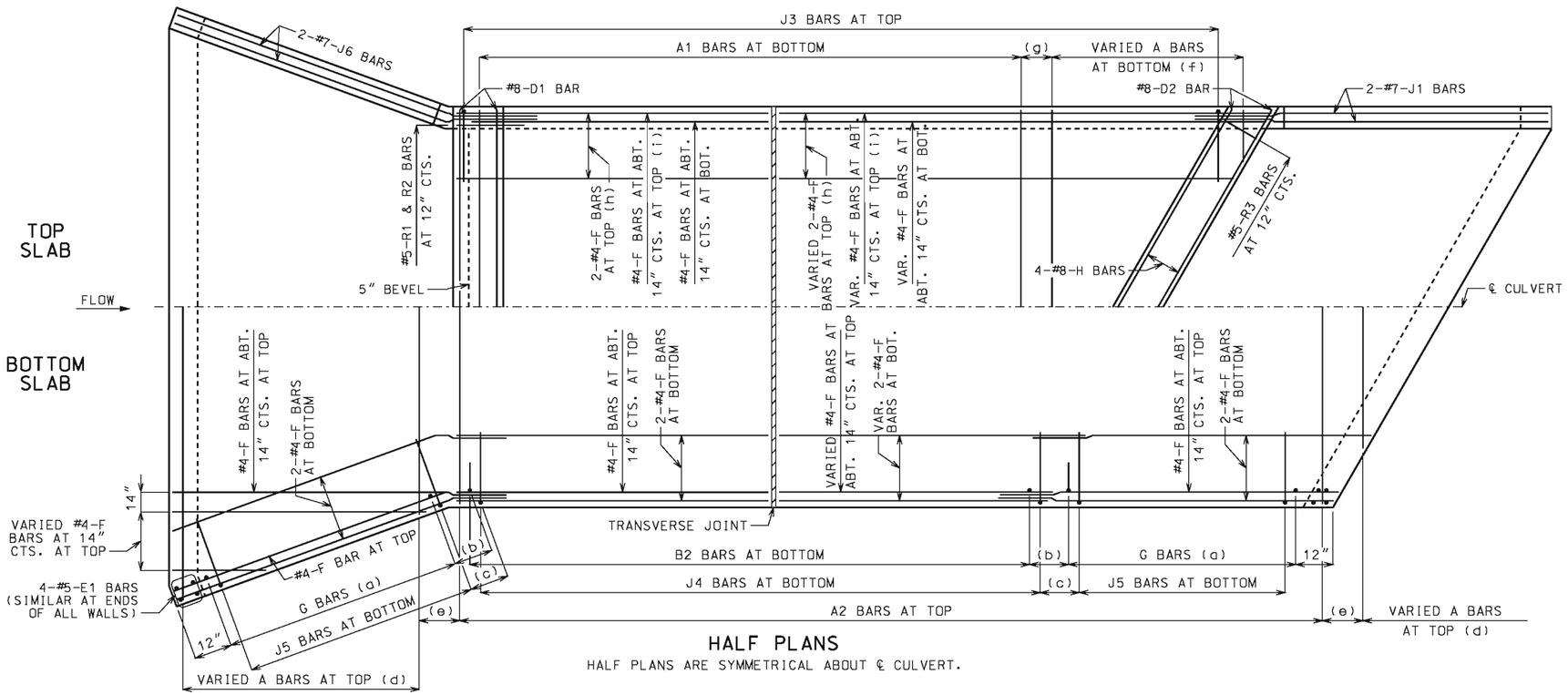

HALF PLANS

HALF PLANS ARE SYMMETRICAL ABOUT ℄ CULVERT.

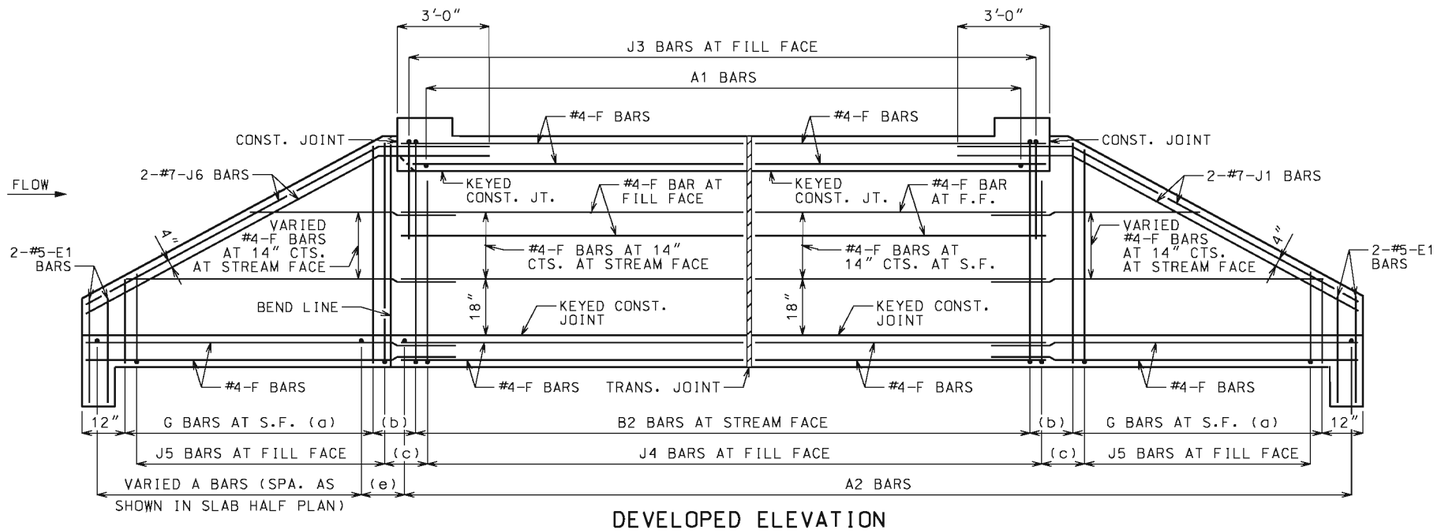

DEVELOPED ELEVATION

J1 AND J6 BARS MAY BE BENT IN FIELD OR SHOP.

LAYING OUT TRANVERSE JOINTS

UNLESS SHOWN ON ROADWAY OR BRIDGE PLANS

USE A TRANSVERSE JOINT WHEN BARREL LENGTH IS OVER 80 FEET. USE ADDITIONAL JOINTS TO LIMIT CUT SECTION LENGTH AND END SECTION BARREL LENGTH MEASURED ALONG CENTERLINE OF CULVERT TO 50 FEET.

MINIMUM END SECTION LENGTH SHALL BE 3 FEET MEASURED ALONG THE SHORTEST WALL FROM THE INSIDE FACE OF HEADWALL TO THE TRANSVERSE JOINT.

TO AVOID LOCATING TRANSVERSE JOINTS UNDER A TRAVELED WAY WITH DESIGN FILLS 2 FEET OR LESS THE FOLLOWING SHALL APPLY:

BARREL LENGTH UP TO 90 FEET WITHOUT A TRANSVERSE JOINT

CUT SECTION LENGTHS UP TO 60 FEET

WHEN BARREL AND CUT SECTION LENGTH RESTRICTIONS REQUIRE TRANSVERSE JOINTS TO BE LOCATED UNDER A TRAVELED WAY WITH DESIGN FILLS 2 FEET OR LESS, THE JOINTS SHALL BE LOCATED TO MINIMIZE THE LENGTH OF JOINT UNDER THE TRAVELED WAY.

TRAVELED WAY IS THE ROADWAY WIDTH MINUS SHOULDER WIDTHS.

FOR CUT SECTION DETAILS, SEE 703.16.

GENERAL NOTES:

FOR SECTIONS THRU BARREL, WINGS AND HEADWALLS, SEE SHEET 3 OF 3. FOR BAR SIZES, SPACING AND DIMENSIONS OF ALL REINFORCEMENT EXCEPT J5 BARS, SEE 703.17. FOR J5 BARS, SEE 703.37.

CONSTRUCTION JOINT KEY NOT SHOWN FOR CLARITY IN HALF PLANS AND ELEVATION. SEE SHEET 3 OF 3 FOR DETAILS.

DRAWING NOT TO SCALE. FOLLOW DIMENSIONS.

MINIMUM CLEARANCE TO REINFORCING STEEL SHALL BE 1½".

LAP LONGITUDINAL BARS A MINIMUM OF 23" AT SPLICES.

BEVELED HEADWALL SHALL BE LOCATED AT UPSTREAM END.

(a) SAME SIZE AND SPACING AS B2 BARS

(b) VARIES, 12" MAXIMUM

(c) J4 BAR SPACING

(d) SAME SIZE AND SPACING AS A2 BARS

(e) A2 BAR SPACING

(f) SAME SIZE AND SPACING AS A1 BARS

(g) A1 BAR SPACING

(h) FOR DESIGN FILLS OVER 2'-0"

(i) FOR DESIGN FILLS 2'-0" OR LESS

MISSOURI HIGHWAYS AND TRANSPORTATION COMMISSION
105 WEST CAPITOL
JEFFERSON CITY, MO 65102
1-888-ASK-MODOT (1-888-275-6636)

STATE OF MISSOURI
DENNIS W. HECKMAN
NUMBER PE-27141
PROFESSIONAL ENGINEER
THIS SHEET HAS BEEN SIGNED, SEALED AND DATED ELECTRONICALLY.

CONCRETE SINGLE BOX CULVERT

SKEW: RIGHT ADVANCE
WINGS: FLARED

REINFORCEMENT

DATE EFFECTIVE: 07/01/2015
DATE PREPARED: 5/13/2015

703.15E

SHEET NO. 2 OF 3

IF A SEAL IS PRESENT ON THIS SHEET IT HAS BEEN ELECTRONICALLY SEALED AND DATED.

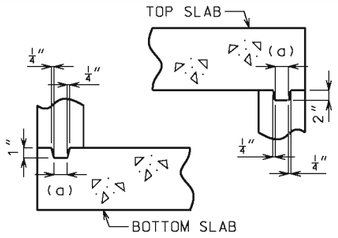

KEYED CONSTRUCTION JOINT

(a) APPROXIMATELY ONE-THIRD OF WALL THICKNESS

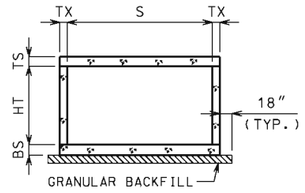

GRANULAR BACKFILL LIMITS AND MEMBER DIMENSIONS

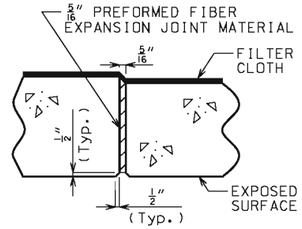

TRANSVERSE JOINT THRU BARREL

PREFORMED FIBER EXPANSION JOINT MATERIAL IN ACCORDANCE WITH SEC 1057 SHALL BE SECURELY STITCHED TO ONE FACE OF THE CONCRETE WITH 10 GAGE COPPER WIRE OR 12 GAGE SOFT DRAWN GALVANIZED STEEL WIRE.

FILTER CLOTH 3 FEET IN WIDTH AND DOUBLE THICKNESS SHALL BE CENTERED ON TRANSVERSE JOINTS IN TOP SLAB AND SIDEWALLS WITH EDGES SEALED WITH MASTIC OR TWO SIDED TAPE. FILTER CLOTH SHALL BE A SUBSURFACE DRAINAGE GEOTEXTILE IN ACCORDANCE WITH SEC 1011. COST OF FURNISHING AND INSTALLING FILTER CLOTH WILL BE CONSIDERED COMPLETELY COVERED BY THE CONTRACT UNIT PRICE FOR OTHER ITEMS.

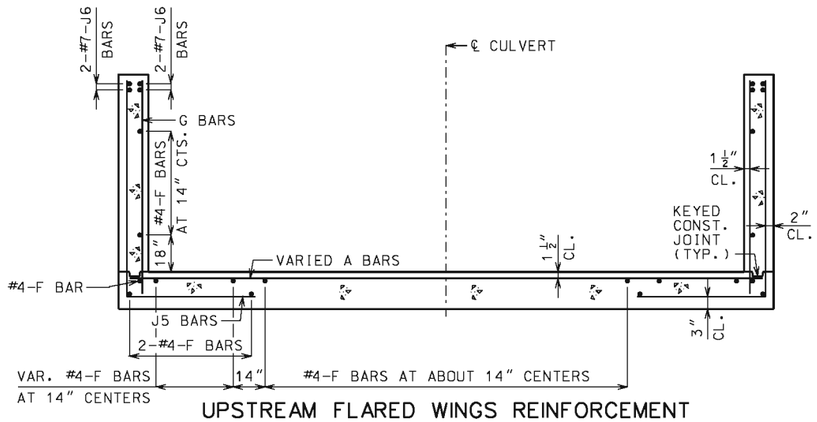

UPSTREAM FLARED WINGS REINFORCEMENT

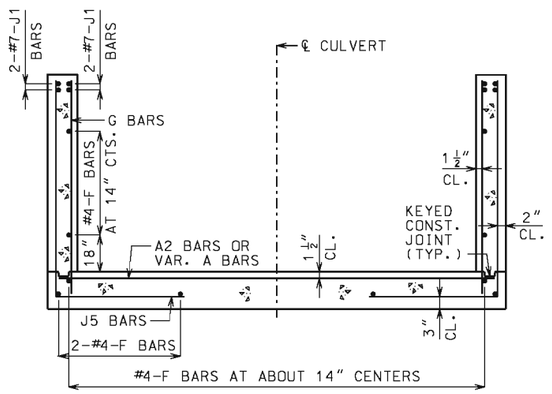

DOWNSTREAM WINGS REINFORCEMENT

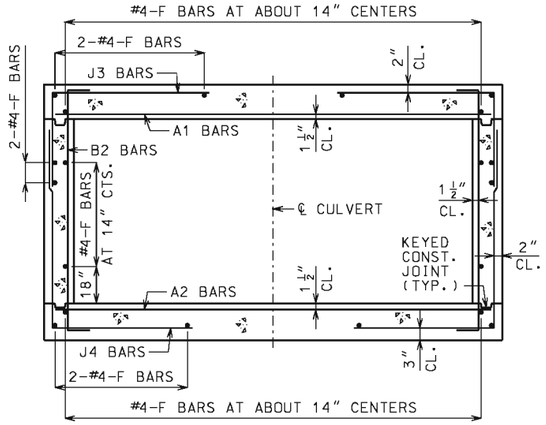

BARREL REINFORCEMENT

FOR DESIGN FILLS OVER 2'-0"

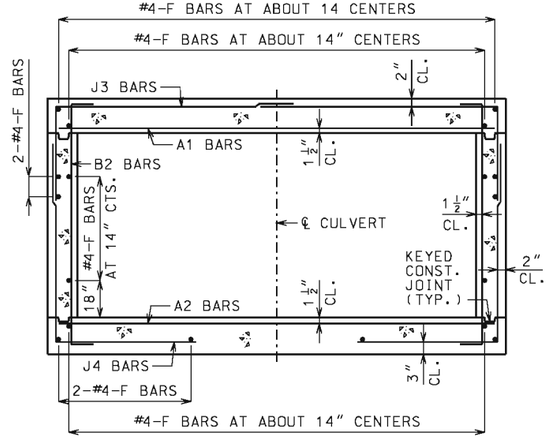

BARREL REINFORCEMENT

FOR DESIGN FILLS 2'-0" OR LESS

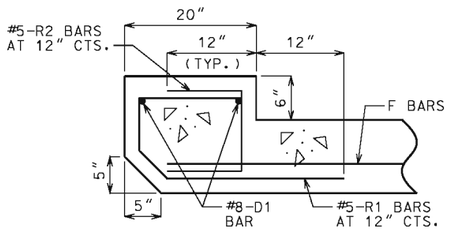

UPSTREAM HEADWALL REINFORCEMENT

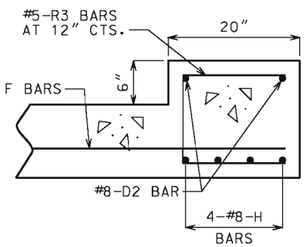

DOWNSTREAM HEADWALL REINFORCEMENT

GENERAL NOTES:

FOR MEMBER THICKNESS AND FOR BAR SIZES, SPACING AND DIMENSIONS OF ALL REINFORCEMENT EXCEPT J5 BARS, SEE 703.17. FOR J5 BARS, SEE 703.37.

BARREL AND WINGS SECTIONS ARE SYMMETRICAL ABOUT AND NORMAL TO ℄ CULVERT. HEADWALL SECTIONS ARE NORMAL TO LONG DIRECTION OF HEADWALL.

DRAWING NOT TO SCALE. FOLLOW DIMENSIONS.

MINIMUM CLEARANCE TO REINFORCING STEEL SHALL BE 1½".

MISSOURI HIGHWAYS AND TRANSPORTATION COMMISSION
105 WEST CAPITOL
JEFFERSON CITY, MO 65102
1-888-ASK-MODOT (1-888-275-6636)

STATE OF MISSOURI
DENNIS W. HECKMAN
NUMBER PE-27141
PROFESSIONAL ENGINEER
THIS SHEET HAS BEEN SIGNED, SEALED AND DATED ELECTRONICALLY.

CONCRETE SINGLE BOX CULVERT

SKEW: RIGHT ADVANCE
WINGS: FLARED

SECTIONS

DATE EFFECTIVE: 07/01/2015
DATE PREPARED: 5/13/2015

703.15E

SHEET NO. 3 OF 3

IF A SEAL IS PRESENT ON THIS SHEET IT HAS BEEN ELECTRONICALLY SEALED AND DATED.

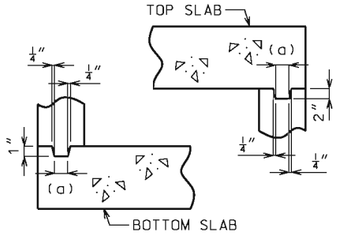

KEYED CONSTRUCTION JOINT

(a) APPROXIMATELY ONE-THIRD OF WALL THICKNESS

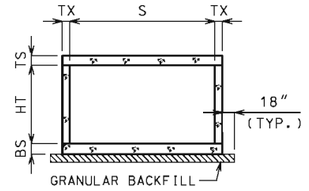

GRANULAR BACKFILL LIMITS AND MEMBER DIMENSIONS

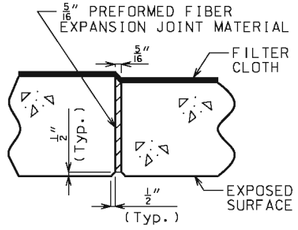

TRANSVERSE JOINT THRU BARREL

PREFORMED FIBER EXPANSION JOINT MATERIAL IN ACCORDANCE WITH SEC 1057 SHALL BE SECURELY STITCHED TO ONE FACE OF THE CONCRETE WITH 10 GAGE COPPER WIRE OR 12 GAGE SOFT DRAWN GALVANIZED STEEL WIRE.

FILTER CLOTH 3 FEET IN WIDTH AND DOUBLE THICKNESS SHALL BE CENTERED ON TRANSVERSE JOINTS IN TOP SLAB AND SIDEWALLS WITH EDGES SEALED WITH MASTIC OR TWO SIDED TAPE. FILTER CLOTH SHALL BE A SUBSURFACE DRAINAGE GEOTEXTILE IN ACCORDANCE WITH SEC 1011. COST OF FURNISHING AND INSTALLING FILTER CLOTH WILL BE CONSIDERED COMPLETELY COVERED BY THE CONTRACT UNIT PRICE FOR OTHER ITEMS.

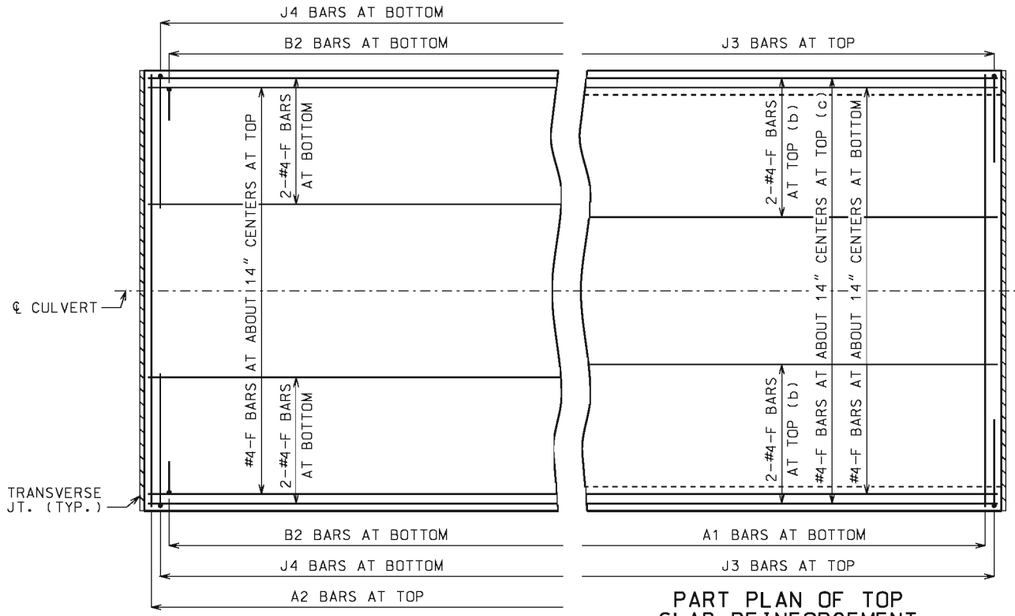

PART PLAN OF BOTTOM SLAB REINFORCEMENT

PART PLAN OF TOP SLAB REINFORCEMENT

(b) FOR DESIGN FILLS OVER 2'-0"
(c) FOR DESIGN FILLS 2'-0" OR LESS

ELEVATION OF WALL REINFORCEMENT

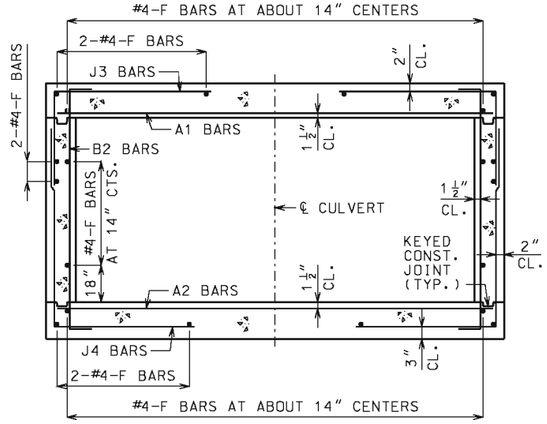

BARREL REINFORCEMENT

FOR DESIGN FILLS OVER 2'-0"
SYMMETRICAL ABOUT AND NORMAL TO ℄ CULVERT.

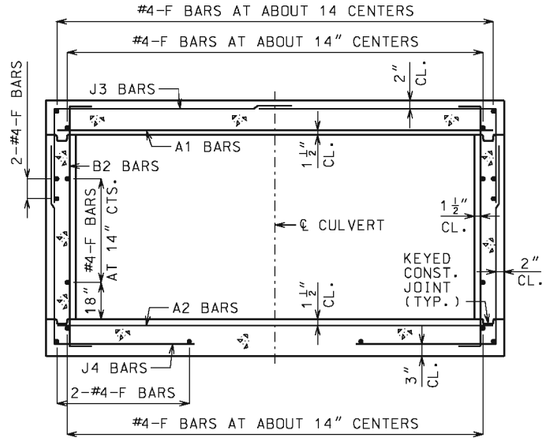

BARREL REINFORCEMENT

FOR DESIGN FILLS 2'-0" OR LESS
SYMMETRICAL ABOUT AND NORMAL TO ℄ CULVERT.

GENERAL NOTES

DESIGN SPECIFICATIONS:
2010 AASHTO LRFD BRIDGE DESIGN SPECFICATIONS AND 2010 INTERIM REVISIONS

DESIGN LOADING:
VEHICULAR = HL-93 MINUS LANE LOAD, EARTH = 120 LB/CF
EQUIVALENT FLUID PRESSURE = 30 LB/CF (MIN.), 60 LB/CF (MAX.)

DESIGN UNIT STRESSES:
CLASS B-1 CONCRETE (BOX CULVERT) f'c = 4,000 PSI
REINFORCING STEEL (GRADE 60) fy = 60,000 PSI

MISCELLANEOUS:
FOR MEMBER THICKNESS AND FOR BAR SIZES, SPACING AND DIMENSIONS, SEE 703.17.

CONSTRUCTION JOINT KEY NOT SHOWN FOR CLARITY IN PART PLANS AND ELEVATION.

DRAWING NOT TO SCALE. FOLLOW DIMENSIONS.

MINIMUM CLEARANCE TO REINFORCING STEEL SHALL BE 1 1/2".

MISSOURI HIGHWAYS AND TRANSPORTATION COMMISSION
105 WEST CAPITOL
JEFFERSON CITY, MO 65102
1-888-ASK-MODOT (1-888-275-6636)

STATE OF MISSOURI
DENNIS W. HECKMAN
NUMBER PE-27141
PROFESSIONAL ENGINEER
THIS SHEET HAS BEEN SIGNED, SEALED AND DATED ELECTRONICALLY.

CONCRETE SINGLE BOX CULVERT

CUT SECTION

DATE EFFECTIVE: 04/01/2011
DATE PREPARED: 5/13/2015

703.16

SHEET NO. 1 OF 1

IF A SEAL IS PRESENT ON THIS SHEET IT HAS BEEN ELECTRONICALLY SEALED AND DATED.

SPAN (S) = 3 FT HEIGHT (HT) = 2 FT OR 3 FT

DESIGN FILL	MEMBER THICKNESS			TOP SLAB BARS							BOTTOM SLAB BARS							WALL BARS		
				A1 BARS		J3 BARS					A2 BARS		J4 BARS					B2 BARS		
	TS	BS	TX	SIZE	SPA.	SIZE	SPA.	C1	K2 HT=2′	K2 HT=3′	SIZE	SPA.	SIZE	SPA.	C4	K3 HT=2′	K3 HT=3′	SIZE	SPA.	G1
1 FT	9	8	8	4	7	4	12	32.5	25.3	33.6	4	11.5	4	12	32.5	28	40	5	12	12
2 FT	9	8	8	4	7	4	12	32.5	25.3	33.6	4	11.5	4	12	30.8	28	40	5	12	12
4 FT	8	8	8	4	12	4	12	26.4	24.1	32.4	4	12	4	12	26.0	28	40	5	12	0
6 FT	8	8	8	4	12	4	12	24.6	24.1	32.4	4	12	4	12	24.6	28	40	5	12	0
8 FT	8	8	8	4	12	4	12	23.8	24.1	32.4	4	12	4	12	23.8	28	40	5	12	0
10 FT	8	8	8	4	12	4	12	22.0	24.1	32.4	4	12	4	12	22.0	28	40	5	12	0
12 FT	8	8	8	4	12	4	12	22.0	24.1	32.4	4	12	4	12	22.0	28	40	5	12	0
14 FT	8	8	8	4	12	4	12	22.0	24.1	32.4	4	12	4	12	22.0	28	40	5	12	0
16 FT	8	8	8	4	12	4	12	22.0	24.1	32.4	4	12	4	12	22.0	28	40	5	12	0
18 FT	8	8	8	4	12	4	12	22.0	24.1	32.4	4	12	4	12	22.0	28	40	5	12	0
20 FT	8	8	8	4	12	4	12	22.0	24.1	32.4	4	11	4	12	22.0	28	40	5	12	0
22 FT	8	8	8	4	11.5	4	12	22.0	24.1	32.4	4	10	4	12	22.0	28	40	5	12	0
24 FT	8	8	8	4	10.5	4	12	22.0	24.1	32.4	4	9	4	12	22.0	28	40	5	12	0
26 FT	8	8	8	4	9.5	4	12	22.0	24.1	32.4	4	8.5	4	11.5	22.0	28	40	5	12	0
28 FT	8	8	8	4	9	4	11.5	22.0	24.1	32.4	4	8	4	10.5	22.0	28	40	5	12	0
30 FT	8	8	8	4	8.5	4	11	22.0	24.1	32.4	4	7.5	4	10	22.0	28	40	5	12	0
32 FT	8	8	8	4	8	4	10	22.0	24.1	32.4	4	7	4	9.5	22.0	28	40	5	12	0
34 FT	8	8	8	4	7.5	4	9.5	22.0	24.1	32.4	4	6.5	4	8.5	22.0	28	40	5	12	0
36 FT	8	8	8	4	7	4	9	22.0	24.1	32.4	4	6	4	8	22.0	28	40	5	12	0
38 FT	8	8	8	4	6.5	4	8.5	22.0	24.1	32.4	5	9	4	8	22.0	28	40	5	12	0
40 FT	8	9	8	4	6.5	4	8	22.0	24.1	32.1	4	6	4	11	21.5	29	41	5	12	0
42 FT	8	9	8	4	6	4	8	22.0	24.1	32.1	5	9	4	10	21.5	29	41	5	12	0
44 FT	8	9	8	4	6	4	7.5	22.0	24.1	32.1	5	8.5	4	10	21.5	29	41	5	12	0
46 FT	8	9	8	4	6	4	7	22.0	24.1	32.1	5	8	4	9.5	21.5	29	41	5	12	0
48 FT	8	10	8	4	6	4	7	22.0	24.0	31.9	5	8.5	4	12	21.5	30	42	5	12	0
50 FT	8	10	8	4	6	4	6.5	22.0	24.0	31.9	5	8	4	12	21.5	30	42	5	12	0

SPAN (S) = 3 FT HEIGHT (HT) = 4 FT OR 5 FT

DESIGN FILL	MEMBER THICKNESS			TOP SLAB BARS							BOTTOM SLAB BARS							WALL BARS		
				A1 BARS		J3 BARS					A2 BARS		J4 BARS					B2 BARS		
	TS	BS	TX	SIZE	SPA.	SIZE	SPA.	C1	K2 HT=4′	K2 HT=5′	SIZE	SPA.	SIZE	SPA.	C4	K3 HT=4′	K3 HT=5′	SIZE	SPA.	G1
1 FT	9	8	8	4	6.5	4	12	32.5	25.3	30.3	4	10.5	4	12	32.5	52	64	5	12	12
2 FT	9	8	8	4	6.5	4	12	32.5	25.3	30.3	4	10	4	12	32.5	52	64	5	12	12
4 FT	8	8	8	4	12	4	12	32.5	24.3	29.1	4	12	4	12	32.5	52	64	5	12	0
6 FT	8	8	8	4	12	4	12	36.1	24.3	29.1	4	12	4	12	33.5	52	64	5	12	0
8 FT	8	8	8	4	12	4	12	32.5	24.3	29.1	4	12	4	12	32.5	52	64	5	12	0
10 FT	8	8	8	4	12	4	12	32.5	24.3	29.1	4	12	4	12	32.5	52	64	5	12	0
12 FT	8	8	8	4	12	4	12	35.6	24.3	29.1	4	12	4	12	32.5	52	64	5	12	0
14 FT	8	8	8	4	12	4	12	34.4	24.3	29.1	4	12	4	11.5	36.1	52	64	5	12	0
16 FT	8	8	8	4	12	4	12	33.5	24.3	29.1	4	12	4	11	35.3	52	64	5	12	0
18 FT	8	8	8	4	12	4	12	32.5	24.3	29.1	4	12	4	10.5	34.8	52	64	5	12	0
20 FT	8	8	8	4	12	4	12	31.6	24.3	29.1	4	10.5	4	10	34.4	52	64	5	12	0
22 FT	8	8	8	4	11.5	4	11	31.6	24.3	29.1	4	9.5	4	9.5	33.9	52	64	5	12	0
24 FT	8	8	8	4	10.5	4	10	31.6	24.3	29.1	4	9	4	9	33.9	52	64	5	12	0
26 FT	8	8	8	4	9.5	4	9.5	31.3	24.3	29.1	4	8.5	4	8	33.5	52	64	5	12	0
28 FT	8	8	8	4	9	4	8.5	31.3	24.3	29.1	4	7.5	4	7.5	33.0	52	64	5	12	0
30 FT	8	8	8	4	8.5	4	8	31.3	24.3	29.1	4	7	4	7	33.0	52	64	5	12	0
32 FT	8	8	8	4	8	4	7.5	30.8	24.3	29.1	4	7	4	6.5	33.0	52	64	5	12	0
34 FT	8	8	8	4	7.5	4	7	30.8	24.3	29.1	4	6.5	4	6.5	32.5	52	64	5	12	0
36 FT	8	8	8	4	7	4	7	30.8	24.3	29.1	4	6	4	6	32.5	52	64	5	12	0
38 FT	8	8	8	4	6.5	4	6.5	30.8	24.3	29.1	5	9	5	7	32.5	52	64	5	12	0
40 FT	8	9	8	4	6.5	4	6	30.8	24.0	28.8	4	6	4	6.5	32.5	53	65	5	12	0
42 FT	8	9	8	4	6	4	6	30.8	24.0	28.8	5	9	4	6	32.5	53	65	5	11.5	0
44 FT	8	9	8	4	6	5	6.5	30.8	24.0	28.8	5	8.5	4	6	32.5	53	65	5	11	0
46 FT	8	9	8	4	6	5	6.5	30.4	24.0	28.8	5	8	5	6.5	34.8	53	65	5	10.5	0
48 FT	8	9	8	4	6	5	6	30.4	24.0	28.8	5	8	5	6.5	34.8	53	65	5	10	0
50 FT	8	9	8	4	6	5	6	30.4	24.0	28.8	5	7.5	5	6	34.8	53	65	5	9.5	0

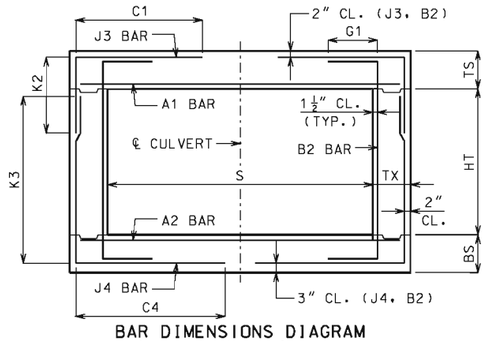

BAR DIMENSIONS DIAGRAM
SYMMETRICAL ABOUT ℄ CULVERT.

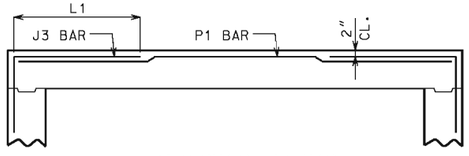

ALTERNATE J3 BAR

AT CONTRACTOR'S OPTION, ALTERNATE J3 BARS MAY BE USED WHEN THE DISTANCE BETWEEN THE ENDS OF J3 BARS IN THE TOP SLAB IS LESS THAN 2′-0″. DIMENSION L1 (NOT C1) SHALL BE USED WITH ALTERNATE J3 BARS. WHERE L1 IS EQUAL TO 18″, 22″ AND 28″ FOR #4, #5 AND #6 BARS, RESPECTIVELY. ADDITIONAL P1 BARS ARE REQUIRED WITH ALTERNATE J3 BARS WITH A LENGTH EQUAL TO A1 BARS, AND SIZE AND SPACING EQUAL TO J3 BARS. NO ADDITIONAL PAYMENT WILL BE MADE FOR THIS SUBSTITUTION.

GENERAL NOTES:

IF DESIGN FILL IS BETWEEN TABULATED DESIGN FILLS, USE THE NEXT GREATER TABULATED DESIGN FILL, EXCEPT FOR DESIGN FILLS BETWEEN 2 FEET AND 4 FEET. FOR DESIGN FILLS BETWEEN 2 FEET AND 4 FEET USE THE GREATER MEMBER THICKNESS, AREA OF REINFORCEMENT AND BAR DIMENSIONS FROM THE 2 FEET AND 4 FEET TABULATED DESIGN FILLS. AREA OF REINFORCEMENT EQUALS BAR AREA PER FOOT SPACING.

SPECIAL DESIGNS ARE REQUIRED WHEN THE DESIGN FILL IS LESS THAN 1 FOOT OR GREATER THAN 50 FEET.

DIMENSIONS ARE IN INCHES UNLESS OTHERWISE SPECIFIED.

DESIGN FILLS ARE MEASURED FROM THE TOP OF TOP SLAB TO THE TOP OF EARTH FILL OR ROADWAY.

CULVERTS MEET STRENGTH AND SERVICEABILITY REQUIREMENTS FOR THE DESIGN VEHICULAR LIVE LOAD HL-93 MINUS THE LANE LOAD.

MISSOURI HIGHWAYS AND TRANSPORTATION COMMISSION
105 WEST CAPITOL
JEFFERSON CITY, MO 65102
1-888-ASK-MODOT (1-888-275-6636)

STATE OF MISSOURI
DENNIS W. HECKMAN
NUMBER PE-27141
PROFESSIONAL ENGINEER
THIS SHEET HAS BEEN SIGNED, SEALED AND DATED ELECTRONICALLY.

CONCRETE SINGLE BOX CULVERT

MEMBER THICKNESS BAR SIZE, SPACING & DIMENSIONS

SPAN (S): 3 FEET HEIGHT (HT): 2 THRU 5 FEET

DATE EFFECTIVE: 04/01/2011
DATE PREPARED: 4/18/2011

703.17

SHEET NO. 1 OF 14

IF A SEAL IS PRESENT ON THIS SHEET IT HAS BEEN ELECTRONICALLY SEALED AND DATED.

SPAN (S) = 4 FT HEIGHT (HT) = 2 FT OR 3 FT

DESIGN FILL	MEMBER THICKNESS			TOP SLAB BARS							BOTTOM SLAB BARS							WALL BARS		
				A1 BARS		J3 BARS			K2		A2 BARS		J4 BARS			K3		B2 BARS		
	TS	BS	TX	SIZE	SPA.	SIZE	SPA.	C1	HT=2′	HT=3′	SIZE	SPA.	SIZE	SPA.	C4	HT=2′	HT=3′	SIZE	SPA.	G1
1 FT	10	8	8	4	6	4	10.5	38.6	26.3	34.8	4	7	4	7	30.3	28	40	5	12	12
2 FT	10	8	8	4	6	4	10.5	38.6	26.3	34.8	4	7	4	7	28.0	28	40	5	12	12
4 FT	8	8	8	4	12	4	12	25.3	24.1	32.4	4	11	4	12	25.3	28	40	5	12	0
6 FT	8	8	8	4	12	4	12	24.6	24.1	32.4	4	12	4	12	24.6	28	40	5	12	0
8 FT	8	8	8	4	12	4	12	24.1	24.1	32.4	4	12	4	12	24.1	28	40	5	12	0
10 FT	8	8	8	4	12	4	12	23.0	24.1	32.4	4	12	4	12	23.0	28	40	5	12	0
12 FT	8	8	8	4	12	4	12	23.0	24.1	32.4	4	11	4	12	23.0	28	40	5	12	0
14 FT	8	8	8	4	11	4	12	23.0	24.1	32.4	4	9.5	4	11.5	23.0	28	40	5	12	0
16 FT	8	8	8	4	10	4	11	23.0	24.1	32.4	4	8.5	4	10	23.0	28	40	5	12	0
18 FT	8	8	8	4	8.5	4	10	23.0	24.1	32.4	4	7.5	4	9	22.4	28	40	5	12	0
20 FT	8	8	8	4	8	4	9	23.0	24.1	32.4	4	6.5	4	8	22.4	28	40	5	12	0
22 FT	8	8	8	4	7	4	8	23.0	24.1	32.4	4	6	4	7.5	22.4	28	40	5	12	0
24 FT	8	8	8	4	6.5	4	7.5	23.0	24.1	32.4	5	8.5	4	6.5	22.4	28	40	5	12	0
26 FT	8	8	8	4	6	4	7	23.0	24.1	32.4	5	8	4	6	22.4	28	40	5	12	0
28 FT	8	9	8	4	6	4	6.5	23.0	24.1	32.1	5	8	4	8	21.9	29	41	5	12	0
30 FT	8	9	8	4	6	4	6	23.0	24.1	32.1	5	7.5	4	7.5	21.9	29	41	5	12	0
32 FT	8	10	8	4	6	5	6.5	23.0	24.0	31.9	5	7.5	4	10	21.3	30	42	5	12	0
34 FT	9	10	8	5	8.5	4	7	22.4	25.1	33.0	5	7.5	4	9.5	21.3	30	42	5	12	0
36 FT	9	10	8	5	8.5	4	7	22.4	25.1	33.0	5	7	4	9	21.3	30	42	5	12	0
38 FT	9	11	8	5	8.5	4	6.5	22.4	25.4	33.1	5	7	4	10	20.8	31	43	5	12	0
40 FT	9	11	8	5	8.5	4	6	22.4	25.4	33.1	5	6.5	4	9.5	20.8	31	43	5	12	0
42 FT	10	11	8	5	8	4	7	21.9	26.0	33.8	5	6.5	4	9	21.3	31	43	5	12	0
44 FT	10	11	8	5	8	4	6.5	21.9	26.0	33.8	5	6.5	4	8.5	21.3	31	43	5	12	0
46 FT	10	12	8	5	8	4	6.5	21.9	26.3	33.9	5	6	4	9.5	20.8	32	44	5	12	0
48 FT	10	12	8	5	8	4	6	21.9	26.3	33.9	5	6	4	9.5	20.8	32	44	5	12	0
50 FT	11	12	8	5	7.5	4	7	21.3	27.3	35.1	5	6	4	9.5	21.3	32	44	5	12	0

SPAN (S) = 4 FT HEIGHT (HT) = 4 FT OR 5 FT

DESIGN FILL	MEMBER THICKNESS			TOP SLAB BARS							BOTTOM SLAB BARS							WALL BARS		
				A1 BARS		J3 BARS			K2		A2 BARS		J4 BARS			K3		B2 BARS		
	TS	BS	TX	SIZE	SPA.	SIZE	SPA.	C1	HT=4′	HT=5′	SIZE	SPA.	SIZE	SPA.	C4	HT=4′	HT=5′	SIZE	SPA.	G1
1 FT	10	8	8	5	9	4	10.5	38.6	26.3	31.4	4	6	4	8	38.6	52	64	5	12	12
2 FT	10	8	8	5	9	4	10.5	38.6	26.3	31.4	4	6	4	7.5	38.6	52	64	5	12	12
4 FT	8	8	8	4	11.5	4	12	38.6	24.3	29.1	4	9.5	4	11.5	38.6	52	64	5	12	0
6 FT	8	8	8	4	12	4	12	35.9	24.3	29.1	4	11	4	11.5	35.3	52	64	5	12	0
8 FT	8	8	8	4	12	4	12	32.5	24.3	29.1	4	11	4	11	32.5	52	64	5	12	0
10 FT	8	8	8	4	12	4	12	28.0	24.3	29.1	4	11.5	4	11.5	28.0	52	64	5	12	0
12 FT	8	8	8	4	12	4	12	27.5	24.3	29.1	4	10	4	10.5	28.0	52	64	5	12	0
14 FT	8	8	8	4	10.5	4	12	27.5	24.3	29.1	4	9	4	10	27.5	52	64	5	12	0
16 FT	8	8	8	4	9.5	4	11	26.9	24.3	29.1	4	8	4	9.5	27.5	52	64	5	12	0
18 FT	8	8	8	4	8.5	4	9.5	26.9	24.3	29.1	4	7	4	8.5	27.5	52	64	5	12	0
20 FT	8	8	8	4	7.5	4	9	26.9	24.3	29.1	4	6.5	4	7.5	27.5	52	64	5	12	0
22 FT	8	8	8	4	7	4	8	26.9	24.3	29.1	4	6	4	7	27.5	52	64	5	12	0
24 FT	8	8	8	4	6	4	7.5	26.9	24.3	29.1	5	8.5	4	6.5	26.9	52	64	5	12	0
26 FT	8	8	8	4	6	4	6.5	26.9	24.3	29.1	5	8	4	6	26.9	52	64	5	12	0
28 FT	8	9	8	4	6	4	6	26.9	24.0	28.8	5	8	4	7.5	27.5	53	65	5	12	0
30 FT	8	9	8	4	6	4	6	26.9	24.0	28.8	5	7.5	4	7	27.5	53	65	5	12	0
32 FT	8	9	8	4	6	5	6.5	26.9	24.0	28.8	5	7.5	4	6.5	27.5	53	65	5	12	0
34 FT	9	10	8	5	8.5	4	6.5	26.9	25.4	30.4	5	7	4	7.5	28.0	54	66	5	12	0
36 FT	9	10	8	5	8.5	4	6	26.9	25.4	30.4	5	7	4	7	28.0	54	66	5	12	0
38 FT	9	10	8	5	8.5	5	7	26.9	25.4	30.4	5	7	4	7	28.0	54	66	5	12	0
40 FT	9	11	8	5	8.5	5	6.5	26.9	25.3	30.0	5	6.5	4	7	28.5	55	67	5	12	0
42 FT	10	11	8	5	8	5	7.5	27.5	26.3	31.1	5	6.5	4	6.5	28.5	55	67	5	12	0
44 FT	10	11	8	5	8	5	7.5	27.5	26.3	31.1	5	6.5	4	6	28.5	55	67	5	12	0
46 FT	10	11	8	5	8	5	7.5	27.5	26.3	31.1	5	6.5	4	6	28.5	55	67	5	12	0
48 FT	10	12	8	5	8	5	7.5	27.5	26.0	30.8	5	6	4	6	29.1	56	68	5	11.5	0
50 FT	11	12	8	5	7.5	5	8	28.0	27.0	32.0	5	6	4	6	29.1	56	68	5	11	0

SPAN (S) = 4 FT HEIGHT (HT) = 6 FT OR 7 FT

DESIGN FILL	MEMBER THICKNESS			TOP SLAB BARS							BOTTOM SLAB BARS							WALL BARS		
				A1 BARS		J3 BARS			K2		A2 BARS		J4 BARS			K3		B2 BARS		
	TS	BS	TX	SIZE	SPA.	SIZE	SPA.	C1	HT=6′	HT=7′	SIZE	SPA.	SIZE	SPA.	C4	HT=6′	HT=7′	SIZE	SPA.	G1
1 FT	10	8	8	5	8.5	4	10.5	38.6	26.4	30.1	5	9	4	7	38.6	76	88	5	12	12
2 FT	10	8	8	5	8.5	4	10.5	38.6	26.4	30.1	5	8.5	4	6.5	38.6	76	88	5	12	12
4 FT	8	8	8	4	11	4	11	38.6	24.1	27.5	4	9	4	8	38.6	76	88	5	12	0
6 FT	8	8	8	4	12	4	11	38.6	24.1	27.5	4	10.5	4	7	38.6	76	88	5	12	0
8 FT	8	8	8	4	12	4	10	38.6	24.1	27.5	4	10.5	4	7	38.6	76	88	5	12	0
10 FT	8	8	8	4	12	4	11	38.6	24.1	27.5	4	11	4	7	38.6	76	88	5	12	0
12 FT	8	8	8	4	12	4	9.5	38.6	24.1	27.5	4	10	4	6.5	38.6	76	88	5	12	0
14 FT	8	8	8	4	10.5	4	8	38.6	24.1	27.5	4	8.5	4	6	38.6	76	88	5	12	0
16 FT	8	9	8	4	9.5	4	7	38.6	24.4	27.9	4	8.5	4	6.5	38.6	77	89	5	12	0
18 FT	8	9	8	4	8.5	4	6.5	38.6	24.4	27.9	4	7.5	4	6	38.6	77	89	5	12	0
20 FT	8	10	8	4	8	4	6	38.6	24.6	28.1	4	7.5	4	6	40.9	78	90	5	11.5	0
22 FT	8	10	9	4	7.5	4	6.5	40.5	24.6	28.1	4	7	4	7	39.9	78	90	5	11.5	0
24 FT	8	10	9	4	7	4	6	39.9	24.6	28.1	4	6.5	4	6.5	39.9	78	90	5	11	0
26 FT	8	10	9	4	6.5	5	6.5	39.4	24.6	28.1	4	6	4	6	39.9	78	90	5	10	0
28 FT	8	10	9	4	6	5	6	38.8	24.6	28.1	5	9	5	7	41.6	78	90	5	9.5	0
30 FT	8	10	9	4	6	6	7.5	41.0	24.6	28.1	5	8.5	5	6.5	41.6	78	90	5	9	0
32 FT	8	10	9	4	6	6	7	40.5	24.6	28.1	5	8	5	6	41.6	78	90	5	8.5	0
34 FT	9	11	9	5	8.5	5	6	41.6	26.1	29.8	5	8.5	5	6	41.6	79	91	5	8.5	0
36 FT	9	11	9	5	8.5	5	6	41.6	26.1	29.8	5	8	5	6	41.6	79	91	5	8.5	0
38 FT	9	11	9	5	8.5	5	6	41.6	26.1	29.8	5	7.5	6	7	43.9	79	91	5	8.5	0
40 FT	9	11	9	5	8.5	5	6	41.6	26.1	29.8	5	7	6	7	43.9	79	91	5	8.5	0
42 FT	10	11	9	5	8	5	6	41.6	30.8	35.0	5	7	6	6.5	43.9	79	91	5	8.5	0
44 FT	10	11	9	5	8	5	6	41.6	30.8	35.0	5	6.5	6	6.5	43.9	79	91	5	8.5	0
46 FT	10	11	10	5	8	5	6.5	42.9	26.4	30.0	5	6.5	5	6	42.9	79	91	5	8	0
48 FT	10	11	10	5	8	5	6.5	42.9	30.8	35.0	5	6	6	7.5	44.6	79	91	5	8	0
50 FT	11	12	11	5	7.5	5	7	44.3	27.9	31.6	5	6.5	5	7.5	43.6	80	92	5	7.5	0

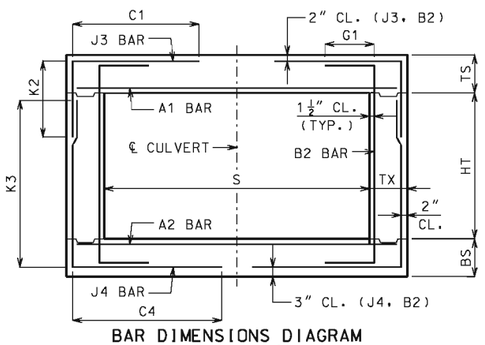

BAR DIMENSIONS DIAGRAM
SYMMETRICAL ABOUT ℄ CULVERT.

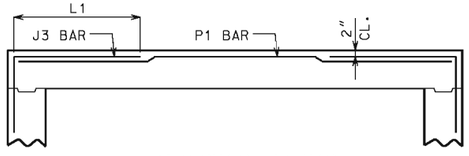

ALTERNATE J3 BAR

AT CONTRACTOR'S OPTION, ALTERNATE J3 BARS MAY BE USED WHEN THE DISTANCE BETWEEN THE ENDS OF J3 BARS IN THE TOP SLAB IS LESS THAN 2′-0″. DIMENSION L1 (NOT C1) SHALL BE USED WITH ALTERNATE J3 BARS, WHERE L1 IS EQUAL TO 18″, 22″ AND 28″ FOR #4, #5 AND #6 BARS, RESPECTIVELY. ADDITIONAL P1 BARS ARE REQUIRED WITH ALTERNATE J3 BARS WITH A LENGTH EQUAL TO A1 BARS, AND SIZE AND SPACING EQUAL TO J3 BARS. NO ADDITIONAL PAYMENT WILL BE MADE FOR THIS SUBSTITUTION.

GENERAL NOTES:

IF DESIGN FILL IS BETWEEN TABULATED DESIGN FILLS, USE THE NEXT GREATER TABULATED DESIGN FILL, EXCEPT FOR DESIGN FILLS BETWEEN 2 FEET AND 4 FEET. FOR DESIGN FILLS BETWEEN 2 FEET AND 4 FEET USE THE GREATER MEMBER THICKNESS, AREA OF REINFORCEMENT AND BAR DIMENSIONS FROM THE 2 FEET AND 4 FEET TABULATED DESIGN FILLS. AREA OF REINFORCEMENT EQUALS BAR AREA PER FOOT SPACING.

SPECIAL DESIGNS ARE REQUIRED WHEN THE DESIGN FILL IS LESS THAN 1 FOOT OR GREATER THAN 50 FEET.

DIMENSIONS ARE IN INCHES UNLESS OTHERWISE SPECIFIED.

DESIGN FILLS ARE MEASURED FROM THE TOP OF TOP SLAB TO THE TOP OF EARTH FILL OR ROADWAY.

CULVERTS MEET STRENGTH AND SERVICEABILITY REQUIREMENTS FOR THE DESIGN VEHICULAR LIVE LOAD HL-93 MINUS THE LANE LOAD.

IF A SEAL IS PRESENT ON THIS SHEET IT HAS BEEN ELECTRONICALLY SEALED AND DATED.

MISSOURI HIGHWAYS AND TRANSPORTATION COMMISSION
105 WEST CAPITOL
JEFFERSON CITY, MO 65102
1-888-ASK-MODOT (1-888-275-6636)

STATE OF MISSOURI
DENNIS W. HECKMAN
NUMBER PE-27141
PROFESSIONAL ENGINEER
THIS SHEET HAS BEEN SIGNED, SEALED AND DATED ELECTRONICALLY.

CONCRETE SINGLE BOX CULVERT

MEMBER THICKNESS BAR SIZE, SPACING & DIMENSIONS

SPAN (S): 4 FEET
HEIGHT (HT): 2 THRU 7 FEET

DATE EFFECTIVE: 04/01/2011
DATE PREPARED: 4/18/2011

703.17

SHEET NO. 2 OF 14

SPAN (S) = 5 FT HEIGHT (HT) = 3 FT OR 4 FT

DESIGN FILL	MEMBER THICKNESS			TOP SLAB BARS							BOTTOM SLAB BARS							WALL BARS		
				A1 BARS		J3 BARS			K2		A2 BARS		J4 BARS			K3		B2 BARS		
	TS	BS	TX	SIZE	SPA.	SIZE	SPA.	C1	HT=3′	HT=4′	SIZE	SPA.	SIZE	SPA.	C4	HT=3′	HT=4′	SIZE	SPA.	G1
1 FT	10	8	8	5	8	4	10.5	44.9	26.5	33.0	5	8.5	4	6	35.4	40	52	5	12	12
2 FT	10	8	8	5	8	4	10.5	44.9	26.5	33.0	5	8	4	6	32.0	40	52	5	12	12
4 FT	8	8	8	4	8.5	4	10.5	28.5	24.5	30.6	4	7.5	4	10	28.5	40	52	5	12	0
6 FT	8	8	8	4	10	4	12	27.3	24.5	30.6	4	8	4	10	27.3	40	52	5	12	0
8 FT	8	8	8	4	9.5	4	11	26.5	24.5	30.6	4	8	4	9.5	26.5	40	52	5	12	0
10 FT	8	8	8	4	10	4	12	25.1	24.5	30.6	4	8.5	4	10.5	25.1	40	52	5	12	0
12 FT	8	8	8	4	8.5	4	10	25.1	24.5	30.6	4	7	4	9	25.1	40	52	5	12	0
14 FT	8	8	8	4	7.5	4	8.5	25.1	24.5	30.6	4	6	4	7.5	25.1	40	52	5	12	0
16 FT	8	8	8	4	6.5	4	7.5	25.1	24.5	30.6	5	8.5	4	7	25.1	40	52	5	12	0
18 FT	8	8	8	4	6	4	6.5	25.1	24.5	30.6	5	8	4	6	25.1	40	52	5	12	0
20 FT	8	8	8	4	6	4	6	25.1	24.5	30.6	5	8	5	6.5	25.1	40	52	5	12	0
22 FT	8	9	8	4	6	5	6.5	25.1	24.0	30.0	5	7.5	4	7	23.8	41	53	5	12	0
24 FT	8	9	8	4	6	5	6	25.1	24.0	30.0	5	7.5	4	6.5	23.8	41	53	5	12	0
26 FT	9	10	8	5	8.5	4	6.5	24.5	25.0	31.0	5	7	4	8.5	23.8	42	54	5	12	0
28 FT	9	10	8	5	8.5	4	6	24.5	25.0	31.0	5	7	4	8	23.8	42	54	5	12	0
30 FT	9	11	8	5	8	5	6.5	24.5	25.5	31.5	5	6.5	4	9	23.1	43	55	5	12	0
32 FT	10	11	8	5	8	4	6	23.8	26.0	32.0	5	6.5	4	8	23.1	43	55	5	12	0
34 FT	10	12	8	5	7.5	5	7.5	23.8	26.5	32.5	5	6	4	9	22.5	44	56	5	12	0
36 FT	10	12	8	5	7	5	7.5	23.8	26.5	32.5	5	6	4	8.5	22.5	44	56	5	12	0
38 FT	11	12	8	5	7	4	6	23.8	27.0	33.0	5	6	4	8	23.1	44	56	5	12	0
40 FT	11	13	8	5	6.5	5	8.5	23.8	27.5	33.5	5	6	4	8.5	22.5	45	57	5	12	0
42 FT	12	13	8	5	6.5	4	6	23.1	28.0	34.0	5	6	4	8	23.1	45	57	5	12	0
44 FT	12	13	8	5	6.5	5	9	23.1	28.0	34.0	5	6	4	7.5	23.1	45	57	5	12	0
46 FT	12	14	8	5	6	5	8.5	23.8	28.5	34.5	6	8	4	7.5	22.5	46	58	5	12	0
48 FT	13	14	8	5	6	4	6	23.1	29.0	35.0	6	8	4	7.5	23.1	46	58	5	12	0
50 FT	13	14	8	5	6	5	8.5	23.1	29.0	35.0	6	8	4	7.5	23.1	46	58	5	12	0

SPAN (S) = 5 FT HEIGHT (HT) = 5 FT OR 6 FT

DESIGN FILL	MEMBER THICKNESS			TOP SLAB BARS							BOTTOM SLAB BARS							WALL BARS		
				A1 BARS		J3 BARS			K2		A2 BARS		J4 BARS			K3		B2 BARS		
	TS	BS	TX	SIZE	SPA.	SIZE	SPA.	C1	HT=5′	HT=6′	SIZE	SPA.	SIZE	SPA.	C4	HT=5′	HT=6′	SIZE	SPA.	G1
1 FT	10	8	8	5	8	4	10.5	44.9	26.3	30.6	5	8	4	6	44.9	64	76	5	12	12
2 FT	10	8	8	5	8	4	10.5	44.9	26.3	30.6	5	8	4	6	44.9	64	76	5	12	12
4 FT	8	8	8	4	8	4	11	44.9	24.1	28.3	4	7	4	8.5	44.9	64	76	5	12	0
6 FT	8	8	8	4	9	4	10.5	39.5	24.1	28.3	4	7.5	4	8	38.1	64	76	5	12	0
8 FT	8	8	8	4	9	4	10	34.6	24.1	28.3	4	7	4	7.5	34.6	64	76	5	12	0
10 FT	8	8	8	4	9.5	4	11	30.6	24.1	28.3	4	8	4	8	30.6	64	76	5	12	0
12 FT	8	8	8	4	8	4	9	29.9	24.1	28.3	4	6.5	4	7.5	30.6	64	76	5	12	0
14 FT	8	8	8	4	7	4	8	29.9	24.1	28.3	4	6	4	6.5	29.9	64	76	5	12	0
16 FT	8	8	8	4	6	4	7	29.3	24.1	28.3	5	8	4	6	29.9	64	76	5	12	0
18 FT	8	8	8	4	6	4	6	29.3	24.1	28.3	5	8	5	6.5	29.9	64	76	5	12	0
20 FT	8	8	8	4	6	5	6.5	29.3	24.1	28.3	5	8	5	6	29.9	64	76	5	12	0
22 FT	8	9	8	4	6	5	6	29.3	24.5	28.5	5	7.5	4	6	29.9	65	77	5	12	0
24 FT	8	9	8	5	9	6	7.5	32.0	28.1	32.8	5	7.5	5	6.5	29.9	65	77	5	12	0
26 FT	9	10	8	5	8.5	5	6.5	29.3	25.1	29.3	5	7	4	6	30.6	66	78	5	12	0
28 FT	9	10	8	5	8	5	6.5	29.3	25.1	29.3	5	7	5	7	29.9	66	78	5	12	0
30 FT	9	10	8	5	7.5	5	6.5	29.3	29.6	34.4	5	6.5	5	6.5	29.9	66	78	5	12	0
32 FT	10	11	8	5	7.5	5	7	29.3	26.6	30.8	5	6.5	5	7.5	30.6	67	79	5	12	0
34 FT	10	11	8	5	7.5	5	6.5	29.3	26.6	30.8	5	6.5	5	7	30.6	67	79	5	11.5	0
36 FT	10	11	8	5	7	5	6.5	29.3	30.4	35.3	5	6	5	6	30.6	67	79	5	11	0
38 FT	11	12	8	5	7	5	7	29.9	27.3	31.5	5	6	5	7	31.3	68	80	5	10	0
40 FT	11	12	8	5	6.5	5	6.5	29.9	31.3	36.0	5	6	5	6.5	31.3	68	80	5	10	0
42 FT	11	13	8	5	6.5	5	6	29.9	27.6	31.9	5	6	5	7	31.3	69	81	5	9.5	0
44 FT	12	13	8	5	6.5	5	6.5	29.9	28.0	32.3	5	6	5	6.5	32.0	69	81	5	9.5	0
46 FT	12	13	8	5	6	5	6	29.9	32.0	36.8	5	6	5	6	31.3	69	81	5	9.5	0
48 FT	12	14	9	5	6	5	7	30.4	28.4	32.5	6	8	5	8	31.8	70	82	5	9.5	0
50 FT	13	14	9	5	6	5	7.5	30.4	29.5	33.9	6	8	5	7.5	32.4	70	82	5	9	0

SPAN (S) = 5 FT HEIGHT (HT) = 7 FT OR 8 FT

DESIGN FILL	MEMBER THICKNESS			TOP SLAB BARS							BOTTOM SLAB BARS							WALL BARS		
				A1 BARS		J3 BARS			K2		A2 BARS		J4 BARS			K3		B2 BARS		
	TS	BS	TX	SIZE	SPA.	SIZE	SPA.	C1	HT=7′	HT=8′	SIZE	SPA.	SIZE	SPA.	C4	HT=7′	HT=8′	SIZE	SPA.	G1
1 FT	10	9	8	5	8	4	9.5	44.9	26.5	29.8	5	7.5	4	7	44.9	89	101	5	12	12
2 FT	10	9	8	5	8	4	8.5	44.9	26.5	29.8	5	7.5	4	6.5	44.9	89	101	5	12	12
4 FT	8	8	8	4	7.5	4	7.5	44.9	24.8	27.9	4	6.5	4	6	44.9	88	100	5	12	0
6 FT	8	9	8	4	9	4	7.5	44.9	24.0	27.0	4	7.5	4	6.5	44.9	89	101	5	12	0
8 FT	8	9	8	4	9	4	7	44.9	24.0	27.0	4	7.5	4	6	44.9	89	101	5	12	0
10 FT	8	9	8	4	10	4	7.5	44.9	24.0	27.0	4	8	4	6.5	44.9	89	101	5	12	0
12 FT	8	10	8	4	8.5	4	6.5	44.9	24.3	27.3	4	8	4	6.5	44.9	90	102	5	12	0
14 FT	8	10	9	4	7.5	4	6.5	41.4	24.3	27.3	4	7	4	7	45.5	90	102	5	12	0
16 FT	8	10	9	4	6.5	4	6	40.8	24.3	27.3	4	6	4	6.5	45.5	90	102	5	11.5	0
18 FT	8	10	9	4	6	5	6.5	40.0	24.3	27.3	5	9	4	6	45.5	90	102	5	10.5	0
20 FT	8	10	9	4	6	5	6	39.4	25.3	28.4	5	8	5	6.5	47.6	90	102	5	10	0
22 FT	8	10	9	4	6	6	7	42.1	25.3	28.4	5	7.5	5	6	47.6	90	102	5	9	0
24 FT	9	11	9	5	8.5	5	6	41.4	26.8	30.0	5	7.5	5	6	47.6	91	103	5	8.5	0
26 FT	9	11	9	5	8.5	5	6	41.4	26.8	30.0	5	7	6	7.5	49.6	91	103	5	8.5	0
28 FT	9	11	9	5	8.5	5	6	41.4	29.8	33.3	5	6.5	6	7	49.6	91	103	5	8.5	0
30 FT	9	11	9	5	8	5	6	40.8	29.8	33.3	5	6.5	6	6.5	49.6	91	103	5	8.5	0
32 FT	10	11	9	5	8	5	6	46.3	30.0	33.6	5	6.5	6	6	49.6	91	103	5	8.5	0
34 FT	10	11	9	5	7.5	5	6	45.5	30.0	33.6	5	6	6	6	49.6	91	103	5	8.5	0
36 FT	10	12	10	5	7	5	6.5	40.6	30.3	33.9	5	6	5	6	49.0	92	104	5	8	0
38 FT	11	12	10	5	7.5	5	6	43.4	31.6	35.4	5	6	6	7	51.1	92	104	5	8	0
40 FT	11	12	11	5	7.5	5	7	41.1	31.6	35.4	5	6	5	6.5	49.8	92	104	5	7.5	0
42 FT	11	13	11	5	7	5	7	41.1	31.9	35.6	5	6	5	6.5	49.8	93	105	5	7.5	0
44 FT	12	13	11	5	7	5	6.5	43.3	32.3	36.0	5	6	5	6	49.8	93	105	5	7.5	0
46 FT	12	13	11	5	7	5	6	43.3	32.3	36.0	5	6	5	6	49.8	93	105	5	7.5	0
48 FT	12	14	12	5	6.5	5	6.5	41.0	32.5	36.3	6	8	5	6.5	51.1	94	106	5	7	0
50 FT	13	14	12	5	6.5	5	6.5	43.3	33.9	37.8	6	8	5	6.5	51.1	94	106	5	7	0

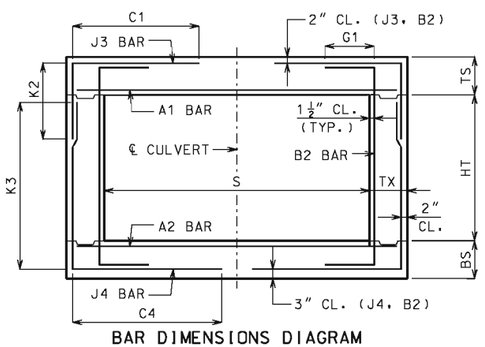

BAR DIMENSIONS DIAGRAM
SYMMETRICAL ABOUT ℄ CULVERT.

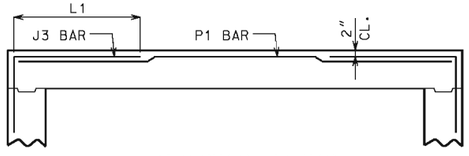

ALTERNATE J3 BAR

AT CONTRACTOR'S OPTION, ALTERNATE J3 BARS MAY BE USED WHEN THE DISTANCE BETWEEN THE ENDS OF J3 BARS IN THE TOP SLAB IS LESS THAN 2′-0″. DIMENSION L1 (NOT C1) SHALL BE USED WITH ALTERNATE J3 BARS, WHERE L1 IS EQUAL TO 18″, 22″ AND 28″ FOR #4, #5 AND #6 BARS, RESPECTIVELY. ADDITIONAL P1 BARS ARE REQUIRED WITH ALTERNATE J3 BARS WITH A LENGTH EQUAL TO A1 BARS, AND SIZE AND SPACING EQUAL TO J3 BARS. NO ADDITIONAL PAYMENT WILL BE MADE FOR THIS SUBSTITUTION.

GENERAL NOTES:

IF DESIGN FILL IS BETWEEN TABULATED DESIGN FILLS, USE THE NEXT GREATER TABULATED DESIGN FILL, EXCEPT FOR DESIGN FILLS BETWEEN 2 FEET AND 4 FEET. FOR DESIGN FILLS BETWEEN 2 FEET AND 4 FEET USE THE GREATER MEMBER THICKNESS. AREA OF REINFORCEMENT AND BAR DIMENSIONS FROM THE 2 FEET AND 4 FEET TABULATED DESIGN FILLS. AREA OF REINFORCEMENT EQUALS BAR AREA PER FOOT SPACING.

SPECIAL DESIGNS ARE REQUIRED WHEN THE DESIGN FILL IS LESS THAN 1 FOOT OR GREATER THAN 50 FEET.

DIMENSIONS ARE IN INCHES UNLESS OTHERWISE SPECIFIED.

DESIGN FILLS ARE MEASURED FROM THE TOP OF TOP SLAB TO THE TOP OF EARTH FILL OR ROADWAY.

CULVERTS MEET STRENGTH AND SERVICEABILITY REQUIREMENTS FOR THE DESIGN VEHICULAR LIVE LOAD HL-93 MINUS THE LANE LOAD.

IF A SEAL IS PRESENT ON THIS SHEET IT HAS BEEN ELECTRONICALLY SEALED AND DATED.

MISSOURI HIGHWAYS AND TRANSPORTATION COMMISSION
105 WEST CAPITOL
JEFFERSON CITY, MO 65102
1-888-ASK-MODOT (1-888-275-6636)

STATE OF MISSOURI
DENNIS W. HECKMAN
NUMBER PE-27141
PROFESSIONAL ENGINEER
THIS SHEET HAS BEEN SIGNED, SEALED AND DATED ELECTRONICALLY.

CONCRETE SINGLE BOX CULVERT

MEMBER THICKNESS BAR SIZE, SPACING & DIMENSIONS

SPAN (S): 5 FEET
HEIGHT (HT): 3 THRU 8 FEET

DATE EFFECTIVE: 04/01/2011
DATE PREPARED: 4/18/2011

703.17

SHEET NO. 3 OF 14

SPAN (S) = 6 FT HEIGHT (HT) = 3 FT OR 4 FT OR 5 FT

DESIGN FILL	MEMBER THICKNESS			TOP SLAB BARS							BOTTOM SLAB BARS								WALL BARS		
				A1 BARS		J3 BARS					A2 BARS		J4 BARS						B2 BARS		
	TS	BS	TX	SIZE	SPA.	SIZE	SPA.	C1	K2						C4	K3					
									HT=3′	HT=4′	HT=5′					HT=3′	HT=4′	HT=5′			
1 FT	10	8	8	5	8	4	9	51.3	26.5	33.0	39.4	5	8	5	6	41.6	40	52	64	5	12	12
2 FT	11	8	8	5	7.5	4	9.5	51.3	27.0	33.5	40.0	5	8	6	7.5	36.0	40	52	64	5	12	12
4 FT	8	8	8	4	6.5	4	7.5	32.8	24.5	30.6	36.9	5	8.5	4	6.5	32.0	40	52	64	5	12	0
6 FT	8	8	8	4	7	4	8	30.4	24.5	30.6	36.9	5	9	4	7	30.4	40	52	64	5	12	0
8 FT	8	8	8	4	6.5	4	7.5	29.6	24.5	30.6	36.9	5	8.5	4	6.5	29.6	40	52	64	5	12	0
10 FT	8	8	8	4	7	4	8	27.3	24.5	30.6	36.9	4	6	4	7	27.3	40	52	64	5	12	0
12 FT	8	8	8	4	6	4	7	27.3	24.5	30.6	36.9	5	8	4	6	27.3	40	52	64	5	12	0
14 FT	8	8	8	4	6	4	6	27.3	24.5	30.6	36.9	5	8	5	6	27.3	40	52	64	5	12	0
16 FT	8	8	8	4	6	5	6	27.3	28.3	35.4	42.6	5	8	6	7	30.4	40	52	64	5	12	0
18 FT	8	9	8	5	8.5	6	7.5	30.4	24.0	30.0	36.0	5	7.5	4	6	26.4	41	53	65	5	12	0
20 FT	8	9	8	5	7.5	6	7.5	30.4	28.4	35.4	42.5	5	7	5	6.5	26.4	41	53	65	5	12	0
22 FT	9	10	8	5	7.5	5	6.5	26.4	25.0	31.0	37.0	5	7	4	6.5	25.6	42	54	66	5	12	0
24 FT	9	11	8	5	7	5	6.5	26.4	25.5	31.5	37.5	5	6.5	4	7	24.8	43	55	67	5	12	0
26 FT	10	11	8	5	7	5	7.5	26.4	26.0	32.0	38.0	5	6.5	4	6.5	25.6	43	55	67	5	12	0
28 FT	10	12	8	5	6.5	5	7.5	26.4	26.5	32.5	38.5	5	6	4	7	24.8	44	56	68	5	12	0
30 FT	11	12	8	5	6.5	5	8.5	25.6	27.0	33.0	39.0	5	6	4	6	24.8	44	56	68	5	12	0
32 FT	11	13	8	5	6	5	8	25.6	27.5	33.5	39.5	5	6	4	7	24.8	45	57	69	5	12	0
34 FT	12	13	8	5	6	5	8.5	25.6	28.0	34.0	40.0	5	6	4	6	24.8	45	57	69	5	12	0
36 FT	12	14	8	6	8	5	8.5	25.6	28.5	34.5	40.5	6	8	4	6.5	24.8	46	58	70	5	12	0
38 FT	13	14	8	6	8	5	8.5	24.8	29.0	35.0	41.0	6	8	4	6	24.8	46	58	70	5	12	0
40 FT	13	14	8	6	7.5	5	8.5	24.8	29.0	35.0	41.0	6	7.5	5	9	24.8	46	58	70	5	12	0
42 FT	14	15	8	6	8	5	8.5	24.8	30.0	36.0	42.0	6	7.5	4	6	24.8	47	59	71	5	12	0
44 FT	14	15	8	6	7.5	5	8.5	24.8	30.0	36.0	42.0	6	7.5	5	8.5	24.8	47	59	71	5	12	0
46 FT	14	16	8	6	7	5	8.5	24.8	30.5	36.5	42.5	6	7	4	6	24.8	48	60	72	5	12	0
48 FT	15	16	8	6	7	5	8	29.6	31.0	37.0	43.0	6	7	5	8	25.6	48	60	72	5	12	0
50 FT	15	16	8	6	7	5	8	29.6	31.0	37.0	43.0	6	7	5	8	24.8	48	60	72	5	12	0

SPAN (S) = 6 FT HEIGHT (HT) = 6 FT OR 7 FT

DESIGN FILL	MEMBER THICKNESS			TOP SLAB BARS							BOTTOM SLAB BARS								WALL BARS		
				A1 BARS		J3 BARS					A2 BARS		J4 BARS						B2 BARS		
	TS	BS	TX	SIZE	SPA.	SIZE	SPA.	C1	K2						C4	K3					
									HT=6′	HT=7′						HT=6′	HT=7′				
1 FT	10	8	8	5	8	4	9.5	51.3	26.4	30.1	5	8	5	6	52.8	76	88	5	12	12	
2 FT	11	9	8	5	7.5	4	9.5	51.3	27.9	31.6	5	7.5	4	6.5	51.3	77	89	5	12	12	
4 FT	8	8	8	4	6	4	7	51.3	24.1	27.5	5	8	4	6	51.3	76	88	5	12	0	
6 FT	8	8	8	4	6.5	4	7.5	42.4	24.1	27.5	5	8	4	6	41.6	76	88	5	12	0	
8 FT	8	8	8	4	6.5	4	7	38.4	24.1	27.5	5	8	5	6.5	38.4	76	88	5	12	0	
10 FT	8	8	8	4	7	4	7.5	32.8	24.1	27.5	5	8.5	4	6	33.6	76	88	5	12	0	
12 FT	8	9	8	4	6	4	6	32.8	24.4	27.9	5	8	4	7	33.6	77	89	5	12	0	
14 FT	8	9	8	4	6	5	6.5	32.0	24.4	27.9	5	7.5	4	6	32.8	77	89	5	12	0	
16 FT	8	9	8	4	6	6	7.5	35.3	28.5	32.6	5	7.5	5	6.5	32.8	77	89	5	12	0	
18 FT	8	9	8	5	8.5	6	7.5	34.4	28.5	32.6	5	7.5	6	7.5	35.3	77	89	5	12	0	
20 FT	8	9	8	5	7.5	6	7.5	34.4	28.5	32.6	5	6.5	6	7	35.3	77	89	5	12	0	
22 FT	9	10	8	5	7.5	5	6	32.0	25.8	29.4	5	7	5	6	32.8	78	90	5	12	0	
24 FT	9	11	8	5	7	6	7	34.4	29.6	33.6	5	6.5	5	6.5	32.8	79	91	5	12	0	
26 FT	10	11	8	5	6.5	5	6	32.0	30.8	35.0	5	6.5	5	6	32.8	79	91	5	11	0	
28 FT	10	12	8	5	6.5	6	7	34.4	30.3	34.4	5	6	5	6.5	33.6	80	92	5	10.5	0	
30 FT	11	12	8	5	6.5	5	6	32.0	31.5	35.8	5	6	5	6	33.6	80	92	5	9.5	0	
32 FT	11	13	8	5	6	6	7	35.3	31.9	36.0	5	6	5	6	33.6	81	93	5	9.5	0	
34 FT	11	13	8	6	7.5	6	6.5	35.3	31.9	36.0	5	6	5	6	33.6	81	93	5	9.5	0	
36 FT	12	13	8	6	8	6	7	35.3	32.3	36.4	6	8	6	7	36.8	81	93	5	9.5	0	
38 FT	12	14	8	6	8	6	6.5	35.3	32.5	36.8	6	8	5	6	34.4	82	94	5	9.5	0	
40 FT	13	14	9	6	8	5	6	32.4	33.9	38.1	6	8	5	6.5	34.0	82	94	5	8.5	0	
42 FT	13	15	10	6	8	5	7	32.8	33.3	37.5	6	7.5	5	7.5	34.5	83	95	5	9	0	
44 FT	14	15	10	6	8	5	7.5	32.8	34.5	38.9	6	7.5	5	7.5	34.5	83	95	5	8.5	0	
46 FT	14	16	11	6	7.5	5	7	33.3	34.9	39.3	6	7	5	7	34.9	84	96	5	9	0	
48 FT	14	16	11	6	7.5	5	6.5	33.3	34.9	39.3	6	7	5	7	34.9	84	96	5	9	0	
50 FT	15	16	11	6	7.5	5	7	38.1	35.3	39.6	6	7	5	7	34.9	84	96	5	8.5	0	

SPAN (S) = 6 FT HEIGHT (HT) = 8 FT OR 9 FT

DESIGN FILL	MEMBER THICKNESS			TOP SLAB BARS							BOTTOM SLAB BARS							WALL BARS		
				A1 BARS		J3 BARS					A2 BARS		J4 BARS					B2 BARS		
	TS	BS	TX	SIZE	SPA.	SIZE	SPA.	C1	K2						C4	K3				
									HT=8′	HT=9′						HT=8′	HT=9′			
1 FT	10	10	8	5	8	4	7	51.3	26.6	29.5	5	7	4	6.5	51.3	102	114	5	12	12
2 FT	11	10	8	5	7.5	4	7	51.3	28.0	31.0	5	7	4	6	51.3	102	114	5	12	12
4 FT	8	9	9	4	6	4	6.5	51.9	24.9	27.6	5	8	4	6.5	51.9	101	113	5	12	0
6 FT	8	9	9	4	6.5	4	6.5	51.9	24.9	27.6	5	8.5	4	6	51.9	101	113	5	12	0
8 FT	8	10	9	4	6.5	4	6	51.9	25.1	27.9	4	6	4	6	51.9	102	114	5	11.5	0
10 FT	8	10	9	4	7.5	4	6.5	45.4	25.1	27.9	4	6.5	4	6.5	51.9	102	114	5	12	0
12 FT	8	10	9	4	6	5	6.5	43.8	25.1	27.9	5	8.5	4	6	51.9	102	114	5	11.5	0
14 FT	8	10	9	4	6	5	6	42.1	26.1	29.0	5	7.5	5	6.5	54.3	102	114	5	10	0
16 FT	8	10	9	4	6	6	7	44.5	28.4	31.5	5	7	5	6	54.3	102	114	5	9.5	0
18 FT	8	10	9	5	9	6	7	43.8	29.4	32.6	5	7	6	7	55.9	102	114	5	8.5	0
20 FT	9	10	9	5	8.5	5	6	43.8	29.8	33.0	5	7	6	6.5	56.8	102	114	5	8.5	0
22 FT	9	11	9	5	8	5	6	42.9	30.0	33.3	5	6.5	6	6.5	55.9	103	115	5	8.5	0
24 FT	10	11	9	5	7.5	5	6	45.4	30.3	33.5	5	6.5	6	6	55.9	103	115	5	8.5	0
26 FT	10	11	9	5	7	5	6	44.5	30.3	33.5	5	6	6	6	55.9	103	115	5	8.5	0
28 FT	10	12	9	5	6.5	6	7	47.0	31.6	35.0	5	6	6	6	55.9	104	116	5	8	0
30 FT	11	12	9	5	6.5	6	6.5	49.4	35.4	39.0	5	6	6	6	55.9	104	116	5	8	0
32 FT	11	13	10	5	6.5	6	8	46.8	32.3	35.5	5	6	6	6.5	56.6	105	117	5	8	0
34 FT	12	13	11	5	6.5	5	6.5	44.0	32.5	35.9	5	6	5	6	49.8	105	117	5	7.5	0
36 FT	12	13	11	5	6	5	6.5	44.0	32.5	35.9	6	8	6	7.5	52.3	105	117	5	7.5	0
38 FT	12	14	12	5	6	5	6	42.0	32.8	36.1	6	8	5	6	48.8	106	118	5	7	0
40 FT	13	14	12	5	6	5	6	44.5	33.0	36.4	6	8	5	6	48.8	106	118	5	7	0
42 FT	13	15	12	5	6	5	6	43.6	33.4	36.6	6	7.5	5	6	52.1	107	119	5	7	0
44 FT	14	15	13	5	6	5	6	44.3	34.8	38.3	6	7.5	5	6	48.5	107	119	5	6.5	0
46 FT	14	15	13	6	8	5	6	44.3	34.8	38.3	6	7.5	6	8	51.0	107	119	5	6.5	0
48 FT	14	16	13	6	8	5	6	44.3	35.1	38.6	6	7	5	6	50.1	108	120	5	6.5	0
50 FT	15	16	13	6	8	5	6	51.0	35.4	38.9	6	7	6	8	53.5	108	120	5	6.5	0

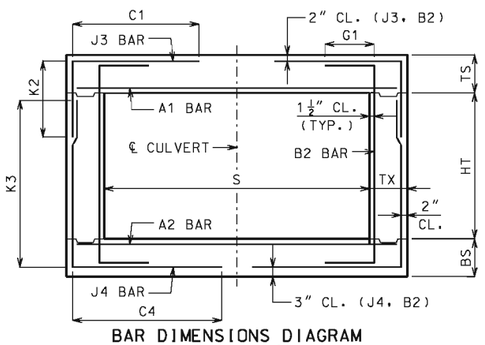

BAR DIMENSIONS DIAGRAM
SYMMETRICAL ABOUT ℄ CULVERT.

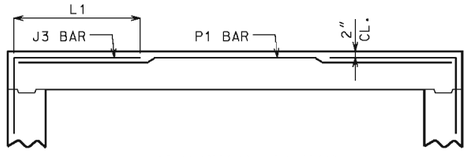

ALTERNATE J3 BAR

AT CONTRACTOR'S OPTION, ALTERNATE J3 BARS MAY BE USED WHEN THE DISTANCE BETWEEN THE ENDS OF J3 BARS IN THE TOP SLAB IS LESS THAN 2′-0″. DIMENSION L1 (NOT C1) SHALL BE USED WITH ALTERNATE J3 BARS, WHERE L1 IS EQUAL TO 18″, 22″ AND 28″ FOR #4, #5 AND #6 BARS, RESPECTIVELY. ADDITIONAL P1 BARS ARE REQUIRED WITH ALTERNATE J3 BARS WITH A LENGTH EQUAL TO A1 BARS, AND SIZE AND SPACING EQUAL TO J3 BARS. NO ADDITIONAL PAYMENT WILL BE MADE FOR THIS SUBSTITUTION.

GENERAL NOTES:

IF DESIGN FILL IS BETWEEN TABULATED DESIGN FILLS, USE THE NEXT GREATER TABULATED DESIGN FILL, EXCEPT FOR DESIGN FILLS BETWEEN 2 FEET AND 4 FEET. FOR DESIGN FILLS BETWEEN 2 FEET AND 4 FEET USE THE GREATER MEMBER THICKNESS. AREA OF REINFORCEMENT AND BAR DIMENSIONS FROM THE 2 FEET AND 4 FEET TABULATED DESIGN FILLS. AREA OF REINFORCEMENT EQUALS BAR AREA PER FOOT SPACING.

SPECIAL DESIGNS ARE REQUIRED WHEN THE DESIGN FILL IS LESS THAN 1 FOOT OR GREATER THAN 50 FEET.

DIMENSIONS ARE IN INCHES UNLESS OTHERWISE SPECIFIED.

DESIGN FILLS ARE MEASURED FROM THE TOP OF TOP SLAB TO THE TOP OF EARTH FILL OR ROADWAY.

CULVERTS MEET STRENGTH AND SERVICEABILITY REQUIREMENTS FOR THE DESIGN VEHICULAR LIVE LOAD HL-93 MINUS THE LANE LOAD.

IF A SEAL IS PRESENT ON THIS SHEET IT HAS BEEN ELECTRONICALLY SEALED AND DATED.

MISSOURI HIGHWAYS AND TRANSPORTATION COMMISSION
105 WEST CAPITOL
JEFFERSON CITY, MO 65102
1-888-ASK-MODOT (1-888-275-6636)

STATE OF MISSOURI
DENNIS W. HECKMAN
NUMBER PE-27141
PROFESSIONAL ENGINEER
THIS SHEET HAS BEEN SIGNED, SEALED AND DATED ELECTRONICALLY.

CONCRETE SINGLE BOX CULVERT

MEMBER THICKNESS BAR SIZE, SPACING & DIMENSIONS

SPAN (S): 6 FEET
HEIGHT (HT): 3 THRU 9 FEET

DATE EFFECTIVE: 04/01/2011
DATE PREPARED: 4/18/2011

703.17

SHEET NO. 4 OF 14

SPAN (S) = 7 FT HEIGHT (HT) = 4 FT OR 5 FT OR 6 FT

DESIGN FILL	MEMBER THICKNESS			TOP SLAB BARS							BOTTOM SLAB BARS								WALL BARS		
				A1 BARS		J3 BARS					A2 BARS		J4 BARS						B2 BARS		
	TS	BS	TX	SIZE	SPA.	SIZE	SPA.	C1	K2						C4	K3					
									HT=4′	HT=5′	HT=6′					HT=4′	HT=5′	HT=6′			
1 FT	11	9	8	5	7.5	4	9	57.0	27.1	32.3	37.4	5	7.5	4	6	54.3	53	65	77	5	12	12
2 FT	11	9	8	5	7.5	4	9	57.0	27.1	32.3	37.4	5	7.5	5	7	43.3	53	65	77	5	12	12
4 FT	8	8	8	4	6	4	6	36.8	24.3	29.1	34.0	5	8	5	6	35.9	52	64	76	5	12	0
6 FT	8	8	8	4	6	4	6	33.1	24.3	29.1	34.0	5	8	5	6	33.1	52	64	76	5	12	0
8 FT	8	9	8	4	6	5	6.5	32.3	24.0	28.8	33.6	5	7.5	4	6.5	32.3	53	65	77	5	12	0
10 FT	8	9	8	4	6	4	6	30.4	24.0	28.8	33.6	5	7.5	4	7.5	29.5	53	65	77	5	12	0
12 FT	8	9	8	4	6	5	6	30.4	24.0	28.8	33.6	5	7.5	4	6	28.5	53	65	77	5	12	0
14 FT	8	9	8	5	8	6	7.5	33.1	28.3	33.9	39.5	5	7	5	6.5	28.5	53	65	77	5	12	0
16 FT	8	9	8	5	7	6	7	33.1	28.3	33.9	39.5	5	6.5	6	7.5	31.3	53	65	77	5	12	0
18 FT	9	10	8	5	7	5	6.5	28.5	25.4	30.4	35.3	5	6	5	7	28.5	54	66	78	5	12	0
20 FT	9	10	8	5	6	5	6	28.5	29.1	34.8	40.4	6	8	5	6	27.6	54	66	78	5	12	0
22 FT	10	11	8	5	6	5	7	28.5	26.3	31.1	36.1	6	8	5	7.5	27.6	55	67	79	5	12	0
24 FT	10	12	8	6	8	5	6	28.5	26.0	30.8	35.6	6	8	5	8.5	26.6	56	68	80	5	12	0
26 FT	11	13	8	6	8	5	7	27.6	27.5	32.4	37.3	6	8	5	8.5	26.6	57	69	81	5	12	0
28 FT	12	13	8	6	7.5	5	8	27.6	28.5	33.6	38.6	6	7.5	5	8.5	27.6	57	69	81	5	12	0
30 FT	12	14	8	6	7.5	5	7	27.6	28.3	33.3	38.1	6	7.5	5	8.5	26.6	58	70	82	5	12	0
32 FT	13	14	8	6	7	5	8	26.6	29.4	34.5	39.5	6	7	5	8.5	27.6	58	70	82	5	12	0
34 FT	13	15	8	6	7	5	7	27.6	29.1	34.0	39.0	6	7	5	8.5	26.6	59	71	83	5	12	0
36 FT	14	15	8	6	6.5	5	7.5	26.6	30.3	35.3	40.4	6	7	5	8.5	27.6	59	71	83	5	12	0
38 FT	14	16	8	6	6.5	5	7	26.6	30.6	35.8	40.8	6	7	5	8	26.6	60	72	84	5	11.5	0
40 FT	15	16	8	6	6.5	5	7.5	32.3	31.1	36.1	41.1	6	6.5	5	8	27.6	60	72	84	5	10.5	0
42 FT	15	17	8	6	6	5	7	32.3	35.3	40.9	46.5	6	6.5	5	7	27.6	61	73	85	5	10	0
44 FT	16	17	8	6	6	5	7	32.3	36.5	42.3	48.0	6	6.5	5	7	27.6	61	73	85	5	9.5	0
46 FT	16	18	8	6	6	5	6	32.3	36.3	41.9	47.5	6	6.5	5	6.5	27.6	62	74	86	5	9.5	0
48 FT	17	18	9	6	6	5	7.5	32.5	33.5	38.8	43.9	6	6.5	5	8	27.9	62	74	86	5	10	0
50 FT	17	19	9	6	6	5	7	32.5	37.1	42.8	48.4	6	6	5	7.5	27.9	63	75	87	5	9	0

SPAN (S) = 7 FT HEIGHT (HT) = 7 FT OR 8 FT

DESIGN FILL	MEMBER THICKNESS			TOP SLAB BARS							BOTTOM SLAB BARS								WALL BARS		
				A1 BARS		J3 BARS					A2 BARS		J4 BARS						B2 BARS		
	TS	BS	TX	SIZE	SPA.	SIZE	SPA.	C1	K2						C4	K3					
									HT=7′	HT=8′						HT=7′	HT=8′				
1 FT	11	9	8	5	7.5	4	8	57.0	27.8	31.1	5	7.5	5	6.5	58.9	89	101	5	12	12	
2 FT	11	9	8	5	7.5	4	7.5	57.0	27.8	31.1	5	7.5	5	6	58.9	89	101	5	12	12	
4 FT	8	9	8	4	6	5	6.5	58.9	24.0	27.0	5	7.5	4	6	57.0	89	101	5	12	0	
6 FT	8	9	8	4	6	5	6.5	46.0	25.0	28.1	5	7.5	5	6.5	50.6	89	101	5	12	0	
8 FT	8	9	8	4	6	5	6	41.4	25.0	28.1	5	7.5	5	6.5	44.1	89	101	5	12	0	
10 FT	8	9	8	4	6	5	6.5	35.9	25.0	28.1	5	7.5	5	6.5	36.8	89	101	5	12	0	
12 FT	8	9	8	4	6	6	7.5	38.6	28.8	32.4	5	7.5	5	6	36.8	89	101	5	12	0	
14 FT	8	9	8	5	8	6	7.5	37.8	28.8	32.4	5	7	6	6.5	38.6	89	101	5	12	0	
16 FT	8	9	8	5	7	6	7	37.8	32.6	36.8	5	6	6	6	38.6	89	101	5	12	0	
18 FT	9	10	8	5	6.5	6	7	37.8	29.4	33.0	5	6	6	6.5	38.6	90	102	5	12	0	
20 FT	9	10	8	5	6	6	7	36.8	33.4	37.4	6	7.5	6	6	38.6	90	102	5	11	0	
22 FT	10	11	9	5	6	5	6	34.4	30.0	33.6	6	8	5	6	35.4	91	103	5	12	0	
24 FT	10	12	9	6	8.5	5	6	34.4	30.3	33.9	6	8	5	6.5	36.3	92	104	5	11	0	
26 FT	11	13	9	6	8	6	7.5	38.1	31.9	35.6	6	8	5	6.5	36.3	93	105	5	10	0	
28 FT	11	13	9	6	7	6	7	37.3	31.9	35.6	6	7.5	5	6	36.3	93	105	5	9.5	0	
30 FT	12	13	9	6	7.5	6	7.5	37.3	33.3	37.1	6	7	6	7.5	39.0	93	105	5	8.5	0	
32 FT	12	14	9	6	6.5	6	6.5	37.3	32.5	36.3	6	7	5	6	36.3	94	106	5	8.5	0	
34 FT	13	14	9	6	7	6	7	38.1	33.9	37.8	6	7	6	7	39.0	94	106	5	8.5	0	
36 FT	14	15	10	6	7	5	6.5	34.8	34.5	38.4	6	7	5	7	36.6	95	107	5	8	0	
38 FT	14	16	11	6	7	5	6.5	36.1	34.9	38.8	6	7	5	7	37.0	96	108	5	8.5	0	
40 FT	15	16	11	6	7	5	6.5	40.9	35.3	39.0	6	7	5	7	37.0	96	108	5	8	0	
42 FT	15	17	11	6	6.5	5	6	40.9	35.5	39.4	6	7	5	7	37.0	97	109	5	7.5	0	
44 FT	16	17	12	6	6.5	5	6.5	41.3	37.0	40.9	6	6.5	5	6.5	37.5	97	109	5	8	0	
46 FT	16	18	12	6	6.5	5	6.5	41.3	36.1	40.0	6	6.5	5	6.5	37.5	98	110	5	8	0	
48 FT	17	18	12	6	6.5	5	6.5	41.3	37.6	41.6	6	6.5	5	6.5	38.4	98	110	5	7.5	0	
50 FT	17	18	12	6	6	5	6	41.3	37.6	41.6	6	6	5	6.5	38.4	98	110	5	7	0	

SPAN (S) = 7 FT HEIGHT (HT) = 9 FT OR 10 FT

DESIGN FILL	MEMBER THICKNESS			TOP SLAB BARS							BOTTOM SLAB BARS							WALL BARS		
				A1 BARS		J3 BARS					A2 BARS		J4 BARS					B2 BARS		
	TS	BS	TX	SIZE	SPA.	SIZE	SPA.	C1	K2						C4	K3				
									HT=9′	HT=10′						HT=9′	HT=10′			
1 FT	11	10	8	5	7.5	4	6	57.0	27.3	29.9	5	7	5	6.5	58.9	114	126	5	12	12
2 FT	11	10	8	5	7.5	5	8.5	58.9	28.5	31.3	5	7	5	6	58.9	114	126	5	11	12
4 FT	8	9	9	4	6	5	6	59.5	28.8	31.6	5	7.5	5	6	59.5	113	125	5	10.5	0
6 FT	8	10	9	4	6	5	6	59.5	29.0	31.9	5	7	5	6.5	59.5	114	126	5	10	0
8 FT	8	10	9	4	6	6	7	62.3	29.0	31.9	5	7	5	6	59.5	114	126	5	9	0
10 FT	8	10	9	4	6	5	6	46.5	26.6	29.3	5	7.5	5	6	59.5	114	126	5	10	0
12 FT	8	11	9	4	6	6	7	47.4	25.6	28.1	5	7	5	6	59.5	115	127	5	9	0
14 FT	8	11	9	5	8.5	6	7	46.5	29.3	32.1	5	6.5	6	7	62.3	115	127	5	8.5	0
16 FT	9	11	9	5	8	5	6	46.5	29.5	32.4	5	6.5	6	6.5	62.3	115	127	5	8.5	0
18 FT	9	11	9	5	7	6	7	48.4	30.8	33.8	5	6.5	6	6	64.1	115	127	5	8.5	0
20 FT	10	11	9	5	7	6	7.5	50.3	31.0	34.0	5	6	6	6	60.5	115	127	5	8.5	0
22 FT	10	12	9	5	6.5	6	6.5	49.3	31.3	34.3	5	6	6	6	62.3	116	128	5	8	0
24 FT	11	12	9	5	6	6	7	51.1	35.3	38.6	6	8.5	6	6	64.1	116	128	5	7.5	0
26 FT	11	13	10	5	6	6	7.5	48.9	33.0	36.1	5	6	6	6.5	60.1	117	129	5	8	0
28 FT	12	13	11	5	6	5	6.5	45.6	32.0	35.0	6	8	6	7	54.1	117	129	5	7.5	0
30 FT	12	14	11	6	8	5	6	45.6	32.3	35.3	6	8	6	7	56.0	118	130	5	7.5	0
32 FT	13	14	12	6	8	5	6	46.1	33.8	36.9	6	7.5	6	8	52.8	118	130	5	7	0
34 FT	13	15	12	6	8	5	6	45.1	34.0	37.1	6	7.5	6	8	55.6	119	131	5	7	0
36 FT	14	15	12	6	7.5	6	8	49.9	35.6	38.9	6	7.5	6	7.5	54.8	119	131	5	7	0
38 FT	14	16	13	6	7.5	5	6	45.6	34.6	37.8	6	7	6	8	54.4	120	132	5	6.5	0
40 FT	15	16	13	6	7.5	6	8	55.3	36.1	39.4	6	7	6	7.5	54.4	120	132	5	6.5	0
42 FT	15	17	13	6	7	6	7.5	55.3	36.5	39.8	6	7	6	7.5	56.3	121	133	5	6.5	0
44 FT	16	17	14	6	7	6	8	55.9	38.1	41.5	6	7	6	7.5	53.9	121	133	5	6	0
46 FT	16	17	14	6	7	6	7.5	55.9	38.1	41.5	6	6.5	6	7	53.9	121	133	5	6	0
48 FT	16	18	14	6	6.5	6	7	55.9	37.0	40.3	6	6.5	6	7.5	55.9	122	134	5	6	0
50 FT	17	18	15	6	6.5	6	8	56.4	41.4	45.0	6	6.5	6	7.5	53.5	122	134	6	8	0

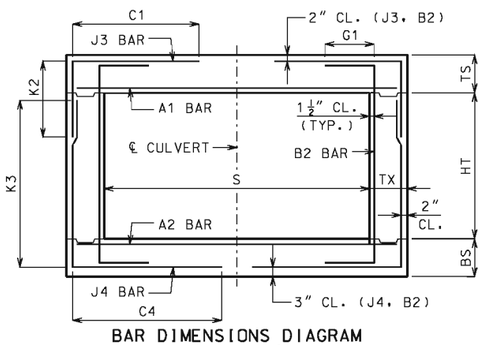

BAR DIMENSIONS DIAGRAM
SYMMETRICAL ABOUT ℄ CULVERT.

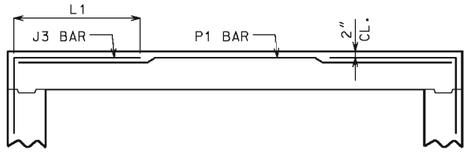

ALTERNATE J3 BAR

AT CONTRACTOR'S OPTION, ALTERNATE J3 BARS MAY BE USED WHEN THE DISTANCE BETWEEN THE ENDS OF J3 BARS IN THE TOP SLAB IS LESS THAN 2′-0″. DIMENSION L1 (NOT C1) SHALL BE USED WITH ALTERNATE J3 BARS, WHERE L1 IS EQUAL TO 18″, 22″ AND 28″ FOR #4, #5 AND #6 BARS, RESPECTIVELY. ADDITIONAL P1 BARS ARE REQUIRED WITH ALTERNATE J3 BARS WITH A LENGTH EQUAL TO A1 BARS, AND SIZE AND SPACING EQUAL TO J3 BARS. NO ADDITIONAL PAYMENT WILL BE MADE FOR THIS SUBSTITUTION.

IF A SEAL IS PRESENT ON THIS SHEET IT HAS BEEN ELECTRONICALLY SEALED AND DATED.

GENERAL NOTES:

IF DESIGN FILL IS BETWEEN TABULATED DESIGN FILLS, USE THE NEXT GREATER TABULATED DESIGN FILL, EXCEPT FOR DESIGN FILLS BETWEEN 2 FEET AND 4 FEET. FOR DESIGN FILLS BETWEEN 2 FEET AND 4 FEET USE THE GREATER MEMBER THICKNESS, AREA OF REINFORCEMENT AND BAR DIMENSIONS FROM THE 2 FEET AND 4 FEET TABULATED DESIGN FILLS. AREA OF REINFORCEMENT EQUALS BAR AREA PER FOOT SPACING.

SPECIAL DESIGNS ARE REQUIRED WHEN THE DESIGN FILL IS LESS THAN 1 FOOT OR GREATER THAN 50 FEET.

DIMENSIONS ARE IN INCHES UNLESS OTHERWISE SPECIFIED.

DESIGN FILLS ARE MEASURED FROM THE TOP OF TOP SLAB TO THE TOP OF EARTH FILL OR ROADWAY.

CULVERTS MEET STRENGTH AND SERVICEABILITY REQUIREMENTS FOR THE DESIGN VEHICULAR LIVE LOAD HL-93 MINUS THE LANE LOAD.

MISSOURI HIGHWAYS AND TRANSPORTATION COMMISSION
105 WEST CAPITOL
JEFFERSON CITY, MO 65102
1-888-ASK-MODOT (1-888-275-6636)

STATE OF MISSOURI
DENNIS W. HECKMAN
NUMBER PE-27141
PROFESSIONAL ENGINEER
THIS SHEET HAS BEEN SIGNED, SEALED AND DATED ELECTRONICALLY.

CONCRETE SINGLE BOX CULVERT

MEMBER THICKNESS BAR SIZE, SPACING & DIMENSIONS

SPAN (S): 7 FEET
HEIGHT (HT): 4 THRU 10 FEET

DATE EFFECTIVE: 04/01/2011
DATE PREPARED: 4/18/2011

703.17

SHEET NO. 5 OF 14

SPAN (S) = 8 FT HEIGHT (HT) = 4 FT OR 5 FT OR 6 FT

DESIGN FILL	MEMBER THICKNESS			TOP SLAB BARS								BOTTOM SLAB BARS								WALL BARS		
				A1 BARS		J3 BARS			K2			A2 BARS		J4 BARS			K3			B2 BARS		
	TS	BS	TX	SIZE	SPA.	SIZE	SPA.	C1	HT=4′	HT=5′	HT=6′	SIZE	SPA.	SIZE	SPA.	C4	HT=4′	HT=5′	HT=6′	SIZE	SPA.	G1
1 FT	12	9	8	5	7	4	8.5	63.5	28.1	33.5	38.8	5	7.5	5	6	44.8	53	65	77	5	12	12
2 FT	12	9	8	5	7	4	8	63.5	28.1	33.5	38.8	5	7	6	7.5	43.6	53	65	77	5	12	12
4 FT	8	8	8	5	8	6	7.5	38.5	32.5	39.0	45.6	5	6.5	6	6	38.5	52	64	76	5	12	0
6 FT	8	8	8	5	8.5	6	7.5	37.5	32.5	39.0	45.6	5	7	6	6	36.4	52	64	76	5	12	0
8 FT	8	8	8	5	8	6	7.5	36.4	32.5	39.0	45.6	5	6.5	6	6	35.4	52	64	76	5	12	0
10 FT	8	8	8	5	8.5	6	7.5	34.4	32.5	39.0	45.6	5	7	6	6	34.4	52	64	76	5	12	0
12 FT	8	9	8	5	7.5	6	7.5	34.4	32.4	38.9	45.4	5	6.5	6	7.5	32.3	53	65	77	5	12	0
14 FT	8	9	8	5	6.5	6	6.5	34.4	32.4	38.9	45.4	6	8	6	7	32.3	53	65	77	5	12	0
16 FT	9	10	8	5	6	5	6	30.1	29.1	34.8	40.4	6	8	5	6.5	28.1	54	66	78	5	12	0
18 FT	9	11	8	6	7.5	6	7	33.3	29.6	35.3	40.9	6	7.5	5	7.5	27.0	55	67	79	5	12	0
20 FT	10	12	8	6	7.5	5	6	29.1	26.0	30.8	35.6	6	7.5	5	8.5	26.0	56	68	80	5	12	0
22 FT	11	13	8	6	7	5	6.5	28.1	27.5	32.4	37.3	6	7	5	8.5	26.0	57	69	81	5	12	0
24 FT	12	13	8	6	7	5	7.5	27.0	32.6	38.4	44.1	6	7	5	8	26.0	57	69	81	5	12	0
26 FT	13	14	8	6	7	5	8	27.0	29.4	34.5	39.5	6	7	5	8.5	26.0	58	70	82	5	12	0
28 FT	13	15	8	6	6.5	5	7	27.0	29.1	34.0	39.0	6	6.5	5	8.5	26.0	59	71	83	5	12	0
30 FT	14	15	8	6	6	5	7.5	26.0	30.3	35.3	40.4	6	6.5	5	8.5	26.0	59	71	83	5	12	0
32 FT	15	16	8	6	6	5	7.5	31.3	35.5	41.3	47.0	6	6.5	5	8	26.0	60	72	84	5	12	0
34 FT	15	17	8	6	6	5	7	31.3	31.5	36.5	41.6	6	6.5	5	7	26.0	61	73	85	5	12	0
36 FT	16	17	8	6	6	5	7	31.3	32.6	37.9	43.0	6	6	5	7	26.0	61	73	85	5	12	0
38 FT	16	18	8	7	7.5	5	7	31.3	36.3	41.9	47.5	6	6	5	6.5	26.0	62	74	86	5	11.5	0
40 FT	17	18	8	7	7.5	5	6.5	31.3	37.5	43.3	49.0	6	6	5	6.5	26.0	62	74	86	5	10.5	0
42 FT	17	19	8	7	7	5	6.5	31.3	37.1	42.8	48.4	6	6	5	6.5	26.0	63	75	87	5	10	0
44 FT	18	19	8	7	7	5	6.5	30.1	38.4	44.1	49.9	7	7.5	5	6.5	26.0	63	75	87	5	9.5	0
46 FT	18	20	8	7	7	5	6	31.3	38.1	43.8	49.4	7	7.5	5	6	26.0	64	76	88	5	9.5	0
48 FT	19	20	8	7	7	5	6	31.3	39.4	45.1	50.9	7	7.5	5	6	26.0	64	76	88	5	9.5	0
50 FT	19	20	8	7	6.5	5	6	31.3	39.4	45.1	50.9	7	7	6	7.5	29.1	64	76	88	5	9.5	0

SPAN (S) = 8 FT HEIGHT (HT) = 7 FT OR 8 FT OR 9 FT

DESIGN FILL	MEMBER THICKNESS			TOP SLAB BARS									BOTTOM SLAB BARS								WALL BARS		
				A1 BARS		J3 BARS				K2			A2 BARS		J4 BARS			K3			B2 BARS		
	TS	BS	TX	SIZE	SPA.	SIZE	SPA.	C1	HT=7′	HT=8′	HT=9′		SIZE	SPA.	SIZE	SPA.	C4	HT=7′	HT=8′	HT=9′	SIZE	SPA.	G1
1 FT	12	10	8	5	7	4	6.5	63.5	28.3	31.6	35.0		5	7	5	6.5	65.5	90	102	114	5	12	12
2 FT	12	10	8	5	7	4	6	63.5	28.3	31.6	35.0		5	7	5	6.5	65.5	90	102	114	5	12	12
4 FT	8	9	8	5	7.5	6	7.5	66.5	28.8	32.4	36.0		5	6.5	6	6.5	66.5	89	101	113	5	12	0
6 FT	8	9	8	5	8	6	7.5	53.0	28.8	32.4	36.0		5	7	6	6.5	58.3	89	101	113	5	12	0
8 FT	8	9	8	5	7.5	6	7.5	47.9	28.8	32.4	36.0		5	6.5	6	6	51.0	89	101	113	5	11.5	0
10 FT	8	9	8	5	8	6	7.5	41.6	28.8	32.4	36.0		5	7	6	6	43.6	89	101	113	5	12	0
12 FT	8	9	9	5	7.5	6	7	41.0	32.6	36.8	40.8		5	6.5	6	6.5	42.0	89	101	113	5	12	0
14 FT	8	10	9	5	6.5	6	6.5	41.0	28.1	31.6	35.1		5	6	6	7	42.0	90	102	114	5	12	0
16 FT	9	10	9	5	6	6	7.5	41.0	29.4	33.0	36.6		6	7.5	6	6.5	42.0	90	102	114	5	12	0
18 FT	9	11	9	6	8	6	6.5	39.9	29.8	33.3	36.9		6	7.5	6	7	42.0	91	103	115	5	11	0
20 FT	10	11	9	6	7.5	6	7	39.9	30.0	33.6	37.3		6	6.5	6	6	42.0	91	103	115	5	10	0
22 FT	11	12	9	6	7.5	6	7	39.9	31.6	35.4	39.0		6	7	6	6.5	42.0	92	104	116	5	9	0
24 FT	11	13	9	6	6.5	6	6.5	39.9	31.9	35.6	39.4		6	6.5	6	7	42.0	93	105	117	5	8.5	0
26 FT	12	14	10	6	7	5	6	38.1	32.5	36.3	40.0		6	7	5	6.5	39.3	94	106	118	5	9	0
28 FT	13	15	10	6	7	6	7.5	40.3	33.1	36.9	40.6		6	7	5	6.5	39.3	95	107	119	5	8	0
30 FT	13	15	10	6	6.5	6	6.5	40.3	33.1	36.9	40.6		6	6.5	5	6	39.3	95	107	119	5	8	0
32 FT	14	16	11	6	6.5	6	8.5	40.6	34.9	38.8	42.5		6	6.5	5	7	39.6	96	108	120	5	8	0
34 FT	15	17	11	6	6.5	6	8	47.1	35.5	39.4	43.3		6	6.5	5	7	39.6	97	109	121	5	7.5	0
36 FT	15	17	11	6	6	6	7	47.1	35.5	39.4	43.3		6	6	5	6.5	39.6	97	109	121	5	7.5	0
38 FT	16	18	12	6	6	6	8	47.5	36.1	40.0	43.9		6	6	5	6.5	40.0	98	110	122	5	7.5	0
40 FT	17	18	12	6	6	6	8	47.5	37.6	41.6	45.5		6	6	5	6.5	40.0	98	110	122	5	7	0
42 FT	17	19	12	7	8	6	7.5	47.5	38.0	41.9	45.9		6	6	5	6.5	41.0	99	111	123	5	7	0
44 FT	18	19	13	7	8	5	6	44.8	38.3	42.3	46.3		6	6	5	6	40.4	99	111	123	5	7	0
46 FT	18	20	13	7	7.5	6	8	48.0	38.6	42.6	46.5		7	8	5	6	41.4	100	112	124	5	6.5	0
48 FT	19	20	13	7	7.5	6	8	48.0	40.1	44.3	48.3		7	7.5	5	6	41.4	100	112	124	5	6.5	0
50 FT	19	21	13	7	7	6	7	48.0	39.3	43.3	47.3		7	7.5	5	6	41.4	101	113	125	5	6.5	0

SPAN (S) = 8 FT HEIGHT (HT) = 10 FT OR 11 FT

DESIGN FILL	MEMBER THICKNESS			TOP SLAB BARS							BOTTOM SLAB BARS							WALL BARS		
				A1 BARS		J3 BARS			K2		A2 BARS		J4 BARS			K3		B2 BARS		
	TS	BS	TX	SIZE	SPA.	SIZE	SPA.	C1	HT=10′	HT=11′	SIZE	SPA.	SIZE	SPA.	C4	HT=10′	HT=11′	SIZE	SPA.	G1
1 FT	11	10	8	5	6.5	5	7.5	65.5	31.3	34.0	5	6.5	6	6.5	66.5	126	138	5	9.5	12
2 FT	11	10	8	5	6.5	5	7	65.5	31.3	34.0	5	6	6	6	66.5	126	138	5	9.5	12
4 FT	8	9	9	5	7.5	6	7	68.3	33.0	36.0	5	6	6	6	68.3	125	137	5	8.5	0
6 FT	8	10	9	5	8.5	6	7	68.3	30.6	33.4	5	7	6	6.5	68.3	126	138	5	8.5	0
8 FT	8	10	9	5	8	6	7	68.3	33.3	36.3	5	7	6	6	68.3	126	138	5	8.5	0
10 FT	8	10	9	5	8.5	6	7	52.5	30.6	33.4	5	7	6	6	68.3	126	138	5	8.5	0
12 FT	8	10	9	5	7.5	6	6.5	50.4	33.3	36.3	5	6.5	6	6	65.1	126	138	5	8.5	0
14 FT	9	11	9	5	7	6	7	52.5	31.0	33.8	5	6.5	6	6	69.3	127	139	5	8.5	0
16 FT	9	11	9	5	6	6	6	50.4	33.8	36.8	6	8	6	6	64.0	127	139	5	8.5	0
18 FT	10	12	9	5	6	6	6	52.5	34.3	37.3	6	8	6	6	68.3	128	140	5	8	0
20 FT	11	12	10	5	6	5	6	48.8	31.8	34.5	6	7.5	6	6.5	58.3	128	140	5	8	0
22 FT	11	13	10	6	8	6	7	50.9	33.4	36.3	6	7.5	6	6.5	60.4	129	141	5	7.5	0
24 FT	12	13	11	6	7.5	6	8	51.4	33.6	36.5	6	7	6	7	56.8	129	141	5	7.5	0
26 FT	12	14	11	6	7	6	7.5	50.3	33.9	36.8	6	7	6	7	57.8	130	142	5	7.5	0
28 FT	13	15	12	6	7.5	6	8	50.8	34.4	37.3	6	7	6	7.5	57.3	131	143	5	7	0
30 FT	14	15	12	6	7	6	7.5	51.9	36.0	39.0	6	6.5	6	7	57.3	131	143	5	7	0
32 FT	14	16	13	6	7	6	8	51.3	36.3	39.3	6	6.5	6	7.5	56.6	132	144	5	6.5	0
34 FT	15	16	13	6	6.5	6	7.5	57.8	36.5	39.5	6	6.5	6	7	55.6	132	144	5	6.5	0
36 FT	15	17	13	6	6.5	6	6.5	57.8	36.8	39.8	6	6.5	6	7	57.8	133	145	5	6.5	0
38 FT	16	18	14	6	6.5	6	7.5	58.3	37.3	40.3	6	6.5	6	7.5	57.3	134	146	5	6	0
40 FT	16	18	14	6	6	6	7	58.3	37.3	40.3	6	6	6	7	57.3	134	146	5	6	0
42 FT	17	19	15	6	6	6	7	58.9	42.3	45.6	6	6	6	7.5	56.6	135	147	6	8	0
44 FT	17	19	15	6	6	6	6.5	57.8	42.3	45.6	6	6	6	7	56.6	135	147	6	8	0
46 FT	18	19	15	6	6	6	7	58.9	42.5	45.9	7	8	6	6	56.6	135	147	6	8	0
48 FT	18	20	16	7	8	6	7	58.3	42.9	46.3	7	8	6	7	56.0	136	148	6	8	0
50 FT	19	21	16	7	7.5	6	7	59.4	43.4	46.8	7	8	6	7	58.3	137	149	6	8	0

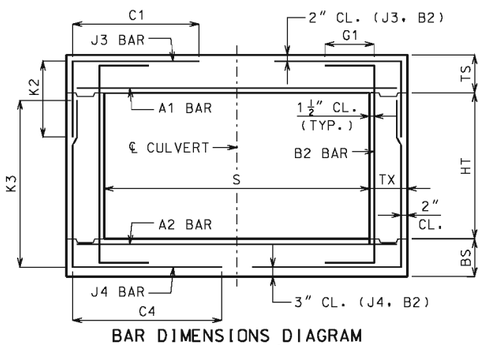

BAR DIMENSIONS DIAGRAM
SYMMETRICAL ABOUT ℄ CULVERT.

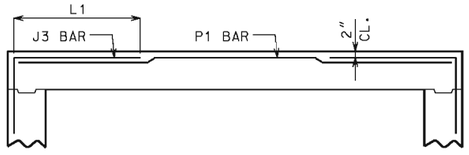

ALTERNATE J3 BAR

AT CONTRACTOR'S OPTION, ALTERNATE J3 BARS MAY BE USED WHEN THE DISTANCE BETWEEN THE ENDS OF J3 BARS IN THE TOP SLAB IS LESS THAN 2′-0″. DIMENSION L1 (NOT C1) SHALL BE USED WITH ALTERNATE J3 BARS, WHERE L1 IS EQUAL TO 18″, 22″ AND 28″ FOR #4, #5 AND #6 BARS, RESPECTIVELY. ADDITIONAL P1 BARS ARE REQUIRED WITH ALTERNATE J3 BARS WITH A LENGTH EQUAL TO A1 BARS, AND SIZE AND SPACING EQUAL TO J3 BARS. NO ADDITIONAL PAYMENT WILL BE MADE FOR THIS SUBSTITUTION.

GENERAL NOTES:

IF DESIGN FILL IS BETWEEN TABULATED DESIGN FILLS, USE THE NEXT GREATER TABULATED DESIGN FILL, EXCEPT FOR DESIGN FILLS BETWEEN 2 FEET AND 4 FEET. FOR DESIGN FILLS BETWEEN 2 FEET AND 4 FEET USE THE GREATER MEMBER THICKNESS. AREA OF REINFORCEMENT AND BAR DIMENSIONS FROM THE 2 FEET AND 4 FEET TABULATED DESIGN FILLS. AREA OF REINFORCEMENT EQUALS BAR AREA PER FOOT SPACING.

SPECIAL DESIGNS ARE REQUIRED WHEN THE DESIGN FILL IS LESS THAN 1 FOOT OR GREATER THAN 50 FEET.

DIMENSIONS ARE IN INCHES UNLESS OTHERWISE SPECIFIED.

DESIGN FILLS ARE MEASURED FROM THE TOP OF TOP SLAB TO THE TOP OF EARTH FILL OR ROADWAY.

CULVERTS MEET STRENGTH AND SERVICEABILITY REQUIREMENTS FOR THE DESIGN VEHICULAR LIVE LOAD HL-93 MINUS THE LANE LOAD.

IF A SEAL IS PRESENT ON THIS SHEET IT HAS BEEN ELECTRONICALLY SEALED AND DATED.

MISSOURI HIGHWAYS AND TRANSPORTATION COMMISSION
105 WEST CAPITOL
JEFFERSON CITY, MO 65102
1-888-ASK-MODOT (1-888-275-6636)

STATE OF MISSOURI
DENNIS W. HECKMAN
NUMBER PE-27141
PROFESSIONAL ENGINEER
THIS SHEET HAS BEEN SIGNED, SEALED AND DATED ELECTRONICALLY.

CONCRETE SINGLE BOX CULVERT

MEMBER THICKNESS BAR SIZE, SPACING & DIMENSIONS

SPAN (S): 8 FEET
HEIGHT (HT): 4 THRU 11 FEET

DATE EFFECTIVE: 04/01/2011
DATE PREPARED: 4/18/2011

703.17

SHEET NO. 6 OF 14

SPAN (S) = 9 FT HEIGHT (HT) = 5 FT OR 6 FT OR 7 FT

DESIGN FILL	MEMBER THICKNESS			TOP SLAB BARS								BOTTOM SLAB BARS								WALL BARS		
				A1 BARS		J3 BARS			K2			A2 BARS		J4 BARS			K3			B2 BARS		
	TS	BS	TX	SIZE	SPA.	SIZE	SPA.	C1	HT=5′	HT=6′	HT=7′	SIZE	SPA.	SIZE	SPA.	C4	HT=5′	HT=6′	HT=7′	SIZE	SPA.	G1
1 FT	12	9	8	5	6.5	4	7	69.6	28.1	32.5	37.0	5	6.5	6	7.5	54.5	65	77	89	5	12	12
2 FT	12	9	8	5	6.5	4	7	69.6	28.1	32.5	37.0	5	6	6	7	48.8	65	77	89	5	12	12
4 FT	8	9	8	5	6.5	6	7	42.9	32.4	37.8	43.3	5	6	6	7.5	42.9	65	77	89	5	12	0
6 FT	8	9	8	5	7	6	7.5	40.6	32.4	37.8	43.3	5	6	6	7	39.5	65	77	89	5	12	0
8 FT	8	10	8	5	6.5	6	7	39.5	24.1	28.0	32.0	5	6	5	6.5	33.6	66	78	90	5	12	0
10 FT	8	10	8	5	7	6	7.5	37.1	24.1	28.0	32.0	5	6.5	4	6	31.4	66	78	90	5	12	0
12 FT	8	10	8	5	6	6	6	37.1	28.5	33.1	37.9	6	8	5	6.5	30.1	66	78	90	5	12	0
14 FT	9	10	8	6	7.5	6	7	34.8	29.6	34.4	39.3	6	7	5	6	30.1	66	78	90	5	12	0
16 FT	9	11	8	6	7	6	6	34.8	29.3	33.9	38.6	6	6.5	5	7	29.0	67	79	91	5	12	0
18 FT	10	12	8	6	6.5	6	6.5	33.6	30.0	34.8	39.4	6	6.5	5	7.5	29.0	68	80	92	5	12	0
20 FT	11	13	8	6	6	6	7	33.6	31.6	36.4	41.3	6	6	5	8	29.0	69	81	93	5	12	0
22 FT	12	14	8	6	6	5	6	29.0	32.4	37.3	42.0	6	6	5	8.5	27.9	70	82	94	5	12	0
24 FT	13	15	8	6	6	5	6	29.0	29.0	33.3	37.5	6	6	5	8.5	27.9	71	83	95	5	12	0
26 FT	14	16	8	6	6	5	6	29.0	30.6	34.9	39.3	6	6	5	8	27.9	72	84	96	5	12	0
28 FT	15	16	8	7	7.5	5	6.5	33.6	35.3	40.1	45.1	7	8	5	8	27.9	72	84	96	5	12	0
30 FT	15	17	8	7	7	6	8	37.1	35.6	40.6	45.5	7	7.5	5	7	27.9	73	85	97	5	11.5	0
32 FT	16	17	8	7	7	5	6	32.5	36.1	41.0	45.9	7	7.5	5	6.5	27.9	73	85	97	5	10	0
34 FT	17	18	8	7	7	5	6	32.5	37.8	42.9	47.9	7	7.5	5	6.5	29.0	74	86	98	5	9.5	0
36 FT	17	19	9	7	7	5	6	33.9	37.3	42.3	47.1	7	7.5	5	7.5	29.3	75	87	99	5	10.5	0
38 FT	18	20	9	7	7	5	6	33.9	38.1	43.0	48.0	7	7.5	5	7	29.3	76	88	100	5	9.5	0
40 FT	19	20	9	7	6.5	5	6.5	33.9	39.5	44.5	49.5	7	7	5	7	29.3	76	88	100	5	8.5	0
42 FT	19	21	10	7	6.5	5	6.5	34.3	39.9	45.0	50.0	7	7	5	7.5	29.5	77	89	101	5	10	0
44 FT	20	21	10	7	6.5	5	6.5	34.3	40.4	45.4	50.4	7	6.5	5	7.5	29.5	77	89	101	5	9.5	0
46 FT	21	22	10	7	6.5	5	6.5	34.3	41.1	46.3	51.3	7	7	5	7	29.5	78	90	102	5	8.5	0
48 FT	21	22	10	7	6	5	6.5	34.3	41.1	46.3	51.3	7	6.5	5	7	29.5	78	90	102	5	8	0
50 FT	22	23	10	7	6	5	6.5	34.3	42.0	47.0	52.1	7	6.5	5	6.5	30.6	79	91	103	5	8	0

SPAN (S) = 9 FT HEIGHT (HT) = 8 FT OR 9 FT OR 10 FT

DESIGN FILL	MEMBER THICKNESS			TOP SLAB BARS									BOTTOM SLAB BARS								WALL BARS		
				A1 BARS		J3 BARS				K2			A2 BARS		J4 BARS			K3			B2 BARS		
	TS	BS	TX	SIZE	SPA.	SIZE	SPA.	C1	HT=8′	HT=9′	HT=10′		SIZE	SPA.	SIZE	SPA.	C4	HT=8′	HT=9′	HT=10′	SIZE	SPA.	G1
1 FT	12	11	8	5	6.5	5	8.5	70.8	29.6	32.8	35.9		5	6.5	5	6.5	70.8	103	115	127	5	12	12
2 FT	12	11	8	5	6.5	5	8.5	70.8	29.6	32.8	35.9		5	6	5	6	70.8	103	115	127	5	11.5	12
4 FT	8	10	9	5	6.5	6	7	67.9	26.1	29.0	31.9		5	6	5	6	72.5	102	114	126	5	11.5	0
6 FT	8	10	9	5	7	6	7	53.9	28.4	31.5	34.6		5	6	6	7	64.4	102	114	126	5	11	0
8 FT	8	10	9	5	6.5	6	6.5	49.1	28.4	31.5	34.6		5	6	6	6.5	55.0	102	114	126	5	10.5	0
10 FT	8	10	9	5	7	6	7	44.5	28.4	31.5	34.6		5	6.5	6	7	46.8	102	114	126	5	12	0
12 FT	9	10	9	5	6.5	5	6	41.0	29.8	33.0	36.1		6	8	6	6	45.6	102	114	126	5	11.5	0
14 FT	9	10	9	6	8	6	6.5	43.3	33.0	36.6	40.3		6	6.5	6	6	45.6	102	114	126	5	10.5	0
16 FT	10	11	9	6	7.5	6	7	43.3	30.3	33.5	36.8		6	6.5	6	6	45.6	103	115	127	5	9.5	0
18 FT	10	12	9	6	6.5	6	6	43.3	31.6	35.0	38.4		6	6.5	6	6	45.6	104	116	128	5	8.5	0
20 FT	11	13	9	6	6.5	6	6.5	43.3	31.0	34.3	37.5		6	6.5	6	6	45.6	105	117	129	5	8.5	0
22 FT	12	13	9	6	6	6	6.5	43.3	33.6	37.1	40.6		6	6	7	6.5	48.0	105	117	129	5	8.5	0
24 FT	13	14	10	6	6	6	7	43.6	33.0	36.4	39.8		6	6	6	6.5	44.9	106	118	130	5	8	0
26 FT	14	15	10	6	6	6	7	43.6	34.8	38.3	41.8		6	6	6	7	44.9	107	119	131	5	8	0
28 FT	14	16	11	7	8	6	7	44.0	35.1	38.6	42.0		7	8	5	6	42.9	108	120	132	5	7.5	0
30 FT	15	17	11	7	8	6	6.5	50.0	35.6	39.1	42.6		6	6	5	6	42.9	109	121	133	5	7.5	0
32 FT	16	18	12	6	6	6	7.5	50.4	36.3	39.8	43.3		6	6	5	6	43.3	110	122	134	5	7	0
34 FT	16	18	12	7	7.5	6	7	50.4	36.3	39.8	43.3		7	7.5	5	6	43.3	110	122	134	5	7	0
36 FT	17	19	13	7	7.5	6	7.5	50.9	38.1	41.8	45.3		7	7.5	5	6	43.5	111	123	135	5	7	0
38 FT	18	20	13	7	7.5	6	7.5	50.9	38.8	42.3	45.9		7	7.5	5	6	43.5	112	124	136	5	6.5	0
40 FT	18	20	13	7	7	6	7	50.9	38.8	42.3	45.9		7	7	6	8.5	46.0	112	124	136	5	6.5	0
42 FT	19	21	13	7	7	6	6.5	50.9	39.3	42.9	46.5		7	7	6	8	47.3	113	125	137	5	6.5	0
44 FT	19	21	14	7	6.5	6	6.5	51.3	39.3	42.9	46.5		7	7	5	6	43.9	113	125	137	5	6	0
46 FT	20	22	14	7	6.5	6	7	51.3	41.3	45.0	48.6		7	7	6	8.5	47.6	114	126	138	5	6	0
48 FT	20	22	14	7	6.5	6	6	51.3	45.3	49.3	53.4		7	6.5	6	7.5	47.6	114	126	138	5	6	0
50 FT	21	23	14	7	6.5	6	6	51.3	41.9	45.6	49.3		7	6.5	6	8	47.6	115	127	139	5	6	0

SPAN (S) = 9 FT HEIGHT (HT) = 11 FT OR 12 FT

DESIGN FILL	MEMBER THICKNESS			TOP SLAB BARS							BOTTOM SLAB BARS							WALL BARS		
				A1 BARS		J3 BARS			K2		A2 BARS		J4 BARS			K3		B2 BARS		
	TS	BS	TX	SIZE	SPA.	SIZE	SPA.	C1	HT=11′	HT=12′	SIZE	SPA.	SIZE	SPA.	C4	HT=11′	HT=12′	SIZE	SPA.	G1
1 FT	11	11	8	5	6	5	6	70.8	31.3	33.8	5	6	6	6	73.1	139	151	5	9.5	12
2 FT	11	12	8	6	8.5	6	7	73.1	33.0	35.6	5	6	6	6	73.1	140	152	5	9.5	12
4 FT	8	10	9	5	6	6	6.5	73.8	33.4	36.1	6	8	6	6	73.8	138	150	5	8.5	0
6 FT	8	11	9	5	7	6	6.5	73.8	32.1	34.8	5	6	6	6	73.8	139	151	5	8.5	0
8 FT	9	11	9	5	7	6	7	73.8	30.9	33.4	5	6	6	6	73.8	139	151	5	8.5	0
10 FT	9	11	9	5	7.5	6	7	58.5	30.9	33.4	5	6.5	6	6	73.8	139	151	5	8.5	0
12 FT	9	12	9	5	6.5	6	6	56.1	34.0	36.8	5	6	6	6	73.8	140	152	5	8.5	0
14 FT	10	12	9	5	6	6	6	57.4	34.3	37.0	6	8	6	6	73.8	140	152	5	7.5	0
16 FT	10	12	10	6	8	6	6.5	53.1	34.3	37.0	6	7	6	6	63.8	140	152	5	8	0
18 FT	11	13	10	6	7.5	6	6.5	54.3	36.3	39.1	6	7	6	6	64.9	141	153	5	7.5	0
20 FT	11	13	11	6	6.5	6	6.5	52.4	36.3	39.1	6	6.5	6	7	59.5	141	153	5	7.5	0
22 FT	12	14	12	6	7	6	8	52.8	33.6	36.3	6	6.5	6	7.5	58.8	142	154	5	7	0
24 FT	13	15	12	6	6.5	6	7.5	54.0	37.3	40.1	6	6.5	6	7	60.0	143	155	5	7	0
26 FT	14	15	13	6	6.5	6	7.5	54.5	35.9	38.6	6	6	6	6.5	56.9	143	155	5	6.5	0
28 FT	14	16	13	6	6	6	7	53.3	39.3	42.3	6	6	6	7	58.1	144	156	5	6.5	0
30 FT	15	17	13	6	6	6	6.5	60.5	39.8	42.8	6	6	6	6.5	60.5	145	157	5	6.5	0
32 FT	16	17	14	6	6	6	7	61.0	40.0	43.0	6	6	6	6	57.4	145	157	5	6	0
34 FT	16	18	14	7	8	6	6.5	61.0	40.3	43.3	7	7.5	6	6.5	58.5	146	158	5	6	0
36 FT	17	19	15	6	6	6	7	60.3	42.4	45.5	7	8	6	6.5	59.0	147	159	6	8	0
38 FT	18	19	15	7	7.5	6	6.5	61.5	42.6	45.8	7	7.5	6	6.5	57.8	147	159	6	8	0
40 FT	18	20	15	7	7.5	6	6	61.5	42.9	46.0	7	7.5	6	6.5	60.3	148	160	6	8	0
42 FT	19	21	16	7	7.5	6	6.5	62.0	43.4	46.5	7	7.5	6	6.5	59.5	149	161	6	8	0
44 FT	19	21	16	7	7	6	6	62.0	43.4	46.5	7	7	6	6.5	59.5	149	161	6	8	0
46 FT	20	22	17	7	7	6	6.5	62.5	45.6	48.9	7	7	6	6.5	58.8	150	162	6	7.5	0
48 FT	20	22	17	7	7	6	6	61.3	45.6	48.9	7	7	6	6.5	58.8	150	162	6	7.5	0
50 FT	21	23	18	7	7	6	6.5	63.0	46.1	49.4	7	7	6	6.5	59.3	151	163	6	7	0

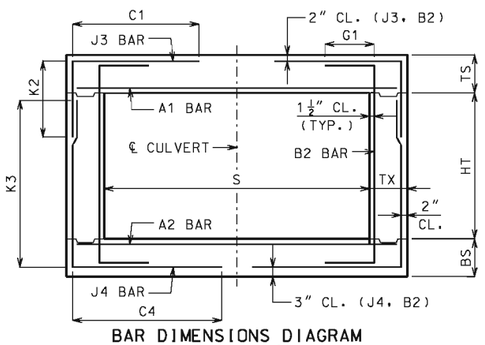

BAR DIMENSIONS DIAGRAM
SYMMETRICAL ABOUT ℄ CULVERT.

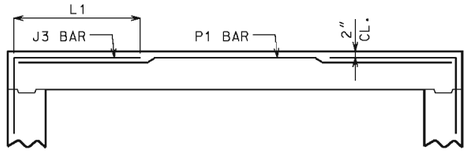

ALTERNATE J3 BAR

AT CONTRACTOR'S OPTION, ALTERNATE J3 BARS MAY BE USED WHEN THE DISTANCE BETWEEN THE ENDS OF J3 BARS IN THE TOP SLAB IS LESS THAN 2′-0″. DIMENSION L1 (NOT C1) SHALL BE USED WITH ALTERNATE J3 BARS, WHERE L1 IS EQUAL TO 18″, 22″ AND 28″ FOR #4, #5 AND #6 BARS, RESPECTIVELY. ADDITIONAL P1 BARS ARE REQUIRED WITH ALTERNATE J3 BARS WITH A LENGTH EQUAL TO A1 BARS, AND SIZE AND SPACING EQUAL TO J3 BARS. NO ADDITIONAL PAYMENT WILL BE MADE FOR THIS SUBSTITUTION.

GENERAL NOTES:

IF DESIGN FILL IS BETWEEN TABULATED DESIGN FILLS, USE THE NEXT GREATER TABULATED DESIGN FILL, EXCEPT FOR DESIGN FILLS BETWEEN 2 FEET AND 4 FEET. FOR DESIGN FILLS BETWEEN 2 FEET AND 4 FEET USE THE GREATER MEMBER THICKNESS. AREA OF REINFORCEMENT AND BAR DIMENSIONS FROM THE 2 FEET AND 4 FEET TABULATED DESIGN FILLS. AREA OF REINFORCEMENT EQUALS BAR AREA PER FOOT SPACING.

SPECIAL DESIGNS ARE REQUIRED WHEN THE DESIGN FILL IS LESS THAN 1 FOOT OR GREATER THAN 50 FEET.

DIMENSIONS ARE IN INCHES UNLESS OTHERWISE SPECIFIED.

DESIGN FILLS ARE MEASURED FROM THE TOP OF TOP SLAB TO THE TOP OF EARTH FILL OR ROADWAY.

CULVERTS MEET STRENGTH AND SERVICEABILITY REQUIREMENTS FOR THE DESIGN VEHICULAR LIVE LOAD HL-93 MINUS THE LANE LOAD.

IF A SEAL IS PRESENT ON THIS SHEET IT HAS BEEN ELECTRONICALLY SEALED AND DATED.

MISSOURI HIGHWAYS AND TRANSPORTATION COMMISSION
105 WEST CAPITOL
JEFFERSON CITY, MO 65102
1-888-ASK-MODOT (1-888-275-6636)

STATE OF MISSOURI
DENNIS W. HECKMAN
NUMBER PE-27141
PROFESSIONAL ENGINEER
THIS SHEET HAS BEEN SIGNED, SEALED AND DATED ELECTRONICALLY.

CONCRETE SINGLE BOX CULVERT

MEMBER THICKNESS BAR SIZE, SPACING & DIMENSIONS

SPAN (S): 9 FEET
HEIGHT (HT): 5 THRU 12 FEET

DATE EFFECTIVE: 04/01/2011
DATE PREPARED: 4/18/2011

703.17

SHEET NO. 7 OF 14

SPAN (S) = 10 FT HEIGHT (HT) = 5 FT OR 6 FT OR 7 FT

DESIGN FILL	MEMBER THICKNESS			TOP SLAB BARS								BOTTOM SLAB BARS								WALL BARS		
				A1 BARS		J3 BARS						A2 BARS		J4 BARS						B2 BARS		
	TS	BS	TX	SIZE	SPA.	SIZE	SPA.	C1	K2			SIZE	SPA.	SIZE	SPA.	C4	K3			SIZE	SPA.	G1
									HT=5′	HT=6′	HT=7′						HT=5′	HT=6′	HT=7′			
1 FT	12	9	8	5	6	4	6	75.5	28.1	32.5	37.0	5	6	6	6.5	52.5	65	77	89	5	12	12
2 FT	12	10	8	5	6	5	7.5	76.8	32.4	37.4	42.4	5	6	5	6.5	44.8	66	78	90	5	12	12
4 FT	8	9	8	6	8	7	6.5	44.8	32.4	37.8	43.3	6	7.5	6	7	42.3	65	77	89	5	12	0
6 FT	8	10	8	6	8.5	6	6	42.3	28.5	33.1	37.9	6	7.5	5	6.5	35.9	66	78	90	5	12	0
8 FT	8	10	8	6	7.5	7	6	43.5	28.5	33.1	37.9	6	7	5	6.5	33.3	66	78	90	5	12	0
10 FT	9	10	8	6	7	6	6.5	38.4	29.6	34.4	39.3	6	6.5	6	7	35.9	66	78	90	5	12	0
12 FT	9	10	8	6	7.5	6	6.5	35.9	29.6	34.4	39.3	6	6.5	6	7	34.5	66	78	90	5	12	0
14 FT	9	11	8	6	6.5	7	6	39.6	29.3	33.9	38.6	6	6	5	7	29.5	67	79	91	5	12	0
16 FT	10	12	8	6	6	6	6	34.5	30.0	34.8	39.4	6	6	5	7.5	28.1	68	80	92	5	12	0
18 FT	11	13	8	7	7.5	6	6.5	33.3	31.6	36.4	41.3	7	7.5	5	8	28.1	69	81	93	5	12	0
20 FT	12	14	8	7	7.5	6	7	33.3	32.4	37.3	42.0	7	7.5	5	8.5	26.9	70	82	94	5	12	0
22 FT	13	15	8	7	7	6	7.5	32.0	33.3	38.0	42.8	7	7.5	5	8.5	26.9	71	83	95	5	12	0
24 FT	14	16	8	7	7	6	8	30.8	34.0	38.8	43.6	7	7.5	5	8	26.9	72	84	96	5	12	0
26 FT	15	17	8	7	6.5	6	8	37.1	35.6	40.6	45.5	7	7	5	7	26.9	73	85	97	5	12	0
28 FT	16	18	8	7	6.5	6	8.5	35.9	36.5	41.4	46.4	7	7	5	6.5	26.9	74	86	98	5	12	0
30 FT	17	18	8	7	6.5	5	6	32.0	37.8	42.9	47.9	7	6.5	5	6.5	26.9	74	86	98	5	11.5	0
32 FT	18	19	8	7	6.5	5	6	32.0	38.6	43.6	48.8	7	6.5	5	6.5	26.9	75	87	99	5	10	0
34 FT	18	20	8	7	6	6	7.5	35.9	38.1	43.0	48.0	7	6.5	5	6	26.9	76	88	100	5	9.5	0
36 FT	19	21	8	7	6	6	7.5	35.9	39.9	45.0	50.0	7	6.5	6	7.5	30.8	77	89	101	5	9.5	0
38 FT	20	21	8	7	6	6	7.5	35.9	44.1	49.6	55.3	7	6.5	6	7.5	30.8	77	89	101	5	9.5	0
40 FT	21	22	8	7	6	6	7	35.9	45.1	50.6	56.1	7	6.5	6	7	30.8	78	90	102	5	9	0
42 FT	21	23	9	8	7.5	5	6	33.5	41.6	46.6	51.6	7	6	5	6	28.4	79	91	103	5	8.5	0
44 FT	22	23	9	8	7.5	6	7.5	37.4	42.0	47.0	52.1	7	6	5	6	28.4	79	91	103	5	8.5	0
46 FT	23	24	10	8	7.5	5	6.5	33.8	43.9	49.0	54.1	7	6	5	6.5	28.6	80	92	104	5	8.5	0
48 FT	23	25	10	8	7	5	6	33.8	43.3	48.3	53.4	7	6	5	6	28.6	81	93	105	5	8	0
50 FT	24	25	10	8	7	5	6	33.8	44.8	49.9	55.0	7	6	5	6	28.6	81	93	105	5	8	0

SPAN (S) = 10 FT HEIGHT (HT) = 11 FT OR 12 FT OR 13 FT

DESIGN FILL	MEMBER THICKNESS			TOP SLAB BARS								BOTTOM SLAB BARS								WALL BARS		
				A1 BARS		J3 BARS						A2 BARS		J4 BARS						B2 BARS		
	TS	BS	TX	SIZE	SPA.	SIZE	SPA.	C1	K2			SIZE	SPA.	SIZE	SPA.	C4	K3			SIZE	SPA.	G1
									HT=11′	HT=12′	HT=13′						HT=11′	HT=12′	HT=13′			
1 FT	11	11	9	6	8	6	7.5	80.0	31.3	33.8	36.4	6	7.5	6	6	80.0	139	151	163	5	8.5	12
2 FT	11	11	9	6	7.5	6	7	80.0	35.8	38.6	41.5	6	7.5	6	6	80.0	139	151	163	5	8.5	12
4 FT	9	11	9	6	8	6	6.5	80.0	33.8	36.6	39.4	6	7.5	6	6	80.0	139	151	163	5	8	0
6 FT	9	12	9	5	6	6	6	80.0	31.1	33.6	36.1	6	7.5	6	6	80.0	140	152	164	5	7.5	0
8 FT	9	12	10	5	6	6	6.5	75.4	31.1	33.6	36.1	6	7.5	6	6.5	80.6	140	152	164	5	7.5	0
10 FT	10	12	10	6	8	6	6.5	74.1	32.8	35.4	38.0	6	7	6	6	80.6	140	152	164	5	7	0
12 FT	10	12	10	6	8.5	6	6.5	58.5	32.8	35.4	38.0	6	7.5	6	6	71.5	140	152	164	5	8	0
14 FT	10	13	10	6	7.5	6	6	57.3	31.5	34.0	36.5	6	7	6	6	74.1	141	153	165	5	7	0
16 FT	11	13	11	6	7	6	6.5	56.4	33.3	35.9	38.5	6	6.5	6	6.5	65.5	141	153	165	5	7.5	0
18 FT	12	14	12	6	7	6	7.5	56.8	33.6	36.3	39.0	6	6.5	6	7.5	63.4	142	154	166	5	7	0
20 FT	13	15	12	6	6.5	6	7	56.8	35.6	38.4	41.1	6	6	6	7	64.6	143	155	167	5	7	0
22 FT	13	15	13	6	6	6	7	55.9	35.6	38.4	41.1	7	8	6	7	61.1	143	155	167	5	6.5	0
24 FT	14	16	13	6	6	6	6.5	57.3	36.1	38.9	41.6	7	7.5	6	7	61.1	144	156	168	5	6.5	0
26 FT	15	17	13	7	8	6	6	63.9	36.6	39.4	42.1	7	7.5	6	6	62.5	145	157	169	5	6.5	0
28 FT	16	18	14	7	8	6	6.5	63.0	38.6	41.5	44.4	7	7.5	6	6.5	61.6	146	158	170	5	6	0
30 FT	16	18	14	7	7	6	6	63.0	40.3	43.3	46.3	7	7	6	6	61.6	146	158	170	5	6	0
32 FT	17	19	15	7	7	6	6	63.5	42.4	45.5	48.6	7	7	6	6	60.8	147	159	171	6	8	0
34 FT	18	20	15	7	7	6	6	63.5	42.9	46.0	49.1	7	7	6	6	62.1	148	160	172	6	8	0
36 FT	19	21	16	7	7	6	6	63.9	43.4	46.5	49.6	7	7	6	6	62.5	149	161	173	6	8	0
38 FT	19	21	16	7	6.5	7	7.5	69.4	43.4	46.5	49.6	7	6.5	6	6	61.3	149	161	173	6	8	0
40 FT	20	22	17	7	6.5	6	6	64.4	45.6	48.9	52.1	7	6.5	6	6	61.6	150	162	174	6	7.5	0
42 FT	21	23	17	7	6.5	7	7.5	69.9	46.1	49.4	52.6	7	6.5	6	6	63.0	151	163	175	6	7.5	0
44 FT	21	23	18	7	6.5	6	6	64.9	46.1	49.4	52.6	7	6.5	6	6	62.1	151	163	175	6	7	0
46 FT	22	24	19	7	6.5	6	6	65.4	46.8	50.0	53.3	7	6.5	6	6	62.5	152	164	176	6	6.5	0
48 FT	23	25	19	7	6	6	6	65.4	47.3	50.5	53.8	7	6	6	6	62.5	153	165	177	6	6.5	0
50 FT	23	25	20	7	6	6	6	65.8	47.3	50.5	53.8	7	6	6	6	63.0	153	165	177	6	6.5	0

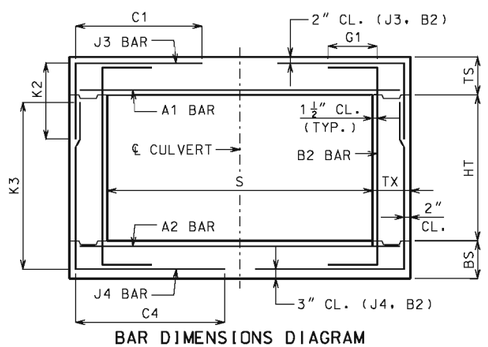

BAR DIMENSIONS DIAGRAM
SYMMETRICAL ABOUT ℄ CULVERT.

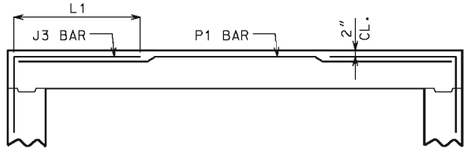

ALTERNATE J3 BAR

AT CONTRACTOR'S OPTION, ALTERNATE J3 BARS MAY BE USED WHEN THE DISTANCE BETWEEN THE ENDS OF J3 BARS IN THE TOP SLAB IS LESS THAN 2′-0″. DIMENSION L1 (NOT C1) SHALL BE USED WITH ALTERNATE J3 BARS, WHERE L1 IS EQUAL TO 18″, 22″ AND 28″ FOR #4, #5 AND #6 BARS, RESPECTIVELY. ADDITIONAL P1 BARS ARE REQUIRED WITH ALTERNATE J3 BARS WITH A LENGTH EQUAL TO A1 BARS, AND SIZE AND SPACING EQUAL TO J3 BARS. NO ADDITIONAL PAYMENT WILL BE MADE FOR THIS SUBSTITUTION.

SPAN (S) = 10 FT HEIGHT (HT) = 8 FT OR 9 FT OR 10 FT

DESIGN FILL	MEMBER THICKNESS			TOP SLAB BARS								BOTTOM SLAB BARS								WALL BARS		
				A1 BARS		J3 BARS						A2 BARS		J4 BARS						B2 BARS		
	TS	BS	TX	SIZE	SPA.	SIZE	SPA.	C1	K2			SIZE	SPA.	SIZE	SPA.	C4	K3			SIZE	SPA.	G1
									HT=8′	HT=9′	HT=10′						HT=8′	HT=9′	HT=10′			
1 FT	12	11	8	5	6	5	8	76.8	33.0	36.5	40.0	5	6	5	6	76.8	103	115	127	5	12	12
2 FT	12	11	8	6	8	5	7	76.8	33.0	36.5	40.0	6	8	6	7.5	79.4	103	115	127	5	11.5	12
4 FT	8	10	9	6	8	6	6	59.4	28.4	31.5	34.6	6	7.5	6	7	68.4	102	114	126	5	12	0
6 FT	8	10	9	6	8	6	6	51.6	32.8	36.3	39.9	6	7.5	6	6.5	56.8	102	114	126	5	11.5	0
8 FT	9	10	9	6	8	6	7	49.0	33.0	36.6	40.3	6	7	6	6	51.6	102	114	126	5	11.5	0
10 FT	9	11	9	6	7.5	6	6	47.8	30.0	33.3	36.5	6	7	6	6.5	49.0	103	115	127	5	11	0
12 FT	9	11	9	6	7.5	6	6.5	43.9	30.0	33.3	36.5	6	7	6	6.5	43.9	103	115	127	5	12	0
14 FT	10	11	9	6	7	6	6.5	42.6	31.4	34.8	38.1	6	6	6	6	43.9	103	115	127	5	12	0
16 FT	10	12	9	6	6	6	6	42.6	30.5	33.8	37.0	7	8	6	6.5	42.6	104	116	128	5	10.5	0
18 FT	11	13	9	6	6	6	6	42.6	31.0	34.3	37.5	7	7.5	6	6.5	42.6	105	117	129	5	9.5	0
20 FT	12	14	9	7	7.5	6	6.5	41.3	32.8	36.1	39.5	7	7.5	6	6.5	42.6	106	118	130	5	8.5	0
22 FT	13	15	9	7	7.5	6	6	41.3	33.4	36.6	40.0	7	7.5	6	6.5	42.6	107	119	131	5	8.5	0
24 FT	14	16	10	7	7.5	6	7	41.6	35.1	38.6	42.0	7	7.5	6	8	42.9	108	120	132	5	8	0
26 FT	15	17	11	7	7.5	6	7	48.5	35.6	39.1	42.6	7	7.5	5	6	40.6	109	121	133	5	8.5	0
28 FT	16	18	11	7	7	6	7	48.5	36.3	39.8	43.3	7	7.5	5	6	40.6	110	122	134	5	7.5	0
30 FT	17	19	12	7	7	6	7.5	48.9	38.1	41.8	45.3	7	7	5	6	40.9	111	123	135	5	8	0
32 FT	17	19	12	7	6.5	6	7	48.9	38.1	41.8	45.3	7	7	5	6	40.9	111	123	135	5	7.5	0
34 FT	18	20	12	7	6.5	6	7	48.9	38.8	42.3	45.9	7	6.5	6	8.5	43.5	112	124	136	5	7	0
36 FT	19	21	12	7	6.5	6	6	48.9	39.3	42.9	46.5	7	6.5	6	8	43.5	113	125	137	5	7	0
38 FT	19	21	13	7	6	6	6	49.3	39.3	42.9	46.5	7	6.5	6	8	43.9	113	125	137	5	7	0
40 FT	20	22	13	7	6	6	6.5	49.3	41.3	45.0	48.6	7	6.5	6	8	43.9	114	126	138	5	6.5	0
42 FT	21	23	13	7	6	6	6	49.3	41.9	45.6	49.3	7	6.5	6	8	43.9	115	127	139	5	6.5	0
44 FT	21	23	14	7	6	6	6	49.6	41.9	45.6	49.3	7	6	6	7.5	44.3	115	127	139	5	6.5	0
46 FT	22	24	14	7	6	6	6.5	49.6	42.5	46.3	49.9	7	6	6	8	45.5	116	128	140	5	6	0
48 FT	23	25	14	8	7.5	6	6.5	49.6	43.1	46.8	50.5	7	6	6	8	45.5	117	129	141	5	6	0
50 FT	23	25	14	8	7	6	6	49.6	43.1	46.8	50.5	7	6	6	7.5	45.5	117	129	141	5	6	0

IF A SEAL IS PRESENT ON THIS SHEET IT HAS BEEN ELECTRONICALLY SEALED AND DATED.

GENERAL NOTES:

IF DESIGN FILL IS BETWEEN TABULATED DESIGN FILLS, USE THE NEXT GREATER TABULATED DESIGN FILL, EXCEPT FOR DESIGN FILLS BETWEEN 2 FEET AND 4 FEET. FOR DESIGN FILLS BETWEEN 2 FEET AND 4 FEET USE THE GREATER MEMBER THICKNESS. AREA OF REINFORCEMENT AND BAR DIMENSIONS FROM THE 2 FEET AND 4 FEET TABULATED DESIGN FILLS. AREA OF REINFORCEMENT EQUALS BAR AREA PER FOOT SPACING.

SPECIAL DESIGNS ARE REQUIRED WHEN THE DESIGN FILL IS LESS THAN 1 FOOT OR GREATER THAN 50 FEET.

DIMENSIONS ARE IN INCHES UNLESS OTHERWISE SPECIFIED.

DESIGN FILLS ARE MEASURED FROM THE TOP OF TOP SLAB TO THE TOP OF EARTH FILL OR ROADWAY.

CULVERTS MEET STRENGTH AND SERVICEABILITY REQUIREMENTS FOR THE DESIGN VEHICULAR LIVE LOAD HL-93 MINUS THE LANE LOAD.

MISSOURI HIGHWAYS AND TRANSPORTATION COMMISSION
105 WEST CAPITOL
JEFFERSON CITY, MO 65102
1-888-ASK-MODOT (1-888-275-6636)

STATE OF MISSOURI
DENNIS W. HECKMAN
NUMBER PE-27141
PROFESSIONAL ENGINEER
THIS SHEET HAS BEEN SIGNED, SEALED AND DATED ELECTRONICALLY.

CONCRETE SINGLE BOX CULVERT

MEMBER THICKNESS BAR SIZE, SPACING & DIMENSIONS

SPAN (S): 10 FEET
HEIGHT (HT): 5 THRU 13 FEET

DATE EFFECTIVE: 04/01/2011
DATE PREPARED: 4/18/2011

703.17

SPAN (S) = 11 FT HEIGHT (HT) = 6 FT OR 7 FT OR 8 FT

DESIGN FILL	MEMBER THICKNESS			TOP SLAB BARS									BOTTOM SLAB BARS								WALL BARS		
				A1 BARS		J3 BARS			K2				A2 BARS		J4 BARS			K3			B2 BARS		
	TS	BS	TX	SIZE	SPA.	SIZE	SPA.	C1	HT=6′	HT=7′	HT=8′		SIZE	SPA.	SIZE	SPA.	C4	HT=6′	HT=7′	HT=8′	SIZE	SPA.	G1
1 FT	12	10	8	6	7.5	5	7	82.6	32.0	36.4	40.6		6	8	6	7.5	61.6	78	90	102	5	12	12
2 FT	12	10	8	6	7.5	5	6.5	82.6	32.0	36.4	40.6		6	7.5	6	7	53.3	78	90	102	5	12	12
4 FT	9	10	8	6	7	6	6.5	46.3	29.3	33.4	37.4		6	7	6	7.5	46.3	78	90	102	5	12	0
6 FT	9	10	8	6	7	6	6.5	43.4	29.3	33.4	37.4		6	6.5	6	6.5	42.0	78	90	102	5	12	0
8 FT	9	10	8	6	6.5	6	6	42.0	33.5	38.3	42.9		6	6	6	6	40.6	78	90	102	5	12	0
10 FT	10	11	8	6	6.5	6	6.5	39.3	30.8	35.0	39.3		7	8	6	7	37.8	79	91	103	5	12	0
12 FT	10	11	8	6	6.5	6	6.5	37.8	30.8	35.0	39.3		6	6	6	7	35.0	79	91	103	5	12	0
14 FT	10	11	8	7	7.5	6	6	36.4	34.4	39.0	43.6		7	7	6	6	35.0	79	91	103	5	12	0
16 FT	11	13	8	7	7	6	6	36.4	31.9	36.0	40.3		7	7	5	6.5	30.8	81	93	105	5	12	0
18 FT	11	14	8	7	6	7	6	39.3	31.3	35.4	39.5		7	6.5	5	7	29.4	82	94	106	5	12	0
20 FT	13	15	8	7	6.5	6	6.5	33.6	33.3	37.5	41.6		7	6.5	5	7	29.4	83	95	107	5	12	0
22 FT	14	16	8	7	6	6	6.5	33.6	34.9	39.3	43.5		7	6.5	5	7	29.4	84	96	108	5	12	0
24 FT	15	17	8	7	6	6	6.5	39.3	35.6	40.0	44.3		7	6.5	5	6.5	29.4	85	97	109	5	12	0
26 FT	16	18	8	7	6	6	6.5	37.8	36.4	40.6	45.0		7	6.5	5	6.5	29.4	86	98	110	5	10	0
28 FT	17	19	8	8	7.5	6	6.5	37.8	37.1	41.4	45.8		7	6	5	6.5	29.4	87	99	111	5	9.5	0
30 FT	18	20	8	8	7.5	6	6	37.8	38.9	43.3	47.8		7	6	5	6	29.4	88	100	112	5	9.5	0
32 FT	19	21	9	8	7.5	6	7	39.5	39.6	44.0	48.5		7	6	5	6.5	29.6	89	101	113	5	9	0
34 FT	20	22	10	8	7.5	6	8	39.8	40.4	44.8	49.3		7	6	5	7	31.3	90	102	114	5	10	0
36 FT	21	23	10	8	7.5	6	8	39.8	41.1	45.5	50.0		7	6	5	6.5	31.3	91	103	115	5	9	0
38 FT	22	23	10	8	7	6	8	39.8	42.5	47.1	51.6		8	7.5	5	6.5	31.3	91	103	115	5	8	0
40 FT	22	24	11	8	7	6	7	40.0	43.0	47.5	52.0		8	7.5	5	7	31.5	92	104	116	5	9	0
42 FT	23	25	11	8	7	6	8	40.0	43.8	48.3	52.9		8	7.5	5	7	31.5	93	105	117	5	8.5	0
44 FT	24	26	11	8	7	6	8	40.0	44.5	49.0	53.6		8	7.5	5	6.5	31.5	94	106	118	5	7.5	0
46 FT	25	26	11	8	6.5	6	8	40.0	46.0	50.8	55.4		8	7	5	6.5	31.5	94	106	118	5	7.5	0
48 FT	25	27	11	8	6.5	6	7.5	40.0	45.3	49.8	54.4		8	7	5	6	31.5	95	107	119	5	7.5	0
50 FT	26	27	11	8	6.5	6	8	40.0	46.8	51.5	56.1		8	7	5	6	31.5	95	107	119	5	7.5	0

SPAN (S) = 11 FT HEIGHT (HT) = 12 FT OR 13 FT OR 14 FT

DESIGN FILL	MEMBER THICKNESS			TOP SLAB BARS									BOTTOM SLAB BARS								WALL BARS		
				A1 BARS		J3 BARS			K2				A2 BARS		J4 BARS			K3			B2 BARS		
	TS	BS	TX	SIZE	SPA.	SIZE	SPA.	C1	HT=12′	HT=13′	HT=14′		SIZE	SPA.	SIZE	SPA.	C4	HT=12′	HT=13′	HT=14′	SIZE	SPA.	G1
1 FT	12	12	9	6	7.5	6	7	86.0	32.6	35.0	37.4		6	7.5	6	6	86.0	152	164	176	5	8.5	12
2 FT	12	12	9	6	7	6	6.5	86.0	34.3	36.8	39.3		6	7	6	6	86.0	152	164	176	5	8	12
4 FT	9	11	10	6	7	6	6	86.6	33.4	35.9	38.4		6	6.5	6	6	86.6	151	163	175	5	7.5	0
6 FT	9	12	10	6	7.5	6	6	86.6	33.6	36.1	38.6		6	6.5	6	6	88.0	152	164	176	5	7	0
8 FT	10	13	10	6	7.5	6	6	86.6	34.0	36.5	39.0		6	7	6	6	86.6	153	165	177	5	6.5	0
10 FT	10	13	11	6	7	6	6	70.1	34.0	36.5	39.0		6	6.5	6	6.5	88.6	153	165	177	5	6.5	0
12 FT	10	13	11	6	7.5	6	6	60.0	32.4	34.8	37.3		6	6.5	6	6.5	74.4	153	165	177	5	7.5	0
14 FT	11	13	11	6	6.5	6	6	60.0	35.9	38.5	41.1		6	6	6	6	70.1	153	165	177	5	7	0
16 FT	12	14	12	6	6.5	6	7	60.5	36.3	39.0	41.6		7	8	6	6.5	67.6	154	166	178	5	7	0
18 FT	13	15	13	6	6	6	7	59.5	38.4	41.1	43.9		7	7.5	6	7	65.3	155	167	179	5	6.5	0
20 FT	14	16	13	6	6	6	6.5	60.9	38.9	41.6	44.4		7	7.5	6	6.5	66.8	156	168	180	5	6.5	0
22 FT	14	17	14	7	7.5	6	6.5	59.9	39.1	41.9	44.6		7	7	6	6.5	64.3	157	169	181	5	6	0
24 FT	15	17	14	7	7	6	6	65.8	39.4	42.1	44.9		7	6.5	6	6	64.3	157	169	181	5	6	0
26 FT	16	18	15	7	7	6	6	66.1	41.5	44.4	47.3		7	6.5	6	6	63.3	158	170	182	6	8	0
28 FT	17	19	15	7	7	6	6	66.1	42.0	44.9	47.8		7	6.5	6	6	64.6	159	171	183	6	8	0
30 FT	18	20	16	7	7	6	6	66.6	42.5	45.4	48.3		7	6.5	6	6	63.6	160	172	184	6	8	0
32 FT	19	21	16	7	6.5	7	8	72.5	44.8	47.8	50.8		7	6.5	7	8	68.1	161	173	185	6	8	0
34 FT	20	22	16	7	6.5	7	7	72.5	45.3	48.3	51.3		7	6.5	7	7	68.1	162	174	186	6	8	0
36 FT	20	22	17	7	6	7	7.5	71.5	50.6	54.0	57.4		7	6	7	7	67.0	162	174	186	6	7.5	0
38 FT	21	23	18	7	6	7	7.5	72.0	45.8	48.8	51.8		7	6	7	7.5	67.5	163	175	187	6	7	0
40 FT	22	24	18	7	6	7	7	73.5	46.3	49.3	52.3		7	6	7	7.5	69.0	164	176	188	6	7	0
42 FT	23	25	19	7	6	7	7.5	74.0	48.6	51.8	54.9		7	6	7	8	68.0	165	177	189	6	6.5	0
44 FT	23	26	20	7	6	7	7.5	73.0	47.0	50.0	53.0		7	6	6	6	65.4	166	178	190	6	6.5	0
46 FT	24	26	20	8	7.5	7	7	73.0	49.1	52.3	55.4		8	7.5	7	7.5	68.4	166	178	190	6	6.5	0
48 FT	25	27	21	8	7.5	7	7.5	73.5	49.6	52.8	55.9		8	7.5	7	8	68.9	167	179	191	6	6	0
50 FT	25	27	21	8	7	7	7	73.5	49.6	52.8	55.9		8	7	7	7	68.9	167	179	191	6	6	0

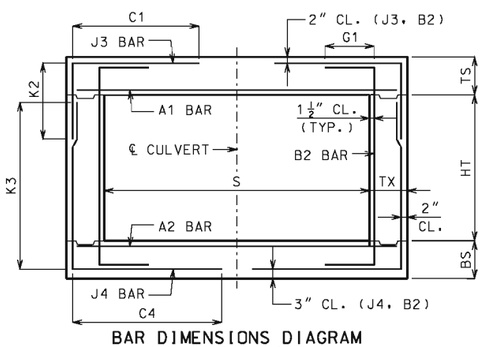

BAR DIMENSIONS DIAGRAM
SYMMETRICAL ABOUT ℄ CULVERT.

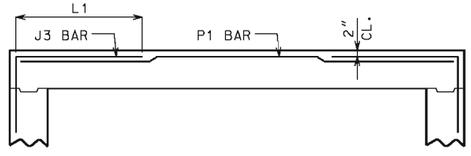

ALTERNATE J3 BAR

AT CONTRACTOR'S OPTION, ALTERNATE J3 BARS MAY BE USED WHEN THE DISTANCE BETWEEN THE ENDS OF J3 BARS IN THE TOP SLAB IS LESS THAN 2′-0″. DIMENSION L1 (NOT C1) SHALL BE USED WITH ALTERNATE J3 BARS, WHERE L1 IS EQUAL TO 18″, 22″ AND 28″ FOR #4, #5 AND #6 BARS, RESPECTIVELY. ADDITIONAL P1 BARS ARE REQUIRED WITH ALTERNATE J3 BARS WITH A LENGTH EQUAL TO A1 BARS, AND SIZE AND SPACING EQUAL TO J3 BARS. NO ADDITIONAL PAYMENT WILL BE MADE FOR THIS SUBSTITUTION.

SPAN (S) = 11 FT HEIGHT (HT) = 9 FT OR 10 FT OR 11 FT

DESIGN FILL	MEMBER THICKNESS			TOP SLAB BARS									BOTTOM SLAB BARS								WALL BARS		
				A1 BARS		J3 BARS			K2				A2 BARS		J4 BARS			K3			B2 BARS		
	TS	BS	TX	SIZE	SPA.	SIZE	SPA.	C1	HT=9′	HT=10′	HT=11′		SIZE	SPA.	SIZE	SPA.	C4	HT=9′	HT=10′	HT=11′	SIZE	SPA.	G1
1 FT	12	11	8	6	7.5	5	7	82.6	32.8	35.9	39.0		6	7.5	6	6.5	85.4	115	127	139	5	9.5	12
2 FT	12	11	8	6	7	5	6.5	82.6	32.8	35.9	39.0		6	7	6	6	85.4	115	127	139	5	9.5	12
4 FT	9	10	9	6	7	6	6.5	70.5	34.1	37.5	40.9		6	6.5	6	6	73.4	114	126	138	5	9.5	0
6 FT	9	11	9	6	7.5	6	6	57.8	30.8	33.8	36.8		6	6.5	6	6	64.9	115	127	139	5	9.5	0
8 FT	9	11	9	6	7	7	6.5	56.4	30.8	33.8	36.8		6	6	6	6	56.4	115	127	139	5	9	0
10 FT	10	12	9	6	6.5	6	6	50.8	31.3	34.3	37.3		6	6	6	6	55.0	116	128	140	5	8.5	0
12 FT	10	12	9	6	6.5	6	6	46.5	31.3	34.3	37.3		6	6	6	6	48.0	116	128	140	5	10	0
14 FT	11	12	9	6	6	6	6.5	45.1	35.3	38.6	42.0		7	7.5	6	6	46.5	116	128	140	5	9	0
16 FT	11	13	10	7	7.5	6	6	45.5	33.0	36.1	39.3		7	7	6	6.5	46.9	117	129	141	5	9.5	0
18 FT	12	14	10	7	7	6	6.5	45.5	32.3	35.3	38.3		7	7	6	6.5	45.5	118	130	142	5	8.5	0
20 FT	13	15	10	7	7	6	6	45.5	34.0	37.1	40.3		7	6.5	6	6.5	45.5	119	131	143	5	8	0
22 FT	14	16	11	7	7	6	6.5	45.8	35.9	39.1	42.4		7	6.5	6	7.5	45.8	120	132	144	5	8	0
24 FT	15	17	11	7	6.5	6	6	51.5	36.5	39.8	42.9		7	6.5	6	7.5	45.8	121	133	145	5	7.5	0
26 FT	16	18	12	7	6.5	6	6.5	51.9	37.0	40.3	43.5		7	6.5	6	8	46.1	122	134	146	5	7.5	0
28 FT	17	19	12	7	6.5	6	6.5	51.9	37.5	40.8	44.0		7	6.5	6	7.5	46.1	123	135	147	5	7	0
30 FT	18	20	13	7	6.5	6	6.5	52.3	38.1	41.3	44.5		7	6.5	6	8	46.4	124	136	148	5	7.5	0
32 FT	19	21	13	7	6	6	6.5	52.3	40.0	43.4	46.8		7	6	6	7.5	46.4	125	137	149	5	6.5	0
34 FT	20	22	13	7	6	6	6	52.3	40.6	44.0	47.4		7	6	6	7.5	46.4	126	138	150	5	6.5	0
36 FT	21	22	13	7	6	6	6	52.3	45.3	49.0	52.8		7	6	6	6.5	46.4	126	138	150	5	6.5	0
38 FT	21	23	14	8	7.5	6	6	52.5	41.1	44.5	47.9		7	6	6	7.5	46.8	127	139	151	5	6	0
40 FT	22	24	14	8	7.5	6	6	52.5	43.3	46.8	50.1		8	7.5	6	7	48.1	128	140	152	5	6	0
42 FT	23	25	15	8	7.5	6	6.5	52.9	48.4	52.1	56.0		8	7.5	6	7.5	48.5	129	141	153	5	6	0
44 FT	24	25	15	8	7	6	6.5	52.9	48.6	52.5	56.4		8	7	6	6.5	48.5	129	141	153	6	8	0
46 FT	24	26	15	8	7	6	6	52.9	49.0	52.8	56.6		8	7	6	7	48.5	130	142	154	6	8	0
48 FT	25	27	16	8	7	6	6	53.3	49.6	53.5	57.3		8	7	6	7.5	48.9	131	143	155	6	8	0
50 FT	26	27	16	8	6.5	6	6	53.3	51.5	55.5	59.4		8	7	6	6.5	48.9	131	143	155	6	8	0

IF A SEAL IS PRESENT ON THIS SHEET IT HAS BEEN ELECTRONICALLY SEALED AND DATED.

GENERAL NOTES:

IF DESIGN FILL IS BETWEEN TABULATED DESIGN FILLS, USE THE NEXT GREATER TABULATED DESIGN FILL, EXCEPT FOR DESIGN FILLS BETWEEN 2 FEET AND 4 FEET. FOR DESIGN FILLS BETWEEN 2 FEET AND 4 FEET USE THE GREATER MEMBER THICKNESS, AREA OF REINFORCEMENT AND BAR DIMENSIONS FROM THE 2 FEET AND 4 FEET TABULATED DESIGN FILLS. AREA OF REINFORCEMENT EQUALS BAR AREA PER FOOT SPACING.

SPECIAL DESIGNS ARE REQUIRED WHEN THE DESIGN FILL IS LESS THAN 1 FOOT OR GREATER THAN 50 FEET.

DIMENSIONS ARE IN INCHES UNLESS OTHERWISE SPECIFIED.

DESIGN FILLS ARE MEASURED FROM THE TOP OF TOP SLAB TO THE TOP OF EARTH FILL OR ROADWAY.

CULVERTS MEET STRENGTH AND SERVICEABILITY REQUIREMENTS FOR THE DESIGN VEHICULAR LIVE LOAD HL-93 MINUS THE LANE LOAD.

MISSOURI HIGHWAYS AND TRANSPORTATION COMMISSION
105 WEST CAPITOL
JEFFERSON CITY, MO 65102
1-888-ASK-MODOT (1-888-275-6636)

STATE OF MISSOURI
DENNIS W. HECKMAN
NUMBER PE-27141
PROFESSIONAL ENGINEER
THIS SHEET HAS BEEN SIGNED, SEALED AND DATED ELECTRONICALLY.

CONCRETE SINGLE BOX CULVERT

MEMBER THICKNESS BAR SIZE, SPACING & DIMENSIONS

SPAN (S): 11 FEET
HEIGHT (HT): 6 THRU 14 FEET

DATE EFFECTIVE: 04/01/2011
DATE PREPARED: 4/18/2011

703.17

SHEET NO. 9 OF 14

SPAN (S) = 12 FT HEIGHT (HT) = 6 FT OR 7 FT OR 8 FT

DESIGN FILL	MEMBER THICKNESS			TOP SLAB BARS								BOTTOM SLAB BARS								WALL BARS		
				A1 BARS		J3 BARS						A2 BARS		J4 BARS						B2 BARS		
	TS	BS	TX	SIZE	SPA.	SIZE	SPA.	C1	K2 HT=6′	K2 HT=7′	K2 HT=8′	SIZE	SPA.	SIZE	SPA.	C4	K3 HT=6′	K3 HT=7′	K3 HT=8′	SIZE	SPA.	G1
1 FT	13	10	8	6	7.5	5	8.5	89.6	33.3	37.8	42.1	6	7.5	6	6.5	57.8	78	90	102	5	12	12
2 FT	14	10	8	6	7	5	8.5	89.6	34.6	39.1	43.8	6	7	6	6	51.6	78	90	102	5	12	12
4 FT	10	11	8	6	6.5	6	6.5	47.1	30.8	35.0	39.3	6	6.5	5	6.5	42.5	79	91	103	5	12	0
6 FT	10	11	8	6	6.5	6	6.5	44.1	30.8	35.0	39.3	6	6	5	6	39.5	79	91	103	5	12	0
8 FT	10	11	8	6	6	6	6.5	41.0	30.8	35.0	39.3	7	7.5	6	6.5	39.5	79	91	103	5	12	0
10 FT	10	11	8	7	7	7	6	42.5	34.4	39.0	43.6	7	6.5	6	6	38.0	79	91	103	5	12	0
12 FT	11	12	8	7	7	6	6	38.0	35.1	39.8	44.5	7	6.5	6	6.5	36.5	80	92	104	5	12	0
14 FT	11	13	8	7	7	6	6	36.5	31.9	36.0	40.3	7	6.5	5	7	30.4	81	93	105	5	12	0
16 FT	12	14	8	7	6.5	6	6	35.0	32.5	36.8	41.0	7	6.5	5	7	30.4	82	94	106	5	12	0
18 FT	13	15	8	7	6	6	6.5	33.5	33.3	37.5	41.6	7	6	5	6.5	30.4	83	95	107	5	12	0
20 FT	15	17	8	7	6	6	7	39.5	35.6	40.0	44.3	7	6.5	5	7	30.4	85	97	109	5	12	0
22 FT	16	18	8	7	6	6	7	39.5	36.4	40.6	45.0	7	6	5	6.5	30.4	86	98	110	5	12	0
24 FT	17	19	8	8	7.5	6	7	39.5	37.1	41.4	45.8	7	6	5	6.5	30.4	87	99	111	5	11	0
26 FT	18	20	8	8	7	6	7	39.5	38.9	43.3	47.8	7	6	5	6	30.4	88	100	112	5	9.5	0
28 FT	19	21	8	8	7	6	7	39.5	39.6	44.0	48.5	7	6	6	7.5	33.5	89	101	113	5	9.5	0
30 FT	20	21	8	8	7	6	6.5	39.5	44.3	49.3	54.1	8	7	6	7.5	33.5	89	101	113	5	9.5	0
32 FT	21	23	9	8	7	6	7.5	39.8	41.1	45.5	50.0	8	7.5	5	6	30.6	91	103	115	5	8.5	0
34 FT	22	23	9	8	6.5	6	7.5	39.8	42.5	47.1	51.6	8	7	5	6	30.6	91	103	115	5	8.5	0
36 FT	23	24	9	8	6.5	6	7	39.8	47.9	52.9	58.0	8	7	6	7	33.6	92	104	116	5	8.5	0
38 FT	24	25	9	8	6.5	6	6.5	39.8	48.8	53.8	58.8	8	7	6	7	33.6	93	105	117	5	8.5	0
40 FT	24	26	10	8	6	6	7	40.0	44.5	49.0	53.6	8	7	5	6	30.8	94	106	118	5	8	0
42 FT	25	27	10	8	6	6	7	40.0	45.3	49.8	54.4	8	7	6	7	33.9	95	107	119	5	8	0
44 FT	26	27	10	8	6	6	7	40.0	50.4	55.5	60.5	8	6.5	6	7	33.9	95	107	119	5	8	0
46 FT	27	28	10	8	6	6	7	40.0	51.3	56.3	61.4	8	6.5	6	7	33.9	96	108	120	5	7.5	0
48 FT	28	29	11	8	6	6	7.5	40.3	52.1	57.1	62.1	8	6.5	6	7.5	34.1	97	109	121	5	7.5	0
50 FT	28	30	11	8	6	6	7.5	40.3	52.5	57.5	62.6	8	6.5	6	7	34.1	98	110	122	5	7.5	0

SPAN (S) = 12 FT HEIGHT (HT) = 9 FT OR 10 FT OR 11 FT

DESIGN FILL	MEMBER THICKNESS			TOP SLAB BARS								BOTTOM SLAB BARS								WALL BARS		
				A1 BARS		J3 BARS						A2 BARS		J4 BARS						B2 BARS		
	TS	BS	TX	SIZE	SPA.	SIZE	SPA.	C1	K2 HT=9′	K2 HT=10′	K2 HT=11′	SIZE	SPA.	SIZE	SPA.	C4	K3 HT=9′	K3 HT=10′	K3 HT=11′	SIZE	SPA.	G1
1 FT	11	12	8	6	6.5	6	7	91.3	31.5	34.5	37.5	6	7.5	6	7	91.3	116	128	140	5	10	12
2 FT	11	12	8	6	6	6	6.5	91.3	31.5	34.5	37.5	6	7	6	6.5	91.3	116	128	140	5	9.5	12
4 FT	10	12	8	6	6	6	6	69.9	30.0	32.9	35.8	6	6.5	6	6.5	83.6	116	128	140	5	9.5	0
6 FT	10	12	8	6	6.5	6	6	57.8	31.3	34.3	37.3	6	6	6	6	62.4	116	128	140	5	9.5	0
8 FT	10	12	9	6	6	6	6	52.0	31.3	34.3	37.3	7	8	6	6	55.1	116	128	140	5	10	0
10 FT	10	12	9	7	7.5	7	6	52.0	35.0	38.4	41.8	7	7	6	6	50.5	116	128	140	5	9.5	0
12 FT	11	13	10	7	7.5	6	6	49.3	33.0	36.1	39.3	7	7	6	6.5	49.3	117	129	141	5	10	0
14 FT	11	13	10	7	7.5	6	6	46.3	31.8	34.8	37.8	7	7	6	6.5	46.3	117	129	141	5	12	0
16 FT	12	14	10	7	7	6	6.5	46.3	32.3	35.3	38.3	7	6.5	6	7	44.6	118	130	142	5	11	0
18 FT	13	15	10	7	6.5	6	6	44.6	38.0	41.5	45.0	7	6	6	7	44.6	119	131	143	5	9.5	0
20 FT	14	16	10	7	6	7	7.5	47.8	38.6	42.0	45.5	7	6	6	6.5	44.6	120	132	144	5	8.5	0
22 FT	16	18	11	7	6.5	6	6.5	51.1	37.0	40.3	43.5	7	6.5	6	7.5	45.0	122	134	146	5	8.5	0
24 FT	17	19	11	7	6	6	6	49.6	37.5	40.8	44.0	7	6	6	7.5	45.0	123	135	147	5	7.5	0
26 FT	18	20	12	7	6	6	6.5	49.9	38.1	41.3	44.5	7	6	6	7.5	45.3	124	136	148	5	8	0
28 FT	19	21	12	7	6	6	6	49.9	40.0	43.4	46.8	7	6	6	7.5	45.3	125	137	149	5	7	0
30 FT	20	22	13	8	7.5	6	6.5	51.8	40.6	44.0	47.4	7	6	6	8	45.5	126	138	150	5	7.5	0
32 FT	21	23	13	8	7.5	6	6	50.3	41.1	44.5	47.9	8	7.5	6	7.5	45.5	127	139	151	5	7	0
34 FT	21	23	13	8	7	6	6	50.3	45.6	49.3	53.0	8	7	6	7	45.5	127	139	151	5	6.5	0
36 FT	22	24	14	8	7	6	6	52.1	43.3	46.8	50.1	8	7	6	7.5	45.9	128	140	152	5	7	0
38 FT	23	25	14	8	6.5	6	6	50.5	43.8	47.3	50.8	8	7	6	7.5	45.9	129	141	153	5	6	0
40 FT	24	26	14	8	6.5	6	6	50.5	44.4	47.9	51.4	8	7	6	7	45.9	130	142	154	5	6	0
42 FT	25	27	15	8	6.5	6	6	52.5	49.6	53.5	57.3	8	7	6	7.5	46.1	131	143	155	5	6	0
44 FT	26	28	15	8	6.5	6	6	52.5	50.3	54.1	57.9	8	6.5	6	7.5	47.8	132	144	156	6	8	0
46 FT	27	28	15	8	6.5	6	6	50.9	52.1	56.1	60.0	8	6.5	6	7	47.8	132	144	156	6	8	0
48 FT	27	29	15	8	6	6	6	52.5	52.5	56.4	60.4	8	6.5	6	7	47.8	133	145	157	6	8	0
50 FT	28	30	16	8	6	6	6	52.8	53.1	57.1	61.0	8	6.5	6	7.5	48.0	134	146	158	6	8	0

SPAN (S) = 12 FT HEIGHT (HT) = 12 FT OR 13 FT

DESIGN FILL	MEMBER THICKNESS			TOP SLAB BARS							BOTTOM SLAB BARS							WALL BARS		
				A1 BARS		J3 BARS					A2 BARS		J4 BARS					B2 BARS		
	TS	BS	TX	SIZE	SPA.	SIZE	SPA.	C1	K2 HT=12′	K2 HT=13′	SIZE	SPA.	SIZE	SPA.	C4	K3 HT=12′	K3 HT=13′	SIZE	SPA.	G1
1 FT	12	11	9	6	6.5	5	6	90.3	32.4	34.8	6	6.5	6	6	91.8	151	163	5	8.5	12
2 FT	12	11	9	6	6.5	6	7	91.8	34.0	36.5	6	6.5	6	6	91.8	151	163	5	8.5	12
4 FT	10	12	9	6	6.5	6	6	91.8	35.4	38.0	6	6.5	6	6	91.8	152	164	5	8.5	0
6 FT	10	12	9	6	6.5	7	6.5	81.1	35.4	38.0	6	6	6	6	91.8	152	164	5	8	0
8 FT	10	12	10	6	6.5	6	6	64.6	35.4	38.0	7	7.5	6	6	73.9	152	164	5	8	0
10 FT	11	13	10	6	6	6	6	61.6	35.9	38.5	7	7.5	6	6	69.3	153	165	5	8	0
12 FT	12	13	11	6	6	6	6	58.9	36.1	38.8	7	7	6	6	62.0	153	165	5	7.5	0
14 FT	12	13	11	6	6	6	7	54.3	36.1	38.8	7	7	6	6	55.8	153	165	5	7.5	0
16 FT	12	14	11	7	7	6	6	52.8	36.3	39.0	7	6.5	6	6.5	55.8	154	166	5	7.5	0
18 FT	13	16	12	7	7	6	6	53.0	38.6	41.4	7	6.5	6	7	56.1	156	168	5	7	0
20 FT	14	16	12	7	6.5	6	6	53.0	38.9	41.6	7	6	6	6	54.6	156	168	5	7	0
22 FT	16	18	13	7	6.5	6	6	59.6	41.5	44.4	7	6.5	6	7	55.0	158	170	5	6.5	0
24 FT	16	19	13	7	6	7	7	64.4	40.0	42.8	7	6	6	6.5	55.0	159	171	5	6.5	0
26 FT	18	20	14	7	6.5	6	6	58.5	42.5	45.4	7	6	6	6.5	55.3	160	172	5	6	0
28 FT	18	21	14	7	6	7	7	63.3	42.8	45.6	7	6	6	6.5	55.3	161	173	5	6	0
30 FT	19	22	14	8	7.5	7	6.5	63.3	43.3	46.1	7	6	6	6	55.3	162	174	5	6	0
32 FT	20	23	15	8	7.5	7	7.5	63.6	45.5	48.5	8	7.5	6	6.5	55.6	163	175	6	8	0
34 FT	21	23	15	8	7	7	7	63.6	45.8	48.8	8	7	6	6	55.6	163	175	6	8	0
36 FT	22	24	16	8	7	7	7.5	64.0	46.3	49.3	8	7	6	6.5	56.0	164	176	6	8	0
38 FT	23	25	16	8	7	7	7	64.0	48.6	51.8	8	7	6	6	56.0	165	177	6	8	0
40 FT	24	26	17	8	7	7	7.5	64.4	49.1	52.3	8	7	6	6.5	56.4	166	178	6	7.5	0
42 FT	24	27	17	8	6.5	7	6.5	64.4	49.4	52.5	8	7	6	6	56.4	167	179	6	7.5	0
44 FT	25	28	18	8	6.5	7	7	66.4	49.9	53.0	8	7	6	6.5	56.8	168	180	6	7	0
46 FT	26	28	18	8	6.5	7	7	66.4	50.1	53.3	8	6.5	6	6	56.8	168	180	6	7	0
48 FT	27	29	19	8	6.5	7	7.5	66.9	52.6	55.9	8	6.5	6	6.5	57.0	169	181	6	6.5	0
50 FT	28	30	19	8	6.5	7	7	66.9	53.3	56.4	8	6.5	6	6	57.0	170	182	6	6.5	0

SPAN (S) = 12 FT HEIGHT (HT) = 14 FT OR 15 FT

DESIGN FILL	MEMBER THICKNESS			TOP SLAB BARS							BOTTOM SLAB BARS							WALL BARS		
				A1 BARS		J3 BARS					A2 BARS		J4 BARS					B2 BARS		
	TS	BS	TX	SIZE	SPA.	SIZE	SPA.	C1	K2 HT=14′	K2 HT=15′	SIZE	SPA.	SIZE	SPA.	C4	K3 HT=14′	K3 HT=15′	SIZE	SPA.	G1
1 FT	12	12	10	6	7	6	7.5	94.0	35.5	37.8	6	7	6	6.5	94.0	176	188	5	7.5	12
2 FT	12	12	10	6	6.5	6	7	94.0	37.4	39.8	6	6.5	6	6	94.0	176	188	5	7.5	12
4 FT	10	13	10	6	6.5	6	6	94.0	35.4	37.6	6	6.5	6	6	94.0	177	189	5	6.5	0
6 FT	10	13	11	6	7	6	6.5	94.5	35.4	37.6	6	6.5	6	6.5	94.5	177	189	5	6.5	0
8 FT	10	13	11	6	6.5	6	6	85.3	35.4	37.6	6	6	6	6	94.5	177	189	5	6	0
10 FT	11	13	12	6	6.5	6	6.5	74.9	35.5	37.8	7	7.5	6	6	95.1	177	189	5	6	0
12 FT	12	14	13	6	6.5	6	7	70.6	37.8	40.3	7	7.5	6	6.5	83.3	178	190	5	6	0
14 FT	12	14	13	6	6.5	6	7	62.8	37.8	40.3	7	7.5	6	6.5	69.1	178	190	5	6.5	0
16 FT	13	15	13	6	6	6	6.5	64.4	38.3	40.6	7	7	6	6.5	70.6	179	191	5	6.5	0
18 FT	14	16	14	7	7.5	6	6.5	63.3	38.6	41.0	7	7	6	6.5	68.0	180	192	5	6	0
20 FT	15	17	14	7	7	6	6	69.5	39.0	41.4	7	6.5	6	6	68.0	181	193	5	6	0
22 FT	16	18	15	7	7	6	6	70.0	41.4	43.9	7	6.5	6	6.5	68.4	182	194	6	8	0
24 FT	16	19	15	7	6.5	7	7	73.1	41.6	44.1	7	6	6	6	68.4	183	195	6	8	0
26 FT	17	20	16	7	6.5	7	7	73.6	42.0	44.5	7	6	6	6	67.3	184	196	6	8	0
28 FT	18	21	16	7	6	7	7	75.3	46.5	49.3	7	6	7	7.5	72.0	185	197	6	8	0
30 FT	19	22	17	7	6	7	7	74.0	46.9	49.6	7	6	7	7.5	70.9	186	198	6	7.5	0
32 FT	20	23	17	7	6	7	6.5	75.6	47.4	50.1	7	6	7	7	70.9	187	199	6	7.5	0
34 FT	21	23	18	8	7.5	7	7	74.5	51.8	54.8	8	7.5	7	6.5	71.3	187	199	6	7	0
36 FT	22	24	19	8	7.5	7	7.5	75.0	52.3	55.3	8	7.5	7	7	70.1	188	200	6	6.5	0
38 FT	23	25	19	8	7.5	7	6.5	76.6	50.6	53.5	8	7	7	7	71.8	189	201	6	6.5	0
40 FT	24	26	20	8	7	7	7	75.5	51.1	54.0	8	7	7	7.5	70.5	190	202	6	6.5	0
42 FT	25	27	20	8	7	7	6.5	77.1	53.8	56.8	8	7	7	7	72.1	191	203	6	6.5	0
44 FT	25	28	21	8	7	7	6.5	75.9	54.0	57.0	8	7	7	7.5	72.6	192	204	6	6	0
46 FT	26	28	22	8	6.5	7	7	76.4	56.4	59.5	8	6.5	7	7	71.4	192	204	6	6	0
48 FT	27	29	22	8	6.5	7	6.5	76.4	59.1	62.4	8	6.5	7	6.5	71.4	193	205	6	6	0
50 FT	27	30	23	8	6.5	7	6.5	76.9	57.3	60.4	8	6.5	7	7	71.8	194	206	7	7.5	0

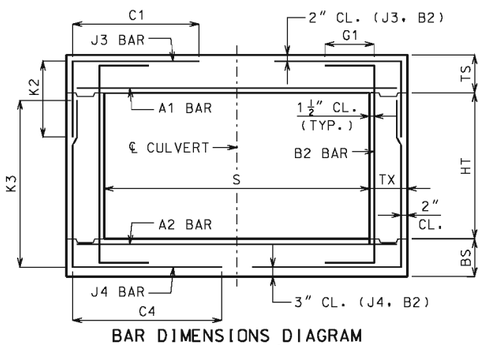

BAR DIMENSIONS DIAGRAM
SYMMETRICAL ABOUT ℄ CULVERT.

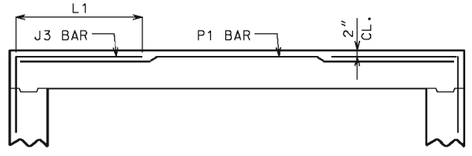

ALTERNATE J3 BAR

AT CONTRACTOR'S OPTION, ALTERNATE J3 BARS MAY BE USED WHEN THE DISTANCE BETWEEN THE ENDS OF J3 BARS IN THE TOP SLAB IS LESS THAN 2′-0″. DIMENSION L1 (NOT C1) SHALL BE USED WITH ALTERNATE J3 BARS, WHERE L1 IS EQUAL TO 18″, 22″ AND 28″ FOR #4, #5 AND #6 BARS, RESPECTIVELY. ADDITIONAL P1 BARS ARE REQUIRED WITH ALTERNATE J3 BARS WITH A LENGTH EQUAL TO A1 BARS, AND SIZE AND SPACING EQUAL TO J3 BARS. NO ADDITIONAL PAYMENT WILL BE MADE FOR THIS SUBSTITUTION.

GENERAL NOTES:

IF DESIGN FILL IS BETWEEN TABULATED DESIGN FILLS, USE THE NEXT GREATER TABULATED DESIGN FILL, EXCEPT FOR DESIGN FILLS BETWEEN 2 FEET AND 4 FEET. FOR DESIGN FILLS BETWEEN 2 FEET AND 4 FEET USE THE GREATER MEMBER THICKNESS, AREA OF REINFORCEMENT AND BAR DIMENSIONS FROM THE 2 FEET AND 4 FEET TABULATED DESIGN FILLS. AREA OF REINFORCEMENT EQUALS BAR AREA PER FOOT SPACING.

SPECIAL DESIGNS ARE REQUIRED WHEN THE DESIGN FILL IS LESS THAN 1 FOOT OR GREATER THAN 50 FEET.

DIMENSIONS ARE IN INCHES UNLESS OTHERWISE SPECIFIED.

DESIGN FILLS ARE MEASURED FROM THE TOP OF TOP SLAB TO THE TOP OF EARTH FILL OR ROADWAY.

CULVERTS MEET STRENGTH AND SERVICEABILITY REQUIREMENTS FOR THE DESIGN VEHICULAR LIVE LOAD HL-93 MINUS THE LANE LOAD.

MISSOURI HIGHWAYS AND TRANSPORTATION COMMISSION
105 WEST CAPITOL
JEFFERSON CITY, MO 65102
1-888-ASK-MODOT (1-888-275-6636)

STATE OF MISSOURI
DENNIS W. HECKMAN
NUMBER PE-27141
PROFESSIONAL ENGINEER
THIS SHEET HAS BEEN SIGNED, SEALED AND DATED ELECTRONICALLY.

CONCRETE SINGLE BOX CULVERT

MEMBER THICKNESS
BAR SIZE, SPACING & DIMENSIONS

SPAN (S): 12 FEET
HEIGHT (HT): 6 THRU 15 FEET

DATE EFFECTIVE: 04/01/2011
DATE PREPARED: 4/18/2011

703.17

SHEET NO. 10 OF 14

IF A SEAL IS PRESENT ON THIS SHEET IT HAS BEEN ELECTRONICALLY SEALED AND DATED.

SPAN (S) = 13 FT HEIGHT (HT) = 7 FT OR 8 FT OR 9 FT

DESIGN FILL	MEMBER THICKNESS			TOP SLAB BARS								BOTTOM SLAB BARS								WALL BARS		
				A1 BARS		J3 BARS						A2 BARS		J4 BARS						B2 BARS		
	TS	BS	TX	SIZE	SPA.	SIZE	SPA.	C1	K2 HT=7′	K2 HT=8′	K2 HT=9′	SIZE	SPA.	SIZE	SPA.	C4	K3 HT=7′	K3 HT=8′	K3 HT=9′	SIZE	SPA.	G1
1 FT	13	11	8	6	6.5	5	8.5	95.1	34.0	38.0	41.9	6	7	6	7	67.3	91	103	115	5	12	12
2 FT	13	11	8	6	6	5	6.5	95.1	34.0	38.0	41.9	6	6.5	6	6.5	59.0	91	103	115	5	12	12
4 FT	10	11	8	7	7.5	6	6	49.3	31.0	34.8	38.5	6	6	6	6.5	49.3	91	103	115	5	12	0
6 FT	10	11	8	7	7.5	6	6	45.9	34.0	38.1	42.1	7	7	6	6	45.9	91	103	115	5	12	0
8 FT	10	12	8	7	7	7	6	47.5	30.3	33.9	37.5	7	7	6	7	42.6	92	104	116	5	12	0
10 FT	11	12	8	7	6.5	7	6.5	44.3	35.8	39.9	44.1	7	6	6	6	41.0	92	104	116	5	12	0
12 FT	12	13	8	7	6	7	6.5	42.6	36.4	40.6	44.8	7	6	6	6.5	39.4	93	105	117	5	12	0
14 FT	12	14	8	7	6	7	6.5	41.0	32.5	36.3	40.0	7	6	5	6	32.8	94	106	118	5	12	0
16 FT	13	15	8	8	7.5	7	6.5	39.4	33.1	36.9	40.6	7	6	5	6	31.1	95	107	119	5	12	0
18 FT	14	16	8	8	7	7	7	37.8	34.9	38.8	42.5	8	7.5	6	8	34.5	96	108	120	5	12	0
20 FT	15	18	8	8	6.5	7	7	45.9	35.9	39.6	43.5	8	7.5	5	6	31.1	98	110	122	5	11.5	0
22 FT	17	19	8	8	7	6	6	41.0	38.0	41.9	45.9	8	7.5	6	8	34.5	99	111	123	5	9.5	0
24 FT	18	20	8	8	6.5	7	7.5	45.9	38.6	42.6	46.5	8	7	6	7.5	34.5	100	112	124	5	9.5	0
26 FT	19	21	9	8	6.5	6	6	41.3	39.3	43.3	47.3	8	7	5	6	31.4	101	113	125	5	9	0
28 FT	20	22	10	8	6.5	6	6.5	41.5	41.1	45.3	49.3	8	7	5	6	33.3	102	114	126	5	10	0
30 FT	21	23	10	8	6.5	6	6.5	41.5	41.9	45.9	50.0	8	6.5	5	6	33.3	103	115	127	5	9	0
32 FT	22	24	10	8	6	6	6	41.5	42.5	46.6	50.6	8	6.5	5	6	33.3	104	116	128	5	8	0
34 FT	23	25	11	8	6	6	6.5	41.8	43.1	47.3	51.4	8	6.5	5	6.5	33.4	105	117	129	5	8.5	0
36 FT	24	26	11	8	6	6	6.5	41.8	45.1	49.4	53.5	8	6.5	5	6	33.4	106	118	130	5	8	0
38 FT	25	27	12	8	6	6	6.5	42.0	45.9	50.0	54.3	8	6.5	5	6	33.6	107	119	131	5	8.5	0
40 FT	26	28	12	8	6	6	7	42.0	46.5	50.8	55.0	8	6.5	5	6	33.6	108	120	132	5	7.5	0
42 FT	27	29	12	9	7.5	6	7	42.0	51.3	55.9	60.4	8	6	6	8.5	37.0	109	121	133	5	7	0
44 FT	28	30	12	9	7	6	7	42.0	52.0	56.6	61.1	8	6	6	8	37.0	110	122	134	5	7	0
46 FT	29	30	12	9	7	6	7	42.0	53.9	58.5	63.1	8	6	6	7.5	37.0	110	122	134	5	7	0
48 FT	30	31	12	9	7	6	7	42.0	54.6	59.3	64.0	8	6	6	7.5	37.0	111	123	135	5	7	0
50 FT	30	32	12	9	7	6	6.5	42.0	55.0	59.6	64.4	8	6	6	7.5	37.0	112	124	136	5	7	0

SPAN (S) = 13 FT HEIGHT (HT) = 10 FT OR 11 FT OR 12 FT

DESIGN FILL	MEMBER THICKNESS			TOP SLAB BARS								BOTTOM SLAB BARS								WALL BARS		
				A1 BARS		J3 BARS						A2 BARS		J4 BARS						B2 BARS		
	TS	BS	TX	SIZE	SPA.	SIZE	SPA.	C1	K2 HT=10′	K2 HT=11′	K2 HT=12′	SIZE	SPA.	SIZE	SPA.	C4	K3 HT=10′	K3 HT=11′	K3 HT=12′	SIZE	SPA.	G1
1 FT	12	12	9	6	6.5	5	6	95.8	33.4	36.3	39.1	6	7	6	6.5	99.0	128	140	152	5	9	12
2 FT	12	13	9	6	6	6	7	99.0	32.3	35.0	37.8	6	6.5	6	7	99.0	129	141	153	5	9	12
4 FT	10	11	9	7	7.5	6	6	72.6	34.0	37.0	40.0	7	7.5	6	6	77.5	127	139	151	5	8.5	0
6 FT	10	11	10	6	6	6	6	61.4	34.0	37.0	40.0	7	7.5	6	6	63.1	127	139	151	5	9	0
8 FT	10	12	10	7	7.5	7	6	59.8	34.3	37.3	40.3	7	7	6	6.5	59.8	128	140	152	5	9	0
10 FT	11	13	10	7	7	6	6	54.8	36.1	39.3	42.4	7	6.5	6	6.5	56.5	129	141	153	5	8.5	0
12 FT	12	14	10	7	6.5	6	6	51.5	33.9	36.8	39.6	7	6.5	6	6	53.1	130	142	154	5	8	0
14 FT	12	14	10	7	6.5	6	6	48.1	33.9	36.8	39.6	7	6	6	6	48.1	130	142	154	5	9.5	0
16 FT	13	15	10	7	6	7	7	51.5	34.4	37.3	40.1	7	6	6	6	48.1	131	143	155	5	8	0
18 FT	14	16	11	7	6	7	7.5	51.8	39.1	42.4	45.6	8	7.5	6	6.5	48.4	132	144	156	5	8.5	0
20 FT	15	18	11	8	7.5	7	7	58.5	37.0	40.0	43.0	8	7.5	6	7	46.8	134	146	158	5	7.5	0
22 FT	17	19	12	8	7.5	6	6	53.8	39.3	42.4	45.5	8	7.5	6	7	48.8	135	147	159	5	7.5	0
24 FT	18	20	12	8	7	7	7.5	58.8	39.8	42.9	46.0	8	7	6	6.5	48.8	136	148	160	5	7	0
26 FT	19	21	13	8	7	7	8	59.1	40.3	43.4	46.5	8	7	6	7	49.0	137	149	161	5	7	0
28 FT	20	22	13	8	7	7	7.5	59.1	42.4	45.6	48.9	8	7	6	6.5	49.0	138	150	162	5	6.5	0
30 FT	21	23	14	8	7	7	8	59.5	46.1	49.6	53.1	8	7	6	7	49.3	139	151	163	5	7	0
32 FT	22	24	14	8	6.5	7	7.5	59.5	46.8	50.1	53.6	8	6.5	6	6.5	49.3	140	152	164	5	6	0
34 FT	23	25	14	8	6.5	7	7	59.5	44.0	47.3	50.5	8	6.5	6	6.5	49.3	141	153	165	5	6	0
36 FT	24	26	15	8	6.5	7	7.5	59.9	49.5	53.1	56.8	8	6.5	6	6.5	49.6	142	154	166	5	6	0
38 FT	25	27	15	8	6	7	7.5	59.9	50.1	53.8	57.3	8	6.5	6	6.5	49.6	143	155	167	6	8	0
40 FT	26	28	15	8	6	7	7	59.9	50.8	54.3	57.9	8	6.5	6	6.5	49.6	144	156	168	6	8	0
42 FT	27	29	16	8	6	7	7.5	60.3	51.3	54.9	58.5	8	6	6	6.5	49.9	145	157	169	6	8	0
44 FT	28	30	16	8	6	7	7.5	60.3	53.6	57.4	61.1	8	6	6	6.5	49.9	146	158	170	6	8	0
46 FT	28	30	16	9	7	7	6.5	60.3	53.6	57.4	61.1	8	6	6	6	49.9	146	158	170	6	8	0
48 FT	29	31	17	9	7	7	7.5	60.5	54.3	58.0	61.8	8	6	6	6.5	50.1	147	159	171	6	7.5	0
50 FT	30	32	17	9	7	7	7.5	60.5	54.9	58.6	62.3	8	6	6	6.5	50.1	148	160	172	6	7.5	0

SPAN (S) = 13 FT HEIGHT (HT) = 13 FT OR 14 FT

DESIGN FILL	MEMBER THICKNESS			TOP SLAB BARS							BOTTOM SLAB BARS							WALL BARS		
				A1 BARS		J3 BARS					A2 BARS		J4 BARS					B2 BARS		
	TS	BS	TX	SIZE	SPA.	SIZE	SPA.	C1	K2 HT=13′	K2 HT=14′	SIZE	SPA.	SIZE	SPA.	C4	K3 HT=13′	K3 HT=14′	SIZE	SPA.	G1
1 FT	12	12	9	6	6	6	6.5	99.0	36.8	39.3	6	6.5	6	6	99.0	164	176	5	8.5	12
2 FT	12	12	9	7	8	6	6.5	99.0	36.8	39.3	6	6	6	6	99.0	164	176	5	8	12
4 FT	10	12	10	6	6	6	6	99.6	34.6	37.0	7	8	6	6	99.6	164	176	5	8	0
6 FT	11	13	10	6	6	6	6.5	84.6	35.0	37.4	6	6	6	6.5	99.6	165	177	5	7.5	0
8 FT	11	13	10	6	6	7	6.5	74.8	35.0	37.4	7	7	6	6	84.6	165	177	5	7	0
10 FT	11	13	11	7	7.5	7	6.5	68.5	35.0	37.4	7	6.5	6	6	70.1	165	177	5	7.5	0
12 FT	12	14	12	7	7	6	6.5	62.1	37.1	39.8	7	6.5	6	6.5	67.3	166	178	5	7	0
14 FT	13	15	12	7	7	6	6	62.1	37.6	40.1	7	6	6	6	65.5	167	179	5	7	0
16 FT	13	15	12	7	6.5	7	7	60.5	37.6	40.1	7	6	6	6.5	58.8	167	179	5	7	0
18 FT	14	17	13	7	6.5	7	8	59.1	38.3	40.8	7	6	6	6.5	59.1	169	181	5	6.5	0
20 FT	15	18	13	7	6	7	7	67.6	40.5	43.1	7	6	6	6	59.1	170	182	5	6.5	0
22 FT	17	19	14	7	6	7	7.5	68.0	41.1	43.8	7	6	6	6	59.5	171	183	5	6	0
24 FT	18	20	14	7	6	7	7.5	66.3	43.5	46.3	8	7.5	6	6	59.5	172	184	5	6	0
26 FT	19	21	15	8	7.5	7	7.5	66.8	43.9	46.8	8	7	6	6	58.1	173	185	6	8	0
28 FT	20	22	15	8	7	7	7	66.8	44.4	47.1	8	7	6	6	58.1	174	186	6	8	0
30 FT	21	23	16	8	7	7	7	67.1	46.8	49.6	8	7	6	6	58.5	175	187	6	8	0
32 FT	22	24	16	8	7	7	7	67.1	49.3	52.3	8	7	7	7.5	61.9	176	188	6	8	0
34 FT	23	25	17	8	6.5	7	7	67.5	47.8	50.6	8	6.5	6	6	58.9	177	189	6	7.5	0
36 FT	24	26	17	8	6.5	7	6.5	67.5	52.3	55.4	8	6.5	7	7.5	62.3	178	190	6	7.5	0
38 FT	25	27	18	8	6.5	7	7	67.9	50.8	53.8	8	6.5	6	6	59.1	179	191	6	7	0
40 FT	25	28	18	8	6	7	6	67.9	51.0	54.0	8	6.5	6	6	59.1	180	192	6	7	0
42 FT	26	29	19	8	6	7	6.5	68.3	51.5	54.5	8	6.5	6	6	59.5	181	193	6	6.5	0
44 FT	27	30	19	8	6	7	6	68.3	52.0	55.0	8	6	6	6	59.5	182	194	6	6.5	0
46 FT	28	31	20	8	6	7	6.5	68.6	52.5	55.5	8	6	6	6	59.9	183	195	6	6.5	0
48 FT	29	31	20	8	6	7	6	68.6	57.0	60.3	8	6	7	7.5	63.4	183	195	6	6.5	0
50 FT	30	32	21	9	7.5	7	7	69.0	55.4	58.5	8	6	6	6	60.1	184	196	6	6	0

SPAN (S) = 13 FT HEIGHT (HT) = 15 FT OR 16 FT

DESIGN FILL	MEMBER THICKNESS			TOP SLAB BARS							BOTTOM SLAB BARS							WALL BARS		
				A1 BARS		J3 BARS					A2 BARS		J4 BARS					B2 BARS		
	TS	BS	TX	SIZE	SPA.	SIZE	SPA.	C1	K2 HT=15′	K2 HT=16′	SIZE	SPA.	SIZE	SPA.	C4	K3 HT=15′	K3 HT=16′	SIZE	SPA.	G1
1 FT	13	13	11	6	6.5	5	6	98.5	34.1	36.3	6	6.5	6	7	100.3	189	201	5	7	12
2 FT	13	13	11	6	6.5	6	7.5	100.3	36.1	38.4	6	6.5	6	6.5	100.3	189	201	5	7	12
4 FT	10	13	11	6	6	6	6	100.3	35.6	37.8	6	6	6	6	100.3	189	201	5	6	0
6 FT	10	13	12	6	6.5	6	6	100.8	35.6	37.8	6	6	6	6	100.8	189	201	5	6	0
8 FT	11	13	12	6	6	6	6	94.1	35.9	38.0	7	7.5	6	6	100.8	189	201	6	8	0
10 FT	12	14	13	6	6	6	6.5	81.1	36.1	38.4	7	7	6	6	103.1	190	202	6	8.5	0
12 FT	13	15	14	6	6	6	6.5	74.8	38.6	40.9	7	7	6	6	85.0	191	203	5	6	0
14 FT	14	16	14	7	7.5	6	6	74.8	39.0	41.3	7	6.5	6	6	85.0	192	204	6	8	0
16 FT	14	16	14	7	7	6	6	68.0	39.0	41.3	7	6.5	6	6	73.1	192	204	5	6	0
18 FT	15	17	14	7	6.5	7	7.5	78.3	43.5	46.0	7	6	7	7	76.5	193	205	6	8	0
20 FT	16	18	15	7	6.5	7	7.5	78.6	43.9	46.4	7	6	7	8	75.3	194	206	6	8	0
22 FT	17	19	16	7	6.5	7	7.5	77.4	46.4	49.0	7	6	7	8	74.0	195	207	6	8	0
24 FT	18	20	16	7	6	7	7	77.4	46.9	49.5	8	7.5	7	7	74.0	196	208	6	8	0
26 FT	19	21	17	7	6	7	7	77.9	49.5	52.3	8	7.5	7	7	74.4	197	209	6	7.5	0
28 FT	20	23	18	7	6	7	7	78.3	48.0	50.6	8	7.5	7	7	74.9	199	211	6	7	0
30 FT	21	23	18	8	7.5	7	7	78.3	52.5	55.5	8	7	7	6.5	74.9	199	211	6	7	0
32 FT	22	24	19	8	7	7	7	78.8	53.0	55.9	8	7	7	6.5	73.5	200	212	6	6.5	0
34 FT	23	25	19	8	7	7	6	78.8	53.5	56.4	8	6.5	7	6	73.5	201	213	6	6.5	0
36 FT	24	26	20	8	7	7	6.5	79.3	54.0	56.9	8	6.5	7	6.5	73.9	202	214	6	6.5	0
38 FT	25	27	21	8	6.5	7	6.5	79.6	56.8	59.8	8	6.5	7	7	74.4	203	215	6	6	0
40 FT	25	28	22	8	6.5	7	6	78.4	57.0	60.0	8	6.5	7	7	74.8	204	216	6	6	0
42 FT	26	29	22	8	6.5	7	6	80.1	57.5	60.5	8	6.5	7	7	74.8	205	217	6	6	0
44 FT	27	30	23	8	6.5	7	6	80.5	58.0	61.0	8	6.5	7	7	75.1	206	218	7	7.5	0
46 FT	28	31	24	8	6	7	6.5	81.0	58.5	61.5	8	6	7	7	75.6	207	219	7	7.5	0
48 FT	29	31	24	8	6	7	6	81.0	61.1	64.3	8	6	7	6.5	75.6	207	219	7	7.5	0
50 FT	29	32	25	8	6	7	6	79.6	59.0	62.0	8	6	7	6.5	76.0	208	220	7	7	0

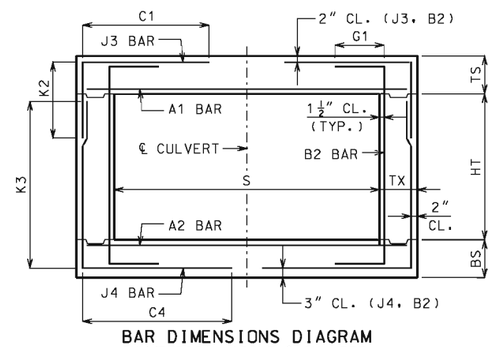

BAR DIMENSIONS DIAGRAM
SYMMETRICAL ABOUT ℄ CULVERT.

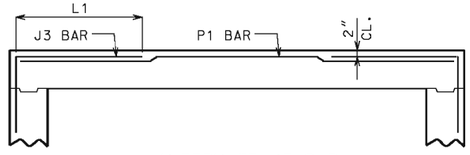

ALTERNATE J3 BAR

AT CONTRACTOR'S OPTION, ALTERNATE J3 BARS MAY BE USED WHEN THE DISTANCE BETWEEN THE ENDS OF J3 BARS IN THE TOP SLAB IS LESS THAN 2′-0″, DIMENSION L1 (NOT C1) SHALL BE USED WITH ALTERNATE J3 BARS, WHERE L1 IS EQUAL TO 18″, 22″ AND 28″ FOR #4, #5 AND #6 BARS, RESPECTIVELY. ADDITIONAL P1 BARS ARE REQUIRED WITH ALTERNATE J3 BARS WITH A LENGTH EQUAL TO A1 BARS, AND SIZE AND SPACING EQUAL TO J3 BARS. NO ADDITIONAL PAYMENT WILL BE MADE FOR THIS SUBSTITUTION.

GENERAL NOTES:

IF DESIGN FILL IS BETWEEN TABULATED DESIGN FILLS, USE THE NEXT GREATER TABULATED DESIGN FILL, EXCEPT FOR DESIGN FILLS BETWEEN 2 FEET AND 4 FEET. FOR DESIGN FILLS BETWEEN 2 FEET AND 4 FEET USE THE GREATER MEMBER THICKNESS, AREA OF REINFORCEMENT AND BAR DIMENSIONS FROM THE 2 FEET AND 4 FEET TABULATED DESIGN FILLS. AREA OF REINFORCEMENT EQUALS BAR AREA PER FOOT SPACING.

SPECIAL DESIGNS ARE REQUIRED WHEN THE DESIGN FILL IS LESS THAN 1 FOOT OR GREATER THAN 50 FEET.

DIMENSIONS ARE IN INCHES UNLESS OTHERWISE SPECIFIED.

DESIGN FILLS ARE MEASURED FROM THE TOP OF TOP SLAB TO THE TOP OF EARTH FILL OR ROADWAY.

CULVERTS MEET STRENGTH AND SERVICEABILITY REQUIREMENTS FOR THE DESIGN VEHICULAR LIVE LOAD HL-93 MINUS THE LANE LOAD.

MISSOURI HIGHWAYS AND TRANSPORTATION COMMISSION
105 WEST CAPITOL
JEFFERSON CITY, MO 65102
1-888-ASK-MODOT (1-888-275-6636)

STATE OF MISSOURI
DENNIS W. HECKMAN
NUMBER PE-27141
PROFESSIONAL ENGINEER
THIS SHEET HAS BEEN SIGNED, SEALED AND DATED ELECTRONICALLY.

CONCRETE SINGLE BOX CULVERT

MEMBER THICKNESS
BAR SIZE, SPACING & DIMENSIONS

SPAN (S): 13 FEET
HEIGHT (HT): 7 THRU 16 FEET

DATE EFFECTIVE: 04/01/2011
DATE PREPARED: 4/18/2011

703.17

SHEET NO.
11 OF 14

IF A SEAL IS PRESENT ON THIS SHEET IT HAS BEEN ELECTRONICALLY SEALED AND DATED.

SPAN (S) = 14 FT HEIGHT (HT) = 7 FT OR 8 FT OR 9 FT

DESIGN FILL	MEMBER THICKNESS			TOP SLAB BARS								BOTTOM SLAB BARS								WALL BARS		
				A1 BARS		J3 BARS						A2 BARS		J4 BARS						B2 BARS		
	TS	BS	TX	SIZE	SPA.	SIZE	SPA.	C1	K2			SIZE	SPA.	SIZE	SPA.	C4	K3			SIZE	SPA.	G1
									HT=7′	HT=8′	HT=9′						HT=7′	HT=8′	HT=9′			
1 FT	13	12	8	6	6	5	7	102.1	33.3	37.1	41.0	6	6.5	6	6.5	66.9	92	104	116	5	12	12
2 FT	13	12	8	7	8	5	6	102.1	33.3	37.1	41.0	6	6	6	6	58.1	92	104	116	5	12	12
4 FT	10	11	8	7	6.5	7	6	52.8	34.0	38.1	42.1	7	7	6	6	49.3	91	103	115	5	12	0
6 FT	11	12	8	7	7	6	6	45.8	31.6	35.4	39.0	7	7	6	7	44.0	92	104	116	5	12	0
8 FT	11	12	8	7	6.5	7	6.5	45.8	35.8	39.9	44.1	7	6	6	6	42.3	92	104	116	5	12	0
10 FT	12	13	8	7	6	7	6.5	44.0	33.3	37.1	41.0	8	7.5	6	6.5	38.8	93	105	117	5	12	0
12 FT	12	14	8	8	7	7	6	42.3	36.8	41.0	45.1	8	7	6	7	37.0	94	106	118	5	12	0
14 FT	13	16	8	8	6.5	7	6	42.3	33.5	37.3	40.9	8	7	5	6	31.6	96	108	120	5	12	0
16 FT	13	16	8	8	6.5	7	6	40.5	33.5	37.3	40.9	8	7	5	6	31.6	96	108	120	5	12	0
18 FT	15	17	8	8	6.5	7	7	45.8	35.5	39.4	43.3	8	6.5	6	7.5	35.3	97	109	121	5	12	0
20 FT	16	19	8	8	6	7	6.5	45.8	36.5	40.4	44.1	8	7	5	6	31.6	99	111	123	5	11.5	0
22 FT	18	20	8	8	6	7	7.5	45.8	38.6	42.6	46.5	8	6.5	6	7.5	35.3	100	112	124	5	9.5	0
24 FT	19	21	8	8	6	7	7	45.8	44.0	48.5	52.9	8	6.5	6	7.5	35.3	101	113	125	5	9.5	0
26 FT	21	23	9	8	6	6	6.5	42.5	41.9	45.9	50.0	8	6.5	5	6	33.6	103	115	127	5	8.5	0
28 FT	22	24	9	8	6	6	6	42.5	46.3	50.8	55.1	8	6.5	6	7	35.4	104	116	128	5	8.5	0
30 FT	23	25	10	8	6	6	6.5	42.8	43.1	47.3	51.4	8	6.5	5	6	33.9	105	117	129	5	8.5	0
32 FT	24	26	10	9	7.5	6	6	42.8	45.1	49.4	53.5	8	6	5	6	33.9	106	118	130	5	8	0
34 FT	25	27	11	9	7	6	7	43.0	45.9	50.0	54.3	8	6	5	6	34.0	107	119	131	5	8.5	0
36 FT	26	28	11	9	7	6	7	43.0	46.5	50.8	55.0	8	6	5	6	34.0	108	120	132	5	7.5	0
38 FT	27	29	11	9	7	6	7	43.0	51.3	55.9	60.4	8	6	6	7.5	37.6	109	121	133	5	7.5	0
40 FT	28	30	11	9	7	6	6.5	43.0	52.0	56.6	61.1	8	6	6	7	37.6	110	122	134	5	7.5	0
42 FT	29	31	12	9	6.5	6	7	43.3	54.3	58.9	63.6	9	7.5	6	7.5	37.8	111	123	135	5	7	0
44 FT	30	32	12	9	6.5	6	7	43.3	55.0	59.6	64.4	9	7	6	7.5	37.8	112	124	136	5	7	0
46 FT	31	33	12	9	6.5	6	7	43.3	55.8	60.5	65.1	9	7	6	7	37.8	113	125	137	5	7	0
48 FT	32	33	12	9	6.5	6	7	43.3	56.1	60.9	65.5	9	7	6	7	37.8	113	125	137	5	7	0
50 FT	33	34	12	9	6.5	6	7	43.3	58.4	63.3	68.0	9	7	6	7	37.8	114	126	138	5	6.5	0

SPAN (S) = 14 FT HEIGHT (HT) = 10 FT OR 11 FT OR 12 FT

DESIGN FILL	MEMBER THICKNESS			TOP SLAB BARS								BOTTOM SLAB BARS								WALL BARS		
				A1 BARS		J3 BARS						A2 BARS		J4 BARS						B2 BARS		
	TS	BS	TX	SIZE	SPA.	SIZE	SPA.	C1	K2			SIZE	SPA.	SIZE	SPA.	C4	K3			SIZE	SPA.	G1
									HT=10′	HT=11′	HT=12′						HT=10′	HT=11′	HT=12′			
1 FT	13	12	9	6	6	5	6.5	102.6	33.6	36.5	39.4	6	6	6	6	106.3	128	140	152	5	9	12
2 FT	13	12	9	7	7.5	5	6	102.6	33.6	36.5	39.4	7	7.5	6	6	106.3	128	140	152	5	8.5	12
4 FT	11	12	9	7	7	6	6.5	69.0	35.9	39.0	42.1	7	7.5	6	6	72.6	128	140	152	5	9	0
6 FT	11	12	9	7	7	6	6	60.1	35.9	39.0	42.1	7	6.5	6	6	62.0	128	140	152	5	9	0
8 FT	11	12	10	7	7	6	6	55.1	35.9	39.0	42.1	7	6.5	6	6	57.0	128	140	152	5	10	0
10 FT	12	13	10	7	6.5	6	6	53.4	36.4	39.5	42.6	7	6	6	6	53.4	129	141	153	5	9.5	0
12 FT	12	14	10	8	7.5	7	6	55.1	36.6	39.8	42.9	8	7	6	6	51.6	130	142	154	5	9	0
14 FT	14	16	10	8	7.5	7	7	53.4	39.1	42.4	45.6	8	7.5	6	6	49.9	132	144	156	5	8	0
16 FT	14	16	10	8	7	7	7	49.9	39.1	42.4	45.6	8	7	6	6.5	46.3	132	144	156	5	9	0
18 FT	15	17	11	8	7	7	7.5	59.1	39.8	42.9	46.1	8	7	6	6	46.5	133	145	157	5	9.5	0
20 FT	16	19	11	8	6.5	7	6.5	57.3	37.5	40.5	43.5	8	7	6	7	46.5	135	147	159	5	8	0
22 FT	18	20	12	8	7	7	7.5	57.6	39.8	42.9	46.0	8	7	6	6.5	46.8	136	148	160	5	8	0
24 FT	19	21	12	8	6.5	7	7	57.6	43.4	46.8	50.1	8	6.5	6	6.5	46.8	137	149	161	5	7.5	0
26 FT	20	23	13	8	6.5	7	7	57.9	41.1	44.3	47.4	8	6.5	6	7	47.0	139	151	163	5	7.5	0
28 FT	21	24	13	8	6	7	6.5	57.9	43.3	46.5	49.6	8	6.5	6	7	47.0	140	152	164	5	7	0
30 FT	22	25	14	8	6	7	6.5	58.3	43.8	47.0	50.3	8	6.5	6	7	47.4	141	153	165	5	7	0
32 FT	24	26	14	8	6	7	7.5	58.3	46.3	49.5	52.9	8	6	6	6.5	47.4	142	154	166	5	6.5	0
34 FT	25	27	14	8	6	7	7.5	58.3	46.8	50.1	53.5	8	6	6	6.5	47.4	143	155	167	5	6	0
36 FT	26	28	14	9	7.5	7	6.5	58.3	47.4	50.6	54.0	8	6	6	6.5	47.4	144	156	168	5	6	0
38 FT	27	29	15	9	7	7	7.5	58.5	51.3	54.9	58.5	8	6	6	6.5	47.6	145	157	169	6	8	0
40 FT	28	30	15	9	7	7	7.5	58.5	53.6	57.4	61.1	8	6	6	6.5	47.6	146	158	170	6	8	0
42 FT	29	31	15	9	7	7	6.5	58.5	54.3	58.0	61.8	9	7.5	6	6.5	47.6	147	159	171	6	8	0
44 FT	30	32	16	9	7	7	7.5	58.9	54.9	58.6	62.3	9	7	6	6.5	49.6	148	160	172	6	8	0
46 FT	31	33	16	9	6.5	7	7.5	58.9	55.5	59.3	62.9	9	7	6	6.5	49.6	149	161	173	6	8	0
48 FT	31	33	16	9	6.5	7	6.5	58.9	55.5	59.3	62.9	9	7	6	6	49.6	149	161	173	6	8	0
50 FT	32	34	17	9	6.5	7	7	59.3	56.1	59.9	63.5	9	7	6	6.5	50.0	150	162	174	6	7.5	0

SPAN (S) = 14 FT HEIGHT (HT) = 13 FT OR 14 FT

DESIGN FILL	MEMBER THICKNESS			TOP SLAB BARS							BOTTOM SLAB BARS							WALL BARS		
				A1 BARS		J3 BARS					A2 BARS		J4 BARS					B2 BARS		
	TS	BS	TX	SIZE	SPA.	SIZE	SPA.	C1	K2		SIZE	SPA.	SIZE	SPA.	C4	K3		SIZE	SPA.	G1
									HT=13′	HT=14′						HT=13′	HT=14′			
1 FT	12	12	10	6	6	6	7	105.0	36.8	39.3	6	6	6	6	105.0	164	176	5	8	12
2 FT	13	13	10	7	8	6	7	105.0	35.4	37.8	7	8	6	6.5	105.0	165	177	5	8	12
4 FT	11	12	10	7	7.5	6	6.5	105.0	36.5	39.0	7	7	6	6	105.0	164	176	5	8	0
6 FT	11	13	10	7	7.5	6	6	76.5	35.0	37.4	7	7	6	6	87.3	165	177	5	8	0
8 FT	11	13	11	7	7.5	6	6	66.3	35.0	37.4	7	6.5	6	6	71.6	165	177	5	7.5	0
10 FT	12	14	11	7	7	6	6	64.5	37.1	39.8	7	6	6	6	68.0	166	178	5	7.5	0
12 FT	13	15	12	7	6.5	6	6	61.3	37.6	40.1	7	6	6	6.5	64.8	167	179	5	7	0
14 FT	14	16	13	7	6.5	6	6	59.8	38.0	40.5	7	6	6	6.5	63.4	168	180	5	6.5	0
16 FT	14	16	13	7	6	7	8	59.8	38.0	40.5	8	7.5	6	6	56.1	168	180	5	7.5	0
18 FT	15	18	13	7	6	7	7	67.0	40.5	43.1	8	7.5	6	6.5	56.1	170	182	5	6.5	0
20 FT	16	19	13	8	7	7	6.5	65.1	40.9	43.5	8	7	6	6	56.1	171	183	5	6.5	0
22 FT	18	20	14	8	7	7	7	65.5	43.5	46.3	8	7	6	6	56.4	172	184	5	6	0
24 FT	19	22	14	8	7	7	7	65.5	44.1	46.9	8	7	6	6	56.4	174	186	5	6	0
26 FT	20	23	15	8	6.5	7	7	65.9	44.6	47.4	8	6.5	6	6	56.8	175	187	6	8	0
28 FT	21	24	15	8	6.5	7	6.5	65.9	45.1	47.9	8	6.5	6	6	56.8	176	188	6	8	0
30 FT	22	25	16	8	6.5	7	6.5	66.3	47.5	50.4	8	6.5	6	6	57.0	177	189	6	8	0
32 FT	23	26	16	8	6	7	6	66.3	50.0	53.0	8	6	7	8	58.9	178	190	6	8	0
34 FT	24	27	17	8	6	7	6	66.6	48.5	51.4	8	6	6	6	57.4	179	191	6	7.5	0
36 FT	25	28	17	8	6	7	6	66.6	53.0	56.1	8	6	7	8	59.3	180	192	6	7.5	0
38 FT	26	29	18	9	7.5	7	6	67.0	51.5	54.5	8	6	6	6	57.6	181	193	6	7	0
40 FT	27	30	18	9	7	7	6	67.0	54.1	57.3	8	6	7	8	61.4	182	194	6	7	0
42 FT	28	31	19	9	7	7	6	67.4	52.5	55.5	9	7.5	6	6	58.0	183	195	6	6.5	0
44 FT	29	32	19	9	7	7	6	67.4	57.3	60.5	9	7	7	8	61.8	184	196	6	6.5	0
46 FT	30	33	20	9	7	7	6.5	67.6	55.6	58.8	9	7	6	6	58.3	185	197	6	6.5	0
48 FT	31	34	20	9	6.5	7	6	67.6	58.4	61.5	9	7	7	8	62.0	186	198	6	6.5	0
50 FT	32	35	21	9	6.5	7	6.5	69.9	56.6	59.8	9	7	6	6	58.6	187	199	6	6	0

SPAN (S) = 14 FT HEIGHT (HT) = 15 FT OR 16 FT

DESIGN FILL	MEMBER THICKNESS			TOP SLAB BARS							BOTTOM SLAB BARS							WALL BARS		
				A1 BARS		J3 BARS					A2 BARS		J4 BARS					B2 BARS		
	TS	BS	TX	SIZE	SPA.	SIZE	SPA.	C1	K2		SIZE	SPA.	SIZE	SPA.	C4	K3		SIZE	SPA.	G1
									HT=15′	HT=16′						HT=15′	HT=16′			
1 FT	12	13	11	6	6	6	6	105.6	36.0	38.1	6	6	6	6.5	105.6	189	201	5	7	12
2 FT	13	14	11	6	6	6	7	105.6	38.4	40.6	6	6	6	6.5	105.6	190	202	5	7	12
4 FT	11	13	11	7	7.5	6	6	105.6	35.9	38.0	7	7.5	6	6	105.6	189	201	5	6	0
6 FT	11	13	12	6	6	6	6.5	99.0	35.9	38.0	7	7	6	6	108.0	189	201	5	6	0
8 FT	12	14	12	7	8	6	6.5	86.4	36.1	38.4	7	7	6	6	108.0	190	202	5	6	0
10 FT	12	15	13	7	7.5	6	6	74.3	36.4	38.5	7	6.5	6	6.5	90.5	191	203	5	6	0
12 FT	13	16	14	7	7	6	6	71.0	38.8	41.0	7	6.5	6	6.5	81.9	192	204	5	6	0
14 FT	14	17	14	7	6.5	7	7.5	72.8	39.1	41.4	7	6	6	6	78.3	193	205	5	6	0
16 FT	14	17	14	7	6.5	7	7.5	67.4	39.1	41.4	7	6	6	6	69.1	193	205	5	6	0
18 FT	15	18	14	7	6	7	7	76.5	43.6	46.3	8	7	7	7	72.8	194	206	5	6	0
20 FT	16	19	15	8	7.5	7	6.5	75.0	44.1	46.6	8	7	7	7.5	71.4	195	207	6	8	0
22 FT	18	20	16	8	7.5	7	7	75.5	49.0	51.8	8	7	7	7	71.8	196	208	6	8	0
24 FT	19	22	16	8	7	7	6.5	75.5	47.5	50.1	8	7	7	7	71.8	198	210	6	8	0
26 FT	20	23	17	8	7	7	6.5	75.9	48.0	50.6	8	6.5	7	7	72.1	199	211	6	7.5	0
28 FT	21	24	18	8	7	7	6.5	76.3	48.4	51.0	8	6.5	7	7	70.6	200	212	6	7	0
30 FT	22	25	18	8	6.5	7	6	76.3	51.0	53.9	8	6.5	7	6.5	70.6	201	213	6	7	0
32 FT	23	26	19	8	6.5	7	6	76.6	51.5	54.3	8	6.5	7	7	71.0	202	214	6	6.5	0
34 FT	24	27	20	8	6.5	7	6	77.1	52.0	54.8	8	6	7	7	71.5	203	215	6	6.5	0
36 FT	25	28	20	8	6	7	6	77.1	52.5	55.3	8	6	7	6.5	71.5	204	216	6	6.5	0
38 FT	26	29	21	8	6	7	6	77.5	55.3	58.1	8	6	7	7	71.9	205	217	6	6	0
40 FT	27	30	22	8	6	7	6	77.9	58.0	61.0	8	6	7	7	72.3	206	218	6	6	0
42 FT	28	31	23	8	6	7	6.5	78.3	58.5	61.5	8	6	7	7.5	72.6	207	219	7	8	0
44 FT	29	32	23	9	7.5	7	6	78.3	59.0	62.0	9	7.5	7	7	72.6	208	220	7	7.5	0
46 FT	30	33	24	9	7	7	6	78.8	61.9	65.0	9	7	7	7	73.0	209	221	7	7.5	0
48 FT	31	34	25	9	7	7	6.5	79.1	62.4	65.5	9	7	7	7	73.4	210	222	7	7.5	0
50 FT	32	35	25	9	7	7	6	79.1	62.9	66.0	9	7	7	7	73.4	211	223	7	7	0

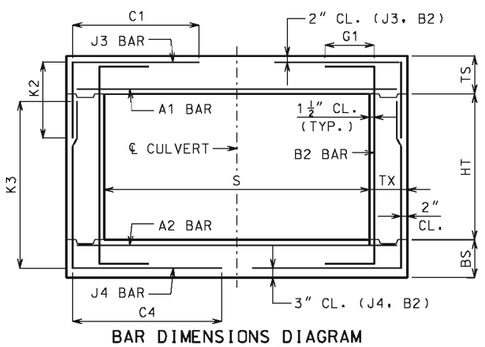

BAR DIMENSIONS DIAGRAM
SYMMETRICAL ABOUT ℄ CULVERT.

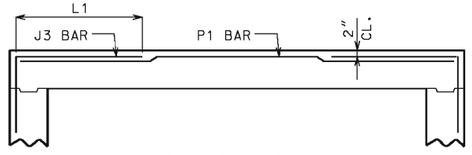

ALTERNATE J3 BAR

AT CONTRACTOR'S OPTION, ALTERNATE J3 BARS MAY BE USED WHEN THE DISTANCE BETWEEN THE ENDS OF J3 BARS IN THE TOP SLAB IS LESS THAN 2′-0″, DIMENSION L1 (NOT C1) SHALL BE USED WITH ALTERNATE J3 BARS, WHERE L1 IS EQUAL TO 18″, 22″ AND 28″ FOR #4, #5 AND #6 BARS, RESPECTIVELY. ADDITIONAL P1 BARS ARE REQUIRED WITH ALTERNATE J3 BARS WITH A LENGTH EQUAL TO A1 BARS, AND SIZE AND SPACING EQUAL TO J3 BARS. NO ADDITIONAL PAYMENT WILL BE MADE FOR THIS SUBSTITUTION.

GENERAL NOTES:

IF DESIGN FILL IS BETWEEN TABULATED DESIGN FILLS, USE THE NEXT GREATER TABULATED DESIGN FILL, EXCEPT FOR DESIGN FILLS BETWEEN 2 FEET AND 4 FEET. FOR DESIGN FILLS BETWEEN 2 FEET AND 4 FEET USE THE GREATER MEMBER THICKNESS, AREA OF REINFORCEMENT AND BAR DIMENSIONS FROM THE 2 FEET AND 4 FEET TABULATED DESIGN FILLS. AREA OF REINFORCEMENT EQUALS BAR AREA PER FOOT SPACING.

SPECIAL DESIGNS ARE REQUIRED WHEN THE DESIGN FILL IS LESS THAN 1 FOOT OR GREATER THAN 50 FEET.

DIMENSIONS ARE IN INCHES UNLESS OTHERWISE SPECIFIED.

DESIGN FILLS ARE MEASURED FROM THE TOP OF TOP SLAB TO THE TOP OF EARTH FILL OR ROADWAY.

CULVERTS MEET STRENGTH AND SERVICEABILITY REQUIREMENTS FOR THE DESIGN VEHICULAR LIVE LOAD HL-93 MINUS THE LANE LOAD.

MISSOURI HIGHWAYS AND TRANSPORTATION COMMISSION
105 WEST CAPITOL
JEFFERSON CITY, MO 65102
1-888-ASK-MODOT (1-888-275-6636)

STATE OF MISSOURI
DENNIS W. HECKMAN
NUMBER PE-27141
PROFESSIONAL ENGINEER
THIS SHEET HAS BEEN SIGNED, SEALED AND DATED ELECTRONICALLY.

CONCRETE SINGLE BOX CULVERT

MEMBER THICKNESS BAR SIZE, SPACING & DIMENSIONS

SPAN (S): 14 FEET
HEIGHT (HT): 7 THRU 16 FEET

DATE EFFECTIVE: 04/01/2011
DATE PREPARED: 4/18/2011

703.17

SHEET NO. 12 OF 14

IF A SEAL IS PRESENT ON THIS SHEET IT HAS BEEN ELECTRONICALLY SEALED AND DATED.

SPAN (S) = 15 FT HEIGHT (HT) = 8 FT OR 9 FT OR 10 FT

DESIGN FILL	MEMBER THICKNESS			TOP SLAB BARS								BOTTOM SLAB BARS								WALL BARS		
				A1 BARS		J3 BARS						A2 BARS		J4 BARS						B2 BARS		
	TS	BS	TX	SIZE	SPA.	SIZE	SPA.	C1	K2			SIZE	SPA.	SIZE	SPA.	C4	K3			SIZE	SPA.	G1
									HT=8′	HT=9′	HT=10′						HT=8′	HT=9′	HT=10′			
1 FT	12	13	8	7	7	6	7	109.0	32.5	35.9	39.3	6	6	6	7	82.8	105	117	129	5	12	12
2 FT	12	13	8	7	6.5	6	6.5	109.0	33.6	37.1	40.6	7	7.5	6	6.5	65.8	105	117	129	5	12	12
4 FT	11	12	8	7	6	6	6	52.6	35.4	39.0	42.8	7	7	6	6	52.6	104	116	128	5	12	0
6 FT	11	12	9	7	6.5	6	6	51.0	35.4	39.0	42.8	7	6.5	6	6	49.1	104	116	128	5	12	0
8 FT	11	12	9	7	6	7	6	51.0	35.4	39.0	42.8	8	7.5	6	6	47.3	104	116	128	5	12	0
10 FT	12	14	9	8	7.5	7	6	49.1	32.8	36.1	39.5	8	7	6	7	43.5	106	118	130	5	12	0
12 FT	13	15	9	8	6.5	7	6.5	47.3	34.5	38.0	41.5	8	6.5	6	7	41.6	107	119	131	5	12	0
14 FT	14	17	9	8	6.5	7	6.5	45.4	34.1	37.5	40.9	8	6.5	6	8	39.8	109	121	133	5	12	0
16 FT	14	17	9	8	6	7	6	43.5	34.1	37.5	40.9	8	6.5	6	8	37.8	109	121	133	5	12	0
18 FT	16	19	9	8	6	7	7	49.1	36.5	40.0	43.5	8	6.5	6	8	37.8	111	123	135	5	12	0
20 FT	17	20	9	9	7.5	7	6	49.1	37.1	40.6	44.1	8	6.5	6	7.5	37.8	112	124	136	5	11	0
22 FT	19	21	9	9	7.5	7	7	49.1	43.3	47.3	51.1	8	6	6	7	37.8	113	125	137	5	9	0
24 FT	21	23	10	8	6	6	6	43.8	41.9	45.6	49.3	8	6	6	8	38.0	115	127	139	5	9	0
26 FT	22	24	11	9	7.5	6	6	43.9	42.5	46.3	49.9	8	6	6	8	38.3	116	128	140	5	10.5	0
28 FT	23	25	11	9	7	6	6	43.9	43.1	46.8	50.5	8	6	6	8	38.3	117	129	141	5	9	0
30 FT	24	26	11	9	7	7	7.5	49.6	49.4	53.5	57.8	9	7.5	6	7	38.3	118	130	142	5	8	0
32 FT	26	28	12	9	7	6	6.5	46.1	46.4	50.3	54.1	8	6	6	8.5	38.4	120	132	144	5	8	0
34 FT	27	29	12	9	7	6	6.5	46.1	51.5	55.6	59.9	9	7.5	6	8	38.4	121	133	145	5	7.5	0
36 FT	28	30	12	9	6.5	6	6.5	46.1	52.1	56.4	60.5	9	7	6	8	38.4	122	134	146	5	7	0
38 FT	29	31	12	9	6.5	6	6	46.1	54.4	58.6	63.0	9	7	6	7.5	38.4	123	135	147	5	7	0
40 FT	30	32	13	9	6.5	6	6.5	46.4	55.1	59.4	63.8	9	7	6	7.5	40.5	124	136	148	5	6.5	0
42 FT	31	33	13	9	6.5	6	6.5	46.4	55.8	60.1	64.5	9	7	6	7	40.5	125	137	149	5	6.5	0
44 FT	32	34	13	9	6	6	6.5	46.4	56.5	60.9	65.1	9	6.5	6	7	40.5	126	138	150	5	6.5	0
46 FT	33	35	13	9	6	6	6.5	46.4	57.3	61.5	65.9	9	6.5	6	6.5	40.5	127	139	151	5	6.5	0
48 FT	34	36	13	9	6	6	6.5	46.4	59.6	64.0	68.5	9	6.5	6	6.5	40.5	128	140	152	5	6.5	0
50 FT	35	36	13	9	6	6	6.5	46.4	60.0	64.4	68.9	9	6.5	6	6	40.5	128	140	152	5	6	0

SPAN (S) = 15 FT HEIGHT (HT) = 11 FT OR 12 FT OR 13 FT

DESIGN FILL	MEMBER THICKNESS			TOP SLAB BARS								BOTTOM SLAB BARS								WALL BARS		
				A1 BARS		J3 BARS						A2 BARS		J4 BARS						B2 BARS		
	TS	BS	TX	SIZE	SPA.	SIZE	SPA.	C1	K2			SIZE	SPA.	SIZE	SPA.	C4	K3			SIZE	SPA.	G1
									HT=11′	HT=12′	HT=13′						HT=11′	HT=12′	HT=13′			
1 FT	12	12	9	7	7	6	6.5	109.6	36.3	39.1	42.0	7	7	6	6	109.6	140	152	164	5	8.5	12
2 FT	13	14	9	7	7	6	6.5	109.6	38.5	41.5	44.5	7	7.5	6	6	109.6	142	154	166	5	8.5	12
4 FT	11	12	10	7	6.5	6	6	74.1	36.0	38.9	41.8	7	7	6	6	76.0	140	152	164	5	8	0
6 FT	12	13	10	7	7	6	6.5	64.6	36.5	39.4	42.3	7	6.5	6	6.5	68.4	141	153	165	5	8	0
8 FT	12	13	10	7	6.5	6	6	58.9	36.5	39.4	42.3	7	6	6	6	62.8	141	153	165	5	8	0
10 FT	13	14	10	7	6	7	7	58.9	38.5	41.5	44.5	8	7	6	6	58.9	142	154	166	5	8	0
12 FT	13	15	10	8	7	7	6	57.0	38.8	41.8	44.8	8	6.5	7	6.5	58.9	143	155	167	5	8	0
14 FT	14	17	11	8	7	7	6.5	57.3	39.5	42.5	45.5	8	6.5	6	6	53.5	145	157	169	5	7.5	0
16 FT	14	17	11	8	6.5	7	6	53.5	39.5	42.5	45.5	8	6.5	6	6	49.6	145	157	169	5	8.5	0
18 FT	16	19	12	8	6.5	7	7	61.5	40.5	43.5	46.5	8	6.5	6	6.5	49.9	147	159	171	5	8.5	0
20 FT	17	20	12	8	6	7	6	61.5	41.0	44.0	47.0	8	6.5	6	6	49.9	148	160	172	5	7.5	0
22 FT	19	22	13	8	6.5	7	7	61.8	43.6	46.8	49.9	8	6.5	6	6.5	50.1	150	162	174	5	7.5	0
24 FT	20	23	13	8	6	7	6.5	59.9	44.3	47.4	50.5	8	6	6	6	50.1	151	163	175	5	6.5	0
26 FT	21	24	14	8	6	7	6	62.1	46.5	49.6	52.9	8	6	6	6.5	50.5	152	164	176	5	7	0
28 FT	23	25	14	8	6	7	7	60.1	47.3	50.5	53.8	8	6	6	6	50.5	153	165	177	5	6	0
30 FT	24	27	15	9	7.5	7	7	60.5	48.0	51.3	54.5	8	6	6	6.5	50.8	155	167	179	5	6	0
32 FT	25	28	15	9	7	7	6.5	60.5	50.4	53.8	57.1	8	6	6	6	50.8	156	168	180	6	8	0
34 FT	26	29	15	9	7	7	6	60.5	51.0	54.4	57.6	9	7.5	6	6	50.8	157	169	181	6	8	0
36 FT	27	30	16	9	7	7	6	60.8	51.5	54.9	58.3	9	7	6	6	51.0	158	170	182	6	8	0
38 FT	28	31	16	9	6.5	7	6	60.8	52.1	55.5	58.8	9	7	6	6	51.0	159	171	183	6	8	0
40 FT	29	32	17	9	6.5	7	6	61.1	54.5	58.0	61.5	9	7	6	6	51.3	160	172	184	6	7.5	0
42 FT	31	33	17	9	6.5	7	7	61.1	55.4	58.9	62.4	9	7	6	6	51.3	161	173	185	6	7.5	0
44 FT	32	34	17	9	6.5	7	6.5	61.1	57.9	61.5	65.1	9	6.5	6	6	51.3	162	174	186	6	7.5	0
46 FT	33	35	17	9	6	7	6	61.1	58.5	62.1	65.8	9	6.5	6	6	53.3	163	175	187	6	7.5	0
48 FT	34	36	18	9	6	7	7	61.4	59.1	62.8	66.3	9	6.5	6	6	53.5	164	176	188	6	7	0
50 FT	34	37	18	9	6	7	6	61.4	59.4	63.0	66.6	9	6.5	6	6	53.5	165	177	189	6	7	0

SPAN (S) = 15 FT HEIGHT (HT) = 14 FT OR 15 FT OR 16 FT

DESIGN FILL	MEMBER THICKNESS			TOP SLAB BARS								BOTTOM SLAB BARS								WALL BARS		
				A1 BARS		J3 BARS						A2 BARS		J4 BARS						B2 BARS		
	TS	BS	TX	SIZE	SPA.	SIZE	SPA.	C1	K2			SIZE	SPA.	SIZE	SPA.	C4	K3			SIZE	SPA.	G1
									HT=14′	HT=15′	HT=16′						HT=14′	HT=15′	HT=16′			
1 FT	13	14	11	7	8	6	7.5	112.8	36.1	38.4	40.6	7	8	6	7	112.8	178	190	202	5	7.5	12
2 FT	13	14	11	7	7.5	6	6.5	112.8	38.0	40.4	42.8	7	7.5	6	6.5	112.8	178	190	202	5	7	12
4 FT	12	13	11	7	7	6	6.5	112.8	37.6	40.0	42.4	7	7	6	6	112.8	177	189	201	5	6.5	0
6 FT	12	13	12	7	7.5	6	6.5	92.1	37.6	40.0	42.4	7	6.5	6	6	97.9	177	189	201	5	6.5	0
8 FT	12	14	13	7	7.5	6	6	77.3	37.8	40.3	42.6	7	6.5	6	6	84.9	178	190	202	5	6.5	0
10 FT	13	15	13	7	6.5	6	6	73.4	38.3	40.6	43.0	7	6	6	6	81.0	179	191	203	5	6.5	0
12 FT	14	16	14	7	6.5	7	8	73.8	38.6	41.0	43.4	8	7.5	6	6	75.6	180	192	204	5	6	0
14 FT	15	17	14	7	6	7	7	81.5	41.0	43.5	46.0	8	7	7	7.5	75.6	181	193	205	5	6	0
16 FT	16	18	15	8	7.5	7	7	80.0	45.3	48.1	50.9	8	7	7	7	74.1	182	194	206	6	8	0
18 FT	16	19	15	8	7	7	7	74.1	41.6	44.1	46.6	8	7	7	7.5	70.3	183	195	207	6	8	0
20 FT	17	20	15	8	7	7	6	74.1	46.0	48.8	51.5	8	6.5	7	7	68.3	184	196	208	6	8	0
22 FT	19	21	15	8	6.5	7	6	74.1	50.8	53.8	56.8	8	6	7	6	68.3	185	197	209	6	8	0
24 FT	20	23	16	8	6.5	7	6	74.5	47.4	50.1	52.9	8	6	7	6.5	68.6	187	199	211	6	8	0
26 FT	21	24	17	8	6	7	6	72.9	49.9	52.8	55.6	8	6	7	7	69.0	188	200	212	6	7.5	0
28 FT	23	25	17	8	6	7	6	72.9	54.9	58.0	61.1	8	6	7	6	69.0	189	201	213	6	7.5	0
30 FT	24	27	18	8	6	7	6	73.3	51.4	54.3	57.1	8	6	7	6.5	69.3	191	203	215	6	7	0
32 FT	25	28	19	8	6	7	6	73.6	49.6	52.5	55.3	8	6	7	7	69.6	192	204	216	6	6.5	0
34 FT	26	29	20	8	6	7	6	74.0	52.4	55.3	58.1	9	7.5	7	7	68.0	193	205	217	6	6.5	0
36 FT	27	30	21	9	7.5	7	6	74.4	52.8	55.6	58.5	9	7	7	7.5	68.4	194	206	218	6	6.5	0
38 FT	28	31	21	9	7	7	6	74.4	55.5	58.5	61.5	9	7	7	7	68.4	195	207	219	6	6	0
40 FT	29	32	22	9	7	7	6	74.8	60.5	63.8	67.0	9	7	7	7	68.6	196	208	220	6	6	0
42 FT	30	33	23	9	7	7	6	77.1	61.0	64.3	67.5	9	7	7	7	69.0	197	209	221	6	6	0
44 FT	31	34	24	9	6.5	7	6	77.5	61.5	64.8	68.0	9	6.5	7	7	69.4	198	210	222	6	6	0
46 FT	32	35	24	9	6.5	7	6	77.5	62.1	65.4	68.6	9	6.5	7	7	69.4	199	211	223	7	8	0
48 FT	33	36	25	9	6.5	7	6	77.9	65.0	68.4	71.6	9	6.5	7	7	69.8	200	212	224	7	8	0
50 FT	34	37	25	9	6.5	7	6	77.9	65.5	68.9	72.3	9	6.5	7	7	71.8	201	213	225	7	7.5	0

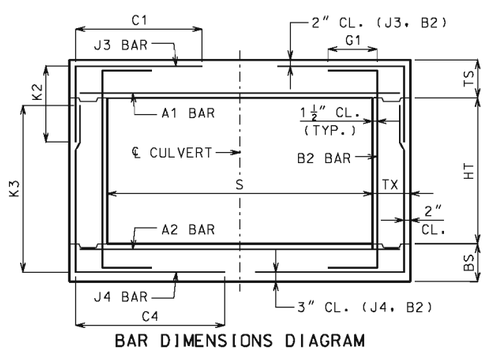

BAR DIMENSIONS DIAGRAM
SYMMETRICAL ABOUT ℄ CULVERT.

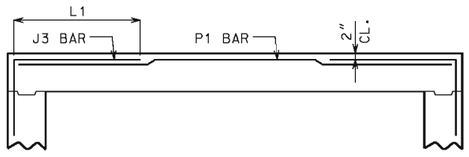

ALTERNATE J3 BAR

AT CONTRACTOR'S OPTION, ALTERNATE J3 BARS MAY BE USED WHEN THE DISTANCE BETWEEN THE ENDS OF J3 BARS IN THE TOP SLAB IS LESS THAN 2′-0″. DIMENSION L1 (NOT C1) SHALL BE USED WITH ALTERNATE J3 BARS, WHERE L1 IS EQUAL TO 18″, 22″ AND 28″ FOR #4, #5 AND #6 BARS, RESPECTIVELY. ADDITIONAL P1 BARS ARE REQUIRED WITH ALTERNATE J3 BARS WITH A LENGTH EQUAL TO A1 BARS, AND SIZE AND SPACING EQUAL TO J3 BARS. NO ADDITIONAL PAYMENT WILL BE MADE FOR THIS SUBSTITUTION.

GENERAL NOTES:

IF DESIGN FILL IS BETWEEN TABULATED DESIGN FILLS, USE THE NEXT GREATER TABULATED DESIGN FILL, EXCEPT FOR DESIGN FILLS BETWEEN 2 FEET AND 4 FEET. FOR DESIGN FILLS BETWEEN 2 FEET AND 4 FEET USE THE GREATER MEMBER THICKNESS. AREA OF REINFORCEMENT AND BAR DIMENSIONS FROM THE 2 FEET AND 4 FEET TABULATED DESIGN FILLS. AREA OF REINFORCEMENT EQUALS BAR AREA PER FOOT SPACING.

SPECIAL DESIGNS ARE REQUIRED WHEN THE DESIGN FILL IS LESS THAN 1 FOOT OR GREATER THAN 50 FEET.

DIMENSIONS ARE IN INCHES UNLESS OTHERWISE SPECIFIED.

DESIGN FILLS ARE MEASURED FROM THE TOP OF TOP SLAB TO THE TOP OF EARTH FILL OR ROADWAY.

CULVERTS MEET STRENGTH AND SERVICEABILITY REQUIREMENTS FOR THE DESIGN VEHICULAR LIVE LOAD HL-93 MINUS THE LANE LOAD.

IF A SEAL IS PRESENT ON THIS SHEET IT HAS BEEN ELECTRONICALLY SEALED AND DATED.

MISSOURI HIGHWAYS AND TRANSPORTATION COMMISSION
105 WEST CAPITOL
JEFFERSON CITY, MO 65102
1-888-ASK-MODOT (1-888-275-6636)

STATE OF MISSOURI
DENNIS W. HECKMAN
NUMBER PE-27141
PROFESSIONAL ENGINEER
THIS SHEET HAS BEEN SIGNED, SEALED AND DATED ELECTRONICALLY.

CONCRETE SINGLE BOX CULVERT

MEMBER THICKNESS BAR SIZE, SPACING & DIMENSIONS

SPAN (S): 15 FEET
HEIGHT (HT): 8 THRU 16 FEET

DATE EFFECTIVE: 04/01/2011
DATE PREPARED: 4/18/2011

703.17

SPAN (S) = 16 FT HEIGHT (HT) = 8 FT OR 9 FT OR 10 FT

DESIGN FILL	MEMBER THICKNESS			TOP SLAB BARS									BOTTOM SLAB BARS								WALL BARS		
				A1 BARS		J3 BARS							A2 BARS		J4 BARS						B2 BARS		
	TS	BS	TX	SIZE	SPA.	SIZE	SPA.	C1	K2 HT=8′	K2 HT=9′	K2 HT=10′		SIZE	SPA.	SIZE	SPA.	C4	K3 HT=8′	K3 HT=9′	K3 HT=10′	SIZE	SPA.	G1
1 FT	12	13	8	7	6.5	6	6.5	116.0	37.1	41.0	44.8		7	7.5	6	6.5	76.0	105	117	129	5	12	12
2 FT	12	13	8	7	6	6	6	116.0	37.1	41.0	44.8		7	7	6	6	64.0	105	117	129	5	12	12
4 FT	12	12	9	7	6.5	6	6.5	54.3	36.8	40.6	44.5		7	6.5	6	6	54.3	104	116	128	5	12	0
6 FT	12	12	9	7	6	6	6.5	50.3	36.8	40.6	44.5		7	6	6	6	50.3	104	116	128	5	12	0
8 FT	12	13	9	8	7.5	7	6.5	50.3	37.1	41.0	44.8		8	7	6	6	46.3	105	117	129	5	12	0
10 FT	13	14	9	8	6.5	7	6.5	48.3	37.8	41.6	45.5		8	6.5	6	6	44.3	106	118	130	5	12	0
12 FT	14	16	9	8	6.5	7	6.5	46.3	35.1	38.6	42.0		8	6.5	6	7.5	40.3	108	120	132	5	12	0
14 FT	15	18	9	8	6	7	6	52.3	36.0	39.5	42.9		8	6	6	8	38.3	110	122	134	5	12	0
16 FT	16	19	9	9	7	7	6	50.3	36.5	40.0	43.5		8	6	6	7.5	38.3	111	123	135	5	12	0
18 FT	17	20	9	9	7	7	6.5	50.3	37.1	40.6	44.1		8	6	6	8	38.3	112	124	136	5	12	0
20 FT	19	21	9	9	7	7	7	50.3	39.3	42.9	46.5		8	6	6	7.5	38.3	113	125	137	5	10.5	0
22 FT	20	23	9	9	6.5	7	6.5	50.3	40.3	43.8	47.4		8	6	6	7.5	38.3	115	127	139	5	9	0
24 FT	22	24	10	9	7	7	7.5	50.5	42.5	46.3	49.9		9	7.5	6	7.5	38.4	116	128	140	5	9.5	0
26 FT	23	25	10	9	6.5	7	7	50.5	47.3	51.4	55.4		9	7	6	7	38.4	117	129	141	5	8.5	0
28 FT	25	27	11	9	6.5	6	6	46.8	45.8	49.6	53.5		9	7	6	8	40.6	119	131	143	5	8.5	0
30 FT	26	28	11	9	6.5	6	6	46.8	46.4	50.3	54.1		9	7	6	8	40.6	120	132	144	5	7.5	0
32 FT	28	29	11	9	6.5	6	6.5	46.8	53.3	57.6	61.9		9	7	6	7	40.6	121	133	145	5	7.5	0
34 FT	29	31	12	9	6.5	6	6.5	46.9	54.4	58.6	63.0		9	7	6	7.5	40.8	123	135	147	5	7	0
36 FT	30	32	12	9	6	6	6.5	46.9	55.1	59.4	63.8		9	6.5	6	7.5	40.8	124	136	148	5	7	0
38 FT	31	33	12	9	6	6	6.5	46.9	55.8	60.1	64.5		9	6.5	6	7	40.8	125	137	149	5	7	0
40 FT	32	34	12	9	6	6	6.5	46.9	56.5	60.9	65.1		9	6.5	6	7	40.8	126	138	150	5	7	0
42 FT	33	35	12	9	6	6	6	46.9	57.3	61.5	65.9		9	6.5	6	6.5	40.8	127	139	151	5	6.5	0
44 FT	34	36	13	10	7.5	6	6.5	47.1	59.6	64.0	68.5		9	6	6	6.5	41.0	128	140	152	5	6.5	0
46 FT	35	37	13	10	7	6	6	47.1	60.3	64.8	69.3		9	6	6	6.5	41.0	129	141	153	5	6.5	0
48 FT	36	38	13	10	7	6	6.5	47.1	61.0	65.5	69.9		9	6	6	6	41.0	130	142	154	5	6	0
50 FT	37	39	13	10	7	6	6	47.1	61.8	66.3	70.6		9	6	6	6	41.0	131	143	155	6	8.5	0

SPAN (S) = 16 FT HEIGHT (HT) = 11 FT OR 12 FT OR 13 FT

DESIGN FILL	MEMBER THICKNESS			TOP SLAB BARS									BOTTOM SLAB BARS								WALL BARS		
				A1 BARS		J3 BARS							A2 BARS		J4 BARS						B2 BARS		
	TS	BS	TX	SIZE	SPA.	SIZE	SPA.	C1	K2 HT=11′	K2 HT=12′	K2 HT=13′		SIZE	SPA.	SIZE	SPA.	C4	K3 HT=11′	K3 HT=12′	K3 HT=13′	SIZE	SPA.	G1
1 FT	12	14	9	7	6.5	6	6	116.6	36.8	39.6	42.5		7	7.5	6	6	116.6	142	154	166	5	8.5	12
2 FT	13	14	10	7	7	6	7	117.1	38.5	41.5	44.5		7	7.5	6	6	101.0	142	154	166	5	8.5	12
4 FT	12	13	10	7	6.5	6	6.5	72.8	36.5	39.4	42.3		7	6.5	6	6.5	74.8	141	153	165	5	8.5	0
6 FT	12	13	10	7	6	6	6	62.6	36.5	39.4	42.3		7	6	6	6	64.6	141	153	165	5	8.5	0
8 FT	12	14	10	7	6	7	6	62.6	36.8	39.6	42.5		8	7.5	6	6	60.6	142	154	166	5	8.5	0
10 FT	13	15	11	8	7.5	7	6.5	60.9	37.3	40.1	43.0		8	7	6	6.5	56.9	143	155	167	5	9	0
12 FT	14	16	11	8	6.5	7	6.5	58.9	39.3	42.3	45.3		8	6.5	6	6	54.8	144	156	168	5	8.5	0
14 FT	15	17	11	8	6	7	6	65.0	46.1	49.6	53.1		8	6	7	7	56.9	145	157	169	5	8	0
16 FT	16	19	12	8	6	7	6	65.3	40.5	43.5	46.5		8	6	6	6	53.0	147	159	171	5	8	0
18 FT	17	20	12	8	6	7	6.5	61.3	41.0	44.0	47.0		8	6	6	6.5	49.0	148	160	172	5	9	0
20 FT	19	21	12	8	6	7	6.5	59.1	43.4	46.5	49.6		8	6	6	6	49.0	149	161	173	5	7.5	0
22 FT	20	23	13	9	7.5	7	6.5	61.5	44.3	47.4	50.5		8	6	6	6.5	49.3	151	163	175	5	8	0
24 FT	22	24	13	9	7	7	6.5	59.5	46.8	50.0	53.3		9	7.5	6	6	49.3	152	164	176	5	6.5	0
26 FT	23	26	14	9	7	7	6.5	59.8	47.5	50.8	54.0		9	7.5	6	6.5	49.5	154	166	178	5	7	0
28 FT	24	27	14	9	7	7	6.5	59.8	48.0	51.3	54.5		9	7	6	6	49.5	155	167	179	5	6	0
30 FT	26	28	14	9	6.5	7	6	59.8	50.6	54.0	57.4		9	7	6	6	49.5	156	168	180	5	6	0
32 FT	27	29	15	9	6.5	7	6.5	60.0	51.3	54.6	58.0		9	7	6	6	49.6	157	169	181	5	6	0
34 FT	28	31	15	9	6.5	7	6	60.0	52.1	55.5	58.8		9	7	6	6	49.6	159	171	183	6	8	0
36 FT	29	32	16	9	6.5	7	6.5	60.4	54.5	58.0	61.5		9	6.5	6	6	49.9	160	172	184	6	8	0
38 FT	30	33	16	9	6	7	6	60.4	55.1	58.6	62.0		9	6.5	6	6	49.9	161	173	185	6	8	0
40 FT	32	34	16	9	6	7	6.5	60.4	57.9	61.5	65.1		9	6.5	6	6	49.9	162	174	186	6	8	0
42 FT	33	35	17	9	6	7	7	60.6	58.5	62.1	65.8		9	6.5	6	6	50.1	163	175	187	6	7.5	0
44 FT	34	36	17	9	6	7	7	60.6	59.1	62.8	66.3		9	6	6	6	50.1	164	176	188	6	7.5	0
46 FT	35	37	17	10	7.5	7	6.5	60.6	59.8	63.3	66.9		9	6	6	6	50.1	165	177	189	6	7.5	0
48 FT	36	38	18	10	7	7	7	60.9	60.3	63.9	67.5		9	6	6	6	52.5	166	178	190	6	7	0
50 FT	37	39	18	10	7	7	7	60.9	62.9	66.6	70.4		9	6	6	6	52.5	167	179	191	6	7	0

SPAN (S) = 16 FT HEIGHT (HT) = 14 FT OR 15 FT OR 16 FT

DESIGN FILL	MEMBER THICKNESS			TOP SLAB BARS									BOTTOM SLAB BARS								WALL BARS		
				A1 BARS		J3 BARS							A2 BARS		J4 BARS						B2 BARS		
	TS	BS	TX	SIZE	SPA.	SIZE	SPA.	C1	K2 HT=14′	K2 HT=15′	K2 HT=16′		SIZE	SPA.	SIZE	SPA.	C4	K3 HT=14′	K3 HT=15′	K3 HT=16′	SIZE	SPA.	G1
1 FT	13	14	11	7	7.5	6	7	117.8	38.0	40.4	42.8		7	7.5	6	6.5	117.8	178	190	202	5	7.5	12
2 FT	13	14	11	7	7	7	7.5	121.8	38.0	40.4	42.8		7	7	6	6.5	117.8	178	190	202	5	7	12
4 FT	12	14	11	7	6.5	6	6	117.8	37.8	40.3	42.6		7	6.5	6	6	117.8	178	190	202	5	6.5	0
6 FT	12	14	12	7	6.5	6	6	83.6	37.8	40.3	42.6		7	6.5	6	6	95.9	178	190	202	5	7	0
8 FT	12	14	13	7	6.5	7	6.5	77.9	37.8	40.3	42.6		7	6	6	6	80.0	178	190	202	5	6.5	0
10 FT	13	16	13	7	6	7	6.5	75.9	38.4	40.8	43.3		8	7.5	6	6	77.9	180	192	204	5	6.5	0
12 FT	14	17	14	7	6	7	6.5	72.1	40.8	43.3	45.8		8	7	7	8	76.3	181	193	205	5	6	0
14 FT	16	18	14	8	7	7	6.5	78.3	45.3	48.1	50.9		8	6.5	7	7	74.1	182	194	206	5	6	0
16 FT	17	19	15	8	7	7	6.5	78.6	47.8	50.6	53.5		8	6.5	7	6.5	72.5	183	195	207	6	8	0
18 FT	17	20	15	8	6.5	7	6.5	72.5	42.0	44.5	47.0		8	6	7	7.5	66.3	184	196	208	6	8	0
20 FT	19	21	15	8	6.5	7	6	72.5	50.8	53.8	56.8		8	6	7	6.5	66.3	185	197	209	6	8	0
22 FT	20	23	16	8	6	7	6	72.8	45.4	48.0	50.6		8	6	7	7	66.5	187	199	211	6	8	0
24 FT	22	24	16	8	6	7	6	72.8	52.3	55.3	58.3		9	7.5	7	6.5	66.5	188	200	212	6	8	0
26 FT	23	26	17	8	6	7	6	73.1	50.9	53.8	56.6		9	7.5	7	7	66.9	190	202	214	6	7.5	0
28 FT	24	27	18	9	7	7	6	73.5	51.4	54.3	57.1		9	7	7	7	67.3	191	203	215	6	7	0
30 FT	26	28	18	9	7	7	6	73.5	56.4	59.5	62.6		9	7	7	6.5	67.3	192	204	216	6	7	0
32 FT	27	30	19	9	7	7	6	73.9	55.0	58.0	61.0		9	7	7	7	67.5	194	206	218	6	6.5	0
34 FT	28	31	20	9	7	7	6	74.3	55.5	58.5	61.5		9	7	7	7	67.9	195	207	219	6	6.5	0
36 FT	29	32	21	9	6.5	7	6	74.5	53.8	56.6	59.5		9	6.5	7	7	68.1	196	208	220	6	6.5	0
38 FT	30	33	22	9	6.5	7	6	74.9	61.0	64.3	67.5		9	6.5	7	7	68.5	197	209	221	6	6.5	0
40 FT	31	34	22	9	6.5	7	6	74.9	61.5	64.8	68.0		9	6.5	7	7	68.5	198	210	222	6	6	0
42 FT	32	35	23	9	6.5	7	6	75.3	62.1	65.4	68.6		9	6.5	7	7	68.8	199	211	223	6	6	0
44 FT	34	36	23	9	6	7	6	75.3	65.3	68.6	72.0		9	6	7	6.5	68.8	200	212	224	7	8	0
46 FT	35	37	24	9	6	7	6	75.6	65.8	69.1	72.5		9	6	7	6.5	69.1	201	213	225	6	6	0
48 FT	36	38	24	9	6	7	6	75.6	66.4	69.8	73.1		9	6	7	7	69.1	202	214	226	7	7.5	0
50 FT	37	39	25	9	6	7	6	76.0	69.3	72.8	76.3		9	6	7	7	69.5	203	215	227	7	7.5	0

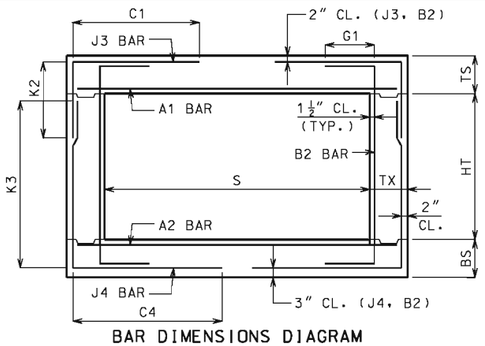

BAR DIMENSIONS DIAGRAM

SYMMETRICAL ABOUT ℄ CULVERT.

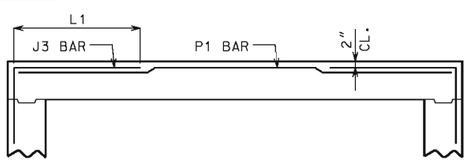

ALTERNATE J3 BAR

AT CONTRACTOR'S OPTION, ALTERNATE J3 BARS MAY BE USED WHEN THE DISTANCE BETWEEN THE ENDS OF J3 BARS IN THE TOP SLAB IS LESS THAN 2′-0″. DIMENSION L1 (NOT C1) SHALL BE USED WITH ALTERNATE J3 BARS, WHERE L1 IS EQUAL TO 18″, 22″ AND 28″ FOR #4, #5 AND #6 BARS, RESPECTIVELY. ADDITIONAL P1 BARS ARE REQUIRED WITH ALTERNATE J3 BARS WITH A LENGTH EQUAL TO A1 BARS, AND SIZE AND SPACING EQUAL TO J3 BARS. NO ADDITIONAL PAYMENT WILL BE MADE FOR THIS SUBSTITUTION.

GENERAL NOTES:

IF DESIGN FILL IS BETWEEN TABULATED DESIGN FILLS, USE THE NEXT GREATER TABULATED DESIGN FILL, EXCEPT FOR DESIGN FILLS BETWEEN 2 FEET AND 4 FEET. FOR DESIGN FILLS BETWEEN 2 FEET AND 4 FEET USE THE GREATER MEMBER THICKNESS, AREA OF REINFORCEMENT AND BAR DIMENSIONS FROM THE 2 FEET AND 4 FEET TABULATED DESIGN FILLS. AREA OF REINFORCEMENT EQUALS BAR AREA PER FOOT SPACING.

SPECIAL DESIGNS ARE REQUIRED WHEN THE DESIGN FILL IS LESS THAN 1 FOOT OR GREATER THAN 50 FEET.

DIMENSIONS ARE IN INCHES UNLESS OTHERWISE SPECIFIED.

DESIGN FILLS ARE MEASURED FROM THE TOP OF TOP SLAB TO THE TOP OF EARTH FILL OR ROADWAY.

CULVERTS MEET STRENGTH AND SERVICEABILITY REQUIREMENTS FOR THE DESIGN VEHICULAR LIVE LOAD HL-93 MINUS THE LANE LOAD.

IF A SEAL IS PRESENT ON THIS SHEET IT HAS BEEN ELECTRONICALLY SEALED AND DATED.

MISSOURI HIGHWAYS AND TRANSPORTATION COMMISSION
105 WEST CAPITOL
JEFFERSON CITY, MO 65102
1-888-ASK-MODOT (1-888-275-6636)

STATE OF MISSOURI
DENNIS W. HECKMAN
NUMBER PE-27141
PROFESSIONAL ENGINEER

THIS SHEET HAS BEEN SIGNED, SEALED AND DATED ELECTRONICALLY.

CONCRETE SINGLE BOX CULVERT

MEMBER THICKNESS BAR SIZE, SPACING & DIMENSIONS

SPAN (S): 16 FEET
HEIGHT (HT): 8 THRU 16 FEET

DATE EFFECTIVE: 04/01/2011
DATE PREPARED: 4/18/2011

703.17

SHEET NO. 14 OF 14

AREA OF STEEL REQUIRED FOR J5 BARS IN WINGS (SQ. IN./FT.)
WALL HEIGHT VS. WALL THICKNESS

① Backfill Slope = 2:1

Wall Thickness TX (in.)	Wall Height (ft.)															
	5	6	7	8	9	10	11	12	13	14	15	16	17	18	19	20
8	0.168	0.168	0.197	0.291	0.414	0.429	0.578	0.766	1.003							
9	0.168	0.168	0.168	0.244	0.346	0.456	0.477	0.626	0.809	1.034	1.312					
10	0.168	0.168	0.168	0.211	0.298	0.407	0.487	0.532	0.683	0.864	1.084	1.349				
11	0.168	0.168	0.168	0.185	0.261	0.357	0.475	0.520	0.592	0.746	0.929	1.147	1.405			
12		0.168	0.168	0.168	0.233	0.318	0.422	0.548	0.554	0.658	0.816	1.002	1.220	1.475		
13		0.168	0.168	0.168	0.210	0.287	0.380	0.493	0.588	0.589	0.729	0.892	1.081	1.301		
14			0.168	0.168	0.192	0.261	0.346	0.448	0.569	0.623	0.659	0.805	0.973	1.167	1.390	
15				0.168	0.176	0.240	0.317	0.411	0.521	0.652	0.658	0.734	0.886	1.059	1.258	
16					0.168	0.222	0.293	0.379	0.481	0.601	0.693	0.693	0.813	0.971	1.151	
17					0.168	0.206	0.273	0.352	0.447	0.557	0.686	0.729	0.752	0.897	1.061	1.247
18							0.255	0.329	0.417	0.520	0.639	0.764	0.764	0.834	0.985	1.156
19								0.309	0.391	0.487	0.599	0.727	0.800	0.800	0.920	1.078
20								0.291	0.368	0.459	0.563	0.684	0.821	0.836	0.863	1.011
21									0.348	0.433	0.532	0.645	0.774	0.871	0.871	0.952
22										0.411	0.504	0.611	0.733	0.870	0.907	0.970
23											0.479	0.580	0.696	0.826	0.943	0.943
24											0.456	0.552	0.662	0.786	0.925	0.979
25												0.527	0.632	0.750	0.882	1.015
26													0.604	0.717	0.843	0.984
27														0.686	0.807	0.942

AREA OF STEEL REQUIRED FOR J5 BARS IN WINGS (SQ. IN./FT.)
WALL HEIGHT VS. WALL THICKNESS

① Backfill Slope = 3:1

Wall Thickness TX (in.)	Wall Height (ft.)															
	5	6	7	8	9	10	11	12	13	14	15	16	17	18	19	20
8	0.168	0.168	0.168	0.187	0.264	0.362	0.425	0.475	0.612							
9	0.168	0.168	0.168	0.168	0.222	0.303	0.403	0.456	0.504	0.637	0.795					
10	0.168	0.168	0.168	0.168	0.191	0.261	0.346	0.450	0.487	0.541	0.671	0.824	1.005	1.217		
11	0.168	0.168	0.168	0.168	0.168	0.229	0.304	0.394	0.501	0.520	0.583	0.713	0.864	1.039		
12		0.168	0.168	0.168	0.168	0.204	0.271	0.351	0.445	0.554	0.554	0.629	0.760	0.910		
13		0.168	0.168	0.168	0.168	0.185	0.244	0.316	0.401	0.501	0.588	0.588	0.679	0.812	0.963	
14			0.168	0.168	0.168	0.168	0.223	0.288	0.365	0.455	0.560	0.623	0.623	0.733	0.868	
15				0.168	0.168	0.168	0.204	0.264	0.335	0.417	0.513	0.623	0.658	0.669	0.791	
16					0.168	0.168	0.189	0.244	0.309	0.385	0.474	0.575	0.690	0.693	0.727	
17					0.168	0.168	0.176	0.227	0.287	0.358	0.440	0.533	0.640	0.729	0.729	0.788
18							0.168	0.212	0.269	0.334	0.411	0.498	0.597	0.709	0.764	0.764
19								0.199	0.252	0.314	0.385	0.467	0.559	0.664	0.782	0.800
20								0.188	0.237	0.295	0.362	0.439	0.526	0.625	0.735	0.836
21									0.224	0.279	0.342	0.415	0.497	0.590	0.694	0.810
22										0.265	0.325	0.393	0.471	0.558	0.657	0.766
23											0.308	0.373	0.447	0.530	0.624	0.727
24											0.294	0.356	0.426	0.505	0.594	0.692
25												0.340	0.407	0.482	0.566	0.661
26													0.389	0.461	0.542	0.632
27														0.442	0.519	0.605

NOTE:

THE WALL HEIGHT IS EQUAL TO THE BARREL HEIGHT (HT) PLUS THE TOP SLAB THICKNESS (TS). WHEN WALL HEIGHT IS IN BETWEEN OR OUTSIDE TABULATED WALL HEIGHTS, THE AREA OF STEEL REQUIRED SHOULD BE INTERPOLATED BETWEEN OR EXTRAPOLATED FROM ADJACENT AREAS OF STEEL USING THE ACTUAL WALL HEIGHT.

IF AREA OF STEEL IN THE WALL OF THE CULVERT (J4 BARS) IS GREATER THAN THAT INDICATED IN THE TABLE, USE THE SAME SIZE AND SPACING FOR THE J5 BARS IN THE WINGS. HOWEVER, IF THE AREA OF STEEL PROVIDED BY MATCHING SIZE AND SPACING OF THE J4 BARS IS INSUFFICIENT, INCREASE THE SIZE OF THE J5 BARS (#8 MAX.) AND/OR DECREASE THE SPACING OF THE J5 BARS (6" MIN.). USE SMALLEST BAR SIZE POSSIBLE BASED ON MINIMUM SPACING.

MINIMUM STEEL TO BE USED IN THE WINGS FOR J5 BARS IS #4 BARS AT 14" CENTERS (AREA OF STEEL = 0.1683 SQ. IN./FT.)

① SEE STANDARD PLAN 703.37C, SHEET 2 OF 2 FOR BACKFILL SLOPE TO BE USED BASED ON SKEW.

MISSOURI HIGHWAYS AND TRANSPORTATION COMMISSION
105 WEST CAPITOL
JEFFERSON CITY, MO 65102
1-888-ASK-MODOT (1-888-275-6636)

STATE OF MISSOURI
DENNIS W. HECKMAN
NUMBER PE-27141
PROFESSIONAL ENGINEER

THIS SHEET HAS BEEN SIGNED, SEALED AND DATED ELECTRONICALLY.

CONCRETE BOX CULVERT

EXTERIOR WING REINFORCEMENT

DATE EFFECTIVE: 04/01/2011
DATE PREPARED: 4/18/2011

703.37C

SHEET NO. 1 OF 2

IF A SEAL IS PRESENT ON THIS SHEET IT HAS BEEN ELECTRONICALLY SEALED AND DATED.

WING BACKFILL TABLE			
WING SKEW (DEGREES)	A (DEGREES)	B TRANSITION ANGLE (DEGREES)	C BACKFILL SLOPE (H:V)
<0	>90	65	>3:1
0	90	65	3:1
5	85	58	3:1
10	80	51	3:1
15	75	43	3:1
20	70	37	3:1
25	65	29	3:1
30	60	22	3:1
35	55	33	2:1
40	50	28	2:1
45	45	23	2:1
50	40	19	2:1
55	35	14	2:1
60	30	10	2:1

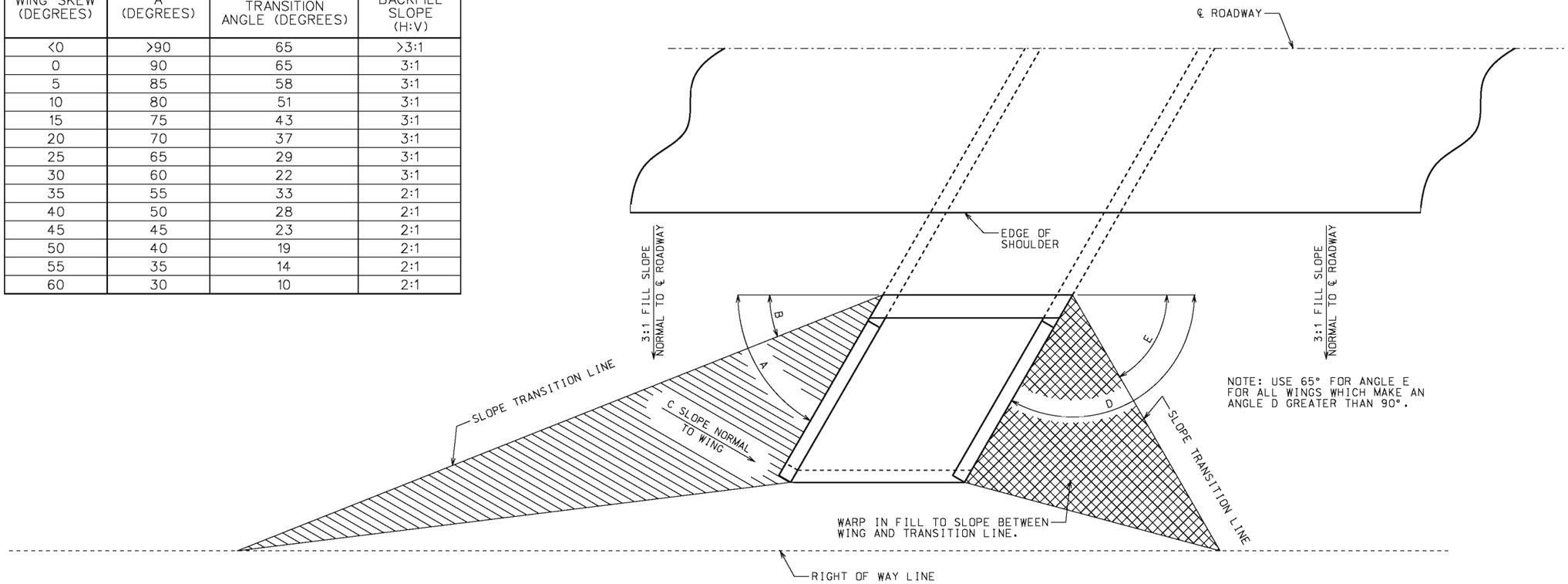

PLAN OF WINGS AND SLOPE TRANSITION LINES

NOTE: BACKFILL TRANSITION ANGLE AND BACKFILL SLOPE SHALL APPLY TO ALL BOX CULVERTS REGARDLESS OF TYPE – SINGLE, DOUBLE, OR TRIPLE.

IF A SEAL IS PRESENT ON THIS SHEET IT HAS BEEN ELECTRONICALLY SEALED AND DATED.

MISSOURI HIGHWAYS AND TRANSPORTATION COMMISSION
105 WEST CAPITOL
JEFFERSON CITY, MO 65102
1-888-ASK-MODOT (1-888-275-6636)

STATE OF MISSOURI
DENNIS W. HECKMAN
NUMBER PE-27141
PROFESSIONAL ENGINEER
THIS SHEET HAS BEEN SIGNED, SEALED AND DATED ELECTRONICALLY.

CONCRETE BOX CULVERT

EXTERIOR WING BACKFILL SLOPE TRANSITION

DATE EFFECTIVE: 04/01/2011
DATE PREPARED: 4/18/2011

703.37C

SHEET NO. 2 OF 2

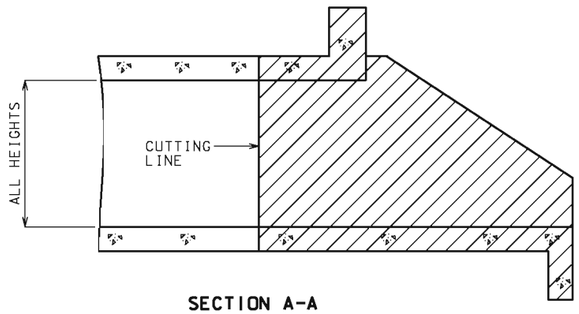

SECTION A-A

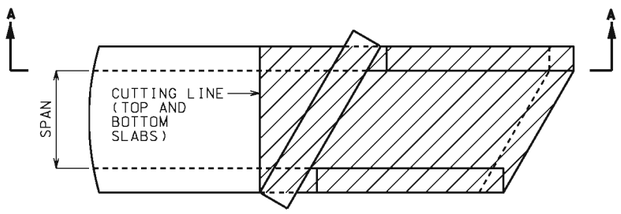

PLAN

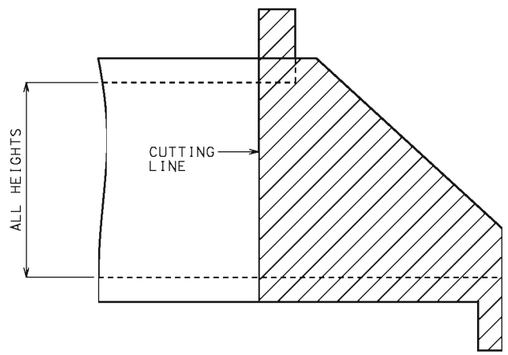

SIDE ELEVATION
NO SKEW OR SKEWS LESS THAN 20°

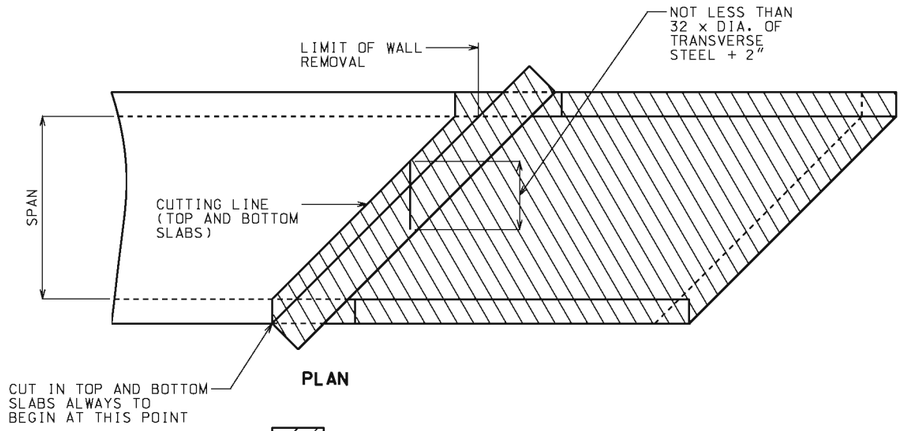

PLAN

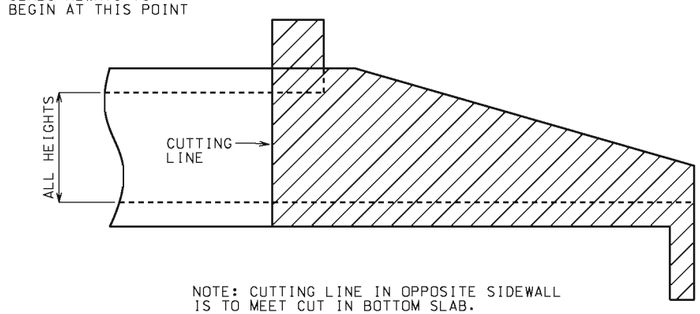

NOTE: CUTTING LINE IN OPPOSITE SIDEWALL IS TO MEET CUT IN BOTTOM SLAB.

SIDE ELEVATION
SKEW OF 20° OR MORE

GENERAL NOTES:

THE HATCHED PARTS OF THESE DRAWINGS INDICATE THOSE PORTIONS OF THE EXISTING CULVERT WHICH ARE TO BE REMOVED.

ALL REINFORCING BARS WITHIN AREAS SHOWN TO BE REMOVED, THAT ARE BONDED IN UNDISTURBED OLD CONCRETE, SHALL BE CLEANLY STRIPPED, STRAIGHTENED, AND EXTENDED INTO NEW CONCRETE.

SEE STANDARD SPECIFICATIONS FOR REQUIRED BUSHHAMMERING AND TREATING OF OLD CONCRETE SURFACES WHICH ARE TO RECEIVE NEW CONCRETE.

A CONTINUOUS V-GROOVE AT LEAST 1" IN DEPTH SHALL BE CUT ON THE FACE OF THE CONCRETE AS A GUIDE FOR THE LINE OF BREAK AND TO PREVENT SPALLING.

THE BOX EXTENSION OPENING SHALL BE BUILT TO MATCH THE EXISTING BOX OPENING. WHEN THE EXISTING OPENING DOES NOT MATCH A SIZE FROM THE TABLES, THE NEXT LARGER SIZE SHALL BE USED FOR DETERMINING THE MEMBER SIZES AND REINFORCEMENT.

MISSOURI HIGHWAYS AND TRANSPORTATION COMMISSION
105 WEST CAPITOL
JEFFERSON CITY, MO 65102
1-888-ASK-MODOT (1-888-275-6636)

STATE OF MISSOURI
DENNIS W. HECKMAN
NUMBER PE-27141
PROFESSIONAL ENGINEER
THIS SHEET HAS BEEN SIGNED, SEALED AND DATED ELECTRONICALLY.

CONCRETE BOX CULVERTS

CUTTING DETAILS EXTENSION TO STRAIGHT WINGS

DATE EFFECTIVE: 10-01-2009
DATE PREPARED: 8/18/2009

703.38A

SHEET NO. 1 OF 2

IF A SEAL IS PRESENT ON THIS SHEET IT HAS BEEN ELECTRONICALLY SEALED AND DATED.

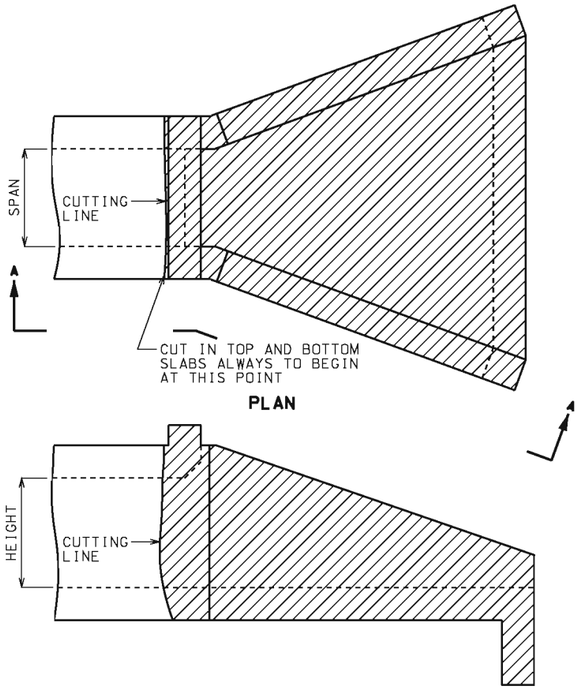

PLAN

ELEVATION A-A

NO SKEW

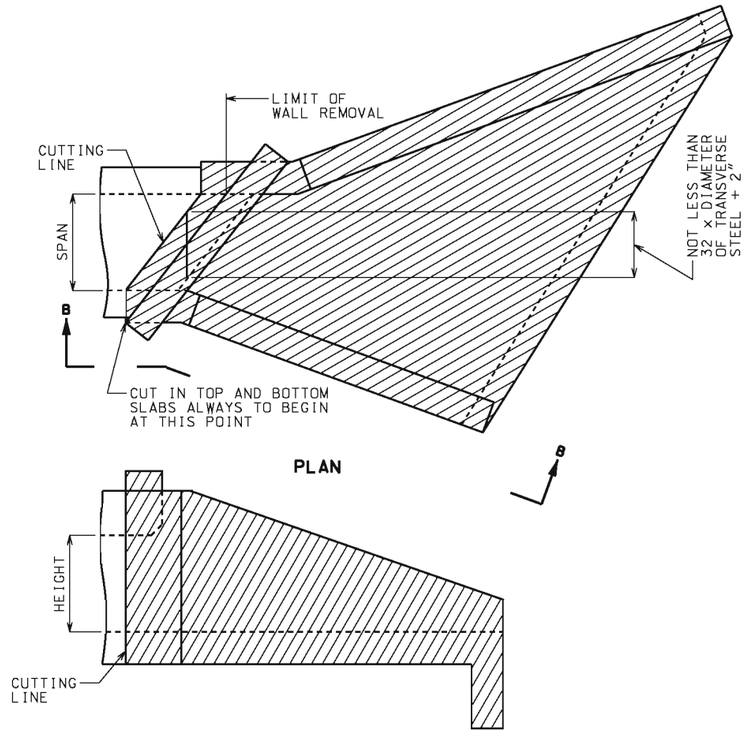

PLAN

ELEVATION B-B

SKEWS OF 20° OR MORE

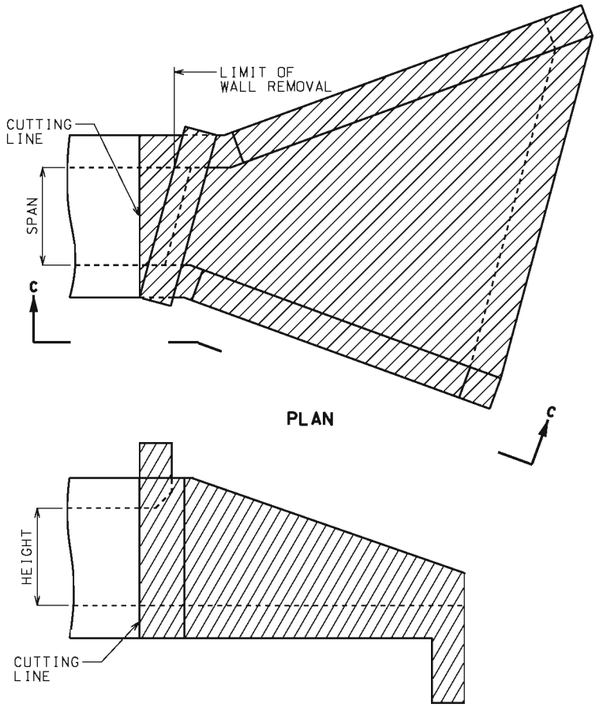

PLAN

ELEVATION C-C

SKEWS LESS THAN 20°

GENERAL NOTES:

THE HATCHED PARTS OF THESE DRAWINGS INDICATE THOSE PORTIONS OF THE EXISTING CULVERT WHICH ARE TO BE REMOVED.

ALL REINFORCING BARS WITHIN AREAS SHOWN TO BE REMOVED, THAT ARE BONDED IN UNDISTURBED OLD CONCRETE, SHALL BE CLEANLY STRIPPED, STRAIGHTENED, AND EXTENDED INTO NEW CONCRETE.

SEE STANDARD SPECIFICATIONS FOR REQUIRED BUSHHAMMERING AND TREATING OF OLD CONCRETE SURFACES WHICH ARE TO RECEIVE NEW CONCRETE.

A CONTINUOUS V-GROOVE AT LEAST 1" IN DEPTH SHALL BE CUT ON THE FACE OF THE CONCRETE AS A GUIDE FOR THE LINE OF BREAK AND TO PREVENT SPALLING.

THE BOX EXTENSION OPENING SHALL BE BUILT TO MATCH THE EXISTING BOX OPENING. WHEN THE EXISTING OPENING DOES NOT MATCH A SIZE FROM THE TABLES, THE NEXT LARGER SIZE SHALL BE USED FOR DETERMINING THE MEMBER SIZES AND REINFORCEMENT.

MISSOURI HIGHWAYS AND TRANSPORTATION COMMISSION
105 WEST CAPITOL
JEFFERSON CITY, MO 65102
1-888-ASK-MODOT (1-888-275-6636)

STATE OF MISSOURI
DENNIS W. HECKMAN
NUMBER PE-27141
PROFESSIONAL ENGINEER
THIS SHEET HAS BEEN SIGNED, SEALED AND DATED ELECTRONICALLY.

CONCRETE BOX CULVERTS

CUTTING DETAILS EXTENSION TO FLARED WINGS

DATE EFFECTIVE: 10-01-2009
DATE PREPARED: 8/18/2009

703.38A

SHEET NO. 2 OF 2

IF A SEAL IS PRESENT ON THIS SHEET IT HAS BEEN ELECTRONICALLY SEALED AND DATED.

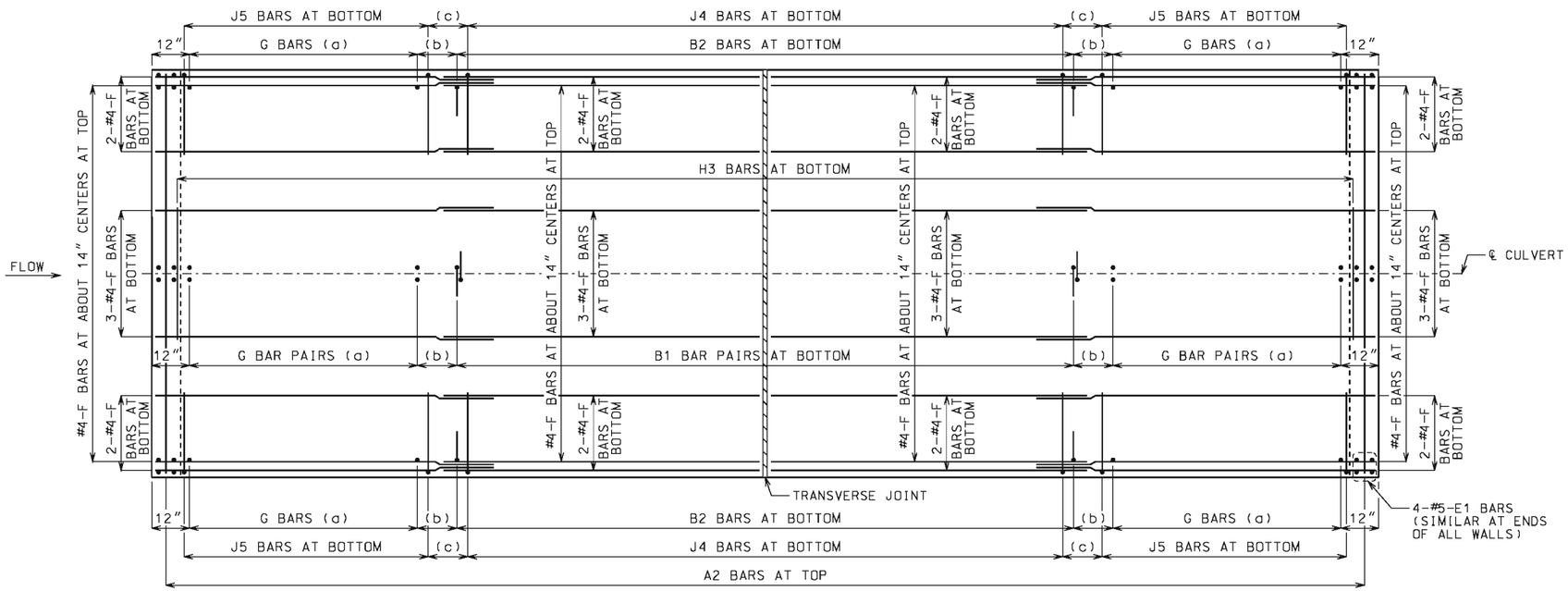

PLAN OF BOTTOM SLAB

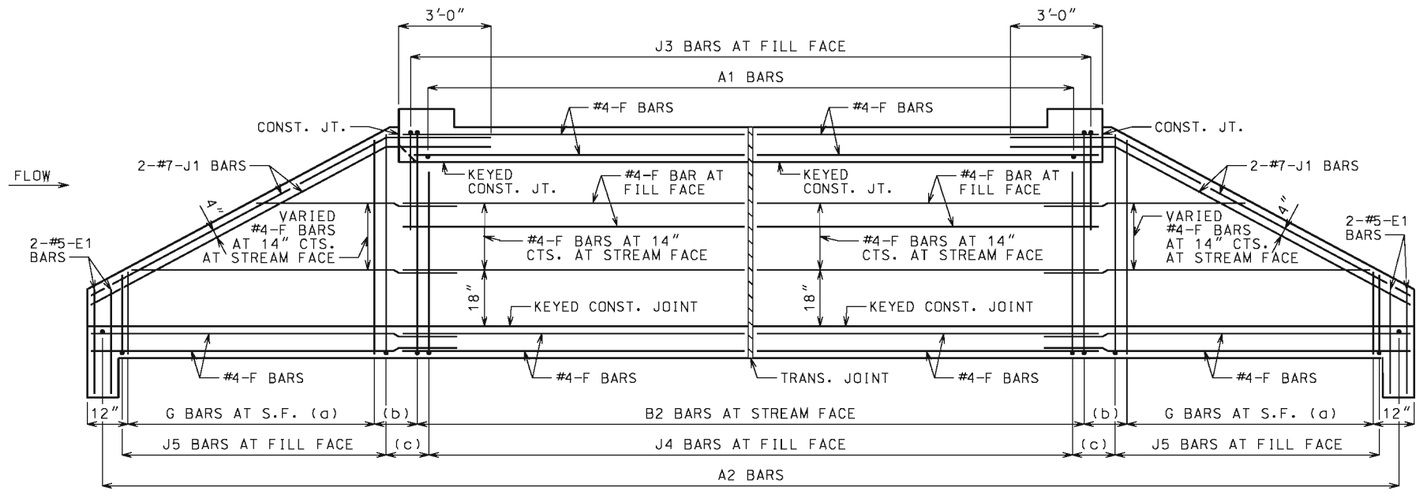

ELEVATION OF EXTERIOR WALL
J1 BARS MAY BE BENT IN FIELD OR SHOP.

LAYING OUT TRANVERSE JOINTS
UNLESS SHOWN ON BRIDGE PLANS

USE A TRANSVERSE JOINT WHEN BARREL LENGTH IS OVER 80 FEET. USE ADDITIONAL JOINTS TO LIMIT CUT SECTION LENGTH AND END SECTION BARREL LENGTH MEASURED ALONG CENTERLINE OF CULVERT TO 50 FEET.

MINIMUM END SECTION LENGTH SHALL BE 3 FEET MEASURED ALONG THE SHORTEST WALL FROM THE INSIDE FACE OF HEADWALL TO THE TRANSVERSE JOINT.

TO AVOID LOCATING TRANSVERSE JOINTS UNDER A TRAVELED WAY WITH DESIGN FILLS 2 FEET OR LESS THE FOLLOWING SHALL APPLY:

BARREL LENGTH UP TO 90 FEET WITHOUT A TRANSVERSE JOINT

CUT SECTION LENGTHS UP TO 60 FEET

WHEN BARREL AND CUT SECTION LENGTH RESTRICTIONS REQUIRE TRANSVERSE JOINTS TO BE LOCATED UNDER A TRAVELED WAY WITH DESIGN FILLS 2 FEET OR LESS, THE JOINTS SHALL BE LOCATED TO MINIMIZE THE LENGTH OF JOINT UNDER THE TRAVELED WAY.

TRAVELED WAY IS THE ROADWAY WIDTH MINUS SHOULDER WIDTHS.

FOR CUT SECTION DETAILS, SEE 703.46.

GENERAL NOTES:

FOR SECTIONS THRU BARREL, WINGS AND HEADWALLS, SEE SHEET 3 OF 3. FOR BAR SIZES, SPACING AND DIMENSIONS OF ALL REINFORCEMENT EXCEPT J5 BARS, SEE 703.47. FOR J5 BARS, SEE 703.37.

CONSTRUCTION JOINT KEY NOT SHOWN FOR CLARITY IN PLAN AND ELEVATION, SEE SHEET 3 OF 3 FOR DETAILS.

DRAWING NOT TO SCALE. FOLLOW DIMENSIONS.

MINIMUM CLEARANCE TO REINFORCING STEEL SHALL BE 1½".

LAP LONGITUDINAL BARS A MINIMUM OF 23" AT SPLICES.

BEVELED HEADWALL SHALL BE LOCATED AT UPSTREAM END.

(a) SAME SIZE AND SPACING AS ADJACENT B BARS

(b) VARIES, 12" MAXIMUM

(c) J4 BAR SPACING

MISSOURI HIGHWAYS AND TRANSPORTATION COMMISSION
105 WEST CAPITOL
JEFFERSON CITY, MO 65102
1-888-ASK-MODOT (1-888-275-6636)

STATE OF MISSOURI
DENNIS W. HECKMAN
NUMBER PE-27141
PROFESSIONAL ENGINEER
THIS SHEET HAS BEEN SIGNED, SEALED AND DATED ELECTRONICALLY.

CONCRETE DOUBLE BOX CULVERT

SKEW: SQUARED
WINGS: STRAIGHT

REINFORCEMENT

DATE EFFECTIVE: 10/01/2011
DATE PREPARED: 5/13/2015

703.40H

SHEET NO. 1 OF 3

IF A SEAL IS PRESENT ON THIS SHEET IT HAS BEEN ELECTRONICALLY SEALED AND DATED.

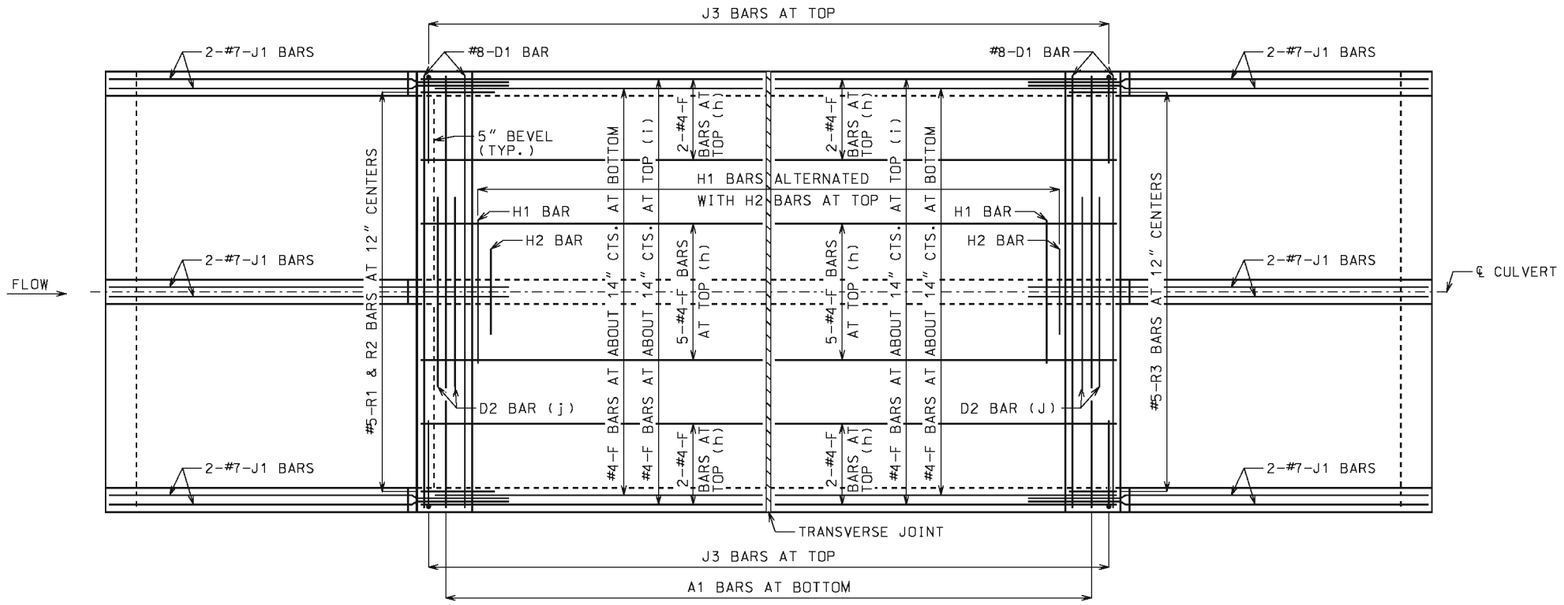

PLAN OF TOP SLAB

B BARS IN WALLS ARE NOT SHOWN FOR CLARITY.
FOR PLACEMENT, SEE SHEET 1 OF 3.

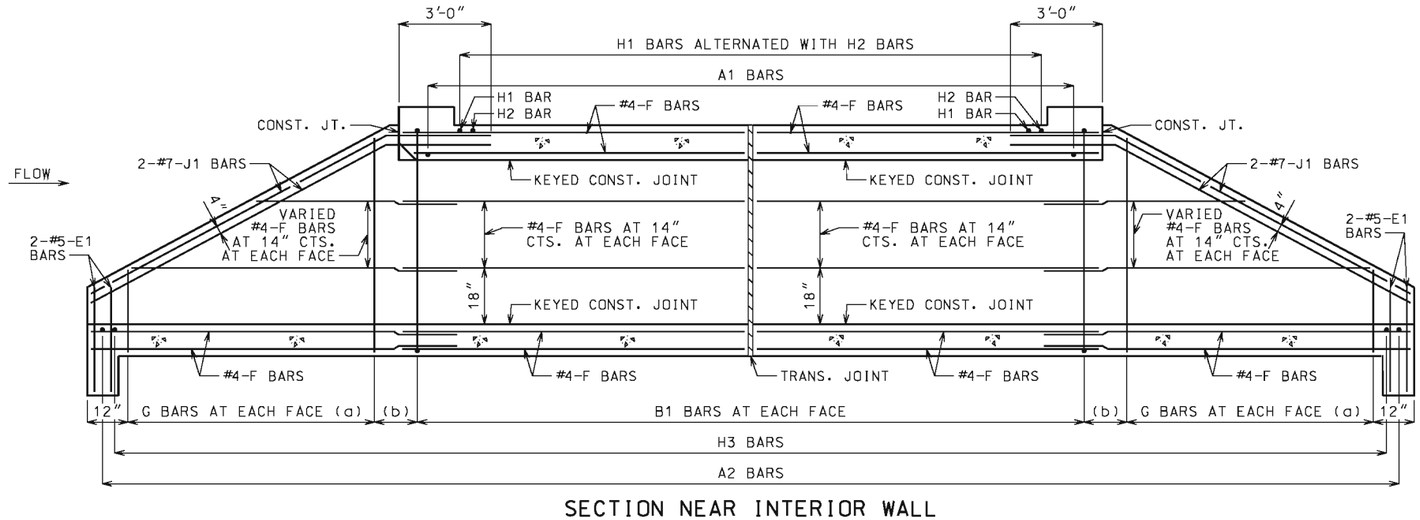

SECTION NEAR INTERIOR WALL

J1 BARS MAY BE BENT IN FIELD OR SHOP.

GENERAL NOTES:

FOR SECTIONS THRU BARREL, WINGS AND HEADWALLS, SEE SHEET 3 OF 3. FOR BAR SIZES, SPACING AND DIMENSIONS OF ALL REINFORCEMENT EXCEPT J5 BARS, SEE 703.47. FOR J5 BARS, SEE 703.37.

CONSTRUCTION JOINT KEY NOT SHOWN FOR CLARITY IN PLAN AND SECTION, SEE SHEET 3 OF 3 FOR DETAILS.

DRAWING NOT TO SCALE. FOLLOW DIMENSIONS.

MINIMUM CLEARANCE TO REINFORCING STEEL SHALL BE 1½".

LAP LONGITUDINAL BARS A MINIMUM OF 23" AT SPLICES.

BEVELED HEADWALL SHALL BE LOCATED AT UPSTREAM END.

(a) SAME SIZE AND SPACING AS ADJACENT B BARS

(b) VARIES, 12" MAXIMUM

(c) NOT SPECIFIED ON THIS SHEET

(d) NOT SPECIFIED ON THIS SHEET

(e) NOT SPECIFIED ON THIS SHEET

(f) NOT SPECIFIED ON THIS SHEET

(g) NOT SPECIFIED ON THIS SHEET

(h) FOR DESIGN FILLS OVER 2'-0"

(i) FOR DESIGN FILLS 2'-0" OR LESS

(j) NOT REQUIRED FOR CLEAR SPANS ≤ 10'-0"
#8 FOR CLEAR SPAN > 10'-0"
#9 FOR CLEAR SPAN > 13'-0"

IF REQUIRED, THE MINIMUM LENGTH EACH SIDE OF ℄ WALL SHALL BE THE GREATER OF 48 BAR DIAMETERS OR ¼ CLEAR SPAN. THE CLEAR SPAN IS PARALLEL TO LONG DIRECTION OF HEADWALL.

IF A SEAL IS PRESENT ON THIS SHEET IT HAS BEEN ELECTRONICALLY SEALED AND DATED.

MISSOURI HIGHWAYS AND TRANSPORTATION COMMISSION
105 WEST CAPITOL
JEFFERSON CITY, MO 65102
1-888-ASK-MODOT (1-888-275-6636)

STATE OF MISSOURI
DENNIS W. HECKMAN
NUMBER PE-27141
PROFESSIONAL ENGINEER
THIS SHEET HAS BEEN SIGNED, SEALED AND DATED ELECTRONICALLY.

CONCRETE DOUBLE BOX CULVERT

SKEW: SQUARED
WINGS: STRAIGHT

REINFORCEMENT

DATE EFFECTIVE: 10/01/2011
DATE PREPARED: 5/13/2015

703.40H

SHEET NO. 2 OF 3

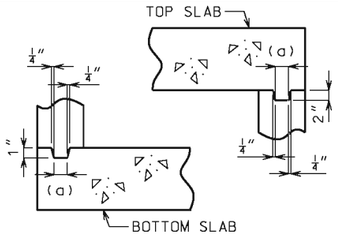

KEYED CONSTRUCTION JOINT

(a) APPROXIMATELY ONE-THIRD OF WALL THICKNESS

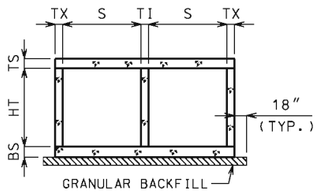

GRANULAR BACKFILL LIMITS AND MEMBER DIMENSIONS

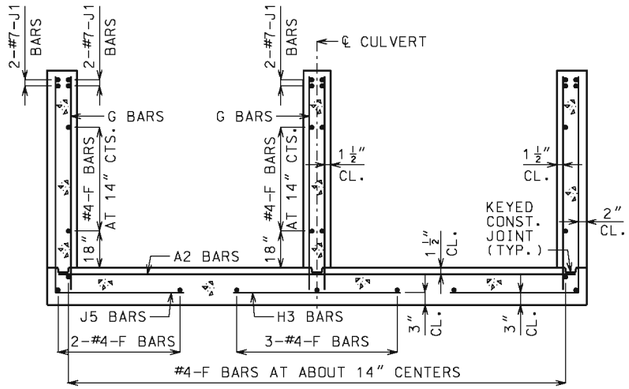

UPSTREAM AND DOWNSTREAM WINGS REINFORCEMENT

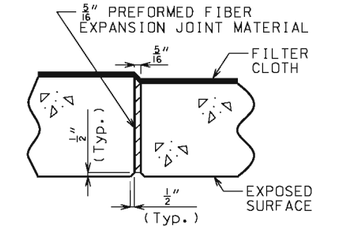

TRANSVERSE JOINT THRU BARREL

PREFORMED FIBER EXPANSION JOINT MATERIAL IN ACCORDANCE WITH SEC 1057 SHALL BE SECURELY STITCHED TO ONE FACE OF THE CONCRETE WITH 10 GAGE COPPER WIRE OR 12 GAGE SOFT DRAWN GALVANIZED STEEL WIRE.

FILTER CLOTH 3 FEET IN WIDTH AND DOUBLE THICKNESS SHALL BE CENTERED ON TRANSVERSE JOINTS IN TOP SLAB AND SIDEWALLS WITH EDGES SEALED WITH MASTIC OR TWO SIDED TAPE. FILTER CLOTH SHALL BE A SUBSURFACE DRAINAGE GEOTEXTILE IN ACCORDANCE WITH SEC 1011. COST OF FURNISHING AND INSTALLING FILTER CLOTH WILL BE CONSIDERED COMPLETELY COVERED BY THE CONTRACT UNIT PRICE FOR OTHER ITEMS.

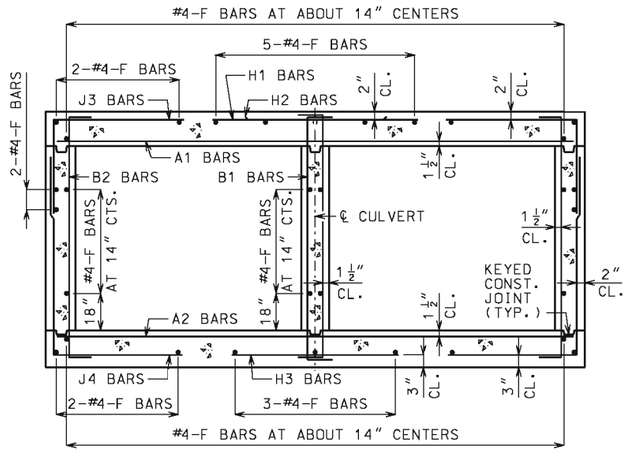

BARREL REINFORCEMENT

FOR DESIGN FILLS OVER 2'-0"

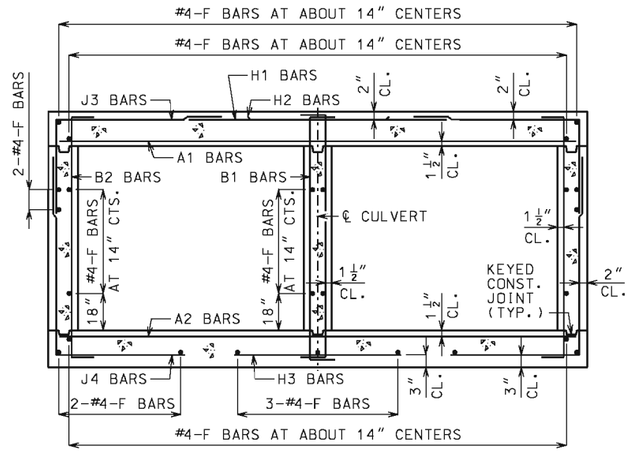

BARREL REINFORCEMENT

FOR DESIGN FILLS 2'-0" OR LESS

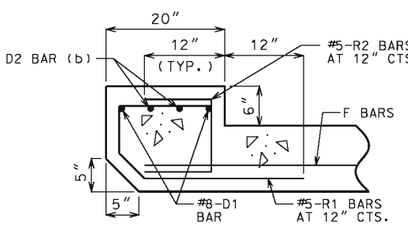

UPSTREAM HEADWALL REINFORCEMENT

NEAR INTERIOR WALL

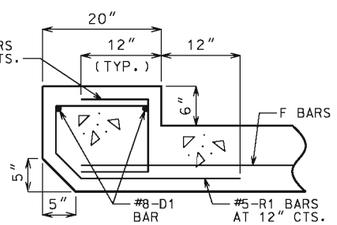

UPSTREAM HEADWALL REINFORCEMENT

NEAR MIDSPAN

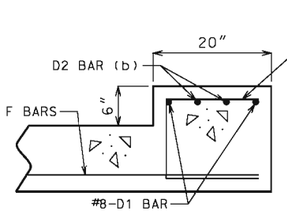

DOWNSTREAM HEADWALL REINFORCEMENT

NEAR INTERIOR WALL

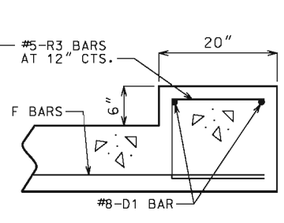

DOWNSTREAM HEADWALL REINFORCEMENT

NEAR MIDSPAN

(b) #8 FOR CLEAR SPAN > 10'-0"
#9 FOR CLEAR SPAN > 13'-0"
NOT REQUIRED FOR CLEAR SPANS ≤ 10'-0"

IF D2 BARS ARE REQUIRED. THE MINIMUM LENGTH EACH SIDE OF ℄ WALL SHALL BE THE GREATER OF 48 BAR DIAMETERS OR 1/4 CLEAR SPAN. THE CLEAR SPAN IS PARALLEL TO LONG DIRECTION OF HEADWALL.

GENERAL NOTES:

FOR MEMBER THICKNESS AND FOR BAR SIZES, SPACING AND DIMENSIONS OF ALL REINFORCEMENT EXCEPT J5 BARS, SEE 703.47. FOR J5 BARS, SEE 703.37.

BARREL AND WINGS SECTIONS ARE SYMMETRICAL ABOUT AND NORMAL TO ℄ CULVERT. HEADWALL SECTIONS ARE NORMAL TO LONG DIRECTION OF HEADWALL.

DRAWING NOT TO SCALE. FOLLOW DIMENSIONS.

MINIMUM CLEARANCE TO REINFORCING STEEL SHALL BE 1 1/2".

MISSOURI HIGHWAYS AND TRANSPORTATION COMMISSION
105 WEST CAPITOL
JEFFERSON CITY, MO 65102
1-888-ASK-MODOT (1-888-275-6636)

STATE OF MISSOURI
DENNIS W. HECKMAN
NUMBER PE-27141
PROFESSIONAL ENGINEER
THIS SHEET HAS BEEN SIGNED, SEALED AND DATED ELECTRONICALLY.

CONCRETE DOUBLE BOX CULVERT

SKEW: SQUARED
WINGS: STRAIGHT

SECTIONS

DATE EFFECTIVE: 10/01/2011
DATE PREPARED: 5/13/2015

703.40H

SHEET NO. 3 OF 3

IF A SEAL IS PRESENT ON THIS SHEET IT HAS BEEN ELECTRONICALLY SEALED AND DATED.

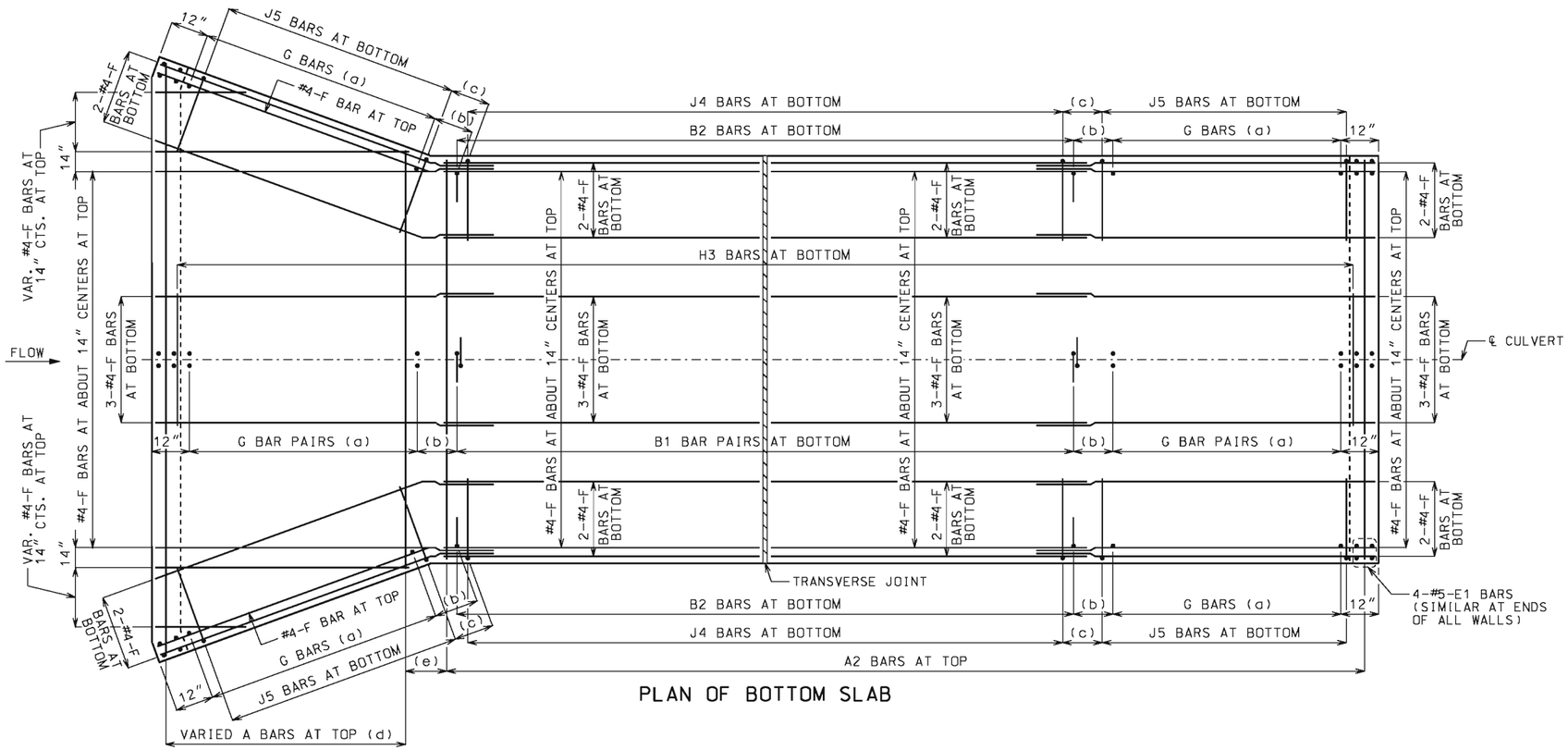

PLAN OF BOTTOM SLAB

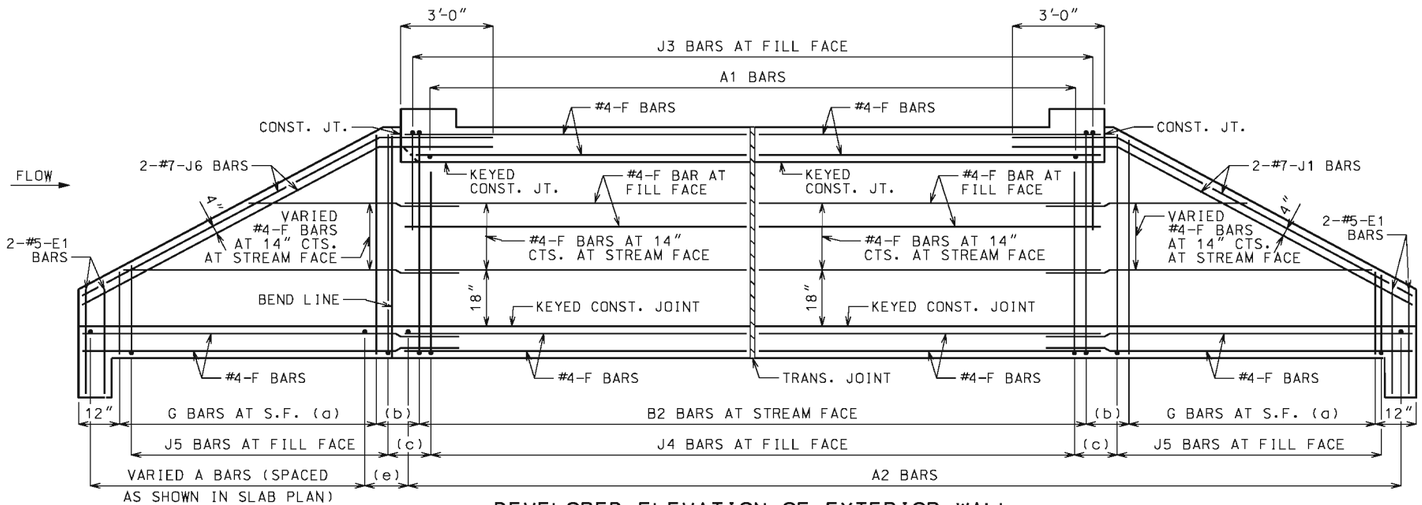

DEVELOPED ELEVATION OF EXTERIOR WALL

J1 AND J6 BARS MAY BE BENT IN FIELD OR SHOP.

LAYING OUT TRANVERSE JOINTS

UNLESS SHOWN ON BRIDGE PLANS

USE A TRANSVERSE JOINT WHEN BARREL LENGTH IS OVER 80 FEET. USE ADDITIONAL JOINTS TO LIMIT CUT SECTION LENGTH AND END SECTION BARREL LENGTH MEASURED ALONG CENTERLINE OF CULVERT TO 50 FEET.

MINIMUM END SECTION LENGTH SHALL BE 3 FEET MEASURED ALONG THE SHORTEST WALL FROM THE INSIDE FACE OF HEADWALL TO THE TRANSVERSE JOINT.

TO AVOID LOCATING TRANSVERSE JOINTS UNDER A TRAVELED WAY WITH DESIGN FILLS 2 FEET OR LESS THE FOLLOWING SHALL APPLY:

BARREL LENGTH UP TO 90 FEET WITHOUT A TRANSVERSE JOINT

CUT SECTION LENGTHS UP TO 60 FEET

WHEN BARREL AND CUT SECTION LENGTH RESTRICTIONS REQUIRE TRANSVERSE JOINTS TO BE LOCATED UNDER A TRAVELED WAY WITH DESIGN FILLS 2 FEET OR LESS. THE JOINTS SHALL BE LOCATED TO MINIMIZE THE LENGTH OF JOINT UNDER THE TRAVELED WAY.

TRAVELED WAY IS THE ROADWAY WIDTH MINUS SHOULDER WIDTHS.

FOR CUT SECTION DETAILS, SEE 703.46.

GENERAL NOTES:

FOR SECTIONS THRU BARREL, WINGS AND HEADWALLS, SEE SHEET 3 OF 3. FOR BAR SIZES, SPACING AND DIMENSIONS OF ALL REINFORCEMENT EXCEPT J5 BARS, SEE 703.47. FOR J5 BARS, SEE 703.37.

CONSTRUCTION JOINT KEY NOT SHOWN FOR CLARITY IN PLAN AND ELEVATION, SEE SHEET 3 OF 3 FOR DETAILS.

DRAWING NOT TO SCALE. FOLLOW DIMENSIONS.

MINIMUM CLEARANCE TO REINFORCING STEEL SHALL BE 1 1/2 ".

LAP LONGITUDINAL BARS A MINIMUM OF 23" AT SPLICES.

BEVELED HEADWALL SHALL BE LOCATED AT UPSTREAM END.

(a) SAME SIZE AND SPACING AS ADJACENT B BARS

(b) VARIES, 12" MAXIMUM

(c) J4 BAR SPACING

(d) SAME SIZE AND SPACING AS A2 BARS

(e) A2 BAR SPACING

MISSOURI HIGHWAYS AND TRANSPORTATION COMMISSION
105 WEST CAPITOL
JEFFERSON CITY, MO 65102
1-888-ASK-MODOT (1-888-275-6636)

STATE OF MISSOURI
DENNIS W. HECKMAN
NUMBER PE-27141
PROFESSIONAL ENGINEER
THIS SHEET HAS BEEN SIGNED, SEALED AND DATED ELECTRONICALLY.

CONCRETE DOUBLE BOX CULVERT

SKEW: SQUARED
WINGS: FLARED

REINFORCEMENT

DATE EFFECTIVE: 10/01/2011
DATE PREPARED: 5/13/2015

703.41H

SHEET NO. 1 OF 3

IF A SEAL IS PRESENT ON THIS SHEET IT HAS BEEN ELECTRONICALLY SEALED AND DATED.

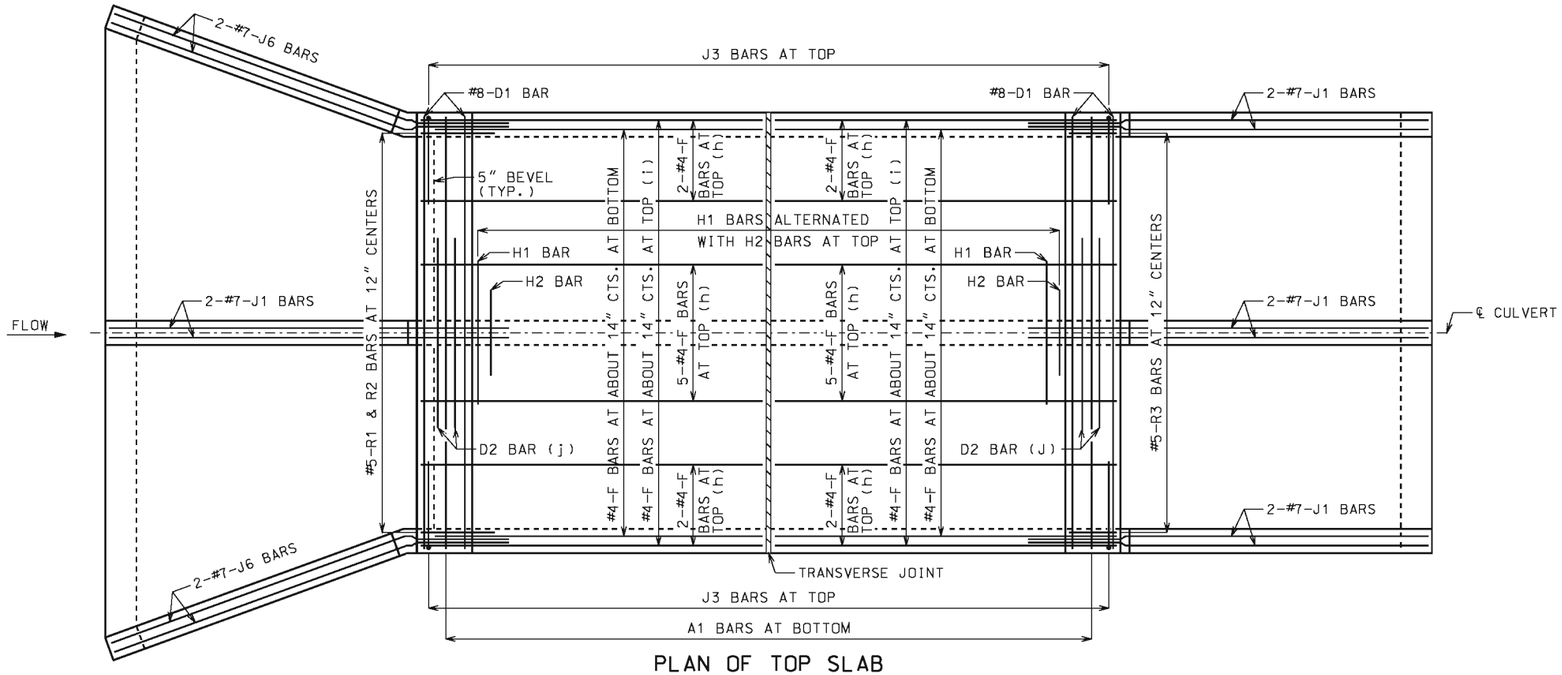

PLAN OF TOP SLAB

B BARS IN WALLS ARE NOT SHOWN FOR CLARITY.
FOR PLACEMENT, SEE SHEET 1 OF 3.

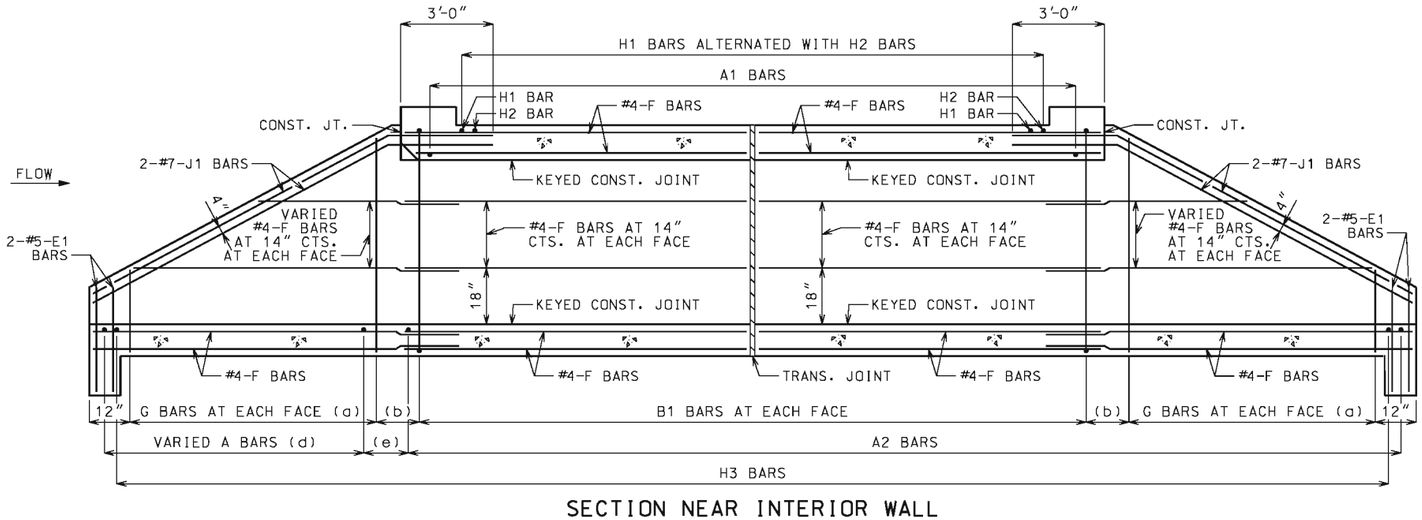

SECTION NEAR INTERIOR WALL

J1 BARS MAY BE BENT IN FIELD OR SHOP.

GENERAL NOTES:

FOR SECTIONS THRU BARREL, WINGS AND HEADWALLS, SEE SHEET 3 OF 3. FOR BAR SIZES, SPACING AND DIMENSIONS OF ALL REINFORCEMENT EXCEPT J5 BARS, SEE 703.47. FOR J5 BARS, SEE 703.37.

CONSTRUCTION JOINT KEY NOT SHOWN FOR CLARITY IN PLAN AND SECTION, SEE SHEET 3 OF 3 FOR DETAILS.

DRAWING NOT TO SCALE. FOLLOW DIMENSIONS.

MINIMUM CLEARANCE TO REINFORCING STEEL SHALL BE 1½".

LAP LONGITUDINAL BARS A MINIMUM OF 23" AT SPLICES.

BEVELED HEADWALL SHALL BE LOCATED AT UPSTREAM END.

(a) SAME SIZE AND SPACING AS ADJACENT B BARS

(b) VARIES, 12" MAXIMUM

(c) NOT SPECFIED ON THIS SHEET

(d) SAME SIZE AND SPACING AS A2 BARS

(e) A2 BAR SPACING

(f) NOT SPECFIED ON THIS SHEET

(g) NOT SPECFIED ON THIS SHEET

(h) FOR DESIGN FILLS OVER 2'-0"

(i) FOR DESIGN FILLS 2'-0" OR LESS

(j) NOT REQUIRED FOR CLEAR SPANS ≤ 10'-0"
#8 FOR CLEAR SPAN > 10'-0"
#9 FOR CLEAR SPAN > 13'-0"

IF REQUIRED, THE MINIMUM LENGTH EACH SIDE OF ℄ WALL SHALL BE THE GREATER OF 48 BAR DIAMETERS OR ¼ CLEAR SPAN. THE CLEAR SPAN IS PARALLEL TO LONG DIRECTION OF HEADWALL.

IF A SEAL IS PRESENT ON THIS SHEET IT HAS BEEN ELECTRONICALLY SEALED AND DATED.

MISSOURI HIGHWAYS AND TRANSPORTATION COMMISSION
105 WEST CAPITOL
JEFFERSON CITY, MO 65102
1-888-ASK-MODOT (1-888-275-6636)

STATE OF MISSOURI
DENNIS W. HECKMAN
NUMBER PE-27141
PROFESSIONAL ENGINEER
THIS SHEET HAS BEEN SIGNED, SEALED AND DATED ELECTRONICALLY.

CONCRETE DOUBLE BOX CULVERT

SKEW: SQUARED
WINGS: FLARED

REINFORCEMENT

DATE EFFECTIVE: 10/01/2011
DATE PREPARED: 5/13/2015

703.41H

SHEET NO. 2 OF 3

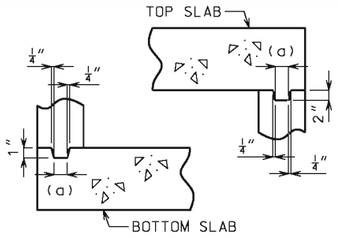

KEYED CONSTRUCTION JOINT

(a) APPROXIMATELY ONE-THIRD OF WALL THICKNESS

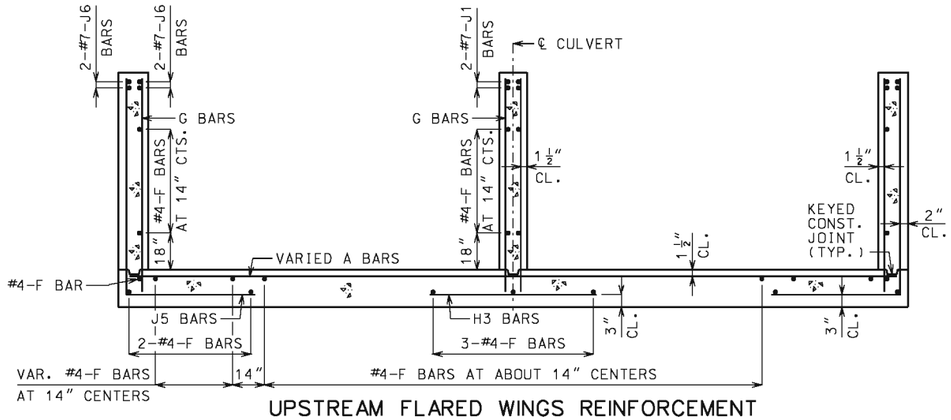

UPSTREAM FLARED WINGS REINFORCEMENT

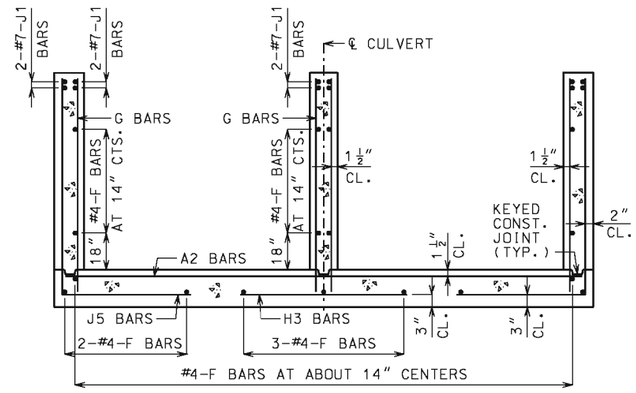

DOWNSTREAM WINGS REINFORCEMENT

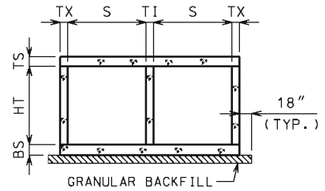

GRANULAR BACKFILL LIMITS AND MEMBER DIMENSIONS

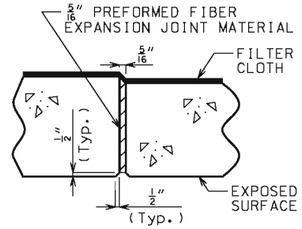

TRANSVERSE JOINT THRU BARREL

PREFORMED FIBER EXPANSION JOINT MATERIAL IN ACCORDANCE WITH SEC 1057 SHALL BE SECURELY STITCHED TO ONE FACE OF THE CONCRETE WITH 10 GAGE COPPER WIRE OR 12 GAGE SOFT DRAWN GALVANIZED STEEL WIRE.

FILTER CLOTH 3 FEET IN WIDTH AND DOUBLE THICKNESS SHALL BE CENTERED ON TRANSVERSE JOINTS IN TOP SLAB AND SIDEWALLS WITH EDGES SEALED WITH MASTIC OR TWO SIDED TAPE. FILTER CLOTH SHALL BE A SUBSURFACE DRAINAGE GEOTEXTILE IN ACCORDANCE WITH SEC 1011. COST OF FURNISHING AND INSTALLING FILTER CLOTH WILL BE CONSIDERED COMPLETELY COVERED BY THE CONTRACT UNIT PRICE FOR OTHER ITEMS.

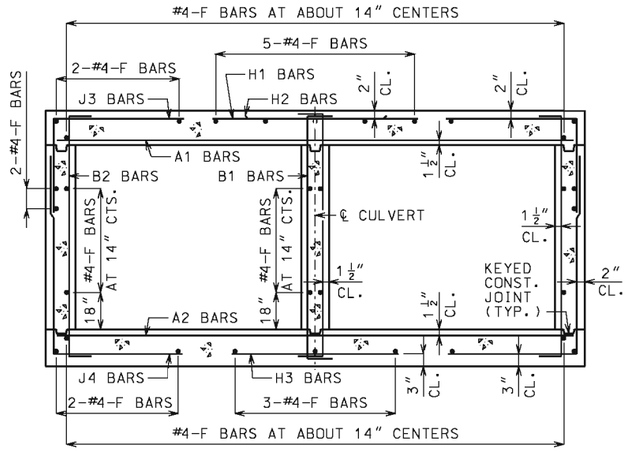

BARREL REINFORCEMENT

FOR DESIGN FILLS OVER 2'-0"

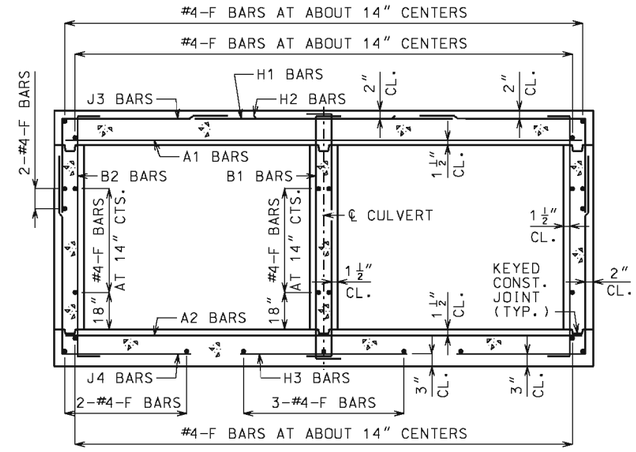

BARREL REINFORCEMENT

FOR DESIGN FILLS 2'-0" OR LESS

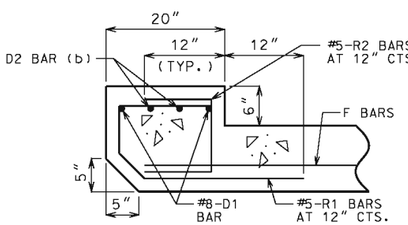

UPSTREAM HEADWALL REINFORCEMENT

NEAR INTERIOR WALL

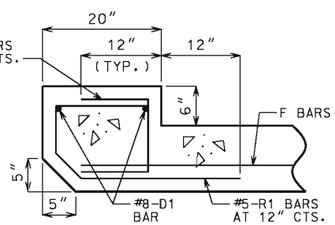

UPSTREAM HEADWALL REINFORCEMENT

NEAR MIDSPAN

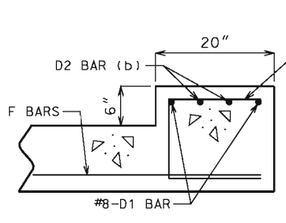

DOWNSTREAM HEADWALL REINFORCEMENT

NEAR INTERIOR WALL

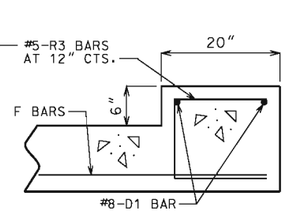

DOWNSTREAM HEADWALL REINFORCEMENT

NEAR MIDSPAN

(b) #8 FOR CLEAR SPAN > 10'-0"
#9 FOR CLEAR SPAN > 13'-0"
NOT REQUIRED FOR CLEAR SPANS ≤ 10'-0"

IF D2 BARS ARE REQUIRED. THE MINIMUM LENGTH EACH SIDE OF ℄ WALL SHALL BE THE GREATER OF 48 BAR DIAMETERS OR ¼ CLEAR SPAN. THE CLEAR SPAN IS PARALLEL TO LONG DIRECTION OF HEADWALL.

GENERAL NOTES:

FOR MEMBER THICKNESS AND FOR BAR SIZES, SPACING AND DIMENSIONS OF ALL REINFORCEMENT EXCEPT J5 BARS, SEE 703.47. FOR J5 BARS, SEE 703.37.

BARREL AND WINGS SECTIONS ARE SYMMETRICAL ABOUT AND NORMAL TO ℄ CULVERT. HEADWALL SECTIONS ARE NORMAL TO LONG DIRECTION OF HEADWALL.

DRAWING NOT TO SCALE. FOLLOW DIMENSIONS.

MINIMUM CLEARANCE TO REINFORCING STEEL SHALL BE 1½".

MISSOURI HIGHWAYS AND TRANSPORTATION COMMISSION
105 WEST CAPITOL
JEFFERSON CITY, MO 65102
1-888-ASK-MODOT (1-888-275-6636)

STATE OF MISSOURI
DENNIS W. HECKMAN
NUMBER PE-27141
PROFESSIONAL ENGINEER
THIS SHEET HAS BEEN SIGNED, SEALED AND DATED ELECTRONICALLY.

CONCRETE DOUBLE BOX CULVERT

SKEW: SQUARED
WINGS: FLARED

SECTIONS

DATE EFFECTIVE: 10/01/2011
DATE PREPARED: 5/13/2015

703.41H

SHEET NO. 3 OF 3

IF A SEAL IS PRESENT ON THIS SHEET IT HAS BEEN ELECTRONICALLY SEALED AND DATED.

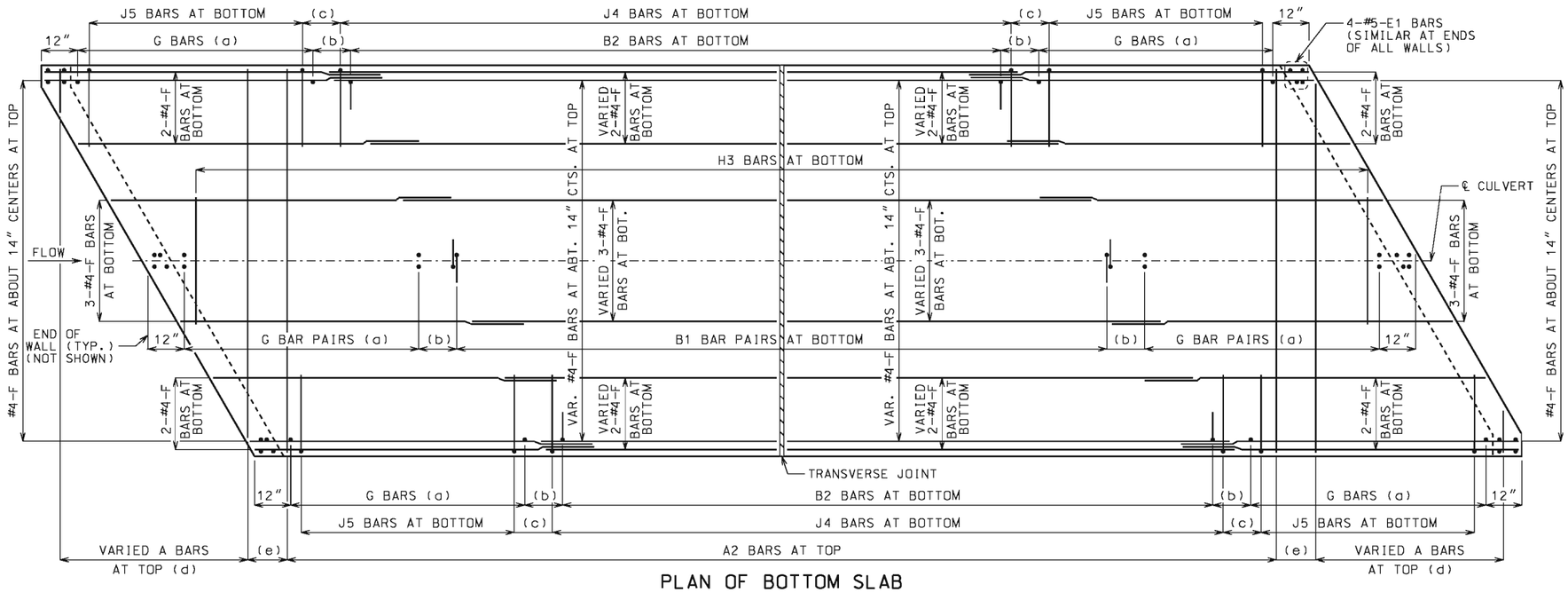

PLAN OF BOTTOM SLAB

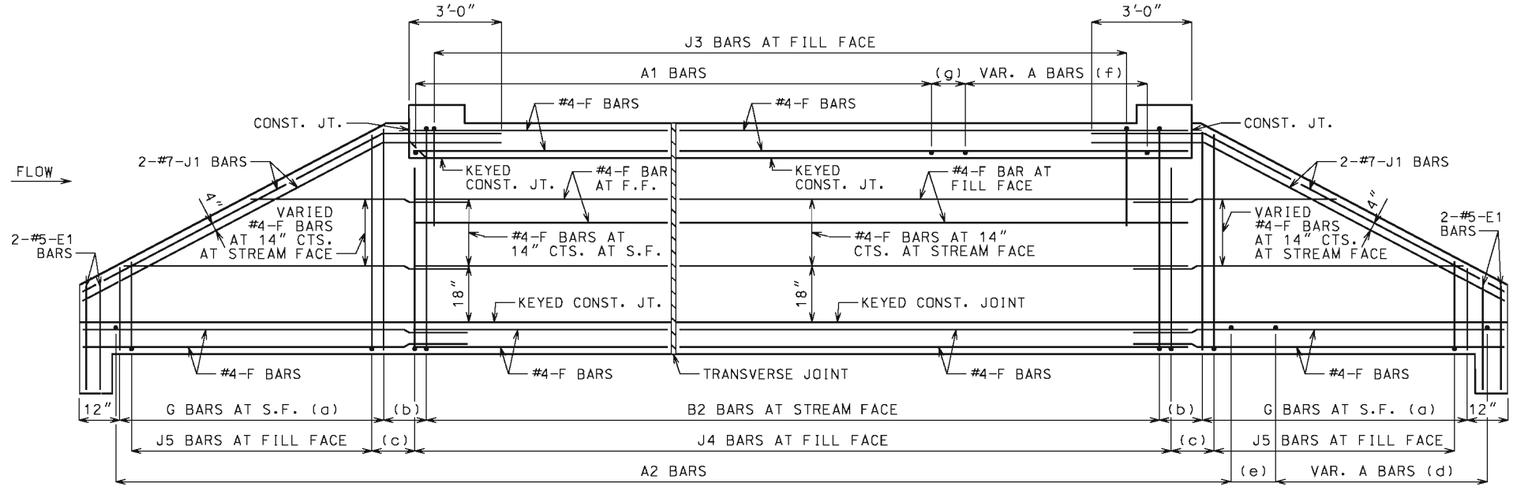

ELEVATION OF EXTERIOR WALL

J1 BARS MAY BE BENT IN FIELD OR SHOP.

LAYING OUT TRANVERSE JOINTS

UNLESS SHOWN ON BRIDGE PLANS

USE A TRANSVERSE JOINT WHEN BARREL LENGTH IS OVER 80 FEET. USE ADDITIONAL JOINTS TO LIMIT CUT SECTION LENGTH AND END SECTION BARREL LENGTH MEASURED ALONG CENTERLINE OF CULVERT TO 50 FEET.

MINIMUM END SECTION LENGTH SHALL BE 3 FEET MEASURED ALONG THE SHORTEST WALL FROM THE INSIDE FACE OF HEADWALL TO THE TRANSVERSE JOINT.

TO AVOID LOCATING TRANSVERSE JOINTS UNDER A TRAVELED WAY WITH DESIGN FILLS 2 FEET OR LESS THE FOLLOWING SHALL APPLY:

BARREL LENGTH UP TO 90 FEET WITHOUT A TRANSVERSE JOINT

CUT SECTION LENGTHS UP TO 60 FEET

WHEN BARREL AND CUT SECTION LENGTH RESTRICTIONS REQUIRE TRANSVERSE JOINTS TO BE LOCATED UNDER A TRAVELED WAY WITH DESIGN FILLS 2 FEET OR LESS, THE JOINTS SHALL BE LOCATED TO MINIMIZE THE LENGTH OF JOINT UNDER THE TRAVELED WAY.

TRAVELED WAY IS THE ROADWAY WIDTH MINUS SHOULDER WIDTHS.

FOR CUT SECTION DETAILS, SEE 703.46.

GENERAL NOTES:

FOR SECTIONS THRU BARREL, WINGS AND HEADWALLS, SEE SHEET 3 OF 3. FOR BAR SIZES, SPACING AND DIMENSIONS OF ALL REINFORCEMENT EXCEPT J5 BARS, SEE 703.47. FOR J5 BARS, SEE 703.37.

CONSTRUCTION JOINT KEY NOT SHOWN FOR CLARITY IN PLAN AND ELEVATION, SEE SHEET 3 OF 3 FOR DETAILS.

DRAWING NOT TO SCALE. FOLLOW DIMENSIONS.

MINIMUM CLEARANCE TO REINFORCING STEEL SHALL BE 1½".

LAP LONGITUDINAL BARS A MINIMUM OF 23" AT SPLICES.

BEVELED HEADWALL SHALL BE LOCATED AT UPSTREAM END.

(a) SAME SIZE AND SPACING AS ADJACENT B BARS

(b) VARIES, 12" MAXIMUM

(c) J4 BAR SPACING

(d) SAME SIZE AND SPACING AS A2 BARS

(e) A2 BAR SPACING

(f) SAME SIZE AND SPACING AS A1 BARS

(g) A1 BAR SPACING

MISSOURI HIGHWAYS AND TRANSPORTATION COMMISSION
105 WEST CAPITOL
JEFFERSON CITY, MO 65102
1-888-ASK-MODOT (1-888-275-6636)

STATE OF MISSOURI
DENNIS W. HECKMAN
NUMBER PE-27141
PROFESSIONAL ENGINEER
THIS SHEET HAS BEEN SIGNED, SEALED AND DATED ELECTRONICALLY.

CONCRETE DOUBLE BOX CULVERT

SKEW: LEFT ADVANCE
WINGS: STRAIGHT

REINFORCEMENT

DATE EFFECTIVE: 10/01/2011
DATE PREPARED: 5/13/2015

703.42H

SHEET NO. 1 OF 3

IF A SEAL IS PRESENT ON THIS SHEET IT HAS BEEN ELECTRONICALLY SEALED AND DATED.

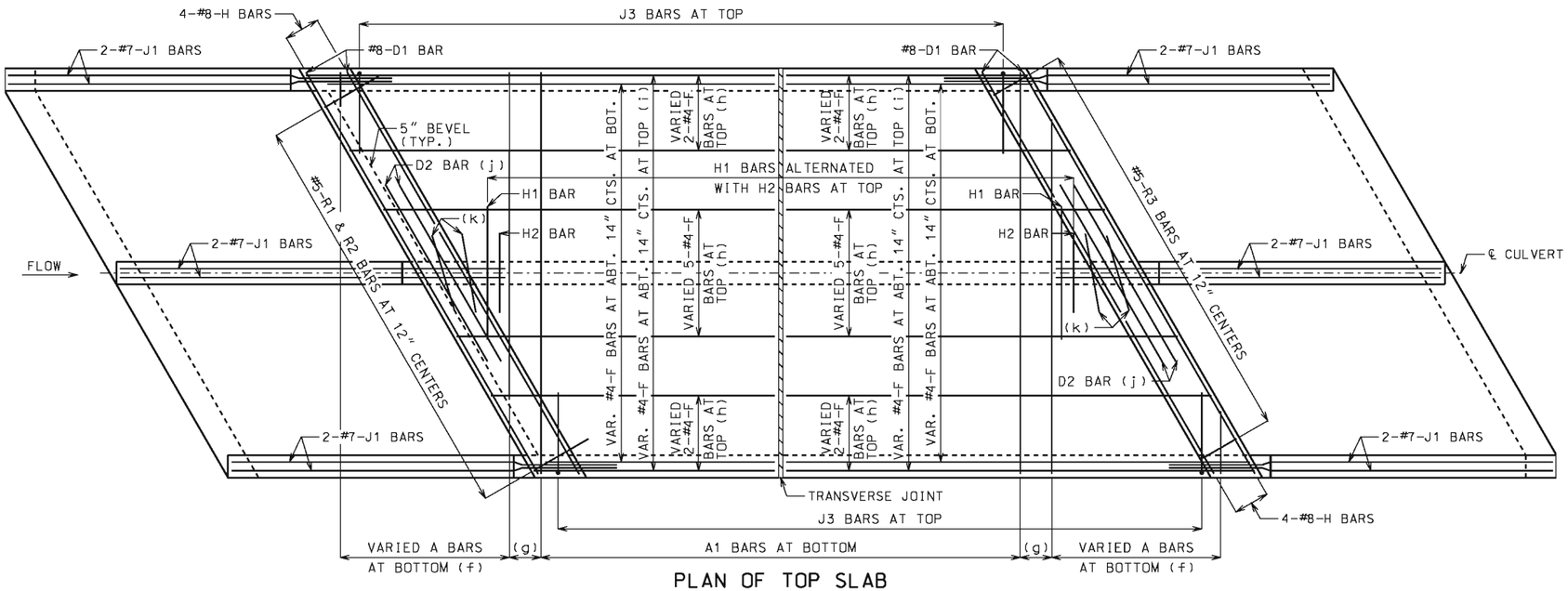

PLAN OF TOP SLAB

B BARS IN WALLS ARE NOT SHOWN FOR CLARITY.
FOR PLACEMENT, SEE SHEET 1 OF 3.

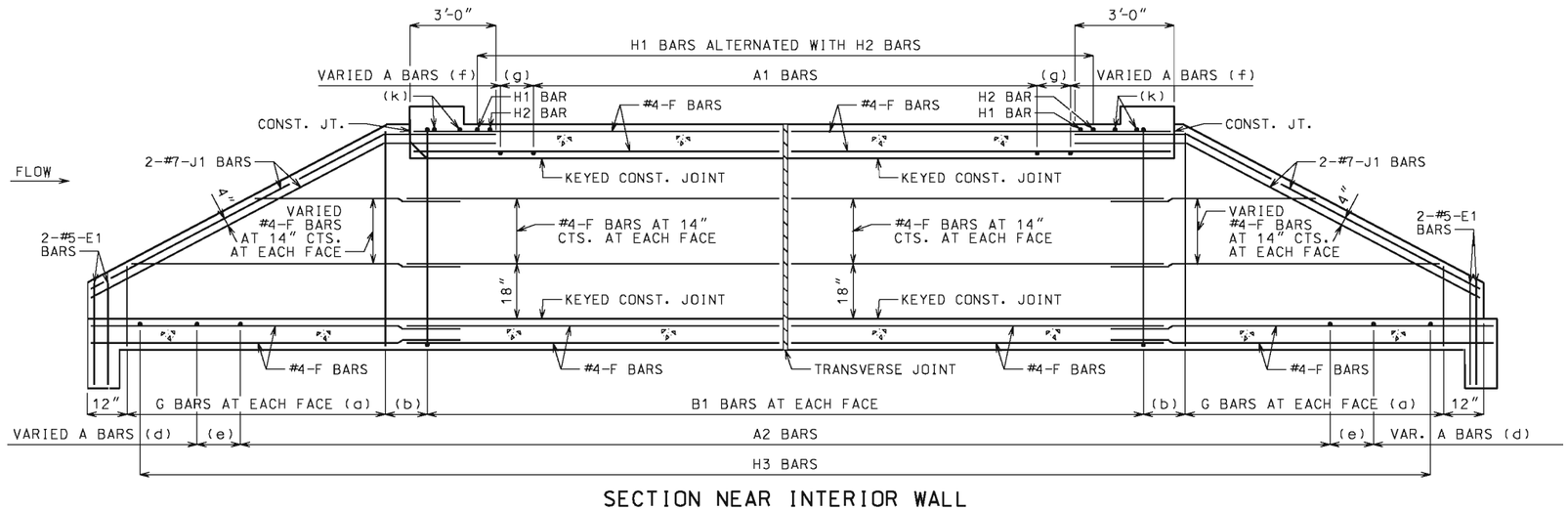

SECTION NEAR INTERIOR WALL

J1 BARS MAY BE BENT IN FIELD OR SHOP.

GENERAL NOTES:

FOR SECTIONS THRU BARREL, WINGS AND HEADWALLS, SEE SHEET 3 OF 3. FOR BAR SIZES, SPACING AND DIMENSIONS OF ALL REINFORCEMENT EXCEPT J5 BARS, SEE 703.47. FOR J5 BARS, SEE 703.37.

CONSTRUCTION JOINT KEY NOT SHOWN FOR CLARITY IN PLAN AND SECTION, SEE SHEET 3 OF 3 FOR DETAILS.

DRAWING NOT TO SCALE. FOLLOW DIMENSIONS.

MINIMUM CLEARANCE TO REINFORCING STEEL SHALL BE 1½".

LAP LONGITUDINAL BARS A MINIMUM OF 23" AT SPLICES.

BEVELED HEADWALL SHALL BE LOCATED AT UPSTREAM END.

(a) SAME SIZE AND SPACING AS ADJACENT B BARS

(b) VARIES, 12" MAXIMUM

(c) NOT SPECIFIED ON THIS SHEET

(d) SAME SIZE AND SPACING AS A2 BARS

(e) A2 BAR SPACING

(f) SAME SIZE AND SPACING AS A1 BARS

(g) A1 BAR SPACING

(h) FOR DESIGN FILLS OVER 2'-0"

(i) FOR DESIGN FILLS 2'-0" OR LESS

(j) NOT REQUIRED FOR CLEAR SPANS ≤ 10'-0"
#8 FOR CLEAR SPAN > 10'-0"
#9 FOR CLEAR SPAN > 13'-0"

IF REQUIRED, THE MINIMUM LENGTH EACH SIDE OF ℄ WALL SHALL BE THE GREATER OF 48 BAR DIAMETERS OR ¼ CLEAR SPAN. THE CLEAR SPAN IS PARALLEL TO LONG DIRECTION OF HEADWALL.

(k) H2 BARS AS REQUIRED, QUANTITY OF BARS VARIES WITH SKEW.

MISSOURI HIGHWAYS AND TRANSPORTATION COMMISSION
105 WEST CAPITOL
JEFFERSON CITY, MO 65102
1-888-ASK-MODOT (1-888-275-6636)

STATE OF MISSOURI
DENNIS W. HECKMAN
NUMBER PE-27141
PROFESSIONAL ENGINEER
THIS SHEET HAS BEEN SIGNED, SEALED AND DATED ELECTRONICALLY.

CONCRETE DOUBLE BOX CULVERT

SKEW: LEFT ADVANCE
WINGS: STRAIGHT

REINFORCEMENT

DATE EFFECTIVE: 10/01/2011
DATE PREPARED: 5/13/2015

703.42H

SHEET NO. 2 OF 3

IF A SEAL IS PRESENT ON THIS SHEET IT HAS BEEN ELECTRONICALLY SEALED AND DATED.

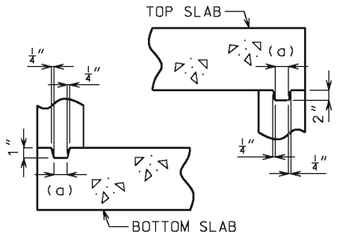

KEYED CONSTRUCTION JOINT

(a) APPROXIMATELY ONE-THIRD OF WALL THICKNESS

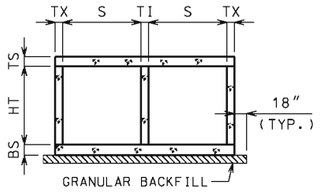

GRANULAR BACKFILL LIMITS AND MEMBER DIMENSIONS

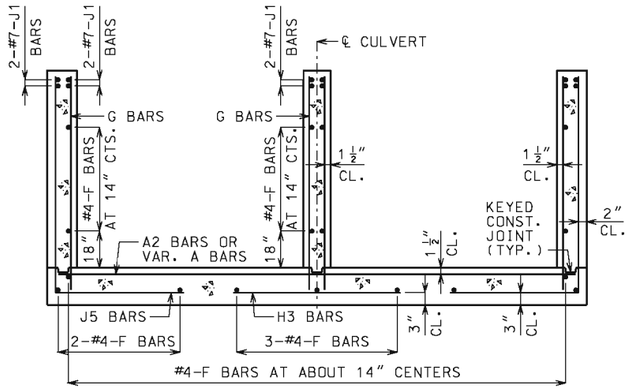

UPSTREAM AND DOWNSTREAM WINGS REINFORCEMENT

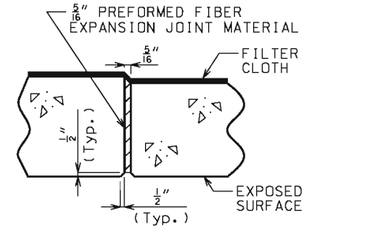

TRANSVERSE JOINT THRU BARREL

PREFORMED FIBER EXPANSION JOINT MATERIAL IN ACCORDANCE WITH SEC 1057 SHALL BE SECURELY STITCHED TO ONE FACE OF THE CONCRETE WITH 10 GAGE COPPER WIRE OR 12 GAGE SOFT DRAWN GALVANIZED STEEL WIRE.

FILTER CLOTH 3 FEET IN WIDTH AND DOUBLE THICKNESS SHALL BE CENTERED ON TRANSVERSE JOINTS IN TOP SLAB AND SIDEWALLS WITH EDGES SEALED WITH MASTIC OR TWO SIDED TAPE. FILTER CLOTH SHALL BE A SUBSURFACE DRAINAGE GEOTEXTILE IN ACCORDANCE WITH SEC 1011. COST OF FURNISHING AND INSTALLING FILTER CLOTH WILL BE CONSIDERED COMPLETELY COVERED BY THE CONTRACT UNIT PRICE FOR OTHER ITEMS.

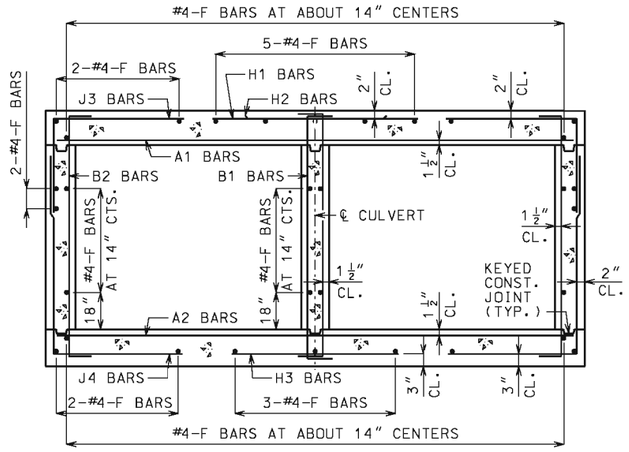

BARREL REINFORCEMENT

FOR DESIGN FILLS OVER 2'-0"

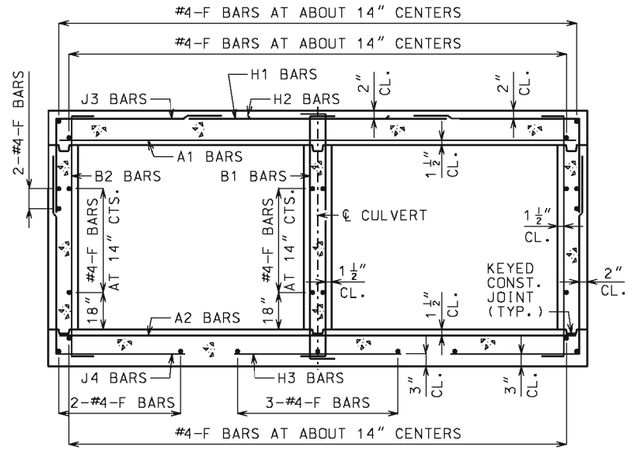

BARREL REINFORCEMENT

FOR DESIGN FILLS 2'-0" OR LESS

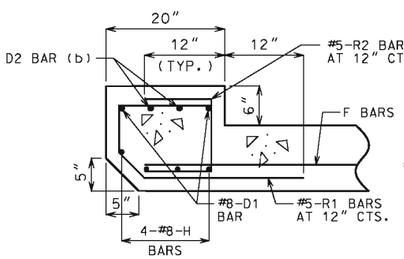

UPSTREAM HEADWALL REINFORCEMENT

NEAR INTERIOR WALL

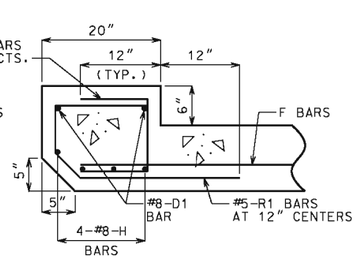

UPSTREAM HEADWALL REINFORCEMENT

NEAR MIDSPAN

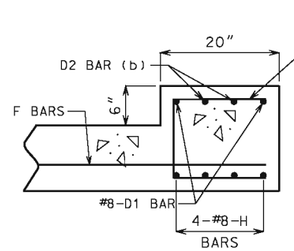

DOWNSTREAM HEADWALL REINFORCEMENT

NEAR INTERIOR WALL

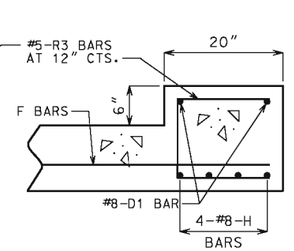

DOWNSTREAM HEADWALL REINFORCEMENT

NEAR MIDSPAN

(b) #8 FOR CLEAR SPAN > 10'-0"
#9 FOR CLEAR SPAN > 13'-0"
NOT REQUIRED FOR CLEAR SPANS ≤ 10'-0"

IF D2 BARS ARE REQUIRED. THE MINIMUM LENGTH EACH SIDE OF ℄ WALL SHALL BE THE GREATER OF 48 BAR DIAMETERS OR 1/4 CLEAR SPAN. THE CLEAR SPAN IS PARALLEL TO LONG DIRECTION OF HEADWALL.

GENERAL NOTES:

FOR MEMBER THICKNESS AND FOR BAR SIZES, SPACING AND DIMENSIONS OF ALL REINFORCEMENT EXCEPT J5 BARS, SEE 703.47. FOR J5 BARS, SEE 703.37.

BARREL AND WINGS SECTIONS ARE SYMMETRICAL ABOUT AND NORMAL TO ℄ CULVERT. HEADWALL SECTIONS ARE NORMAL TO LONG DIRECTION OF HEADWALL.

DRAWING NOT TO SCALE. FOLLOW DIMENSIONS.

MINIMUM CLEARANCE TO REINFORCING STEEL SHALL BE 1 1/2".

MISSOURI HIGHWAYS AND TRANSPORTATION COMMISSION
105 WEST CAPITOL
JEFFERSON CITY, MO 65102
1-888-ASK-MODOT (1-888-275-6636)

STATE OF MISSOURI
DENNIS W. HECKMAN
NUMBER PE-27141
PROFESSIONAL ENGINEER
THIS SHEET HAS BEEN SIGNED, SEALED AND DATED ELECTRONICALLY.

CONCRETE DOUBLE BOX CULVERT

SKEW: LEFT ADVANCE
WINGS: STRAIGHT

SECTIONS

DATE EFFECTIVE: 10/01/2011
DATE PREPARED: 5/13/2015

703.42H

SHEET NO. 3 OF 3

IF A SEAL IS PRESENT ON THIS SHEET IT HAS BEEN ELECTRONICALLY SEALED AND DATED.

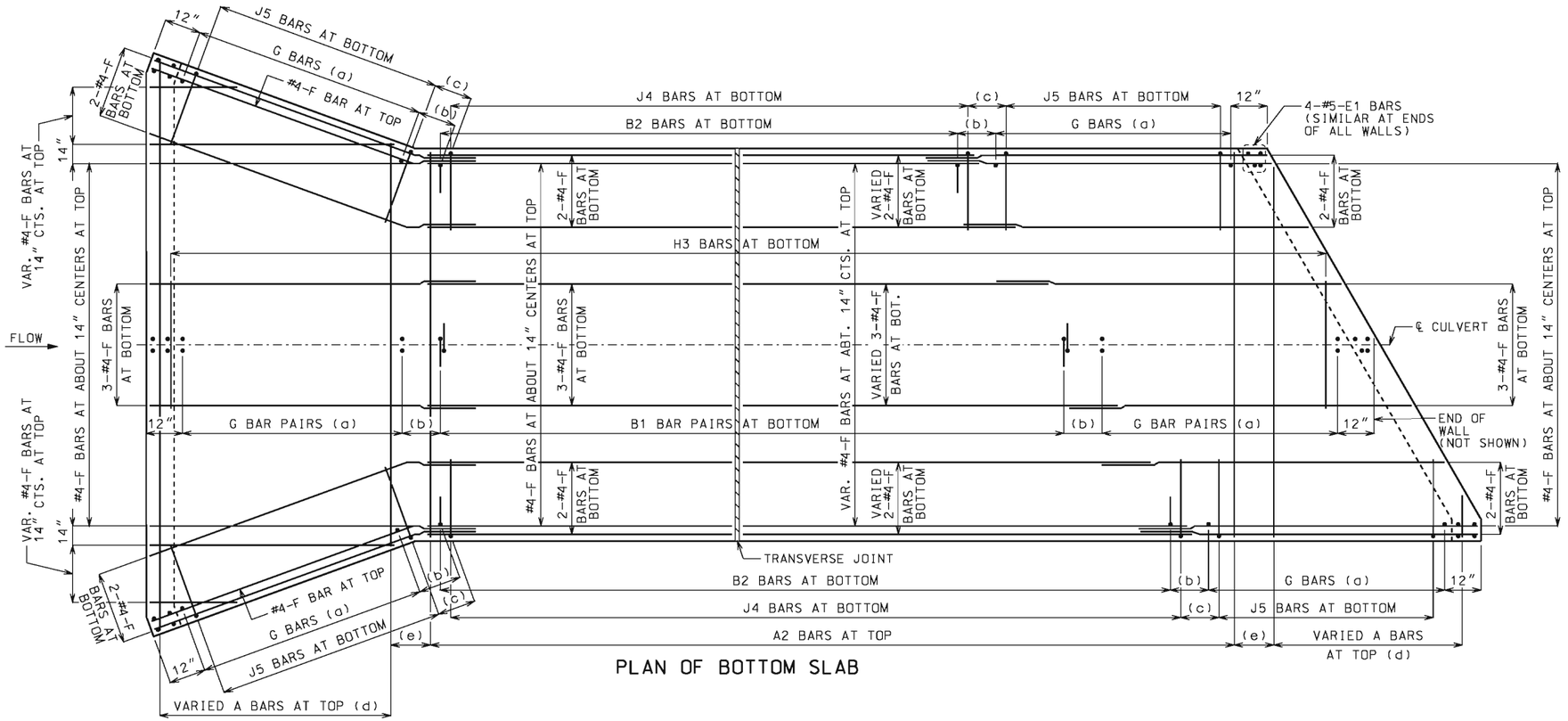

PLAN OF BOTTOM SLAB

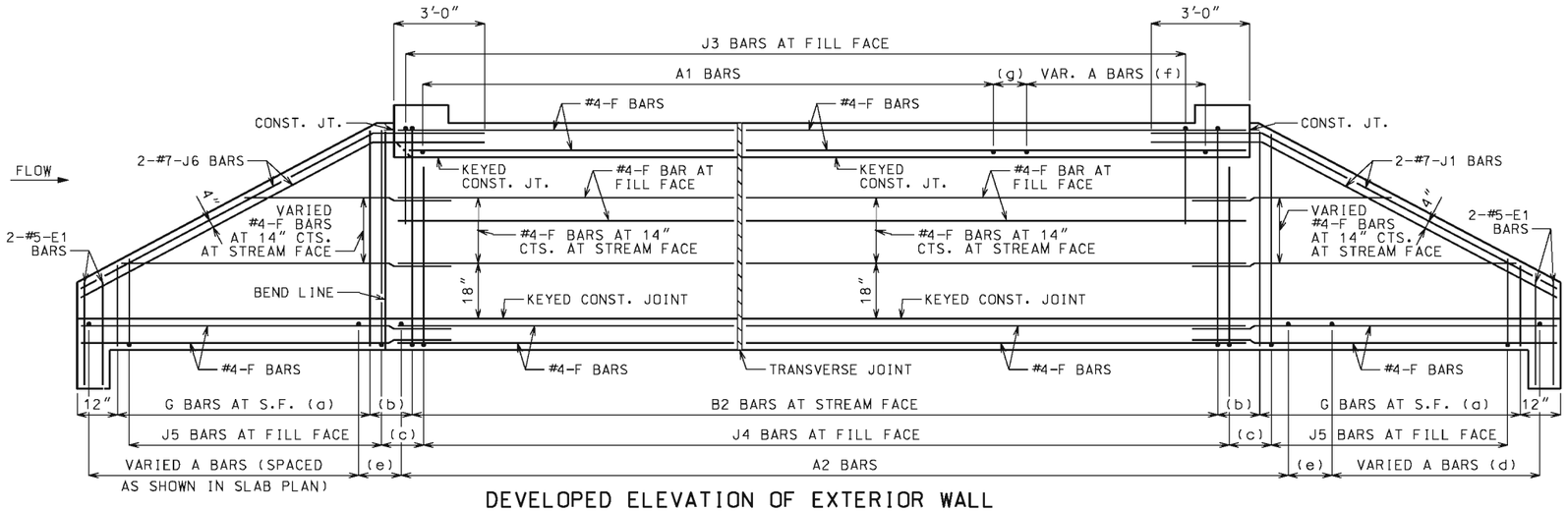

DEVELOPED ELEVATION OF EXTERIOR WALL

J1 AND J6 BARS MAY BE BENT IN FIELD OR SHOP.

LAYING OUT TRANVERSE JOINTS

UNLESS SHOWN ON BRIDGE PLANS

USE A TRANSVERSE JOINT WHEN BARREL LENGTH IS OVER 80 FEET. USE ADDITIONAL JOINTS TO LIMIT CUT SECTION LENGTH AND END SECTION BARREL LENGTH MEASURED ALONG CENTERLINE OF CULVERT TO 50 FEET.

MINIMUM END SECTION LENGTH SHALL BE 3 FEET MEASURED ALONG THE SHORTEST WALL FROM THE INSIDE FACE OF HEADWALL TO THE TRANSVERSE JOINT.

TO AVOID LOCATING TRANSVERSE JOINTS UNDER A TRAVELED WAY WITH DESIGN FILLS 2 FEET OR LESS THE FOLLOWING SHALL APPLY:

BARREL LENGTH UP TO 90 FEET WITHOUT A TRANSVERSE JOINT

CUT SECTION LENGTHS UP TO 60 FEET

WHEN BARREL AND CUT SECTION LENGTH RESTRICTIONS REQUIRE TRANSVERSE JOINTS TO BE LOCATED UNDER A TRAVELED WAY WITH DESIGN FILLS 2 FEET OR LESS, THE JOINTS SHALL BE LOCATED TO MINIMIZE THE LENGTH OF JOINT UNDER THE TRAVELED WAY.

TRAVELED WAY IS THE ROADWAY WIDTH MINUS SHOULDER WIDTHS.

FOR CUT SECTION DETAILS, SEE 703.46.

GENERAL NOTES:

FOR SECTIONS THRU BARREL, WINGS AND HEADWALLS, SEE SHEET 3 OF 3. FOR BAR SIZES, SPACING AND DIMENSIONS OF ALL REINFORCEMENT EXCEPT J5 BARS, SEE 703.47. FOR J5 BARS, SEE 703.37.

CONSTRUCTION JOINT KEY NOT SHOWN FOR CLARITY IN PLAN AND ELEVATION, SEE SHEET 3 OF 3 FOR DETAILS.

DRAWING NOT TO SCALE. FOLLOW DIMENSIONS.

MINIMUM CLEARANCE TO REINFORCING STEEL SHALL BE 1½".

LAP LONGITUDINAL BARS A MINIMUM OF 23" AT SPLICES.

BEVELED HEADWALL SHALL BE LOCATED AT UPSTREAM END.

(a) SAME SIZE AND SPACING AS ADJACENT B BARS

(b) VARIES, 12" MAXIMUM

(c) J4 BAR SPACING

(d) SAME SIZE AND SPACING AS A2 BARS

(e) A2 BAR SPACING

(f) SAME SIZE AND SPACING AS A1 BARS

(g) A1 BAR SPACING

MISSOURI HIGHWAYS AND TRANSPORTATION COMMISSION
105 WEST CAPITOL
JEFFERSON CITY, MO 65102
1-888-ASK-MODOT (1-888-275-6636)

STATE OF MISSOURI
DENNIS W. HECKMAN
NUMBER PE-27141
PROFESSIONAL ENGINEER

THIS SHEET HAS BEEN SIGNED, SEALED AND DATED ELECTRONICALLY.

CONCRETE DOUBLE BOX CULVERT

SKEW: LEFT ADVANCE
WINGS: FLARED

REINFORCEMENT

DATE EFFECTIVE: 10/01/2011
DATE PREPARED: 5/13/2015

703.43H

SHEET NO. 1 OF 3

IF A SEAL IS PRESENT ON THIS SHEET IT HAS BEEN ELECTRONICALLY SEALED AND DATED.

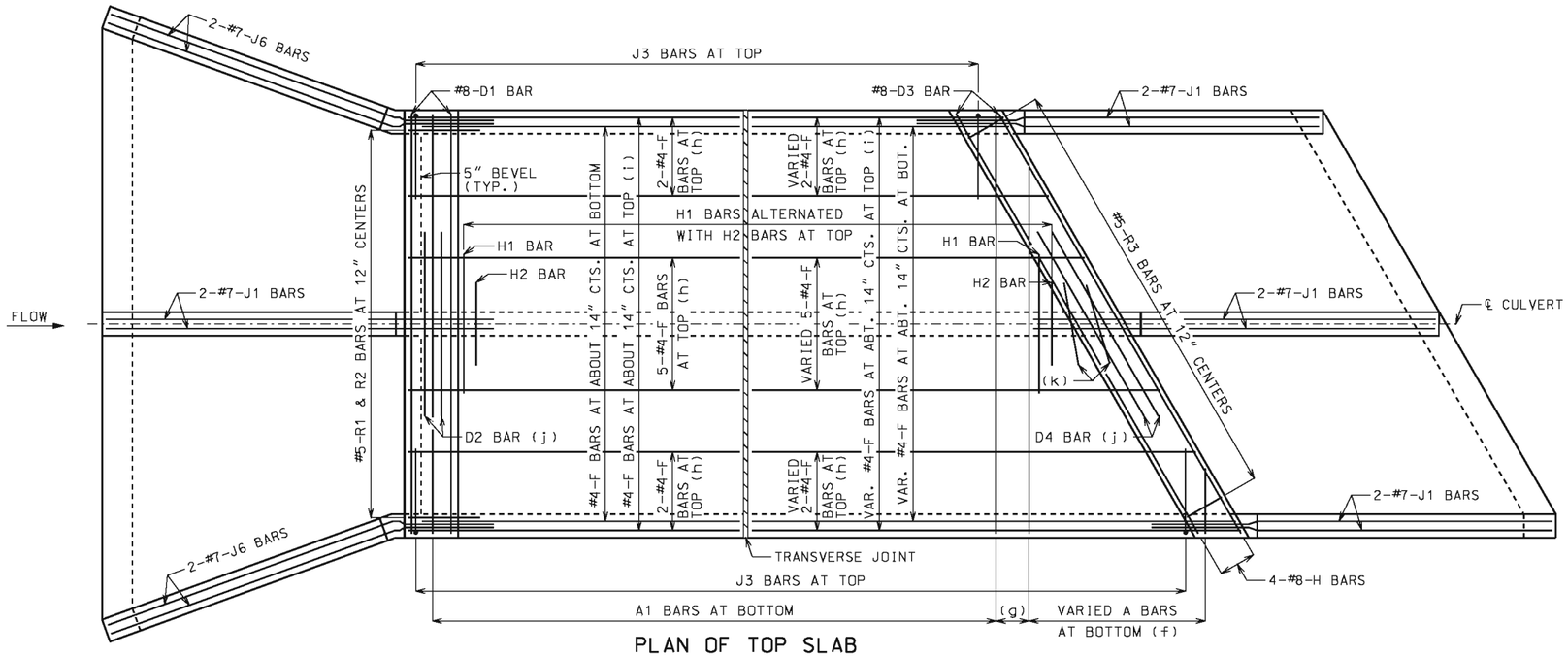

PLAN OF TOP SLAB

B BARS IN WALLS ARE NOT SHOWN FOR CLARITY.
FOR PLACEMENT, SEE SHEET 1 OF 3.

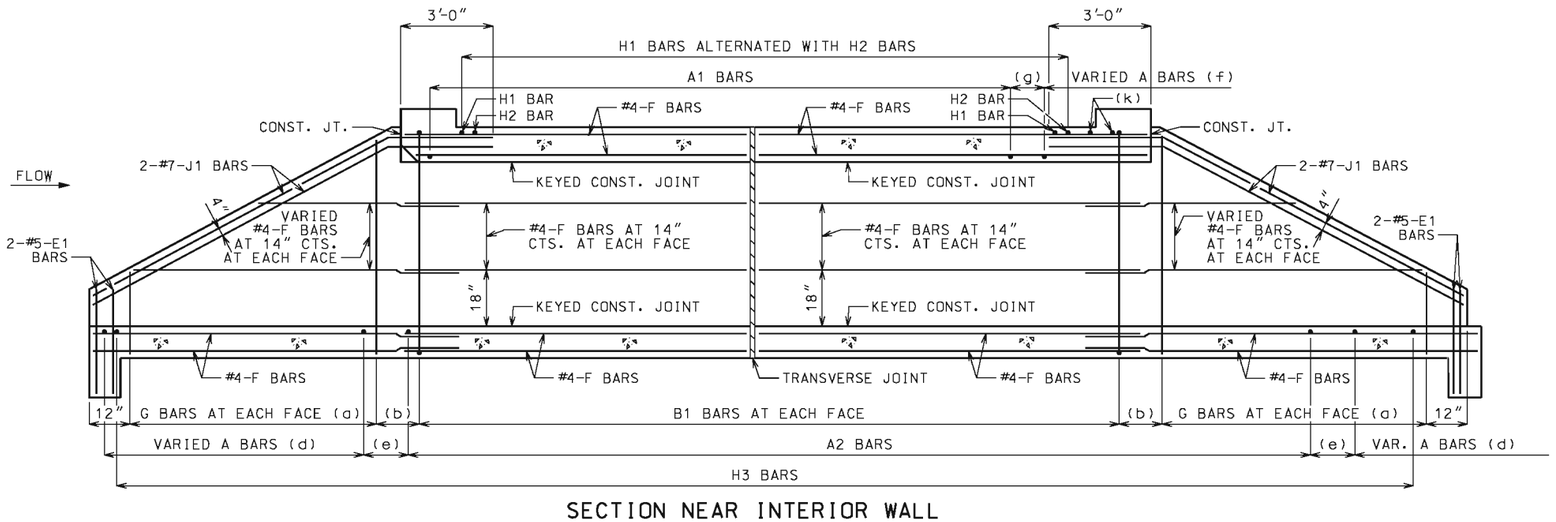

SECTION NEAR INTERIOR WALL

J1 BARS MAY BE BENT IN FIELD OR SHOP.

GENERAL NOTES:

FOR SECTIONS THRU BARREL, WINGS AND HEADWALLS, SEE SHEET 3 OF 3. FOR BAR SIZES, SPACING AND DIMENSIONS OF ALL REINFORCEMENT EXCEPT J5 BARS, SEE 703.47. FOR J5 BARS, SEE 703.37.

CONSTRUCTION JOINT KEY NOT SHOWN FOR CLARITY IN PLAN AND SECTION, SEE SHEET 3 OF 3 FOR DETAILS.

DRAWING NOT TO SCALE. FOLLOW DIMENSIONS.

MINIMUM CLEARANCE TO REINFORCING STEEL SHALL BE 1½".

LAP LONGITUDINAL BARS A MINIMUM OF 23" AT SPLICES.

BEVELED HEADWALL SHALL BE LOCATED AT UPSTREAM END.

(a) SAME SIZE AND SPACING AS ADJACENT B BARS

(b) VARIES, 12" MAXIMUM

(c) NOT SPECIFIED ON THIS SHEET

(d) SAME SIZE AND SPACING AS A2 BARS

(e) A2 BAR SPACING

(f) SAME SIZE AND SPACING AS A1 BARS

(g) A1 BAR SPACING

(h) FOR DESIGN FILLS OVER 2'-0"

(i) FOR DESIGN FILLS 2'-0" OR LESS

(j) NOT REQUIRED FOR CLEAR SPANS ≤ 10'-0"
#8 FOR CLEAR SPAN > 10'-0"
#9 FOR CLEAR SPAN > 13'-0"

IF REQUIRED, THE MINIMUM LENGTH EACH SIDE OF ℄ WALL SHALL BE THE GREATER OF 48 BAR DIAMETERS OR ¼ CLEAR SPAN. THE CLEAR SPAN IS PARALLEL TO LONG DIRECTION OF HEADWALL.

(k) H2 BARS AS REQUIRED, QUANTITY OF BARS VARIES WITH SKEW.

MISSOURI HIGHWAYS AND TRANSPORTATION COMMISSION
105 WEST CAPITOL
JEFFERSON CITY, MO 65102
1-888-ASK-MODOT (1-888-275-6636)

STATE OF MISSOURI
DENNIS W. HECKMAN
NUMBER PE-27141
PROFESSIONAL ENGINEER
THIS SHEET HAS BEEN SIGNED, SEALED AND DATED ELECTRONICALLY.

CONCRETE DOUBLE BOX CULVERT

SKEW: LEFT ADVANCE
WINGS: FLARED

REINFORCEMENT

DATE EFFECTIVE: 10/01/2011
DATE PREPARED: 5/13/2015

703.43H

SHEET NO. 2 OF 3

IF A SEAL IS PRESENT ON THIS SHEET IT HAS BEEN ELECTRONICALLY SEALED AND DATED.

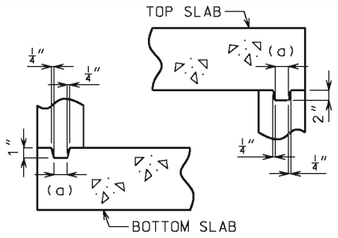

KEYED CONSTRUCTION JOINT

(a) APPROXIMATELY ONE-THIRD OF WALL THICKNESS

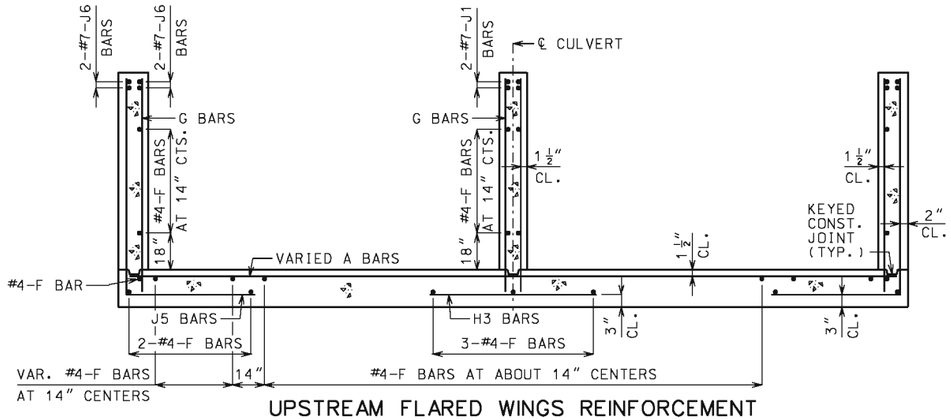

UPSTREAM FLARED WINGS REINFORCEMENT

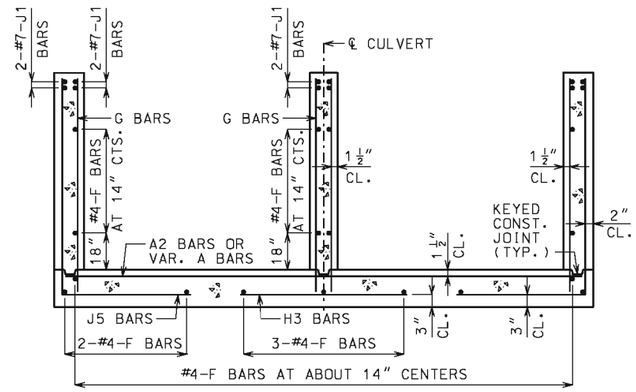

DOWNSTREAM WINGS REINFORCEMENT

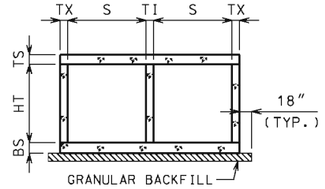

GRANULAR BACKFILL LIMITS AND MEMBER DIMENSIONS

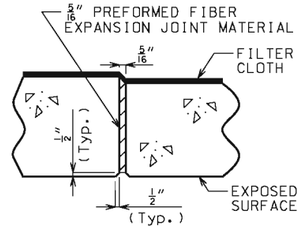

TRANSVERSE JOINT THRU BARREL

PREFORMED FIBER EXPANSION JOINT MATERIAL IN ACCORDANCE WITH SEC 1057 SHALL BE SECURELY STITCHED TO ONE FACE OF THE CONCRETE WITH 10 GAGE COPPER WIRE OR 12 GAGE SOFT DRAWN GALVANIZED STEEL WIRE.

FILTER CLOTH 3 FEET IN WIDTH AND DOUBLE THICKNESS SHALL BE CENTERED ON TRANSVERSE JOINTS IN TOP SLAB AND SIDEWALLS WITH EDGES SEALED WITH MASTIC OR TWO SIDED TAPE. FILTER CLOTH SHALL BE A SUBSURFACE DRAINAGE GEOTEXTILE IN ACCORDANCE WITH SEC 1011. COST OF FURNISHING AND INSTALLING FILTER CLOTH WILL BE CONSIDERED COMPLETELY COVERED BY THE CONTRACT UNIT PRICE FOR OTHER ITEMS.

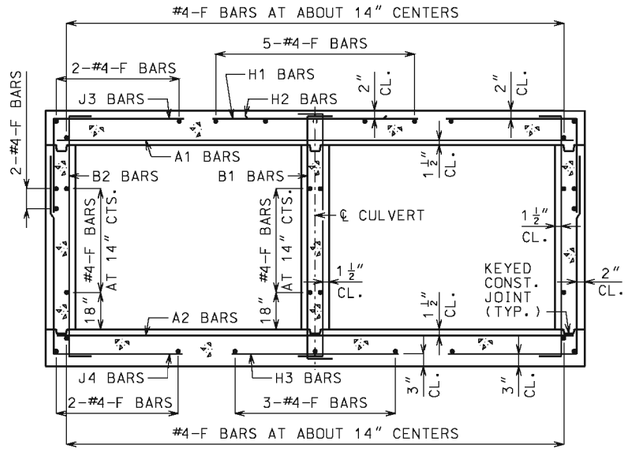

BARREL REINFORCEMENT

FOR DESIGN FILLS OVER 2'-0"

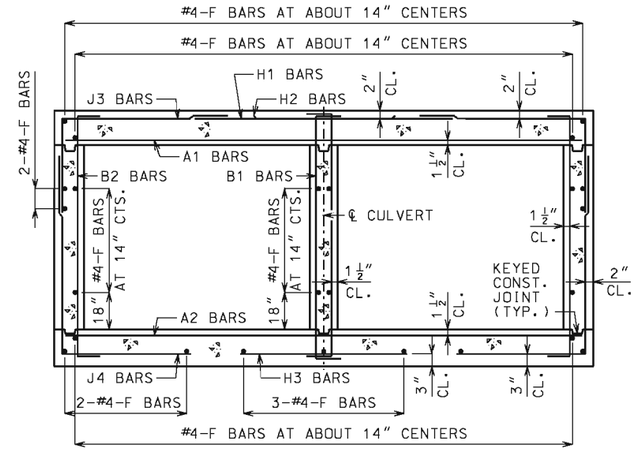

BARREL REINFORCEMENT

FOR DESIGN FILLS 2'-0" OR LESS

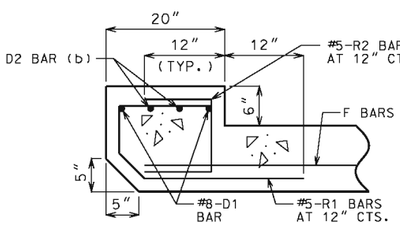

UPSTREAM HEADWALL REINFORCEMENT

NEAR INTERIOR WALL

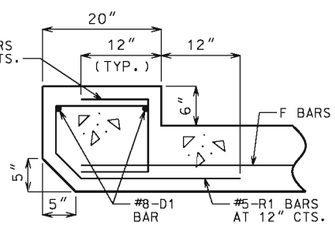

UPSTREAM HEADWALL REINFORCEMENT

NEAR MIDSPAN

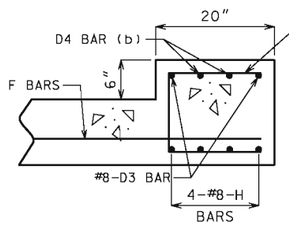

DOWNSTREAM HEADWALL REINFORCEMENT

NEAR INTERIOR WALL

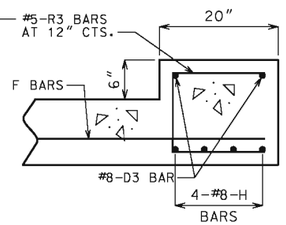

DOWNSTREAM HEADWALL REINFORCEMENT

NEAR MIDSPAN

(b) #8 FOR CLEAR SPAN > 10'-0"
#9 FOR CLEAR SPAN > 13'-0"
NOT REQUIRED FOR CLEAR SPANS ≤ 10'-0"

IF D2 AND D4 BARS ARE REQUIRED, THE MINIMUM LENGTH EACH SIDE OF ℄ WALL SHALL BE THE GREATER OF 48 BAR DIAMETERS OR 1/4 CLEAR SPAN. THE CLEAR SPAN IS PARALLEL TO LONG DIRECTION OF HEADWALL.

GENERAL NOTES:

FOR MEMBER THICKNESS AND FOR BAR SIZES, SPACING AND DIMENSIONS OF ALL REINFORCEMENT EXCEPT J5 BARS, SEE 703.47. FOR J5 BARS, SEE 703.37.

BARREL AND WINGS SECTIONS ARE SYMMETRICAL ABOUT AND NORMAL TO ℄ CULVERT. HEADWALL SECTIONS ARE NORMAL TO LONG DIRECTION OF HEADWALL.

DRAWING NOT TO SCALE. FOLLOW DIMENSIONS.

MINIMUM CLEARANCE TO REINFORCING STEEL SHALL BE 1 1/2".

MISSOURI HIGHWAYS AND TRANSPORTATION COMMISSION
105 WEST CAPITOL
JEFFERSON CITY, MO 65102
1-888-ASK-MODOT (1-888-275-6636)

STATE OF MISSOURI
DENNIS W. HECKMAN
NUMBER PE-27141
PROFESSIONAL ENGINEER
THIS SHEET HAS BEEN SIGNED, SEALED AND DATED ELECTRONICALLY.

CONCRETE DOUBLE BOX CULVERT

SKEW: LEFT ADVANCE
WINGS: FLARED

SECTIONS

DATE EFFECTIVE: 10/01/2011
DATE PREPARED: 5/13/2015

703.43H

SHEET NO. 3 OF 3

IF A SEAL IS PRESENT ON THIS SHEET IT HAS BEEN ELECTRONICALLY SEALED AND DATED.

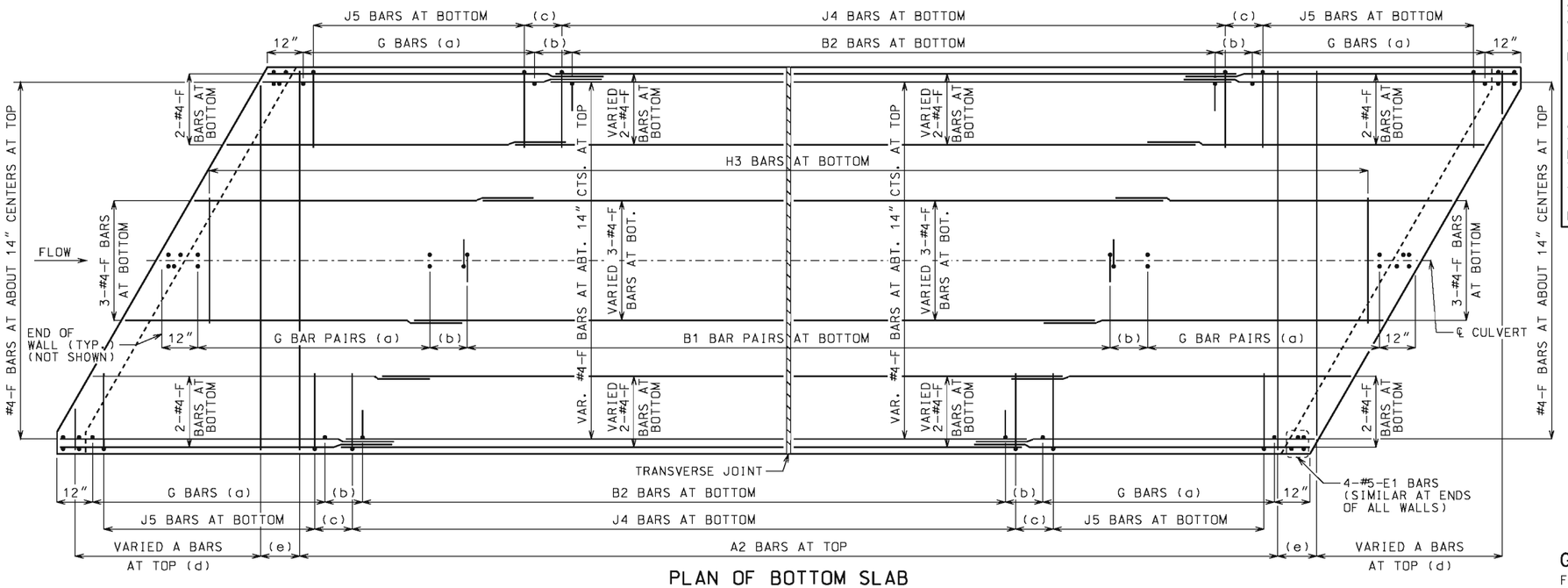

PLAN OF BOTTOM SLAB

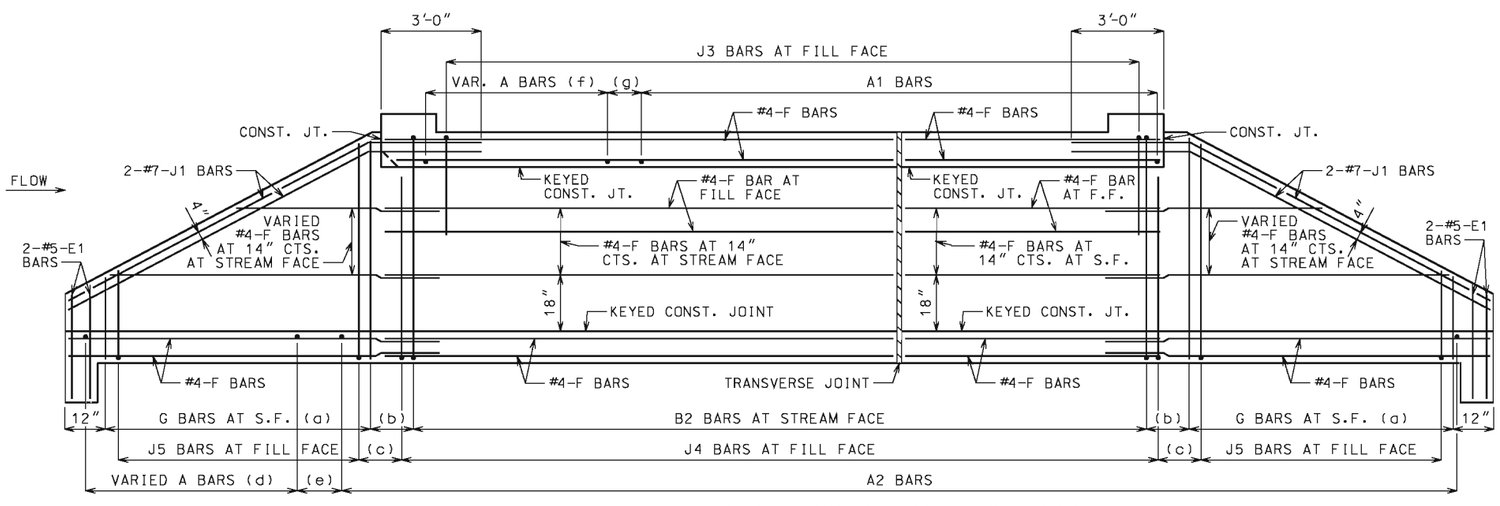

ELEVATION OF EXTERIOR WALL
J1 BARS MAY BE BENT IN FIELD OR SHOP.

LAYING OUT TRANVERSE JOINTS
UNLESS SHOWN ON BRIDGE PLANS

USE A TRANSVERSE JOINT WHEN BARREL LENGTH IS OVER 80 FEET. USE ADDITIONAL JOINTS TO LIMIT CUT SECTION LENGTH AND END SECTION BARREL LENGTH MEASURED ALONG CENTERLINE OF CULVERT TO 50 FEET.

MINIMUM END SECTION LENGTH SHALL BE 3 FEET MEASURED ALONG THE SHORTEST WALL FROM THE INSIDE FACE OF HEADWALL TO THE TRANSVERSE JOINT.

TO AVOID LOCATING TRANSVERSE JOINTS UNDER A TRAVELED WAY WITH DESIGN FILLS 2 FEET OR LESS THE FOLLOWING SHALL APPLY:

BARREL LENGTH UP TO 90 FEET WITHOUT A TRANSVERSE JOINT

CUT SECTION LENGTHS UP TO 60 FEET

WHEN BARREL AND CUT SECTION LENGTH RESTRICTIONS REQUIRE TRANSVERSE JOINTS TO BE LOCATED UNDER A TRAVELED WAY WITH DESIGN FILLS 2 FEET OR LESS. THE JOINTS SHALL BE LOCATED TO MINIMIZE THE LENGTH OF JOINT UNDER THE TRAVELED WAY.

TRAVELED WAY IS THE ROADWAY WIDTH MINUS SHOULDER WIDTHS.

FOR CUT SECTION DETAILS, SEE 703.46.

GENERAL NOTES:

FOR SECTIONS THRU BARREL, WINGS AND HEADWALLS, SEE SHEET 3 OF 3. FOR BAR SIZES, SPACING AND DIMENSIONS OF ALL REINFORCEMENT EXCEPT J5 BARS, SEE 703.47. FOR J5 BARS, SEE 703.37.

CONSTRUCTION JOINT KEY NOT SHOWN FOR CLARITY IN PLAN AND ELEVATION, SEE SHEET 3 OF 3 FOR DETAILS.

DRAWING NOT TO SCALE. FOLLOW DIMENSIONS.

MINIMUM CLEARANCE TO REINFORCING STEEL SHALL BE 1½".

LAP LONGITUDINAL BARS A MINIMUM OF 23" AT SPLICES.

BEVELED HEADWALL SHALL BE LOCATED AT UPSTREAM END.

(a) SAME SIZE AND SPACING AS ADJACENT B BARS

(b) VARIES, 12" MAXIMUM

(c) J4 BAR SPACING

(d) SAME SIZE AND SPACING AS A2 BARS

(e) A2 BAR SPACING

(f) SAME SIZE AND SPACING AS A1 BARS

(g) A1 BAR SPACING

MISSOURI HIGHWAYS AND TRANSPORTATION COMMISSION
105 WEST CAPITOL
JEFFERSON CITY, MO 65102
1-888-ASK-MODOT (1-888-275-6636)

STATE OF MISSOURI
DENNIS W. HECKMAN
NUMBER PE-27141
PROFESSIONAL ENGINEER
THIS SHEET HAS BEEN SIGNED, SEALED AND DATED ELECTRONICALLY.

CONCRETE DOUBLE BOX CULVERT

SKEW: RIGHT ADVANCE
WINGS: STRAIGHT

REINFORCEMENT

DATE EFFECTIVE: 10/01/2011
DATE PREPARED: 5/13/2015

703.44H

SHEET NO. 1 OF 3

IF A SEAL IS PRESENT ON THIS SHEET IT HAS BEEN ELECTRONICALLY SEALED AND DATED.

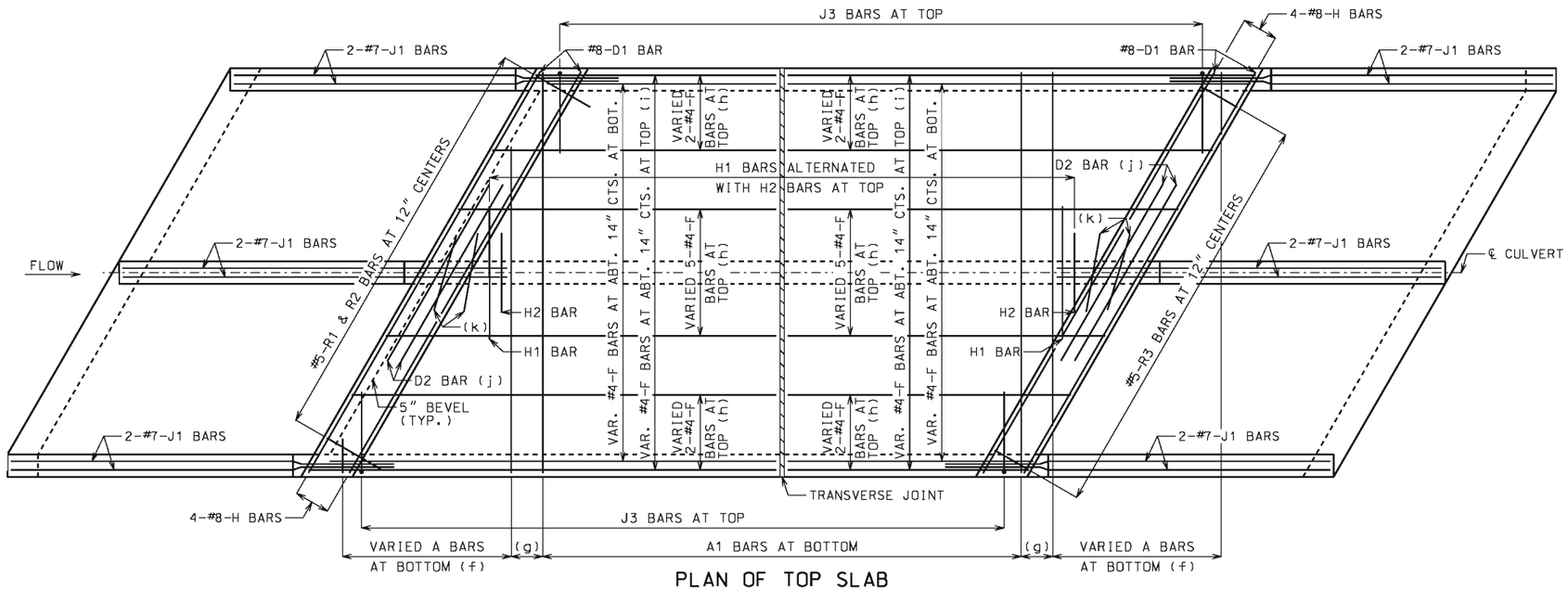

PLAN OF TOP SLAB

B BARS IN WALLS ARE NOT SHOWN FOR CLARITY.
FOR PLACEMENT, SEE SHEET 1 OF 3.

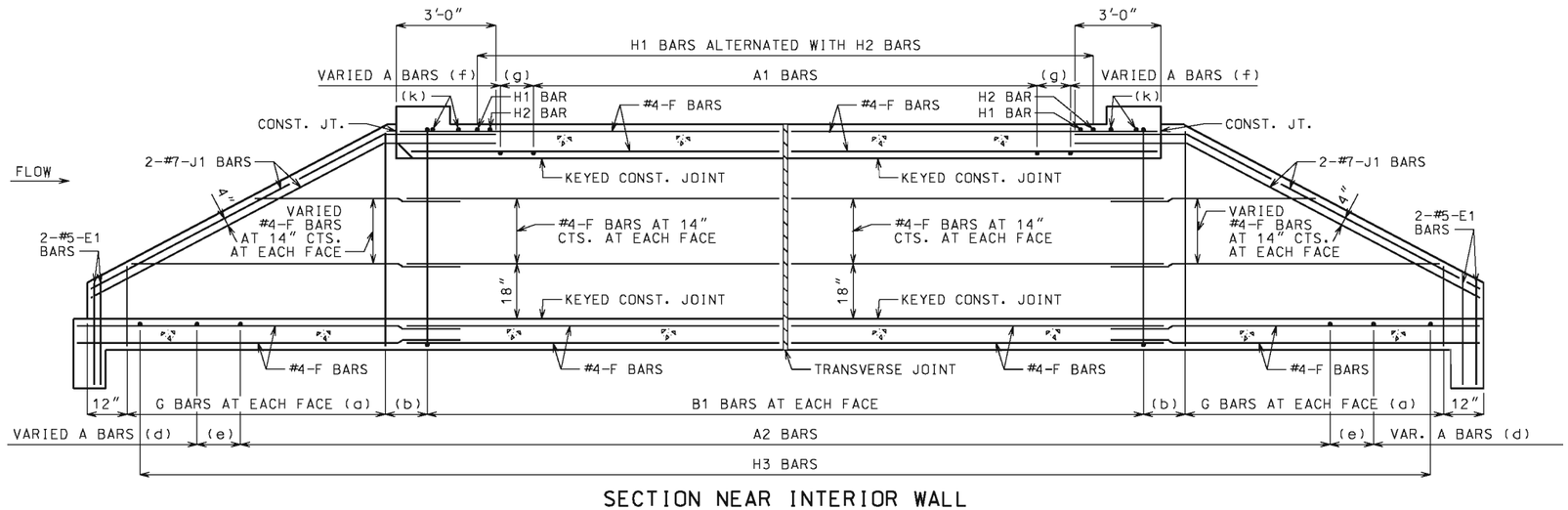

SECTION NEAR INTERIOR WALL

J1 BARS MAY BE BENT IN FIELD OR SHOP.

GENERAL NOTES:

FOR SECTIONS THRU BARREL, WINGS AND HEADWALLS, SEE SHEET 3 OF 3. FOR BAR SIZES, SPACING AND DIMENSIONS OF ALL REINFORCEMENT EXCEPT J5 BARS, SEE 703.47. FOR J5 BARS, SEE 703.37.

CONSTRUCTION JOINT KEY NOT SHOWN FOR CLARITY IN PLAN AND SECTION, SEE SHEET 3 OF 3 FOR DETAILS.

DRAWING NOT TO SCALE. FOLLOW DIMENSIONS.

MINIMUM CLEARANCE TO REINFORCING STEEL SHALL BE 1½".

LAP LONGITUDINAL BARS A MINIMUM OF 23" AT SPLICES.

BEVELED HEADWALL SHALL BE LOCATED AT UPSTREAM END.

(a) SAME SIZE AND SPACING AS ADJACENT B BARS

(b) VARIES, 12" MAXIMUM

(c) NOT SPECIFIED ON THIS SHEET

(d) SAME SIZE AND SPACING AS A2 BARS

(e) A2 BAR SPACING

(f) SAME SIZE AND SPACING AS A1 BARS

(g) A1 BAR SPACING

(h) FOR DESIGN FILLS OVER 2'-0"

(i) FOR DESIGN FILLS 2'-0" OR LESS

(j) NOT REQUIRED FOR CLEAR SPANS ≤ 10'-0"
#8 FOR CLEAR SPAN > 10'-0"
#9 FOR CLEAR SPAN > 13'-0"

IF REQUIRED, THE MINIMUM LENGTH EACH SIDE OF ℄ WALL SHALL BE THE GREATER OF 48 BAR DIAMETERS OR ¼ CLEAR SPAN. THE CLEAR SPAN IS PARALLEL TO LONG DIRECTION OF HEADWALL.

(k) H2 BARS AS REQUIRED, QUANTITY OF BARS VARIES WITH SKEW.

MISSOURI HIGHWAYS AND TRANSPORTATION COMMISSION
105 WEST CAPITOL
JEFFERSON CITY, MO 65102
1-888-ASK-MODOT (1-888-275-6636)

STATE OF MISSOURI
DENNIS W. HECKMAN
NUMBER PE-27141
PROFESSIONAL ENGINEER
THIS SHEET HAS BEEN SIGNED, SEALED AND DATED ELECTRONICALLY.

CONCRETE DOUBLE BOX CULVERT

SKEW: RIGHT ADVANCE
WINGS: STRAIGHT

REINFORCEMENT

DATE EFFECTIVE: 10/01/2011
DATE PREPARED: 5/13/2015

703.44H

SHEET NO. 2 OF 3

IF A SEAL IS PRESENT ON THIS SHEET IT HAS BEEN ELECTRONICALLY SEALED AND DATED.

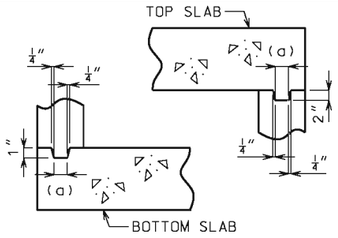

KEYED CONSTRUCTION JOINT

(a) APPROXIMATELY ONE-THIRD OF WALL THICKNESS

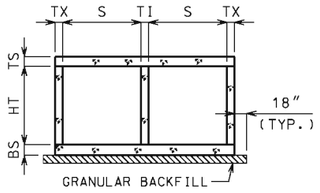

GRANULAR BACKFILL LIMITS AND MEMBER DIMENSIONS

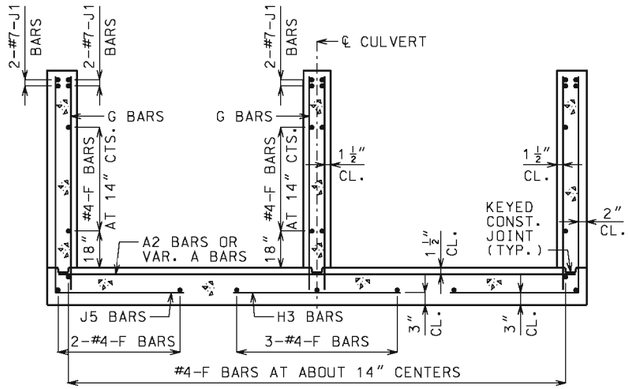

UPSTREAM AND DOWNSTREAM WINGS REINFORCEMENT

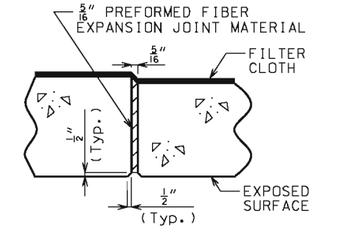

TRANSVERSE JOINT THRU BARREL

PREFORMED FIBER EXPANSION JOINT MATERIAL IN ACCORDANCE WITH SEC 1057 SHALL BE SECURELY STITCHED TO ONE FACE OF THE CONCRETE WITH 10 GAGE COPPER WIRE OR 12 GAGE SOFT DRAWN GALVANIZED STEEL WIRE.

FILTER CLOTH 3 FEET IN WIDTH AND DOUBLE THICKNESS SHALL BE CENTERED ON TRANSVERSE JOINTS IN TOP SLAB AND SIDEWALLS WITH EDGES SEALED WITH MASTIC OR TWO SIDED TAPE. FILTER CLOTH SHALL BE A SUBSURFACE DRAINAGE GEOTEXTILE IN ACCORDANCE WITH SEC 1011. COST OF FURNISHING AND INSTALLING FILTER CLOTH WILL BE CONSIDERED COMPLETELY COVERED BY THE CONTRACT UNIT PRICE FOR OTHER ITEMS.

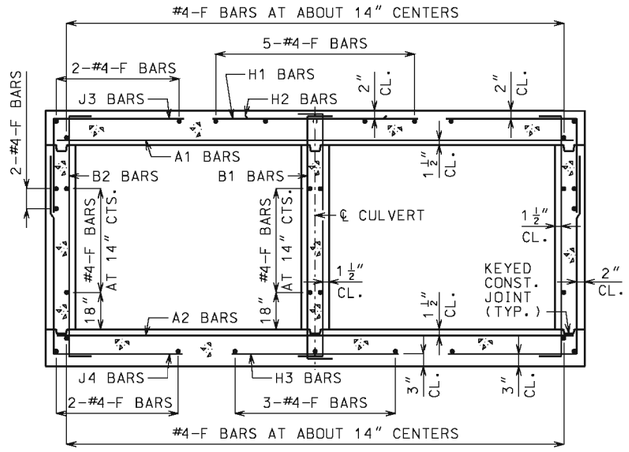

BARREL REINFORCEMENT

FOR DESIGN FILLS OVER 2'-0"

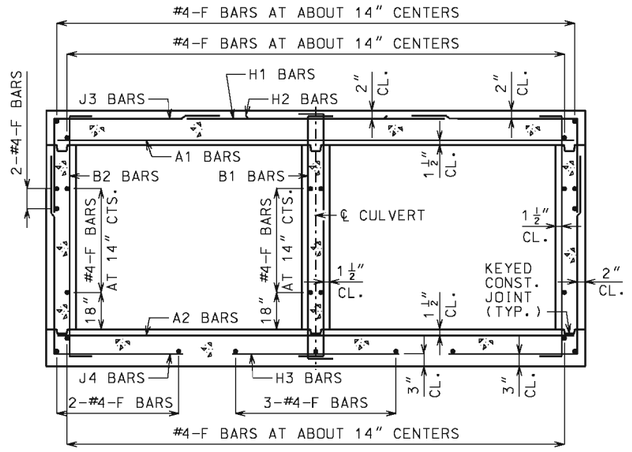

BARREL REINFORCEMENT

FOR DESIGN FILLS 2'-0" OR LESS

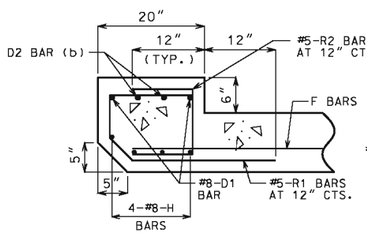

UPSTREAM HEADWALL REINFORCEMENT

NEAR INTERIOR WALL

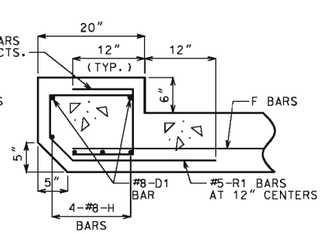

UPSTREAM HEADWALL REINFORCEMENT

NEAR MIDSPAN

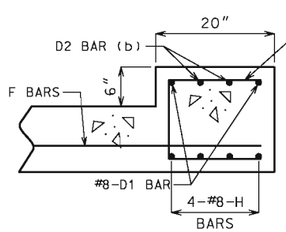

DOWNSTREAM HEADWALL REINFORCEMENT

NEAR INTERIOR WALL

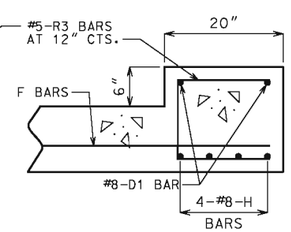

DOWNSTREAM HEADWALL REINFORCEMENT

NEAR MIDSPAN

(b) #8 FOR CLEAR SPAN > 10'-0"
#9 FOR CLEAR SPAN > 13'-0"
NOT REQUIRED FOR CLEAR SPANS ≤ 10'-0"

IF D2 BARS ARE REQUIRED. THE MINIMUM LENGTH EACH SIDE OF ℄ WALL SHALL BE THE GREATER OF 48 BAR DIAMETERS OR 1/4 CLEAR SPAN. THE CLEAR SPAN IS PARALLEL TO LONG DIRECTION OF HEADWALL.

GENERAL NOTES:

FOR MEMBER THICKNESS AND FOR BAR SIZES, SPACING AND DIMENSIONS OF ALL REINFORCEMENT EXCEPT J5 BARS, SEE 703.47. FOR J5 BARS, SEE 703.37.

BARREL AND WINGS SECTIONS ARE SYMMETRICAL ABOUT AND NORMAL TO ℄ CULVERT. HEADWALL SECTIONS ARE NORMAL TO LONG DIRECTION OF HEADWALL.

DRAWING NOT TO SCALE. FOLLOW DIMENSIONS.

MINIMUM CLEARANCE TO REINFORCING STEEL SHALL BE 1 1/2".

MISSOURI HIGHWAYS AND TRANSPORTATION COMMISSION
105 WEST CAPITOL
JEFFERSON CITY, MO 65102
1-888-ASK-MODOT (1-888-275-6636)

STATE OF MISSOURI
DENNIS W. HECKMAN
NUMBER PE-27141
PROFESSIONAL ENGINEER
THIS SHEET HAS BEEN SIGNED, SEALED AND DATED ELECTRONICALLY.

CONCRETE DOUBLE BOX CULVERT

SKEW: RIGHT ADVANCE
WINGS: STRAIGHT

SECTIONS

DATE EFFECTIVE: 10/01/2011
DATE PREPARED: 5/13/2015

703.44H

SHEET NO. 3 OF 3

IF A SEAL IS PRESENT ON THIS SHEET IT HAS BEEN ELECTRONICALLY SEALED AND DATED.

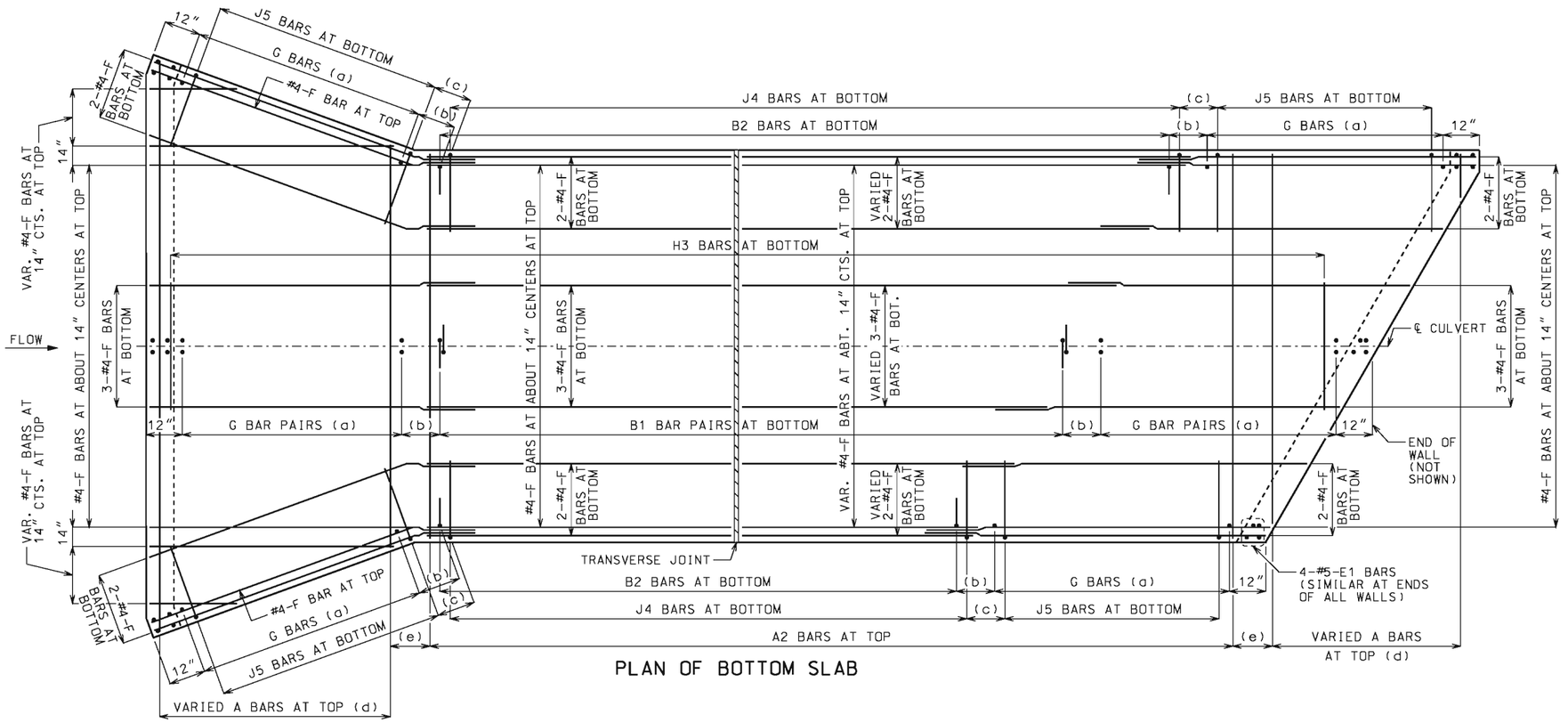

PLAN OF BOTTOM SLAB

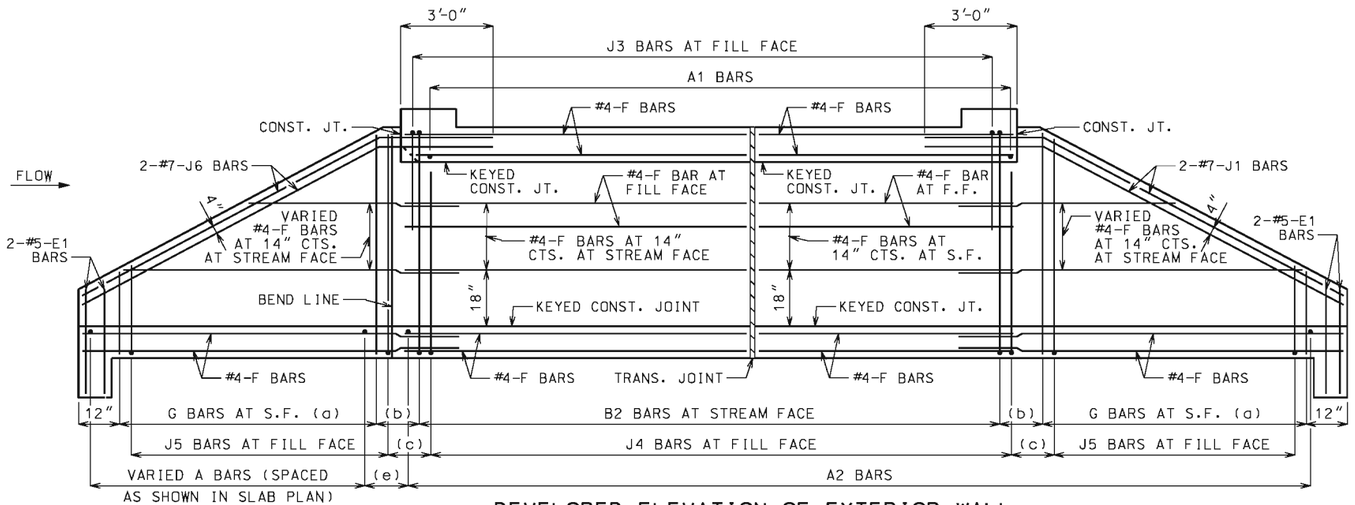

DEVELOPED ELEVATION OF EXTERIOR WALL

J1 AND J6 BARS MAY BE BENT IN FIELD OR SHOP.

LAYING OUT TRANVERSE JOINTS

UNLESS SHOWN ON BRIDGE PLANS

USE A TRANSVERSE JOINT WHEN BARREL LENGTH IS OVER 80 FEET. USE ADDITIONAL JOINTS TO LIMIT CUT SECTION LENGTH AND END SECTION BARREL LENGTH MEASURED ALONG CENTERLINE OF CULVERT TO 50 FEET.

MINIMUM END SECTION LENGTH SHALL BE 3 FEET MEASURED ALONG THE SHORTEST WALL FROM THE INSIDE FACE OF HEADWALL TO THE TRANSVERSE JOINT.

TO AVOID LOCATING TRANSVERSE JOINTS UNDER A TRAVELED WAY WITH DESIGN FILLS 2 FEET OR LESS THE FOLLOWING SHALL APPLY:

BARREL LENGTH UP TO 90 FEET WITHOUT A TRANSVERSE JOINT

CUT SECTION LENGTHS UP TO 60 FEET

WHEN BARREL AND CUT SECTION LENGTH RESTRICTIONS REQUIRE TRANSVERSE JOINTS TO BE LOCATED UNDER A TRAVELED WAY WITH DESIGN FILLS 2 FEET OR LESS. THE JOINTS SHALL BE LOCATED TO MINIMIZE THE LENGTH OF JOINT UNDER THE TRAVELED WAY.

TRAVELED WAY IS THE ROADWAY WIDTH MINUS SHOULDER WIDTHS.

FOR CUT SECTION DETAILS, SEE 703.46.

GENERAL NOTES:

FOR SECTIONS THRU BARREL, WINGS AND HEADWALLS, SEE SHEET 3 OF 3. FOR BAR SIZES, SPACING AND DIMENSIONS OF ALL REINFORCEMENT EXCEPT J5 BARS, SEE 703.47. FOR J5 BARS, SEE 703.37.

CONSTRUCTION JOINT KEY NOT SHOWN FOR CLARITY IN PLAN AND ELEVATION, SEE SHEET 3 OF 3 FOR DETAILS.

DRAWING NOT TO SCALE. FOLLOW DIMENSIONS.

MINIMUM CLEARANCE TO REINFORCING STEEL SHALL BE 1½".

LAP LONGITUDINAL BARS A MINIMUM OF 23" AT SPLICES.

BEVELED HEADWALL SHALL BE LOCATED AT UPSTREAM END.

(a) SAME SIZE AND SPACING AS ADJACENT B BARS

(b) VARIES, 12" MAXIMUM

(c) J4 BAR SPACING

(d) SAME SIZE AND SPACING AS A2 BARS

(e) A2 BAR SPACING

MISSOURI HIGHWAYS AND TRANSPORTATION COMMISSION
105 WEST CAPITOL
JEFFERSON CITY, MO 65102
1-888-ASK-MODOT (1-888-275-6636)

STATE OF MISSOURI — DENNIS W. HECKMAN — NUMBER PE-27141 — PROFESSIONAL ENGINEER

THIS SHEET HAS BEEN SIGNED, SEALED AND DATED ELECTRONICALLY.

CONCRETE DOUBLE BOX CULVERT

SKEW: RIGHT ADVANCE
WINGS: FLARED

REINFORCEMENT

DATE EFFECTIVE: 10/01/2011
DATE PREPARED: 5/13/2015

703.45C

SHEET NO. 1 OF 3

IF A SEAL IS PRESENT ON THIS SHEET IT HAS BEEN ELECTRONICALLY SEALED AND DATED.

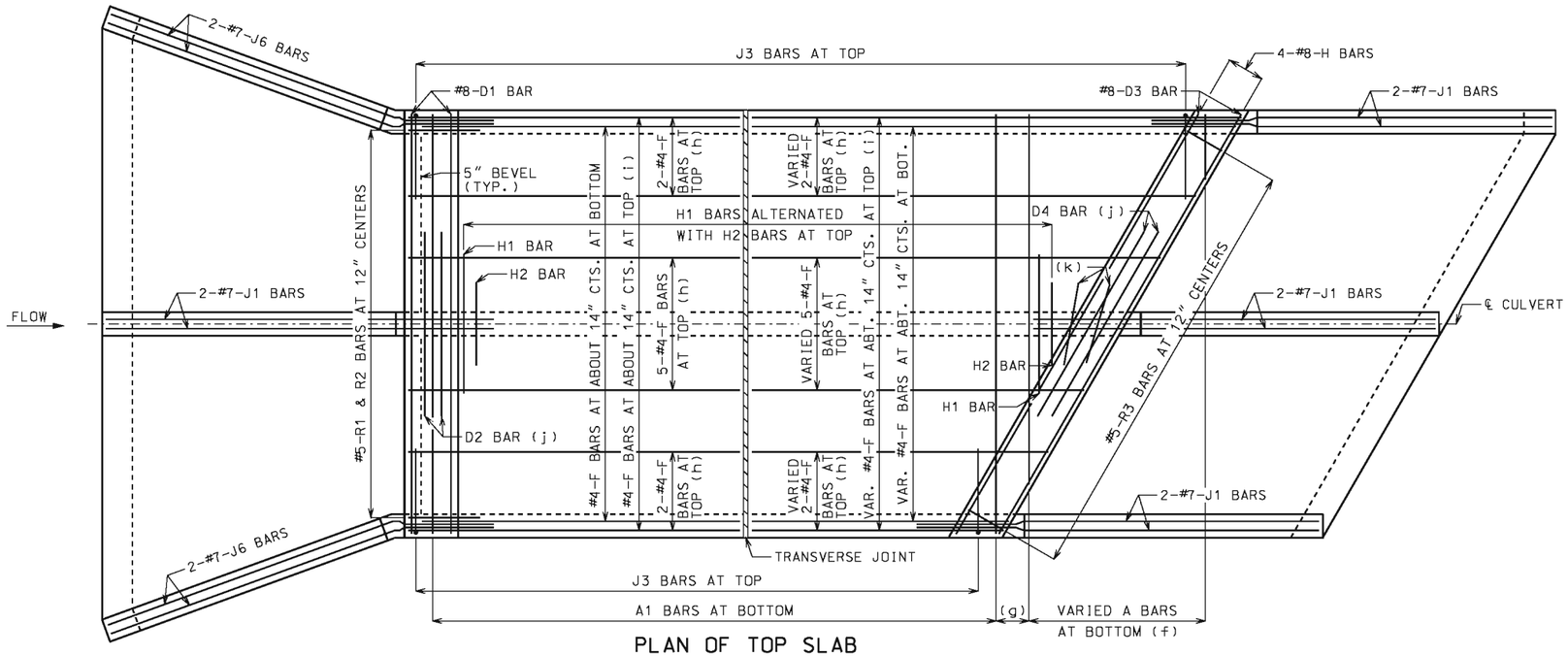

PLAN OF TOP SLAB

B BARS IN WALLS ARE NOT SHOWN FOR CLARITY.
FOR PLACEMENT, SEE SHEET 1 OF 3.

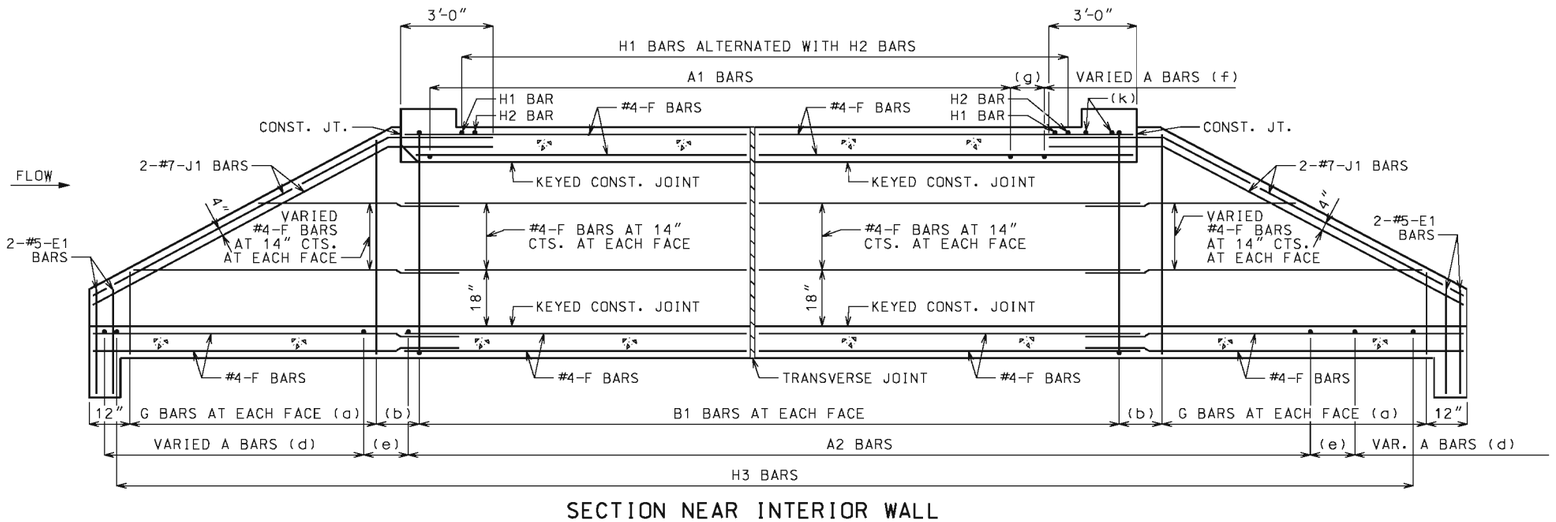

SECTION NEAR INTERIOR WALL

J1 BARS MAY BE BENT IN FIELD OR SHOP.

GENERAL NOTES:

FOR SECTIONS THRU BARREL, WINGS AND HEADWALLS, SEE SHEET 3 OF 3. FOR BAR SIZES, SPACING AND DIMENSIONS OF ALL REINFORCEMENT EXCEPT J5 BARS, SEE 703.47. FOR J5 BARS, SEE 703.37.

CONSTRUCTION JOINT KEY NOT SHOWN FOR CLARITY IN PLAN AND SECTION, SEE SHEET 3 OF 3 FOR DETAILS.

DRAWING NOT TO SCALE. FOLLOW DIMENSIONS.

MINIMUM CLEARANCE TO REINFORCING STEEL SHALL BE 1½".

LAP LONGITUDINAL BARS A MINIMUM OF 23" AT SPLICES.

BEVELED HEADWALL SHALL BE LOCATED AT UPSTREAM END.

(a) SAME SIZE AND SPACING AS ADJACENT B BARS

(b) VARIES, 12" MAXIMUM

(c) NOT SPECIFIED ON THIS SHEET

(d) SAME SIZE AND SPACING AS A2 BARS

(e) A2 BAR SPACING

(f) SAME SIZE AND SPACING AS A1 BARS

(g) A1 BAR SPACING

(h) FOR DESIGN FILLS OVER 2'-0"

(i) FOR DESIGN FILLS 2'-0" OR LESS

(j) NOT REQUIRED FOR CLEAR SPANS ≤ 10'-0"
#8 FOR CLEAR SPAN > 10'-0"
#9 FOR CLEAR SPAN > 13'-0"

IF REQUIRED, THE MINIMUM LENGTH EACH SIDE OF ℄ WALL SHALL BE THE GREATER OF 48 BAR DIAMETERS OR ¼ CLEAR SPAN. THE CLEAR SPAN IS PARALLEL TO LONG DIRECTION OF HEADWALL.

(k) H2 BARS AS REQUIRED, QUANTITY OF BARS VARIES WITH SKEW.

MISSOURI HIGHWAYS AND TRANSPORTATION COMMISSION
105 WEST CAPITOL
JEFFERSON CITY, MO 65102
1-888-ASK-MODOT (1-888-275-6636)

STATE OF MISSOURI
DENNIS W. HECKMAN
NUMBER PE-27141
PROFESSIONAL ENGINEER
THIS SHEET HAS BEEN SIGNED, SEALED AND DATED ELECTRONICALLY.

CONCRETE DOUBLE BOX CULVERT

SKEW: RIGHT ADVANCE
WINGS: FLARED

REINFORCEMENT

DATE EFFECTIVE: 10/01/2011
DATE PREPARED: 5/13/2015

703.45C

SHEET NO. 2 OF 3

IF A SEAL IS PRESENT ON THIS SHEET IT HAS BEEN ELECTRONICALLY SEALED AND DATED.

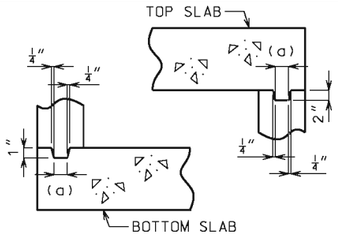

KEYED CONSTRUCTION JOINT

(a) APPROXIMATELY ONE-THIRD OF WALL THICKNESS

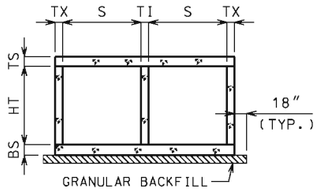

GRANULAR BACKFILL LIMITS AND MEMBER DIMENSIONS

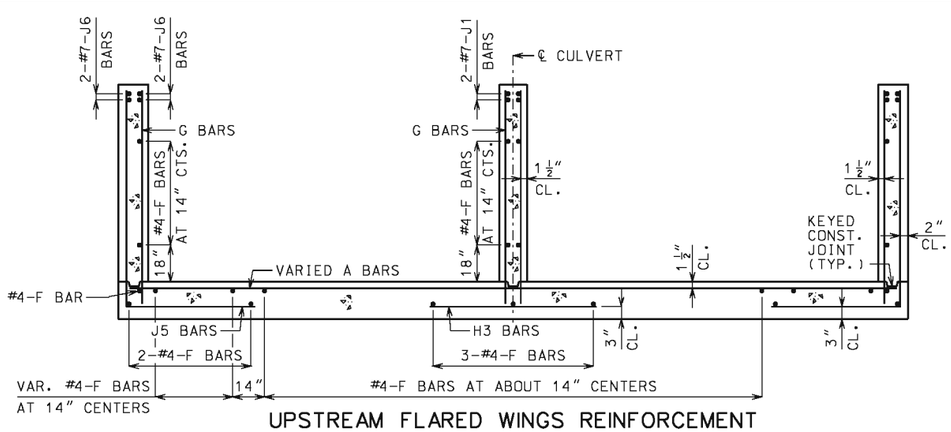

UPSTREAM FLARED WINGS REINFORCEMENT

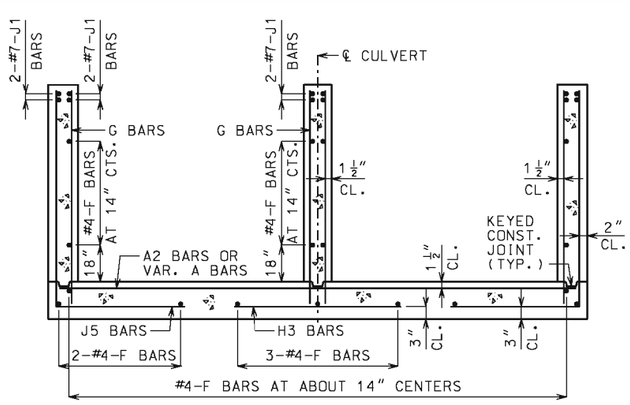

DOWNSTREAM WINGS REINFORCEMENT

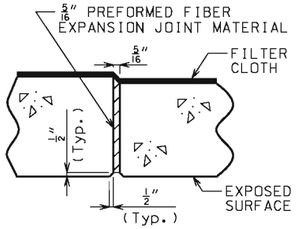

TRANSVERSE JOINT THRU BARREL

PREFORMED FIBER EXPANSION JOINT MATERIAL IN ACCORDANCE WITH SEC 1057 SHALL BE SECURELY STITCHED TO ONE FACE OF THE CONCRETE WITH 10 GAGE COPPER WIRE OR 12 GAGE SOFT DRAWN GALVANIZED STEEL WIRE.

FILTER CLOTH 3 FEET IN WIDTH AND DOUBLE THICKNESS SHALL BE CENTERED ON TRANSVERSE JOINTS IN TOP SLAB AND SIDEWALLS WITH EDGES SEALED WITH MASTIC OR TWO SIDED TAPE. FILTER CLOTH SHALL BE A SUBSURFACE DRAINAGE GEOTEXTILE IN ACCORDANCE WITH SEC 1011. COST OF FURNISHING AND INSTALLING FILTER CLOTH WILL BE CONSIDERED COMPLETELY COVERED BY THE CONTRACT UNIT PRICE FOR OTHER ITEMS.

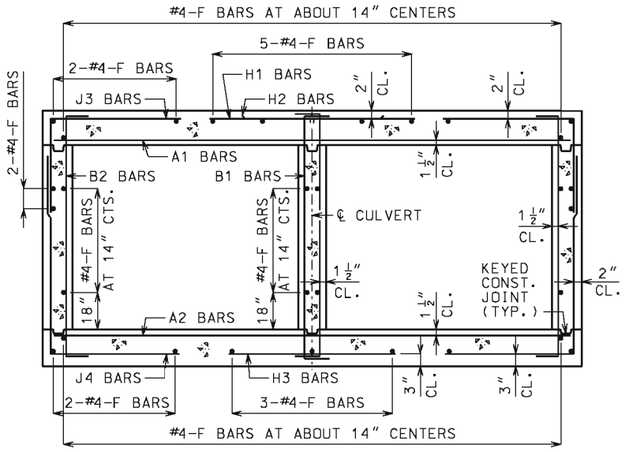

BARREL REINFORCEMENT

FOR DESIGN FILLS OVER 2'-0"

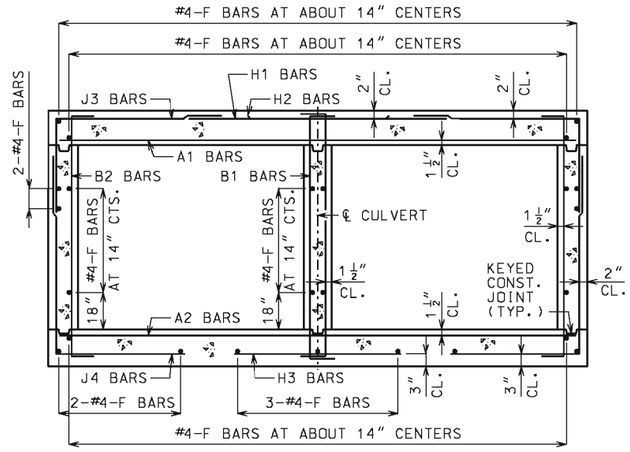

BARREL REINFORCEMENT

FOR DESIGN FILLS 2'-0" OR LESS

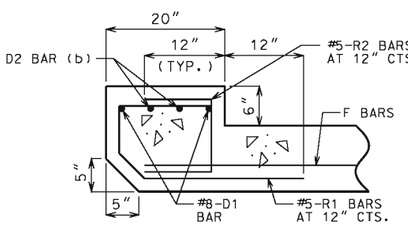

UPSTREAM HEADWALL REINFORCEMENT

NEAR INTERIOR WALL

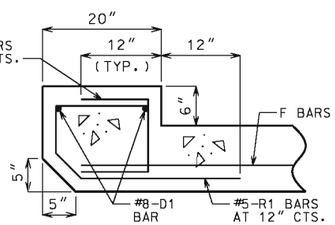

UPSTREAM HEADWALL REINFORCEMENT

NEAR MIDSPAN

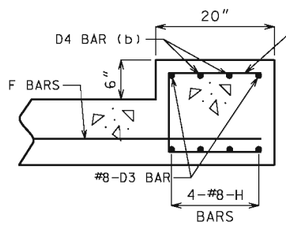

DOWNSTREAM HEADWALL REINFORCEMENT

NEAR INTERIOR WALL

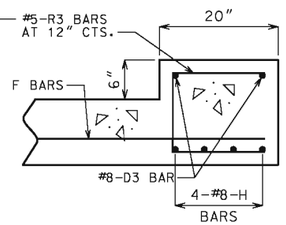

DOWNSTREAM HEADWALL REINFORCEMENT

NEAR MIDSPAN

(b) #8 FOR CLEAR SPAN > 10'-0"
#9 FOR CLEAR SPAN > 13'-0"
NOT REQUIRED FOR CLEAR SPANS ≤ 10'-0"

IF D2 AND D4 BARS ARE REQUIRED, THE MINIMUM LENGTH EACH SIDE OF ℄ WALL SHALL BE THE GREATER OF 48 BAR DIAMETERS OR ¼ CLEAR SPAN. THE CLEAR SPAN IS PARALLEL TO LONG DIRECTION OF HEADWALL.

GENERAL NOTES:

FOR MEMBER THICKNESS AND FOR BAR SIZES, SPACING AND DIMENSIONS OF ALL REINFORCEMENT EXCEPT J5 BARS, SEE 703.47. FOR J5 BARS, SEE 703.37.

BARREL AND WINGS SECTIONS ARE SYMMETRICAL ABOUT AND NORMAL TO ℄ CULVERT. HEADWALL SECTIONS ARE NORMAL TO LONG DIRECTION OF HEADWALL.

DRAWING NOT TO SCALE. FOLLOW DIMENSIONS.

MINIMUM CLEARANCE TO REINFORCING STEEL SHALL BE 1½".

MISSOURI HIGHWAYS AND TRANSPORTATION COMMISSION
105 WEST CAPITOL
JEFFERSON CITY, MO 65102
1-888-ASK-MODOT (1-888-275-6636)

STATE OF MISSOURI
DENNIS W. HECKMAN
NUMBER PE-27141
PROFESSIONAL ENGINEER
THIS SHEET HAS BEEN SIGNED, SEALED AND DATED ELECTRONICALLY.

CONCRETE DOUBLE BOX CULVERT

SKEW: RIGHT ADVANCE
WINGS: FLARED

SECTIONS

DATE EFFECTIVE: 10/01/2011
DATE PREPARED: 5/13/2015

703.45C

SHEET NO. 3 OF 3

IF A SEAL IS PRESENT ON THIS SHEET IT HAS BEEN ELECTRONICALLY SEALED AND DATED.

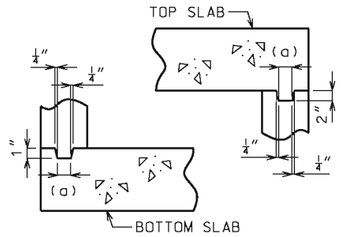

KEYED CONSTRUCTION JOINT

(a) APPROXIMATELY ONE-THIRD OF WALL THICKNESS

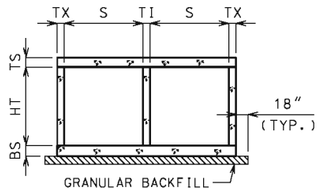

GRANULAR BACKFILL LIMITS AND MEMBER DIMENSIONS

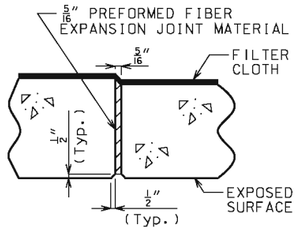

TRANSVERSE JOINT THRU BARREL

PREFORMED FIBER EXPANSION JOINT MATERIAL IN ACCORDANCE WITH SEC 1057 SHALL BE SECURELY STITCHED TO ONE FACE OF THE CONCRETE WITH 10 GAGE COPPER WIRE OR 12 GAGE SOFT DRAWN GALVANIZED STEEL WIRE.

FILTER CLOTH 3 FEET IN WIDTH AND DOUBLE THICKNESS SHALL BE CENTERED ON TRANSVERSE JOINTS IN TOP SLAB AND SIDEWALLS WITH EDGES SEALED WITH MASTIC OR TWO SIDED TAPE. FILTER CLOTH SHALL BE A SUBSURFACE DRAINAGE GEOTEXTILE IN ACCORDANCE WITH SEC 1011. COST OF FURNISHING AND INSTALLING FILTER CLOTH WILL BE CONSIDERED COMPLETELY COVERED BY THE CONTRACT UNIT PRICE FOR OTHER ITEMS.

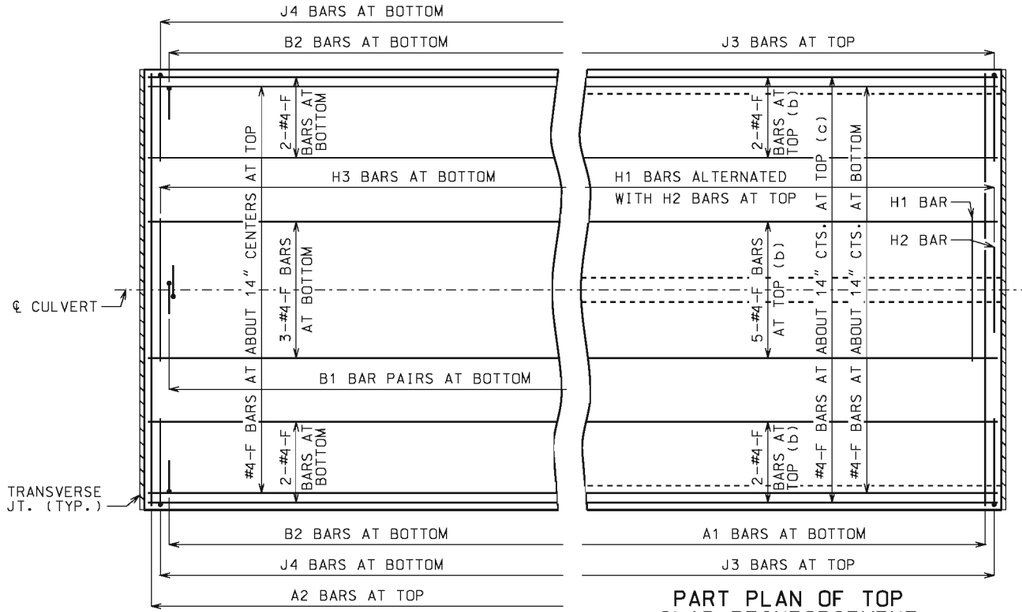

PART PLAN OF BOTTOM SLAB REINFORCEMENT

PART PLAN OF TOP SLAB REINFORCEMENT

(b) FOR DESIGN FILLS OVER 2'-0"
(c) FOR DESIGN FILLS 2'-0" OR LESS

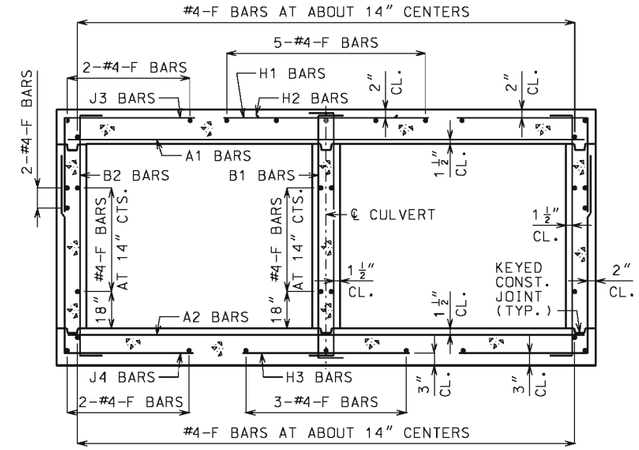

BARREL REINFORCEMENT

FOR DESIGN FILLS OVER 2'-0"
SYMMETRICAL ABOUT AND NORMAL TO ℄ CULVERT.

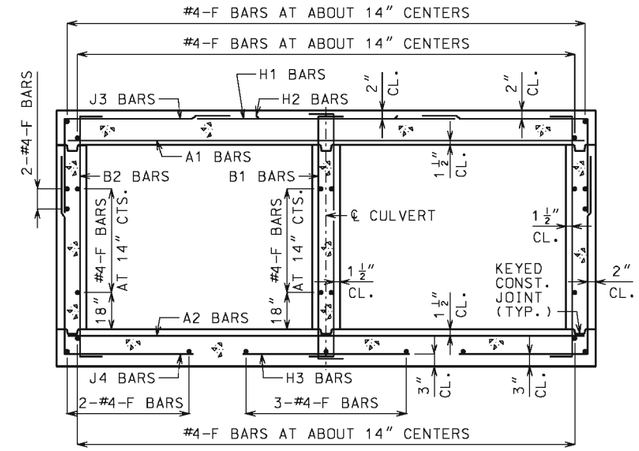

BARREL REINFORCEMENT

FOR DESIGN FILLS 2'-0" OR LESS
SYMMETRICAL ABOUT AND NORMAL TO ℄ CULVERT.

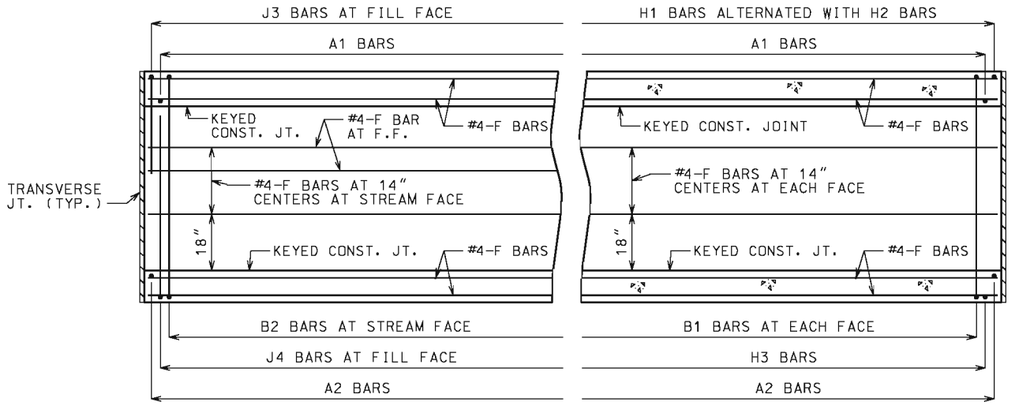

PART ELEVATION OF EXTERIOR WALL REINFORCEMENT

PART SECTION NEAR INTERIOR WALL REINFORCEMENT

GENERAL NOTES

DESIGN SPECIFICATIONS:
2010 AASHTO LRFD BRIDGE DESIGN SPECFICATIONS AND 2010 INTERIM REVISIONS

DESIGN LOADING:
VEHICULAR = HL-93 MINUS LANE LOAD, EARTH = 120 LB/CF
EQUIVALENT FLUID PRESSURE = 30 LB/CF (MIN.), 60 LB/CF (MAX.)

DESIGN UNIT STRESSES:
CLASS B-1 CONCRETE (BOX CULVERT) f'c = 4,000 PSI
REINFORCING STEEL (GRADE 60) fy = 60,000 PSI

MISCELLANEOUS:
FOR MEMBER THICKNESS AND FOR BAR SIZES, SPACING AND DIMENSIONS, SEE 703.47.

CONSTRUCTION JOINT KEY NOT SHOWN FOR CLARITY IN PART PLANS, PART ELEVATION AND PART SECTION.

DRAWING NOT TO SCALE. FOLLOW DIMENSIONS.

MINIMUM CLEARANCE TO REINFORCING STEEL SHALL BE 1 1/2".

MISSOURI HIGHWAYS AND TRANSPORTATION COMMISSION
105 WEST CAPITOL
JEFFERSON CITY, MO 65102
1-888-ASK-MODOT (1-888-275-6636)

STATE OF MISSOURI
DENNIS W. HECKMAN
NUMBER PE-27141
PROFESSIONAL ENGINEER
THIS SHEET HAS BEEN SIGNED, SEALED AND DATED ELECTRONICALLY.

CONCRETE DOUBLE BOX CULVERT

CUT SECTION

DATE EFFECTIVE: 10/01/2011
DATE PREPARED: 5/13/2015

703.46

SHEET NO. 1 OF 1

IF A SEAL IS PRESENT ON THIS SHEET IT HAS BEEN ELECTRONICALLY SEALED AND DATED.

SPAN (S) = 3 FT HEIGHT (HT) = 2 FT OR 3 FT OR 4 FT

DESIGN FILL	MEMBER THICKNESS				TOP SLAB BARS												BOTTOM SLAB BARS												WALL BARS				
					A1 BARS		J3 BARS						H1 BARS			H2 BARS			A2 BARS		J4 BARS					H3 BARS			B1 BARS		B2 BARS		
	TS	BS	TX	TI	SIZE	SPA.	SIZE	SPA.	C1	K2 HT=2′	K2 HT=3′	K2 HT=4′	SIZE	SPA.	C5	SIZE	SPA.	C6	SIZE	SPA.	SIZE	SPA.	C4	K3 HT=2′	K3 HT=3′	K3 HT=4′	SIZE	SPA.	C7	SIZE	SPA.	SIZE	SPA.	G1
1 FT	10	8	8	8	4	8.5	4	10.5	23.8	26.0	26.0	26.0	4	24	39.5	4	24	16.0	4	12	4	12	35.3	28	40	52	4	12	24.5	5	12	5	12	12
2 FT	10	8	8	8	4	9	4	10.5	23.8	26.0	26.0	26.0	4	24	39.5	4	24	16.0	4	12	4	12	33.0	28	40	52	4	12	24.5	5	12	5	12	12
4 FT	8	8	8	8	4	12	4	12	23.8	24.0	24.0	24.0	4	24	39.5	4	24	15.5	4	12	4	12	30.1	28	40	52	4	12	23.5	5	12	5	12	12
6 FT	8	8	8	8	4	12	4	12	30.0	24.0	24.0	24.0	4	24	24.5	4	24	15.0	4	12	4	12	28.0	28	40	52	4	12	23.0	5	12	5	12	12
8 FT	8	8	8	8	4	12	4	12	28.0	24.0	24.0	24.0	4	24	23.5	4	24	15.0	4	12	4	12	27.0	28	40	52	4	12	23.0	5	12	5	12	0
10 FT	8	8	8	8	4	12	4	12	25.0	24.0	24.0	24.0	4	24	22.0	4	24	14.5	4	12	4	12	24.6	28	40	52	4	12	22.5	5	12	5	12	0
12 FT	8	8	8	8	4	12	4	12	24.9	24.0	24.0	24.0	4	24	22.0	4	24	15.5	4	12	4	12	24.5	28	40	52	4	12	22.5	5	12	5	12	0
14 FT	8	8	8	8	4	12	4	12	24.8	24.0	24.0	24.0	4	24	22.0	4	24	16.0	4	12	4	12	24.5	28	40	52	4	11.5	22.5	5	12	5	12	0
16 FT	8	8	8	8	4	12	4	12	24.6	24.0	24.0	24.0	4	24	22.0	4	24	17.0	4	12	4	12	24.4	28	40	52	4	10.5	22.5	5	12	5	12	0
18 FT	8	8	8	8	4	12	4	12	24.6	24.0	24.0	24.0	4	24	22.0	4	24	17.5	4	12	4	12	24.4	28	40	52	4	10	22.5	5	12	5	12	0
20 FT	8	8	8	8	4	12	4	12	24.5	24.0	24.0	24.0	4	24	22.0	4	24	17.5	4	12	4	12	24.3	28	40	52	4	9.5	22.5	5	12	5	12	0
22 FT	8	8	8	8	4	12	4	12	24.5	24.0	24.0	24.0	4	24	22.0	4	24	18.0	4	12	4	12	24.3	28	40	52	4	9	22.5	5	12	5	12	0
24 FT	8	8	8	8	4	12	4	12	24.5	24.0	24.0	24.0	4	24	22.0	4	24	18.0	4	12	4	12	24.3	28	40	52	4	8.5	22.5	5	12	5	12	0
26 FT	8	8	8	8	4	12	4	12	24.5	24.0	24.0	24.0	4	24	22.0	4	24	18.0	4	11	4	11	24.3	28	40	52	4	8	22.5	5	12	5	12	0
28 FT	8	8	8	8	4	12	4	11	24.4	24.0	24.0	24.0	4	23	22.0	4	23	18.0	4	10.5	4	10.5	24.1	28	40	52	4	7.5	22.5	5	12	5	12	0
30 FT	8	8	8	8	4	11.5	4	10.5	24.4	24.0	24.0	24.0	4	22	22.0	4	22	18.0	4	9	4	9.5	24.1	28	40	52	4	7.5	22.5	5	12	5	12	0
32 FT	8	9	8	8	4	11	4	9.5	24.5	24.0	24.0	24.0	4	21	22.0	4	21	18.0	4	10.5	4	12	24.5	29	41	53	4	8	22.5	5	12	5	12	0
34 FT	8	9	8	8	4	10.5	4	9	24.5	24.0	24.0	24.0	4	20	22.0	4	20	18.0	4	9.5	4	11.5	24.4	29	41	53	4	8	22.5	5	12	5	12	0
36 FT	8	9	8	8	4	10	4	8.5	24.4	24.0	24.0	24.0	4	19	22.0	4	19	18.0	4	9	4	11	24.4	29	41	53	4	7.5	22.5	5	12	5	12	0
38 FT	8	10	8	8	4	9.5	4	8	24.5	24.0	24.0	24.0	4	18	22.0	4	18	17.5	4	10	4	12	24.8	30	42	54	4	8.5	22.5	5	12	5	12	0
40 FT	8	10	8	8	4	9	4	7.5	24.5	24.0	24.0	24.0	4	17	22.0	4	17	17.5	4	9.5	4	12	24.8	30	42	54	4	8	22.5	5	12	5	12	0
42 FT	9	10	8	8	4	9	4	9	24.6	25.0	25.0	25.0	4	19	22.0	4	19	17.5	4	9	4	11.5	24.8	30	42	54	4	8	22.5	5	12	5	12	0
44 FT	9	10	8	8	4	9	4	8.5	24.6	25.0	25.0	25.0	4	18	22.0	4	18	17.5	4	8.5	4	11	24.8	30	42	54	4	8	22.5	5	12	5	12	0
46 FT	9	11	8	8	4	8.5	4	8	24.8	25.0	25.0	25.0	4	18	22.0	4	18	17.5	4	9	4	10.5	25.0	31	43	55	4	8.5	22.5	5	12	5	12	0
48 FT	9	11	8	8	4	8	4	7.5	24.8	25.0	25.0	25.0	4	17	22.0	4	17	17.5	4	8.5	4	10.5	25.0	31	43	55	4	8	22.5	5	12	5	12	0
50 FT	10	11	8	8	4	8.5	4	8	24.9	26.0	26.0	26.0	4	19	21.5	4	19	17.5	4	8.5	4	10.5	25.1	31	43	55	4	8	22.5	5	12	5	12	0

SPAN (S) = 3 FT HEIGHT (HT) = 5 FT OR 6 FT

DESIGN FILL	MEMBER THICKNESS				TOP SLAB BARS												BOTTOM SLAB BARS												WALL BARS				
					A1 BARS		J3 BARS						H1 BARS			H2 BARS			A2 BARS		J4 BARS					H3 BARS			B1 BARS		B2 BARS		
	TS	BS	TX	TI	SIZE	SPA.	SIZE	SPA.	C1	K2 HT=5′	K2 HT=6′		SIZE	SPA.	C5	SIZE	SPA.	C6	SIZE	SPA.	SIZE	SPA.	C4	K3 HT=5′	K3 HT=6′		SIZE	SPA.	C7	SIZE	SPA.	SIZE	SPA.	G1
1 FT	10	8	8	8	4	8.5	4	10.5	23.8	26.0	26.0		4	24	39.5	4	24	16.0	4	12	4	11.5	39.0	64	76		4	12	24.5	5	12	5	12	12
2 FT	10	8	8	8	4	8.5	4	10.5	23.8	26.0	26.0		4	24	39.5	4	24	16.0	4	12	4	11	39.9	64	76		4	11.5	24.5	5	12	5	12	12
4 FT	8	8	8	8	4	12	4	12	23.8	24.0	24.0		4	24	39.5	4	24	15.0	4	12	4	10	38.6	64	76		4	12	23.5	5	12	5	12	12
6 FT	8	8	8	8	4	12	4	12	36.9	24.0	24.0		4	24	25.0	4	24	14.5	4	12	4	9.5	36.9	64	76		4	12	23.0	5	12	5	12	12
8 FT	8	8	8	8	4	12	4	12	38.6	24.0	24.0		4	24	23.5	4	24	15.0	4	12	4	9	35.8	64	76		4	12	23.0	5	12	5	12	0
10 FT	8	8	8	8	4	12	4	12	33.1	24.0	24.0		4	24	21.5	4	24	14.0	4	12	4	9.5	32.8	64	76		4	12	22.5	5	12	5	12	0
12 FT	8	8	8	8	4	12	4	12	32.8	24.0	24.0		4	24	21.5	4	24	15.0	4	12	4	9	32.5	64	76		4	12	22.5	5	12	5	12	0
14 FT	8	8	8	8	4	12	4	11	32.4	24.0	24.0		4	24	21.5	4	24	16.0	4	12	4	8.5	32.3	64	76		4	12	22.5	5	12	5	12	0
16 FT	8	8	8	8	4	12	4	10	32.1	24.0	24.0		4	24	21.5	4	24	16.5	4	12	4	8	32.1	64	76		4	11.5	22.5	5	12	5	12	0
18 FT	8	8	8	8	4	12	4	9	32.0	24.0	24.0		4	24	21.5	4	24	17.0	4	12	4	7.5	32.0	64	76		4	11	22.5	5	12	5	12	0
20 FT	8	8	8	8	4	12	4	8	31.8	24.0	24.0		4	24	21.5	4	24	17.0	4	12	4	7	31.9	64	76		4	10	22.5	5	12	5	12	0
22 FT	8	8	8	8	4	12	4	7.5	31.6	24.0	24.0		4	24	21.5	4	24	17.5	4	12	4	6.5	31.8	64	76		4	9.5	22.5	5	12	5	12	0
24 FT	8	8	8	8	4	12	4	7	31.6	24.0	24.0		4	24	21.5	4	24	17.5	4	12	4	6	31.6	64	76		4	9.5	22.5	5	12	5	12	0
26 FT	8	8	8	8	4	12	4	6.5	31.5	24.0	24.0		4	24	21.5	4	24	17.5	4	11.5	5	6.5	31.6	64	76		4	9	22.5	5	12	5	12	0
28 FT	8	8	8	8	4	12	4	6	31.5	24.0	24.0		4	24	21.5	4	24	17.5	4	10.5	5	6	31.5	64	76		4	8.5	22.5	5	12	5	12	0
30 FT	8	9	8	8	4	12	5	6.5	31.3	24.0	28.0		4	24	21.5	4	24	17.5	4	11.5	5	6.5	32.8	65	77		4	10	22.5	5	12	5	11.5	0
32 FT	8	9	8	8	4	11	5	6	31.3	24.0	28.0		4	24	21.5	4	24	17.5	4	11	5	6	32.6	65	77		4	9.5	22.5	5	12	5	11	0
34 FT	8	9	8	8	4	10.5	5	6	31.3	24.0	28.0		4	23	21.5	4	23	17.5	4	10	5	6	32.6	65	77		4	9	22.5	5	12	5	10.5	0
36 FT	8	10	8	8	4	10	6	7.5	34.1	24.0	28.0		4	22	21.5	4	22	17.5	4	11	5	6	33.5	66	78		4	10.5	22.5	5	12	5	10	0
38 FT	8	10	8	8	4	9.5	6	7.5	34.1	24.0	28.0		4	21	21.5	4	21	17.5	4	10.5	5	6	33.5	66	78		4	10	22.5	5	12	5	9.5	0
40 FT	9	10	8	8	4	10	5	6	31.9	25.0	29.0		4	24	21.0	4	24	17.5	4	10	6	7	36.4	66	78		4	9.5	22.5	5	12	5	9.5	0
42 FT	9	10	8	8	4	9.5	5	6	31.9	25.0	29.0		4	23	21.0	4	23	17.5	4	9.5	6	7	36.3	66	78		4	9	22.5	5	12	5	9.5	0
44 FT	9	10	8	8	4	9	6	7	34.9	25.0	33.0		4	22	21.0	4	22	17.5	4	9	6	6.5	36.3	66	78		4	8.5	22.5	5	12	5	9.5	0
46 FT	10	11	8	8	4	9.5	5	6	32.8	26.0	30.0		4	24	20.5	4	24	17.0	4	10	6	7	36.9	67	79		4	9.5	22.5	5	12	5	9.5	0
48 FT	10	11	8	8	4	9	6	7	35.8	26.0	34.0		4	24	20.5	4	24	17.5	4	9.5	6	6.5	36.9	67	79		4	9	22.5	5	12	5	9.5	0
50 FT	10	11	8	8	4	8.5	6	7	35.6	26.0	34.0		4	24	20.5	4	24	17.5	4	9	6	6.5	36.9	67	79		4	9	22.5	5	12	5	9.5	0

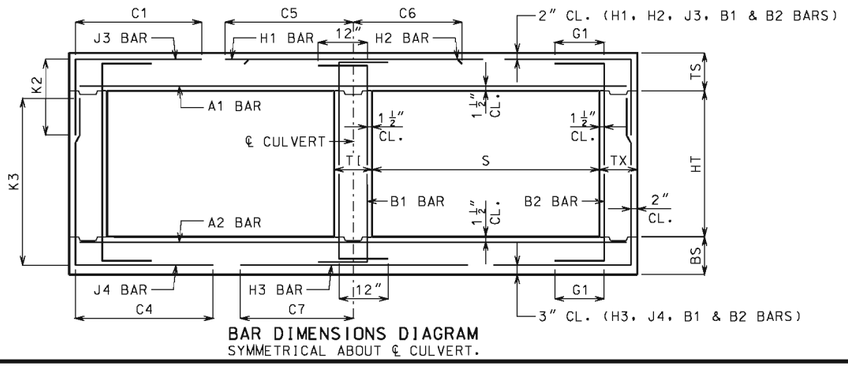

BAR DIMENSIONS DIAGRAM
SYMMETRICAL ABOUT ℄ CULVERT.

IF A SEAL IS PRESENT ON THIS SHEET IT HAS BEEN ELECTRONICALLY SEALED AND DATED.

GENERAL NOTES:

IF DESIGN FILL IS BETWEEN TABULATED DESIGN FILLS, USE THE NEXT GREATER TABULATED DESIGN FILL. EXCEPT FOR DESIGN FILLS BETWEEN 2 FEET AND 4 FEET. FOR DESIGN FILLS BETWEEN 2 FEET AND 4 FEET USE THE GREATER MEMBER THICKNESS, AREA OF REINFORCEMENT AND BAR DIMENSIONS FROM THE 2 FEET AND 4 FEET TABULATED DESIGN FILLS. AREA OF REINFORCEMENT EQUALS BAR AREA PER FOOT SPACING.

SPECIAL DESIGNS ARE REQUIRED WHEN THE DESIGN FILL IS LESS THAN 1 FOOT OR GREATER THAN 50 FEET.

DIMENSIONS ARE IN INCHES UNLESS OTHERWISE SPECIFIED.

DESIGN FILLS ARE MEASURED FROM THE TOP OF TOP SLAB TO THE TOP OF EARTH FILL OR ROADWAY.

CULVERTS MEET STRENGTH AND SERVICEABILITY REQUIREMENTS FOR THE DESIGN VEHICULAR LIVE LOAD HL-93 MINUS THE LANE LOAD.

MISSOURI HIGHWAYS AND TRANSPORTATION COMMISSION
105 WEST CAPITOL
JEFFERSON CITY, MO 65102
1-888-ASK-MODOT (1-888-275-6636)

STATE OF MISSOURI
DENNIS W. HECKMAN
NUMBER PE-27141
PROFESSIONAL ENGINEER
THIS SHEET HAS BEEN SIGNED, SEALED AND DATED ELECTRONICALLY.

CONCRETE DOUBLE BOX CULVERT

MEMBER THICKNESS BAR SIZE, SPACING & DIMENSIONS

SPAN (S): 3 FEET
HEIGHT (HT): 2 THRU 6 FEET

DATE EFFECTIVE: 10/01/2011
DATE PREPARED: 9/8/2011

703.47

SHEET NO. 1 OF 27

SPAN (S) = 4 FT HEIGHT (HT) = 2 FT OR 3 FT

DESIGN FILL	MEMBER THICKNESS				TOP SLAB BARS												BOTTOM SLAB BARS												WALL BARS				
					A1 BARS		J3 BARS					H1 BARS			H2 BARS			A2 BARS		J4 BARS				H3 BARS			B1 BARS		B2 BARS		
	TS	BS	TX	TI	SIZE	SPA.	SIZE	SPA.	C1	K2 HT=2′	K2 HT=3′	SIZE	SPA.	C5	SIZE	SPA.	C6	SIZE	SPA.	SIZE	SPA.	C4	K3 HT=2′	K3 HT=3′	SIZE	SPA.	C7	SIZE	SPA.	SIZE	SPA.	G1
1 FT	10	8	8	8	4	7	4	10.5	27.3	26.0	26.0	4	23	48.0	4	23	20.5	4	12	4	12	29.3	28	40	4	9.5	28.0	5	12	5	12	12
2 FT	10	8	8	8	4	7	4	10.5	27.3	26.0	26.0	4	23	48.0	4	23	20.0	4	12	4	12	27.3	28	40	4	9	27.5	5	12	5	12	12
4 FT	8	8	8	8	4	12	4	12	26.3	24.0	24.0	4	24	34.0	4	24	19.0	4	12	4	12	25.0	28	40	4	9.5	27.0	5	12	5	12	12
6 FT	8	8	8	8	4	12	4	12	24.8	24.0	24.0	4	24	28.5	4	24	19.0	4	12	4	12	24.0	28	40	4	9.5	26.5	5	12	5	12	12
8 FT	8	8	8	8	4	12	4	12	24.1	24.0	24.0	4	24	27.0	4	24	19.0	4	12	4	12	23.4	28	40	4	9	26.0	5	12	5	12	0
10 FT	8	8	8	8	4	12	4	12	22.6	24.0	24.0	4	24	25.5	4	24	18.5	4	12	4	12	22.1	28	40	4	9	25.5	5	12	5	12	0
12 FT	8	8	8	8	4	12	4	12	22.5	24.0	24.0	4	24	25.5	4	24	18.5	4	12	4	12	22.1	28	40	4	8	25.5	5	12	5	12	0
14 FT	8	8	8	8	4	12	4	12	22.5	24.0	24.0	4	22	25.5	4	22	18.5	4	12	4	12	22.1	28	40	4	7.5	25.5	5	12	5	12	0
16 FT	8	8	8	8	4	12	4	12	22.5	24.0	24.0	4	20	25.5	4	20	18.5	4	11	4	12	22.1	28	40	4	7	25.5	5	12	5	12	0
18 FT	8	8	8	8	4	12	4	12	22.5	24.0	24.0	4	18	25.5	4	18	18.5	4	10	4	11.5	22.0	28	40	4	6.5	25.5	5	12	5	12	0
20 FT	8	8	8	8	4	10.5	4	11.5	22.5	24.0	24.0	4	17	25.5	4	17	18.5	4	9	4	10.5	22.0	28	40	4	6	25.5	5	12	5	12	0
22 FT	8	9	8	8	4	10	4	10.5	22.6	24.0	24.0	4	15	25.5	4	15	18.5	4	9	4	12	21.4	29	41	4	6.5	26.0	5	12	5	12	0
24 FT	8	9	8	8	4	9	4	9.5	22.6	24.0	24.0	4	14	25.5	4	14	18.5	4	8.5	4	12	21.4	29	41	4	6	26.0	5	12	5	12	0
26 FT	8	10	8	8	4	8.5	4	8.5	22.8	24.0	24.0	4	13	25.5	4	13	18.5	4	8.5	4	12	20.9	30	42	4	6.5	26.0	5	12	5	12	0
28 FT	8	10	8	8	4	7.5	4	8	22.8	24.0	24.0	4	12	25.5	4	12	18.5	4	8	4	12	20.9	30	42	4	6.5	26.0	5	12	5	12	0
30 FT	9	10	8	8	4	8	4	10.5	22.3	25.0	25.0	4	13	25.5	4	13	18.5	4	7.5	4	12	21.0	30	42	4	6	26.0	5	12	5	12	0
32 FT	9	11	8	8	4	7.5	4	10	22.4	25.0	25.0	4	12	25.5	4	12	18.5	4	8	4	10.5	20.6	31	43	4	6.5	26.0	5	12	5	12	0
34 FT	10	11	8	8	4	7.5	4	10.5	22.0	26.0	26.0	4	13	25.0	4	13	18.5	4	7.5	4	10.5	20.9	31	43	4	6	26.0	5	12	5	12	0
36 FT	10	12	8	8	4	7.5	4	10	22.1	26.0	26.0	4	12	25.0	4	12	18.5	4	7.5	4	9.5	20.6	32	44	4	6.5	26.0	5	12	5	12	0
38 FT	10	12	8	8	4	7	4	9.5	22.1	26.0	26.0	4	12	25.0	4	12	18.5	4	7.5	4	9.5	20.6	32	44	4	6	26.0	5	12	5	12	0
40 FT	11	12	8	8	4	7	4	9.5	21.8	27.0	27.0	4	13	25.0	4	13	18.5	4	7	4	9.5	20.9	32	44	4	6	26.0	5	12	5	12	0
42 FT	11	13	8	8	4	6.5	4	9.5	21.9	27.0	27.0	4	12	25.0	4	12	18.5	4	7	4	8.5	20.6	33	45	4	6	26.0	5	12	5	12	0
44 FT	11	13	8	8	4	6.5	4	9	21.9	27.0	27.0	4	12	25.0	4	12	18.5	4	7	4	8.5	20.6	33	45	4	6	26.0	5	12	5	12	0
46 FT	12	13	8	8	4	6.5	4	8.5	21.6	28.0	28.0	4	12	24.5	4	12	18.5	4	6.5	4	8.5	20.9	33	45	5	8.5	26.0	5	12	5	12	0
48 FT	12	13	8	8	4	6.5	4	8.5	21.6	28.0	28.0	4	12	24.5	4	12	18.5	4	6	4	8.5	20.9	33	45	5	8.5	26.0	5	12	5	12	0
50 FT	12	14	8	8	4	6	4	8.5	21.8	28.0	28.0	4	12	24.5	4	12	18.5	4	6.5	4	7.5	20.8	34	46	5	9	26.0	5	12	5	12	0

SPAN (S) = 4 FT HEIGHT (HT) = 4 FT OR 5 FT

DESIGN FILL	MEMBER THICKNESS				TOP SLAB BARS												BOTTOM SLAB BARS												WALL BARS				
					A1 BARS		J3 BARS					H1 BARS			H2 BARS			A2 BARS		J4 BARS				H3 BARS			B1 BARS		B2 BARS		
	TS	BS	TX	TI	SIZE	SPA.	SIZE	SPA.	C1	K2 HT=4′	K2 HT=5′	SIZE	SPA.	C5	SIZE	SPA.	C6	SIZE	SPA.	SIZE	SPA.	C4	K3 HT=4′	K3 HT=5′	SIZE	SPA.	C7	SIZE	SPA.	SIZE	SPA.	G1
1 FT	10	8	8	8	4	7	4	10.5	27.3	26.0	26.0	4	23	48.0	4	23	20.5	4	12	4	12	39.9	52	64	4	9	28.0	5	12	5	12	12
2 FT	10	8	8	8	4	7	4	10.5	27.3	26.0	26.0	4	23	48.0	4	23	20.5	4	12	4	12	36.8	52	64	4	9	27.5	5	12	5	12	12
4 FT	8	8	8	8	4	12	4	12	27.3	24.0	24.0	4	24	48.0	4	24	19.5	4	12	4	12	33.8	52	64	4	9	27.0	5	12	5	12	12
6 FT	8	8	8	8	4	12	4	12	33.5	24.0	24.0	4	24	28.5	4	24	19.0	4	12	4	11.5	31.3	52	64	4	9	26.5	5	12	5	12	12
8 FT	8	8	8	8	4	12	4	12	30.6	24.0	24.0	4	24	27.0	4	24	19.0	4	12	4	11	29.9	52	64	4	8.5	26.0	5	12	5	12	0
10 FT	8	8	8	8	4	12	4	12	27.4	24.0	24.0	4	24	25.5	4	24	18.5	4	12	4	12	27.1	52	64	4	9	25.5	5	12	5	12	0
12 FT	8	8	8	8	4	12	4	12	27.1	24.0	24.0	4	24	25.5	4	24	18.5	4	12	4	11	26.9	52	64	4	8	25.5	5	12	5	12	0
14 FT	8	8	8	8	4	12	4	12	27.0	24.0	24.0	4	22	25.0	4	22	18.5	4	12	4	10.5	26.8	52	64	4	7.5	25.5	5	12	5	12	0
16 FT	8	8	8	8	4	12	4	11	26.9	24.0	24.0	4	21	25.0	4	21	18.5	4	10.5	4	10	26.6	52	64	4	7	25.5	5	12	5	12	0
18 FT	8	8	8	8	4	11.5	4	10	26.8	24.0	24.0	4	19	25.0	4	19	18.5	4	9.5	4	9	26.6	52	64	4	6.5	25.5	5	12	5	12	0
20 FT	8	8	8	8	4	10.5	4	9	26.6	24.0	24.0	4	17	25.0	4	17	18.5	4	8.5	4	8	26.5	52	64	4	6	25.5	5	12	5	12	0
22 FT	8	9	8	8	4	9.5	4	8	26.8	24.0	24.0	4	15	25.0	4	15	18.5	4	9	4	9.5	26.8	53	65	4	6.5	26.0	5	12	5	12	0
24 FT	8	9	8	8	4	9	4	7.5	26.6	24.0	24.0	4	14	25.0	4	14	18.5	4	8.5	4	9	26.6	53	65	4	6.5	26.0	5	12	5	12	0
26 FT	8	10	8	8	4	8.5	4	6.5	26.6	24.0	24.0	4	13	25.0	4	13	18.5	4	8.5	4	10.5	26.9	54	66	4	7	26.0	5	12	5	12	0
28 FT	8	10	8	8	4	7.5	4	6	26.6	24.0	24.0	4	12	25.0	4	12	18.5	4	8	4	10	26.9	54	66	4	6.5	26.0	5	12	5	12	0
30 FT	9	10	8	8	4	8	4	7.5	26.8	25.0	25.0	4	13	25.0	4	13	18.5	4	7	4	9	26.9	54	66	4	6	26.0	5	12	5	12	0
32 FT	9	11	8	8	4	7.5	4	6.5	26.9	25.0	25.0	4	12	25.0	4	12	18.5	4	8	4	9	27.1	55	67	4	6.5	26.0	5	12	5	12	0
34 FT	10	11	8	8	4	7.5	4	6.5	27.0	26.0	26.0	4	14	24.5	4	14	18.5	4	7.5	4	8.5	27.1	55	67	4	6	26.0	5	12	5	12	0
36 FT	10	12	8	8	4	7.5	4	6.5	27.1	26.0	26.0	4	13	24.5	4	13	18.5	4	8	4	8.5	27.4	56	68	4	6.5	26.0	5	12	5	12	0
38 FT	10	12	8	8	4	7	4	6	27.1	26.0	26.0	4	12	24.5	4	12	18.5	4	7.5	4	8	27.4	56	68	4	6	26.0	5	12	5	12	0
40 FT	11	12	8	8	4	7	4	6	27.3	27.0	27.0	4	14	24.5	4	14	18.5	4	7	4	7.5	27.5	56	68	4	6	26.0	5	12	5	12	0
42 FT	11	13	8	8	4	7	5	9	27.3	27.0	27.0	4	13	24.5	4	13	18.5	4	7.5	4	7.5	27.8	57	69	4	6	26.0	5	12	5	12	0
44 FT	11	13	8	8	4	6.5	5	8.5	27.3	27.0	27.0	4	12	24.5	4	12	18.5	4	7	4	7.5	27.6	57	69	4	6	26.0	5	12	5	12	0
46 FT	11	13	8	8	4	6	5	8.5	27.3	27.0	27.0	4	12	24.5	4	12	18.5	4	6.5	4	7	27.6	57	69	5	9	26.0	5	12	5	12	0
48 FT	12	13	8	8	4	6.5	5	8.5	27.4	28.0	28.0	4	13	24.0	4	13	18.5	4	6.5	4	6.5	27.8	57	69	5	8.5	26.0	5	12	5	11.5	0
50 FT	12	14	8	8	4	6	5	8.5	27.5	28.0	28.0	4	13	23.5	4	13	18.0	4	7	4	6.5	28.0	58	70	4	6	25.5	5	12	5	11	0

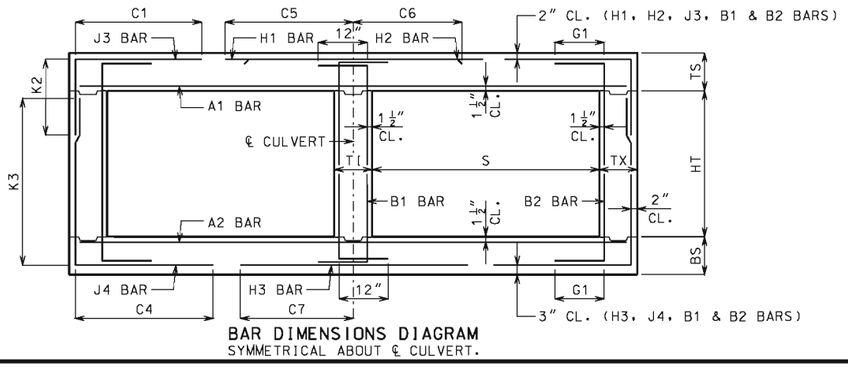

BAR DIMENSIONS DIAGRAM
SYMMETRICAL ABOUT ℄ CULVERT.

IF A SEAL IS PRESENT ON THIS SHEET IT HAS BEEN ELECTRONICALLY SEALED AND DATED.

GENERAL NOTES:

IF DESIGN FILL IS BETWEEN TABULATED DESIGN FILLS, USE THE NEXT GREATER TABULATED DESIGN FILL, EXCEPT FOR DESIGN FILLS BETWEEN 2 FEET AND 4 FEET. FOR DESIGN FILLS BETWEEN 2 FEET AND 4 FEET USE THE GREATER MEMBER THICKNESS, AREA OF REINFORCEMENT AND BAR DIMENSIONS FROM THE 2 FEET AND 4 FEET TABULATED DESIGN FILLS. AREA OF REINFORCEMENT EQUALS BAR AREA PER FOOT SPACING.

SPECIAL DESIGNS ARE REQUIRED WHEN THE DESIGN FILL IS LESS THAN 1 FOOT OR GREATER THAN 50 FEET.

DIMENSIONS ARE IN INCHES UNLESS OTHERWISE SPECIFIED.

DESIGN FILLS ARE MEASURED FROM THE TOP OF TOP SLAB TO THE TOP OF EARTH FILL OR ROADWAY.

CULVERTS MEET STRENGTH AND SERVICEABILITY REQUIREMENTS FOR THE DESIGN VEHICULAR LIVE LOAD HL-93 MINUS THE LANE LOAD.

MISSOURI HIGHWAYS AND TRANSPORTATION COMMISSION
105 WEST CAPITOL
JEFFERSON CITY, MO 65102
1-888-ASK-MODOT (1-888-275-6636)

STATE OF MISSOURI
DENNIS W. HECKMAN
NUMBER PE-27141
PROFESSIONAL ENGINEER
THIS SHEET HAS BEEN SIGNED, SEALED AND DATED ELECTRONICALLY.

CONCRETE DOUBLE BOX CULVERT

MEMBER THICKNESS
BAR SIZE, SPACING & DIMENSIONS

SPAN (S): 4 FEET
HEIGHT (HT): 2 THRU 5 FEET

DATE EFFECTIVE: 10/01/2011
DATE PREPARED: 9/8/2011

703.47

SPAN (S) = 4 FT HEIGHT (HT) = 6 FT OR 7 FT

DESIGN FILL	MEMBER THICKNESS				TOP SLAB BARS												BOTTOM SLAB BARS										WALL BARS				
					A1 BARS		J3 BARS					H1 BARS			H2 BARS			A2 BARS		J4 BARS				H3 BARS			B1 BARS		B2 BARS		
										K2											K3									
	TS	BS	TX	TI	SIZE	SPA.	SIZE	SPA.	C1	HT=6′	HT=7′	SIZE	SPA.	C5	SIZE	SPA.	C6	SIZE	SPA.	SIZE	SPA.	C4	HT=6′	HT=7′	SIZE	SPA.	C7	SIZE	SPA.	SIZE	SPA.	G1
1 FT	10	8	8	8	4	6.5	4	10.5	27.3	26.0	26.0	4	24	48.0	4	24	20.5	4	12	4	8.5	46.6	76	88	4	8.5	28.0	5	12	5	12	12
2 FT	10	8	8	8	4	6.5	4	10.5	27.3	26.0	26.0	4	23	48.0	4	23	20.5	4	12	4	8.5	45.3	76	88	4	8.5	27.5	5	12	5	12	12
4 FT	8	8	8	8	4	12	4	10.5	27.3	24.0	24.0	4	24	48.0	4	24	19.5	4	12	4	7.5	43.0	76	88	4	9	27.0	5	12	5	12	12
6 FT	8	8	8	8	4	12	4	10	47.3	24.0	24.0	4	24	28.5	4	24	19.0	4	12	4	7	40.8	76	88	4	9	26.5	5	12	5	12	12
8 FT	8	8	8	8	4	12	4	9	41.4	24.0	24.0	4	24	27.0	4	24	19.0	4	12	4	6.5	39.0	76	88	4	8.5	26.0	5	12	5	12	0
10 FT	8	8	8	8	4	12	4	10	35.4	24.0	24.0	4	24	25.0	4	24	18.5	4	12	4	7	35.1	76	88	4	8.5	25.5	5	12	5	12	0
12 FT	8	8	8	8	4	12	4	8.5	34.9	24.0	24.0	4	24	25.0	4	24	18.5	4	12	4	6.5	34.9	76	88	4	8	25.5	5	12	5	12	0
14 FT	8	8	8	8	4	12	4	7.5	34.6	24.0	24.0	4	23	25.0	4	23	18.5	4	12	4	6	34.6	76	88	4	7.5	25.5	5	12	5	12	0
16 FT	8	8	8	8	4	12	4	6.5	34.4	24.0	24.0	4	22	25.0	4	22	18.5	4	10.5	5	6.5	34.4	76	88	4	7	25.5	5	12	5	12	0
18 FT	8	8	8	8	4	12	4	6	34.1	24.0	24.0	4	19	25.0	4	19	18.5	4	9.5	5	6	34.3	76	88	4	6.5	25.5	5	12	5	12	0
20 FT	8	9	9	8	4	11	4	6.5	33.6	24.0	24.0	4	18	24.5	4	18	18.5	4	10	4	6.5	34.9	77	89	4	7.5	25.5	5	12	5	12	0
22 FT	8	9	9	8	4	10	4	6	33.5	24.0	24.0	4	16	25.0	4	16	18.5	4	9	4	6	34.8	77	89	4	7	25.5	5	12	5	12	0
24 FT	8	9	9	8	4	9	5	6.5	33.4	24.0	28.0	4	15	25.0	4	15	18.5	4	8.5	5	7	34.6	77	89	4	6.5	25.5	5	12	5	12	0
26 FT	8	10	9	8	4	8.5	5	6	33.1	24.0	24.0	4	14	24.5	4	14	18.5	4	9	4	6	35.5	78	90	4	7	26.0	5	12	5	11.5	0
28 FT	8	10	9	8	4	8	6	7.5	36.1	24.0	28.0	4	13	24.5	4	13	18.5	4	8.5	5	7	35.5	78	90	4	6.5	26.0	5	12	5	10.5	0
30 FT	9	10	9	8	4	8	5	6	34.0	25.0	29.0	4	14	24.5	4	14	18.5	4	7.5	5	6.5	35.3	78	90	4	6	25.5	5	12	5	10	0
32 FT	9	11	9	8	4	8	5	6	33.9	25.0	29.0	4	13	24.5	4	13	18.5	4	8	5	6.5	35.9	79	91	4	6.5	26.0	5	12	5	9.5	0
34 FT	9	11	9	8	4	7.5	5	6	33.9	25.0	29.0	4	13	24.5	4	13	18.5	4	7.5	5	6.5	35.9	79	91	4	6	26.0	5	12	5	9	0
36 FT	10	11	9	8	4	7.5	5	6.5	34.6	26.0	30.0	4	14	24.0	4	14	18.0	4	7	5	6	35.8	79	91	4	6	25.5	5	12	5	8.5	0
38 FT	10	12	9	8	4	7	5	6	34.5	26.0	30.0	4	14	24.0	4	14	18.0	4	7.5	5	6	36.3	80	92	4	6	25.5	5	12	5	8.5	0
40 FT	10	12	9	8	4	7	5	6	34.5	26.0	30.0	4	13	24.0	4	13	18.0	4	7.5	5	6	36.3	80	92	4	6	25.5	5	12	5	8.5	0
42 FT	11	12	9	8	4	7	5	6	35.1	31.0	31.0	4	14	23.5	4	14	18.0	4	6.5	6	7.5	39.1	80	92	5	9	25.5	5	12	5	8.5	0
44 FT	11	13	10	8	4	6.5	5	7	35.1	27.0	31.0	4	14	23.0	4	14	18.0	4	7.5	5	7.5	36.8	81	93	4	6	25.5	5	12	5	8	0
46 FT	11	13	10	8	4	6.5	5	6.5	35.0	27.0	31.0	4	13	23.0	4	13	18.0	4	7	5	7	36.8	81	93	5	9	26.0	5	12	5	8	0
48 FT	11	13	10	8	4	6	5	6	35.0	27.0	31.0	4	13	23.0	4	13	18.0	4	6.5	5	6.5	36.8	81	93	5	8.5	25.5	5	12	5	8	0
50 FT	12	14	11	8	4	6.5	5	7	35.6	28.0	32.0	4	15	23.0	4	15	18.0	4	7	5	7.5	37.3	82	94	5	9	26.0	5	12	5	8	0

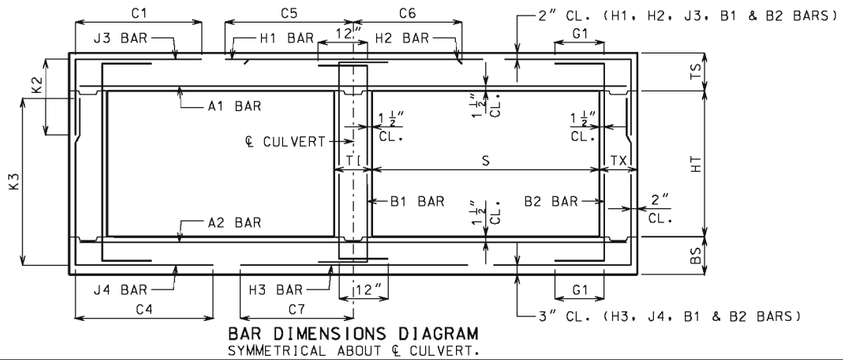

BAR DIMENSIONS DIAGRAM
SYMMETRICAL ABOUT ℄ CULVERT.

IF A SEAL IS PRESENT ON THIS SHEET IT HAS BEEN ELECTRONICALLY SEALED AND DATED.

GENERAL NOTES:

IF DESIGN FILL IS BETWEEN TABULATED DESIGN FILLS, USE THE NEXT GREATER TABULATED DESIGN FILL, EXCEPT FOR DESIGN FILLS BETWEEN 2 FEET AND 4 FEET. FOR DESIGN FILLS BETWEEN 2 FEET AND 4 FEET USE THE GREATER MEMBER THICKNESS, AREA OF REINFORCEMENT AND BAR DIMENSIONS FROM THE 2 FEET AND 4 FEET TABULATED DESIGN FILLS. AREA OF REINFORCEMENT EQUALS BAR AREA PER FOOT SPACING.

SPECIAL DESIGNS ARE REQUIRED WHEN THE DESIGN FILL IS LESS THAN 1 FOOT OR GREATER THAN 50 FEET.

DIMENSIONS ARE IN INCHES UNLESS OTHERWISE SPECIFIED.

DESIGN FILLS ARE MEASURED FROM THE TOP OF TOP SLAB TO THE TOP OF EARTH FILL OR ROADWAY.

CULVERTS MEET STRENGTH AND SERVICEABILITY REQUIREMENTS FOR THE DESIGN VEHICULAR LIVE LOAD HL-93 MINUS THE LANE LOAD.

MISSOURI HIGHWAYS AND TRANSPORTATION COMMISSION
105 WEST CAPITOL
JEFFERSON CITY, MO 65102
1-888-ASK-MODOT (1-888-275-6636)

STATE OF MISSOURI
DENNIS W. HECKMAN
NUMBER PE-27141
PROFESSIONAL ENGINEER
THIS SHEET HAS BEEN SIGNED, SEALED AND DATED ELECTRONICALLY.

CONCRETE DOUBLE BOX CULVERT

MEMBER THICKNESS BAR SIZE, SPACING & DIMENSIONS

SPAN (S): 4 FEET
HEIGHT (HT): 6 THRU 7 FEET

DATE EFFECTIVE: 10/01/2011
DATE PREPARED: 9/8/2011

703.47

SHEET NO. 3 OF 27

SPAN (S) = 5 FT HEIGHT (HT) = 3 FT OR 4 FT

DESIGN FILL	MEMBER THICKNESS				TOP SLAB BARS												BOTTOM SLAB BARS										WALL BARS				
					A1 BARS		J3 BARS					H1 BARS			H2 BARS			A2 BARS		J4 BARS				H3 BARS			B1 BARS		B2 BARS		
	TS	BS	TX	TI	SIZE	SPA.	SIZE	SPA.	C1	K2 HT=3′	K2 HT=4′	SIZE	SPA.	C5	SIZE	SPA.	C6	SIZE	SPA.	SIZE	SPA.	C4	K3 HT=3′	K3 HT=4′	SIZE	SPA.	C7	SIZE	SPA.	SIZE	SPA.	G1
1 FT	11	8	8	8	4	6.5	4	9.5	30.9	27.0	27.0	4	20	56.0	4	20	21.5	4	12	4	12	33.3	40	52	4	7.5	31.0	5	12	5	12	12
2 FT	11	8	8	8	4	6.5	4	9.5	30.9	27.0	27.0	4	19	56.0	4	19	21.5	4	11.5	4	11.5	31.0	40	52	4	7	31.0	5	12	5	12	12
4 FT	8	8	8	8	4	11	4	12	30.0	24.0	24.0	4	18	39.0	4	18	20.0	4	12	4	12	28.4	40	52	4	7	30.0	5	12	5	12	12
6 FT	8	8	8	8	4	12	4	12	27.4	24.0	24.0	4	19	32.0	4	19	20.0	4	11.5	4	12	26.9	40	52	4	7	29.5	5	12	5	12	12
8 FT	8	8	8	8	4	12	4	12	26.6	24.0	24.0	4	18	30.5	4	18	19.5	4	10.5	4	11.5	26.0	40	52	4	6.5	29.0	5	12	5	12	0
10 FT	8	8	8	8	4	11	4	12	26.1	24.0	24.0	4	16	29.5	4	16	19.5	4	9.5	4	10.5	25.5	40	52	4	6	29.0	5	12	5	12	0
12 FT	8	8	8	8	4	12	4	12	24.6	24.0	24.0	4	16	28.5	4	16	19.0	4	9.5	4	11	24.4	40	52	5	7.5	28.5	5	12	5	12	0
14 FT	8	8	8	8	4	10	4	11	24.6	24.0	24.0	4	14	28.5	4	14	19.0	4	8.5	4	10	24.3	40	52	5	7	28.5	5	12	5	12	0
16 FT	8	9	8	8	4	9	4	9.5	24.8	24.0	24.0	4	12	28.5	4	12	19.0	4	8.5	4	12	23.5	41	53	5	7.5	29.0	5	12	5	12	0
18 FT	8	9	8	8	4	8	4	8.5	24.8	24.0	24.0	5	17	28.5	5	17	19.5	4	7.5	4	11.5	23.5	41	53	5	7	29.0	5	12	5	12	0
20 FT	8	10	8	8	4	7.5	4	7.5	24.9	24.0	24.0	5	17	28.0	5	17	20.0	4	7.5	4	12	22.9	42	54	5	7.5	29.0	5	12	5	12	0
22 FT	9	10	8	8	4	7	4	9	24.3	25.0	25.0	5	16	28.5	5	16	19.0	4	7	4	12	23.1	42	54	5	7	29.0	5	12	5	12	0
24 FT	9	11	8	8	4	6.5	4	8	24.5	25.0	25.0	5	16	28.5	5	16	20.0	4	7	4	10.5	22.8	43	55	5	7.5	29.0	5	12	5	12	0
26 FT	10	11	8	8	4	6.5	4	8.5	24.0	26.0	26.0	5	16	28.5	5	16	19.0	4	6.5	4	10.5	23.0	43	55	5	7	29.0	5	12	5	12	0
28 FT	10	12	8	8	4	6.5	4	8	24.1	26.0	26.0	5	15	28.0	5	15	19.5	4	6.5	4	9.5	22.6	44	56	5	7.5	29.0	5	12	5	12	0
30 FT	11	12	8	8	4	6.5	4	8.5	23.8	27.0	27.0	5	15	28.0	5	15	19.0	4	6	4	9.5	22.9	44	56	5	7	29.0	5	12	5	12	0
32 FT	11	13	8	8	4	6	4	7.5	23.9	27.0	27.0	5	15	28.0	5	15	19.0	4	6.5	4	8.5	22.8	45	57	5	7.5	29.0	5	12	5	12	0
34 FT	12	13	8	8	4	6	4	8.5	23.6	28.0	28.0	5	15	28.0	5	15	19.0	4	6	4	8.5	22.9	45	57	5	7	29.0	5	12	5	12	0
36 FT	12	14	8	8	5	9	4	7.5	23.8	28.0	28.0	5	15	28.0	5	15	19.0	4	6	4	7.5	22.8	46	58	5	7.5	29.0	5	12	5	12	0
38 FT	13	14	8	8	5	9	4	7.5	23.5	29.0	29.0	5	15	27.5	5	15	19.0	4	6	4	7.5	23.0	46	58	5	7	29.0	5	12	5	12	0
40 FT	13	15	8	8	5	8.5	4	7.5	23.8	29.0	29.0	5	15	27.5	5	15	19.0	4	6	4	7	22.9	47	59	5	7.5	29.0	5	12	5	12	0
42 FT	13	15	8	8	5	8	4	7	23.8	29.0	29.0	5	14	27.5	5	14	19.0	5	9	4	7	22.9	47	59	5	7	29.0	5	12	5	12	0
44 FT	14	15	8	8	5	8.5	4	7	23.5	30.0	30.0	5	15	27.0	5	15	19.0	5	8.5	4	7	23.1	47	59	5	6.5	29.0	5	12	5	12	0
46 FT	14	16	8	8	5	8	4	7	23.6	30.0	30.0	5	14	27.0	5	14	19.0	5	9	4	6.5	23.1	48	60	5	7	29.0	5	12	5	12	0
48 FT	14	16	8	8	5	7.5	4	6.5	23.6	30.0	30.0	5	14	27.0	5	14	19.0	5	8.5	4	6.5	23.1	48	60	5	6.5	29.0	5	12	5	12	0
50 FT	15	16	8	8	5	7.5	4	6.5	25.6	31.0	31.0	5	15	31.5	5	15	24.0	5	8	4	6.5	23.3	48	60	5	6.5	29.0	5	12	5	12	0

SPAN (S) = 5 FT HEIGHT (HT) = 5 FT OR 6 FT

DESIGN FILL	MEMBER THICKNESS				TOP SLAB BARS												BOTTOM SLAB BARS										WALL BARS				
					A1 BARS		J3 BARS					H1 BARS			H2 BARS			A2 BARS		J4 BARS				H3 BARS			B1 BARS		B2 BARS		
	TS	BS	TX	TI	SIZE	SPA.	SIZE	SPA.	C1	K2 HT=5′	K2 HT=6′	SIZE	SPA.	C5	SIZE	SPA.	C6	SIZE	SPA.	SIZE	SPA.	C4	K3 HT=5′	K3 HT=6′	SIZE	SPA.	C7	SIZE	SPA.	SIZE	SPA.	G1
1 FT	11	8	8	8	4	6	4	9.5	30.9	27.0	27.0	4	20	56.0	4	20	22.0	4	11.5	4	9.5	44.1	64	76	4	7	31.0	5	12	5	12	12
2 FT	11	8	8	8	4	6	4	9.5	30.9	27.0	27.0	4	19	56.0	4	19	21.5	4	10.5	4	9	40.6	64	76	4	7	31.0	5	12	5	12	12
4 FT	8	8	8	8	4	10.5	4	10.5	30.9	24.0	24.0	4	18	56.0	4	18	20.0	4	11.5	4	9	37.6	64	76	4	7	30.0	5	12	5	12	12
6 FT	8	8	8	8	4	12	4	10.5	37.1	24.0	24.0	4	19	32.0	4	19	20.0	4	11	4	8.5	34.6	64	76	4	6.5	29.5	5	12	5	12	12
8 FT	8	8	8	8	4	12	4	10	33.8	24.0	24.0	4	18	30.5	4	18	19.5	4	10	4	8	33.0	64	76	4	6	29.0	5	12	5	12	0
10 FT	8	8	8	8	4	11	4	9	32.3	24.0	24.0	4	16	29.5	4	16	19.5	4	9	4	7.5	31.9	64	76	5	7.5	29.0	5	12	5	12	0
12 FT	8	8	8	8	4	11.5	4	9.5	29.5	24.0	24.0	4	16	28.5	4	16	19.0	4	9	4	7.5	29.4	64	76	5	7.5	28.5	5	12	5	12	0
14 FT	8	8	8	8	4	10	4	8	29.3	24.0	24.0	4	14	28.5	4	14	19.0	4	8	4	7	29.1	64	76	5	7	28.5	5	12	5	12	0
16 FT	8	9	8	8	4	9	4	7	29.3	24.0	24.0	4	12	28.0	4	12	19.0	4	8	4	8	29.3	65	77	5	7.5	29.0	5	12	5	12	0
18 FT	8	9	8	8	4	8	4	6.5	29.1	24.0	24.0	5	17	28.0	5	17	19.5	4	7	4	7.5	29.1	65	77	5	7	29.0	5	12	5	12	0
20 FT	8	10	8	8	4	7	5	7	29.0	24.0	24.0	5	17	28.0	5	17	20.0	4	7.5	4	8.5	29.3	66	78	5	7.5	29.0	5	12	5	12	0
22 FT	9	10	8	8	4	7	4	6.5	29.1	25.0	25.0	5	16	28.0	5	16	19.0	4	7	4	7.5	29.3	66	78	5	7	29.0	5	12	5	12	0
24 FT	9	11	8	8	4	6.5	4	6	29.1	25.0	25.0	5	16	28.0	5	16	19.5	4	7	4	7.5	29.5	67	79	5	7.5	29.0	5	12	5	12	0
26 FT	10	11	8	8	4	6.5	5	8	29.3	26.0	26.0	5	16	28.0	5	16	19.0	4	6.5	4	6.5	29.5	67	79	5	7.5	29.0	5	12	5	12	0
28 FT	10	12	8	8	4	6.5	5	7.5	29.3	26.0	26.0	5	15	28.0	5	15	19.0	4	6.5	4	6.5	29.6	68	80	5	7.5	29.0	5	12	5	12	0
30 FT	11	12	8	8	4	6.5	5	8.5	29.4	27.0	27.0	5	16	27.5	5	16	19.0	4	6.5	4	6	29.8	68	80	5	7.5	29.0	5	12	5	12	0
32 FT	11	13	8	8	4	6	5	8	29.5	27.0	27.0	5	15	27.5	5	15	19.0	4	6.5	4	6	29.9	69	81	5	7.5	29.0	5	12	5	12	0
34 FT	12	13	8	8	4	6	5	8.5	29.5	28.0	32.0	5	16	27.5	5	16	19.0	4	6	5	8.5	30.0	69	81	5	7	29.0	5	12	5	11.5	0
36 FT	12	14	8	8	5	9	5	7.5	29.6	28.0	32.0	5	15	27.0	5	15	19.0	4	6.5	5	9	30.1	70	82	5	7.5	29.0	5	12	5	10.5	0
38 FT	12	14	8	8	5	8.5	5	7.5	29.6	28.0	32.0	5	15	27.0	5	15	19.0	4	6	5	8.5	30.1	70	82	5	7	29.0	5	12	5	10	0
40 FT	13	14	8	8	5	8.5	5	7.5	29.6	29.0	33.0	5	16	27.0	5	16	19.0	5	8.5	5	8	30.3	70	82	5	7	29.0	5	12	5	9.5	0
42 FT	13	15	8	8	5	8.5	5	7	29.8	29.0	33.0	5	15	26.5	5	15	19.0	4	6	5	8	30.4	71	83	5	7	28.5	5	12	5	9.5	0
44 FT	13	15	8	8	5	8	5	6.5	29.8	29.0	33.0	5	14	26.5	5	14	19.0	5	9	5	8	30.4	71	83	5	7	28.5	5	12	5	9.5	0
46 FT	14	16	9	8	5	8	5	8	30.5	30.0	34.0	5	16	26.0	5	16	19.0	5	9	5	9	31.0	72	84	5	7	29.0	5	12	5	9.5	0
48 FT	14	16	9	8	5	8	5	8	30.4	30.0	34.0	5	15	26.0	5	15	19.0	5	8.5	5	8.5	31.0	72	84	5	6.5	29.0	5	12	5	9	0
50 FT	14	16	10	8	5	7.5	5	7.5	31.0	30.0	30.0	5	15	26.0	5	15	19.0	5	8	4	6	31.1	72	84	5	6.5	29.0	5	12	5	10	0

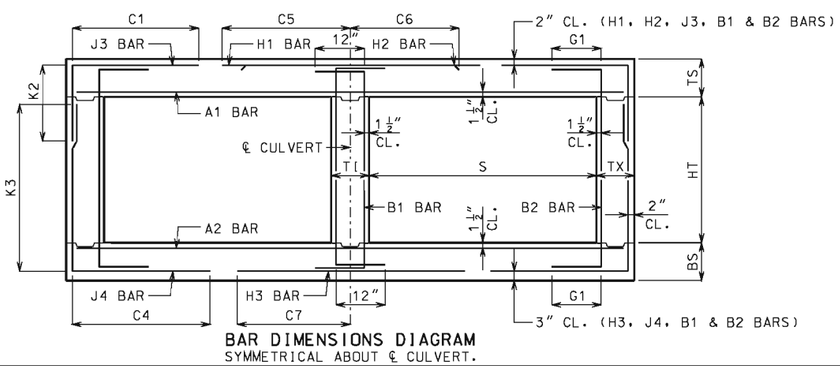

BAR DIMENSIONS DIAGRAM
SYMMETRICAL ABOUT ℄ CULVERT.

IF A SEAL IS PRESENT ON THIS SHEET IT HAS BEEN ELECTRONICALLY SEALED AND DATED.

GENERAL NOTES:

IF DESIGN FILL IS BETWEEN TABULATED DESIGN FILLS, USE THE NEXT GREATER TABULATED DESIGN FILL, EXCEPT FOR DESIGN FILLS BETWEEN 2 FEET AND 4 FEET. FOR DESIGN FILLS BETWEEN 2 FEET AND 4 FEET USE THE GREATER MEMBER THICKNESS, AREA OF REINFORCEMENT AND BAR DIMENSIONS FROM THE 2 FEET AND 4 FEET TABULATED DESIGN FILLS. AREA OF REINFORCEMENT EQUALS BAR AREA PER FOOT SPACING.

SPECIAL DESIGNS ARE REQUIRED WHEN THE DESIGN FILL IS LESS THAN 1 FOOT OR GREATER THAN 50 FEET.

DIMENSIONS ARE IN INCHES UNLESS OTHERWISE SPECIFIED.

DESIGN FILLS ARE MEASURED FROM THE TOP OF TOP SLAB TO THE TOP OF EARTH FILL OR ROADWAY.

CULVERTS MEET STRENGTH AND SERVICEABILITY REQUIREMENTS FOR THE DESIGN VEHICULAR LIVE LOAD HL-93 MINUS THE LANE LOAD.

MISSOURI HIGHWAYS AND TRANSPORTATION COMMISSION
105 WEST CAPITOL
JEFFERSON CITY, MO 65102
1-888-ASK-MODOT (1-888-275-6636)

STATE OF MISSOURI
DENNIS W. HECKMAN
NUMBER PE-27141
PROFESSIONAL ENGINEER
THIS SHEET HAS BEEN SIGNED, SEALED AND DATED ELECTRONICALLY.

CONCRETE DOUBLE BOX CULVERT

MEMBER THICKNESS
BAR SIZE, SPACING & DIMENSIONS

SPAN (S): 5 FEET
HEIGHT (HT): 3 THRU 6 FEET

DATE EFFECTIVE: 10/01/2011
DATE PREPARED: 9/8/2011

703.47

SHEET NO.
4 OF 27

SPAN (S) = 5 FT HEIGHT (HT) = 7 FT OR 8 FT

DESIGN FILL	MEMBER THICKNESS				TOP SLAB BARS												BOTTOM SLAB BARS										WALL BARS				
					A1 BARS		J3 BARS					H1 BARS			H2 BARS			A2 BARS		J4 BARS					H3 BARS			B1 BARS		B2 BARS		
										K2											K3										
	TS	BS	TX	TI	SIZE	SPA.	SIZE	SPA.	C1	HT=7′	HT=8′	SIZE	SPA.	C5	SIZE	SPA.	C6	SIZE	SPA.	SIZE	SPA.	C4	HT=7′	HT=8′	SIZE	SPA.	C7	SIZE	SPA.	SIZE	SPA.	G1
1 FT	11	8	8	8	4	6	4	9.5	30.9	27.0	27.0	4	20	56.0	4	20	22.0	4	10.5	4	7	52.1	88	100	4	7	31.0	5	12	5	12	12
2 FT	11	8	8	8	4	6	4	9	30.9	27.0	27.0	4	20	56.0	4	20	22.0	4	10	4	6.5	50.0	88	100	4	6.5	31.0	5	12	5	12	12
4 FT	8	8	8	8	4	10	4	7	30.9	24.0	24.0	4	18	56.0	4	18	20.5	4	10.5	4	6	47.4	88	100	4	6.5	30.0	5	12	5	12	12
6 FT	8	9	8	8	4	12	4	7	51.6	24.0	24.0	4	19	32.5	4	19	20.0	4	12	4	6.5	46.3	89	101	4	7.5	29.5	5	12	5	12	12
8 FT	8	9	8	8	4	12	4	6.5	44.5	24.0	24.0	4	18	30.5	4	18	19.5	4	11	4	6	44.0	89	101	4	7	29.5	5	12	5	12	0
10 FT	8	9	9	8	4	11.5	4	7	40.8	24.0	24.0	4	16	29.5	4	16	19.5	4	10	4	6.5	41.4	89	101	4	6.5	29.0	5	12	5	12	0
12 FT	8	9	9	8	4	12	4	7	36.9	24.0	24.0	4	17	28.0	4	17	19.0	4	10.5	4	7	38.3	89	101	4	6.5	29.0	5	12	5	12	0
14 FT	8	9	9	8	4	10.5	4	6.5	36.4	24.0	24.0	4	15	28.0	4	15	19.0	4	9	4	6.5	37.9	89	101	4	6	29.0	5	12	5	12	0
16 FT	8	9	9	8	4	9	5	7	36.0	24.0	28.0	4	13	28.0	4	13	19.0	4	8	5	7	37.5	89	101	5	7.5	28.5	5	12	5	12	0
18 FT	8	9	9	8	4	8	5	6	35.8	24.0	28.0	5	18	28.0	5	18	19.0	4	7.5	5	6	37.3	89	101	5	7	28.5	5	12	5	12	0
20 FT	8	10	9	8	4	7.5	6	7	38.4	24.0	28.0	5	17	28.0	5	17	19.5	4	7.5	5	6.5	38.1	90	102	5	7.5	29.0	5	12	5	11	0
22 FT	9	10	9	8	4	7.5	5	6	36.4	25.0	29.0	5	17	27.5	5	17	19.0	4	7	5	6	37.8	90	102	5	7.5	29.0	5	12	5	10	0
24 FT	9	11	9	8	4	7	5	6	36.1	25.0	29.0	5	16	27.5	5	16	19.0	4	7	5	6	38.5	91	103	5	8	29.0	5	12	5	9.5	0
26 FT	10	11	9	8	4	7	5	6	36.9	26.0	30.0	5	17	27.5	5	17	19.0	4	6.5	5	6	38.3	91	103	5	7.5	29.0	5	12	5	9	0
28 FT	10	12	9	8	4	6.5	5	6	36.8	30.0	30.0	5	16	27.5	5	16	19.0	4	7	5	6	38.9	92	104	5	8	29.0	5	12	5	8.5	0
30 FT	11	12	9	8	4	6.5	5	6	37.4	31.0	31.0	5	17	27.0	5	17	19.0	4	6.5	6	7.5	41.6	92	104	5	7.5	29.0	5	12	5	8.5	0
32 FT	11	13	9	8	4	6.5	6	7	40.3	31.0	31.0	5	16	27.0	5	16	19.0	4	6.5	5	6	39.1	93	105	5	7.5	29.0	5	12	5	8.5	0
34 FT	11	13	9	8	4	6	6	7	40.1	31.0	35.0	5	15	27.0	5	15	19.0	4	6.5	6	7	42.1	93	105	5	7.5	29.0	5	12	5	8.5	0
36 FT	12	14	10	8	4	6	5	6.5	37.8	32.0	32.0	5	17	26.0	5	17	19.0	4	6.5	5	7	39.5	94	106	5	7.5	29.0	5	12	5	8	0
38 FT	12	14	10	8	5	9	5	6	37.6	32.0	32.0	5	16	26.0	5	16	19.0	4	6	5	6.5	39.5	94	106	5	7	29.0	5	12	5	8	0
40 FT	12	15	11	8	5	8.5	5	7	37.8	28.0	32.0	5	15	26.0	5	15	19.0	4	6	5	7	40.0	95	107	5	7.5	29.0	5	12	5	7.5	0
42 FT	13	15	11	8	5	8.5	5	7	38.3	33.0	33.0	5	17	25.5	5	17	18.5	4	6	5	7	39.9	95	107	5	7	29.0	5	12	5	7.5	0
44 FT	13	15	11	8	5	8.5	5	6.5	38.1	33.0	33.0	5	16	25.5	5	16	18.5	5	9	5	7	39.9	95	107	5	6.5	29.0	5	12	5	7.5	0
46 FT	13	16	12	8	5	8	5	6.5	38.3	29.0	33.0	5	16	25.5	5	16	18.5	4	6	5	7	40.4	96	108	5	7	29.0	5	12	5	7.5	0
48 FT	14	16	12	8	5	8	5	6.5	38.8	34.0	34.0	5	17	25.0	5	17	18.5	5	9	5	6.5	40.4	96	108	5	6.5	29.0	5	12	5	7	0
50 FT	14	16	12	8	5	7.5	5	6.5	38.8	34.0	34.0	5	17	25.0	5	17	18.5	5	8.5	5	6.5	40.3	96	108	5	6.5	29.0	5	12	5	7	0

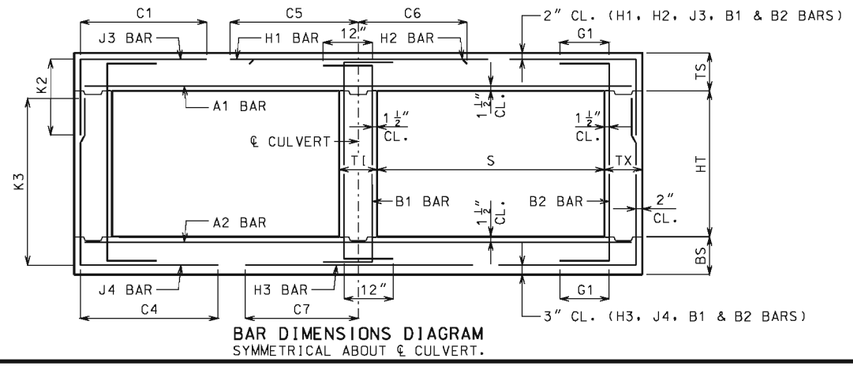

BAR DIMENSIONS DIAGRAM
SYMMETRICAL ABOUT ℄ CULVERT.

GENERAL NOTES:

IF DESIGN FILL IS BETWEEN TABULATED DESIGN FILLS, USE THE NEXT GREATER TABULATED DESIGN FILL, EXCEPT FOR DESIGN FILLS BETWEEN 2 FEET AND 4 FEET. FOR DESIGN FILLS BETWEEN 2 FEET AND 4 FEET USE THE GREATER MEMBER THICKNESS, AREA OF REINFORCEMENT AND BAR DIMENSIONS FROM THE 2 FEET AND 4 FEET TABULATED DESIGN FILLS. AREA OF REINFORCEMENT EQUALS BAR AREA PER FOOT SPACING.

SPECIAL DESIGNS ARE REQUIRED WHEN THE DESIGN FILL IS LESS THAN 1 FOOT OR GREATER THAN 50 FEET.

DIMENSIONS ARE IN INCHES UNLESS OTHERWISE SPECIFIED.

DESIGN FILLS ARE MEASURED FROM THE TOP OF TOP SLAB TO THE TOP OF EARTH FILL OR ROADWAY.

CULVERTS MEET STRENGTH AND SERVICEABILITY REQUIREMENTS FOR THE DESIGN VEHICULAR LIVE LOAD HL-93 MINUS THE LANE LOAD.

MISSOURI HIGHWAYS AND TRANSPORTATION COMMISSION
105 WEST CAPITOL
JEFFERSON CITY, MO 65102
1-888-ASK-MODOT (1-888-275-6636)

STATE OF MISSOURI
DENNIS W. HECKMAN
NUMBER PE-27141
PROFESSIONAL ENGINEER
THIS SHEET HAS BEEN SIGNED, SEALED AND DATED ELECTRONICALLY.

CONCRETE DOUBLE BOX CULVERT

MEMBER THICKNESS BAR SIZE, SPACING & DIMENSIONS

SPAN (S): 5 FEET
HEIGHT (HT): 7 THRU 8 FEET

DATE EFFECTIVE: 10/01/2011
DATE PREPARED: 9/8/2011

703.47

SHEET NO. 5 OF 27

IF A SEAL IS PRESENT ON THIS SHEET IT HAS BEEN ELECTRONICALLY SEALED AND DATED.

SPAN (S) = 6 FT HEIGHT (HT) = 3 FT OR 4 FT OR 5 FT

DESIGN FILL	MEMBER THICKNESS				TOP SLAB BARS													BOTTOM SLAB BARS											WALL BARS				
					A1 BARS		J3 BARS						H1 BARS			H2 BARS			A2 BARS		J4 BARS					H3 BARS			B1 BARS		B2 BARS		
	TS	BS	TX	TI	SIZE	SPA.	SIZE	SPA.	C1	K2			SIZE	SPA.	C5	SIZE	SPA.	C6	SIZE	SPA.	SIZE	SPA.	C4	K3			SIZE	SPA.	C7	SIZE	SPA.	SIZE	SPA.	G1
										HT=3′	HT=4′	HT=5′												HT=3′	HT=4′	HT=5′							
1 FT	11	8	8	8	5	8.5	4	9.5	34.5	27.0	27.0	27.0	4	16	64.5	4	16	23.0	4	9.5	4	9.5	37.6	40	52	64	4	6	34.5	5	12	5	12	12
2 FT	11	8	8	8	5	8.5	4	9.5	34.5	27.0	27.0	27.0	4	15	64.5	4	15	22.5	4	9	4	9	35.0	40	52	64	5	7.5	34.0	5	12	5	12	12
4 FT	8	8	8	8	4	8	4	9	34.0	24.0	24.0	24.0	4	13	43.5	4	13	21.0	4	9	4	9.5	32.0	40	52	64	5	7.5	33.5	5	12	5	12	12
6 FT	8	8	8	8	4	9.5	4	9.5	30.4	24.0	24.0	24.0	4	13	35.5	4	13	20.5	4	8.5	4	9	29.9	40	52	64	5	7	32.5	5	12	5	12	12
8 FT	8	8	8	8	4	9	4	9	29.3	24.0	24.0	24.0	4	12	34.0	4	12	20.5	4	7.5	4	8	28.9	40	52	64	5	6.5	32.0	5	12	5	12	0
10 FT	8	9	8	8	4	8	4	8	28.8	24.0	24.0	24.0	5	17	33.0	5	17	20.5	4	7.5	4	10	27.8	41	53	65	5	7	32.0	5	12	5	12	0
12 FT	8	9	8	8	4	7	4	7	28.4	24.0	24.0	24.0	5	16	32.5	5	16	21.5	4	6.5	4	9	27.3	41	53	65	5	6.5	32.0	5	12	5	12	0
14 FT	8	9	8	8	4	7.5	4	7	27.0	24.0	24.0	24.0	5	16	31.5	5	16	21.5	4	6.6	4	9.5	25.9	41	53	65	5	6	32.0	5	12	5	12	0
16 FT	8	10	8	8	4	6.5	4	6	27.1	24.0	24.0	24.0	5	15	31.5	5	15	22.5	4	6.5	4	11.5	25.3	42	54	66	5	6.5	32.0	5	12	5	12	0
18 FT	9	11	8	8	4	6.5	4	7.5	26.6	25.0	25.0	25.0	5	16	31.5	5	16	21.5	4	6.5	4	10.5	25.0	43	55	67	5	7	32.0	5	12	5	12	0
20 FT	10	11	8	8	4	6	4	7.5	26.1	26.0	26.0	26.0	5	15	31.5	5	15	21.0	4	6	4	10	25.3	43	55	67	5	6.5	32.0	5	12	5	12	0
22 FT	10	12	8	8	5	9	4	6.5	26.3	26.0	26.0	26.0	5	15	31.5	5	15	21.5	4	6	4	9.5	24.9	44	56	68	5	6.5	32.0	5	12	5	12	0
24 FT	11	12	8	8	5	9	4	7	25.9	27.0	27.0	27.0	5	14	31.5	5	14	21.0	5	8.5	4	9	25.1	44	56	68	5	6	32.0	5	12	5	12	0
26 FT	11	13	8	8	5	8.5	4	6	26.0	27.0	27.0	27.0	5	14	31.5	5	14	21.5	5	8.5	4	8.5	24.9	45	57	69	5	6	32.0	5	12	5	12	0
28 FT	12	14	8	8	5	8.5	4	6.5	25.9	28.0	28.0	28.0	5	13	31.5	5	13	20.5	5	9	4	7.5	25.0	46	58	70	5	6.5	32.0	5	12	5	12	0
30 FT	13	14	8	8	5	8.5	4	6.5	25.6	29.0	29.0	29.0	5	12	31.0	5	12	20.0	5	8.5	4	7.5	25.1	46	58	70	5	6	32.0	5	12	5	12	0
32 FT	13	15	8	8	5	8	4	6	25.8	29.0	29.0	29.0	5	12	31.0	5	12	20.5	5	8.5	4	7	25.1	47	59	71	5	6	32.0	5	12	5	12	0
34 FT	14	15	8	8	5	8	4	6	25.5	30.0	30.0	30.0	5	12	31.0	5	12	20.0	5	8	4	7	25.3	47	59	71	6	8.5	35.0	5	12	5	12	0
36 FT	14	16	8	8	5	7.5	5	8.5	25.8	30.0	30.0	30.0	5	12	31.0	5	12	20.0	5	8	4	6.5	25.3	48	60	72	5	6	32.0	5	12	5	12	0
38 FT	15	16	8	8	5	7.5	4	6	27.5	31.0	31.0	31.0	5	12	35.5	5	12	25.0	5	7.5	4	6.5	25.4	48	60	72	6	8	35.0	5	12	5	12	0
40 FT	15	17	8	8	5	7	5	8	30.8	31.0	31.0	31.0	6	17	39.5	6	17	29.0	5	7.5	4	6	25.4	49	61	73	6	8.5	35.0	5	12	5	12	0
42 FT	16	17	8	8	5	7	5	7	30.6	32.0	32.0	32.0	5	12	35.0	5	12	25.0	5	7.5	4	6	25.6	49	61	73	6	8	35.0	5	12	5	12	0
44 FT	16	18	8	8	5	6.5	5	7	30.8	32.0	32.0	36.0	6	17	39.0	6	17	29.0	5	7.5	5	6.5	25.6	50	62	74	6	8	35.0	5	12	5	12	0
46 FT	16	18	8	8	5	6	5	7	30.8	32.0	32.0	36.0	6	16	39.0	6	16	29.0	5	7	5	6.5	25.6	50	62	74	6	8	35.0	5	12	5	11.5	0
48 FT	17	19	8	8	5	6.5	5	6.5	30.8	37.0	37.0	37.0	5	12	34.5	5	12	24.5	5	7.5	5	6.5	25.9	51	63	75	6	8	35.0	5	12	5	10.5	0
50 FT	17	19	8	8	5	6	5	6.5	30.8	37.0	37.0	37.0	6	16	38.5	6	16	28.5	5	7	5	6.5	25.9	51	63	75	6	7.5	35.0	5	12	5	10	0

SPAN (S) = 6 FT HEIGHT (HT) = 6 FT OR 7 FT

DESIGN FILL	MEMBER THICKNESS				TOP SLAB BARS													BOTTOM SLAB BARS											WALL BARS				
					A1 BARS		J3 BARS						H1 BARS			H2 BARS			A2 BARS		J4 BARS					H3 BARS			B1 BARS		B2 BARS		
	TS	BS	TX	TI	SIZE	SPA.	SIZE	SPA.	C1	K2			SIZE	SPA.	C5	SIZE	SPA.	C6	SIZE	SPA.	SIZE	SPA.	C4	K3			SIZE	SPA.	C7	SIZE	SPA.	SIZE	SPA.	G1
										HT=6′	HT=7′													HT=6′	HT=7′								
1 FT	11	8	8	8	5	8	4	9.5	34.5	27.0	27.0	4	16	64.5	4	16	23.5	4	9	4	7.5	48.9	76	88	5	7.5	34.5	5	12	5	12	12
2 FT	11	8	8	8	5	8	4	9.5	34.5	27.0	27.0	4	15	64.5	4	15	23.0	4	8.5	4	7	45.0	76	88	5	7.5	34.0	5	12	5	12	12
4 FT	8	8	8	8	4	7.5	4	7.5	34.5	24.0	24.0	4	13	64.5	4	13	21.0	4	8.5	4	7	41.6	76	88	5	7	33.5	5	12	5	12	12
6 FT	8	8	8	8	4	9	4	7.5	40.9	24.0	24.0	4	13	36.0	4	13	20.5	4	8	4	6.5	38.1	76	88	5	7	32.5	5	12	5	12	12
8 FT	8	8	8	8	4	9	4	7	37.0	24.0	24.0	4	12	34.0	4	12	20.5	4	7.5	4	6	36.3	76	88	5	6.5	32.0	5	12	5	12	0
10 FT	8	9	8	8	4	8	4	6	35.1	24.0	24.0	5	17	33.0	5	17	21.0	4	7.5	4	6.5	35.5	77	89	5	7	32.0	5	12	5	12	0
12 FT	8	9	8	8	4	7	5	6.5	34.1	24.0	24.0	5	16	32.5	5	16	21.5	4	6.5	4	6	34.5	77	89	5	6.5	32.0	5	12	5	12	0
14 FT	8	9	8	8	4	7	5	6.5	31.8	24.0	24.0	5	16	31.5	5	16	21.5	4	6.5	4	6	32.0	77	89	5	6	32.0	5	12	5	12	0
16 FT	8	10	8	8	4	6.5	5	6	31.6	24.0	24.0	5	15	31.0	5	15	22.5	4	6.5	4	7	32.0	78	90	5	6.5	32.0	5	12	5	12	0
18 FT	9	11	8	8	4	6.5	5	6.5	31.8	25.0	25.0	5	16	31.0	5	16	21.5	4	6.5	4	6.5	32.3	79	91	5	7	32.0	5	12	5	12	0
20 FT	10	11	8	8	4	6	5	7.5	31.8	26.0	30.0	5	15	31.0	5	15	21.0	4	6	5	7.5	32.1	79	91	5	6.5	32.0	5	12	5	12	0
22 FT	10	12	8	8	5	9	5	7	31.6	26.0	30.0	5	15	31.0	5	15	21.5	4	6	5	8	32.3	80	92	5	6.5	32.0	5	12	5	12	0
24 FT	11	12	8	8	5	9	5	7.5	31.8	27.0	31.0	5	14	31.0	5	14	20.5	5	8.5	5	7.5	32.1	80	92	5	6	32.0	5	12	5	12	0
26 FT	11	13	8	8	5	8.5	5	6.5	31.8	27.0	31.0	5	14	31.0	5	14	21.0	5	9	5	7.5	32.3	81	93	5	6	32.0	5	12	5	11	0
28 FT	12	14	8	8	5	8.5	5	7	31.9	28.0	32.0	5	13	30.5	5	13	20.0	5	9	5	8	32.6	82	94	5	6.5	32.0	5	12	5	10	0
30 FT	12	14	8	8	5	7.5	5	6.5	31.8	28.0	32.0	5	13	30.5	5	13	20.5	5	8.5	5	7.5	32.5	82	94	5	6	32.0	5	12	5	9.5	0
32 FT	13	15	8	8	5	8	5	6.5	32.0	29.0	33.0	5	12	30.0	5	12	20.0	5	8.5	5	7.5	32.8	83	95	5	6	32.0	5	12	5	9.5	0
34 FT	13	15	8	8	5	7	5	6	31.9	29.0	33.0	5	12	30.0	5	12	20.0	5	8	5	7	32.8	83	95	5	6	32.0	5	12	5	9.5	0
36 FT	14	16	9	8	5	7.5	5	7.5	32.6	30.0	34.0	5	12	29.5	5	12	19.5	5	8	5	8	33.3	84	96	5	6	32.0	5	12	5	9	0
38 FT	14	16	9	8	5	7	5	7	32.5	30.0	34.0	5	12	29.5	5	12	19.5	5	8	5	8	33.1	84	96	6	8	35.0	5	12	5	8.5	0
40 FT	15	17	9	8	5	7	5	6.5	37.8	31.0	35.0	5	13	34.0	5	13	24.5	5	8	5	8	33.5	85	97	6	8.5	35.0	5	12	5	8.5	0
42 FT	15	17	10	8	5	7	5	7.5	38.3	31.0	35.0	5	12	34.0	5	12	24.5	5	7.5	5	7.5	33.6	85	97	6	8	35.0	5	12	5	9	0
44 FT	15	18	10	8	5	6	5	7	38.4	31.0	35.0	5	12	34.0	5	12	24.5	5	7.5	5	7.5	33.9	86	98	6	8	35.0	5	12	5	8.5	0
46 FT	16	18	10	8	5	6.5	5	6.5	38.4	32.0	36.0	5	12	33.0	5	12	24.5	5	7.5	5	7.5	34.0	86	98	6	7.5	35.0	5	12	5	8	0
48 FT	16	19	11	8	5	6.5	5	7	39.0	32.0	36.0	5	12	33.0	5	12	24.5	5	7.5	5	8.5	34.4	87	99	6	8	35.0	5	12	5	8.5	0
50 FT	17	19	11	8	5	6.5	5	7	39.1	33.0	37.0	5	13	32.5	5	13	24.5	5	7	5	8	34.5	87	99	6	7.5	35.0	5	12	5	8	0

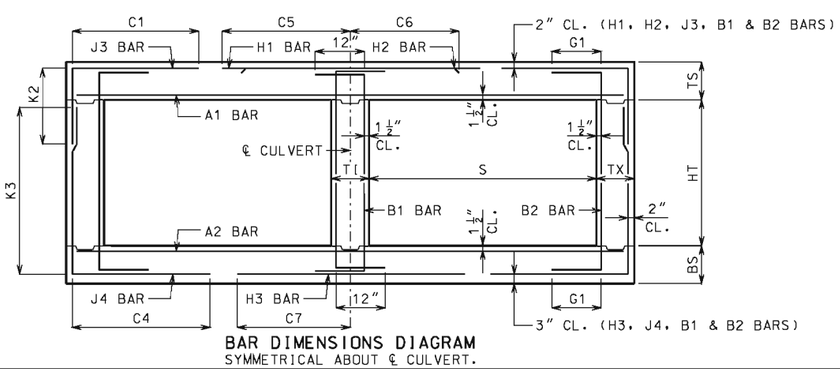

BAR DIMENSIONS DIAGRAM
SYMMETRICAL ABOUT ℄ CULVERT.

IF A SEAL IS PRESENT ON THIS SHEET IT HAS BEEN ELECTRONICALLY SEALED AND DATED.

GENERAL NOTES:

IF DESIGN FILL IS BETWEEN TABULATED DESIGN FILLS, USE THE NEXT GREATER TABULATED DESIGN FILL, EXCEPT FOR DESIGN FILLS BETWEEN 2 FEET AND 4 FEET. FOR DESIGN FILLS BETWEEN 2 FEET AND 4 FEET USE THE GREATER MEMBER THICKNESS, AREA OF REINFORCEMENT AND BAR DIMENSIONS FROM THE 2 FEET AND 4 FEET TABULATED DESIGN FILLS. AREA OF REINFORCEMENT EQUALS BAR AREA PER FOOT SPACING.

SPECIAL DESIGNS ARE REQUIRED WHEN THE DESIGN FILL IS LESS THAN 1 FOOT OR GREATER THAN 50 FEET.

DIMENSIONS ARE IN INCHES UNLESS OTHERWISE SPECIFIED.

DESIGN FILLS ARE MEASURED FROM THE TOP OF TOP SLAB TO THE TOP OF EARTH FILL OR ROADWAY.

CULVERTS MEET STRENGTH AND SERVICEABILITY REQUIREMENTS FOR THE DESIGN VEHICULAR LIVE LOAD HL-93 MINUS THE LANE LOAD.

MISSOURI HIGHWAYS AND TRANSPORTATION COMMISSION
105 WEST CAPITOL
JEFFERSON CITY, MO 65102
1-888-ASK-MODOT (1-888-275-6636)

STATE OF MISSOURI
DENNIS W. HECKMAN
NUMBER PE-27141
PROFESSIONAL ENGINEER
THIS SHEET HAS BEEN SIGNED, SEALED AND DATED ELECTRONICALLY.

CONCRETE DOUBLE BOX CULVERT

MEMBER THICKNESS
BAR SIZE, SPACING & DIMENSIONS

SPAN (S): 6 FEET
HEIGHT (HT): 3 THRU 7 FEET

DATE EFFECTIVE: 10/01/2011
DATE PREPARED: 9/8/2011

703.47

SHEET NO.
6 OF 27

SPAN (S) = 6 FT HEIGHT (HT) = 8 FT OR 9 FT

DESIGN FILL	MEMBER THICKNESS				TOP SLAB BARS												BOTTOM SLAB BARS										WALL BARS				
					A1 BARS		J3 BARS					H1 BARS			H2 BARS			A2 BARS		J4 BARS					H3 BARS			B1 BARS		B2 BARS	
										K2											K3									
	TS	BS	TX	TI	SIZE	SPA.	SIZE	SPA.	C1	HT=8′	HT=9′	SIZE	SPA.	C5	SIZE	SPA.	C6	SIZE	SPA.	SIZE	SPA.	C4	HT=8′	HT=9′	SIZE	SPA.	C7	SIZE	SPA.	SIZE	SPA.	G1
1 FT	11	9	8	8	5	8	4	7	34.5	27.0	27.0	4	16	64.5	4	16	23.5	4	9.5	4	6.5	59.4	101	113	4	6.5	34.5	5	12	5	12	12
2 FT	11	9	8	8	5	8	4	6.5	34.5	27.0	27.0	4	16	64.5	4	16	23.0	4	9	4	6	57.0	101	113	4	6	34.0	5	12	5	12	12
4 FT	8	9	9	8	4	7.5	4	6.5	35.1	24.0	24.0	4	13	65.0	4	13	21.0	4	9.5	4	6.5	53.0	101	113	4	6	33.5	5	12	5	12	12
6 FT	8	9	9	8	4	9	4	6	53.1	24.0	24.0	4	13	36.0	4	13	20.5	4	9	4	6	49.5	101	113	4	6	33.0	5	12	5	12	12
8 FT	8	9	9	8	4	9	5	7	46.5	24.0	28.0	4	12	33.5	4	12	20.5	4	8	5	6.5	46.5	101	113	5	7.5	32.5	5	12	5	12	0
10 FT	8	9	9	8	4	8	5	6	43.8	24.0	28.0	5	17	32.5	5	17	20.5	4	7.5	5	6	44.6	101	113	5	6.5	32.0	5	12	5	11.5	0
12 FT	8	9	10	8	4	7.5	5	6.5	41.8	24.0	28.0	5	17	32.0	5	17	21.5	4	6.5	5	6.5	42.9	101	113	5	6.5	32.0	5	12	5	11.5	0
14 FT	8	9	10	8	4	7.5	5	6.5	38.5	24.0	28.0	5	17	31.0	5	17	21.0	4	6.5	5	6.5	39.6	101	113	5	6	31.5	5	12	5	12	0
16 FT	8	10	10	8	4	6.5	5	6	38.1	24.0	28.0	5	16	31.0	5	16	22.0	4	6.5	5	7	40.6	102	114	5	6.5	32.0	5	12	5	11.5	0
18 FT	9	11	10	8	4	6.5	5	6	38.8	25.0	29.0	5	16	31.0	5	16	21.0	4	6.5	5	7	41.1	103	115	5	7	32.0	5	12	5	10.5	0
20 FT	9	11	10	8	4	6	5	6	38.5	25.0	29.0	5	16	31.0	5	16	22.0	4	6	5	6.5	40.9	103	115	5	6	32.0	5	12	5	10	0
22 FT	10	12	10	8	4	6	5	6.5	39.1	30.0	30.0	5	15	30.5	5	15	21.0	4	6	5	6.5	41.4	104	116	5	6.5	32.0	5	12	5	9	0
24 FT	11	13	10	8	4	6	5	6.5	39.6	31.0	31.0	5	14	30.5	5	14	20.0	4	6	5	6.5	41.8	105	117	5	6.5	32.0	5	12	5	8.5	0
26 FT	11	13	10	8	5	9	5	6	39.4	31.0	31.0	5	14	30.5	5	14	20.5	5	9	5	6.5	41.6	105	117	5	6	32.0	5	12	5	8	0
28 FT	12	14	10	8	5	9	5	6	40.0	32.0	32.0	5	13	30.0	5	13	19.5	4	6	5	6.5	42.0	106	118	5	6.5	32.0	5	12	5	8	0
30 FT	12	14	10	8	5	8	5	6	39.9	32.0	32.0	5	13	30.0	5	13	20.0	5	8.5	5	6	41.9	106	118	5	6	32.0	5	12	5	8	0
32 FT	13	15	11	8	5	8.5	5	7	40.4	33.0	33.0	5	13	29.0	5	13	19.5	5	8.5	5	7	42.3	107	119	5	6	32.0	5	12	5	7.5	0
34 FT	13	15	11	8	5	8	5	6.5	40.3	33.0	33.0	5	13	29.0	5	13	19.5	5	8	5	7	42.1	107	119	6	8	35.0	5	12	5	7.5	0
36 FT	14	16	11	8	5	8	5	6	40.8	34.0	34.0	5	14	28.5	5	14	19.5	5	8.5	5	7	42.6	108	120	5	6	32.0	5	12	5	7.5	0
38 FT	14	16	12	8	5	7.5	5	6.5	40.8	34.0	34.0	5	13	28.5	5	13	19.5	5	7.5	5	6.5	42.5	108	120	6	8	35.0	5	12	5	7	0
40 FT	14	17	12	8	5	7	5	6	40.8	34.0	34.0	5	12	28.5	5	12	19.5	5	8	5	6.5	43.0	109	121	6	8	35.0	5	12	5	7	0
42 FT	15	17	13	8	5	7	5	6	46.4	35.0	35.0	5	13	33.0	5	13	24.5	5	7	5	6	42.8	109	121	6	7.5	35.0	5	12	5	7	0
44 FT	15	18	13	8	5	7	5	6	46.4	35.0	35.0	5	13	33.0	5	13	24.5	5	7.5	5	6	43.3	110	122	6	8	35.0	5	12	5	6.5	0
46 FT	15	18	13	8	5	6	5	6	46.3	35.0	35.0	5	12	33.0	5	12	24.5	5	7.5	5	6	43.3	110	122	6	7.5	35.0	5	12	5	6.5	0
48 FT	16	19	14	8	5	6.5	5	6	47.0	36.0	36.0	5	14	32.5	5	14	24.0	5	7.5	5	6	43.8	111	123	6	7.5	35.0	5	12	5	6.5	0
50 FT	16	19	14	8	5	6	5	6	46.9	36.0	36.0	5	13	32.5	5	13	24.0	5	7	5	6	43.6	111	123	6	7.5	35.0	5	12	5	6.5	0

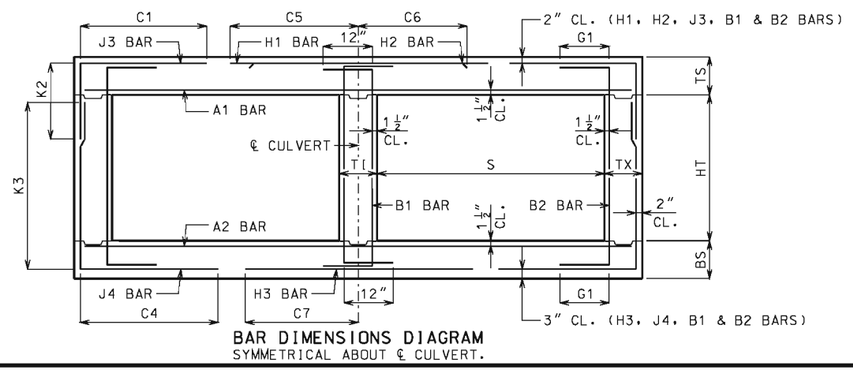

BAR DIMENSIONS DIAGRAM
SYMMETRICAL ABOUT ℄ CULVERT.

GENERAL NOTES:

IF DESIGN FILL IS BETWEEN TABULATED DESIGN FILLS, USE THE NEXT GREATER TABULATED DESIGN FILL, EXCEPT FOR DESIGN FILLS BETWEEN 2 FEET AND 4 FEET. FOR DESIGN FILLS BETWEEN 2 FEET AND 4 FEET USE THE GREATER MEMBER THICKNESS, AREA OF REINFORCEMENT AND BAR DIMENSIONS FROM THE 2 FEET AND 4 FEET TABULATED DESIGN FILLS. AREA OF REINFORCEMENT EQUALS BAR AREA PER FOOT SPACING.

SPECIAL DESIGNS ARE REQUIRED WHEN THE DESIGN FILL IS LESS THAN 1 FOOT OR GREATER THAN 50 FEET.

DIMENSIONS ARE IN INCHES UNLESS OTHERWISE SPECIFIED.

DESIGN FILLS ARE MEASURED FROM THE TOP OF TOP SLAB TO THE TOP OF EARTH FILL OR ROADWAY.

CULVERTS MEET STRENGTH AND SERVICEABILITY REQUIREMENTS FOR THE DESIGN VEHICULAR LIVE LOAD HL-93 MINUS THE LANE LOAD.

MISSOURI HIGHWAYS AND TRANSPORTATION COMMISSION
105 WEST CAPITOL
JEFFERSON CITY, MO 65102
1-888-ASK-MODOT (1-888-275-6636)

STATE OF MISSOURI
DENNIS W. HECKMAN
NUMBER PE-27141
PROFESSIONAL ENGINEER
THIS SHEET HAS BEEN SIGNED, SEALED AND DATED ELECTRONICALLY.

CONCRETE DOUBLE BOX CULVERT

MEMBER THICKNESS BAR SIZE, SPACING & DIMENSIONS

SPAN (S): 6 FEET
HEIGHT (HT): 8 THRU 9 FEET

DATE EFFECTIVE: 10/01/2011
DATE PREPARED: 9/8/2011

703.47

SHEET NO. 7 OF 27

IF A SEAL IS PRESENT ON THIS SHEET IT HAS BEEN ELECTRONICALLY SEALED AND DATED.

SPAN (S) = 7 FT HEIGHT (HT) = 4 FT OR 5 FT OR 6 FT

DESIGN FILL	MEMBER THICKNESS				TOP SLAB BARS												BOTTOM SLAB BARS												WALL BARS				
					A1 BARS		J3 BARS						H1 BARS			H2 BARS			A2 BARS		J4 BARS				H3 BARS				B1 BARS		B2 BARS		
	TS	BS	TX	TI	SIZE	SPA.	SIZE	SPA.	C1	K2			SIZE	SPA.	C5	SIZE	SPA.	C6	SIZE	SPA.	SIZE	SPA.	C4	K3			SIZE	SPA.	C7	SIZE	SPA.	SIZE	SPA.	G1
										HT=4′	HT=5′	HT=6′												HT=4′	HT=5′	HT=6′							
1 FT	12	8	8	8	5	8	4	8.5	38.1	28.0	28.0	28.0	4	15	73.0	4	15	25.5	4	7	4	6.5	41.8	52	64	76	5	6.5	37.5	5	12	5	12	12
2 FT	12	9	8	8	5	7.5	4	8.5	38.1	28.0	28.0	28.0	4	14	73.0	4	14	24.5	4	7.5	4	8.5	39.9	53	65	77	5	7	37.5	5	12	5	12	12
4 FT	8	8	8	8	4	6	4	6.5	38.4	24.0	24.0	24.0	5	17	48.0	5	17	23.5	4	7	4	7	35.8	52	64	76	5	6	36.5	5	12	5	12	12
6 FT	8	8	8	8	4	7	4	7	33.9	24.0	24.0	24.0	5	17	39.0	5	17	23.5	4	6.5	4	6.5	33.3	52	64	76	6	7	38.5	5	12	5	12	12
8 FT	8	9	8	8	4	7	4	6.5	32.1	24.0	24.0	24.0	5	16	37.0	5	16	24.0	4	6.5	4	8	31.8	53	65	77	5	6	35.5	5	12	5	12	0
10 FT	8	10	8	8	4	6	5	7	31.5	24.0	24.0	24.0	5	15	36.0	5	15	24.0	4	6.5	4	9.5	30.5	54	66	78	5	6.5	35.5	5	12	5	12	0
12 FT	9	10	8	8	4	6	4	6.5	30.5	25.0	25.0	25.0	5	15	35.5	5	15	24.0	5	9	4	8.5	29.8	54	66	78	5	6	35.5	5	12	5	12	0
14 FT	9	11	8	8	5	8.5	5	7	30.4	25.0	25.0	25.0	5	14	35.5	5	14	24.0	5	9	4	8.5	29.1	55	67	79	5	6	35.5	5	12	5	12	0
16 FT	10	11	8	8	4	6	4	6.5	28.5	26.0	26.0	26.0	5	15	34.5	5	15	23.0	5	8.5	4	8	27.8	55	67	79	5	6	35.0	5	12	5	12	0
18 FT	10	12	8	8	5	8	5	8	28.6	26.0	26.0	26.0	5	14	34.5	5	14	23.5	5	8.5	4	8.5	27.4	56	68	80	5	6	35.0	5	12	5	12	0
20 FT	11	12	8	8	5	8	5	9	28.1	27.0	27.0	27.0	5	14	34.5	5	14	23.5	5	7	4	7	27.5	56	68	80	6	7	38.0	5	12	5	12	0
22 FT	12	13	8	8	5	8	5	8.5	27.9	28.0	28.0	28.0	5	13	34.5	5	13	23.0	5	7.5	4	7	27.5	57	69	81	6	7.5	38.0	5	12	5	12	0
24 FT	12	14	8	8	5	7.5	5	8.5	28.0	28.0	28.0	28.0	5	13	34.5	5	13	23.5	5	7.5	4	7	27.3	58	70	82	6	7.5	38.0	5	12	5	12	0
26 FT	13	15	8	8	5	7	5	8.5	27.9	29.0	29.0	29.0	5	12	34.5	5	12	22.5	5	7.5	4	7	27.4	59	71	83	6	7.5	38.0	5	12	5	12	0
28 FT	14	15	8	8	5	7	5	8.5	27.6	30.0	30.0	30.0	5	12	34.0	5	12	22.0	5	7	4	6.5	27.6	59	71	83	6	7	38.0	5	12	5	12	0
30 FT	14	16	8	8	5	6.5	5	8.5	27.8	30.0	30.0	30.0	5	12	34.0	5	12	22.5	5	7	4	6.5	27.5	60	72	84	6	7	38.0	5	12	5	12	0
32 FT	15	17	8	8	5	6.5	5	8	32.8	31.0	31.0	31.0	6	16	43.0	6	16	30.5	5	7.5	4	6	27.8	61	73	85	6	7.5	38.0	5	12	5	12	0
34 FT	16	17	8	8	5	6.5	5	7	32.6	32.0	32.0	32.0	6	15	42.5	6	15	29.5	5	7	4	6	27.9	61	73	85	6	7	38.0	5	12	5	11.5	0
36 FT	16	18	8	8	5	6	5	7	32.8	32.0	36.0	36.0	6	15	42.5	6	15	30.0	5	7	5	6.5	27.9	62	74	86	6	7	38.0	5	12	5	10.5	0
38 FT	17	18	8	8	5	6	5	6.5	32.8	37.0	37.0	37.0	6	14	42.0	6	14	29.5	5	6	5	6.5	28.0	62	74	86	6	6.5	38.0	5	12	5	10	0
40 FT	17	19	8	8	5	6	5	6.5	32.8	37.0	37.0	37.0	6	14	42.0	6	14	30.0	5	6.5	5	6.5	28.0	63	75	87	6	7	38.0	5	12	5	9.5	0
42 FT	18	20	8	8	5	6	5	6.5	32.9	38.0	38.0	38.0	6	14	41.5	6	14	29.5	5	6.5	5	6	28.3	64	76	88	6	7	38.0	5	12	5	9.5	0
44 FT	18	20	8	8	6	8	5	6.5	32.9	38.0	38.0	38.0	6	14	41.5	6	14	29.5	5	6.5	5	6	28.3	64	76	88	6	6.5	38.0	5	12	5	9.5	0
46 FT	19	21	8	8	6	8	5	6	33.0	39.0	39.0	39.0	6	14	41.0	6	14	29.5	5	6.5	6	7.5	31.5	65	77	89	6	6.5	38.0	5	12	5	9.5	0
48 FT	19	21	8	8	6	8	5	6	32.9	39.0	39.0	39.0	6	14	41.0	6	14	29.5	5	6	6	7.5	31.4	65	77	89	6	6.5	38.0	5	12	5	9.5	0
50 FT	20	22	9	8	6	8	5	6.5	33.8	40.0	40.0	40.0	6	15	40.0	6	15	29.0	5	6	5	6	29.0	66	78	90	6	6.5	38.0	5	12	5	8.5	0

SPAN (S) = 7 FT HEIGHT (HT) = 7 FT OR 8 FT

DESIGN FILL	MEMBER THICKNESS				TOP SLAB BARS												BOTTOM SLAB BARS												WALL BARS				
					A1 BARS		J3 BARS						H1 BARS			H2 BARS			A2 BARS		J4 BARS				H3 BARS				B1 BARS		B2 BARS		
	TS	BS	TX	TI	SIZE	SPA.	SIZE	SPA.	C1	K2			SIZE	SPA.	C5	SIZE	SPA.	C6	SIZE	SPA.	SIZE	SPA.	C4	K3			SIZE	SPA.	C7	SIZE	SPA.	SIZE	SPA.	G1
										HT=7′	HT=8′												HT=7′	HT=8′								
1 FT	12	9	8	8	5	7.5	4	8.5	38.1	28.0	28.0	4	15	73.0	4	15	25.5	4	7.5	4	7	56.0	89	101	5	7	37.5	5	12	5	12	12
2 FT	12	9	8	8	5	7.5	4	8	38.1	28.0	28.0	4	15	73.0	4	15	25.0	4	7	4	6.5	51.4	89	101	5	7	37.5	5	12	5	12	12
4 FT	8	9	8	8	4	6	5	6.5	40.1	24.0	24.0	5	17	75.0	5	17	23.5	4	7.5	4	6.5	47.8	89	101	5	7	37.0	5	12	5	12	12
6 FT	8	9	8	8	4	7	5	6.5	44.6	24.0	24.0	5	17	39.5	5	17	23.5	4	7	4	6	43.5	89	101	5	6.5	36.0	5	12	5	12	12
8 FT	8	9	9	8	4	7	4	6	40.1	24.0	24.0	5	16	37.0	5	16	23.5	4	6.5	4	6.5	40.4	89	101	5	6	35.5	5	12	5	12	0
10 FT	8	10	9	8	4	6.5	5	6	38.4	24.0	24.0	5	15	36.0	5	15	24.0	4	6.5	4	7	39.5	90	102	5	6.5	35.5	5	12	5	12	0
12 FT	9	10	9	8	4	6	5	6.5	37.8	25.0	25.0	5	15	35.5	5	15	24.0	5	9	4	6	38.1	90	102	5	6	35.0	5	12	5	12	0
14 FT	9	11	9	8	5	8.5	5	6	37.1	25.0	25.0	5	14	35.0	5	14	23.5	5	9	4	6	37.9	91	103	5	6	35.5	5	12	5	12	0
16 FT	9	11	9	8	5	8.5	5	6	34.8	25.0	25.0	5	14	34.0	5	14	23.5	5	8.5	4	6	35.3	91	103	5	6	35.0	5	12	5	12	0
18 FT	10	12	9	8	5	8.5	5	7	34.9	26.0	30.0	5	14	34.0	5	14	23.5	5	8.5	5	8.5	35.3	92	104	5	6	35.0	5	12	5	12	0
20 FT	11	13	9	8	5	8	5	7.5	34.9	27.0	31.0	5	14	34.0	5	14	23.0	5	8.5	5	8	35.4	93	105	6	8	38.0	5	12	5	12	0
22 FT	11	13	9	8	5	7	5	6.5	34.8	27.0	31.0	5	13	34.0	5	13	23.5	5	7.5	5	8	35.1	93	105	6	7.5	38.0	5	12	5	11.5	0
24 FT	12	14	9	8	5	7.5	5	7	34.8	28.0	32.0	5	13	34.0	5	13	23.0	5	8	5	8	35.4	94	106	6	7.5	38.0	5	12	5	10.5	0
26 FT	13	15	9	8	5	7.5	5	7	34.9	29.0	33.0	5	12	33.5	5	12	22.0	5	8	5	8	35.6	95	107	6	7.5	38.0	5	12	5	9.5	0
28 FT	13	15	9	8	5	6.5	5	6.5	34.8	33.0	33.0	5	12	33.5	5	12	22.5	5	7	5	7.5	35.4	95	107	6	7	38.0	5	12	5	9	0
30 FT	14	16	9	8	5	7	5	6.5	34.9	34.0	34.0	5	12	33.0	5	12	21.5	5	7.5	5	7.5	35.6	96	108	6	7	38.0	5	12	5	8.5	0
32 FT	15	17	9	8	5	7	5	6	40.0	35.0	35.0	6	16	41.5	6	16	29.5	5	7.5	5	7.5	36.0	97	109	6	7.5	38.0	5	12	5	8.5	0
34 FT	15	17	10	8	5	6.5	5	7	40.5	35.0	35.0	6	16	41.5	6	16	30.0	5	6.5	5	7.5	36.0	97	109	6	7	38.0	5	12	5	8.5	0
36 FT	16	18	10	8	5	6.5	5	6.5	40.6	36.0	36.0	6	15	41.0	6	15	29.5	5	7	5	7.5	36.4	98	110	6	7	38.0	5	12	5	8	0
38 FT	16	19	11	8	5	6	5	7	41.3	32.0	36.0	6	15	40.5	6	15	29.5	5	7	5	7	36.8	99	111	6	7	38.0	5	12	5	8.5	0
40 FT	17	19	11	8	5	6	5	7	41.3	33.0	37.0	6	15	40.0	6	15	29.0	5	6.5	5	7	36.8	99	111	6	6.5	38.0	5	12	5	8	0
42 FT	17	20	11	8	5	6	5	6.5	41.4	37.0	37.0	6	15	40.0	6	15	29.0	5	6.5	5	7	36.9	100	112	6	7	38.0	5	12	5	7.5	0
44 FT	18	20	11	8	6	8.5	5	6	41.4	38.0	38.0	6	16	39.5	6	16	29.0	5	6.5	5	7	37.0	100	112	6	6.5	38.0	5	12	5	7.5	0
46 FT	18	21	12	8	6	8	5	6.5	42.1	38.0	38.0	6	15	39.5	6	15	29.0	5	6.5	5	7	37.4	101	113	6	6.5	38.0	5	12	5	7.5	0
48 FT	19	21	12	8	6	8	5	6.5	42.0	39.0	39.0	6	16	39.0	6	16	29.0	5	6	5	6.5	37.5	101	113	6	6.5	38.0	5	12	5	7	0
50 FT	19	22	12	8	6	7.5	5	6	42.1	39.0	39.0	6	15	39.0	6	15	29.0	5	6	5	6.5	37.6	102	114	6	6.5	38.0	5	12	5	7	0

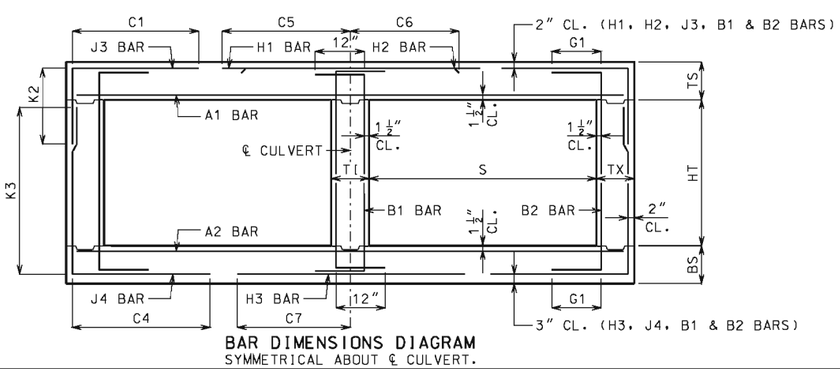

BAR DIMENSIONS DIAGRAM
SYMMETRICAL ABOUT ℄ CULVERT.

IF A SEAL IS PRESENT ON THIS SHEET IT HAS BEEN ELECTRONICALLY SEALED AND DATED.

GENERAL NOTES:

IF DESIGN FILL IS BETWEEN TABULATED DESIGN FILLS, USE THE NEXT GREATER TABULATED DESIGN FILL, EXCEPT FOR DESIGN FILLS BETWEEN 2 FEET AND 4 FEET. FOR DESIGN FILLS BETWEEN 2 FEET AND 4 FEET USE THE GREATER MEMBER THICKNESS, AREA OF REINFORCEMENT AND BAR DIMENSIONS FROM THE 2 FEET AND 4 FEET TABULATED DESIGN FILLS. AREA OF REINFORCEMENT EQUALS BAR AREA PER FOOT SPACING.

SPECIAL DESIGNS ARE REQUIRED WHEN THE DESIGN FILL IS LESS THAN 1 FOOT OR GREATER THAN 50 FEET.

DIMENSIONS ARE IN INCHES UNLESS OTHERWISE SPECIFIED.

DESIGN FILLS ARE MEASURED FROM THE TOP OF TOP SLAB TO THE TOP OF EARTH FILL OR ROADWAY.

CULVERTS MEET STRENGTH AND SERVICEABILITY REQUIREMENTS FOR THE DESIGN VEHICULAR LIVE LOAD HL-93 MINUS THE LANE LOAD.

MISSOURI HIGHWAYS AND TRANSPORTATION COMMISSION
105 WEST CAPITOL
JEFFERSON CITY, MO 65102
1-888-ASK-MODOT (1-888-275-6636)

STATE OF MISSOURI
DENNIS W. HECKMAN
NUMBER PE-27141
PROFESSIONAL ENGINEER
THIS SHEET HAS BEEN SIGNED, SEALED AND DATED ELECTRONICALLY.

CONCRETE DOUBLE BOX CULVERT

MEMBER THICKNESS
BAR SIZE, SPACING & DIMENSIONS

SPAN (S): 7 FEET
HEIGHT (HT): 4 THRU 8 FEET

DATE EFFECTIVE: 10/01/2011
DATE PREPARED: 9/8/2011

703.47

SPAN (S) = 7 FT HEIGHT (HT) = 9 FT OR 10 FT

DESIGN FILL	MEMBER THICKNESS				TOP SLAB BARS												BOTTOM SLAB BARS												WALL BARS				
					A1 BARS		J3 BARS					H1 BARS			H2 BARS			A2 BARS		J4 BARS					H3 BARS				B1 BARS		B2 BARS		
										K2												K3									
	TS	BS	TX	TI	SIZE	SPA.	SIZE	SPA.	C1	HT=9'	HT=10'	SIZE	SPA.	C5	SIZE	SPA.	C6	SIZE	SPA.	SIZE	SPA.	C4	HT=9'	HT=10'	SIZE	SPA.	C7	SIZE	SPA.	SIZE	SPA.	G1
1 FT	12	9	8	8	5	7.5	4	6	38.1	28.0	28.0	4	16	73.0	4	16	26.0	4	7	6	7	68.1	113	125	5	7	38.0	5	12	5	12	12
2 FT	12	9	8	8	5	7.5	5	8.5	38.1	28.0	32.0	4	15	73.0	4	15	25.0	4	6.5	6	6.5	64.9	113	125	5	6.5	37.5	5	12	5	12	12
4 FT	8	9	9	8	4	6	5	6	40.8	24.0	28.0	5	17	75.5	5	17	23.5	4	7.5	5	6	57.8	113	125	5	7	37.0	5	12	5	11.5	12
6 FT	8	9	10	8	4	7	5	6.5	55.0	24.0	28.0	5	17	39.5	5	17	23.0	4	7	5	6.5	51.9	113	125	5	6.5	36.0	5	12	5	11.5	12
8 FT	8	9	10	8	4	7	5	6	49.0	28.0	28.0	5	16	37.0	5	16	23.5	4	6.5	5	6	49.3	113	125	5	6	35.5	5	12	5	10.5	0
10 FT	8	10	10	8	4	6.5	6	7	49.0	28.0	28.0	5	15	36.0	5	15	24.0	4	6.5	5	6	49.1	114	126	5	6	35.5	5	12	5	10	0
12 FT	9	10	10	8	4	6	5	6	46.1	29.0	29.0	5	16	35.5	5	16	23.5	5	9	6	7	50.3	114	126	5	6	35.0	5	12	5	9.5	0
14 FT	9	11	10	8	5	9	5	6	44.6	29.0	29.0	5	15	35.0	5	15	23.5	5	9	6	7.5	50.6	115	127	5	6	35.0	5	12	5	8.5	0
16 FT	9	11	10	8	5	9	5	6	41.5	29.0	29.0	5	14	34.0	5	14	23.5	5	8.5	5	6	44.0	115	127	5	6	35.0	5	12	5	9.5	0
18 FT	10	12	10	8	5	8.5	5	6.5	42.0	30.0	30.0	5	15	34.0	5	15	23.5	5	8.5	5	6	44.3	116	128	5	6	35.0	5	12	5	8.5	0
20 FT	11	13	10	8	5	8.5	5	6	42.4	31.0	31.0	5	14	33.5	5	14	22.5	5	8.5	5	6	44.6	117	129	6	8	38.0	5	12	5	8	0
22 FT	11	13	10	8	5	7.5	5	6	42.1	31.0	31.0	5	14	33.5	5	14	23.5	5	7.5	6	7	47.3	117	129	6	7.5	38.0	5	12	5	8	0
24 FT	12	14	10	8	5	7.5	5	6	42.5	32.0	32.0	5	13	33.5	5	13	22.5	5	8	6	7.5	47.6	118	130	6	7.5	38.0	5	12	5	8	0
26 FT	13	15	10	8	5	7.5	6	7	45.8	33.0	37.0	5	12	33.0	5	12	21.5	5	8	6	7.5	47.9	119	131	6	7.5	38.0	5	12	5	8	0
28 FT	13	16	11	8	5	7	5	6	42.9	33.0	33.0	5	12	32.5	5	12	22.0	5	8	5	6.5	45.3	120	132	6	7.5	38.0	5	12	5	7.5	0
30 FT	14	16	11	8	5	7	6	7.5	46.1	34.0	34.0	5	12	32.0	5	12	21.0	5	7.5	5	6	45.0	120	132	6	7	38.0	5	12	5	7.5	0
32 FT	14	17	12	8	5	7	5	6	43.4	34.0	34.0	5	12	32.0	5	12	21.5	5	7.5	5	6.5	45.4	121	133	6	7	38.0	5	12	5	7	0
34 FT	15	17	12	8	5	6.5	6	8.5	52.6	35.0	35.0	6	16	40.5	6	16	29.5	5	6.5	5	6.5	45.1	121	133	6	7	38.0	5	12	5	7	0
36 FT	15	18	13	8	5	6	6	8.5	52.9	35.0	35.0	6	16	40.0	6	16	29.5	5	7	5	6	45.5	122	134	6	7	38.0	5	12	5	6.5	0
38 FT	16	19	13	8	5	6.5	6	8	53.1	36.0	36.0	6	16	39.5	6	16	29.0	5	7	5	6	45.9	123	135	6	7	38.0	5	12	5	6.5	0
40 FT	17	19	13	8	5	6	6	7.5	53.4	37.0	37.0	5	12	35.0	5	12	25.0	5	6.5	5	6	45.8	123	135	6	6.5	38.0	5	12	5	6.5	0
42 FT	17	20	14	8	5	6	6	8	53.8	37.0	37.0	6	16	39.0	6	16	29.0	5	6.5	5	6	46.1	124	136	6	6.5	38.5	5	12	5	6	0
44 FT	17	20	14	8	6	8.5	6	7.5	53.6	37.0	37.0	6	15	39.0	6	15	29.0	5	6	5	6	46.1	124	136	6	6.5	38.5	5	12	5	6	0
46 FT	18	21	14	8	6	8	6	7	53.9	38.0	38.0	6	17	38.5	6	17	29.0	5	6.5	5	6	46.5	125	137	6	6.5	38.0	5	12	5	6	0
48 FT	18	22	15	8	6	8	6	7.5	54.3	38.0	42.0	6	16	38.5	6	16	29.0	5	6.5	6	8	49.9	126	138	6	6.5	38.5	5	12	5	6	0
50 FT	18	22	15	8	6	7.5	6	7.5	54.3	38.0	42.0	6	15	38.5	6	15	29.0	5	6	6	8	49.9	126	138	6	6	38.5	5	12	6	8	0

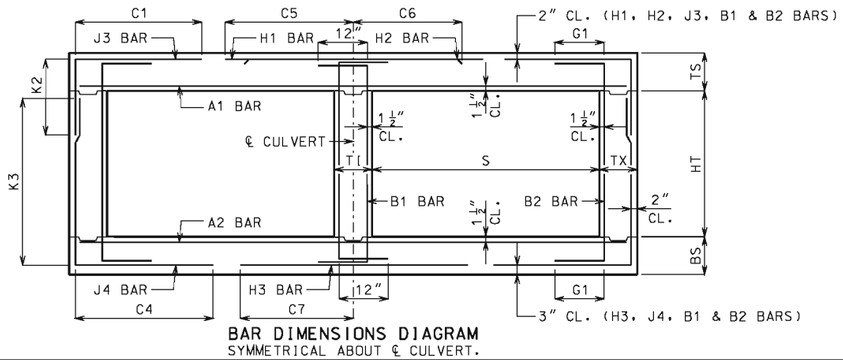

BAR DIMENSIONS DIAGRAM
SYMMETRICAL ABOUT ℄ CULVERT.

IF A SEAL IS PRESENT ON THIS SHEET IT HAS BEEN ELECTRONICALLY SEALED AND DATED.

GENERAL NOTES:

IF DESIGN FILL IS BETWEEN TABULATED DESIGN FILLS, USE THE NEXT GREATER TABULATED DESIGN FILL, EXCEPT FOR DESIGN FILLS BETWEEN 2 FEET AND 4 FEET. FOR DESIGN FILLS BETWEEN 2 FEET AND 4 FEET USE THE GREATER MEMBER THICKNESS, AREA OF REINFORCEMENT AND BAR DIMENSIONS FROM THE 2 FEET AND 4 FEET TABULATED DESIGN FILLS. AREA OF REINFORCEMENT EQUALS BAR AREA PER FOOT SPACING.

SPECIAL DESIGNS ARE REQUIRED WHEN THE DESIGN FILL IS LESS THAN 1 FOOT OR GREATER THAN 50 FEET.

DIMENSIONS ARE IN INCHES UNLESS OTHERWISE SPECIFIED.

DESIGN FILLS ARE MEASURED FROM THE TOP OF TOP SLAB TO THE TOP OF EARTH FILL OR ROADWAY.

CULVERTS MEET STRENGTH AND SERVICEABILITY REQUIREMENTS FOR THE DESIGN VEHICULAR LIVE LOAD HL-93 MINUS THE LANE LOAD.

MISSOURI HIGHWAYS AND TRANSPORTATION COMMISSION
105 WEST CAPITOL
JEFFERSON CITY, MO 65102
1-888-ASK-MODOT (1-888-275-6636)

STATE OF MISSOURI
DENNIS W. HECKMAN
NUMBER PE-27141
PROFESSIONAL ENGINEER
THIS SHEET HAS BEEN SIGNED, SEALED AND DATED ELECTRONICALLY.

CONCRETE DOUBLE BOX CULVERT

MEMBER THICKNESS BAR SIZE, SPACING & DIMENSIONS

SPAN (S): 7 FEET
HEIGHT (HT): 9 THRU 10 FEET

DATE EFFECTIVE: 10/01/2011
DATE PREPARED: 9/8/2011

703.47

SHEET NO. 9 OF 27

SPAN (S) = 8 FT HEIGHT (HT) = 4 FT OR 5 FT OR 6 FT

DESIGN FILL	MEMBER THICKNESS				TOP SLAB BARS												BOTTOM SLAB BARS													WALL BARS				
					A1 BARS		J3 BARS						H1 BARS			H2 BARS			A2 BARS		J4 BARS					H3 BARS				B1 BARS		B2 BARS		
	TS	BS	TX	TI	SIZE	SPA.	SIZE	SPA.	C1	K2			SIZE	SPA.	C5	SIZE	SPA.	C6	SIZE	SPA.	SIZE	SPA.	C4	K3			SIZE	SPA.	C7	SIZE	SPA.	SIZE	SPA.	G1
										HT=4′	HT=5′	HT=6′											HT=4′	HT=5′	HT=6′								
1 FT	12	9	8	8	5	7	4	8.5	41.8	28.0	28.0	28.0	4	12	81.5	4	12	26.5	4	7	4	8	43.0	53	65	77	5	6.5	41.0	5	12	5	12	12
2 FT	13	9	8	8	5	7.5	4	7.5	41.8	29.0	29.0	29.0	4	13	81.5	4	13	26.5	4	6.5	4	7	39.1	53	65	77	5	6	40.5	5	12	5	12	12
4 FT	8	8	8	8	4	6	5	6.5	36.4	24.0	24.0	24.0	5	15	51.0	5	15	26.5	4	6	4	6	35.3	52	64	76	6	6.5	42.5	5	9.5	5	12	12
6 FT	8	9	8	8	4	6	5	6.5	34.3	24.0	24.0	24.0	5	15	42.5	5	15	26.0	4	6	4	7.5	33.1	53	65	77	6	7	42.0	5	12	5	12	12
8 FT	8	9	8	8	4	6	5	6	33.1	24.0	24.0	24.0	5	13	40.5	5	13	25.5	5	8.5	4	7	31.6	53	65	77	6	6.5	41.5	5	12	5	12	0
10 FT	9	10	8	8	5	8.5	4	6	31.9	25.0	25.0	25.0	5	14	39.5	5	14	25.5	5	8	4	8	30.4	54	66	78	6	7	41.5	5	12	5	12	0
12 FT	10	11	8	8	5	8	4	6	30.6	26.0	26.0	26.0	5	14	39.0	5	14	25.0	5	8	4	8	29.3	55	67	79	6	7	41.5	5	12	5	12	0
14 FT	11	12	8	8	5	8	4	6	29.8	27.0	27.0	27.0	5	14	38.5	5	14	25.0	5	7.5	4	7.5	28.6	56	68	80	6	7	41.5	5	12	5	12	0
16 FT	11	13	8	8	5	7.5	5	8.5	29.6	27.0	27.0	27.0	5	12	38.5	5	12	25.0	5	7.5	4	8	28.0	57	69	81	6	7	41.5	5	12	5	12	0
18 FT	12	13	8	8	5	7.5	4	6	27.5	28.0	28.0	28.0	5	13	37.5	5	13	25.0	5	7	4	7.5	26.8	57	69	81	6	7	41.0	5	12	5	12	0
20 FT	12	14	8	8	5	7	5	8.5	27.8	28.0	28.0	28.0	5	12	37.5	5	12	25.0	5	7	4	7.5	26.4	58	70	82	6	7	41.5	5	12	5	12	0
22 FT	13	15	8	8	5	6.5	6	8.5	27.4	29.0	29.0	29.0	5	12	37.5	5	12	25.0	5	7	4	7	26.4	59	71	83	6	7	41.5	5	12	5	12	0
24 FT	14	16	8	8	5	6.5	5	8.5	27.3	30.0	30.0	30.0	5	12	37.5	5	12	24.5	5	7	4	6.5	26.5	60	72	84	6	7	41.5	5	12	5	12	0
26 FT	15	16	8	8	5	6.5	5	8	31.9	31.0	31.0	31.0	6	16	46.5	6	16	33.0	5	6.5	4	6.5	26.6	60	72	84	6	7	41.0	5	12	5	12	0
28 FT	16	17	8	8	5	6	5	7	31.8	32.0	32.0	32.0	6	15	46.0	6	15	32.0	5	6.5	4	6	26.8	61	73	85	6	6.5	41.0	5	12	5	12	0
30 FT	16	18	8	8	5	6	5	7	32.0	32.0	32.0	36.0	6	15	46.0	6	15	33.0	5	6.5	5	6.5	26.6	62	74	86	6	6.5	41.0	5	12	5	12	0
32 FT	17	19	8	8	5	6	5	6.5	31.9	37.0	37.0	37.0	6	14	45.5	6	14	32.0	5	6.5	5	6.5	26.8	63	75	87	6	6.5	41.0	5	12	5	12	0
34 FT	18	19	8	8	6	8.5	5	6.5	31.8	38.0	38.0	38.0	6	13	45.5	6	13	31.0	5	6	5	6.5	26.9	63	75	87	6	6	41.0	5	12	5	11	0
36 FT	18	20	8	8	6	8	5	6.5	31.9	38.0	38.0	38.0	6	13	45.5	6	13	32.0	5	6	5	6	26.9	64	76	88	6	6	41.0	5	12	5	10	0
38 FT	19	21	8	8	6	8	5	6	32.0	39.0	39.0	39.0	6	13	45.0	6	13	31.0	5	6	6	7.5	30.1	65	77	89	6	6	41.0	5	12	5	9.5	0
40 FT	20	22	8	8	6	7.5	6	7.5	36.0	44.0	44.0	44.0	6	13	44.5	6	13	30.5	5	6	6	7	30.4	66	78	90	6	6	41.0	5	12	5	9.5	0
42 FT	20	22	8	8	6	7.5	6	7.5	36.0	44.0	44.0	44.0	6	12	44.5	6	12	30.5	6	8.5	6	7	30.3	66	78	90	6	6	41.0	5	12	5	9.5	0
44 FT	21	23	8	8	6	7.5	6	7	36.0	45.0	45.0	45.0	6	12	43.5	6	12	30.0	6	8.5	6	6.5	30.5	67	79	91	6	6	41.0	5	12	5	9.5	0
46 FT	21	23	8	8	6	7	6	7	36.0	45.0	45.0	45.0	6	12	43.5	6	12	30.0	6	8	6	6.5	30.5	67	79	91	7	7.5	44.0	5	12	5	9.5	0
48 FT	22	24	8	8	6	7	6	6.5	36.1	46.0	46.0	46.0	6	12	43.0	6	12	30.0	6	8	6	6	30.8	68	80	92	7	7.5	44.0	5	12	5	9	0
50 FT	22	24	8	8	6	6.5	6	6.5	36.1	46.0	46.0	46.0	6	12	43.0	6	12	30.0	6	7.5	6	6	30.8	68	80	92	7	7.5	44.0	5	12	5	8.5	0

SPAN (S) = 8 FT HEIGHT (HT) = 7 FT OR 8 FT OR 9 FT

DESIGN FILL	MEMBER THICKNESS				TOP SLAB BARS												BOTTOM SLAB BARS													WALL BARS				
					A1 BARS		J3 BARS						H1 BARS			H2 BARS			A2 BARS		J4 BARS					H3 BARS				B1 BARS		B2 BARS		
	TS	BS	TX	TI	SIZE	SPA.	SIZE	SPA.	C1	K2			SIZE	SPA.	C5	SIZE	SPA.	C6	SIZE	SPA.	SIZE	SPA.	C4	K3			SIZE	SPA.	C7	SIZE	SPA.	SIZE	SPA.	G1
										HT=7′	HT=8′	HT=9′											HT=7′	HT=8′	HT=9′								
1 FT	12	9	8	8	5	7	4	6.5	41.8	28.0	28.0	28.0	4	12	81.5	4	12	27.5	4	6	5	6.5	61.6	89	101	113	5	6	41.0	5	12	5	12	12
2 FT	13	10	8	8	5	7	4	6.5	41.8	29.0	29.0	29.0	4	13	81.5	4	13	27.0	4	6.5	4	6	58.3	90	102	114	5	6.5	40.5	5	12	5	12	12
4 FT	8	9	8	8	4	6	6	7.5	43.8	24.0	24.0	28.0	5	15	83.5	5	15	27.0	4	6	5	6	52.3	89	101	113	5	6	40.0	5	11	5	12	12
6 FT	8	10	8	8	4	6	6	7.5	51.4	24.0	24.0	28.0	5	15	43.0	5	15	26.0	4	6.5	5	6	49.0	90	102	114	5	6.5	39.5	5	12	5	12	12
8 FT	8	11	8	8	4	6	6	7.5	46.6	24.0	24.0	28.0	5	13	40.5	5	13	25.5	4	6.5	5	6.5	46.3	91	103	115	5	6	39.0	5	12	5	12	0
10 FT	9	11	8	8	5	8.5	6	7	45.3	25.0	25.0	29.0	5	14	39.5	5	14	25.5	5	8.5	5	6	43.6	91	103	115	5	6	38.5	5	12	5	11	0
12 FT	10	12	8	8	5	8	6	7	44.4	26.0	30.0	30.0	5	14	39.0	5	14	25.0	5	8.5	5	6	42.5	92	104	116	5	6	38.5	5	12	5	10	0
14 FT	11	12	8	8	5	8	6	7	43.5	27.0	31.0	35.0	5	12	38.5	5	12	25.0	5	7.5	6	7	44.4	92	104	116	6	7	41.5	5	12	5	9.5	0
16 FT	11	13	8	8	5	7.5	6	6.5	42.9	27.0	31.0	35.0	5	12	38.0	5	12	25.0	5	7.5	6	7	44.0	93	105	117	6	7.5	41.5	5	12	5	9.5	0
18 FT	12	13	8	8	5	7.5	5	6	37.1	28.0	32.0	32.0	5	13	37.5	5	13	25.0	5	7	6	7.5	41.1	93	105	117	6	7	41.0	5	12	5	9.5	0
20 FT	12	14	8	8	5	7	6	7	39.9	32.0	32.0	36.0	5	12	37.5	5	12	25.0	5	7	6	7.5	41.1	94	106	118	6	7	41.0	5	12	5	9.5	0
22 FT	13	15	8	8	5	6.5	6	7	39.9	33.0	33.0	37.0	5	12	37.0	5	12	25.0	5	7	6	7.5	41.3	95	107	119	6	7	41.0	5	12	5	9.5	0
24 FT	14	16	8	8	5	6.5	6	7	40.0	34.0	34.0	38.0	5	12	37.0	5	12	24.0	5	7	6	7	41.4	96	108	120	6	7	41.0	5	12	5	9	0
26 FT	15	16	9	8	5	6.5	5	6	42.4	35.0	35.0	35.0	6	16	45.5	6	16	32.0	5	6.5	5	6	38.5	96	108	120	6	7	41.0	5	12	5	8.5	0
28 FT	15	17	10	8	5	6	5	6.5	42.9	31.0	35.0	35.0	6	16	45.5	6	16	33.0	5	6.5	5	7.5	38.8	97	109	121	6	6.5	41.5	5	12	5	8	0
30 FT	16	18	11	8	5	6	5	6.5	43.6	32.0	36.0	36.0	6	15	44.5	6	15	31.5	5	6.5	5	7	39.1	98	110	122	6	6.5	41.5	5	12	5	8.5	0
32 FT	17	19	11	8	5	6	5	6.5	43.6	33.0	37.0	37.0	6	14	44.0	6	14	31.0	5	6.5	5	7	39.4	99	111	123	6	6	41.5	5	12	5	7.5	0
34 FT	17	20	11	8	6	8	5	6	43.8	37.0	37.0	37.0	6	14	44.0	6	14	31.5	5	6.5	5	7	39.5	100	112	124	6	6	41.5	5	12	5	7.5	0
36 FT	18	20	12	8	6	8	5	6.5	44.3	38.0	38.0	38.0	6	13	43.5	6	13	30.5	5	6	5	6.5	39.6	100	112	124	6	6	41.5	5	12	5	7.5	0
38 FT	18	21	12	8	6	7.5	5	6	44.4	38.0	38.0	38.0	6	13	43.5	6	13	31.0	5	6	5	6.5	39.9	101	113	125	6	6	41.5	5	12	5	7	0
40 FT	19	22	12	8	6	7.5	6	8.5	48.4	39.0	39.0	39.0	6	13	42.5	6	13	30.0	5	6	5	6.5	40.1	102	114	126	6	6	41.5	5	12	5	7	0
42 FT	19	22	13	8	6	7	5	6	45.0	39.0	39.0	39.0	6	13	42.5	6	13	30.5	6	8	5	6.5	40.3	102	114	126	7	7.5	44.5	5	12	5	7	0
44 FT	20	23	13	8	6	7	6	8.5	49.1	40.0	40.0	40.0	6	13	42.0	6	13	30.0	6	8	5	6	40.5	103	115	127	7	7.5	44.5	5	12	5	7	0
46 FT	20	24	13	8	6	6.5	6	8	49.3	40.0	40.0	40.0	6	12	42.0	6	12	30.0	6	8	5	6	40.6	104	116	128	7	7.5	44.5	5	12	5	6.5	0
48 FT	21	24	13	8	6	7	6	7.5	49.1	41.0	41.0	41.0	6	13	41.5	6	13	29.5	6	8	5	6	40.8	104	116	128	7	7.5	44.5	5	12	5	6.5	0
50 FT	21	25	14	8	6	6.5	6	8	49.9	41.0	41.0	41.0	6	13	41.5	6	13	29.5	6	8	5	6.5	41.1	105	117	129	7	7.5	44.5	5	12	5	6.5	0

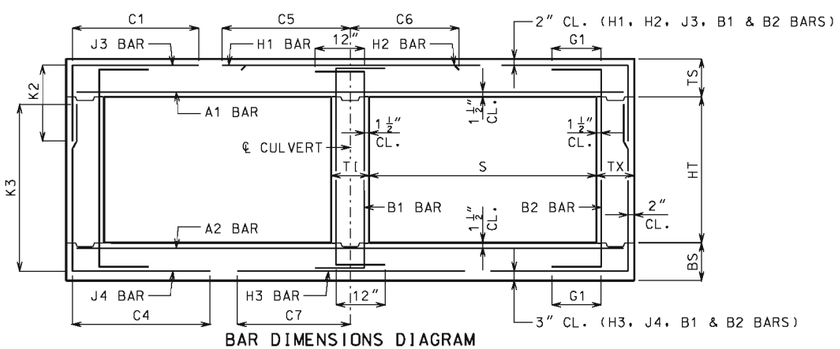

BAR DIMENSIONS DIAGRAM
SYMMETRICAL ABOUT ℄ CULVERT.

GENERAL NOTES:

IF DESIGN FILL IS BETWEEN TABULATED DESIGN FILLS, USE THE NEXT GREATER TABULATED DESIGN FILL, EXCEPT FOR DESIGN FILLS BETWEEN 2 FEET AND 4 FEET. FOR DESIGN FILLS BETWEEN 2 FEET AND 4 FEET USE THE GREATER MEMBER THICKNESS, AREA OF REINFORCEMENT AND BAR DIMENSIONS FROM THE 2 FEET AND 4 FEET TABULATED DESIGN FILLS. AREA OF REINFORCEMENT EQUALS BAR AREA PER FOOT SPACING.

SPECIAL DESIGNS ARE REQUIRED WHEN THE DESIGN FILL IS LESS THAN 1 FOOT OR GREATER THAN 50 FEET.

DIMENSIONS ARE IN INCHES UNLESS OTHERWISE SPECIFIED.

DESIGN FILLS ARE MEASURED FROM THE TOP OF TOP SLAB TO THE TOP OF EARTH FILL OR ROADWAY.

CULVERTS MEET STRENGTH AND SERVICEABILITY REQUIREMENTS FOR THE DESIGN VEHICULAR LIVE LOAD HL-93 MINUS THE LANE LOAD.

MISSOURI HIGHWAYS AND TRANSPORTATION COMMISSION
105 WEST CAPITOL
JEFFERSON CITY, MO 65102
1-888-ASK-MODOT (1-888-275-6636)

STATE OF MISSOURI
DENNIS W. HECKMAN
NUMBER PE-27141
PROFESSIONAL ENGINEER
THIS SHEET HAS BEEN SIGNED, SEALED AND DATED ELECTRONICALLY.

CONCRETE DOUBLE BOX CULVERT

MEMBER THICKNESS
BAR SIZE, SPACING & DIMENSIONS

SPAN (S): 8 FEET
HEIGHT (HT): 4 THRU 9 FEET

DATE EFFECTIVE: 10/01/2011
DATE PREPARED: 9/8/2011

703.47

SHEET NO.
10 OF 27

IF A SEAL IS PRESENT ON THIS SHEET IT HAS BEEN ELECTRONICALLY SEALED AND DATED.

SPAN (S) = 8 FT HEIGHT (HT) = 10 FT OR 11 FT

DESIGN FILL	MEMBER THICKNESS				TOP SLAB BARS												BOTTOM SLAB BARS										WALL BARS				
					A1 BARS		J3 BARS					H1 BARS			H2 BARS			A2 BARS		J4 BARS					H3 BARS			B1 BARS		B2 BARS		
										K2											K3									
	TS	BS	TX	TI	SIZE	SPA.	SIZE	SPA.	C1	HT=10'	HT=11'	SIZE	SPA.	C5	SIZE	SPA.	C6	SIZE	SPA.	SIZE	SPA.	C4	HT=10'	HT=11'	SIZE	SPA.	C7	SIZE	SPA.	SIZE	SPA.	G1
1 FT	12	9	8	9	5	7	5	7.5	41.9	32.0	32.0	4	12	81.5	4	12	27.5	5	9	6	6	73.9	125	137	5	6	41.5	5	12	5	10.5	12
2 FT	13	10	9	9	5	7	5	8	42.5	29.0	33.0	4	13	82.0	4	13	27.0	4	6	5	6	66.8	126	138	5	6.5	41.0	5	12	5	11	12
4 FT	8	11	9	9	4	6	6	7	44.5	24.0	28.0	5	16	84.0	5	16	27.0	4	7	5	6	66.0	127	139	5	7.5	41.0	5	10.5	5	9.5	12
6 FT	8	11	9	9	4	6	6	7	61.5	28.0	32.0	5	15	43.0	5	15	26.0	4	6.5	6	7	64.5	127	139	5	7	40.0	5	11.5	5	9	12
8 FT	8	11	9	9	4	6	6	7	55.6	28.0	32.0	5	14	40.5	5	14	25.5	4	6	6	6.5	60.4	127	139	5	6	39.5	5	11.5	5	8.5	0
10 FT	9	11	9	9	5	8.5	6	7.5	54.9	29.0	33.0	5	14	39.5	5	14	25.5	5	8.5	6	6	57.5	127	139	5	6	39.0	5	12	5	8.5	0
12 FT	10	11	9	9	5	8	5	6	51.1	30.0	30.0	5	14	39.0	5	14	25.5	5	7.5	6	6	55.3	127	139	6	7	41.5	5	12	5	8.5	0
14 FT	10	12	9	9	5	8	6	6.5	52.0	30.0	34.0	5	13	38.5	5	13	25.5	5	7.5	6	6	54.8	128	140	6	7	41.5	5	12	5	8.5	0
16 FT	11	13	10	9	5	7.5	5	6	48.6	31.0	31.0	5	13	38.0	5	13	25.5	5	7.5	6	6.5	54.1	129	141	6	7.5	41.5	5	12	5	8	0
18 FT	11	13	10	9	5	7.5	5	6	45.1	31.0	31.0	5	12	37.0	5	12	25.0	5	7	6	6.5	50.4	129	141	6	7	41.5	5	12	5	8	0
20 FT	12	14	10	9	5	7	6	7.5	48.4	32.0	36.0	5	13	37.0	5	13	25.0	5	7	6	6.5	50.5	130	142	6	7.5	41.5	5	12	5	8	0
22 FT	13	15	10	9	5	7	6	7	48.5	33.0	37.0	5	12	37.0	5	12	24.5	5	7	6	6.5	50.6	131	143	6	7	41.5	5	12	5	8	0
24 FT	13	16	11	9	5	6.5	6	8	48.5	33.0	33.0	5	12	36.5	5	12	25.0	5	7	5	6	47.8	132	144	6	7	41.5	5	12	5	7.5	0
26 FT	14	16	12	9	5	6.5	5	6	46.0	34.0	34.0	5	12	36.0	5	12	24.5	5	6	5	6	47.5	132	144	6	7	41.5	5	12	5	7	0
28 FT	15	17	12	9	5	6.5	6	8	55.3	35.0	35.0	6	16	44.5	6	16	32.5	5	6.5	5	6	47.8	133	145	6	6.5	41.5	5	12	5	7	0
30 FT	16	18	13	9	5	6.5	6	8	55.8	36.0	36.0	6	15	44.0	6	15	31.5	5	6.5	5	6	48.0	134	146	6	6.5	41.5	5	12	5	6.5	0
32 FT	16	19	13	9	5	6	6	7.5	55.8	36.0	36.0	6	15	44.0	6	15	32.0	5	6.5	5	6	48.3	135	147	6	6	41.5	5	12	5	6.5	0
34 FT	17	20	13	9	5	6	6	7	56.0	37.0	37.0	6	14	43.5	6	14	31.0	5	6.5	5	6	48.5	136	148	6	6.5	41.5	5	12	5	6.5	0
36 FT	17	20	14	9	6	8	6	7.5	56.1	37.0	37.0	6	14	43.0	6	14	31.5	5	6	5	6	48.6	136	148	6	6	41.5	5	12	5	6	0
38 FT	18	21	14	9	6	8	6	7	56.4	38.0	38.0	6	13	42.5	6	13	30.5	5	6	5	6	48.9	137	149	6	6	41.5	5	12	5	6	0
40 FT	18	22	15	9	6	7	6	7.5	56.8	38.0	42.0	6	13	42.5	6	13	30.5	5	6	6	8	52.3	138	150	6	6	41.5	5	12	6	8	0
42 FT	19	22	15	9	6	7.5	6	7	57.0	39.0	43.0	6	14	42.0	6	14	30.0	6	8.5	6	8	52.3	138	150	7	7.5	44.5	5	12	6	8	0
44 FT	19	23	15	9	6	6.5	6	6.5	56.9	39.0	43.0	6	13	42.0	6	13	30.0	6	8.5	6	8	52.5	139	151	7	8	44.5	5	12	6	8	0
46 FT	20	24	16	9	6	7	6	7	57.6	40.0	44.0	6	14	41.5	6	14	30.0	6	8	6	7.5	52.9	140	152	7	8	44.5	5	12	6	8	0
48 FT	20	24	16	9	6	6.5	6	6.5	57.5	40.0	44.0	6	13	41.5	6	13	30.0	6	8	6	7.5	52.9	140	152	7	7.5	44.5	5	12	6	8	0
50 FT	21	25	16	9	6	6.5	6	6	57.8	41.0	45.0	6	14	41.0	6	14	30.0	6	8	6	7.5	53.1	141	153	7	7.5	44.5	5	12	6	8	0

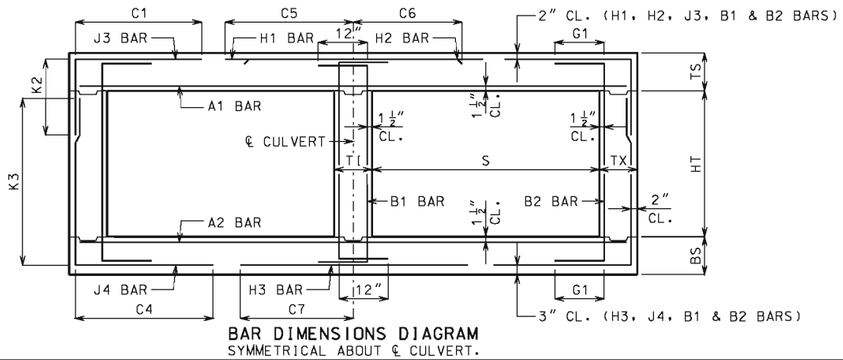

BAR DIMENSIONS DIAGRAM
SYMMETRICAL ABOUT ℄ CULVERT.

GENERAL NOTES:

IF DESIGN FILL IS BETWEEN TABULATED DESIGN FILLS, USE THE NEXT GREATER TABULATED DESIGN FILL, EXCEPT FOR DESIGN FILLS BETWEEN 2 FEET AND 4 FEET. FOR DESIGN FILLS BETWEEN 2 FEET AND 4 FEET USE THE GREATER MEMBER THICKNESS, AREA OF REINFORCEMENT AND BAR DIMENSIONS FROM THE 2 FEET AND 4 FEET TABULATED DESIGN FILLS. AREA OF REINFORCEMENT EQUALS BAR AREA PER FOOT SPACING.

SPECIAL DESIGNS ARE REQUIRED WHEN THE DESIGN FILL IS LESS THAN 1 FOOT OR GREATER THAN 50 FEET.

DIMENSIONS ARE IN INCHES UNLESS OTHERWISE SPECIFIED.

DESIGN FILLS ARE MEASURED FROM THE TOP OF TOP SLAB TO THE TOP OF EARTH FILL OR ROADWAY.

CULVERTS MEET STRENGTH AND SERVICEABILITY REQUIREMENTS FOR THE DESIGN VEHICULAR LIVE LOAD HL-93 MINUS THE LANE LOAD.

MISSOURI HIGHWAYS AND TRANSPORTATION COMMISSION
105 WEST CAPITOL
JEFFERSON CITY, MO 65102
1-888-ASK-MODOT (1-888-275-6636)

STATE OF MISSOURI
DENNIS W. HECKMAN
NUMBER PE-27141
PROFESSIONAL ENGINEER
THIS SHEET HAS BEEN SIGNED, SEALED AND DATED ELECTRONICALLY.

CONCRETE DOUBLE BOX CULVERT

MEMBER THICKNESS BAR SIZE, SPACING & DIMENSIONS

SPAN (S): 8 FEET
HEIGHT (HT): 10 THRU 11 FEET

DATE EFFECTIVE: 10/01/2011
DATE PREPARED: 9/8/2011

703.47

SHEET NO. 11 OF 27

IF A SEAL IS PRESENT ON THIS SHEET IT HAS BEEN ELECTRONICALLY SEALED AND DATED.

SPAN (S) = 9 FT HEIGHT (HT) = 5 FT OR 6 FT OR 7 FT

DESIGN FILL	MEMBER THICKNESS				TOP SLAB BARS												BOTTOM SLAB BARS												WALL BARS				
					A1 BARS		J3 BARS						H1 BARS			H2 BARS			A2 BARS		J4 BARS					H3 BARS			B1 BARS		B2 BARS		
	TS	BS	TX	TI	SIZE	SPA.	SIZE	SPA.	C1	K2 HT=5′	K2 HT=6′	K2 HT=7′	SIZE	SPA.	C5	SIZE	SPA.	C6	SIZE	SPA.	SIZE	SPA.	C4	K3 HT=5′	K3 HT=6′	K3 HT=7′	SIZE	SPA.	C7	SIZE	SPA.	SIZE	SPA.	G1
1 FT	13	9	8	8	5	6.5	4	7.5	45.3	29.0	29.0	29.0	5	17	89.5	5	17	28.5	4	6	4	6	47.3	65	77	89	5	6	44.0	5	12	5	12	12
2 FT	13	10	8	8	5	6.5	4	7.5	45.3	29.0	29.0	29.0	5	16	89.5	5	16	27.5	4	6	4	7.5	44.5	66	78	90	5	6.5	44.0	5	12	5	12	12
4 FT	9	9	8	8	5	8.5	5	6.5	42.1	25.0	25.0	25.0	5	15	59.0	5	15	28.5	5	8	4	6	39.5	65	77	89	6	6.5	46.0	5	11	5	12	12
6 FT	9	9	8	8	5	8.5	5	6.5	36.9	25.0	25.0	29.0	5	14	47.0	5	14	27.5	5	7.5	5	7	36.5	65	77	89	6	6	45.0	5	12	5	12	12
8 FT	9	10	8	8	5	8.5	5	6.5	35.6	25.0	25.0	25.0	5	12	44.0	5	12	27.0	5	7.5	4	6.5	34.6	66	78	90	6	6.5	45.0	5	12	5	12	0
10 FT	10	11	8	8	5	8	5	7.5	34.3	26.0	26.0	26.0	5	12	43.0	5	12	26.5	5	7.5	4	6.5	33.3	67	79	91	6	6.5	44.5	5	12	5	12	0
12 FT	11	12	8	8	5	7.5	5	8.5	33.0	27.0	27.0	27.0	5	12	42.5	5	12	26.5	5	7	4	6	32.1	68	80	92	6	6.5	44.5	5	12	5	12	0
14 FT	12	13	8	8	5	7	5	8.5	32.1	28.0	28.0	28.0	5	12	42.0	5	12	26.5	5	6.5	4	6	31.5	69	81	93	6	6.5	44.5	5	12	5	12	0
16 FT	13	14	8	8	5	6.5	5	8.5	31.5	29.0	29.0	33.0	6	16	44.5	6	16	29.5	5	6.5	5	8.5	31.0	70	82	94	6	6.5	44.5	5	12	5	12	0
18 FT	13	15	8	8	5	6.5	5	8	31.3	29.0	29.0	33.0	6	15	44.5	6	15	29.5	5	6.5	5	8.5	30.5	71	83	95	6	6.5	44.5	5	12	5	12	0
20 FT	14	15	8	8	5	6	5	8.5	29.3	30.0	30.0	34.0	6	16	43.5	6	16	29.0	5	6	5	8.5	29.1	71	83	95	6	6.5	44.5	5	12	5	12	0
22 FT	15	16	8	8	5	6	5	8	34.1	31.0	31.0	35.0	6	15	49.5	6	15	35.0	5	6	5	8	29.1	72	84	96	6	6.5	44.5	5	12	5	12	0
24 FT	15	17	8	8	6	7.5	5	8	34.3	31.0	31.0	35.0	6	14	49.5	6	14	35.0	5	6	5	7	28.9	73	85	97	6	6.5	44.5	5	12	5	12	0
26 FT	16	18	8	8	6	8	5	7	34.1	32.0	36.0	36.0	6	14	49.0	6	14	35.0	5	6	5	6.5	29.0	74	86	98	6	6.5	44.5	5	12	5	11	0
28 FT	17	19	8	8	6	7.5	5	6.5	34.0	37.0	37.0	37.0	6	14	49.0	6	14	35.0	5	6	5	6.5	29.1	75	87	99	6	6	44.5	5	12	5	10	0
30 FT	18	20	8	8	6	7.5	5	6.5	34.0	38.0	38.0	38.0	6	13	48.5	6	13	34.0	6	8.5	5	6	29.3	76	88	100	6	6	44.5	5	12	5	9.5	0
32 FT	19	21	8	8	6	7.5	5	6	34.1	39.0	39.0	39.0	6	13	48.0	6	13	33.0	6	8.5	6	7.5	32.5	77	89	101	7	7.5	47.0	5	12	5	9.5	0
34 FT	20	21	8	8	6	7.5	6	7.5	38.0	44.0	44.0	44.0	6	12	47.5	6	12	32.5	6	7.5	6	7.5	32.6	77	89	101	7	7.5	47.0	5	12	5	9.5	0
36 FT	20	22	8	8	6	7	6	7.5	38.0	44.0	44.0	44.0	6	12	47.5	6	12	33.0	6	8	6	7	32.6	78	90	102	7	7.5	47.0	5	12	5	9.5	0
38 FT	21	23	8	8	6	7	6	7	38.1	45.0	45.0	45.0	6	12	47.0	6	12	32.0	6	7.5	6	6.5	32.8	79	91	103	7	7	47.0	5	12	5	9	0
40 FT	22	24	8	8	6	6.5	6	6.5	38.3	46.0	46.0	46.0	7	15	51.5	7	15	36.0	6	7.5	6	6	33.0	80	92	104	7	7	47.0	5	12	5	8	0
42 FT	22	24	8	8	6	6.5	6	6	38.1	46.0	46.0	46.0	7	15	51.5	7	15	36.5	6	7.5	6	6	33.0	80	92	104	7	7	47.0	5	12	5	7.5	0
44 FT	23	25	9	8	6	6.5	6	7	39.0	47.0	47.0	47.0	7	15	50.5	7	15	36.0	6	7.5	6	7	33.5	81	93	105	7	7	47.0	5	12	5	8.5	0
46 FT	24	26	9	8	6	6	6	7	39.0	48.0	48.0	48.0	7	15	49.5	7	15	35.5	6	7.5	6	6.5	33.8	82	94	106	7	7	47.0	5	12	5	8	0
48 FT	24	26	9	8	6	6	6	7	39.0	48.0	48.0	48.0	7	15	49.5	7	15	35.5	6	6.5	6	6.5	33.8	82	94	106	7	6.5	47.0	5	12	5	8	0
50 FT	25	27	9	8	6	6	6	6.5	39.0	49.0	49.0	49.0	7	15	49.0	7	15	35.5	6	7	6	6.5	34.0	83	95	107	7	6.5	47.0	5	12	5	7.5	0

SPAN (S) = 9 FT HEIGHT (HT) = 8 FT OR 9 FT OR 10 FT

DESIGN FILL	MEMBER THICKNESS				TOP SLAB BARS												BOTTOM SLAB BARS												WALL BARS				
					A1 BARS		J3 BARS						H1 BARS			H2 BARS			A2 BARS		J4 BARS					H3 BARS			B1 BARS		B2 BARS		
	TS	BS	TX	TI	SIZE	SPA.	SIZE	SPA.	C1	K2 HT=8′	K2 HT=9′	K2 HT=10′	SIZE	SPA.	C5	SIZE	SPA.	C6	SIZE	SPA.	SIZE	SPA.	C4	K3 HT=8′	K3 HT=9′	K3 HT=10′	SIZE	SPA.	C7	SIZE	SPA.	SIZE	SPA.	G1
1 FT	13	10	8	8	5	6.5	5	8.5	47.3	29.0	29.0	33.0	5	18	91.5	5	18	29.0	4	6	5	6	69.0	102	114	126	5	6.5	44.5	5	12	5	12	12
2 FT	13	10	8	8	5	6.5	5	8.5	47.3	29.0	29.0	33.0	5	17	91.5	5	17	28.0	5	9	6	7	66.6	102	114	126	5	6	44.0	5	12	5	12	12
4 FT	9	9	8	8	5	8.5	6	7	47.3	29.0	33.0	33.0	5	15	91.5	5	15	29.0	5	7.5	6	6	59.4	101	113	125	6	6	46.0	5	12	5	10.5	12
6 FT	9	10	9	8	5	8.5	5	6	54.1	25.0	25.0	29.0	5	14	48.0	5	14	27.5	5	8	5	6	51.8	102	114	126	6	6.5	45.5	5	12	5	11.5	12
8 FT	9	11	9	8	5	8.5	5	6	48.0	25.0	29.0	29.0	5	13	44.0	5	13	27.0	5	8	5	6	49.3	103	115	127	6	7	45.0	5	12	5	11	0
10 FT	10	11	9	8	5	8	5	6	46.6	26.0	30.0	30.0	5	12	43.0	5	12	26.5	5	7	6	7	50.0	103	115	127	6	6.5	44.5	5	12	5	10	0
12 FT	11	12	9	8	5	7.5	6	7	48.4	31.0	31.0	35.0	5	12	42.0	5	12	26.5	5	7	6	7	49.0	104	116	128	6	6.5	44.5	5	12	5	9.5	0
14 FT	12	13	9	8	5	7	6	7.5	47.4	32.0	32.0	36.0	5	12	41.5	5	12	26.5	5	6.5	6	7	48.1	105	117	129	6	6.5	44.5	5	12	5	8.5	0
16 FT	12	14	9	8	5	7	6	6.5	46.4	32.0	32.0	36.0	6	15	44.5	6	15	29.5	5	6.5	6	7	47.5	106	118	130	6	6.5	44.5	5	12	5	8.5	0
18 FT	13	15	9	8	5	6.5	6	6.5	46.0	33.0	33.0	37.0	6	15	44.0	6	15	29.0	5	6.5	6	7.5	47.3	107	119	131	6	7	44.5	5	12	5	8.5	0
20 FT	14	15	9	8	5	6.5	5	6	40.1	34.0	34.0	34.0	6	16	43.0	6	16	29.0	5	6	6	7.5	44.4	107	119	131	6	6.5	44.5	5	12	5	8.5	0
22 FT	14	16	10	8	5	6	5	6	40.5	34.0	34.0	34.0	6	15	43.0	6	15	29.0	5	6	5	7	41.5	108	120	132	6	6.5	44.5	5	12	5	8	0
24 FT	15	17	10	8	6	8	6	8	49.5	35.0	35.0	35.0	6	15	48.5	6	15	35.0	5	6	5	6.5	41.6	109	121	133	6	6.5	44.5	5	12	5	8	0
26 FT	16	18	11	8	6	8	5	6	46.1	36.0	36.0	36.0	6	15	48.0	6	15	34.5	5	6	5	7	41.9	110	122	134	6	6.5	44.5	5	12	5	7.5	0
28 FT	17	19	11	8	6	8	6	8	50.1	37.0	37.0	37.0	6	14	47.5	6	14	33.5	5	6	5	7	42.0	111	123	135	6	6	44.5	5	12	5	7.5	0
30 FT	18	20	12	8	6	8	5	6	46.8	38.0	38.0	38.0	6	13	47.0	6	13	32.5	6	8.5	5	6.5	42.4	112	124	136	6	6	44.5	5	12	5	7.5	0
32 FT	18	21	12	8	6	7.5	6	8	50.8	38.0	38.0	38.0	6	13	47.0	6	13	33.5	6	8	5	6.5	42.5	113	125	137	7	7.5	47.5	5	12	5	7	0
34 FT	19	22	12	8	6	7	6	7.5	50.9	39.0	39.0	39.0	6	13	46.0	6	13	32.5	6	8	5	6.5	42.8	114	126	138	7	7.5	47.5	5	12	5	7	0
36 FT	20	23	13	8	6	7	6	8	51.5	40.0	40.0	40.0	6	12	45.0	6	12	31.5	6	8	5	6	43.1	115	127	139	7	7	47.5	5	12	5	6.5	0
38 FT	20	23	13	8	6	6.5	6	7.5	51.4	40.0	40.0	40.0	6	12	45.0	6	12	32.0	6	7.5	5	6	43.0	115	127	139	7	7	47.5	5	12	5	6.5	0
40 FT	21	24	13	8	6	6.5	6	7	51.5	41.0	41.0	41.0	6	12	44.5	6	12	31.0	6	7.5	5	6	43.3	116	128	140	7	7	47.5	5	12	5	6.5	0
42 FT	21	25	14	8	6	6	6	7.5	52.3	41.0	41.0	41.0	6	12	44.5	6	12	31.5	6	7.5	5	6	43.5	117	129	141	7	7	47.5	5	12	5	6	0
44 FT	22	25	14	8	6	6.5	6	7	52.1	42.0	42.0	42.0	7	16	49.0	7	16	35.5	6	6.5	5	6	43.6	117	129	141	7	6.5	47.5	5	12	5	6	0
46 FT	23	26	14	8	6	6	6	7	52.1	43.0	43.0	43.0	6	12	43.5	6	12	30.5	6	7	5	6	43.9	118	130	142	7	6.5	47.5	5	12	5	6	0
48 FT	23	27	15	8	6	6	6	7	53.0	43.0	43.0	47.0	6	12	43.5	6	12	30.0	6	7	6	8.5	47.1	119	131	143	7	6.5	47.5	5	12	5	6	0
50 FT	24	28	15	8	6	6	6	7	53.0	44.0	44.0	48.0	6	12	43.0	6	12	30.0	6	7	6	8	47.5	120	132	144	7	6.5	47.5	5	12	6	8	0

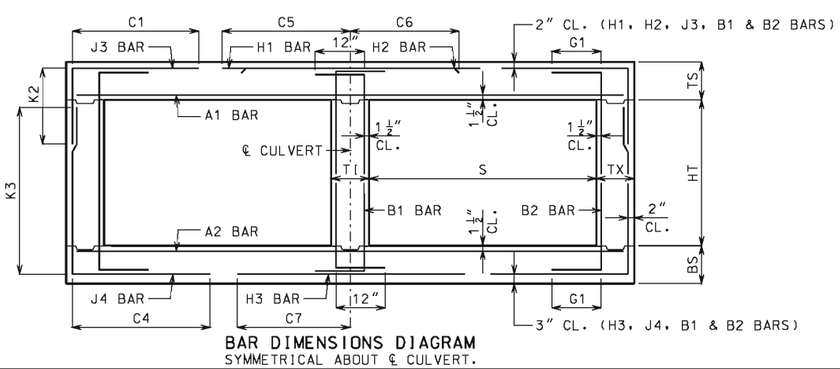

BAR DIMENSIONS DIAGRAM
SYMMETRICAL ABOUT ℄ CULVERT.

IF A SEAL IS PRESENT ON THIS SHEET IT HAS BEEN ELECTRONICALLY SEALED AND DATED.

GENERAL NOTES:

IF DESIGN FILL IS BETWEEN TABULATED DESIGN FILLS, USE THE NEXT GREATER TABULATED DESIGN FILL, EXCEPT FOR DESIGN FILLS BETWEEN 2 FEET AND 4 FEET. FOR DESIGN FILLS BETWEEN 2 FEET AND 4 FEET USE THE GREATER MEMBER THICKNESS, AREA OF REINFORCEMENT AND BAR DIMENSIONS FROM THE 2 FEET AND 4 FEET TABULATED DESIGN FILLS. AREA OF REINFORCEMENT EQUALS BAR AREA PER FOOT SPACING.

SPECIAL DESIGNS ARE REQUIRED WHEN THE DESIGN FILL IS LESS THAN 1 FOOT OR GREATER THAN 50 FEET.

DIMENSIONS ARE IN INCHES UNLESS OTHERWISE SPECIFIED.

DESIGN FILLS ARE MEASURED FROM THE TOP OF TOP SLAB TO THE TOP OF EARTH FILL OR ROADWAY.

CULVERTS MEET STRENGTH AND SERVICEABILITY REQUIREMENTS FOR THE DESIGN VEHICULAR LIVE LOAD HL-93 MINUS THE LANE LOAD.

MISSOURI HIGHWAYS AND TRANSPORTATION COMMISSION
105 WEST CAPITOL
JEFFERSON CITY, MO 65102
1-888-ASK-MODOT (1-888-275-6636)

STATE OF MISSOURI
DENNIS W. HECKMAN
NUMBER PE-27141
PROFESSIONAL ENGINEER
THIS SHEET HAS BEEN SIGNED, SEALED AND DATED ELECTRONICALLY.

CONCRETE DOUBLE BOX CULVERT

MEMBER THICKNESS
BAR SIZE, SPACING & DIMENSIONS

SPAN (S): 9 FEET
HEIGHT (HT): 5 THRU 10 FEET

DATE EFFECTIVE: 10/01/2011
DATE PREPARED: 9/8/2011

703.47

SHEET NO.
12 OF 27

SPAN (S) = 9 FT HEIGHT (HT) = 11 FT OR 12 FT

DESIGN FILL	MEMBER THICKNESS				TOP SLAB BARS												BOTTOM SLAB BARS										WALL BARS				
					A1 BARS		J3 BARS					H1 BARS			H2 BARS			A2 BARS		J4 BARS					H3 BARS			B1 BARS		B2 BARS		
										K2												K3								
	TS	BS	TX	TI	SIZE	SPA.	SIZE	SPA.	C1	HT=11'	HT=12'	SIZE	SPA.	C5	SIZE	SPA.	C6	SIZE	SPA.	SIZE	SPA.	C4	HT=11'	HT=12'	SIZE	SPA.	C7	SIZE	SPA.	SIZE	SPA.	G1
1 FT	13	10	9	10	5	6.5	5	8	48.3	33.0	33.0	5	17	93.0	5	17	29.0	5	9	6	6.5	79.4	138	150	5	6	44.5	5	12	5	9.5	12
2 FT	13	11	9	10	5	6.5	5	7.5	48.3	33.0	33.0	5	16	93.0	5	16	28.0	4	6	6	7	77.0	139	151	5	6	44.5	5	12	5	9	12
4 FT	9	10	9	10	5	8.5	5	6	48.3	29.0	29.0	5	15	93.0	5	15	29.0	5	8	6	6	71.4	138	150	6	7	46.5	5	12	5	8.5	12
6 FT	9	11	9	10	5	8.5	6	7	69.3	29.0	33.0	5	15	47.0	5	15	28.0	5	8.5	6	6	68.0	139	151	5	6	43.0	5	12	5	8.5	12
8 FT	9	11	9	10	5	8.5	6	6.5	61.6	29.0	33.0	5	13	44.0	5	13	27.5	5	7.5	6	6	63.8	139	151	6	7	45.5	5	12	5	8.5	0
10 FT	10	11	10	10	5	8	5	6	56.4	30.0	30.0	5	13	43.0	5	13	27.5	5	7	6	6	60.1	139	151	6	6.5	45.0	5	12	5	8	0
12 FT	11	12	10	10	5	7.5	5	6	55.0	31.0	31.0	5	13	42.5	5	13	27.0	5	6.5	6	6.5	59.1	140	152	6	6.5	45.0	5	12	5	8	0
14 FT	11	13	10	10	5	7.5	6	7	55.6	31.0	35.0	6	16	45.0	6	16	30.0	5	6.5	6	6.5	58.5	141	153	6	6.5	45.0	5	12	5	8	0
16 FT	12	14	11	10	5	7	6	8.5	54.6	32.0	36.0	6	16	44.5	6	16	30.0	5	6.5	6	7	57.4	142	154	6	6.5	45.0	5	12	5	7.5	0
18 FT	13	15	11	10	5	6.5	6	7.5	54.6	33.0	37.0	6	16	44.0	6	16	30.0	5	6.5	6	6.5	57.1	143	155	6	7	44.5	5	12	5	7.5	0
20 FT	13	15	11	10	5	6.5	6	7.5	51.5	33.0	37.0	6	15	43.5	6	15	29.5	5	6	6	6.5	53.4	143	155	6	6.5	44.5	5	12	5	7.5	0
22 FT	14	16	12	10	5	6	6	8	51.9	34.0	38.0	6	16	43.0	6	16	29.5	5	6	6	7.5	53.6	144	156	6	6.5	44.5	5	12	5	7	0
24 FT	15	17	12	10	5	6	6	7.5	58.0	35.0	39.0	6	16	48.5	6	16	35.5	5	6	6	7.5	53.8	145	157	6	6.5	44.5	5	12	5	7	0
26 FT	16	18	13	10	6	8.5	6	7.5	58.5	36.0	40.0	6	15	48.0	6	15	34.5	5	6	6	8	54.0	146	158	6	6.5	44.5	5	12	5	6.5	0
28 FT	17	19	13	10	6	8	6	7	58.6	37.0	41.0	6	14	47.5	6	14	33.5	6	8.5	6	8	54.1	147	159	6	6	44.5	5	12	5	6.5	0
30 FT	17	20	13	10	6	7.5	6	6.5	58.5	37.0	41.0	6	14	47.5	6	14	34.5	6	8	6	7	54.4	148	160	6	6	44.5	5	12	5	6.5	0
32 FT	18	21	14	10	6	7.5	6	7	59.1	38.0	42.0	6	13	47.0	6	13	33.5	6	8	6	8	54.6	149	161	7	7.5	47.5	5	12	5	6	0
34 FT	19	22	14	10	6	7.5	6	6.5	59.3	39.0	43.0	6	13	46.5	6	13	32.5	6	8	6	8	54.9	150	162	7	7.5	47.5	5	12	5	6	0
36 FT	19	22	15	10	6	7	6	6.5	59.5	43.0	43.0	6	13	46.0	6	13	33.0	6	7	6	8	54.9	150	162	7	7.5	48.0	5	12	6	8	0
38 FT	20	23	15	10	6	7	6	6.5	59.6	44.0	44.0	6	12	45.5	6	12	32.0	6	7.5	6	8	55.1	151	163	7	7	47.5	5	12	6	8	0
40 FT	20	24	16	10	6	6	6	6.5	60.0	44.0	44.0	6	12	45.0	6	12	32.5	6	7.5	6	7.5	55.5	152	164	7	7	48.0	5	12	6	8	0
42 FT	21	25	16	10	6	6.5	6	6	60.3	45.0	45.0	6	12	44.5	6	12	31.5	6	7.5	6	7.5	55.8	153	165	7	7	48.0	5	12	6	8	0
44 FT	22	25	17	10	6	6.5	6	6.5	60.8	46.0	46.0	6	12	44.0	6	12	31.0	6	6.5	6	7	55.9	153	165	7	6.5	48.0	5	12	6	7.5	0
46 FT	22	26	17	10	6	6	6	6	60.8	46.0	46.0	6	12	44.0	6	12	31.0	6	7	6	7	56.1	154	166	7	6.5	48.0	5	12	6	7.5	0
48 FT	23	27	18	10	6	6	6	6.5	61.5	47.0	47.0	6	12	43.5	6	12	31.0	6	7	6	6.5	56.6	155	167	7	6.5	48.0	5	12	6	7	0
50 FT	23	28	19	10	6	6	6	6.5	62.0	43.0	47.0	6	12	43.5	6	12	31.0	6	7	6	7	57.0	156	168	7	6.5	48.0	5	12	6	7	0

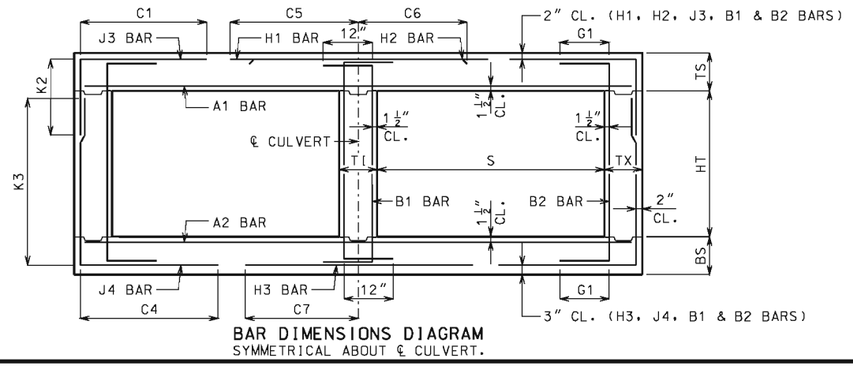

BAR DIMENSIONS DIAGRAM
SYMMETRICAL ABOUT ℄ CULVERT.

GENERAL NOTES:

IF DESIGN FILL IS BETWEEN TABULATED DESIGN FILLS, USE THE NEXT GREATER TABULATED DESIGN FILL, EXCEPT FOR DESIGN FILLS BETWEEN 2 FEET AND 4 FEET. FOR DESIGN FILLS BETWEEN 2 FEET AND 4 FEET USE THE GREATER MEMBER THICKNESS, AREA OF REINFORCEMENT AND BAR DIMENSIONS FROM THE 2 FEET AND 4 FEET TABULATED DESIGN FILLS. AREA OF REINFORCEMENT EQUALS BAR AREA PER FOOT SPACING.

SPECIAL DESIGNS ARE REQUIRED WHEN THE DESIGN FILL IS LESS THAN 1 FOOT OR GREATER THAN 50 FEET.

DIMENSIONS ARE IN INCHES UNLESS OTHERWISE SPECIFIED.

DESIGN FILLS ARE MEASURED FROM THE TOP OF TOP SLAB TO THE TOP OF EARTH FILL OR ROADWAY.

CULVERTS MEET STRENGTH AND SERVICEABILITY REQUIREMENTS FOR THE DESIGN VEHICULAR LIVE LOAD HL-93 MINUS THE LANE LOAD.

MISSOURI HIGHWAYS AND TRANSPORTATION COMMISSION
105 WEST CAPITOL
JEFFERSON CITY, MO 65102
1-888-ASK-MODOT (1-888-275-6636)

STATE OF MISSOURI
DENNIS W. HECKMAN
NUMBER PE-27141
PROFESSIONAL ENGINEER
THIS SHEET HAS BEEN SIGNED, SEALED AND DATED ELECTRONICALLY.

CONCRETE DOUBLE BOX CULVERT

MEMBER THICKNESS BAR SIZE, SPACING & DIMENSIONS

SPAN (S): 9 FEET
HEIGHT (HT): 11 THRU 12 FEET

DATE EFFECTIVE: 10/01/2011
DATE PREPARED: 9/8/2011

703.47

SHEET NO. 13 OF 27

IF A SEAL IS PRESENT ON THIS SHEET IT HAS BEEN ELECTRONICALLY SEALED AND DATED.

SPAN (S) = 10 FT HEIGHT (HT) = 5 FT OR 6 FT OR 7 FT

DESIGN FILL	MEMBER THICKNESS				TOP SLAB BARS										H1 BARS			H2 BARS			BOTTOM SLAB BARS										H3 BARS			WALL BARS			
					A1 BARS		J3 BARS														A2 BARS		J4 BARS													B1 BARS		B2 BARS	
	TS	BS	TX	TI	SIZE	SPA.	SIZE	SPA.	C1	K2 HT=5′	K2 HT=6′	K2 HT=7′	SIZE	SPA.	C5	SIZE	SPA.	C6	SIZE	SPA.	SIZE	SPA.	C4	K3 HT=5′	K3 HT=6′	K3 HT=7′	SIZE	SPA.	C7	SIZE	SPA.	SIZE	SPA.	G1
1 FT	13	10	8	8	5	6.5	4	7	48.9	29.0	29.0	29.0	5	15	98.0	5	15	29.0	4	6	4	7	48.1	66	78	90	5	6	47.5	5	12	5	12	12
2 FT	13	10	8	8	5	6.5	4	7	48.9	29.0	29.0	29.0	5	13	98.0	5	13	28.5	5	8.5	4	6.5	43.8	66	78	90	6	7	50.0	5	12	5	12	12
4 FT	9	10	8	8	5	7.5	6	7.5	43.1	25.0	25.0	25.0	5	12	62.0	5	12	30.0	5	8	4	7	38.9	66	78	90	6	6.5	49.5	5	8.5	5	12	12
6 FT	9	10	8	8	5	8.5	5	6	38.0	25.0	25.0	25.0	6	15	53.5	6	15	32.0	5	7	4	6.5	36.1	66	78	90	6	6	48.5	5	12	5	12	12
8 FT	10	11	8	8	5	8	5	7.5	36.0	26.0	26.0	26.0	6	16	51.0	6	16	31.5	5	7	4	6.5	34.1	67	79	91	6	6	48.0	5	12	5	12	0
10 FT	11	12	8	8	5	7.5	5	8	34.1	27.0	27.0	27.0	6	15	49.5	6	15	31.0	5	6.5	4	6	32.6	68	80	92	6	6.5	48.0	5	12	5	12	0
12 FT	12	13	8	8	5	7	5	8.5	32.8	28.0	28.0	28.0	6	15	48.5	6	15	31.0	5	6.5	4	6	31.5	69	81	93	6	6.5	48.0	5	12	5	12	0
14 FT	13	14	8	8	5	6.5	5	8.5	31.6	29.0	29.0	33.0	6	15	48.5	6	15	31.0	5	6	5	9	30.8	70	82	94	6	6	47.5	5	12	5	12	0
16 FT	14	15	8	8	5	6	5	8.5	30.8	30.0	30.0	34.0	6	14	48.0	6	14	31.0	5	6	5	8.5	30.1	71	83	95	6	6	47.5	5	12	5	12	0
18 FT	15	16	8	8	6	8	5	8	35.1	31.0	31.0	35.0	6	14	53.5	6	14	36.5	6	8	5	8	29.9	72	84	96	6	6	47.5	5	12	5	12	0
20 FT	15	17	8	8	6	7.5	5	8	35.1	31.0	31.0	35.0	6	13	53.5	6	13	36.5	6	8	5	7	29.4	73	85	97	6	6	47.5	5	12	5	12	0
22 FT	16	18	8	8	6	8	5	7	33.4	32.0	36.0	36.0	6	13	52.5	6	13	36.5	6	8	5	6.5	28.0	74	86	98	6	6.5	47.5	5	12	5	12	0
24 FT	17	19	8	8	6	7.5	5	6.5	33.3	37.0	37.0	37.0	6	13	52.5	6	13	36.5	6	8	5	6.5	28.0	75	87	99	6	6	47.5	5	12	5	12	0
26 FT	18	20	8	8	6	7	5	6.5	33.1	38.0	38.0	38.0	6	13	52.0	6	13	36.5	6	8	5	6	28.1	76	88	100	6	6	47.5	5	12	5	10.5	0
28 FT	19	21	8	8	6	7	5	6	33.1	39.0	39.0	39.0	6	13	52.0	6	13	36.0	6	7.5	6	7.5	31.3	77	89	101	7	7.5	50.5	5	12	5	9.5	0
30 FT	20	22	8	8	6	7	6	7.5	37.1	44.0	44.0	44.0	6	12	51.5	6	12	35.5	6	7.5	6	7	31.4	78	90	102	7	7.5	50.5	5	12	5	9.5	0
32 FT	21	23	8	8	6	6.5	6	7	37.1	45.0	45.0	45.0	6	12	51.0	6	12	34.5	6	7.5	6	6.5	31.5	79	91	103	7	7	50.5	5	12	5	9.5	0
34 FT	22	23	8	8	6	6.5	6	6.5	37.0	46.0	46.0	46.0	7	15	55.5	7	15	38.5	6	6.5	6	6.5	31.6	79	91	103	7	7	50.5	5	12	5	9.5	0
36 FT	22	24	8	8	6	6	6	6.5	37.1	46.0	46.0	46.0	7	15	55.5	7	15	39.5	6	7	6	6	31.6	80	92	104	7	7	50.0	5	12	5	9	0
38 FT	23	25	8	8	6	6	6	6	37.1	47.0	47.0	47.0	7	15	55.0	7	15	38.5	6	7	6	6	31.9	81	93	105	7	6.5	50.0	5	12	5	8.5	0
40 FT	24	26	9	8	6	6	6	7	38.0	48.0	48.0	48.0	7	14	54.0	7	14	37.5	6	7	6	6.5	32.5	82	94	106	7	6.5	50.0	5	12	5	8.5	0
42 FT	25	27	9	8	6	6	6	6.5	38.0	49.0	49.0	49.0	7	14	53.5	7	14	37.0	6	7	6	6.5	32.6	83	95	107	7	6	50.0	5	12	5	8.5	0
44 FT	25	28	9	8	7	7.5	6	6.5	38.1	49.0	49.0	49.0	7	14	53.0	7	14	37.5	6	6.5	6	6	32.8	84	96	108	7	6	50.0	5	12	5	8.5	0
46 FT	26	28	9	8	7	7.5	6	6.5	38.1	50.0	50.0	50.0	7	13	52.5	7	13	36.5	6	6.5	6	6	32.9	84	96	108	7	6	50.0	5	12	5	8	0
48 FT	27	29	9	8	7	7.5	6	6	38.1	51.0	51.0	51.0	7	14	51.5	7	14	36.5	6	6.5	6	6	33.0	85	97	109	7	6	50.0	5	12	5	7.5	0
50 FT	27	30	10	8	7	7	6	7	39.0	51.0	51.0	51.0	7	13	51.5	7	13	36.0	6	6.5	6	6.5	33.5	86	98	110	7	6	50.0	5	12	5	8	0

SPAN (S) = 10 FT HEIGHT (HT) = 8 FT OR 9 FT OR 10 FT

DESIGN FILL	MEMBER THICKNESS				TOP SLAB BARS										H1 BARS			H2 BARS			BOTTOM SLAB BARS										H3 BARS			WALL BARS			
					A1 BARS		J3 BARS														A2 BARS		J4 BARS													B1 BARS		B2 BARS	
	TS	BS	TX	TI	SIZE	SPA.	SIZE	SPA.	C1	K2 HT=8′	K2 HT=9′	K2 HT=10′	SIZE	SPA.	C5	SIZE	SPA.	C6	SIZE	SPA.	SIZE	SPA.	C4	K3 HT=8′	K3 HT=9′	K3 HT=10′	SIZE	SPA.	C7	SIZE	SPA.	SIZE	SPA.	G1
1 FT	13	10	8	8	5	6.5	5	8.5	50.9	29.0	33.0	33.0	5	14	100.0	5	14	29.5	5	8.5	6	7.5	71.6	102	114	126	5	6	47.5	5	12	5	12	12
2 FT	13	11	8	8	5	6.5	5	8.5	50.9	29.0	33.0	33.0	5	13	100.0	5	13	28.5	5	8.5	5	6	64.1	103	115	127	5	6	47.0	5	12	5	12	12
4 FT	9	10	9	8	5	7.5	5	6	69.0	25.0	25.0	29.0	5	12	73.0	5	12	30.0	5	7.5	5	6	55.4	102	114	126	6	6.5	49.5	5	10	5	12	12
6 FT	9	10	9	8	5	8.5	5	6	51.4	25.0	29.0	29.0	6	15	54.0	6	15	32.0	5	7	6	7	53.4	102	114	126	6	6	48.5	5	12	5	12	12
8 FT	10	11	9	8	5	8	5	6	48.0	26.0	30.0	30.0	5	12	48.0	5	12	28.5	5	7	6	7.5	50.9	103	115	127	6	6	48.0	5	12	5	11.5	0
10 FT	11	12	9	8	5	7.5	5	6	46.0	31.0	31.0	31.0	6	16	49.5	6	16	31.0	5	6.5	5	6	46.3	104	116	128	6	6	48.0	5	12	5	10.5	0
12 FT	12	13	9	8	5	7	5	6	44.5	32.0	32.0	32.0	6	15	48.5	6	15	31.0	5	6.5	5	6	45.0	105	117	129	6	6	47.5	5	12	5	9.5	0
14 FT	13	14	9	8	5	6.5	5	6	43.3	33.0	33.0	33.0	6	15	48.0	6	15	30.5	5	6	5	6	43.9	106	118	130	6	6	47.5	5	12	5	8.5	0
16 FT	14	15	9	8	5	6	5	6	42.1	34.0	34.0	34.0	6	15	47.5	6	15	30.5	5	6	5	6	43.0	107	119	131	6	6	47.5	5	12	5	8.5	0
18 FT	15	16	10	8	6	8.5	5	6.5	47.1	35.0	35.0	35.0	6	15	53.0	6	15	36.5	6	8	5	7	42.8	108	120	132	6	6	47.5	5	12	5	8.5	0
20 FT	15	17	10	8	6	8	6	8	50.6	35.0	35.0	35.0	6	13	52.5	6	13	36.5	6	8	5	6.5	42.3	109	121	133	6	6	47.5	5	12	5	8	0
22 FT	16	18	10	8	6	8	5	6	44.5	36.0	36.0	36.0	6	14	52.0	6	14	36.0	6	8	5	7	40.0	110	122	134	6	6.5	47.5	5	12	5	8	0
24 FT	17	19	10	8	6	7.5	6	8	48.4	37.0	37.0	37.0	6	14	51.5	6	14	36.0	6	8	5	6.5	40.1	111	123	135	6	6	47.5	5	12	5	8	0
26 FT	18	20	11	8	6	7.5	5	6	45.0	38.0	38.0	38.0	6	13	51.0	6	13	35.5	6	7.5	5	7	40.5	112	124	136	6	6	47.5	5	12	5	7.5	0
28 FT	19	21	11	8	6	7	6	8	49.0	39.0	39.0	39.0	6	13	50.5	6	13	35.0	6	7.5	5	7	40.5	113	125	137	7	7.5	50.5	5	12	5	7.5	0
30 FT	19	22	12	8	6	6.5	6	8	49.8	39.0	39.0	39.0	6	13	50.0	6	13	35.5	6	7.5	5	6.5	40.9	114	126	138	7	7.5	50.5	5	12	5	7.5	0
32 FT	20	23	12	8	6	6.5	6	8	49.6	40.0	40.0	40.0	6	12	49.5	6	12	34.5	6	7.5	5	6.5	41.0	115	127	139	7	7	50.5	5	12	5	7	0
34 FT	21	24	12	8	6	6.5	6	7.5	49.6	41.0	41.0	41.0	6	12	49.0	6	12	33.5	6	7.5	5	6.5	41.1	116	128	140	7	7	50.5	5	12	5	7	0
36 FT	22	25	12	8	6	6.5	6	6.5	49.6	42.0	42.0	42.0	7	15	53.0	7	15	38.0	6	7	5	6.5	41.3	117	129	141	7	6.5	50.5	5	12	5	7	0
38 FT	23	26	13	8	6	6	6	7.5	50.4	43.0	43.0	43.0	7	15	52.0	7	15	37.0	6	7	5	6	41.8	118	130	142	7	6.5	50.5	5	12	5	6.5	0
40 FT	23	26	13	8	6	6	6	7	50.3	43.0	43.0	43.0	7	15	52.0	7	15	37.5	6	6.5	5	6	41.6	118	130	142	7	6.5	50.5	5	12	5	6.5	0
42 FT	24	27	14	8	6	6	6	7.5	51.0	44.0	44.0	44.0	7	14	51.5	7	14	36.5	6	6.5	5	6	42.1	119	131	143	7	6	50.5	5	12	5	6	0
44 FT	24	28	14	8	7	7	6	7	51.1	44.0	44.0	44.0	7	14	51.5	7	14	37.0	6	6.5	5	6	42.1	120	132	144	7	6	50.5	5	12	5	6	0
46 FT	25	29	14	8	7	7.5	6	6.5	51.1	45.0	49.0	49.0	7	14	51.0	7	14	36.0	6	6.5	6	8.5	45.4	121	133	145	7	6	50.5	5	12	5	6	0
48 FT	26	30	14	8	7	7	6	6	51.1	46.0	50.0	50.0	7	15	50.5	7	15	36.0	6	6.5	6	8	45.6	122	134	146	7	6	50.5	5	12	5	6	0
50 FT	26	30	15	8	7	7	6	6.5	51.9	50.0	50.0	50.0	7	14	50.5	7	14	36.0	6	6	6	8	45.8	122	134	146	8	7.5	56.5	5	12	6	8	0

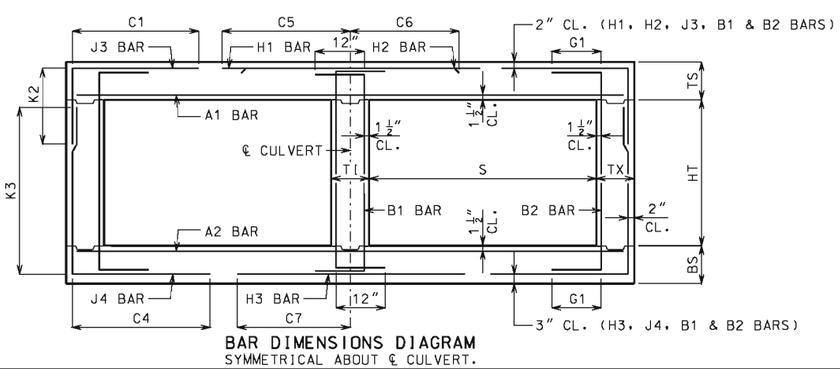

BAR DIMENSIONS DIAGRAM
SYMMETRICAL ABOUT ℄ CULVERT.

GENERAL NOTES:

IF DESIGN FILL IS BETWEEN TABULATED DESIGN FILLS, USE THE NEXT GREATER TABULATED DESIGN FILL, EXCEPT FOR DESIGN FILLS BETWEEN 2 FEET AND 4 FEET. FOR DESIGN FILLS BETWEEN 2 FEET AND 4 FEET USE THE GREATER MEMBER THICKNESS, AREA OF REINFORCEMENT AND BAR DIMENSIONS FROM THE 2 FEET AND 4 FEET TABULATED DESIGN FILLS. AREA OF REINFORCEMENT EQUALS BAR AREA PER FOOT SPACING.

SPECIAL DESIGNS ARE REQUIRED WHEN THE DESIGN FILL IS LESS THAN 1 FOOT OR GREATER THAN 50 FEET.

DIMENSIONS ARE IN INCHES UNLESS OTHERWISE SPECIFIED.

DESIGN FILLS ARE MEASURED FROM THE TOP OF TOP SLAB TO THE TOP OF EARTH FILL OR ROADWAY.

CULVERTS MEET STRENGTH AND SERVICEABILITY REQUIREMENTS FOR THE DESIGN VEHICULAR LIVE LOAD HL-93 MINUS THE LANE LOAD.

IF A SEAL IS PRESENT ON THIS SHEET IT HAS BEEN ELECTRONICALLY SEALED AND DATED.

MISSOURI HIGHWAYS AND TRANSPORTATION COMMISSION
105 WEST CAPITOL
JEFFERSON CITY, MO 65102
1-888-ASK-MODOT (1-888-275-6636)

STATE OF MISSOURI
DENNIS W. HECKMAN
NUMBER PE-27141
PROFESSIONAL ENGINEER
THIS SHEET HAS BEEN SIGNED, SEALED AND DATED ELECTRONICALLY.

CONCRETE DOUBLE BOX CULVERT

MEMBER THICKNESS
BAR SIZE, SPACING & DIMENSIONS

SPAN (S): 10 FEET
HEIGHT (HT): 5 THRU 10 FEET

DATE EFFECTIVE: 10/01/2011
DATE PREPARED: 9/8/2011

703.47

SPAN (S) = 10 FT HEIGHT (HT) = 11 FT OR 12 FT OR 13 FT

DESIGN FILL	MEMBER THICKNESS				TOP SLAB BARS												BOTTOM SLAB BARS												WALL BARS				
					A1 BARS		J3 BARS						H1 BARS			H2 BARS			A2 BARS		J4 BARS						H3 BARS			B1 BARS		B2 BARS		
	TS	BS	TX	TI	SIZE	SPA.	SIZE	SPA.	C1	K2 HT=11'	K2 HT=12'	K2 HT=13'	SIZE	SPA.	C5	SIZE	SPA.	C6	SIZE	SPA.	SIZE	SPA.	C4	K3 HT=11'	K3 HT=12'	K3 HT=13'	SIZE	SPA.	C7	SIZE	SPA.	SIZE	SPA.	G1
1 FT	13	10	9	10	5	6.5	5	6.5	51.9	33.0	33.0	33.0	5	14	101.0	5	14	30.0	5	7.5	6	6	85.4	138	150	162	6	7	51.0	5	12	5	8.5	12
2 FT	13	11	9	10	5	6.5	5	6	51.9	33.0	33.0	33.0	5	13	101.0	5	13	29.0	5	8	6	6	82.6	139	151	163	5	6	47.5	5	12	5	8.5	12
4 FT	9	10	10	10	5	7.5	6	7	52.5	29.0	29.0	33.0	5	12	101.5	5	12	30.5	5	7	6	6	74.5	138	150	162	6	6	50.0	5	10	5	8	12
6 FT	9	11	10	10	5	8.5	6	7	70.4	29.0	29.0	33.0	5	12	50.5	5	12	29.5	5	7	6	6	71.0	139	151	163	6	6.5	49.5	5	12	5	8	12
8 FT	10	12	11	10	5	8	5	6	62.6	30.0	30.0	30.0	5	12	47.5	5	12	29.0	5	7	5	6	64.6	140	152	164	6	6.5	48.5	5	12	5	7.5	0
10 FT	11	12	11	10	5	7.5	5	6.5	60.9	31.0	31.0	31.0	5	12	46.5	5	12	28.5	5	6.5	6	6.5	64.4	140	152	164	6	6	48.0	5	12	5	7.5	0
12 FT	11	13	11	10	5	7.5	6	7.5	60.6	31.0	31.0	35.0	6	15	48.5	6	15	31.5	5	6	6	6.5	63.6	141	153	165	6	6	48.0	5	12	5	7.5	0
14 FT	12	14	11	10	5	7	6	7.5	59.6	32.0	32.0	36.0	6	14	48.0	6	14	31.5	5	6	6	6.5	62.5	142	154	166	6	6	48.0	5	12	5	7.5	0
16 FT	13	15	12	10	5	6.5	6	7.5	58.4	33.0	33.0	37.0	6	14	47.5	6	14	31.0	6	8	6	7	61.1	143	155	167	6	6	48.0	5	12	5	7	0
18 FT	14	16	12	10	5	6	6	7	58.0	34.0	38.0	38.0	6	14	47.0	6	14	31.0	6	8	6	6.5	60.5	144	156	168	6	6.5	48.0	5	12	5	7	0
20 FT	15	17	13	10	6	8	6	7	64.0	35.0	39.0	39.0	6	14	52.5	6	14	37.0	6	8	6	6.5	59.9	145	157	169	6	6.5	48.0	5	12	5	6.5	0
22 FT	15	18	13	10	6	7.5	6	7	61.1	35.0	35.0	39.0	6	13	52.0	6	13	37.0	6	8	6	7.5	57.4	146	158	170	6	6.5	48.0	5	12	5	6.5	0
24 FT	16	19	13	10	6	7.5	6	6.5	61.3	36.0	36.0	40.0	6	13	51.5	6	13	36.5	6	7.5	6	7.5	57.4	147	159	171	6	6	48.0	5	12	5	6.5	0
26 FT	17	20	14	10	6	7.5	6	7	61.8	37.0	37.0	41.0	6	13	51.5	6	13	36.5	6	7.5	6	7.5	57.6	148	160	172	6	6	48.0	5	12	5	6	0
28 FT	18	21	14	10	6	7	6	6.5	61.9	38.0	38.0	42.0	6	13	51.0	6	13	36.5	6	7.5	6	7.5	57.8	149	161	173	7	7.5	51.0	5	12	5	6	0
30 FT	19	22	15	10	6	7	6	6.5	62.4	39.0	43.0	43.0	6	13	50.0	6	13	35.5	6	7.5	6	7.5	58.0	150	162	174	7	7.5	51.0	5	12	6	8	0
32 FT	20	23	15	10	6	7	6	6	62.5	44.0	44.0	44.0	6	12	49.5	6	12	34.5	6	7	6	7.5	58.1	151	163	175	7	7	51.0	5	12	6	8	0
34 FT	21	24	16	10	6	6.5	6	6.5	63.0	41.0	45.0	45.0	6	12	48.5	6	12	33.5	6	7	6	7.5	58.5	152	164	176	7	7	51.0	5	12	6	8	0
36 FT	21	25	16	10	6	6	6	6	62.9	45.0	45.0	45.0	6	12	48.5	6	12	34.0	6	7	6	7.5	58.6	153	165	177	7	6.5	51.0	5	12	6	8	0
38 FT	22	26	17	10	6	6.5	6	6	63.5	42.0	46.0	46.0	7	15	52.5	7	15	38.5	6	7	6	7	59.0	154	166	178	7	6.5	51.0	5	12	6	7.5	0
40 FT	23	26	17	10	6	6	6	6	63.5	47.0	47.0	47.0	7	15	52.0	7	15	37.5	6	6	6	7	58.9	154	166	178	7	6.5	51.0	5	12	6	7.5	0
42 FT	24	27	18	10	6	6	6	6	64.1	44.0	48.0	48.0	7	15	51.5	7	15	37.0	6	6.5	6	6.5	59.3	155	167	179	7	6	51.0	5	12	6	7	0
44 FT	24	28	19	10	7	8	6	6	64.6	44.0	48.0	48.0	7	14	51.5	7	14	37.0	6	6.5	6	6.5	59.6	156	168	180	7	6	51.0	5	12	6	7	0
46 FT	25	29	19	10	7	7.5	6	6	64.8	49.0	49.0	49.0	7	15	51.0	7	15	36.5	6	6.5	6	6.5	59.9	157	169	181	7	6	51.0	5	12	6	6.5	0
48 FT	25	30	20	10	7	7.5	7	8	70.3	49.0	49.0	49.0	7	15	51.0	7	15	36.5	6	6.5	6	6.5	60.3	158	170	182	7	6	51.0	5	12	6	6.5	0
50 FT	26	31	20	10	7	7	7	7	70.4	50.0	50.0	50.0	7	15	50.5	7	15	36.5	6	6	6	6	60.5	159	171	183	7	6	51.0	5	12	6	6.5	0

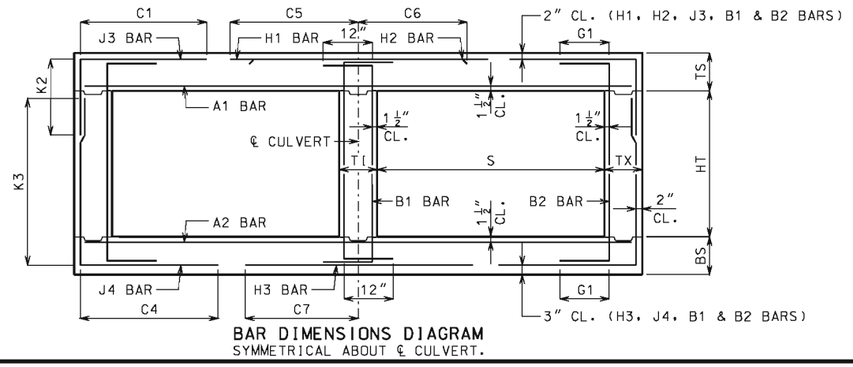

BAR DIMENSIONS DIAGRAM
SYMMETRICAL ABOUT ℄ CULVERT.

GENERAL NOTES:

IF DESIGN FILL IS BETWEEN TABULATED DESIGN FILLS, USE THE NEXT GREATER TABULATED DESIGN FILL, EXCEPT FOR DESIGN FILLS BETWEEN 2 FEET AND 4 FEET. FOR DESIGN FILLS BETWEEN 2 FEET AND 4 FEET USE THE GREATER MEMBER THICKNESS, AREA OF REINFORCEMENT AND BAR DIMENSIONS FROM THE 2 FEET AND 4 FEET TABULATED DESIGN FILLS. AREA OF REINFORCEMENT EQUALS BAR AREA PER FOOT SPACING.

SPECIAL DESIGNS ARE REQUIRED WHEN THE DESIGN FILL IS LESS THAN 1 FOOT OR GREATER THAN 50 FEET.

DIMENSIONS ARE IN INCHES UNLESS OTHERWISE SPECIFIED.

DESIGN FILLS ARE MEASURED FROM THE TOP OF TOP SLAB TO THE TOP OF EARTH FILL OR ROADWAY.

CULVERTS MEET STRENGTH AND SERVICEABILITY REQUIREMENTS FOR THE DESIGN VEHICULAR LIVE LOAD HL-93 MINUS THE LANE LOAD.

MISSOURI HIGHWAYS AND TRANSPORTATION COMMISSION
105 WEST CAPITOL
JEFFERSON CITY, MO 65102
1-888-ASK-MODOT (1-888-275-6636)

STATE OF MISSOURI
DENNIS W. HECKMAN
NUMBER PE-27141
PROFESSIONAL ENGINEER
THIS SHEET HAS BEEN SIGNED, SEALED AND DATED ELECTRONICALLY.

CONCRETE DOUBLE BOX CULVERT

MEMBER THICKNESS BAR SIZE, SPACING & DIMENSIONS

SPAN (S): 10 FEET
HEIGHT (HT): 11 THRU 13 FEET

DATE EFFECTIVE: 10/01/2011
DATE PREPARED: 9/8/2011

703.47

SHEET NO. 15 OF 27

IF A SEAL IS PRESENT ON THIS SHEET IT HAS BEEN ELECTRONICALLY SEALED AND DATED.

SPAN (S) = 11 FT HEIGHT (HT) = 6 FT OR 7 FT OR 8 FT

DESIGN FILL	MEMBER THICKNESS				TOP SLAB BARS												BOTTOM SLAB BARS												WALL BARS				
					A1 BARS		J3 BARS						H1 BARS			H2 BARS			A2 BARS		J4 BARS					H3 BARS			B1 BARS		B2 BARS		
	TS	BS	TX	TI	SIZE	SPA.	SIZE	SPA.	C1	K2			SIZE	SPA.	C5	SIZE	SPA.	C6	SIZE	SPA.	SIZE	SPA.	C4	K3			SIZE	SPA.	C7	SIZE	SPA.	SIZE	SPA.	G1
										HT=6′	HT=7′	HT=8′												HT=6′	HT=7′	HT=8′							
1 FT	14	10	8	8	5	6	4	6.5	52.5	30.0	30.0	30.0	5	13	106.5	5	13	30.0	5	8	5	7	52.9	78	90	102	6	7	53.5	5	12	5	12	12
2 FT	14	11	8	8	5	6	4	6	52.5	30.0	30.0	30.0	5	12	106.5	5	12	29.0	5	8	5	8	49.1	79	91	103	6	7	53.0	5	12	5	12	12
4 FT	10	10	8	8	5	7	5	6	45.6	26.0	26.0	30.0	6	16	72.5	6	16	35.0	5	7	5	6.5	43.0	78	90	102	6	6	52.5	5	10.5	5	12	12
6 FT	10	11	8	8	5	7.5	5	6	40.8	26.0	26.0	30.0	6	15	58.5	6	15	33.5	5	6.5	5	7.5	39.5	79	91	103	6	6	52.0	5	12	5	12	12
8 FT	11	12	8	8	5	7.5	5	7	38.6	27.0	27.0	31.0	6	15	54.5	6	15	33.0	5	6.5	5	8	37.3	80	92	104	6	6	51.5	5	12	5	12	0
10 FT	12	13	8	8	5	7	5	7.5	36.6	28.0	28.0	32.0	6	14	53.0	6	14	32.5	5	6	5	8	35.6	81	93	105	6	6	51.0	5	12	5	12	0
12 FT	13	14	8	8	5	6.5	5	7.5	35.3	29.0	33.0	33.0	6	14	52.0	6	14	32.5	6	8.5	5	8.5	34.6	82	94	106	6	6	51.0	5	12	5	12	0
14 FT	14	15	8	8	5	6	5	8	34.1	30.0	34.0	34.0	6	13	51.5	6	13	32.0	6	8	5	8.5	33.8	83	95	107	6	6	51.0	5	12	5	12	0
16 FT	15	16	8	8	6	8	5	7.5	38.3	31.0	35.0	35.0	6	13	57.0	6	13	38.0	6	7.5	5	8	33.1	84	96	108	6	6	51.0	5	12	5	12	0
18 FT	16	17	8	8	6	8	5	7	37.5	32.0	36.0	36.0	6	12	56.5	6	12	38.0	6	7	5	7	32.6	85	97	109	7	7	53.5	5	12	5	10.5	0
20 FT	17	18	8	8	6	7.5	5	6.5	37.1	37.0	37.0	37.0	6	12	56.5	6	12	38.0	6	7	5	6.5	32.4	86	98	110	7	7	53.5	5	12	5	9.5	0
22 FT	18	20	8	8	6	7	5	6.5	37.1	38.0	38.0	38.0	6	12	56.0	6	12	37.5	6	7.5	5	6	32.4	88	100	112	6	6	50.5	5	12	5	9.5	0
24 FT	19	20	8	8	6	6.5	5	6	35.1	39.0	39.0	39.0	6	12	55.0	6	12	37.5	6	7	5	6	30.9	88	100	112	6	6	50.5	5	12	5	9.5	0
26 FT	20	21	8	8	6	6.5	6	7.5	39.1	44.0	44.0	44.0	6	12	54.5	6	12	37.5	6	6.5	6	7.5	33.9	89	101	113	7	7	53.5	5	12	5	9.5	0
28 FT	21	22	8	8	6	6.5	6	7	39.1	45.0	45.0	45.0	6	12	54.5	6	12	37.0	6	6	6	7	34.0	90	102	114	7	7	53.5	5	12	5	9.5	0
30 FT	22	23	8	8	6	6	6	6.5	39.1	46.0	46.0	46.0	7	15	59.0	7	15	41.0	6	6	6	6.5	34.1	91	103	115	7	7	53.5	5	12	5	8.5	0
32 FT	23	24	8	8	6	6	6	6	39.1	47.0	47.0	47.0	7	15	58.5	7	15	40.5	6	6	6	6	34.3	92	104	116	7	7	53.5	5	12	5	8	0
34 FT	23	26	9	8	7	7.5	6	7	40.3	47.0	47.0	47.0	7	15	58.0	7	15	41.0	6	6.5	6	6.5	34.8	94	106	118	7	6.5	53.5	5	12	5	8.5	0
36 FT	24	27	9	8	7	7.5	6	7	40.3	48.0	48.0	48.0	7	14	57.5	7	14	40.5	6	6.5	6	6.5	34.9	95	107	119	7	6	53.5	5	12	5	8	0
38 FT	25	27	9	8	7	7.5	6	6.5	40.1	49.0	49.0	49.0	7	14	57.0	7	14	39.5	6	6	6	6.5	35.0	95	107	119	7	6	53.5	5	12	5	7.5	0
40 FT	26	28	10	8	7	7.5	6	7	40.9	50.0	50.0	50.0	7	13	56.0	7	13	38.5	6	6	6	7	35.5	96	108	120	7	6	53.5	5	12	5	8	0
42 FT	27	29	10	8	7	7	6	7	41.0	51.0	51.0	51.0	7	13	55.0	7	13	37.5	6	6	6	6.5	35.8	97	109	121	8	7.5	59.5	5	12	5	8	0
44 FT	27	30	11	8	7	6.5	5	6	37.9	47.0	47.0	47.0	7	13	54.5	7	13	38.0	6	6	6	7	36.1	98	110	122	8	7.5	59.5	5	12	5	7.5	0
46 FT	28	31	11	8	7	6.5	6	7.5	41.9	52.0	52.0	52.0	7	12	54.0	7	12	37.5	6	6	6	7	36.4	99	111	123	8	7	59.5	5	12	5	7.5	0
48 FT	29	32	11	8	7	6.5	6	7	41.9	53.0	53.0	53.0	7	12	53.5	7	12	37.0	6	6	6	6.5	36.5	100	112	124	8	7	59.0	5	12	5	7.5	0
50 FT	29	33	11	8	7	6.5	6	7	42.0	53.0	53.0	53.0	7	12	53.5	7	12	37.0	6	6	6	6.5	36.6	101	113	125	8	7	59.0	5	12	5	7	0

SPAN (S) = 11 FT HEIGHT (HT) = 9 FT OR 10 FT OR 11 FT

DESIGN FILL	MEMBER THICKNESS				TOP SLAB BARS												BOTTOM SLAB BARS												WALL BARS				
					A1 BARS		J3 BARS						H1 BARS			H2 BARS			A2 BARS		J4 BARS					H3 BARS			B1 BARS		B2 BARS		
	TS	BS	TX	TI	SIZE	SPA.	SIZE	SPA.	C1	K2			SIZE	SPA.	C5	SIZE	SPA.	C6	SIZE	SPA.	SIZE	SPA.	C4	K3			SIZE	SPA.	C7	SIZE	SPA.	SIZE	SPA.	G1
										HT=9′	HT=10′	HT=11′												HT=9′	HT=10′	HT=11′							
1 FT	14	10	8	9	5	6	5	8	54.6	34.0	34.0	34.0	5	13	109.0	5	13	30.5	5	7.5	6	6	76.4	114	126	138	6	6.5	54.0	5	12	5	10	12
2 FT	14	11	8	9	5	6	5	8	54.6	34.0	34.0	34.0	5	12	109.0	5	12	29.5	5	7.5	6	6.5	71.8	115	127	139	6	7	53.5	5	12	5	10	12
4 FT	10	10	9	9	5	7	5	6	82.4	30.0	30.0	30.0	6	16	84.0	6	16	35.0	5	7	6	6.5	62.1	114	126	138	7	7	55.5	5	10.5	5	10	12
6 FT	10	11	9	9	5	7.5	5	6	56.3	30.0	30.0	30.0	6	15	58.5	6	15	33.5	5	6.5	6	6.5	58.1	115	127	139	6	6	52.0	5	12	5	9.5	12
8 FT	11	12	10	9	5	7.5	5	6	52.4	31.0	31.0	31.0	6	15	54.5	6	15	33.0	5	6	5	6	52.1	116	128	140	6	6	51.5	5	12	5	10.5	0
10 FT	11	13	10	9	5	7.5	5	6	49.6	31.0	31.0	31.0	6	14	52.5	6	14	32.5	5	6	5	6	50.5	117	129	141	6	6	51.5	5	12	5	9.5	0
12 FT	12	14	10	9	5	6.5	5	6	48.1	32.0	32.0	32.0	6	13	52.0	6	13	32.5	6	8	5	6	49.0	118	130	142	6	6	51.0	5	12	5	9	0
14 FT	14	15	10	9	5	6	5	6	47.1	34.0	34.0	34.0	6	14	51.5	6	14	32.5	6	8	5	6	47.9	119	131	143	6	6	51.0	5	12	5	8	0
16 FT	15	16	10	9	6	8	6	8	55.0	35.0	35.0	35.0	6	13	57.0	6	13	38.5	6	7.5	5	6	46.9	120	132	144	6	6	51.0	5	12	5	8	0
18 FT	16	17	10	9	6	8	6	7.5	53.9	36.0	36.0	40.0	6	13	56.5	6	13	38.0	6	7	6	7	49.0	121	133	145	6	6	51.0	5	12	5	8	0
20 FT	17	18	11	9	6	7.5	6	8	54.0	37.0	37.0	37.0	6	13	56.0	6	13	38.0	6	6.5	5	6	45.9	122	134	146	6	6	51.0	5	12	5	7.5	0
22 FT	18	20	12	9	6	7	6	8	54.4	38.0	38.0	38.0	6	13	55.5	6	13	38.0	6	7.5	5	6.5	46.0	124	136	148	6	6	51.0	5	12	5	7	0
24 FT	18	20	12	9	6	7	6	8	52.1	38.0	38.0	38.0	6	12	54.5	6	12	37.5	6	6.5	5	6.5	43.5	124	136	148	6	6	51.0	5	12	5	7.5	0
26 FT	19	22	12	9	6	6.5	6	7.5	52.1	39.0	39.0	39.0	6	12	54.5	6	12	37.5	6	7	5	6.5	43.6	126	138	150	7	7.5	54.0	5	12	5	7	0
28 FT	20	23	12	9	6	6.5	6	7	52.1	40.0	40.0	40.0	6	12	54.0	6	12	37.5	6	7	5	6	43.8	127	139	151	7	7	54.0	5	12	5	7	0
30 FT	21	24	13	9	6	6	6	7.5	52.8	41.0	41.0	41.0	6	12	53.0	6	12	37.0	6	6.5	5	6	44.1	128	140	152	7	7	54.0	5	12	5	6.5	0
32 FT	22	25	13	9	6	6	6	7	52.8	42.0	42.0	42.0	7	15	56.5	7	15	41.0	6	6.5	5	6	44.3	129	141	153	7	6.5	54.0	5	12	5	6.5	0
34 FT	23	26	13	9	6	6	6	6.5	52.8	43.0	43.0	43.0	7	15	57.0	7	15	40.0	6	6.5	5	6	44.4	130	142	154	7	6.5	54.0	5	12	5	6.5	0
36 FT	24	27	14	9	7	8	6	7	53.4	44.0	44.0	44.0	7	14	56.0	7	14	39.5	6	6.5	5	6	44.8	131	143	155	7	6	54.0	5	12	5	6	0
38 FT	25	28	14	9	7	7.5	6	7	53.4	45.0	45.0	45.0	7	14	55.0	7	14	38.5	6	6.5	5	6	44.9	132	144	156	7	6	54.0	5	12	5	6	0
40 FT	25	29	14	9	7	7	6	6	53.4	45.0	49.0	49.0	7	14	55.0	7	14	39.0	6	6	6	8.5	47.9	133	145	157	8	7.5	60.0	5	12	5	6	0
42 FT	26	30	15	9	7	7	6	6.5	54.1	50.0	50.0	50.0	7	13	54.0	7	13	38.0	6	6	6	8	48.4	134	146	158	8	7.5	60.0	5	12	6	8	0
44 FT	27	31	15	9	7	7	6	6.5	54.1	51.0	51.0	51.0	7	13	54.0	7	13	37.0	6	6	6	7.5	48.6	135	147	159	8	7	60.0	5	12	6	8	0
46 FT	27	32	16	9	7	6.5	6	6.5	55.0	51.0	51.0	51.0	7	13	53.5	7	13	37.5	6	6	6	7.5	48.9	136	148	160	8	7	60.0	5	12	6	8	0
48 FT	28	32	16	9	7	6.5	6	6	54.9	52.0	52.0	52.0	7	13	53.0	7	13	37.0	7	8	6	7.5	49.0	136	148	160	8	7	60.0	5	12	6	8	0
50 FT	29	33	17	9	7	6.5	6	6.5	55.6	53.0	53.0	53.0	7	13	52.5	7	13	37.0	7	7.5	6	7	49.5	137	149	161	8	7	60.0	5	12	6	7.5	0

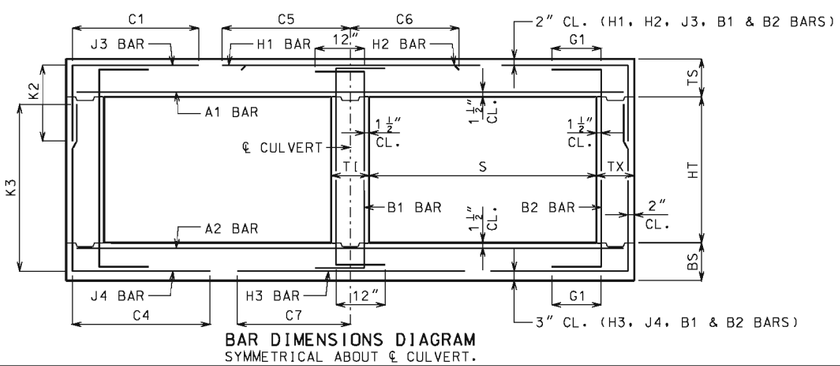

BAR DIMENSIONS DIAGRAM
SYMMETRICAL ABOUT ℄ CULVERT.

GENERAL NOTES:

IF DESIGN FILL IS BETWEEN TABULATED DESIGN FILLS, USE THE NEXT GREATER TABULATED DESIGN FILL, EXCEPT FOR DESIGN FILLS BETWEEN 2 FEET AND 4 FEET. FOR DESIGN FILLS BETWEEN 2 FEET AND 4 FEET USE THE GREATER MEMBER THICKNESS, AREA OF REINFORCEMENT AND BAR DIMENSIONS FROM THE 2 FEET AND 4 FEET TABULATED DESIGN FILLS. AREA OF REINFORCEMENT EQUALS BAR AREA PER FOOT SPACING.

SPECIAL DESIGNS ARE REQUIRED WHEN THE DESIGN FILL IS LESS THAN 1 FOOT OR GREATER THAN 50 FEET.

DIMENSIONS ARE IN INCHES UNLESS OTHERWISE SPECIFIED.

DESIGN FILLS ARE MEASURED FROM THE TOP OF TOP SLAB TO THE TOP OF EARTH FILL OR ROADWAY.

CULVERTS MEET STRENGTH AND SERVICEABILITY REQUIREMENTS FOR THE DESIGN VEHICULAR LIVE LOAD HL-93 MINUS THE LANE LOAD.

MISSOURI HIGHWAYS AND TRANSPORTATION COMMISSION
105 WEST CAPITOL
JEFFERSON CITY, MO 65102
1-888-ASK-MODOT (1-888-275-6636)

STATE OF MISSOURI
DENNIS W. HECKMAN
NUMBER PE-27141
PROFESSIONAL ENGINEER
THIS SHEET HAS BEEN SIGNED, SEALED AND DATED ELECTRONICALLY.

CONCRETE DOUBLE BOX CULVERT

MEMBER THICKNESS
BAR SIZE, SPACING & DIMENSIONS

SPAN (S): 11 FEET
HEIGHT (HT): 6 THRU 11 FEET

DATE EFFECTIVE: 10/01/2011
DATE PREPARED: 9/8/2011

703.47

SHEET NO.
16 OF 27

IF A SEAL IS PRESENT ON THIS SHEET IT HAS BEEN ELECTRONICALLY SEALED AND DATED.

SPAN (S) = 11 FT HEIGHT (HT) = 12 FT OR 13 FT OR 14 FT

DESIGN FILL	MEMBER THICKNESS				TOP SLAB BARS												BOTTOM SLAB BARS												WALL BARS				
					A1 BARS		J3 BARS						H1 BARS			H2 BARS			A2 BARS		J4 BARS						H3 BARS			B1 BARS		B2 BARS		
										K2													K3									
	TS	BS	TX	TI	SIZE	SPA.	SIZE	SPA.	C1	HT=12'	HT=13'	HT=14'	SIZE	SPA.	C5	SIZE	SPA.	C6	SIZE	SPA.	SIZE	SPA.	C4	HT=12'	HT=13'	HT=14'	SIZE	SPA.	C7	SIZE	SPA.	SIZE	SPA.	G1
1 FT	14	12	9	11	5	6	5	6	55.6	34.0	34.0	34.0	5	13	110.0	5	13	30.5	5	8	6	6	94.6	152	164	176	5	6	51.5	5	12	5	8.5	12
2 FT	14	12	9	11	5	6	6	7.5	55.6	34.0	34.0	38.0	5	12	110.0	5	12	30.0	5	7.5	6	6	89.4	152	164	176	5	6	51.0	5	12	5	8.5	12
4 FT	10	12	10	11	5	7	6	7	58.3	30.0	30.0	34.0	6	16	112.5	6	16	35.5	5	7	6	6.5	83.4	152	164	176	6	7	53.5	5	11.5	5	8	12
6 FT	10	12	10	11	5	7.5	6	6.5	78.8	30.0	34.0	34.0	6	15	57.5	6	15	34.0	5	6.5	6	6	77.1	152	164	176	6	6.5	52.5	5	12	5	7.5	12
8 FT	10	13	10	11	5	7.5	6	6	70.1	34.0	34.0	34.0	6	14	54.0	6	14	33.5	5	6	6	6	74.1	153	165	177	6	6.5	52.0	5	12	5	7	0
10 FT	11	13	11	11	5	7.5	6	7	67.0	31.0	31.0	35.0	6	14	52.5	6	14	33.0	5	6	6	6	69.9	153	165	177	6	6	51.5	5	12	5	7.5	0
12 FT	12	14	12	11	5	7	6	8	64.6	32.0	32.0	36.0	6	14	51.5	6	14	33.0	6	8	6	7	67.6	154	166	178	6	6	51.5	5	12	5	7	0
14 FT	13	15	12	11	5	6.5	6	7	63.4	33.0	37.0	37.0	6	13	51.0	6	13	33.0	6	7.5	6	6.5	66.4	155	167	179	6	6	51.0	5	12	5	7	0
16 FT	14	16	13	11	5	6	6	7	62.3	34.0	38.0	38.0	6	13	51.0	6	13	33.0	6	7	6	7	64.8	156	168	180	6	6	51.0	5	12	5	6.5	0
18 FT	15	17	13	11	6	8	6	6.5	67.6	35.0	39.0	39.0	6	12	56.5	6	12	38.5	6	6.5	6	6	63.8	157	169	181	6	6	51.0	5	12	5	6.5	0
20 FT	16	19	14	11	6	8	6	6.5	67.4	36.0	40.0	40.0	6	12	56.0	6	12	38.5	6	7.5	6	6.5	63.8	159	171	183	6	6	51.5	5	12	5	6	0
22 FT	17	20	14	11	6	7.5	6	6	67.3	37.0	41.0	41.0	6	12	55.5	6	12	38.5	6	7	6	6	63.5	160	172	184	6	6	51.0	5	12	5	6	0
24 FT	18	21	15	11	6	7	6	6.5	67.4	42.0	42.0	42.0	6	12	55.0	6	12	38.5	6	7	6	6.5	63.4	161	173	185	7	7.5	54.5	5	12	6	8	0
26 FT	19	22	15	11	6	6.5	6	6.5	65.3	43.0	43.0	43.0	6	13	54.5	6	13	38.0	6	7	6	7	61.1	162	174	186	7	7.5	54.0	5	12	6	8	0
28 FT	20	23	15	11	6	6.5	6	6	65.3	44.0	44.0	44.0	6	12	54.0	6	12	38.0	6	7	6	6.5	61.3	163	175	187	7	7	54.0	5	12	6	8	0
30 FT	21	24	16	11	6	6.5	6	6	65.8	45.0	45.0	45.0	6	12	53.0	6	12	37.0	6	6.5	6	7	61.4	164	176	188	7	7	54.0	5	12	6	8	0
32 FT	22	25	16	11	6	6	7	7.5	70.8	46.0	46.0	46.0	7	15	57.5	7	15	41.0	6	6.5	6	6.5	61.6	165	177	189	7	6.5	54.0	5	12	6	8	0
34 FT	23	26	17	11	6	6	6	6	66.4	47.0	47.0	47.0	7	15	56.5	7	15	40.0	6	6.5	6	7	61.9	166	178	190	7	6.5	54.5	5	12	6	7.5	0
36 FT	23	27	17	11	7	7.5	7	7	71.3	47.0	47.0	47.0	7	15	56.5	7	15	41.0	6	6.5	6	6.5	62.0	167	179	191	7	6	54.5	5	12	6	7.5	0
38 FT	24	28	18	11	7	7.5	7	7.5	71.8	48.0	48.0	48.0	7	14	55.5	7	14	40.0	6	6	6	6.5	62.4	168	180	192	7	6	54.5	5	12	6	7	0
40 FT	25	29	19	11	7	7.5	7	7.5	72.4	49.0	49.0	49.0	7	14	55.0	7	14	39.0	6	6	6	6.5	62.6	169	181	193	8	7.5	60.5	5	12	6	6.5	0
42 FT	26	30	19	11	7	7.5	7	7	72.5	50.0	50.0	50.0	7	13	54.5	7	13	38.0	6	6	6	6.5	62.9	170	182	194	8	7.5	60.5	5	12	6	6.5	0
44 FT	27	31	20	11	7	7	7	7.5	73.0	51.0	51.0	51.0	7	14	54.0	7	14	38.0	6	6	6	6	63.3	171	183	195	8	7	60.5	5	12	6	6.5	0
46 FT	28	32	20	11	7	7	7	6.5	73.1	52.0	52.0	52.0	7	14	53.5	7	14	38.0	6	6	6	6	63.5	172	184	196	8	7	60.5	5	12	6	6.5	0
48 FT	28	32	21	11	7	6.5	7	6.5	73.6	52.0	52.0	52.0	7	14	53.5	7	14	37.5	7	7	6	6	63.5	172	184	196	8	7	60.5	5	12	6	6	0
50 FT	28	33	22	11	7	6.5	7	6.5	74.1	52.0	52.0	52.0	7	13	53.5	7	13	37.5	7	7.5	6	6	63.9	173	185	197	8	7	60.5	5	12	6	6	0

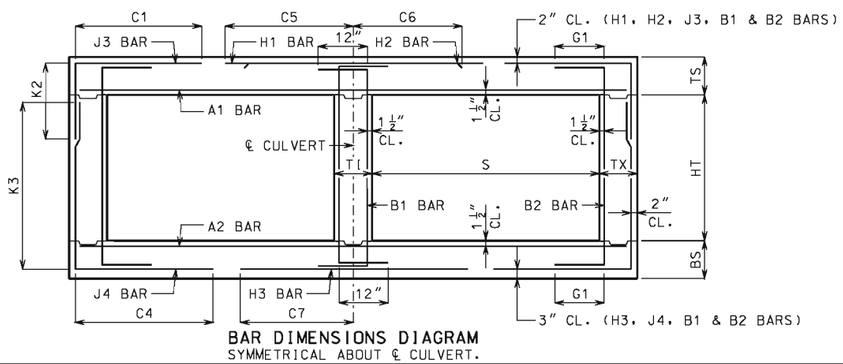

BAR DIMENSIONS DIAGRAM
SYMMETRICAL ABOUT ℄ CULVERT.

GENERAL NOTES:

IF DESIGN FILL IS BETWEEN TABULATED DESIGN FILLS, USE THE NEXT GREATER TABULATED DESIGN FILL, EXCEPT FOR DESIGN FILLS BETWEEN 2 FEET AND 4 FEET. FOR DESIGN FILLS BETWEEN 2 FEET AND 4 FEET USE THE GREATER MEMBER THICKNESS, AREA OF REINFORCEMENT AND BAR DIMENSIONS FROM THE 2 FEET AND 4 FEET TABULATED DESIGN FILLS. AREA OF REINFORCEMENT EQUALS BAR AREA PER FOOT SPACING.

SPECIAL DESIGNS ARE REQUIRED WHEN THE DESIGN FILL IS LESS THAN 1 FOOT OR GREATER THAN 50 FEET.

DIMENSIONS ARE IN INCHES UNLESS OTHERWISE SPECIFIED.

DESIGN FILLS ARE MEASURED FROM THE TOP OF TOP SLAB TO THE TOP OF EARTH FILL OR ROADWAY.

CULVERTS MEET STRENGTH AND SERVICEABILITY REQUIREMENTS FOR THE DESIGN VEHICULAR LIVE LOAD HL-93 MINUS THE LANE LOAD.

MISSOURI HIGHWAYS AND TRANSPORTATION COMMISSION
105 WEST CAPITOL
JEFFERSON CITY, MO 65102
1-888-ASK-MODOT (1-888-275-6636)

STATE OF MISSOURI
DENNIS W. HECKMAN
NUMBER PE-27141
PROFESSIONAL ENGINEER
THIS SHEET HAS BEEN SIGNED, SEALED AND DATED ELECTRONICALLY.

CONCRETE DOUBLE BOX CULVERT

MEMBER THICKNESS BAR SIZE, SPACING & DIMENSIONS

SPAN (S): 11 FEET
HEIGHT (HT): 12 THRU 14 FEET

DATE EFFECTIVE: 10/01/2011
DATE PREPARED: 9/8/2011

703.47

SHEET NO. 17 OF 27

IF A SEAL IS PRESENT ON THIS SHEET IT HAS BEEN ELECTRONICALLY SEALED AND DATED.

SPAN (S) = 12 FT HEIGHT (HT) = 6 FT OR 7 FT OR 8 FT

DESIGN FILL	MEMBER THICKNESS				TOP SLAB BARS												BOTTOM SLAB BARS												WALL BARS				
					A1 BARS		J3 BARS						H1 BARS			H2 BARS			A2 BARS		J4 BARS					H3 BARS			B1 BARS		B2 BARS		
	TS	BS	TX	TI	SIZE	SPA.	SIZE	SPA.	C1	K2			SIZE	SPA.	C5	SIZE	SPA.	C6	SIZE	SPA.	SIZE	SPA.	C4	K3			SIZE	SPA.	C7	SIZE	SPA.	SIZE	SPA.	G1
										HT=6′	HT=7′	HT=8′												HT=6′	HT=7′	HT=8′							
1 FT	14	10	8	8	5	6	4	6	56.1	30.0	30.0	30.0	5	12	115.0	5	12	31.5	5	7.5	5	6.5	52.4	78	90	102	6	6.5	56.5	5	12	5	12	12
2 FT	15	11	8	8	6	8	4	6.5	59.1	31.0	31.0	31.0	6	16	118.0	6	16	39.0	5	7.5	5	7.5	47.9	79	91	103	6	6.5	56.0	5	12	5	12	12
4 FT	11	10	8	8	5	6.5	5	7	43.6	31.0	31.0	31.0	6	15	77.5	6	15	36.5	5	6.5	5	6	42.6	78	90	102	7	6.5	58.5	5	12	5	12	12
6 FT	11	11	8	8	5	7	5	6.5	40.9	27.0	31.0	31.0	6	14	63.0	6	14	35.0	5	6.5	5	7	39.3	79	91	103	7	6.5	57.5	5	12	5	12	12
8 FT	11	13	8	8	5	7	5	6	39.1	27.0	27.0	31.0	6	12	58.0	6	12	34.0	5	6	5	8.5	36.3	81	93	105	6	6	54.5	5	12	5	12	0
10 FT	12	14	8	8	5	6.5	5	6.5	37.0	28.0	28.0	32.0	6	12	56.5	6	12	33.5	6	8	5	8.5	34.5	82	94	106	6	6	54.5	5	12	5	12	0
12 FT	14	15	8	8	5	6	5	8	34.6	30.0	34.0	34.0	6	13	55.5	6	13	33.5	6	7.5	5	8.5	33.8	83	95	107	7	7	57.0	5	12	5	12	0
14 FT	15	16	8	8	6	8	5	7.5	38.4	31.0	35.0	35.0	6	12	61.0	6	12	39.5	6	7.5	5	8	32.9	84	96	108	7	7	57.0	5	12	5	12	0
16 FT	16	17	8	8	6	8	5	7	37.5	32.0	36.0	36.0	7	16	65.5	7	16	44.5	6	7	5	7	32.3	85	97	109	7	6.5	57.0	5	12	5	12	0
18 FT	17	19	8	8	6	7.5	5	6.5	37.0	37.0	37.0	37.0	7	15	65.0	7	15	44.0	6	7	5	6.5	31.6	87	99	111	7	7	57.0	5	12	5	10.5	0
20 FT	18	20	8	8	6	7	5	6.5	36.4	38.0	38.0	38.0	7	15	64.5	7	15	44.0	6	6.5	5	6	31.3	88	100	112	7	7	57.0	5	12	5	9.5	0
22 FT	19	21	8	8	6	6	5	6	36.0	39.0	39.0	39.0	7	14	64.0	7	14	44.0	6	6.5	6	7.5	34.1	89	101	113	7	7	57.0	5	12	5	9.5	0
24 FT	21	22	8	8	6	6	6	7	39.6	45.0	45.0	45.0	7	15	63.5	7	15	44.0	6	6.5	6	7	34.4	90	102	114	7	7	56.5	5	12	5	9.5	0
26 FT	21	23	8	8	6	6	6	7	38.3	45.0	45.0	45.0	7	14	63.0	7	14	43.5	6	6.5	6	6.5	32.8	91	103	115	7	7	56.5	5	12	5	9.5	0
28 FT	23	24	8	8	6	6	6	6	38.3	47.0	47.0	47.0	7	15	62.0	7	15	43.0	6	6	6	6	33.0	92	104	116	7	7	56.5	5	12	5	9	0
30 FT	23	25	8	8	7	7	6	6	38.3	47.0	47.0	47.0	7	14	62.0	7	14	43.5	6	6	6	6	33.0	93	105	117	7	6.5	56.5	5	12	5	8.5	0
32 FT	25	27	9	8	7	7.5	6	6.5	39.1	49.0	49.0	49.0	7	14	61.0	7	14	41.5	6	6	6	6.5	33.8	95	107	119	7	6	56.5	5	12	5	8.5	0
34 FT	25	28	9	8	7	6.5	6	6.5	39.3	49.0	49.0	49.0	7	13	61.0	7	13	42.5	6	6	6	6	33.8	96	108	120	7	6	56.5	5	12	5	8.5	0
36 FT	26	29	9	8	7	6.5	6	6.5	39.3	50.0	50.0	50.0	7	13	60.0	7	13	41.5	6	6	6	6	33.9	97	109	121	8	7.5	62.5	5	12	5	8	0
38 FT	27	30	10	8	7	6.5	6	7	40.1	51.0	51.0	51.0	7	13	59.0	7	13	41.0	6	6	6	6.5	34.5	98	110	122	8	7.5	62.5	5	12	5	8	0
40 FT	28	31	10	8	7	6.5	6	6.5	40.1	52.0	52.0	52.0	7	12	58.5	7	12	40.0	7	8	6	6	34.6	99	111	123	8	7	62.5	5	12	5	8	0
42 FT	29	32	10	8	7	6.5	6	6.5	40.1	53.0	53.0	53.0	7	12	57.5	7	12	39.0	7	8	6	6	34.9	100	112	124	8	7	62.5	5	12	5	7.5	0
44 FT	30	33	10	8	7	6.5	6	6	40.3	54.0	54.0	54.0	7	12	56.5	7	12	38.5	7	7.5	7	6.5	38.1	101	113	125	8	6.5	62.0	5	12	5	7	0
46 FT	31	34	10	8	7	6	6	6	40.3	55.0	55.0	55.0	8	15	64.0	8	15	45.5	7	7.5	7	6.5	38.3	102	114	126	8	6.5	62.0	5	12	5	6.5	0
48 FT	31	34	11	8	7	6	6	6.5	41.0	55.0	55.0	55.0	8	15	64.0	8	15	46.0	7	6.5	6	6	35.6	102	114	126	8	6.5	62.5	5	12	5	7.5	0
50 FT	32	35	11	8	8	7.5	6	6.5	41.0	56.0	56.0	56.0	8	15	63.5	8	15	45.5	7	7	6	6	35.8	103	115	127	8	6.5	62.0	5	12	5	7	0

SPAN (S) = 12 FT HEIGHT (HT) = 9 FT OR 10 FT OR 11 FT

DESIGN FILL	MEMBER THICKNESS				TOP SLAB BARS												BOTTOM SLAB BARS												WALL BARS				
					A1 BARS		J3 BARS						H1 BARS			H2 BARS			A2 BARS		J4 BARS					H3 BARS			B1 BARS		B2 BARS		
	TS	BS	TX	TI	SIZE	SPA.	SIZE	SPA.	C1	K2			SIZE	SPA.	C5	SIZE	SPA.	C6	SIZE	SPA.	SIZE	SPA.	C4	K3			SIZE	SPA.	C7	SIZE	SPA.	SIZE	SPA.	G1
										HT=9′	HT=10′	HT=11′												HT=9′	HT=10′	HT=11′							
1 FT	14	11	8	9	5	6	5	8	58.3	34.0	34.0	34.0	5	12	117.5	5	12	32.0	5	7.5	6	6.5	77.5	115	127	139	6	7	57.0	5	12	5	10	12
2 FT	15	12	8	9	6	8	5	8	62.3	35.0	35.0	35.0	6	16	121.5	6	16	39.5	5	7.5	6	7	71.9	116	128	140	6	7	56.5	5	12	5	10	12
4 FT	11	11	9	9	5	6.5	6	7	76.1	31.0	31.0	35.0	6	15	86.0	6	15	37.0	5	6.5	6	7	61.8	115	127	139	6	6	56.0	5	11.5	5	10.5	12
6 FT	11	12	9	9	5	7	6	7	59.0	31.0	31.0	35.0	6	14	63.0	6	14	35.5	5	6	6	7	57.6	116	128	140	6	6	55.0	5	12	5	10	12
8 FT	11	13	9	9	5	7	6	7	54.0	31.0	31.0	35.0	6	13	58.0	6	13	34.5	5	6	6	7	54.5	117	129	141	6	6	55.0	5	12	5	9.5	0
10 FT	12	14	10	9	5	7	5	6	49.0	32.0	32.0	32.0	6	12	56.0	6	12	34.0	6	8	5	6.5	49.3	118	130	142	7	7	57.5	5	12	5	10	0
12 FT	13	15	10	9	5	6.5	6	7.5	50.1	33.0	33.0	33.0	6	12	55.0	6	12	33.5	6	7.5	5	6.5	47.6	119	131	143	7	7	57.5	5	12	5	9	0
14 FT	15	16	10	9	6	8	5	6	50.6	35.0	35.0	35.0	6	12	60.0	6	12	39.5	6	7	5	6	46.4	120	132	144	7	7	57.0	5	12	5	8	0
16 FT	16	17	10	9	6	8	6	7.5	53.8	36.0	36.0	36.0	6	12	60.0	6	12	39.5	6	6.5	5	6	45.4	121	133	145	7	6.5	57.0	5	12	5	8	0
18 FT	17	19	10	9	6	7.5	6	7	53.1	37.0	37.0	41.0	7	16	64.5	7	16	44.5	6	7	6	7.5	47.8	123	135	147	7	7	57.0	5	12	5	8	0
20 FT	18	20	11	9	6	7	6	7.5	53.1	38.0	38.0	38.0	7	15	64.0	7	15	44.0	6	6.5	5	6	44.6	124	136	148	7	7	57.0	5	12	5	7.5	0
22 FT	19	21	12	9	6	6.5	6	7.5	53.5	39.0	39.0	39.0	7	15	63.5	7	15	44.0	6	6.5	5	6.5	44.8	125	137	149	7	7	57.0	5	12	5	7.5	0
24 FT	20	23	12	9	6	6.5	6	7	53.4	40.0	40.0	40.0	7	15	63.0	7	15	44.0	6	6.5	5	6.5	44.6	127	139	151	7	7	57.0	5	12	5	7	0
26 FT	21	23	12	9	6	6	6	7.5	51.4	41.0	41.0	41.0	7	15	62.0	7	15	43.5	6	6	5	6.5	42.8	127	139	151	7	7	57.0	5	12	5	7	0
28 FT	22	25	12	9	6	6	6	7	51.4	42.0	42.0	42.0	7	15	61.5	7	15	43.5	6	6.5	5	6.5	42.9	129	141	153	7	6.5	57.0	5	12	5	7	0
30 FT	23	26	12	9	7	7.5	6	6.5	51.3	43.0	43.0	43.0	7	15	61.0	7	15	43.5	6	6	5	6	43.0	130	142	154	7	6.5	57.0	5	12	5	7	0
32 FT	24	27	13	9	7	7.5	6	7	52.0	44.0	44.0	44.0	7	14	60.5	7	14	42.5	6	6	5	6	43.4	131	143	155	7	6	57.0	5	12	5	6.5	0
34 FT	25	28	13	9	7	7	6	7	52.0	45.0	45.0	45.0	7	14	59.5	7	14	41.5	6	6	5	6	43.5	132	144	156	7	6	57.0	5	12	5	6.5	0
36 FT	26	29	13	9	7	7	6	6	51.9	46.0	50.0	50.0	7	13	58.5	7	13	41.0	6	6	6	8.5	46.6	133	145	157	8	7.5	63.0	5	12	5	6.5	0
38 FT	27	30	14	9	7	7	6	6.5	52.6	47.0	51.0	51.0	7	13	57.5	7	13	40.0	7	8	6	8	47.1	134	146	158	8	7.5	63.0	5	12	5	6	0
40 FT	28	31	14	9	7	6.5	6	6.5	52.6	52.0	52.0	52.0	7	12	56.5	7	12	39.0	7	7.5	6	7.5	47.3	135	147	159	8	7	63.0	5	12	5	6	0
42 FT	28	32	15	9	7	6	6	6.5	53.5	52.0	52.0	52.0	7	12	56.5	7	12	39.5	7	7.5	6	7.5	47.5	136	148	160	8	7	63.0	5	12	6	8	0
44 FT	29	33	15	9	7	6	6	6.5	53.4	53.0	53.0	53.0	7	12	56.0	7	12	38.5	7	7.5	6	7	47.8	137	149	161	8	6.5	63.0	5	12	6	8	0
46 FT	30	34	15	9	7	6	6	6	53.4	54.0	54.0	54.0	7	12	55.5	7	12	38.0	7	7.5	6	7	47.9	138	150	162	8	6.5	63.0	5	12	6	8	0
48 FT	31	35	16	9	7	6	6	6.5	54.1	55.0	55.0	55.0	7	12	55.0	7	12	37.5	7	7	6	6.5	48.4	139	151	163	8	6.5	63.0	5	12	6	8	0
50 FT	31	36	16	9	8	7.5	6	6	54.3	55.0	55.0	55.0	7	12	55.0	7	12	37.5	7	7	6	6.5	48.4	140	152	164	8	6.5	63.0	5	12	6	8	0

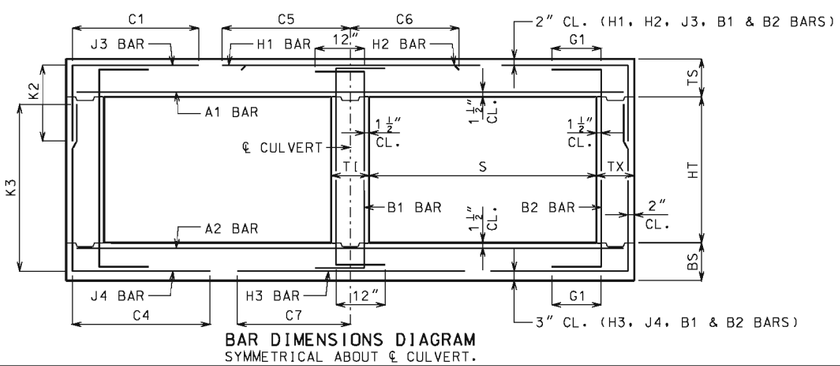

BAR DIMENSIONS DIAGRAM
SYMMETRICAL ABOUT ℄ CULVERT.

IF A SEAL IS PRESENT ON THIS SHEET IT HAS BEEN ELECTRONICALLY SEALED AND DATED.

GENERAL NOTES:

IF DESIGN FILL IS BETWEEN TABULATED DESIGN FILLS, USE THE NEXT GREATER TABULATED DESIGN FILL, EXCEPT FOR DESIGN FILLS BETWEEN 2 FEET AND 4 FEET. FOR DESIGN FILLS BETWEEN 2 FEET AND 4 FEET USE THE GREATER MEMBER THICKNESS, AREA OF REINFORCEMENT AND BAR DIMENSIONS FROM THE 2 FEET AND 4 FEET TABULATED DESIGN FILLS. AREA OF REINFORCEMENT EQUALS BAR AREA PER FOOT SPACING.

SPECIAL DESIGNS ARE REQUIRED WHEN THE DESIGN FILL IS LESS THAN 1 FOOT OR GREATER THAN 50 FEET.

DIMENSIONS ARE IN INCHES UNLESS OTHERWISE SPECIFIED.

DESIGN FILLS ARE MEASURED FROM THE TOP OF TOP SLAB TO THE TOP OF EARTH FILL OR ROADWAY.

CULVERTS MEET STRENGTH AND SERVICEABILITY REQUIREMENTS FOR THE DESIGN VEHICULAR LIVE LOAD HL-93 MINUS THE LANE LOAD.

MISSOURI HIGHWAYS AND TRANSPORTATION COMMISSION
105 WEST CAPITOL
JEFFERSON CITY, MO 65102
1-888-ASK-MODOT (1-888-275-6636)

STATE OF MISSOURI
DENNIS W. HECKMAN
NUMBER PE-27141
PROFESSIONAL ENGINEER
THIS SHEET HAS BEEN SIGNED, SEALED AND DATED ELECTRONICALLY.

CONCRETE DOUBLE BOX CULVERT

MEMBER THICKNESS
BAR SIZE, SPACING & DIMENSIONS

SPAN (S): 12 FEET
HEIGHT (HT): 6 THRU 11 FEET

DATE EFFECTIVE: 10/01/2011
DATE PREPARED: 9/8/2011

703.47

SPAN (S) = 12 FT HEIGHT (HT) = 12 FT OR 13 FT

DESIGN FILL	MEMBER THICKNESS				TOP SLAB BARS												BOTTOM SLAB BARS										WALL BARS				
					A1 BARS		J3 BARS			K2		H1 BARS			H2 BARS		A2 BARS		J4 BARS			K3		H3 BARS			B1 BARS		B2 BARS		
	TS	BS	TX	TI	SIZE	SPA.	SIZE	SPA.	C1	HT=12′	HT=13′	SIZE	SPA.	C5	SIZE	SPA.	C6	SIZE	SPA.	SIZE	SPA.	C4	HT=12′	HT=13′	SIZE	SPA.	C7	SIZE	SPA.	SIZE	SPA.	G1
1 FT	14	11	9	10	5	6	5	6.5	59.0	34.0	34.0	5	12	118.0	5	12	32.5	5	7	6	6	88.9	151	163	6	6.5	57.5	5	12	5	8.5	12
2 FT	15	12	9	10	6	8	5	7	63.0	35.0	35.0	6	16	122.0	6	16	39.5	5	7	6	6	83.6	152	164	6	7	57.0	5	12	5	8.5	12
4 FT	11	12	9	10	5	6.5	6	7	61.0	35.0	35.0	6	15	120.0	6	15	37.0	5	6.5	6	6	76.5	152	164	6	6.5	56.5	5	12	5	8.5	12
6 FT	11	12	9	10	5	7	6	6.5	73.5	35.0	35.0	6	14	63.5	6	14	35.5	5	6	6	6	70.0	152	164	6	6	55.5	5	12	5	8.5	12
8 FT	11	13	10	10	5	7	6	7	63.9	31.0	35.0	6	13	58.0	6	13	34.5	5	6	6	6.5	65.8	153	165	6	6	55.0	5	12	5	8	0
10 FT	12	14	10	10	5	7	6	7	61.6	36.0	36.0	6	12	56.5	6	12	34.5	6	8	6	6	63.1	154	166	7	7	57.5	5	12	5	8	0
12 FT	13	15	11	10	5	6.5	6	7.5	59.9	33.0	37.0	6	12	55.0	6	12	34.0	6	7.5	6	6.5	61.4	155	167	7	7	57.5	5	12	5	7.5	0
14 FT	14	16	12	10	5	6	6	7.5	58.8	34.0	38.0	6	12	54.5	6	12	34.0	6	7	6	7.5	60.0	156	168	7	7	57.5	5	12	5	7	0
16 FT	16	18	12	10	6	8	6	7	64.1	36.0	40.0	6	12	60.0	6	12	40.0	6	7	6	7.5	59.5	158	170	6	6	54.0	5	12	5	7	0
18 FT	17	19	12	10	6	7.5	6	6.5	63.1	37.0	41.0	6	12	59.5	6	12	39.5	6	7	6	6.5	58.5	159	171	7	7	57.0	5	12	5	7	0
20 FT	18	20	13	10	6	7	6	6.5	62.6	38.0	42.0	6	12	58.5	6	12	39.5	6	6.5	6	7.5	57.9	160	172	7	7	57.0	5	12	5	6.5	0
22 FT	19	21	13	10	6	6.5	6	6.5	62.3	39.0	43.0	7	16	63.0	7	16	44.5	6	6	6	6.5	57.5	161	173	7	7	57.0	5	12	5	6.5	0
24 FT	20	23	14	10	6	6.5	6	6.5	62.5	40.0	44.0	7	16	62.5	7	16	44.0	6	6.5	6	7.5	57.8	163	175	7	7	57.0	5	12	5	6	0
26 FT	21	24	14	10	6	6	6	6	62.3	41.0	45.0	7	15	62.0	7	15	44.0	6	6.5	6	7	57.6	164	176	7	7	57.0	5	12	5	6	0
28 FT	22	25	14	10	6	6	6	6	59.8	42.0	46.0	7	15	61.0	7	15	43.5	6	6.5	6	7.5	55.1	165	177	7	6.5	57.0	5	12	5	6	0
30 FT	23	26	15	10	7	8	6	6	60.3	47.0	47.0	7	15	60.0	7	15	42.5	6	6	6	7.5	55.4	166	178	7	6.5	57.0	5	12	6	8	0
32 FT	24	27	15	10	7	7.5	6	6	60.3	48.0	48.0	7	14	59.5	7	14	42.0	6	6	6	7.5	55.5	167	179	7	6	57.0	5	12	6	8	0
34 FT	25	28	16	10	7	7.5	6	6	60.9	49.0	49.0	7	14	58.5	7	14	41.0	6	6	6	7.5	55.8	168	180	7	6	57.0	5	12	6	8	0
36 FT	25	29	16	10	7	6.5	7	7.5	65.8	49.0	49.0	7	13	58.5	7	13	41.5	6	6	6	7.5	55.8	169	181	8	7.5	63.0	5	12	6	8	0
38 FT	26	30	17	10	7	7	6	6	61.5	50.0	50.0	7	13	57.5	7	13	40.5	7	7.5	6	7	56.1	170	182	8	7.5	63.0	5	12	6	7.5	0
40 FT	27	31	17	10	7	6.5	7	7.5	66.5	51.0	51.0	7	13	57.0	7	13	40.0	7	7.5	6	7	56.3	171	183	8	7	63.0	5	12	6	7.5	0
42 FT	28	32	18	10	7	6.5	7	7.5	67.1	52.0	52.0	7	12	56.5	7	12	39.0	7	7.5	6	6.5	56.6	172	184	8	7	63.0	5	12	6	7	0
44 FT	29	33	18	10	7	6.5	7	7	67.1	53.0	53.0	7	12	56.0	7	12	38.0	7	7.5	6	6.5	56.9	173	185	8	6.5	63.0	5	12	6	7	0
46 FT	29	34	19	10	7	6	7	7.5	67.9	53.0	53.0	7	12	56.0	7	12	38.5	7	7.5	6	6.5	57.0	174	186	8	6.5	63.0	5	12	6	6.5	0
48 FT	30	35	19	10	7	6	7	6.5	67.9	54.0	54.0	7	12	55.0	7	12	38.0	7	7	6	6.5	57.3	175	187	8	6.5	63.0	5	12	6	6.5	0
50 FT	31	36	20	10	7	6	7	7	68.6	55.0	55.0	7	13	54.5	7	13	37.5	7	7	6	6.5	57.6	176	188	8	6	63.0	5	12	6	6.5	0

SPAN (S) = 12 FT HEIGHT (HT) = 14 FT OR 15 FT

DESIGN FILL	MEMBER THICKNESS				TOP SLAB BARS												BOTTOM SLAB BARS										WALL BARS				
					A1 BARS		J3 BARS			K2		H1 BARS			H2 BARS		A2 BARS		J4 BARS			K3		H3 BARS			B1 BARS		B2 BARS		
	TS	BS	TX	TI	SIZE	SPA.	SIZE	SPA.	C1	HT=14′	HT=15′	SIZE	SPA.	C5	SIZE	SPA.	C6	SIZE	SPA.	SIZE	SPA.	C4	HT=14′	HT=15′	SIZE	SPA.	C7	SIZE	SPA.	SIZE	SPA.	G1
1 FT	14	12	10	12	5	6	5	6	60.0	34.0	34.0	5	12	119.0	5	12	32.5	5	7	6	6	98.8	176	188	6	7	58.0	5	12	5	8	12
2 FT	15	12	10	12	6	8	6	8	67.0	35.0	39.0	6	16	126.0	6	16	40.0	5	6.5	6	6	92.5	176	188	6	6.5	57.0	5	12	5	8	12
4 FT	11	13	10	12	5	6.5	6	6.5	62.0	35.0	35.0	6	16	121.0	6	16	37.5	5	6.5	6	6	89.8	177	189	6	7	57.0	5	12	5	7	12
6 FT	11	13	11	12	5	7	6	7	83.8	31.0	35.0	6	15	61.0	6	15	36.0	5	6	6	6.5	81.4	177	189	6	6.5	56.0	5	12	5	7	12
8 FT	11	13	12	12	5	7	6	7.5	73.9	35.0	35.0	6	13	57.5	6	13	35.0	5	6	6	6.5	76.1	177	189	7	7	58.0	5	12	5	7	0
10 FT	12	14	12	12	5	7	6	7	71.4	36.0	36.0	6	13	56.0	6	13	35.0	6	8	6	6.5	74.1	178	190	7	7	58.0	5	12	5	7	0
12 FT	13	15	13	12	5	6.5	6	7.5	68.8	37.0	37.0	6	13	55.0	6	13	34.5	6	7.5	6	6.5	71.6	179	191	7	7	57.5	5	12	5	6.5	0
14 FT	14	16	13	12	5	6	6	6.5	67.3	38.0	38.0	6	12	54.5	6	12	34.5	6	6.5	6	6	70.1	180	192	7	7	57.5	5	12	5	6.5	0
16 FT	15	18	14	12	6	8	6	6.5	72.1	39.0	39.0	6	12	60.0	6	12	40.5	6	7	6	6.5	69.5	182	194	6	6	54.5	5	12	5	6	0
18 FT	17	19	14	12	6	7.5	6	6	72.1	41.0	41.0	6	12	59.5	6	12	40.5	6	6.5	6	6	68.1	183	195	6	6	54.5	5	12	5	6	0
20 FT	18	20	15	12	6	7	6	6	71.5	42.0	42.0	6	12	59.0	6	12	40.0	6	6.5	6	6	67.1	184	196	7	7	57.5	5	12	6	8	0
22 FT	19	22	16	12	6	6.5	6	6	71.4	43.0	43.0	6	12	58.5	6	12	40.0	6	6.5	6	6	67.4	186	198	7	7	57.5	5	12	6	8	0
24 FT	20	23	16	12	6	6.5	6	6	71.3	44.0	44.0	6	12	58.0	6	12	40.0	6	6.5	6	6	67.1	187	199	7	7	57.5	5	12	6	8	0
26 FT	21	24	17	12	6	6	6	6	71.4	45.0	45.0	6	12	57.0	6	12	39.5	6	6	6	6	67.1	188	200	7	7	57.5	5	12	6	7.5	0
28 FT	22	25	17	12	6	6	6	6	69.1	46.0	46.0	7	15	61.5	7	15	44.0	6	6	6	6.5	64.9	189	201	7	6.5	57.5	5	12	6	7.5	0
30 FT	23	26	17	12	6	6	7	7.5	74.1	47.0	47.0	7	15	61.0	7	15	43.0	6	6	6	6.5	64.9	190	202	7	6.5	57.5	5	12	6	7.5	0
32 FT	23	27	17	12	7	7	7	6.5	74.0	47.0	47.0	7	14	61.0	7	14	44.0	6	6	6	6	65.0	191	203	7	6	57.5	5	12	6	7.5	0
34 FT	24	28	18	12	7	7	7	7	74.5	48.0	48.0	7	14	60.0	7	14	43.0	6	6	6	6	65.3	192	204	7	6	57.5	5	12	6	7	0
36 FT	25	29	19	12	7	7	7	7	75.0	49.0	49.0	7	14	59.0	7	14	42.0	7	7.5	6	6.5	65.5	193	205	8	7.5	63.5	5	12	6	6.5	0
38 FT	26	30	20	12	7	7	7	7.5	75.5	50.0	50.0	7	13	58.0	7	13	41.5	7	7.5	6	6	65.9	194	206	8	7.5	63.5	5	12	6	6.5	0
40 FT	27	31	20	12	7	7	7	6.5	75.6	51.0	51.0	7	13	57.5	7	13	40.5	7	7.5	6	6	66.0	195	207	8	7	63.5	5	12	6	6.5	0
42 FT	28	32	21	12	7	6.5	7	7	76.3	52.0	52.0	7	12	57.0	7	12	39.5	7	7	6	6	66.4	196	208	8	7	63.5	5	12	6	6	0
44 FT	28	33	22	12	7	6.5	7	7	76.6	52.0	58.0	7	12	57.0	7	12	40.0	7	7	7	7.5	69.6	197	209	8	6.5	63.5	5	12	6	6	0
46 FT	29	34	22	12	7	6.5	7	6	76.8	53.0	59.0	7	12	56.5	7	12	39.0	7	7	7	7.5	69.9	198	210	8	6.5	63.5	5	12	6	6	0
48 FT	30	35	24	12	7	6	7	7	78.0	54.0	60.0	7	12	56.0	7	12	39.0	7	7	7	7.5	70.4	199	211	8	6.5	64.0	5	12	6	6	0
50 FT	30	36	24	12	7	6	7	6	78.0	54.0	60.0	7	12	56.0	7	12	39.0	7	7	7	7.5	70.5	200	212	8	6	64.0	5	12	7	8	0

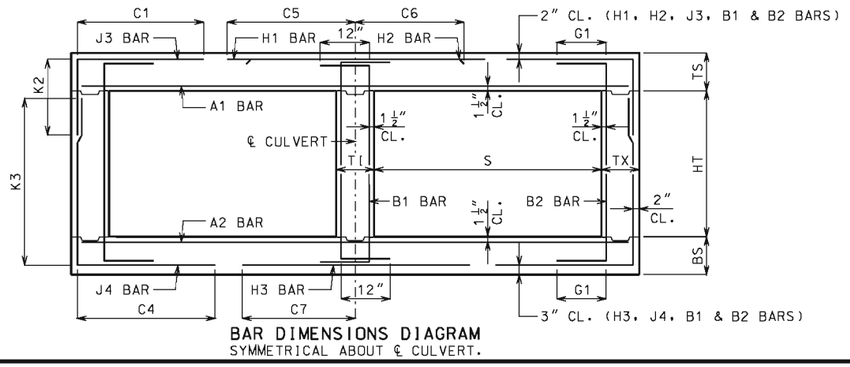

BAR DIMENSIONS DIAGRAM
SYMMETRICAL ABOUT ℄ CULVERT.

IF A SEAL IS PRESENT ON THIS SHEET IT HAS BEEN ELECTRONICALLY SEALED AND DATED.

GENERAL NOTES:

IF DESIGN FILL IS BETWEEN TABULATED DESIGN FILLS, USE THE NEXT GREATER TABULATED DESIGN FILL, EXCEPT FOR DESIGN FILLS BETWEEN 2 FEET AND 4 FEET. FOR DESIGN FILLS BETWEEN 2 FEET AND 4 FEET USE THE GREATER MEMBER THICKNESS, AREA OF REINFORCEMENT AND BAR DIMENSIONS FROM THE 2 FEET AND 4 FEET TABULATED DESIGN FILLS. AREA OF REINFORCEMENT EQUALS BAR AREA PER FOOT SPACING.

SPECIAL DESIGNS ARE REQUIRED WHEN THE DESIGN FILL IS LESS THAN 1 FOOT OR GREATER THAN 50 FEET.

DIMENSIONS ARE IN INCHES UNLESS OTHERWISE SPECIFIED.

DESIGN FILLS ARE MEASURED FROM THE TOP OF TOP SLAB TO THE TOP OF EARTH FILL OR ROADWAY.

CULVERTS MEET STRENGTH AND SERVICEABILITY REQUIREMENTS FOR THE DESIGN VEHICULAR LIVE LOAD HL-93 MINUS THE LANE LOAD.

MISSOURI HIGHWAYS AND TRANSPORTATION COMMISSION
105 WEST CAPITOL
JEFFERSON CITY, MO 65102
1-888-ASK-MODOT (1-888-275-6636)

STATE OF MISSOURI
DENNIS W. HECKMAN
NUMBER PE-27141
PROFESSIONAL ENGINEER
THIS SHEET HAS BEEN SIGNED, SEALED AND DATED ELECTRONICALLY.

CONCRETE DOUBLE BOX CULVERT

MEMBER THICKNESS
BAR SIZE, SPACING & DIMENSIONS

SPAN (S): 12 FEET
HEIGHT (HT): 12 THRU 15 FEET

DATE EFFECTIVE: 10/01/2011
DATE PREPARED: 9/8/2011

703.47

SHEET NO.
19 OF 27

SPAN (S) = 13 FT HEIGHT (HT) = 7 FT OR 8 FT OR 9 FT

DESIGN FILL	MEMBER THICKNESS				TOP SLAB BARS												BOTTOM SLAB BARS												WALL BARS				
					A1 BARS		J3 BARS						H1 BARS			H2 BARS			A2 BARS		J4 BARS					H3 BARS			B1 BARS		B2 BARS		
	TS	BS	TX	TI	SIZE	SPA.	SIZE	SPA.	C1	K2 HT=7′	K2 HT=8′	K2 HT=9′	SIZE	SPA.	C5	SIZE	SPA.	C6	SIZE	SPA.	SIZE	SPA.	C4	K3 HT=7′	K3 HT=8′	K3 HT=9′	SIZE	SPA.	C7	SIZE	SPA.	SIZE	SPA.	G1
1 FT	14	10	8	8	5	6	5	8.5	61.8	30.0	34.0	34.0	5	12	125.5	5	12	36.5	5	7	6	7	61.0	90	102	114	6	6	60.0	5	12	5	12	12
2 FT	15	12	8	8	6	8	5	8	65.8	31.0	35.0	35.0	6	16	129.5	6	16	43.5	5	7	5	7	53.8	92	104	116	6	6.5	59.5	5	12	5	12	12
4 FT	11	11	8	8	6	8	6	7	52.1	31.0	31.0	31.0	6	13	82.0	6	13	38.0	5	6.5	5	6	46.5	91	103	115	7	6.5	62.0	5	11	5	12	12
6 FT	12	12	8	8	5	6.5	5	6.5	44.1	32.0	32.0	32.0	6	13	68.0	6	13	36.5	5	6	5	6.5	42.8	92	104	116	7	6.5	61.0	5	12	5	12	12
8 FT	12	13	8	8	5	6	5	6	41.5	32.0	32.0	32.0	7	16	65.0	7	16	38.5	5	6	5	6.5	40.0	93	105	117	7	6.5	60.5	5	12	5	12	0
10 FT	13	15	8	8	5	6	5	6	39.5	29.0	33.0	33.0	7	15	63.0	7	15	38.0	6	7.5	5	8	38.0	95	107	119	7	7	60.5	5	12	5	12	0
12 FT	15	16	8	8	6	8	5	6.5	42.4	35.0	35.0	35.0	7	16	70.0	7	16	46.0	6	7	5	7.5	37.1	96	108	120	7	6.5	60.0	5	12	5	11	0
14 FT	16	17	8	8	6	8	5	6	41.1	36.0	36.0	36.0	7	15	69.0	7	15	46.0	6	7	5	7	36.1	97	109	121	7	6.5	60.0	5	12	5	10	0
16 FT	17	18	8	8	6	7.5	5	6	40.1	37.0	37.0	37.0	7	14	68.5	7	14	45.5	6	6	5	6.5	35.4	98	110	122	7	6.5	60.0	5	12	5	9.5	0
18 FT	18	20	8	8	6	6.5	6	8	43.5	38.0	38.0	38.0	7	14	68.0	7	14	45.5	6	6.5	5	6	34.8	100	112	124	7	6.5	60.0	5	12	5	9.5	0
20 FT	20	21	8	8	6	6.5	6	7.5	42.6	44.0	44.0	44.0	7	14	67.0	7	14	45.5	6	6	6	7.5	37.5	101	113	125	7	6.5	60.0	5	12	5	9	0
22 FT	21	23	8	8	6	6	6	6.5	42.5	45.0	45.0	45.0	7	14	66.5	7	14	45.0	6	6	6	6.5	37.3	103	115	127	7	6.5	60.0	5	12	5	8	0
24 FT	22	24	9	8	6	6	6	7.5	43.1	42.0	42.0	46.0	7	13	66.0	7	13	45.0	6	6	6	7	37.6	104	116	128	7	6.5	60.0	5	12	5	8.5	0
26 FT	23	25	9	8	7	7.5	6	6.5	42.9	47.0	47.0	47.0	7	13	65.5	7	13	45.0	6	6	6	7	37.6	105	117	129	7	6.5	60.0	5	12	5	8.5	0
28 FT	24	26	9	8	7	7.5	6	7	41.3	48.0	48.0	48.0	7	13	64.5	7	13	44.5	7	8	6	6.5	36.1	106	118	130	7	6.5	59.5	5	12	5	8.5	0
30 FT	25	27	9	8	7	7	6	6	41.3	49.0	49.0	49.0	7	13	64.0	7	13	44.5	7	7.5	6	6.5	36.3	107	119	131	7	6	59.5	5	12	5	7.5	0
32 FT	26	29	10	8	7	7	6	7	42.3	50.0	50.0	50.0	7	13	63.5	7	13	44.0	7	8	6	6.5	36.9	109	121	133	8	7.5	65.5	5	12	5	8	0
34 FT	27	30	10	8	7	6.5	6	6.5	42.3	51.0	51.0	51.0	7	13	62.5	7	13	43.5	7	7.5	6	6.5	37.0	110	122	134	8	7.5	65.5	5	12	5	7.5	0
36 FT	28	31	11	8	7	6.5	6	7.5	43.1	52.0	52.0	52.0	7	12	62.0	7	12	42.5	7	7.5	6	7	37.5	111	123	135	8	7	65.5	5	12	5	7.5	0
38 FT	29	32	11	8	7	6	6	7	43.1	53.0	53.0	53.0	7	12	61.0	7	12	41.5	7	7.5	6	6.5	37.6	112	124	136	8	7	65.5	5	12	5	7.5	0
40 FT	30	33	11	8	7	6	6	7	43.1	54.0	54.0	54.0	7	12	60.0	7	12	41.0	7	7	6	6.5	37.9	113	125	137	8	6.5	65.5	5	12	5	7	0
42 FT	31	34	12	8	7	6	6	7.5	44.0	55.0	55.0	55.0	8	15	67.0	8	15	48.0	7	7	6	7	38.4	114	126	138	8	6.5	65.5	5	12	5	7	0
44 FT	32	35	12	8	8	7.5	6	7	44.0	56.0	56.0	56.0	8	14	66.5	8	14	47.0	7	7	6	6.5	38.5	115	127	139	8	6.5	65.5	5	12	5	7	0
46 FT	33	36	12	8	8	7	6	7	44.0	57.0	57.0	57.0	8	14	66.0	8	14	46.0	7	7	6	6.5	38.8	116	128	140	8	6	65.5	5	12	5	6.5	0
48 FT	33	37	12	8	8	6.5	6	7	44.0	57.0	57.0	57.0	8	13	66.0	8	13	46.5	7	6.5	6	6.5	38.8	117	129	141	8	6	65.5	5	12	5	6.5	0
50 FT	34	38	12	8	8	7	6	6	44.0	58.0	58.0	58.0	8	14	65.0	8	14	46.0	7	6.5	6	6	39.0	118	130	142	8	6	65.5	5	12	5	6	0

SPAN (S) = 13 FT HEIGHT (HT) = 10 FT OR 11 FT OR 12 FT

DESIGN FILL	MEMBER THICKNESS				TOP SLAB BARS												BOTTOM SLAB BARS												WALL BARS				
					A1 BARS		J3 BARS						H1 BARS			H2 BARS			A2 BARS		J4 BARS					H3 BARS			B1 BARS		B2 BARS		
	TS	BS	TX	TI	SIZE	SPA.	SIZE	SPA.	C1	K2 HT=10′	K2 HT=11′	K2 HT=12′	SIZE	SPA.	C5	SIZE	SPA.	C6	SIZE	SPA.	SIZE	SPA.	C4	K3 HT=10′	K3 HT=11′	K3 HT=12′	SIZE	SPA.	C7	SIZE	SPA.	SIZE	SPA.	G1
1 FT	14	11	9	10	5	6	5	7.5	62.6	34.0	34.0	34.0	5	12	126.5	5	12	36.5	5	6.5	6	6.5	81.1	127	139	151	6	6.5	60.5	5	11.5	5	9.5	12
2 FT	15	12	9	10	6	8	5	7.5	66.6	35.0	35.0	35.0	6	16	130.5	6	16	43.5	5	6.5	6	6.5	75.6	128	140	152	6	6.5	60.0	5	12	5	9	12
4 FT	11	11	9	10	6	8	6	7	78.5	35.0	35.0	35.0	6	13	84.0	6	13	38.0	5	6.5	6	6	66.3	127	139	151	7	6.5	62.0	5	9	5	8.5	12
6 FT	12	12	9	10	5	6.5	6	6.5	63.6	32.0	36.0	36.0	6	13	67.0	6	13	37.0	5	6	6	6	61.5	128	140	152	7	6.5	61.5	5	12	5	8.5	12
8 FT	12	14	9	10	5	6	6	6.5	58.3	32.0	32.0	36.0	6	12	61.5	6	12	36.0	6	8	6	6.5	59.1	130	142	154	7	7	61.0	5	12	5	8.5	0
10 FT	13	15	9	10	5	6	6	6	55.4	33.0	33.0	37.0	7	15	63.0	7	15	38.5	6	7.5	6	6.5	56.6	131	143	155	7	7	61.0	5	12	5	8.5	0
12 FT	14	16	10	10	5	6	6	6.5	53.6	34.0	34.0	38.0	7	15	61.5	7	15	38.5	6	7	6	7	54.6	132	144	156	7	6.5	60.5	5	12	5	8	0
14 FT	16	17	10	10	6	8	6	7	58.0	36.0	36.0	40.0	7	15	69.0	7	15	46.5	6	7	6	6.5	53.3	133	145	157	7	6.5	60.5	5	12	5	8	0
16 FT	17	19	11	10	6	7.5	6	7	57.5	37.0	37.0	41.0	7	15	68.5	7	15	46.0	6	6.5	6	8	52.4	135	147	159	7	7	60.5	5	12	5	7.5	0
18 FT	18	20	12	10	6	7	6	7.5	57.4	38.0	38.0	38.0	7	14	68.0	7	14	46.0	6	6.5	5	6	48.8	136	148	160	7	6.5	60.5	5	12	5	7	0
20 FT	19	21	12	10	6	6.5	6	7	56.6	39.0	39.0	43.0	7	14	67.5	7	14	46.0	6	6	6	8	51.1	137	149	161	7	6.5	60.5	5	12	5	7	0
22 FT	21	23	12	10	6	6	6	6.5	56.1	41.0	41.0	45.0	7	14	66.5	7	14	45.5	6	6	6	7.5	51.0	139	151	163	7	6.5	60.5	5	12	5	7	0
24 FT	22	24	13	10	6	6	6	7	56.5	42.0	42.0	46.0	7	14	66.0	7	14	45.5	6	6	6	8	51.1	140	152	164	7	6.5	60.5	5	12	5	6.5	0
26 FT	23	25	13	10	7	7.5	6	6.5	56.3	43.0	43.0	47.0	7	14	65.5	7	14	45.5	7	7.5	6	7.5	51.0	141	153	165	7	6.5	60.5	5	12	5	6.5	0
28 FT	24	26	13	10	7	7.5	6	6.5	54.4	44.0	44.0	48.0	7	14	64.5	7	14	45.0	7	7.5	6	8	49.1	142	154	166	7	6.5	60.0	5	12	5	6.5	0
30 FT	25	28	13	10	7	7	6	6	54.4	45.0	45.0	49.0	7	14	64.0	7	14	45.0	7	8	6	8	49.3	144	156	168	7	6	60.0	5	12	5	6.5	0
32 FT	26	29	14	10	7	7	6	6.5	55.1	46.0	50.0	50.0	7	13	63.5	7	13	44.0	7	7.5	6	8.5	49.8	145	157	169	8	7.5	66.0	5	12	5	6	0
34 FT	27	30	14	10	7	6.5	6	6	55.0	47.0	51.0	51.0	7	13	62.5	7	13	43.0	7	7.5	6	8	49.8	146	158	170	8	7.5	66.0	5	12	5	6	0
36 FT	28	31	15	10	7	6.5	6	6.5	55.8	52.0	52.0	52.0	7	12	61.5	7	12	42.5	7	7	6	7.5	50.3	147	159	171	8	7	66.0	5	12	6	8	0
38 FT	29	32	15	10	7	6	6	6	55.6	53.0	53.0	53.0	7	12	60.5	7	12	41.5	7	7	6	7.5	50.4	148	160	172	8	7	66.0	5	12	6	8	0
40 FT	30	33	16	10	7	6	6	6	56.4	54.0	54.0	54.0	7	12	59.5	7	12	41.0	7	6.5	6	7	50.8	149	161	173	8	6.5	66.0	5	12	6	8	0
42 FT	31	35	16	10	7	6	6	6	56.5	55.0	55.0	55.0	8	15	67.0	8	15	48.0	7	7	6	6.5	51.0	151	163	175	8	6.5	66.0	5	12	6	8	0
44 FT	31	35	16	10	8	7	7	7.5	61.4	55.0	55.0	55.0	8	14	67.0	8	14	48.5	7	6	6	6.5	50.9	151	163	175	8	6.5	66.0	5	12	6	8	0
46 FT	32	36	17	10	8	7.5	6	6	57.1	56.0	56.0	56.0	8	14	66.5	8	14	47.5	7	6	6	6.5	51.4	152	164	176	8	6	66.0	5	12	6	7.5	0
48 FT	33	37	17	10	8	7	7	7.5	62.1	57.0	57.0	57.0	8	14	66.0	8	14	47.0	7	6	6	6.5	51.5	153	165	177	8	6	66.0	5	12	6	7.5	0
50 FT	34	38	17	10	8	7	7	7	62.1	58.0	58.0	58.0	8	14	65.5	8	14	46.5	7	6	6	6	51.8	154	166	178	8	6	66.0	5	12	6	7.5	0

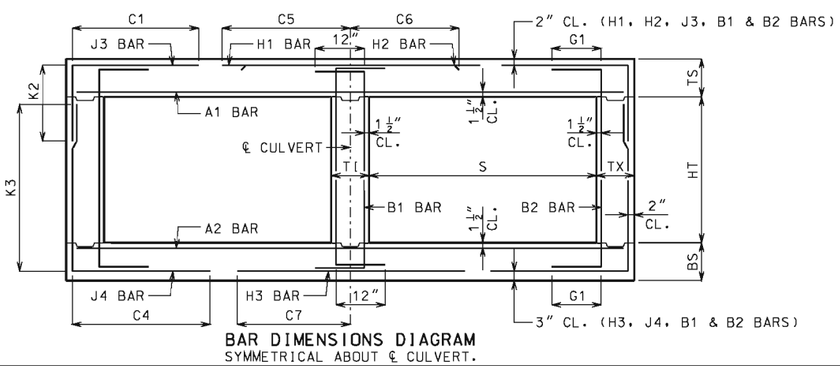

BAR DIMENSIONS DIAGRAM
SYMMETRICAL ABOUT ℄ CULVERT.

IF A SEAL IS PRESENT ON THIS SHEET IT HAS BEEN ELECTRONICALLY SEALED AND DATED.

GENERAL NOTES:

IF DESIGN FILL IS BETWEEN TABULATED DESIGN FILLS, USE THE NEXT GREATER TABULATED DESIGN FILL, EXCEPT FOR DESIGN FILLS BETWEEN 2 FEET AND 4 FEET. FOR DESIGN FILLS BETWEEN 2 FEET AND 4 FEET USE THE GREATER MEMBER THICKNESS, AREA OF REINFORCEMENT AND BAR DIMENSIONS FROM THE 2 FEET AND 4 FEET TABULATED DESIGN FILLS. AREA OF REINFORCEMENT EQUALS BAR AREA PER FOOT SPACING.

SPECIAL DESIGNS ARE REQUIRED WHEN THE DESIGN FILL IS LESS THAN 1 FOOT OR GREATER THAN 50 FEET.

DIMENSIONS ARE IN INCHES UNLESS OTHERWISE SPECIFIED.

DESIGN FILLS ARE MEASURED FROM THE TOP OF TOP SLAB TO THE TOP OF EARTH FILL OR ROADWAY.

CULVERTS MEET STRENGTH AND SERVICEABILITY REQUIREMENTS FOR THE DESIGN VEHICULAR LIVE LOAD HL-93 MINUS THE LANE LOAD.

MISSOURI HIGHWAYS AND TRANSPORTATION COMMISSION
105 WEST CAPITOL
JEFFERSON CITY, MO 65102
1-888-ASK-MODOT (1-888-275-6636)

STATE OF MISSOURI
DENNIS W. HECKMAN
NUMBER PE-27141
PROFESSIONAL ENGINEER
THIS SHEET HAS BEEN SIGNED, SEALED AND DATED ELECTRONICALLY.

CONCRETE DOUBLE BOX CULVERT

MEMBER THICKNESS
BAR SIZE, SPACING & DIMENSIONS

SPAN (S): 13 FEET
HEIGHT (HT): 7 THRU 12 FEET

DATE EFFECTIVE: 10/01/2011
DATE PREPARED: 9/8/2011

703.47

SPAN (S) = 13 FT HEIGHT (HT) = 13 FT OR 14 FT

DESIGN FILL	MEMBER THICKNESS				TOP SLAB BARS												BOTTOM SLAB BARS										WALL BARS				
					A1 BARS		J3 BARS			K2		H1 BARS			H2 BARS		A2 BARS		J4 BARS			K3		H3 BARS			B1 BARS		B2 BARS		
	TS	BS	TX	TI	SIZE	SPA.	SIZE	SPA.	C1	HT=13′	HT=14′	SIZE	SPA.	C5	SIZE	SPA.	C6	SIZE	SPA.	SIZE	SPA.	C4	HT=13′	HT=14′	SIZE	SPA.	C7	SIZE	SPA.	SIZE	SPA.	G1
1 FT	14	11	11	11	5	6	5	7	64.1	34.0	34.0	5	12	127.5	5	12	36.5	5	6.5	5	6	85.3	163	175	6	6	60.5	5	12	5	8	12
2 FT	15	12	11	11	6	8	5	7	68.1	35.0	35.0	6	16	131.5	6	16	43.5	5	6.5	5	6	80.9	164	176	6	6.5	60.0	5	12	5	7.5	12
4 FT	11	12	11	11	5	6	5	6	92.9	31.0	31.0	6	13	82.5	6	13	38.0	5	6	5	6	75.5	164	176	7	7	62.5	5	11.5	5	7.5	12
6 FT	11	12	11	11	5	6	6	7.5	74.6	31.0	35.0	6	12	64.5	6	12	37.0	5	6	6	6.5	72.1	164	176	7	6.5	61.5	5	12	5	7.5	12
8 FT	12	14	11	11	5	6.5	6	7.5	68.5	32.0	36.0	6	12	61.5	6	12	36.5	6	8	6	7	70.1	166	178	7	7	61.5	5	12	5	7.5	0
10 FT	13	15	11	11	5	6.5	6	7	65.9	37.0	37.0	6	12	59.5	6	12	36.0	6	7.5	6	6.5	67.4	167	179	7	6.5	61.0	5	12	5	7.5	0
12 FT	14	16	12	11	5	6	6	7	64.0	38.0	38.0	7	15	61.5	7	15	38.5	6	7	6	7	65.5	168	180	7	6.5	60.5	5	12	5	7	0
14 FT	15	17	12	11	6	7.5	6	6.5	68.5	39.0	39.0	7	15	69.0	7	15	46.5	6	6.5	6	6	64.1	169	181	7	6.5	60.5	5	12	5	7	0
16 FT	17	19	13	11	6	7.5	6	6.5	68.0	41.0	41.0	7	15	68.0	7	15	46.5	6	6.5	6	7	63.4	171	183	7	6.5	60.5	5	12	5	6.5	0
18 FT	18	20	13	11	6	7	6	6	66.9	42.0	42.0	7	15	67.5	7	15	46.5	6	6	6	6	62.4	172	184	7	6.5	60.5	5	12	5	6.5	0
20 FT	19	22	14	11	6	6.5	6	6	66.5	43.0	43.0	7	14	67.0	7	14	46.0	6	6	6	7	62.0	174	186	7	7	60.5	5	12	5	6	0
22 FT	20	23	14	11	6	6	7	8	70.6	44.0	44.0	7	14	66.5	7	14	46.0	6	6	6	6	61.3	175	187	7	6.5	60.5	5	12	5	6	0
24 FT	22	25	15	11	6	6	6	6	66.1	46.0	46.0	7	15	65.5	7	15	45.5	6	6	6	7	61.5	177	189	7	6.5	60.5	5	12	6	8	0
26 FT	23	25	15	11	7	7.5	7	7.5	70.6	47.0	47.0	7	14	65.0	7	14	45.5	7	7	6	6	60.9	177	189	7	6.5	60.5	5	12	6	8	0
28 FT	24	27	16	11	7	7.5	7	8	71.0	48.0	48.0	7	14	64.5	7	14	45.0	7	8	6	7	61.3	179	191	7	6	60.5	5	12	6	8	0
30 FT	25	28	16	11	7	7	7	8	68.5	49.0	49.0	7	14	63.5	7	14	44.0	7	7.5	6	7	58.9	180	192	7	6	60.5	5	12	6	8	0
32 FT	26	29	16	11	7	7	7	7.5	68.4	50.0	50.0	7	13	62.5	7	13	43.5	7	7.5	6	6.5	58.9	181	193	8	7.5	66.5	5	12	6	8	0
34 FT	27	30	17	11	7	6.5	7	7.5	69.0	51.0	51.0	7	13	61.5	7	13	42.5	7	7.5	6	7	59.1	182	194	8	7.5	66.5	5	12	6	7.5	0
36 FT	27	31	17	11	7	6	7	6.5	68.9	51.0	51.0	7	12	61.5	7	12	43.5	7	7	6	7	59.1	183	195	8	7	66.5	5	12	6	7.5	0
38 FT	28	33	18	11	7	6	7	7	69.8	52.0	52.0	7	12	60.0	7	12	42.5	7	7	6	6.5	59.6	185	197	8	6.5	66.5	5	12	6	7	0
40 FT	29	34	19	11	7	6	7	7	70.4	53.0	53.0	7	12	59.5	7	12	41.5	7	7	6	6.5	60.0	186	198	8	6.5	66.5	5	12	6	6.5	0
42 FT	30	35	19	11	7	6	7	6.5	70.4	54.0	54.0	7	12	59.0	7	12	40.5	7	7	6	6.5	60.1	187	199	8	6.5	66.5	5	12	6	6.5	0
44 FT	31	36	20	11	7	6	7	7	71.0	55.0	55.0	8	15	66.5	8	15	47.5	7	7	6	6	60.5	188	200	8	6	66.5	5	12	6	6.5	0
46 FT	32	37	21	11	8	7.5	7	7	71.8	56.0	56.0	8	15	66.0	8	15	47.0	7	6.5	6	6	60.8	189	201	8	6	66.5	5	12	6	6	0
48 FT	32	38	21	11	8	7	7	6	71.8	56.0	56.0	8	14	66.0	8	14	47.0	7	6.5	6	6	60.9	190	202	8	6	66.5	5	12	6	6	0
50 FT	33	39	22	11	8	7	7	6.5	72.5	57.0	57.0	8	15	65.5	8	15	47.0	7	6.5	6	6	61.3	191	203	8	6	66.5	5	12	6	6	0

SPAN (S) = 13 FT HEIGHT (HT) = 15 FT OR 16 FT

DESIGN FILL	MEMBER THICKNESS				TOP SLAB BARS												BOTTOM SLAB BARS										WALL BARS				
					A1 BARS		J3 BARS			K2		H1 BARS			H2 BARS		A2 BARS		J4 BARS			K3		H3 BARS			B1 BARS		B2 BARS		
	TS	BS	TX	TI	SIZE	SPA.	SIZE	SPA.	C1	HT=15′	HT=16′	SIZE	SPA.	C5	SIZE	SPA.	C6	SIZE	SPA.	SIZE	SPA.	C4	HT=15′	HT=16′	SIZE	SPA.	C7	SIZE	SPA.	SIZE	SPA.	G1
1 FT	14	12	12	13	5	6	5	6	65.0	34.0	34.0	5	12	128.5	5	12	36.0	5	6.5	6	7	99.8	188	200	6	6.5	61.0	5	12	5	7	12
2 FT	15	13	12	13	6	8	6	8.5	72.0	35.0	39.0	6	16	135.5	6	16	43.5	5	6.5	6	7	96.4	189	201	6	6.5	60.5	5	12	5	7	12
4 FT	11	13	12	13	5	6	6	7	115.0	35.0	35.0	6	14	81.0	6	14	38.5	5	6	6	6.5	91.6	189	201	6	6	60.5	5	12	5	7	12
6 FT	11	13	12	13	5	6.5	6	6.5	84.8	35.0	35.0	6	13	63.5	6	13	37.5	5	6	6	6	84.8	189	201	7	7	62.0	5	12	5	6.5	12
8 FT	12	14	13	13	5	6.5	6	7	78.8	36.0	36.0	6	13	61.0	6	13	37.0	6	8	6	6.5	80.6	190	202	7	7	61.5	5	12	5	6.5	0
10 FT	13	15	13	13	5	6.5	6	7	75.9	37.0	37.0	6	12	59.5	6	12	36.5	6	7.5	6	6.5	78.4	191	203	7	6.5	61.0	5	12	5	6.5	0
12 FT	14	16	14	13	5	6	6	7	72.9	38.0	38.0	6	12	58.5	6	12	36.5	6	6.5	6	6.5	75.6	192	204	7	6.5	61.0	5	12	5	6	0
14 FT	15	18	14	13	6	8	6	6	77.1	39.0	39.0	7	16	69.0	7	16	47.0	6	6.5	6	6	75.3	194	206	7	7	61.0	5	12	5	6	0
16 FT	16	19	15	13	6	7.5	6	6	76.0	40.0	40.0	7	15	68.0	7	15	47.0	6	6.5	6	6	73.3	195	207	7	6.5	61.0	5	12	6	8	0
18 FT	18	20	16	13	6	7	6	6	76.0	42.0	42.0	7	15	67.5	7	15	47.0	6	6	6	6	71.6	196	208	7	6.5	61.0	5	12	6	8	0
20 FT	19	22	16	13	6	6.5	7	8	80.4	43.0	49.0	7	15	67.5	7	15	47.0	6	6	7	7.5	74.5	198	210	7	7	61.0	5	12	6	8	0
22 FT	20	23	17	13	6	6.5	7	8	79.9	44.0	50.0	7	14	67.0	7	14	46.5	6	6	7	7.5	73.9	199	211	7	6.5	61.0	5	12	6	7.5	0
24 FT	21	24	17	13	6	6	7	7.5	79.6	45.0	51.0	7	14	66.5	7	14	46.5	7	7	7	7	73.6	200	212	7	6.5	61.0	5	12	6	7.5	0
26 FT	23	26	18	13	7	7.5	7	7.5	80.1	47.0	53.0	7	15	65.5	7	15	46.0	7	8	7	8	73.9	202	214	7	6.5	61.0	5	12	6	7	0
28 FT	23	27	19	13	7	7.5	7	7.5	80.0	47.0	47.0	7	14	65.0	7	14	46.0	7	7.5	6	6	70.9	203	215	7	6	61.0	5	12	6	6.5	0
30 FT	24	28	19	13	7	7.5	7	7.5	77.8	48.0	48.0	7	14	64.5	7	14	46.0	7	7.5	6	6	68.5	204	216	7	6	61.0	5	12	6	6.5	0
32 FT	25	29	19	13	7	7	7	7	77.8	49.0	49.0	7	14	63.5	7	14	45.5	7	7.5	6	6	68.6	205	217	8	7.5	67.0	5	12	6	6.5	0
34 FT	26	30	20	13	7	7	7	7	78.3	50.0	50.0	7	13	63.0	7	13	44.5	7	6.5	6	6	68.9	206	218	8	7.5	67.0	5	12	6	6.5	0
36 FT	27	32	21	13	7	6.5	7	7	78.9	51.0	51.0	7	13	62.0	7	13	43.5	7	7	6	6	69.4	208	220	8	7	67.0	5	12	6	6	0
38 FT	28	33	22	13	7	6.5	7	7	79.4	52.0	58.0	7	12	61.0	7	12	43.0	7	7	7	7.5	72.6	209	221	8	6.5	67.0	5	12	6	6	0
40 FT	29	34	22	13	7	6.5	7	6.5	79.5	59.0	59.0	7	12	60.0	7	12	42.0	7	7	7	7.5	72.9	210	222	8	6.5	67.0	5	12	6	6	0
42 FT	30	35	23	13	7	6	7	6.5	80.1	60.0	60.0	7	12	60.0	7	12	41.0	7	7	7	7.5	73.1	211	223	8	6.5	67.0	5	12	7	7.5	0
44 FT	31	36	24	13	7	6	7	6.5	80.8	55.0	61.0	8	15	67.5	8	15	48.5	7	6.5	7	7	73.5	212	224	8	6	67.0	5	12	7	7.5	0
46 FT	32	37	24	13	7	6	7	6	80.8	56.0	62.0	8	15	67.0	8	15	48.0	7	6.5	7	7	73.6	213	225	8	6	67.0	5	12	7	7.5	0
48 FT	32	38	26	13	8	7.5	7	6	81.9	56.0	62.0	8	14	67.0	8	14	48.0	7	6.5	7	7.5	74.1	214	226	8	6	67.0	5	12	7	7.5	0
50 FT	33	39	27	13	8	7	7	6	82.6	57.0	63.0	8	15	66.0	8	15	47.5	7	6.5	7	7.5	74.5	215	227	8	6	67.0	5	12	7	8	0

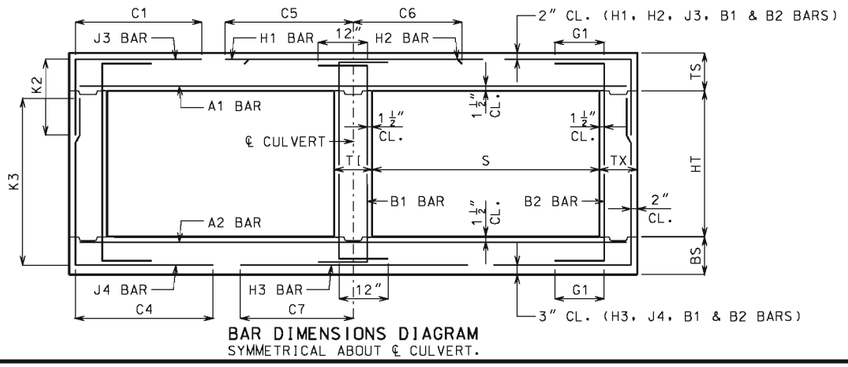

BAR DIMENSIONS DIAGRAM
SYMMETRICAL ABOUT ℄ CULVERT.

IF A SEAL IS PRESENT ON THIS SHEET IT HAS BEEN ELECTRONICALLY SEALED AND DATED.

GENERAL NOTES:

IF DESIGN FILL IS BETWEEN TABULATED DESIGN FILLS, USE THE NEXT GREATER TABULATED DESIGN FILL. EXCEPT FOR DESIGN FILLS BETWEEN 2 FEET AND 4 FEET. FOR DESIGN FILLS BETWEEN 2 FEET AND 4 FEET USE THE GREATER MEMBER THICKNESS, AREA OF REINFORCEMENT AND BAR DIMENSIONS FROM THE 2 FEET AND 4 FEET TABULATED DESIGN FILLS. AREA OF REINFORCEMENT EQUALS BAR AREA PER FOOT SPACING.

SPECIAL DESIGNS ARE REQUIRED WHEN THE DESIGN FILL IS LESS THAN 1 FOOT OR GREATER THAN 50 FEET.

DIMENSIONS ARE IN INCHES UNLESS OTHERWISE SPECIFIED.

DESIGN FILLS ARE MEASURED FROM THE TOP OF TOP SLAB TO THE TOP OF EARTH FILL OR ROADWAY.

CULVERTS MEET STRENGTH AND SERVICEABILITY REQUIREMENTS FOR THE DESIGN VEHICULAR LIVE LOAD HL-93 MINUS THE LANE LOAD.

MISSOURI HIGHWAYS AND TRANSPORTATION COMMISSION
105 WEST CAPITOL
JEFFERSON CITY, MO 65102
1-888-ASK-MODOT (1-888-275-6636)

STATE OF MISSOURI
DENNIS W. HECKMAN
NUMBER PE-27141
PROFESSIONAL ENGINEER
THIS SHEET HAS BEEN SIGNED, SEALED AND DATED ELECTRONICALLY.

CONCRETE DOUBLE BOX CULVERT

MEMBER THICKNESS
BAR SIZE, SPACING & DIMENSIONS

SPAN (S): 13 FEET
HEIGHT (HT): 13 THRU 16 FEET

DATE EFFECTIVE: 10/01/2011
DATE PREPARED: 9/8/2011

703.47

SHEET NO.
21 OF 27

SPAN (S) = 14 FT HEIGHT (HT) = 7 FT OR 8 FT OR 9 FT

DESIGN FILL	MEMBER THICKNESS				TOP SLAB BARS												BOTTOM SLAB BARS												WALL BARS				
					A1 BARS		J3 BARS						H1 BARS			H2 BARS			A2 BARS		J4 BARS					H3 BARS			B1 BARS		B2 BARS		
	TS	BS	TX	TI	SIZE	SPA.	SIZE	SPA.	C1	K2 HT=7′	K2 HT=8′	K2 HT=9′	SIZE	SPA.	C5	SIZE	SPA.	C6	SIZE	SPA.	SIZE	SPA.	C4	K3 HT=7′	K3 HT=8′	K3 HT=9′	SIZE	SPA.	C7	SIZE	SPA.	SIZE	SPA.	G1
1 FT	15	11	8	8	6	8	5	8	69.3	31.0	35.0	35.0	6	16	137.5	6	16	46.5	5	6.5	5	6	57.8	91	103	115	6	6	63.0	5	12	5	12	12
2 FT	15	12	8	8	6	8	5	8	69.3	35.0	35.0	35.0	6	16	137.5	6	16	48.0	5	6	5	6.5	52.5	92	104	116	6	6	62.5	5	12	5	12	12
4 FT	12	11	8	8	6	7.5	5	6	48.0	32.0	32.0	32.0	6	12	86.0	6	12	39.5	5	6.5	6	7	49.3	91	103	115	7	6	64.5	5	12	5	12	12
6 FT	12	13	8	8	6	8	6	7.5	47.6	32.0	32.0	32.0	7	15	74.0	7	15	41.0	5	6	5	7	41.9	93	105	117	7	6.5	64.5	5	12	5	12	12
8 FT	13	14	8	8	5	6	5	6.5	41.1	33.0	33.0	33.0	7	15	68.5	7	15	40.0	6	8	5	7.5	39.1	94	106	118	7	6.5	64.0	5	12	5	12	0
10 FT	14	15	8	8	6	8	5	6.5	38.6	34.0	34.0	34.0	7	14	66.5	7	14	39.5	6	7.5	5	7.5	37.4	95	107	119	7	6	63.5	5	12	5	12	0
12 FT	16	17	8	8	6	8	5	6.5	41.5	36.0	36.0	36.0	7	14	73.0	7	14	47.5	6	7	5	7	36.1	97	109	121	7	6.5	63.5	5	12	5	11	0
14 FT	17	18	8	8	6	7.5	5	6	40.3	37.0	37.0	37.0	7	14	72.5	7	14	47.0	6	6.5	5	6.5	35.1	98	110	122	7	6.5	63.0	5	12	5	10	0
16 FT	18	20	8	8	6	7	6	8	43.4	38.0	38.0	38.0	7	13	71.5	7	13	47.0	6	6	5	6	34.4	100	112	124	7	6.5	63.0	5	12	5	9.5	0
18 FT	20	21	8	8	6	6.5	6	7.5	42.4	44.0	44.0	44.0	7	13	71.0	7	13	46.5	6	6	6	7.5	37.0	101	113	125	7	6.5	63.0	5	12	5	9.5	0
20 FT	21	22	8	8	6	6	6	7	41.8	45.0	45.0	45.0	7	13	70.5	7	13	46.5	7	7.5	6	7	36.5	102	114	126	7	6	63.0	5	12	5	9	0
22 FT	23	24	8	8	7	7.5	6	6	41.3	47.0	47.0	47.0	7	13	69.5	7	13	46.5	7	7.5	6	6	36.4	104	116	128	7	6	63.0	5	12	5	8	0
24 FT	24	26	9	8	7	7.5	6	7	42.1	48.0	48.0	48.0	7	13	69.0	7	13	46.0	7	7.5	6	6.5	36.8	106	118	130	7	6.5	63.0	5	12	5	8.5	0
26 FT	25	27	9	8	7	7	6	6.5	41.9	49.0	49.0	49.0	7	12	68.5	7	12	46.0	7	7.5	6	6.5	36.6	107	119	131	7	6	63.0	5	12	5	8	0
28 FT	26	28	9	8	7	7	6	6	41.8	50.0	50.0	50.0	7	12	68.0	7	12	46.0	7	7.5	6	6	36.6	108	120	132	7	6	63.0	5	12	5	7.5	0
30 FT	27	29	9	8	7	6.5	6	6	41.1	51.0	51.0	51.0	7	12	67.0	7	12	45.5	7	7	6	6	35.4	109	121	133	8	7.5	68.5	5	12	5	7.5	0
32 FT	28	31	10	8	7	6.5	6	6.5	41.8	52.0	52.0	52.0	7	12	66.0	7	12	45.0	7	7	6	6	35.9	111	123	135	8	7	68.5	5	12	5	8	0
34 FT	29	32	10	8	7	6	6	6.5	41.8	53.0	53.0	53.0	7	12	65.5	7	12	44.5	7	7	6	6	36.0	112	124	136	8	7	68.5	5	12	5	7.5	0
36 FT	31	33	10	8	7	6	6	6	41.8	55.0	55.0	55.0	8	15	71.5	8	15	50.5	7	7	7	6.5	39.4	113	125	137	8	6.5	68.5	5	12	5	6.5	0
38 FT	31	34	11	8	8	7	6	6.5	42.3	55.0	55.0	55.0	8	14	71.5	8	14	51.0	7	6.5	6	6	36.8	114	126	138	8	6.5	68.5	5	12	5	7.5	0
40 FT	33	35	11	8	8	7.5	6	6	42.3	57.0	57.0	57.0	8	14	69.5	8	14	49.0	7	6	6	6	37.0	115	127	139	8	6.5	68.5	5	12	5	7	0
42 FT	33	37	11	8	8	7	6	6	42.3	57.0	57.0	57.0	8	14	69.5	8	14	49.5	7	6.5	7	6.5	40.1	117	129	141	8	6	68.5	5	12	5	6.5	0
44 FT	34	38	12	8	8	7	6	6.5	43.3	58.0	58.0	58.0	8	14	69.0	8	14	48.5	7	6.5	6	6	37.6	118	130	142	8	6	68.5	5	12	5	7	0
46 FT	35	39	12	8	8	6.5	6	6.5	43.1	59.0	59.0	59.0	8	13	68.5	8	13	47.5	7	6.5	6	6	37.9	119	131	143	8	6	68.5	5	12	5	6.5	0
48 FT	36	40	12	8	8	6.5	6	6.5	43.1	60.0	60.0	60.0	8	13	67.5	8	13	46.5	7	6.5	6	6	38.1	120	132	144	9	7	74.5	5	11.5	5	6	0
50 FT	37	41	12	8	8	6.5	6	6	43.3	61.0	61.0	61.0	8	13	67.0	8	13	46.5	7	6	7	6.5	41.3	121	133	145	9	7	74.5	5	8.5	6	8	0

SPAN (S) = 14 FT HEIGHT (HT) = 10 FT OR 11 FT OR 12 FT

DESIGN FILL	MEMBER THICKNESS				TOP SLAB BARS												BOTTOM SLAB BARS												WALL BARS				
					A1 BARS		J3 BARS						H1 BARS			H2 BARS			A2 BARS		J4 BARS					H3 BARS			B1 BARS		B2 BARS		
	TS	BS	TX	TI	SIZE	SPA.	SIZE	SPA.	C1	K2 HT=10′	K2 HT=11′	K2 HT=12′	SIZE	SPA.	C5	SIZE	SPA.	C6	SIZE	SPA.	SIZE	SPA.	C4	K3 HT=10′	K3 HT=11′	K3 HT=12′	SIZE	SPA.	C7	SIZE	SPA.	SIZE	SPA.	G1
1 FT	15	12	8	10	6	8	5	7	69.6	35.0	35.0	35.0	6	16	138.5	6	16	47.0	5	6.5	6	6	83.9	128	140	152	6	6.5	63.5	5	12	5	9.5	12
2 FT	15	13	8	10	6	8	5	6.5	69.6	35.0	35.0	35.0	6	16	138.5	6	16	48.0	5	6	6	6	77.4	129	141	153	6	6.5	63.0	5	12	5	9.5	12
4 FT	12	12	10	10	6	8	5	6	70.1	32.0	32.0	32.0	6	13	85.5	6	13	40.0	5	6	6	7	65.5	128	140	152	7	6.5	65.5	5	10	5	9.5	12
6 FT	12	13	10	10	6	8.5	5	6	58.6	32.0	32.0	32.0	6	12	69.0	6	12	38.0	5	6	6	7	60.8	129	141	153	7	6.5	64.5	5	12	5	9.5	12
8 FT	13	14	10	10	5	6	6	7	57.1	33.0	33.0	37.0	7	15	68.0	7	15	40.5	6	8	6	7	57.4	130	142	154	7	6.5	64.0	5	12	5	9	0
10 FT	14	16	10	10	5	6	6	7	54.4	34.0	34.0	34.0	7	15	66.5	7	15	40.0	6	7	5	6	52.0	132	144	156	7	6.5	64.0	5	12	5	8	0
12 FT	15	17	10	10	6	8	6	7	58.6	35.0	35.0	39.0	7	14	73.0	7	14	48.0	6	7	6	7.5	53.1	133	145	157	7	6.5	63.5	5	12	5	8	0
14 FT	17	18	10	10	6	7.5	6	7	57.1	37.0	37.0	41.0	7	14	72.5	7	14	47.5	6	6.5	6	6.5	52.0	134	146	158	7	6.5	63.5	5	12	5	8	0
16 FT	18	20	11	10	6	7	6	7	57.0	38.0	38.0	42.0	7	14	71.5	7	14	47.5	6	6	6	8	51.5	136	148	160	7	6.5	63.5	5	12	5	7.5	0
18 FT	19	21	12	10	6	6.5	6	7	56.9	39.0	39.0	43.0	7	13	71.0	7	13	47.5	6	6	6	8.5	51.1	137	149	161	7	6.5	63.5	5	12	5	7	0
20 FT	21	23	12	10	6	6	6	7	56.1	41.0	41.0	45.0	7	13	70.5	7	13	47.0	7	8	6	8	50.8	139	151	163	7	6.5	63.5	5	12	5	7	0
22 FT	22	24	12	10	6	6	6	6.5	55.5	42.0	42.0	46.0	7	13	70.0	7	13	47.0	7	7.5	6	7.5	50.1	140	152	164	7	6.5	63.5	5	12	5	7	0
24 FT	23	26	13	10	7	7	6	6.5	55.9	43.0	43.0	47.0	7	12	69.5	7	12	47.0	7	7.5	6	8.5	50.3	142	154	166	7	6.5	63.5	5	12	5	6.5	0
26 FT	25	27	13	10	7	7	6	6.5	55.5	45.0	45.0	49.0	7	13	68.5	7	13	46.5	7	7.5	6	8	50.3	143	155	167	7	6	63.5	5	12	5	6.5	0
28 FT	26	29	14	10	7	7	6	6.5	56.3	46.0	50.0	50.0	7	13	67.5	7	13	46.5	7	7.5	6	8.5	50.5	145	157	169	8	7.5	69.5	5	12	5	6	0
30 FT	27	30	14	10	7	6.5	6	6.5	56.0	47.0	51.0	51.0	7	13	67.0	7	13	46.0	7	7	6	8	50.5	146	158	170	8	7.5	69.5	5	12	5	6	0
32 FT	28	31	14	10	7	6.5	6	6.5	54.3	52.0	52.0	52.0	7	12	66.0	7	12	45.5	7	7	6	7.5	48.9	147	159	171	8	7	69.5	5	12	5	6	0
34 FT	29	32	14	10	7	6	6	6	54.1	53.0	53.0	53.0	7	12	65.0	7	12	44.5	7	7	6	7.5	48.9	148	160	172	8	7	69.0	5	12	5	6	0
36 FT	30	33	15	10	7	6	6	6.5	54.9	54.0	54.0	54.0	7	12	64.0	7	12	44.0	7	6	6	7	49.4	149	161	173	8	6.5	69.5	5	12	6	8	0
38 FT	31	35	15	10	8	7.5	6	6	55.0	55.0	55.0	55.0	8	15	71.0	8	15	51.0	7	6.5	6	6.5	49.6	151	163	175	8	6.5	69.0	5	12	6	8	0
40 FT	32	36	16	10	8	7.5	6	6	55.8	56.0	56.0	56.0	8	14	70.0	8	14	50.0	7	6.5	6	6.5	50.0	152	164	176	8	6	69.5	5	12	6	8	0
42 FT	33	37	16	10	8	7	6	6	55.8	57.0	57.0	57.0	8	14	69.5	8	14	49.5	7	6.5	6	6.5	50.1	153	165	177	8	6	69.0	5	12	6	8	0
44 FT	34	38	16	10	8	7	6	6	55.6	58.0	58.0	58.0	8	14	69.0	8	14	48.5	7	6.5	6	6	50.3	154	166	178	8	6	69.0	5	12	6	8	0
46 FT	35	39	17	10	8	7	6	6	56.5	59.0	59.0	59.0	8	13	68.5	8	13	47.5	7	6	6	6	50.8	155	167	179	8	6	69.0	5	12	6	7.5	0
48 FT	35	40	17	10	8	6	7	7.5	61.5	59.0	59.0	59.0	8	12	68.5	8	12	48.0	7	6	6	6	50.8	156	168	180	9	7	75.0	5	12	6	7.5	0
50 FT	36	41	17	10	8	6.5	7	7	61.5	60.0	60.0	66.0	8	13	68.0	8	13	47.5	7	6	7	8	53.9	157	169	181	9	7	75.0	5	12	6	7.5	0

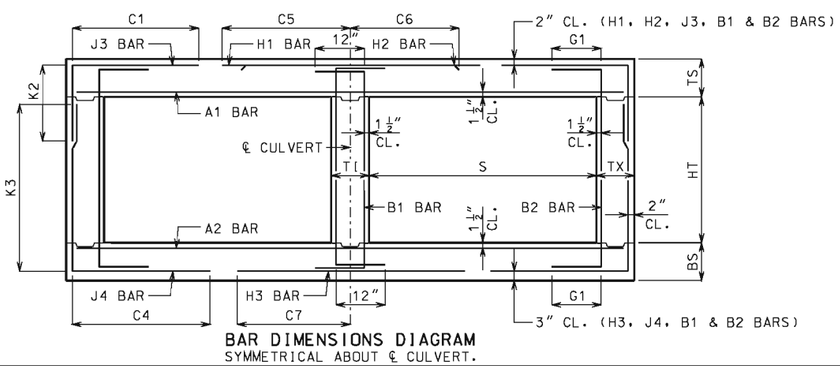

BAR DIMENSIONS DIAGRAM
SYMMETRICAL ABOUT ℄ CULVERT.

GENERAL NOTES:

IF DESIGN FILL IS BETWEEN TABULATED DESIGN FILLS, USE THE NEXT GREATER TABULATED DESIGN FILL, EXCEPT FOR DESIGN FILLS BETWEEN 2 FEET AND 4 FEET. FOR DESIGN FILLS BETWEEN 2 FEET AND 4 FEET USE THE GREATER MEMBER THICKNESS, AREA OF REINFORCEMENT AND BAR DIMENSIONS FROM THE 2 FEET AND 4 FEET TABULATED DESIGN FILLS. AREA OF REINFORCEMENT EQUALS BAR AREA PER FOOT SPACING.

SPECIAL DESIGNS ARE REQUIRED WHEN THE DESIGN FILL IS LESS THAN 1 FOOT OR GREATER THAN 50 FEET.

DIMENSIONS ARE IN INCHES UNLESS OTHERWISE SPECIFIED.

DESIGN FILLS ARE MEASURED FROM THE TOP OF TOP SLAB TO THE TOP OF EARTH FILL OR ROADWAY.

CULVERTS MEET STRENGTH AND SERVICEABILITY REQUIREMENTS FOR THE DESIGN VEHICULAR LIVE LOAD HL-93 MINUS THE LANE LOAD.

MISSOURI HIGHWAYS AND TRANSPORTATION COMMISSION
105 WEST CAPITOL
JEFFERSON CITY, MO 65102
1-888-ASK-MODOT (1-888-275-6636)

STATE OF MISSOURI
DENNIS W. HECKMAN
NUMBER PE-27141
PROFESSIONAL ENGINEER
THIS SHEET HAS BEEN SIGNED, SEALED AND DATED ELECTRONICALLY.

CONCRETE DOUBLE BOX CULVERT

MEMBER THICKNESS
BAR SIZE, SPACING & DIMENSIONS

SPAN (S): 14 FEET
HEIGHT (HT): 7 THRU 12 FEET

DATE EFFECTIVE: 10/01/2011
DATE PREPARED: 9/8/2011

703.47

SHEET NO. 22 OF 27

IF A SEAL IS PRESENT ON THIS SHEET IT HAS BEEN ELECTRONICALLY SEALED AND DATED.

SPAN (S) = 14 FT HEIGHT (HT) = 13 FT OR 14 FT

DESIGN FILL	MEMBER THICKNESS				TOP SLAB BARS												BOTTOM SLAB BARS										WALL BARS				
					A1 BARS		J3 BARS			K2		H1 BARS			H2 BARS		A2 BARS		J4 BARS			K3		H3 BARS			B1 BARS		B2 BARS		
	TS	BS	TX	TI	SIZE	SPA.	SIZE	SPA.	C1	HT=13′	HT=14′	SIZE	SPA.	C5	SIZE	SPA.	C6	SIZE	SPA.	SIZE	SPA.	C4	HT=13′	HT=14′	SIZE	SPA.	C7	SIZE	SPA.	SIZE	SPA.	G1
1 FT	15	12	9	11	6	8	5	6	70.4	35.0	35.0	6	16	139.0	6	16	47.0	5	6	6	6	96.1	164	176	6	6	64.0	5	12	5	8.5	12
2 FT	15	13	10	11	6	8	5	6	71.0	35.0	35.0	6	16	139.5	6	16	47.5	5	6	6	6.5	87.6	165	177	6	6.5	63.5	5	12	5	8	12
4 FT	12	12	10	11	6	7.5	6	7.5	100.0	36.0	36.0	6	13	94.5	6	13	40.0	5	6	6	6	77.9	164	176	7	6.5	65.5	5	12	5	8	12
6 FT	12	13	10	11	6	8	6	7	74.8	36.0	36.0	6	12	69.0	6	12	38.5	5	6	6	6	72.4	165	177	7	6.5	65.0	5	12	5	8	12
8 FT	13	14	11	11	5	6	6	7	68.4	37.0	37.0	7	16	68.0	7	16	41.0	6	8	6	7	68.4	166	178	7	6	64.0	5	12	5	7.5	0
10 FT	14	16	11	11	5	6	6	6.5	65.4	38.0	38.0	7	15	66.5	7	15	40.5	6	7	6	6.5	66.8	168	180	7	6.5	64.0	5	12	5	7.5	0
12 FT	15	17	12	11	6	8	6	6.5	69.4	39.0	39.0	7	14	73.0	7	14	48.0	6	7	6	7	64.6	169	181	7	6.5	64.0	5	12	5	7	0
14 FT	17	18	12	11	6	7.5	6	6.5	67.9	41.0	41.0	7	15	72.0	7	15	48.0	6	6	6	6	63.0	170	182	7	6	63.5	5	12	5	7	0
16 FT	18	20	13	11	6	7	6	6.5	66.9	42.0	42.0	7	14	71.5	7	14	47.5	6	6	6	7	62.1	172	184	7	6.5	63.5	5	12	5	6.5	0
18 FT	19	21	13	11	6	6.5	6	6	65.6	43.0	43.0	7	13	71.0	7	13	47.5	7	8	6	6	61.0	173	185	7	6.5	63.5	5	12	5	6.5	0
20 FT	21	23	14	11	6	6	6	6	65.4	45.0	45.0	7	14	70.0	7	14	47.5	7	8	6	7	60.6	175	187	7	6.5	63.5	5	12	5	6	0
22 FT	22	24	14	11	6	6	7	8	69.4	46.0	46.0	7	13	69.5	7	13	47.0	7	7	6	6	59.8	176	188	7	6.5	63.5	5	12	5	6	0
24 FT	23	26	15	11	7	7.5	7	8	69.5	47.0	47.0	7	13	69.0	7	13	47.0	7	7.5	6	7	59.5	178	190	7	6.5	63.5	5	12	6	8	0
26 FT	24	27	15	11	7	7	7	7.5	69.0	48.0	48.0	7	13	68.5	7	13	47.0	7	7	6	6.5	59.3	179	191	7	6	63.5	5	12	6	8	0
28 FT	25	29	16	11	7	6.5	7	7.5	69.5	49.0	49.0	7	13	67.5	7	13	46.5	7	7	6	7	59.5	181	193	8	7.5	69.5	5	12	6	8	0
30 FT	27	30	16	11	7	6.5	7	7	69.3	51.0	51.0	7	13	66.0	7	13	45.5	7	7	6	6.5	59.5	182	194	8	7.5	69.5	5	12	6	8	0
32 FT	28	31	16	11	7	6.5	7	7.5	67.1	52.0	52.0	7	12	65.0	7	12	44.5	7	7	6	7	57.1	183	195	8	7	69.5	5	12	6	8	0
34 FT	29	32	17	11	7	6	7	7.5	67.8	53.0	53.0	7	12	64.0	7	12	44.0	7	6.5	6	7	57.5	184	196	8	7	69.5	5	12	6	7.5	0
36 FT	30	34	17	11	7	6	7	6.5	67.8	54.0	54.0	7	12	63.0	7	12	43.0	7	7	6	7	57.6	186	198	8	6.5	69.5	5	12	6	7.5	0
38 FT	31	35	18	11	7	6	7	7	68.5	55.0	55.0	8	15	70.0	8	15	50.5	7	6.5	6	6.5	58.0	187	199	8	6.5	69.5	5	12	6	7	0
40 FT	32	36	18	11	8	7.5	7	6.5	68.4	56.0	56.0	8	14	69.5	8	14	49.5	7	6.5	6	6.5	58.1	188	200	8	6	69.5	5	12	6	7	0
42 FT	33	37	19	11	8	7	7	7	69.1	57.0	57.0	8	14	69.0	8	14	48.5	7	6.5	6	6.5	58.5	189	201	8	6	69.5	5	12	6	6.5	0
44 FT	33	38	20	11	8	7	7	7	69.9	57.0	57.0	8	14	69.0	8	14	49.0	7	6	6	6	58.9	190	202	8	6	69.5	5	12	6	6.5	0
46 FT	34	39	20	11	8	7	7	6	69.8	58.0	58.0	8	14	68.5	8	14	48.5	7	6	6	6	59.0	191	203	8	6	69.5	5	12	6	6.5	0
48 FT	35	41	21	11	8	6.5	7	6.5	70.6	65.0	65.0	8	13	68.0	8	13	47.5	7	6	7	8	62.5	193	205	9	7	75.5	5	12	6	6	0
50 FT	36	42	22	11	8	6.5	7	6.5	71.4	66.0	66.0	8	14	67.0	8	14	47.5	7	6	7	7.5	63.0	194	206	9	7	75.5	5	12	6	6	0

SPAN (S) = 14 FT HEIGHT (HT) = 15 FT OR 16 FT

DESIGN FILL	MEMBER THICKNESS				TOP SLAB BARS												BOTTOM SLAB BARS										WALL BARS				
					A1 BARS		J3 BARS			K2		H1 BARS			H2 BARS		A2 BARS		J4 BARS			K3		H3 BARS			B1 BARS		B2 BARS		
	TS	BS	TX	TI	SIZE	SPA.	SIZE	SPA.	C1	HT=15′	HT=16′	SIZE	SPA.	C5	SIZE	SPA.	C6	SIZE	SPA.	SIZE	SPA.	C4	HT=15′	HT=16′	SIZE	SPA.	C7	SIZE	SPA.	SIZE	SPA.	G1
1 FT	15	13	12	13	6	8	5	6	72.6	35.0	35.0	6	16	141.0	6	16	46.0	5	6.5	6	7.5	102.5	189	201	6	6.5	64.5	5	12	5	7	12
2 FT	15	13	12	13	6	8	6	8	75.6	35.0	39.0	6	16	144.0	6	16	47.5	5	6	6	7	95.8	189	201	6	6	63.5	5	12	5	7	12
4 FT	12	12	12	13	6	8	6	7.5	118.3	36.0	36.0	6	13	86.5	6	13	40.0	5	6	6	6	86.6	188	200	7	6.5	65.5	5	12	5	7	12
6 FT	12	13	12	13	5	6	6	7	86.4	36.0	36.0	6	12	68.0	6	12	39.0	5	6	6	6	83.0	189	201	7	6	65.0	5	12	5	7	12
8 FT	13	15	13	13	5	6	6	7	78.9	37.0	37.0	6	12	64.5	6	12	38.0	6	7.5	6	6.5	80.3	191	203	7	6.5	64.5	5	12	5	6.5	0
10 FT	14	16	13	13	5	6	6	6.5	75.0	38.0	38.0	7	15	66.0	7	15	41.0	6	7	6	6.5	77.3	192	204	7	6.5	64.5	5	12	5	6.5	0
12 FT	15	17	14	13	6	8	6	6.5	78.5	39.0	39.0	7	15	73.0	7	15	48.5	6	6.5	6	6.5	74.1	193	205	7	6.5	64.0	5	12	5	6	0
14 FT	16	19	14	13	6	8	6	6	77.0	40.0	40.0	7	14	72.0	7	14	48.5	6	6	6	6	73.6	195	207	7	6.5	64.0	5	12	5	6	0
16 FT	18	20	15	13	6	7	6	6	76.5	42.0	42.0	7	14	71.5	7	14	48.5	6	6	6	6	72.1	196	208	7	6.5	64.0	5	12	6	8	0
18 FT	19	21	15	13	6	6.5	7	7.5	80.5	43.0	49.0	7	14	71.0	7	14	48.5	7	8	7	7	74.1	197	209	7	6.5	64.0	5	12	6	8	0
20 FT	20	23	16	13	6	6.5	7	7.5	79.9	44.0	50.0	7	13	70.5	7	13	48.0	7	7.5	7	8	73.8	199	211	7	6.5	64.0	5	12	6	8	0
22 FT	22	25	17	13	6	6	7	7.5	79.8	46.0	46.0	7	14	69.5	7	14	48.0	7	7.5	6	6	70.5	201	213	7	6.5	64.0	5	12	6	7.5	0
24 FT	23	26	18	13	7	7.5	7	7.5	79.5	47.0	47.0	7	13	69.0	7	13	47.5	7	7.5	6	6	69.9	202	214	7	6.5	64.0	5	12	6	7	0
26 FT	24	27	18	13	7	7.5	7	7	79.1	48.0	48.0	7	13	68.5	7	13	47.5	7	6.5	6	6	69.6	203	215	7	6	64.0	5	12	6	7	0
28 FT	25	29	19	13	7	7	7	7	79.5	49.0	49.0	7	13	68.0	7	13	47.5	7	7	6	6	70.0	205	217	8	7.5	70.0	5	12	6	6.5	0
30 FT	26	30	20	13	7	6.5	7	7	79.8	50.0	50.0	7	13	67.0	7	13	47.0	7	6.5	6	6	69.9	206	218	8	7.5	70.0	5	12	6	6.5	0
32 FT	27	31	20	13	7	6.5	7	7	77.4	51.0	51.0	7	13	66.5	7	13	47.0	7	6.5	6	6	67.5	207	219	8	7	70.0	5	12	6	6.5	0
34 FT	28	32	20	13	7	6	7	7	77.4	52.0	52.0	7	12	65.5	7	12	46.0	7	6	6	6	67.6	208	220	8	7	70.0	5	12	6	6.5	0
36 FT	29	34	21	13	7	6	7	7	78.0	53.0	53.0	7	12	64.5	7	12	45.0	7	6.5	6	6	68.1	210	222	8	6.5	70.0	5	12	6	6	0
38 FT	30	35	22	13	7	6	7	6.5	78.6	54.0	60.0	7	12	63.5	7	12	44.5	7	6.5	7	7.5	71.4	211	223	8	6.5	70.0	5	12	6	6	0
40 FT	31	36	22	13	8	7.5	7	6	78.6	61.0	61.0	8	15	71.0	8	15	51.5	7	6.5	7	7.5	71.5	212	224	8	6	70.0	5	12	6	6	0
42 FT	32	37	23	13	8	7.5	7	6.5	79.3	56.0	62.0	8	14	70.0	8	14	51.0	7	6	7	7.5	71.8	213	225	8	6	70.0	5	12	7	7.5	0
44 FT	33	39	24	13	8	7	7	6.5	80.0	57.0	63.0	8	14	70.0	8	14	50.0	7	6	7	7	72.4	215	227	8	6	70.0	5	12	7	7.5	0
46 FT	34	40	25	13	8	7	7	6.5	80.6	58.0	64.0	8	14	69.5	8	14	49.0	7	6	7	7.5	72.6	216	228	9	7	76.0	5	12	7	7.5	0
48 FT	35	41	26	13	8	7	7	6	81.4	65.0	65.0	8	14	68.5	8	14	48.5	7	6	7	7.5	73.0	217	229	9	7	76.5	5	12	7	8	0
50 FT	35	42	27	13	8	6.5	7	6	82.0	65.0	65.0	8	13	68.5	8	13	48.5	7	6	7	7.5	73.3	218	230	9	7	76.5	5	12	7	8	0

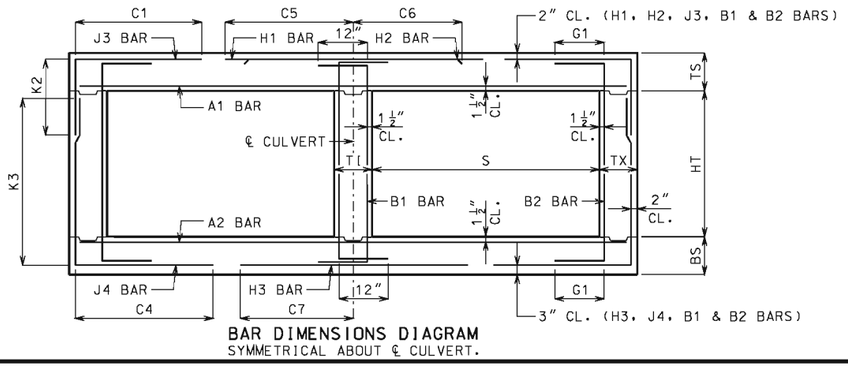

BAR DIMENSIONS DIAGRAM
SYMMETRICAL ABOUT ℄ CULVERT.

IF A SEAL IS PRESENT ON THIS SHEET IT HAS BEEN ELECTRONICALLY SEALED AND DATED.

GENERAL NOTES:

IF DESIGN FILL IS BETWEEN TABULATED DESIGN FILLS, USE THE NEXT GREATER TABULATED DESIGN FILL. EXCEPT FOR DESIGN FILLS BETWEEN 2 FEET AND 4 FEET. FOR DESIGN FILLS BETWEEN 2 FEET AND 4 FEET USE THE GREATER MEMBER THICKNESS, AREA OF REINFORCEMENT AND BAR DIMENSIONS FROM THE 2 FEET AND 4 FEET TABULATED DESIGN FILLS. AREA OF REINFORCEMENT EQUALS BAR AREA PER FOOT SPACING.

SPECIAL DESIGNS ARE REQUIRED WHEN THE DESIGN FILL IS LESS THAN 1 FOOT OR GREATER THAN 50 FEET.

DIMENSIONS ARE IN INCHES UNLESS OTHERWISE SPECIFIED.

DESIGN FILLS ARE MEASURED FROM THE TOP OF TOP SLAB TO THE TOP OF EARTH FILL OR ROADWAY.

CULVERTS MEET STRENGTH AND SERVICEABILITY REQUIREMENTS FOR THE DESIGN VEHICULAR LIVE LOAD HL-93 MINUS THE LANE LOAD.

MISSOURI HIGHWAYS AND TRANSPORTATION COMMISSION
105 WEST CAPITOL
JEFFERSON CITY, MO 65102
1-888-ASK-MODOT (1-888-275-6636)

STATE OF MISSOURI
DENNIS W. HECKMAN
NUMBER PE-27141
PROFESSIONAL ENGINEER
THIS SHEET HAS BEEN SIGNED, SEALED AND DATED ELECTRONICALLY.

CONCRETE DOUBLE BOX CULVERT

MEMBER THICKNESS
BAR SIZE, SPACING & DIMENSIONS

SPAN (S): 14 FEET
HEIGHT (HT): 13 THRU 16 FEET

DATE EFFECTIVE: 10/01/2011
DATE PREPARED: 9/8/2011

703.47

SHEET NO. 23 OF 27

SPAN (S) = 15 FT HEIGHT (HT) = 8 FT OR 9 FT OR 10 FT

DESIGN FILL	MEMBER THICKNESS				TOP SLAB BARS												BOTTOM SLAB BARS												WALL BARS				
					A1 BARS		J3 BARS						H1 BARS			H2 BARS			A2 BARS		J4 BARS					H3 BARS			B1 BARS		B2 BARS		
	TS	BS	TX	TI	SIZE	SPA.	SIZE	SPA.	C1	K2 HT=8′	K2 HT=9′	K2 HT=10′	SIZE	SPA.	C5	SIZE	SPA.	C6	SIZE	SPA.	SIZE	SPA.	C4	K3 HT=8′	K3 HT=9′	K3 HT=10′	SIZE	SPA.	C7	SIZE	SPA.	SIZE	SPA.	G1
1 FT	15	12	8	8	6	8	5	8	72.9	35.0	35.0	35.0	6	16	146.0	6	16	51.0	5	6	5	6	64.9	104	116	128	6	6	66.5	5	12	5	12	12
2 FT	17	13	8	8	6	7.5	5	6.5	72.9	37.0	37.0	37.0	6	14	146.0	6	14	45.5	5	6	5	6	57.8	105	117	129	6	6	65.5	5	12	5	12	12
4 FT	13	12	8	8	6	7	5	6	53.1	33.0	33.0	33.0	6	12	92.5	6	12	41.5	5	6	6	6.5	53.3	104	116	128	7	6	68.0	5	12	5	12	12
6 FT	13	13	8	8	6	7.5	6	7.5	50.4	33.0	33.0	37.0	7	15	78.5	7	15	42.5	5	6	6	7	48.9	105	117	129	7	6	67.0	5	12	5	12	12
8 FT	14	15	8	8	6	8	5	6	44.0	34.0	34.0	34.0	7	14	72.5	7	14	41.5	6	7.5	5	6.5	42.8	107	119	131	7	6	67.0	5	12	5	11	0
10 FT	15	16	8	8	6	7.5	6	8	50.5	35.0	35.0	35.0	7	13	78.0	7	13	49.0	6	7	5	6.5	40.9	108	120	132	7	6	66.5	5	12	5	10	0
12 FT	17	18	8	8	6	7.5	6	8	48.4	37.0	37.0	37.0	7	13	76.5	7	13	48.5	6	6.5	5	6	39.6	110	122	134	7	6	66.5	5	12	5	9.5	0
14 FT	18	19	8	8	6	7	6	7.5	47.0	38.0	38.0	42.0	7	13	75.5	7	13	48.5	6	6	6	8	41.5	111	123	135	7	6	66.5	5	12	5	9.5	0
16 FT	19	21	8	8	6	6	6	6.5	46.1	39.0	43.0	43.0	7	12	75.0	7	12	48.0	6	6	6	7	40.8	113	125	137	7	6	66.5	5	12	5	9	0
18 FT	21	22	9	8	6	6	6	7.5	46.0	41.0	41.0	41.0	7	12	74.0	7	12	48.0	7	7.5	5	6	37.8	114	126	138	7	6	66.0	5	12	5	8.5	0
20 FT	22	24	9	8	6	6	6	6.5	45.5	42.0	42.0	46.0	7	12	73.5	7	12	47.5	7	7.5	6	7	40.3	116	128	140	7	6	66.0	5	12	5	8.5	0
22 FT	24	26	10	8	7	7.5	6	7.5	46.0	44.0	44.0	44.0	7	12	72.5	7	12	47.5	7	7.5	5	6	37.5	118	130	142	7	6	66.0	5	12	5	8	0
24 FT	25	27	11	8	7	7	6	8	46.5	45.0	45.0	45.0	7	12	71.5	7	12	47.0	7	6.5	5	6	37.5	119	131	143	8	7	72.0	5	12	5	7.5	0
26 FT	27	29	11	8	7	6.5	6	8	46.1	47.0	47.0	51.0	7	12	70.5	7	12	47.0	7	7	6	7.5	40.6	121	133	145	8	7	72.0	5	12	5	7.5	0
28 FT	28	30	11	8	7	6.5	6	7	45.9	52.0	52.0	52.0	7	12	69.5	7	12	46.5	7	6.5	6	7	40.5	122	134	146	8	7	72.0	5	12	5	7.5	0
30 FT	29	32	12	8	7	6	6	7.5	46.9	53.0	53.0	53.0	7	12	69.0	7	12	46.5	7	7	6	7.5	41.0	124	136	148	8	7	72.0	5	12	5	7	0
32 FT	30	33	12	8	7	6	6	7.5	45.4	54.0	54.0	54.0	7	12	67.5	7	12	46.0	7	6.5	6	7	39.5	125	137	149	8	6.5	72.0	5	12	5	7	0
34 FT	31	34	12	8	8	7.5	6	7.5	45.3	55.0	55.0	55.0	8	15	75.0	8	15	53.0	7	6.5	6	7	39.6	126	138	150	8	6.5	72.0	5	12	5	7	0
36 FT	32	36	12	8	8	7	6	7	45.4	56.0	56.0	56.0	8	14	73.5	8	14	52.5	7	6.5	6	6.5	39.9	128	140	152	8	6	72.0	5	12	5	7	0
38 FT	33	37	12	8	8	6.5	6	6.5	45.4	57.0	57.0	57.0	8	13	72.5	8	13	51.5	7	6.5	6	6.5	40.0	129	141	153	8	6	72.0	5	12	5	6.5	0
40 FT	35	38	12	8	8	6.5	6	6.5	45.1	59.0	59.0	59.0	8	13	71.0	8	13	49.5	7	6	6	6	40.3	130	142	154	8	6	71.5	5	12	5	6	0
42 FT	35	39	13	8	8	6	6	6.5	46.1	59.0	59.0	59.0	8	12	71.0	8	12	50.0	7	6	6	6	40.6	131	143	155	8	6	72.0	5	12	5	6.5	0
44 FT	36	41	13	8	8	6	6	6.5	46.3	60.0	60.0	60.0	8	12	70.5	8	12	49.0	7	6	7	7	43.9	133	145	157	9	7	77.5	5	9	5	6	0
46 FT	37	42	13	8	8	6	6	6	46.3	61.0	61.0	61.0	8	12	70.0	8	12	48.0	7	6	7	7	44.1	134	146	158	9	7	77.5	5	6.5	6	8.5	0
48 FT	38	43	13	9	8	6	6	6	46.3	62.0	62.0	62.0	8	12	70.5	8	12	48.5	7	6	7	6.5	44.3	135	147	159	9	7	77.5	5	12	6	8	0
50 FT	39	44	14	9	8	6	6	6	47.1	63.0	63.0	63.0	8	12	70.0	8	12	47.5	8	7.5	7	7	44.8	136	148	160	9	6.5	77.5	5	12	6	8	0

SPAN (S) = 15 FT HEIGHT (HT) = 11 FT OR 12 FT OR 13 FT

DESIGN FILL	MEMBER THICKNESS				TOP SLAB BARS												BOTTOM SLAB BARS												WALL BARS				
					A1 BARS		J3 BARS						H1 BARS			H2 BARS			A2 BARS		J4 BARS					H3 BARS			B1 BARS		B2 BARS		
	TS	BS	TX	TI	SIZE	SPA.	SIZE	SPA.	C1	K2 HT=11′	K2 HT=12′	K2 HT=13′	SIZE	SPA.	C5	SIZE	SPA.	C6	SIZE	SPA.	SIZE	SPA.	C4	K3 HT=11′	K3 HT=12′	K3 HT=13′	SIZE	SPA.	C7	SIZE	SPA.	SIZE	SPA.	G1
1 FT	15	12	9	10	6	8	5	6.5	73.9	35.0	35.0	35.0	6	16	147.0	6	16	51.0	5	6	6	6	88.3	140	152	164	6	6	67.0	5	12	5	8.5	12
2 FT	17	13	9	10	6	7.5	5	6.5	73.9	37.0	37.0	37.0	6	14	147.0	6	14	46.0	5	6	6	6	80.4	141	153	165	6	6	66.0	5	12	5	8.5	12
4 FT	13	12	9	10	6	7	6	6	85.5	33.0	37.0	37.0	6	12	96.0	6	12	42.0	5	6	6	6	70.6	140	152	164	7	6	68.5	5	12	5	8.5	12
6 FT	13	14	10	10	6	8	6	7	67.4	33.0	33.0	37.0	7	15	76.5	7	15	43.0	6	8	6	6.5	66.0	142	154	166	7	6.5	68.0	5	12	5	8	12
8 FT	14	15	10	10	6	8	6	6.5	62.0	34.0	34.0	38.0	7	14	72.0	7	14	42.0	6	7.5	6	6.5	62.1	143	155	167	7	6	67.0	5	12	5	8	0
10 FT	15	17	10	10	6	8	6	6.5	64.6	35.0	35.0	39.0	7	14	78.0	7	14	49.5	6	7	6	6.5	59.6	145	157	169	7	6.5	67.0	5	12	5	8	0
12 FT	16	18	11	10	6	7.5	6	6.5	62.6	36.0	36.0	40.0	7	13	76.5	7	13	49.0	6	6.5	6	7.5	57.4	146	158	170	7	6	67.0	5	12	5	7.5	0
14 FT	18	20	12	10	6	7	6	7	62.0	38.0	38.0	42.0	7	13	75.5	7	13	48.0	6	6	6	8	56.4	148	160	172	7	6.5	67.0	5	12	5	7	0
16 FT	19	21	12	10	6	6.5	6	6.5	60.9	39.0	39.0	43.0	7	13	74.5	7	13	48.5	7	8	6	7.5	55.4	149	161	173	7	6	66.5	5	12	5	7	0
18 FT	21	22	12	10	6	6	6	6.5	59.8	41.0	45.0	45.0	7	13	74.0	7	13	48.5	7	7	6	6	54.6	150	162	174	7	6	66.5	5	12	5	7	0
20 FT	22	24	13	10	6	6	6	6.5	59.9	42.0	42.0	46.0	7	12	73.5	7	12	48.5	7	7	6	7.5	54.4	152	164	176	7	6	66.5	5	12	5	6.5	0
22 FT	23	26	13	10	7	7	6	6	59.3	43.0	43.0	47.0	7	12	72.5	7	12	48.0	7	7	6	7	53.9	154	166	178	7	6	66.5	5	12	5	6.5	0
24 FT	25	28	14	10	7	7	6	6	59.5	45.0	45.0	49.0	7	12	71.5	7	12	48.0	7	7	6	7.5	54.0	156	168	180	7	6	66.5	5	12	5	6	0
26 FT	26	29	14	10	7	6.5	6	6	59.0	50.0	50.0	50.0	7	12	71.0	7	12	47.5	7	7	6	7.5	53.6	157	169	181	8	7	72.5	5	12	5	6	0
28 FT	27	31	15	10	7	6	6	6	59.6	51.0	51.0	51.0	7	12	70.5	7	12	47.5	7	7	6	7.5	53.9	159	171	183	8	7	72.5	5	12	6	8	0
30 FT	29	32	15	10	7	6	7	8	64.3	53.0	53.0	53.0	7	12	69.0	7	12	47.0	7	6.5	6	7.5	54.0	160	172	184	8	7	72.5	5	12	6	8	0
32 FT	30	33	16	10	7	6	6	6	59.9	54.0	54.0	54.0	7	12	68.0	7	12	46.5	7	6	6	7	54.3	161	173	185	8	6.5	72.5	5	12	6	8	0
34 FT	31	35	16	10	8	7.5	6	6	58.3	55.0	55.0	55.0	8	15	75.0	8	15	53.0	7	6.5	6	6.5	52.6	163	175	187	8	6.5	72.5	5	12	6	8	0
36 FT	32	36	16	10	8	7.5	7	7.5	63.1	56.0	56.0	56.0	8	14	74.0	8	14	52.5	7	6.5	6	6.5	52.8	164	176	188	8	6	72.5	5	12	6	8	0
38 FT	33	37	16	10	8	7	7	7	63.1	57.0	57.0	57.0	8	14	72.5	8	14	52.0	7	6	6	6.5	52.9	165	177	189	8	6	72.5	5	12	6	8	0
40 FT	34	38	17	10	8	7	7	7.5	63.9	58.0	58.0	58.0	8	14	72.0	8	14	51.0	7	6	6	6	53.3	166	178	190	8	6	72.5	5	12	6	7.5	0
42 FT	35	40	18	10	8	6.5	7	7.5	64.8	59.0	59.0	59.0	8	13	71.5	8	13	50.0	7	6	6	6	53.8	168	180	192	9	7	78.5	5	12	6	7	0
44 FT	36	41	18	10	8	6.5	7	7.5	64.6	60.0	60.0	66.0	8	13	71.0	8	13	49.5	7	6	7	8	56.9	169	181	193	9	7	78.5	5	12	6	7	0
46 FT	37	42	18	10	8	6.5	7	6.5	64.6	61.0	61.0	67.0	8	12	70.5	8	12	48.5	7	6	7	7.5	57.0	170	182	194	9	7	78.5	5	12	6	7	0
48 FT	38	43	19	10	8	6	7	7	65.4	62.0	62.0	68.0	8	13	69.5	8	13	48.0	8	7.5	7	7.5	57.5	171	183	195	9	7	78.5	5	12	6	6.5	0
50 FT	39	44	19	10	8	6	7	6.5	65.3	63.0	63.0	69.0	8	13	69.0	8	13	47.5	8	7.5	7	7	57.6	172	184	196	9	6.5	78.5	5	12	6	6.5	0

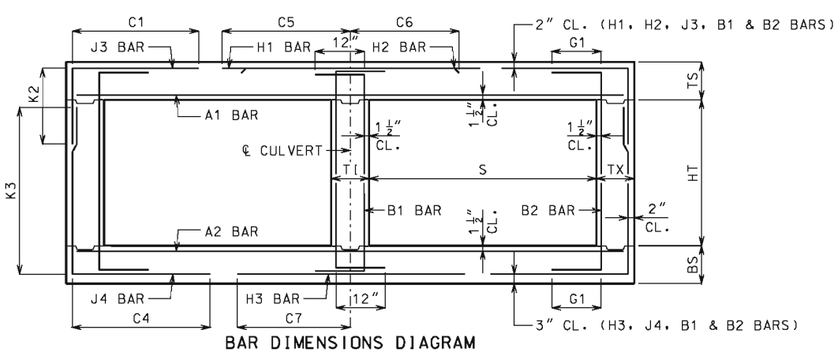

BAR DIMENSIONS DIAGRAM
SYMMETRICAL ABOUT ℄ CULVERT.

GENERAL NOTES:

IF DESIGN FILL IS BETWEEN TABULATED DESIGN FILLS, USE THE NEXT GREATER TABULATED DESIGN FILL, EXCEPT FOR DESIGN FILLS BETWEEN 2 FEET AND 4 FEET. FOR DESIGN FILLS BETWEEN 2 FEET AND 4 FEET USE THE GREATER MEMBER THICKNESS, AREA OF REINFORCEMENT AND BAR DIMENSIONS FROM THE 2 FEET AND 4 FEET TABULATED DESIGN FILLS. AREA OF REINFORCEMENT EQUALS BAR AREA PER FOOT SPACING.

SPECIAL DESIGNS ARE REQUIRED WHEN THE DESIGN FILL IS LESS THAN 1 FOOT OR GREATER THAN 50 FEET.

DIMENSIONS ARE IN INCHES UNLESS OTHERWISE SPECIFIED.

DESIGN FILLS ARE MEASURED FROM THE TOP OF TOP SLAB TO THE TOP OF EARTH FILL OR ROADWAY.

CULVERTS MEET STRENGTH AND SERVICEABILITY REQUIREMENTS FOR THE DESIGN VEHICULAR LIVE LOAD HL-93 MINUS THE LANE LOAD.

IF A SEAL IS PRESENT ON THIS SHEET IT HAS BEEN ELECTRONICALLY SEALED AND DATED.

MISSOURI HIGHWAYS AND TRANSPORTATION COMMISSION
105 WEST CAPITOL
JEFFERSON CITY, MO 65102
1-888-ASK-MODOT (1-888-275-6636)

STATE OF MISSOURI
DENNIS W. HECKMAN
NUMBER PE-27141
PROFESSIONAL ENGINEER
THIS SHEET HAS BEEN SIGNED, SEALED AND DATED ELECTRONICALLY.

CONCRETE DOUBLE BOX CULVERT

MEMBER THICKNESS
BAR SIZE, SPACING & DIMENSIONS

SPAN (S): 15 FEET
HEIGHT (HT): 8 THRU 13 FEET

DATE EFFECTIVE: 10/01/2011
DATE PREPARED: 9/8/2011

703.47

SHEET NO.
24 OF 27

SPAN (S) = 15 FT HEIGHT (HT) = 14 FT OR 15 FT OR 16 FT

DESIGN FILL	MEMBER THICKNESS				TOP SLAB BARS												BOTTOM SLAB BARS												WALL BARS				
					A1 BARS		J3 BARS					H1 BARS			H2 BARS			A2 BARS		J4 BARS					H3 BARS				B1 BARS		B2 BARS		
										K2											K3										
	TS	BS	TX	TI	SIZE	SPA.	SIZE	SPA.	C1	HT=14'	HT=15'	HT=16'	SIZE	SPA.	C5	SIZE	SPA.	C6	SIZE	SPA.	SIZE	SPA.	C4	HT=14'	HT=15'	HT=16'	SIZE	SPA.	C7	SIZE	SPA.	SIZE	SPA.	G1
1 FT	15	13	12	13	6	8	6	8.5	79.3	35.0	35.0	39.0	6	16	152.5	6	16	50.0	5	6	6	7	102.4	177	189	201	6	6	67.5	5	11	5	7	12
2 FT	16	14	12	13	6	7.5	5	6	76.3	36.0	36.0	36.0	6	15	149.5	6	15	48.5	6	8	6	7.5	96.3	178	190	202	6	6	67.0	5	12	5	7	12
4 FT	12	13	12	13	6	7	6	7	101.4	36.0	36.0	36.0	6	12	86.5	6	12	41.5	5	6	6	6.5	88.5	177	189	201	7	6.5	69.0	5	10.5	5	7	12
6 FT	13	14	12	13	6	8	6	6.5	86.3	37.0	37.0	37.0	7	16	74.5	7	16	43.5	6	8	6	6.5	82.9	178	190	202	7	6	68.0	5	12	5	7	12
8 FT	13	15	13	13	6	8	6	6.5	76.4	37.0	37.0	37.0	7	14	70.5	7	14	42.5	6	7.5	6	6.5	77.9	179	191	203	7	6	68.0	5	12	5	6.5	0
10 FT	15	17	13	13	6	8	6	6	80.6	39.0	39.0	39.0	7	14	77.5	7	14	50.5	6	7	6	6.5	76.0	181	193	205	7	6.5	67.5	5	12	5	6.5	0
12 FT	16	18	14	13	6	8	6	6	78.4	40.0	40.0	40.0	7	14	76.5	7	14	50.0	6	6.5	6	6.5	73.8	182	194	206	7	6	67.5	5	12	5	6	0
14 FT	17	20	14	13	6	7.5	7	7.5	81.6	41.0	41.0	41.0	7	13	75.5	7	13	50.0	6	6	6	6	72.9	184	196	208	7	6	67.5	5	12	5	6	0
16 FT	19	21	15	13	6	6.5	7	8	80.9	43.0	43.0	49.0	7	13	75.0	7	13	49.5	7	8	7	8	74.4	185	197	209	7	6	67.0	5	12	6	8	0
18 FT	20	23	16	13	6	6.5	7	8	80.1	44.0	44.0	44.0	7	13	74.0	7	13	49.5	7	7.5	6	6	70.8	187	199	211	7	6	67.0	5	12	6	8	0
20 FT	21	24	17	13	6	6	7	7.5	79.5	45.0	45.0	45.0	7	12	73.5	7	12	49.5	7	7	6	6	69.8	188	200	212	7	6	67.0	5	12	6	7.5	0
22 FT	23	26	17	13	7	7.5	7	7.5	78.9	47.0	47.0	47.0	7	12	73.0	7	12	49.0	7	7	6	6	69.4	190	202	214	7	6	67.0	5	12	6	7.5	0
24 FT	24	28	18	13	7	7	7	7.5	78.6	48.0	48.0	48.0	7	12	72.5	7	12	49.0	7	7	6	6.5	69.0	192	204	216	7	6	67.0	5	12	6	7	0
26 FT	26	29	18	13	7	7	7	7	78.1	50.0	50.0	50.0	7	12	71.5	7	12	49.0	7	6	6	6	68.5	193	205	217	8	7	73.0	5	12	6	7	0
28 FT	27	31	19	13	7	6.5	7	7	78.5	51.0	51.0	51.0	7	12	71.0	7	12	48.5	7	6.5	6	6	68.6	195	207	219	8	7	73.0	5	12	6	6.5	0
30 FT	28	32	19	13	7	6	7	6	78.1	52.0	52.0	52.0	7	12	70.5	7	12	48.5	7	6.5	6	6	68.5	196	208	220	8	7	73.0	5	12	6	6.5	0
32 FT	30	34	20	13	7	6	7	6.5	78.8	54.0	54.0	54.0	7	12	69.0	7	12	47.0	7	6.5	6	6	68.9	198	210	222	8	6.5	73.0	5	12	6	6.5	0
34 FT	31	35	20	13	7	6	7	6.5	76.3	55.0	55.0	55.0	8	15	76.0	8	15	54.0	7	6.5	6	6	66.4	199	211	223	8	6.5	73.0	5	12	6	6.5	0
36 FT	32	36	21	13	8	7.5	7	6.5	76.8	56.0	56.0	56.0	8	14	75.0	8	14	53.5	7	6	6	6	66.6	200	212	224	8	6	73.0	5	12	6	6	0
38 FT	33	37	21	13	8	7	7	6	76.8	57.0	57.0	57.0	8	14	74.0	8	14	53.0	7	6	6	6	66.6	201	213	225	8	6	73.0	5	12	6	6	0
40 FT	34	39	22	13	8	7	7	6	77.5	58.0	58.0	64.0	8	14	73.0	8	14	52.0	7	6	7	7.5	70.1	203	215	227	8	6	73.0	5	12	6	6	0
42 FT	35	40	23	13	8	7	7	6.5	78.1	59.0	59.0	65.0	8	13	72.5	8	13	51.0	7	6	7	7.5	70.4	204	216	228	9	7	79.0	5	12	7	7.5	0
44 FT	35	41	24	13	8	6	7	6	78.9	65.0	65.0	65.0	8	12	72.5	8	12	52.0	8	7.5	7	7	70.6	205	217	229	9	7	79.5	5	12	7	8	0
46 FT	36	42	25	13	8	6	7	6	79.5	66.0	66.0	66.0	8	12	72.0	8	12	51.0	8	7	7	7.5	70.9	206	218	230	9	7	79.5	5	12	7	8	0
48 FT	37	43	26	13	8	6.5	7	6	80.3	67.0	67.0	67.0	8	12	71.5	8	12	50.0	8	6.5	7	7.5	71.3	207	219	231	9	7	79.5	5	12	7	8	0
50 FT	38	45	27	13	8	6	7	6	81.1	68.0	68.0	68.0	8	12	71.0	8	12	49.0	8	7	7	7	71.8	209	221	233	9	6.5	79.5	5	12	7	8	0

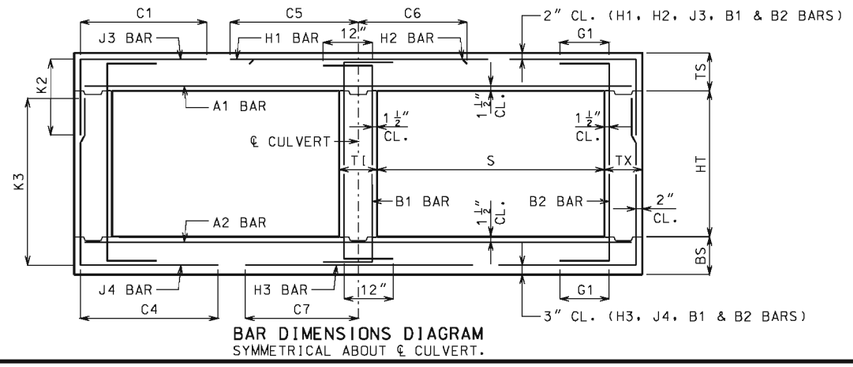

BAR DIMENSIONS DIAGRAM
SYMMETRICAL ABOUT ℄ CULVERT.

GENERAL NOTES:

IF DESIGN FILL IS BETWEEN TABULATED DESIGN FILLS, USE THE NEXT GREATER TABULATED DESIGN FILL, EXCEPT FOR DESIGN FILLS BETWEEN 2 FEET AND 4 FEET. FOR DESIGN FILLS BETWEEN 2 FEET AND 4 FEET USE THE GREATER MEMBER THICKNESS, AREA OF REINFORCEMENT AND BAR DIMENSIONS FROM THE 2 FEET AND 4 FEET TABULATED DESIGN FILLS. AREA OF REINFORCEMENT EQUALS BAR AREA PER FOOT SPACING.

SPECIAL DESIGNS ARE REQUIRED WHEN THE DESIGN FILL IS LESS THAN 1 FOOT OR GREATER THAN 50 FEET.

DIMENSIONS ARE IN INCHES UNLESS OTHERWISE SPECIFIED.

DESIGN FILLS ARE MEASURED FROM THE TOP OF TOP SLAB TO THE TOP OF EARTH FILL OR ROADWAY.

CULVERTS MEET STRENGTH AND SERVICEABILITY REQUIREMENTS FOR THE DESIGN VEHICULAR LIVE LOAD HL-93 MINUS THE LANE LOAD.

MISSOURI HIGHWAYS AND TRANSPORTATION COMMISSION
105 WEST CAPITOL
JEFFERSON CITY, MO 65102
1-888-ASK-MODOT (1-888-275-6636)

STATE OF MISSOURI
DENNIS W. HECKMAN
NUMBER PE-27141
PROFESSIONAL ENGINEER
THIS SHEET HAS BEEN SIGNED, SEALED AND DATED ELECTRONICALLY.

CONCRETE DOUBLE BOX CULVERT

MEMBER THICKNESS
BAR SIZE, SPACING & DIMENSIONS

SPAN (S): 15 FEET
HEIGHT (HT): 14 THRU 16 FEET

DATE EFFECTIVE: 10/01/2011
DATE PREPARED: 9/8/2011

703.47

SHEET NO. 25 OF 27

IF A SEAL IS PRESENT ON THIS SHEET IT HAS BEEN ELECTRONICALLY SEALED AND DATED.

SPAN (S) = 16 FT HEIGHT (HT) = 8 FT OR 9 FT OR 10 FT

DESIGN FILL	MEMBER THICKNESS				TOP SLAB BARS												BOTTOM SLAB BARS												WALL BARS				
					A1 BARS		J3 BARS						H1 BARS			H2 BARS			A2 BARS		J4 BARS					H3 BARS			B1 BARS		B2 BARS		
	TS	BS	TX	TI	SIZE	SPA.	SIZE	SPA.	C1	K2 HT=8′	K2 HT=9′	K2 HT=10′	SIZE	SPA.	C5	SIZE	SPA.	C6	SIZE	SPA.	SIZE	SPA.	C4	K3 HT=8′	K3 HT=9′	K3 HT=10′	SIZE	SPA.	C7	SIZE	SPA.	SIZE	SPA.	G1
1 FT	15	12	8	8	6	7.5	5	8	76.5	35.0	35.0	35.0	6	15	154.5	6	15	54.0	5	6	6	7	66.9	104	116	128	7	7	72.5	5	12	5	12	12
2 FT	17	13	8	8	6	7	5	6.5	76.5	37.0	37.0	37.0	6	14	154.5	6	14	50.0	5	6	5	6	56.4	105	117	129	7	7	71.5	5	12	5	12	12
4 FT	13	13	8	8	6	6.5	6	7	55.6	33.0	33.0	33.0	7	14	97.0	7	14	45.5	5	6	5	6	49.6	105	117	129	7	6	71.0	5	12	5	12	12
6 FT	14	14	8	8	6	7	5	6	47.1	34.0	34.0	34.0	7	14	82.0	7	14	44.0	6	8	5	6	45.1	106	118	130	7	6	70.5	5	12	5	12	12
8 FT	15	16	8	8	6	7.5	5	6	48.4	35.0	35.0	35.0	7	13	84.0	7	13	51.0	6	7	5	7	41.9	108	120	132	7	6	70.0	5	12	5	11	0
10 FT	16	17	8	8	6	7	6	8	49.6	36.0	36.0	36.0	7	12	81.5	7	12	50.5	6	7	5	6.5	39.9	109	121	133	7	6	69.5	5	12	5	10	0
12 FT	18	19	8	8	6	7	6	7.5	47.5	38.0	38.0	38.0	7	12	80.0	7	12	50.0	6	6	5	6	38.6	111	123	135	7	6	69.5	5	12	5	9.5	0
14 FT	19	20	8	8	6	6.5	6	7	46.0	39.0	39.0	43.0	7	12	79.0	7	12	49.5	6	6	6	7.5	40.5	112	124	136	7	6	69.5	5	12	5	9.5	0
16 FT	21	22	8	8	6	6	6	7	44.9	45.0	45.0	45.0	7	12	78.0	7	12	49.5	7	7.5	6	7	39.9	114	126	138	7	6	69.5	5	12	5	8.5	0
18 FT	22	23	9	8	6	6	6	7.5	45.1	42.0	42.0	42.0	8	15	85.0	8	15	57.0	7	6.5	5	6	36.8	115	127	139	8	6.5	75.5	5	12	5	8.5	0
20 FT	24	25	9	8	7	7.5	6	7	44.4	48.0	48.0	48.0	8	15	84.0	8	15	57.0	7	7	6	7	39.4	117	129	141	8	7	75.5	5	12	5	8.5	0
22 FT	25	27	10	8	7	7	6	7.5	45.0	45.0	45.0	49.0	8	14	83.5	8	14	56.5	7	6.5	6	7	39.5	119	131	143	8	7	75.5	5	12	5	8	0
24 FT	27	29	10	8	7	6.5	6	6.5	44.5	51.0	51.0	51.0	8	14	82.5	8	14	56.5	7	6.5	6	6.5	39.3	121	133	145	8	7	75.0	5	12	5	8	0
26 FT	28	31	11	8	7	6	6	7.5	45.3	52.0	52.0	52.0	8	14	81.5	8	14	56.0	7	6.5	6	7	39.5	123	135	147	8	7	75.0	5	12	5	7.5	0
28 FT	30	32	11	8	7	6	6	7	44.9	54.0	54.0	54.0	8	14	80.5	8	14	56.0	7	6.5	6	6.5	39.6	124	136	148	8	7	75.0	5	12	5	7.5	0
30 FT	31	34	11	8	8	7.5	6	6	44.9	55.0	55.0	55.0	8	14	79.5	8	14	55.5	7	6.5	6	6	39.6	126	138	150	8	6.5	75.0	5	12	5	7	0
32 FT	32	35	12	8	8	7	6	7	45.8	56.0	56.0	56.0	8	14	78.5	8	14	55.0	7	6	6	6.5	40.0	127	139	151	8	6.5	75.0	5	12	5	7	0
34 FT	33	36	12	8	8	7	6	7	45.3	57.0	57.0	57.0	8	14	77.5	8	14	54.5	7	6	6	6.5	39.3	128	140	152	8	6	75.0	5	12	5	7	0
36 FT	35	38	12	8	8	6.5	6	6.5	45.3	59.0	59.0	59.0	8	13	75.0	8	13	52.0	7	6	6	6	39.3	130	142	154	8	6	75.0	5	12	5	7	0
38 FT	36	39	12	8	8	6.5	6	6.5	45.3	60.0	60.0	60.0	8	13	74.0	8	13	51.5	7	6	6	6	39.3	131	143	155	8	6	75.0	5	12	5	6.5	0
40 FT	37	41	12	8	8	6.5	6	6	45.3	61.0	61.0	61.0	8	12	73.5	8	12	50.5	7	6	7	6.5	42.5	133	145	157	9	7	80.5	5	11	5	6	0
42 FT	38	42	12	8	8	6	6	6	45.3	62.0	62.0	62.0	8	12	73.0	8	12	50.0	7	6	7	6	42.6	134	146	158	9	7	80.5	5	7	6	8	0
44 FT	39	43	13	9	8	6	6	6	45.8	63.0	63.0	63.0	8	12	73.5	8	12	50.5	8	7.5	7	6.5	43.1	135	147	159	9	7	81.0	5	12	5	6	0
46 FT	40	44	13	9	8	6	7	7	50.8	70.0	70.0	70.0	8	12	73.0	8	12	49.5	8	7.5	7	6.5	43.4	136	148	160	9	6.5	80.5	5	12	6	8	0
48 FT	41	45	13	9	9	7.5	7	7	50.8	71.0	71.0	71.0	9	15	80.5	9	15	56.5	8	7	7	6.5	43.5	137	149	161	9	6.5	80.5	5	12	6	7.5	0
50 FT	42	46	13	9	9	7	7	6.5	50.8	72.0	72.0	72.0	9	14	80.0	9	14	56.0	8	7	7	6	43.8	138	150	162	9	6.5	80.5	5	9.5	6	7	0

SPAN (S) = 16 FT HEIGHT (HT) = 11 FT OR 12 FT OR 13 FT

DESIGN FILL	MEMBER THICKNESS				TOP SLAB BARS												BOTTOM SLAB BARS												WALL BARS				
					A1 BARS		J3 BARS						H1 BARS			H2 BARS			A2 BARS		J4 BARS					H3 BARS			B1 BARS		B2 BARS		
	TS	BS	TX	TI	SIZE	SPA.	SIZE	SPA.	C1	K2 HT=11′	K2 HT=12′	K2 HT=13′	SIZE	SPA.	C5	SIZE	SPA.	C6	SIZE	SPA.	SIZE	SPA.	C4	K3 HT=11′	K3 HT=12′	K3 HT=13′	SIZE	SPA.	C7	SIZE	SPA.	SIZE	SPA.	G1
1 FT	15	13	9	10	6	7.5	5	6	77.5	35.0	35.0	35.0	6	15	155.5	6	15	53.5	5	6	6	6	89.5	141	153	165	6	6	70.0	5	11.5	5	8.5	12
2 FT	17	14	9	10	6	7.5	5	6.5	77.5	37.0	37.0	37.0	6	14	155.5	6	14	50.0	6	8	6	6.5	79.8	142	154	166	6	6	69.5	5	12	5	8.5	12
4 FT	13	13	10	10	6	6.5	6	7	76.9	33.0	37.0	37.0	7	15	96.5	7	15	46.0	5	6	6	6.5	70.0	141	153	165	7	6	71.5	5	11	5	8.5	12
6 FT	13	14	10	10	6	7	6	7	65.3	33.0	37.0	37.0	7	13	79.5	7	13	44.0	6	8	6	6.5	64.5	142	154	166	7	6	71.0	5	12	5	8	12
8 FT	14	16	10	10	6	7	6	6.5	60.3	34.0	34.0	38.0	7	13	75.0	7	13	43.0	6	7	6	7	60.6	144	156	168	7	6	70.5	5	12	5	8	0
10 FT	16	17	10	10	6	7	6	6.5	63.1	36.0	40.0	40.0	7	13	81.5	7	13	51.0	6	7	6	6.5	57.8	145	157	169	7	6	70.0	5	12	5	8	0
12 FT	17	19	11	10	6	7	6	6.5	62.3	37.0	37.0	41.0	7	12	80.0	7	12	50.5	6	6	6	7.5	56.5	147	159	171	7	6	70.0	5	12	5	7.5	0
14 FT	19	21	12	10	6	6.5	6	7	61.5	39.0	39.0	43.0	7	12	78.5	7	12	50.0	7	8	6	8	55.8	149	161	173	7	6	70.0	5	12	5	7	0
16 FT	20	22	12	10	6	6.5	6	6.5	60.3	40.0	40.0	44.0	7	12	78.0	7	12	50.0	7	7.5	6	7	54.6	150	162	174	7	6	70.0	5	12	5	7	0
18 FT	22	24	12	10	6	6	6	6	59.3	42.0	46.0	46.0	7	12	77.0	7	12	50.0	7	7	6	6.5	54.0	152	164	176	7	6	69.5	5	12	5	7	0
20 FT	23	25	13	10	7	7.5	6	6	59.1	43.0	43.0	47.0	8	15	84.5	8	15	57.5	7	6.5	6	7	53.6	153	165	177	8	7	75.5	5	12	5	6.5	0
22 FT	25	27	13	10	7	7	6	6	58.4	45.0	45.0	49.0	8	15	83.5	8	15	57.5	7	6.5	6	7	53.1	155	167	179	8	7	75.5	5	12	5	6.5	0
24 FT	27	29	14	10	7	6.5	6	6	58.6	51.0	51.0	51.0	8	15	82.5	8	15	57.0	7	6.5	6	7.5	53.3	157	169	181	8	7	75.5	5	12	5	6	0
26 FT	28	31	14	10	7	6.5	6	6	58.3	52.0	52.0	52.0	8	14	82.0	8	14	57.0	7	6.5	6	7.5	52.9	159	171	183	8	7	75.5	5	12	5	6	0
28 FT	30	33	15	10	7	6	6	6	58.8	54.0	54.0	54.0	8	15	80.5	8	15	56.5	7	6.5	6	7	53.3	161	173	185	8	6.5	75.5	5	12	6	8	0
30 FT	31	34	15	10	8	7.5	7	8	63.5	55.0	55.0	55.0	8	15	79.5	8	15	56.0	7	6	6	7	53.1	162	174	186	8	6.5	75.5	5	12	6	8	0
32 FT	32	35	15	10	8	7.5	7	7	63.3	56.0	56.0	56.0	8	14	79.0	8	14	55.5	7	6	6	6.5	53.0	163	175	187	8	6.5	75.5	5	12	6	8	0
34 FT	33	37	16	10	8	7	7	7.5	64.0	57.0	57.0	57.0	8	14	77.5	8	14	55.0	7	6	6	6.5	53.5	165	177	189	8	6	75.5	5	12	6	8	0
36 FT	34	38	16	10	8	7	7	7.5	62.4	58.0	58.0	58.0	8	14	76.5	8	14	54.0	7	6	6	6	51.9	166	178	190	8	6	75.5	5	12	6	8	0
38 FT	35	40	16	10	8	6.5	7	7	62.4	59.0	59.0	59.0	8	13	75.0	8	13	53.5	7	6	6	6	52.0	168	180	192	9	7	81.5	5	12	6	8	0
40 FT	36	41	17	10	8	6	7	7.5	63.1	60.0	60.0	66.0	8	12	74.5	8	12	52.5	8	7.5	7	8	55.5	169	181	193	9	7	81.5	5	12	6	7.5	0
42 FT	38	42	17	10	8	6	7	7.5	62.9	62.0	62.0	68.0	8	12	73.5	8	12	50.0	8	7.5	7	7.5	55.8	170	182	194	9	7	81.5	5	12	6	7.5	0
44 FT	39	43	18	10	8	6	7	7.5	63.8	63.0	63.0	69.0	8	12	73.0	8	12	49.0	8	7	7	7.5	56.1	171	183	195	9	7	81.5	5	12	6	7	0
46 FT	40	44	18	10	8	6	7	7.5	63.6	70.0	70.0	70.0	8	12	72.0	8	12	48.5	8	6.5	7	7	56.3	172	184	196	9	6.5	81.5	5	12	6	7	0
48 FT	40	46	19	10	8	6	7	7	64.8	70.0	70.0	70.0	8	12	72.0	8	12	49.0	8	7	7	7	56.6	174	186	198	9	6.5	81.5	5	12	6	6.5	0
50 FT	41	47	19	10	9	7.5	7	6.5	64.6	71.0	71.0	71.0	8	12	71.5	8	12	48.5	8	7	7	6.5	56.9	175	187	199	9	6	81.5	5	12	6	6.5	0

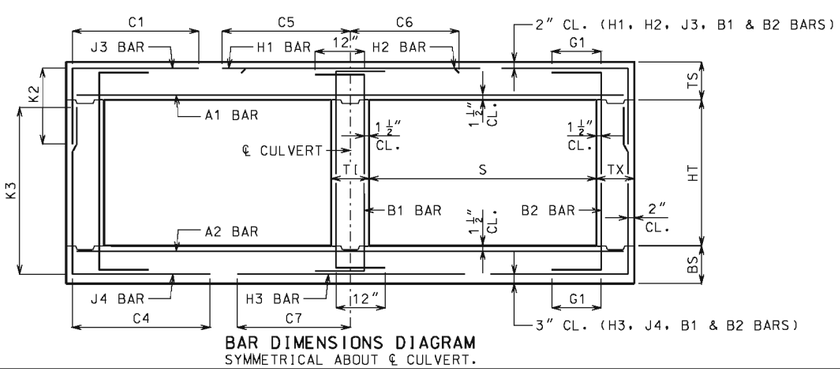

BAR DIMENSIONS DIAGRAM
SYMMETRICAL ABOUT ℄ CULVERT.

IF A SEAL IS PRESENT ON THIS SHEET IT HAS BEEN ELECTRONICALLY SEALED AND DATED.

GENERAL NOTES:

IF DESIGN FILL IS BETWEEN TABULATED DESIGN FILLS, USE THE NEXT GREATER TABULATED DESIGN FILL, EXCEPT FOR DESIGN FILLS BETWEEN 2 FEET AND 4 FEET. FOR DESIGN FILLS BETWEEN 2 FEET AND 4 FEET USE THE GREATER MEMBER THICKNESS, AREA OF REINFORCEMENT AND BAR DIMENSIONS FROM THE 2 FEET AND 4 FEET TABULATED DESIGN FILLS. AREA OF REINFORCEMENT EQUALS BAR AREA PER FOOT SPACING.

SPECIAL DESIGNS ARE REQUIRED WHEN THE DESIGN FILL IS LESS THAN 1 FOOT OR GREATER THAN 50 FEET.

DIMENSIONS ARE IN INCHES UNLESS OTHERWISE SPECIFIED.

DESIGN FILLS ARE MEASURED FROM THE TOP OF TOP SLAB TO THE TOP OF EARTH FILL OR ROADWAY.

CULVERTS MEET STRENGTH AND SERVICEABILITY REQUIREMENTS FOR THE DESIGN VEHICULAR LIVE LOAD HL-93 MINUS THE LANE LOAD.

MISSOURI HIGHWAYS AND TRANSPORTATION COMMISSION
105 WEST CAPITOL
JEFFERSON CITY, MO 65102
1-888-ASK-MODOT (1-888-275-6636)

STATE OF MISSOURI
DENNIS W. HECKMAN
NUMBER PE-27141
PROFESSIONAL ENGINEER
THIS SHEET HAS BEEN SIGNED, SEALED AND DATED ELECTRONICALLY.

CONCRETE DOUBLE BOX CULVERT

MEMBER THICKNESS
BAR SIZE, SPACING & DIMENSIONS

SPAN (S): 16 FEET
HEIGHT (HT): 8 THRU 13 FEET

DATE EFFECTIVE: 10/01/2011
DATE PREPARED: 9/8/2011

703.47

SHEET NO.
26 OF 27

SPAN (S) = 16 FT HEIGHT (HT) = 14 FT OR 15 FT OR 16 FT

DESIGN FILL	MEMBER THICKNESS				TOP SLAB BARS												BOTTOM SLAB BARS											WALL BARS				
					A1 BARS		J3 BARS					H1 BARS			H2 BARS			A2 BARS		J4 BARS					H3 BARS			B1 BARS		B2 BARS		
										K2											K3										
	TS	BS	TX	TI	SIZE	SPA.	SIZE	SPA.	C1	HT=14'	HT=15'	HT=16'	SIZE	SPA.	C5	SIZE	SPA.	C6	SIZE	SPA.	SIZE	SPA.	C4	HT=14'	HT=15'	HT=16'	SIZE	SPA.	C7	SIZE	SPA.	SIZE	SPA.	G1
1 FT	15	13	12	13	6	7.5	6	8	82.9	35.0	35.0	39.0	6	15	160.5	6	15	53.0	5	6	6	7	101.1	177	189	201	6	6	70.5	5	10	5	7	12
2 FT	17	14	12	13	6	7.5	6	8.5	82.9	37.0	37.0	41.0	6	14	160.5	6	14	50.0	6	8	6	7	95.1	178	190	202	7	7	73.0	5	12	5	7	12
4 FT	13	13	12	13	6	7	6	7	99.8	37.0	37.0	37.0	7	15	94.0	7	15	46.0	6	8.5	6	6	86.1	177	189	201	7	6	72.0	5	11	5	7	12
6 FT	13	15	12	13	6	7	6	6.5	82.6	37.0	37.0	37.0	7	14	77.5	7	14	44.5	6	7.5	6	6.5	82.5	179	191	203	7	6	71.5	5	12	5	7	12
8 FT	14	16	13	13	6	7.5	6	6.5	76.6	38.0	38.0	38.0	7	13	74.5	7	13	44.0	6	7	6	6.5	77.6	180	192	204	7	6	71.0	5	12	5	6.5	0
10 FT	15	18	13	13	6	6.5	6	6	79.5	39.0	39.0	39.0	7	13	80.5	7	13	51.5	6	6.5	6	6	75.6	182	194	206	7	6	71.0	5	12	5	6.5	0
12 FT	17	19	14	13	6	7	6	6	77.8	41.0	41.0	41.0	7	13	79.5	7	13	51.5	6	6	6	6	73.1	183	195	207	7	6	70.5	5	12	5	6	0
14 FT	18	21	15	13	6	7	6	6	76.3	42.0	42.0	42.0	7	12	78.5	7	12	51.0	7	8	6	6	71.8	185	197	209	7	6	70.5	5	12	6	8	0
16 FT	20	22	15	13	6	6.5	7	7.5	79.9	44.0	44.0	44.0	7	12	78.0	7	12	51.0	7	7.5	6	6	70.3	186	198	210	7	6	70.0	5	12	6	8	0
18 FT	22	24	15	13	6	6	7	7	78.8	46.0	46.0	52.0	7	12	77.5	7	12	51.0	7	7	7	7	72.4	188	200	212	7	6	70.0	5	12	6	8	0
20 FT	23	25	16	13	7	7.5	7	7	78.0	47.0	47.0	53.0	8	15	85.0	8	15	58.5	7	6	7	7.5	71.4	189	201	213	8	7	76.0	5	12	6	8	0
22 FT	25	27	17	13	7	7	7	7.5	77.8	49.0	49.0	49.0	7	12	76.0	7	12	50.5	7	6	6	6	68.0	191	203	215	8	7	76.0	5	12	6	7.5	0
24 FT	26	29	17	13	7	7	7	7	76.9	50.0	50.0	56.0	8	15	83.5	8	15	58.5	7	6.5	7	7.5	70.4	193	205	217	8	7	76.0	5	12	6	7.5	0
26 FT	28	31	18	13	7	6.5	7	7	76.9	52.0	52.0	52.0	8	15	82.5	8	15	58.0	7	6.5	6	6	67.1	195	207	219	8	7	76.5	5	12	6	7	0
28 FT	29	33	19	13	7	6	7	7	77.1	53.0	53.0	53.0	8	15	82.0	8	15	58.0	7	6	6	6	67.1	197	209	221	8	6.5	76.5	5	12	6	6.5	0
30 FT	31	34	19	13	8	7.5	7	6.5	76.8	55.0	55.0	55.0	8	15	80.5	8	15	57.0	7	6	6	6	67.0	198	210	222	8	6.5	76.0	5	12	6	6.5	0
32 FT	32	36	20	13	8	7.5	7	6.5	77.3	56.0	56.0	56.0	8	14	79.5	8	14	56.5	7	6	6	6	67.3	200	212	224	8	6	76.5	5	12	6	6.5	0
34 FT	33	37	21	13	8	7	7	6.5	77.6	57.0	57.0	57.0	8	14	78.5	8	14	55.5	7	6	6	6	67.3	201	213	225	8	6	76.5	5	12	6	6	0
36 FT	34	38	21	13	8	7	7	6.5	75.5	58.0	58.0	58.0	8	14	77.5	8	14	55.0	8	7	6	6	64.9	202	214	226	8	6	76.5	5	12	6	6	0
38 FT	35	40	21	13	8	6.5	7	6	75.5	59.0	59.0	59.0	8	13	76.5	8	13	54.0	8	7.5	6	6	65.1	204	216	228	9	7	82.0	5	12	6	6	0
40 FT	36	41	22	13	8	6.5	7	6	76.1	66.0	66.0	66.0	8	13	75.5	8	13	53.5	8	7.5	7	7.5	68.5	205	217	229	9	7	82.0	5	12	6	6	0
42 FT	37	42	23	13	8	6.5	7	6.5	76.9	67.0	67.0	67.0	8	12	75.0	8	12	52.5	8	6.5	7	7.5	68.8	206	218	230	9	7	82.5	5	12	7	7.5	0
44 FT	38	44	24	13	8	6	7	6	77.6	68.0	68.0	68.0	8	12	74.5	8	12	52.0	8	7	7	7	69.4	208	220	232	9	6.5	82.5	5	12	7	7.5	0
46 FT	39	45	25	13	8	6	7	6	78.4	69.0	69.0	69.0	8	12	74.0	8	12	51.0	8	7	7	7	69.8	209	221	233	9	6.5	82.5	5	12	7	7.5	0
48 FT	40	46	26	13	8	6	7	6	79.1	70.0	70.0	70.0	8	12	73.5	8	12	50.0	8	6.5	7	7	70.1	210	222	234	9	6.5	82.5	5	12	7	8	0
50 FT	41	47	27	13	9	7.5	7	6	79.9	71.0	71.0	71.0	8	12	73.0	8	12	49.5	8	6	7	6.5	70.5	211	223	235	9	6	82.5	5	12	7	8	0

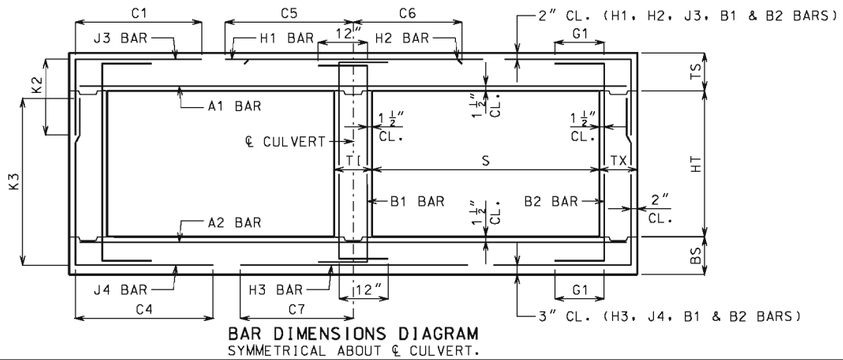

BAR DIMENSIONS DIAGRAM
SYMMETRICAL ABOUT ℄ CULVERT.

GENERAL NOTES:

IF DESIGN FILL IS BETWEEN TABULATED DESIGN FILLS, USE THE NEXT GREATER TABULATED DESIGN FILL, EXCEPT FOR DESIGN FILLS BETWEEN 2 FEET AND 4 FEET. FOR DESIGN FILLS BETWEEN 2 FEET AND 4 FEET USE THE GREATER MEMBER THICKNESS, AREA OF REINFORCEMENT AND BAR DIMENSIONS FROM THE 2 FEET AND 4 FEET TABULATED DESIGN FILLS. AREA OF REINFORCEMENT EQUALS BAR AREA PER FOOT SPACING.

SPECIAL DESIGNS ARE REQUIRED WHEN THE DESIGN FILL IS LESS THAN 1 FOOT OR GREATER THAN 50 FEET.

DIMENSIONS ARE IN INCHES UNLESS OTHERWISE SPECIFIED.

DESIGN FILLS ARE MEASURED FROM THE TOP OF TOP SLAB TO THE TOP OF EARTH FILL OR ROADWAY.

CULVERTS MEET STRENGTH AND SERVICEABILITY REQUIREMENTS FOR THE DESIGN VEHICULAR LIVE LOAD HL-93 MINUS THE LANE LOAD.

MISSOURI HIGHWAYS AND TRANSPORTATION COMMISSION
105 WEST CAPITOL
JEFFERSON CITY, MO 65102
1-888-ASK-MODOT (1-888-275-6636)

STATE OF MISSOURI
DENNIS W. HECKMAN
NUMBER PE-27141
PROFESSIONAL ENGINEER
THIS SHEET HAS BEEN SIGNED, SEALED AND DATED ELECTRONICALLY.

CONCRETE DOUBLE BOX CULVERT

MEMBER THICKNESS BAR SIZE, SPACING & DIMENSIONS

SPAN (S): 16 FEET
HEIGHT (HT): 14 THRU 16 FEET

DATE EFFECTIVE: 10/01/2011
DATE PREPARED: 9/8/2011

703.47

SHEET NO. 27 OF 27

IF A SEAL IS PRESENT ON THIS SHEET IT HAS BEEN ELECTRONICALLY SEALED AND DATED.

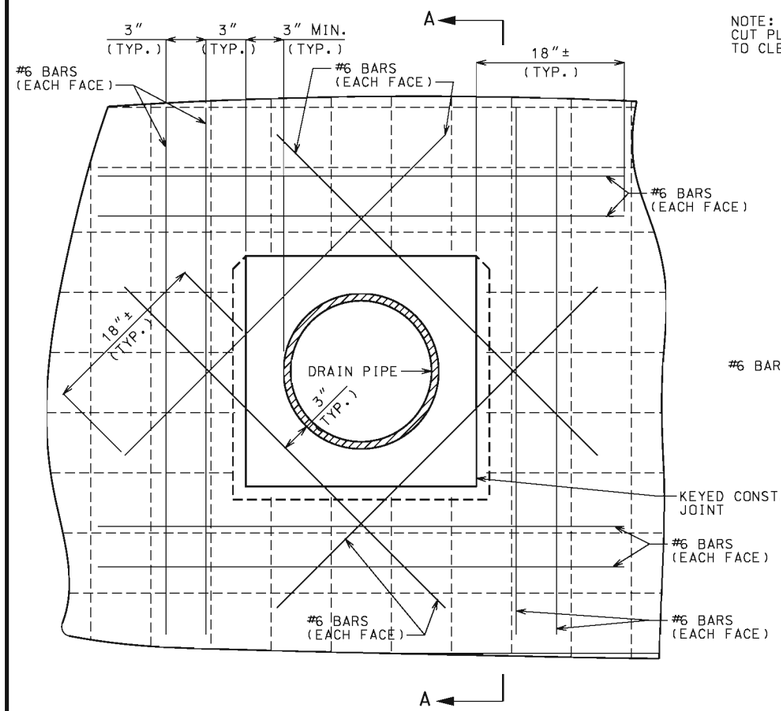

PART ELEVATION OF EXTERIOR WALL
(PIPE DIAMETER = 24" OR MORE)
(WALL THICKNESS = 12" OR MORE)

NOTE:
CUT PLAN REINFORCING BARS
TO CLEAR PIPE BLOCK-OUT.

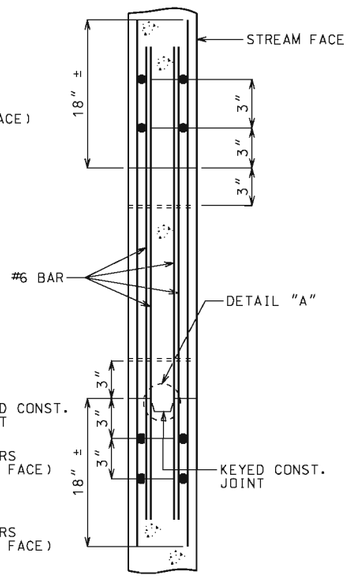

SECTION A-A

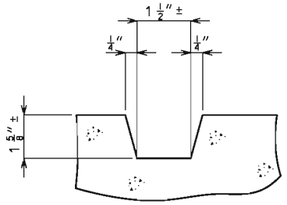

DETAIL "A"
(KEYED JOINT)

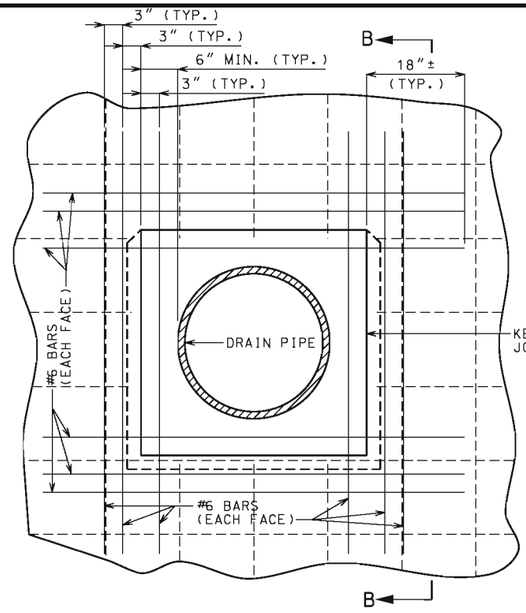

PART ELEVATION OF EXTERIOR WALL
(PIPE DIAMETER = 24" OR MORE)
(WALL THICKNESS = 8" TO 12")

NOTE:
CUT PLAN REINFORCING BARS
TO CLEAR PIPE BLOCK-OUT.

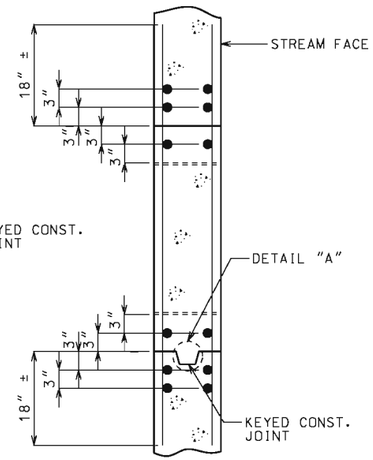

SECTION B-B

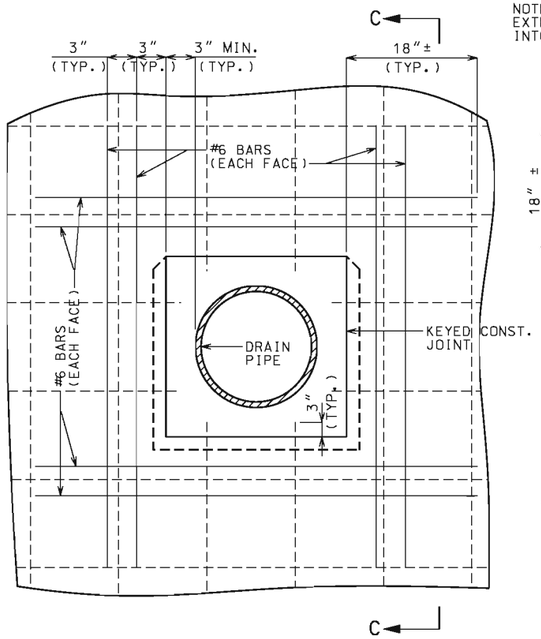

PART ELEVATION OF EXTERIOR WALL
(PIPE DIAMETER = LESS THAN 24")
(WALL THICKNESS = 8" OR MORE)

NOTE:
EXTEND PLAN REINFORCING BARS
INTO PIPE BLOCK-OUT AS SHOWN.

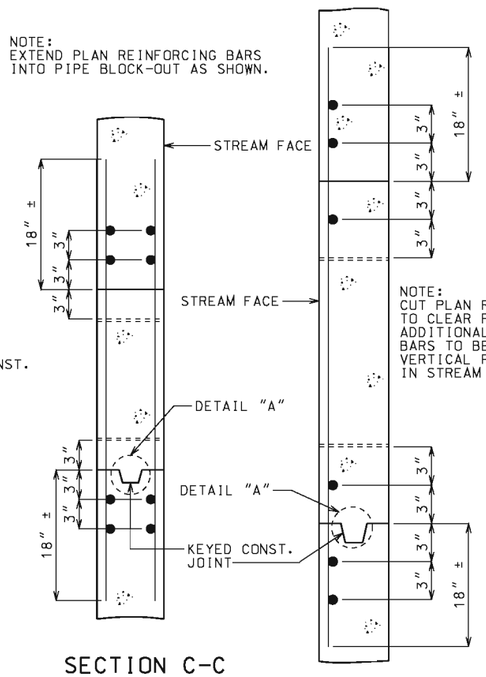

SECTION C-C

NOTE:
CUT PLAN REINFORCING BARS
TO CLEAR PIPE BLOCK-OUT.
ADDITIONAL VERTICAL #6
BARS TO BE IN SAME PLANE AS
VERTICAL PLAN REINFORCEMENT
IN STREAM FACE.

SECTION D-D

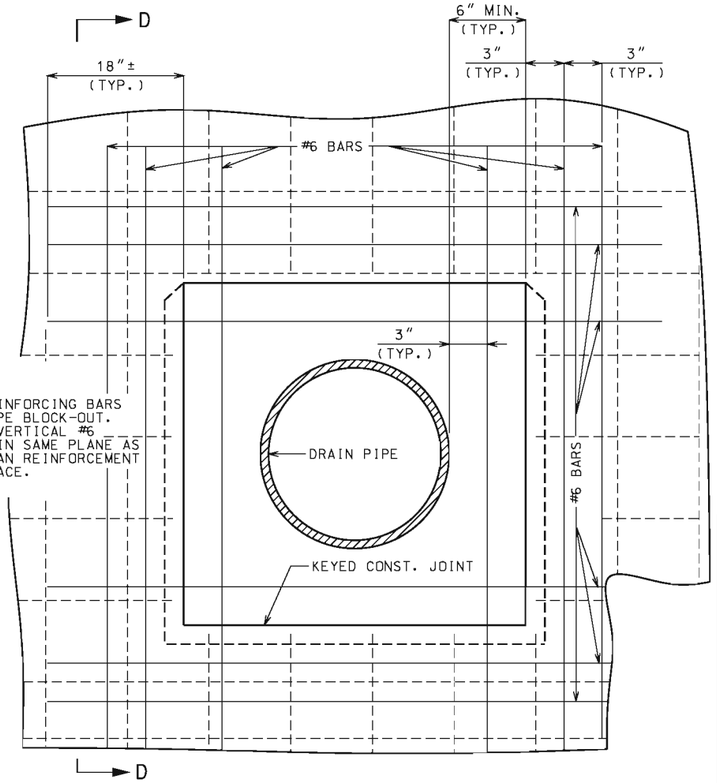

PART ELEVATION OF EXTERIOR WALL
(PIPE DIAMETER = 36" OR LESS)
(WALL THICKNESS = LESS THAN 8")

NOTE:
DASHED BARS REPRESENT PLAN REINFORCEMENT.

SOLID BARS INDICATE ADDITIONAL #6 BARS.

BAR COVER FROM FACE OF CONCRETE = 1-1/2" CLEAR.

SEE ROAD PLANS FOR LOCATION, SIZE AND TYPE OF PIPE.

PLACE 5/16" JOINT FILLER AROUND REINFORCED CONCRETE PIPE AND EMULSIFIED ASPHALT AROUND CORRUGATED METAL PIPE AT PIPE INLET.

THE BLOCK-OUT MAY BE ELIMINATED AT CONTRACTORS ELECTION. IF BLOCK-OUT IS ELIMINATED, REINFORCEMENT SHALL BE AS SHOWN EXCEPT PLAN REINFORCEMENT MAY BE BENT TO CLEAR PIPE.

ADDITIONAL REINFORCEMENT REQUIRED FOR BLOCK-OUT IS NOT INCLUDED IN ESTIMATED QUANTITIES. NO SEPARATE PAYMENT WILL BE MADE FOR ADDITIONAL REINFORCING REQUIRED.

IF A SEAL IS PRESENT ON THIS SHEET IT HAS BEEN ELECTRONICALLY SEALED AND DATED.

MISSOURI HIGHWAYS AND TRANSPORTATION COMMISSION
105 WEST CAPITOL
JEFFERSON CITY, MO 65102
1-888-ASK-MODOT (1-888-275-6636)

STATE OF MISSOURI
DENNIS W. HECKMAN
NUMBER PE-27141
PROFESSIONAL ENGINEER
THIS SHEET HAS BEEN SIGNED, SEALED AND DATED ELECTRONICALLY.

CONCRETE BOX STRUCTURE PIPE INLET

DATE EFFECTIVE:	07/01/2001	703.60E	SHEET NO.
DATE PREPARED:	9/3/2009		1 OF 1

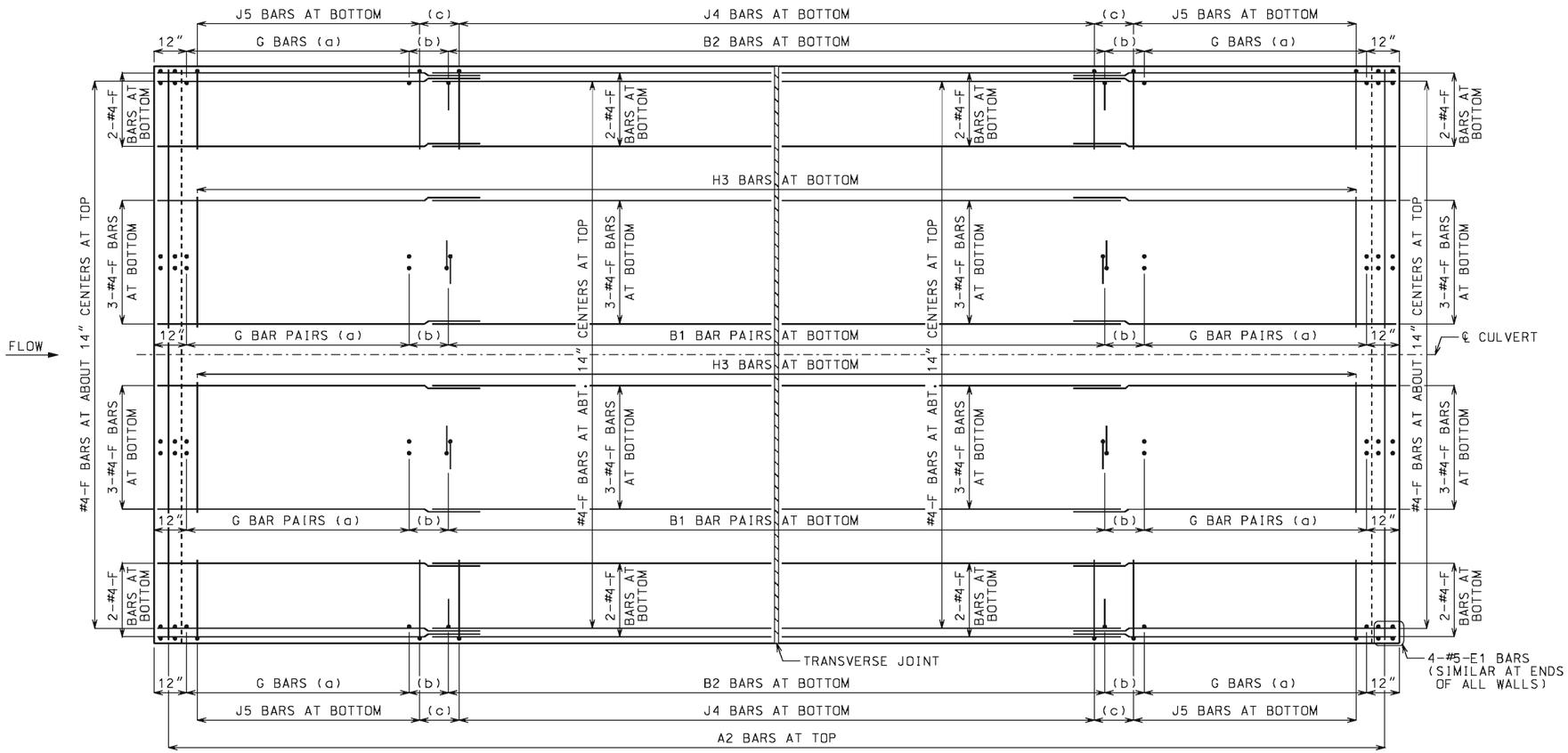

PLAN OF BOTTOM SLAB

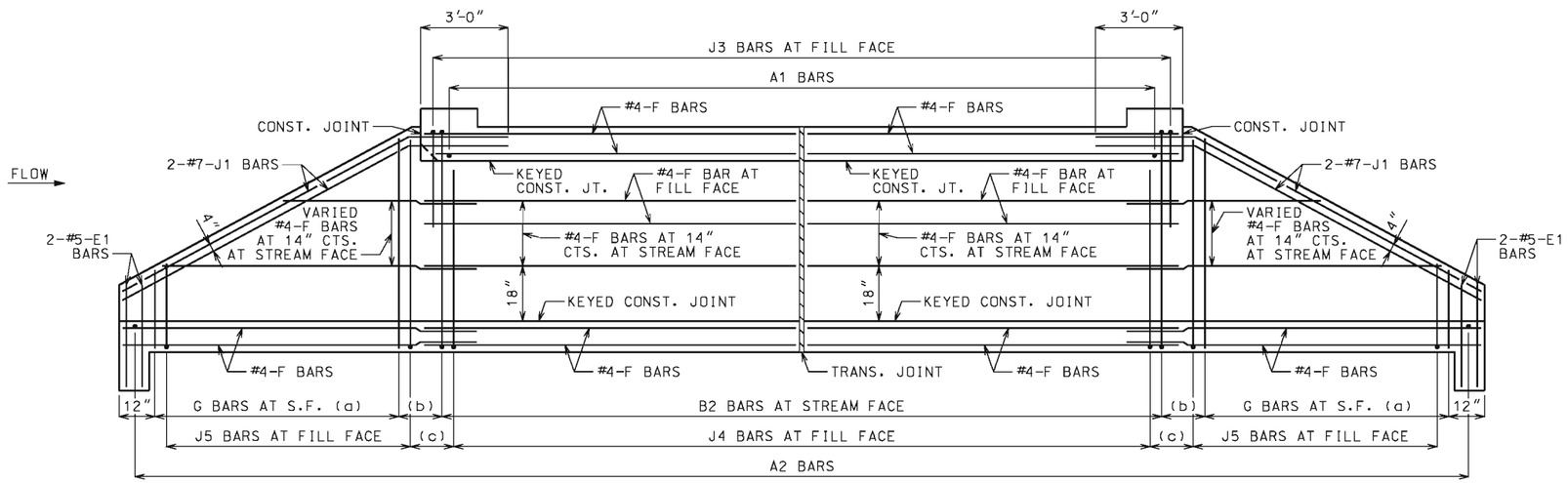

ELEVATION OF EXTERIOR WALL

J1 BARS MAY BE BENT IN FIELD OR SHOP.

LAYING OUT TRANVERSE JOINTS

UNLESS SHOWN ON BRIDGE PLANS

USE A TRANSVERSE JOINT WHEN BARREL LENGTH IS OVER 80 FEET. USE ADDITIONAL JOINTS TO LIMIT CUT SECTION LENGTH AND END SECTION BARREL LENGTH MEASURED ALONG CENTERLINE OF CULVERT TO 50 FEET.

MINIMUM END SECTION LENGTH SHALL BE 3 FEET MEASURED ALONG THE SHORTEST WALL FROM THE INSIDE FACE OF HEADWALL TO THE TRANSVERSE JOINT.

TO AVOID LOCATING TRANSVERSE JOINTS UNDER A TRAVELED WAY WITH DESIGN FILLS 2 FEET OR LESS THE FOLLOWING SHALL APPLY:

BARREL LENGTH UP TO 90 FEET WITHOUT A TRANSVERSE JOINT

CUT SECTION LENGTHS UP TO 60 FEET

WHEN BARREL AND CUT SECTION LENGTH RESTRICTIONS REQUIRE TRANSVERSE JOINTS TO BE LOCATED UNDER A TRAVELED WAY WITH DESIGN FILLS 2 FEET OR LESS, THE JOINTS SHALL BE LOCATED TO MINIMIZE THE LENGTH OF JOINT UNDER THE TRAVELED WAY.

TRAVELED WAY IS THE ROADWAY WIDTH MINUS SHOULDER WIDTHS.

FOR CUT SECTION DETAILS, SEE 703.86.

GENERAL NOTES:

FOR SECTIONS THRU BARREL, WINGS AND HEADWALLS, SEE SHEET 3 OF 3. FOR BAR SIZES, SPACING AND DIMENSIONS OF ALL REINFORCEMENT EXCEPT J5 BARS, SEE 703.87. FOR J5 BARS, SEE 703.37.

CONSTRUCTION JOINT KEY NOT SHOWN FOR CLARITY IN PLAN AND ELEVATION, SEE SHEET 3 OF 3 FOR DETAILS.

DRAWING NOT TO SCALE. FOLLOW DIMENSIONS.

MINIMUM CLEARANCE TO REINFORCING STEEL SHALL BE 1½".

LAP LONGITUDINAL BARS A MINIMUM OF 23" AT SPLICES.

BEVELED HEADWALL SHALL BE LOCATED AT UPSTREAM END.

(a) SAME SIZE AND SPACING AS ADJACENT B BARS

(b) VARIES, 12" MAXIMUM

(c) J4 BAR SPACING

MISSOURI HIGHWAYS AND TRANSPORTATION COMMISSION
105 WEST CAPITOL
JEFFERSON CITY, MO 65102
1-888-ASK-MODOT (1-888-275-6636)

STATE OF MISSOURI
DENNIS W. HECKMAN
NUMBER PE-27141
PROFESSIONAL ENGINEER
THIS SHEET HAS BEEN SIGNED, SEALED AND DATED ELECTRONICALLY.

CONCRETE TRIPLE BOX CULVERT

SKEW: SQUARED
WINGS: STRAIGHT

REINFORCEMENT

DATE EFFECTIVE: 12/01/2011
DATE PREPARED: 5/13/2015

703.80H

SHEET NO. 1 OF 3

IF A SEAL IS PRESENT ON THIS SHEET IT HAS BEEN ELECTRONICALLY SEALED AND DATED.

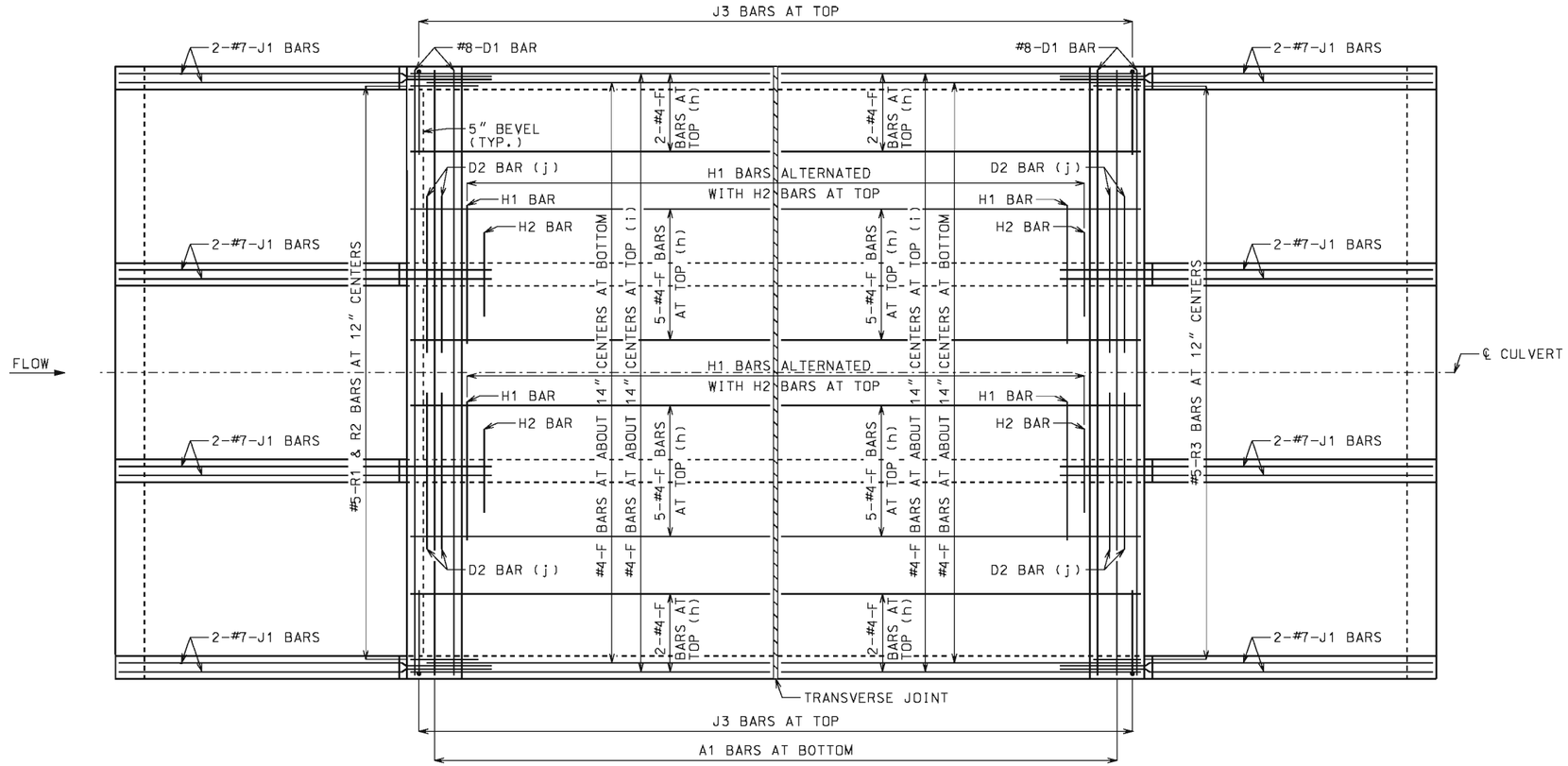

PLAN OF TOP SLAB

B BARS IN WALLS ARE NOT SHOWN FOR CLARITY.
FOR PLACEMENT, SEE SHEET 1 OF 3.

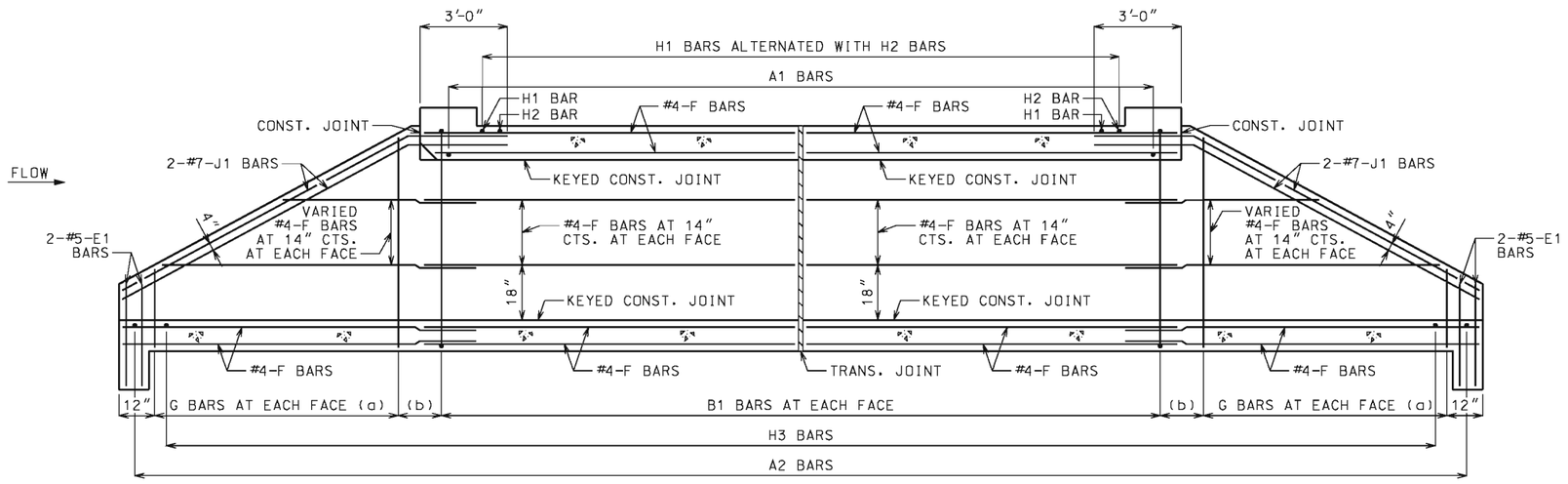

SECTION NEAR INTERIOR WALL

J1 BARS MAY BE BENT IN FIELD OR SHOP.

GENERAL NOTES:

FOR SECTIONS THRU BARREL, WINGS AND HEADWALLS, SEE SHEET 3 OF 3. FOR BAR SIZES, SPACING AND DIMENSIONS OF ALL REINFORCEMENT EXCEPT J5 BARS, SEE 703.87. FOR J5 BARS, SEE 703.37.

CONSTRUCTION JOINT KEY NOT SHOWN FOR CLARITY IN PLAN AND SECTION, SEE SHEET 3 OF 3 FOR DETAILS.

DRAWING NOT TO SCALE. FOLLOW DIMENSIONS.

MINIMUM CLEARANCE TO REINFORCING STEEL SHALL BE 1½".

LAP LONGITUDINAL BARS A MINIMUM OF 23" AT SPLICES.

BEVELED HEADWALL SHALL BE LOCATED AT UPSTREAM END.

(a) SAME SIZE AND SPACING AS ADJACENT B BARS

(b) VARIES, 12" MAXIMUM

(c) NOT SPECIFIED ON THIS SHEET

(d) NOT SPECIFIED ON THIS SHEET

(e) NOT SPECIFIED ON THIS SHEET

(f) NOT SPECIFIED ON THIS SHEET

(g) NOT SPECIFIED ON THIS SHEET

(h) FOR DESIGN FILLS OVER 2'-0"

(i) FOR DESIGN FILLS 2'-0" OR LESS

(j) NOT REQUIRED FOR CLEAR SPANS ≤ 10'-0"
#8 FOR CLEAR SPAN > 10'-0"
#9 FOR CLEAR SPAN > 13'-0"

IF REQUIRED, THE MINIMUM LENGTH EACH SIDE OF ℄ WALL SHALL BE THE GREATER OF 48 BAR DIAMETERS OR ¼ CLEAR SPAN. THE CLEAR SPAN IS PARALLEL TO LONG DIRECTION OF HEADWALL.

MISSOURI HIGHWAYS AND TRANSPORTATION COMMISSION
105 WEST CAPITOL
JEFFERSON CITY, MO 65102
1-888-ASK-MODOT (1-888-275-6636)

STATE OF MISSOURI
DENNIS W. HECKMAN
NUMBER PE-27141
PROFESSIONAL ENGINEER
THIS SHEET HAS BEEN SIGNED, SEALED AND DATED ELECTRONICALLY.

CONCRETE TRIPLE BOX CULVERT

SKEW: SQUARED
WINGS: STRAIGHT

REINFORCEMENT

DATE EFFECTIVE: 12/01/2011
DATE PREPARED: 5/13/2015

703.80H

SHEET NO. 2 OF 3

IF A SEAL IS PRESENT ON THIS SHEET IT HAS BEEN ELECTRONICALLY SEALED AND DATED.

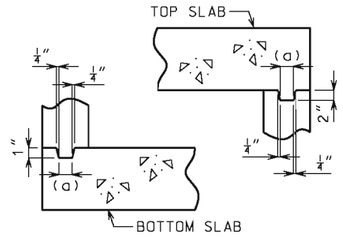

KEYED CONSTRUCTION JOINT

(a) APPROXIMATELY ONE-THIRD OF WALL THICKNESS

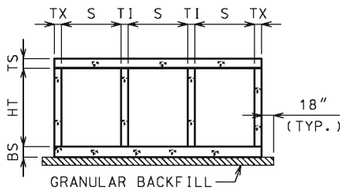

GRANULAR BACKFILL LIMITS AND MEMBER DIMENSIONS

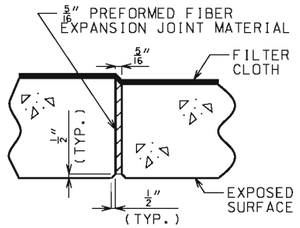

TRANSVERSE JOINT THRU BARREL

PREFORMED FIBER EXPANSION JOINT MATERIAL IN ACCORDANCE WITH SEC 1057 SHALL BE SECURELY STITCHED TO ONE FACE OF THE CONCRETE WITH 10 GAGE COPPER WIRE OR 12 GAGE SOFT DRAWN GALVANIZED STEEL WIRE.

FILTER CLOTH 3 FEET IN WIDTH AND DOUBLE THICKNESS SHALL BE CENTERED ON TRANSVERSE JOINTS IN TOP SLAB AND SIDEWALLS WITH EDGES SEALED WITH MASTIC OR TWO SIDED TAPE. FILTER CLOTH SHALL BE A SUBSURFACE DRAINAGE GEOTEXTILE IN ACCORDANCE WITH SEC 1011. COST OF FURNISHING AND INSTALLING FILTER CLOTH WILL BE CONSIDERED COMPLETELY COVERED BY THE CONTRACT UNIT PRICE FOR OTHER ITEMS.

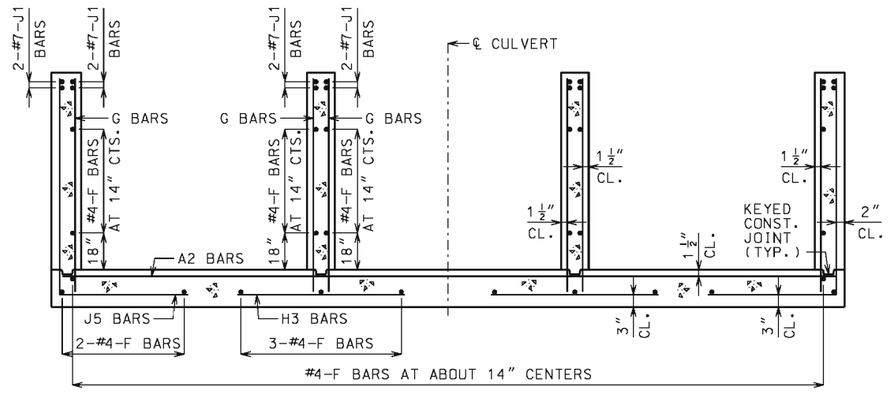

UPSTREAM AND DOWNSTREAM WINGS REINFORCEMENT

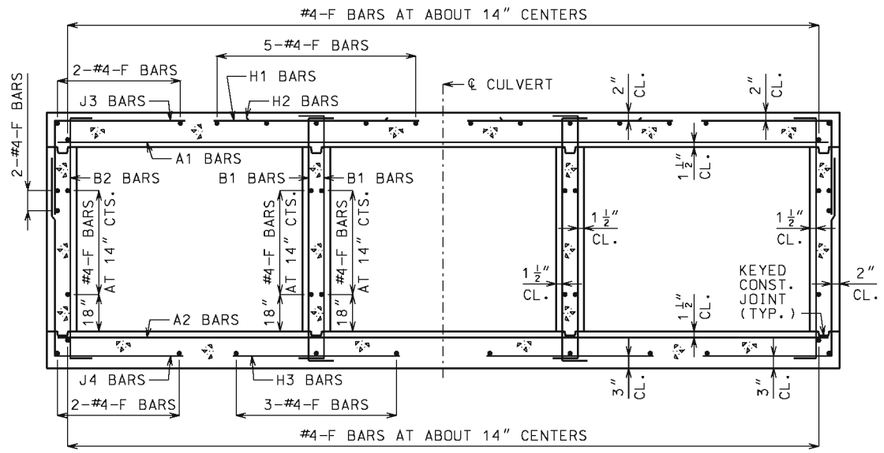

BARREL REINFORCEMENT

FOR DESIGN FILLS OVER 2'-0"

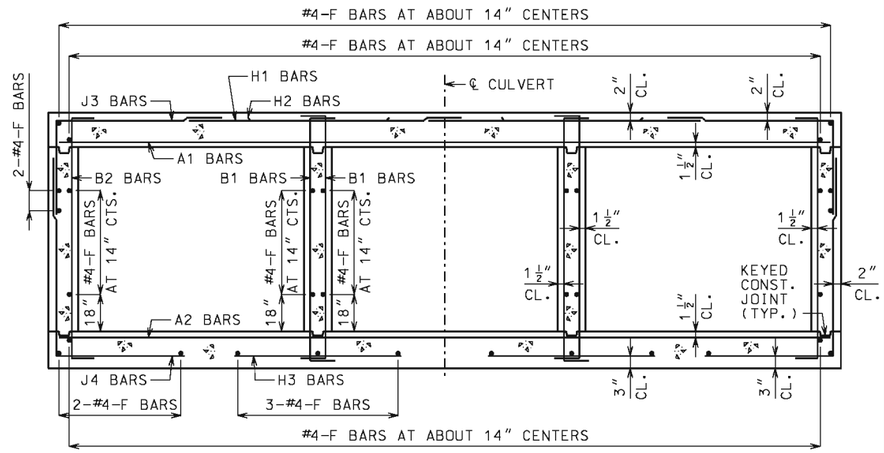

BARREL REINFORCEMENT

FOR DESIGN FILLS 2'-0" OR LESS

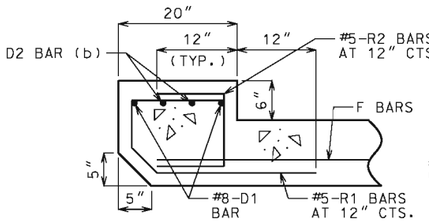

UPSTREAM HEADWALL REINFORCEMENT

NEAR INTERIOR WALL

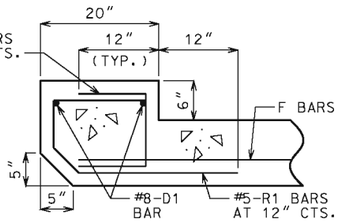

UPSTREAM HEADWALL REINFORCEMENT

NEAR MIDSPAN

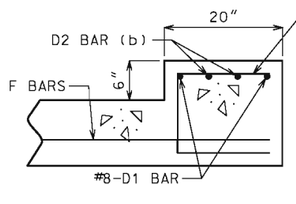

DOWNSTREAM HEADWALL REINFORCEMENT

NEAR INTERIOR WALL

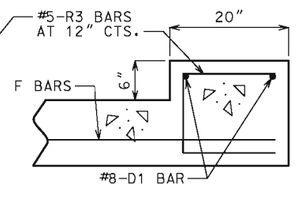

DOWNSTREAM HEADWALL REINFORCEMENT

NEAR MIDSPAN

(b) NOT REQUIRED FOR CLEAR SPANS ≤ 10'-0"
#8 FOR CLEAR SPAN > 10'-0"
#9 FOR CLEAR SPAN > 13'-0"

IF D2 BARS ARE REQUIRED, THE MINIMUM LENGTH EACH SIDE OF ℄ WALL SHALL BE THE GREATER OF 48 BAR DIAMETERS OR ¼ CLEAR SPAN. THE CLEAR SPAN IS PARALLEL TO LONG DIRECTION OF HEADWALL.

GENERAL NOTES:

FOR MEMBER THICKNESS AND FOR BAR SIZES, SPACING AND DIMENSIONS OF ALL REINFORCEMENT EXCEPT J5 BARS, SEE 703.87. FOR J5 BARS, SEE 703.37.

BARREL AND WINGS SECTIONS ARE SYMMETRICAL ABOUT AND NORMAL TO ℄ CULVERT. HEADWALL SECTIONS ARE NORMAL TO LONG DIRECTION OF HEADWALL.

DRAWING NOT TO SCALE. FOLLOW DIMENSIONS.

MINIMUM CLEARANCE TO REINFORCING STEEL SHALL BE 1½".

MISSOURI HIGHWAYS AND TRANSPORTATION COMMISSION
105 WEST CAPITOL
JEFFERSON CITY, MO 65102
1-888-ASK-MODOT (1-888-275-6636)

STATE OF MISSOURI
DENNIS W. HECKMAN
NUMBER PE-27141
PROFESSIONAL ENGINEER
THIS SHEET HAS BEEN SIGNED, SEALED AND DATED ELECTRONICALLY.

CONCRETE TRIPLE BOX CULVERT

SKEW: SQUARED
WINGS: STRAIGHT

SECTIONS

DATE EFFECTIVE: 12/01/2011
DATE PREPARED: 5/13/2015

703.80H

SHEET NO. 3 OF 3

IF A SEAL IS PRESENT ON THIS SHEET IT HAS BEEN ELECTRONICALLY SEALED AND DATED.

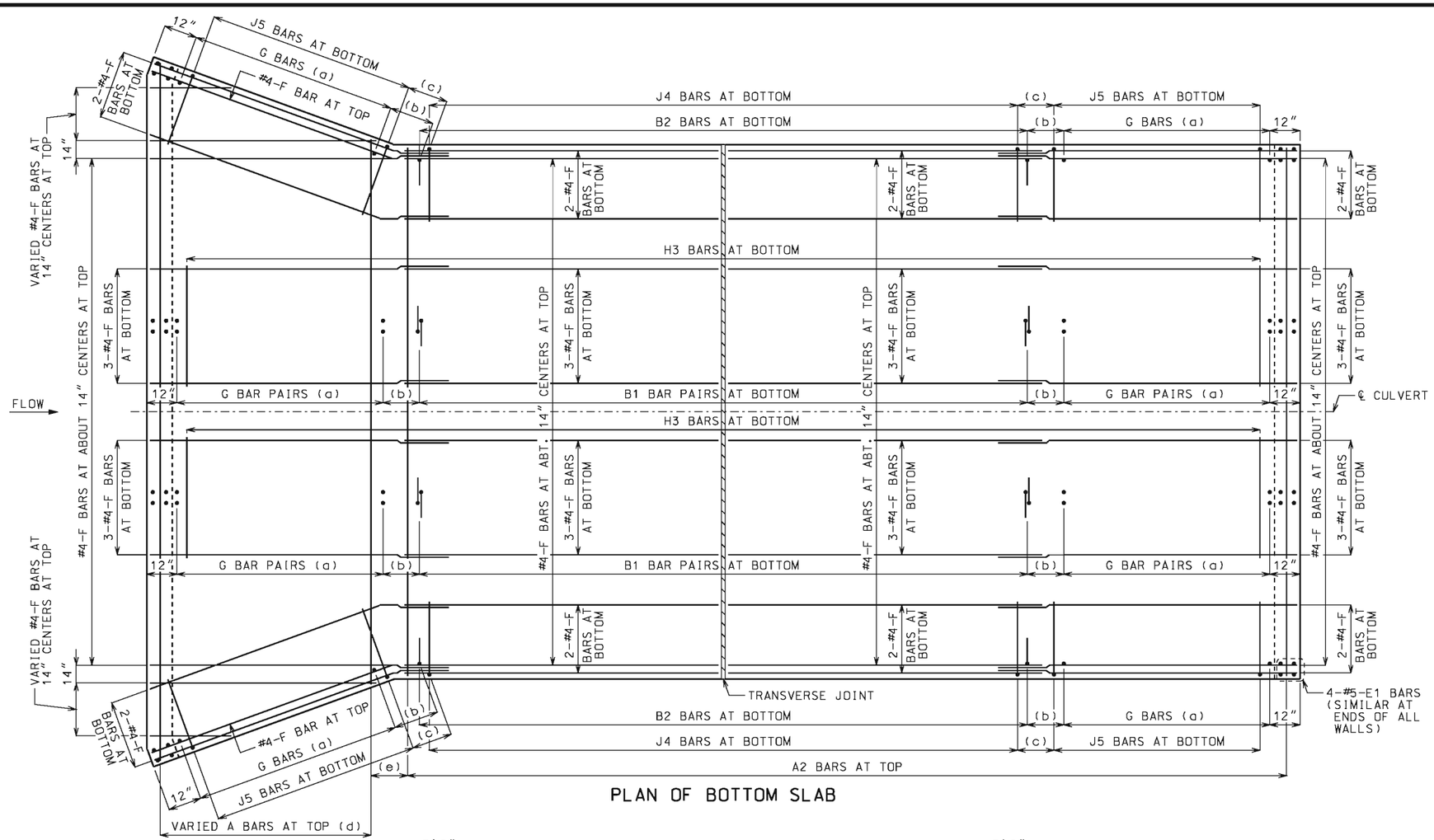

PLAN OF BOTTOM SLAB

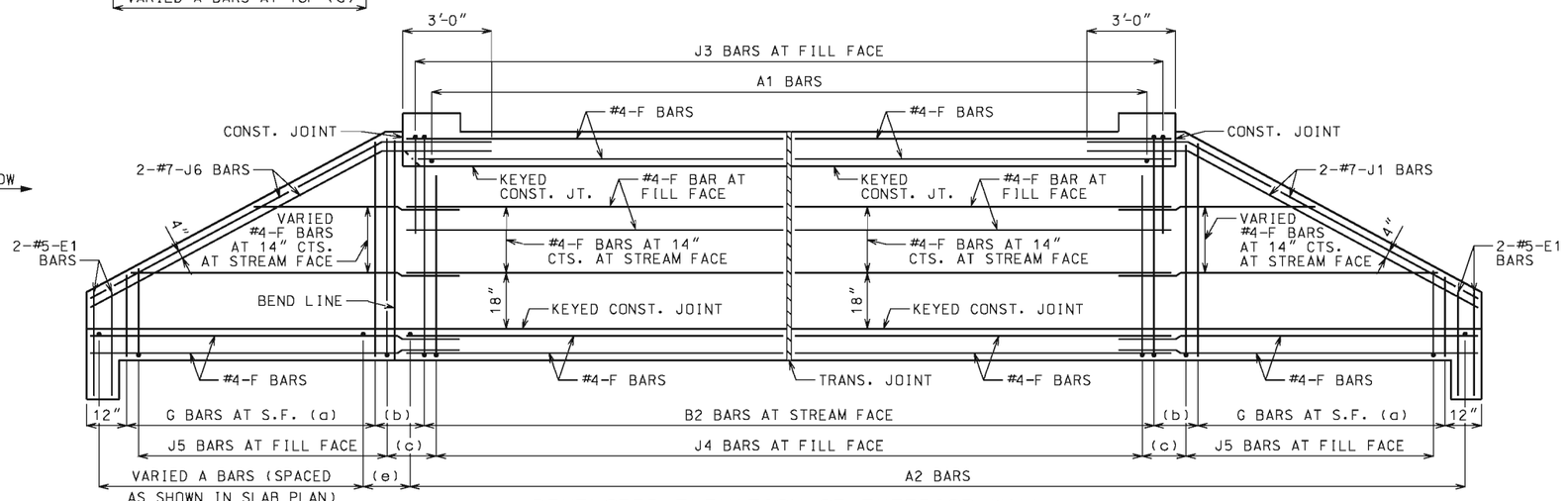

DEVELOPED ELEVATION OF EXTERIOR WALL

J1 AND J6 BARS MAY BE BENT IN FIELD OR SHOP.

LAYING OUT TRANVERSE JOINTS

UNLESS SHOWN ON BRIDGE PLANS

USE A TRANSVERSE JOINT WHEN BARREL LENGTH IS OVER 80 FEET. USE ADDITIONAL JOINTS TO LIMIT CUT SECTION LENGTH AND END SECTION BARREL LENGTH MEASURED ALONG CENTERLINE OF CULVERT TO 50 FEET.

MINIMUM END SECTION LENGTH SHALL BE 3 FEET MEASURED ALONG THE SHORTEST WALL FROM THE INSIDE FACE OF HEADWALL TO THE TRANSVERSE JOINT.

TO AVOID LOCATING TRANSVERSE JOINTS UNDER A TRAVELED WAY WITH DESIGN FILLS 2 FEET OR LESS THE FOLLOWING SHALL APPLY:

BARREL LENGTH UP TO 90 FEET WITHOUT A TRANSVERSE JOINT

CUT SECTION LENGTHS UP TO 60 FEET

WHEN BARREL AND CUT SECTION LENGTH RESTRICTIONS REQUIRE TRANSVERSE JOINTS TO BE LOCATED UNDER A TRAVELED WAY WITH DESIGN FILLS 2 FEET OR LESS. THE JOINTS SHALL BE LOCATED TO MINIMIZE THE LENGTH OF JOINT UNDER THE TRAVELED WAY.

TRAVELED WAY IS THE ROADWAY WIDTH MINUS SHOULDER WIDTHS.

FOR CUT SECTION DETAILS, SEE 703.86.

GENERAL NOTES:

FOR SECTIONS THRU BARREL, WINGS AND HEADWALLS, SEE SHEET 3 OF 3. FOR BAR SIZES, SPACING AND DIMENSIONS OF ALL REINFORCEMENT EXCEPT J5 BARS, SEE 703.87. FOR J5 BARS, SEE 703.37.

CONSTRUCTION JOINT KEY NOT SHOWN FOR CLARITY IN PLAN AND ELEVATION, SEE SHEET 3 OF 3 FOR DETAILS.

DRAWING NOT TO SCALE. FOLLOW DIMENSIONS.

MINIMUM CLEARANCE TO REINFORCING STEEL SHALL BE 1½".

LAP LONGITUDINAL BARS A MINIMUM OF 23" AT SPLICES.

BEVELED HEADWALL SHALL BE LOCATED AT UPSTREAM END.

(a) SAME SIZE AND SPACING AS ADJACENT B BARS

(b) VARIES, 12" MAXIMUM

(c) J4 BAR SPACING

(d) SAME SIZE AND SPACING AS A2 BARS

(e) A2 BAR SPACING

MISSOURI HIGHWAYS AND TRANSPORTATION COMMISSION
105 WEST CAPITOL
JEFFERSON CITY, MO 65102
1-888-ASK-MODOT (1-888-275-6636)

STATE OF MISSOURI
DENNIS W. HECKMAN
NUMBER PE-27141
PROFESSIONAL ENGINEER
THIS SHEET HAS BEEN SIGNED, SEALED AND DATED ELECTRONICALLY.

CONCRETE TRIPLE BOX CULVERT

SKEW: SQUARED
WINGS: FLARED

REINFORCEMENT

DATE EFFECTIVE: 12/01/2011
DATE PREPARED: 5/13/2015

703.81H

SHEET NO. 1 OF 3

IF A SEAL IS PRESENT ON THIS SHEET IT HAS BEEN ELECTRONICALLY SEALED AND DATED.

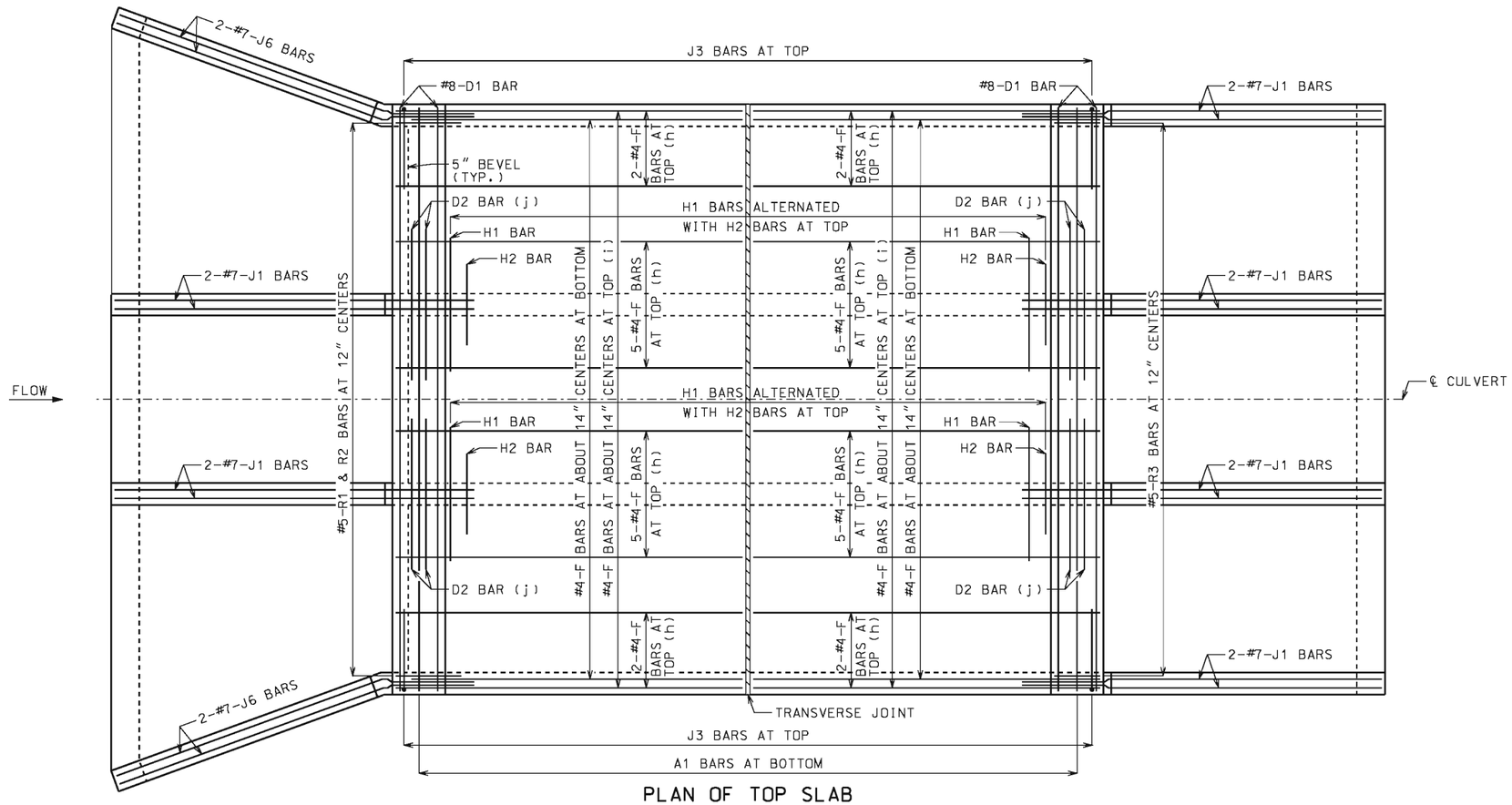

PLAN OF TOP SLAB

B BARS IN WALLS ARE NOT SHOWN FOR CLARITY.
FOR PLACEMENT, SEE SHEET 1 OF 3.

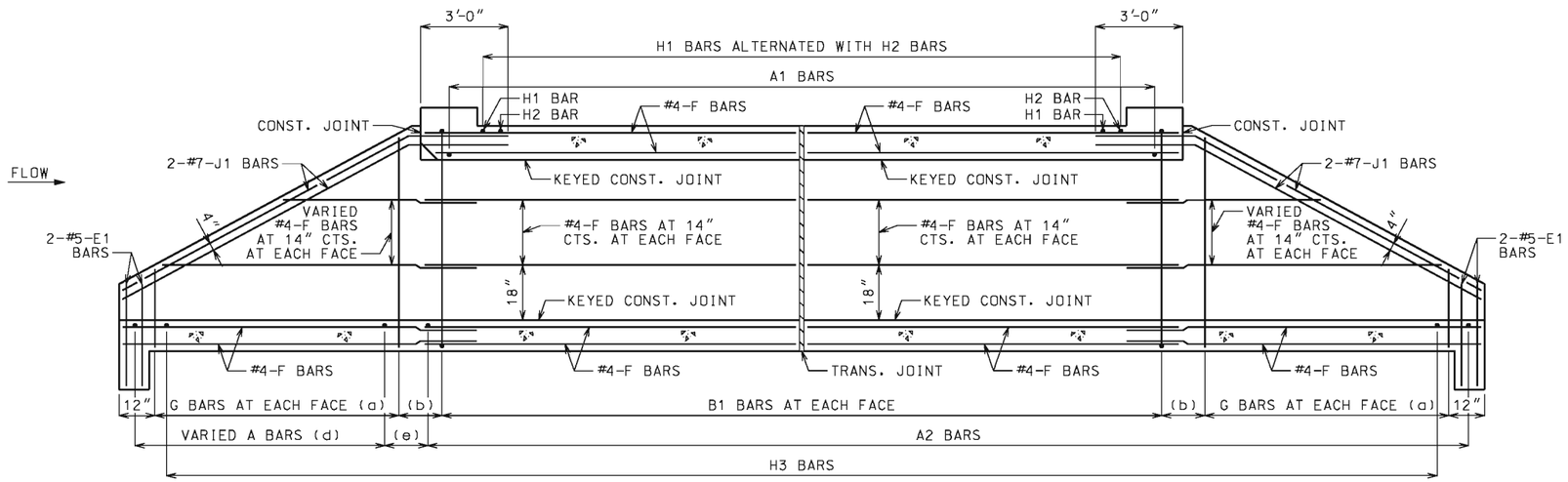

SECTION NEAR INTERIOR WALL

J1 BARS MAY BE BENT IN FIELD OR SHOP.

GENERAL NOTES:

FOR SECTIONS THRU BARREL, WINGS AND HEADWALLS, SEE SHEET 3 OF 3. FOR BAR SIZES, SPACING AND DIMENSIONS OF ALL REINFORCEMENT EXCEPT J5 BARS, SEE 703.87. FOR J5 BARS, SEE 703.37.

CONSTRUCTION JOINT KEY NOT SHOWN FOR CLARITY IN PLAN AND SECTION, SEE SHEET 3 OF 3 FOR DETAILS.

DRAWING NOT TO SCALE. FOLLOW DIMENSIONS.

MINIMUM CLEARANCE TO REINFORCING STEEL SHALL BE 1½".

LAP LONGITUDINAL BARS A MINIMUM OF 23" AT SPLICES.

BEVELED HEADWALL SHALL BE LOCATED AT UPSTREAM END.

(a) SAME SIZE AND SPACING AS ADJACENT B BARS

(b) VARIES, 12" MAXIMUM

(c) NOT SPECIFIED ON THIS SHEET

(d) SAME SIZE AND SPACING AS A2 BARS

(e) A2 BAR SPACING

(f) NOT SPECIFIED ON THIS SHEET

(g) NOT SPECIFIED ON THIS SHEET

(h) FOR DESIGN FILLS OVER 2'-0"

(i) FOR DESIGN FILLS 2'-0" OR LESS

(j) NOT REQUIRED FOR CLEAR SPANS ≤ 10'-0"
#8 FOR CLEAR SPAN > 10'-0"
#9 FOR CLEAR SPAN > 13'-0"

IF REQUIRED, THE MINIMUM LENGTH EACH SIDE OF ℄ WALL SHALL BE THE GREATER OF 48 BAR DIAMETERS OR ¼ CLEAR SPAN. THE CLEAR SPAN IS PARALLEL TO LONG DIRECTION OF HEADWALL.

MISSOURI HIGHWAYS AND TRANSPORTATION COMMISSION
105 WEST CAPITOL
JEFFERSON CITY, MO 65102
1-888-ASK-MODOT (1-888-275-6636)

STATE OF MISSOURI
DENNIS W. HECKMAN
NUMBER PE-27141
PROFESSIONAL ENGINEER
THIS SHEET HAS BEEN SIGNED, SEALED AND DATED ELECTRONICALLY.

CONCRETE TRIPLE BOX CULVERT

SKEW: SQUARED
WINGS: FLARED

REINFORCEMENT

DATE EFFECTIVE: 12/01/2011
DATE PREPARED: 5/13/2015

703.81H

SHEET NO. 2 OF 3

IF A SEAL IS PRESENT ON THIS SHEET IT HAS BEEN ELECTRONICALLY SEALED AND DATED.

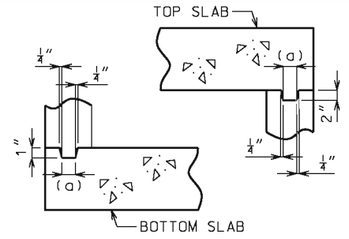

KEYED CONSTRUCTION JOINT

(a) APPROXIMATELY ONE-THIRD OF WALL THICKNESS

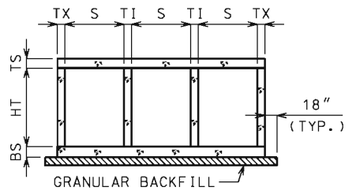

GRANULAR BACKFILL LIMITS AND MEMBER DIMENSIONS

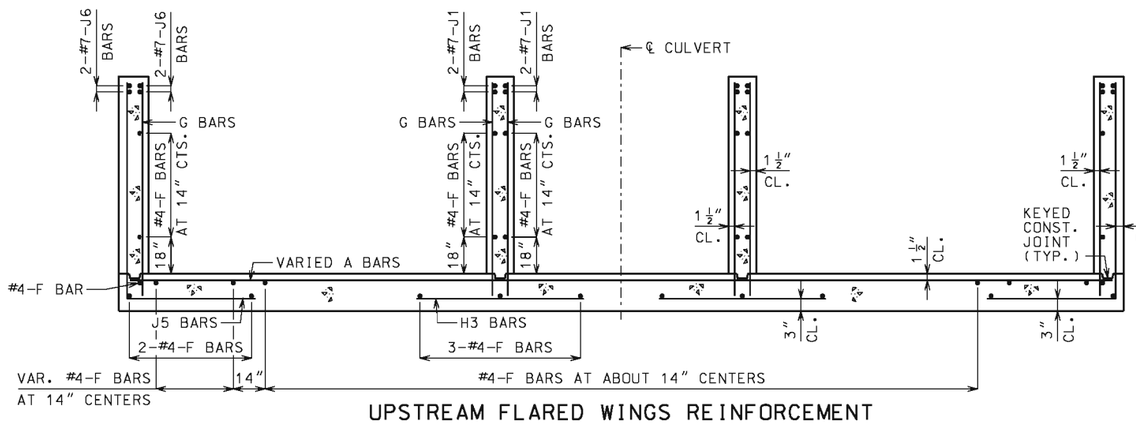

UPSTREAM FLARED WINGS REINFORCEMENT

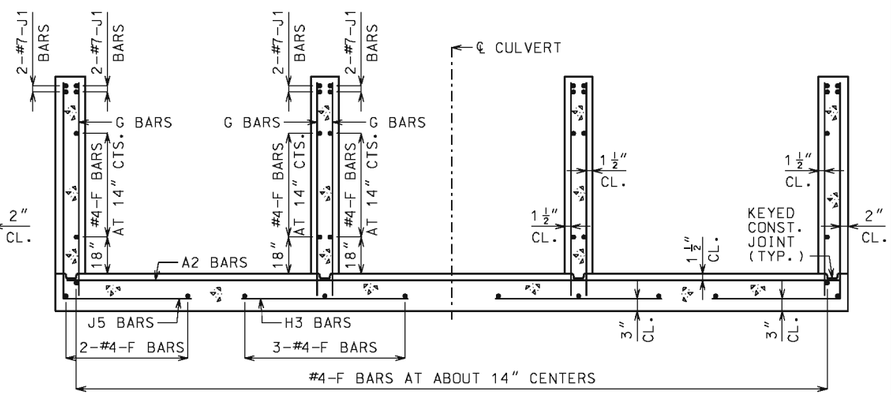

DOWNSTREAM WINGS REINFORCEMENT

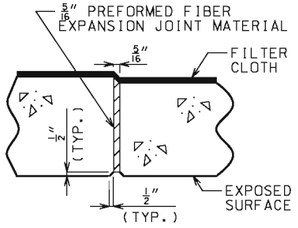

TRANSVERSE JOINT THRU BARREL

PREFORMED FIBER EXPANSION JOINT MATERIAL IN ACCORDANCE WITH SEC 1057 SHALL BE SECURELY STITCHED TO ONE FACE OF THE CONCRETE WITH 10 GAGE COPPER WIRE OR 12 GAGE SOFT DRAWN GALVANIZED STEEL WIRE.

FILTER CLOTH 3 FEET IN WIDTH AND DOUBLE THICKNESS SHALL BE CENTERED ON TRANSVERSE JOINTS IN TOP SLAB AND SIDEWALLS WITH EDGES SEALED WITH MASTIC OR TWO SIDED TAPE. FILTER CLOTH SHALL BE A SUBSURFACE DRAINAGE GEOTEXTILE IN ACCORDANCE WITH SEC 1011. COST OF FURNISHING AND INSTALLING FILTER CLOTH WILL BE CONSIDERED COMPLETELY COVERED BY THE CONTRACT UNIT PRICE FOR OTHER ITEMS.

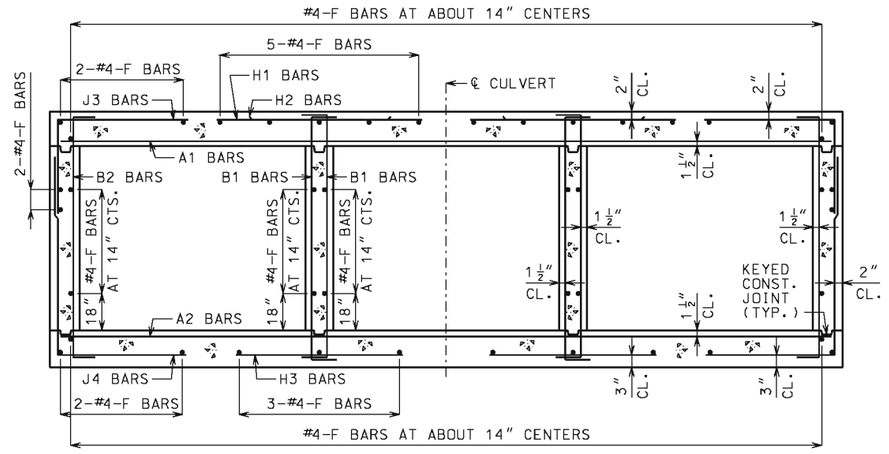

BARREL REINFORCEMENT

FOR DESIGN FILLS OVER 2'-0"

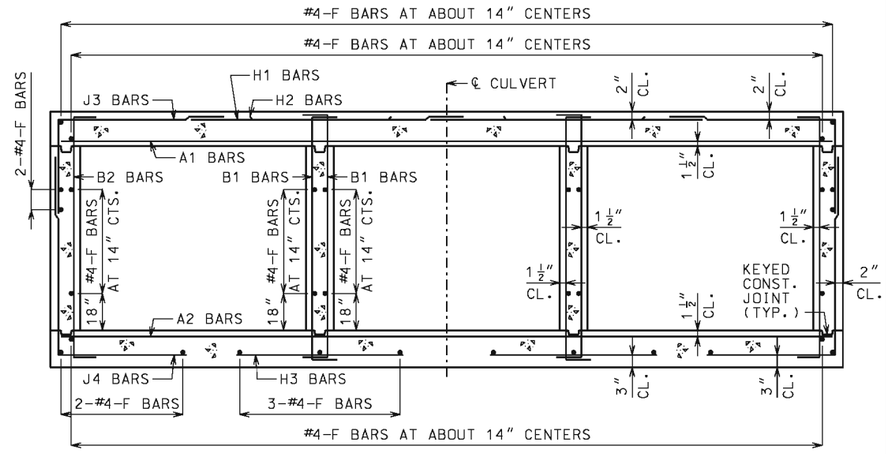

BARREL REINFORCEMENT

FOR DESIGN FILLS 2'-0" OR LESS

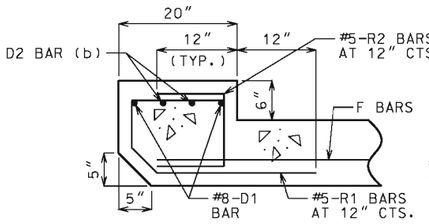

UPSTREAM HEADWALL REINFORCEMENT

NEAR INTERIOR WALL

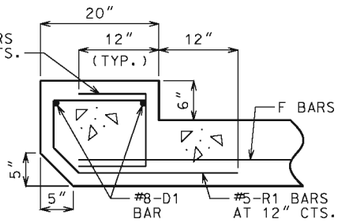

UPSTREAM HEADWALL REINFORCEMENT

NEAR MIDSPAN

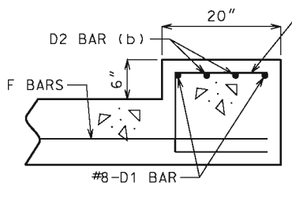

DOWNSTREAM HEADWALL REINFORCEMENT

NEAR INTERIOR WALL

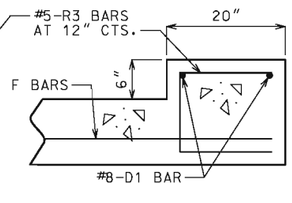

DOWNSTREAM HEADWALL REINFORCEMENT

NEAR MIDSPAN

(b) NOT REQUIRED FOR CLEAR SPANS ≤ 10'-0"
#8 FOR CLEAR SPAN > 10'-0"
#9 FOR CLEAR SPAN > 13'-0"

IF D2 BARS ARE REQUIRED, THE MINIMUM LENGTH EACH SIDE OF ℄ WALL SHALL BE THE GREATER OF 48 BAR DIAMETERS OR ¼ CLEAR SPAN. THE CLEAR SPAN IS PARALLEL TO LONG DIRECTION OF HEADWALL.

GENERAL NOTES:

FOR MEMBER THICKNESS AND FOR BAR SIZES, SPACING AND DIMENSIONS OF ALL REINFORCEMENT EXCEPT J5 BARS, SEE 703.87. FOR J5 BARS, SEE 703.37.

BARREL AND WINGS SECTIONS ARE SYMMETRICAL ABOUT AND NORMAL TO ℄ CULVERT. HEADWALL SECTIONS ARE NORMAL TO LONG DIRECTION OF HEADWALL.

DRAWING NOT TO SCALE. FOLLOW DIMENSIONS.

MINIMUM CLEARANCE TO REINFORCING STEEL SHALL BE 1½".

MISSOURI HIGHWAYS AND TRANSPORTATION COMMISSION
105 WEST CAPITOL
JEFFERSON CITY, MO 65102
1-888-ASK-MODOT (1-888-275-6636)

STATE OF MISSOURI
DENNIS W. HECKMAN
NUMBER PE-27141
PROFESSIONAL ENGINEER
THIS SHEET HAS BEEN SIGNED, SEALED AND DATED ELECTRONICALLY.

CONCRETE TRIPLE BOX CULVERT

SKEW: SQUARED
WINGS: FLARED

SECTIONS

DATE EFFECTIVE: 12/01/2011
DATE PREPARED: 5/13/2015

703.81H

SHEET NO. 3 OF 3

IF A SEAL IS PRESENT ON THIS SHEET IT HAS BEEN ELECTRONICALLY SEALED AND DATED.

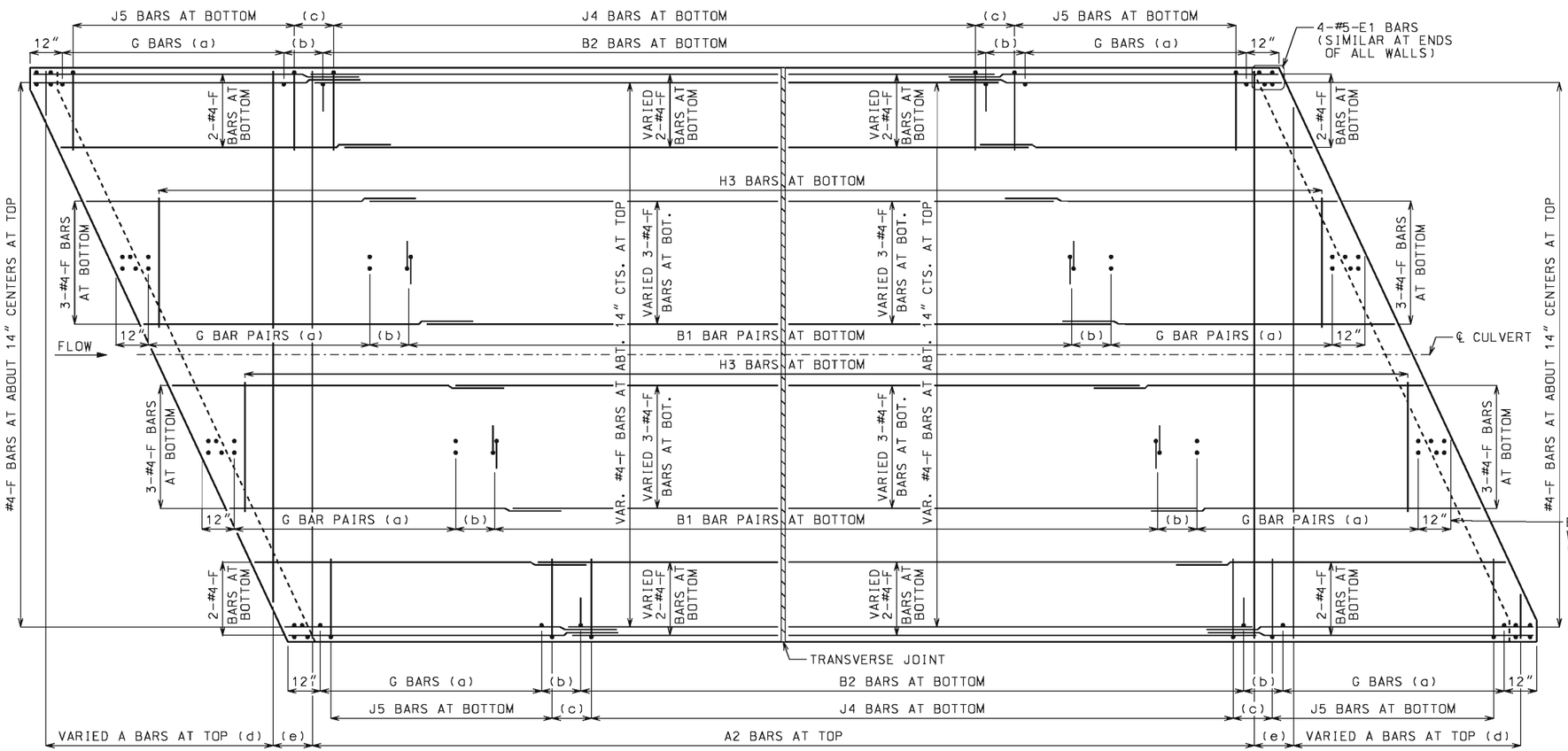

PLAN OF BOTTOM SLAB

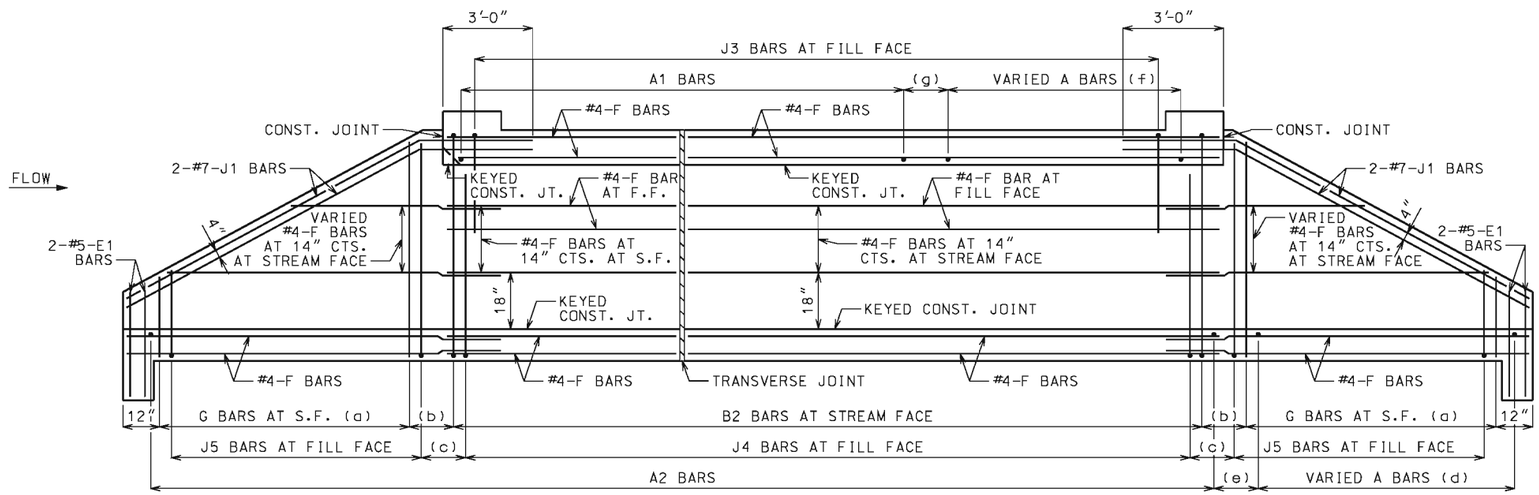

ELEVATION OF EXTERIOR WALL

J1 BARS MAY BE BENT IN FIELD OR SHOP.

LAYING OUT TRANVERSE JOINTS

UNLESS SHOWN ON BRIDGE PLANS

USE A TRANSVERSE JOINT WHEN BARREL LENGTH IS OVER 80 FEET. USE ADDITIONAL JOINTS TO LIMIT CUT SECTION LENGTH AND END SECTION BARREL LENGTH MEASURED ALONG CENTERLINE OF CULVERT TO 50 FEET.

MINIMUM END SECTION LENGTH SHALL BE 3 FEET MEASURED ALONG THE SHORTEST WALL FROM THE INSIDE FACE OF HEADWALL TO THE TRANSVERSE JOINT.

TO AVOID LOCATING TRANSVERSE JOINTS UNDER A TRAVELED WAY WITH DESIGN FILLS 2 FEET OR LESS THE FOLLOWING SHALL APPLY:

BARREL LENGTH UP TO 90 FEET WITHOUT A TRANSVERSE JOINT

CUT SECTION LENGTHS UP TO 60 FEET

WHEN BARREL AND CUT SECTION LENGTH RESTRICTIONS REQUIRE TRANSVERSE JOINTS TO BE LOCATED UNDER A TRAVELED WAY WITH DESIGN FILLS 2 FEET OR LESS, THE JOINTS SHALL BE LOCATED TO MINIMIZE THE LENGTH OF JOINT UNDER THE TRAVELED WAY.

TRAVELED WAY IS THE ROADWAY WIDTH MINUS SHOULDER WIDTHS.

FOR CUT SECTION DETAILS, SEE 703.86.

GENERAL NOTES:

FOR SECTIONS THRU BARREL, WINGS AND HEADWALLS, SEE SHEET 3 OF 3. FOR BAR SIZES, SPACING AND DIMENSIONS OF ALL REINFORCEMENT EXCEPT J5 BARS, SEE 703.87. FOR J5 BARS, SEE 703.37.

CONSTRUCTION JOINT KEY NOT SHOWN FOR CLARITY IN PLAN AND ELEVATION, SEE SHEET 3 OF 3 FOR DETAILS.

DRAWING NOT TO SCALE. FOLLOW DIMENSIONS.

MINIMUM CLEARANCE TO REINFORCING STEEL SHALL BE 1½".

LAP LONGITUDINAL BARS A MINIMUM OF 23" AT SPLICES.

BEVELED HEADWALL SHALL BE LOCATED AT UPSTREAM END.

(a) SAME SIZE AND SPACING AS ADJACENT B BARS

(b) VARIES, 12" MAXIMUM

(c) J4 BAR SPACING

(d) SAME SIZE AND SPACING AS A2 BARS

(e) A2 BAR SPACING

(f) SAME SIZE AND SPACING AS A1 BARS

(g) A1 BAR SPACING

MISSOURI HIGHWAYS AND TRANSPORTATION COMMISSION
105 WEST CAPITOL
JEFFERSON CITY, MO 65102
1-888-ASK-MODOT (1-888-275-6636)

STATE OF MISSOURI
DENNIS W. HECKMAN
NUMBER PE-27141
PROFESSIONAL ENGINEER
THIS SHEET HAS BEEN SIGNED, SEALED AND DATED ELECTRONICALLY.

CONCRETE TRIPLE BOX CULVERT

SKEW: LEFT ADVANCE
WINGS: STRAIGHT

REINFORCEMENT

DATE EFFECTIVE: 12/01/2011
DATE PREPARED: 5/13/2015

703.82H

SHEET NO. 1 OF 3

IF A SEAL IS PRESENT ON THIS SHEET IT HAS BEEN ELECTRONICALLY SEALED AND DATED.

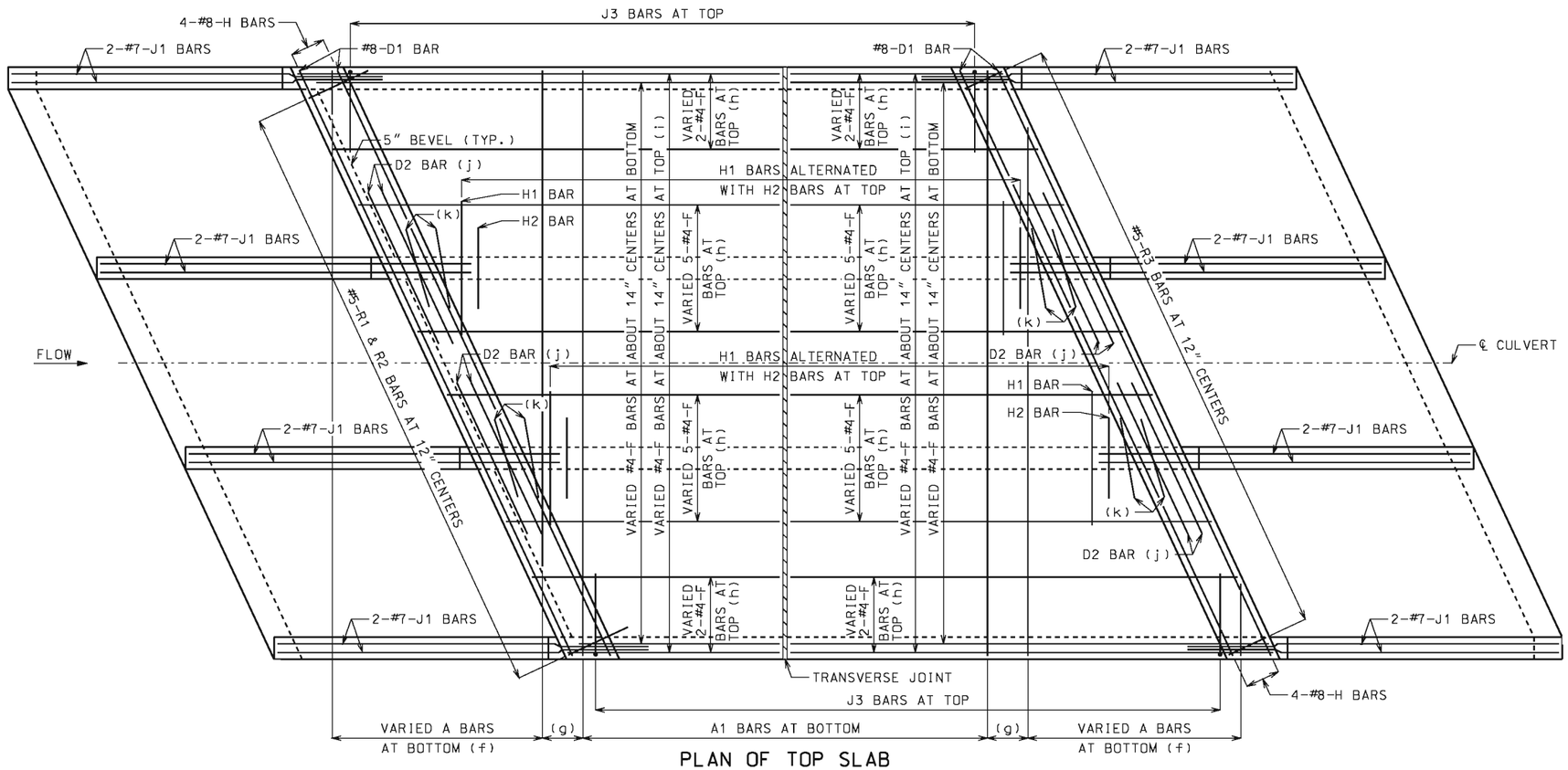

PLAN OF TOP SLAB

B BARS IN WALLS ARE NOT SHOWN FOR CLARITY.
FOR PLACEMENT, SEE SHEET 1 OF 3.

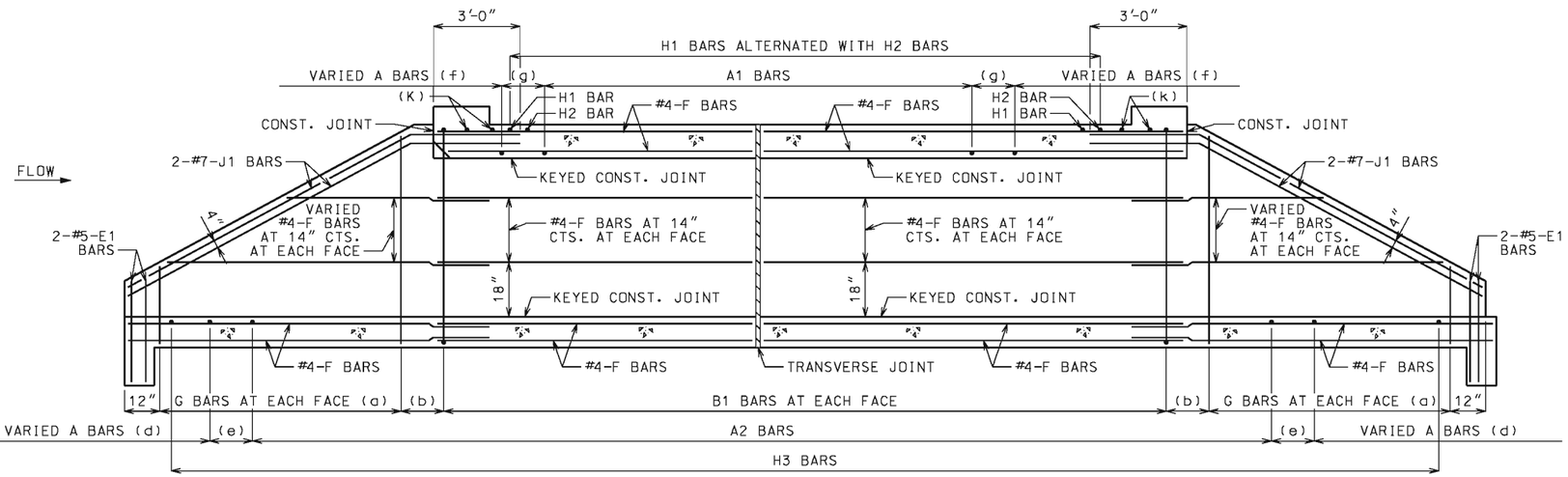

SECTION NEAR INTERIOR WALL

J1 BARS MAY BE BENT IN FIELD OR SHOP.

GENERAL NOTES:

FOR SECTIONS THRU BARREL, WINGS AND HEADWALLS, SEE SHEET 3 OF 3. FOR BAR SIZES, SPACING AND DIMENSIONS OF ALL REINFORCEMENT EXCEPT J5 BARS, SEE 703.87. FOR J5 BARS, SEE 703.37.

CONSTRUCTION JOINT KEY NOT SHOWN FOR CLARITY IN PLAN AND SECTION, SEE SHEET 3 OF 3 FOR DETAILS.

DRAWING NOT TO SCALE. FOLLOW DIMENSIONS.

MINIMUM CLEARANCE TO REINFORCING STEEL SHALL BE 1½".

LAP LONGITUDINAL BARS A MINIMUM OF 23" AT SPLICES.

BEVELED HEADWALL SHALL BE LOCATED AT UPSTREAM END.

(a) SAME SIZE AND SPACING AS ADJACENT B BARS

(b) VARIES, 12" MAXIMUM

(c) NOT SPECIFIED ON THIS SHEET

(d) SAME SIZE AND SPACING AS A2 BARS

(e) A2 BAR SPACING

(f) SAME SIZE AND SPACING AS A1 BARS

(g) A1 BAR SPACING

(h) FOR DESIGN FILLS OVER 2'-0"

(i) FOR DESIGN FILLS 2'-0" OR LESS

(j) NOT REQUIRED FOR CLEAR SPANS ≤ 10'-0"
#8 FOR CLEAR SPAN > 10'-0"
#9 FOR CLEAR SPAN > 13'-0"

IF REQUIRED, THE MINIMUM LENGTH EACH SIDE OF ℄ WALL SHALL BE THE GREATER OF 48 BAR DIAMETERS OR ¼ CLEAR SPAN. THE CLEAR SPAN IS PARALLEL TO LONG DIRECTION OF HEADWALL.

(k) H2 BARS AS REQUIRED, QUANTITY OF BARS VARIES WITH SKEW.

MISSOURI HIGHWAYS AND TRANSPORTATION COMMISSION
105 WEST CAPITOL
JEFFERSON CITY, MO 65102
1-888-ASK-MODOT (1-888-275-6636)

STATE OF MISSOURI
DENNIS W. HECKMAN
NUMBER PE-27141
PROFESSIONAL ENGINEER
THIS SHEET HAS BEEN SIGNED, SEALED AND DATED ELECTRONICALLY.

CONCRETE TRIPLE BOX CULVERT

SKEW: LEFT ADVANCE
WINGS: STRAIGHT

REINFORCEMENT

DATE EFFECTIVE: 12/01/2011
DATE PREPARED: 5/13/2015

703.82H

SHEET NO. 2 OF 3

IF A SEAL IS PRESENT ON THIS SHEET IT HAS BEEN ELECTRONICALLY SEALED AND DATED.

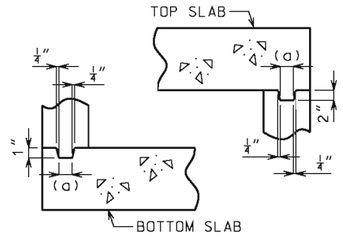

KEYED CONSTRUCTION JOINT

(a) APPROXIMATELY ONE-THIRD OF WALL THICKNESS

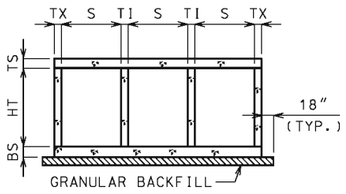

GRANULAR BACKFILL LIMITS AND MEMBER DIMENSIONS

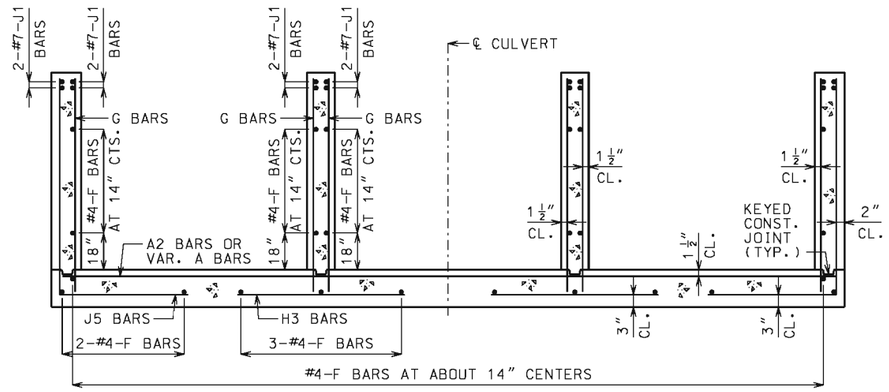

UPSTREAM AND DOWNSTREAM WINGS REINFORCEMENT

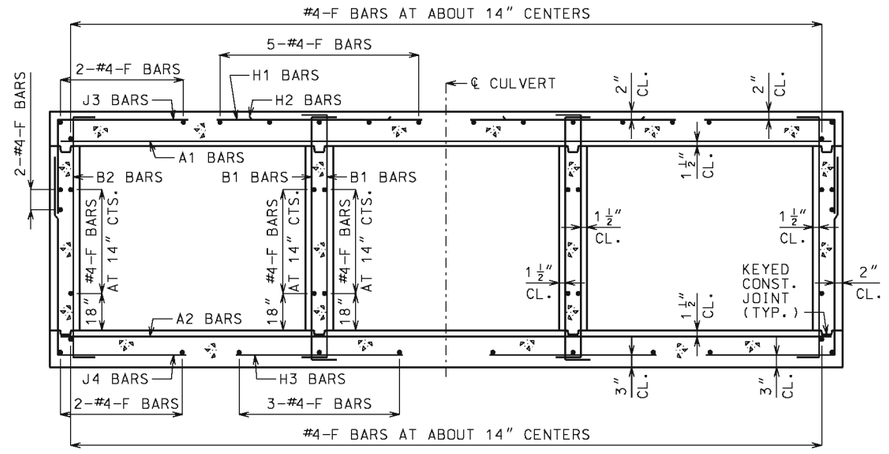

BARREL REINFORCEMENT

FOR DESIGN FILLS OVER 2'-0"

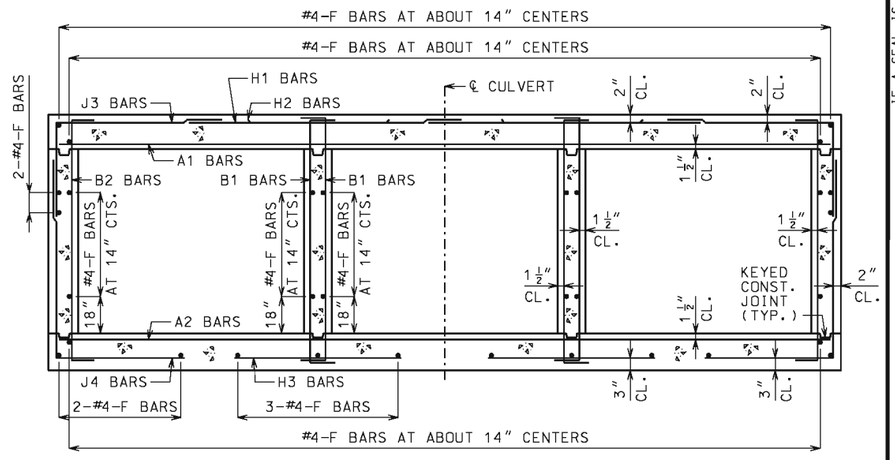

BARREL REINFORCEMENT

FOR DESIGN FILLS 2'-0" OR LESS

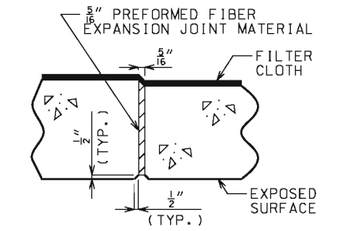

TRANSVERSE JOINT THRU BARREL

PREFORMED FIBER EXPANSION JOINT MATERIAL IN ACCORDANCE WITH SEC 1057 SHALL BE SECURELY STITCHED TO ONE FACE OF THE CONCRETE WITH 10 GAGE COPPER WIRE OR 12 GAGE SOFT DRAWN GALVANIZED STEEL WIRE.

FILTER CLOTH 3 FEET IN WIDTH AND DOUBLE THICKNESS SHALL BE CENTERED ON TRANSVERSE JOINTS IN TOP SLAB AND SIDEWALLS WITH EDGES SEALED WITH MASTIC OR TWO SIDED TAPE. FILTER CLOTH SHALL BE A SUBSURFACE DRAINAGE GEOTEXTILE IN ACCORDANCE WITH SEC 1011. COST OF FURNISHING AND INSTALLING FILTER CLOTH WILL BE CONSIDERED COMPLETELY COVERED BY THE CONTRACT UNIT PRICE FOR OTHER ITEMS.

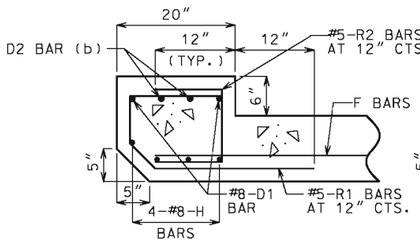

UPSTREAM HEADWALL REINFORCEMENT

NEAR INTERIOR WALL

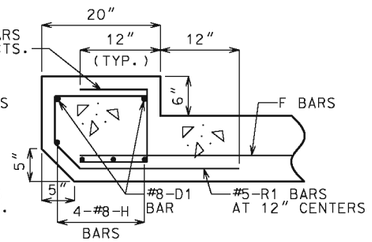

UPSTREAM HEADWALL REINFORCEMENT

NEAR MIDSPAN

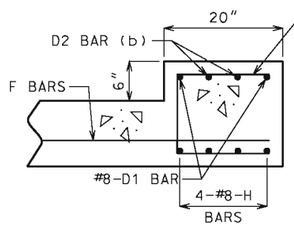

DOWNSTREAM HEADWALL REINFORCEMENT

NEAR INTERIOR WALL

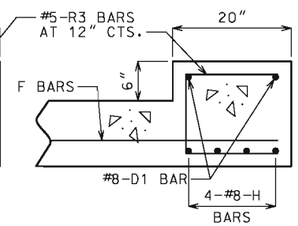

DOWNSTREAM HEADWALL REINFORCEMENT

NEAR MIDSPAN

(b) NOT REQUIRED FOR CLEAR SPANS ≤ 10'-0"
#8 FOR CLEAR SPAN > 10'-0"
#9 FOR CLEAR SPAN > 13'-0"

IF D2 BARS ARE REQUIRED, THE MINIMUM LENGTH EACH SIDE OF ℄ WALL SHALL BE THE GREATER OF 48 BAR DIAMETERS OR ¼ CLEAR SPAN. THE CLEAR SPAN IS PARALLEL TO LONG DIRECTION OF HEADWALL.

GENERAL NOTES:

FOR MEMBER THICKNESS AND FOR BAR SIZES, SPACING AND DIMENSIONS OF ALL REINFORCEMENT EXCEPT J5 BARS, SEE 703.87. FOR J5 BARS, SEE 703.37.

BARREL AND WINGS SECTIONS ARE SYMMETRICAL ABOUT AND NORMAL TO ℄ CULVERT. HEADWALL SECTIONS ARE NORMAL TO LONG DIRECTION OF HEADWALL.

DRAWING NOT TO SCALE. FOLLOW DIMENSIONS.

MINIMUM CLEARANCE TO REINFORCING STEEL SHALL BE 1½".

MISSOURI HIGHWAYS AND TRANSPORTATION COMMISSION
105 WEST CAPITOL
JEFFERSON CITY, MO 65102
1-888-ASK-MODOT (1-888-275-6636)

STATE OF MISSOURI
DENNIS W. HECKMAN
NUMBER PE-27141
PROFESSIONAL ENGINEER
THIS SHEET HAS BEEN SIGNED, SEALED AND DATED ELECTRONICALLY.

CONCRETE TRIPLE BOX CULVERT

SKEW: LEFT ADVANCE
WINGS: STRAIGHT

SECTIONS

DATE EFFECTIVE: 12/01/2011
DATE PREPARED: 5/13/2015

703.82H

SHEET NO. 3 OF 3

IF A SEAL IS PRESENT ON THIS SHEET IT HAS BEEN ELECTRONICALLY SEALED AND DATED.

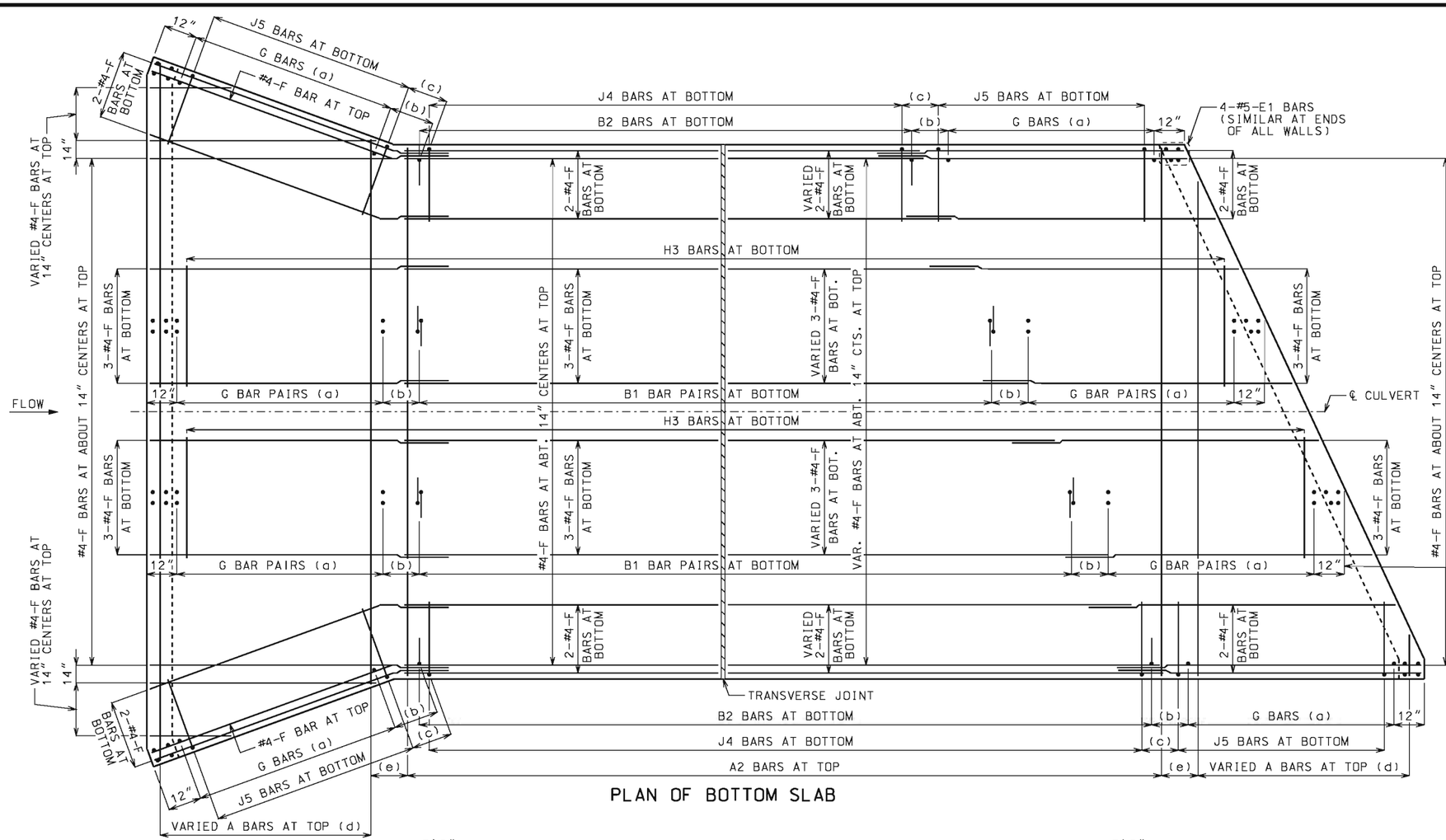

LAYING OUT TRANVERSE JOINTS

UNLESS SHOWN ON BRIDGE PLANS

USE A TRANSVERSE JOINT WHEN BARREL LENGTH IS OVER 80 FEET. USE ADDITIONAL JOINTS TO LIMIT CUT SECTION LENGTH AND END SECTION BARREL LENGTH MEASURED ALONG CENTERLINE OF CULVERT TO 50 FEET.

MINIMUM END SECTION LENGTH SHALL BE 3 FEET MEASURED ALONG THE SHORTEST WALL FROM THE INSIDE FACE OF HEADWALL TO THE TRANSVERSE JOINT.

TO AVOID LOCATING TRANSVERSE JOINTS UNDER A TRAVELED WAY WITH DESIGN FILLS 2 FEET OR LESS THE FOLLOWING SHALL APPLY:

BARREL LENGTH UP TO 90 FEET WITHOUT A TRANSVERSE JOINT

CUT SECTION LENGTHS UP TO 60 FEET

WHEN BARREL AND CUT SECTION LENGTH RESTRICTIONS REQUIRE TRANSVERSE JOINTS TO BE LOCATED UNDER A TRAVELED WAY WITH DESIGN FILLS 2 FEET OR LESS. THE JOINTS SHALL BE LOCATED TO MINIMIZE THE LENGTH OF JOINT UNDER THE TRAVELED WAY.

TRAVELED WAY IS THE ROADWAY WIDTH MINUS SHOULDER WIDTHS.

FOR CUT SECTION DETAILS, SEE 703.86.

GENERAL NOTES:

FOR SECTIONS THRU BARREL, WINGS AND HEADWALLS, SEE SHEET 3 OF 3. FOR BAR SIZES, SPACING AND DIMENSIONS OF ALL REINFORCEMENT EXCEPT J5 BARS, SEE 703.87. FOR J5 BARS, SEE 703.37.

CONSTRUCTION JOINT KEY NOT SHOWN FOR CLARITY IN PLAN AND ELEVATION, SEE SHEET 3 OF 3 FOR DETAILS.

DRAWING NOT TO SCALE. FOLLOW DIMENSIONS.

MINIMUM CLEARANCE TO REINFORCING STEEL SHALL BE 1½".

LAP LONGITUDINAL BARS A MINIMUM OF 23" AT SPLICES.

BEVELED HEADWALL SHALL BE LOCATED AT UPSTREAM END.

(a) SAME SIZE AND SPACING AS ADJACENT B BARS

(b) VARIES, 12" MAXIMUM

(c) J4 BAR SPACING

(d) SAME SIZE AND SPACING AS A2 BARS

(e) A2 BAR SPACING

(f) SAME SIZE AND SPACING AS A1 BARS

(g) A1 BAR SPACING

MISSOURI HIGHWAYS AND TRANSPORTATION COMMISSION
105 WEST CAPITOL
JEFFERSON CITY, MO 65102
1-888-ASK-MODOT (1-888-275-6636)

STATE OF MISSOURI
DENNIS W. HECKMAN
NUMBER PE-27141
PROFESSIONAL ENGINEER
THIS SHEET HAS BEEN SIGNED, SEALED AND DATED ELECTRONICALLY.

CONCRETE TRIPLE BOX CULVERT

SKEW: LEFT ADVANCE
WINGS: FLARED

REINFORCEMENT

DATE EFFECTIVE: 12/01/2011
DATE PREPARED: 5/13/2015

703.83H

SHEET NO. 1 OF 3

IF A SEAL IS PRESENT ON THIS SHEET IT HAS BEEN ELECTRONICALLY SEALED AND DATED.

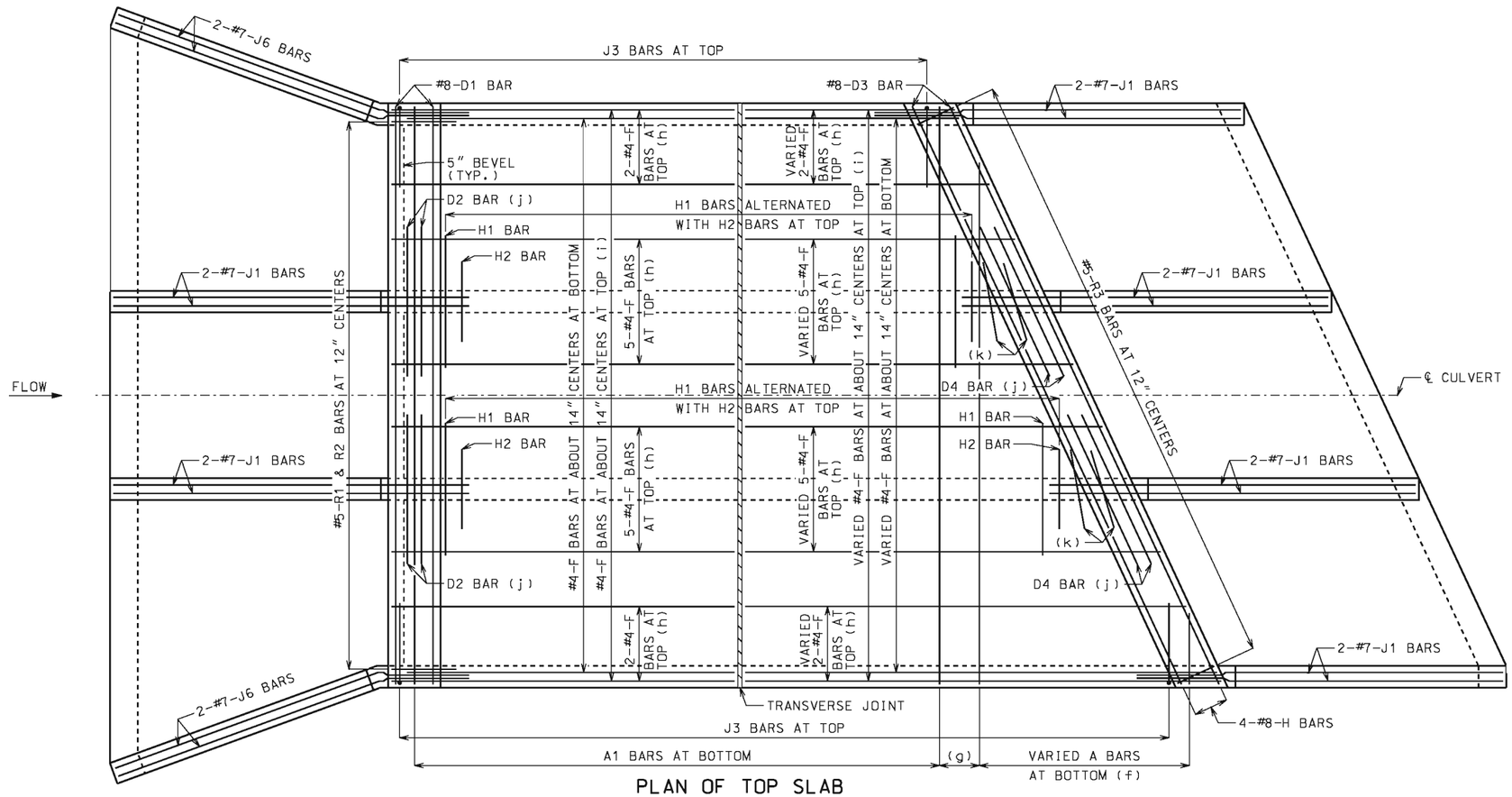

PLAN OF TOP SLAB

B BARS IN WALLS ARE NOT SHOWN FOR CLARITY.
FOR PLACEMENT, SEE SHEET 1 OF 3.

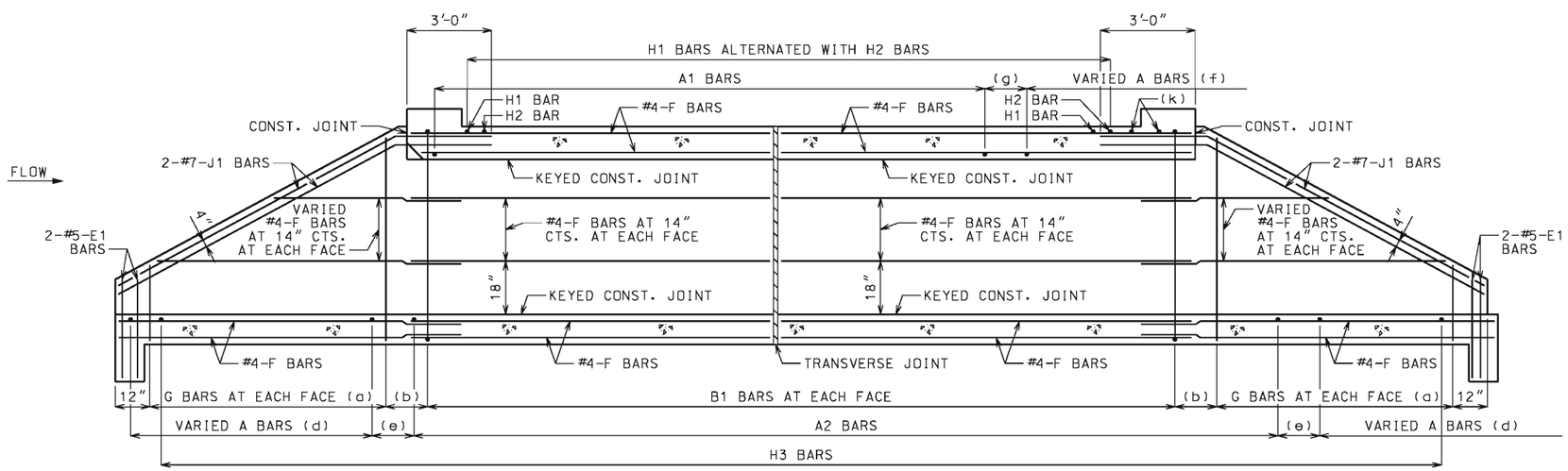

SECTION NEAR INTERIOR WALL

J1 BARS MAY BE BENT IN FIELD OR SHOP.

GENERAL NOTES:

FOR SECTIONS THRU BARREL, WINGS AND HEADWALLS, SEE SHEET 3 OF 3. FOR BAR SIZES, SPACING AND DIMENSIONS OF ALL REINFORCEMENT EXCEPT J5 BARS, SEE 703.87. FOR J5 BARS, SEE 703.37.

CONSTRUCTION JOINT KEY NOT SHOWN FOR CLARITY IN PLAN AND SECTION, SEE SHEET 3 OF 3 FOR DETAILS.

DRAWING NOT TO SCALE. FOLLOW DIMENSIONS.

MINIMUM CLEARANCE TO REINFORCING STEEL SHALL BE 1½".

LAP LONGITUDINAL BARS A MINIMUM OF 23" AT SPLICES.

BEVELED HEADWALL SHALL BE LOCATED AT UPSTREAM END.

(a) SAME SIZE AND SPACING AS ADJACENT B BARS

(b) VARIES, 12" MAXIMUM

(c) NOT SPECIFIED ON THIS SHEET

(d) SAME SIZE AND SPACING AS A2 BARS

(e) A2 BAR SPACING

(f) SAME SIZE AND SPACING AS A1 BARS

(g) A1 BAR SPACING

(h) FOR DESIGN FILLS OVER 2'-0"

(i) FOR DESIGN FILLS 2'-0" OR LESS

(j) NOT REQUIRED FOR CLEAR SPANS ≤ 10'-0"
#8 FOR CLEAR SPAN > 10'-0"
#9 FOR CLEAR SPAN > 13'-0"

IF REQUIRED, THE MINIMUM LENGTH EACH SIDE OF ℄ WALL SHALL BE THE GREATER OF 48 BAR DIAMETERS OR ¼ CLEAR SPAN. THE CLEAR SPAN IS PARALLEL TO LONG DIRECTION OF HEADWALL.

(k) H2 BARS AS REQUIRED, QUANTITY OF BARS VARIES WITH SKEW.

MISSOURI HIGHWAYS AND TRANSPORTATION COMMISSION
105 WEST CAPITOL
JEFFERSON CITY, MO 65102
1-888-ASK-MODOT (1-888-275-6636)

STATE OF MISSOURI
DENNIS W. HECKMAN
NUMBER PE-27141
PROFESSIONAL ENGINEER
THIS SHEET HAS BEEN SIGNED, SEALED AND DATED ELECTRONICALLY.

CONCRETE TRIPLE BOX CULVERT

SKEW: LEFT ADVANCE
WINGS: FLARED

REINFORCEMENT

DATE EFFECTIVE: 12/01/2011
DATE PREPARED: 5/13/2015

703.83H

SHEET NO. 2 OF 3

IF A SEAL IS PRESENT ON THIS SHEET IT HAS BEEN ELECTRONICALLY SEALED AND DATED.

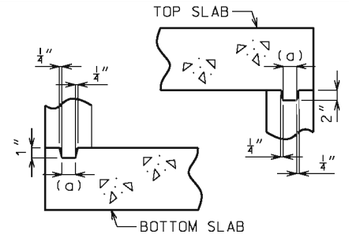

KEYED CONSTRUCTION JOINT

(a) APPROXIMATELY ONE-THIRD OF WALL THICKNESS

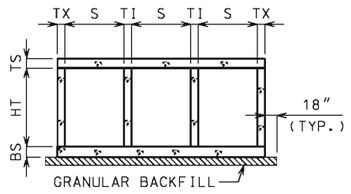

GRANULAR BACKFILL LIMITS AND MEMBER DIMENSIONS

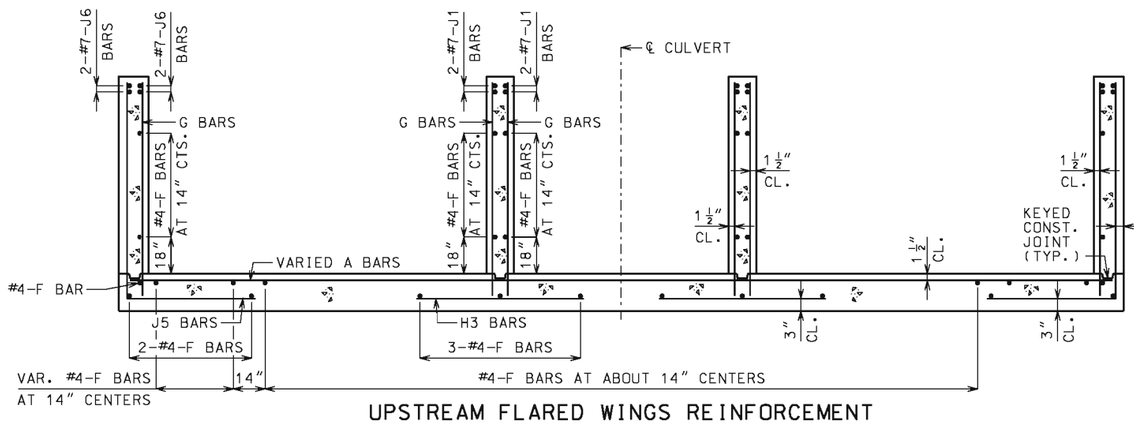

UPSTREAM FLARED WINGS REINFORCEMENT

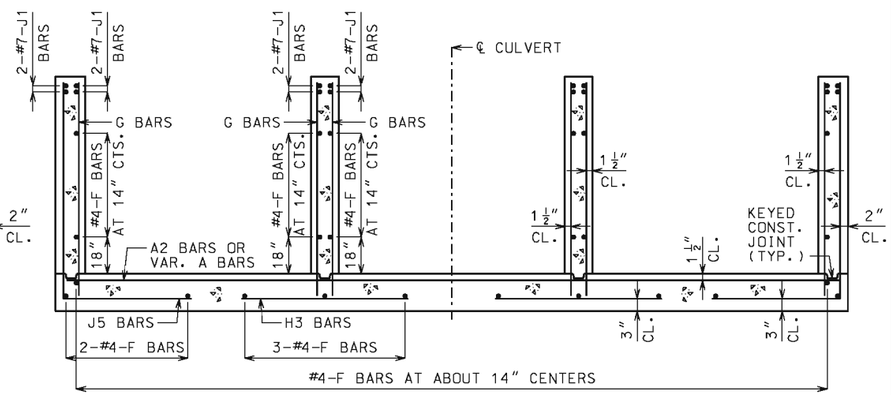

DOWNSTREAM WINGS REINFORCEMENT

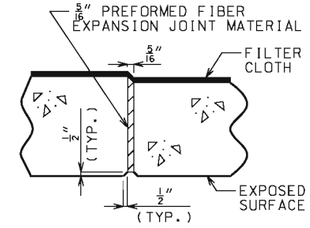

TRANSVERSE JOINT THRU BARREL

PREFORMED FIBER EXPANSION JOINT MATERIAL IN ACCORDANCE WITH SEC 1057 SHALL BE SECURELY STITCHED TO ONE FACE OF THE CONCRETE WITH 10 GAGE COPPER WIRE OR 12 GAGE SOFT DRAWN GALVANIZED STEEL WIRE.

FILTER CLOTH 3 FEET IN WIDTH AND DOUBLE THICKNESS SHALL BE CENTERED ON TRANSVERSE JOINTS IN TOP SLAB AND SIDEWALLS WITH EDGES SEALED WITH MASTIC OR TWO SIDED TAPE. FILTER CLOTH SHALL BE A SUBSURFACE DRAINAGE GEOTEXTILE IN ACCORDANCE WITH SEC 1011. COST OF FURNISHING AND INSTALLING FILTER CLOTH WILL BE CONSIDERED COMPLETELY COVERED BY THE CONTRACT UNIT PRICE FOR OTHER ITEMS.

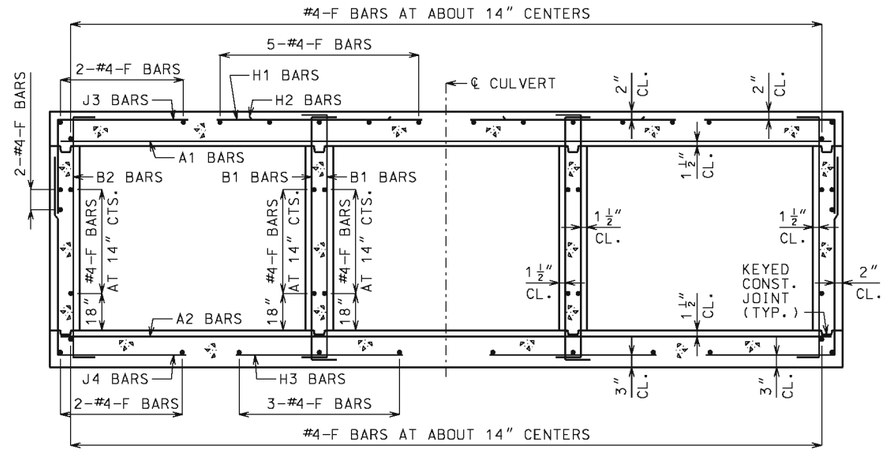

BARREL REINFORCEMENT

FOR DESIGN FILLS OVER 2'-0"

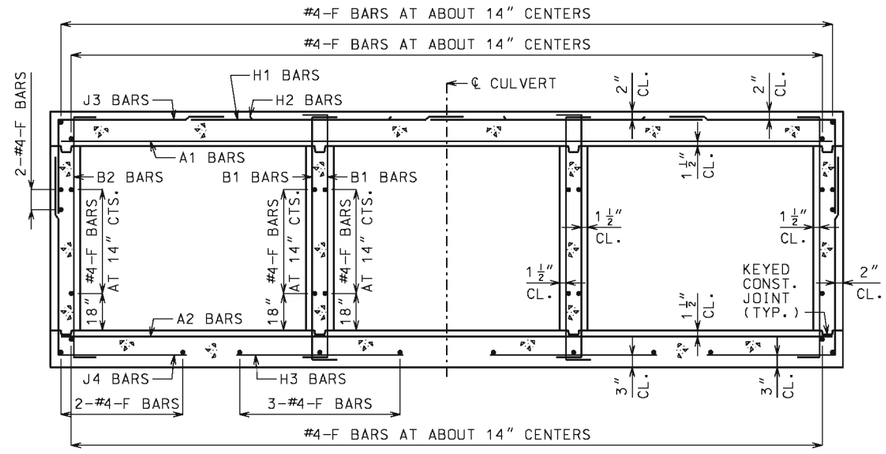

BARREL REINFORCEMENT

FOR DESIGN FILLS 2'-0" OR LESS

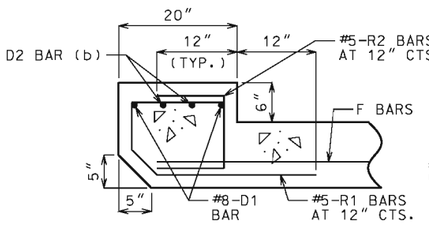

UPSTREAM HEADWALL REINFORCEMENT

NEAR INTERIOR WALL

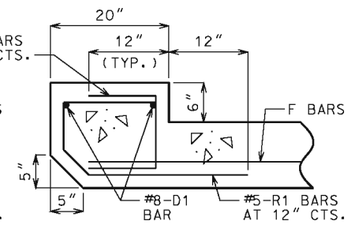

UPSTREAM HEADWALL REINFORCEMENT

NEAR MIDSPAN

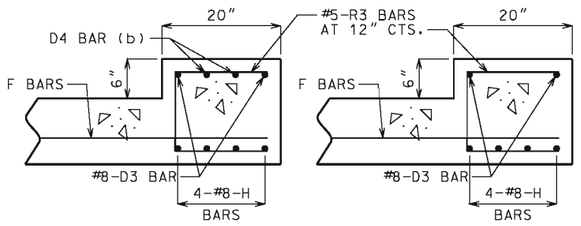

DOWNSTREAM HEADWALL REINFORCEMENT

NEAR INTERIOR WALL

DOWNSTREAM HEADWALL REINFORCEMENT

NEAR MIDSPAN

(b) NOT REQUIRED FOR CLEAR SPANS ≤ 10'-0"
#8 FOR CLEAR SPAN > 10'-0"
#9 FOR CLEAR SPAN > 13'-0"

IF D2 AND D4 BARS ARE REQUIRED, THE MINIMUM LENGTH EACH SIDE OF ℄ WALL SHALL BE THE GREATER OF 48 BAR DIAMETERS OR ¼ CLEAR SPAN. THE CLEAR SPAN IS PARALLEL TO LONG DIRECTION OF HEADWALL.

GENERAL NOTES:

FOR MEMBER THICKNESS AND FOR BAR SIZES, SPACING AND DIMENSIONS OF ALL REINFORCEMENT EXCEPT J5 BARS, SEE 703.87. FOR J5 BARS, SEE 703.37.

BARREL AND WINGS SECTIONS ARE SYMMETRICAL ABOUT AND NORMAL TO ℄ CULVERT. HEADWALL SECTIONS ARE NORMAL TO LONG DIRECTION OF HEADWALL.

DRAWING NOT TO SCALE. FOLLOW DIMENSIONS.

MINIMUM CLEARANCE TO REINFORCING STEEL SHALL BE 1½".

MISSOURI HIGHWAYS AND TRANSPORTATION COMMISSION
105 WEST CAPITOL
JEFFERSON CITY, MO 65102
1-888-ASK-MODOT (1-888-275-6636)

STATE OF MISSOURI
DENNIS W. HECKMAN
NUMBER PE-27141
PROFESSIONAL ENGINEER
THIS SHEET HAS BEEN SIGNED, SEALED AND DATED ELECTRONICALLY.

CONCRETE TRIPLE BOX CULVERT

SKEW: LEFT ADVANCE
WINGS: FLARED

SECTIONS

DATE EFFECTIVE: 12/01/2011
DATE PREPARED: 5/13/2015

703.83H

SHEET NO. 3 OF 3

IF A SEAL IS PRESENT ON THIS SHEET IT HAS BEEN ELECTRONICALLY SEALED AND DATED.

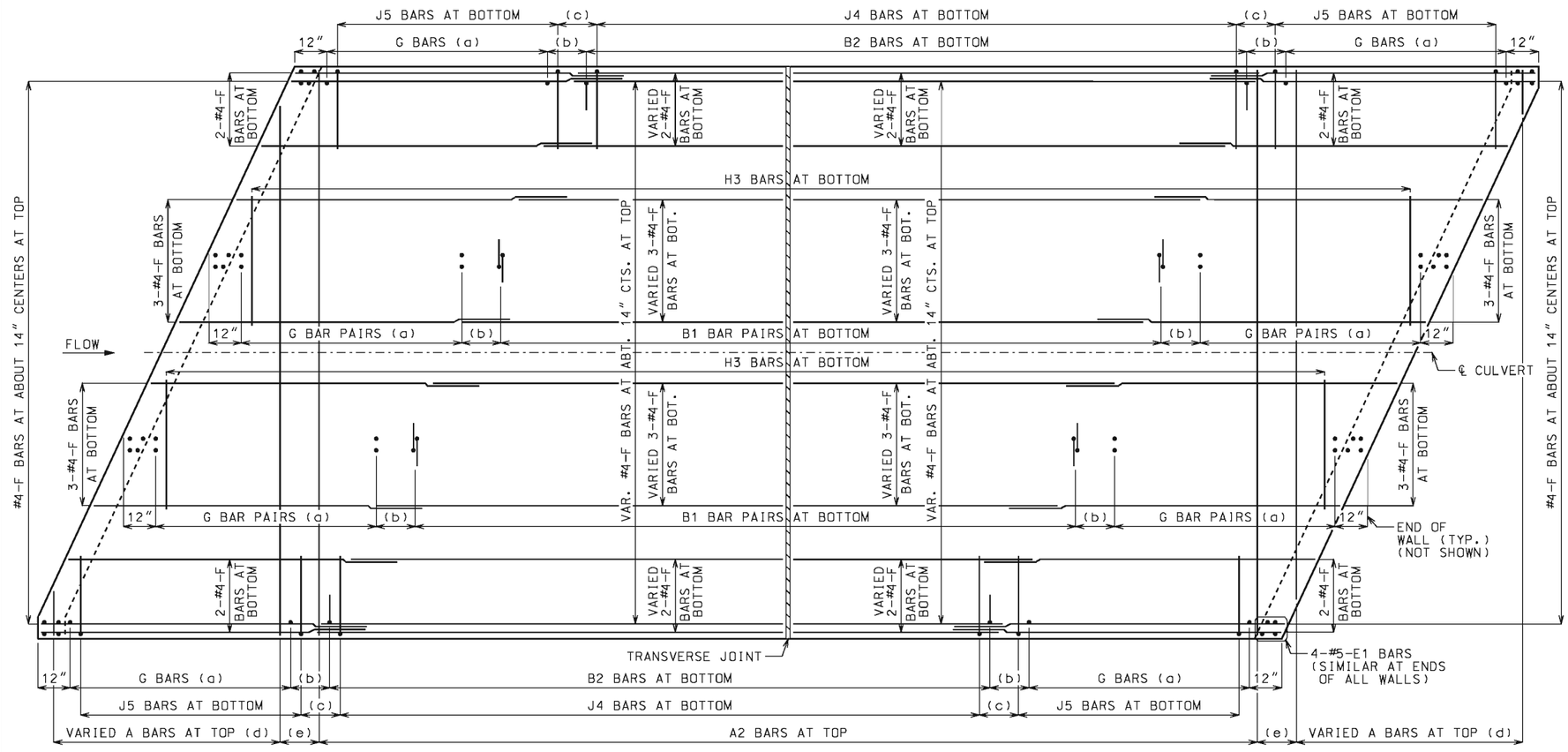

PLAN OF BOTTOM SLAB

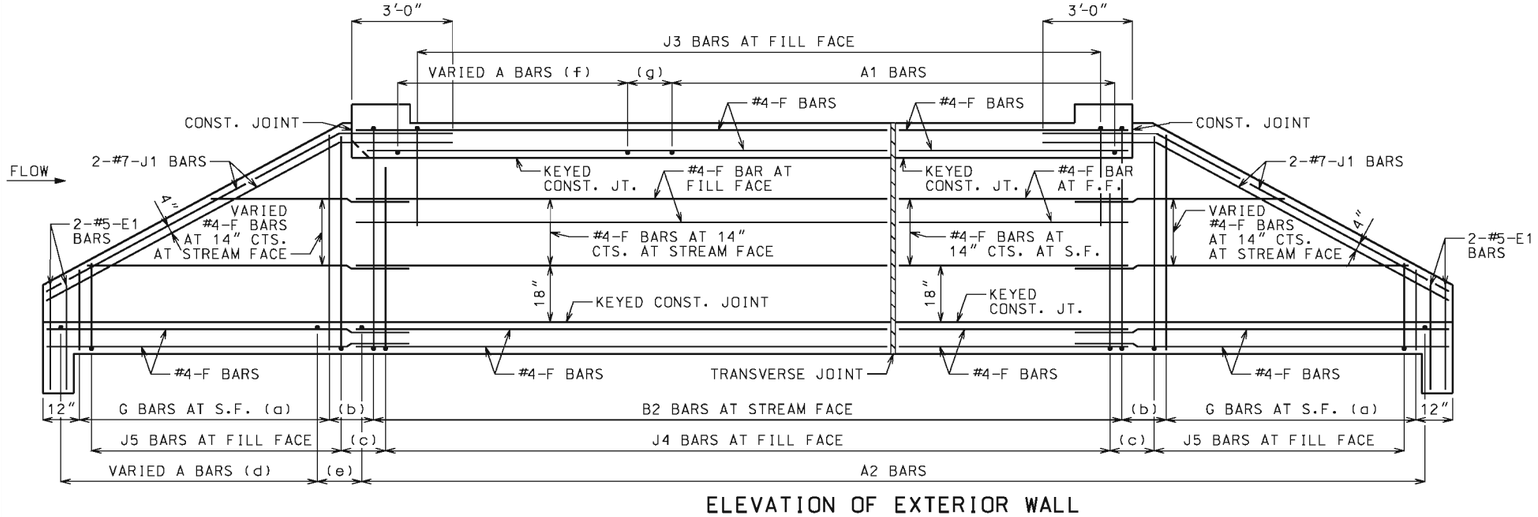

ELEVATION OF EXTERIOR WALL

J1 BARS MAY BE BENT IN FIELD OR SHOP.

LAYING OUT TRANVERSE JOINTS

UNLESS SHOWN ON BRIDGE PLANS

USE A TRANSVERSE JOINT WHEN BARREL LENGTH IS OVER 80 FEET. USE ADDITIONAL JOINTS TO LIMIT CUT SECTION LENGTH AND END SECTION BARREL LENGTH MEASURED ALONG CENTERLINE OF CULVERT TO 50 FEET.

MINIMUM END SECTION LENGTH SHALL BE 3 FEET MEASURED ALONG THE SHORTEST WALL FROM THE INSIDE FACE OF HEADWALL TO THE TRANSVERSE JOINT.

TO AVOID LOCATING TRANSVERSE JOINTS UNDER A TRAVELED WAY WITH DESIGN FILLS 2 FEET OR LESS THE FOLLOWING SHALL APPLY:

BARREL LENGTH UP TO 90 FEET WITHOUT A TRANSVERSE JOINT

CUT SECTION LENGTHS UP TO 60 FEET

WHEN BARREL AND CUT SECTION LENGTH RESTRICTIONS REQUIRE TRANSVERSE JOINTS TO BE LOCATED UNDER A TRAVELED WAY WITH DESIGN FILLS 2 FEET OR LESS, THE JOINTS SHALL BE LOCATED TO MINIMIZE THE LENGTH OF JOINT UNDER THE TRAVELED WAY.

TRAVELED WAY IS THE ROADWAY WIDTH MINUS SHOULDER WIDTHS.

FOR CUT SECTION DETAILS, SEE 703.86.

GENERAL NOTES:

FOR SECTIONS THRU BARREL, WINGS AND HEADWALLS, SEE SHEET 3 OF 3. FOR BAR SIZES, SPACING AND DIMENSIONS OF ALL REINFORCEMENT EXCEPT J5 BARS, SEE 703.87. FOR J5 BARS, SEE 703.37.

CONSTRUCTION JOINT KEY NOT SHOWN FOR CLARITY IN PLAN AND ELEVATION, SEE SHEET 3 OF 3 FOR DETAILS.

DRAWING NOT TO SCALE. FOLLOW DIMENSIONS.

MINIMUM CLEARANCE TO REINFORCING STEEL SHALL BE 1½".

LAP LONGITUDINAL BARS A MINIMUM OF 23" AT SPLICES.

BEVELED HEADWALL SHALL BE LOCATED AT UPSTREAM END.

(a) SAME SIZE AND SPACING AS ADJACENT B BARS

(b) VARIES, 12" MAXIMUM

(c) J4 BAR SPACING

(d) SAME SIZE AND SPACING AS A2 BARS

(e) A2 BAR SPACING

(f) SAME SIZE AND SPACING AS A1 BARS

(g) A1 BAR SPACING

MISSOURI HIGHWAYS AND TRANSPORTATION COMMISSION
105 WEST CAPITOL
JEFFERSON CITY, MO 65102
1-888-ASK-MODOT (1-888-275-6636)

STATE OF MISSOURI
DENNIS W. HECKMAN
NUMBER PE-27141
PROFESSIONAL ENGINEER
THIS SHEET HAS BEEN SIGNED, SEALED AND DATED ELECTRONICALLY.

CONCRETE TRIPLE BOX CULVERT

SKEW: RIGHT ADVANCE
WINGS: STRAIGHT

REINFORCEMENT

DATE EFFECTIVE: 12/01/2011
DATE PREPARED: 5/13/2015

703.84H

SHEET NO. 1 OF 3

IF A SEAL IS PRESENT ON THIS SHEET IT HAS BEEN ELECTRONICALLY SEALED AND DATED.

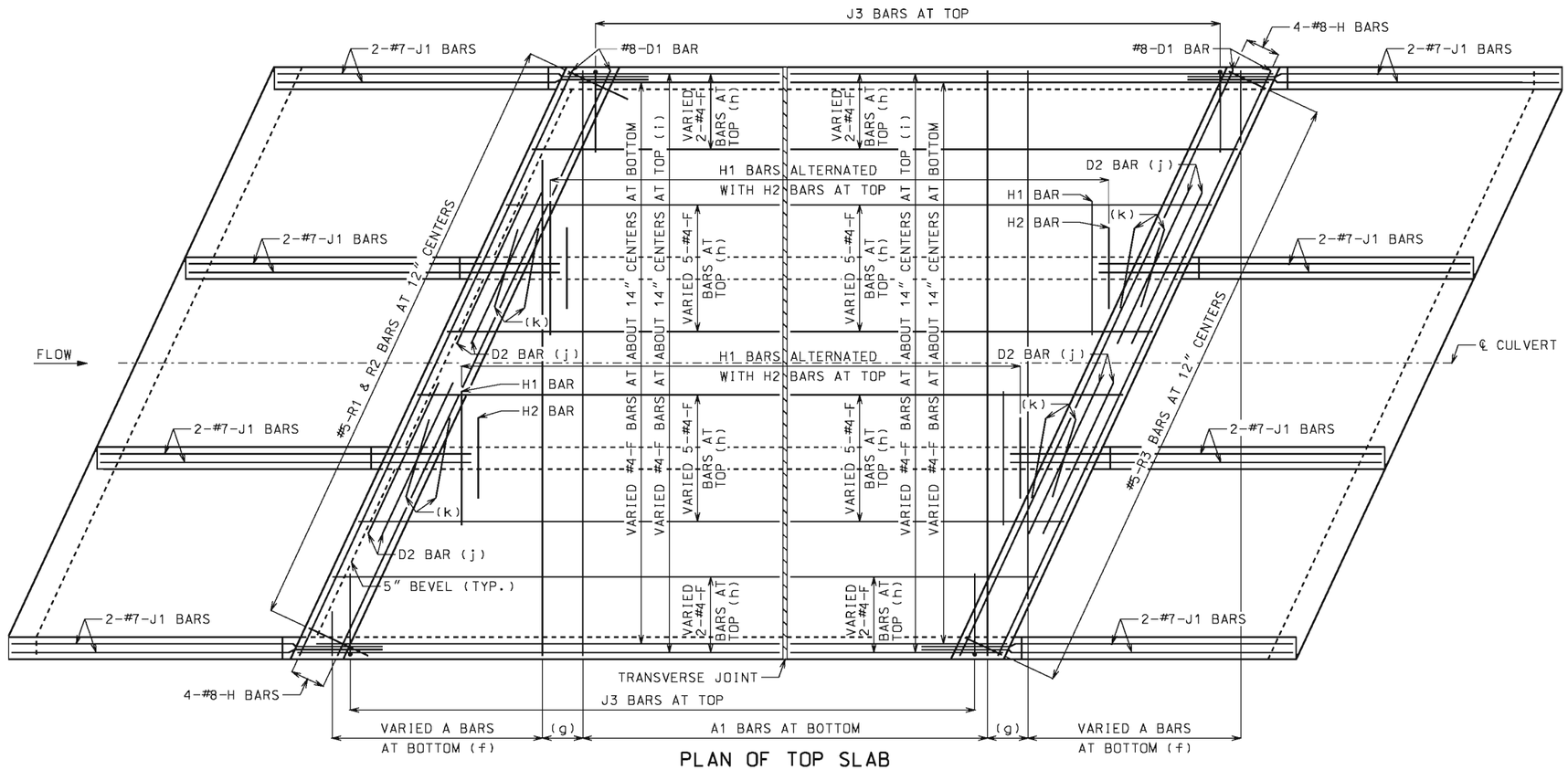

PLAN OF TOP SLAB

B BARS IN WALLS ARE NOT SHOWN FOR CLARITY.
FOR PLACEMENT, SEE SHEET 1 OF 3.

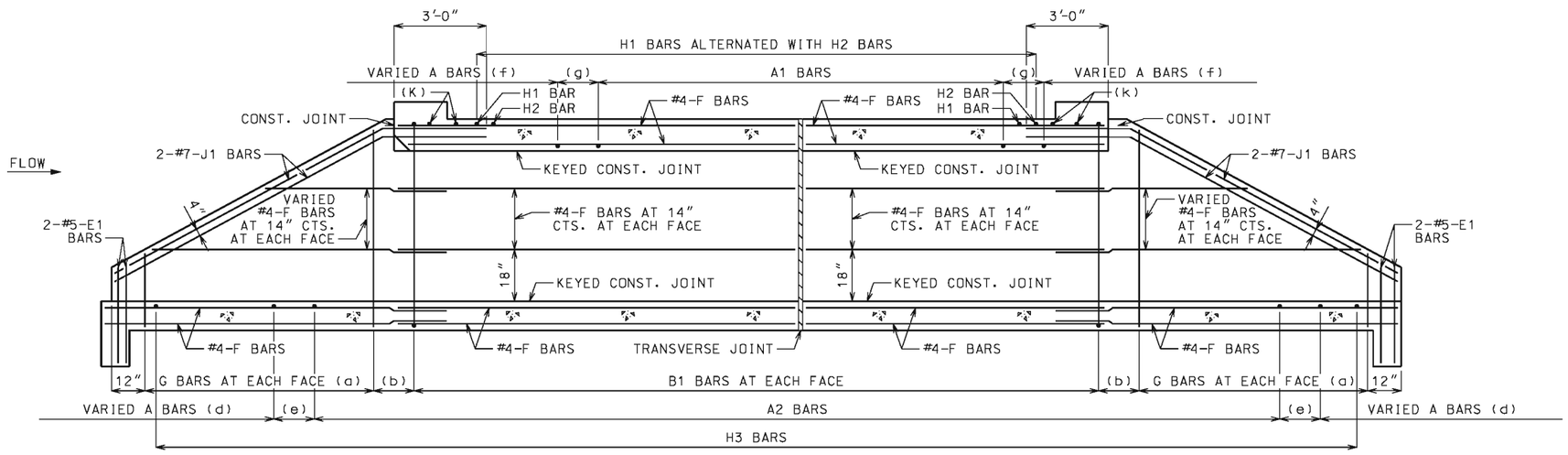

SECTION NEAR INTERIOR WALL

J1 BARS MAY BE BENT IN FIELD OR SHOP.

GENERAL NOTES:

FOR SECTIONS THRU BARREL, WINGS AND HEADWALLS, SEE SHEET 3 OF 3. FOR BAR SIZES, SPACING AND DIMENSIONS OF ALL REINFORCEMENT EXCEPT J5 BARS, SEE 703.87. FOR J5 BARS, SEE 703.37.

CONSTRUCTION JOINT KEY NOT SHOWN FOR CLARITY IN PLAN AND SECTION, SEE SHEET 3 OF 3 FOR DETAILS.

DRAWING NOT TO SCALE. FOLLOW DIMENSIONS.

MINIMUM CLEARANCE TO REINFORCING STEEL SHALL BE 1½".

LAP LONGITUDINAL BARS A MINIMUM OF 23" AT SPLICES.

BEVELED HEADWALL SHALL BE LOCATED AT UPSTREAM END.

(a) SAME SIZE AND SPACING AS ADJACENT B BARS

(b) VARIES, 12" MAXIMUM

(c) NOT SPECIFIED ON THIS SHEET

(d) SAME SIZE AND SPACING AS A2 BARS

(e) A2 BAR SPACING

(f) SAME SIZE AND SPACING AS A1 BARS

(g) A1 BAR SPACING

(h) FOR DESIGN FILLS OVER 2'-0"

(i) FOR DESIGN FILLS 2'-0" OR LESS

(j) NOT REQUIRED FOR CLEAR SPANS ≤ 10'-0"
#8 FOR CLEAR SPAN > 10'-0"
#9 FOR CLEAR SPAN > 13'-0"

IF REQUIRED, THE MINIMUM LENGTH EACH SIDE OF ℄ WALL SHALL BE THE GREATER OF 48 BAR DIAMETERS OR ¼ CLEAR SPAN. THE CLEAR SPAN IS PARALLEL TO LONG DIRECTION OF HEADWALL.

(k) H2 BARS AS REQUIRED, QUANTITY OF BARS VARIES WITH SKEW.

MISSOURI HIGHWAYS AND TRANSPORTATION COMMISSION
105 WEST CAPITOL
JEFFERSON CITY, MO 65102
1-888-ASK-MODOT (1-888-275-6636)

STATE OF MISSOURI
DENNIS W. HECKMAN
NUMBER PE-27141
PROFESSIONAL ENGINEER
THIS SHEET HAS BEEN SIGNED, SEALED AND DATED ELECTRONICALLY.

CONCRETE TRIPLE BOX CULVERT

SKEW: RIGHT ADVANCE
WINGS: STRAIGHT

REINFORCEMENT

DATE EFFECTIVE: 12/01/2011
DATE PREPARED: 5/13/2015

703.84H

SHEET NO. 2 OF 3

IF A SEAL IS PRESENT ON THIS SHEET IT HAS BEEN ELECTRONICALLY SEALED AND DATED.

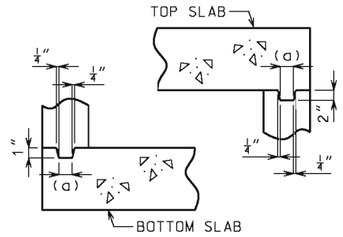

KEYED CONSTRUCTION JOINT

(a) APPROXIMATELY ONE-THIRD OF WALL THICKNESS

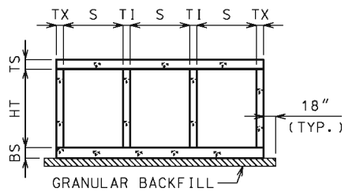

GRANULAR BACKFILL LIMITS AND MEMBER DIMENSIONS

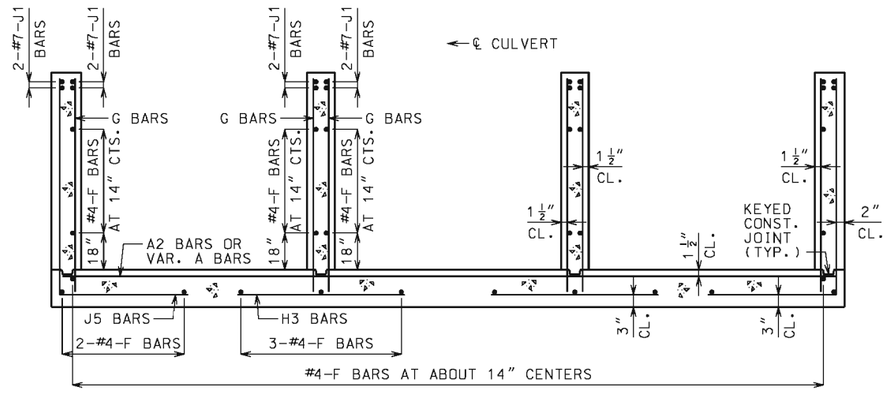

UPSTREAM AND DOWNSTREAM WINGS REINFORCEMENT

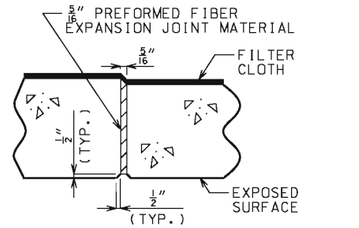

TRANSVERSE JOINT THRU BARREL

PREFORMED FIBER EXPANSION JOINT MATERIAL IN ACCORDANCE WITH SEC 1057 SHALL BE SECURELY STITCHED TO ONE FACE OF THE CONCRETE WITH 10 GAGE COPPER WIRE OR 12 GAGE SOFT DRAWN GALVANIZED STEEL WIRE.

FILTER CLOTH 3 FEET IN WIDTH AND DOUBLE THICKNESS SHALL BE CENTERED ON TRANSVERSE JOINTS IN TOP SLAB AND SIDEWALLS WITH EDGES SEALED WITH MASTIC OR TWO SIDED TAPE. FILTER CLOTH SHALL BE A SUBSURFACE DRAINAGE GEOTEXTILE IN ACCORDANCE WITH SEC 1011. COST OF FURNISHING AND INSTALLING FILTER CLOTH WILL BE CONSIDERED COMPLETELY COVERED BY THE CONTRACT UNIT PRICE FOR OTHER ITEMS.

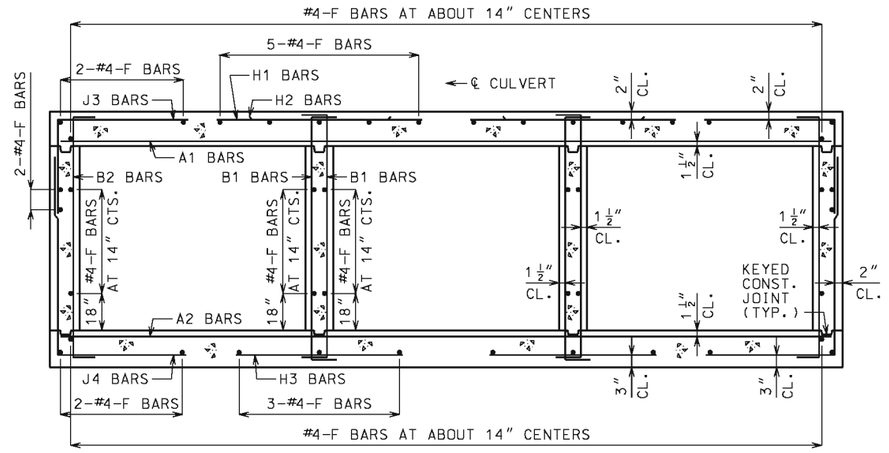

BARREL REINFORCEMENT

FOR DESIGN FILLS OVER 2'-0"

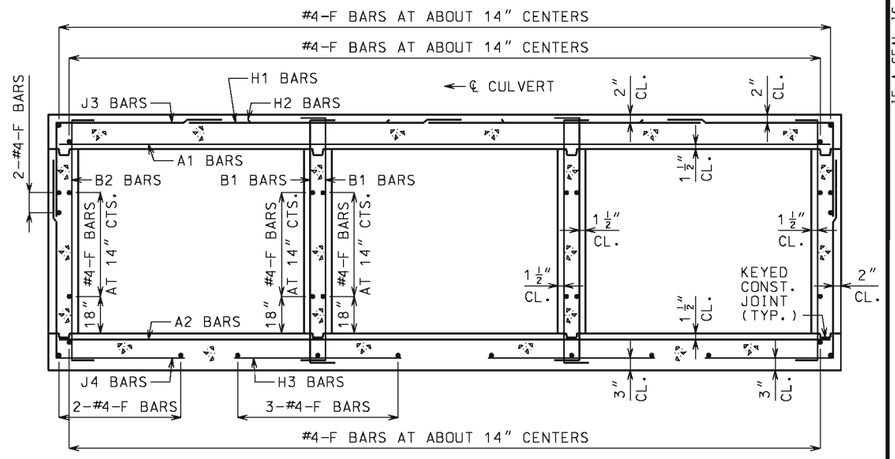

BARREL REINFORCEMENT

FOR DESIGN FILLS 2'-0" OR LESS

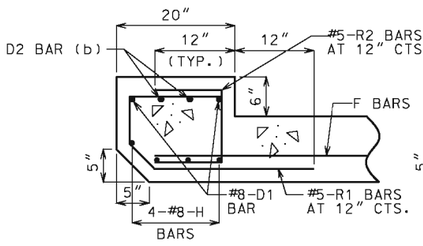

UPSTREAM HEADWALL REINFORCEMENT

NEAR INTERIOR WALL

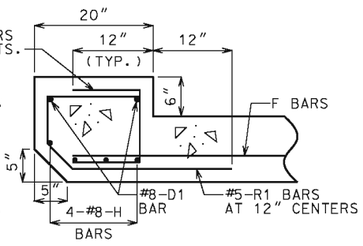

UPSTREAM HEADWALL REINFORCEMENT

NEAR MIDSPAN

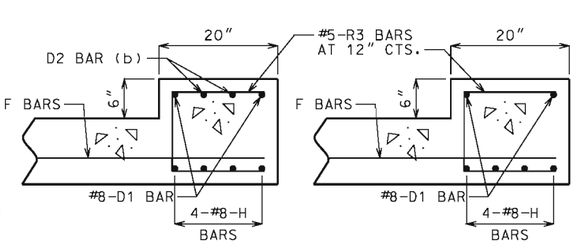

DOWNSTREAM HEADWALL REINFORCEMENT

NEAR INTERIOR WALL

DOWNSTREAM HEADWALL REINFORCEMENT

NEAR MIDSPAN

(b) NOT REQUIRED FOR CLEAR SPANS ≤ 10'-0"
#8 FOR CLEAR SPAN > 10'-0"
#9 FOR CLEAR SPAN > 13'-0"

IF D2 BARS ARE REQUIRED, THE MINIMUM LENGTH EACH SIDE OF ℄ WALL SHALL BE THE GREATER OF 48 BAR DIAMETERS OR ¼ CLEAR SPAN. THE CLEAR SPAN IS PARALLEL TO LONG DIRECTION OF HEADWALL.

GENERAL NOTES:

FOR MEMBER THICKNESS AND FOR BAR SIZES, SPACING AND DIMENSIONS OF ALL REINFORCEMENT EXCEPT J5 BARS, SEE 703.87. FOR J5 BARS, SEE 703.37.

BARREL AND WINGS SECTIONS ARE SYMMETRICAL ABOUT AND NORMAL TO ℄ CULVERT. HEADWALL SECTIONS ARE NORMAL TO LONG DIRECTION OF HEADWALL.

DRAWING NOT TO SCALE. FOLLOW DIMENSIONS.

MINIMUM CLEARANCE TO REINFORCING STEEL SHALL BE 1½".

MISSOURI HIGHWAYS AND TRANSPORTATION COMMISSION
105 WEST CAPITOL
JEFFERSON CITY, MO 65102
1-888-ASK-MODOT (1-888-275-6636)

STATE OF MISSOURI
DENNIS W. HECKMAN
NUMBER PE-27141
PROFESSIONAL ENGINEER
THIS SHEET HAS BEEN SIGNED, SEALED AND DATED ELECTRONICALLY.

CONCRETE TRIPLE BOX CULVERT

SKEW: RIGHT ADVANCE
WINGS: STRAIGHT

SECTIONS

DATE EFFECTIVE: 12/01/2011
DATE PREPARED: 5/13/2015

703.84H

SHEET NO. 3 OF 3

IF A SEAL IS PRESENT ON THIS SHEET IT HAS BEEN ELECTRONICALLY SEALED AND DATED.

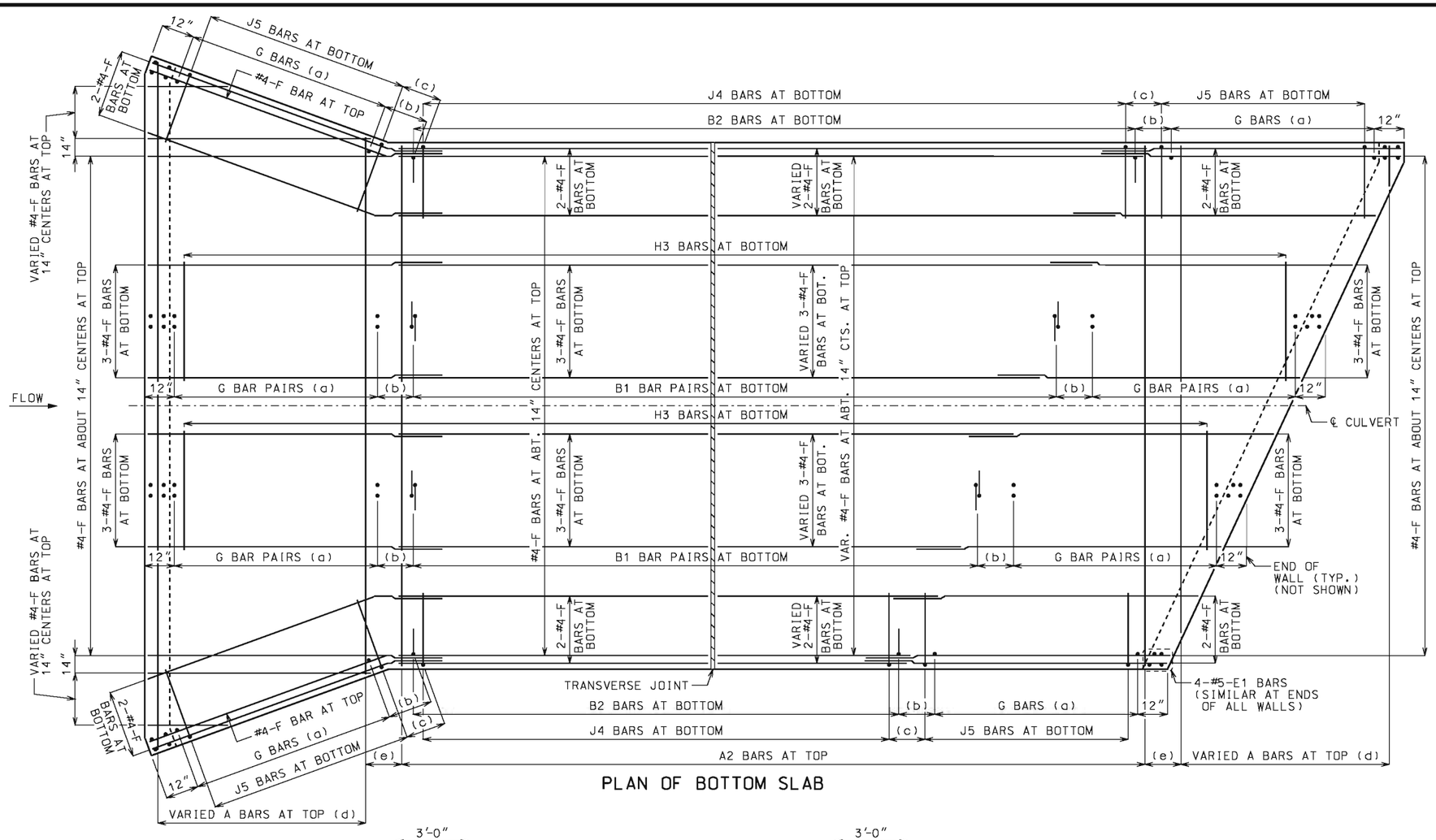

PLAN OF BOTTOM SLAB

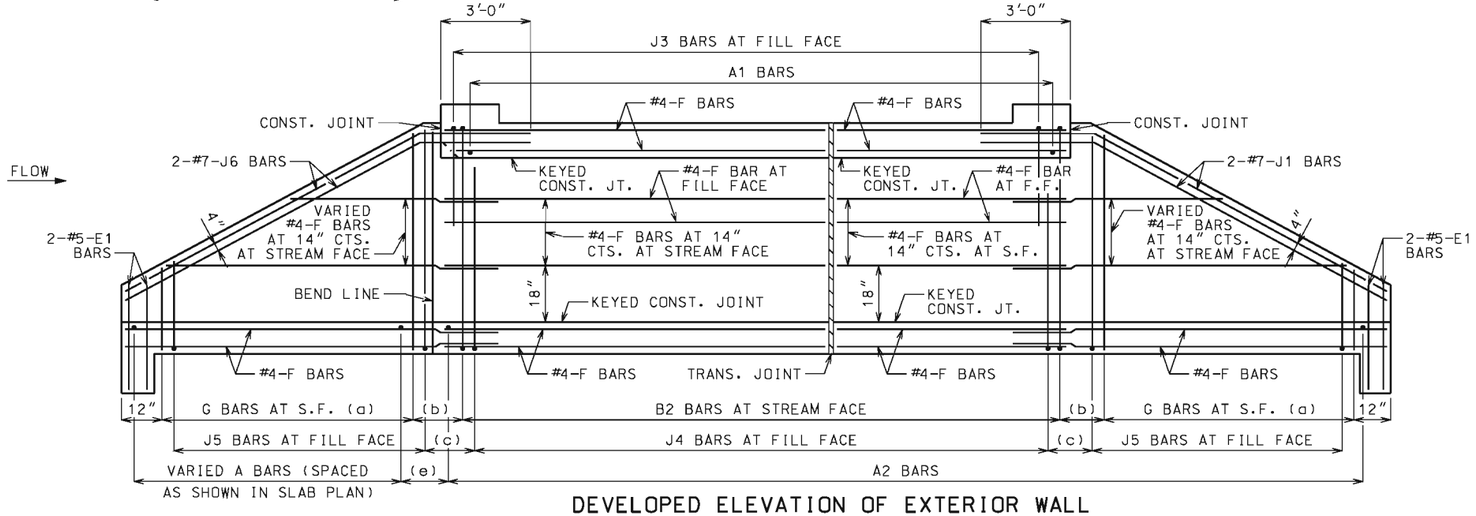

DEVELOPED ELEVATION OF EXTERIOR WALL

J1 BARS MAY BE BENT IN FIELD OR SHOP.

LAYING OUT TRANVERSE JOINTS

UNLESS SHOWN ON BRIDGE PLANS

USE A TRANSVERSE JOINT WHEN BARREL LENGTH IS OVER 80 FEET. USE ADDITIONAL JOINTS TO LIMIT CUT SECTION LENGTH AND END SECTION BARREL LENGTH MEASURED ALONG CENTERLINE OF CULVERT TO 50 FEET.

MINIMUM END SECTION LENGTH SHALL BE 3 FEET MEASURED ALONG THE SHORTEST WALL FROM THE INSIDE FACE OF HEADWALL TO THE TRANSVERSE JOINT.

TO AVOID LOCATING TRANSVERSE JOINTS UNDER A TRAVELED WAY WITH DESIGN FILLS 2 FEET OR LESS THE FOLLOWING SHALL APPLY:

BARREL LENGTH UP TO 90 FEET WITHOUT A TRANSVERSE JOINT

CUT SECTION LENGTHS UP TO 60 FEET

WHEN BARREL AND CUT SECTION LENGTH RESTRICTIONS REQUIRE TRANSVERSE JOINTS TO BE LOCATED UNDER A TRAVELED WAY WITH DESIGN FILLS 2 FEET OR LESS. THE JOINTS SHALL BE LOCATED TO MINIMIZE THE LENGTH OF JOINT UNDER THE TRAVELED WAY.

TRAVELED WAY IS THE ROADWAY WIDTH MINUS SHOULDER WIDTHS.

FOR CUT SECTION DETAILS, SEE 703.86.

GENERAL NOTES:

FOR SECTIONS THRU BARREL, WINGS AND HEADWALLS, SEE SHEET 3 OF 3. FOR BAR SIZES, SPACING AND DIMENSIONS OF ALL REINFORCEMENT EXCEPT J5 BARS, SEE 703.87. FOR J5 BARS, SEE 703.37.

CONSTRUCTION JOINT KEY NOT SHOWN FOR CLARITY IN PLAN AND ELEVATION, SEE SHEET 3 OF 3 FOR DETAILS.

DRAWING NOT TO SCALE. FOLLOW DIMENSIONS.

MINIMUM CLEARANCE TO REINFORCING STEEL SHALL BE 1½".

LAP LONGITUDINAL BARS A MINIMUM OF 23" AT SPLICES.

BEVELED HEADWALL SHALL BE LOCATED AT UPSTREAM END.

(a) SAME SIZE AND SPACING AS ADJACENT B BARS

(b) VARIES, 12" MAXIMUM

(c) J4 BAR SPACING

(d) SAME SIZE AND SPACING AS A2 BARS

(e) A2 BAR SPACING

MISSOURI HIGHWAYS AND TRANSPORTATION COMMISSION
105 WEST CAPITOL
JEFFERSON CITY, MO 65102
1-888-ASK-MODOT (1-888-275-6636)

STATE OF MISSOURI
DENNIS W. HECKMAN
NUMBER PE-27141
PROFESSIONAL ENGINEER
THIS SHEET HAS BEEN SIGNED, SEALED AND DATED ELECTRONICALLY.

CONCRETE TRIPLE BOX CULVERT

SKEW: RIGHT ADVANCE
WINGS: FLARED

REINFORCEMENT

DATE EFFECTIVE: 12/01/2011
DATE PREPARED: 5/13/2015

703.85C

SHEET NO. 1 OF 3

IF A SEAL IS PRESENT ON THIS SHEET IT HAS BEEN ELECTRONICALLY SEALED AND DATED.

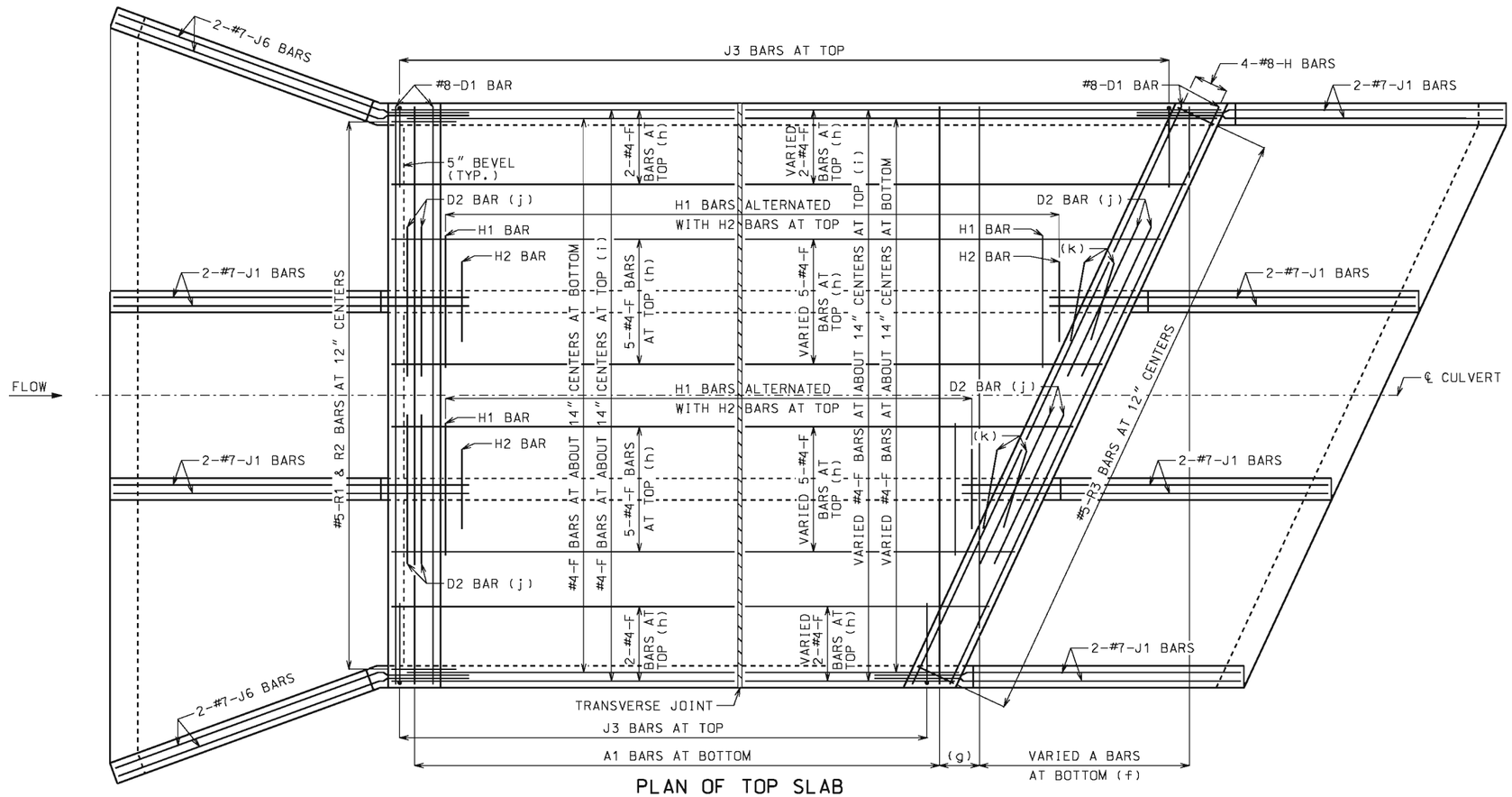

PLAN OF TOP SLAB

B BARS IN WALLS ARE NOT SHOWN FOR CLARITY.
FOR PLACEMENT, SEE SHEET 1 OF 3.

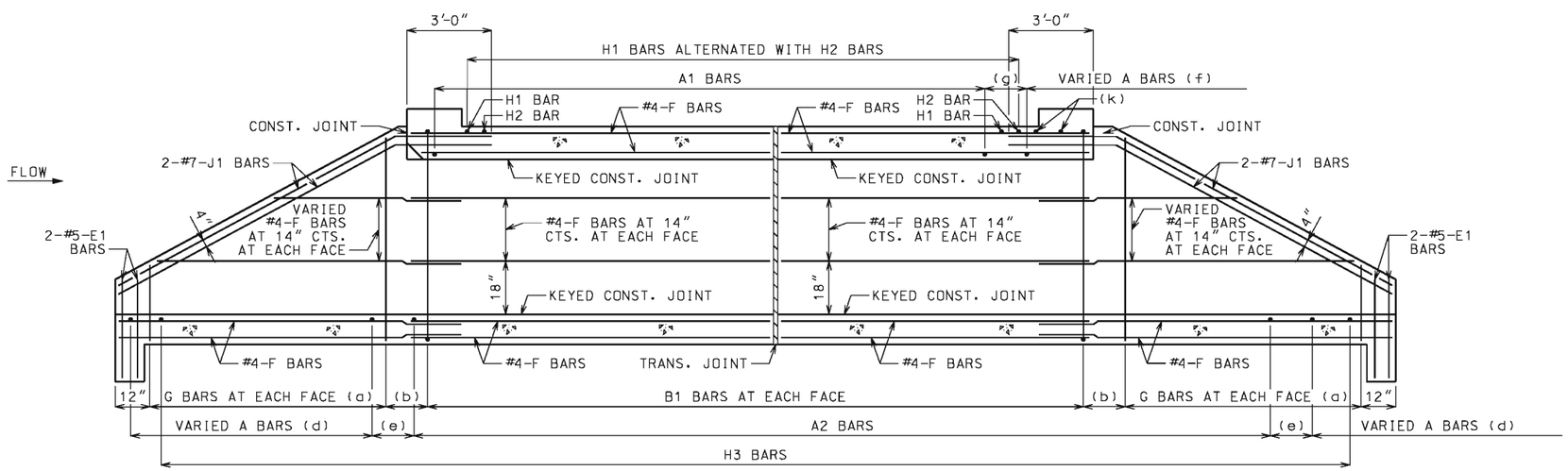

SECTION NEAR INTERIOR WALL

J1 BARS MAY BE BENT IN FIELD OR SHOP.

GENERAL NOTES:

FOR SECTIONS THRU BARREL, WINGS AND HEADWALLS, SEE SHEET 3 OF 3. FOR BAR SIZES, SPACING AND DIMENSIONS OF ALL REINFORCEMENT EXCEPT J5 BARS, SEE 703.87. FOR J5 BARS, SEE 703.37.

CONSTRUCTION JOINT KEY NOT SHOWN FOR CLARITY IN PLAN AND SECTION, SEE SHEET 3 OF 3 FOR DETAILS.

DRAWING NOT TO SCALE. FOLLOW DIMENSIONS.

MINIMUM CLEARANCE TO REINFORCING STEEL SHALL BE 1½".

LAP LONGITUDINAL BARS A MINIMUM OF 23" AT SPLICES.

BEVELED HEADWALL SHALL BE LOCATED AT UPSTREAM END.

(a) SAME SIZE AND SPACING AS ADJACENT B BARS

(b) VARIES, 12" MAXIMUM

(c) NOT SPECIFIED ON THIS SHEET

(d) SAME SIZE AND SPACING AS A2 BARS

(e) A2 BAR SPACING

(f) SAME SIZE AND SPACING AS A1 BARS

(g) A1 BAR SPACING

(h) FOR DESIGN FILLS OVER 2'-0"

(i) FOR DESIGN FILLS 2'-0" OR LESS

(j) NOT REQUIRED FOR CLEAR SPANS ≤ 10'-0"
#8 FOR CLEAR SPAN > 10'-0"
#9 FOR CLEAR SPAN > 13'-0"

IF REQUIRED, THE MINIMUM LENGTH EACH SIDE OF ℄ WALL SHALL BE THE GREATER OF 48 BAR DIAMETERS OR ¼ CLEAR SPAN. THE CLEAR SPAN IS PARALLEL TO LONG DIRECTION OF HEADWALL.

(k) H2 BARS AS REQUIRED, QUANTITY OF BARS VARIES WITH SKEW.

MISSOURI HIGHWAYS AND TRANSPORTATION COMMISSION
105 WEST CAPITOL
JEFFERSON CITY, MO 65102
1-888-ASK-MODOT (1-888-275-6636)

STATE OF MISSOURI
DENNIS W. HECKMAN
NUMBER PE-27141
PROFESSIONAL ENGINEER
THIS SHEET HAS BEEN SIGNED, SEALED AND DATED ELECTRONICALLY.

CONCRETE TRIPLE BOX CULVERT

SKEW: RIGHT ADVANCE
WINGS: FLARED

REINFORCEMENT

DATE EFFECTIVE: 12/01/2011
DATE PREPARED: 5/13/2015

703.85C

SHEET NO. 2 OF 3

IF A SEAL IS PRESENT ON THIS SHEET IT HAS BEEN ELECTRONICALLY SEALED AND DATED.

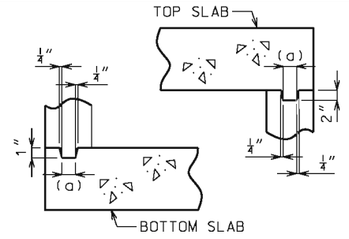

KEYED CONSTRUCTION JOINT

(a) APPROXIMATELY ONE-THIRD OF WALL THICKNESS

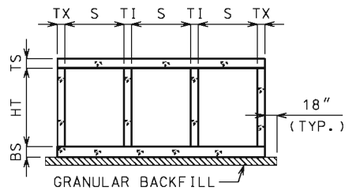

GRANULAR BACKFILL LIMITS AND MEMBER DIMENSIONS

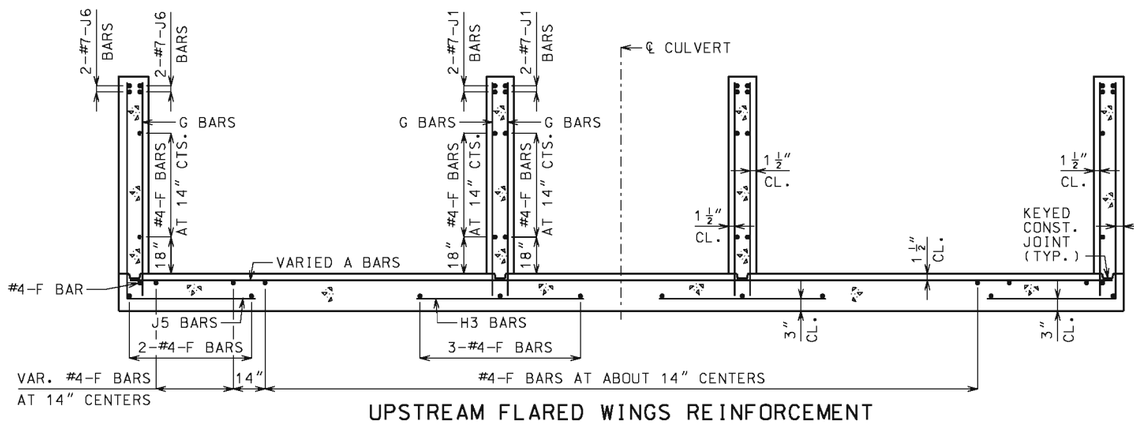

UPSTREAM FLARED WINGS REINFORCEMENT

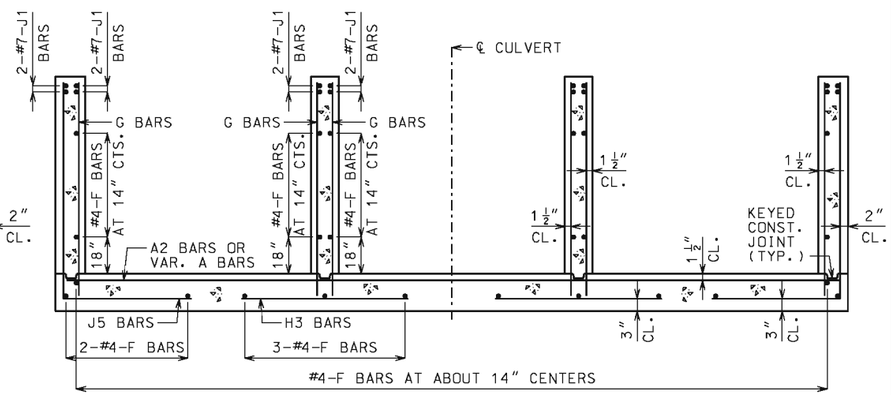

DOWNSTREAM WINGS REINFORCEMENT

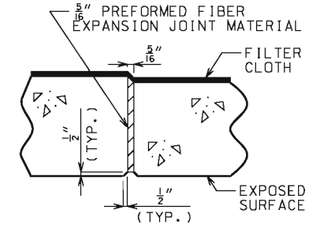

TRANSVERSE JOINT THRU BARREL

PREFORMED FIBER EXPANSION JOINT MATERIAL IN ACCORDANCE WITH SEC 1057 SHALL BE SECURELY STITCHED TO ONE FACE OF THE CONCRETE WITH 10 GAGE COPPER WIRE OR 12 GAGE SOFT DRAWN GALVANIZED STEEL WIRE.

FILTER CLOTH 3 FEET IN WIDTH AND DOUBLE THICKNESS SHALL BE CENTERED ON TRANSVERSE JOINTS IN TOP SLAB AND SIDEWALLS WITH EDGES SEALED WITH MASTIC OR TWO SIDED TAPE. FILTER CLOTH SHALL BE A SUBSURFACE DRAINAGE GEOTEXTILE IN ACCORDANCE WITH SEC 1011. COST OF FURNISHING AND INSTALLING FILTER CLOTH WILL BE CONSIDERED COMPLETELY COVERED BY THE CONTRACT UNIT PRICE FOR OTHER ITEMS.

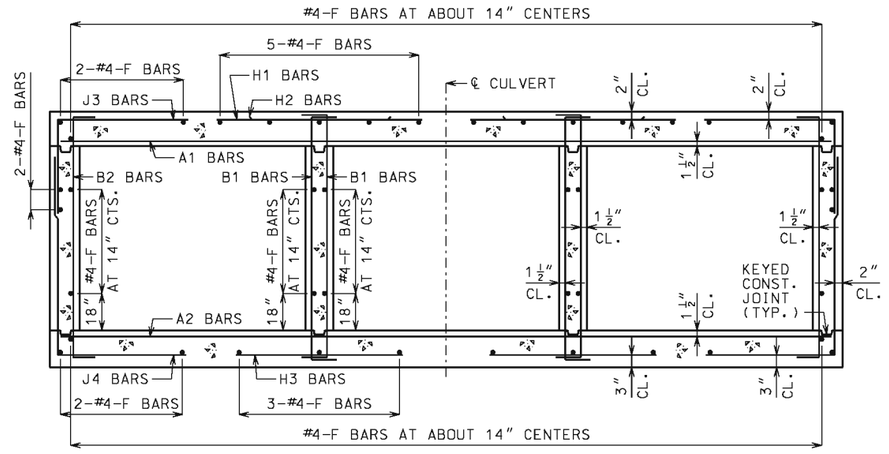

BARREL REINFORCEMENT

FOR DESIGN FILLS OVER 2'-0"

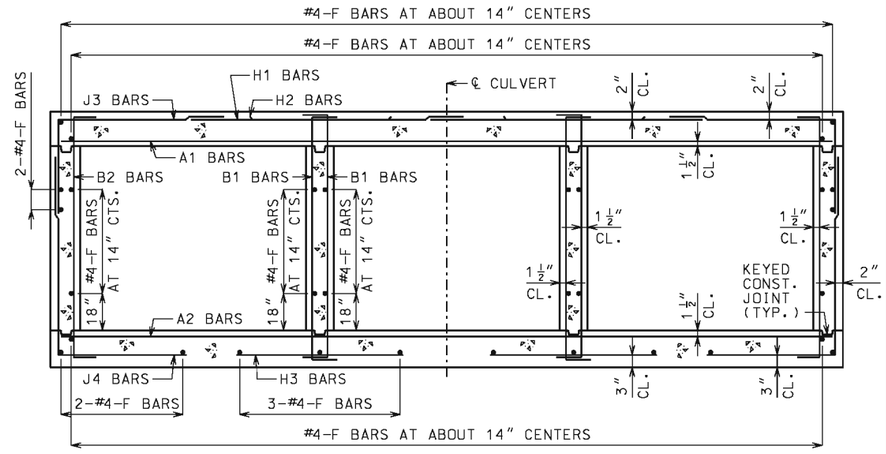

BARREL REINFORCEMENT

FOR DESIGN FILLS 2'-0" OR LESS

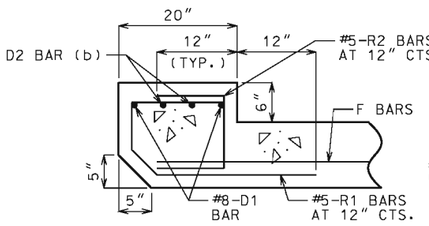

UPSTREAM HEADWALL REINFORCEMENT

NEAR INTERIOR WALL

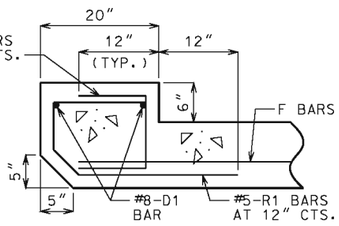

UPSTREAM HEADWALL REINFORCEMENT

NEAR MIDSPAN

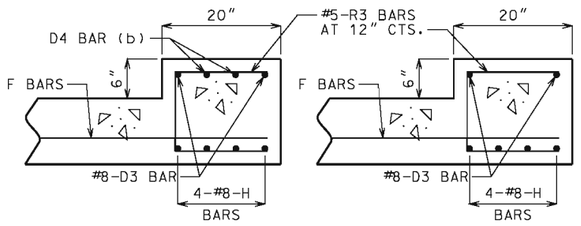

DOWNSTREAM HEADWALL REINFORCEMENT

NEAR INTERIOR WALL

DOWNSTREAM HEADWALL REINFORCEMENT

NEAR MIDSPAN

(b) NOT REQUIRED FOR CLEAR SPANS ≤ 10'-0"
#8 FOR CLEAR SPAN > 10'-0"
#9 FOR CLEAR SPAN > 13'-0"

IF D2 AND D4 BARS ARE REQUIRED, THE MINIMUM LENGTH EACH SIDE OF ℄ WALL SHALL BE THE GREATER OF 48 BAR DIAMETERS OR ¼ CLEAR SPAN. THE CLEAR SPAN IS PARALLEL TO LONG DIRECTION OF HEADWALL.

GENERAL NOTES:

FOR MEMBER THICKNESS AND FOR BAR SIZES, SPACING AND DIMENSIONS OF ALL REINFORCEMENT EXCEPT J5 BARS, SEE 703.87. FOR J5 BARS, SEE 703.37.

BARREL AND WINGS SECTIONS ARE SYMMETRICAL ABOUT AND NORMAL TO ℄ CULVERT. HEADWALL SECTIONS ARE NORMAL TO LONG DIRECTION OF HEADWALL.

DRAWING NOT TO SCALE. FOLLOW DIMENSIONS.

MINIMUM CLEARANCE TO REINFORCING STEEL SHALL BE 1½".

MISSOURI HIGHWAYS AND TRANSPORTATION COMMISSION
105 WEST CAPITOL
JEFFERSON CITY, MO 65102
1-888-ASK-MODOT (1-888-275-6636)

STATE OF MISSOURI
DENNIS W. HECKMAN
NUMBER PE-27141
PROFESSIONAL ENGINEER
THIS SHEET HAS BEEN SIGNED, SEALED AND DATED ELECTRONICALLY.

CONCRETE TRIPLE BOX CULVERT

SKEW: RIGHT ADVANCE
WINGS: FLARED

SECTIONS

DATE EFFECTIVE: 12/01/2011
DATE PREPARED: 5/13/2015

703.85C

SHEET NO. 3 OF 3

IF A SEAL IS PRESENT ON THIS SHEET IT HAS BEEN ELECTRONICALLY SEALED AND DATED.

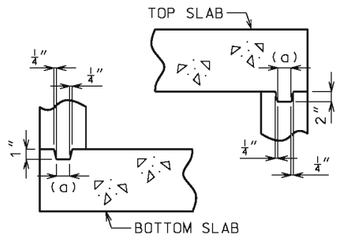

KEYED CONSTRUCTION JOINT

(a) APPROXIMATELY ONE-THIRD OF WALL THICKNESS

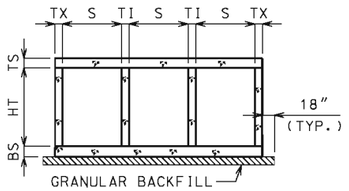

GRANULAR BACKFILL LIMITS AND MEMBER DIMENSIONS

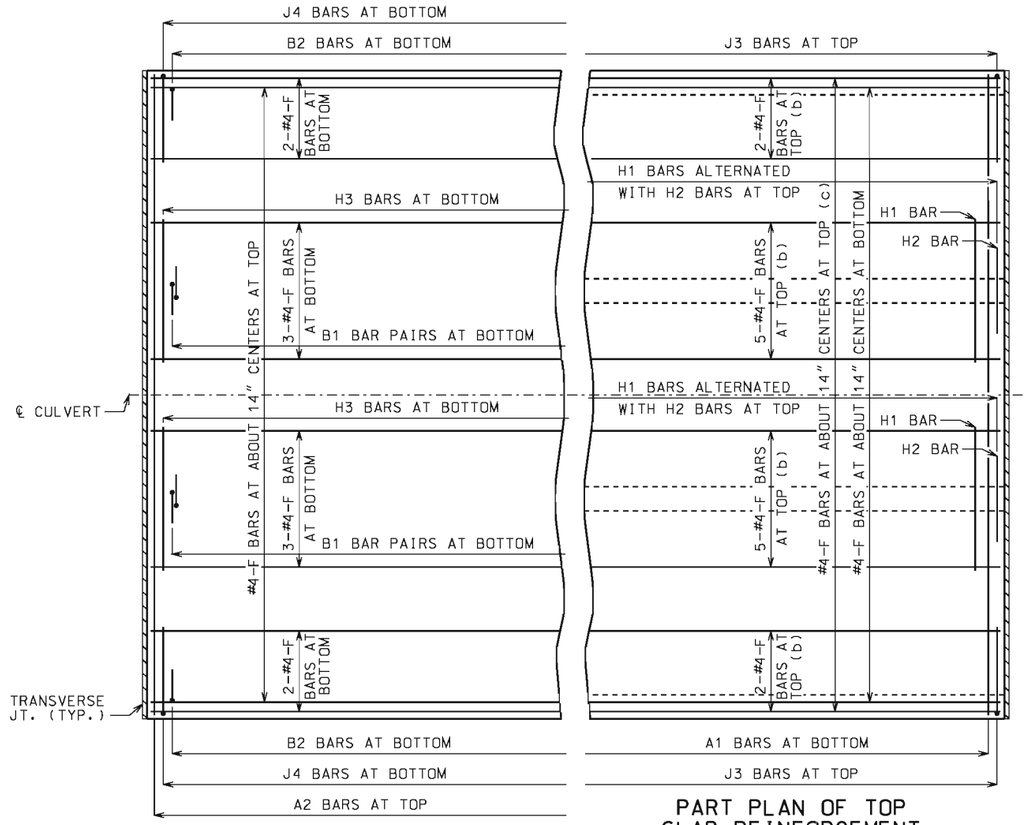

PART PLAN OF BOTTOM SLAB REINFORCEMENT

PART PLAN OF TOP SLAB REINFORCEMENT

(b) FOR DESIGN FILLS OVER 2'-0"
(c) FOR DESIGN FILLS 2'-0" OR LESS

PART ELEVATION OF EXTERIOR WALL REINFORCEMENT

PART SECTION NEAR INTERIOR WALL REINFORCEMENT

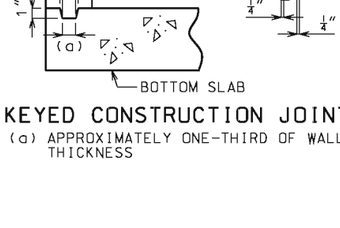

TRANSVERSE JOINT THRU BARREL

PREFORMED FIBER EXPANSION JOINT MATERIAL IN ACCORDANCE WITH SEC 1057 SHALL BE SECURELY STITCHED TO ONE FACE OF THE CONCRETE WITH 10 GAGE COPPER WIRE OR 12 GAGE SOFT DRAWN GALVANIZED STEEL WIRE.

FILTER CLOTH 3 FEET IN WIDTH AND DOUBLE THICKNESS SHALL BE CENTERED ON TRANSVERSE JOINTS IN TOP SLAB AND SIDEWALLS WITH EDGES SEALED WITH MASTIC OR TWO SIDED TAPE. FILTER CLOTH SHALL BE A SUBSURFACE DRAINAGE GEOTEXTILE IN ACCORDANCE WITH SEC 1011. COST OF FURNISHING AND INSTALLING FILTER CLOTH WILL BE CONSIDERED COMPLETELY COVERED BY THE CONTRACT UNIT PRICE FOR OTHER ITEMS.

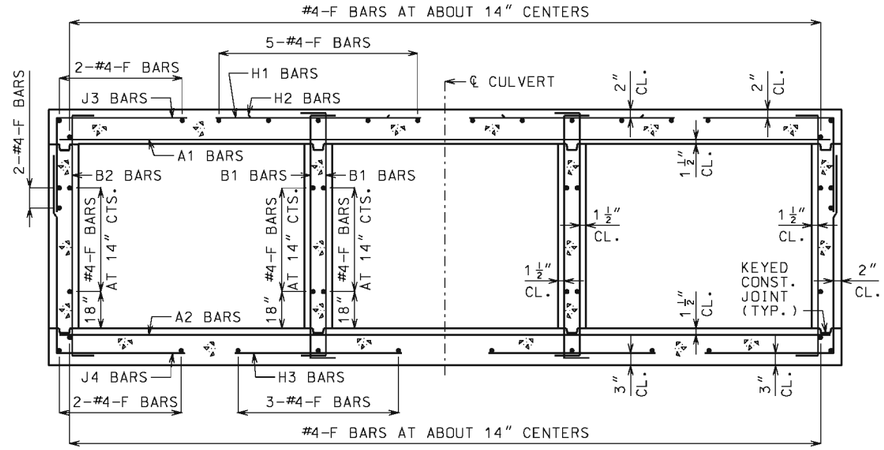

BARREL REINFORCEMENT

FOR DESIGN FILLS OVER 2'-0"
SYMMETRICAL ABOUT AND NORMAL TO ℄ CULVERT.

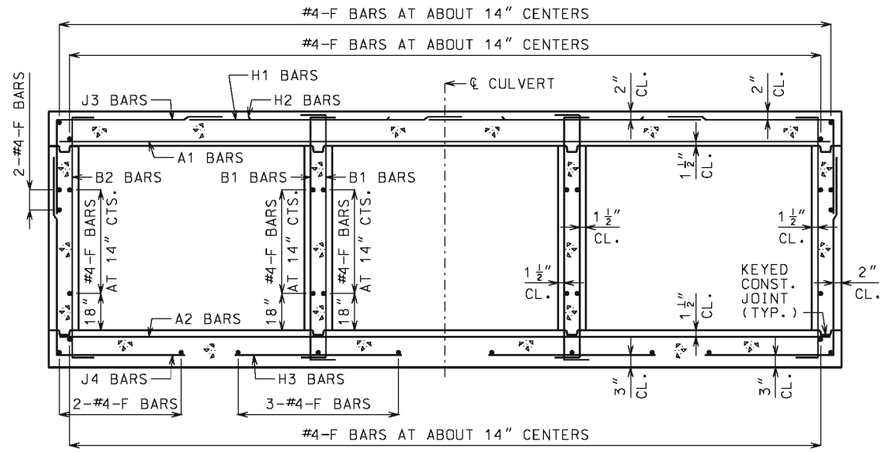

BARREL REINFORCEMENT

FOR DESIGN FILLS 2'-0" OR LESS
SYMMETRICAL ABOUT AND NORMAL TO ℄ CULVERT.

GENERAL NOTES

DESIGN SPECIFICATIONS:
2010 AASHTO LRFD BRIDGE DESIGN SPECFICATIONS AND 2010 INTERIM REVISIONS

DESIGN LOADING:
VEHICULAR = HL-93 MINUS LANE LOAD, EARTH = 120 LB/CF
EQUIVALENT FLUID PRESSURE = 30 LB/CF (MIN.), 60 LB/CF (MAX.)

DESIGN UNIT STRESSES:
CLASS B-1 CONCRETE (BOX CULVERT) f'c = 4,000 PSI
REINFORCING STEEL (GRADE 60) fy = 60,000 PSI

MISCELLANEOUS:
FOR MEMBER THICKNESS AND FOR BAR SIZES, SPACING AND DIMENSIONS, SEE 703.87.

CONSTRUCTION JOINT KEY NOT SHOWN FOR CLARITY IN PART PLANS, PART ELEVATION AND PART SECTION.

DRAWING NOT TO SCALE. FOLLOW DIMENSIONS.

MINIMUM CLEARANCE TO REINFORCING STEEL SHALL BE 1 1/2".

MISSOURI HIGHWAYS AND TRANSPORTATION COMMISSION
105 WEST CAPITOL
JEFFERSON CITY, MO 65102
1-888-ASK-MODOT (1-888-275-6636)

STATE OF MISSOURI
DENNIS W. HECKMAN
NUMBER PE-27141
PROFESSIONAL ENGINEER
THIS SHEET HAS BEEN SIGNED, SEALED AND DATED ELECTRONICALLY.

CONCRETE TRIPLE BOX CULVERT

CUT SECTION

DATE EFFECTIVE: 12/01/2011
DATE PREPARED: 5/13/2015

703.86

SHEET NO. 1 OF 1

IF A SEAL IS PRESENT ON THIS SHEET IT HAS BEEN ELECTRONICALLY SEALED AND DATED.

SPAN (S) = 3 FT HEIGHT (HT) = 2 FT OR 3 FT OR 4 FT

DESIGN FILL	MEMBER THICKNESS				TOP SLAB BARS														BOTTOM SLAB BARS												WALL BARS				
					A1 BARS		J3 BARS					H1 BARS				H2 BARS				A2 BARS		J4 BARS					H3 BARS				B1 BARS		B2 BARS		
										K2													K3										
	TS	BS	TX	TI	SIZE	SPA.	SIZE	SPA.	C1	HT=2'	HT=3'	HT=4'	SIZE	SPA.	C5	Q8	SIZE	SPA.	C6	Q9	SIZE	SPA.	SIZE	SPA.	C4	HT=2'	HT=3'	HT=4'	SIZE	SPA.	C7	Q10	SIZE	SPA.	SIZE	SPA.	G1
1 FT	10	8	8	8	4	8.5	4	10.5	26.8	26.0	26.0	26.0	4	24	39.5	30.5	4	24	20.0	20.0	4	12	4	12	36.0	28	40	52	4	12	25.0	25.0	5	12	5	12	12
2 FT	10	8	8	8	4	8.5	4	10.5	26.8	26.0	26.0	26.0	4	24	39.5	30.5	4	24	20.0	20.0	4	12	4	12	35.0	28	40	52	4	12	24.0	24.0	5	12	5	12	12
4 FT	8	8	8	8	4	12	4	12	26.8	24.0	24.0	24.0	4	24	39.5	34.0	4	24	19.0	19.0	4	12	4	12	31.1	28	40	52	4	12	23.0	24.0	5	12	5	12	12
6 FT	8	8	8	8	4	12	4	12	31.1	24.0	24.0	24.0	4	24	26.0	26.0	4	24	18.0	18.0	4	12	4	12	28.9	28	40	52	4	12	22.0	23.0	5	12	5	12	12
8 FT	8	8	8	8	4	12	4	12	28.5	24.0	24.0	24.0	4	24	24.0	24.0	4	24	18.0	18.0	4	12	4	12	27.3	28	40	52	4	12	22.0	23.0	5	12	5	12	0
10 FT	8	8	8	8	4	12	4	12	27.1	24.0	24.0	24.0	4	24	23.0	24.0	4	24	18.0	18.0	4	12	4	12	26.5	28	40	52	4	12	22.0	23.0	5	12	5	12	0
12 FT	8	8	8	8	4	12	4	12	25.0	24.0	24.0	24.0	4	24	21.0	23.0	4	24	18.0	18.0	4	12	4	12	24.5	28	40	52	4	12	22.0	23.0	5	12	5	12	0
14 FT	8	8	8	8	4	12	4	12	24.9	24.0	24.0	24.0	4	24	21.0	23.0	4	24	18.0	18.0	4	12	4	12	24.5	28	40	52	4	12	22.0	23.0	5	12	5	12	0
16 FT	8	8	8	8	4	12	4	12	24.8	24.0	24.0	24.0	4	24	21.0	22.0	4	24	18.0	18.0	4	12	4	12	24.4	28	40	52	4	11.5	22.0	23.0	5	12	5	12	0
18 FT	8	8	8	8	4	12	4	12	24.8	24.0	24.0	24.0	4	24	21.0	22.0	4	24	18.0	18.0	4	12	4	12	24.4	28	40	52	4	11	22.0	23.0	5	12	5	12	0
20 FT	8	8	8	8	4	12	4	12	24.6	24.0	24.0	24.0	4	24	21.0	22.0	4	24	18.0	18.0	4	12	4	12	24.3	28	40	52	4	10.5	22.0	23.0	5	12	5	12	0
22 FT	8	8	8	8	4	12	4	12	24.6	24.0	24.0	24.0	4	24	21.0	22.0	4	24	18.0	18.0	4	12	4	12	24.3	28	40	52	4	9.5	22.0	23.0	5	12	5	12	0
24 FT	8	8	8	8	4	12	4	12	24.5	24.0	24.0	24.0	4	24	21.0	22.0	4	24	18.0	18.0	4	11.5	4	12	24.3	28	40	52	4	9	22.0	23.0	5	12	5	12	0
26 FT	8	8	8	8	4	12	4	12	24.5	24.0	24.0	24.0	4	24	21.0	22.0	4	24	18.0	18.0	4	10.5	4	11	24.1	28	40	52	4	9	22.0	23.0	5	12	5	12	0
28 FT	8	8	8	8	4	12	4	11	24.5	24.0	24.0	24.0	4	24	21.0	22.0	4	24	18.0	18.0	4	10	4	10	24.1	28	40	52	4	8.5	22.0	23.0	5	12	5	12	0
30 FT	8	8	8	8	4	11	4	10.5	24.5	24.0	24.0	24.0	4	24	21.0	22.0	4	24	18.0	18.0	4	9	4	9.5	24.1	28	40	52	4	8	22.0	23.0	5	12	5	12	0
32 FT	8	9	8	8	4	10.5	4	9.5	24.5	24.0	24.0	24.0	4	23	21.0	22.0	4	23	18.0	18.0	4	9.5	4	12	24.5	29	41	53	4	9.5	21.0	23.0	5	12	5	12	0
34 FT	8	9	8	8	4	10	4	9	24.5	24.0	24.0	24.0	4	22	21.0	22.0	4	22	18.0	18.0	4	9	4	11	24.4	29	41	53	4	9	21.0	23.0	5	12	5	12	0
36 FT	8	9	8	8	4	9.5	4	8.5	24.5	24.0	24.0	24.0	4	21	21.0	22.0	4	21	18.0	18.0	4	8.5	4	10.5	24.4	29	41	53	4	8.5	21.0	23.0	5	12	5	12	0
38 FT	8	9	8	8	4	9	4	8	24.5	24.0	24.0	24.0	4	20	21.0	22.0	4	20	18.0	18.0	4	8	4	10	24.4	29	41	53	4	8.5	21.0	23.0	5	12	5	12	0
40 FT	8	10	8	8	4	8.5	4	7.5	24.5	24.0	24.0	24.0	4	19	21.0	22.0	4	19	18.0	18.0	4	8.5	4	12	24.8	30	42	54	4	9	21.0	23.0	5	12	5	12	0
42 FT	9	10	8	8	4	9	4	9	24.8	25.0	25.0	25.0	4	21	21.0	23.0	4	21	17.0	18.0	4	8	4	11.5	24.8	30	42	54	4	9	21.0	23.0	5	12	5	12	0
44 FT	9	10	8	8	4	8.5	4	8.5	24.8	25.0	25.0	25.0	4	20	21.0	23.0	4	20	17.0	18.0	4	8	4	11	24.8	30	42	54	4	9	21.0	23.0	5	12	5	12	0
46 FT	9	10	8	8	4	8	4	8	24.8	25.0	25.0	25.0	4	19	21.0	23.0	4	19	17.0	18.0	4	7.5	4	10.5	24.8	30	42	54	4	8.5	21.0	23.0	5	12	5	12	0
48 FT	9	11	8	8	4	8	4	7.5	24.9	25.0	25.0	25.0	4	19	21.0	22.0	4	19	18.0	18.0	4	8	4	10.5	25.0	31	43	55	4	9.5	21.0	23.0	5	12	5	12	0
50 FT	10	11	8	8	4	8	4	8	25.1	26.0	26.0	26.0	4	20	21.0	23.0	4	20	17.0	18.0	4	7.5	4	10.5	25.1	31	43	55	4	9	21.0	23.0	5	12	5	12	0

SPAN (S) = 3 FT HEIGHT (HT) = 5 FT OR 6 FT

DESIGN FILL	MEMBER THICKNESS				TOP SLAB BARS														BOTTOM SLAB BARS												WALL BARS				
					A1 BARS		J3 BARS					H1 BARS				H2 BARS				A2 BARS		J4 BARS					H3 BARS				B1 BARS		B2 BARS		
										K2													K3										
	TS	BS	TX	TI	SIZE	SPA.	SIZE	SPA.	C1	HT=5'	HT=6'		SIZE	SPA.	C5	Q8	SIZE	SPA.	C6	Q9	SIZE	SPA.	SIZE	SPA.	C4	HT=5'	HT=6'		SIZE	SPA.	C7	Q10	SIZE	SPA.	SIZE	SPA.	G1
1 FT	10	8	8	8	4	8.5	4	10.5	26.8	26.0	26.0		4	24	39.5	30.5	4	24	21.0	20.0	4	12	4	11.5	36.0	64	76		4	12	34.0	25.0	5	12	5	12	12
2 FT	10	8	8	8	4	8.5	4	10.5	26.8	26.0	26.0		4	24	39.5	30.5	4	24	20.0	20.0	4	12	4	11	36.0	64	76		4	12	34.0	24.0	5	12	5	12	12
4 FT	8	8	8	8	4	12	4	12	26.8	24.0	24.0		4	24	39.5	34.0	4	24	19.0	19.0	4	12	4	10	36.0	64	76		4	12	34.0	24.0	5	12	5	12	12
6 FT	8	8	8	8	4	12	4	12	26.8	24.0	24.0		4	24	39.5	26.0	4	24	18.0	19.0	4	12	4	9.5	36.0	64	76		4	12	34.0	23.0	5	12	5	12	12
8 FT	8	8	8	8	4	12	4	12	26.8	24.0	24.0		4	24	39.5	24.0	4	24	18.0	18.0	4	12	4	9	36.0	64	76		4	12	24.0	23.0	5	12	5	12	0
10 FT	8	8	8	8	4	12	4	12	26.8	24.0	24.0		4	24	39.5	23.0	4	24	18.0	18.0	4	12	4	8.5	36.0	64	76		4	12	23.0	23.0	5	12	5	12	0
12 FT	8	8	8	8	4	12	4	12	34.9	24.0	24.0		4	24	22.0	22.0	4	24	17.0	18.0	4	12	4	9	34.4	64	76		4	12	22.0	23.0	5	12	5	12	0
14 FT	8	8	8	8	4	12	4	11	34.5	24.0	24.0		4	24	22.0	22.0	4	24	17.0	18.0	4	12	4	8.5	34.1	64	76		4	12	22.0	23.0	5	12	5	12	0
16 FT	8	8	8	8	4	12	4	10	34.3	24.0	24.0		4	24	22.0	22.0	4	24	17.0	18.0	4	12	4	8	33.9	64	76		4	12	22.0	23.0	5	12	5	12	0
18 FT	8	8	8	8	4	12	4	9	34.0	24.0	24.0		4	24	22.0	22.0	4	24	17.0	18.0	4	12	4	7.5	33.8	64	76		4	12	22.0	23.0	5	12	5	12	0
20 FT	8	8	8	8	4	12	4	8	33.8	24.0	24.0		4	24	22.0	22.0	4	24	17.0	18.0	4	12	4	7	33.6	64	76		4	11.5	22.0	23.0	5	12	5	12	0
22 FT	8	8	8	8	4	12	4	7.5	33.6	24.0	24.0		4	24	22.0	22.0	4	24	17.0	18.0	4	12	4	6.5	33.5	64	76		4	10.5	22.0	23.0	5	12	5	12	0
24 FT	8	8	8	8	4	12	4	7	33.5	24.0	24.0		4	24	22.0	22.0	4	24	17.0	18.0	4	11.5	4	6	33.4	64	76		4	10.5	22.0	23.0	5	12	5	12	0
26 FT	8	8	8	8	4	12	4	6.5	33.4	24.0	24.0		4	24	21.0	22.0	4	24	17.0	18.0	4	10.5	5	6.5	33.3	64	76		4	10	22.0	22.0	5	12	5	12	0
28 FT	8	8	8	8	4	12	4	6	33.3	24.0	24.0		4	24	21.0	22.0	4	24	17.0	18.0	4	10	5	6	33.1	64	76		4	9.5	22.0	22.0	5	12	5	12	0
30 FT	8	8	9	8	4	11.5	4	6.5	32.3	24.0	24.0		4	24	21.0	22.0	4	24	17.0	18.0	4	9.5	4	6	32.1	64	76		4	9	22.0	23.0	5	12	5	12	0
32 FT	8	9	9	8	4	11	4	6.5	32.1	24.0	24.0		4	24	21.0	22.0	4	24	17.0	18.0	4	10	4	6.5	34.1	65	77		4	10.5	22.0	23.0	5	12	5	12	0
34 FT	8	9	9	8	4	10	4	6	32.0	24.0	24.0		4	23	21.0	22.0	4	23	17.0	18.0	4	9.5	4	6	34.0	65	77		4	10	22.0	23.0	5	12	5	11.5	0
36 FT	8	9	9	8	4	9.5	5	7	32.0	24.0	24.0		4	22	21.0	22.0	4	22	17.0	18.0	4	9	4	6	34.0	65	77		4	10	22.0	23.0	5	12	5	11	0
38 FT	8	9	9	8	4	9	5	6.5	32.0	24.0	28.0		4	21	21.0	22.0	4	21	17.0	18.0	4	8.5	5	7	34.0	65	77		4	9.5	22.0	23.0	5	12	5	10	0
40 FT	8	10	9	8	4	8.5	5	6	31.9	24.0	24.0		4	20	21.0	22.0	4	20	17.0	18.0	4	9	4	6	35.5	66	78		4	10.5	23.0	23.0	5	12	5	10	0
42 FT	9	10	9	8	4	9.5	5	6.5	33.4	25.0	29.0		4	22	21.0	22.0	4	22	17.0	18.0	4	9	5	7	35.3	66	78		4	10	23.0	23.0	5	12	5	9.5	0
44 FT	9	10	9	8	4	9	5	6.5	33.3	25.0	29.0		4	21	21.0	22.0	4	21	17.0	18.0	4	8.5	5	6.5	35.3	66	78		4	10	23.0	23.0	5	12	5	9	0
46 FT	9	10	9	8	4	8.5	5	6	33.3	25.0	29.0		4	21	21.0	22.0	4	21	17.0	18.0	4	8	5	6.5	35.1	66	78		4	9.5	23.0	23.0	5	12	5	8.5	0
48 FT	9	11	9	8	4	8	5	6	33.1	25.0	29.0		4	20	21.0	22.0	4	20	17.0	18.0	4	8.5	5	6.5	36.4	67	79		4	10	23.0	23.0	5	12	5	8.5	0
50 FT	9	11	9	8	4	7.5	5	6	33.1	25.0	29.0		4	19	21.0	22.0	4	19	17.0	18.0	4	8.5	5	6.5	36.4	67	79		4	10	23.0	23.0	5	12	5	8.5	0

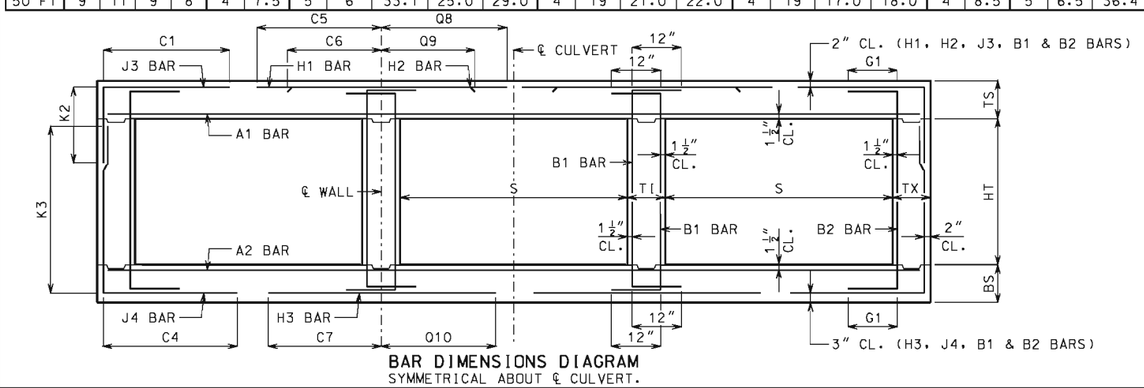

BAR DIMENSIONS DIAGRAM
SYMMETRICAL ABOUT ℄ CULVERT.

IF A SEAL IS PRESENT ON THIS SHEET IT HAS BEEN ELECTRONICALLY SEALED AND DATED.

GENERAL NOTES:

IF DESIGN FILL IS BETWEEN TABULATED DESIGN FILLS, USE THE NEXT GREATER TABULATED DESIGN FILL, EXCEPT FOR DESIGN FILLS BETWEEN 2 FEET AND 4 FEET. FOR DESIGN FILLS BETWEEN 2 FEET AND 4 FEET USE THE GREATER MEMBER THICKNESS, AREA OF REINFORCEMENT AND BAR DIMENSIONS FROM THE 2 FEET AND 4 FEET TABULATED DESIGN FILLS. AREA OF REINFORCEMENT EQUALS BAR AREA PER FOOT SPACING.

SPECIAL DESIGNS ARE REQUIRED WHEN THE DESIGN FILL IS LESS THAN 1 FOOT OR GREATER THAN 50 FEET.

DIMENSIONS ARE IN INCHES UNLESS OTHERWISE SPECIFIED.

DESIGN FILLS ARE MEASURED FROM THE TOP OF TOP SLAB TO THE TOP OF EARTH FILL OR ROADWAY.

CULVERTS MEET STRENGTH AND SERVICEABILITY REQUIREMENTS FOR THE DESIGN VEHICULAR LIVE LOAD HL-93 MINUS THE LANE LOAD.

MISSOURI HIGHWAYS AND TRANSPORTATION COMMISSION
105 WEST CAPITOL
JEFFERSON CITY, MO 65102
1-888-ASK-MODOT (1-888-275-6636)

STATE OF MISSOURI
DENNIS W. HECKMAN
NUMBER PE-27141
PROFESSIONAL ENGINEER
THIS SHEET HAS BEEN SIGNED, SEALED AND DATED ELECTRONICALLY.

CONCRETE TRIPLE BOX CULVERT

MEMBER THICKNESS BAR SIZE, SPACING & DIMENSIONS

SPAN (S): 3 FEET
HEIGHT (HT): 2 THRU 6 FEET

DATE EFFECTIVE: 12/01/2011
DATE PREPARED: 9/29/2011

703.87

SPAN (S) = 4 FT HEIGHT (HT) = 2 FT OR 3 FT

DESIGN FILL	MEMBER THICKNESS				TOP SLAB BARS														BOTTOM SLAB BARS										WALL BARS				
					A1 BARS		J3 BARS					H1 BARS				H2 BARS				A2 BARS		J4 BARS				H3 BARS				B1 BARS		B2 BARS		
										K2													K3									
	TS	BS	TX	TI	SIZE	SPA.	SIZE	SPA.	C1	HT=2′	HT=3′	SIZE	SPA.	C5	Q8	SIZE	SPA.	C6	Q9	SIZE	SPA.	SIZE	SPA.	C4	HT=2′	HT=3′	SIZE	SPA.	C7	Q10	SIZE	SPA.	SIZE	SPA.	G1
1 FT	10	8	8	8	4	7	4	10.5	30.3	26.0	26.0	4	24	47.5	36.5	4	24	21.0	20.0	4	12	4	12	29.4	28	40	4	12	27.0	28.0	5	12	5	12	12
2 FT	10	8	8	8	4	7	4	10.5	30.3	26.0	26.0	4	24	47.5	36.5	4	24	21.0	20.0	4	12	4	12	27.3	28	40	4	11.5	27.0	27.0	5	12	5	12	12
4 FT	8	8	8	8	4	12	4	12	28.6	24.0	24.0	4	24	33.0	36.0	4	24	20.0	20.0	4	12	4	12	25.0	28	40	4	11.5	26.0	27.0	5	12	5	12	12
6 FT	8	8	8	8	4	12	4	12	26.0	24.0	24.0	4	24	28.0	29.0	4	24	19.0	19.0	4	12	4	12	24.1	28	40	4	10.5	25.0	26.0	5	12	5	12	12
8 FT	8	8	8	8	4	12	4	12	24.8	24.0	24.0	4	24	26.0	28.0	4	24	19.0	19.0	4	12	4	12	23.5	28	40	4	10	25.0	26.0	5	12	5	12	0
10 FT	8	8	8	8	4	12	4	12	24.1	24.0	24.0	4	24	26.0	27.0	4	24	19.0	19.0	4	12	4	12	23.1	28	40	4	9	25.0	26.0	5	12	5	12	0
12 FT	8	8	8	8	4	12	4	12	23.6	24.0	24.0	4	23	25.0	26.0	4	23	18.0	19.0	4	12	4	12	22.9	28	40	4	8	25.0	26.0	5	12	5	12	0
14 FT	8	8	8	8	4	12	4	12	23.4	24.0	24.0	4	22	25.0	26.0	4	22	18.0	18.0	4	11	4	12	22.6	28	40	4	7.5	24.0	26.0	5	12	5	12	0
16 FT	8	8	8	8	4	12	4	12	22.5	24.0	24.0	4	21	24.0	25.0	4	21	18.0	18.0	4	10.5	4	12	22.1	28	40	4	7.5	24.0	25.0	5	12	5	12	0
18 FT	8	8	8	8	4	11.5	4	12	22.5	24.0	24.0	4	20	24.0	25.0	4	20	18.0	18.0	4	9.5	4	10.5	22.1	28	40	4	7	24.0	25.0	5	12	5	12	0
20 FT	8	8	8	8	4	10.5	4	11	22.4	24.0	24.0	4	18	24.0	25.0	4	18	18.0	18.0	4	8.5	4	9.5	22.1	28	40	4	6.5	24.0	25.0	5	12	5	12	0
22 FT	8	8	8	8	4	9.5	4	10	22.4	24.0	24.0	4	17	24.0	25.0	4	17	18.0	18.0	4	7.5	4	9	22.0	28	40	4	6	24.0	25.0	5	12	5	12	0
24 FT	8	9	8	8	4	8.5	4	9	22.6	24.0	24.0	4	15	24.0	25.0	4	15	18.0	18.0	4	8	4	11.5	21.4	29	41	4	7	24.0	26.0	5	12	5	12	0
26 FT	8	9	8	8	4	8	4	8.5	22.5	24.0	24.0	4	14	24.0	25.0	4	14	18.0	18.0	4	7	4	11	21.4	29	41	4	6.5	24.0	26.0	5	12	5	12	0
28 FT	8	10	8	8	4	7.5	4	8	22.8	24.0	24.0	4	13	24.0	25.0	4	13	18.0	18.0	4	7.5	4	12	20.9	30	42	4	7	24.0	26.0	5	12	5	12	0
30 FT	9	10	8	8	4	7.5	4	10	22.1	25.0	25.0	4	15	24.0	26.0	4	15	18.0	18.0	4	7	4	12	21.0	30	42	4	7	24.0	26.0	5	12	5	12	0
32 FT	9	10	8	8	4	7	4	9.5	22.1	25.0	25.0	4	14	24.0	26.0	4	14	18.0	18.0	4	6	4	12	21.0	30	42	4	6	24.0	26.0	5	12	5	12	0
34 FT	9	11	8	8	4	6.5	4	9	22.3	25.0	25.0	4	13	24.0	26.0	4	13	18.0	18.0	4	6.5	4	10.5	20.6	31	43	4	7	24.0	26.0	5	12	5	12	0
36 FT	10	11	8	8	4	7	4	10	21.9	26.0	26.0	4	14	24.0	26.0	4	14	18.0	19.0	4	6.5	4	10.5	20.9	31	43	4	7	24.0	26.0	5	12	5	12	0
38 FT	10	12	8	8	4	6.5	4	9.5	22.0	26.0	26.0	4	13	24.0	26.0	4	13	18.0	19.0	4	6.5	4	9.5	20.5	32	44	4	7.5	24.0	27.0	5	12	5	12	0
40 FT	10	12	8	8	4	6	4	9	22.0	26.0	26.0	4	13	24.0	26.0	4	13	18.0	19.0	4	6.5	4	9.5	20.5	32	44	4	7	24.0	27.0	5	12	5	12	0
42 FT	11	12	8	8	4	6.5	4	9.5	21.6	27.0	27.0	4	14	23.0	26.0	4	14	18.0	19.0	4	6	4	9.5	20.8	32	44	4	6.5	24.0	26.0	5	12	5	12	0
44 FT	11	12	8	8	4	6	4	9.5	21.6	27.0	27.0	4	13	23.0	26.0	4	13	18.0	19.0	4	6	4	9.5	20.8	32	44	4	6	24.0	26.0	5	12	5	12	0
46 FT	11	13	8	8	4	6	4	8.5	21.8	27.0	27.0	4	12	23.0	26.0	4	12	18.0	19.0	4	6	4	8.5	20.5	33	45	4	6.5	23.0	27.0	5	12	5	12	0
48 FT	12	13	8	8	4	6	4	8.5	21.5	28.0	28.0	4	13	23.0	26.0	4	13	18.0	19.0	4	6	4	8.5	20.8	33	45	4	6.5	24.0	27.0	5	12	5	12	0
50 FT	12	13	8	8	5	9	4	8.5	21.5	28.0	28.0	4	13	23.0	26.0	4	13	18.0	19.0	5	8.5	4	8.5	20.8	33	45	4	6	24.0	27.0	5	12	5	12	0

SPAN (S) = 4 FT HEIGHT (HT) = 4 FT OR 5 FT

DESIGN FILL	MEMBER THICKNESS				TOP SLAB BARS														BOTTOM SLAB BARS										WALL BARS				
					A1 BARS		J3 BARS					H1 BARS				H2 BARS				A2 BARS		J4 BARS				H3 BARS				B1 BARS		B2 BARS		
										K2													K3									
	TS	BS	TX	TI	SIZE	SPA.	SIZE	SPA.	C1	HT=4′	HT=5′	SIZE	SPA.	C5	Q8	SIZE	SPA.	C6	Q9	SIZE	SPA.	SIZE	SPA.	C4	HT=4′	HT=5′	SIZE	SPA.	C7	Q10	SIZE	SPA.	SIZE	SPA.	G1
1 FT	10	8	8	8	4	7	4	10.5	30.3	26.0	26.0	4	24	47.5	36.5	4	24	21.0	21.0	4	12	4	12	42.0	52	64	4	12	28.0	28.0	5	12	5	12	12
2 FT	10	8	8	8	4	7	4	10.5	30.3	26.0	26.0	4	24	47.5	36.5	4	24	21.0	21.0	4	12	4	12	39.1	52	64	4	11	27.0	28.0	5	12	5	12	12
4 FT	8	8	8	8	4	12	4	12	30.3	24.0	24.0	4	24	47.5	37.0	4	24	20.0	20.0	4	12	4	12	34.8	52	64	4	11	26.0	27.0	5	12	5	12	12
6 FT	8	8	8	8	4	12	4	12	34.6	24.0	24.0	4	24	29.0	30.0	4	24	19.0	19.0	4	12	4	11.5	32.1	52	64	4	10.5	25.0	26.0	5	12	5	12	12
8 FT	8	8	8	8	4	12	4	12	31.4	24.0	24.0	4	24	27.0	28.0	4	24	19.0	19.0	4	12	4	11	30.3	52	64	4	9.5	25.0	26.0	5	12	5	12	0
10 FT	8	8	8	8	4	12	4	12	29.9	24.0	24.0	4	24	26.0	27.0	4	24	19.0	19.0	4	12	4	10.5	29.3	52	64	4	9	25.0	26.0	5	12	5	12	0
12 FT	8	8	8	8	4	12	4	12	29.1	24.0	24.0	4	24	25.0	27.0	4	24	18.0	19.0	4	11.5	4	10	28.5	52	64	4	8.5	24.0	26.0	5	12	5	12	0
14 FT	8	8	8	8	4	12	4	11	28.5	24.0	24.0	4	23	25.0	26.0	4	23	18.0	19.0	4	10.5	4	9.5	28.1	52	64	4	7.5	24.0	26.0	5	12	5	12	0
16 FT	8	8	8	8	4	12	4	11	26.9	24.0	24.0	4	22	24.0	26.0	4	22	18.0	19.0	4	10	4	9.5	26.6	52	64	4	7.5	24.0	26.0	5	12	5	12	0
18 FT	8	8	8	8	4	11	4	10	26.8	24.0	24.0	4	21	24.0	26.0	4	21	18.0	19.0	4	9	4	8.5	26.5	52	64	4	7	24.0	26.0	5	12	5	12	0
20 FT	8	8	8	8	4	10	4	9	26.8	24.0	24.0	4	19	24.0	26.0	4	19	18.0	19.0	4	8	4	8	26.4	52	64	4	6.5	24.0	26.0	5	12	5	12	0
22 FT	8	8	8	8	4	9	4	8	26.6	24.0	24.0	4	17	24.0	26.0	4	17	18.0	18.0	4	7	4	7	26.4	52	64	4	6	24.0	26.0	5	12	5	12	0
24 FT	8	9	8	8	4	8.5	4	7.5	26.6	24.0	24.0	4	16	24.0	25.0	4	16	18.0	18.0	4	7.5	4	8.5	26.6	53	65	4	7	24.0	26.0	5	12	5	12	0
26 FT	8	9	8	8	4	8	4	7	26.6	24.0	24.0	4	14	24.0	25.0	4	14	18.0	18.0	4	7	4	8	26.5	53	65	4	6.5	24.0	26.0	5	12	5	12	0
28 FT	8	10	8	8	4	7.5	4	6	26.6	24.0	24.0	4	13	24.0	25.0	4	13	18.0	18.0	4	7.5	4	9.5	26.8	54	66	4	7.5	24.0	26.0	5	12	5	12	0
30 FT	9	10	8	8	4	7.5	4	7.5	26.9	25.0	25.0	4	15	24.0	26.0	4	15	18.0	19.0	4	7	4	9	26.9	54	66	4	7	24.0	26.0	5	12	5	12	0
32 FT	9	10	8	8	4	7	4	7	26.9	25.0	25.0	4	14	24.0	26.0	4	14	18.0	19.0	4	6	4	8	26.8	54	66	4	6	24.0	26.0	5	12	5	12	0
34 FT	9	11	8	8	4	6.5	4	6.5	26.9	25.0	25.0	4	13	24.0	26.0	4	13	18.0	18.0	4	6.5	4	8.5	27.0	55	67	4	7	24.0	26.0	5	12	5	12	0
36 FT	10	11	8	8	4	7	4	6.5	27.1	26.0	26.0	4	14	23.0	26.0	4	14	18.0	19.0	4	6.5	4	8	27.1	55	67	4	7	24.0	26.0	5	12	5	12	0
38 FT	10	12	8	8	4	6.5	4	6	27.3	26.0	26.0	4	14	23.0	26.0	4	14	18.0	19.0	4	6.5	4	8	27.4	56	68	4	7.5	24.0	26.0	5	12	5	12	0
40 FT	10	12	8	8	4	6	5	8	27.1	26.0	26.0	4	13	23.0	26.0	4	13	18.0	19.0	4	6.5	4	7.5	27.4	56	68	4	7	24.0	26.0	5	12	5	12	0
42 FT	11	12	8	8	4	6.5	5	9	27.4	27.0	27.0	4	14	23.0	26.0	4	14	18.0	19.0	4	6	4	7	27.4	56	68	4	6.5	24.0	26.0	5	12	5	12	0
44 FT	11	12	8	8	4	6	5	8.5	27.4	27.0	27.0	4	13	23.0	26.0	4	13	18.0	19.0	4	6	4	6.5	27.4	56	68	4	6.5	24.0	26.0	5	12	5	12	0
46 FT	11	13	8	8	4	6	5	8.5	27.5	27.0	27.0	4	13	23.0	26.0	4	13	18.0	19.0	4	6	4	7	27.6	57	69	4	6.5	24.0	26.0	5	12	5	12	0
48 FT	12	13	8	8	4	6	5	8.5	27.6	28.0	28.0	4	14	23.0	25.0	4	14	18.0	18.0	4	6	4	6.5	27.8	57	69	4	6.5	24.0	26.0	5	12	5	11.5	0
50 FT	12	13	8	8	4	6	5	8.5	27.6	28.0	28.0	4	13	23.0	25.0	4	13	18.0	18.0	5	9	4	6	27.8	57	69	4	6	24.0	26.0	5	12	5	11	0

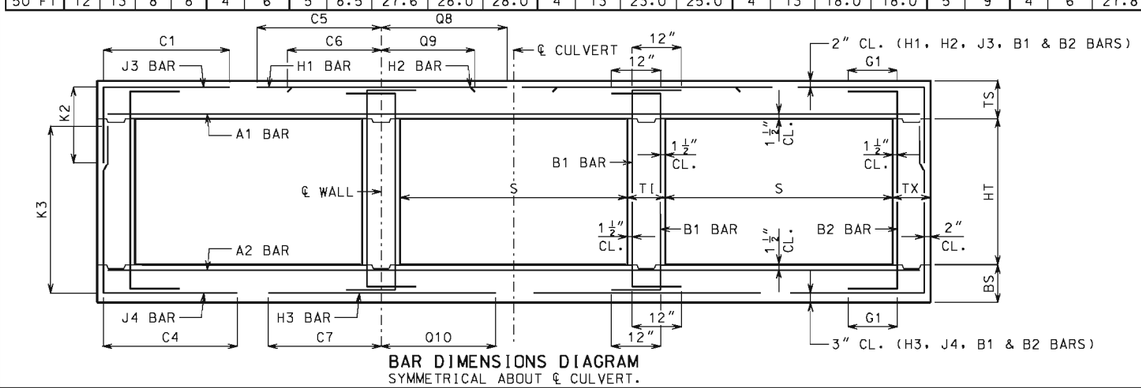

BAR DIMENSIONS DIAGRAM
SYMMETRICAL ABOUT ℄ CULVERT.

GENERAL NOTES:

IF DESIGN FILL IS BETWEEN TABULATED DESIGN FILLS, USE THE NEXT GREATER TABULATED DESIGN FILL, EXCEPT FOR DESIGN FILLS BETWEEN 2 FEET AND 4 FEET. FOR DESIGN FILLS BETWEEN 2 FEET AND 4 FEET USE THE GREATER MEMBER THICKNESS. AREA OF REINFORCEMENT AND BAR DIMENSIONS FROM THE 2 FEET AND 4 FEET TABULATED DESIGN FILLS. AREA OF REINFORCEMENT EQUALS BAR AREA PER FOOT SPACING.

SPECIAL DESIGNS ARE REQUIRED WHEN THE DESIGN FILL IS LESS THAN 1 FOOT OR GREATER THAN 50 FEET.

DIMENSIONS ARE IN INCHES UNLESS OTHERWISE SPECIFIED.

DESIGN FILLS ARE MEASURED FROM THE TOP OF TOP SLAB TO THE TOP OF EARTH FILL OR ROADWAY.

CULVERTS MEET STRENGTH AND SERVICEABILITY REQUIREMENTS FOR THE DESIGN VEHICULAR LIVE LOAD HL-93 MINUS THE LANE LOAD.

MISSOURI HIGHWAYS AND TRANSPORTATION COMMISSION
105 WEST CAPITOL
JEFFERSON CITY, MO 65102
1-888-ASK-MODOT (1-888-275-6636)

STATE OF MISSOURI
DENNIS W. HECKMAN
NUMBER PE-27141
PROFESSIONAL ENGINEER
THIS SHEET HAS BEEN SIGNED, SEALED AND DATED ELECTRONICALLY.

CONCRETE TRIPLE BOX CULVERT

MEMBER THICKNESS BAR SIZE, SPACING & DIMENSIONS

SPAN (S): 4 FEET
HEIGHT (HT): 2 THRU 5 FEET

DATE EFFECTIVE: 12/01/2011
DATE PREPARED: 9/29/2011

703.87

SHEET NO. 2 OF 27

IF A SEAL IS PRESENT ON THIS SHEET IT HAS BEEN ELECTRONICALLY SEALED AND DATED.

SPAN (S) = 4 FT HEIGHT (HT) = 6 FT OR 7 FT

DESIGN FILL	MEMBER THICKNESS				TOP SLAB BARS														BOTTOM SLAB BARS										WALL BARS				
					A1 BARS		J3 BARS			K2		H1 BARS				H2 BARS				A2 BARS		J4 BARS			K3		H3 BARS				B1 BARS		B2 BARS	
	TS	BS	TX	TI	SIZE	SPA.	SIZE	SPA.	C1	HT=6′	HT=7′	SIZE	SPA.	C5	Q8	SIZE	SPA.	C6	Q9	SIZE	SPA.	SIZE	SPA.	C4	HT=6′	HT=7′	SIZE	SPA.	C7	Q10	SIZE	SPA.	SIZE	SPA.	G1
1 FT	10	8	8	8	4	6.5	4	10.5	30.3	26.0	26.0	4	24	47.5	36.5	4	24	22.0	21.0	4	12	4	9	42.0	76	88	4	11.5	40.0	28.0	5	12	5	12	12
2 FT	10	8	8	8	4	6.5	4	10.5	30.3	26.0	26.0	4	24	47.5	36.5	4	24	21.0	21.0	4	12	4	8.5	42.0	76	88	4	11	40.0	28.0	5	12	5	12	12
4 FT	8	8	8	8	4	12	4	10	30.3	24.0	24.0	4	24	47.5	37.0	4	24	20.0	20.0	4	12	4	7.5	42.0	76	88	4	11	29.0	27.0	5	12	5	12	12
6 FT	8	8	8	8	4	12	4	10	30.3	24.0	24.0	4	24	47.5	29.0	4	24	19.0	19.0	4	12	4	7	42.0	76	88	4	10	27.0	26.0	5	12	5	12	12
8 FT	8	8	8	8	4	12	4	9	30.3	24.0	24.0	4	24	47.5	28.0	4	24	19.0	19.0	4	12	4	6.5	42.0	76	88	4	9.5	26.0	26.0	5	12	5	12	0
10 FT	8	8	8	8	4	12	4	8	43.1	24.0	24.0	4	24	28.0	27.0	4	24	18.0	19.0	4	12	4	6.5	40.6	76	88	4	9	25.0	26.0	5	12	5	12	0
12 FT	8	8	8	8	4	12	4	7.5	40.5	24.0	24.0	4	24	27.0	26.0	4	24	18.0	19.0	4	11.5	4	6	39.1	76	88	4	8.5	25.0	26.0	5	12	5	12	0
14 FT	8	8	8	8	4	12	4	6.5	39.3	24.0	24.0	4	23	26.0	26.0	4	23	18.0	19.0	4	10.5	5	6.5	38.4	76	88	4	8	25.0	26.0	5	12	5	12	0
16 FT	8	8	8	8	4	12	4	6.5	35.5	24.0	24.0	4	23	24.0	25.0	4	23	18.0	19.0	4	10	5	6.5	35.4	76	88	4	7.5	24.0	26.0	5	12	5	12	0
18 FT	8	8	8	8	4	11.5	4	6	35.3	24.0	24.0	4	21	24.0	25.0	4	21	18.0	18.0	4	9	5	6	35.1	76	88	4	7	24.0	26.0	5	12	5	12	0
20 FT	8	8	8	8	4	10	5	6.5	35.0	24.0	28.0	4	19	24.0	25.0	4	19	18.0	18.0	4	8	6	6.5	38.0	76	88	4	6.5	24.0	26.0	5	12	5	12	0
22 FT	8	9	8	8	4	9.5	5	6	34.6	24.0	28.0	4	18	24.0	25.0	4	18	18.0	18.0	4	8.5	5	6	36.1	77	89	4	8	25.0	26.0	5	12	5	11.5	0
24 FT	8	9	9	8	4	8.5	5	6.5	34.1	24.0	28.0	4	16	24.0	25.0	4	16	18.0	18.0	4	8	5	7	35.6	77	89	4	7.5	25.0	26.0	5	12	5	11.5	0
26 FT	8	9	9	8	4	8	5	6	34.0	24.0	28.0	4	15	24.0	25.0	4	15	18.0	18.0	4	7.5	5	6.5	35.5	77	89	4	7	25.0	26.0	5	12	5	11	0
28 FT	8	10	9	8	4	7.5	6	7.5	36.8	24.0	28.0	4	14	24.0	25.0	4	14	18.0	18.0	4	7.5	5	7	36.6	78	90	4	7.5	25.0	26.0	5	12	5	10.5	0
30 FT	9	10	9	8	4	8	5	6	35.0	25.0	29.0	4	15	24.0	25.0	4	15	18.0	18.0	4	7	5	6.5	36.4	78	90	4	7	25.0	26.0	5	12	5	10	0
32 FT	9	10	9	8	4	7.5	5	6	35.0	25.0	29.0	4	14	24.0	25.0	4	14	18.0	18.0	4	6.5	5	6	36.3	78	90	4	6.5	25.0	26.0	5	12	5	9.5	0
34 FT	9	11	9	8	4	7	5	6	34.9	25.0	29.0	4	13	24.0	25.0	4	13	18.0	18.0	4	7	5	6.5	37.4	79	91	4	7	25.0	26.0	5	12	5	9	0
36 FT	10	11	9	8	4	7	5	6.5	35.9	26.0	30.0	4	15	24.0	25.0	4	15	18.0	18.0	4	7	5	6	37.0	79	91	4	7	25.0	26.0	5	12	5	8.5	0
38 FT	10	11	9	8	4	7	5	6	35.8	26.0	30.0	4	14	24.0	25.0	4	14	18.0	18.0	4	6.5	6	7.5	40.0	79	91	4	6.5	25.0	26.0	5	12	5	8.5	0
40 FT	10	12	9	8	4	6.5	5	6	35.6	26.0	30.0	4	13	24.0	25.0	4	13	18.0	18.0	4	6.5	5	6	38.3	80	92	4	7	25.0	26.0	5	12	5	8.5	0
42 FT	10	12	9	8	4	6	5	6	35.6	30.0	30.0	4	12	24.0	25.0	4	12	18.0	18.0	4	6.5	6	7.5	41.1	80	92	4	6.5	25.0	26.0	5	12	5	8.5	0
44 FT	11	12	9	8	4	6.5	6	7.5	39.5	31.0	35.0	4	14	24.0	25.0	4	14	18.0	18.0	4	6	6	7	40.9	80	92	4	6.5	25.0	26.0	5	12	5	8.5	0
46 FT	11	13	9	8	4	6	6	6.5	39.4	31.0	35.0	4	13	24.0	25.0	4	13	18.0	18.0	4	6.5	6	7.5	42.0	81	93	4	6.5	26.0	26.0	5	12	5	8.5	0
48 FT	11	13	10	8	4	6	5	6	36.3	27.0	31.0	4	13	23.0	25.0	4	13	18.0	18.0	4	6	5	6.5	38.4	81	93	4	6.5	25.0	26.0	5	12	5	8	0
50 FT	12	13	11	8	4	6	5	7	37.0	28.0	32.0	4	14	23.0	25.0	4	14	18.0	18.0	4	6	5	7.5	37.9	81	93	4	6	25.0	26.0	5	12	5	7.5	0

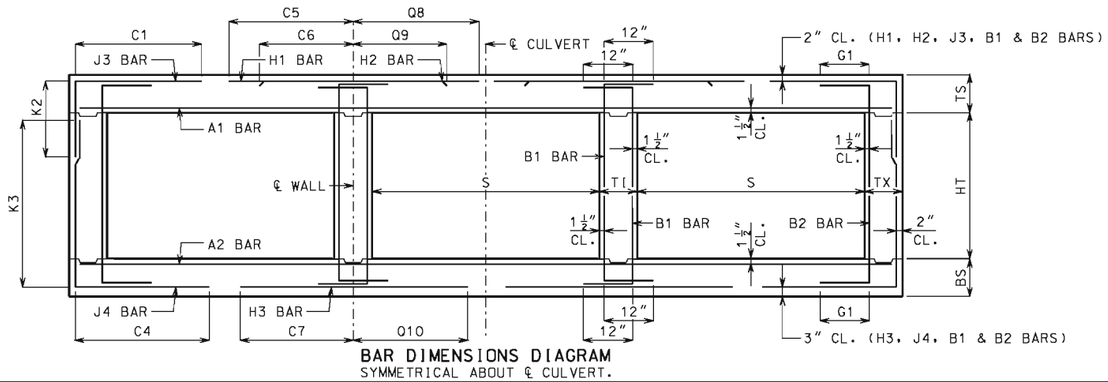

BAR DIMENSIONS DIAGRAM
SYMMETRICAL ABOUT ℄ CULVERT.

GENERAL NOTES:

IF DESIGN FILL IS BETWEEN TABULATED DESIGN FILLS, USE THE NEXT GREATER TABULATED DESIGN FILL, EXCEPT FOR DESIGN FILLS BETWEEN 2 FEET AND 4 FEET. FOR DESIGN FILLS BETWEEN 2 FEET AND 4 FEET USE THE GREATER MEMBER THICKNESS, AREA OF REINFORCEMENT AND BAR DIMENSIONS FROM THE 2 FEET AND 4 FEET TABULATED DESIGN FILLS. AREA OF REINFORCEMENT EQUALS BAR AREA PER FOOT SPACING.

SPECIAL DESIGNS ARE REQUIRED WHEN THE DESIGN FILL IS LESS THAN 1 FOOT OR GREATER THAN 50 FEET.

DIMENSIONS ARE IN INCHES UNLESS OTHERWISE SPECIFIED.

DESIGN FILLS ARE MEASURED FROM THE TOP OF TOP SLAB TO THE TOP OF EARTH FILL OR ROADWAY.

CULVERTS MEET STRENGTH AND SERVICEABILITY REQUIREMENTS FOR THE DESIGN VEHICULAR LIVE LOAD HL-93 MINUS THE LANE LOAD.

MISSOURI HIGHWAYS AND TRANSPORTATION COMMISSION
105 WEST CAPITOL
JEFFERSON CITY, MO 65102
1-888-ASK-MODOT (1-888-275-6636)

STATE OF MISSOURI
DENNIS W. HECKMAN
NUMBER PE-27141
PROFESSIONAL ENGINEER
THIS SHEET HAS BEEN SIGNED, SEALED AND DATED ELECTRONICALLY.

CONCRETE TRIPLE BOX CULVERT

MEMBER THICKNESS BAR SIZE, SPACING & DIMENSIONS

SPAN (S): 4 FEET
HEIGHT (HT): 6 THRU 7 FEET

DATE EFFECTIVE: 12/01/2011
DATE PREPARED: 9/29/2011

703.87

SHEET NO. 3 OF 27

IF A SEAL IS PRESENT ON THIS SHEET IT HAS BEEN ELECTRONICALLY SEALED AND DATED.

SPAN (S) = 5 FT HEIGHT (HT) = 3 FT OR 4 FT

DESIGN FILL	MEMBER THICKNESS				TOP SLAB BARS														BOTTOM SLAB BARS										WALL BARS				
					A1 BARS		J3 BARS					H1 BARS				H2 BARS				A2 BARS		J4 BARS				H3 BARS				B1 BARS		B2 BARS		
										K2													K3									
	TS	BS	TX	TI	SIZE	SPA.	SIZE	SPA.	C1	HT=3′	HT=4′	SIZE	SPA.	C5	Q8	SIZE	SPA.	C6	Q9	SIZE	SPA.	SIZE	SPA.	C4	HT=3′	HT=4′	SIZE	SPA.	C7	Q10	SIZE	SPA.	SIZE	SPA.	G1
1 FT	10	8	8	8	5	9	4	10.5	33.9	26.0	26.0	4	19	56.5	42.5	4	19	22.0	21.0	4	12	4	12	33.9	40	52	4	8.5	30.0	31.0	5	12	5	12	12
2 FT	11	8	8	8	4	6	4	9.5	33.9	27.0	27.0	4	21	56.5	42.5	4	21	22.0	21.0	4	12	4	12	31.1	40	52	4	8.5	30.0	31.0	5	12	5	12	12
4 FT	8	8	8	8	4	10.5	4	12	32.1	24.0	24.0	4	20	38.0	46.0	4	20	20.0	20.0	4	12	4	12	28.4	40	52	4	8.5	29.0	30.0	5	12	5	12	12
6 FT	8	8	8	8	4	12	4	12	29.3	24.0	24.0	4	21	31.0	34.0	4	21	20.0	20.0	4	12	4	12	27.0	40	52	4	8	28.0	29.0	5	12	5	12	12
8 FT	8	8	8	8	4	12	4	12	27.5	24.0	24.0	4	20	30.0	31.0	4	20	19.0	19.0	4	11	4	11	26.3	40	52	4	7	28.0	29.0	5	12	5	12	0
10 FT	8	8	8	8	4	11	4	12	26.6	24.0	24.0	4	18	29.0	30.0	4	18	19.0	19.0	4	9.5	4	10.5	25.6	40	52	4	6.5	27.0	29.0	5	12	5	12	0
12 FT	8	8	8	8	4	10	4	10.5	26.1	24.0	24.0	4	16	28.0	30.0	4	16	19.0	19.0	4	8	4	9.5	25.3	40	52	4	6	27.0	29.0	5	12	5	12	0
14 FT	8	8	8	8	4	8.5	4	9.5	25.6	24.0	24.0	4	14	28.0	29.0	4	14	19.0	19.0	4	7	4	8.5	25.0	40	52	5	7	27.0	29.0	5	12	5	12	0
16 FT	8	9	8	8	4	8	4	8.5	25.6	24.0	24.0	4	13	28.0	29.0	4	13	19.0	19.0	4	7	4	11	24.3	41	53	4	6	27.0	29.0	5	12	5	12	0
18 FT	8	9	8	8	4	7.5	4	8	24.8	24.0	24.0	4	12	27.0	28.0	4	12	19.0	19.0	4	7	4	10.5	23.5	41	53	4	6	27.0	29.0	5	12	5	12	0
20 FT	8	9	8	8	4	7	4	7.5	24.6	24.0	24.0	5	17	27.0	28.0	5	17	19.0	19.0	4	6	4	9.5	23.5	41	53	5	7	27.0	29.0	5	12	5	12	0
22 FT	9	10	8	8	4	7	4	9	24.3	25.0	25.0	4	12	27.0	29.0	4	12	19.0	19.0	4	6.5	4	12	23.1	42	54	4	6	27.0	29.0	5	12	5	12	0
24 FT	9	11	8	8	4	6.5	4	8	24.4	25.0	25.0	5	17	27.0	29.0	5	17	19.0	19.0	4	6.5	4	10.5	22.6	43	55	4	6	26.0	30.0	5	12	5	12	0
26 FT	10	11	8	8	4	6.5	4	8.5	23.9	26.0	26.0	5	18	26.0	29.0	5	18	19.0	19.0	4	6	4	10.5	22.9	43	55	5	8	26.0	29.0	5	12	5	12	0
28 FT	10	11	8	8	4	6	4	8	23.9	26.0	26.0	5	17	26.0	29.0	5	17	19.0	19.0	5	8.5	4	10.5	22.9	43	55	5	8	26.0	29.0	5	12	5	12	0
30 FT	10	12	8	8	5	8	4	7	24.0	26.0	26.0	5	16	26.0	29.0	5	16	19.0	19.0	5	9	4	9.5	22.5	44	56	5	8.5	26.0	30.0	5	12	5	12	0
32 FT	11	12	8	8	5	9	4	8	23.6	27.0	27.0	5	17	26.0	29.0	5	17	19.0	19.0	5	8.5	4	9.5	22.8	44	56	5	8	26.0	30.0	5	12	5	12	0
34 FT	11	13	8	8	5	8.5	4	7	23.8	27.0	27.0	5	16	26.0	29.0	5	16	19.0	19.0	5	8.5	4	8.5	22.5	45	57	5	8.5	26.0	30.0	5	12	5	12	0
36 FT	12	13	8	8	5	8.5	4	8	23.5	28.0	28.0	5	17	26.0	29.0	5	17	19.0	19.0	5	8	4	8.5	22.8	45	57	5	8	26.0	30.0	5	12	5	12	0
38 FT	12	14	8	8	5	8	4	7	23.6	28.0	28.0	5	16	26.0	29.0	5	16	19.0	19.0	5	8	4	7.5	22.6	46	58	5	8.5	26.0	30.0	5	12	5	12	0
40 FT	13	14	8	8	5	8	4	7.5	23.4	29.0	29.0	5	16	26.0	29.0	5	16	19.0	19.0	5	8	4	7.5	22.8	46	58	5	8	26.0	30.0	5	12	5	12	0
42 FT	13	14	8	8	5	7.5	4	7.5	23.4	29.0	29.0	5	16	26.0	29.0	5	16	19.0	19.0	5	7.5	4	7.5	22.8	46	58	5	7.5	26.0	30.0	5	12	5	12	0
44 FT	13	15	8	8	5	7.5	4	7	23.6	29.0	29.0	5	15	26.0	29.0	5	15	19.0	19.0	5	7.5	4	7	22.8	47	59	5	8	26.0	30.0	5	12	5	12	0
46 FT	14	15	8	8	5	7.5	4	7	23.4	30.0	30.0	5	16	25.0	29.0	5	16	18.0	19.0	5	7.5	4	7	22.9	47	59	5	7.5	26.0	30.0	5	12	5	12	0
48 FT	14	15	8	8	5	7	4	7	23.4	30.0	30.0	5	15	25.0	29.0	5	15	18.0	19.0	5	7	4	7	22.9	47	59	5	7	26.0	30.0	5	12	5	12	0
50 FT	14	16	8	8	5	7	4	6.5	23.6	30.0	30.0	5	15	25.0	29.0	5	15	18.0	19.0	5	7	4	6.5	22.9	48	60	5	7.5	26.0	30.0	5	12	5	12	0

SPAN (S) = 5 FT HEIGHT (HT) = 5 FT OR 6 FT

DESIGN FILL	MEMBER THICKNESS				TOP SLAB BARS														BOTTOM SLAB BARS										WALL BARS				
					A1 BARS		J3 BARS					H1 BARS				H2 BARS				A2 BARS		J4 BARS				H3 BARS				B1 BARS		B2 BARS		
										K2													K3									
	TS	BS	TX	TI	SIZE	SPA.	SIZE	SPA.	C1	HT=5′	HT=6′	SIZE	SPA.	C5	Q8	SIZE	SPA.	C6	Q9	SIZE	SPA.	SIZE	SPA.	C4	HT=5′	HT=6′	SIZE	SPA.	C7	Q10	SIZE	SPA.	SIZE	SPA.	G1
1 FT	11	8	8	8	4	6	4	9.5	33.9	27.0	27.0	4	22	56.5	42.5	4	22	23.0	23.0	4	12	4	10	47.5	64	76	4	8.5	31.0	31.0	5	12	5	12	12
2 FT	11	8	8	8	4	6	4	9.5	33.9	27.0	27.0	4	21	56.5	42.5	4	21	22.0	22.0	4	11	4	9.5	42.8	64	76	4	8	30.0	31.0	5	12	5	12	12
4 FT	8	8	8	8	4	10	4	10	33.9	24.0	24.0	4	20	56.5	46.0	4	20	21.0	21.0	4	12	4	9	38.9	64	76	4	8.5	29.0	30.0	5	12	5	12	12
6 FT	8	8	8	8	4	12	4	10.5	38.3	24.0	24.0	4	21	33.0	35.0	4	21	20.0	20.0	4	12	4	8.5	35.5	64	76	4	7.5	28.0	30.0	5	12	5	12	12
8 FT	8	8	8	8	4	12	4	10	34.4	24.0	24.0	4	20	30.0	31.0	4	20	19.0	20.0	4	10.5	4	8	33.5	64	76	4	7	28.0	29.0	5	12	5	12	0
10 FT	8	8	8	8	4	10.5	4	9	32.9	24.0	24.0	4	18	29.0	30.0	4	18	19.0	19.0	4	9	4	7.5	32.3	64	76	4	6.5	27.0	29.0	5	12	5	12	0
12 FT	8	8	8	8	4	9.5	4	8	31.9	24.0	24.0	4	16	28.0	30.0	4	16	19.0	19.0	4	7.5	4	7	31.3	64	76	4	6	27.0	29.0	5	12	5	12	0
14 FT	8	8	8	8	4	8.5	4	7	31.1	24.0	24.0	4	14	28.0	29.0	4	14	19.0	19.0	4	7	4	6	30.8	64	76	5	7	27.0	29.0	5	12	5	12	0
16 FT	8	9	8	8	4	8	4	6.5	30.8	24.0	24.0	4	13	28.0	29.0	4	13	19.0	19.0	4	7	4	7	30.9	65	77	4	6	27.0	29.0	5	12	5	12	0
18 FT	8	9	8	8	4	7.5	4	6.5	29.1	24.0	24.0	4	12	27.0	28.0	4	12	19.0	19.0	4	6.5	4	7	29.1	65	77	4	6	27.0	29.0	5	12	5	12	0
20 FT	8	9	8	8	4	7	5	7	29.0	24.0	24.0	5	17	27.0	28.0	5	17	19.0	19.0	4	6	4	6.5	29.0	65	77	5	7.5	27.0	29.0	5	12	5	12	0
22 FT	9	10	8	8	4	7	4	6.5	29.1	25.0	25.0	4	12	26.0	29.0	4	12	19.0	19.0	4	6	4	7.5	29.3	66	78	4	6	27.0	29.0	5	12	5	12	0
24 FT	9	10	8	8	4	6.5	4	6	29.1	25.0	25.0	5	17	26.0	29.0	5	17	19.0	19.0	5	8.5	4	7	29.1	66	78	5	7.5	27.0	29.0	5	12	5	12	0
26 FT	10	11	8	8	4	6.5	5	8	29.4	26.0	26.0	4	12	26.0	29.0	4	12	19.0	19.0	4	6	4	6.5	29.4	67	79	5	8.5	26.0	29.0	5	12	5	12	0
28 FT	10	11	8	8	4	6	5	7.5	29.3	26.0	26.0	5	17	26.0	29.0	5	17	19.0	19.0	5	8.5	4	6	29.4	67	79	5	8	26.0	29.0	5	12	5	12	0
30 FT	10	12	8	8	5	8.5	5	7.5	29.3	26.0	26.0	5	16	26.0	29.0	5	16	19.0	19.0	5	9	4	6	29.5	68	80	5	8.5	26.0	30.0	5	12	5	12	0
32 FT	11	12	8	8	5	9	5	8	29.5	27.0	31.0	5	17	26.0	29.0	5	17	19.0	19.0	5	8.5	5	8	29.6	68	80	5	8	26.0	30.0	5	12	5	12	0
34 FT	11	13	8	8	5	8.5	5	7.5	29.5	27.0	31.0	5	16	26.0	29.0	5	16	19.0	19.0	5	8.5	5	8.5	29.8	69	81	5	8.5	26.0	30.0	5	12	5	11.5	0
36 FT	12	13	8	8	5	8.5	5	8	29.8	28.0	32.0	5	17	26.0	29.0	5	17	18.0	19.0	5	8	5	8	29.9	69	81	5	8	26.0	30.0	5	12	5	11	0
38 FT	12	14	8	8	5	8	5	7.5	29.8	28.0	32.0	5	16	26.0	29.0	5	16	18.0	19.0	5	8.5	5	8.5	30.1	70	82	5	8.5	26.0	30.0	5	12	5	10	0
40 FT	12	14	8	8	5	7.5	5	7	29.8	28.0	32.0	5	15	26.0	29.0	5	15	18.0	19.0	5	8	5	8	30.0	70	82	5	8	26.0	30.0	5	12	5	9.5	0
42 FT	13	14	8	8	5	8	5	7.5	29.9	29.0	33.0	5	16	26.0	29.0	5	16	18.0	19.0	5	7.5	5	7.5	30.1	70	82	5	7.5	26.0	30.0	5	12	5	9.5	0
44 FT	13	15	8	8	5	7.5	5	7	30.0	29.0	33.0	5	15	26.0	29.0	5	15	18.0	19.0	5	8	5	8	30.4	71	83	5	8	27.0	30.0	5	12	5	9.5	0
46 FT	14	15	8	8	5	7.5	5	6.5	30.1	30.0	34.0	5	16	26.0	28.0	5	16	18.0	19.0	5	7.5	5	7.5	30.5	71	83	5	7.5	27.0	30.0	5	12	5	9.5	0
48 FT	14	15	9	8	5	7.5	5	8	30.6	30.0	34.0	5	16	26.0	28.0	5	16	18.0	19.0	5	7.5	5	8	30.8	71	83	5	7.5	27.0	30.0	5	12	5	9	0
50 FT	14	16	9	8	5	7	5	7.5	30.8	30.0	34.0	5	15	26.0	28.0	5	15	18.0	19.0	5	7.5	5	8	31.0	72	84	5	7.5	27.0	30.0	5	12	5	8.5	0

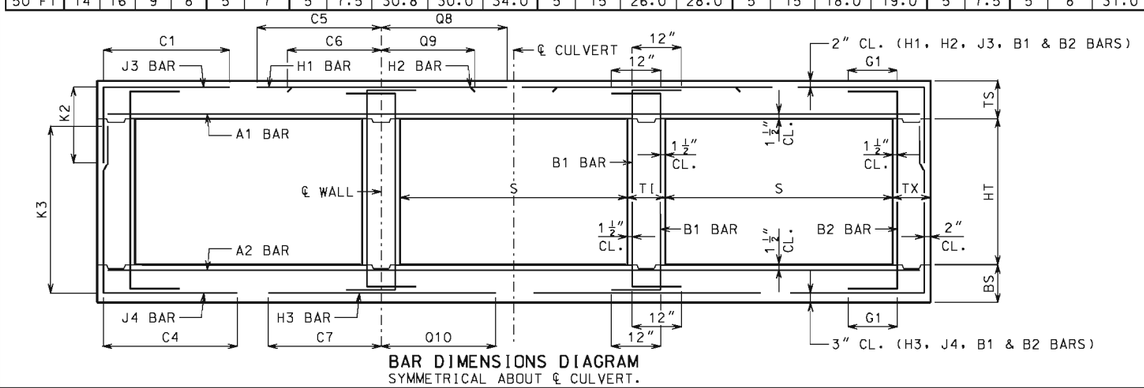

BAR DIMENSIONS DIAGRAM
SYMMETRICAL ABOUT ℄ CULVERT.

GENERAL NOTES:

IF DESIGN FILL IS BETWEEN TABULATED DESIGN FILLS, USE THE NEXT GREATER TABULATED DESIGN FILL, EXCEPT FOR DESIGN FILLS BETWEEN 2 FEET AND 4 FEET. FOR DESIGN FILLS BETWEEN 2 FEET AND 4 FEET USE THE GREATER MEMBER THICKNESS, AREA OF REINFORCEMENT AND BAR DIMENSIONS FROM THE 2 FEET AND 4 FEET TABULATED DESIGN FILLS. AREA OF REINFORCEMENT EQUALS BAR AREA PER FOOT SPACING.

SPECIAL DESIGNS ARE REQUIRED WHEN THE DESIGN FILL IS LESS THAN 1 FOOT OR GREATER THAN 50 FEET.

DIMENSIONS ARE IN INCHES UNLESS OTHERWISE SPECIFIED.

DESIGN FILLS ARE MEASURED FROM THE TOP OF TOP SLAB TO THE TOP OF EARTH FILL OR ROADWAY.

CULVERTS MEET STRENGTH AND SERVICEABILITY REQUIREMENTS FOR THE DESIGN VEHICULAR LIVE LOAD HL-93 MINUS THE LANE LOAD.

IF A SEAL IS PRESENT ON THIS SHEET IT HAS BEEN ELECTRONICALLY SEALED AND DATED.

MISSOURI HIGHWAYS AND TRANSPORTATION COMMISSION
105 WEST CAPITOL
JEFFERSON CITY, MO 65102
1-888-ASK-MODOT (1-888-275-6636)

STATE OF MISSOURI
DENNIS W. HECKMAN
NUMBER PE-27141
PROFESSIONAL ENGINEER
THIS SHEET HAS BEEN SIGNED, SEALED AND DATED ELECTRONICALLY.

CONCRETE TRIPLE BOX CULVERT

MEMBER THICKNESS BAR SIZE, SPACING & DIMENSIONS

SPAN (S): 5 FEET
HEIGHT (HT): 3 THRU 6 FEET

DATE EFFECTIVE: 12/01/2011
DATE PREPARED: 9/29/2011

703.87

SPAN (S) = 5 FT HEIGHT (HT) = 7 FT OR 8 FT

DESIGN FILL	MEMBER THICKNESS				TOP SLAB BARS														BOTTOM SLAB BARS										WALL BARS				
					A1 BARS		J3 BARS					H1 BARS				H2 BARS				A2 BARS		J4 BARS				H3 BARS				B1 BARS		B2 BARS	
	TS	BS	TX	TI	SIZE	SPA.	SIZE	SPA.	C1	K2 HT=7′	K2 HT=8′	SIZE	SPA.	C5	Q8	SIZE	SPA.	C6	Q9	SIZE	SPA.	SIZE	SPA.	C4	K3 HT=7′	K3 HT=8′	SIZE	SPA.	C7	Q10	SIZE	SPA.	SIZE	SPA.	G1
1 FT	11	8	8	8	4	6	4	9	33.9	27.0	27.0	4	22	56.5	42.5	4	22	23.0	23.0	4	11	4	7	48.0	88	100	4	8	46.0	31.0	5	12	5	12	12
2 FT	11	8	8	8	4	6	4	8.5	33.9	27.0	27.0	4	21	56.5	42.5	4	21	23.0	23.0	4	10.5	4	6.5	48.0	88	100	4	8	32.0	31.0	5	12	5	12	12
4 FT	8	8	8	8	4	9.5	4	7	33.9	24.0	24.0	4	20	56.5	46.0	4	20	21.0	21.0	4	11.5	4	6	48.0	88	100	4	8	31.0	30.0	5	12	5	12	12
6 FT	8	8	8	8	4	12	4	7	33.9	24.0	24.0	4	21	56.5	35.0	4	21	20.0	20.0	4	11	5	6	48.0	88	100	4	7.5	29.0	30.0	5	12	5	12	12
8 FT	8	8	8	8	4	12	4	6.5	51.8	24.0	24.0	4	20	34.0	31.0	4	20	19.0	20.0	4	10	5	6	46.0	88	100	4	7	28.0	29.0	5	12	5	12	0
10 FT	8	8	9	8	4	11	4	7	43.8	24.0	24.0	4	18	30.0	30.0	4	18	19.0	20.0	4	9	4	6	41.6	88	100	4	6.5	28.0	29.0	5	12	5	12	0
12 FT	8	8	9	8	4	9.5	4	6	41.3	24.0	24.0	4	16	29.0	30.0	4	16	19.0	19.0	4	8	5	6	40.4	88	100	4	6	27.0	29.0	5	12	5	12	0
14 FT	8	9	9	8	4	9	5	7	39.9	24.0	28.0	4	15	28.0	29.0	4	15	19.0	19.0	4	8	5	6.5	41.4	89	101	4	6.5	27.0	29.0	5	12	5	11.5	0
16 FT	8	9	9	8	4	8	5	6	39.1	24.0	28.0	4	13	28.0	29.0	4	13	19.0	19.0	4	7	5	6	40.8	89	101	4	6	27.0	29.0	5	12	5	11	0
18 FT	8	9	9	8	4	7.5	5	6	36.5	24.0	28.0	4	13	26.0	28.0	4	13	19.0	19.0	4	7	5	6	38.1	89	101	4	6	27.0	29.0	5	12	5	11.5	0
20 FT	8	9	9	8	4	7	6	7	39.1	24.0	32.0	5	18	26.0	28.0	5	18	19.0	19.0	4	6	6	7	40.9	89	101	5	7.5	27.0	29.0	5	12	5	10.5	0
22 FT	8	10	9	8	4	6.5	6	7	38.8	24.0	28.0	5	17	27.0	28.0	5	17	19.0	20.0	4	6.5	5	6	39.0	90	102	5	8	27.0	29.0	5	12	5	10	0
24 FT	9	11	9	8	4	6.5	5	6	37.0	25.0	29.0	5	18	26.0	28.0	5	18	19.0	19.0	4	6.5	5	6	39.8	91	103	4	6	27.0	29.0	5	12	5	9.5	0
26 FT	9	11	9	8	4	6	5	6	36.9	25.0	29.0	5	16	26.0	28.0	5	16	19.0	19.0	4	6	5	6	39.6	91	103	5	8.5	27.0	29.0	5	12	5	8.5	0
28 FT	10	12	9	8	4	6	5	6	37.9	30.0	30.0	5	17	26.0	28.0	5	17	19.0	19.0	4	6	5	6	40.3	92	104	4	6	27.0	29.0	5	12	5	8.5	0
30 FT	10	12	9	8	4	6	5	6	37.8	30.0	30.0	5	16	26.0	28.0	5	16	19.0	19.0	4	6	6	7.5	43.1	92	104	5	8.5	27.0	29.0	5	12	5	8.5	0
32 FT	11	12	10	8	4	6	5	6.5	38.4	31.0	31.0	5	17	26.0	28.0	5	17	18.0	19.0	5	9	5	6.5	39.6	92	104	5	8	27.0	29.0	5	12	5	8	0
34 FT	11	13	10	8	5	9	5	6.5	38.3	31.0	31.0	5	16	26.0	28.0	5	16	19.0	19.0	5	9	5	6.5	40.4	93	105	5	8.5	28.0	30.0	5	12	5	8	0
36 FT	12	13	10	8	5	9	5	6.5	39.1	32.0	32.0	5	17	26.0	28.0	5	17	18.0	19.0	5	8.5	5	6.5	40.3	93	105	5	8	27.0	30.0	5	12	5	8	0
38 FT	12	14	10	8	5	8.5	5	6	39.0	32.0	32.0	5	17	26.0	28.0	5	17	18.0	19.0	5	9	5	6.5	40.9	94	106	5	8.5	28.0	30.0	5	12	5	8	0
40 FT	12	14	11	8	5	8	5	7	38.9	32.0	32.0	5	16	26.0	28.0	5	16	18.0	19.0	5	8.5	5	7	40.8	94	106	5	8	28.0	30.0	5	12	5	7.5	0
42 FT	13	14	11	8	5	8.5	5	7	39.6	33.0	33.0	5	17	26.0	28.0	5	17	18.0	19.0	5	8	5	7	40.5	94	106	5	7.5	28.0	30.0	5	12	5	7.5	0
44 FT	13	15	11	8	5	8	5	6.5	39.5	33.0	33.0	5	16	26.0	28.0	5	16	18.0	19.0	5	8	5	7	41.3	95	107	5	8	28.0	30.0	5	12	5	7.5	0
46 FT	13	15	12	8	5	7.5	5	6.5	39.5	33.0	33.0	5	15	26.0	28.0	5	15	18.0	19.0	5	8	5	6.5	41.0	95	107	5	7.5	28.0	30.0	5	12	5	7	0
48 FT	14	15	12	8	5	8	5	6.5	40.3	34.0	34.0	5	17	26.0	27.0	5	17	18.0	19.0	5	7.5	5	6.5	40.9	95	107	5	7	28.0	30.0	5	12	5	7	0
50 FT	14	16	12	8	5	7.5	5	6.5	40.1	34.0	34.0	5	16	26.0	27.0	5	16	18.0	19.0	5	8	5	6.5	41.6	96	108	5	7.5	28.0	30.0	5	12	5	7	0

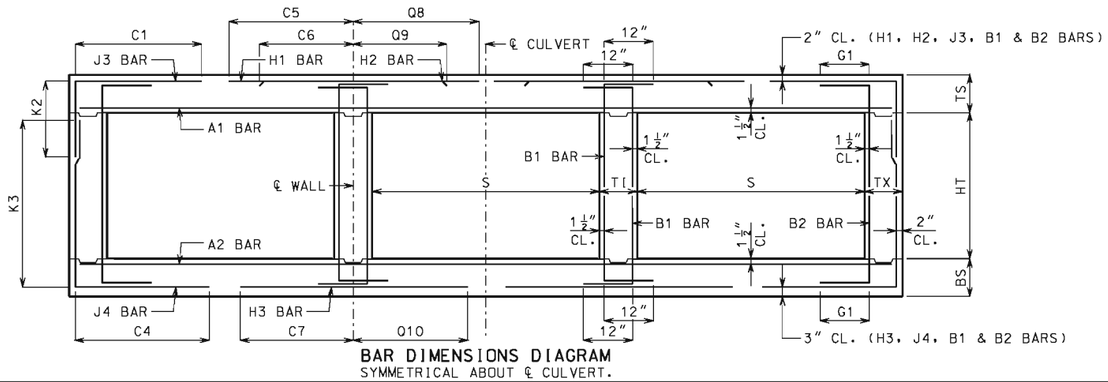

BAR DIMENSIONS DIAGRAM
SYMMETRICAL ABOUT ℄ CULVERT.

GENERAL NOTES:

IF DESIGN FILL IS BETWEEN TABULATED DESIGN FILLS, USE THE NEXT GREATER TABULATED DESIGN FILL, EXCEPT FOR DESIGN FILLS BETWEEN 2 FEET AND 4 FEET. FOR DESIGN FILLS BETWEEN 2 FEET AND 4 FEET USE THE GREATER MEMBER THICKNESS, AREA OF REINFORCEMENT AND BAR DIMENSIONS FROM THE 2 FEET AND 4 FEET TABULATED DESIGN FILLS. AREA OF REINFORCEMENT EQUALS BAR AREA PER FOOT SPACING.

SPECIAL DESIGNS ARE REQUIRED WHEN THE DESIGN FILL IS LESS THAN 1 FOOT OR GREATER THAN 50 FEET.

DIMENSIONS ARE IN INCHES UNLESS OTHERWISE SPECIFIED.

DESIGN FILLS ARE MEASURED FROM THE TOP OF TOP SLAB TO THE TOP OF EARTH FILL OR ROADWAY.

CULVERTS MEET STRENGTH AND SERVICEABILITY REQUIREMENTS FOR THE DESIGN VEHICULAR LIVE LOAD HL-93 MINUS THE LANE LOAD.

MISSOURI HIGHWAYS AND TRANSPORTATION COMMISSION
105 WEST CAPITOL
JEFFERSON CITY, MO 65102
1-888-ASK-MODOT (1-888-275-6636)

STATE OF MISSOURI
DENNIS W. HECKMAN
NUMBER PE-27141
PROFESSIONAL ENGINEER
THIS SHEET HAS BEEN SIGNED, SEALED AND DATED ELECTRONICALLY.

CONCRETE TRIPLE BOX CULVERT

MEMBER THICKNESS BAR SIZE, SPACING & DIMENSIONS

SPAN (S): 5 FEET
HEIGHT (HT): 7 THRU 8 FEET

DATE EFFECTIVE: 12/01/2011
DATE PREPARED: 9/29/2011

703.87

SHEET NO. 5 OF 27

IF A SEAL IS PRESENT ON THIS SHEET IT HAS BEEN ELECTRONICALLY SEALED AND DATED.

SPAN (S) = 6 FT HEIGHT (HT) = 3 FT OR 4 FT OR 5 FT

DESIGN FILL	MEMBER THICKNESS				TOP SLAB BARS														BOTTOM SLAB BARS												WALL BARS				
					A1 BARS		J3 BARS					H1 BARS				H2 BARS				A2 BARS		J4 BARS				H3 BARS				B1 BARS		B2 BARS		
										K2													K3									
	TS	BS	TX	TI	SIZE	SPA.	SIZE	SPA.	C1	HT=3'	HT=4'	HT=5'	SIZE	SPA.	C5	Q8	SIZE	SPA.	C6	Q9	SIZE	SPA.	SIZE	SPA.	C4	HT=3'	HT=4'	HT=5'	SIZE	SPA.	C7	Q10	SIZE	SPA.	SIZE	SPA.	G1
1 FT	11	8	8	8	5	8	4	9.5	37.5	27.0	27.0	27.0	4	17	64.5	48.5	4	17	24.0	23.0	4	10	4	10	38.1	40	52	64	4	7.5	33.0	34.0	5	12	5	12	12
2 FT	11	8	8	8	5	8	4	9.5	37.5	27.0	27.0	27.0	4	17	64.5	48.5	4	17	23.0	22.0	4	9.5	4	9	35.1	40	52	64	4	7	33.0	34.0	5	12	5	12	12
4 FT	8	8	8	8	4	7.5	4	8.5	35.8	24.0	24.0	24.0	4	14	43.0	52.0	4	14	21.0	21.0	4	9	4	9.5	32.1	40	52	64	4	6.5	32.0	33.0	5	12	5	12	12
6 FT	8	8	8	8	4	9	4	9.5	32.6	24.0	24.0	24.0	4	14	35.0	38.0	4	14	21.0	20.0	4	8.5	4	8.5	30.0	40	52	64	4	6	31.0	32.0	5	12	5	12	12
8 FT	8	8	8	8	4	9	4	9	30.4	24.0	24.0	24.0	4	13	33.0	35.0	4	13	20.0	20.0	4	8	4	8	29.0	40	52	64	5	7.5	30.0	32.0	5	12	5	12	0
10 FT	8	8	8	8	4	8	4	8	29.4	24.0	24.0	24.0	4	12	32.0	34.0	4	12	20.0	20.0	4	7	4	7	28.4	40	52	64	5	6.5	30.0	32.0	5	12	5	12	0
12 FT	8	9	8	8	4	7	4	7	28.8	24.0	24.0	24.0	5	17	31.0	33.0	5	17	20.0	20.0	4	6.5	4	9	27.4	41	53	65	5	7	30.0	32.0	5	12	5	12	0
14 FT	8	9	8	8	4	6.5	4	6.5	28.3	24.0	24.0	24.0	5	16	31.0	32.0	5	16	21.0	21.0	5	9	4	8	26.9	41	53	65	5	6.5	30.0	32.0	5	12	5	12	0
16 FT	9	10	8	8	4	6	4	7.5	27.6	25.0	25.0	25.0	5	16	30.0	33.0	5	16	20.0	20.0	5	9	4	9.5	26.5	42	54	66	5	7	29.0	32.0	5	12	5	12	0
18 FT	9	10	8	8	5	9	4	6.5	27.4	25.0	25.0	25.0	5	16	30.0	32.0	5	16	21.0	21.0	5	8	4	8.5	26.3	42	54	66	5	6.5	29.0	32.0	5	12	5	12	0
20 FT	10	11	8	8	5	9	4	7	27.0	26.0	26.0	26.0	5	15	30.0	33.0	5	15	20.0	20.0	5	8	4	8.5	26.0	43	55	67	5	7	29.0	33.0	5	12	5	12	0
22 FT	10	11	8	8	5	8.5	4	6.5	26.0	26.0	26.0	26.0	5	15	29.0	32.0	5	15	20.0	20.0	5	7.5	4	8.5	25.0	43	55	67	5	7	29.0	33.0	5	12	5	12	0
24 FT	11	12	8	8	5	8.5	4	6.5	25.8	27.0	27.0	27.0	5	15	29.0	32.0	5	15	20.0	20.0	5	8	4	8.5	24.9	44	56	68	5	7	29.0	33.0	5	12	5	12	0
26 FT	11	12	8	8	5	7.5	4	6	25.6	27.0	27.0	27.0	5	14	29.0	32.0	5	14	20.0	20.0	5	6.5	4	8	24.9	44	56	68	5	6.5	29.0	33.0	5	12	5	12	0
28 FT	12	13	8	8	5	7.5	4	6.5	25.5	28.0	28.0	28.0	5	14	29.0	32.0	5	14	19.0	20.0	5	7.5	4	8	24.9	45	57	69	5	7	29.0	33.0	5	12	5	12	0
30 FT	12	14	8	8	5	7	4	6	25.6	28.0	28.0	28.0	5	13	29.0	32.0	5	13	19.0	20.0	5	7.5	4	7.5	24.8	46	58	70	5	7	28.0	33.0	5	12	5	12	0
32 FT	13	14	8	8	5	7	4	6	25.4	29.0	29.0	29.0	5	14	28.0	33.0	5	14	19.0	20.0	5	7	4	7.5	24.9	46	58	70	5	6.5	28.0	33.0	5	12	5	12	0
34 FT	13	15	8	8	5	7	5	8.5	25.6	29.0	29.0	29.0	5	13	28.0	32.0	5	13	19.0	20.0	5	7	4	7	24.8	47	59	71	5	7	28.0	33.0	5	12	5	12	0
36 FT	14	15	8	8	5	7	4	6	25.4	30.0	30.0	30.0	5	13	28.0	33.0	5	13	19.0	20.0	5	6.5	4	7	25.0	47	59	71	5	6.5	28.0	33.0	5	12	5	12	0
38 FT	14	16	8	8	5	6.5	5	8.5	25.5	30.0	30.0	30.0	5	13	28.0	32.0	5	13	19.0	20.0	5	7	4	6.5	24.9	48	60	72	5	6.5	28.0	33.0	5	12	5	12	0
40 FT	15	16	8	8	5	6.5	5	8	30.4	31.0	31.0	31.0	5	13	33.0	38.0	5	13	24.0	25.0	5	6.5	4	6.5	25.1	48	60	72	5	6.5	28.0	33.0	5	12	5	12	0
42 FT	15	17	8	8	5	6.5	5	8	30.6	31.0	31.0	31.0	5	12	33.0	37.0	5	12	24.0	25.0	5	6.5	4	6	25.1	49	61	73	5	6.5	28.0	33.0	5	12	5	12	0
44 FT	16	17	8	8	5	6.5	5	7	30.5	32.0	32.0	32.0	5	13	33.0	37.0	5	13	24.0	25.0	5	6.5	4	6	25.3	49	61	73	5	6	28.0	33.0	5	12	5	12	0
46 FT	16	17	8	8	5	6	5	7	30.5	32.0	32.0	32.0	5	12	33.0	37.0	5	12	24.0	25.0	5	6	4	6	25.3	49	61	73	5	6	28.0	33.0	5	12	5	12	0
48 FT	17	18	8	8	5	6	5	6.5	30.6	37.0	37.0	37.0	5	13	33.0	37.0	5	13	24.0	25.0	5	6	5	6.5	25.5	50	62	74	5	6	28.0	33.0	5	12	5	11	0
50 FT	17	18	8	8	5	6	5	6.5	30.6	37.0	37.0	37.0	5	12	33.0	37.0	5	12	24.0	25.0	5	6	5	6.5	25.4	50	62	74	5	6	28.0	33.0	5	12	5	10.5	0

SPAN (S) = 6 FT HEIGHT (HT) = 6 FT OR 7 FT

DESIGN FILL	MEMBER THICKNESS				TOP SLAB BARS														BOTTOM SLAB BARS												WALL BARS				
					A1 BARS		J3 BARS					H1 BARS				H2 BARS				A2 BARS		J4 BARS				H3 BARS				B1 BARS		B2 BARS		
										K2													K3									
	TS	BS	TX	TI	SIZE	SPA.	SIZE	SPA.	C1	HT=6'	HT=7'	SIZE	SPA.	C5	Q8	SIZE	SPA.	C6	Q9	SIZE	SPA.	SIZE	SPA.	C4	HT=6'	HT=7'	SIZE	SPA.	C7	Q10	SIZE	SPA.	SIZE	SPA.	G1
1 FT	11	8	8	8	5	8	4	9.5	37.5	27.0	27.0	4	17	64.5	48.5	4	17	24.0	24.0	4	9.5	4	7.5	52.8	76	88	4	7	34.0	34.0	5	12	5	12	12
2 FT	11	8	8	8	5	8	4	9.5	37.5	27.0	27.0	4	17	64.5	48.5	4	17	23.0	23.0	4	8.5	4	7	47.3	76	88	4	6.5	33.0	34.0	5	12	5	12	12
4 FT	8	8	8	8	4	7	4	7	37.5	24.0	24.0	4	14	64.5	52.0	4	14	21.0	22.0	4	8.5	4	7	43.0	76	88	4	6.5	32.0	34.0	5	12	5	12	12
6 FT	8	8	8	8	4	8.5	4	7.5	41.9	24.0	24.0	4	14	37.0	39.0	4	14	21.0	21.0	4	8	4	6.5	39.1	76	88	4	6	31.0	33.0	5	12	5	12	12
8 FT	8	8	8	8	4	8.5	4	7	37.6	24.0	24.0	4	13	34.0	35.0	4	13	20.0	20.0	4	7.5	4	6	36.9	76	88	5	7	30.0	32.0	5	12	5	12	0
10 FT	8	8	8	8	4	8	4	6	36.0	24.0	24.0	4	12	32.0	34.0	4	12	20.0	20.0	4	6.5	5	6	35.4	76	88	5	6.5	30.0	32.0	5	12	5	12	0
12 FT	8	9	8	8	4	7	5	6.5	34.8	24.0	24.0	5	17	31.0	33.0	5	17	20.0	20.0	4	6.5	4	6	35.0	77	89	5	7	30.0	32.0	5	12	5	12	0
14 FT	8	9	8	8	4	6	5	6	33.9	24.0	28.0	5	16	31.0	33.0	5	16	21.0	21.0	5	8.5	5	6.5	34.1	77	89	5	6.5	30.0	32.0	5	12	5	12	0
16 FT	9	10	8	8	4	6	5	6.5	33.8	25.0	25.0	5	16	30.0	33.0	5	16	20.0	20.0	5	9	4	6	34.0	78	90	5	7	29.0	33.0	5	12	5	12	0
18 FT	9	10	8	8	5	9	5	6.5	33.4	25.0	29.0	5	16	30.0	32.0	5	16	21.0	21.0	5	8	5	6.5	33.6	78	90	5	6.5	29.0	32.0	5	12	5	12	0
20 FT	9	11	8	8	5	8	5	6	33.1	25.0	29.0	5	16	30.0	32.0	5	16	21.0	22.0	5	8	5	7	33.8	79	91	5	7.5	29.0	33.0	5	12	5	12	0
22 FT	10	11	8	8	5	8.5	5	7	31.6	26.0	30.0	5	15	29.0	32.0	5	15	20.0	20.0	5	7.5	5	7	31.9	79	91	5	7	29.0	33.0	5	12	5	12	0
24 FT	10	12	8	8	5	7.5	5	6.5	31.6	26.0	30.0	5	15	29.0	32.0	5	15	20.0	21.0	5	8	5	7.5	32.0	80	92	5	7	29.0	33.0	5	12	5	12	0
26 FT	11	13	8	8	5	8	5	6.5	31.9	27.0	31.0	5	14	29.0	32.0	5	14	20.0	20.0	5	8	5	7.5	32.3	81	93	5	7.5	29.0	33.0	5	12	5	11	0
28 FT	12	13	8	8	5	8	5	7	31.9	28.0	32.0	5	14	29.0	32.0	5	14	19.0	20.0	5	7.5	5	7	32.3	81	93	5	7	29.0	33.0	5	12	5	10	0
30 FT	12	14	8	8	5	7.5	5	6.5	32.0	28.0	32.0	5	13	29.0	32.0	5	13	19.0	20.0	5	7.5	5	7.5	32.4	82	94	5	7	29.0	33.0	5	12	5	9.5	0
32 FT	13	14	8	8	5	7.5	5	6.5	32.0	33.0	33.0	5	14	28.0	32.0	5	14	19.0	20.0	5	7	5	7	32.5	82	94	5	6.5	29.0	33.0	5	12	5	9.5	0
34 FT	13	15	8	8	5	7	5	6.5	32.1	33.0	33.0	5	13	28.0	32.0	5	13	19.0	20.0	5	7	5	7	32.6	83	95	5	7	29.0	33.0	5	12	5	9.5	0
36 FT	14	15	8	8	5	7	5	6	32.3	34.0	34.0	5	14	28.0	32.0	5	14	19.0	20.0	5	7	5	6.5	32.8	83	95	5	6.5	29.0	33.0	5	12	5	9.5	0
38 FT	14	16	9	8	5	6.5	5	7	32.9	30.0	34.0	5	13	28.0	32.0	5	13	19.0	20.0	5	7	5	8	33.1	84	96	5	6.5	29.0	33.0	5	12	5	8.5	0
40 FT	14	16	10	8	5	6	5	7.5	33.3	30.0	34.0	5	12	28.0	32.0	5	12	19.0	20.0	5	6.5	5	7.5	33.4	84	96	5	6.5	29.0	33.0	5	12	5	9.5	0
42 FT	15	17	10	8	5	6.5	5	7.5	38.5	31.0	35.0	5	13	33.0	37.0	5	13	24.0	25.0	5	7	5	7.5	33.6	85	97	5	6.5	29.0	33.0	5	12	5	9	0
44 FT	15	17	10	8	5	6.5	5	7.5	38.5	31.0	35.0	5	12	33.0	37.0	5	12	24.0	25.0	5	6.5	5	7.5	33.6	85	97	5	6	29.0	33.0	5	12	5	8.5	0
46 FT	16	17	10	8	5	6.5	5	7	38.6	32.0	36.0	5	13	33.0	36.0	5	13	24.0	25.0	5	6	5	7.5	33.8	85	97	5	6	29.0	33.0	5	12	5	8	0
48 FT	16	18	11	8	5	6	5	7	39.3	32.0	36.0	5	12	33.0	36.0	5	12	24.0	25.0	5	6.5	5	7.5	34.1	86	98	5	6	29.0	34.0	5	12	5	8.5	0
50 FT	17	18	11	8	5	6	5	7	39.4	33.0	37.0	5	13	33.0	36.0	5	13	24.0	25.0	5	6	5	7.5	34.3	86	98	5	6	29.0	33.0	5	12	5	8	0

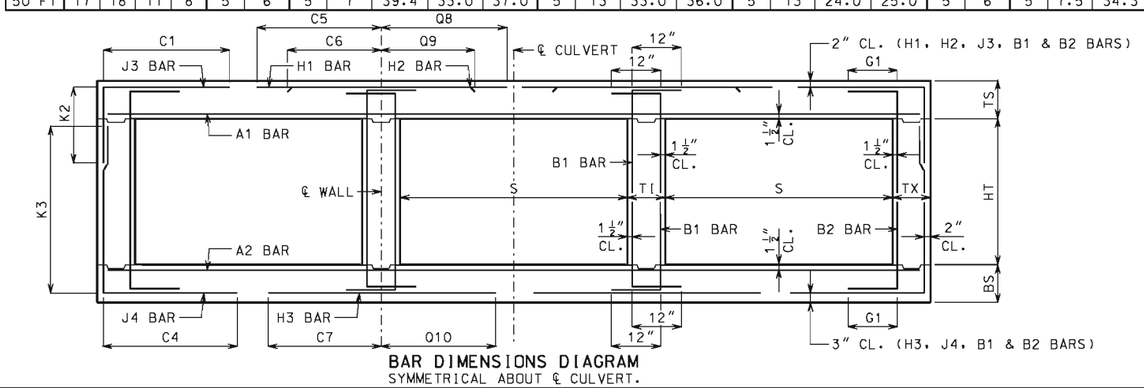

BAR DIMENSIONS DIAGRAM
SYMMETRICAL ABOUT ℄ CULVERT.

GENERAL NOTES:

IF DESIGN FILL IS BETWEEN TABULATED DESIGN FILLS, USE THE NEXT GREATER TABULATED DESIGN FILL, EXCEPT FOR DESIGN FILLS BETWEEN 2 FEET AND 4 FEET. FOR DESIGN FILLS BETWEEN 2 FEET AND 4 FEET USE THE GREATER MEMBER THICKNESS. AREA OF REINFORCEMENT AND BAR DIMENSIONS FROM THE 2 FEET AND 4 FEET TABULATED DESIGN FILLS. AREA OF REINFORCEMENT EQUALS BAR AREA PER FOOT SPACING.

SPECIAL DESIGNS ARE REQUIRED WHEN THE DESIGN FILL IS LESS THAN 1 FOOT OR GREATER THAN 50 FEET.

DIMENSIONS ARE IN INCHES UNLESS OTHERWISE SPECIFIED.

DESIGN FILLS ARE MEASURED FROM THE TOP OF TOP SLAB TO THE TOP OF EARTH FILL OR ROADWAY.

CULVERTS MEET STRENGTH AND SERVICEABILITY REQUIREMENTS FOR THE DESIGN VEHICULAR LIVE LOAD HL-93 MINUS THE LANE LOAD.

IF A SEAL IS PRESENT ON THIS SHEET IT HAS BEEN ELECTRONICALLY SEALED AND DATED.

MISSOURI HIGHWAYS AND TRANSPORTATION COMMISSION
105 WEST CAPITOL
JEFFERSON CITY, MO 65102
1-888-ASK-MODOT (1-888-275-6636)

STATE OF MISSOURI
DENNIS W. HECKMAN
NUMBER PE-27141
PROFESSIONAL ENGINEER
THIS SHEET HAS BEEN SIGNED, SEALED AND DATED ELECTRONICALLY.

CONCRETE TRIPLE BOX CULVERT

MEMBER THICKNESS BAR SIZE, SPACING & DIMENSIONS

SPAN (S): 6 FEET
HEIGHT (HT): 3 THRU 7 FEET

DATE EFFECTIVE: 12/01/2011
DATE PREPARED: 9/29/2011

703.87

SPAN (S) = 6 FT HEIGHT (HT) = 8 FT OR 9 FT

DESIGN FILL	MEMBER THICKNESS				TOP SLAB BARS														BOTTOM SLAB BARS										WALL BARS				
					A1 BARS		J3 BARS					H1 BARS				H2 BARS				A2 BARS		J4 BARS					H3 BARS				B1 BARS		B2 BARS	
	TS	BS	TX	TI	SIZE	SPA.	SIZE	SPA.	C1	K2 HT=8′	K2 HT=9′	SIZE	SPA.	C5	Q8	SIZE	SPA.	C6	Q9	SIZE	SPA.	SIZE	SPA.	C4	K3 HT=8′	K3 HT=9′	SIZE	SPA.	C7	Q10	SIZE	SPA.	SIZE	SPA.	G1
1 FT	11	8	8	8	5	7.5	4	7	37.5	27.0	27.0	4	17	64.5	48.5	4	17	24.0	25.0	4	8.5	5	6.5	54.0	100	112	4	7	52.0	35.0	5	12	5	12	12
2 FT	11	8	8	8	5	7.5	4	6.5	37.5	27.0	27.0	4	17	64.5	48.5	4	17	23.0	24.0	4	8	5	6	54.0	100	112	4	6.5	35.0	34.0	5	12	5	12	12
4 FT	8	8	9	8	4	7	4	6	38.1	24.0	24.0	4	14	64.5	52.0	4	14	22.0	22.0	4	8	5	6.5	54.8	100	112	4	6	33.0	34.0	5	12	5	12	12
6 FT	8	8	9	8	4	8.5	4	6	38.1	24.0	24.0	4	14	64.5	40.0	4	14	21.0	21.0	4	8	5	6	50.8	100	112	4	6	32.0	33.0	5	12	5	12	12
8 FT	8	9	9	8	4	8.5	4	6	50.1	24.0	24.0	4	14	35.0	35.0	4	14	20.0	20.0	4	8.5	5	6.5	50.8	101	113	4	6.5	31.0	33.0	5	12	5	12	0
10 FT	8	9	9	8	4	8	5	6.5	45.8	24.0	28.0	4	12	33.0	33.0	4	12	20.0	20.0	4	7.5	5	6	47.5	101	113	4	6	31.0	33.0	5	12	5	11	0
12 FT	8	9	10	8	4	7	5	6.5	43.0	24.0	28.0	5	17	32.0	33.0	5	17	20.0	20.0	4	6.5	5	6.5	44.8	101	113	5	7	30.0	32.0	5	12	5	11	0
14 FT	8	9	10	8	4	6.5	5	6	41.6	28.0	28.0	5	17	31.0	32.0	5	17	21.0	21.0	4	6	5	6	43.5	101	113	5	6.5	30.0	32.0	5	12	5	10	0
16 FT	8	10	10	8	4	6	6	7	43.3	28.0	28.0	5	16	30.0	32.0	5	16	22.0	22.0	5	9	5	6	44.4	102	114	5	7	30.0	33.0	5	12	5	9.5	0
18 FT	9	10	10	8	4	6	5	6	41.8	29.0	29.0	5	16	30.0	32.0	5	16	20.0	21.0	5	8.5	6	7.5	46.4	102	114	5	7	30.0	32.0	5	12	5	9	0
20 FT	9	11	10	8	5	8.5	5	6	41.0	29.0	29.0	5	16	30.0	32.0	5	16	21.0	22.0	5	8.5	5	6	44.4	103	115	5	7	30.0	33.0	5	12	5	8.5	0
22 FT	10	11	10	8	5	9	5	6.5	39.9	30.0	30.0	5	15	29.0	32.0	5	15	20.0	20.0	5	8	5	6	41.4	103	115	5	7	30.0	33.0	5	12	5	9	0
24 FT	10	12	10	8	5	8	5	6.5	39.5	30.0	30.0	5	15	29.0	32.0	5	15	20.0	21.0	5	8	5	6	42.3	104	116	5	7	30.0	33.0	5	12	5	8.5	0
26 FT	11	12	10	8	5	8	5	6	40.5	31.0	31.0	5	14	29.0	32.0	5	14	19.0	20.0	5	7	5	6	41.9	104	116	5	6.5	30.0	33.0	5	12	5	8	0
28 FT	11	13	10	8	5	7.5	5	6	40.3	31.0	31.0	5	14	29.0	32.0	5	14	20.0	20.0	5	7.5	5	6	42.8	105	117	5	7	30.0	33.0	5	12	5	8	0
30 FT	12	14	10	8	5	8	5	6	41.0	32.0	32.0	5	14	29.0	31.0	5	14	19.0	20.0	5	8	5	6	43.3	106	118	5	7	30.0	33.0	5	12	5	8	0
32 FT	12	14	11	8	5	7.5	5	6.5	40.8	32.0	32.0	5	13	29.0	31.0	5	13	19.0	20.0	5	7.5	5	7	42.9	106	118	5	6.5	30.0	33.0	5	12	5	7.5	0
34 FT	13	15	11	8	5	7.5	5	6.5	41.5	33.0	33.0	5	13	28.0	31.0	5	13	19.0	20.0	5	7.5	5	7	43.5	107	119	5	7	30.0	33.0	5	12	5	7.5	0
36 FT	13	15	11	8	5	7	5	6	41.4	33.0	33.0	5	13	28.0	31.0	5	13	19.0	20.0	5	7	5	6.5	43.4	107	119	5	6.5	30.0	33.0	5	12	5	7.5	0
38 FT	14	16	12	8	5	7	5	6.5	42.1	34.0	34.0	5	13	28.0	31.0	5	13	19.0	20.0	5	7	5	6.5	43.8	108	120	5	6.5	30.0	33.0	5	12	5	7	0
40 FT	14	16	12	8	5	7	5	6	42.0	34.0	34.0	5	13	28.0	31.0	5	13	19.0	20.0	5	7	5	6.5	43.6	108	120	5	6.5	30.0	33.0	5	12	5	7	0
42 FT	15	17	12	8	5	7	5	6	47.6	35.0	35.0	5	13	33.0	36.0	5	13	24.0	25.0	5	7	5	6.5	44.3	109	121	5	6.5	30.0	33.0	5	12	5	7	0
44 FT	15	17	13	8	5	6.5	5	6	47.6	35.0	35.0	5	13	33.0	36.0	5	13	24.0	25.0	5	6.5	5	6	44.0	109	121	5	6	30.0	33.0	5	12	5	6.5	0
46 FT	15	17	13	8	5	6	5	6	47.6	35.0	35.0	5	12	33.0	36.0	5	12	24.0	25.0	5	6	5	6	43.9	109	121	5	6	30.0	33.0	5	12	5	6.5	0
48 FT	16	18	13	8	5	6.5	5	6	48.3	36.0	36.0	5	13	33.0	35.0	5	13	24.0	25.0	5	6.5	5	6	44.5	110	122	5	6	30.0	33.0	5	12	5	6.5	0
50 FT	16	18	14	8	5	6	5	6	48.3	36.0	36.0	5	12	33.0	35.0	5	12	24.0	25.0	5	6	5	6	44.3	110	122	6	8.5	32.0	37.0	5	12	5	6.5	0

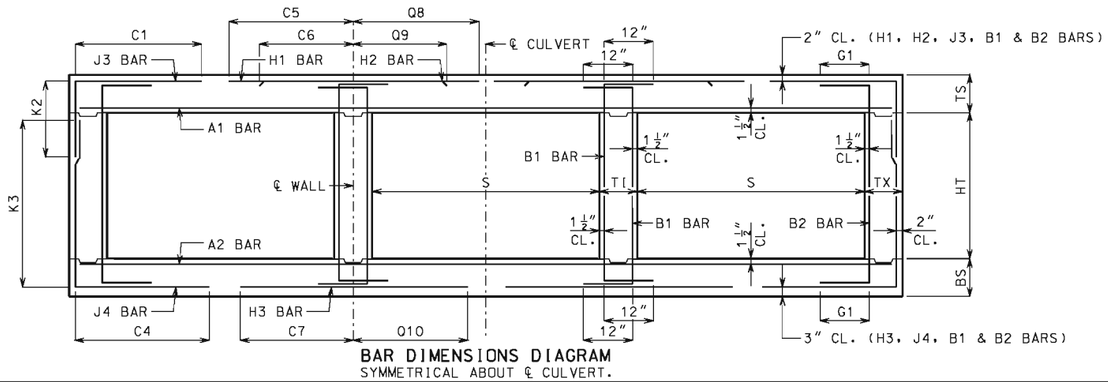

BAR DIMENSIONS DIAGRAM
SYMMETRICAL ABOUT ℄ CULVERT.

GENERAL NOTES:

IF DESIGN FILL IS BETWEEN TABULATED DESIGN FILLS, USE THE NEXT GREATER TABULATED DESIGN FILL, EXCEPT FOR DESIGN FILLS BETWEEN 2 FEET AND 4 FEET. FOR DESIGN FILLS BETWEEN 2 FEET AND 4 FEET USE THE GREATER MEMBER THICKNESS, AREA OF REINFORCEMENT AND BAR DIMENSIONS FROM THE 2 FEET AND 4 FEET TABULATED DESIGN FILLS. AREA OF REINFORCEMENT EQUALS BAR AREA PER FOOT SPACING.

SPECIAL DESIGNS ARE REQUIRED WHEN THE DESIGN FILL IS LESS THAN 1 FOOT OR GREATER THAN 50 FEET.

DIMENSIONS ARE IN INCHES UNLESS OTHERWISE SPECIFIED.

DESIGN FILLS ARE MEASURED FROM THE TOP OF TOP SLAB TO THE TOP OF EARTH FILL OR ROADWAY.

CULVERTS MEET STRENGTH AND SERVICEABILITY REQUIREMENTS FOR THE DESIGN VEHICULAR LIVE LOAD HL-93 MINUS THE LANE LOAD.

MISSOURI HIGHWAYS AND TRANSPORTATION COMMISSION
105 WEST CAPITOL
JEFFERSON CITY, MO 65102
1-888-ASK-MODOT (1-888-275-6636)

STATE OF MISSOURI
DENNIS W. HECKMAN
NUMBER PE-27141
PROFESSIONAL ENGINEER
THIS SHEET HAS BEEN SIGNED, SEALED AND DATED ELECTRONICALLY.

CONCRETE TRIPLE BOX CULVERT

MEMBER THICKNESS BAR SIZE, SPACING & DIMENSIONS

SPAN (S): 6 FEET
HEIGHT (HT): 8 THRU 9 FEET

DATE EFFECTIVE: 12/01/2011
DATE PREPARED: 9/29/2011

703.87

SHEET NO. 7 OF 27

IF A SEAL IS PRESENT ON THIS SHEET IT HAS BEEN ELECTRONICALLY SEALED AND DATED.

SPAN (S) = 7 FT HEIGHT (HT) = 4 FT OR 5 FT OR 6 FT

DESIGN FILL	MEMBER THICKNESS				TOP SLAB BARS														BOTTOM SLAB BARS												WALL BARS				
					A1 BARS		J3 BARS						H1 BARS				H2 BARS				A2 BARS		J4 BARS					H3 BARS				B1 BARS		B2 BARS		
	TS	BS	TX	TI	SIZE	SPA.	SIZE	SPA.	C1	K2			SIZE	SPA.	C5	Q8	SIZE	SPA.	C6	Q9	SIZE	SPA.	SIZE	SPA.	C4	K3			SIZE	SPA.	C7	Q10	SIZE	SPA.	SIZE	SPA.	G1
										HT=4′	HT=5′	HT=6′														HT=4′	HT=5′	HT=6′								
1 FT	12	8	8	8	5	7.5	4	8.5	41.1	28.0	28.0	28.0	4	16	72.5	54.5	4	16	25.0	25.0	4	8.5	4	7.5	42.5	52	64	76	4	6	36.0	37.0	5	12	5	12	12
2 FT	12	8	8	8	5	7.5	4	8.5	41.1	28.0	28.0	28.0	4	15	72.5	54.5	4	15	24.0	24.0	4	7.5	4	7	39.0	52	64	76	5	7.5	35.0	37.0	5	12	5	12	12
4 FT	8	8	8	8	4	6	4	6.5	39.5	24.0	24.0	24.0	5	17	47.0	58.0	5	17	23.0	23.0	4	7	4	7	36.0	52	64	76	5	7	35.0	37.0	5	12	5	12	12
6 FT	8	8	8	8	4	6.5	4	7	36.0	24.0	24.0	24.0	5	17	38.0	42.0	5	17	22.0	22.0	4	6.5	4	6.5	33.4	52	64	76	5	6.5	34.0	36.0	5	12	5	12	12
8 FT	8	8	8	8	4	6.5	4	6.5	33.5	24.0	24.0	24.0	5	17	36.0	38.0	5	17	23.0	22.0	5	9	4	6	32.0	52	64	76	5	6	33.0	35.0	5	12	5	12	0
10 FT	8	9	8	8	4	6	5	7	32.3	24.0	24.0	24.0	5	16	35.0	37.0	5	16	23.0	23.0	5	9	4	7	30.9	53	65	77	5	6.5	33.0	35.0	5	12	5	12	0
12 FT	8	9	8	8	4	6	5	6	31.4	24.0	24.0	24.0	5	14	34.0	36.0	5	14	23.0	23.0	5	7.5	4	6	30.1	53	65	77	5	6	32.0	35.0	5	12	5	12	0
14 FT	9	10	8	8	5	8.5	4	6	30.5	25.0	25.0	25.0	5	15	33.0	36.0	5	15	23.0	23.0	5	7.5	4	7	29.5	54	66	78	5	6	32.0	36.0	5	12	5	12	0
16 FT	10	11	8	8	5	8	5	8	29.9	26.0	26.0	26.0	5	15	33.0	36.0	5	15	22.0	22.0	5	7.5	4	7	29.0	55	67	79	5	6.5	32.0	36.0	5	12	5	12	0
18 FT	10	11	8	8	5	8	5	7.5	29.5	26.0	26.0	26.0	5	15	33.0	36.0	5	15	23.0	24.0	5	6	4	6.5	28.6	55	67	79	5	6	32.0	36.0	5	12	5	12	0
20 FT	11	12	8	8	5	7.5	5	8.5	29.1	27.0	27.0	27.0	5	14	32.0	36.0	5	14	22.0	23.0	5	6.5	4	6.5	28.4	56	68	80	5	6	31.0	36.0	5	12	5	12	0
22 FT	12	13	8	8	5	7	5	8.5	28.9	28.0	28.0	28.0	5	13	32.0	36.0	5	13	21.0	22.0	5	6.5	4	6	28.3	57	69	81	5	6	31.0	36.0	5	12	5	12	0
24 FT	12	13	8	8	5	7	5	8.5	27.6	28.0	28.0	28.0	5	13	31.0	36.0	5	13	21.0	22.0	5	6	4	6	27.1	57	69	81	6	8	34.0	39.0	5	12	5	12	0
26 FT	13	14	8	8	5	6.5	5	8.5	27.5	29.0	29.0	29.0	5	12	31.0	36.0	5	12	20.0	21.0	5	6.5	4	6	27.1	58	70	82	5	6	31.0	36.0	5	12	5	12	0
28 FT	13	15	8	8	5	6.5	5	8.5	27.6	29.0	29.0	29.0	5	12	31.0	36.0	5	12	21.0	22.0	5	6.5	4	6.5	27.0	59	71	83	5	6	31.0	37.0	5	12	5	12	0
30 FT	14	15	8	8	5	6	5	8.5	27.5	30.0	30.0	34.0	5	12	31.0	36.0	5	12	20.0	21.0	5	6	5	8.5	27.1	59	71	83	6	8	34.0	39.0	5	12	5	12	0
32 FT	15	16	8	8	5	6	5	8	32.5	31.0	31.0	35.0	6	17	39.0	45.0	6	17	29.0	30.0	5	6	5	8	27.3	60	72	84	6	8	34.0	40.0	5	12	5	12	0
34 FT	15	17	8	8	5	6	5	8	32.6	31.0	31.0	31.0	6	16	39.0	45.0	6	16	29.0	30.0	5	6	4	6	27.3	61	73	85	6	8.5	34.0	40.0	5	12	5	11.5	0
36 FT	16	17	8	8	5	6	5	7	32.5	32.0	32.0	36.0	6	16	39.0	45.0	6	16	29.0	30.0	6	8.5	5	7	27.4	61	73	85	6	8	34.0	40.0	5	12	5	11	0
38 FT	16	18	8	8	6	8	5	7	32.6	32.0	36.0	36.0	6	15	39.0	45.0	6	15	29.0	30.0	5	6	5	6.5	27.4	62	74	86	6	8	34.0	40.0	5	12	5	10	0
40 FT	17	18	8	8	6	8	5	6.5	32.6	37.0	37.0	37.0	6	16	39.0	45.0	6	16	29.0	30.0	6	8	5	6.5	27.6	62	74	86	6	7.5	34.0	40.0	5	12	5	9.5	0
42 FT	17	19	8	8	6	7.5	5	6.5	32.8	37.0	37.0	37.0	6	15	39.0	45.0	6	15	29.0	30.0	6	8	5	6.5	27.6	63	75	87	6	8	34.0	40.0	5	12	5	9.5	0
44 FT	18	19	8	8	6	7.5	5	6.5	32.6	38.0	38.0	38.0	6	15	39.0	45.0	6	15	29.0	30.0	6	7.5	5	6.5	27.8	63	75	87	6	7.5	34.0	40.0	5	12	5	9.5	0
46 FT	18	20	8	8	6	7.5	5	6.5	32.8	38.0	38.0	38.0	6	15	39.0	44.0	6	15	29.0	30.0	6	8	5	6	27.8	64	76	88	6	7.5	34.0	40.0	5	12	5	9.5	0
48 FT	19	20	8	8	6	7.5	5	6	32.8	39.0	39.0	39.0	6	15	39.0	44.0	6	15	29.0	30.0	6	7.5	5	6	27.9	64	76	88	6	7	34.0	40.0	5	12	5	9.5	0
50 FT	19	21	8	8	6	7	5	6	32.9	39.0	39.0	39.0	6	14	39.0	44.0	6	14	29.0	30.0	6	7.5	6	7.5	31.0	65	77	89	6	7.5	34.0	40.0	5	12	5	9	0

SPAN (S) = 7 FT HEIGHT (HT) = 7 FT OR 8 FT

DESIGN FILL	MEMBER THICKNESS				TOP SLAB BARS														BOTTOM SLAB BARS												WALL BARS				
					A1 BARS		J3 BARS						H1 BARS				H2 BARS				A2 BARS		J4 BARS					H3 BARS				B1 BARS		B2 BARS		
	TS	BS	TX	TI	SIZE	SPA.	SIZE	SPA.	C1	K2			SIZE	SPA.	C5	Q8	SIZE	SPA.	C6	Q9	SIZE	SPA.	SIZE	SPA.	C4	K3			SIZE	SPA.	C7	Q10	SIZE	SPA.	SIZE	SPA.	G1
										HT=7′	HT=8′															HT=7′	HT=8′									
1 FT	12	8	8	8	5	7.5	4	8	41.1	28.0	28.0		4	16	72.5	54.5	4	16	25.0	26.0	4	8	4	6	57.4	88	100		4	6	37.0	37.0	5	12	5	12	12
2 FT	12	8	8	8	5	7.5	4	7.5	41.1	28.0	28.0		4	15	72.5	54.5	4	15	25.0	25.0	4	7	5	6.5	51.3	88	100		5	7	36.0	37.0	5	12	5	12	12
4 FT	8	8	9	8	4	6	4	6	41.8	24.0	24.0		5	17	73.5	58.0	5	17	23.0	23.0	4	7	4	6.5	45.9	88	100		5	7	35.0	37.0	5	12	5	12	12
6 FT	8	8	9	8	4	6.5	4	6	44.3	24.0	24.0		5	17	40.0	43.0	5	17	22.0	22.0	4	6.5	5	6.5	41.8	88	100		5	6.5	34.0	36.0	5	12	5	12	12
8 FT	8	8	9	8	4	6.5	4	6	40.9	24.0	24.0		5	17	37.0	38.0	5	17	22.0	23.0	5	9	5	6	39.9	88	100		5	6	33.0	35.0	5	12	5	12	0
10 FT	8	9	9	8	4	6	5	6.5	39.1	24.0	28.0		5	16	35.0	37.0	5	16	23.0	23.0	5	9	5	7	39.4	89	101		5	6.5	33.0	36.0	5	12	5	12	0
12 FT	8	9	9	8	4	6	6	7	41.0	24.0	28.0		5	15	34.0	36.0	5	15	23.0	24.0	5	7	5	6	38.3	89	101		5	6	32.0	35.0	5	12	5	12	0
14 FT	9	10	9	8	5	8.5	5	6	37.8	25.0	29.0		5	15	34.0	36.0	5	15	23.0	23.0	5	7.5	5	6.5	37.9	90	102		5	6	32.0	36.0	5	12	5	12	0
16 FT	10	11	9	8	5	8	5	7	37.4	26.0	30.0		5	15	33.0	36.0	5	15	22.0	22.0	5	7.5	5	7	37.6	91	103		5	6.5	32.0	36.0	5	12	5	12	0
18 FT	10	11	9	8	5	8	5	6.5	36.8	30.0	30.0		5	15	33.0	36.0	5	15	23.0	23.0	5	6	5	6.5	36.9	91	103		5	6	32.0	36.0	5	12	5	12	0
20 FT	11	12	9	8	5	7.5	5	6.5	36.8	31.0	31.0		5	14	32.0	36.0	5	14	21.0	22.0	5	7	5	6.5	37.0	92	104		5	6	32.0	36.0	5	12	5	11	0
22 FT	11	13	9	8	5	7	5	6	36.5	31.0	31.0		5	14	32.0	35.0	5	14	22.0	23.0	5	7	5	7	37.0	93	105		5	6	32.0	36.0	5	12	5	10	0
24 FT	12	13	9	8	5	7	5	7	34.8	32.0	32.0		5	13	31.0	35.0	5	13	21.0	22.0	5	6	5	7	35.0	93	105		6	8	34.0	39.0	5	12	5	10.5	0
26 FT	13	14	9	8	5	7	5	7	34.9	33.0	33.0		5	12	31.0	35.0	5	12	20.0	21.0	5	6.5	5	7.5	35.3	94	106		5	6	31.0	36.0	5	12	5	9.5	0
28 FT	13	15	9	8	5	6.5	5	6.5	34.9	33.0	33.0		5	12	31.0	35.0	5	12	21.0	22.0	5	6.5	5	7.5	35.4	95	107		5	6	31.0	36.0	5	12	5	9	0
30 FT	14	15	9	8	5	6.5	5	7	35.0	34.0	34.0		5	12	31.0	35.0	5	12	20.0	21.0	5	6	5	7	35.4	95	107		6	8	34.0	39.0	5	12	5	8.5	0
32 FT	14	16	9	8	5	6	5	6	35.0	34.0	34.0		5	12	31.0	35.0	5	12	20.0	21.0	5	6	5	7	35.5	96	108		6	8	35.0	39.0	5	12	5	8.5	0
34 FT	15	17	10	8	5	6	5	7	40.8	35.0	35.0		6	16	40.0	44.0	6	16	29.0	30.0	5	6	5	7.5	36.0	97	109		6	8.5	35.0	40.0	5	12	5	8.5	0
36 FT	16	17	10	8	5	6	5	7	40.8	36.0	36.0		6	17	39.0	44.0	6	17	29.0	30.0	5	6	5	7.5	36.0	97	109		6	8	35.0	40.0	5	12	5	8	0
38 FT	16	18	11	8	5	6	5	7	41.5	36.0	36.0		6	16	39.0	44.0	6	16	29.0	30.0	5	6	5	7	36.5	98	110		6	8	35.0	40.0	5	12	5	8.5	0
40 FT	17	18	11	8	5	6	5	7	41.5	37.0	37.0		6	16	39.0	43.0	6	16	29.0	30.0	6	8	5	7	36.5	98	110		6	7.5	35.0	40.0	5	12	5	8	0
42 FT	17	19	11	8	6	8	5	6.5	41.6	37.0	37.0		6	16	39.0	43.0	6	16	29.0	30.0	6	8.5	5	7	36.8	99	111		6	7.5	35.0	40.0	5	12	5	7.5	0
44 FT	18	19	12	8	6	8	5	6.5	42.3	38.0	38.0		6	16	39.0	43.0	6	16	29.0	29.0	6	8	5	6.5	37.0	99	111		6	7.5	35.0	40.0	5	12	5	8	0
46 FT	18	20	12	8	6	8	5	6.5	42.4	38.0	38.0		6	15	39.0	43.0	6	15	29.0	29.0	6	8	5	6.5	37.1	100	112		6	7.5	35.0	40.0	5	12	5	7.5	0
48 FT	18	20	12	8	6	7.5	5	6.5	42.4	38.0	38.0		6	15	39.0	43.0	6	15	29.0	29.0	6	7.5	5	6.5	37.1	100	112		6	7	35.0	40.0	5	12	5	7.5	0
50 FT	19	21	12	8	6	7.5	5	6	42.5	39.0	39.0		6	15	39.0	43.0	6	15	28.0	29.0	6	8	5	6.5	37.5	101	113		6	7.5	35.0	40.0	5	12	5	7	0

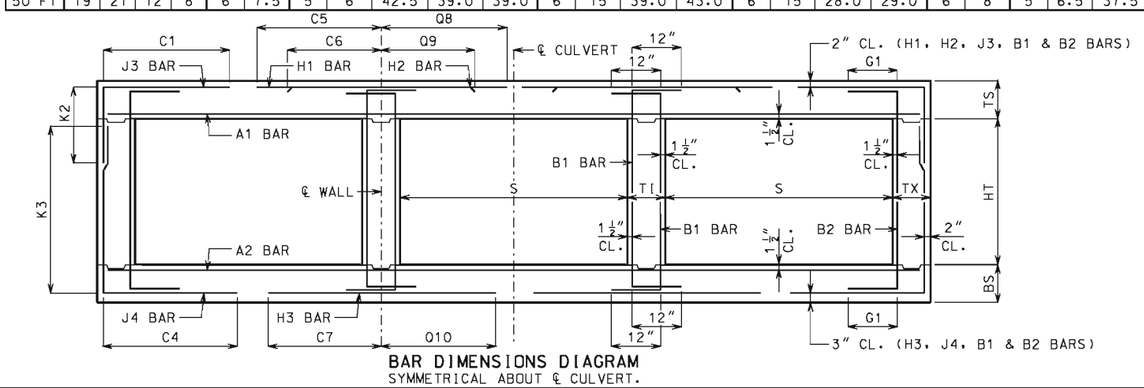

BAR DIMENSIONS DIAGRAM
SYMMETRICAL ABOUT ℄ CULVERT.

GENERAL NOTES:

IF DESIGN FILL IS BETWEEN TABULATED DESIGN FILLS, USE THE NEXT GREATER TABULATED DESIGN FILL, EXCEPT FOR DESIGN FILLS BETWEEN 2 FEET AND 4 FEET. FOR DESIGN FILLS BETWEEN 2 FEET AND 4 FEET USE THE GREATER MEMBER THICKNESS. AREA OF REINFORCEMENT AND BAR DIMENSIONS FROM THE 2 FEET AND 4 FEET TABULATED DESIGN FILLS. AREA OF REINFORCEMENT EQUALS BAR AREA PER FOOT SPACING.

SPECIAL DESIGNS ARE REQUIRED WHEN THE DESIGN FILL IS LESS THAN 1 FOOT OR GREATER THAN 50 FEET.

DIMENSIONS ARE IN INCHES UNLESS OTHERWISE SPECIFIED.

DESIGN FILLS ARE MEASURED FROM THE TOP OF TOP SLAB TO THE TOP OF EARTH FILL OR ROADWAY.

CULVERTS MEET STRENGTH AND SERVICEABILITY REQUIREMENTS FOR THE DESIGN VEHICULAR LIVE LOAD HL-93 MINUS THE LANE LOAD.

IF A SEAL IS PRESENT ON THIS SHEET IT HAS BEEN ELECTRONICALLY SEALED AND DATED.

MISSOURI HIGHWAYS AND TRANSPORTATION COMMISSION
105 WEST CAPITOL
JEFFERSON CITY, MO 65102
1-888-ASK-MODOT (1-888-275-6636)

STATE OF MISSOURI
DENNIS W. HECKMAN
NUMBER PE-27141
PROFESSIONAL ENGINEER
THIS SHEET HAS BEEN SIGNED, SEALED AND DATED ELECTRONICALLY.

CONCRETE TRIPLE BOX CULVERT

MEMBER THICKNESS BAR SIZE, SPACING & DIMENSIONS

SPAN (S): 7 FEET
HEIGHT (HT): 4 THRU 8 FEET

DATE EFFECTIVE: 12/01/2011
DATE PREPARED: 9/29/2011

703.87

SPAN (S) = 7 FT HEIGHT (HT) = 9 FT OR 10 FT

DESIGN FILL	MEMBER THICKNESS				TOP SLAB BARS														BOTTOM SLAB BARS										WALL BARS				
					A1 BARS		J3 BARS					H1 BARS				H2 BARS				A2 BARS		J4 BARS				H3 BARS				B1 BARS		B2 BARS	
	TS	BS	TX	TI	SIZE	SPA.	SIZE	SPA.	C1	K2 HT=9'	K2 HT=10'	SIZE	SPA.	C5	Q8	SIZE	SPA.	C6	Q9	SIZE	SPA.	SIZE	SPA.	C4	K3 HT=9'	K3 HT=10'	SIZE	SPA.	C7	Q10	SIZE	SPA.	SIZE	SPA.	G1
1 FT	12	9	8	8	5	7.5	5	9	41.1	28.0	32.0	4	16	72.5	54.5	4	16	26.0	27.0	4	8	5	6	60.0	113	125	4	7	58.0	38.0	5	12	5	12	12
2 FT	12	9	8	8	5	7	5	8.5	41.1	28.0	32.0	4	15	72.5	54.5	4	15	25.0	26.0	4	7.5	6	7	63.0	113	125	4	6.5	39.0	38.0	5	12	5	12	12
4 FT	8	9	9	8	4	6	5	6	44.8	24.0	28.0	5	17	75.5	58.0	5	17	23.0	23.0	4	7	5	6	60.8	113	125	4	6	37.0	38.0	5	12	5	11	12
6 FT	8	9	10	8	4	6.5	5	6.5	59.1	24.0	28.0	5	17	45.0	43.0	5	17	22.0	22.0	4	7	5	6.5	56.3	113	125	5	7.5	34.0	37.0	5	12	5	11	12
8 FT	8	9	10	8	4	6.5	5	6.5	50.8	28.0	28.0	5	17	38.0	38.0	5	17	22.0	22.0	4	6.5	5	6	51.8	113	125	5	7	33.0	36.0	5	12	5	10.5	0
10 FT	8	9	10	8	4	6	6	7.5	50.9	28.0	32.0	5	16	36.0	37.0	5	16	23.0	23.0	5	9	6	6.5	52.6	113	125	5	6	33.0	36.0	5	12	5	9.5	0
12 FT	8	10	10	8	4	6	6	6.5	48.5	28.0	32.0	5	15	35.0	36.0	5	15	23.0	24.0	5	8.5	6	7	53.1	114	126	5	6.5	33.0	36.0	5	12	5	9	0
14 FT	9	10	10	8	5	8.5	5	6	46.4	29.0	29.0	5	16	34.0	36.0	5	16	23.0	23.0	5	8	6	7	51.3	114	126	5	6	33.0	36.0	5	12	5	8.5	0
16 FT	9	11	10	8	5	8	5	6	44.8	29.0	29.0	5	15	33.0	35.0	5	15	23.0	24.0	5	7.5	6	7	51.8	115	127	5	6	33.0	36.0	5	12	5	8	0
18 FT	10	12	10	8	5	8	5	6.5	45.3	30.0	30.0	5	15	33.0	35.0	5	15	22.0	23.0	5	7.5	6	7	51.8	116	128	5	6.5	33.0	36.0	5	12	5	8	0
20 FT	11	12	10	8	5	7.5	5	6	46.1	31.0	31.0	5	14	33.0	35.0	5	14	21.0	22.0	5	7	6	6.5	50.8	116	128	5	6	33.0	36.0	5	12	5	8	0
22 FT	11	13	10	8	5	7.5	5	6	45.4	31.0	31.0	5	14	32.0	35.0	5	14	22.0	23.0	5	7	6	6.5	51.4	117	129	5	6	33.0	36.0	5	12	5	8	0
24 FT	12	13	10	8	5	7	5	6	43.4	32.0	32.0	5	13	31.0	35.0	5	13	21.0	22.0	5	6	6	6.5	48.0	117	129	6	8	35.0	39.0	5	12	5	8	0
26 FT	12	14	10	8	5	7	6	7.5	46.1	32.0	36.0	5	13	31.0	35.0	5	13	21.0	22.0	5	6.5	6	7	48.6	118	130	6	8.5	35.0	39.0	5	12	5	8	0
28 FT	13	15	11	8	5	6.5	5	6	43.6	33.0	33.0	5	12	31.0	35.0	5	12	20.0	21.0	5	6.5	5	6.5	45.9	119	131	5	6	32.0	36.0	5	12	5	7.5	0
30 FT	14	15	11	8	5	6.5	5	6	44.3	34.0	34.0	5	12	31.0	35.0	5	12	20.0	21.0	5	6	5	6	45.5	119	131	6	8	35.0	39.0	5	12	5	7.5	0
32 FT	14	16	12	8	5	6.5	5	6	44.1	34.0	34.0	5	12	31.0	34.0	5	12	20.0	21.0	5	6.5	5	6	45.9	120	132	6	8	35.0	40.0	5	12	5	7	0
34 FT	15	17	12	8	5	6.5	5	6	49.6	35.0	35.0	6	17	40.0	43.0	6	17	29.0	30.0	5	6.5	5	6.5	46.5	121	133	6	8	36.0	40.0	5	12	5	7	0
36 FT	15	17	13	8	5	6	5	6	49.6	35.0	35.0	6	16	40.0	43.0	6	16	29.0	30.0	5	6	5	6	46.0	121	133	6	7.5	35.0	40.0	5	12	5	6.5	0
38 FT	16	18	13	8	5	6	6	8.5	54.1	36.0	36.0	6	16	40.0	43.0	6	16	29.0	29.0	5	6	5	6	46.6	122	134	6	8	36.0	40.0	5	12	5	6.5	0
40 FT	16	18	13	8	6	8.5	6	8	54.0	36.0	36.0	6	15	40.0	43.0	6	15	29.0	30.0	5	6	5	6	46.5	122	134	6	7.5	36.0	40.0	5	12	5	6.5	0
42 FT	17	19	14	8	5	6	6	8	54.8	37.0	37.0	6	16	39.0	42.0	6	16	29.0	29.0	5	6	5	6	46.9	123	135	6	7.5	36.0	40.0	5	12	5	6	0
44 FT	17	19	14	8	6	8	6	8	54.6	37.0	37.0	6	15	39.0	42.0	6	15	29.0	29.0	6	8	5	6	46.8	123	135	6	7	36.0	40.0	5	12	5	6	0
46 FT	18	20	14	8	6	8	6	7.5	55.3	38.0	38.0	6	16	39.0	42.0	6	16	28.0	29.0	6	8	5	6	47.3	124	136	6	7.5	36.0	40.0	5	12	5	6	0
48 FT	18	20	15	8	6	7.5	6	8	55.4	38.0	42.0	6	15	39.0	42.0	6	15	28.0	29.0	6	7.5	6	8	50.0	124	136	6	7	36.0	40.0	5	12	6	8.5	0
50 FT	18	21	15	8	6	7	6	7.5	55.4	38.0	42.0	6	14	39.0	42.0	6	14	28.0	29.0	6	8	6	8	50.6	125	137	6	7	36.0	40.0	5	12	6	8	0

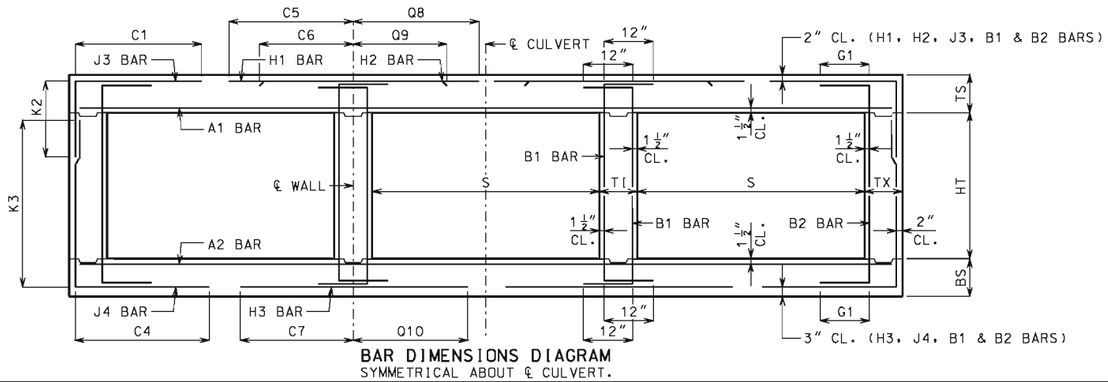

BAR DIMENSIONS DIAGRAM
SYMMETRICAL ABOUT ℄ CULVERT.

GENERAL NOTES:

IF DESIGN FILL IS BETWEEN TABULATED DESIGN FILLS, USE THE NEXT GREATER TABULATED DESIGN FILL, EXCEPT FOR DESIGN FILLS BETWEEN 2 FEET AND 4 FEET. FOR DESIGN FILLS BETWEEN 2 FEET AND 4 FEET USE THE GREATER MEMBER THICKNESS, AREA OF REINFORCEMENT AND BAR DIMENSIONS FROM THE 2 FEET AND 4 FEET TABULATED DESIGN FILLS. AREA OF REINFORCEMENT EQUALS BAR AREA PER FOOT SPACING.

SPECIAL DESIGNS ARE REQUIRED WHEN THE DESIGN FILL IS LESS THAN 1 FOOT OR GREATER THAN 50 FEET.

DIMENSIONS ARE IN INCHES UNLESS OTHERWISE SPECIFIED.

DESIGN FILLS ARE MEASURED FROM THE TOP OF TOP SLAB TO THE TOP OF EARTH FILL OR ROADWAY.

CULVERTS MEET STRENGTH AND SERVICEABILITY REQUIREMENTS FOR THE DESIGN VEHICULAR LIVE LOAD HL-93 MINUS THE LANE LOAD.

MISSOURI HIGHWAYS AND TRANSPORTATION COMMISSION
105 WEST CAPITOL
JEFFERSON CITY, MO 65102
1-888-ASK-MODOT (1-888-275-6636)

STATE OF MISSOURI
DENNIS W. HECKMAN
NUMBER PE-27141
PROFESSIONAL ENGINEER
THIS SHEET HAS BEEN SIGNED, SEALED AND DATED ELECTRONICALLY.

CONCRETE TRIPLE BOX CULVERT

MEMBER THICKNESS BAR SIZE, SPACING & DIMENSIONS

SPAN (S): 7 FEET
HEIGHT (HT): 9 THRU 10 FEET

DATE EFFECTIVE: 12/01/2011
DATE PREPARED: 9/29/2011

703.87

SHEET NO. 9 OF 27

IF A SEAL IS PRESENT ON THIS SHEET IT HAS BEEN ELECTRONICALLY SEALED AND DATED.

SPAN (S) = 8 FT HEIGHT (HT) = 4 FT OR 5 FT OR 6 FT

DESIGN FILL	MEMBER THICKNESS				TOP SLAB BARS														BOTTOM SLAB BARS												WALL BARS				
					A1 BARS		J3 BARS						H1 BARS				H2 BARS				A2 BARS		J4 BARS					H3 BARS				B1 BARS		B2 BARS		
	TS	BS	TX	TI	SIZE	SPA.	SIZE	SPA.	C1	K2 HT=4′	K2 HT=5′	K2 HT=6′	SIZE	SPA.	C5	Q8	SIZE	SPA.	C6	Q9	SIZE	SPA.	SIZE	SPA.	C4	K3 HT=4′	K3 HT=5′	K3 HT=6′	SIZE	SPA.	C7	Q10	SIZE	SPA.	SIZE	SPA.	G1
1 FT	12	8	8	8	5	7	4	8.5	44.8	28.0	28.0	28.0	4	13	81.5	60.5	4	13	27.0	23.0	4	7.5	4	6.5	42.0	52	64	76	5	7	39.0	40.0	5	12	5	12	12
2 FT	12	8	8	8	5	7	4	8.5	44.8	28.0	28.0	28.0	4	12	81.5	60.5	4	12	26.0	25.0	4	6.5	4	6	38.8	52	64	76	5	6.5	38.0	40.0	5	12	5	12	12
4 FT	8	8	8	8	4	6	5	6	40.6	24.0	24.0	24.0	5	16	50.0	64.0	5	16	27.0	27.0	4	6	4	6	35.4	52	64	76	5	6	38.0	40.0	5	11	5	12	12
6 FT	8	8	8	8	4	6	5	6.5	36.5	28.0	24.0	28.0	5	15	42.0	45.0	5	15	26.0	26.0	5	8.5	5	6.5	33.5	52	64	76	6	7	39.0	41.0	5	12	5	12	12
8 FT	8	9	8	8	4	6	5	6	34.4	24.0	24.0	24.0	5	14	39.0	41.0	5	14	25.0	25.0	5	8	4	6.5	31.9	53	65	77	5	6	36.0	39.0	5	12	5	12	0
10 FT	9	10	8	8	5	8.5	4	6	32.6	25.0	25.0	25.0	5	15	38.0	41.0	5	15	25.0	25.0	5	8	4	7.5	30.5	54	66	78	5	6	35.0	39.0	5	12	5	12	0
12 FT	9	10	8	8	5	8.5	5	6.5	31.6	25.0	25.0	25.0	5	14	37.0	40.0	5	14	24.0	25.0	5	7	4	6.5	29.8	54	66	78	6	7	38.0	42.0	5	12	5	12	0
14 FT	10	11	8	8	5	8	5	7.5	30.5	26.0	26.0	26.0	5	14	36.0	40.0	5	14	24.0	25.0	5	6.5	4	6.5	29.0	55	67	79	5	6	34.0	39.0	5	12	5	12	0
16 FT	11	12	8	8	5	7.5	5	8.5	29.6	27.0	27.0	27.0	5	14	35.0	40.0	5	14	24.0	25.0	5	6.5	4	6.5	28.4	56	68	80	5	6	34.0	39.0	5	12	5	12	0
18 FT	11	13	8	8	5	7.5	5	8	29.5	27.0	27.0	27.0	5	13	35.0	39.0	5	13	24.0	25.0	5	6	4	6.5	27.6	57	69	81	6	8	37.0	43.0	5	12	5	12	0
20 FT	12	14	8	8	5	7	5	8.5	28.8	28.0	28.0	28.0	5	13	35.0	39.0	5	13	24.0	25.0	5	6	4	6.5	27.3	58	70	82	6	8	36.0	43.0	5	12	5	12	0
22 FT	13	14	8	8	5	6.5	5	8.5	28.1	29.0	29.0	29.0	5	12	34.0	40.0	5	12	23.0	24.0	6	8	4	6	27.4	58	70	82	6	7.5	37.0	43.0	5	12	5	12	0
24 FT	14	15	8	8	5	6	5	8.5	27.9	30.0	30.0	30.0	5	12	34.0	40.0	5	12	22.0	23.0	6	8	4	6	27.3	59	71	83	6	7.5	36.0	43.0	5	12	5	12	0
26 FT	15	16	8	8	6	8.5	5	8	32.6	31.0	31.0	31.0	6	16	42.0	49.0	6	16	30.0	32.0	6	8	4	6	27.3	60	72	84	6	7.5	36.0	43.0	5	12	5	12	0
28 FT	15	16	8	8	6	8	5	8	31.6	31.0	31.0	31.0	6	16	42.0	48.0	6	16	31.0	32.0	6	7.5	4	6	26.1	60	72	84	6	7	36.0	43.0	5	12	5	12	0
30 FT	16	17	8	8	6	8	5	7	31.5	32.0	32.0	32.0	6	15	42.0	48.0	6	15	30.0	31.0	6	7.5	4	6	26.3	61	73	85	6	7	36.0	43.0	5	12	5	12	0
32 FT	16	18	8	8	6	7.5	5	7	31.6	32.0	36.0	36.0	6	15	42.0	48.0	6	15	31.0	32.0	6	7.5	5	6.5	26.1	62	74	86	6	7	36.0	43.0	5	12	5	12	0
34 FT	17	19	8	8	6	7.5	5	6.5	31.6	37.0	37.0	37.0	6	14	42.0	48.0	6	14	30.0	31.0	6	7.5	5	6.5	26.3	63	75	87	6	7	36.0	43.0	5	12	5	11.5	0
36 FT	18	19	8	8	6	7.5	5	6.5	31.5	38.0	38.0	38.0	6	14	42.0	48.0	6	14	30.0	31.0	6	7.5	5	6.5	26.4	63	75	87	6	7	36.0	43.0	5	12	5	10.5	0
38 FT	18	20	8	8	6	7	5	6.5	31.6	38.0	38.0	38.0	6	13	42.0	48.0	6	13	30.0	31.0	6	7.5	5	6	26.4	64	76	88	6	7	36.0	43.0	5	12	5	10	0
40 FT	19	20	8	8	6	7	5	6	31.6	39.0	39.0	39.0	6	13	42.0	48.0	6	13	29.0	31.0	6	6.5	5	6	26.5	64	76	88	6	6.5	36.0	43.0	5	12	5	9.5	0
42 FT	19	21	8	8	6	6	5	6	31.8	39.0	39.0	39.0	6	12	42.0	48.0	6	12	30.0	31.0	6	7	6	7.5	29.6	65	77	89	6	6.5	36.0	43.0	5	12	5	9.5	0
44 FT	20	22	8	8	6	6.5	6	7.5	35.9	44.0	44.0	44.0	6	13	41.0	48.0	6	13	29.0	30.0	6	7	6	7	29.8	66	78	90	6	6.5	36.0	43.0	5	12	5	9.5	0
46 FT	21	22	8	8	6	6.5	6	7	35.8	45.0	45.0	45.0	6	13	41.0	48.0	6	13	29.0	30.0	6	6.5	6	7	29.9	66	78	90	6	6.5	36.0	43.0	5	12	5	9.5	0
48 FT	21	23	8	8	6	6.5	6	7	36.0	45.0	45.0	45.0	6	13	41.0	48.0	6	13	29.0	30.0	6	7	6	6.5	30.0	67	79	91	6	6.5	36.0	43.0	5	12	5	9.5	0
50 FT	22	23	8	8	6	6.5	6	6.5	35.9	46.0	46.0	46.0	6	13	41.0	47.0	6	13	29.0	30.0	6	6.5	6	6.5	30.1	67	79	91	6	6	36.0	43.0	5	12	5	9	0

SPAN (S) = 8 FT HEIGHT (HT) = 7 FT OR 8 FT OR 9 FT

DESIGN FILL	MEMBER THICKNESS				TOP SLAB BARS														BOTTOM SLAB BARS												WALL BARS				
					A1 BARS		J3 BARS						H1 BARS				H2 BARS				A2 BARS		J4 BARS					H3 BARS				B1 BARS		B2 BARS		
	TS	BS	TX	TI	SIZE	SPA.	SIZE	SPA.	C1	K2 HT=7′	K2 HT=8′	K2 HT=9′	SIZE	SPA.	C5	Q8	SIZE	SPA.	C6	Q9	SIZE	SPA.	SIZE	SPA.	C4	K3 HT=7′	K3 HT=8′	K3 HT=9′	SIZE	SPA.	C7	Q10	SIZE	SPA.	SIZE	SPA.	G1
1 FT	12	9	8	8	5	7	4	6	44.8	28.0	28.0	28.0	4	13	81.5	60.5	4	13	27.0	25.0	4	7.5	4	6	66.0	89	101	113	5	8	41.0	41.0	5	12	5	12	12
2 FT	12	9	8	8	5	7	4	6	44.8	28.0	28.0	28.0	4	12	81.5	60.5	4	12	26.0	24.0	4	6.5	5	6.5	61.3	89	101	113	5	7.5	39.0	41.0	5	12	5	12	12
4 FT	8	8	8	8	4	6	6	7.5	47.8	28.0	32.0	32.0	5	16	83.5	64.0	5	16	27.0	28.0	5	8.5	6	6	55.0	88	100	112	5	6	38.0	40.0	5	12	5	12	12
6 FT	8	9	8	8	4	6	6	7.5	52.5	24.0	28.0	32.0	5	15	44.0	47.0	5	15	26.0	26.0	5	8.5	6	6.5	52.3	89	101	113	5	6.5	37.0	40.0	5	12	5	12	12
8 FT	8	9	8	8	4	6	6	7.5	47.4	24.0	28.0	32.0	5	14	40.0	42.0	5	14	25.0	25.0	5	7.5	6	6	48.1	89	101	113	5	6	36.0	39.0	5	12	5	11.5	0
10 FT	9	10	8	8	5	8.5	6	7	46.3	25.0	29.0	33.0	5	15	39.0	41.0	5	15	25.0	25.0	5	7.5	6	6.5	46.9	90	102	114	5	6	35.0	39.0	5	12	5	11	0
12 FT	9	10	8	8	5	8.5	6	7	44.8	29.0	33.0	33.0	5	14	37.0	40.0	5	14	24.0	25.0	5	6.5	6	6	45.4	90	102	114	6	7	38.0	42.0	5	12	5	10	0
14 FT	10	11	8	8	5	8	6	6.5	44.1	30.0	30.0	34.0	5	14	37.0	40.0	5	14	24.0	25.0	5	6.5	6	6	44.9	91	103	115	5	6	35.0	39.0	5	12	5	9.5	0
16 FT	11	12	8	8	5	7.5	6	6.5	43.6	31.0	31.0	35.0	5	14	36.0	40.0	5	14	24.0	25.0	5	6.5	6	6.5	44.4	92	104	116	5	6	34.0	39.0	5	12	5	9.5	0
18 FT	11	13	8	8	5	7.5	6	6	42.8	31.0	31.0	35.0	5	13	35.0	39.0	5	13	24.0	25.0	5	6	6	6.5	43.9	93	105	117	6	8	37.0	43.0	5	12	5	9.5	0
20 FT	12	14	8	8	5	7	6	6	42.4	32.0	32.0	36.0	5	13	35.0	39.0	5	13	24.0	25.0	5	6	6	6.5	43.4	94	106	118	6	8	37.0	43.0	5	12	5	9.5	0
22 FT	13	14	8	8	5	6.5	6	6	42.1	33.0	33.0	37.0	5	12	35.0	39.0	5	12	23.0	24.0	6	8	6	6	43.0	94	106	118	6	7.5	37.0	43.0	5	12	5	9	0
24 FT	14	15	10	8	5	6	5	6.5	40.0	34.0	34.0	34.0	5	12	34.0	39.0	5	12	22.0	23.0	6	8.5	5	7	40.4	95	107	119	6	7	37.0	43.0	5	12	5	8	0
26 FT	14	16	10	8	5	6	5	6	39.8	34.0	34.0	34.0	5	12	34.0	39.0	5	12	22.0	24.0	6	8	5	7	40.4	96	108	120	6	7.5	37.0	43.0	5	12	5	8	0
28 FT	15	16	10	8	6	8	5	6.5	43.0	35.0	35.0	35.0	6	16	42.0	48.0	6	16	30.0	32.0	6	7.5	5	7	38.4	96	108	120	6	7	37.0	43.0	5	12	5	8	0
30 FT	15	17	11	8	6	7.5	5	6.5	43.5	31.0	35.0	35.0	6	15	42.0	47.0	6	15	31.0	32.0	6	8	5	7	38.8	97	109	121	6	7	37.0	43.0	5	12	5	8.5	0
32 FT	16	18	11	8	6	8	5	6	43.8	32.0	36.0	36.0	6	15	42.0	47.0	6	15	30.0	32.0	6	8	5	7	39.0	98	110	122	6	7	37.0	43.0	5	12	5	8	0
34 FT	17	19	11	8	6	7.5	5	6	43.9	33.0	37.0	37.0	6	14	42.0	47.0	6	14	30.0	31.0	6	8	5	7	39.3	99	111	123	6	7	37.0	43.0	5	12	5	7.5	0
36 FT	17	19	12	8	6	7	5	6	44.4	33.0	37.0	37.0	6	14	42.0	47.0	6	14	30.0	31.0	6	7.5	5	6.5	39.3	99	111	123	6	6.5	37.0	43.0	5	12	5	8	0
38 FT	18	20	12	8	6	7.5	5	6	44.6	38.0	38.0	38.0	6	13	42.0	47.0	6	13	29.0	31.0	6	7.5	5	6.5	39.6	100	112	124	6	6.5	37.0	43.0	5	12	5	7.5	0
40 FT	19	20	12	8	6	7	5	6	44.6	39.0	39.0	39.0	6	14	42.0	47.0	6	14	29.0	30.0	6	6.5	5	6.5	39.6	100	112	124	6	6.5	37.0	43.0	5	12	5	7	0
42 FT	19	21	12	8	6	7	6	7.5	48.8	39.0	39.0	39.0	6	13	42.0	47.0	6	13	29.0	30.0	6	7	5	6.5	39.8	101	113	125	6	6.5	37.0	43.0	5	12	5	7	0
44 FT	20	22	13	8	6	7	5	6	45.5	40.0	40.0	40.0	6	14	41.0	46.0	6	14	29.0	30.0	6	7	5	6	40.3	102	114	126	6	6.5	37.0	44.0	5	12	5	7	0
46 FT	20	22	13	8	6	6.5	6	8	49.5	40.0	40.0	40.0	6	13	41.0	46.0	6	13	29.0	30.0	6	7	5	6	40.3	102	114	126	6	6	37.0	44.0	5	12	5	6.5	0
48 FT	21	23	13	8	6	6.5	6	8	49.6	41.0	41.0	41.0	6	13	41.0	46.0	6	13	29.0	30.0	6	7	5	6	40.5	103	115	127	6	6.5	37.0	44.0	5	12	5	6.5	0
50 FT	21	23	13	8	6	6.5	6	7	49.6	41.0	41.0	41.0	6	13	41.0	46.0	6	13	29.0	30.0	6	6	5	6	40.5	103	115	127	6	6	37.0	44.0	5	12	5	6.5	0

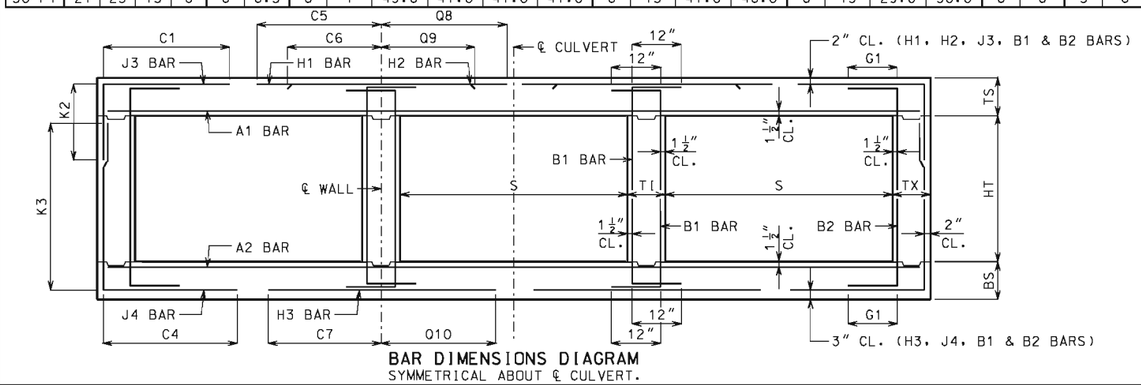

BAR DIMENSIONS DIAGRAM
SYMMETRICAL ABOUT ℄ CULVERT.

GENERAL NOTES:

IF DESIGN FILL IS BETWEEN TABULATED DESIGN FILLS, USE THE NEXT GREATER TABULATED DESIGN FILL, EXCEPT FOR DESIGN FILLS BETWEEN 2 FEET AND 4 FEET. FOR DESIGN FILLS BETWEEN 2 FEET AND 4 FEET USE THE GREATER MEMBER THICKNESS. AREA OF REINFORCEMENT AND BAR DIMENSIONS FROM THE 2 FEET AND 4 FEET TABULATED DESIGN FILLS. AREA OF REINFORCEMENT EQUALS BAR AREA PER FOOT SPACING.

SPECIAL DESIGNS ARE REQUIRED WHEN THE DESIGN FILL IS LESS THAN 1 FOOT OR GREATER THAN 50 FEET.

DIMENSIONS ARE IN INCHES UNLESS OTHERWISE SPECIFIED.

DESIGN FILLS ARE MEASURED FROM THE TOP OF TOP SLAB TO THE TOP OF EARTH FILL OR ROADWAY.

CULVERTS MEET STRENGTH AND SERVICEABILITY REQUIREMENTS FOR THE DESIGN VEHICULAR LIVE LOAD HL-93 MINUS THE LANE LOAD.

IF A SEAL IS PRESENT ON THIS SHEET IT HAS BEEN ELECTRONICALLY SEALED AND DATED.

MISSOURI HIGHWAYS AND TRANSPORTATION COMMISSION
105 WEST CAPITOL
JEFFERSON CITY, MO 65102
1-888-ASK-MODOT (1-888-275-6636)

STATE OF MISSOURI
DENNIS W. HECKMAN
NUMBER PE-27141
PROFESSIONAL ENGINEER
THIS SHEET HAS BEEN SIGNED, SEALED AND DATED ELECTRONICALLY.

CONCRETE TRIPLE BOX CULVERT

MEMBER THICKNESS BAR SIZE, SPACING & DIMENSIONS

SPAN (S): 8 FEET
HEIGHT (HT): 4 THRU 9 FEET

DATE EFFECTIVE: 12/01/2011
DATE PREPARED: 9/29/2011

703.87

SPAN (S) = 8 FT HEIGHT (HT) = 10 FT OR 11 FT

DESIGN FILL	MEMBER THICKNESS				TOP SLAB BARS														BOTTOM SLAB BARS										WALL BARS				
					A1 BARS		J3 BARS					H1 BARS				H2 BARS				A2 BARS		J4 BARS				H3 BARS				B1 BARS		B2 BARS	
	TS	BS	TX	TI	SIZE	SPA.	SIZE	SPA.	C1	K2 HT=10'	K2 HT=11'	SIZE	SPA.	C5	Q8	SIZE	SPA.	C6	Q9	SIZE	SPA.	SIZE	SPA.	C4	K3 HT=10'	K3 HT=11'	SIZE	SPA.	C7	Q10	SIZE	SPA.	SIZE	SPA.	G1
1 FT	12	9	8	9	5	7	5	7	44.9	32.0	32.0	4	13	81.5	61.5	4	13	28.0	26.0	4	6.5	6	6	69.3	125	137	5	7.5	43.0	42.0	5	11.5	5	10	12
2 FT	12	9	9	9	5	7	5	8	45.5	32.0	32.0	4	12	82.5	61.5	4	12	27.0	24.0	4	6.5	6	6.5	70.0	125	137	5	7	41.0	41.0	5	11.5	5	10.5	12
4 FT	8	9	10	9	4	6	6	7	49.1	28.0	28.0	5	16	84.5	65.0	5	16	27.0	27.0	4	6	5	6	65.8	125	137	5	7	39.0	41.0	5	11.5	5	9.5	12
6 FT	8	9	11	9	4	6	5	6	57.1	28.0	28.0	5	16	44.0	44.0	5	16	26.0	26.0	5	9	5	6	56.6	125	137	5	6.5	37.0	39.0	5	11.5	5	9.5	12
8 FT	8	10	11	9	4	6	6	7	54.8	28.0	28.0	5	15	41.0	41.0	5	15	25.0	26.0	5	9	5	6.5	56.4	126	138	5	6.5	37.0	39.0	5	12	5	9	0
10 FT	8	10	11	9	4	6	6	6.5	51.9	28.0	28.0	5	14	39.0	40.0	5	14	25.0	25.0	5	7.5	5	6	54.0	126	138	5	6	36.0	39.0	5	12	5	8.5	0
12 FT	9	11	11	9	5	8.5	6	7	52.5	29.0	29.0	5	14	38.0	39.0	5	14	25.0	25.0	5	7.5	5	6	53.9	127	139	5	6	36.0	39.0	5	12	5	8	0
14 FT	10	11	11	9	5	8	5	6	50.1	30.0	30.0	5	15	37.0	39.0	5	15	25.0	25.0	5	7	5	6	51.9	127	139	5	6	35.0	39.0	5	12	5	7.5	0
16 FT	10	12	11	9	5	7.5	5	6	48.3	30.0	30.0	5	13	36.0	39.0	5	13	24.0	25.0	5	6.5	5	6	52.3	128	140	5	6	35.0	39.0	5	12	5	7.5	0
18 FT	11	13	11	9	5	7.5	5	6.5	48.6	31.0	31.0	5	14	36.0	39.0	5	14	24.0	25.0	5	6.5	6	7	55.0	129	141	6	8	38.0	42.0	5	12	5	7.5	0
20 FT	12	14	11	9	5	7	5	6	48.8	32.0	32.0	5	13	35.0	39.0	5	13	24.0	25.0	5	6.5	6	7	54.9	130	142	6	8	38.0	43.0	5	12	5	7.5	0
22 FT	13	15	11	9	5	6.5	6	8	52.1	33.0	37.0	5	12	35.0	39.0	5	12	23.0	24.0	5	6	6	7	54.9	131	143	6	8	38.0	43.0	5	12	5	7.5	0
24 FT	13	15	12	9	5	6.5	5	6	48.3	33.0	33.0	5	12	35.0	38.0	5	12	23.0	25.0	5	6	6	7.5	53.9	131	143	6	7	38.0	43.0	5	12	5	7	0
26 FT	14	16	12	9	5	6	6	8	51.8	34.0	38.0	5	12	35.0	38.0	5	12	22.0	24.0	5	6	6	7.5	54.1	132	144	6	7.5	38.0	43.0	5	12	5	7	0
28 FT	15	16	12	9	5	6	6	8	56.1	35.0	39.0	6	16	43.0	47.0	6	16	31.0	32.0	6	7.5	6	8	51.0	132	144	6	7	38.0	43.0	5	12	5	7	0
30 FT	15	17	12	9	6	8	6	7	55.9	35.0	39.0	6	16	43.0	47.0	6	16	31.0	32.0	6	8	6	7.5	51.5	133	145	6	7	38.0	43.0	5	12	5	7	0
32 FT	16	18	13	9	6	8	6	8	56.5	36.0	40.0	6	15	42.0	47.0	6	15	30.0	31.0	6	8	6	8.5	51.8	134	146	6	7	38.0	43.0	5	12	5	6.5	0
34 FT	17	19	13	9	6	8	6	7.5	56.9	37.0	41.0	6	14	42.0	47.0	6	14	30.0	31.0	6	8	6	8.5	52.3	135	147	6	7	38.0	43.0	5	12	5	6.5	0
36 FT	17	19	14	9	6	7.5	6	7.5	57.0	37.0	41.0	6	14	42.0	46.0	6	14	30.0	31.0	6	7.5	6	8	51.9	135	147	6	6.5	38.0	43.0	5	12	5	6	0
38 FT	18	20	14	9	6	7.5	6	7.5	57.4	38.0	42.0	6	14	42.0	46.0	6	14	30.0	31.0	6	7.5	6	8	52.3	136	148	6	7	38.0	43.0	5	12	5	6	0
40 FT	18	20	14	9	6	7	6	6.5	57.3	38.0	42.0	6	13	42.0	46.0	6	13	30.0	31.0	6	6.5	6	8	52.1	136	148	6	6.5	38.0	43.0	5	12	5	6	0
42 FT	19	21	15	9	6	7	6	7	57.9	43.0	43.0	6	14	42.0	46.0	6	14	30.0	30.0	6	7	6	8	52.6	137	149	6	6.5	38.0	43.0	5	12	6	8	0
44 FT	19	22	15	9	6	7	6	7	57.9	43.0	43.0	6	13	42.0	46.0	6	13	30.0	30.0	6	7	6	8	53.0	138	150	6	6.5	38.0	43.0	5	12	6	8	0
46 FT	20	22	15	9	6	7	6	6	58.1	44.0	44.0	6	14	42.0	45.0	6	14	30.0	30.0	6	7	6	7.5	52.9	138	150	6	6.5	38.0	43.0	5	12	6	8	0
48 FT	20	23	16	9	6	6.5	6	7	58.5	44.0	44.0	6	13	42.0	45.0	6	13	30.0	30.0	6	7	6	7.5	53.3	139	151	6	6.5	38.0	44.0	5	12	6	8	0
50 FT	21	23	16	9	6	6.5	6	6.5	58.9	45.0	45.0	6	13	42.0	45.0	6	13	29.0	30.0	6	6.5	6	7.5	53.3	139	151	6	6	38.0	44.0	5	12	6	8	0

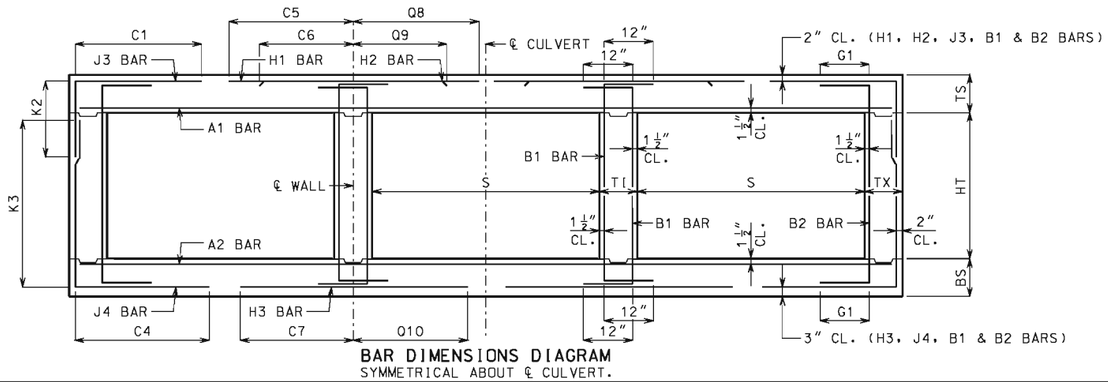

BAR DIMENSIONS DIAGRAM
SYMMETRICAL ABOUT ℄ CULVERT.

GENERAL NOTES:

IF DESIGN FILL IS BETWEEN TABULATED DESIGN FILLS, USE THE NEXT GREATER TABULATED DESIGN FILL, EXCEPT FOR DESIGN FILLS BETWEEN 2 FEET AND 4 FEET. FOR DESIGN FILLS BETWEEN 2 FEET AND 4 FEET USE THE GREATER MEMBER THICKNESS, AREA OF REINFORCEMENT AND BAR DIMENSIONS FROM THE 2 FEET AND 4 FEET TABULATED DESIGN FILLS. AREA OF REINFORCEMENT EQUALS BAR AREA PER FOOT SPACING.

SPECIAL DESIGNS ARE REQUIRED WHEN THE DESIGN FILL IS LESS THAN 1 FOOT OR GREATER THAN 50 FEET.

DIMENSIONS ARE IN INCHES UNLESS OTHERWISE SPECIFIED.

DESIGN FILLS ARE MEASURED FROM THE TOP OF TOP SLAB TO THE TOP OF EARTH FILL OR ROADWAY.

CULVERTS MEET STRENGTH AND SERVICEABILITY REQUIREMENTS FOR THE DESIGN VEHICULAR LIVE LOAD HL-93 MINUS THE LANE LOAD.

MISSOURI HIGHWAYS AND TRANSPORTATION COMMISSION
105 WEST CAPITOL
JEFFERSON CITY, MO 65102
1-888-ASK-MODOT (1-888-275-6636)

STATE OF MISSOURI
DENNIS W. HECKMAN
NUMBER PE-27141
PROFESSIONAL ENGINEER
THIS SHEET HAS BEEN SIGNED, SEALED AND DATED ELECTRONICALLY.

CONCRETE TRIPLE BOX CULVERT

MEMBER THICKNESS BAR SIZE, SPACING & DIMENSIONS

SPAN (S): 8 FEET
HEIGHT (HT): 10 THRU 11 FEET

DATE EFFECTIVE: 12/01/2011
DATE PREPARED: 9/29/2011

703.87

SHEET NO. 11 OF 27

IF A SEAL IS PRESENT ON THIS SHEET IT HAS BEEN ELECTRONICALLY SEALED AND DATED.

SPAN (S) = 9 FT HEIGHT (HT) = 5 FT OR 6 FT OR 7 FT

DESIGN FILL	MEMBER THICKNESS				TOP SLAB BARS														BOTTOM SLAB BARS												WALL BARS			
					A1 BARS		J3 BARS						H1 BARS				H2 BARS				A2 BARS		J4 BARS						H3 BARS				B1 BARS		B2 BARS	
										K2														K3										
	TS	BS	TX	TI	SIZE	SPA.	SIZE	SPA.	C1	HT=5′	HT=6′	HT=7′	SIZE	SPA.	C5	Q8	SIZE	SPA.	C6	Q9	SIZE	SPA.	SIZE	SPA.	C4	HT=5′	HT=6′	HT=7′	SIZE	SPA.	C7	Q10	SIZE	SPA.	SIZE	SPA.	G1
1 FT	13	8	8	8	5	6.5	4	7.5	48.3	29.0	29.0	29.0	4	12	89.5	66.5	4	12	28.0	26.0	4	6.5	5	6	46.1	64	76	88	5	6	42.0	43.0	5	12	5	12	12
2 FT	13	9	8	8	5	6.5	4	7.5	48.3	29.0	29.0	29.0	5	17	89.5	68.5	5	17	27.0	27.0	4	6.5	4	6	43.9	65	77	89	5	6.5	41.0	43.0	5	12	5	12	12
4 FT	9	9	8	8	5	8.5	5	6.5	44.8	25.0	25.0	25.0	5	16	57.0	70.0	5	16	29.0	29.0	5	8.5	4	6	39.6	65	77	89	5	6	40.0	43.0	5	12	5	12	12
6 FT	9	9	8	8	5	8.5	5	6.5	39.6	25.0	25.0	29.0	5	15	46.0	52.0	5	15	27.0	28.0	5	7.5	5	6.5	36.5	65	77	89	6	7	42.0	45.0	5	12	5	12	12
8 FT	9	10	8	8	5	8.5	5	6.5	36.8	25.0	25.0	25.0	5	14	42.0	45.0	5	14	26.0	27.0	5	7.5	4	6.5	34.8	66	78	90	5	6	38.0	42.0	5	12	5	12	0
10 FT	9	10	8	8	5	8.5	5	6	35.4	25.0	25.0	29.0	5	12	41.0	44.0	5	12	26.0	26.0	5	7	5	7	33.5	66	78	90	6	6.5	41.0	45.0	5	12	5	12	0
12 FT	10	11	8	8	5	8	5	7	33.9	26.0	26.0	30.0	5	12	40.0	44.0	5	12	26.0	26.0	5	6.5	5	7.5	32.4	67	79	91	6	7	40.0	45.0	5	12	5	12	0
14 FT	11	12	8	8	5	7.5	5	7.5	32.8	27.0	27.0	31.0	5	13	39.0	43.0	5	13	25.0	26.0	5	6	5	8.5	31.6	68	80	92	6	7	40.0	46.0	5	12	5	12	0
16 FT	12	13	8	8	5	7	5	8	31.9	28.0	28.0	32.0	5	13	38.0	43.0	5	13	25.0	27.0	5	6	5	8.5	31.0	69	81	93	6	7	39.0	46.0	5	12	5	12	0
18 FT	13	14	8	8	5	6.5	5	8	31.3	29.0	29.0	33.0	5	12	37.0	43.0	5	12	25.0	26.0	6	8	5	8.5	30.6	70	82	94	6	7.5	39.0	46.0	5	12	5	12	0
20 FT	14	15	8	8	5	6	5	8.5	30.6	30.0	30.0	34.0	5	12	37.0	43.0	5	12	24.0	26.0	6	8	5	8.5	30.3	71	83	95	6	7	39.0	46.0	5	12	5	12	0
22 FT	15	16	8	8	6	8	5	8	35.3	31.0	31.0	35.0	6	16	45.0	52.0	6	16	32.0	34.0	6	7.5	5	8	30.0	72	84	96	6	7	39.0	46.0	5	12	5	12	0
24 FT	15	16	8	8	6	8	5	7.5	35.0	31.0	35.0	35.0	6	16	45.0	52.0	6	16	33.0	35.0	6	6.5	5	8	29.8	72	84	96	6	6.5	39.0	46.0	5	12	5	11.5	0
26 FT	16	17	8	8	6	8	5	7	34.9	32.0	36.0	36.0	6	15	45.0	52.0	6	15	32.0	34.0	6	7	5	7	29.8	73	85	97	6	6.5	39.0	46.0	5	12	5	10.5	0
28 FT	17	18	8	8	6	7.5	5	6.5	34.8	37.0	37.0	37.0	6	14	45.0	52.0	6	14	32.0	34.0	6	7	5	6.5	29.8	74	86	98	6	6.5	39.0	46.0	5	12	5	9.5	0
30 FT	18	19	8	8	6	7	5	6.5	33.6	38.0	38.0	38.0	6	13	44.0	52.0	6	13	31.0	32.0	6	7	5	6.5	28.8	75	87	99	6	6	39.0	46.0	5	12	5	9.5	0
32 FT	18	20	8	8	6	7	5	6.5	33.8	38.0	38.0	38.0	6	13	44.0	51.0	6	13	32.0	33.0	6	7	5	6	28.8	76	88	100	6	6.5	39.0	46.0	5	12	5	9.5	0
34 FT	19	20	8	8	6	6.5	5	6	33.6	39.0	39.0	39.0	6	13	44.0	51.0	6	13	31.0	33.0	6	6	5	6	28.9	76	88	100	6	6	39.0	46.0	5	12	5	9.5	0
36 FT	20	21	8	8	6	6.5	6	7.5	37.8	44.0	44.0	44.0	6	12	44.0	51.0	6	12	30.0	32.0	6	6.5	6	7.5	32.0	77	89	101	6	6	39.0	46.0	5	12	5	9.5	0
38 FT	20	22	8	8	6	6	6	7.5	37.9	44.0	44.0	44.0	6	12	44.0	51.0	6	12	31.0	32.0	6	6.5	6	7	32.0	78	90	102	6	6	39.0	46.0	5	12	5	9	0
40 FT	21	23	8	8	6	6	6	7	38.0	45.0	45.0	45.0	6	12	44.0	51.0	6	12	30.0	32.0	6	6.5	6	6.5	32.3	79	91	103	6	6	39.0	46.0	5	12	5	8.5	0
42 FT	22	23	8	8	6	6	6	6.5	37.9	46.0	46.0	46.0	6	12	44.0	51.0	6	12	30.0	31.0	6	6	6	6.5	32.3	79	91	103	7	8	42.0	49.0	5	12	5	8	0
44 FT	23	24	9	8	6	6	6	7	38.8	47.0	47.0	47.0	6	12	44.0	50.0	6	12	30.0	31.0	6	6	6	7	33.0	80	92	104	7	8	42.0	50.0	5	12	5	8.5	0
46 FT	23	25	9	8	7	8	6	7	38.9	47.0	47.0	47.0	7	16	49.0	55.0	7	16	35.0	36.0	6	6	6	7	33.0	81	93	105	7	8	42.0	50.0	5	12	5	8.5	0
48 FT	24	25	9	8	7	8	6	7	38.9	48.0	48.0	48.0	6	12	43.0	50.0	6	12	30.0	31.0	6	6	6	7	33.1	81	93	105	7	7.5	42.0	50.0	5	12	5	8	0
50 FT	24	26	9	8	7	7.5	6	6.5	39.0	48.0	48.0	48.0	7	15	48.0	55.0	7	15	35.0	36.0	6	6	6	6.5	33.3	82	94	106	7	7.5	42.0	50.0	5	12	5	7.5	0

SPAN (S) = 9 FT HEIGHT (HT) = 8 FT OR 9 FT OR 10 FT

DESIGN FILL	MEMBER THICKNESS				TOP SLAB BARS														BOTTOM SLAB BARS												WALL BARS			
					A1 BARS		J3 BARS						H1 BARS				H2 BARS				A2 BARS		J4 BARS						H3 BARS				B1 BARS		B2 BARS	
										K2														K3										
	TS	BS	TX	TI	SIZE	SPA.	SIZE	SPA.	C1	HT=8′	HT=9′	HT=10′	SIZE	SPA.	C5	Q8	SIZE	SPA.	C6	Q9	SIZE	SPA.	SIZE	SPA.	C4	HT=8′	HT=9′	HT=10′	SIZE	SPA.	C7	Q10	SIZE	SPA.	SIZE	SPA.	G1
1 FT	13	9	8	8	5	6.5	5	8.5	48.3	29.0	29.0	33.0	4	12	89.5	66.5	4	12	29.0	27.0	4	6.5	6	6.5	75.0	101	113	125	5	7	43.0	44.0	5	12	5	12	12
2 FT	13	9	8	8	5	6.5	5	8.5	51.3	29.0	33.0	33.0	5	18	91.5	68.5	5	18	28.0	25.0	5	9	6	6.5	69.0	101	113	125	5	6.5	42.0	44.0	5	12	5	11.5	12
4 FT	9	9	8	8	5	8.5	6	7	51.3	29.0	33.0	33.0	5	16	91.5	70.0	5	16	29.0	30.0	5	8	6	6	62.0	101	113	125	5	6	41.0	44.0	5	12	5	10	12
6 FT	9	10	9	8	5	8.5	5	6	54.9	25.0	25.0	29.0	5	15	49.0	53.0	5	15	27.0	28.0	5	8	5	6	53.9	102	114	126	5	6.5	39.0	43.0	5	12	5	11	12
8 FT	9	10	9	8	5	8.5	5	6	48.8	25.0	29.0	29.0	5	14	44.0	46.0	5	14	26.0	27.0	5	7	6	6.5	52.4	102	114	126	6	7	41.0	46.0	5	12	5	10.5	0
10 FT	9	11	9	8	5	8.5	5	6	46.5	25.0	29.0	29.0	5	12	42.0	44.0	5	12	26.0	26.0	5	6.5	6	7	51.4	103	115	127	5	6	38.0	43.0	5	12	5	9.5	0
12 FT	10	11	9	8	5	8	5	6	45.8	30.0	30.0	30.0	5	13	40.0	43.0	5	13	26.0	27.0	5	6.5	6	6	49.5	103	115	127	6	7	40.0	45.0	5	12	5	9	0
14 FT	11	12	9	8	5	7.5	6	7	48.1	31.0	31.0	35.0	5	13	39.0	43.0	5	13	25.0	27.0	5	6	6	6.5	48.8	104	116	128	6	7	40.0	46.0	5	12	5	8.5	0
16 FT	12	13	9	8	5	7	6	6.5	47.4	32.0	32.0	36.0	5	13	39.0	43.0	5	13	25.0	27.0	5	6	6	6.5	48.3	105	117	129	6	7	40.0	46.0	5	12	5	8.5	0
18 FT	13	14	9	8	5	6.5	6	7	46.9	33.0	33.0	37.0	5	12	38.0	43.0	5	12	24.0	26.0	6	8	6	6.5	47.6	106	118	130	6	7.5	40.0	46.0	5	12	5	8.5	0
20 FT	13	15	9	8	5	6.5	6	6	46.0	33.0	33.0	37.0	5	12	38.0	43.0	5	12	25.0	27.0	6	8	6	6.5	47.1	107	119	131	6	7	40.0	46.0	5	12	5	8.5	0
22 FT	14	16	11	8	5	6	5	6	43.5	34.0	34.0	34.0	5	12	37.0	42.0	5	12	25.0	26.0	6	7.5	5	7	44.0	108	120	132	6	7	40.0	46.0	5	12	5	8	0
24 FT	15	17	11	8	6	8	5	6	48.4	35.0	35.0	35.0	6	16	46.0	51.0	6	16	33.0	35.0	6	7.5	5	7	44.0	109	121	133	6	6.5	40.0	46.0	5	12	5	7.5	0
26 FT	16	17	11	8	6	8	6	8	52.1	36.0	36.0	36.0	6	15	45.0	51.0	6	15	32.0	34.0	6	6.5	5	6	43.6	109	121	133	6	6.5	40.0	46.0	5	12	5	7.5	0
28 FT	17	18	12	8	6	7.5	5	6	48.8	37.0	37.0	37.0	6	14	45.0	51.0	6	14	31.0	33.0	6	7	5	6.5	43.9	110	122	134	6	6.5	40.0	46.0	5	12	5	7	0
30 FT	17	19	12	8	6	7.5	5	6	46.9	37.0	37.0	37.0	6	14	44.0	51.0	6	14	32.0	33.0	6	7	5	6.5	42.0	111	123	135	6	6	40.0	47.0	5	12	5	7.5	0
32 FT	18	20	12	8	6	7	6	8	51.0	38.0	38.0	38.0	6	13	44.0	50.0	6	13	31.0	33.0	6	7	5	6.5	42.3	112	124	136	6	6	40.0	47.0	5	12	5	7	0
34 FT	19	20	12	8	6	7	6	8	50.9	39.0	39.0	39.0	6	13	44.0	50.0	6	13	30.0	32.0	6	6	5	6.5	42.3	112	124	136	6	6	40.0	47.0	5	12	5	7	0
36 FT	19	21	13	8	6	6.5	6	8	51.6	39.0	39.0	39.0	6	13	44.0	50.0	6	13	31.0	32.0	6	6.5	5	6	42.5	113	125	137	6	6	40.0	47.0	5	12	5	7	0
38 FT	20	22	13	8	6	6.5	6	7.5	51.8	40.0	40.0	40.0	6	12	44.0	50.0	6	12	30.0	31.0	6	6.5	5	6	42.8	114	126	138	6	6	40.0	47.0	5	12	5	6.5	0
40 FT	21	23	13	8	6	6.5	6	7.5	51.9	41.0	41.0	41.0	6	12	44.0	49.0	6	12	30.0	31.0	6	6.5	5	6	43.0	115	127	139	6	6	40.0	47.0	5	12	5	6.5	0
42 FT	21	24	14	8	6	6	6	7.5	52.6	41.0	41.0	41.0	6	12	44.0	49.0	6	12	30.0	31.0	6	6.5	5	6	43.4	116	128	140	6	6	40.0	47.0	5	12	5	6.5	0
44 FT	22	24	14	8	6	6	6	7.5	52.6	42.0	42.0	42.0	6	12	44.0	49.0	6	12	30.0	31.0	6	6	5	6	43.4	116	128	140	7	7.5	43.0	50.0	5	12	5	6	0
46 FT	23	25	14	8	6	6	6	7	52.8	43.0	43.0	43.0	6	12	43.0	48.0	6	12	30.0	31.0	6	6	5	6	43.6	117	129	141	7	7.5	43.0	50.0	5	12	5	6	0
48 FT	23	26	15	8	6	6	6	7	53.6	43.0	43.0	47.0	6	12	44.0	48.0	6	12	30.0	31.0	6	6	6	8	47.0	118	130	142	7	7.5	43.0	50.0	5	12	5	6	0
50 FT	24	26	15	8	6	6	6	7	53.6	44.0	44.0	48.0	6	12	43.0	48.0	6	12	30.0	30.0	6	6	6	8	47.1	118	130	142	7	7.5	43.0	50.0	5	12	6	8	0

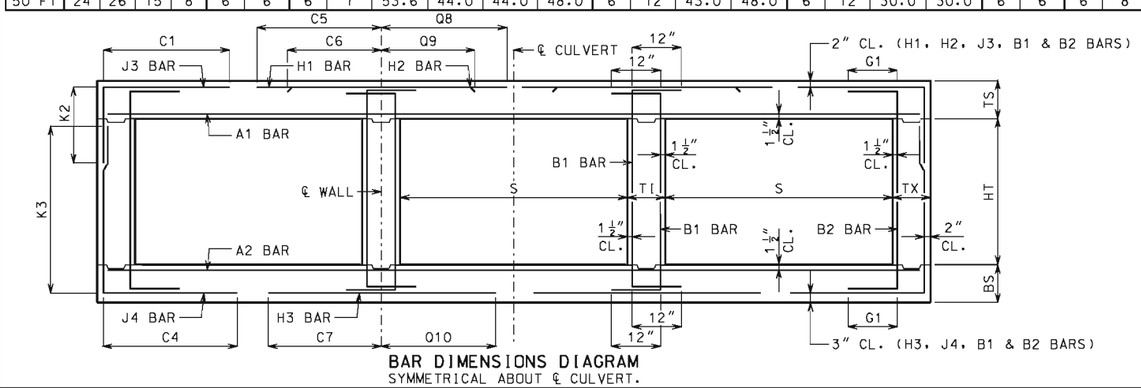

BAR DIMENSIONS DIAGRAM
SYMMETRICAL ABOUT ℄ CULVERT.

GENERAL NOTES:

IF DESIGN FILL IS BETWEEN TABULATED DESIGN FILLS, USE THE NEXT GREATER TABULATED DESIGN FILL, EXCEPT FOR DESIGN FILLS BETWEEN 2 FEET AND 4 FEET. FOR DESIGN FILLS BETWEEN 2 FEET AND 4 FEET USE THE GREATER MEMBER THICKNESS. AREA OF REINFORCEMENT AND BAR DIMENSIONS FROM THE 2 FEET AND 4 FEET TABULATED DESIGN FILLS. AREA OF REINFORCEMENT EQUALS BAR AREA PER FOOT SPACING.

SPECIAL DESIGNS ARE REQUIRED WHEN THE DESIGN FILL IS LESS THAN 1 FOOT OR GREATER THAN 50 FEET.

DIMENSIONS ARE IN INCHES UNLESS OTHERWISE SPECIFIED.

DESIGN FILLS ARE MEASURED FROM THE TOP OF TOP SLAB TO THE TOP OF EARTH FILL OR ROADWAY.

CULVERTS MEET STRENGTH AND SERVICEABILITY REQUIREMENTS FOR THE DESIGN VEHICULAR LIVE LOAD HL-93 MINUS THE LANE LOAD.

IF A SEAL IS PRESENT ON THIS SHEET IT HAS BEEN ELECTRONICALLY SEALED AND DATED.

MISSOURI HIGHWAYS AND TRANSPORTATION COMMISSION
105 WEST CAPITOL
JEFFERSON CITY, MO 65102
1-888-ASK-MODOT (1-888-275-6636)

STATE OF MISSOURI
DENNIS W. HECKMAN
NUMBER PE-27141
PROFESSIONAL ENGINEER
THIS SHEET HAS BEEN SIGNED, SEALED AND DATED ELECTRONICALLY.

CONCRETE TRIPLE BOX CULVERT

MEMBER THICKNESS BAR SIZE, SPACING & DIMENSIONS

SPAN (S): 9 FEET
HEIGHT (HT): 5 THRU 10 FEET

DATE EFFECTIVE: 12/01/2011
DATE PREPARED: 9/29/2011

703.87

SPAN (S) = 9 FT HEIGHT (HT) = 11 FT OR 12 FT

DESIGN FILL	MEMBER THICKNESS				TOP SLAB BARS														BOTTOM SLAB BARS										WALL BARS				
					A1 BARS		J3 BARS					H1 BARS				H2 BARS				A2 BARS		J4 BARS				H3 BARS				B1 BARS		B2 BARS	
	TS	BS	TX	TI	SIZE	SPA.	SIZE	SPA.	C1	K2 HT=11'	K2 HT=12'	SIZE	SPA.	C5	Q8	SIZE	SPA.	C6	Q9	SIZE	SPA.	SIZE	SPA.	C4	K3 HT=11'	K3 HT=12'	SIZE	SPA.	C7	Q10	SIZE	SPA.	SIZE	SPA.	G1
1 FT	13	9	9	10	5	6.5	5	7.5	49.3	33.0	33.0	4	12	90.5	67.5	4	12	29.0	27.0	4	6	6	6	76.3	137	149	5	6.5	44.0	44.0	5	10	5	9	12
2 FT	13	10	9	10	5	6.5	5	7	52.3	33.0	33.0	5	18	92.5	69.5	5	18	28.0	25.0	4	6	6	6.5	76.3	138	150	5	7	44.0	45.0	5	11.5	5	9	12
4 FT	9	10	9	10	5	8.5	5	6	52.3	29.0	29.0	5	16	92.5	71.0	5	16	29.0	30.0	5	8.5	6	6	76.3	138	150	5	7	43.0	45.0	5	11.5	5	8.5	12
6 FT	9	10	10	10	5	8.5	5	6	69.4	29.0	29.0	5	16	51.0	49.0	5	16	28.0	28.0	5	7.5	6	6.5	68.8	138	150	5	6	41.0	43.0	5	12	5	8	12
8 FT	9	10	10	10	5	8.5	5	6	60.0	29.0	29.0	5	14	45.0	45.0	5	14	27.0	27.0	5	7	6	6	63.9	138	150	6	7	43.0	45.0	5	12	5	8	0
10 FT	9	11	10	10	5	8.5	6	7	59.0	29.0	33.0	5	13	42.0	43.0	5	13	27.0	27.0	5	6.5	6	6	63.6	139	151	5	6	39.0	43.0	5	12	5	8	0
12 FT	10	12	10	10	5	8	6	7	58.6	30.0	34.0	5	13	41.0	43.0	5	13	26.0	27.0	5	6.5	6	6.5	62.8	140	152	5	6	39.0	43.0	5	12	5	8	0
14 FT	11	12	10	10	5	7.5	6	7.5	58.5	31.0	35.0	5	13	41.0	43.0	5	13	26.0	27.0	5	6	6	6	60.4	140	152	6	7	41.0	45.0	5	12	5	8	0
16 FT	12	13	11	10	5	7	5	6	54.4	32.0	32.0	5	13	40.0	42.0	5	13	26.0	27.0	5	6	6	7	59.1	141	153	6	7	41.0	45.0	5	12	5	7.5	0
18 FT	12	14	11	10	5	7	6	7.5	55.6	32.0	36.0	5	12	39.0	42.0	5	12	26.0	27.0	6	8	6	6.5	59.0	142	154	6	7.5	41.0	46.0	5	12	5	7.5	0
20 FT	13	15	12	10	5	6.5	6	8	55.0	33.0	37.0	5	12	38.0	42.0	5	12	26.0	27.0	6	8	6	7	58.1	143	155	6	7	41.0	46.0	5	12	5	7	0
22 FT	14	16	12	10	5	6	6	7.5	55.0	34.0	38.0	5	12	38.0	42.0	5	12	25.0	27.0	6	7.5	6	7	57.9	144	156	6	7	41.0	46.0	5	12	5	7	0
24 FT	15	17	13	10	6	8	6	7.5	61.0	35.0	39.0	6	16	47.0	51.0	6	16	33.0	35.0	6	7.5	6	7.5	57.4	145	157	6	6.5	41.0	46.0	5	12	5	6.5	0
26 FT	16	17	13	10	6	8	6	7	61.3	40.0	40.0	6	15	46.0	51.0	6	15	33.0	34.0	6	6.5	6	7	56.6	145	157	6	6.5	41.0	46.0	5	12	5	6.5	0
28 FT	16	18	14	10	6	8	6	7.5	61.0	36.0	40.0	6	15	46.0	51.0	6	15	33.0	35.0	6	7	6	7	56.6	146	158	6	6.5	41.0	46.0	5	12	5	6	0
30 FT	17	19	14	10	6	7.5	6	7.5	59.6	37.0	41.0	6	14	45.0	50.0	6	14	32.0	34.0	6	7	6	7.5	54.8	147	159	6	6	41.0	46.0	5	12	5	6	0
32 FT	18	20	14	10	6	7	6	7	59.9	38.0	42.0	6	13	45.0	50.0	6	13	32.0	33.0	6	7	6	7.5	55.0	148	160	6	6	41.0	46.0	5	12	5	6	0
34 FT	18	20	14	10	6	6.5	6	6.5	59.8	38.0	42.0	6	13	45.0	50.0	6	13	32.0	34.0	6	6	6	7.5	54.9	148	160	6	6	41.0	46.0	5	12	5	6	0
36 FT	19	21	15	10	6	6.5	6	7	60.3	43.0	43.0	6	13	45.0	50.0	6	13	31.0	33.0	6	6.5	6	7.5	55.3	149	161	6	6	41.0	47.0	5	12	6	8	0
38 FT	20	22	15	10	6	6.5	6	6.5	60.6	44.0	44.0	6	12	45.0	50.0	6	12	31.0	32.0	6	6.5	6	7.5	55.5	150	162	6	6	41.0	47.0	5	12	6	8	0
40 FT	20	23	16	10	6	6.5	6	6.5	60.9	44.0	44.0	6	12	45.0	49.0	6	12	31.0	32.0	6	6.5	6	7.5	55.9	151	163	6	6	41.0	47.0	5	12	6	8	0
42 FT	21	23	16	10	6	6.5	6	6.5	61.1	45.0	45.0	6	12	45.0	49.0	6	12	31.0	32.0	6	6	6	7.5	55.8	151	163	7	7.5	44.0	50.0	5	12	6	8	0
44 FT	22	24	17	10	6	6	6	6.5	61.9	46.0	46.0	6	12	45.0	49.0	6	12	31.0	32.0	6	6	6	7	56.3	152	164	7	7.5	44.0	50.0	5	12	6	7.5	0
46 FT	22	25	17	10	6	6	6	6	61.9	46.0	46.0	6	12	45.0	48.0	6	12	31.0	32.0	6	6	6	7	56.5	153	165	7	8	44.0	50.0	5	12	6	7.5	0
48 FT	23	26	18	10	6	6	6	6.5	62.5	47.0	47.0	6	12	44.0	48.0	6	12	31.0	31.0	6	6	6	6.5	57.0	154	166	7	8	44.0	50.0	5	12	6	7	0
50 FT	23	26	18	10	7	8	6	6	62.5	47.0	47.0	6	12	44.0	48.0	6	12	31.0	31.0	6	6	6	6.5	56.9	154	166	7	7.5	44.0	50.0	5	12	6	7	0

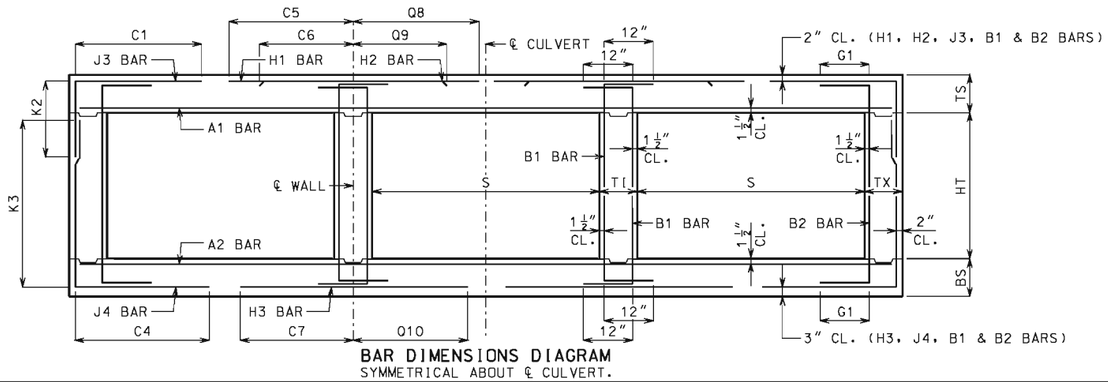

BAR DIMENSIONS DIAGRAM
SYMMETRICAL ABOUT ℄ CULVERT.

GENERAL NOTES:

IF DESIGN FILL IS BETWEEN TABULATED DESIGN FILLS, USE THE NEXT GREATER TABULATED DESIGN FILL, EXCEPT FOR DESIGN FILLS BETWEEN 2 FEET AND 4 FEET. FOR DESIGN FILLS BETWEEN 2 FEET AND 4 FEET USE THE GREATER MEMBER THICKNESS, AREA OF REINFORCEMENT AND BAR DIMENSIONS FROM THE 2 FEET AND 4 FEET TABULATED DESIGN FILLS. AREA OF REINFORCEMENT EQUALS BAR AREA PER FOOT SPACING.

SPECIAL DESIGNS ARE REQUIRED WHEN THE DESIGN FILL IS LESS THAN 1 FOOT OR GREATER THAN 50 FEET.

DIMENSIONS ARE IN INCHES UNLESS OTHERWISE SPECIFIED.

DESIGN FILLS ARE MEASURED FROM THE TOP OF TOP SLAB TO THE TOP OF EARTH FILL OR ROADWAY.

CULVERTS MEET STRENGTH AND SERVICEABILITY REQUIREMENTS FOR THE DESIGN VEHICULAR LIVE LOAD HL-93 MINUS THE LANE LOAD.

MISSOURI HIGHWAYS AND TRANSPORTATION COMMISSION
105 WEST CAPITOL
JEFFERSON CITY, MO 65102
1-888-ASK-MODOT (1-888-275-6636)

STATE OF MISSOURI
DENNIS W. HECKMAN
NUMBER PE-27141
PROFESSIONAL ENGINEER
THIS SHEET HAS BEEN SIGNED, SEALED AND DATED ELECTRONICALLY.

CONCRETE TRIPLE BOX CULVERT

MEMBER THICKNESS BAR SIZE, SPACING & DIMENSIONS

SPAN (S): 9 FEET
HEIGHT (HT): 11 THRU 12 FEET

DATE EFFECTIVE: 12/01/2011
DATE PREPARED: 9/29/2011

703.87

SHEET NO. 13 OF 27

IF A SEAL IS PRESENT ON THIS SHEET IT HAS BEEN ELECTRONICALLY SEALED AND DATED.

SPAN (S) = 10 FT HEIGHT (HT) = 5 FT OR 6 FT OR 7 FT

DESIGN FILL	MEMBER THICKNESS				TOP SLAB BARS														BOTTOM SLAB BARS												WALL BARS				
					A1 BARS		J3 BARS						H1 BARS				H2 BARS				A2 BARS		J4 BARS						H3 BARS				B1 BARS		B2 BARS	
	TS	BS	TX	TI	SIZE	SPA.	SIZE	SPA.	C1	K2 HT=5'	K2 HT=6'	K2 HT=7'	SIZE	SPA.	C5	Q8	SIZE	SPA.	C6	Q9	SIZE	SPA.	SIZE	SPA.	C4	K3 HT=5'	K3 HT=6'	K3 HT=7'	SIZE	SPA.	C7	Q10	SIZE	SPA.	SIZE	SPA.	G1
1 FT	13	9	8	8	5	6.5	4	7	51.9	29.0	29.0	29.0	5	16	98.5	74.5	5	16	29.0	27.0	4	6	4	6	47.4	65	77	89	5	6.5	45.0	47.0	5	12	5	12	12
2 FT	13	9	8	8	5	6.5	4	6.5	51.9	29.0	29.0	29.0	5	14	98.5	74.5	5	14	28.0	29.0	5	8.5	5	6.5	43.3	65	77	89	5	6	44.0	46.0	5	12	5	12	12
4 FT	9	9	8	8	5	7.5	6	7.5	48.4	25.0	29.0	29.0	5	13	59.0	76.0	5	13	30.0	30.0	5	7.5	5	6.5	39.0	65	77	89	6	6.5	46.0	49.0	5	10	5	12	12
6 FT	9	9	8	8	5	8	5	6	39.8	29.0	29.0	29.0	5	13	49.0	55.0	5	13	28.0	29.0	5	7.5	6	7	39.8	65	77	89	6	6	45.0	48.0	5	12	5	12	12
8 FT	10	10	8	8	5	8	5	7.5	36.8	26.0	26.0	30.0	5	13	45.0	50.0	5	13	28.0	28.0	5	7	5	6.5	34.8	66	78	90	6	6.5	44.0	48.0	5	12	5	12	0
10 FT	10	11	8	8	5	8	5	6.5	35.4	26.0	26.0	30.0	6	15	47.0	51.0	6	15	30.0	31.0	5	6.5	5	7.5	32.9	67	79	91	6	6.5	43.0	49.0	5	12	5	12	0
12 FT	11	12	8	8	5	7.5	5	7	33.6	27.0	27.0	31.0	6	16	45.0	50.0	6	16	30.0	31.0	5	6	5	8.5	31.6	68	80	92	6	6.5	42.0	49.0	5	12	5	12	0
14 FT	12	13	8	8	5	7	5	8	32.4	28.0	28.0	32.0	6	16	44.0	50.0	6	16	29.0	31.0	5	6	5	8.5	30.9	69	81	93	6	6.5	42.0	49.0	5	12	5	12	0
16 FT	13	14	8	8	5	6.5	5	8	31.3	29.0	29.0	33.0	6	16	44.0	50.0	6	16	29.0	31.0	6	8	5	8.5	30.3	70	82	94	6	7	42.0	49.0	5	12	5	12	0
18 FT	14	15	8	8	5	6	5	8.5	30.5	30.0	30.0	34.0	6	16	43.0	50.0	6	16	29.0	31.0	6	7.5	5	8.5	29.8	71	83	95	6	7	41.0	49.0	5	12	5	12	0
20 FT	15	16	8	8	6	8	5	8	34.9	31.0	31.0	35.0	6	16	48.0	56.0	6	16	35.0	37.0	6	7	5	8	29.4	72	84	96	6	7	41.0	49.0	5	12	5	12	0
22 FT	16	17	8	8	6	8	5	7	34.4	32.0	32.0	36.0	6	15	48.0	56.0	6	15	34.0	37.0	6	7	5	7	29.0	73	85	97	6	6.5	41.0	50.0	5	12	5	12	0
24 FT	17	18	8	8	6	7.5	5	6.5	34.0	37.0	37.0	37.0	6	14	48.0	56.0	6	14	34.0	36.0	6	6.5	5	6.5	28.9	74	86	98	6	6.5	41.0	50.0	5	12	5	11	0
26 FT	18	19	8	8	6	7	5	6.5	33.9	38.0	38.0	38.0	6	13	47.0	55.0	6	13	33.0	35.0	6	6.5	5	6.5	28.8	75	87	99	6	6	41.0	50.0	5	12	5	10	0
28 FT	19	20	8	8	6	6.5	5	6	33.8	39.0	39.0	39.0	6	13	47.0	55.0	6	13	33.0	35.0	6	6.5	5	6	28.8	76	88	100	6	6	41.0	50.0	5	12	5	9.5	0
30 FT	19	21	8	8	6	6	5	6	33.8	39.0	39.0	39.0	6	12	47.0	55.0	6	12	33.0	36.0	6	6	6	7.5	31.6	77	89	101	7	7.5	44.0	53.0	5	12	5	9.5	0
32 FT	20	22	8	8	6	6.5	6	7.5	37.8	44.0	44.0	44.0	6	12	47.0	55.0	6	12	33.0	35.0	6	6	6	7	31.8	78	90	102	7	7.5	44.0	53.0	5	12	5	9.5	0
34 FT	21	23	8	8	6	6	6	7	36.8	45.0	45.0	45.0	6	12	46.0	55.0	6	12	32.0	34.0	6	6	6	6.5	30.9	79	91	103	7	7.5	44.0	53.0	5	12	5	9.5	0
36 FT	22	23	8	8	6	6	6	6.5	36.8	46.0	46.0	46.0	7	15	51.0	60.0	7	15	36.0	38.0	6	6	6	6.5	31.0	79	91	103	7	7	44.0	53.0	5	12	5	9.5	0
38 FT	23	24	8	8	7	7.5	6	6	36.8	47.0	47.0	47.0	7	15	51.0	59.0	7	15	36.0	37.0	6	6	6	6	31.1	80	92	104	7	7	44.0	53.0	5	12	5	8.5	0
40 FT	23	25	8	8	7	7.5	6	6	36.9	47.0	47.0	47.0	7	15	51.0	59.0	7	15	36.0	38.0	6	6	6	6	31.1	81	93	105	7	7	44.0	53.0	5	12	5	8	0
42 FT	24	26	8	8	7	7.5	6	6	37.0	48.0	48.0	48.0	7	14	51.0	59.0	7	14	36.0	37.0	7	8	7	6.5	34.4	82	94	106	7	7	44.0	53.0	5	12	5	7.5	0
44 FT	25	26	9	8	7	7	6	6.5	37.8	49.0	49.0	49.0	7	14	51.0	59.0	7	14	36.0	37.0	7	7.5	6	6.5	32.0	82	94	106	7	7	44.0	53.0	5	12	5	8.5	0
46 FT	25	27	9	8	7	7	6	6.5	37.9	49.0	49.0	49.0	7	14	51.0	59.0	7	14	36.0	37.0	7	7.5	6	6.5	32.0	83	95	107	7	7	44.0	53.0	5	12	5	8	0
48 FT	26	28	9	8	7	7	6	6.5	38.0	50.0	50.0	50.0	7	14	51.0	58.0	7	14	35.0	37.0	7	7.5	6	6	32.3	84	96	108	7	7	44.0	53.0	5	12	5	7.5	0
50 FT	27	28	9	8	7	7	6	6	38.0	51.0	51.0	51.0	7	14	51.0	58.0	7	14	35.0	37.0	7	7	6	6	32.4	84	96	108	7	6.5	44.0	53.0	5	12	5	7	0

SPAN (S) = 10 FT HEIGHT (HT) = 8 FT OR 9 FT OR 10 FT

DESIGN FILL	MEMBER THICKNESS				TOP SLAB BARS														BOTTOM SLAB BARS												WALL BARS				
					A1 BARS		J3 BARS						H1 BARS				H2 BARS				A2 BARS		J4 BARS						H3 BARS				B1 BARS		B2 BARS	
	TS	BS	TX	TI	SIZE	SPA.	SIZE	SPA.	C1	K2 HT=8'	K2 HT=9'	K2 HT=10'	SIZE	SPA.	C5	Q8	SIZE	SPA.	C6	Q9	SIZE	SPA.	SIZE	SPA.	C4	K3 HT=8'	K3 HT=9'	K3 HT=10'	SIZE	SPA.	C7	Q10	SIZE	SPA.	SIZE	SPA.	G1
1 FT	13	9	8	8	5	6.5	5	8.5	54.9	29.0	33.0	33.0	5	16	100.5	74.5	5	16	30.0	30.0	5	8.5	6	6.5	74.1	101	113	125	5	6	46.0	47.0	5	12	5	12	12
2 FT	13	9	8	8	5	6.5	5	8	54.9	29.0	33.0	33.0	5	14	100.5	74.5	5	14	28.0	28.0	5	7.5	6	6	65.8	101	113	125	6	7	47.0	50.0	5	12	5	11.5	12
4 FT	9	9	9	8	5	7	5	6	65.9	29.0	29.0	29.0	5	13	74.0	76.0	5	13	30.0	31.0	5	7.5	6	6.5	57.6	101	113	125	6	6.5	46.0	50.0	5	12	5	11.5	12
6 FT	9	9	9	8	5	8	5	6	51.8	29.0	29.0	29.0	5	13	51.0	57.0	5	13	29.0	29.0	5	7	6	6	52.9	101	113	125	6	6	45.0	48.0	5	12	5	11.5	12
8 FT	9	10	9	8	5	8	5	6	48.1	29.0	29.0	29.0	6	15	49.0	52.0	6	15	30.0	31.0	5	7	6	6.5	51.0	102	114	126	6	6	44.0	49.0	5	12	5	11	0
10 FT	10	11	9	8	5	8	5	6	46.5	30.0	30.0	30.0	5	12	44.0	48.0	5	12	27.0	28.0	5	6.5	6	6.5	49.5	103	115	127	6	6.5	43.0	49.0	5	12	5	10.5	0
12 FT	11	12	9	8	5	7.5	6	7	48.1	31.0	31.0	35.0	6	16	45.0	50.0	6	16	30.0	31.0	5	6	6	6.5	48.4	104	116	128	6	6.5	43.0	49.0	5	12	5	9.5	0
14 FT	12	13	9	8	5	7	6	7	47.0	32.0	32.0	36.0	6	16	45.0	50.0	6	16	29.0	31.0	5	6	6	7	47.4	105	117	129	6	6.5	42.0	49.0	5	12	5	8.5	0
16 FT	13	14	9	8	5	6.5	6	7	46.0	33.0	33.0	37.0	6	16	44.0	50.0	6	16	29.0	31.0	6	8	6	7	46.5	106	118	130	6	7	42.0	49.0	5	12	5	8.5	0
18 FT	14	15	9	8	5	6	6	7	45.3	34.0	34.0	38.0	6	16	43.0	49.0	6	16	29.0	31.0	6	7.5	6	7	45.9	107	119	131	6	7	42.0	49.0	5	12	5	8.5	0
20 FT	15	16	9	8	6	8	6	7	50.5	35.0	35.0	39.0	6	16	49.0	55.0	6	16	35.0	37.0	6	7	6	6.5	45.3	108	120	132	6	7	42.0	49.0	5	12	5	8.5	0
22 FT	15	17	11	8	6	7.5	5	6	47.1	35.0	35.0	35.0	6	15	48.0	55.0	6	15	35.0	37.0	6	7	5	7	42.1	109	121	133	6	6.5	42.0	50.0	5	12	5	8	0
24 FT	17	18	11	8	6	7.5	6	8.5	50.8	37.0	37.0	37.0	6	14	48.0	55.0	6	14	33.0	36.0	6	6.5	5	6.5	42.0	110	122	134	6	6.5	42.0	50.0	5	12	5	7.5	0
26 FT	18	19	11	8	6	7	6	8	50.4	38.0	38.0	38.0	6	13	47.0	55.0	6	13	33.0	35.0	6	6.5	5	6	41.8	111	123	135	6	6	42.0	50.0	5	12	5	7.5	0
28 FT	18	20	12	8	6	7	6	8	51.0	38.0	38.0	38.0	6	13	47.0	54.0	6	13	34.0	36.0	6	6.5	5	6.5	41.9	112	124	136	6	6	42.0	50.0	5	12	5	7.5	0
30 FT	19	21	12	8	6	6.5	6	7.5	50.9	39.0	39.0	39.0	6	13	47.0	54.0	6	13	33.0	35.0	6	6.5	5	6.5	41.9	113	125	137	7	7.5	45.0	53.0	5	12	5	7	0
32 FT	20	22	12	8	6	6.5	6	7	50.9	40.0	40.0	40.0	6	12	47.0	54.0	6	12	32.0	34.0	6	6	5	6.5	42.0	114	126	138	7	7.5	45.0	53.0	5	12	5	7	0
34 FT	21	23	12	8	6	6	6	7.5	49.6	41.0	41.0	41.0	6	12	46.0	53.0	6	12	31.0	33.0	6	6	5	6.5	40.8	115	127	139	7	7.5	45.0	53.0	5	12	5	7	0
36 FT	22	24	12	8	6	6	6	7	49.8	42.0	42.0	42.0	7	15	51.0	58.0	7	15	36.0	37.0	6	6	5	6.5	40.9	116	128	140	7	7.5	45.0	53.0	5	12	5	7	0
38 FT	22	24	13	8	6	6	6	7.5	50.4	42.0	42.0	42.0	7	15	51.0	58.0	7	15	36.0	38.0	6	6	5	6	41.1	116	128	140	7	7	45.0	53.0	5	12	5	6.5	0
40 FT	23	25	13	8	7	7.5	6	7.5	50.5	43.0	43.0	43.0	7	15	51.0	58.0	7	15	36.0	37.0	6	6	5	6	41.4	117	129	141	7	7	45.0	53.0	5	12	5	6.5	0
42 FT	24	26	13	8	7	7.5	6	6.5	50.5	44.0	44.0	44.0	7	15	51.0	57.0	7	15	35.0	36.0	7	8	5	6	41.5	118	130	142	7	7	45.0	53.0	5	12	5	6.5	0
44 FT	24	27	14	8	7	7.5	6	7	51.3	44.0	44.0	44.0	7	14	51.0	57.0	7	14	36.0	37.0	7	8	5	6	41.9	119	131	143	7	7	45.0	54.0	5	12	5	6	0
46 FT	25	27	14	8	7	7	6	7	51.3	45.0	45.0	45.0	7	14	51.0	57.0	7	14	35.0	36.0	7	7.5	5	6	42.0	119	131	143	7	6.5	45.0	53.0	5	12	5	6	0
48 FT	26	28	14	8	7	7	6	7	51.4	46.0	46.0	46.0	7	15	51.0	56.0	7	15	35.0	36.0	7	7.5	5	6	42.1	120	132	144	7	6.5	45.0	53.0	5	12	5	6	0
50 FT	26	29	15	8	7	7	6	7	52.1	50.0	50.0	50.0	7	14	51.0	56.0	7	14	35.0	36.0	7	7.5	6	8	45.5	121	133	145	7	6.5	45.0	54.0	5	12	6	8	0

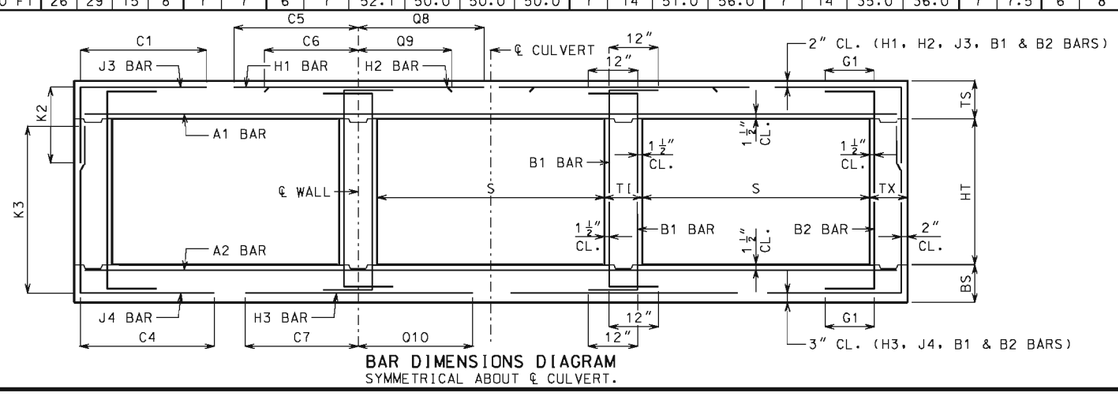

BAR DIMENSIONS DIAGRAM
SYMMETRICAL ABOUT ℄ CULVERT.

IF A SEAL IS PRESENT ON THIS SHEET IT HAS BEEN ELECTRONICALLY SEALED AND DATED.

GENERAL NOTES:

IF DESIGN FILL IS BETWEEN TABULATED DESIGN FILLS, USE THE NEXT GREATER TABULATED DESIGN FILL, EXCEPT FOR DESIGN FILLS BETWEEN 2 FEET AND 4 FEET. FOR DESIGN FILLS BETWEEN 2 FEET AND 4 FEET USE THE GREATER MEMBER THICKNESS. AREA OF REINFORCEMENT AND BAR DIMENSIONS FROM THE 2 FEET AND 4 FEET TABULATED DESIGN FILLS. AREA OF REINFORCEMENT EQUALS BAR AREA PER FOOT SPACING.

SPECIAL DESIGNS ARE REQUIRED WHEN THE DESIGN FILL IS LESS THAN 1 FOOT OR GREATER THAN 50 FEET.

DIMENSIONS ARE IN INCHES UNLESS OTHERWISE SPECIFIED.

DESIGN FILLS ARE MEASURED FROM THE TOP OF TOP SLAB TO THE TOP OF EARTH FILL OR ROADWAY.

CULVERTS MEET STRENGTH AND SERVICEABILITY REQUIREMENTS FOR THE DESIGN VEHICULAR LIVE LOAD HL-93 MINUS THE LANE LOAD.

MISSOURI HIGHWAYS AND TRANSPORTATION COMMISSION
105 WEST CAPITOL
JEFFERSON CITY, MO 65102
1-888-ASK-MODOT (1-888-275-6636)

STATE OF MISSOURI
DENNIS W. HECKMAN
NUMBER PE-27141
PROFESSIONAL ENGINEER
THIS SHEET HAS BEEN SIGNED, SEALED AND DATED ELECTRONICALLY.

CONCRETE TRIPLE BOX CULVERT

MEMBER THICKNESS BAR SIZE, SPACING & DIMENSIONS

SPAN (S): 10 FEET
HEIGHT (HT): 5 THRU 10 FEET

DATE EFFECTIVE: 12/01/2011
DATE PREPARED: 9/29/2011

703.87

SPAN (S) = 10 FT HEIGHT (HT) = 11 FT OR 12 FT OR 13 FT

DESIGN FILL	MEMBER THICKNESS				TOP SLAB BARS														BOTTOM SLAB BARS												WALL BARS				
					A1 BARS		J3 BARS						H1 BARS				H2 BARS				A2 BARS		J4 BARS						H3 BARS				B1 BARS		B2 BARS	
										K2														K3											
	TS	BS	TX	TI	SIZE	SPA.	SIZE	SPA.	C1	HT=11'	HT=12'	HT=13'	SIZE	SPA.	C5	Q8	SIZE	SPA.	C6	Q9	SIZE	SPA.	SIZE	SPA.	C4	HT=11'	HT=12'	HT=13'	SIZE	SPA.	C7	Q10	SIZE	SPA.	SIZE	SPA.	G1
1 FT	13	10	9	10	5	6.5	5	6.5	55.9	33.0	33.0	33.0	5	16	101.5	75.5	5	16	30.0	29.0	5	8.5	6	6	82.3	138	150	162	5	6.5	49.0	49.0	5	10	5	8.5	12
2 FT	13	10	10	10	5	6.5	5	6.5	56.5	33.0	33.0	33.0	5	14	101.5	75.5	5	14	29.0	29.0	5	8	6	6.5	83.0	138	150	162	5	6.5	47.0	48.0	5	12	5	8	12
4 FT	9	10	10	10	5	7	6	7	56.5	29.0	29.0	33.0	5	13	101.5	77.0	5	13	31.0	31.0	5	7	6	6	81.3	138	150	162	5	6	46.0	48.0	5	11	5	8	12
6 FT	9	11	10	10	5	8	6	7	75.6	29.0	29.0	33.0	5	13	54.0	53.0	5	13	29.0	29.0	5	7	6	6	77.8	139	151	163	5	6	44.0	47.0	5	12	5	8	12
8 FT	9	11	11	10	5	8	6	7	64.6	29.0	29.0	33.0	5	12	47.0	48.0	5	12	28.0	28.0	5	6.5	6	6.5	69.5	139	151	163	6	7	45.0	49.0	5	12	5	7.5	0
10 FT	10	11	11	10	5	8	5	6	61.1	30.0	30.0	30.0	5	12	46.0	47.0	5	12	28.0	28.0	5	6	6	6	65.8	139	151	163	6	6.5	45.0	48.0	5	12	5	7.5	0
12 FT	11	12	11	10	5	7.5	5	6	60.3	31.0	31.0	31.0	5	12	44.0	47.0	5	12	27.0	28.0	5	6	6	6	65.1	140	152	164	6	6.5	44.0	49.0	5	12	5	7.5	0
14 FT	12	13	11	10	5	7	6	7.5	62.6	32.0	32.0	36.0	5	12	43.0	46.0	5	12	27.0	28.0	5	6	6	6.5	64.4	141	153	165	6	6.5	44.0	49.0	5	12	5	7	0
16 FT	13	14	12	10	5	6.5	6	8	61.3	33.0	33.0	37.0	5	12	42.0	46.0	5	12	27.0	28.0	6	8	6	7	63.0	142	154	166	6	7	44.0	49.0	5	12	5	7	0
18 FT	13	15	12	10	5	6.5	6	7	59.3	33.0	37.0	37.0	6	15	45.0	48.0	6	15	30.0	31.0	6	7.5	6	6.5	62.8	143	155	167	6	7	44.0	49.0	5	12	5	7	0
20 FT	14	16	13	10	5	6	6	7.5	58.8	34.0	38.0	38.0	6	15	44.0	48.0	6	15	30.0	31.0	6	7	6	7	61.8	144	156	168	6	7	44.0	49.0	5	12	5	6.5	0
22 FT	15	17	13	10	6	8	6	6.5	64.6	35.0	39.0	39.0	6	15	50.0	54.0	6	15	36.0	37.0	6	7	6	6.5	61.4	145	157	169	6	6.5	44.0	50.0	5	12	5	6.5	0
24 FT	16	18	14	10	6	8	6	7	64.6	36.0	40.0	40.0	6	15	49.0	54.0	6	15	35.0	37.0	6	6.5	6	6.5	60.5	146	158	170	6	6.5	44.0	50.0	5	12	5	6	0
26 FT	17	19	14	10	6	7.5	6	6.5	64.5	37.0	41.0	41.0	6	14	49.0	54.0	6	14	35.0	37.0	6	6.5	6	6.5	60.4	147	159	171	6	6	44.0	50.0	5	12	5	6	0
28 FT	18	20	15	10	6	7	6	6.5	64.9	42.0	42.0	42.0	6	13	48.0	54.0	6	13	34.0	36.0	6	6.5	6	6.5	60.3	148	160	172	6	6	44.0	50.0	5	12	6	8	0
30 FT	19	21	15	10	6	6.5	6	6.5	65.1	43.0	43.0	43.0	6	13	48.0	54.0	6	13	33.0	35.0	6	6.5	6	6.5	60.4	149	161	173	7	7.5	47.0	53.0	5	12	6	8	0
32 FT	20	22	16	10	6	6.5	6	6.5	65.5	44.0	44.0	44.0	6	12	48.0	53.0	6	12	33.0	34.0	6	6	6	7	60.5	150	162	174	7	7.5	47.0	53.0	5	12	6	8	0
34 FT	20	23	16	10	6	6.5	6	6.5	63.5	44.0	44.0	44.0	6	12	47.0	53.0	6	12	33.0	35.0	6	6	6	7.5	58.9	151	163	175	7	7.5	46.0	53.0	5	12	6	8	0
36 FT	21	24	16	10	6	6	6	6	63.9	45.0	45.0	45.0	6	12	47.0	53.0	6	12	32.0	34.0	6	6	6	7	59.1	152	164	176	7	7.5	46.0	53.0	5	12	6	8	0
38 FT	22	24	17	10	6	6	6	6	64.4	46.0	46.0	46.0	7	15	52.0	58.0	7	15	37.0	38.0	6	6	6	7	59.0	152	164	176	7	7	46.0	53.0	5	12	6	7.5	0
40 FT	23	25	17	10	6	6	6	6	64.6	47.0	47.0	47.0	7	15	52.0	57.0	7	15	36.0	37.0	6	6	6	7	59.3	153	165	177	7	7	46.0	53.0	5	12	6	7.5	0
42 FT	23	26	18	10	7	7.5	6	6	65.0	47.0	47.0	47.0	7	15	52.0	57.0	7	15	37.0	38.0	7	8	6	6.5	59.6	154	166	178	7	7	46.0	54.0	5	12	6	7	0
44 FT	24	27	19	10	7	7.5	6	6	65.8	44.0	48.0	48.0	7	15	52.0	57.0	7	15	36.0	37.0	7	8	6	6.5	60.0	155	167	179	7	7	46.0	54.0	5	12	6	7	0
46 FT	24	27	19	10	7	7	6	6	65.6	48.0	48.0	48.0	7	14	52.0	57.0	7	14	36.0	38.0	7	7.5	6	6.5	59.9	155	167	179	7	6.5	46.0	54.0	5	12	6	6.5	0
48 FT	25	28	20	10	7	7	6	6	66.4	45.0	49.0	49.0	7	14	52.0	56.0	7	14	36.0	37.0	7	7.5	6	6	60.4	156	168	180	7	6.5	46.0	54.0	5	12	6	6.5	0
50 FT	26	29	20	10	7	7	7	7.5	71.6	50.0	50.0	50.0	7	15	51.0	55.0	7	15	36.0	37.0	7	7.5	6	6	60.6	157	169	181	7	6.5	47.0	54.0	5	12	6	6.5	0

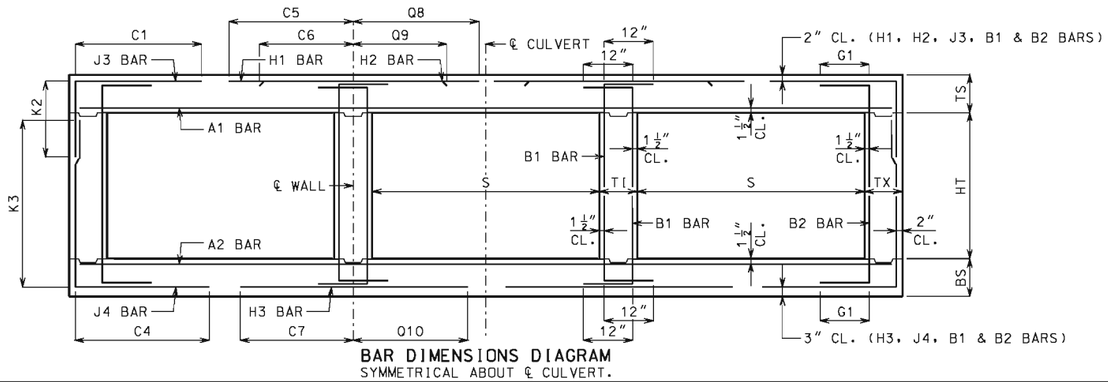

BAR DIMENSIONS DIAGRAM
SYMMETRICAL ABOUT ℄ CULVERT.

GENERAL NOTES:

IF DESIGN FILL IS BETWEEN TABULATED DESIGN FILLS, USE THE NEXT GREATER TABULATED DESIGN FILL, EXCEPT FOR DESIGN FILLS BETWEEN 2 FEET AND 4 FEET. FOR DESIGN FILLS BETWEEN 2 FEET AND 4 FEET USE THE GREATER MEMBER THICKNESS, AREA OF REINFORCEMENT AND BAR DIMENSIONS FROM THE 2 FEET AND 4 FEET TABULATED DESIGN FILLS. AREA OF REINFORCEMENT EQUALS BAR AREA PER FOOT SPACING.

SPECIAL DESIGNS ARE REQUIRED WHEN THE DESIGN FILL IS LESS THAN 1 FOOT OR GREATER THAN 50 FEET.

DIMENSIONS ARE IN INCHES UNLESS OTHERWISE SPECIFIED.

DESIGN FILLS ARE MEASURED FROM THE TOP OF TOP SLAB TO THE TOP OF EARTH FILL OR ROADWAY.

CULVERTS MEET STRENGTH AND SERVICEABILITY REQUIREMENTS FOR THE DESIGN VEHICULAR LIVE LOAD HL-93 MINUS THE LANE LOAD.

MISSOURI HIGHWAYS AND TRANSPORTATION COMMISSION
105 WEST CAPITOL
JEFFERSON CITY, MO 65102
1-888-ASK-MODOT (1-888-275-6636)

STATE OF MISSOURI
DENNIS W. HECKMAN
NUMBER PE-27141
PROFESSIONAL ENGINEER
THIS SHEET HAS BEEN SIGNED, SEALED AND DATED ELECTRONICALLY.

CONCRETE TRIPLE BOX CULVERT

MEMBER THICKNESS BAR SIZE, SPACING & DIMENSIONS

SPAN (S): 10 FEET
HEIGHT (HT): 11 THRU 13 FEET

DATE EFFECTIVE: 12/01/2011
DATE PREPARED: 9/29/2011

703.87

SHEET NO. 15 OF 27

IF A SEAL IS PRESENT ON THIS SHEET IT HAS BEEN ELECTRONICALLY SEALED AND DATED.

SPAN (S) = 11 FT HEIGHT (HT) = 6 FT OR 7 FT OR 8 FT

DESIGN FILL	MEMBER THICKNESS				TOP SLAB BARS														BOTTOM SLAB BARS											WALL BARS			
					A1 BARS		J3 BARS					H1 BARS				H2 BARS				A2 BARS		J4 BARS					H3 BARS				B1 BARS		B2 BARS	
	TS	BS	TX	TI	SIZE	SPA.	SIZE	SPA.	C1	K2 HT=6′	K2 HT=7′	K2 HT=8′	SIZE	SPA.	C5	Q8	SIZE	SPA.	C6	Q9	SIZE	SPA.	SIZE	SPA.	C4	K3 HT=6′	K3 HT=7′	K3 HT=8′	SIZE	SPA.	C7	Q10	SIZE	SPA.	SIZE	SPA.	G1
1 FT	13	9	8	8	5	6.5	5	9	58.5	29.0	29.0	33.0	5	13	108.5	80.5	5	13	30.0	33.0	5	8.5	5	6	52.6	77	89	101	6	7	50.0	53.0	5	12	5	12	12
2 FT	14	9	8	8	5	6	4	6	55.5	30.0	30.0	30.0	5	14	106.5	80.5	5	14	29.0	28.0	5	7.5	6	6.5	50.8	77	89	101	6	6.5	49.0	52.0	5	12	5	12	12
4 FT	10	9	8	8	5	6.5	5	6	49.1	30.0	30.0	30.0	5	12	66.0	82.0	5	12	32.0	33.0	5	7.5	6	6.5	45.9	77	89	101	6	6	49.0	52.0	5	11.5	5	12	12
6 FT	10	10	8	8	5	7	5	6	42.8	30.0	30.0	30.0	5	12	53.0	63.0	5	12	30.0	31.0	5	7	5	6	39.8	78	90	102	6	6	47.0	52.0	5	12	5	12	12
8 FT	10	11	8	8	5	7	6	7	43.0	26.0	30.0	30.0	6	15	52.0	56.0	6	15	32.0	32.0	5	6.5	5	6.5	37.4	79	91	103	6	6.5	46.0	52.0	5	12	5	12	0
10 FT	11	12	8	8	5	7	5	6	37.6	27.0	31.0	31.0	6	15	50.0	55.0	6	15	31.0	32.0	5	6	5	7	35.6	80	92	104	6	6.5	45.0	52.0	5	12	5	12	0
12 FT	12	13	8	8	5	7	5	6.5	36.0	28.0	32.0	32.0	6	15	48.0	54.0	6	15	31.0	32.0	5	6	5	7.5	34.6	81	93	105	6	6.5	45.0	52.0	5	12	5	12	0
14 FT	13	14	8	8	5	6.5	5	7	34.6	33.0	33.0	33.0	6	15	47.0	54.0	6	15	31.0	32.0	6	8	5	7.5	33.8	82	94	106	6	6.5	44.0	53.0	5	12	5	12	0
16 FT	14	15	8	8	5	6	5	7	33.6	34.0	34.0	34.0	6	14	46.0	53.0	6	14	30.0	32.0	6	7.5	5	7.5	33.1	83	95	107	6	6.5	44.0	53.0	5	12	5	12	0
18 FT	15	16	8	8	6	8	5	6.5	37.9	35.0	35.0	35.0	6	14	51.0	59.0	6	14	36.0	38.0	6	7	5	7.5	32.6	84	96	108	6	6.5	44.0	53.0	5	12	5	11	0
20 FT	16	17	8	8	6	8	5	6.5	37.3	36.0	36.0	36.0	6	14	51.0	59.0	6	14	36.0	38.0	6	7	5	7	32.1	85	97	109	6	6.5	44.0	53.0	5	12	5	10	0
22 FT	17	18	8	8	6	7.5	5	6	36.9	37.0	37.0	37.0	6	14	50.0	59.0	6	14	36.0	38.0	6	6.5	5	6.5	31.9	86	98	110	6	6.5	44.0	53.0	5	12	5	9.5	0
24 FT	18	19	8	8	6	7	5	6	36.5	38.0	38.0	38.0	6	13	50.0	59.0	6	13	36.0	38.0	6	6	5	6.5	31.6	87	99	111	6	6	44.0	53.0	5	12	5	9.5	0
26 FT	19	21	8	8	6	6.5	6	7.5	40.4	39.0	39.0	43.0	6	13	50.0	59.0	6	13	35.0	38.0	6	6	6	7.5	34.4	89	101	113	7	7.5	47.0	56.0	5	12	5	9.5	0
28 FT	20	22	9	8	6	6.5	5	6	37.1	40.0	40.0	40.0	6	12	49.0	58.0	6	12	35.0	37.0	6	6	5	6	31.9	90	102	114	7	7.5	47.0	56.0	5	12	5	8.5	0
30 FT	21	23	10	8	6	6	5	6.5	37.9	41.0	41.0	41.0	6	12	49.0	58.0	6	12	34.0	37.0	7	8	5	6.5	32.4	91	103	115	7	7	47.0	56.0	5	12	5	8.5	0
32 FT	22	24	10	8	6	6	5	6.5	37.8	42.0	42.0	42.0	7	15	54.0	63.0	7	15	39.0	41.0	7	7.5	5	6.5	32.5	92	104	116	7	7	47.0	57.0	5	12	5	8	0
34 FT	23	25	10	8	7	7.5	5	6.5	37.8	43.0	43.0	43.0	7	15	54.0	63.0	7	15	38.0	40.0	7	7.5	5	6	32.5	93	105	117	7	6.5	47.0	57.0	5	12	5	8	0
36 FT	24	25	10	8	7	7.5	5	6	36.5	44.0	44.0	44.0	7	14	54.0	62.0	7	14	37.0	39.0	7	7	5	6	31.6	93	105	117	7	6.5	47.0	56.0	5	12	5	8	0
38 FT	25	26	10	8	7	7	5	6	36.6	45.0	45.0	45.0	7	14	53.0	62.0	7	14	37.0	38.0	7	7	5	6	31.8	94	106	118	7	6.5	47.0	56.0	5	12	5	8	0
40 FT	25	27	10	8	7	6.5	5	6	36.8	45.0	45.0	45.0	7	13	53.0	62.0	7	13	37.0	39.0	7	7	6	7	34.6	95	107	119	7	6.5	46.0	56.0	5	12	5	8	0
42 FT	26	28	10	8	7	7	6	7	40.8	50.0	50.0	50.0	7	13	53.0	62.0	7	13	37.0	38.0	7	7	6	7	34.9	96	108	120	7	6.5	46.0	56.0	5	12	5	8	0
44 FT	27	29	10	8	7	6.5	6	7	40.9	51.0	51.0	51.0	7	13	53.0	61.0	7	13	36.0	37.0	7	7	6	6.5	35.0	97	109	121	7	6.5	46.0	56.0	5	12	5	7.5	0
46 FT	28	29	11	8	7	6.5	6	7.5	41.6	52.0	52.0	52.0	7	13	53.0	61.0	7	13	36.0	37.0	7	6	6	7.5	35.6	97	109	121	7	6	47.0	57.0	5	12	5	7.5	0
48 FT	28	30	11	8	7	6	6	7.5	41.8	52.0	52.0	52.0	7	12	53.0	61.0	7	12	36.0	37.0	7	6.5	6	7	35.6	98	110	122	7	6	47.0	57.0	5	12	5	7.5	0
50 FT	29	31	11	8	7	6	6	7	41.9	53.0	53.0	53.0	7	12	53.0	60.0	7	12	36.0	37.0	7	6.5	6	7	35.9	99	111	123	7	6	47.0	57.0	5	12	5	7.5	0

SPAN (S) = 11 FT HEIGHT (HT) = 9 FT OR 10 FT OR 11 FT

DESIGN FILL	MEMBER THICKNESS				TOP SLAB BARS														BOTTOM SLAB BARS											WALL BARS			
					A1 BARS		J3 BARS					H1 BARS				H2 BARS				A2 BARS		J4 BARS					H3 BARS				B1 BARS		B2 BARS	
	TS	BS	TX	TI	SIZE	SPA.	SIZE	SPA.	C1	K2 HT=9′	K2 HT=10′	K2 HT=11′	SIZE	SPA.	C5	Q8	SIZE	SPA.	C6	Q9	SIZE	SPA.	SIZE	SPA.	C4	K3 HT=9′	K3 HT=10′	K3 HT=11′	SIZE	SPA.	C7	Q10	SIZE	SPA.	SIZE	SPA.	G1
1 FT	13	9	9	9	5	6.5	5	8	59.3	33.0	33.0	33.0	5	13	109.5	81.5	5	13	31.0	33.0	5	7.5	6	6	74.5	113	125	137	6	7	51.0	53.0	5	11.5	5	10.5	12
2 FT	14	10	9	9	5	6	5	8	59.3	34.0	34.0	34.0	5	14	109.5	81.5	5	14	29.0	28.0	5	7.5	6	7	70.6	114	126	138	5	6	47.0	50.0	5	12	5	10.5	12
4 FT	10	10	9	9	5	6.5	5	6	59.3	30.0	30.0	30.0	5	13	109.5	83.0	5	13	32.0	33.0	5	7	6	6.5	64.1	114	126	138	6	6.5	50.0	53.0	5	11.5	5	9.5	12
6 FT	10	10	9	9	5	7	5	6	56.6	30.0	30.0	30.0	5	12	55.0	61.0	5	12	30.0	31.0	5	7	6	6	57.8	114	126	138	6	6	48.0	52.0	5	12	5	9.5	12
8 FT	10	11	9	9	5	7	6	7.5	55.5	30.0	30.0	34.0	6	15	53.0	56.0	6	15	32.0	33.0	5	6.5	6	6	55.6	115	127	139	6	6	47.0	52.0	5	12	5	9	0
10 FT	11	12	9	9	5	7	6	7	53.5	31.0	35.0	35.0	6	15	51.0	55.0	6	15	32.0	33.0	5	6	6	6	53.8	116	128	140	6	6.5	46.0	52.0	5	12	5	8.5	0
12 FT	12	13	9	9	5	7	6	6.5	51.9	32.0	36.0	36.0	6	15	49.0	54.0	6	15	31.0	33.0	5	6	6	6	52.4	117	129	141	6	6.5	46.0	52.0	5	12	5	8.5	0
14 FT	13	14	9	9	5	6.5	6	6	50.5	33.0	37.0	37.0	6	15	48.0	53.0	6	15	31.0	33.0	6	8	6	6	51.3	118	130	142	6	6.5	45.0	52.0	5	12	5	8.5	0
16 FT	14	15	10	9	5	6	6	7	49.9	34.0	34.0	38.0	6	15	47.0	53.0	6	15	31.0	33.0	6	7.5	6	7	50.4	119	131	143	6	6.5	45.0	52.0	5	12	5	8	0
18 FT	15	16	10	9	6	8	6	7	54.9	35.0	35.0	39.0	6	15	52.0	59.0	6	15	37.0	39.0	6	7	6	7	49.6	120	132	144	6	6.5	45.0	53.0	5	12	5	8	0
20 FT	16	17	11	9	6	8	6	7.5	54.8	36.0	36.0	40.0	6	14	52.0	58.0	6	14	36.0	39.0	6	7	6	8	49.3	121	133	145	6	6.5	45.0	53.0	5	12	5	7.5	0
22 FT	17	18	12	9	6	7.5	6	8	54.8	37.0	37.0	37.0	6	14	51.0	58.0	6	14	36.0	39.0	6	6.5	5	6	45.9	122	134	146	6	6.5	45.0	53.0	5	12	5	7.5	0
24 FT	18	20	12	9	6	7	6	7.5	54.4	38.0	38.0	38.0	6	13	51.0	58.0	6	13	36.0	38.0	6	6	5	6	45.8	124	136	148	6	6	45.0	53.0	5	12	5	7	0
26 FT	19	21	12	9	6	6.5	6	7	53.9	39.0	39.0	43.0	6	13	50.0	58.0	6	13	35.0	38.0	6	6	6	8.5	48.4	125	137	149	7	7.5	48.0	56.0	5	12	5	7	0
28 FT	20	22	13	9	6	6.5	6	7.5	54.3	40.0	40.0	40.0	6	12	50.0	58.0	6	12	35.0	37.0	6	6	5	6	45.4	126	138	150	7	7.5	48.0	57.0	5	12	5	6.5	0
30 FT	21	23	13	9	6	6	6	7	54.1	41.0	41.0	41.0	6	12	50.0	57.0	6	12	34.0	36.0	7	8	5	6	45.4	127	139	151	7	7	48.0	57.0	5	12	5	6.5	0
32 FT	22	24	13	9	6	6	6	6.5	54.1	42.0	42.0	46.0	7	15	54.0	62.0	7	15	39.0	41.0	7	7.5	6	8	48.4	128	140	152	7	7	48.0	57.0	5	12	5	6.5	0
34 FT	23	25	14	9	7	7.5	6	7	54.8	43.0	43.0	43.0	7	15	54.0	62.0	7	15	38.0	40.0	7	7.5	5	6	45.8	129	141	153	7	6.5	48.0	57.0	5	12	5	6	0
36 FT	23	25	14	9	7	7	6	7	53.3	43.0	43.0	43.0	7	14	54.0	62.0	7	14	38.0	40.0	7	7	5	6	44.1	129	141	153	7	6.5	48.0	57.0	5	12	5	6	0
38 FT	24	26	14	9	7	7.5	6	7	53.4	44.0	44.0	44.0	7	14	54.0	61.0	7	14	38.0	40.0	7	7	5	6	44.3	130	142	154	7	6.5	48.0	57.0	5	12	5	6	0
40 FT	25	27	14	9	7	7	6	6.5	53.4	45.0	45.0	45.0	7	14	54.0	61.0	7	14	37.0	39.0	7	7	5	6	44.5	131	143	155	7	6.5	48.0	57.0	5	12	5	6	0
42 FT	26	28	15	9	7	7	6	7	54.3	46.0	50.0	50.0	7	13	54.0	60.0	7	13	37.0	38.0	7	7	6	8	48.0	132	144	156	7	6	48.0	57.0	5	12	6	8	0
44 FT	27	29	15	9	7	6.5	6	6.5	54.3	51.0	51.0	51.0	7	13	53.0	60.0	7	13	36.0	38.0	7	7	6	8	48.1	133	145	157	7	6	48.0	57.0	5	12	6	8	0
46 FT	27	30	15	9	7	6.5	6	6	54.4	51.0	51.0	51.0	7	13	53.0	60.0	7	13	37.0	38.0	7	7	6	8	48.1	134	146	158	7	6	48.0	57.0	5	12	6	8	0
48 FT	28	30	16	9	7	6.5	6	6.5	55.0	52.0	52.0	52.0	7	13	53.0	59.0	7	13	36.0	37.0	7	6	6	7.5	48.5	134	146	158	7	6	48.0	57.0	5	12	6	8	0
50 FT	29	31	16	9	7	6.5	6	6.5	55.1	53.0	53.0	53.0	7	13	53.0	59.0	7	13	36.0	37.0	7	6.5	6	7.5	48.8	135	147	159	7	6	48.0	57.0	5	12	6	8	0

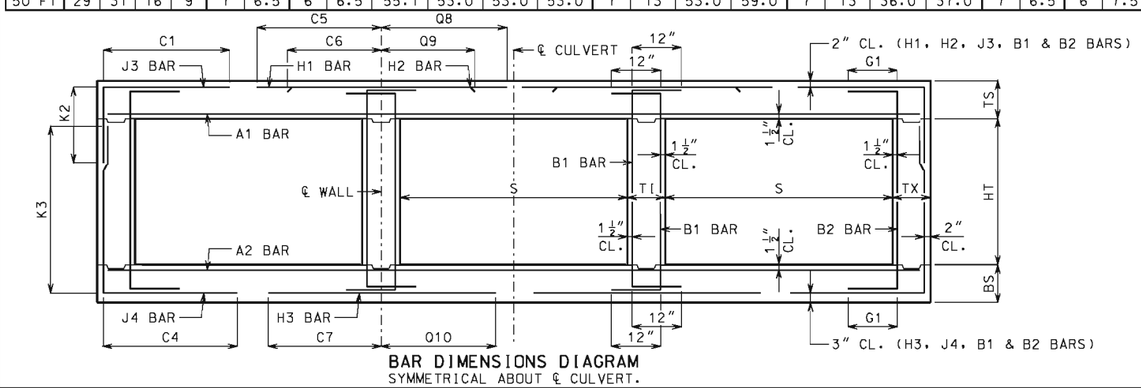

BAR DIMENSIONS DIAGRAM
SYMMETRICAL ABOUT ℄ CULVERT.

IF A SEAL IS PRESENT ON THIS SHEET IT HAS BEEN ELECTRONICALLY SEALED AND DATED.

GENERAL NOTES:

IF DESIGN FILL IS BETWEEN TABULATED DESIGN FILLS, USE THE NEXT GREATER TABULATED DESIGN FILL, EXCEPT FOR DESIGN FILLS BETWEEN 2 FEET AND 4 FEET. FOR DESIGN FILLS BETWEEN 2 FEET AND 4 FEET USE THE GREATER MEMBER THICKNESS. AREA OF REINFORCEMENT AND BAR DIMENSIONS FROM THE 2 FEET AND 4 FEET TABULATED DESIGN FILLS. AREA OF REINFORCEMENT EQUALS BAR AREA PER FOOT SPACING.

SPECIAL DESIGNS ARE REQUIRED WHEN THE DESIGN FILL IS LESS THAN 1 FOOT OR GREATER THAN 50 FEET.

DIMENSIONS ARE IN INCHES UNLESS OTHERWISE SPECIFIED.

DESIGN FILLS ARE MEASURED FROM THE TOP OF TOP SLAB TO THE TOP OF EARTH FILL OR ROADWAY.

CULVERTS MEET STRENGTH AND SERVICEABILITY REQUIREMENTS FOR THE DESIGN VEHICULAR LIVE LOAD HL-93 MINUS THE LANE LOAD.

MISSOURI HIGHWAYS AND TRANSPORTATION COMMISSION
105 WEST CAPITOL
JEFFERSON CITY, MO 65102
1-888-ASK-MODOT (1-888-275-6636)

STATE OF MISSOURI
DENNIS W. HECKMAN
NUMBER PE-27141
PROFESSIONAL ENGINEER
THIS SHEET HAS BEEN SIGNED, SEALED AND DATED ELECTRONICALLY.

CONCRETE TRIPLE BOX CULVERT

MEMBER THICKNESS BAR SIZE, SPACING & DIMENSIONS

SPAN (S): 11 FEET
HEIGHT (HT): 6 THRU 11 FEET

DATE EFFECTIVE: 12/01/2011
DATE PREPARED: 9/29/2011

703.87

SPAN (S) = 11 FT HEIGHT (HT) = 12 FT OR 13 FT OR 14 FT

DESIGN FILL	MEMBER THICKNESS				TOP SLAB BARS														BOTTOM SLAB BARS												WALL BARS				
					A1 BARS		J3 BARS						H1 BARS				H2 BARS				A2 BARS		J4 BARS						H3 BARS				B1 BARS		B2 BARS	
										K2														K3											
	TS	BS	TX	TI	SIZE	SPA.	SIZE	SPA.	C1	HT=12'	HT=13'	HT=14'	SIZE	SPA.	C5	Q8	SIZE	SPA.	C6	Q9	SIZE	SPA.	SIZE	SPA.	C4	HT=12'	HT=13'	HT=14'	SIZE	SPA.	C7	Q10	SIZE	SPA.	SIZE	SPA.	G1
1 FT	13	10	10	11	5	6.5	5	6	60.3	33.0	33.0	33.0	5	13	110.5	82.5	5	13	31.0	33.0	5	7.5	6	6	89.3	150	162	174	5	6	51.0	51.0	5	10	5	8	12
2 FT	14	11	10	11	5	6	5	6	60.3	34.0	34.0	34.0	5	14	110.5	82.5	5	14	30.0	32.0	5	7.5	6	6	89.3	151	163	175	5	6	50.0	51.0	5	12	5	8	12
4 FT	10	11	11	11	5	7	5	6	60.9	30.0	30.0	30.0	5	13	110.5	80.0	5	13	33.0	33.0	5	7	6	6.5	85.9	151	163	175	5	6	49.0	51.0	5	12	5	7.5	12
6 FT	10	11	11	11	5	7.5	5	6	79.0	30.0	30.0	30.0	5	12	58.0	57.0	5	12	31.0	31.0	5	6.5	6	6	77.5	151	163	175	6	6.5	50.0	53.0	5	12	5	7.5	12
8 FT	10	11	12	11	5	7.5	6	7.5	70.1	30.0	30.0	34.0	6	15	54.0	55.0	6	15	33.0	33.0	5	6.5	6	6	70.9	151	163	175	6	6	48.0	52.0	5	12	5	7	0
10 FT	11	12	12	11	5	7.5	6	8	68.5	31.0	31.0	35.0	6	16	52.0	54.0	6	16	32.0	33.0	5	6	6	6	69.9	152	164	176	6	6	47.0	52.0	5	12	5	7	0
12 FT	12	13	12	11	5	7	6	8	67.4	32.0	32.0	36.0	6	16	50.0	53.0	6	16	32.0	33.0	5	6	6	6.5	69.0	153	165	177	6	6	47.0	52.0	5	12	5	7	0
14 FT	13	14	12	11	5	6.5	6	7	66.4	33.0	37.0	37.0	6	16	49.0	53.0	6	16	32.0	33.0	6	8	6	6.5	68.3	154	166	178	6	6.5	47.0	52.0	5	12	5	6.5	0
16 FT	14	15	13	11	5	6	6	7	64.9	34.0	38.0	38.0	6	15	48.0	52.0	6	15	32.0	33.0	6	7.5	6	7	66.6	155	167	179	6	6.5	47.0	52.0	5	12	5	6.5	0
18 FT	15	16	13	11	6	8	6	6.5	70.3	39.0	39.0	39.0	6	15	54.0	58.0	6	15	37.0	39.0	6	7	6	6	66.0	156	168	180	6	6.5	47.0	52.0	5	12	5	6.5	0
20 FT	15	17	14	11	6	8	6	6.5	68.4	39.0	39.0	39.0	6	14	53.0	58.0	6	14	37.0	39.0	6	7	6	6.5	65.1	157	169	181	6	6.5	46.0	53.0	5	12	5	6	0
22 FT	17	18	14	11	6	7.5	6	6.5	69.0	41.0	41.0	41.0	6	14	53.0	58.0	6	14	37.0	39.0	6	6	6	6	64.5	158	170	182	6	6	46.0	53.0	5	12	5	6	0
24 FT	18	20	15	11	6	7	6	6.5	68.9	42.0	42.0	42.0	6	13	52.0	58.0	6	13	36.0	38.0	6	6	6	6	64.6	160	172	184	6	6	46.0	53.0	5	12	6	8	0
26 FT	19	21	15	11	6	6.5	6	6	68.6	43.0	43.0	43.0	6	13	52.0	57.0	6	13	36.0	38.0	6	6	6	6	64.3	161	173	185	7	7.5	49.0	56.0	5	12	6	8	0
28 FT	20	22	16	11	6	6.5	6	6	68.6	44.0	44.0	44.0	6	12	51.0	57.0	6	12	35.0	37.0	6	6	6	6	63.9	162	174	186	7	7.5	49.0	56.0	5	12	6	8	0
30 FT	21	23	17	11	6	6	6	6	69.0	45.0	45.0	45.0	6	12	51.0	57.0	6	12	34.0	36.0	7	8	6	6.5	64.0	163	175	187	7	7	49.0	57.0	5	12	6	7.5	0
32 FT	21	24	17	11	6	6	6	6	68.6	45.0	45.0	45.0	6	12	51.0	57.0	6	12	35.0	37.0	7	7.5	6	6.5	64.1	164	176	188	7	7	49.0	57.0	5	12	6	7.5	0
34 FT	22	25	18	11	6	6	6	6	69.1	46.0	46.0	46.0	7	15	55.0	62.0	7	15	40.0	41.0	7	7.5	6	6.5	64.4	165	177	189	7	6.5	49.0	57.0	5	12	6	7	0
36 FT	23	26	18	11	7	7.5	7	7.5	74.3	47.0	47.0	47.0	7	15	55.0	61.0	7	15	39.0	41.0	7	7.5	6	6	64.5	166	178	190	7	6.5	49.0	57.0	5	12	6	7	0
38 FT	24	26	18	11	7	7.5	7	8	72.6	48.0	48.0	48.0	7	14	55.0	61.0	7	14	38.0	40.0	7	7	6	6.5	62.4	166	178	190	7	6.5	49.0	57.0	5	12	6	7	0
40 FT	25	27	18	11	7	7	7	7	72.9	49.0	49.0	49.0	7	14	55.0	61.0	7	14	38.0	39.0	7	7	6	6	62.6	167	179	191	7	6.5	49.0	57.0	5	12	6	7	0
42 FT	25	28	19	11	7	7	7	7	73.3	49.0	49.0	49.0	7	14	55.0	60.0	7	14	38.0	40.0	7	7	6	6	62.9	168	180	192	7	6.5	49.0	57.0	5	12	6	6.5	0
44 FT	26	29	20	11	7	7	7	7.5	74.0	50.0	50.0	50.0	7	13	54.0	60.0	7	13	38.0	39.0	7	7	6	6	63.3	169	181	193	7	6	49.0	57.0	5	12	6	6.5	0
46 FT	27	30	21	11	7	6.5	7	7.5	74.6	51.0	51.0	51.0	7	13	54.0	59.0	7	13	37.0	38.0	7	7	6	6	63.6	170	182	194	7	6	49.0	57.0	5	12	6	6	0
48 FT	27	30	21	11	7	6	7	7	74.5	51.0	51.0	51.0	7	12	54.0	59.0	7	12	37.0	39.0	7	6	6	6	63.5	170	182	194	7	6	49.0	57.0	5	12	6	6	0
50 FT	28	31	22	11	7	6.5	7	7	75.3	52.0	52.0	58.0	7	13	54.0	59.0	7	13	37.0	38.0	7	6.5	7	7.5	67.0	171	183	195	7	6	49.0	58.0	5	12	6	6	0

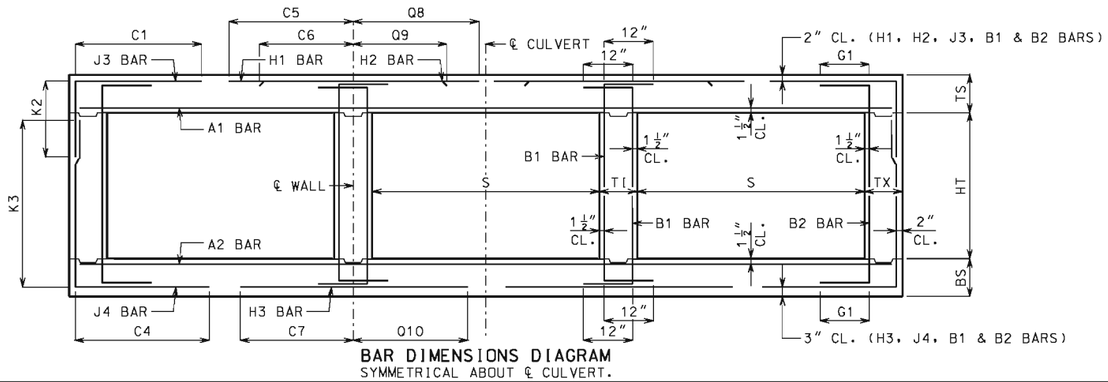

BAR DIMENSIONS DIAGRAM
SYMMETRICAL ABOUT ℄ CULVERT.

GENERAL NOTES:

IF DESIGN FILL IS BETWEEN TABULATED DESIGN FILLS, USE THE NEXT GREATER TABULATED DESIGN FILL, EXCEPT FOR DESIGN FILLS BETWEEN 2 FEET AND 4 FEET. FOR DESIGN FILLS BETWEEN 2 FEET AND 4 FEET USE THE GREATER MEMBER THICKNESS, AREA OF REINFORCEMENT AND BAR DIMENSIONS FROM THE 2 FEET AND 4 FEET TABULATED DESIGN FILLS. AREA OF REINFORCEMENT EQUALS BAR AREA PER FOOT SPACING.

SPECIAL DESIGNS ARE REQUIRED WHEN THE DESIGN FILL IS LESS THAN 1 FOOT OR GREATER THAN 50 FEET.

DIMENSIONS ARE IN INCHES UNLESS OTHERWISE SPECIFIED.

DESIGN FILLS ARE MEASURED FROM THE TOP OF TOP SLAB TO THE TOP OF EARTH FILL OR ROADWAY.

CULVERTS MEET STRENGTH AND SERVICEABILITY REQUIREMENTS FOR THE DESIGN VEHICULAR LIVE LOAD HL-93 MINUS THE LANE LOAD.

MISSOURI HIGHWAYS AND TRANSPORTATION COMMISSION
105 WEST CAPITOL
JEFFERSON CITY, MO 65102
1-888-ASK-MODOT (1-888-275-6636)

STATE OF MISSOURI
DENNIS W. HECKMAN
NUMBER PE-27141
PROFESSIONAL ENGINEER
THIS SHEET HAS BEEN SIGNED, SEALED AND DATED ELECTRONICALLY.

CONCRETE TRIPLE BOX CULVERT

MEMBER THICKNESS BAR SIZE, SPACING & DIMENSIONS

SPAN (S): 11 FEET
HEIGHT (HT): 12 THRU 14 FEET

DATE EFFECTIVE: 12/01/2011
DATE PREPARED: 9/29/2011

703.87

SHEET NO. 17 OF 27

IF A SEAL IS PRESENT ON THIS SHEET IT HAS BEEN ELECTRONICALLY SEALED AND DATED.

SPAN (S) = 12 FT HEIGHT (HT) = 6 FT OR 7 FT OR 8 FT

DESIGN FILL	MEMBER THICKNESS				TOP SLAB BARS														BOTTOM SLAB BARS												WALL BARS			
					A1 BARS		J3 BARS						H1 BARS				H2 BARS				A2 BARS		J4 BARS						H3 BARS				B1 BARS		B2 BARS	
	TS	BS	TX	TI	SIZE	SPA.	SIZE	SPA.	C1	K2 HT=6′	K2 HT=7′	K2 HT=8′	SIZE	SPA.	C5	Q8	SIZE	SPA.	C6	Q9	SIZE	SPA.	SIZE	SPA.	C4	K3 HT=6′	K3 HT=7′	K3 HT=8′	SIZE	SPA.	C7	Q10	SIZE	SPA.	SIZE	SPA.	G1
1 FT	14	9	8	8	5	6	4	6	59.1	30.0	30.0	30.0	5	12	114.5	86.5	5	12	31.0	34.0	5	7.5	6	7	54.6	77	89	101	6	6.5	53.0	56.0	5	12	5	12	12
2 FT	14	9	8	8	5	6	5	8.5	62.1	30.0	30.0	34.0	5	12	116.5	86.5	5	12	30.0	33.0	5	7.5	6	6.5	50.3	77	89	101	6	6	52.0	55.0	5	12	5	12	12
4 FT	11	10	8	8	5	6	5	6.5	48.9	31.0	31.0	31.0	5	12	69.0	88.0	5	12	33.0	35.0	5	7	5	6	42.6	78	90	102	6	6	51.0	56.0	5	12	5	12	12
6 FT	11	11	8	8	5	6.5	5	6.5	42.8	31.0	31.0	31.0	6	16	59.0	71.0	6	16	34.0	36.0	5	6.5	5	6.5	39.3	79	91	103	6	6.5	49.0	56.0	5	12	5	12	12
8 FT	11	12	8	8	5	6.5	5	6	39.9	31.0	31.0	31.0	6	14	55.0	61.0	6	14	33.0	34.0	5	6	5	7.5	36.6	80	92	104	6	6.5	48.0	56.0	5	12	5	12	0
10 FT	12	13	8	8	5	6.5	5	6.5	37.3	32.0	32.0	32.0	6	14	52.0	59.0	6	14	32.0	34.0	5	6	5	7.5	34.9	81	93	105	6	6	47.0	56.0	5	12	5	12	0
12 FT	13	14	8	8	5	6	5	7	35.4	33.0	33.0	33.0	6	14	51.0	58.0	6	14	32.0	34.0	6	8	5	8	33.8	82	94	106	6	6	47.0	56.0	5	12	5	12	0
14 FT	14	15	8	8	5	6	5	7	33.9	34.0	34.0	34.0	6	13	49.0	57.0	6	13	32.0	34.0	6	7.5	5	8	32.8	83	95	107	6	6	47.0	56.0	5	12	5	12	0
16 FT	15	16	8	8	6	8	5	6.5	37.9	35.0	35.0	35.0	6	13	55.0	63.0	6	13	37.0	40.0	6	7	5	8	32.1	84	96	108	6	6	46.0	56.0	5	12	5	12	0
18 FT	16	17	8	8	6	8	5	6.5	37.0	36.0	36.0	36.0	6	13	54.0	63.0	6	13	37.0	40.0	6	7	5	7	31.6	85	97	109	6	6	46.0	56.0	5	12	5	11.5	0
20 FT	17	18	8	8	6	7.5	5	6.5	36.4	37.0	37.0	37.0	6	12	53.0	63.0	6	12	37.0	40.0	6	6.5	5	6.5	31.1	86	98	110	6	6	46.0	56.0	5	12	5	10	0
22 FT	18	20	8	8	6	6.5	5	6	36.1	38.0	38.0	38.0	6	12	53.0	62.0	6	12	37.0	40.0	6	6	5	6	30.8	88	100	112	6	6	46.0	57.0	5	12	5	9.5	0
24 FT	20	21	8	8	6	6.5	6	7.5	39.5	44.0	44.0	44.0	6	12	52.0	62.0	6	12	36.0	39.0	7	8	6	7.5	33.8	89	101	113	7	7.5	49.0	59.0	5	12	5	9.5	0
26 FT	21	22	8	8	6	6	6	7	39.3	45.0	45.0	45.0	6	12	52.0	62.0	6	12	36.0	39.0	7	7.5	6	7	33.6	90	102	114	7	7.5	49.0	60.0	5	12	5	9.5	0
28 FT	22	23	8	8	6	6	6	6.5	39.0	46.0	46.0	46.0	7	15	57.0	67.0	7	15	41.0	44.0	7	7	6	6.5	33.4	91	103	115	7	7	49.0	60.0	5	12	5	8.5	0
30 FT	23	24	8	8	7	7.5	6	6	38.9	47.0	47.0	47.0	7	15	56.0	67.0	7	15	40.0	43.0	7	6.5	6	6	33.4	92	104	116	7	6.5	49.0	60.0	5	12	5	8	0
32 FT	24	25	9	8	7	7.5	6	7	39.8	48.0	48.0	48.0	7	14	56.0	66.0	7	14	40.0	42.0	7	6.5	6	7	34.0	93	105	117	7	6.5	49.0	60.0	5	12	5	8.5	0
34 FT	25	26	9	8	7	7	6	6.5	39.8	49.0	49.0	49.0	7	14	56.0	66.0	7	14	39.0	42.0	7	6	6	6.5	34.0	94	106	118	7	6	49.0	60.0	5	12	5	8	0
36 FT	26	27	9	8	7	7	6	6.5	39.8	50.0	50.0	50.0	7	13	56.0	66.0	7	13	39.0	41.0	7	6	6	6.5	34.1	95	107	119	7	6	49.0	60.0	5	12	5	7.5	0
38 FT	27	28	9	8	7	6.5	6	6	39.8	51.0	51.0	51.0	7	13	56.0	66.0	7	13	38.0	40.0	7	6	6	6	34.3	96	108	120	7	6	49.0	60.0	5	12	5	7	0
40 FT	28	29	9	8	7	6.5	6	6	38.9	52.0	52.0	52.0	7	12	56.0	65.0	7	12	37.0	39.0	7	6.5	6	6	33.4	97	109	121	8	7.5	55.0	66.0	5	12	5	7	0
42 FT	28	30	10	8	7	6	6	6.5	39.8	52.0	52.0	52.0	7	12	56.0	65.0	7	12	38.0	40.0	7	6.5	6	6.5	33.9	98	110	122	8	7.5	55.0	66.0	5	12	5	8	0
44 FT	29	31	10	8	7	6	6	6.5	39.9	53.0	53.0	53.0	7	12	55.0	64.0	7	12	38.0	39.0	7	6.5	6	6	34.0	99	111	123	8	7.5	55.0	66.0	5	12	5	7	0
46 FT	30	32	10	8	7	6	6	6	40.0	54.0	54.0	54.0	7	12	55.0	64.0	7	12	37.0	38.0	7	6	6	6	34.3	100	112	124	8	7.5	55.0	66.0	5	12	5	6.5	0
48 FT	31	33	10	8	8	7.5	6	6	40.1	55.0	55.0	55.0	8	15	63.0	71.0	8	15	45.0	46.0	7	6	7	6.5	37.5	101	113	125	8	7.5	55.0	66.0	5	12	5	6.5	0
50 FT	32	34	11	8	8	7.5	6	6.5	41.0	56.0	56.0	56.0	7	12	55.0	63.0	7	12	37.0	38.0	7	6	6	6	35.1	102	114	126	8	7	55.0	66.0	5	12	5	7	0

SPAN (S) = 12 FT HEIGHT (HT) = 9 FT OR 10 FT OR 11 FT

DESIGN FILL	MEMBER THICKNESS				TOP SLAB BARS														BOTTOM SLAB BARS												WALL BARS			
					A1 BARS		J3 BARS						H1 BARS				H2 BARS				A2 BARS		J4 BARS						H3 BARS				B1 BARS		B2 BARS	
	TS	BS	TX	TI	SIZE	SPA.	SIZE	SPA.	C1	K2 HT=9′	K2 HT=10′	K2 HT=11′	SIZE	SPA.	C5	Q8	SIZE	SPA.	C6	Q9	SIZE	SPA.	SIZE	SPA.	C4	K3 HT=9′	K3 HT=10′	K3 HT=11′	SIZE	SPA.	C7	Q10	SIZE	SPA.	SIZE	SPA.	G1
1 FT	14	10	8	9	5	6	5	7.5	62.3	34.0	34.0	34.0	5	12	117.5	87.5	5	12	31.0	35.0	5	7.5	6	6	79.4	114	126	138	5	6	51.0	54.0	5	12	5	10	12
2 FT	14	10	9	9	5	6	5	8	62.9	34.0	34.0	34.0	5	12	117.5	87.5	5	12	30.0	33.0	5	7	6	6.5	68.6	114	126	138	6	6.5	53.0	56.0	5	12	5	10.5	12
4 FT	11	10	9	9	5	6	6	7	75.1	31.0	31.0	35.0	5	12	82.0	89.0	5	12	34.0	36.0	5	7	6	6	61.3	114	126	138	6	6	52.0	56.0	5	12	5	10	12
6 FT	11	11	9	9	5	6.5	6	7	59.8	31.0	35.0	35.0	6	16	61.0	70.0	6	16	35.0	36.0	5	6.5	6	6	57.5	115	127	139	6	6	50.0	56.0	5	12	5	9.5	12
8 FT	11	12	9	9	5	6.5	6	7	55.3	31.0	31.0	35.0	6	15	56.0	60.0	6	15	33.0	34.0	5	6	6	6.5	54.5	116	128	140	6	6	49.0	56.0	5	12	5	9	0
10 FT	12	13	9	9	5	6.5	6	6.5	52.5	32.0	32.0	36.0	6	14	54.0	59.0	6	14	33.0	34.0	5	6	6	6.5	52.4	117	129	141	6	6	48.0	56.0	5	12	5	8.5	0
12 FT	13	14	9	9	5	6	6	6.5	50.4	33.0	33.0	37.0	6	14	52.0	58.0	6	14	32.0	34.0	5	6	6	6.5	50.6	118	130	142	6	6	48.0	56.0	5	12	5	8.5	0
14 FT	14	15	9	9	5	6	6	6.5	48.8	34.0	34.0	38.0	6	14	51.0	57.0	6	14	32.0	34.0	6	7.5	6	6.5	49.4	119	131	143	6	6	48.0	56.0	5	12	5	8.5	0
16 FT	15	16	10	9	6	8	6	7.5	54.3	35.0	35.0	39.0	6	13	55.0	63.0	6	13	38.0	40.0	6	7	6	7.5	48.5	120	132	144	6	6	47.0	56.0	5	12	5	8	0
18 FT	16	17	11	9	6	8	6	8	54.3	36.0	36.0	36.0	6	13	55.0	62.0	6	13	38.0	40.0	6	7	5	6	45.4	121	133	145	6	6	47.0	56.0	5	12	5	8	0
20 FT	17	18	11	9	6	7.5	6	7.5	53.6	37.0	37.0	41.0	6	13	54.0	62.0	6	13	37.0	40.0	6	6	6	8	47.8	122	134	146	6	6	47.0	56.0	5	12	5	7.5	0
22 FT	18	20	11	9	6	7	6	6.5	53.3	38.0	38.0	42.0	6	12	54.0	62.0	6	12	37.0	40.0	6	6	6	7.5	47.5	124	136	148	6	6	47.0	57.0	5	12	5	7.5	0
24 FT	19	21	12	9	6	6.5	6	7	53.5	39.0	39.0	39.0	6	12	53.0	62.0	6	12	37.0	40.0	7	8	5	6	44.5	125	137	149	7	7.5	50.0	60.0	5	12	5	7	0
26 FT	20	22	13	9	6	6	6	7.5	53.9	40.0	40.0	40.0	6	12	53.0	61.0	6	12	37.0	40.0	7	7.5	5	6	44.6	126	138	150	7	7.5	50.0	60.0	5	12	5	7	0
28 FT	22	23	13	9	6	6	6	7.5	53.5	42.0	42.0	42.0	7	15	57.0	66.0	7	15	40.0	43.0	7	7	5	6	44.5	127	139	151	7	7	50.0	60.0	5	12	5	6.5	0
30 FT	23	25	13	9	7	7.5	6	7	53.4	43.0	43.0	43.0	7	15	57.0	66.0	7	15	40.0	42.0	7	7	5	6	44.4	129	141	153	7	6.5	50.0	60.0	5	12	5	6.5	0
32 FT	24	26	13	9	7	7.5	6	6.5	53.3	44.0	44.0	48.0	7	14	57.0	66.0	7	14	40.0	42.0	7	7	6	8.5	47.4	130	142	154	7	6.5	50.0	60.0	5	12	5	6.5	0
34 FT	25	26	13	9	7	7	6	6	53.0	45.0	45.0	49.0	7	14	57.0	65.0	7	14	39.0	41.0	7	6	6	7.5	47.3	130	142	154	7	6	50.0	60.0	5	12	5	6.5	0
36 FT	26	28	14	9	7	7	6	6.5	53.9	46.0	46.0	46.0	7	13	56.0	65.0	7	13	38.0	40.0	7	7	5	6	44.9	132	144	156	7	6	50.0	60.0	5	12	5	6	0
38 FT	26	29	15	9	7	6.5	6	6.5	54.6	50.0	50.0	50.0	7	13	56.0	65.0	7	13	39.0	41.0	7	6.5	6	8	48.1	133	145	157	7	6	50.0	60.0	5	12	6	8.5	0
40 FT	27	29	15	9	7	6.5	6	7	53.4	51.0	51.0	51.0	7	13	56.0	64.0	7	13	38.0	40.0	7	6	6	8	46.9	133	145	157	8	7.5	56.0	66.0	5	12	5	6	0
42 FT	28	30	15	9	7	6.5	6	6.5	53.4	52.0	52.0	52.0	7	12	56.0	64.0	7	12	38.0	39.0	7	6	6	8	47.0	134	146	158	8	7.5	56.0	66.0	5	12	6	8	0
44 FT	29	31	15	9	7	6	6	6.5	53.4	53.0	53.0	53.0	7	12	56.0	63.0	7	12	37.0	39.0	7	6	6	7.5	47.1	135	147	159	8	7.5	56.0	66.0	5	12	6	8	0
46 FT	30	32	15	9	7	6	6	6.5	53.5	54.0	54.0	54.0	7	12	55.0	63.0	7	12	37.0	38.0	7	6	6	7.5	47.4	136	148	160	8	7.5	56.0	66.0	5	12	6	8	0
48 FT	31	33	15	9	7	6	6	6	53.5	55.0	55.0	55.0	7	12	55.0	62.0	7	12	37.0	38.0	7	6	6	7	47.5	137	149	161	8	7	56.0	66.0	5	12	6	8	0
50 FT	31	34	16	9	8	7.5	6	6	54.4	55.0	55.0	55.0	7	12	55.0	62.0	7	12	37.0	38.0	7	6	6	7	47.9	138	150	162	8	7	56.0	67.0	5	12	6	8	0

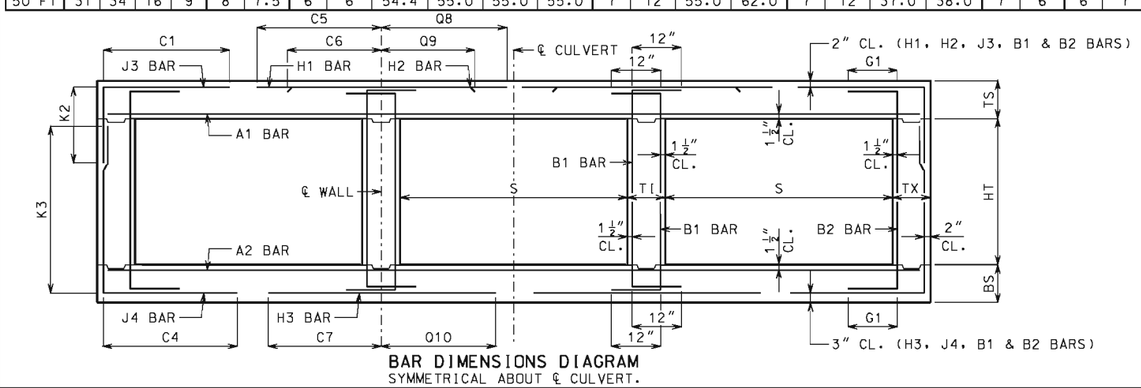

BAR DIMENSIONS DIAGRAM
SYMMETRICAL ABOUT ℄ CULVERT.

IF A SEAL IS PRESENT ON THIS SHEET IT HAS BEEN ELECTRONICALLY SEALED AND DATED.

GENERAL NOTES:

IF DESIGN FILL IS BETWEEN TABULATED DESIGN FILLS, USE THE NEXT GREATER TABULATED DESIGN FILL, EXCEPT FOR DESIGN FILLS BETWEEN 2 FEET AND 4 FEET. FOR DESIGN FILLS BETWEEN 2 FEET AND 4 FEET USE THE GREATER MEMBER THICKNESS, AREA OF REINFORCEMENT AND BAR DIMENSIONS FROM THE 2 FEET AND 4 FEET TABULATED DESIGN FILLS. AREA OF REINFORCEMENT EQUALS BAR AREA PER FOOT SPACING.

SPECIAL DESIGNS ARE REQUIRED WHEN THE DESIGN FILL IS LESS THAN 1 FOOT OR GREATER THAN 50 FEET.

DIMENSIONS ARE IN INCHES UNLESS OTHERWISE SPECIFIED.

DESIGN FILLS ARE MEASURED FROM THE TOP OF TOP SLAB TO THE TOP OF EARTH FILL OR ROADWAY.

CULVERTS MEET STRENGTH AND SERVICEABILITY REQUIREMENTS FOR THE DESIGN VEHICULAR LIVE LOAD HL-93 MINUS THE LANE LOAD.

MISSOURI HIGHWAYS AND TRANSPORTATION COMMISSION
105 WEST CAPITOL
JEFFERSON CITY, MO 65102
1-888-ASK-MODOT (1-888-275-6636)

STATE OF MISSOURI
DENNIS W. HECKMAN
NUMBER PE-27141
PROFESSIONAL ENGINEER
THIS SHEET HAS BEEN SIGNED, SEALED AND DATED ELECTRONICALLY.

CONCRETE TRIPLE BOX CULVERT

MEMBER THICKNESS BAR SIZE, SPACING & DIMENSIONS

SPAN (S): 12 FEET
HEIGHT (HT): 6 THRU 11 FEET

DATE EFFECTIVE: 12/01/2011
DATE PREPARED: 9/29/2011

703.87

SPAN (S) = 12 FT HEIGHT (HT) = 12 FT OR 13 FT

DESIGN FILL	MEMBER THICKNESS				TOP SLAB BARS														BOTTOM SLAB BARS										WALL BARS				
					A1 BARS		J3 BARS					H1 BARS				H2 BARS				A2 BARS		J4 BARS				H3 BARS				B1 BARS		B2 BARS		
	TS	BS	TX	TI	SIZE	SPA.	SIZE	SPA.	C1	K2 HT=12'	K2 HT=13'	SIZE	SPA.	C5	Q8	SIZE	SPA.	C6	Q9	SIZE	SPA.	SIZE	SPA.	C4	K3 HT=12'	K3 HT=13'	SIZE	SPA.	C7	Q10	SIZE	SPA.	SIZE	SPA.	G1
1 FT	14	10	10	10	5	6	5	7	63.8	34.0	34.0	5	12	118.5	87.5	5	12	32.0	35.0	5	7	6	6.5	89.1	150	162	6	7	55.0	57.0	5	12	5	8.5	12
2 FT	14	10	10	10	5	6	5	7	63.8	34.0	34.0	5	12	118.5	87.5	5	12	31.0	33.0	5	7	6	6	79.6	150	162	6	6.5	54.0	56.0	5	12	5	8	12
4 FT	11	11	10	10	5	6.5	5	6	63.8	31.0	31.0	5	12	118.5	89.0	5	12	34.0	35.0	5	6.5	6	6.5	76.3	151	163	6	6.5	53.0	57.0	5	12	5	8	12
6 FT	11	11	10	10	5	6.5	5	6	71.3	31.0	31.0	6	16	65.0	69.0	6	16	35.0	36.0	5	6.5	6	6	69.1	151	163	6	6	51.0	56.0	5	12	5	8	12
8 FT	11	12	10	10	5	6.5	6	7	65.4	31.0	35.0	6	15	57.0	60.0	6	15	34.0	35.0	5	6	6	6	66.4	152	164	6	6	50.0	56.0	5	12	5	8	0
10 FT	12	13	10	10	5	6.5	6	7	62.9	36.0	36.0	6	15	55.0	58.0	6	15	33.0	34.0	5	6	6	6	63.8	153	165	6	6	49.0	56.0	5	12	5	8	0
12 FT	13	14	11	10	5	6.5	6	7.5	61.1	33.0	37.0	6	14	53.0	57.0	6	14	33.0	34.0	6	8	6	7	62.0	154	166	6	6	49.0	56.0	5	12	5	7.5	0
14 FT	14	15	11	10	5	6	6	7	59.9	38.0	38.0	6	14	51.0	57.0	6	14	32.0	34.0	6	7.5	6	6	60.9	155	167	6	6	48.0	56.0	5	12	5	7.5	0
16 FT	15	16	12	10	6	8	6	7	65.0	39.0	39.0	6	14	56.0	62.0	6	14	38.0	40.0	6	7	6	7	59.9	156	168	6	6	48.0	56.0	5	12	5	7	0
18 FT	16	17	12	10	6	8	6	6.5	64.1	40.0	40.0	6	13	55.0	62.0	6	13	38.0	40.0	6	7	6	6	59.1	157	169	6	6	48.0	56.0	5	12	5	7	0
20 FT	17	18	13	10	6	7.5	6	6.5	63.8	41.0	41.0	6	13	55.0	61.0	6	13	38.0	40.0	6	6	6	7	58.5	158	170	6	6	48.0	56.0	5	12	5	6.5	0
22 FT	18	20	13	10	6	7	6	6	63.3	42.0	42.0	6	13	54.0	61.0	6	13	38.0	40.0	6	6	6	6.5	58.4	160	172	6	6	48.0	56.0	5	12	5	6.5	0
24 FT	19	21	14	10	6	6.5	6	6.5	63.1	39.0	43.0	6	12	54.0	61.0	6	12	37.0	40.0	7	8	6	7	58.0	161	173	7	7.5	51.0	60.0	5	12	5	6	0
26 FT	20	22	14	10	6	6.5	6	6	62.8	44.0	44.0	6	12	53.0	61.0	6	12	37.0	40.0	7	7.5	6	6.5	57.6	162	174	7	7.5	51.0	60.0	5	12	5	6	0
28 FT	21	23	15	10	6	6	6	6	62.9	45.0	45.0	6	12	53.0	61.0	6	12	37.0	40.0	7	7	6	7	57.4	163	175	7	7	51.0	60.0	5	12	6	8	0
30 FT	23	25	15	10	7	7.5	6	6	62.8	47.0	47.0	7	15	57.0	65.0	7	15	40.0	42.0	7	7	6	7	57.5	165	177	7	6.5	51.0	60.0	5	12	6	8	0
32 FT	23	26	16	10	7	7	6	6	63.1	47.0	47.0	7	14	57.0	65.0	7	14	41.0	43.0	7	7	6	7.5	57.5	166	178	7	6.5	51.0	60.0	5	12	6	8	0
34 FT	24	27	16	10	7	7	7	7.5	68.1	48.0	48.0	7	14	57.0	65.0	7	14	40.0	42.0	7	7	6	7	57.5	167	179	7	6	51.0	60.0	5	12	6	8	0
36 FT	25	28	17	10	7	7	6	6	63.6	49.0	49.0	7	14	57.0	64.0	7	14	40.0	42.0	7	7	6	7	57.8	168	180	7	6	51.0	60.0	5	12	6	7.5	0
38 FT	26	29	17	10	7	7	7	7.5	68.6	50.0	50.0	7	13	57.0	64.0	7	13	39.0	41.0	7	6.5	6	7	57.9	169	181	7	6	51.0	60.0	5	12	6	7.5	0
40 FT	27	29	17	10	7	6.5	7	8	66.8	51.0	51.0	7	13	56.0	63.0	7	13	38.0	40.0	7	6	6	7	55.9	169	181	8	7.5	57.0	66.0	5	12	6	7.5	0
42 FT	28	30	17	10	7	6.5	7	7	66.9	52.0	52.0	7	12	56.0	63.0	7	12	38.0	39.0	7	6	6	7	56.0	170	182	8	7.5	57.0	66.0	5	12	6	7.5	0
44 FT	29	31	18	10	7	6	7	7.5	67.8	53.0	53.0	7	12	56.0	62.0	7	12	37.0	38.0	7	6	6	6.5	56.4	171	183	8	7.5	57.0	66.0	5	12	6	7	0
46 FT	29	32	19	10	7	6	7	7.5	68.5	53.0	53.0	7	12	56.0	62.0	7	12	38.0	39.0	7	6	6	6.5	56.8	172	184	8	7	57.0	67.0	5	12	6	6.5	0
48 FT	30	33	19	10	7	6	7	7	68.5	54.0	54.0	7	12	56.0	61.0	7	12	37.0	38.0	7	6	6	6.5	56.9	173	185	8	7	57.0	67.0	5	12	6	6.5	0
50 FT	31	34	19	10	7	6	7	6.5	68.6	55.0	55.0	7	12	56.0	61.0	7	12	37.0	38.0	7	6	6	6.5	57.3	174	186	8	7	57.0	67.0	5	12	6	6.5	0

SPAN (S) = 12 FT HEIGHT (HT) = 14 FT OR 15 FT

DESIGN FILL	MEMBER THICKNESS				TOP SLAB BARS														BOTTOM SLAB BARS										WALL BARS				
					A1 BARS		J3 BARS					H1 BARS				H2 BARS				A2 BARS		J4 BARS				H3 BARS				B1 BARS		B2 BARS		
	TS	BS	TX	TI	SIZE	SPA.	SIZE	SPA.	C1	K2 HT=14'	K2 HT=15'	SIZE	SPA.	C5	Q8	SIZE	SPA.	C6	Q9	SIZE	SPA.	SIZE	SPA.	C4	K3 HT=14'	K3 HT=15'	SIZE	SPA.	C7	Q10	SIZE	SPA.	SIZE	SPA.	G1
1 FT	14	11	10	12	5	6	6	7.5	64.0	34.0	38.0	5	12	119.5	88.5	5	12	32.0	35.0	5	7	6	6	95.5	175	187	5	6	55.0	55.0	5	12	5	8	12
2 FT	14	12	10	12	5	6	6	7	64.0	34.0	38.0	5	12	119.5	88.5	5	12	31.0	34.0	5	7	6	6	95.5	176	188	5	6	54.0	55.0	5	12	5	8	12
4 FT	10	11	12	12	5	6	6	7.5	68.3	34.0	34.0	6	15	121.5	77.0	6	15	37.0	37.0	5	6.5	6	6	86.8	175	187	6	6.5	55.0	57.0	5	11	5	7	12
6 FT	10	12	12	12	5	6.5	6	7	80.0	34.0	34.0	6	15	61.0	61.0	6	15	35.0	35.0	5	6	6	6.5	83.1	176	188	6	6.5	53.0	57.0	5	12	5	7	12
8 FT	11	12	12	12	5	7	6	7.5	76.8	35.0	35.0	6	15	58.0	59.0	6	15	35.0	35.0	5	6	6	6	77.1	176	188	6	6	52.0	55.0	5	12	5	7	0
10 FT	12	13	12	12	5	6.5	6	7.5	74.4	36.0	36.0	6	15	56.0	58.0	6	15	34.0	35.0	5	6	6	6	75.5	177	189	6	6	51.0	55.0	5	12	5	6.5	0
12 FT	13	14	13	12	5	6.5	6	7.5	71.5	37.0	37.0	6	15	54.0	57.0	6	15	34.0	35.0	6	8	6	6	73.0	178	190	6	6	50.0	55.0	5	12	5	6.5	0
14 FT	14	15	13	12	5	6	6	6.5	70.3	38.0	38.0	6	14	52.0	56.0	6	14	33.0	35.0	6	7.5	6	6	72.0	179	191	6	6	50.0	55.0	5	12	5	6.5	0
16 FT	15	16	14	12	6	8	6	6.5	74.5	39.0	39.0	6	14	57.0	62.0	6	14	39.0	41.0	6	7	6	6.5	70.3	180	192	6	6	49.0	55.0	5	12	5	6	0
18 FT	15	17	15	12	6	7.5	6	6.5	72.4	39.0	39.0	6	13	56.0	61.0	6	13	39.0	40.0	6	6.5	6	6.5	69.0	181	193	6	6	49.0	56.0	5	12	6	8	0
20 FT	17	19	15	12	6	7.5	6	6	73.0	41.0	41.0	6	13	56.0	61.0	6	13	39.0	41.0	6	6	6	6	69.6	183	195	6	6	49.0	56.0	5	12	6	8	0
22 FT	18	20	16	12	6	7	6	6.5	72.8	42.0	42.0	6	13	55.0	61.0	6	13	39.0	41.0	6	6	6	6	68.4	184	196	6	6	49.0	56.0	5	12	6	8	0
24 FT	19	21	16	12	6	6.5	6	6	72.4	43.0	43.0	6	13	55.0	61.0	6	13	38.0	41.0	7	8	7	7.5	71.1	185	197	7	7.5	52.0	59.0	5	12	6	8	0
26 FT	20	22	16	12	6	6.5	7	7.5	77.1	44.0	50.0	6	12	55.0	61.0	6	12	38.0	40.0	7	7.5	7	7	70.8	186	198	7	7.5	52.0	60.0	5	12	6	8	0
28 FT	21	23	17	12	6	6	7	7.5	77.1	45.0	51.0	6	12	54.0	60.0	6	12	37.0	40.0	7	6.5	7	7.5	70.5	187	199	7	6.5	52.0	60.0	5	12	6	7.5	0
30 FT	22	25	18	12	6	6	7	7.5	77.3	46.0	46.0	7	15	59.0	65.0	7	15	42.0	44.0	7	7	6	6	67.8	189	201	7	6.5	52.0	60.0	5	12	6	7	0
32 FT	23	26	19	12	7	7.5	7	7.5	77.5	47.0	47.0	7	15	58.0	65.0	7	15	41.0	44.0	7	7	6	6	67.8	190	202	7	6.5	52.0	60.0	5	12	6	6.5	0
34 FT	24	27	19	12	7	7.5	7	7	77.6	48.0	48.0	7	14	58.0	65.0	7	14	41.0	43.0	7	7	6	6	67.9	191	203	7	6	52.0	60.0	5	12	6	6.5	0
36 FT	25	28	20	12	7	7	7	7.5	78.1	49.0	49.0	7	14	58.0	64.0	7	14	40.0	42.0	7	7	6	6	68.1	192	204	7	6	52.0	60.0	5	12	6	6.5	0
38 FT	26	29	21	12	7	7	7	7.5	78.6	50.0	50.0	7	13	58.0	64.0	7	13	40.0	41.0	7	6.5	6	6	68.3	193	205	7	6	52.0	61.0	5	12	6	6	0
40 FT	27	30	21	12	7	6.5	7	7.5	77.1	51.0	51.0	7	13	57.0	63.0	7	13	39.0	40.0	7	6.5	6	6	66.5	194	206	7	6	52.0	61.0	5	12	6	6	0
42 FT	27	31	21	12	7	6	7	7	77.0	51.0	51.0	7	12	57.0	63.0	7	12	40.0	41.0	7	6.5	6	6	66.8	195	207	7	6	52.0	61.0	5	12	6	6	0
44 FT	28	31	22	12	7	6.5	7	7	77.6	52.0	58.0	7	12	57.0	63.0	7	12	39.0	40.0	7	6	7	7.5	69.6	195	207	8	7.5	58.0	67.0	5	12	6	6	0
46 FT	29	32	22	12	7	6	7	6.5	77.9	59.0	59.0	7	12	57.0	62.0	7	12	38.0	40.0	7	6	7	7.5	70.0	196	208	8	7.5	58.0	67.0	5	12	6	6	0
48 FT	30	33	23	12	7	6	7	6.5	78.6	54.0	60.0	7	12	57.0	62.0	7	12	38.0	39.0	7	6	7	7.5	70.4	197	209	8	7	58.0	67.0	5	12	7	8	0
50 FT	30	34	24	12	7	6	7	6.5	79.1	54.0	60.0	7	12	57.0	62.0	7	12	38.0	39.0	7	6	7	7	70.6	198	210	8	7	58.0	67.0	5	12	7	8	0

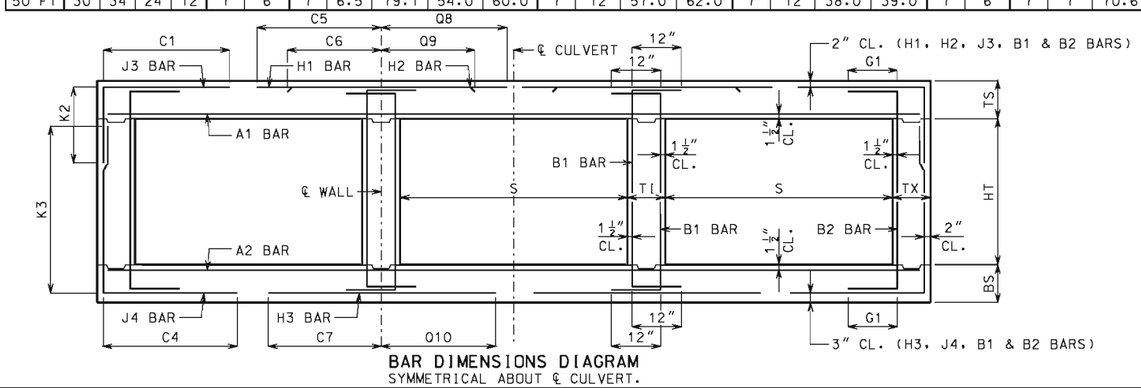

BAR DIMENSIONS DIAGRAM
SYMMETRICAL ABOUT ℄ CULVERT.

IF A SEAL IS PRESENT ON THIS SHEET IT HAS BEEN ELECTRONICALLY SEALED AND DATED.

GENERAL NOTES:

IF DESIGN FILL IS BETWEEN TABULATED DESIGN FILLS, USE THE NEXT GREATER TABULATED DESIGN FILL, EXCEPT FOR DESIGN FILLS BETWEEN 2 FEET AND 4 FEET. FOR DESIGN FILLS BETWEEN 2 FEET AND 4 FEET USE THE GREATER MEMBER THICKNESS, AREA OF REINFORCEMENT AND BAR DIMENSIONS FROM THE 2 FEET AND 4 FEET TABULATED DESIGN FILLS. AREA OF REINFORCEMENT EQUALS BAR AREA PER FOOT SPACING.

SPECIAL DESIGNS ARE REQUIRED WHEN THE DESIGN FILL IS LESS THAN 1 FOOT OR GREATER THAN 50 FEET.

DIMENSIONS ARE IN INCHES UNLESS OTHERWISE SPECIFIED.

DESIGN FILLS ARE MEASURED FROM THE TOP OF TOP SLAB TO THE TOP OF EARTH FILL OR ROADWAY.

CULVERTS MEET STRENGTH AND SERVICEABILITY REQUIREMENTS FOR THE DESIGN VEHICULAR LIVE LOAD HL-93 MINUS THE LANE LOAD.

MISSOURI HIGHWAYS AND TRANSPORTATION COMMISSION
105 WEST CAPITOL
JEFFERSON CITY, MO 65102
1-888-ASK-MODOT (1-888-275-6636)

STATE OF MISSOURI
DENNIS W. HECKMAN
NUMBER PE-27141
PROFESSIONAL ENGINEER
THIS SHEET HAS BEEN SIGNED, SEALED AND DATED ELECTRONICALLY.

CONCRETE TRIPLE BOX CULVERT

MEMBER THICKNESS BAR SIZE, SPACING & DIMENSIONS

SPAN (S): 12 FEET
HEIGHT (HT): 12 THRU 15 FEET

DATE EFFECTIVE: 12/01/2011
DATE PREPARED: 9/29/2011

703.87

SPAN (S) = 13 FT HEIGHT (HT) = 7 FT OR 8 FT OR 9 FT

DESIGN FILL	MEMBER THICKNESS				TOP SLAB BARS														BOTTOM SLAB BARS												WALL BARS			
					A1 BARS		J3 BARS						H1 BARS				H2 BARS				A2 BARS		J4 BARS					H3 BARS				B1 BARS		B2 BARS	
	TS	BS	TX	TI	SIZE	SPA.	SIZE	SPA.	C1	K2 HT=7′	K2 HT=8′	K2 HT=9′	SIZE	SPA.	C5	Q8	SIZE	SPA.	C6	Q9	SIZE	SPA.	SIZE	SPA.	C4	K3 HT=7′	K3 HT=8′	K3 HT=9′	SIZE	SPA.	C7	Q10	SIZE	SPA.	SIZE	SPA.	G1
1 FT	14	9	8	8	5	6	5	8.5	65.8	34.0	34.0	34.0	5	12	125.5	92.5	5	12	34.0	38.0	5	7.5	6	6	60.0	89	101	113	6	6	56.0	59.0	5	12	5	12	12
2 FT	15	10	8	8	6	8	5	8	65.8	31.0	35.0	35.0	6	16	129.5	99.5	6	16	40.0	44.0	5	7	6	6.5	55.5	90	102	114	6	6	54.0	59.0	5	12	5	12	12
4 FT	11	10	8	8	6	8	6	7	56.4	31.0	35.0	35.0	6	14	77.0	97.0	6	14	38.0	40.0	5	7	6	6	49.5	90	102	114	7	6.5	57.0	62.0	5	12	5	12	12
6 FT	11	11	8	8	6	8.5	6	7	49.0	31.0	31.0	35.0	6	13	63.0	75.0	6	13	35.0	37.0	5	6.5	6	7	45.9	91	103	115	7	7	55.0	62.0	5	12	5	12	12
8 FT	12	12	8	8	5	6	5	6	42.0	32.0	32.0	32.0	6	14	58.0	67.0	6	14	34.0	36.0	5	6	6	7	43.3	92	104	116	7	7	54.0	62.0	5	12	5	12	0
10 FT	13	14	8	8	5	6	5	6	39.8	33.0	33.0	33.0	6	13	55.0	63.0	6	13	33.0	36.0	6	8	5	6.5	38.1	94	106	118	6	6	50.0	59.0	5	12	5	12	0
12 FT	14	15	8	8	6	8	5	6	37.9	34.0	34.0	34.0	6	13	53.0	62.0	6	13	33.0	35.0	6	7.5	5	6.5	36.9	95	107	119	6	6	49.0	59.0	5	12	5	12	0
14 FT	15	16	8	8	6	7.5	5	6	41.4	35.0	35.0	35.0	6	12	58.0	67.0	6	12	39.0	41.0	6	7	5	6.5	35.9	96	108	120	6	6	49.0	59.0	5	12	5	10.5	0
16 FT	16	17	8	8	6	7.5	6	8	44.4	36.0	36.0	36.0	6	12	57.0	67.0	6	12	38.0	41.0	6	7	5	6.5	35.1	97	109	121	6	6	49.0	60.0	5	12	5	9.5	0
18 FT	17	18	8	8	6	7	6	7.5	43.5	37.0	37.0	37.0	6	12	56.0	66.0	6	12	38.0	41.0	6	6.5	5	6	34.5	98	110	122	7	7	52.0	63.0	5	12	5	9.5	0
20 FT	18	20	9	8	6	6.5	6	8	44.3	38.0	38.0	38.0	7	15	61.0	71.0	7	15	43.0	46.0	6	6	5	7	34.6	100	112	124	6	6	49.0	60.0	5	12	5	9	0
22 FT	20	21	9	8	6	6.5	6	8	43.4	40.0	40.0	40.0	6	12	55.0	66.0	6	12	38.0	41.0	7	8	5	6.5	34.5	101	113	125	7	7	52.0	63.0	5	12	5	8.5	0
24 FT	21	22	9	8	6	6	6	7.5	43.0	41.0	41.0	41.0	7	15	60.0	71.0	7	15	43.0	46.0	7	7.5	5	6	34.3	102	114	126	7	7	51.0	63.0	5	12	5	8.5	0
26 FT	22	24	10	8	6	6	6	8	43.8	42.0	42.0	42.0	7	15	59.0	70.0	7	15	42.0	46.0	7	7	5	6.5	34.5	104	116	128	7	7	51.0	63.0	5	12	5	8	0
28 FT	23	25	11	8	7	7	5	6	40.5	43.0	43.0	43.0	7	14	59.0	70.0	7	14	42.0	46.0	7	6.5	5	7	34.9	105	117	129	7	6.5	51.0	63.0	5	12	5	8.5	0
30 FT	25	26	11	8	7	7	5	6	40.0	45.0	45.0	45.0	7	14	59.0	70.0	7	14	41.0	44.0	7	6.5	5	6.5	34.9	106	118	130	7	6.5	51.0	63.0	5	12	5	7.5	0
32 FT	26	27	11	8	7	7	5	6	39.8	46.0	46.0	46.0	7	13	59.0	69.0	7	13	40.0	43.0	7	6	5	6	34.8	107	119	131	7	6	51.0	63.0	5	12	5	7.5	0
34 FT	27	29	11	8	7	6.5	6	8	43.9	47.0	47.0	51.0	7	13	58.0	69.0	7	13	40.0	42.0	7	6.5	6	7.5	37.9	109	121	133	8	7.5	57.0	69.0	5	12	5	7.5	0
36 FT	28	30	11	8	7	6.5	6	7.5	43.9	52.0	52.0	52.0	7	12	58.0	68.0	7	12	40.0	42.0	7	6	6	7	37.9	110	122	134	8	7.5	57.0	69.0	5	12	5	7.5	0
38 FT	29	31	11	8	7	6	6	6.5	43.9	53.0	53.0	53.0	7	12	58.0	68.0	7	12	39.0	41.0	7	6	6	7	38.0	111	123	135	8	7	57.0	69.0	5	12	5	7	0
40 FT	30	32	12	8	7	6	6	7.5	44.8	54.0	54.0	54.0	7	12	58.0	68.0	7	12	38.0	40.0	7	6	6	7.5	38.5	112	124	136	8	7	57.0	70.0	5	12	5	7	0
42 FT	31	33	12	8	8	7.5	6	7.5	43.8	55.0	55.0	55.0	8	15	66.0	75.0	8	15	46.0	47.0	7	6	6	7	37.6	113	125	137	8	7	57.0	69.0	5	12	5	7	0
44 FT	32	34	12	8	8	7.5	6	7	43.9	56.0	56.0	56.0	8	14	65.0	74.0	8	14	45.0	47.0	7	6	6	7	37.8	114	126	138	8	7	57.0	69.0	5	12	5	7	0
46 FT	32	35	12	8	8	7	6	7	43.9	56.0	56.0	56.0	8	14	65.0	74.0	8	14	46.0	47.0	7	6	6	6.5	37.8	115	127	139	8	7	57.0	69.0	5	12	5	7	0
48 FT	33	35	12	8	8	7	6	7	43.9	57.0	57.0	57.0	8	14	65.0	74.0	8	14	45.0	47.0	8	7	6	6.5	37.9	115	127	139	8	6.5	57.0	69.0	5	12	5	6.5	0
50 FT	34	36	12	8	8	7	6	6.5	43.9	58.0	58.0	58.0	8	14	65.0	73.0	8	14	45.0	46.0	8	7	6	6.5	38.1	116	128	140	8	6.5	57.0	69.0	5	12	5	6	0

SPAN (S) = 13 FT HEIGHT (HT) = 10 FT OR 11 FT OR 12 FT

DESIGN FILL	MEMBER THICKNESS				TOP SLAB BARS														BOTTOM SLAB BARS												WALL BARS			
					A1 BARS		J3 BARS						H1 BARS				H2 BARS				A2 BARS		J4 BARS					H3 BARS				B1 BARS		B2 BARS	
	TS	BS	TX	TI	SIZE	SPA.	SIZE	SPA.	C1	K2 HT=10′	K2 HT=11′	K2 HT=12′	SIZE	SPA.	C5	Q8	SIZE	SPA.	C6	Q9	SIZE	SPA.	SIZE	SPA.	C4	K3 HT=10′	K3 HT=11′	K3 HT=12′	SIZE	SPA.	C7	Q10	SIZE	SPA.	SIZE	SPA.	G1
1 FT	14	10	9	10	5	6	5	7	66.6	34.0	34.0	34.0	5	12	126.5	93.5	5	12	35.0	38.0	5	7	6	6	81.5	126	138	150	6	6.5	57.0	60.0	5	12	5	9	12
2 FT	15	10	10	10	6	8	5	7.5	67.3	35.0	35.0	35.0	6	16	130.5	100.5	6	16	41.0	44.0	5	7	6	6	70.1	126	138	150	6	6	56.0	58.0	5	12	5	9.5	12
4 FT	11	10	10	10	6	8	5	6	72.3	31.0	31.0	31.0	6	15	82.0	97.0	6	15	38.0	39.0	5	7	6	6	64.6	126	138	150	7	6.5	58.0	61.0	5	9.5	5	9	12
6 FT	11	11	10	10	5	6	5	6	60.5	31.0	31.0	31.0	6	14	64.0	71.0	6	14	36.0	37.0	5	6.5	6	6	61.0	127	139	151	7	6.5	57.0	61.0	5	12	5	9	12
8 FT	12	13	10	10	5	6	5	6	56.8	32.0	32.0	32.0	6	14	60.0	64.0	6	14	35.0	36.0	5	6	6	6.5	59.1	129	141	153	6	6	52.0	59.0	5	12	5	8.5	0
10 FT	13	14	10	10	5	6	6	7	56.9	33.0	33.0	37.0	6	13	57.0	62.0	6	13	34.0	36.0	6	8	6	6.5	56.8	130	142	154	6	6	51.0	59.0	5	12	5	8	0
12 FT	14	15	10	10	5	6	6	6.5	54.6	34.0	34.0	38.0	6	13	55.0	61.0	6	13	34.0	36.0	6	7.5	6	6.5	54.9	131	143	155	6	6	51.0	59.0	5	12	5	8	0
14 FT	15	16	10	10	6	8	6	6.5	58.9	35.0	35.0	39.0	6	13	60.0	66.0	6	13	39.0	42.0	6	7	6	6	53.5	132	144	156	6	6	50.0	59.0	5	12	5	8	0
16 FT	16	17	11	10	6	7.5	6	7	58.0	36.0	36.0	40.0	6	12	58.0	66.0	6	12	39.0	42.0	6	7	6	7.5	52.5	133	145	157	6	6	50.0	59.0	5	12	5	7.5	0
18 FT	17	18	12	10	6	7.5	6	7	57.9	37.0	37.0	41.0	6	12	58.0	66.0	6	12	39.0	42.0	6	6	6	7.5	52.0	134	146	158	7	7	53.0	62.0	5	12	5	7	0
20 FT	18	20	12	10	6	7	6	6.5	57.3	38.0	38.0	42.0	6	12	57.0	65.0	6	12	39.0	42.0	6	6	6	7.5	51.5	136	148	160	6	6	50.0	60.0	5	12	5	7	0
22 FT	19	21	12	10	6	6	6	6.5	56.8	39.0	39.0	43.0	7	15	62.0	70.0	7	15	44.0	47.0	7	8	6	7	51.0	137	149	161	7	7	53.0	63.0	5	12	5	7	0
24 FT	21	22	13	10	6	6	6	6.5	56.9	41.0	41.0	45.0	6	12	56.0	65.0	6	12	38.0	42.0	7	7	6	7.5	51.1	138	150	162	7	7	53.0	63.0	5	12	5	6.5	0
26 FT	22	24	13	10	6	6	6	6.5	56.6	42.0	42.0	46.0	7	15	60.0	70.0	7	15	43.0	46.0	7	7	6	7.5	50.9	140	152	164	7	7	53.0	63.0	5	12	5	6.5	0
28 FT	23	25	14	10	7	7.5	6	6.5	57.0	43.0	43.0	47.0	7	15	60.0	69.0	7	15	43.0	46.0	7	6.5	6	8	51.0	141	153	165	7	6.5	53.0	63.0	5	12	5	6	0
30 FT	24	26	14	10	7	7	6	6.5	56.6	44.0	44.0	48.0	7	14	60.0	69.0	7	14	42.0	45.0	7	6.5	6	7.5	50.8	142	154	166	7	6.5	53.0	63.0	5	12	5	6	0
32 FT	26	28	14	10	7	7	6	6	56.5	46.0	46.0	50.0	7	13	59.0	69.0	7	13	41.0	43.0	7	6.5	6	7.5	50.8	144	156	168	7	6	53.0	63.0	5	12	5	6	0
34 FT	27	29	15	10	7	6.5	6	6.5	57.1	51.0	51.0	51.0	7	13	59.0	68.0	7	13	40.0	43.0	7	6.5	6	8	51.1	145	157	169	8	7.5	59.0	70.0	5	12	6	8	0
36 FT	28	30	15	10	7	6.5	6	6	57.1	52.0	52.0	52.0	7	12	59.0	68.0	7	12	40.0	42.0	7	6	6	7.5	51.1	146	158	170	8	7.5	59.0	70.0	5	12	6	8	0
38 FT	29	31	16	10	7	6	6	6	57.8	53.0	53.0	53.0	7	12	59.0	68.0	7	12	39.0	41.0	7	6	6	7.5	51.6	147	159	171	8	7	59.0	70.0	5	12	6	8	0
40 FT	30	32	16	10	7	6	6	6	57.8	54.0	54.0	54.0	7	12	59.0	67.0	7	12	39.0	40.0	7	6	6	7.5	51.6	148	160	172	8	7	59.0	70.0	5	12	6	8	0
42 FT	30	33	17	10	7	6	6	6	58.5	54.0	54.0	54.0	7	12	59.0	67.0	7	12	40.0	41.0	7	6	6	7	51.9	149	161	173	8	7	59.0	70.0	5	12	6	7.5	0
44 FT	31	34	17	10	8	7.5	6	6	57.4	55.0	55.0	55.0	8	15	66.0	74.0	8	15	47.0	48.0	7	6	6	7	50.8	150	162	174	8	7	59.0	70.0	5	12	6	7.5	0
46 FT	32	35	17	10	8	7.5	6	6	57.4	56.0	56.0	56.0	8	14	66.0	74.0	8	14	46.0	48.0	8	7.5	6	6.5	50.9	151	163	175	8	7	59.0	70.0	5	12	6	7.5	0
48 FT	33	36	17	10	8	7	6	6	57.4	57.0	57.0	57.0	8	14	66.0	73.0	8	14	46.0	47.0	8	7.5	6	6.5	51.1	152	164	176	8	6.5	59.0	70.0	5	12	6	7.5	0
50 FT	34	36	18	10	8	7	6	6	58.1	58.0	58.0	58.0	8	14	66.0	73.0	8	14	46.0	47.0	8	6.5	6	6.5	51.5	152	164	176	8	6.5	59.0	70.0	5	12	6	7	0

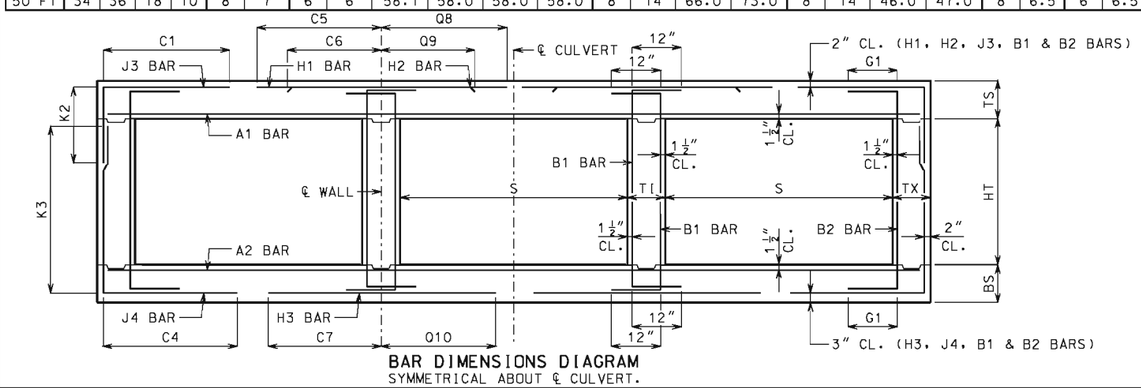

BAR DIMENSIONS DIAGRAM
SYMMETRICAL ABOUT ℄ CULVERT.

GENERAL NOTES:

IF DESIGN FILL IS BETWEEN TABULATED DESIGN FILLS, USE THE NEXT GREATER TABULATED DESIGN FILL, EXCEPT FOR DESIGN FILLS BETWEEN 2 FEET AND 4 FEET. FOR DESIGN FILLS BETWEEN 2 FEET AND 4 FEET USE THE GREATER MEMBER THICKNESS. AREA OF REINFORCEMENT AND BAR DIMENSIONS FROM THE 2 FEET AND 4 FEET TABULATED DESIGN FILLS. AREA OF REINFORCEMENT EQUALS BAR AREA PER FOOT SPACING.

SPECIAL DESIGNS ARE REQUIRED WHEN THE DESIGN FILL IS LESS THAN 1 FOOT OR GREATER THAN 50 FEET.

DIMENSIONS ARE IN INCHES UNLESS OTHERWISE SPECIFIED.

DESIGN FILLS ARE MEASURED FROM THE TOP OF TOP SLAB TO THE TOP OF EARTH FILL OR ROADWAY.

CULVERTS MEET STRENGTH AND SERVICEABILITY REQUIREMENTS FOR THE DESIGN VEHICULAR LIVE LOAD HL-93 MINUS THE LANE LOAD.

IF A SEAL IS PRESENT ON THIS SHEET IT HAS BEEN ELECTRONICALLY SEALED AND DATED.

MISSOURI HIGHWAYS AND TRANSPORTATION COMMISSION
105 WEST CAPITOL
JEFFERSON CITY, MO 65102
1-888-ASK-MODOT (1-888-275-6636)

STATE OF MISSOURI
DENNIS W. HECKMAN
NUMBER PE-27141
PROFESSIONAL ENGINEER
THIS SHEET HAS BEEN SIGNED, SEALED AND DATED ELECTRONICALLY.

CONCRETE TRIPLE BOX CULVERT

MEMBER THICKNESS BAR SIZE, SPACING & DIMENSIONS

SPAN (S): 13 FEET
HEIGHT (HT): 7 THRU 12 FEET

DATE EFFECTIVE: 12/01/2011
DATE PREPARED: 9/29/2011

703.87

SPAN (S) = 13 FT HEIGHT (HT) = 13 FT OR 14 FT

DESIGN FILL	MEMBER THICKNESS				TOP SLAB BARS												BOTTOM SLAB BARS										WALL BARS				
					A1 BARS		J3 BARS					H1 BARS				H2 BARS				A2 BARS		J4 BARS					H3 BARS				B1 BARS		B2 BARS	
	TS	BS	TX	TI	SIZE	SPA.	SIZE	SPA.	C1	K2 HT=13'	K2 HT=14'	SIZE	SPA.	C5	Q8	SIZE	SPA.	C6	Q9	SIZE	SPA.	SIZE	SPA.	C4	K3 HT=13'	K3 HT=14'	SIZE	SPA.	C7	Q10	SIZE	SPA.	SIZE	SPA.	G1
1 FT	14	11	10	11	5	6	5	6	67.5	34.0	34.0	5	12	127.5	94.5	5	12	35.0	38.0	5	7	6	6.5	100.1	163	175	5	6	56.0	58.0	5	12	5	8	12
2 FT	15	11	10	11	6	8	5	6	67.5	35.0	35.0	6	16	131.5	101.5	6	16	41.0	44.0	5	6.5	6	6	88.9	163	175	6	6.5	57.0	60.0	5	12	5	8	12
4 FT	11	11	11	11	6	8	5	6	68.1	31.0	31.0	6	15	127.5	92.0	6	15	38.0	39.0	5	6.5	6	6	78.6	163	175	6	6	56.0	60.0	5	12	5	7.5	12
6 FT	11	12	11	11	5	6	6	7.5	75.9	31.0	35.0	6	14	65.0	69.0	6	14	36.0	37.0	5	6	6	6.5	74.6	164	176	6	6	54.0	59.0	5	12	5	7.5	12
8 FT	12	13	11	11	5	6	6	7.5	70.1	32.0	36.0	6	14	61.0	64.0	6	14	35.0	36.0	5	6	6	6.5	70.9	165	177	6	6	53.0	59.0	5	12	5	7.5	0
10 FT	12	14	12	11	5	6	6	7.5	65.9	36.0	36.0	6	12	58.0	61.0	6	12	35.0	35.0	6	8	6	7	67.9	166	178	6	6	52.0	59.0	5	12	5	7	0
12 FT	13	15	12	11	6	8	6	7	64.4	37.0	37.0	6	12	56.0	60.0	6	12	34.0	35.0	6	7.5	6	7	66.3	167	179	6	6	52.0	59.0	5	12	5	7	0
14 FT	15	16	12	11	6	8	6	6.5	69.9	39.0	39.0	6	13	60.0	66.0	6	13	40.0	42.0	6	7	6	6	64.9	168	180	6	6	51.0	59.0	5	12	5	7	0
16 FT	16	17	13	11	6	8	6	6.5	68.9	40.0	40.0	6	13	59.0	65.0	6	13	40.0	42.0	6	7	6	6.5	63.8	169	181	6	6	51.0	59.0	5	12	5	6.5	0
18 FT	17	19	14	11	6	7.5	6	6.5	68.3	41.0	41.0	6	12	58.0	65.0	6	12	40.0	42.0	6	6	6	6.5	63.5	171	183	6	6	51.0	60.0	5	12	5	6	0
20 FT	18	20	14	11	6	7	6	6	67.5	42.0	42.0	6	12	58.0	65.0	6	12	39.0	42.0	6	6	6	6.5	62.8	172	184	6	6	51.0	60.0	5	12	5	6	0
22 FT	19	21	14	11	6	6.5	6	6	66.9	43.0	43.0	6	12	57.0	65.0	6	12	39.0	42.0	7	8	6	6	62.1	173	185	7	7	54.0	63.0	5	12	5	6	0
24 FT	20	22	16	11	6	6	6	6	67.3	44.0	44.0	7	15	62.0	69.0	7	15	44.0	47.0	7	7	6	6.5	61.8	174	186	7	7	54.0	63.0	5	12	6	8	0
26 FT	22	24	16	11	6	6	6	6	67.1	46.0	46.0	7	15	61.0	69.0	7	15	43.0	46.0	7	7	6	7	61.8	176	188	7	7	54.0	63.0	5	12	6	8	0
28 FT	23	25	16	11	7	7.5	7	8	71.6	47.0	47.0	7	15	61.0	69.0	7	15	43.0	46.0	7	6.5	6	6.5	61.4	177	189	7	6.5	54.0	63.0	5	12	6	8	0
30 FT	24	26	16	11	7	7.5	7	7	71.3	48.0	48.0	7	14	60.0	69.0	7	14	42.0	45.0	7	6.5	6	6	61.0	178	190	7	6.5	54.0	63.0	5	12	6	8	0
32 FT	25	28	17	11	7	7	7	7.5	71.6	49.0	49.0	7	14	60.0	68.0	7	14	42.0	45.0	7	6.5	6	6.5	61.1	180	192	7	6	54.0	64.0	5	12	6	7.5	0
34 FT	26	29	17	11	7	6.5	7	6.5	71.4	50.0	50.0	7	13	60.0	68.0	7	13	42.0	44.0	7	6.5	6	6.5	61.0	181	193	8	7.5	60.0	70.0	5	12	6	7.5	0
36 FT	27	30	18	11	7	6.5	7	7	72.0	51.0	51.0	7	13	60.0	68.0	7	13	41.0	43.0	7	6	6	6.5	61.3	182	194	8	7.5	60.0	70.0	5	12	6	7	0
38 FT	28	31	19	11	7	6.5	7	7.5	72.5	52.0	52.0	7	12	59.0	67.0	7	12	41.0	43.0	7	6	6	6.5	61.5	183	195	8	7	60.0	70.0	5	12	6	6.5	0
40 FT	29	32	19	11	7	6	7	6.5	72.6	53.0	53.0	7	12	59.0	67.0	7	12	40.0	42.0	7	6	6	6	61.5	184	196	8	7	60.0	70.0	5	12	6	6.5	0
42 FT	30	33	20	11	7	6	7	7	73.3	54.0	54.0	7	12	59.0	66.0	7	12	39.0	41.0	7	6	6	6	61.9	185	197	8	7	60.0	70.0	5	12	6	6.5	0
44 FT	31	34	20	11	8	7.5	7	7	71.6	55.0	55.0	8	15	67.0	73.0	8	15	47.0	48.0	7	6	6	6	60.1	186	198	8	7	60.0	70.0	5	12	6	6.5	0
46 FT	32	35	20	11	8	7.5	7	6.5	71.6	56.0	56.0	8	15	67.0	73.0	8	15	46.0	48.0	8	7.5	6	6	60.3	187	199	8	7	60.0	70.0	5	12	6	6.5	0
48 FT	32	36	21	11	8	7	7	7	72.4	56.0	56.0	8	14	67.0	73.0	8	14	47.0	48.0	8	7.5	6	6	60.5	188	200	8	6.5	60.0	70.0	5	12	6	6	0
50 FT	33	36	22	11	8	7	7	7	73.1	57.0	63.0	8	14	66.0	72.0	8	14	46.0	47.0	8	6.5	7	7.5	63.8	188	200	8	6.5	60.0	70.0	5	12	6	6	0

SPAN (S) = 13 FT HEIGHT (HT) = 15 FT OR 16 FT

DESIGN FILL	MEMBER THICKNESS				TOP SLAB BARS												BOTTOM SLAB BARS										WALL BARS				
					A1 BARS		J3 BARS					H1 BARS				H2 BARS				A2 BARS		J4 BARS					H3 BARS				B1 BARS		B2 BARS	
	TS	BS	TX	TI	SIZE	SPA.	SIZE	SPA.	C1	K2 HT=15'	K2 HT=16'	SIZE	SPA.	C5	Q8	SIZE	SPA.	C6	Q9	SIZE	SPA.	SIZE	SPA.	C4	K3 HT=15'	K3 HT=16'	SIZE	SPA.	C7	Q10	SIZE	SPA.	SIZE	SPA.	G1
1 FT	14	11	12	13	5	6	5	6	69.0	34.0	34.0	5	12	128.5	95.5	5	12	35.0	37.0	5	6.5	6	6.5	103.3	187	199	6	7	60.0	61.0	5	10.5	5	7	12
2 FT	15	11	12	13	6	8	6	8	72.0	35.0	39.0	6	16	135.5	102.5	6	16	41.0	44.0	5	6.5	6	6	95.4	187	199	6	6.5	58.0	59.0	5	12	5	7	12
4 FT	11	11	12	13	6	8	6	7	72.0	35.0	35.0	6	15	130.5	82.0	6	15	39.0	39.0	5	6.5	7	6	92.5	187	199	6	6	57.0	59.0	5	12	5	6.5	12
6 FT	11	12	12	13	5	6	6	6.5	90.4	35.0	35.0	6	14	65.0	66.0	6	14	37.0	37.0	5	6	7	6	88.9	188	200	6	6	56.0	59.0	5	12	5	6.5	12
8 FT	11	13	13	13	5	6	6	6.5	78.1	35.0	35.0	6	13	60.0	62.0	6	13	36.0	36.0	5	6	6	6	82.4	189	201	6	6	55.0	59.0	5	12	5	6.5	0
10 FT	12	14	13	13	5	6	6	6.5	76.0	36.0	36.0	6	13	58.0	60.0	6	13	35.0	36.0	6	8	6	6	80.4	190	202	6	6	54.0	59.0	5	12	5	6	0
12 FT	13	15	14	13	5	6	6	6.5	73.3	37.0	37.0	6	12	57.0	59.0	6	12	35.0	36.0	6	7.5	6	6	77.5	191	203	6	6	53.0	59.0	5	12	5	6	0
14 FT	14	16	14	13	6	8	6	6	72.3	38.0	38.0	6	12	55.0	59.0	6	12	35.0	36.0	6	7	6	6	76.3	192	204	7	7	55.0	62.0	5	12	5	6	0
16 FT	15	17	16	13	6	7.5	6	6.5	76.6	39.0	39.0	6	12	60.0	64.0	6	12	41.0	42.0	6	6.5	6	6.5	73.3	193	205	7	7	55.0	62.0	5	12	6	8	0
18 FT	16	19	16	13	6	7	6	6	76.3	40.0	40.0	6	12	59.0	64.0	6	12	40.0	42.0	6	6	6	6	74.1	195	207	6	6	52.0	60.0	5	12	6	8	0
20 FT	18	20	16	13	6	7	6	6	76.8	42.0	42.0	6	12	59.0	64.0	6	12	40.0	42.0	6	6	6	6	73.0	196	208	6	6	52.0	60.0	5	12	6	8	0
22 FT	19	21	17	13	6	6.5	6	6	76.4	43.0	43.0	6	12	58.0	64.0	6	12	40.0	42.0	7	7.5	7	7.5	75.1	197	209	7	7	55.0	63.0	5	12	6	7.5	0
24 FT	20	23	17	13	6	6.5	7	7.5	81.1	44.0	50.0	6	12	58.0	64.0	6	12	40.0	42.0	7	7	7	7	75.4	199	211	7	7	55.0	63.0	5	12	6	7.5	0
26 FT	22	24	18	13	6	6	7	7.5	81.5	46.0	52.0	7	15	62.0	69.0	7	15	44.0	46.0	7	7	7	7.5	74.9	200	212	7	7	55.0	63.0	5	12	6	7	0
28 FT	23	25	18	13	7	7.5	7	6.5	81.3	47.0	53.0	7	15	62.0	69.0	7	15	43.0	46.0	7	6.5	7	6.5	74.6	201	213	7	6.5	55.0	63.0	5	12	6	7	0
30 FT	24	26	19	13	7	7.5	7	7	81.3	48.0	54.0	7	14	61.0	69.0	7	14	43.0	46.0	7	6.5	7	7	74.4	202	214	7	6.5	55.0	63.0	5	12	6	6.5	0
32 FT	25	28	20	13	7	7	7	7	81.4	49.0	55.0	7	14	61.0	68.0	7	14	42.0	45.0	7	6.5	7	7.5	74.6	204	216	7	6	55.0	64.0	5	12	6	6.5	0
34 FT	26	29	21	13	7	7	7	7	81.6	50.0	56.0	7	13	61.0	68.0	7	13	42.0	44.0	7	6.5	7	7.5	74.5	205	217	8	7.5	61.0	70.0	5	12	6	6	0
36 FT	27	30	22	13	7	6.5	7	7	82.0	57.0	57.0	7	13	60.0	68.0	7	13	42.0	44.0	7	6	7	7.5	74.8	206	218	8	7.5	61.0	70.0	5	12	6	6	0
38 FT	28	31	22	13	7	6.5	7	6.5	82.1	58.0	58.0	7	12	60.0	67.0	7	12	41.0	43.0	7	6	7	7	74.8	207	219	8	7	61.0	70.0	5	12	6	6	0
40 FT	29	32	23	13	7	6	7	6.5	82.6	59.0	59.0	7	12	60.0	67.0	7	12	41.0	42.0	7	6	7	7	75.0	208	220	8	7	61.0	70.0	5	12	7	7.5	0
42 FT	30	33	24	13	7	6	7	6.5	83.3	60.0	60.0	7	12	60.0	66.0	7	12	40.0	42.0	7	6	7	7	75.3	209	221	8	7	61.0	70.0	5	12	7	7.5	0
44 FT	31	34	24	13	7	6	7	7	81.8	61.0	61.0	8	15	68.0	74.0	8	15	47.0	49.0	7	6	7	7	73.5	210	222	8	7	61.0	70.0	5	12	7	7.5	0
46 FT	31	35	24	13	8	7.5	7	6	81.6	61.0	61.0	8	15	68.0	74.0	8	15	48.0	49.0	8	7.5	7	7	73.8	211	223	8	7	61.0	70.0	5	12	7	7.5	0
48 FT	32	36	25	13	8	7.5	7	6	82.4	62.0	62.0	8	14	67.0	73.0	8	14	47.0	49.0	8	7.5	7	7	74.1	212	224	8	6.5	61.0	71.0	5	12	7	7.5	0
50 FT	33	37	26	13	8	7	7	6	83.1	63.0	63.0	8	14	67.0	72.0	8	14	47.0	48.0	8	7.5	7	6.5	74.5	213	225	8	6.5	61.0	71.0	5	12	7	7.5	0

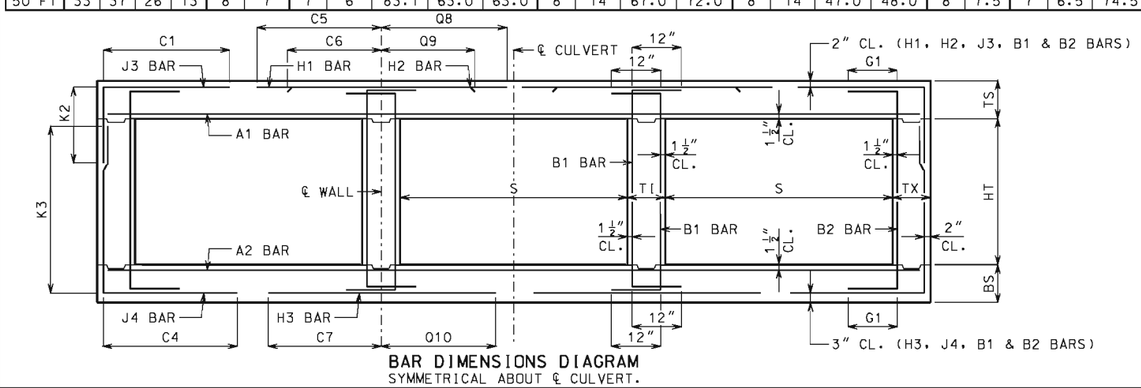

BAR DIMENSIONS DIAGRAM
SYMMETRICAL ABOUT ℄ CULVERT.

IF A SEAL IS PRESENT ON THIS SHEET IT HAS BEEN ELECTRONICALLY SEALED AND DATED.

GENERAL NOTES:

IF DESIGN FILL IS BETWEEN TABULATED DESIGN FILLS, USE THE NEXT GREATER TABULATED DESIGN FILL, EXCEPT FOR DESIGN FILLS BETWEEN 2 FEET AND 4 FEET. FOR DESIGN FILLS BETWEEN 2 FEET AND 4 FEET USE THE GREATER MEMBER THICKNESS, AREA OF REINFORCEMENT AND BAR DIMENSIONS FROM THE 2 FEET AND 4 FEET TABULATED DESIGN FILLS. AREA OF REINFORCEMENT EQUALS BAR AREA PER FOOT SPACING.

SPECIAL DESIGNS ARE REQUIRED WHEN THE DESIGN FILL IS LESS THAN 1 FOOT OR GREATER THAN 50 FEET.

DIMENSIONS ARE IN INCHES UNLESS OTHERWISE SPECIFIED.

DESIGN FILLS ARE MEASURED FROM THE TOP OF TOP SLAB TO THE TOP OF EARTH FILL OR ROADWAY.

CULVERTS MEET STRENGTH AND SERVICEABILITY REQUIREMENTS FOR THE DESIGN VEHICULAR LIVE LOAD HL-93 MINUS THE LANE LOAD.

MISSOURI HIGHWAYS AND TRANSPORTATION COMMISSION
105 WEST CAPITOL
JEFFERSON CITY, MO 65102
1-888-ASK-MODOT (1-888-275-6636)

STATE OF MISSOURI
DENNIS W. HECKMAN
NUMBER PE-27141
PROFESSIONAL ENGINEER
THIS SHEET HAS BEEN SIGNED, SEALED AND DATED ELECTRONICALLY.

CONCRETE TRIPLE BOX CULVERT

MEMBER THICKNESS BAR SIZE, SPACING & DIMENSIONS

SPAN (S): 13 FEET
HEIGHT (HT): 13 THRU 16 FEET

DATE EFFECTIVE: 12/01/2011
DATE PREPARED: 9/29/2011

703.87

SHEET NO. 21 OF 27

SPAN (S) = 14 FT HEIGHT (HT) = 7 FT OR 8 FT OR 9 FT

DESIGN FILL	MEMBER THICKNESS				TOP SLAB BARS														BOTTOM SLAB BARS											WALL BARS			
					A1 BARS		J3 BARS						H1 BARS				H2 BARS				A2 BARS		J4 BARS					H3 BARS				B1 BARS		B2 BARS	
	TS	BS	TX	TI	SIZE	SPA.	SIZE	SPA.	C1	K2 HT=7′	K2 HT=8′	K2 HT=9′	SIZE	SPA.	C5	Q8	SIZE	SPA.	C6	Q9	SIZE	SPA.	SIZE	SPA.	C4	K3 HT=7′	K3 HT=8′	K3 HT=9′	SIZE	SPA.	C7	Q10	SIZE	SPA.	SIZE	SPA.	G1
1 FT	14	10	8	8	6	8.5	5	8.5	69.3	34.0	34.0	34.0	5	12	133.5	98.5	5	12	39.0	43.0	5	7	6	7	60.9	90	102	114	6	6.5	58.0	63.0	5	12	5	12	12
2 FT	15	10	8	8	6	8	5	8	69.3	35.0	35.0	35.0	6	16	137.5	105.5	6	16	45.0	49.0	5	7	6	6	54.8	90	102	114	7	7	60.0	64.0	5	12	5	12	12
4 FT	12	11	8	8	6	7.5	5	6	52.4	32.0	32.0	32.0	6	14	80.0	103.0	6	14	39.0	42.0	5	6.5	6	7	49.1	91	103	115	6	6	56.0	62.0	5	12	5	12	12
6 FT	12	12	8	8	6	8	6	7.5	48.9	32.0	32.0	32.0	6	13	66.0	81.0	6	13	37.0	39.0	5	6	5	6	42.1	92	104	116	7	7	57.0	65.0	5	12	5	12	12
8 FT	12	13	8	8	6	7.5	6	7	45.5	32.0	32.0	32.0	6	12	61.0	69.0	6	12	35.0	37.0	6	8.5	5	6	39.1	93	105	117	7	7	56.0	66.0	5	12	5	12	0
10 FT	13	14	9	8	6	7	5	6	41.3	33.0	33.0	33.0	7	15	61.0	69.0	7	15	38.0	40.0	6	8	5	7	38.4	94	106	118	7	6.5	55.0	65.0	5	12	5	12	0
12 FT	15	16	9	8	6	7.5	5	6.5	43.5	35.0	35.0	35.0	6	12	62.0	71.0	6	12	40.0	43.0	6	7	5	8	36.8	96	108	120	6	6	52.0	63.0	5	12	5	12	0
14 FT	16	17	9	8	6	7	5	6	41.9	36.0	36.0	36.0	6	12	61.0	70.0	6	12	40.0	43.0	6	7	5	7.5	35.8	97	109	121	7	7	54.0	66.0	5	12	5	12	0
16 FT	17	18	9	8	6	7	5	6	40.8	37.0	37.0	37.0	7	15	65.0	75.0	7	15	44.0	48.0	6	6.5	5	7	34.9	98	110	122	7	7	54.0	66.0	5	12	5	12	0
18 FT	18	20	9	8	6	6.5	6	8	44.0	38.0	38.0	38.0	7	15	64.0	75.0	7	15	44.0	47.0	6	6	5	7	34.0	100	112	124	7	7	54.0	66.0	5	12	5	10	0
20 FT	20	21	9	8	6	6.5	5	6	38.9	40.0	40.0	40.0	7	15	63.0	75.0	7	15	44.0	48.0	7	8	5	6.5	33.9	101	113	125	7	7	54.0	66.0	5	12	5	9	0
22 FT	21	22	9	8	6	6	6	8	42.4	41.0	41.0	41.0	7	14	63.0	74.0	7	14	44.0	47.0	7	7	5	6	33.5	102	114	126	7	6.5	54.0	66.0	5	12	5	8.5	0
24 FT	23	24	9	8	7	7.5	6	7	42.0	47.0	47.0	47.0	7	15	62.0	74.0	7	15	44.0	47.0	7	7	6	7	36.4	104	116	128	7	7	54.0	66.0	5	12	5	8.5	0
26 FT	24	25	9	8	7	7.5	6	7	41.6	48.0	48.0	48.0	7	14	62.0	74.0	7	14	43.0	47.0	7	6.5	6	7	36.1	105	117	129	7	6.5	54.0	66.0	5	12	5	8.5	0
28 FT	25	26	9	8	7	7	6	6	41.4	49.0	49.0	49.0	7	14	61.0	73.0	7	14	43.0	47.0	7	6	6	6.5	35.9	106	118	130	7	6	54.0	66.0	5	12	5	7.5	0
30 FT	27	28	10	8	7	6.5	6	7	42.3	51.0	51.0	51.0	7	13	61.0	73.0	7	13	42.0	45.0	7	6	6	7	36.5	108	120	132	7	6	54.0	67.0	5	12	5	8	0
32 FT	28	29	10	8	7	6.5	6	6.5	42.0	52.0	52.0	52.0	7	12	61.0	73.0	7	12	41.0	44.0	7	6	6	6.5	36.4	109	121	133	8	7.5	60.0	73.0	5	12	5	7.5	0
34 FT	29	30	10	8	7	6	6	6	41.9	53.0	53.0	53.0	7	12	61.0	72.0	7	12	41.0	44.0	8	7	6	6.5	36.4	110	122	134	8	7	60.0	73.0	5	12	5	7	0
36 FT	30	32	11	8	7	6	6	7	42.9	54.0	54.0	54.0	7	12	61.0	72.0	7	12	41.0	43.0	7	6	6	6.5	36.9	112	124	136	8	7	60.0	73.0	5	12	5	7.5	0
38 FT	31	33	11	8	8	7.5	6	6.5	42.9	55.0	55.0	55.0	8	15	68.0	79.0	8	15	48.0	51.0	8	7.5	6	6.5	37.0	113	125	137	8	6.5	60.0	73.0	5	12	5	7	0
40 FT	32	34	11	8	8	7.5	6	6.5	42.9	56.0	56.0	56.0	8	14	68.0	79.0	8	14	48.0	50.0	8	7.5	6	6	37.1	114	126	138	8	6.5	60.0	73.0	5	12	5	6.5	0
42 FT	33	35	12	8	8	7	6	7	43.8	57.0	57.0	57.0	8	14	68.0	78.0	8	14	47.0	49.0	8	7	6	6.5	37.6	115	127	139	8	6.5	60.0	73.0	5	12	5	7	0
44 FT	34	36	12	8	8	7	6	6.5	43.8	58.0	58.0	58.0	8	14	68.0	78.0	8	14	47.0	48.0	8	7	6	6.5	37.8	116	128	140	8	6	60.0	73.0	5	12	5	6.5	0
46 FT	35	37	12	8	8	6.5	6	6.5	42.9	59.0	59.0	59.0	8	13	67.0	77.0	8	13	46.0	47.0	8	7	6	6.5	37.0	117	129	141	8	6	60.0	73.0	5	12	5	6.5	0
48 FT	36	38	12	8	8	6.5	6	6.5	43.0	60.0	60.0	60.0	8	13	67.0	76.0	8	13	46.0	47.0	8	7	6	6	37.1	118	130	142	8	6	60.0	73.0	5	12	5	6	0
50 FT	37	39	12	8	8	6.5	6	6	43.1	61.0	61.0	61.0	8	13	67.0	75.0	8	13	46.0	47.0	8	7	6	6	37.4	119	131	143	8	6	60.0	73.0	5	12	5	6	0

SPAN (S) = 14 FT HEIGHT (HT) = 10 FT OR 11 FT OR 12 FT

DESIGN FILL	MEMBER THICKNESS				TOP SLAB BARS														BOTTOM SLAB BARS											WALL BARS			
					A1 BARS		J3 BARS						H1 BARS				H2 BARS				A2 BARS		J4 BARS					H3 BARS				B1 BARS		B2 BARS	
	TS	BS	TX	TI	SIZE	SPA.	SIZE	SPA.	C1	K2 HT=10′	K2 HT=11′	K2 HT=12′	SIZE	SPA.	C5	Q8	SIZE	SPA.	C6	Q9	SIZE	SPA.	SIZE	SPA.	C4	K3 HT=10′	K3 HT=11′	K3 HT=12′	SIZE	SPA.	C7	Q10	SIZE	SPA.	SIZE	SPA.	G1
1 FT	14	10	9	10	6	8.5	5	7	70.3	34.0	34.0	34.0	5	12	134.5	99.5	5	12	39.0	43.0	5	7	6	6	80.1	126	138	150	6	6	60.0	63.0	5	10.5	5	9	12
2 FT	15	11	9	10	6	8	5	7	70.3	35.0	35.0	35.0	6	16	138.5	106.5	6	16	45.0	48.0	5	6.5	6	6	73.6	127	139	151	6	6.5	59.0	62.0	5	12	5	9	12
4 FT	11	11	11	10	6	7	5	6	66.6	31.0	31.0	31.0	6	13	81.0	94.0	6	13	39.0	40.0	5	6.5	5	6	61.8	127	139	151	7	7	61.0	65.0	5	9.5	5	10	12
6 FT	12	12	11	10	6	8	5	6.5	60.6	32.0	32.0	32.0	6	13	67.0	75.0	6	13	37.0	39.0	5	6	5	6	57.3	128	140	152	7	7	59.0	65.0	5	12	5	10.5	12
8 FT	12	13	11	10	6	8	5	6	56.3	32.0	32.0	32.0	6	12	62.0	67.0	6	12	36.0	37.0	5	6	6	7	57.4	129	141	153	7	6.5	57.0	65.0	5	12	5	10	0
10 FT	13	14	11	10	6	7.5	6	8	56.3	33.0	33.0	37.0	6	12	59.0	65.0	6	12	35.0	37.0	6	7.5	6	7	55.0	130	142	154	7	6.5	57.0	65.0	5	12	5	9.5	0
12 FT	14	16	12	10	6	7.5	6	8	54.9	34.0	34.0	34.0	7	15	61.0	67.0	7	15	38.0	39.0	6	7	5	6	50.9	132	144	156	7	7	56.0	66.0	5	12	5	9.5	0
14 FT	16	17	12	10	6	7.5	6	8	59.3	36.0	36.0	36.0	6	12	62.0	70.0	6	12	41.0	43.0	6	7	5	6	49.9	133	145	157	7	7	56.0	66.0	5	12	5	9	0
16 FT	17	18	12	10	6	7	6	7.5	58.1	37.0	37.0	41.0	7	16	66.0	74.0	7	16	45.0	48.0	6	6.5	6	8	52.0	134	146	158	7	7	56.0	66.0	5	12	5	8	0
18 FT	18	20	12	10	6	7	6	7	57.5	38.0	38.0	42.0	7	15	65.0	74.0	7	15	45.0	48.0	6	6	6	8	51.3	136	148	160	7	7	55.0	66.0	5	12	5	7.5	0
20 FT	19	21	12	10	6	6	6	6.5	56.6	39.0	39.0	43.0	7	14	64.0	74.0	7	14	45.0	48.0	7	8	6	7.5	50.6	137	149	161	7	7	55.0	66.0	5	12	5	7	0
22 FT	21	22	12	10	6	6	6	6.5	55.9	41.0	41.0	45.0	7	15	64.0	74.0	7	15	45.0	48.0	7	7	6	6.5	50.3	138	150	162	7	7	55.0	66.0	5	12	5	7	0
24 FT	22	24	13	10	6	6	6	6.5	56.4	42.0	42.0	46.0	7	14	63.0	73.0	7	14	44.0	48.0	7	7	6	7.5	50.4	140	152	164	7	7	55.0	67.0	5	12	5	6.5	0
26 FT	23	25	14	10	7	7	6	6.5	56.6	43.0	43.0	47.0	7	14	63.0	73.0	7	14	44.0	48.0	7	6.5	6	8	50.4	141	153	165	7	6.5	55.0	67.0	5	12	5	6.5	0
28 FT	25	27	14	10	7	7	6	6.5	56.4	45.0	45.0	49.0	7	14	62.0	73.0	7	14	43.0	47.0	7	6.5	6	8	50.3	143	155	167	7	6	55.0	67.0	5	12	5	6	0
30 FT	26	28	14	10	7	7	6	6.5	56.0	46.0	46.0	50.0	7	13	62.0	73.0	7	13	43.0	47.0	7	6	6	7.5	50.0	144	156	168	7	6	55.0	67.0	5	12	5	6	0
32 FT	27	29	14	10	7	6	6	6	55.6	51.0	51.0	51.0	7	12	62.0	72.0	7	12	43.0	46.0	7	6	6	7.5	49.8	145	157	169	8	7.5	61.0	73.0	5	12	5	6	0
34 FT	29	31	15	10	7	6	6	6.5	56.3	53.0	53.0	53.0	7	12	61.0	72.0	7	12	41.0	44.0	7	6	6	7.5	50.3	147	159	171	8	7	61.0	73.0	5	12	6	8	0
36 FT	30	32	15	10	7	6	6	6	56.1	54.0	54.0	54.0	7	12	61.0	71.0	7	12	41.0	43.0	8	7.5	6	7.5	50.3	148	160	172	8	7	61.0	73.0	5	12	6	8	0
38 FT	31	33	16	10	8	7.5	6	6	56.9	55.0	55.0	55.0	8	15	69.0	79.0	8	15	49.0	51.0	8	7.5	6	7	50.6	149	161	173	8	6.5	61.0	73.0	5	12	6	8	0
40 FT	32	34	16	10	8	7.5	6	6	56.9	56.0	56.0	56.0	8	14	69.0	78.0	8	14	48.0	50.0	8	7	6	7	50.6	150	162	174	8	6.5	61.0	73.0	5	12	6	8	0
42 FT	33	35	16	10	8	7	6	6	56.9	57.0	57.0	57.0	8	14	69.0	78.0	8	14	48.0	49.0	8	7	6	6.5	50.8	151	163	175	8	6.5	61.0	73.0	5	12	6	8	0
44 FT	34	36	17	10	8	7	6	6	57.6	58.0	58.0	58.0	8	14	68.0	77.0	8	14	47.0	49.0	8	7	6	6.5	51.3	152	164	176	8	6	61.0	73.0	5	12	6	7.5	0
46 FT	35	37	17	10	8	6.5	6	6	56.5	59.0	59.0	59.0	8	13	68.0	77.0	8	13	47.0	48.0	8	7	6	6.5	50.1	153	165	177	8	6	61.0	73.0	5	12	6	7.5	0
48 FT	35	38	17	10	8	6.5	6	6	56.5	59.0	59.0	59.0	8	13	68.0	77.0	8	13	47.0	49.0	8	7	6	6	50.1	154	166	178	8	6	61.0	73.0	5	12	6	7.5	0
50 FT	36	39	17	10	8	6.5	7	7.5	61.6	60.0	60.0	60.0	8	13	68.0	76.0	8	13	47.0	48.0	8	6.5	6	6	50.3	155	167	179	8	6	61.0	73.0	5	12	6	7.5	0

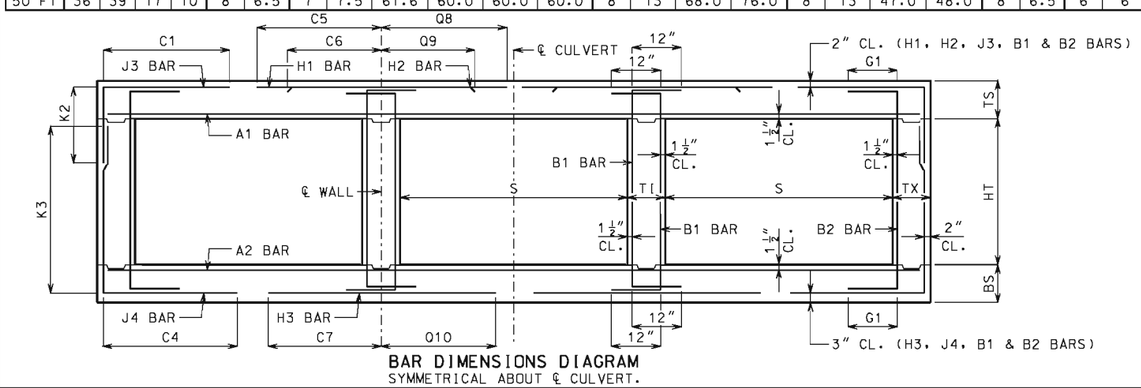

BAR DIMENSIONS DIAGRAM
SYMMETRICAL ABOUT ℄ CULVERT.

IF A SEAL IS PRESENT ON THIS SHEET IT HAS BEEN ELECTRONICALLY SEALED AND DATED.

GENERAL NOTES:

IF DESIGN FILL IS BETWEEN TABULATED DESIGN FILLS, USE THE NEXT GREATER TABULATED DESIGN FILL, EXCEPT FOR DESIGN FILLS BETWEEN 2 FEET AND 4 FEET. FOR DESIGN FILLS BETWEEN 2 FEET AND 4 FEET USE THE GREATER MEMBER THICKNESS. AREA OF REINFORCEMENT AND BAR DIMENSIONS FROM THE 2 FEET AND 4 FEET TABULATED DESIGN FILLS. AREA OF REINFORCEMENT EQUALS BAR AREA PER FOOT SPACING.

SPECIAL DESIGNS ARE REQUIRED WHEN THE DESIGN FILL IS LESS THAN 1 FOOT OR GREATER THAN 50 FEET.

DIMENSIONS ARE IN INCHES UNLESS OTHERWISE SPECIFIED.

DESIGN FILLS ARE MEASURED FROM THE TOP OF TOP SLAB TO THE TOP OF EARTH FILL OR ROADWAY.

CULVERTS MEET STRENGTH AND SERVICEABILITY REQUIREMENTS FOR THE DESIGN VEHICULAR LIVE LOAD HL-93 MINUS THE LANE LOAD.

MISSOURI HIGHWAYS AND TRANSPORTATION COMMISSION
105 WEST CAPITOL
JEFFERSON CITY, MO 65102
1-888-ASK-MODOT (1-888-275-6636)

STATE OF MISSOURI
DENNIS W. HECKMAN
NUMBER PE-27141
PROFESSIONAL ENGINEER
THIS SHEET HAS BEEN SIGNED, SEALED AND DATED ELECTRONICALLY.

CONCRETE TRIPLE BOX CULVERT

MEMBER THICKNESS BAR SIZE, SPACING & DIMENSIONS

SPAN (S): 14 FEET
HEIGHT (HT): 7 THRU 12 FEET

DATE EFFECTIVE: 12/01/2011
DATE PREPARED: 9/29/2011

703.87

SHEET NO. 22 OF 27

SPAN (S) = 14 FT HEIGHT (HT) = 13 FT OR 14 FT

DESIGN FILL	MEMBER THICKNESS				TOP SLAB BARS														BOTTOM SLAB BARS										WALL BARS				
					A1 BARS		J3 BARS					H1 BARS				H2 BARS				A2 BARS		J4 BARS				H3 BARS				B1 BARS		B2 BARS		
										K2													K3									
	TS	BS	TX	TI	SIZE	SPA.	SIZE	SPA.	C1	HT=13'	HT=14'	SIZE	SPA.	C5	Q8	SIZE	SPA.	C6	Q9	SIZE	SPA.	SIZE	SPA.	C4	HT=13'	HT=14'	SIZE	SPA.	C7	Q10	SIZE	SPA.	SIZE	SPA.	G1
1 FT	14	10	11	11	5	6	5	6.5	71.8	34.0	34.0	5	12	135.5	100.5	5	12	39.0	42.0	5	7	6	6	87.3	162	174	6	6	60.0	62.0	5	12	5	7.5	12
2 FT	15	11	11	11	6	8	5	6.5	71.8	35.0	35.0	6	16	139.5	107.5	6	16	45.0	48.0	5	6.5	6	6.5	83.4	163	175	6	6	59.0	62.0	5	12	5	7.5	12
4 FT	11	11	11	11	6	6.5	6	7	88.0	31.0	35.0	6	13	86.0	92.0	6	13	40.0	40.0	5	6.5	6	6	76.4	163	175	7	6.5	62.0	66.0	5	10.5	5	7.5	12
6 FT	12	12	11	11	6	8	6	7.5	74.5	32.0	36.0	6	13	68.0	75.0	6	13	38.0	39.0	5	6	6	6	71.3	164	176	7	6.5	60.0	65.0	5	12	5	7.5	12
8 FT	12	13	11	11	6	8	6	7	68.5	36.0	36.0	6	12	63.0	67.0	6	12	36.0	37.0	6	8	6	6.5	68.8	165	177	7	6.5	58.0	65.0	5	12	5	7.5	0
10 FT	13	15	11	11	6	7.5	6	6.5	66.0	37.0	37.0	6	12	60.0	65.0	6	12	36.0	37.0	6	7.5	6	6	67.4	167	179	6	6	55.0	63.0	5	12	5	7.5	0
12 FT	14	16	12	11	6	7.5	6	6.5	64.0	38.0	38.0	7	16	61.0	67.0	7	16	38.0	40.0	6	7	6	7	65.3	168	180	7	7	57.0	66.0	5	12	5	7	0
14 FT	16	17	13	11	6	7.5	6	7	69.1	40.0	40.0	6	12	63.0	69.0	6	12	41.0	43.0	6	7	6	6.5	63.6	169	181	7	7	57.0	65.0	5	12	5	6.5	0
16 FT	17	18	13	11	6	7	6	6.5	67.8	41.0	41.0	6	12	62.0	69.0	6	12	41.0	43.0	6	6	6	6.5	62.4	170	182	7	6.5	56.0	66.0	5	12	5	6.5	0
18 FT	18	20	13	11	6	7	6	6	66.6	42.0	42.0	7	15	66.0	74.0	7	15	46.0	48.0	6	6	6	6	61.9	172	184	7	7	56.0	66.0	5	12	5	6.5	0
20 FT	19	21	14	11	6	6.5	6	6	66.3	43.0	43.0	7	15	65.0	73.0	7	15	45.0	48.0	7	8	6	6.5	61.0	173	185	7	7	56.0	66.0	5	12	5	6	0
22 FT	21	23	14	11	6	6	7	8	70.6	45.0	45.0	7	15	64.0	73.0	7	15	45.0	48.0	7	7	6	6	60.8	175	187	7	7	56.0	66.0	5	12	5	6	0
24 FT	22	24	15	11	6	6	7	8	70.5	46.0	46.0	7	15	64.0	73.0	7	15	45.0	48.0	7	7	6	6.5	60.3	176	188	7	7	56.0	66.0	5	12	6	8	0
26 FT	23	25	15	11	7	7.5	7	7.5	69.9	47.0	47.0	7	14	64.0	73.0	7	14	45.0	48.0	7	6.5	6	6	59.6	177	189	7	6.5	56.0	67.0	5	12	6	8	0
28 FT	25	27	16	11	7	7	7	7.5	70.3	49.0	49.0	7	14	63.0	72.0	7	14	44.0	47.0	7	6.5	6	6.5	59.9	179	191	7	6	56.0	67.0	5	12	6	8	0
30 FT	26	28	16	11	7	7	7	7	69.8	50.0	50.0	7	13	62.0	72.0	7	13	43.0	46.0	7	6	6	6	59.4	180	192	7	6	56.0	67.0	5	12	6	8	0
32 FT	27	30	17	11	7	6.5	7	7.5	70.1	51.0	51.0	7	13	62.0	72.0	7	13	43.0	46.0	7	6	6	6.5	59.5	182	194	8	7.5	62.0	73.0	5	12	6	7.5	0
34 FT	28	31	17	11	7	6	7	6.5	69.8	52.0	52.0	7	12	62.0	71.0	7	12	43.0	45.0	7	6	6	6.5	59.1	183	195	8	7	62.0	73.0	5	12	6	7.5	0
36 FT	29	32	18	11	7	6	7	7	70.3	53.0	53.0	7	12	62.0	71.0	7	12	42.0	45.0	8	7.5	6	6.5	59.3	184	196	8	7	62.0	73.0	5	12	6	7	0
38 FT	31	33	19	11	8	7.5	7	7.5	71.0	55.0	55.0	8	15	70.0	78.0	8	15	48.0	50.0	8	7.5	6	6.5	59.6	185	197	8	6.5	62.0	73.0	5	12	6	6.5	0
40 FT	31	34	19	11	8	7	7	6.5	70.9	55.0	55.0	8	14	70.0	78.0	8	14	49.0	51.0	8	7	6	6.5	59.5	186	198	8	6.5	62.0	73.0	5	12	6	6.5	0
42 FT	32	35	20	11	8	7	7	7	71.5	56.0	56.0	8	14	69.0	77.0	8	14	49.0	51.0	8	7	6	6	59.8	187	199	8	6.5	62.0	74.0	5	12	6	6.5	0
44 FT	33	36	20	11	8	7	7	6.5	71.5	57.0	57.0	8	14	69.0	77.0	8	14	48.0	50.0	8	7	6	6	59.9	188	200	8	6	62.0	74.0	5	12	6	6.5	0
46 FT	34	37	20	11	8	7	7	7	70.1	58.0	58.0	8	14	69.0	76.0	8	14	47.0	49.0	8	7	6	6	58.5	189	201	8	6	62.0	74.0	5	12	6	6.5	0
48 FT	35	38	21	11	8	6.5	7	7	70.9	59.0	59.0	8	13	68.0	75.0	8	13	47.0	48.0	8	7	6	6	59.0	190	202	8	6	62.0	74.0	5	12	6	6	0
50 FT	36	39	21	11	8	6.5	7	6.5	70.9	60.0	60.0	8	13	68.0	75.0	8	13	47.0	48.0	8	6.5	6	6	59.1	191	203	8	6	62.0	74.0	5	12	6	6	0

SPAN (S) = 14 FT HEIGHT (HT) = 15 FT OR 16 FT

DESIGN FILL	MEMBER THICKNESS				TOP SLAB BARS														BOTTOM SLAB BARS										WALL BARS				
					A1 BARS		J3 BARS					H1 BARS				H2 BARS				A2 BARS		J4 BARS				H3 BARS				B1 BARS		B2 BARS		
										K2													K3									
	TS	BS	TX	TI	SIZE	SPA.	SIZE	SPA.	C1	HT=15'	HT=16'	SIZE	SPA.	C5	Q8	SIZE	SPA.	C6	Q9	SIZE	SPA.	SIZE	SPA.	C4	HT=15'	HT=16'	SIZE	SPA.	C7	Q10	SIZE	SPA.	SIZE	SPA.	G1
1 FT	14	11	12	13	5	6	5	6	72.6	34.0	34.0	5	12	136.5	101.5	5	12	38.0	41.0	5	6.5	6	6	103.4	187	199	6	6.5	62.0	63.0	5	11.5	5	7	12
2 FT	15	12	12	13	6	8	6	8	75.6	35.0	39.0	6	16	143.5	108.5	6	16	45.0	48.0	5	6	6	6.5	99.0	188	200	6	6.5	61.0	63.0	5	12	5	7	12
4 FT	12	12	12	13	6	8	6	7.5	75.6	36.0	36.0	6	15	138.5	89.0	6	15	40.0	41.0	5	6	6	6	90.1	188	200	6	6	60.0	63.0	5	12	5	7	12
6 FT	12	13	12	13	6	8	6	7	89.3	36.0	36.0	6	14	69.0	71.0	6	14	38.0	39.0	5	6	6	6	86.4	189	201	6	6	58.0	63.0	5	12	5	6.5	12
8 FT	12	14	13	13	6	8	6	6.5	78.1	36.0	36.0	6	12	64.0	66.0	6	12	37.0	37.0	6	8	6	6	81.9	190	202	6	6	57.0	62.0	5	12	5	6.5	0
10 FT	13	15	13	13	6	8	6	6.5	75.1	37.0	37.0	6	12	61.0	64.0	6	12	37.0	37.0	6	7.5	6	6.5	79.1	191	203	7	7	59.0	65.0	5	12	5	6.5	0
12 FT	14	16	14	13	6	7.5	6	6.5	72.9	38.0	38.0	6	12	59.0	63.0	6	12	36.0	37.0	6	7	6	6.5	75.6	192	204	7	7	58.0	65.0	5	12	5	6	0
14 FT	15	17	15	13	6	7.5	6	6.5	77.6	39.0	39.0	7	16	69.0	73.0	7	16	47.0	48.0	6	7	6	6.5	73.6	193	205	7	7	58.0	65.0	5	12	6	8	0
16 FT	17	19	15	13	6	7.5	6	6	77.6	41.0	41.0	6	12	63.0	68.0	6	12	42.0	44.0	6	6	6	6	73.5	195	207	6	6	55.0	63.0	5	12	6	8	0
18 FT	18	20	15	13	6	7	7	7.5	81.8	42.0	48.0	7	16	67.0	73.0	7	16	46.0	49.0	6	6	7	7	75.6	196	208	7	7	57.0	66.0	5	12	6	8	0
20 FT	19	21	16	13	6	6.5	7	7.5	81.1	43.0	49.0	7	15	66.0	73.0	7	15	46.0	49.0	7	7.5	7	7.5	74.8	197	209	7	7	57.0	66.0	5	12	6	8	0
22 FT	20	23	17	13	6	6	7	7.5	80.8	44.0	50.0	7	15	65.0	73.0	7	15	46.0	49.0	7	7	7	7.5	74.6	199	211	7	7	57.0	66.0	5	12	6	7.5	0
24 FT	22	24	17	13	6	6	7	7	80.8	46.0	52.0	7	15	65.0	73.0	7	15	46.0	49.0	7	7	7	7	74.1	200	212	7	7	57.0	66.0	5	12	6	7.5	0
26 FT	23	25	18	13	7	7.5	7	7	80.5	47.0	53.0	7	15	65.0	72.0	7	15	46.0	49.0	7	6	7	7.5	73.6	201	213	7	6	57.0	67.0	5	12	6	7	0
28 FT	24	27	19	13	7	7.5	7	7	80.5	48.0	54.0	7	14	64.0	72.0	7	14	45.0	48.0	7	6.5	7	8	73.8	203	215	7	6	57.0	67.0	5	12	6	6.5	0
30 FT	25	28	20	13	7	6.5	7	7	80.6	49.0	55.0	7	13	64.0	72.0	7	13	45.0	48.0	7	6	7	8	73.5	204	216	7	6	57.0	67.0	5	12	6	6.5	0
32 FT	27	30	21	13	7	6.5	7	7	81.1	51.0	51.0	7	13	63.0	71.0	7	13	43.0	46.0	7	6	6	6	70.8	206	218	8	7.5	63.0	73.0	5	12	6	6	0
34 FT	28	31	21	13	7	6.5	7	7	80.9	52.0	52.0	7	12	63.0	71.0	7	12	43.0	46.0	7	6	6	6	70.4	207	219	8	7	63.0	73.0	5	12	6	6	0
36 FT	29	32	22	13	7	6	7	7	81.1	59.0	59.0	7	12	63.0	71.0	7	12	43.0	45.0	8	7.5	7	7.5	73.3	208	220	8	7	63.0	73.0	5	12	6	6	0
38 FT	30	33	22	13	7	6	7	6	81.1	60.0	60.0	7	12	63.0	71.0	7	12	42.0	45.0	8	7.5	7	7	73.4	209	221	8	6.5	63.0	74.0	5	12	6	6	0
40 FT	31	34	23	13	8	7.5	7	6.5	81.8	61.0	61.0	8	15	70.0	78.0	8	15	50.0	52.0	8	7	7	7.5	73.5	210	222	8	6.5	63.0	74.0	5	12	7	7.5	0
42 FT	32	35	24	13	8	7.5	7	6.5	82.3	62.0	62.0	8	14	70.0	78.0	8	14	49.0	51.0	8	6.5	7	7	73.8	211	223	8	6.5	63.0	74.0	5	12	7	7.5	0
44 FT	33	36	24	13	8	7	7	6	82.4	63.0	63.0	8	14	70.0	77.0	8	14	49.0	50.0	8	6.5	7	7	73.9	212	224	8	6	63.0	74.0	5	12	7	7.5	0
46 FT	34	38	26	13	8	7	7	6	83.8	64.0	64.0	8	14	70.0	76.0	8	14	48.0	49.0	8	7	7	7	74.6	214	226	8	6.5	63.0	74.0	5	12	7	7.5	0
48 FT	35	38	26	13	8	6.5	7	6.5	82.1	65.0	65.0	8	13	69.0	76.0	8	13	48.0	49.0	8	6.5	7	7	72.6	214	226	8	6	63.0	74.0	5	12	7	8	0
50 FT	35	39	26	13	8	6.5	7	6	82.1	65.0	65.0	8	13	69.0	76.0	8	13	48.0	50.0	8	6.5	7	6.5	72.8	215	227	8	6	63.0	74.0	5	12	7	7.5	0

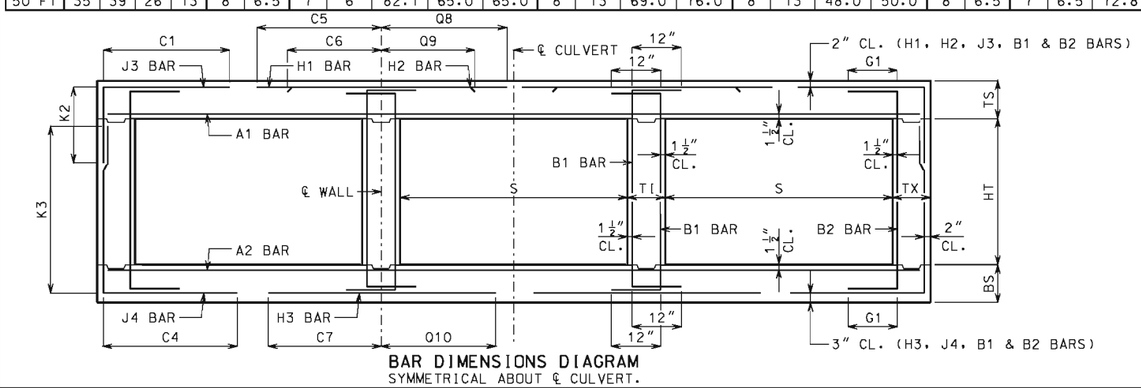

BAR DIMENSIONS DIAGRAM
SYMMETRICAL ABOUT ℄ CULVERT.

IF A SEAL IS PRESENT ON THIS SHEET IT HAS BEEN ELECTRONICALLY SEALED AND DATED.

GENERAL NOTES:

IF DESIGN FILL IS BETWEEN TABULATED DESIGN FILLS, USE THE NEXT GREATER TABULATED DESIGN FILL, EXCEPT FOR DESIGN FILLS BETWEEN 2 FEET AND 4 FEET. FOR DESIGN FILLS BETWEEN 2 FEET AND 4 FEET USE THE GREATER MEMBER THICKNESS, AREA OF REINFORCEMENT AND BAR DIMENSIONS FROM THE 2 FEET AND 4 FEET TABULATED DESIGN FILLS. AREA OF REINFORCEMENT EQUALS BAR AREA PER FOOT SPACING.

SPECIAL DESIGNS ARE REQUIRED WHEN THE DESIGN FILL IS LESS THAN 1 FOOT OR GREATER THAN 50 FEET.

DIMENSIONS ARE IN INCHES UNLESS OTHERWISE SPECIFIED.

DESIGN FILLS ARE MEASURED FROM THE TOP OF TOP SLAB TO THE TOP OF EARTH FILL OR ROADWAY.

CULVERTS MEET STRENGTH AND SERVICEABILITY REQUIREMENTS FOR THE DESIGN VEHICULAR LIVE LOAD HL-93 MINUS THE LANE LOAD.

MISSOURI HIGHWAYS AND TRANSPORTATION COMMISSION
105 WEST CAPITOL
JEFFERSON CITY, MO 65102
1-888-ASK-MODOT (1-888-275-6636)

STATE OF MISSOURI
DENNIS W. HECKMAN
NUMBER PE-27141
PROFESSIONAL ENGINEER
THIS SHEET HAS BEEN SIGNED, SEALED AND DATED ELECTRONICALLY.

CONCRETE TRIPLE BOX CULVERT

MEMBER THICKNESS BAR SIZE, SPACING & DIMENSIONS

SPAN (S): 14 FEET
HEIGHT (HT): 13 THRU 16 FEET

DATE EFFECTIVE: 12/01/2011
DATE PREPARED: 9/29/2011

703.87

SPAN (S) = 15 FT HEIGHT (HT) = 8 FT OR 9 FT OR 10 FT

DESIGN FILL	MEMBER THICKNESS				TOP SLAB BARS											BOTTOM SLAB BARS										WALL BARS				
					A1 BARS		J3 BARS						H1 BARS			H2 BARS				A2 BARS		J4 BARS					H3 BARS				B1 BARS		B2 BARS	
	TS	BS	TX	TI	SIZE	SPA.	SIZE	SPA.	C1	K2 HT=8′	K2 HT=9′	K2 HT=10′	SIZE	SPA.	C5	Q8	SIZE	SPA.	C6	Q9	SIZE	SPA.	SIZE	SPA.	C4	K3 HT=8′	K3 HT=9′	K3 HT=10′	SIZE	SPA.	C7	Q10	SIZE	SPA.	SIZE	SPA.	G1
1 FT	15	10	8	8	6	8	5	8	72.9	35.0	35.0	35.0	6	16	146.5	111.5	6	16	48.0	53.0	5	7	7	6.5	69.0	102	114	126	6	6	61.0	65.0	5	12	5	12	12
2 FT	15	11	9	8	6	7.5	5	8	73.5	35.0	35.0	35.0	6	16	146.5	111.5	6	16	49.0	53.0	5	6.5	6	7	60.4	103	115	127	6	6	59.0	65.0	5	12	5	12	12
4 FT	12	11	9	8	6	6.5	6	7	60.8	32.0	36.0	36.0	6	12	84.0	109.0	6	12	40.0	43.0	5	6.5	6	6.5	53.9	103	115	127	7	6.5	61.0	68.0	5	11.5	5	12	12
6 FT	12	12	9	8	6	7	6	6.5	53.5	32.0	32.0	36.0	7	16	72.0	86.0	7	16	41.0	43.0	6	8	6	7	49.9	104	116	128	7	6.5	60.0	68.0	5	12	5	12	12
8 FT	13	14	9	8	6	7	6	7	49.5	33.0	33.0	33.0	7	15	67.0	77.0	7	15	39.0	42.0	6	8	5	6.5	43.4	106	118	130	7	7	58.0	69.0	5	12	5	12	0
10 FT	14	15	9	8	6	7	6	7.5	46.6	34.0	34.0	34.0	7	15	64.0	73.0	7	15	39.0	41.0	6	7.5	5	6.5	41.5	107	119	131	7	6.5	58.0	69.0	5	12	5	12	0
12 FT	15	16	9	8	6	6	6	7.5	50.4	35.0	35.0	35.0	7	14	70.0	80.0	7	14	46.0	49.0	6	6	5	6	40.0	108	120	132	7	6.5	57.0	69.0	5	12	5	11.5	0
14 FT	17	18	9	8	6	6.5	6	7.5	48.4	37.0	37.0	37.0	7	15	68.0	79.0	7	15	46.0	49.0	6	6.5	5	6	38.9	110	122	134	7	6.5	57.0	69.0	5	12	5	9.5	0
16 FT	18	19	9	8	6	6.5	6	7.5	47.1	38.0	38.0	42.0	7	14	67.0	79.0	7	14	45.0	49.0	6	6	6	8.5	41.0	111	123	135	7	6.5	57.0	69.0	5	12	5	8.5	0
18 FT	19	21	10	8	6	6	6	7.5	47.8	39.0	39.0	39.0	7	14	66.0	78.0	7	14	45.0	49.0	7	8	5	6.5	37.9	113	125	137	7	6.5	57.0	70.0	5	12	5	9.5	0
20 FT	21	22	10	8	6	6	6	7.5	46.6	41.0	41.0	41.0	7	14	66.0	78.0	7	14	45.0	49.0	7	7.5	5	6	37.5	114	126	138	7	6.5	56.0	70.0	5	12	5	8	0
22 FT	23	24	10	8	7	7.5	6	7.5	46.0	43.0	43.0	43.0	7	14	65.0	77.0	7	14	45.0	49.0	7	7	5	6	37.3	116	128	140	7	6.5	56.0	70.0	5	12	5	8	0
24 FT	24	25	11	8	7	7.5	6	8	46.5	44.0	44.0	44.0	7	13	64.0	77.0	7	13	45.0	49.0	7	6.5	6	6.5	37.5	117	129	141	7	6.5	56.0	70.0	5	12	5	7.5	0
26 FT	25	27	11	8	7	7	6	7.5	46.4	45.0	45.0	45.0	7	13	64.0	77.0	7	13	44.0	48.0	7	6.5	5	6	37.1	119	131	143	7	6	56.0	70.0	5	12	5	7.5	0
28 FT	27	28	11	8	7	6.5	6	7.5	45.8	47.0	47.0	47.0	7	13	64.0	76.0	7	13	44.0	48.0	7	6	5	6	37.1	120	132	144	7	6	56.0	70.0	5	12	5	7.5	0
30 FT	28	30	12	8	7	6.5	6	7.5	46.8	52.0	52.0	52.0	7	12	63.0	76.0	7	12	43.0	47.0	8	7.5	6	8	40.4	122	134	146	8	7.5	62.0	76.0	5	12	5	7	0
32 FT	30	31	12	8	7	6	6	7.5	46.3	54.0	54.0	54.0	7	12	63.0	75.0	7	12	42.0	45.0	8	7.5	6	7.5	40.5	123	135	147	8	7	62.0	76.0	5	12	5	7	0
34 FT	31	32	12	8	8	7.5	6	7.5	46.1	55.0	55.0	55.0	8	15	71.0	83.0	8	15	50.0	53.0	8	6.5	6	7.5	40.3	124	136	148	8	6.5	62.0	76.0	5	12	5	7	0
36 FT	32	34	12	8	8	7.5	6	7	46.1	56.0	56.0	56.0	8	14	71.0	82.0	8	14	49.0	52.0	8	7	6	7	40.3	126	138	150	8	6.5	62.0	76.0	5	12	5	7	0
38 FT	33	35	13	8	8	7	6	7	47.0	57.0	57.0	57.0	8	14	71.0	82.0	8	14	49.0	51.0	8	7	6	6.5	40.8	127	139	151	8	6.5	62.0	76.0	5	12	5	6.5	0
40 FT	34	36	13	8	8	7	6	6.5	46.9	58.0	58.0	58.0	8	14	70.0	81.0	8	14	49.0	51.0	8	6.5	6	6.5	40.8	128	140	152	8	6	62.0	76.0	5	12	5	6.5	0
42 FT	35	37	13	8	8	6.5	6	6.5	46.9	59.0	59.0	59.0	8	13	70.0	81.0	8	13	48.0	50.0	8	6	6	6.5	40.9	129	141	153	8	6	62.0	76.0	5	12	5	6.5	0
44 FT	36	38	13	8	8	6.5	6	6.5	46.9	60.0	60.0	60.0	8	13	70.0	80.0	8	13	48.0	49.0	8	6	6	6	41.0	130	142	154	8	6	62.0	76.0	5	12	5	6	0
46 FT	37	39	13	8	8	6.5	6	6	46.9	61.0	61.0	61.0	8	12	70.0	79.0	8	12	47.0	49.0	8	6	6	6	41.1	131	143	155	8	6	62.0	76.0	5	12	6	8	0
48 FT	38	41	13	8	8	6	6	6	46.1	62.0	62.0	62.0	8	12	69.0	78.0	8	12	46.0	48.0	8	6.5	7	7	43.3	133	145	157	9	7.5	68.0	82.0	5	12	6	8	0
50 FT	39	42	14	8	8	6	6	6	47.1	63.0	63.0	63.0	8	12	69.0	77.0	8	12	46.0	47.0	8	6.5	7	7.5	43.9	134	146	158	9	7	68.0	82.0	5	12	5	6	0

SPAN (S) = 15 FT HEIGHT (HT) = 11 FT OR 12 FT OR 13 FT

DESIGN FILL	MEMBER THICKNESS				TOP SLAB BARS											BOTTOM SLAB BARS										WALL BARS				
					A1 BARS		J3 BARS						H1 BARS			H2 BARS				A2 BARS		J4 BARS					H3 BARS				B1 BARS		B2 BARS	
	TS	BS	TX	TI	SIZE	SPA.	SIZE	SPA.	C1	K2 HT=11′	K2 HT=12′	K2 HT=13′	SIZE	SPA.	C5	Q8	SIZE	SPA.	C6	Q9	SIZE	SPA.	SIZE	SPA.	C4	K3 HT=11′	K3 HT=12′	K3 HT=13′	SIZE	SPA.	C7	Q10	SIZE	SPA.	SIZE	SPA.	G1
1 FT	15	11	9	10	6	8	5	6.5	73.9	35.0	35.0	35.0	6	16	147.5	112.5	6	16	48.0	52.0	5	6.5	6	6	89.3	139	151	163	6	6.5	63.0	67.0	5	12	5	8.5	12
2 FT	15	11	10	10	6	7.5	5	6.5	74.5	35.0	35.0	35.0	6	16	147.5	112.5	6	16	49.0	53.0	5	6.5	6	6	77.1	139	151	163	6	6	61.0	65.0	5	12	5	8	12
4 FT	12	12	10	10	6	7	6	7.5	77.5	32.0	36.0	36.0	6	13	89.0	107.0	6	13	41.0	43.0	5	6	6	6.5	71.3	140	152	164	6	6	60.0	67.0	5	10	5	8	12
6 FT	12	12	10	10	6	7	6	7	67.9	32.0	36.0	36.0	7	16	74.0	83.0	7	16	41.0	43.0	6	8	6	6	65.1	140	152	164	7	6	61.0	68.0	5	12	5	8	12
8 FT	13	14	10	10	6	7.5	6	6.5	63.0	33.0	37.0	37.0	7	16	69.0	75.0	7	16	40.0	42.0	6	7.5	6	6	62.3	142	154	166	7	6.5	60.0	69.0	5	12	5	8	0
10 FT	14	15	10	10	6	7	6	6.5	59.4	34.0	38.0	38.0	7	15	66.0	73.0	7	15	40.0	42.0	6	7	7	6.5	62.4	143	155	167	7	6.5	59.0	69.0	5	12	5	8	0
12 FT	15	17	11	10	6	7	6	6.5	63.5	35.0	35.0	39.0	7	14	71.0	79.0	7	14	47.0	49.0	6	7	6	7	57.5	145	157	169	7	7	59.0	69.0	5	12	5	7.5	0
14 FT	17	18	12	10	6	7	6	6.5	62.4	37.0	41.0	41.0	7	15	70.0	78.0	7	15	47.0	49.0	6	6.5	6	7	56.4	146	158	170	7	6.5	58.0	69.0	5	12	5	7	0
16 FT	18	19	12	10	6	6.5	6	6.5	61.1	38.0	42.0	42.0	7	14	68.0	78.0	7	14	46.0	49.0	6	6	6	7	55.4	147	159	171	7	6.5	58.0	69.0	5	12	5	7	0
18 FT	19	21	12	10	6	6	6	6	60.4	39.0	43.0	43.0	7	14	68.0	77.0	7	14	46.0	49.0	7	8	6	6	54.6	149	161	173	7	6.5	58.0	70.0	5	12	5	7	0
20 FT	21	22	13	10	6	6	6	6	60.3	41.0	45.0	45.0	7	14	67.0	77.0	7	14	46.0	49.0	7	7	6	6.5	54.5	150	162	174	7	6.5	58.0	70.0	5	12	5	6.5	0
22 FT	22	24	13	10	6	6	6	6	59.6	42.0	46.0	46.0	7	14	66.0	77.0	7	14	46.0	49.0	7	7	6	6.5	54.0	152	164	176	7	6.5	58.0	70.0	5	12	5	6.5	0
24 FT	24	25	14	10	7	7.5	6	6	59.8	44.0	48.0	48.0	7	14	66.0	77.0	7	14	45.0	49.0	7	6.5	6	7	54.1	153	165	177	7	6.5	58.0	70.0	5	12	5	6	0
26 FT	25	27	14	10	7	7	6	6	59.5	45.0	49.0	49.0	7	13	65.0	76.0	7	13	45.0	49.0	7	6.5	6	7	53.8	155	167	179	7	6	58.0	70.0	5	12	5	6	0
28 FT	26	28	15	10	7	6.5	6	6	59.9	50.0	50.0	50.0	7	13	65.0	76.0	7	13	45.0	49.0	7	6	6	7	53.9	156	168	180	7	6	58.0	70.0	5	12	6	8	0
30 FT	28	30	15	10	7	6.5	7	8	64.5	52.0	52.0	52.0	7	12	64.0	76.0	7	12	44.0	47.0	8	7.5	6	7	53.8	158	170	182	8	7.5	64.0	76.0	5	12	6	8	0
32 FT	29	31	15	10	7	6	7	7	64.3	53.0	53.0	53.0	7	12	64.0	75.0	7	12	44.0	47.0	8	7.5	6	6.5	53.5	159	171	183	8	7	64.0	76.0	5	12	6	8	0
34 FT	31	32	16	10	8	7.5	6	6	59.6	55.0	55.0	55.0	8	15	72.0	83.0	8	15	50.0	53.0	8	6.5	6	7	53.8	160	172	184	8	6.5	64.0	76.0	5	12	6	8	0
36 FT	32	34	16	10	8	7.5	7	7	64.5	56.0	56.0	56.0	8	14	72.0	82.0	8	14	50.0	52.0	8	7	6	7	53.8	162	174	186	8	6.5	63.0	77.0	5	12	6	8	0
38 FT	33	35	17	10	8	7	7	7.5	65.1	57.0	57.0	57.0	8	14	71.0	82.0	8	14	49.0	52.0	8	7	6	6.5	54.0	163	175	187	8	6.5	63.0	77.0	5	12	6	7.5	0
40 FT	34	36	17	10	8	7	7	7	65.1	58.0	58.0	58.0	8	14	71.0	81.0	8	14	49.0	51.0	8	6.5	6	6.5	54.0	164	176	188	8	6	63.0	77.0	5	12	6	7.5	0
42 FT	35	37	18	10	8	6.5	7	7.5	65.9	59.0	59.0	59.0	8	13	71.0	80.0	8	13	49.0	50.0	8	6	6	6.5	54.4	165	177	189	8	6	64.0	77.0	5	12	6	7	0
44 FT	36	39	18	10	8	6.5	7	7	66.0	60.0	60.0	60.0	8	13	71.0	80.0	8	13	48.0	50.0	8	6.5	6	6	54.6	167	179	191	8	6	63.0	77.0	5	12	6	7	0
46 FT	37	40	19	10	8	6.5	7	7.5	66.8	61.0	61.0	61.0	8	12	70.0	79.0	8	12	48.0	49.0	8	6.5	6	6	55.0	168	180	192	9	7.5	70.0	83.0	5	12	6	6.5	0
48 FT	38	41	19	10	8	6	7	6.5	66.8	62.0	62.0	68.0	8	12	70.0	78.0	8	12	47.0	48.0	8	6.5	7	8	58.1	169	181	193	9	7	70.0	83.0	5	12	6	6.5	0
50 FT	39	42	19	10	8	6	7	7	65.6	63.0	63.0	69.0	8	12	70.0	77.0	8	12	47.0	48.0	8	6.5	7	7.5	57.0	170	182	194	9	7	69.0	83.0	5	12	6	6.5	0

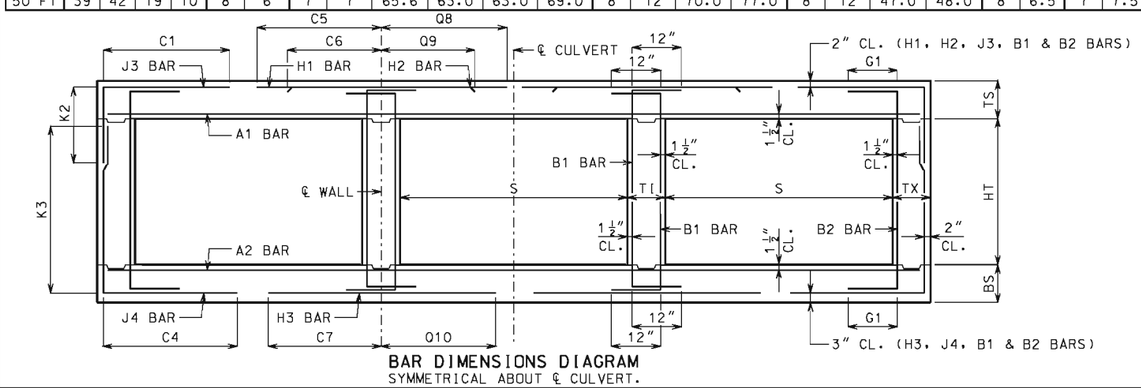

BAR DIMENSIONS DIAGRAM
SYMMETRICAL ABOUT ℄ CULVERT.

IF A SEAL IS PRESENT ON THIS SHEET IT HAS BEEN ELECTRONICALLY SEALED AND DATED.

GENERAL NOTES:

IF DESIGN FILL IS BETWEEN TABULATED DESIGN FILLS, USE THE NEXT GREATER TABULATED DESIGN FILL, EXCEPT FOR DESIGN FILLS BETWEEN 2 FEET AND 4 FEET. FOR DESIGN FILLS BETWEEN 2 FEET AND 4 FEET USE THE GREATER MEMBER THICKNESS. AREA OF REINFORCEMENT AND BAR DIMENSIONS FROM THE 2 FEET AND 4 FEET TABULATED DESIGN FILLS. AREA OF REINFORCEMENT EQUALS BAR AREA PER FOOT SPACING.

SPECIAL DESIGNS ARE REQUIRED WHEN THE DESIGN FILL IS LESS THAN 1 FOOT OR GREATER THAN 50 FEET.

DIMENSIONS ARE IN INCHES UNLESS OTHERWISE SPECIFIED.

DESIGN FILLS ARE MEASURED FROM THE TOP OF TOP SLAB TO THE TOP OF EARTH FILL OR ROADWAY.

CULVERTS MEET STRENGTH AND SERVICEABILITY REQUIREMENTS FOR THE DESIGN VEHICULAR LIVE LOAD HL-93 MINUS THE LANE LOAD.

MISSOURI HIGHWAYS AND TRANSPORTATION COMMISSION
105 WEST CAPITOL
JEFFERSON CITY, MO 65102
1-888-ASK-MODOT (1-888-275-6636)

STATE OF MISSOURI
DENNIS W. HECKMAN
NUMBER PE-27141
PROFESSIONAL ENGINEER
THIS SHEET HAS BEEN SIGNED, SEALED AND DATED ELECTRONICALLY.

CONCRETE TRIPLE BOX CULVERT

MEMBER THICKNESS BAR SIZE, SPACING & DIMENSIONS

SPAN (S): 15 FEET
HEIGHT (HT): 8 THRU 13 FEET

DATE EFFECTIVE: 12/01/2011
DATE PREPARED: 9/29/2011

703.87

SHEET NO. 24 OF 27

SPAN (S) = 15 FT HEIGHT (HT) = 14 FT OR 15 FT OR 16 FT

DESIGN FILL	MEMBER THICKNESS				TOP SLAB BARS														BOTTOM SLAB BARS											WALL BARS			
					A1 BARS		J3 BARS						H1 BARS				H2 BARS				A2 BARS		J4 BARS					H3 BARS				B1 BARS		B2 BARS	
										K2														K3								
	TS	BS	TX	TI	SIZE	SPA.	SIZE	SPA.	C1	HT=14'	HT=15'	HT=16'	SIZE	SPA.	C5	Q8	SIZE	SPA.	C6	Q9	SIZE	SPA.	SIZE	SPA.	C4	HT=14'	HT=15'	HT=16'	SIZE	SPA.	C7	Q10	SIZE	SPA.	SIZE	SPA.	G1
1 FT	15	11	12	13	6	8	6	8	79.3	35.0	35.0	39.0	6	16	152.5	114.5	6	16	48.0	51.0	5	6.5	6	6	99.0	175	187	199	6	6	64.0	65.0	5	11.5	5	7	12
2 FT	15	12	12	13	6	8	6	8	79.3	35.0	35.0	39.0	6	16	152.5	114.5	6	16	49.0	52.0	5	6	6	6.5	95.5	176	188	200	6	6	63.0	66.0	5	11.5	5	7	12
4 FT	12	12	12	13	6	7	6	7	111.5	36.0	36.0	36.0	6	13	99.0	91.0	6	13	41.0	42.0	5	6	6	6	88.6	176	188	200	7	6.5	65.0	69.0	5	9.5	5	7	12
6 FT	12	13	12	13	6	7.5	6	6.5	85.6	36.0	36.0	36.0	6	12	71.0	73.0	6	12	40.0	40.0	6	8	6	6	84.0	177	189	201	7	6.5	64.0	69.0	5	12	5	6.5	12
8 FT	13	14	13	13	6	7.5	6	7	77.4	37.0	37.0	37.0	6	12	67.0	70.0	6	12	38.0	39.0	6	7.5	6	6	78.1	178	190	202	7	6.5	62.0	68.0	5	12	5	6.5	0
10 FT	14	16	13	13	6	7.5	6	6	75.0	38.0	38.0	38.0	7	15	67.0	71.0	7	15	41.0	42.0	6	7	6	6	77.0	180	192	204	7	7	61.0	69.0	5	12	5	6.5	0
12 FT	15	17	14	13	6	7	6	6	78.9	39.0	39.0	39.0	7	15	73.0	78.0	7	15	48.0	50.0	6	7	6	6.5	74.8	181	193	205	7	6.5	60.0	69.0	5	12	5	6	0
14 FT	16	18	15	13	6	7	6	6	77.5	40.0	40.0	40.0	7	14	71.0	77.0	7	14	48.0	49.0	6	6.5	6	6.5	73.0	182	194	206	7	6.5	60.0	69.0	5	12	6	8	0
16 FT	18	20	15	13	6	7	7	8	81.9	42.0	42.0	42.0	7	15	70.0	77.0	7	15	48.0	50.0	6	6	6	6	72.4	184	196	208	7	7	60.0	69.0	5	12	6	8	0
18 FT	19	21	15	13	6	6.5	7	7	80.8	43.0	43.0	49.0	7	14	69.0	77.0	7	14	48.0	50.0	7	8	7	7	74.4	185	197	209	7	6.5	60.0	69.0	5	12	6	8	0
20 FT	20	23	16	13	6	6	7	7	80.3	44.0	44.0	50.0	7	14	69.0	76.0	7	14	47.0	50.0	7	7	7	7.5	74.0	187	199	211	7	7	59.0	70.0	5	12	6	8	0
22 FT	22	24	17	13	6	6	7	7.5	80.1	46.0	46.0	52.0	7	14	68.0	76.0	7	14	47.0	50.0	7	7	7	7.5	73.3	188	200	212	7	6.5	59.0	70.0	5	12	6	7.5	0
24 FT	23	25	17	13	7	7.5	7	7	79.4	47.0	47.0	53.0	7	14	67.0	76.0	7	14	47.0	50.0	7	6	7	7	72.5	189	201	213	7	6	59.0	70.0	5	12	6	7.5	0
26 FT	25	27	18	13	7	7	7	7	79.6	49.0	49.0	55.0	7	14	67.0	76.0	7	14	47.0	50.0	7	6.5	7	7.5	72.5	191	203	215	7	6	59.0	70.0	5	12	6	7	0
28 FT	26	29	19	13	7	7	7	7	79.6	50.0	50.0	50.0	7	13	66.0	76.0	7	13	46.0	50.0	7	6	6	6	69.5	193	205	217	8	7.5	65.0	76.0	5	12	6	6.5	0
30 FT	27	30	19	13	7	6.5	7	6.5	79.3	51.0	51.0	57.0	7	13	66.0	76.0	7	13	46.0	49.0	8	7.5	7	7.5	72.1	194	206	218	8	7.5	65.0	77.0	5	12	6	6.5	0
32 FT	29	31	20	13	7	6	7	7	79.5	53.0	53.0	59.0	7	12	65.0	75.0	7	12	44.0	47.0	8	7	7	8	71.9	195	207	219	8	7	65.0	77.0	5	12	6	6.5	0
34 FT	30	33	21	13	7	6	7	7	79.9	54.0	54.0	54.0	7	12	65.0	75.0	7	12	44.0	47.0	8	7	6	6	69.0	197	209	221	8	6.5	65.0	77.0	5	12	6	6	0
36 FT	31	34	22	13	8	7.5	7	6.5	80.1	55.0	61.0	61.0	8	15	73.0	82.0	8	15	52.0	55.0	8	7	7	7.5	71.9	198	210	222	8	6.5	65.0	77.0	5	12	6	6	0
38 FT	32	35	22	13	8	7	7	6	79.8	56.0	62.0	62.0	8	14	73.0	82.0	8	14	52.0	54.0	8	6.5	7	7.5	71.6	199	211	223	8	6.5	65.0	77.0	5	12	6	6	0
40 FT	33	36	23	13	8	6.5	7	6.5	80.4	57.0	63.0	63.0	8	13	73.0	82.0	8	13	51.0	54.0	8	6	7	7.5	71.8	200	212	224	8	6	65.0	77.0	5	12	7	7.5	0
42 FT	34	38	24	13	8	6.5	7	6.5	81.1	58.0	64.0	64.0	8	13	72.0	81.0	8	13	51.0	53.0	8	6.5	7	7	72.4	202	214	226	8	6	65.0	78.0	5	12	7	7.5	0
44 FT	35	39	25	13	8	6.5	7	6.5	81.9	59.0	65.0	65.0	8	13	72.0	81.0	8	13	50.0	52.0	8	6.5	7	7	72.5	203	215	227	8	6	65.0	78.0	5	12	7	7.5	0
46 FT	36	40	26	13	8	6.5	7	6.5	82.5	60.0	66.0	66.0	8	13	72.0	80.0	8	13	50.0	52.0	8	6.5	7	7	72.9	204	216	228	9	7.5	71.0	84.0	5	12	7	8	0
48 FT	37	41	27	13	8	6.5	7	6	83.3	67.0	67.0	67.0	8	12	72.0	79.0	8	12	49.0	51.0	8	6.5	7	7	73.1	205	217	229	9	7	71.0	84.0	5	12	7	8	0
50 FT	38	42	27	13	8	6	7	6.5	81.8	68.0	68.0	68.0	8	12	71.0	79.0	8	12	49.0	50.0	8	6	7	7	71.4	206	218	230	9	7	71.0	84.0	5	12	6	6	0

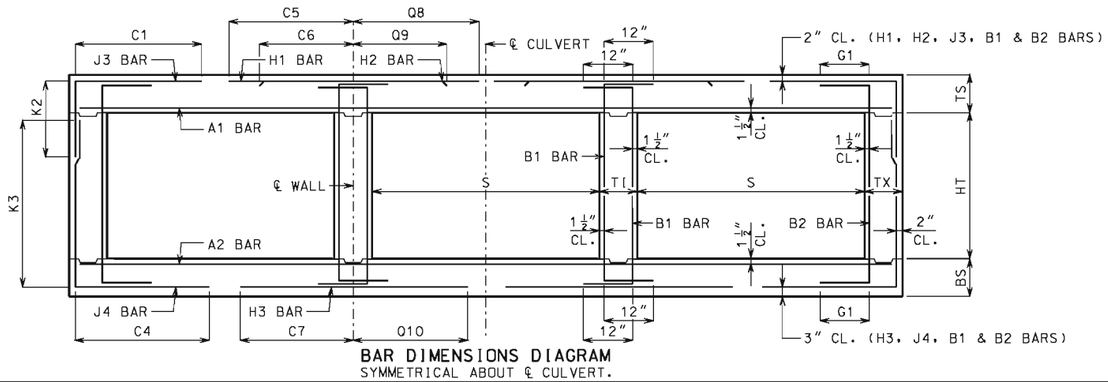

BAR DIMENSIONS DIAGRAM
SYMMETRICAL ABOUT ℄ CULVERT.

GENERAL NOTES:

IF DESIGN FILL IS BETWEEN TABULATED DESIGN FILLS, USE THE NEXT GREATER TABULATED DESIGN FILL, EXCEPT FOR DESIGN FILLS BETWEEN 2 FEET AND 4 FEET. FOR DESIGN FILLS BETWEEN 2 FEET AND 4 FEET USE THE GREATER MEMBER THICKNESS, AREA OF REINFORCEMENT AND BAR DIMENSIONS FROM THE 2 FEET AND 4 FEET TABULATED DESIGN FILLS. AREA OF REINFORCEMENT EQUALS BAR AREA PER FOOT SPACING.

SPECIAL DESIGNS ARE REQUIRED WHEN THE DESIGN FILL IS LESS THAN 1 FOOT OR GREATER THAN 50 FEET.

DIMENSIONS ARE IN INCHES UNLESS OTHERWISE SPECIFIED.

DESIGN FILLS ARE MEASURED FROM THE TOP OF TOP SLAB TO THE TOP OF EARTH FILL OR ROADWAY.

CULVERTS MEET STRENGTH AND SERVICEABILITY REQUIREMENTS FOR THE DESIGN VEHICULAR LIVE LOAD HL-93 MINUS THE LANE LOAD.

MISSOURI HIGHWAYS AND TRANSPORTATION COMMISSION
105 WEST CAPITOL
JEFFERSON CITY, MO 65102
1-888-ASK-MODOT (1-888-275-6636)

STATE OF MISSOURI
DENNIS W. HECKMAN
NUMBER PE-27141
PROFESSIONAL ENGINEER
THIS SHEET HAS BEEN SIGNED, SEALED AND DATED ELECTRONICALLY.

CONCRETE TRIPLE BOX CULVERT

MEMBER THICKNESS BAR SIZE, SPACING & DIMENSIONS

SPAN (S): 15 FEET
HEIGHT (HT): 14 THRU 16 FEET

DATE EFFECTIVE: 12/01/2011
DATE PREPARED: 9/29/2011

703.87

SHEET NO. 25 OF 27

IF A SEAL IS PRESENT ON THIS SHEET IT HAS BEEN ELECTRONICALLY SEALED AND DATED.

SPAN (S) = 16 FT HEIGHT (HT) = 8 FT OR 9 FT OR 10 FT

DESIGN FILL	MEMBER THICKNESS				TOP SLAB BARS														BOTTOM SLAB BARS												WALL BARS				
					A1 BARS		J3 BARS						H1 BARS				H2 BARS				A2 BARS		J4 BARS						H3 BARS				B1 BARS		B2 BARS	
	TS	BS	TX	TI	SIZE	SPA.	SIZE	SPA.	C1	K2 HT=8′	K2 HT=9′	K2 HT=10′	SIZE	SPA.	C5	Q8	SIZE	SPA.	C6	Q9	SIZE	SPA.	SIZE	SPA.	C4	K3 HT=8′	K3 HT=9′	K3 HT=10′	SIZE	SPA.	C7	Q10	SIZE	SPA.	SIZE	SPA.	G1
1 FT	15	10	9	8	6	7.5	5	8	77.1	35.0	35.0	35.0	6	16	154.5	117.5	6	16	52.0	57.0	5	7	6	6	64.6	102	114	126	7	6.5	66.0	71.0	5	12	5	12	12
2 FT	16	11	9	8	6	7	5	8	77.1	36.0	36.0	36.0	6	14	154.5	117.5	6	14	48.0	53.0	5	6.5	6	6.5	59.3	103	115	127	7	7	65.0	71.0	5	12	5	12	12
4 FT	13	11	9	8	6	6.5	5	6	55.9	33.0	33.0	33.0	6	12	87.0	115.0	6	12	42.0	45.0	6	8	6	6	54.0	103	115	127	7	6	64.0	71.0	5	12	5	12	12
6 FT	13	12	10	8	6	7	5	6	51.4	33.0	33.0	33.0	7	15	75.0	91.0	7	15	42.0	45.0	6	7	6	6.5	51.4	104	116	128	7	6	62.0	70.0	5	12	5	12	12
8 FT	14	14	10	8	6	7	5	6	47.3	34.0	34.0	34.0	7	15	70.0	81.0	7	15	41.0	43.0	6	7.5	5	6.5	44.5	106	118	130	7	6	61.0	71.0	5	12	5	12	0
10 FT	15	16	10	8	6	6.5	6	8	53.6	35.0	35.0	35.0	7	14	75.0	85.0	7	14	48.0	51.0	6	7	5	7	41.6	108	120	132	7	6.5	60.0	72.0	5	12	5	12	0
12 FT	16	17	10	8	6	6.5	6	8	51.3	36.0	36.0	36.0	7	13	73.0	83.0	7	13	47.0	50.0	6	6.5	5	6.5	40.1	109	121	133	7	6	60.0	72.0	5	12	5	12	0
14 FT	18	19	10	8	6	6	6	8	49.0	38.0	38.0	38.0	7	14	71.0	83.0	7	14	47.0	50.0	6	6	5	6.5	38.8	111	123	135	7	6.5	59.0	73.0	5	12	5	12	0
16 FT	19	20	10	8	6	6	6	7.5	47.6	39.0	39.0	39.0	7	13	69.0	82.0	7	13	46.0	50.0	6	6	5	6.5	37.8	112	124	136	7	6	59.0	73.0	5	12	5	11	0
18 FT	20	22	10	8	7	7	6	7.5	46.9	40.0	40.0	40.0	7	13	69.0	81.0	7	13	46.0	50.0	7	7.5	5	6.5	36.8	114	126	138	7	6.5	59.0	73.0	5	12	5	9.5	0
20 FT	22	23	10	8	7	7.5	6	7.5	45.6	42.0	42.0	42.0	7	13	68.0	81.0	7	13	46.0	50.0	7	6.5	5	6	36.5	115	127	139	7	6	59.0	73.0	5	12	5	8	0
22 FT	24	25	10	8	7	7.5	6	7.5	45.0	44.0	44.0	44.0	7	13	67.0	81.0	7	13	46.0	50.0	7	6.5	5	6	36.3	117	129	141	7	6.5	59.0	73.0	5	12	5	8	0
24 FT	25	27	11	8	7	7	6	7.5	45.9	45.0	45.0	45.0	7	12	67.0	80.0	7	12	46.0	50.0	7	6.5	5	6	36.4	119	131	143	7	6	59.0	73.0	5	12	5	7.5	0
26 FT	27	28	11	8	7	6.5	6	7.5	45.1	47.0	47.0	47.0	7	12	66.0	80.0	7	12	45.0	50.0	7	6	5	6	36.4	120	132	144	7	6	59.0	73.0	5	12	5	7.5	0
28 FT	28	30	11	8	7	6	6	7	45.0	52.0	52.0	52.0	7	12	66.0	80.0	7	12	45.0	50.0	8	7.5	6	7	39.0	122	134	146	8	7.5	65.0	79.0	5	12	5	7.5	0
30 FT	30	31	11	8	7	6	6	6.5	44.6	54.0	54.0	54.0	7	12	66.0	79.0	7	12	44.0	48.0	8	7	6	7	39.0	123	135	147	8	7	65.0	79.0	5	12	5	7.5	0
32 FT	31	33	12	8	8	7.5	6	7.5	45.5	55.0	55.0	55.0	8	15	74.0	87.0	8	15	52.0	56.0	8	7	6	7	39.4	125	137	149	8	6.5	65.0	80.0	5	12	5	7	0
34 FT	33	34	12	8	8	7	6	7	45.3	57.0	57.0	57.0	8	14	73.0	86.0	8	14	51.0	54.0	8	6.5	6	7	39.5	126	138	150	8	6.5	65.0	80.0	5	12	5	7	0
36 FT	34	36	12	8	8	7	6	6.5	45.3	58.0	58.0	58.0	8	14	73.0	85.0	8	14	50.0	53.0	8	6.5	6	6.5	39.4	128	140	152	8	6	65.0	80.0	5	12	5	6.5	0
38 FT	35	37	12	8	8	6.5	6	6.5	45.3	59.0	59.0	59.0	8	13	73.0	85.0	8	13	50.0	53.0	8	6.5	6	6.5	39.4	129	141	153	8	6	65.0	80.0	5	12	5	6	0
40 FT	36	39	13	8	8	6	6	6.5	46.1	60.0	60.0	60.0	8	12	73.0	84.0	8	12	50.0	52.0	8	6.5	6	6	39.9	131	143	155	8	6	65.0	80.0	5	12	5	6.5	0
42 FT	38	40	13	8	8	6	6	6	46.0	62.0	62.0	62.0	8	12	72.0	83.0	8	12	48.0	50.0	8	6.5	6	6	40.1	132	144	156	9	7	71.0	86.0	5	12	5	6	0
44 FT	39	41	13	8	8	6	6	6	46.0	63.0	63.0	63.0	8	12	72.0	82.0	8	12	48.0	49.0	8	6	7	7	43.3	133	145	157	9	7	71.0	86.0	5	12	6	8	0
46 FT	40	42	13	8	8	6	7	7	51.1	70.0	70.0	70.0	8	12	72.0	82.0	8	12	47.0	48.0	8	6	7	7	43.4	134	146	158	9	7	71.0	86.0	5	12	6	7.5	0
48 FT	41	43	13	8	9	7.5	7	7	51.1	71.0	71.0	71.0	9	15	79.0	89.0	9	15	55.0	56.0	8	6	7	6.5	43.5	135	147	159	9	7	70.0	86.0	5	12	6	7.5	0
50 FT	42	45	13	8	9	7	7	6	51.4	72.0	72.0	72.0	9	15	79.0	88.0	9	15	55.0	56.0	8	6	7	6.5	43.8	137	149	161	9	7	70.0	86.0	5	10.5	6	7	0

SPAN (S) = 16 FT HEIGHT (HT) = 11 FT OR 12 FT OR 13 FT

DESIGN FILL	MEMBER THICKNESS				TOP SLAB BARS														BOTTOM SLAB BARS												WALL BARS				
					A1 BARS		J3 BARS						H1 BARS				H2 BARS				A2 BARS		J4 BARS						H3 BARS				B1 BARS		B2 BARS	
	TS	BS	TX	TI	SIZE	SPA.	SIZE	SPA.	C1	K2 HT=11′	K2 HT=12′	K2 HT=13′	SIZE	SPA.	C5	Q8	SIZE	SPA.	C6	Q9	SIZE	SPA.	SIZE	SPA.	C4	K3 HT=11′	K3 HT=12′	K3 HT=13′	SIZE	SPA.	C7	Q10	SIZE	SPA.	SIZE	SPA.	G1
1 FT	15	11	9	10	6	7.5	5	6	77.5	35.0	35.0	35.0	6	16	155.5	118.5	6	16	52.0	57.0	5	6.5	6	6	87.6	139	151	163	6	6	65.0	69.0	5	12	5	8.5	12
2 FT	16	12	9	10	6	7	5	6	77.5	36.0	36.0	36.0	6	14	155.5	118.5	6	14	49.0	54.0	5	6	6	6	79.0	140	152	164	6	6	64.0	69.0	5	12	5	8.5	12
4 FT	13	12	10	10	6	6.5	6	7	76.3	37.0	37.0	37.0	6	12	91.0	115.0	6	12	42.0	45.0	5	6	6	6	69.6	140	152	164	7	6.5	65.0	72.0	5	10.5	5	8	12
6 FT	13	13	10	10	6	6.5	6	7	67.3	37.0	37.0	37.0	7	15	77.0	88.0	7	15	43.0	45.0	6	7.5	6	6.5	64.3	141	153	165	7	6	64.0	72.0	5	12	5	8	12
8 FT	14	14	10	10	6	7	6	6.5	61.5	38.0	38.0	38.0	7	15	71.0	79.0	7	15	41.0	44.0	6	7	6	6	60.3	142	154	166	7	6	62.0	72.0	5	12	5	8	0
10 FT	15	16	10	10	6	6.5	6	6	63.9	35.0	39.0	39.0	7	14	76.0	85.0	7	14	49.0	51.0	6	6.5	6	6	57.6	144	156	168	7	6.5	61.0	72.0	5	12	5	8	0
12 FT	16	18	11	10	6	6.5	6	6	62.9	36.0	40.0	40.0	7	14	74.0	83.0	7	14	48.0	51.0	6	6.5	6	7	56.4	146	158	170	7	6.5	61.0	73.0	5	12	5	7.5	0
14 FT	18	19	12	10	6	6.5	6	6.5	61.8	38.0	42.0	42.0	7	14	72.0	82.0	7	14	48.0	51.0	6	6	6	7	55.8	147	159	171	7	6.5	61.0	73.0	5	12	5	7	0
16 FT	19	21	12	10	6	6	6	6	60.8	39.0	43.0	43.0	7	13	71.0	81.0	7	13	47.0	51.0	7	8	6	7	54.6	149	161	173	7	6.5	60.0	73.0	5	12	5	7	0
18 FT	20	22	12	10	7	8	7	8	64.6	40.0	44.0	44.0	7	13	70.0	81.0	7	13	47.0	51.0	7	7.5	6	6	53.8	150	162	174	7	6.5	60.0	73.0	5	12	5	7	0
20 FT	22	24	13	10	7	8	6	6	59.6	42.0	46.0	46.0	7	13	69.0	81.0	7	13	47.0	51.0	7	7	6	7	53.6	152	164	176	7	6.5	60.0	73.0	5	12	5	6.5	0
22 FT	23	25	14	10	7	7	6	6	59.8	43.0	47.0	47.0	7	12	69.0	80.0	7	12	47.0	50.0	7	6.5	6	7	53.5	153	165	177	7	6.5	60.0	73.0	5	12	5	6.5	0
24 FT	25	27	14	10	7	7	6	6	59.1	45.0	49.0	49.0	7	13	68.0	80.0	7	13	46.0	50.0	7	6.5	6	7	53.3	155	167	179	7	6	60.0	74.0	5	12	5	6	0
26 FT	27	29	14	10	7	6.5	6	6	58.6	51.0	51.0	51.0	7	13	67.0	80.0	7	13	46.0	50.0	7	6	6	7	53.0	157	169	181	8	7.5	66.0	80.0	5	12	5	6	0
28 FT	28	30	15	10	7	6.5	6	6	59.1	52.0	52.0	52.0	7	12	67.0	79.0	7	12	46.0	50.0	8	7.5	6	7	53.1	158	170	182	8	7.5	66.0	80.0	5	12	6	8	0
30 FT	30	32	15	10	7	6	6	6	58.8	54.0	54.0	54.0	7	12	67.0	79.0	7	12	45.0	48.0	8	7	6	7	53.0	160	172	184	8	7	66.0	80.0	5	12	6	8	0
32 FT	31	33	15	10	8	7.5	7	7	63.4	55.0	55.0	55.0	8	15	74.0	87.0	8	15	53.0	56.0	8	7	6	7	52.8	161	173	185	8	6.5	66.0	80.0	5	12	6	8	0
34 FT	32	34	16	10	8	7	7	7.5	63.9	56.0	56.0	56.0	8	14	74.0	86.0	8	14	52.0	56.0	8	6	6	7	52.9	162	174	186	8	6	66.0	80.0	5	12	6	8	0
36 FT	34	36	16	10	8	7	7	7.5	63.8	58.0	58.0	58.0	8	14	74.0	85.0	8	14	51.0	54.0	8	6.5	6	6.5	52.9	164	176	188	8	6	66.0	80.0	5	12	6	8	0
38 FT	35	37	17	10	8	6.5	7	7.5	64.4	59.0	59.0	59.0	8	13	74.0	85.0	8	13	51.0	53.0	8	6	6	6.5	53.1	165	177	189	8	6	66.0	80.0	5	12	6	7.5	0
40 FT	36	39	17	10	8	6.5	7	7	64.4	60.0	60.0	60.0	8	13	73.0	84.0	8	13	50.0	53.0	8	6.5	6	6	53.1	167	179	191	8	6	66.0	80.0	5	12	6	7.5	0
42 FT	37	40	17	10	8	6	7	6.5	64.3	61.0	61.0	61.0	8	12	73.0	84.0	8	12	50.0	52.0	8	6	6	6	53.1	168	180	192	9	7	72.0	86.0	5	12	6	7.5	0
44 FT	38	41	18	10	8	6	7	7	65.0	62.0	62.0	68.0	8	12	73.0	83.0	8	12	49.0	51.0	8	6	7	8	56.6	169	181	193	9	7	72.0	86.0	5	12	6	7	0
46 FT	39	43	19	10	8	6	7	7.5	66.0	63.0	63.0	69.0	8	12	73.0	82.0	8	12	49.0	51.0	8	6	7	7.5	57.1	171	183	195	9	7	72.0	87.0	5	12	6	6.5	0
48 FT	40	44	19	10	8	6	7	6.5	66.0	70.0	70.0	70.0	8	12	72.0	81.0	8	12	48.0	50.0	8	6	7	7	57.3	172	184	196	9	7	72.0	87.0	5	12	6	6.5	0
50 FT	41	45	20	10	9	7.5	7	7	66.9	71.0	71.0	71.0	9	15	80.0	88.0	9	15	56.0	57.0	8	6	7	7	57.6	173	185	197	9	6.5	72.0	87.0	5	12	6	6.5	0

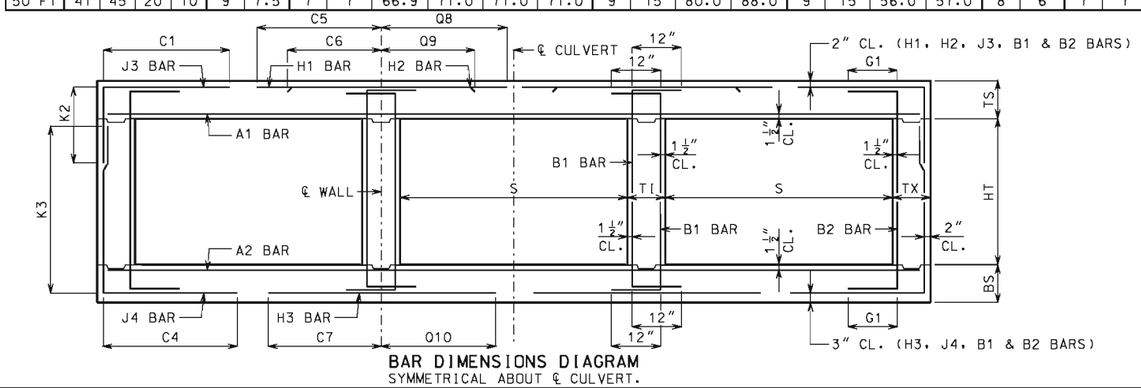

BAR DIMENSIONS DIAGRAM
SYMMETRICAL ABOUT ℄ CULVERT.

GENERAL NOTES:

IF DESIGN FILL IS BETWEEN TABULATED DESIGN FILLS, USE THE NEXT GREATER TABULATED DESIGN FILL, EXCEPT FOR DESIGN FILLS BETWEEN 2 FEET AND 4 FEET. FOR DESIGN FILLS BETWEEN 2 FEET AND 4 FEET USE THE GREATER MEMBER THICKNESS. AREA OF REINFORCEMENT AND BAR DIMENSIONS FROM THE 2 FEET AND 4 FEET TABULATED DESIGN FILLS. AREA OF REINFORCEMENT EQUALS BAR AREA PER FOOT SPACING.

SPECIAL DESIGNS ARE REQUIRED WHEN THE DESIGN FILL IS LESS THAN 1 FOOT OR GREATER THAN 50 FEET.

DIMENSIONS ARE IN INCHES UNLESS OTHERWISE SPECIFIED.

DESIGN FILLS ARE MEASURED FROM THE TOP OF TOP SLAB TO THE TOP OF EARTH FILL OR ROADWAY.

CULVERTS MEET STRENGTH AND SERVICEABILITY REQUIREMENTS FOR THE DESIGN VEHICULAR LIVE LOAD HL-93 MINUS THE LANE LOAD.

IF A SEAL IS PRESENT ON THIS SHEET IT HAS BEEN ELECTRONICALLY SEALED AND DATED.

MISSOURI HIGHWAYS AND TRANSPORTATION COMMISSION
105 WEST CAPITOL
JEFFERSON CITY, MO 65102
1-888-ASK-MODOT (1-888-275-6636)

STATE OF MISSOURI
DENNIS W. HECKMAN
NUMBER PE-27141
PROFESSIONAL ENGINEER
THIS SHEET HAS BEEN SIGNED, SEALED AND DATED ELECTRONICALLY.

CONCRETE TRIPLE BOX CULVERT

MEMBER THICKNESS BAR SIZE, SPACING & DIMENSIONS

SPAN (S): 16 FEET
HEIGHT (HT): 8 THRU 13 FEET

DATE EFFECTIVE: 12/01/2011
DATE PREPARED: 9/29/2011

703.87

SHEET NO. 26 OF 27

SPAN (S) = 16 FT HEIGHT (HT) = 14 FT OR 15 FT OR 16 FT

DESIGN FILL	MEMBER THICKNESS				TOP SLAB BARS														BOTTOM SLAB BARS												WALL BARS			
					A1 BARS		J3 BARS						H1 BARS				H2 BARS				A2 BARS		J4 BARS					H3 BARS				B1 BARS		B2 BARS	
										K2														K3										
	TS	BS	TX	TI	SIZE	SPA.	SIZE	SPA.	C1	HT=14'	HT=15'	HT=16'	SIZE	SPA.	C5	Q8	SIZE	SPA.	C6	Q9	SIZE	SPA.	SIZE	SPA.	C4	HT=14'	HT=15'	HT=16'	SIZE	SPA.	C7	Q10	SIZE	SPA.	SIZE	SPA.	G1
1 FT	15	11	12	13	6	7.5	6	8	82.9	35.0	35.0	39.0	6	16	160.5	120.5	6	16	51.0	55.0	5	6.5	6	6	97.5	175	187	199	7	7	70.0	71.0	5	10.5	5	7	12
2 FT	16	12	12	13	6	7.5	6	8	82.9	36.0	36.0	40.0	6	15	160.5	120.5	6	15	49.0	52.0	5	6	6	6	93.3	176	188	200	7	7	69.0	71.0	5	12	5	7	12
4 FT	12	13	13	13	6	6.5	6	6.5	94.8	36.0	36.0	36.0	7	16	92.0	94.0	7	16	46.0	46.0	5	6	6	6.5	87.8	177	189	201	7	7	68.0	73.0	5	8.5	5	6.5	12
6 FT	13	13	13	13	6	7	6	7	82.5	37.0	37.0	37.0	7	16	77.0	81.0	7	16	44.0	45.0	6	7.5	6	6	79.3	177	189	201	7	6	66.0	71.0	5	12	5	6.5	12
8 FT	14	15	13	13	6	7	6	6.5	77.9	38.0	38.0	38.0	7	15	73.0	77.0	7	15	43.0	44.0	6	7.5	6	6.5	77.8	179	191	203	7	6.5	64.0	72.0	5	12	5	6.5	0
10 FT	15	16	13	13	6	7	6	6	80.9	39.0	39.0	39.0	7	15	78.0	83.0	7	15	50.0	51.0	6	6.5	6	6	75.3	180	192	204	7	6	63.0	72.0	5	12	5	6.5	0
12 FT	16	18	14	13	6	6.5	6	6	78.5	40.0	40.0	40.0	7	14	76.0	82.0	7	14	49.0	51.0	6	6.5	6	6	73.8	182	194	206	7	6.5	63.0	72.0	5	12	5	6	0
14 FT	17	19	14	13	6	6	7	7.5	81.6	41.0	41.0	47.0	7	13	74.0	81.0	7	13	49.0	51.0	6	6	7	7.5	75.0	183	195	207	7	6.5	62.0	72.0	5	12	5	6	0
16 FT	19	21	15	13	6	6.5	7	7.5	80.9	43.0	43.0	49.0	7	14	73.0	81.0	7	14	49.0	51.0	7	8	7	7.5	74.0	185	197	209	7	6.5	62.0	73.0	5	12	6	8	0
18 FT	20	22	16	13	6	6	7	7.5	80.0	44.0	44.0	50.0	7	13	72.0	80.0	7	13	49.0	51.0	7	7.5	7	7.5	72.9	186	198	210	7	6.5	62.0	73.0	5	12	6	8	0
20 FT	22	24	16	13	6	6	7	7	79.1	46.0	46.0	52.0	7	13	71.0	80.0	7	13	48.0	51.0	7	7	7	7.5	72.3	188	200	212	7	6.5	62.0	73.0	5	12	6	8	0
22 FT	23	25	17	13	7	7.5	7	7	78.8	47.0	47.0	53.0	7	13	70.0	80.0	7	13	48.0	51.0	7	6	7	8	71.5	189	201	213	7	6	62.0	73.0	5	12	6	7.5	0
24 FT	25	27	17	13	7	7	7	7	78.1	49.0	49.0	55.0	7	13	70.0	80.0	7	13	48.0	51.0	7	6.5	7	7	71.3	191	203	215	7	6	61.0	73.0	5	12	6	7.5	0
26 FT	26	29	18	13	7	7	7	7	78.1	50.0	50.0	56.0	7	12	69.0	79.0	7	12	48.0	51.0	7	6	7	8	71.0	193	205	217	8	7.5	67.0	80.0	5	12	6	7	0
28 FT	28	30	19	13	7	6.5	7	7	78.3	52.0	52.0	52.0	7	12	68.0	79.0	7	12	47.0	51.0	8	7.5	6	6	67.8	194	206	218	8	7.5	67.0	80.0	5	12	6	6.5	0
30 FT	29	32	19	13	7	6	7	6.5	77.9	53.0	53.0	59.0	7	12	68.0	79.0	7	12	47.0	51.0	8	7	7	7.5	70.5	196	208	220	8	7	67.0	80.0	5	12	6	6.5	0
32 FT	31	33	20	13	8	7.5	7	6.5	78.1	55.0	55.0	61.0	8	15	76.0	87.0	8	15	53.0	57.0	8	7	7	8	70.4	197	209	221	8	6.5	67.0	80.0	5	12	6	6.5	0
34 FT	32	34	20	13	8	7.5	7	6	77.6	56.0	56.0	62.0	8	14	75.0	86.0	8	14	53.0	56.0	8	6	7	7	70.0	198	210	222	8	6	67.0	80.0	5	12	6	6.5	0
36 FT	33	36	22	13	8	7	7	6.5	78.8	57.0	63.0	63.0	8	14	75.0	86.0	8	14	53.0	56.0	8	6.5	7	7.5	70.3	200	212	224	8	6	67.0	81.0	5	12	6	6	0
38 FT	34	37	23	13	8	6.5	7	6.5	79.1	58.0	64.0	64.0	8	13	75.0	85.0	8	13	53.0	56.0	8	6	7	7.5	70.3	201	213	225	8	6	67.0	81.0	5	12	6	6	0
40 FT	36	39	23	13	8	6.5	7	6.5	79.0	60.0	66.0	66.0	8	13	75.0	85.0	8	13	51.0	54.0	8	6.5	7	7.5	70.3	203	215	227	8	6	67.0	81.0	5	12	7	7.5	0
42 FT	37	40	23	13	8	6.5	7	6	78.9	61.0	67.0	67.0	8	12	74.0	84.0	8	12	51.0	53.0	8	6	7	7	70.3	204	216	228	9	7	73.0	87.0	5	12	7	7.5	0
44 FT	38	42	24	13	8	6	7	6	79.8	68.0	68.0	68.0	8	12	74.0	83.0	8	12	50.0	52.0	8	6	7	7	70.8	206	218	230	9	7	73.0	87.0	5	12	7	7.5	0
46 FT	39	43	26	13	8	6	7	6.5	81.4	69.0	69.0	69.0	8	12	74.0	83.0	8	12	50.0	52.0	8	6	7	7	71.3	207	219	231	9	7	73.0	87.0	5	12	7	7.5	0
48 FT	40	44	27	13	8	6	7	6	82.1	70.0	70.0	70.0	8	12	74.0	82.0	8	12	49.0	51.0	8	6	7	7	71.6	208	220	232	9	7	73.0	88.0	5	12	7	8	0
50 FT	41	45	28	13	9	7.5	7	6	83.0	71.0	71.0	71.0	9	15	82.0	89.0	9	15	57.0	58.0	8	6	7	7	72.0	209	221	233	9	6.5	73.0	88.0	5	12	7	8	0

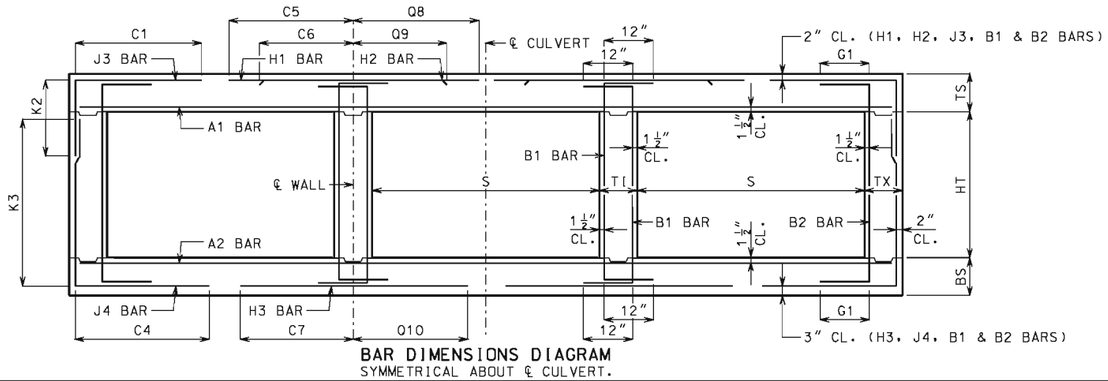

BAR DIMENSIONS DIAGRAM
SYMMETRICAL ABOUT ℄ CULVERT.

GENERAL NOTES:

IF DESIGN FILL IS BETWEEN TABULATED DESIGN FILLS, USE THE NEXT GREATER TABULATED DESIGN FILL, EXCEPT FOR DESIGN FILLS BETWEEN 2 FEET AND 4 FEET. FOR DESIGN FILLS BETWEEN 2 FEET AND 4 FEET USE THE GREATER MEMBER THICKNESS, AREA OF REINFORCEMENT AND BAR DIMENSIONS FROM THE 2 FEET AND 4 FEET TABULATED DESIGN FILLS. AREA OF REINFORCEMENT EQUALS BAR AREA PER FOOT SPACING.

SPECIAL DESIGNS ARE REQUIRED WHEN THE DESIGN FILL IS LESS THAN 1 FOOT OR GREATER THAN 50 FEET.

DIMENSIONS ARE IN INCHES UNLESS OTHERWISE SPECIFIED.

DESIGN FILLS ARE MEASURED FROM THE TOP OF TOP SLAB TO THE TOP OF EARTH FILL OR ROADWAY.

CULVERTS MEET STRENGTH AND SERVICEABILITY REQUIREMENTS FOR THE DESIGN VEHICULAR LIVE LOAD HL-93 MINUS THE LANE LOAD.

MISSOURI HIGHWAYS AND TRANSPORTATION COMMISSION
105 WEST CAPITOL
JEFFERSON CITY, MO 65102
1-888-ASK-MODOT (1-888-275-6636)

STATE OF MISSOURI
DENNIS W. HECKMAN
NUMBER PE-27141
PROFESSIONAL ENGINEER
THIS SHEET HAS BEEN SIGNED, SEALED AND DATED ELECTRONICALLY.

CONCRETE TRIPLE BOX CULVERT

MEMBER THICKNESS BAR SIZE, SPACING & DIMENSIONS

SPAN (S): 16 FEET
HEIGHT (HT): 14 THRU 16 FEET

DATE EFFECTIVE: 12/01/2011
DATE PREPARED: 9/29/2011

703.87

SHEET NO. 27 OF 27

IF A SEAL IS PRESENT ON THIS SHEET IT HAS BEEN ELECTRONICALLY SEALED AND DATED.

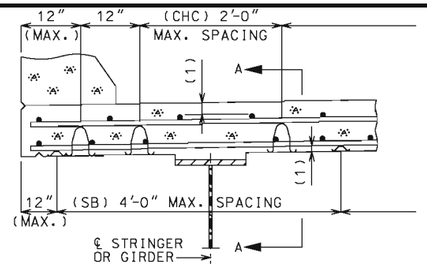

PART CROSS SECTION

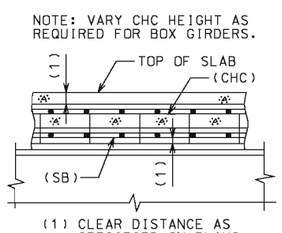

PART SECTION A-A

W BEAM SPANS
PLATE GIRDER SPANS
PRESTRESSED GIRDER SPANS
DECK GIRDER SPANS
BOX GIRDER SPANS (TOP SLAB ONLY)

SLABS ON STRINGERS AND GIRDERS

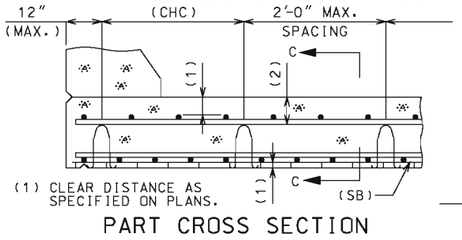

PART CROSS SECTION

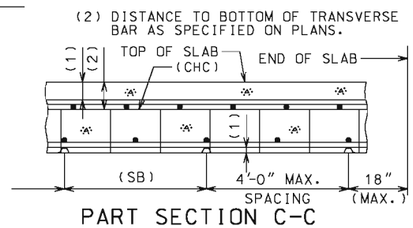

PART SECTION C-C

SLAB SPANS - NO VOIDS (SOLID)
TRUSSES - NO LONGITUDINAL STRINGERS

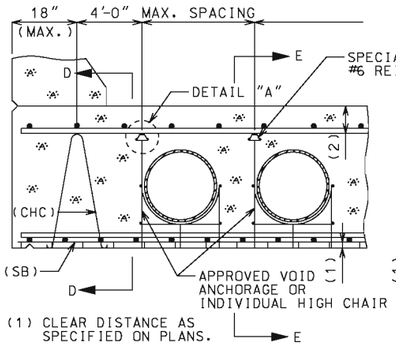

PART CROSS SECTION

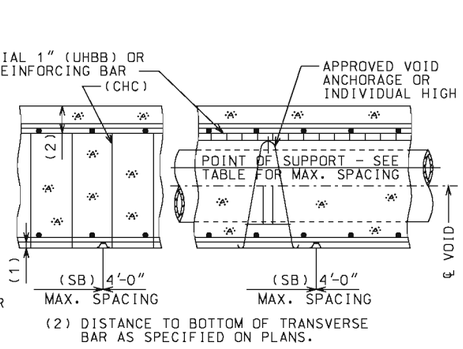

PART SECTION D-D

PART SECTION E-E

SLAB SPANS - WITH VOIDS

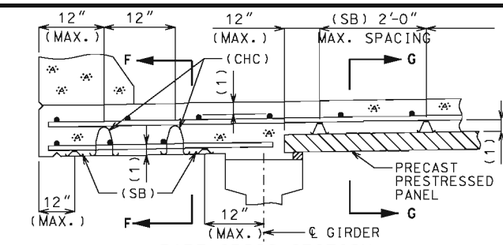

PART CROSS SECTION

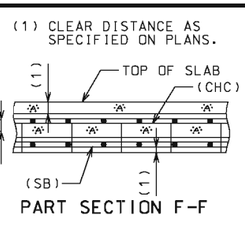

PART SECTION F-F

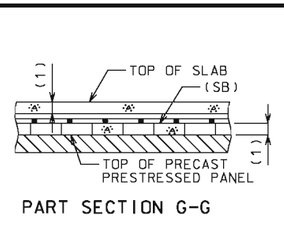

PART SECTION G-G

SLABS ON PRECAST PRESTRESSED PANELS

VOIDS	MAX. SPACING
14" & LESS	4'-0"
16" & 17"	3'-0"
19"	2'-6"
21"	2'-0"
22"	21"
23" & UP	18"

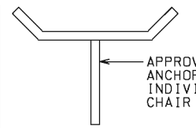

PART DETAIL "A"

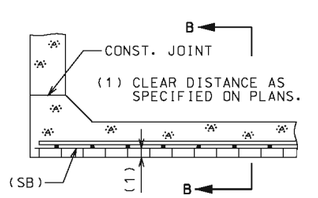

PART CROSS SECTION

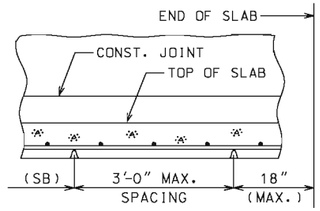

PART SECTION B-B

BOX GIRDER - BOTTOM SLAB

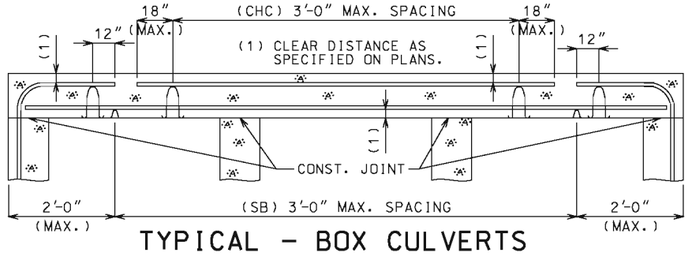

TYPICAL - BOX CULVERTS

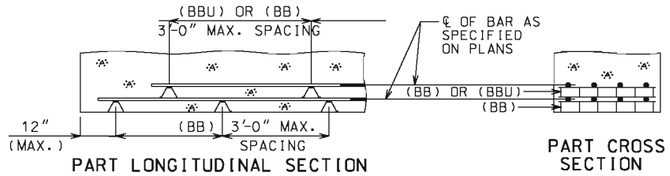

PART LONGITUDINAL SECTION

PART CROSS SECTION

DECK GIRDERS
SUBSTRUCTURE BEAMS
VOIDED SLAB DROP PANELS
BOX GIRDER CROSS BEAMS
} RECOMMENDED METHOD

TYPICAL - BEAMS & GIRDERS

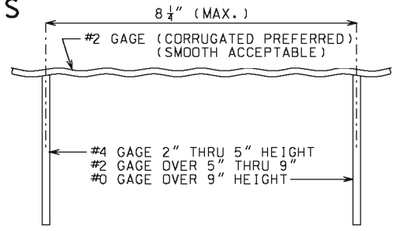

ELEVATION

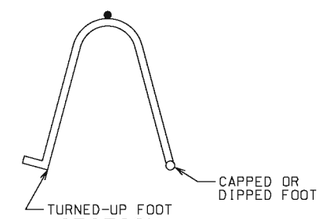

SECTION

CONTINUOUS HIGH CHAIR - CHC

ALL CONTACT POINTS ON WIRE BAR SUPPORTS SHALL BE SECURELY WELDED.

A TURNED-UP, CAPPED OR DIPPED FOOT SHALL BE ON ALL BAR SUPPORTS BEARING ON FORMS. WHERE BAR SUPPORTS ARE USED ON EARTH OR AGGREGATE SUBGRADES, SUITABLE PLATES, CONTINUOUS BARS OR PRECAST CONCRETE BAR SUPPORTS SHALL BE PROVIDED TO PREVENT DISPLACEMENT OF THE SUPPORT FOOT.

ALL DIMENSIONS TO REINFORCING STEEL ARE TO ℄ BAR EXCEPT WHERE CLEAR DISTANCE FROM FACE OF CONCRETE IS INDICATED. HEIGHT OF BAR SUPPORTS TO BE THAT REQUIRED TO SUPPORT BARS IN EXACT POSITIONS SHOWN ON PLANS.

SPIRAL REINFORCING SHALL BE SUPPORTED BY USE OF APPROVED SPIRAL SPACERS AT NOT MORE THAN 3'-0" CENTERS. PAYMENT FOR SPACERS AND ALL OTHER BAR SUPPORTS WILL BE CONSIDERED COMPLETELY COVERED BY THE CONTRACT UNIT PRICE FOR OTHER ITEMS.

WHEN BARS OF DIFFERENT SIZES ARE USED IN THE SAME MEMBERS, THE SELECTION OF BAR SUPPORTS SHALL BE BASED ON THE LARGER SIZE.

SUPPORTS FOR THE UPPER LAYERS NEED NOT BE DIRECTLY OVER THE SUPPORTS BELOW.

ALL BAR SUPPORTS SHALL BE IN ACCORDANCE WITH C.R.S.I. MANUAL OF STANDARD PRACTICE, EXCEPT AS SHOWN.

WIRE BAR AND REINFORCING BAR SUPPORTS USED WITH EPOXY COATED REINFORCING STEEL SHALL BE COATED ENTIRELY WITH AN EPOXY OR PLASTIC MATERIAL.

ALL UNCOATED WIRE BAR SUPPORTS SHALL HAVE CAPPED OR DIPPED FEET FOR THOSE APPLICATIONS WHERE MINIMIZING RUST SPOTS AND SURFACE BLEMISHES ARE EXPECTED TO BECOME VISIBLE. COLOR SHALL MATCH CONCRETE.

INDIVIDUAL HIGH CHAIRS AND SPACING WILL BE PERMITTED AS APPROVED BY THE ENGINEER. INDIVIDUAL HIGH CHAIRS SHALL NOT BE PERMITTED FOR USE ON SOLID SLAB AND VOIDED SLAB BRIDGES, EXCEPT AS SHOWN.

PLASTIC BAR SUPPORTS SHALL MEET OR EXCEED THE LOAD CARRYING CAPACITY OF AND BE PLACED AT THE SAME SPACING FOR STEEL WIRE BAR SUPPORTS AS SHOWN.

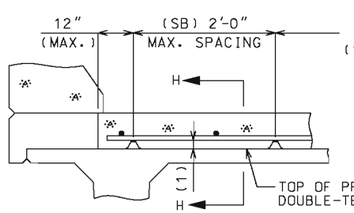

PART CROSS SECTION

PART SECTION H-H

SLABS ON P/S DOUBLE-TEE GIRDER

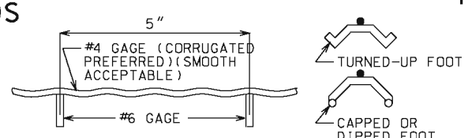

ELEVATION

SECTION

SLAB BOLSTER - SB

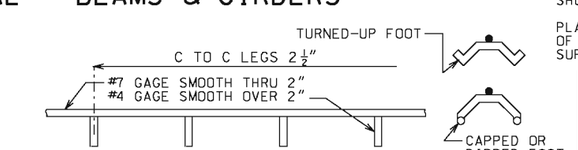

ELEVATION

SECTION

BEAM BOLSTER - BB

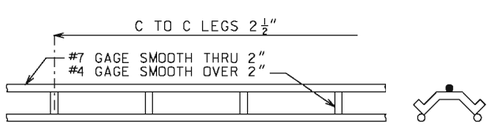

ELEVATION

SECTION

BEAM BOLSTER UPPER - BBU

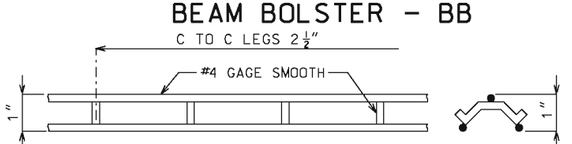

ELEVATION

SECTION

SPECIAL 1" UPPER HEAVY BEAM BOLSTER (SPECIAL 1" UHBB)

IF A SEAL IS PRESENT ON THIS SHEET IT HAS BEEN ELECTRONICALLY SEALED AND DATED.

MISSOURI HIGHWAYS AND TRANSPORTATION COMMISSION
105 WEST CAPITOL
JEFFERSON CITY, MO 65102
1-888-ASK-MODOT (1-888-275-6636)

STATE OF MISSOURI
DENNIS W. HECKMAN
NUMBER PE-27141
PROFESSIONAL ENGINEER
THIS SHEET HAS BEEN SIGNED, SEALED AND DATED ELECTRONICALLY.

BAR SUPPORTS FOR CONCRETE REINFORCEMENT

DATE EFFECTIVE: 07/01/2004
DATE PREPARED: 9/3/2009

706.35H

SHEET NO. 1 OF 1

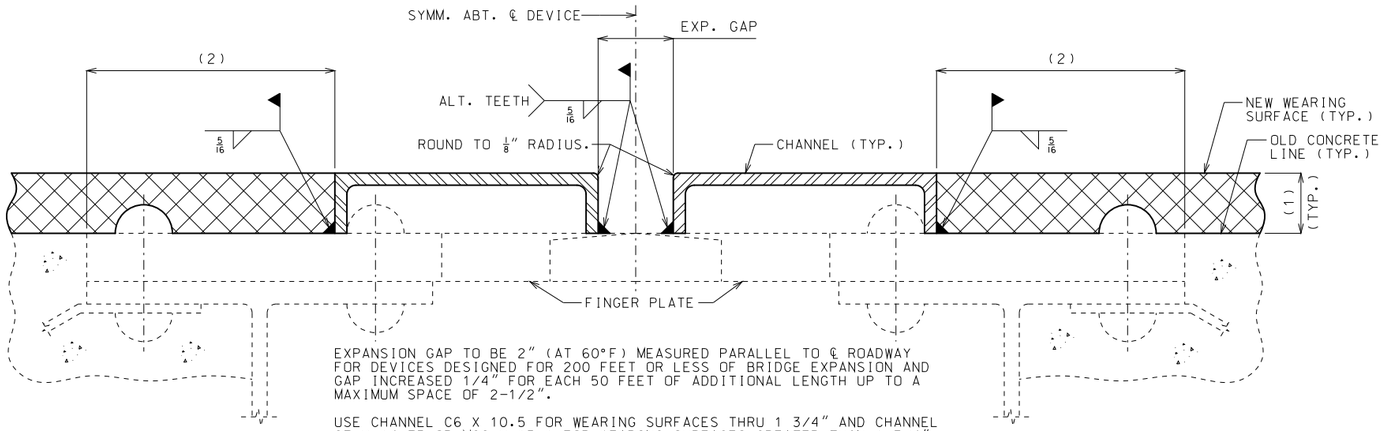

PART SECTION THRU EXPANSION DEVICE

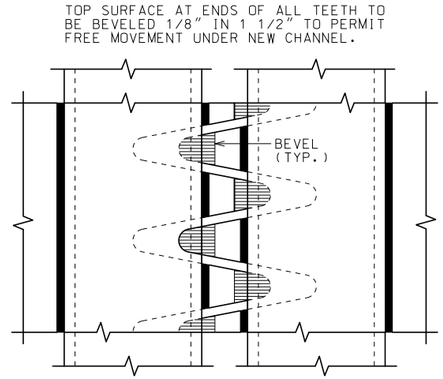

PART PLAN AT EXPANSION DEVICE

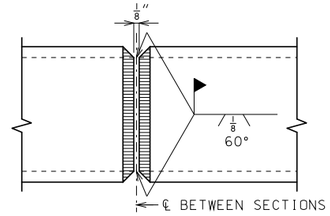

PLAN OF CHANNEL SPLICE

SPLICE TO BE AT ℄ ROADWAY FOR TWO LANE BRIDGES.

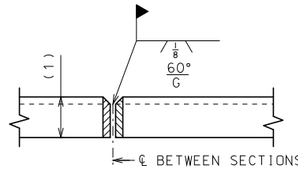

ELEVATION OF CHANNEL SPLICE

TYPE A – FINGER TYPE EXPANSION DEVICES

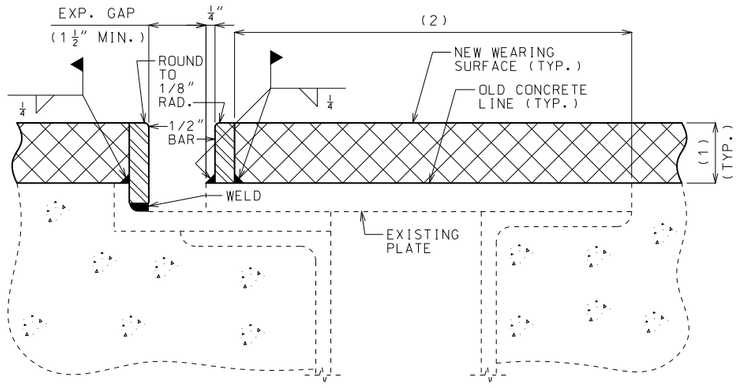

PART SECTION AT EXPANSION DEVICE

TYPE B – PLATE TYPE EXPANSION DEVICES

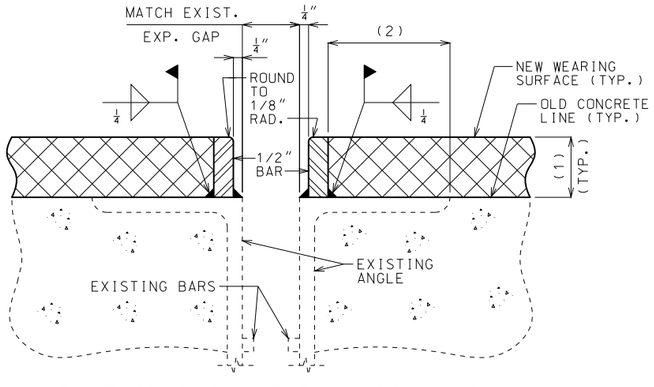

PART SECTION AT EXPANSION DEVICE

TYPE C – ANGLE TYPE EXPANSION DEVICES

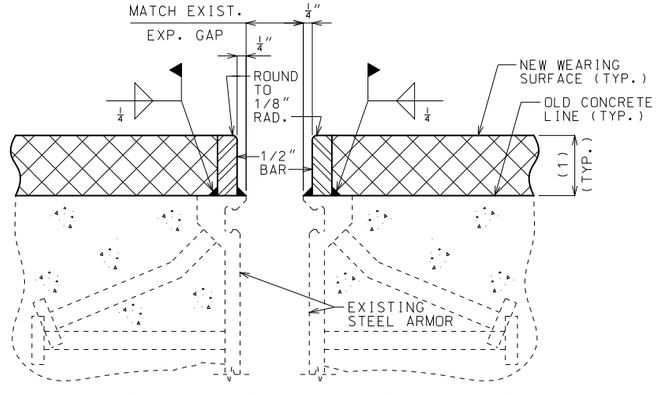

PART SECTION AT EXPANSION DEVICE

TYPE D – STRIP SEAL TYPE EXPANSION DEVICES

(1) WEARING SURFACE THICKNESS

(2) WHEN THIS DIMENSION EXCEEDS 3" AND A CONCRETE WEARING SURFACE IS USED, TACK WELD A ONE INCH BAR CHAIR TO THE PLATE OR ANGLE FOR EACH 3" OF PLATE OR ANGLE TO BE COVERED BY WEARING SURFACE.

GENERAL NOTES:

OUTLINE OF OLD WORK IS INDICATED BY LIGHT DASHED LINES. HEAVY LINES INDICATE NEW WORK.

STRUCTURAL STEEL SHALL BE IN ACCORDANCE WITH ASTM A709 GRADE 36.

QUALIFICATION OF WELDING OPERATORS WILL BE REQUIRED.

E7016 OR E7018 ELECTRODES SHALL BE USED.

THE STEEL DAMS SHALL EXTEND FULL ROADWAY WIDTH BETWEEN CURBS, BUT SHALL BE INSTALLED IN SECTIONS OF SUCH LENGTHS TO PERMIT AT LEAST ONE WAY TRAFFIC AT ALL TIMES. BEFORE TRAFFIC IS PERMITTED TO CROSS OVER SECTIONS OF DAMS IN PLACE, SUFFICIENT WEARING SURFACE SHALL BE PLACED ON ROADWAY SLAB ADJACENT TO BOTH SIDES OF EXPANSION DEVICE TO PREVENT ANY DAMAGE TO EITHER THE STEEL DAMS OR TIRES OF VEHICLES.

STEEL DAMS SHALL BE FABRICATED AND INSTALLED TO THE CROWN AND GRADE OF THE ROADWAY.

STEEL CHANNELS OR BARS ON BOTH SIDES OF EXPANSION JOINT. FOR FULL WIDTH OF ROADWAY, WILL BE CONSIDERED COMPLETELY COVERED BY THE CONTRACT UNIT PRICE FOR STEEL BAR DAM.

PAINT INSIDE SURFACE OF CHANNEL 5.0 MILS THICKNESS OF INORGANIC ZINC PRIMER.

SHOP DRAWINGS WILL NOT BE REQUIRED FOR STEEL BAR DAMS.

MISSOURI HIGHWAYS AND TRANSPORTATION COMMISSION
105 WEST CAPITOL
JEFFERSON CITY, MO 65102
1-888-ASK-MODOT (1-888-275-6636)

STATE OF MISSOURI
DENNIS W. HECKMAN
NUMBER PE-27141
PROFESSIONAL ENGINEER
THIS SHEET HAS BEEN SIGNED, SEALED AND DATED ELECTRONICALLY.

STEEL DAMS

AT EXPANSION DEVICES
FOR RESURFACING BRIDGE FLOORS

DATE EFFECTIVE:	04/01/2016	712.40K	SHEET NO.
DATE PREPARED:	2/17/2016		1 OF 1

IF A SEAL IS PRESENT ON THIS SHEET IT HAS BEEN ELECTRONICALLY SEALED AND DATED.

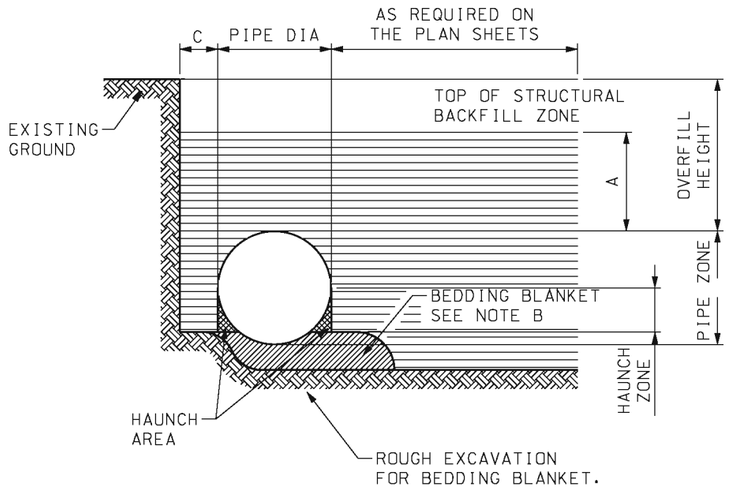

TYPICAL TRENCH DETAIL

PIPE INSTALLATION AND BEDDING

NOTE:

A) MINIMUM STRUCTURAL BACKFILL OVER TOP OF PIPE SHALL BE ONE-EIGHTH DIAMETER OR SPAN OF PIPE OR ONE FOOT WHICHEVER IS GREATER.

B) BEDDING BLANKET OF LOOSE FILL SHALL BE ROUGHLY SHAPED TO FIT BOTTOM OF PIPE. MINIMUM THICKNESS BEFORE PLACING PIPE SHALL BE AS FOLLOWS:

DEPTH OF CORRUGATION	MIN. BEDDING THICKNESS
½"	1"
1"	2"
2"	3"

C) TRENCH INSTALLATIONS - 2 FEET MINIMUM EACH SIDE OF CULVERT. THIS RECOMMENDED LIMIT SHOULD BE MODIFIED AS NECESSARY TO ACCOUNT FOR VARIABLES SUCH AS POOR IN-SITU SOILS. EMBANKMENT INSTALLATIONS - ONE DIAMETER OR SPAN EACH SIDE OF CULVERT.

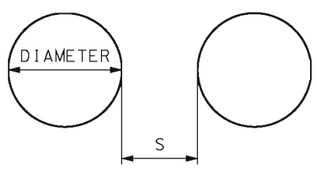

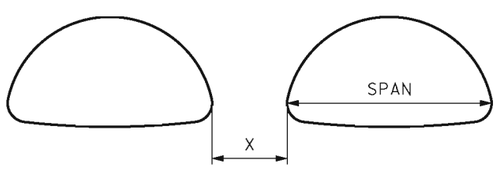

PIPE	
DIAMETER	SPACE S
UP TO 24"	12"
24" TO 72"	½ PIPE DIA
72" AND OVER	36"

PIPE-ARCHES	
SPAN	SPACE X
UP TO 36"	12"
36" TO 108"	1/3 ARCH SPAN
108" TO 189"	36"

MULTIPLE STRUCTURE SPACING

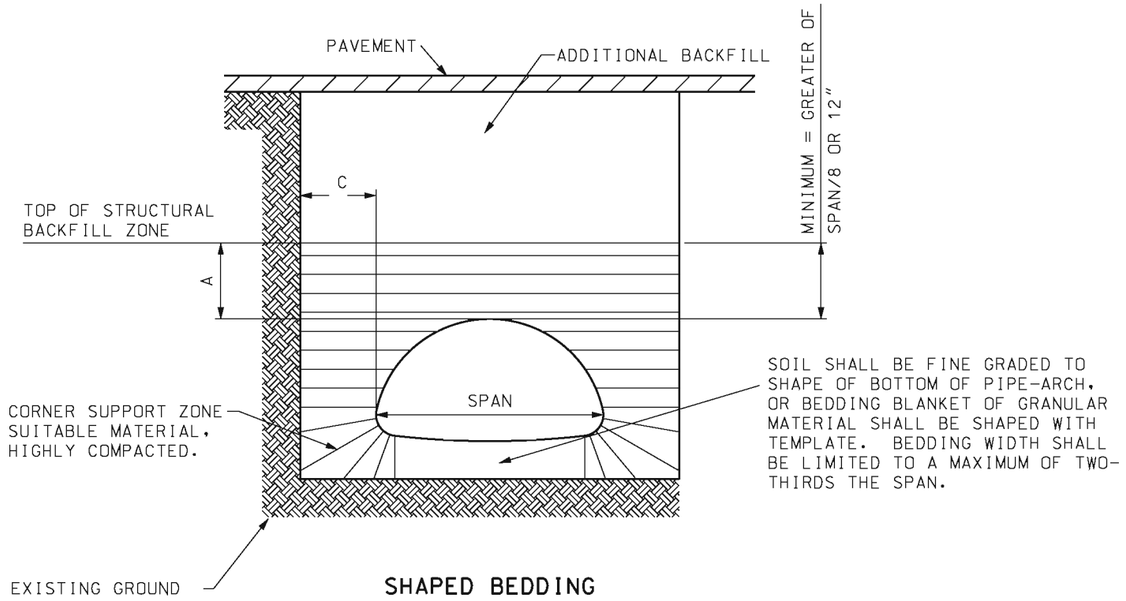

SHAPED BEDDING

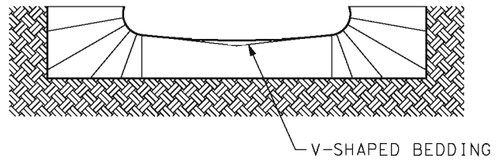

ALTERNATIVE-SHAPED BEDDING

PIPE-ARCH TRENCH DETAIL

BEDDING AND CORNER ZONE TREATMENT FOR PIPE ARCH STRUCTURES

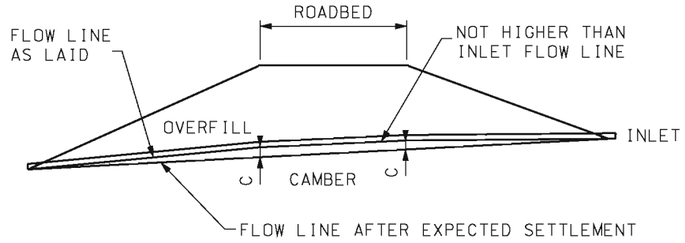

TYPICAL CAMBERED FLOW LINE

NOTE:

ON YIELDING SOIL, PIPE CULVERTS SHALL BE PLACED ON A CAMBERED FLOW LINE. THE AMOUNT OF CAMBER WILL VARY WITH SOIL CONDITIONS AND WILL BE SPECIFIED ON THE DESIGN PLANS.

IF A SEAL IS PRESENT ON THIS SHEET IT HAS BEEN ELECTRONICALLY SEALED AND DATED.

MISSOURI HIGHWAYS AND TRANSPORTATION COMMISSION
105 WEST CAPITOL
JEFFERSON CITY, MO 65102
1-888-ASK-MODOT (1-888-275-6636)

STATE OF MISSOURI
KATHRYN PHILLIPS HARVEY
NUMBER PE-23751
PROFESSIONAL ENGINEER
THIS SHEET HAS BEEN SIGNED, SEALED AND DATED ELECTRONICALLY.

CORRUGATED METAL PIPE INSTALLATION METHODS

DATE EFFECTIVE: 04/01/2011
DATE PREPARED: 3/10/2011

725.00C

SHEET NO. 1 OF 5

CORRUGATED METALIC-COATED STEEL CIRCULAR PIPE LOCK SEAM

MAXIMUM ALLOWABLE OVERFILL HEIGHTS (1)

SPECIFIED DIAMETER OF PIPE	MINIMUM COVER		SPECIFIED THICKNEWW OF COATED SHEET (IN.)																			
			0.064				0.079				0.109				0.138				0.168			
	CORRUGATED	SPIRAL RIB	A	B	C	D	A	B	C	D	A	B	C	D	A	B	C	D	A	B	C	D
IN.	FT.	FT.	FT.	FT.	FT.	FT.	FT.	FT.	FT.	FT.	FT.	FT.	FT.	FT.	FT.	FT.	FT.	FT.	FT.	FT.	FT.	FT.
12	1	1	219	251	224	144	273	314	280	201	382	440	392	334	492	566	504	484	602	693	617	
15	1	1	175	201	179	115	218	251	224	161	306	352	314	267	394	453	403	387	481	555	493	
18	1	1	146	167	149	96	182	209	187	134	255	293	261	223	328	378	336	323	401	462	411	
21	1	1	125	143	128	82	156	179	160	115	219	251	224	191	281	324	288	277	344	396	352	
24	1	1	109	126	112	72	137	157	140	100	191	220	196	167	246	283	252	242	301	347	308	
30	1	1	87	100	90	57	109	126	112	80	153	176	157	134	197	227	202	194	241	277	247	
36	1	1	73	84	75	48	91	105	93	67	127	147	131	111	164	189	168	161	201	231	206	
42	1	1	62	72	64	41	78	90	80	57	109	126	112	95	141	162	144	138	172	198	176	
48	1	1	55	63	56	36	68	78	70	50	96	110	98	83	123	142	126	121	150	173	154	
54	1	2		56	50	32✳	61	70	62	45	85	98	87	74	109	126	112	108	134	154	137	
60	1	2		50	45			63	56	40	76	88	78	67	98	113	101	97	120	139	123	
66	1	2		46	41			57	51	37✳		80	71	61	89	103	92	88	109	126	112	
72	1	2		42	37			52	47			73	65	56	82	94	84	81	100	116	103	
78	1	2		39	34			48	43			68	60	51		87	78	75	89	107	95	
84	1	2		36	32			45	40			63	56	48✳		81	72	69	77	99	88	
90	1	2		33	30			42	37			59	52			76	67	65		92	82	
96	1	2						39	35			55	49			71	63	60✳		87	77	
102	2	3						37	33			52	46			67	59	53✳		82	73	
108	2	3										49	44			63	56			77	69	
114	2	3										46	41			60	53			73	65	
120	2	3										44	39			57	50			69	62	
126	2	3														54	48			66	59	

CORRUGATED METALIC-COATED STEEL CIRCULAR PIPE RIVETED SEAM

MAXIMUM ALLOWABLE OVERFILL HEIGHTS (1)

SPECIFIED DIAMETER OF PIPE	MINIMUM COVER		SPECIFIED THICKNEWW OF COATED SHEET (IN.)																			
			0.064				0.079				0.109				0.138				0.168			
			SINGLE RIVET		DOUBLE RIVET		SINGLE RIVET		DOUBLE RIVET		SINGLE RIVET		DOUBLE RIVET		SINGLE RIVET		DOUBLE RIVET		SINGLE RIVET		DOUBLE RIVET	
	CORRUGATED	SPIRAL RIB	A	B	A	B	A	B	A	B	A	B	A	B	A	B	A	B	A	B	A	B
IN.	FT.	FT.	FT.	FT.	FT.	FT.	FT.	FT.	FT.	FT.	FT.	FT.	FT.	FT.	FT.	FT.	FT.	FT.	FT.	FT.	FT.	FT.
12	1	1	143		185	245	156		255	305	200		382	440	209		419	544	219		438	604
15	1	1	114		148	196	124		204	244	160		306	352	168		335	436	175		351	483
18	1	1	95		123	164	104		170	203	133		255	293	140		279	363	146		292	403
21	1	1	82		105	140	89		146	174	114		219	251	120		239	311	125		251	345
24	1	1	71		92	123	78		127	153	100		191	220	105		209	272	109		219	302
30	1	1	57		74	98	62		102	122	80		153	176	84		168	218	88		175	242
36	1	1	48		62	82	52		85	102	67		127	147	70		140	181	73		146	201
42	1	1	41		53	70	44		73	87	57		109	126	60		120	156	63		125	173
48	1	1	36		46	61	39		64	76	50		96	110	52		105	136	55		110	151
54	1	2				55	35		57	68	44		85	98	47		93	121	49		97	134
60	1	2				49				61	40		76	88	42		84	109	44		88	121
66	1	2				45				55				80	38		76	99	40		80	110
72	1	2				41				51				73	35		70	91	36		73	101
78	1	2				38				47				68				84	34		67	93
84	1	2				35				44				63				78	31		63	86
90	1	2				33				41				59				73				81
96	1	2								38				55				68				76
102	2	3								36				52				64				71
108	2	3												49				60				67
114	2	3												46				57				64
120	2	3												44				54				60
126	2	3																52				58

✳ FOR TRENCH INSTALLATION ONLY

A = 2-2/3" X 1/2" CORRUGATIONS.
B = 3" X 1" CORRUGATIONS.
C = 5" X 1" CORRAGATIONS
D = 3/4" X 3/4" X 7-1/2" SPIRAL RIB

(1) MAXIMUM OVERFILL MEASURED FROM THE TOP OF PIPE TO SURFACE.

IF A SEAL IS PRESENT ON THIS SHEET IT HAS BEEN ELECTRONICALLY SEALED AND DATED.

MISSOURI HIGHWAYS AND TRANSPORTATION COMMISSION
105 WEST CAPITOL
JEFFERSON CITY, MO 65102
1-888-ASK-MODOT (1-888-275-6636)

STATE OF MISSOURI
KATHRYN PHILLIPS HARVEY
NUMBER PE-23751
PROFESSIONAL ENGINEER
THIS SHEET HAS BEEN SIGNED, SEALED AND DATED ELECTRONICALLY.

CORRUGATED METAL PIPE INSTALLATION METHODS

DATE EFFECTIVE: 04/01/2011
DATE PREPARED: 3/9/2011

725.00C

CORRUGATED H32 ALUMINUM CIRCULAR PIPE LOCK SEAM

MAXIMUM ALLOWABLE OVERFILL HEIGHTS (1)

SPECIFIED DIAMETER OF PIPE	MINIMUM COVER		SPECIFIED THICKNEWW OF COATED SHEET (IN.)																			
			0.06				0.075				0.105				0.135				0.164			
	CORRUGATED	SPIRAL RIB	A	B	C	D	A	B	C	D	A	B	C	D	A	B	C	D	A	B	C	D
IN.	FT.	FT.	FT.	FT.	FT.	FT.	FT.	FT.	FT.	FT.	FT.	FT.	FT.	FT.	FT.	FT.	FT.	FT.	FT.	FT.	FT.	FT.
12	1	1	132	152		71	165	191		97	232	267		156	298	357		221	364	420		
15	1	1	106	122		57	132	153		78	185	213		125	239	286		176	291	336		
18	1	1	88	101		47	110	127		65	155	178		104	199	238		147	243	280		
21	1	1	76	87		41	95	109		56	132	152		89	170	204		126	208	240		
24	1	1	66	76		35	83	96		49	116	133		78	149	178		110	182	210		
30	1	2		61		28	66	76		39	93	107		62	119	143		88	146	168		
36	1	2		51		24✳	55	64		32	77	89		52	99	119		74	121	140		
42	1	2		43				55		28✳	66	76		45	85	102		63	104	120		
48	1	2		38				48			58	67		39	75	89		55	91	105		
54	1	2		34				42			51	59		35	66	79		49	81	93		
60	1	2		30				38				53		31✳	55	71		44	68	84		
66	1	2		28				35				48				65		40	56	76		
72	1	3		25				32				44				59		37✳	46	70		
78	1	3						29				41				55				65		
84	1	3										38				51				60		
90	1	3										36				48				56		
96	1	3										33				45				53		
102	2	4														42				49		
108	2	4														39				47		
114	2	4																		42		
120	2	4																		39		
126	2	4																				

CORRUGATED H32 ALUMINUM CIRCULAR PIPE RIVETED SEAM

MAXIMUM ALLOWABLE OVERFILL HEIGHTS (1)

SPECIFIED DIAMETER OF PIPE	MINIMUM COVER		SPECIFIED THICKNEWW OF COATED SHEET (IN.)																			
			0.06				0.075				0.105				0.135				0.164			
			SINGLE RIVET		DOUBLE RIVET		SINGLE RIVET		DOUBLE RIVET		SINGLE RIVET		DOUBLE RIVET		SINGLE RIVET		DOUBLE RIVET		SINGLE RIVET		DOUBLE RIVET	
	CORRUGATED	SPIRAL RIB	A	B	A	B	A	B	A	B	A	B	A	B	A	B	A	B	A	B	A	B
IN.	FT.	FT.	FT.	FT.	FT.	FT.	FT.	FT.	FT.	FT.	FT.	FT.	FT.	FT.	FT.	FT.	FT.	FT.	FT.	FT.	FT.	FT.
12	1	1	77		120	141	77		154	175	133		269	239	138		282	359	144		291	466
15	1	1	62		96	113	62		123	140	107		215	191	111		226	287	115		232	373
18	1	1	51		80	94	51		103	117	89		179	160	92		188	239	96		194	311
21	1	1	44		68	81	44		88	100	76		154	137	79		161	205	82		166	266
24	1	1	38		60	71	38		77	88	67		135	120	69		141	179	72		145	233
30	1	2				56	31		62	70	53		108	96	55		113	144	57		116	186
36	1	2				47	26		51	58	44		90	80	46		94	120	48		97	155
42	1	2				40				50	38		77	68	40		81	103	41		83	133
48	1	2				35				44	33		67	60	35		71	90	36		73	116
54	1	2				31				39	30		56	53	31		63	80	32		65	104
60	1	2				28				35				48	28		56	72	29		58	93
66	1	2				26				32				44				65	26		53	85
72	1	3				24				29				40				60	24		47	78
78	1	3								27				37				55				72
84	1	3												34				51				67
90	1	3												32				48				62
96	1	3												30				45				58
102	2	4																42				55
108	2	4																40				51
114	2	4																				46
120	2	4																				41
126	2	4																				

✳ FOR TRENCH INSTALLATION ONLY

A = 2-2/3" X 1/2" CORRUGATIONS.
B = 3" X 1" CORRUGATIONS.
C = 5" X 1" CORRAGATIONS
D = 3/4" X 3/4" X 7-1/2" SPIRAL RIB

(1) MAXIMUM OVERFILL MEASURED FROM THE TOP OF PIPE TO SURFACE.

IF A SEAL IS PRESENT ON THIS SHEET IT HAS BEEN ELECTRONICALLY SEALED AND DATED.

MISSOURI HIGHWAYS AND TRANSPORTATION COMMISSION
105 WEST CAPITOL
JEFFERSON CITY, MO 65102
1-888-ASK-MODOT (1-888-275-6636)

STATE OF MISSOURI
KATHRYN PHILLIPS HARVEY
NUMBER PE-23751
PROFESSIONAL ENGINEER
THIS SHEET HAS BEEN SIGNED, SEALED AND DATED ELECTRONICALLY.

CORRUGATED METAL PIPE INSTALLATION METHODS

DATE EFFECTIVE: 04/01/2011
DATE PREPARED: 3/9/2011

725.00C

CORRUGATED H34 ALUMINUM CIRCULAR PIPE LOCK SEAM

MAXIMUM ALLOWABLE OVERFILL HEIGHTS (1)

SPECIFIED DIAMETER OF PIPE	MINIMUM COVER		SPECIFIED THICKNESS OF COATED SHEET (IN.)																			
			0.06				0.075				0.105				0.135				0.164			
	CORRUGATED	SPIRAL RIB	A	B	C	D	A	B	C	D	A	B	C	D	A	B	C	D	A	B	C	D
IN.	FT.	FT.	FT.	FT.	FT.	FT.	FT.	FT.	FT.	FT.	FT.	FT.	FT.	FT.	FT.	FT.	FT.	FT.	FT.	FT.	FT.	FT.
12	1	1	159	183		85	199	229		117	278	320		187	358	428		265	437	504		
15	1	1	127	146		68	159	183		93	223	256		150	286	343		212	350	403		
18	1	1	106	122		57	132	153		78	185	213		125	239	286		176	291	336		
21	1	1	91	104		49	113	131		67	159	183		107	205	245		151	250	288		
24	1	1	79	91		43	99	115		58	139	160		94	179	214		132	218	252		
30	1	2		73		34	79	92		47	111	128		75	143	171		106	175	202		
36	1	2		61		28✳	66	76		39	93	107		62	119	143		88	146	168		
42	1	2		52				66		33✳	79	91		54	102	122		76	125	144		
48	1	2		46				57			68	80		47	89	107		66	109	126		
54	1	2		41				51			56	71		42	73	95		59	90	112		
60	1	2		37				46				64		37✳	59	86		53	73	101		
66	1	2		33				42				58				78		48	59	92		
72	1	3		30				38				53				71		42✳	47	84		
78	1	3						35				49				66				78		
84	1	3										46				61				72		
90	1	3										43				57				67		
96	1	3										39				53				62		
102	2	4														48				56		
108	2	4														43				51		
114	2	4																		46		
120	2	4																		41		
126	2	4																				

CORRUGATED H34 ALUMINUM CIRCULAR PIPE RIVETED SEAM

MAXIMUM ALLOWABLE OVERFILL HEIGHTS (1)

SPECIFIED DIAMETER OF PIPE	MINIMUM COVER		SPECIFIED THICKNESS OF COATED SHEET (IN.)																			
			0.06				0.075				0.105				0.135				0.164			
			SINGLE RIVET		DOUBLE RIVET		SINGLE RIVET		DOUBLE RIVET		SINGLE RIVET		DOUBLE RIVET		SINGLE RIVET		DOUBLE RIVET		SINGLE RIVET		DOUBLE RIVET	
	CORRUGATED	SPIRAL RIB	A	B	A	B	A	B	A	B	A	B	A	B	A	B	A	B	A	B	A	B
IN.	FT.	FT.	FT.	FT.	FT.	FT.	FT.	FT.	FT.	FT.	FT.	FT.	FT.	FT.	FT.	FT.	FT.	FT.	FT.	FT.	FT.	FT.
12	1	1	77		120	141	77		154	175	133		269	239	138		282	359	144		291	466
15	1	1	62		96	113	62		123	140	107		215	191	111		226	287	115		232	373
18	1	1	51		80	94	51		103	117	89		179	160	92		188	239	96		194	311
21	1	1	44		68	81	44		88	100	76		154	137	79		161	205	82		166	266
24	1	1	38		60	71	38		77	88	67		135	120	69		141	179	72		145	233
30	1	2				56	31		62	70	53		108	96	55		113	144	57		116	186
36	1	2				47	26		51	58	44		90	80	46		94	120	48		97	155
42	1	2				40				50	38		77	68	40		81	103	41		83	133
48	1	2				35				44	33		67	60	35		71	90	36		73	116
54	1	2				31				39	30		56	53	31		63	80	32		65	104
60	1	2				28				35				48	28		56	72	29		58	93
66	1	2				26				32				44				65	26		53	85
72	1	3				24				29				40				60	24		47	78
78	1	3								27				37				55				72
84	1	3												34				51				67
90	1	3												32				48				62
96	1	3												30				45				58
102	2	4																42				55
108	2	4																40				51
114	2	4																				46
120	2	4																				41
126	2	4																				

✳ FOR TRENCH INSTALLATION ONLY

A = 2-2/3" X 1/2" CORRUGATIONS.
B = 3" X 1" CORRUGATIONS.
C = 5" X 1" CORRAGATIONS
D = 3/4" X 3/4" X 7-1/2" SPIRAL RIB

(1) MAXIMUM OVERFILL MEASURED FROM THE TOP OF PIPE TO SURFACE.

IF A SEAL IS PRESENT ON THIS SHEET IT HAS BEEN ELECTRONICALLY SEALED AND DATED.

MISSOURI HIGHWAYS AND TRANSPORTATION COMMISSION
105 WEST CAPITOL
JEFFERSON CITY, MO 65102
1-888-ASK-MODOT (1-888-275-6636)

STATE OF MISSOURI
KATHRYN PHILLIPS HARVEY
NUMBER PE-23751
PROFESSIONAL ENGINEER
THIS SHEET HAS BEEN SIGNED, SEALED AND DATED ELECTRONICALLY.

CORRUGATED METAL PIPE INSTALLATION METHODS

DATE EFFECTIVE: 04/01/2011
DATE PREPARED: 4/1/2013

725.00C

MINIMUM COVER FOR CONSTRUCTION LOADS (ROUND AND PIPE-ARCH)

DIAMETER OR PIPE SPAN	MINIMUM COVER (FT.) FOR INDICATED AXLE LOADS (2)			
	18K LBS.-50K LBS.	50K LBS.-75K LBS.	75K LBS.-110K LBS.	110K LBS.-150K LBS.
IN.	FT.	FT.	FT.	FT.
12-42	2.0	2.5	3.0	3.0
48-72	3.0	3.0	3.5	4.0
78-120	3.0	3.5	4.0	4.0
126-144	3.5	4.0	4.5	4.5

THE CONTRACTOR SHALL PROVIDE MINIMUM COVER PLUS ANY ADDITIONAL COVER REQUIRED TO AVOID DAMAGE TO THE PIPE. IN UNPAVED SITUATIONS, THE SURFACE MUST BE MAINTAINED TO A LEVEL AND NON-RUTTED CONDITION.

PIPE-ARCH REQUIREMENTS 2-2/3" X 1/2" CORRUGATIONS

TYPE	SPAN (3)	RISE (3)	GALVANIZED SHEET	
	(IN.)	(IN.)	THICKNESS (IN.)	GAUGE
B1	17	13	0.064	16
B2	21	15	0.064	16
B3	24	18	0.064	16
B4	28	20	0.064	16
B5	35	24	0.064	16
B6	42	29	0.079	14
B7	49	33	0.109	12
B8	57	38	0.109	12
B9	64	43	0.109	12
B10	71	47	0.138	10
B11	77	52	0.168	8
B12	83	57	0.168	8

PIPE-ARCH REQUIREMENTS

TYPE	SPAN (4)	RISE (4)	GALVANIZED SHEET 3" X 1" CORRUGATIONS		GALVANIZED SHEET 5" X 1" CORRUGATIONS		MINIMUM COVER (2)
	(IN.)	(IN.)	THICKNESS (IN.)	GAUGE	THICKNESS (IN.)	GAUGE	(IN.)
B8A	53 (-2.4)	41 (+2.4)	0.079	14	0.109	12	12
B9A	60 (-2.7)	46 (+2.7)	0.079	14	0.109	12	15
B10A	66 (-3.0)	51 (+3.0)	0.079	14	0.109	12	15
B11A	73 (-3.3)	55 (+3.3)	0.079	14	0.109	12	18
B12A	81 (-3.6)	59 (+3.6)	0.079	14	0.109	12	18
B13A	87 (-4.4)	63 (+4.4)	0.079	14	0.109	12	18
B14A	95 (-4.8)	67 (+4.8)	0.079	14	0.109	12	18
B15A	103 (-5.2)	71 (+5.2)	0.079	14	0.109	12	18
B16A	112 (-5.6)	75 (+5.6)	0.109	12	0.109	12	21
B17A	117 (-5.9)	79 (+5.9)	0.109	12	0.109	12	21
B18A	128 (-6.4)	83 (+6.4)	0.109	12	0.109	12	24
B19A	137 (-6.9)	87 (+6.9)	0.109	12	0.109	12	24
B20A	142 (-7.1)	91 (+7.1)	0.138	10	0.138	10	24

(2) MINIMUM COVER MEASURED FROM TOP OF PIPE TO BOTTOM OF FLEXIBLE PAVEMENT OR TOP OF RIGID PAVEMENT.

(3) A TOLERANCE OF PLUS OR MINUS ONE INCH OR 2 PERCENT OF EQUIVALENT CIRCULAR DIAMETER, WHICHEVER IS GREATER, WILL BE PERMISSIBLE IN SPAN AND RISE.

(4) TOLERANCES IN PARENTHESES. NO TOLERANCE IN OPPOSITE DIRECTION.

IF A SEAL IS PRESENT ON THIS SHEET IT HAS BEEN ELECTRONICALLY SEALED AND DATED.

MISSOURI HIGHWAYS AND TRANSPORTATION COMMISSION
105 WEST CAPITOL
JEFFERSON CITY, MO 65102
1-888-ASK-MODOT (1-888-275-6636)

STATE OF MISSOURI
ERIC E. SCHROETER
NUMBER PE-28411
PROFESSIONAL ENGINEER
THIS SHEET HAS BEEN SIGNED, SEALED AND DATED ELECTRONICALLY.

CORRUGATED METAL PIPE INSTALLATION METHODS

DATE EFFECTIVE: 04/01/2011
DATE PREPARED: 8/24/2015

725.00C

SHEET NO. 5 OF 5

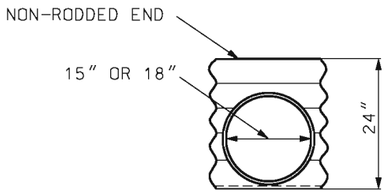

SECTION A-A

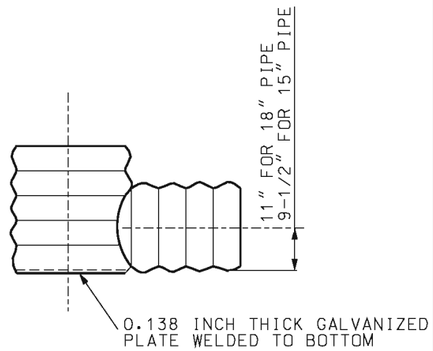

SECTION B-B

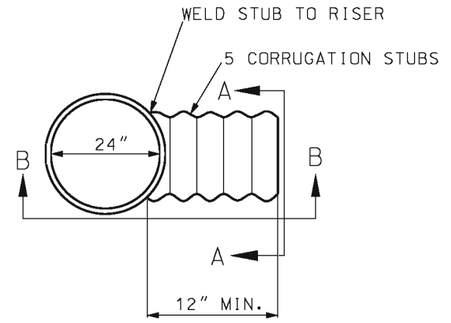

PLAN

METAL INLETS

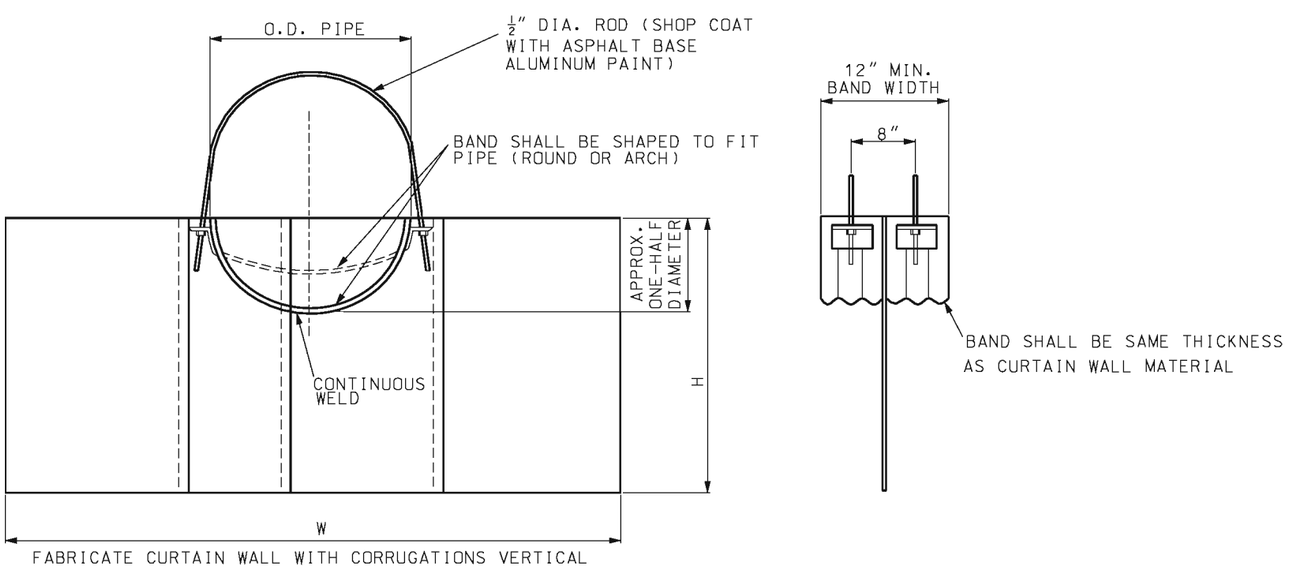

FABRICATE CURTAIN WALL WITH CORRUGATIONS VERTICAL

METAL CURTAIN WALL

TABLE FOR METAL CURTAIN WALL

FOR ROUND OR ELLIPTICAL PIPE			
DIA. IN.	GALV. SHT. THICK IN.	W IN.	H IN.
18	0.064	72	35
21	0.064	72	35
24	0.064	72	40
30	0.064	84	40
36	0.079	84	49
42	0.079	96	49
48	0.079	96	49
54	0.079	120	58-1/2
60	0.109	120	58-1/2
66	0.109	132	58-1/2
72	0.109	132	68-1/2
78	0.138	132	68-1/2
84	0.138	144	68-1/2
FOR PIPE ARCH			
B-2	0.064	72	30
B-3	0.064	72	30
B-4	0.079	84	30
B-5	0.079	84	30
B-6	0.109	96	35
B-7	0.109	96	35
B-8	0.109	108	35
B-9	0.109	120	35
B-10	0.138	120	40
B-11	0.168	125	50
B-12	0.168	131	54

GENERAL NOTES:

IF A SEAL IS PRESENT ON THIS SHEET IT HAS BEEN ELECTRONICALLY SEALED AND DATED.

MISSOURI HIGHWAYS AND TRANSPORTATION COMMISSION
105 WEST CAPITOL
JEFFERSON CITY, MO 65102
1-888-ASK-MODOT (1-888-275-6636)

STATE OF MISSOURI
KATHRYN PHILLIPS HARVEY
NUMBER PE-23751
PROFESSIONAL ENGINEER
THIS SHEET HAS BEEN SIGNED, SEALED AND DATED ELECTRONICALLY.

METAL CURTAIN WALL AND METAL INLETS

DATE EFFECTIVE: 07/01/2004
DATE PREPARED: 8/21/2009

725.31C

SHEET NO. 1 OF 1

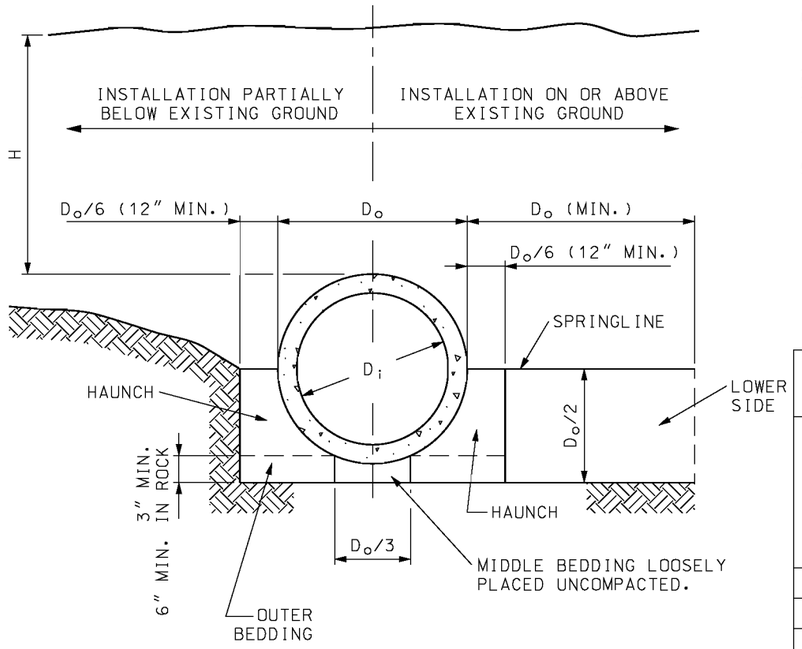

EMBANKMENT INSTALLATIONS

CONSTRUCTION SEQUENCE
1. PLACE BEDDING MATERIAL TO GRADE. DO NOT COMPACT.
2. INSTALL PIPE TO GRADE.
3. COMPACT BEDDING OUTSIDE THE MIDDLE THIRD OF THE PIPE.
4. PLACE AND COMPACT THE HAUNCH AREA UP TO THE SPRINGLINE.
5. COMPLETE BACKFILL ACCORDING TO SPECIFICATIONS.

MAXIMUM DIAMETER AND MAXIMUM FILL HEIGHT

INSTALLATION TYPE	CLASS OF PIPE				
	CLASS I	CLASS II	CLASS III	CLASS IV	CLASS V
	MAXIMUM DIAMETER (INCHES)				
	108	108	108	84	72
	MAXIMUM FILL HEIGHT IN (FEET)				
TYPE 1	12	15	21	33	51
TYPE 2	9	12	17	26	39
TYPE 3	7	9	13	20	30
TYPE 4	4	6	9	13	20

IF FILL HEIGHT EXCEEDS 51 FEET AND PIPE DIAMETER IS 36 INCHES OR LESS A SPECIAL PIPE DESIGN AND INSTALLATION PROCEDURE SHALL BE REQUIRED. IF FILL HEIGHT EXCEEDS 51 FEET AND PIPE DIAMETER IS GREATER THAN 36 INCHES A SPECIAL DESIGN PIPE IS NOT ALLOWED.

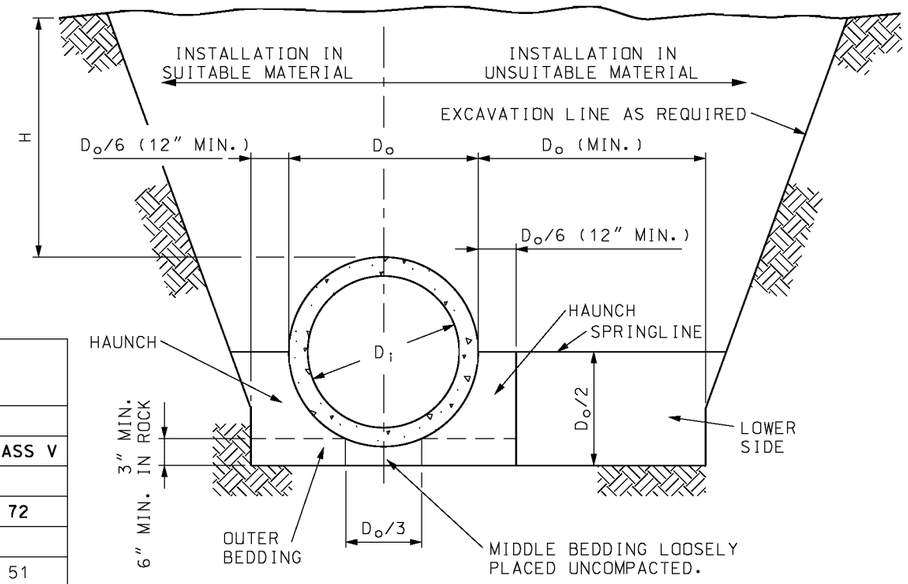

TRENCH INSTALLATION

- LEGEND -

D_i = NORMAL INSIDE DIAMETER OF PIPE.
D_o = OUTSIDE DIAMETER OF PIPE.
H = FILL COVER HEIGHT OVER PIPE (FEET)
MIN. = MINIMUM
= UNDISTURBED SOIL

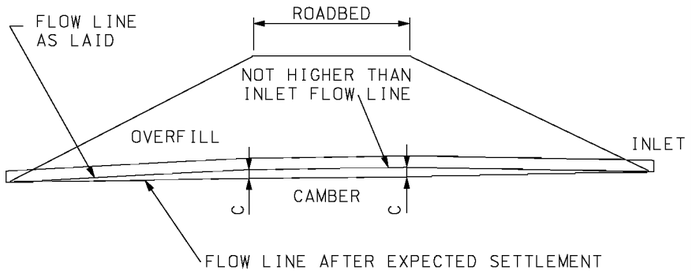

NOTE:
ON YIELDING SOIL, PIPE CULVERTS SHALL BE PLACED ON A CAMBERED FLOW LINE. THE AMOUNT OF CAMBER WILL VARY WITH SOIL CONDITION AND SHALL BE SPECIFIED ON THE DESIGN PLANS.

TYPICAL CAMBERED FLOW LINE

BEDDING AND COMPACTION REQUIREMENTS

INSTALLATION TYPE	BEDDING THICKNESS	COMPACTION REQUIREMENTS (MIN. STANDARD PROCTOR %)					
		HAUNCH AND OUTER BEDDING			LOWER SIDE BEDDING		
		CATEGORY 1 SOIL (A)	CATEGORY 2 SOIL (B)	CATEGORY 3 SOIL (C)	CATEGORY 1 SOIL (A)	CATEGORY 2 SOIL (B)	CATEGORY 3 SOIL (C)
1	D_o/24 MINIMUM, NOT LESS THAN 3". IF ROCK FOUNDATION, USE D_o/12 MIMIMUM, NOT LESS THAN 6".	95	N/A	N/A	90	95	100
2	D_o/24 MINIMUM, NOT LESS THAN 3". IF ROCK FOUNDATION, USE D_o/12 MIMIMUM, NOT LESS THAN 6".	90	95	N/A	85	90	95
3	D_o/24 MINIMUM, NOT LESS THAN 3". IF ROCK FOUNDATION, USE D_o/12 MIMIMUM, NOT LESS THAN 6".	85	90	95	85	90	95
4	D_o/24 MINIMUM, NOT LESS THAN 3". IF ROCK FOUNDATION, USE D_o/12 MIMIMUM, NOT LESS THAN 6".	NO COMPACTION REQUIRED	NO COMPACTION REQUIRED	85	NO COMPACTION REQUIRED	NO COMPACTION REQUIRED	85

(A) GRAVELLY SAND
(B) SANDY-SILT
(C) SILTY CLAY

GENERAL NOTES:

MULTIPLE PIPE CULVERTS SHALL BE INSTALLED WITH A MINIMUM CLEARANCE BETWEEN PIPES OF $\frac{1}{2}$ D_o OR 12", WHICHEVER IS GREATER, BUT NOT TO EXCEED 36".

CLASS I AND CLASS II REINFORCED CONCRETE PIPE SHALL ONLY BE USED FOR SEWERS IN TRENCHES OUTSIDE ROADBED AND STREET LIMITS.

MISSOURI HIGHWAYS AND TRANSPORTATION COMMISSION
105 WEST CAPITOL
JEFFERSON CITY, MO 65102
1-888-ASK-MODOT (1-888-275-6636)

STATE OF MISSOURI
ERIC E. SCHROETER
NUMBER PE-28411
PROFESSIONAL ENGINEER
THIS SHEET HAS BEEN SIGNED, SEALED AND DATED ELECTRONICALLY.

RIGID CULVERT INSTALLATION METHODS
REINFORCED CONCRETE PIPE CULVERTS

DATE EFFECTIVE: 04/01/2015
DATE PREPARED: 2/20/2015

726.30J

SHEET NO. 1 OF 2

IF A SEAL IS PRESENT ON THIS SHEET IT HAS BEEN ELECTRONICALLY SEALED AND DATED.

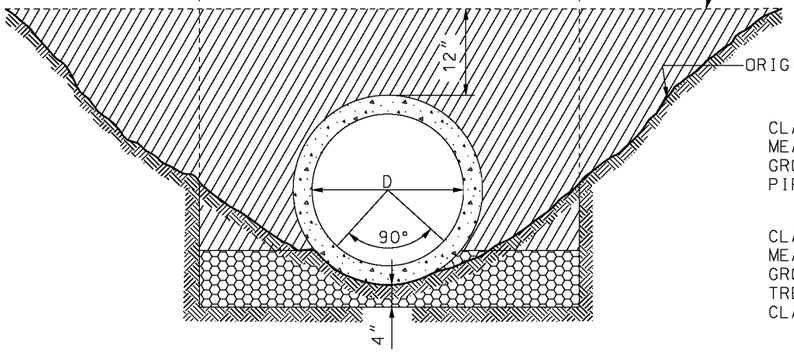

EXTRA STRENGTH

CLASS 3 EXCAVATION LIMITS MEASURED FROM ORIGINAL GROUND LINE TO BOTTOM OF PIPE FOR GROUP I PIPE.

CLASS 3 EXCATAION LIMITS MEASURED FROM ORIGINAL GROUND LINE TO BOTTOM OF TRENCH WHEN VITRIFIED CLAY PIPE IS SPECIFIED.

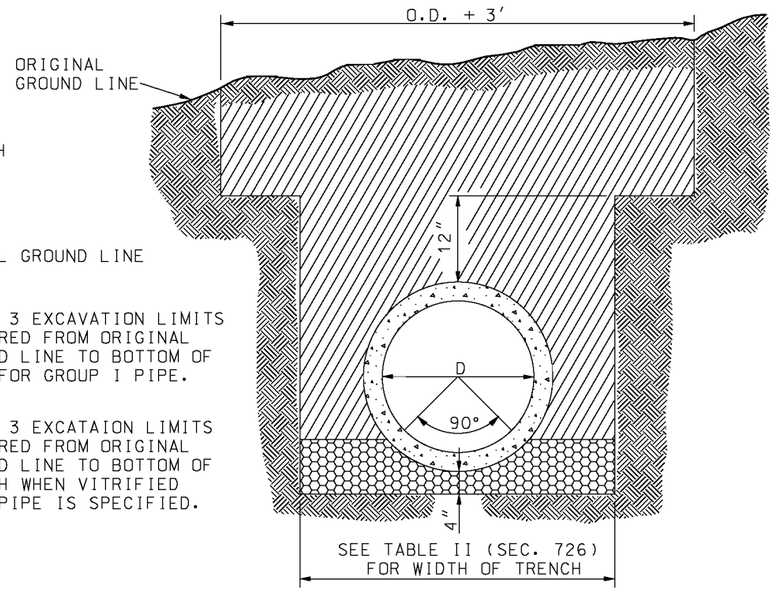

STANDARD STRENGTH

LEGEND

- COMPACTED ROADWAY EMBANKMENT
- SUITABLE BACKFILL
- LOOSE DRY MATERIAL
- COMPACTED SAND

IF A SEAL IS PRESENT ON THIS SHEET IT HAS BEEN ELECTRONICALLY SEALED AND DATED.

HEIGHT OF FILL OVER V.C. PIPE CULVERTS						
	STANDARD STRENGTH			EXTRA STRENGTH		
NOMINAL PIPE DIAMETER (INCH)	TRENCH WIDTH AT ONE FOOT ABOVE TOP OF PIPE (FEET)	MINIMUM FILL HEIGHT (FEET)	MAXIMUM FILL HEIGHT (FEET)	TRENCH WIDTH AT ONE FOOT ABOVE TOP OF PIPE (FEET)	MINIMUM FILL HEIGHT (FEET)	MAXIMUM FILL HEIGHT (FEET)
6	2.0	1.0	9.0			
8	2.0	1.0	7.0	2.5	4.0	12.0
10	2.5	1.0	7.0	2.5	4.0	12.0
12	2.7	1.0	6.0	3.0	4.0	13.0
15	3.5	1.0	6.0	3.0	4.0	17.0
18	3.5	1.0	6.0	3.5	4.0	17.0
21	4.0	1.0	6.0	4.0	4.0	17.0
24	4.0	1.0	8.0	4.0	3.0	19.0
30	4.5	1.0	10.0	4.5	3.0	19.0
36	5.0	1.0	11.0	5.0	3.0	19.0

MISSOURI HIGHWAYS AND TRANSPORTATION COMMISSION
105 WEST CAPITOL
JEFFERSON CITY, MO 65102
1-888-ASK-MODOT (1-888-275-6636)

STATE OF MISSOURI
ERIC E. SCHROETER
NUMBER PE-28411
PROFESSIONAL ENGINEER
THIS SHEET HAS BEEN SIGNED, SEALED AND DATED ELECTRONICALLY.

RIGID CULVERT INSTALLATION METHODS

VITRIFIED CLAY PIPE CULVERTS

DATE EFFECTIVE: 04/01/2015
DATE PREPARED: 2/20/2015

726.30J

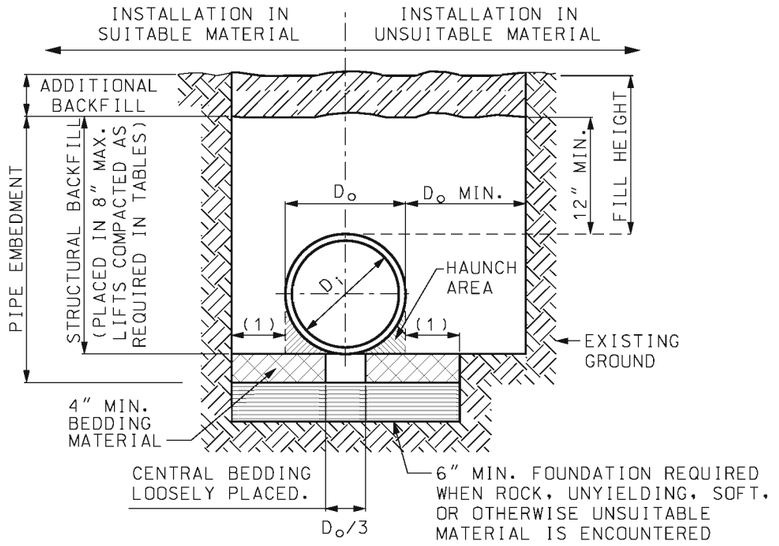

TRENCH INSTALLATION

LEGEND

D_i = INSIDE DIAMETER OF PIPE.
D_o = OUTSIDE DIAMETER OF PIPE.
(1) = $(D_o/4)+6"$ (MIN.)

NOTE:
MULTIPLE PIPE SHALL BE INSTALLED WITH A MINIMUM CLEARANCE BETWEEN PIPES OF $\frac{1}{2}$ D_o OR 12", WHICHEVER IS GREATER, BUT NOT TO EXCEED 36".

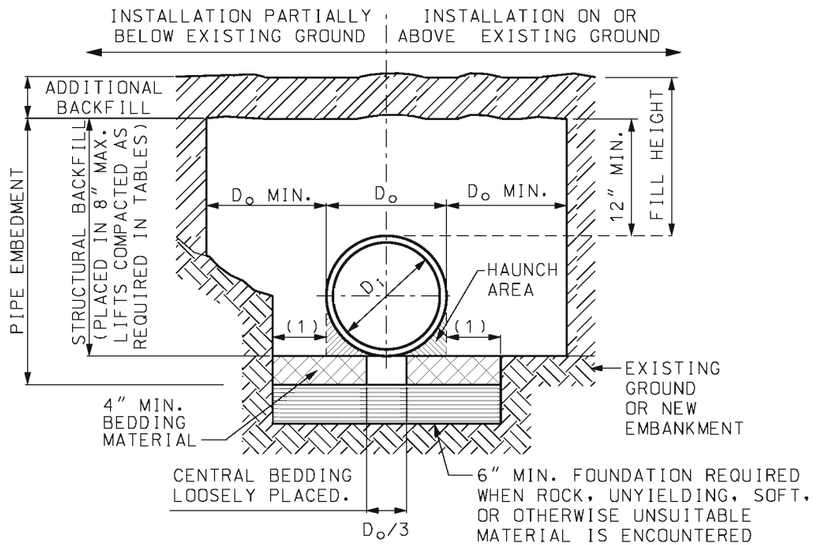

EMBANKMENT INSTALLATION

CONSTRUCTION SEQUENCE

1. PLACE BEDDING MATERIAL TO GRADE.
2. COMPACT BEDDING OUTSIDE THE MIDDLE THIRD OF THE PIPE.
3. INSTALL PIPE TO GRADE.
4. COMPLETE STRUCTURAL BACKFILL ACCORDING TO SPECIFICATIONS.

FILL HEIGHT LIMITS

STRUCTURAL BACKFILL	SPECIFIED NOMINAL DIA OF PIPE (IN.)	POLYETHYLENE				STEEL REINFORCED POLYETHYLENE		POLYVINYL				DOUBLE WALL POLYPROPYLENE				TRIPLE WALL POLYPROPYLENE			
		COMPACTION 90% SPD		COMPACTION 95% SPD		COMPACTION 90% SPD		COMPACTION 90% SPD		COMPACTION 95% SPD		COMPACTION 90% SPD		COMPACTION 95% SPD		COMPACTION 90% SPD		COMPACTION 95% SPD	
		MIN.	MAX.	MIN.	MAX.	MIN.	MAX.	MIN.	MAX.	MIN.	MAX.	MIN.	MAX.	MIN.	MAX.	MIN.	MAX.	MIN.	MAX.
GRAVEL (AASHTO M145 SOIL TYPE A1 & A3)	12	2'	19'	2'	26'	--	--	2'	32'	2'	61'	2'	21'	2'	29'	--	--	--	--
	15	2'	19'	2'	27'	--	--	2'	32'	2'	55'	2'	22'	2'	31'	--	--	--	--
	18	2'	17'	2'	25'	--	--	2'	31'	2'	60'	2'	19'	2'	27'	--	--	--	--
	24	2'	15'	2'	21'	2'	50'	2'	30'	2'	54'	2'	16'	2'	22'	--	--	--	--
	30	2'	17'	2'	24'	2'	50'	2'	31'	2'	52'	2'	11'	2'	15'	2'	17'	2'	23'
	36	2'	13'	2'	19'	2'	50'	2'	30'	2'	53'	--	--	--	--	2'	15'	2'	21'
	42	2'	13'	2'	19'	2'	50'	--	--	--	--	--	--	--	--	2'	19'	2'	27'
	48	2'	12'	2'	18'	2'	30'	--	--	--	--	--	--	--	--	2'	12'	2'	17'
	60	2'	13'	2'	20'	2'	30'	--	--	--	--	--	--	--	--	2'	16'	2'	23'
COURSE SAND (AASHTO M145 SOIL TYPE A-1-b)	12	2'	17'	2'	23'	--	--	2'	32'	2'	55'	2'	18'	2'	24'	--	--	--	--
	15	2'	16'	2'	22'	--	--	2'	32'	2'	49'	2'	22'	2'	31'	--	--	--	--
	18	2'	15'	2'	21'	--	--	2'	31'	2'	53'	2'	16'	2'	21'	--	--	--	--
	24	2'	14'	2'	20'	2'	50'	2'	30'	2'	48'	2'	13'	2'	17'	--	--	--	--
	30	2'	13'	2'	19'	2'	50'	2'	31'	2'	46'	2'	7'	2'	10'	2'	17'	2'	23'
	36	2'	12'	2'	17'	2'	50'	2'	30'	2'	46'	--	--	--	--	2'	15'	2'	21'
	42	2'	13'	2'	18'	2'	50'	--	--	--	--	--	--	--	--	2'	19'	2'	27'
	48	2'	12'	2'	17'	2'	30'	--	--	--	--	--	--	--	--	2'	12'	2'	17'
	60	2'	13'	2'	20'	2'	30'	--	--	--	--	--	--	--	--	2'	16'	2'	23'
SILTY SAND OR SILTY GRAVEL (AASHTO M145 SOIL TYPES A-2-4 & A-2-5)	12	3.3'	10'	2'	17'	--	--	2.7'	16'	2'	33'	2.8'	11'	2'	19'	--	--	--	--
	15	3.4'	10'	2'	16'	--	--	2.7'	16'	2'	33'	2.8'	11'	2'	23'	--	--	--	--
	18	3.6'	10'	2'	15'	--	--	2.7'	15'	2'	32'	3'	11'	2'	16'	--	--	--	--
	24	3.8'	9'	2'	14'	2'	50'	2.7'	15'	2'	31'	3.3'	10'	2'	13'	--	--	--	--
	30	3.7'	10'	2'	14'	2'	50'	2.8'	15'	2'	31'	3.4'	6'	2'	7'	3'	10'	2'	17'
	36	4.2'	7'	2'	12'	2'	50'	2.8'	14'	2'	31'	--	--	--	--	3.3'	10'	2'	15'
	42	4.2'	7'	2'	13'	2'	50'	--	--	--	--	--	--	--	--	3.2'	11'	2'	20'
	48	4.5'	6'	2'	12'	2'	30'	--	--	--	--	--	--	--	--	3.1'	9'	2'	13'
	60	3.3'	7'	2'	14'	2'	30'	--	--	--	--	--	--	--	--	2'	10'	2'	17'

NOTE:

SPD = STANDARD PROCTOR DENSITY.

FILL HEIGHT MEASURED FROM THE TOP OF PIPE TO SURFACE.

LIMITS ACCOUNT FOR SHORT-TERM TEMPORARY WATER TABLE DEPTHS OF FIVE FEET ABOVE SPRINGLINE. TABLES ARE NOT APPLICABLE FOR LONG-TERM PERMANENT WATER TABLE DEPTHS ABOVE SPRINGLINE.

WHEN PIPES ARE USED AS GROUP A, FILL HEIGHTS ARE LIMITED TO SHADED VALUES.

MINIMUM COVER FOR CONSTRUCTION LOADS

NOMINAL PIPE DIA. (IN.)	MINIMUM COVER (FT) FOR INDICATED AXLE LOADS (THOUSANDS OF POUNDS)			
	18-50	50-75	75-110	110-150
12-36	2.0	2.5	3.0	3.0
42-60	3.0	3.0	3.5	4.0

MINIMUM COVER LIMITS ARE NOT SUFFICIENT FOR SILTY SAND OR SILTY GRAVEL STRUCTURAL BACKFILL COMPACTED TO 90% STANDARD PROCTOR DENSITY. THE CONTRACTOR SHALL PROVIDE MINIMUM COVER PLUS ANY ADDITIONAL COVER REQUIRED TO AVOID DAMAGE TO THE PIPE. IN UNPAVED SITUATIONS, THE SURFACE MUST BE MAINTAINED TO A LEVEL AND NON-RUTTED CONDITION.

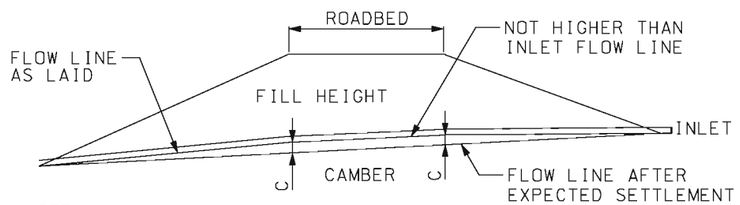

NOTE:
ON YIELDING SOIL, PIPE CULVERTS SHALL BE PLACED ON A CAMBERED FLOW LINE. THE AMOUNT OF CAMBER WILL VARY WITH SOIL CONDITION AND WILL BE SPECIFIED ON THE DESIGN PLANS.

TYPICAL CAMBERED FLOW LINE

MISSOURI HIGHWAYS AND TRANSPORTATION COMMISSION
105 WEST CAPITOL
JEFFERSON CITY, MO 65102
1-888-ASK-MODOT (1-888-275-6636)

STATE OF MISSOURI
ERIC E. SCHROETER
NUMBER PE-28411
PROFESSIONAL ENGINEER
THIS SHEET HAS BEEN SIGNED, SEALED AND DATED ELECTRONICALLY.

THERMOPLASTIC PIPE INSTALLATION METHODS

DATE EFFECTIVE: 04/01/2015
DATE PREPARED: 2/27/2015

730.00E

SHEET NO. 1 OF 1

IF A SEAL IS PRESENT ON THIS SHEET IT HAS BEEN ELECTRONICALLY SEALED AND DATED.

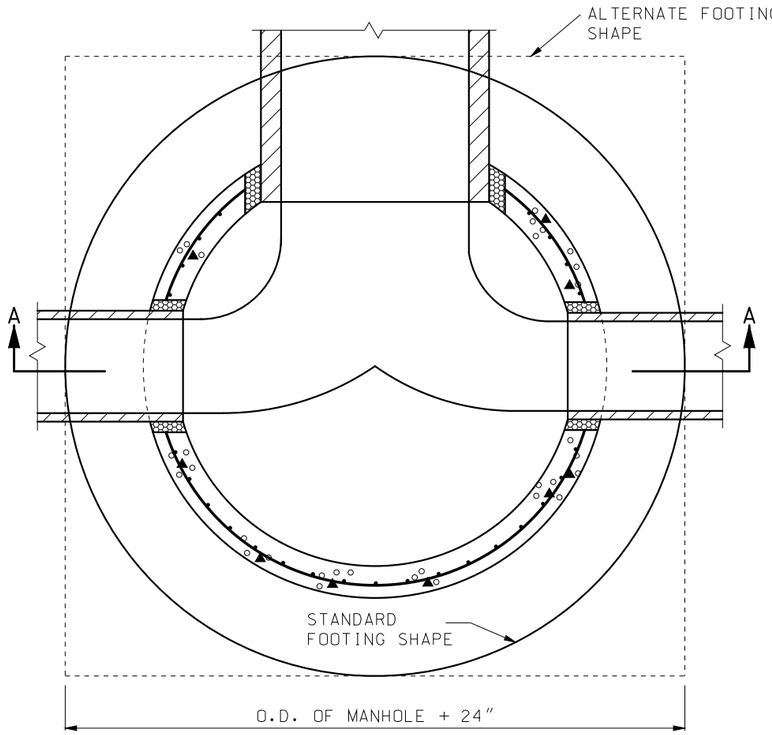

PLAN OF FOOTING

BASE SECTION DIMENSIONS*	
SIZE OF PIPE	MIN. DIA.
24" OR SMALLER	48"
30" - 36"	60"
42" - 48"	72"

* RISER SECTIONS SHALL NOT BE LESS THAN 42" DIAMETER.

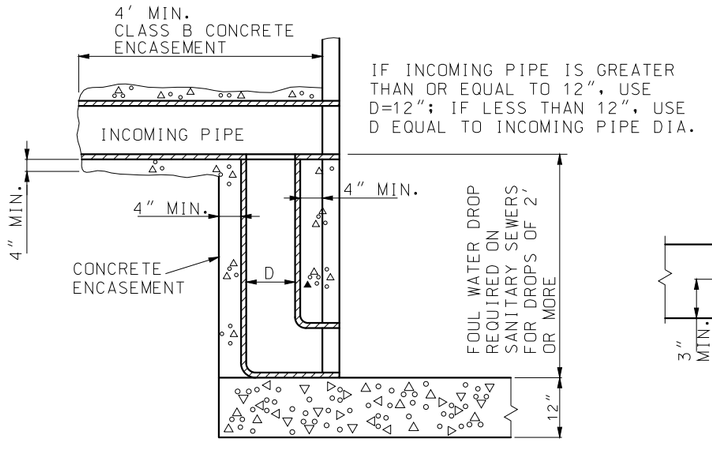

FOUL WATER DROP

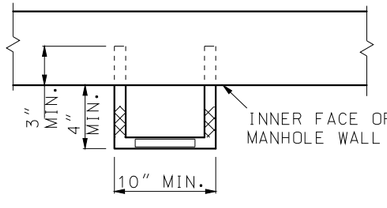

STEP INSTALLATION

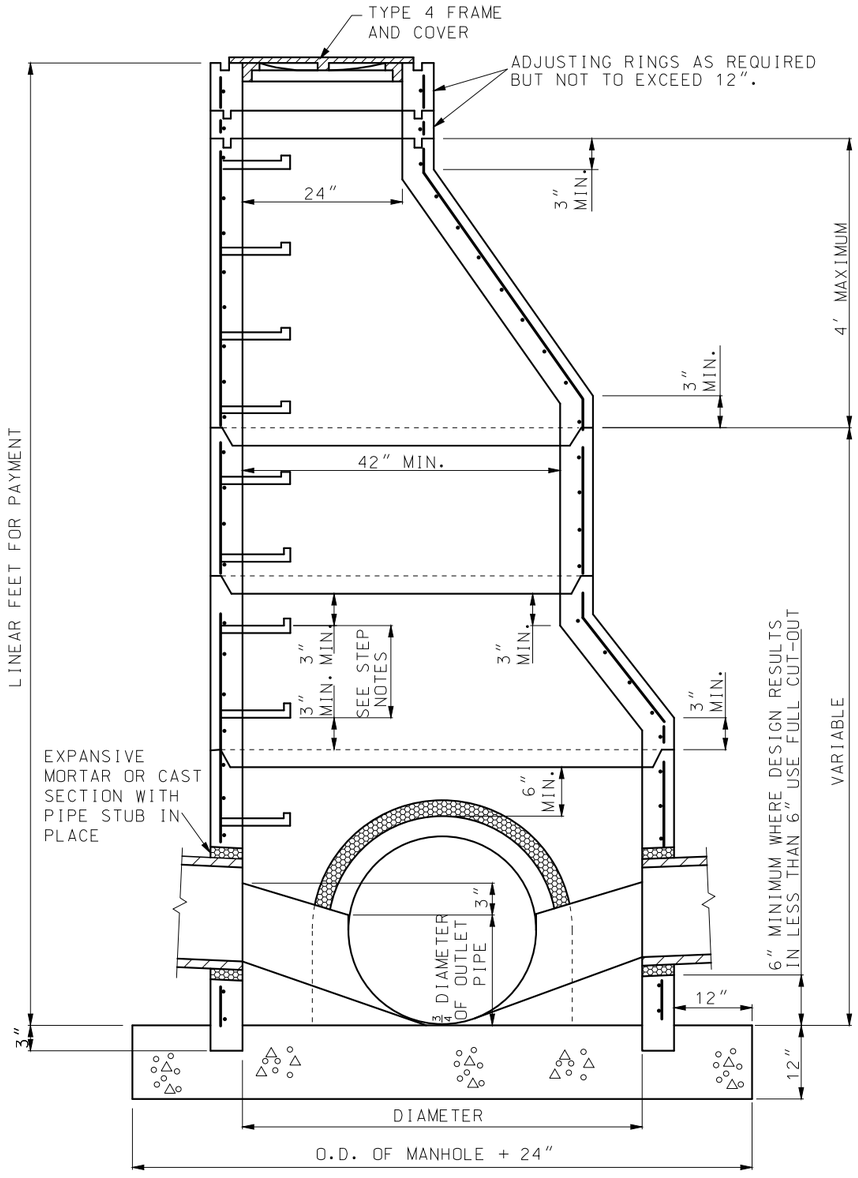

PRECAST BASE SECTION SET ON CONCRETE BLOCKS FOUNDATION SLAB AND INVERT POURED MONOLITHIC.

SECTION A-A

STEPS SHALL BE PLACED AT VERTICAL INTERVALS OF 16" MAXIMUM IN ALL MANHOLES HAVING A DEPTH OF MORE THAN 4'. STEPS SHALL BEGIN AT AN ELEVATION 6" ABOVE THE TOP OF THE OUTLET PIPE.

STEPS SHALL BE LEVEL AND IN VERTICAL ALIGNMENT.

NO DIRECT PAYMENT WILL BE MADE FOR MANHOLE STEPS.

GENERAL NOTES:

THE CONTRACTOR WILL BE PERMITTED TO CAST IN PLACE THE MANHOLES, IN ACCORDANCE WITH THE CONCRETE MANHOLE STANDARD.

IF THE CONTRACTOR ELECTS TO CAST IN PLACE THE MANHOLES, PAYMENT WILL BE MADE AT THE CONTRACT UNIT PRICE FOR PRECAST MANHOLES.

THE CONFIGURATION DETAILS SHOWN ARE DESCRIPTIVE ONLY AND MAY BE VARIED TO CONFORM WITH AN ESTABLISHED MANUFACTURING PROCEDURE.

FORMED OR CUT OUT OPENINGS SHALL BE PROVIDED WHERE PIPE INLETS AND OUTLETS ARE SHOWN ON THE PLANS.

THE TOP OF THE INLET SHALL NOT BE SET BELOW THE TOP OF THE OUTLET PIPE.

REINFORCEMENT SHALL BE CUT AT PIPE OPENINGS.

NO DIRECT PAYMENT WILL BE MADE FOR CUTTING PIPE, NOR FOR CUTTING AND BENDING REINFORCING STEEL.

WHERE THE WIDTH OF THE BASE SECTION IS GREATER THAN 42" AN ECCENTRIC TAPER SECTION MAY BE USED TO ALLOW THE USE OF 42" RISER SECTIONS.

THE LOWER TRANSITION SECTION AS SHOWN ON SECTION A-A IS OPTIONAL.

FOUL WATER DROPS ARE REQUIRED WHEN SPECIFIED IN THE PLANS. NO DIRECT PAYMENT WILL BE MADE FOR THE FOUL WATER DROP OR ITS ENCASEMENT.

SEE STANDARD PLAN 614.30 FOR MANHOLE FRAMES AND COVERS.

WHERE PIPES DO NOT ENTER OR EXIT RADIALLY, USE NEXT LARGER SIZE MANHOLE. CLASS 3 EXCAVATION WILL BE PAID WITHIN VERTICAL LIMITS 18" OUTSIDE OF THE OUTER WALLS OF THE BASE SECTION ON THE MANHOLE, CLASS 3 EXCAVATION WILL NOT BE PAID FOR OUTSIDE THE FOOTING LIMITS.

ALL PIPE CONNECTED WITH A MANHOLE WILL BE MEASURED AND PAID FOR TO THE INSIDE WALL OF THE MANHOLE.

CIRCUMFERENTIAL REINFORCEMENT SIZE AND PLACEMENT SHALL BE IN ACCORDANCE WITH THE STANDARD SPECIFICATIONS TO A MAXIMUM DEPTH OF 20 FEET. OVER 20 FOOT DEPTH CIRCUMFERENTIAL REINFORCEMENT IS INCREASED TO 0.24 SQUARE INCHES STEEL REQUIRED PER LINEAR FOOT, TO A MAXIMUM DEPTH OF 30 FEET.

FOR PIPE CONNECTIONS, A RUBBER GASKET IN ACCORDANCE WITH ASTM RUBBER GASKET SPECIFICATIONS C-443 OR C-923 AND CAST INTEGRALLY IN MANHOLE MAY BE USED AS AN ALTERNATE TO EXPANSIVE MORTAR.

IF A SEAL IS PRESENT ON THIS SHEET IT HAS BEEN ELECTRONICALLY SEALED AND DATED.

MISSOURI HIGHWAYS AND TRANSPORTATION COMMISSION
105 WEST CAPITOL
JEFFERSON CITY, MO 65102
1-888-ASK-MODOT (1-888-275-6636)

STATE OF MISSOURI
ERIC E. SCHROETER
NUMBER PE-28411
PROFESSIONAL ENGINEER
THIS SHEET HAS BEEN SIGNED, SEALED AND DATED ELECTRONICALLY.

PRECAST MANHOLES

DATE EFFECTIVE: 07/01/2016
DATE PREPARED: 5/13/2016

731.00U

SHEET NO. 1 OF 2

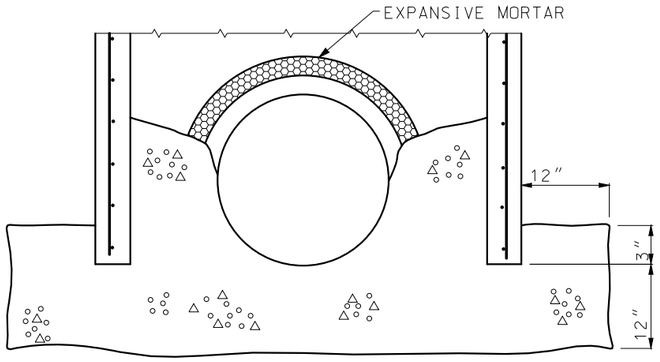

ALTERNATE FOOTING

PRECAST BASE SECTION SET ON CONCRETE BLOCKS FOUNDATION SLAB AND INVERT POURED MONOLITHIC.



SECTION C-C

S = 0 FOR DEPTHS LESS THAN OR EQUAL TO 6':
S = 9" FOR DEPTHS GREATER THAN 6'.

T = 6" FOR DEPTHS OR LESS THAN OR EQUAL TO 6';
T = 9" FOR DEPTHS GREATER THAN 6'.

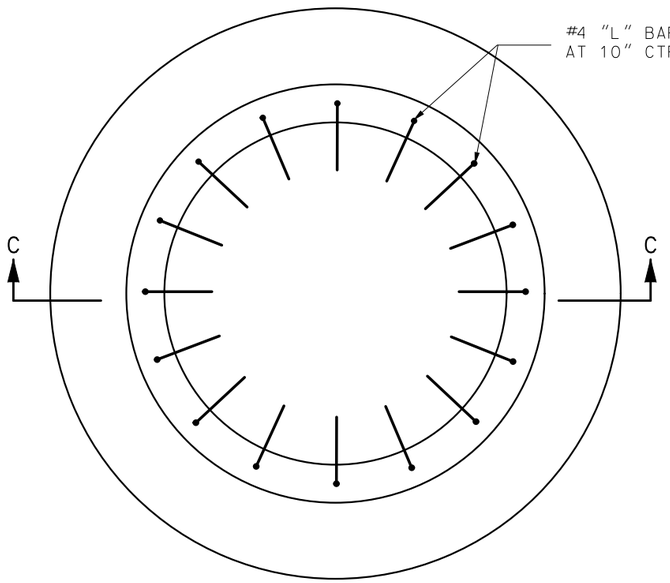

PRECAST FOUNDATION SLAB

FOUNDATION SLAB AND BASE SECTION MAY BE POURED MONOLITHIC OR SEPARATELY WITH A KEYWAY.

INVERT SHALL BE POURED AFTER PLACEMENT OF MANHOLE.

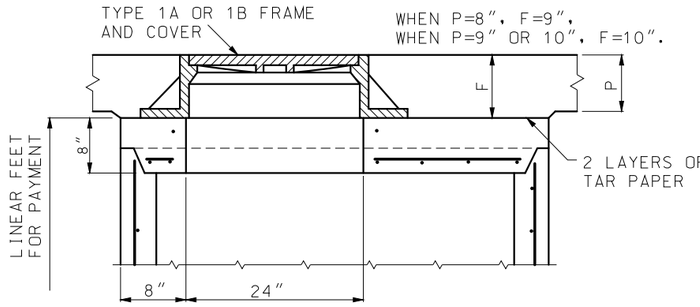

FLAT SLAB MANHOLE TOP (PAVED AREA)

SECTION B-B

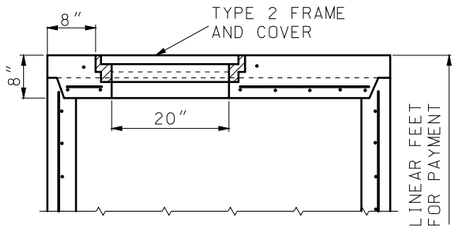

ALTERNATE SECTION B-B

ALTERNATE FLAT SLAB MANHOLE TOP (UNPAVED AREA) USED WHERE DEPTH OF MANHOLE WILL NOT PERMIT USE OF CONE AND TAPER SECTIONS.

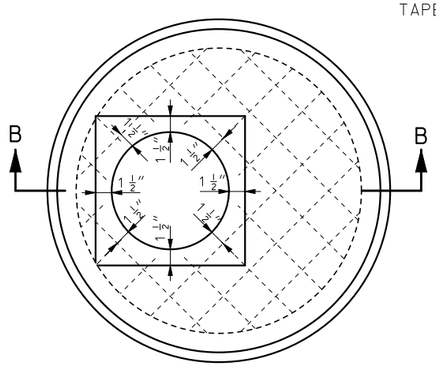

PLAN OF FLAT SLAB MANHOLE TOP

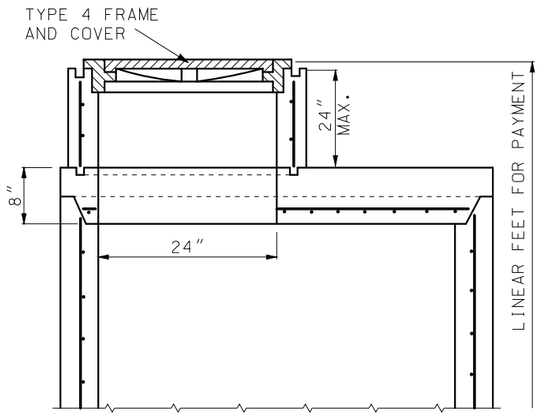

ALTERNATE MANHOLE TOP

IF A SEAL IS PRESENT ON THIS SHEET IT HAS BEEN ELECTRONICALLY SEALED AND DATED.

MISSOURI HIGHWAYS AND TRANSPORTATION COMMISSION
105 WEST CAPITOL
JEFFERSON CITY, MO 65102
1-888-ASK-MODOT (1-888-275-6636)

STATE OF MISSOURI
ERIC E. SCHROETER
NUMBER PE-28411
PROFESSIONAL ENGINEER
THIS SHEET HAS BEEN SIGNED, SEALED AND DATED ELECTRONICALLY.

PRECAST MANHOLES

DATE EFFECTIVE: 07/01/2016
DATE PREPARED: 5/13/2016

731.00U

SHEET NO. 2 OF 2

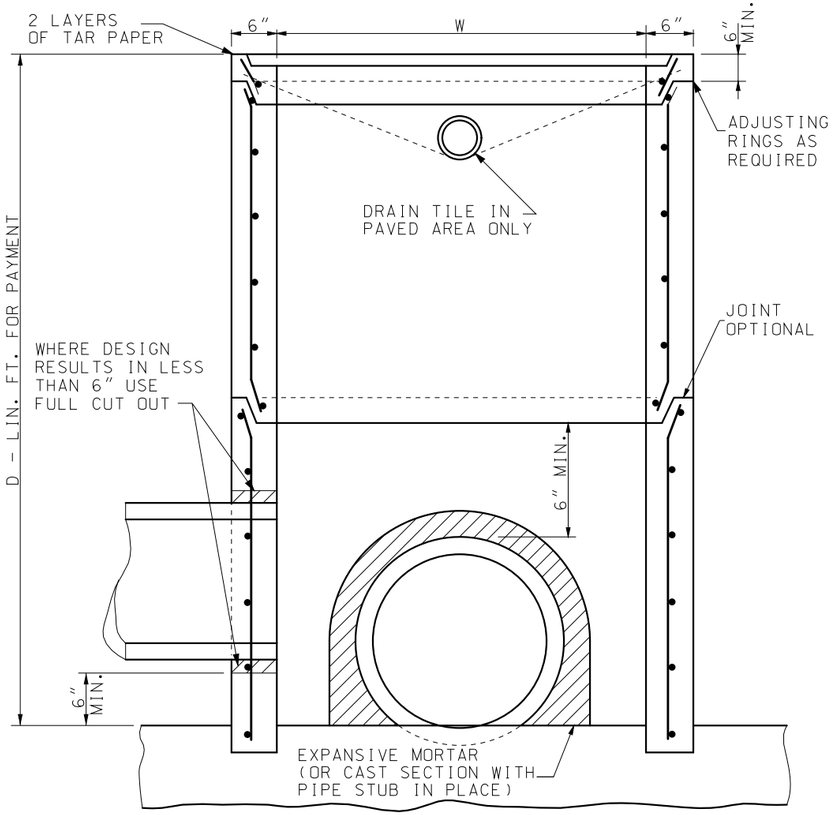

SECTION A-A

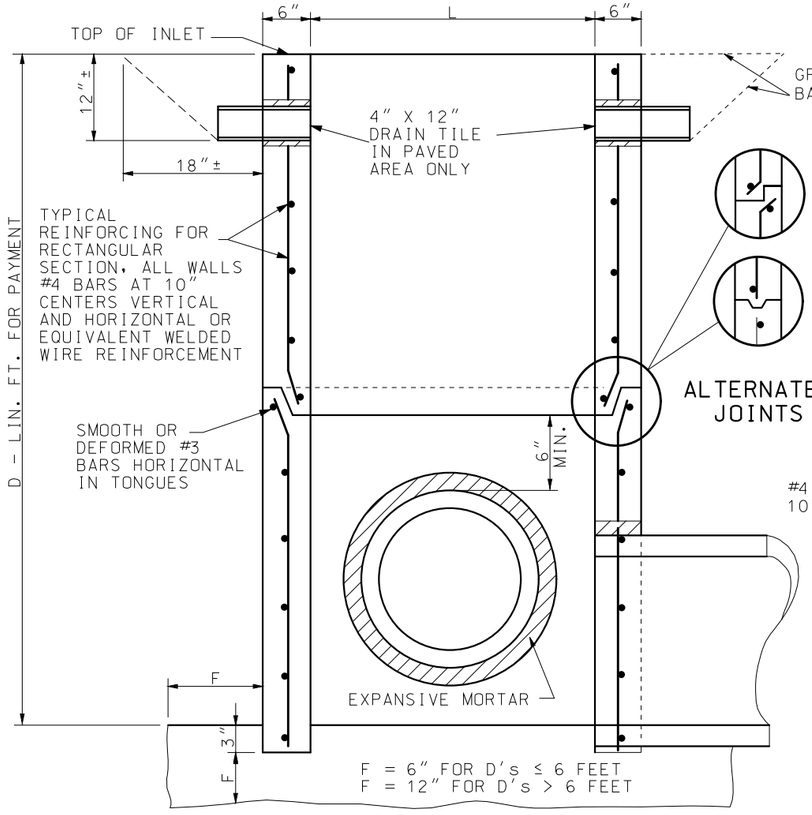

SECTION B-B

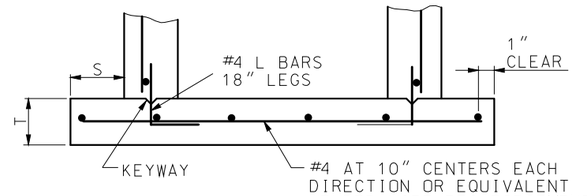

SECTION C-C

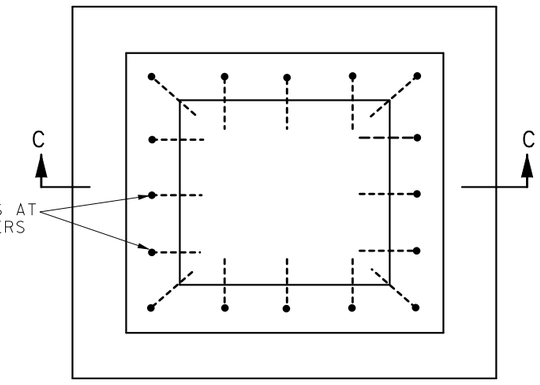

S = 0 FOR D ≤ 6 FEET AND 9" FOR D > 6 FEET

T = 6" FOR D ≤ 6 FEET AND 9" FOR D > 6 FEET

FOUNDATION SLAB AND BASE SECTION MAY BE POURED MONOLITHIC OR SEPARATELY WITH A KEYWAY.

PRECAST FOUNDATION SLAB

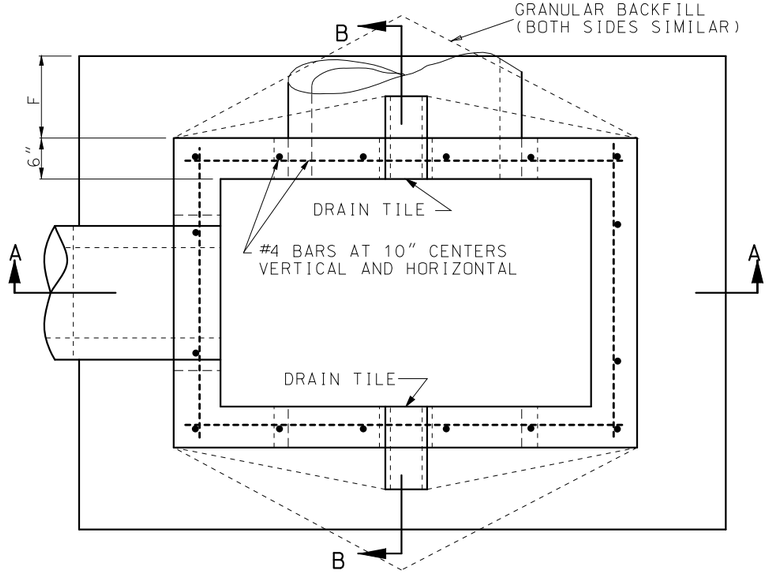

INLET PLAN

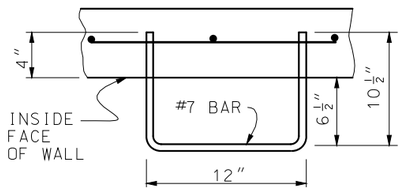

STEPS

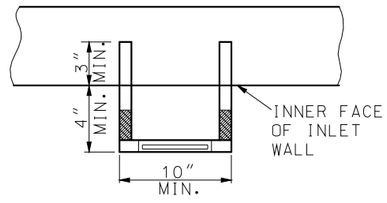

STEP INSTALLATION (OTHER THAN STEEL BAR)

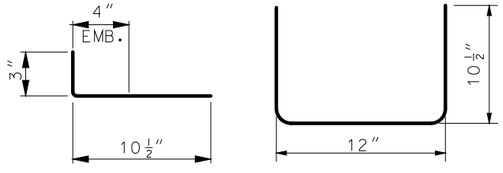

S - BARS

BENDING DIAGRAM STEEL STEP BAR

GENERAL NOTES:

STEPS SHALL BE PLACED AT VERTICAL INTERVALS OF 16" MAXIMUM IN ALL INLETS HAVING A DEPTH OF MORE THAN 4 FEET. STEPS SHALL BEGIN AT AN ELEVATION 6" ABOVE THE TOP OF THE OUTLET PIPE.

STEPS SHALL BE SET LEVEL AND IN VERTICAL ALIGNMENT AND NOT NEARER THAT 3" TO A JOINT.

NO DIRECT PAYMENT WILL BE MADE FOR INLET STEPS.

STEPS ARE NOT REQUIRED FOR TYPE D INLETS.

MISSOURI HIGHWAYS AND TRANSPORTATION COMMISSION
105 WEST CAPITOL
JEFFERSON CITY, MO 65102
1-888-ASK-MODOT (1-888-275-6636)

STATE OF MISSOURI
ERIC E. SCHROETER
NUMBER PE-28411
PROFESSIONAL ENGINEER
THIS SHEET HAS BEEN SIGNED, SEALED AND DATED ELECTRONICALLY.

PRECAST DROP INLET

DATE EFFECTIVE: 07/01/2016	731.10S	SHEET NO. 1 OF 8
DATE PREPARED: 5/13/2016		

IF A SEAL IS PRESENT ON THIS SHEET IT HAS BEEN ELECTRONICALLY SEALED AND DATED.

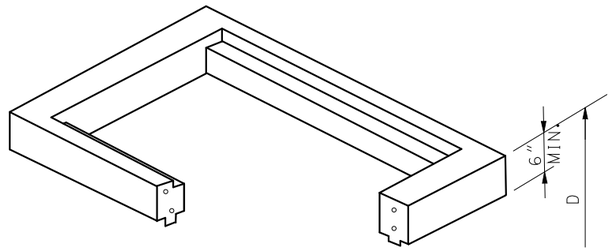

TYPE S-1

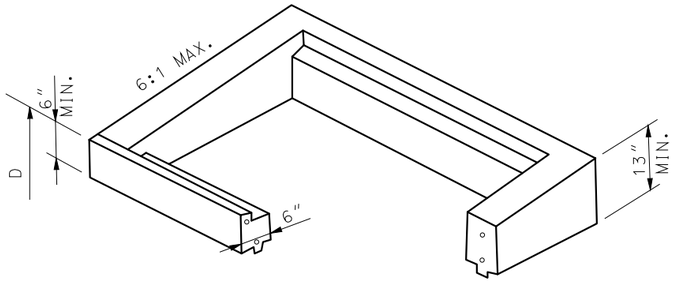

TYPE S-2

HORIZ. #4 BARS AT 6" CTRS.
AND VERT. AT 10" CTRS.

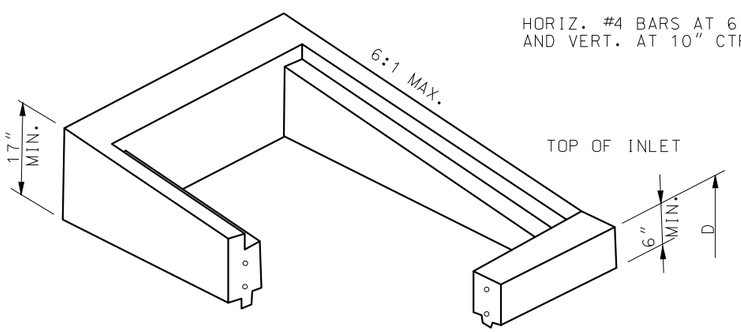

TYPE S-3

SEE STANDARD PLAN 614.10 FOR GRATES AND BEARING PLATES. TYPICAL LOCATION DETAILS ARE INDICATED ON SHEETS 7 AND 8 OF 8. TOP SECTIONS MAY BE CAST MONOLITHIC WITH BASE SECTION.

DROP INLET		
WIDTH FT.	LENGTH FT.	TYPE
2	2	A,B,C
4	2	
2	2	D
3	2	E,S-1 S-2,S-3
3	3	
5	2	
5	3	

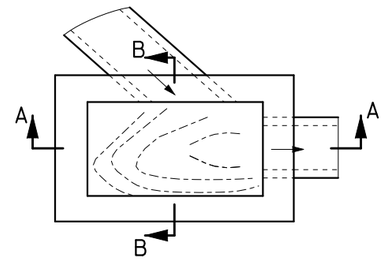

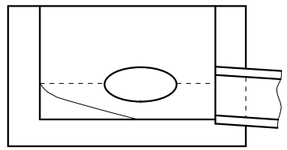

SECTION A-A

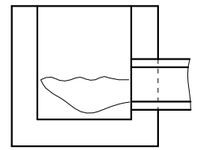

SECTION B-B

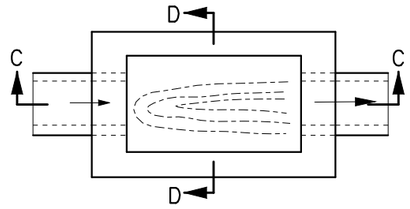

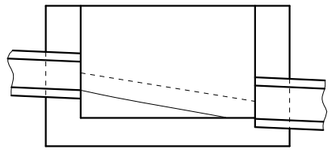

SECTION C-C

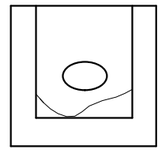

SECTION D-D

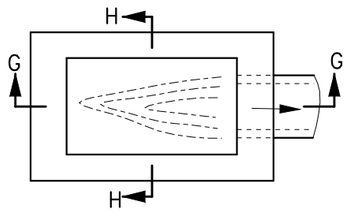

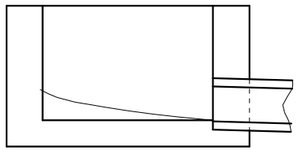

SECTION G-G

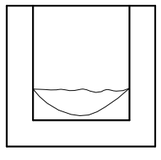

SECTION H-H

TYPICAL INVERTS

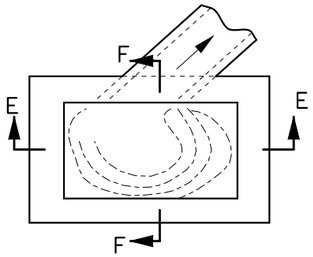

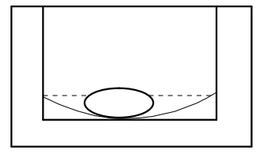

SECTION E-E

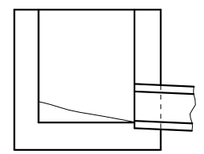

SECTION F-F

GENERAL NOTES:

THE CONCRETE FOR INVERTS SHALL BE PLACED AFTER COMPLETION OF THE DROP INLET BOX. NO DIRECT PAYMENT WILL BE MADE FOR FURNISHING OR PLACING INVERT CONCRETE.

MISSOURI HIGHWAYS AND TRANSPORTATION COMMISSION
105 WEST CAPITOL
JEFFERSON CITY, MO 65102
1-888-ASK-MODOT (1-888-275-6636)

STATE OF MISSOURI
ERIC E. SCHROETER
NUMBER PE-2011
PROFESSIONAL ENGINEER
THIS SHEET HAS BEEN SIGNED, SEALED AND DATED ELECTRONICALLY.

PRECAST DROP INLET

DATE EFFECTIVE: 07/01/2016
DATE PREPARED: 5/13/2016

731.10S

SHEET NO. 2 OF 8

IF A SEAL IS PRESENT ON THIS SHEET IT HAS BEEN ELECTRONICALLY SEALED AND DATED.

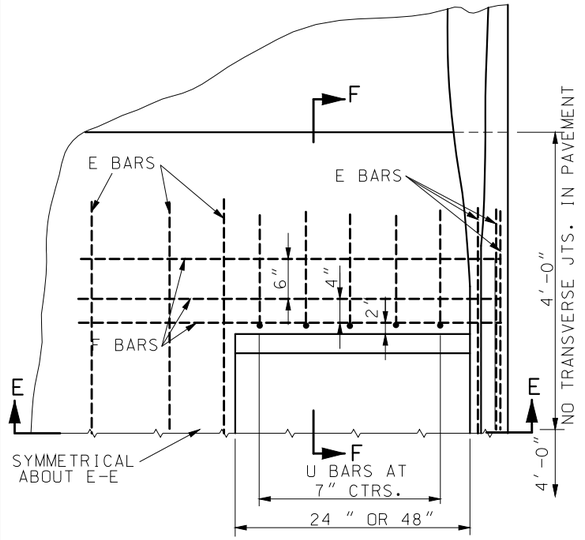

HALF-PLAN

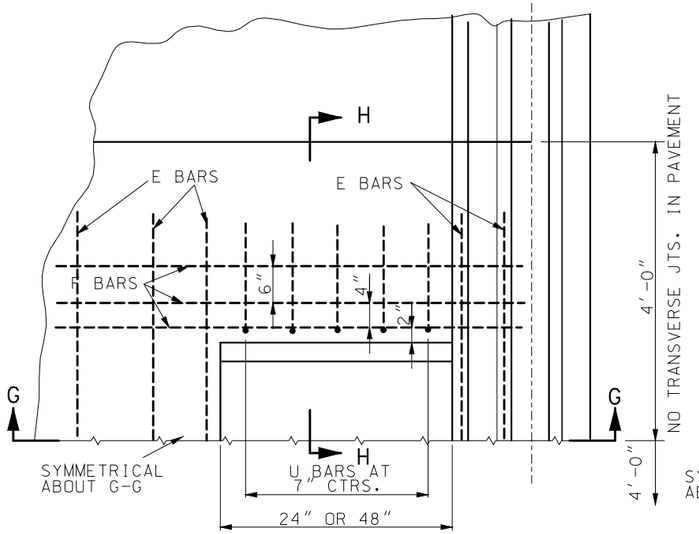

HALF-PLAN

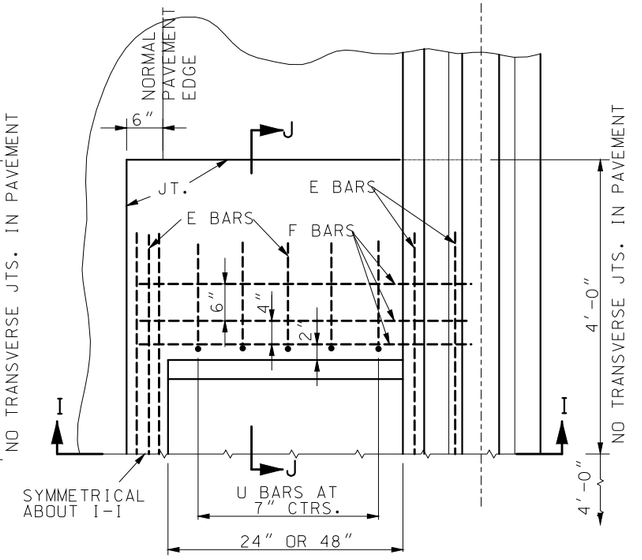

HALF-PLAN

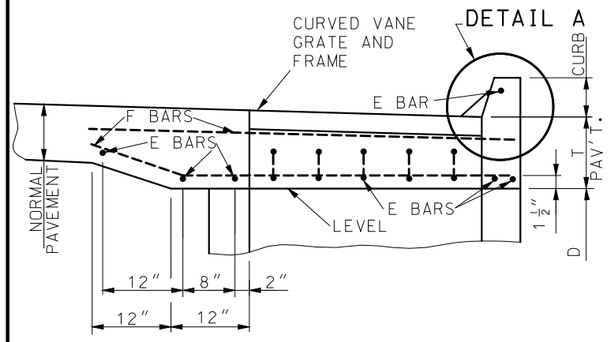

SECTION E-E

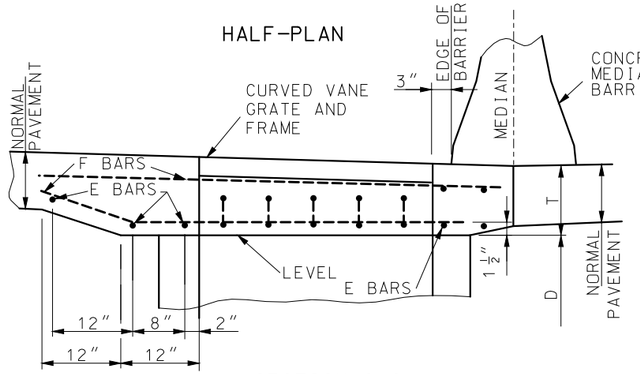

SECTION G-G

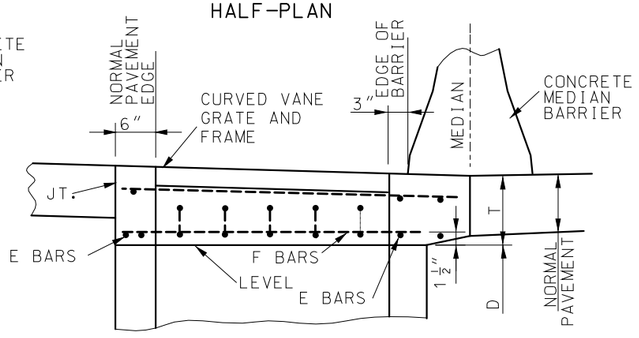

SECTION I-I

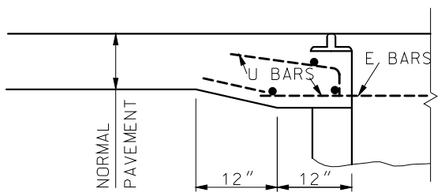

HALF SECTION F-F

TYPE A
INLET ADJACENT TO CURB

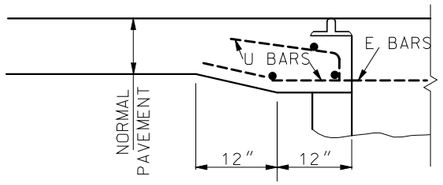

HALF SECTION H-H

TYPE B
DISTANCE BETWEEN BARRIER AND
PAVEMENT EDGE GREATER THAN INLET WIDTH

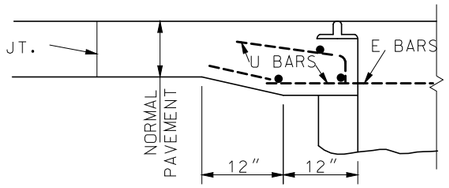

HALF SECTIONJ-J

TYPE C
DISTANCE BETWEEN
BARRIER AND PAVEMENT
EDGE EQUALTO INLET WIDTH

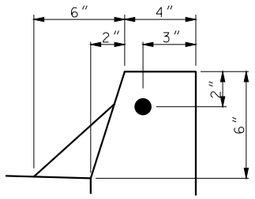

DETAIL A

PAVEMENT BAR BILL

TYPE	WIDTH	LENGTH	MARK	NO.	LENGTH
A	4'	2'	E	6	6'-0"
			F	6	6'-6"
			U	14	2'-9"
	2'	2'	E	6	6'-0"
			F	6	4'-6"
			U	8	2'-9"
B	4'	2'	E	7	6'-0"
			F	6	7'-0"
			U	14	2'-9"
	2'	2'	E	7	6'-0"
			F	6	5'-0"
			U	8	2'-9"
C	4'	2'	E	7	6'-0"
			F	6	5'-3"
			U	14	2'-9"
	2'	2'	E	7	6'-0"
			F	6	3'-3"
			U	8	2'-9"
D	2'	2'	E	6	7'-0"
			F	6	2'-9"
			U	8	2'-9"

BARS E, F, & U.....#4

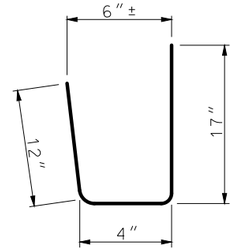

U-BARS
BENDING DIAGRAM

GENERAL NOTE:

SEE STANDARD PLAN 614.11 FOR CURVED VANE GRATE.

IF A SEAL IS PRESENT ON THIS SHEET IT HAS BEEN ELECTRONICALLY SEALED AND DATED.

MISSOURI HIGHWAYS AND TRANSPORTATION COMMISSION
105 WEST CAPITOL
JEFFERSON CITY, MO 65102
1-888-ASK-MODOT (1-888-275-6636)

STATE OF MISSOURI
ERIC E. SCHROETER
NUMBER PE-28411
PROFESSIONAL ENGINEER
THIS SHEET HAS BEEN SIGNED, SEALED AND DATED ELECTRONICALLY.

PRECAST DROP INLET COVERS

DATE EFFECTIVE: 07/01/2016
DATE PREPARED: 5/13/2016

731.10S

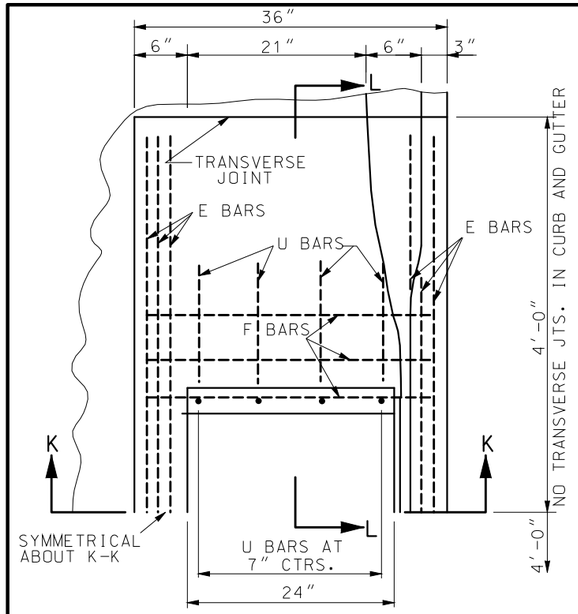

HALF-PLAN

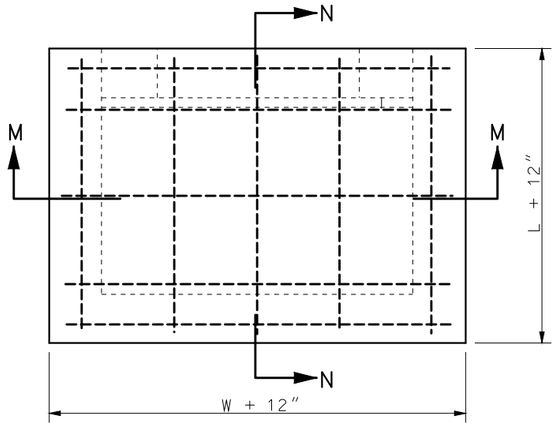

PLAN

PAVEMENT THICKNESS	"T" DIMENSION
LESS THAN OR EQUAL TO 11″	11″
12″	12″
13″	13″
GREATER THAN OR EQUAL TO 14″	14″

DETAIL A
(SHEET 3 OF 8)

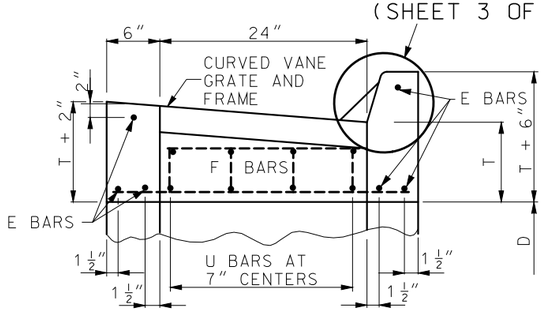

SECTION K-K

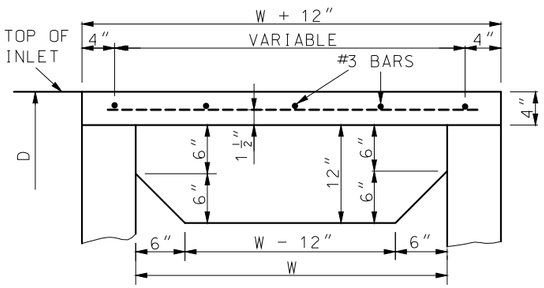

SECTION M-M

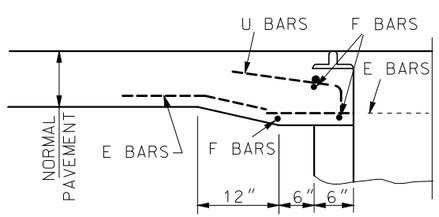

HALF SECTION L-L

TYPE D
CURB AND GUTTER

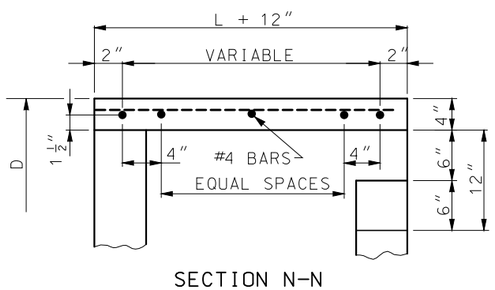

SECTION N-N

TYPE E
PRECAST SLAB

TYPE E COVER BAR BILL				
WIDTH	LENGTH	BAR SIZE	NO.	LENGTH
3′	2′	#3	5	2′-9″
		#4	5	3′-9″
3′	3′	#3	5	3′-9″
		#4	5	3′-9″
5′	2′	#3	6	2′-9″
		#4	6	5′-9″
5′	3′	#3	6	3′-9″
		#4	7	5′-9″

GENERAL NOTES:

THE SIZE OF THE DROP INLET AND TYPE OF COVER WILL BE SHOWN ON THE PLANS.

THE CONFIGURATION DETAILS SHOWN ARE DESCRIPTIVE ONLY AND MAY BE VARIED TO CONFORM WITH ESTABLISHED MANUFACTURING PROCEDURES.

TOP OF DROP INLET WALL SHALL BE CONSTRUCTED TO THE ELEVATION OF BOTTOM OF SLAB AT THE EDGE OF PAVEMENT OR BOTTOM OF CURB AND GUTTER AT DROP INLET.

WHERE THE DROP INLET IS LOCATED IN AN UNPAVED AREA, THE TOP OF THE DROP INLET WALLS SHALL BE SET TO THE ELEVATION SHOWN ON THE PLANS.

ALL CONCRETE ABOVE THE TAR PAPER SEPARATION JOINT IS TO BE CONSTRUCTED DURING PAVING OPERATIONS OR CURB AND GUTTER CONSTRUCTION, AND WILL BE PAID FOR AS SQUARE YARDS OF CONCRETE PAVEMENT OR LINEAR FEET OF CURB AND GUTTER.

FORMED OR CUT-OUT OPENINGS SHALL BE PROVIDED WHERE PIPE INLETS AND OUTLETS ARE SHOWN ON THE PLANS.

REINFORCING BARS IN PAVEMENT SHALL BE EPOXY COATED AND SECURELY TIED TOGETHER AND FASTENED TO AVOID ANY POSSIBLE DISPLACEMENT DURING THE PLACING OF CONCRETE. REINFORCEMENT SHOWN IS IN ADDITION TO ANY REINFORCEMENT SHOWN FOR CONCRETE PAVEMENT OR CURB AND GUTTER.

JOINTS SHALL BE SEALED IN ACCORDANCE WITH SECTION 726.3.1 OF THE STANDARD SPECIFICATIONS.

THE CONTRACTOR WILL BE PERMITTED TO CAST IN PLACE THE DROP INLETS CALLED FOR IN THE PLANS, TO THE DIMENSIONS REQUIRED FOR PRECAST DROP INLETS.

WELDED WIRE REINFORCEMENT MAY BE IN LIEU OF REINFORCING BARS, THE REINFORCEMENT SHALL NOT BE LESS THAN .23 SQUARE INCHES PER LINEAR FOOT BOTH HORIZONTALLY AND VERTICALLY.

NO DIRECT PAYMENT WILL BE MADE FOR REINFORCING STEEL.

NO DIRECT PAYMENT WILL BE MADE FOR CUTTING PIPE NOR FOR CUTTING OR BENDING REINFORCING STEEL.

THE TOP OF INLET PIPES SHALL NOT BE SET BELOW THE TOP OF THE OUTLET PIPE.

NO DIRECT PAYMENT WILL BE MADE FOR FORMING FOR CURVED VANE GRATES AND FRAMES.

THE REINFORCEMENT SHOWN IS THE MINIMUM REQUIRED. AT THE CONTRACTOR'S OPTION, ADDITIONAL REINFORCEMENT MAY BE USED.

REINFORCING STEEL EDGE DISTANCE WILL BE 1½″ UNLESS OTHERWISE SPECIFIED.

NOT MORE THEN TWO LIFT HOLES OR LIFTING INSERTS MAY BE PROVIDED.

CLASS 3 EXCAVATION WILL BE PAID WITHIN VERTICAL PLANES 18″ OUTSIDE OF THE OUTER WALLS OF THE BASE SECTION OF THE DROP INLETS, CLASS 3 EXCAVATION WILL NOT BE PAID FOR OUTSIDE THE FOOTING LIMITS.

IF A SEAL IS PRESENT ON THIS SHEET IT HAS BEEN ELECTRONICALLY SEALED AND DATED.

MISSOURI HIGHWAYS AND TRANSPORTATION COMMISSION
105 WEST CAPITOL
JEFFERSON CITY, MO 65102
1-888-ASK-MODOT (1-888-275-6636)

STATE OF MISSOURI
ERIC E. SCHROETER
NUMBER PE-28411
PROFESSIONAL ENGINEER
THIS SHEET HAS BEEN SIGNED, SEALED AND DATED ELECTRONICALLY.

PRECAST DROP INLET COVERS

DATE EFFECTIVE: 07/01/2016
DATE PREPARED: 5/13/2016

731.10S

SHEET NO. 4 OF 8

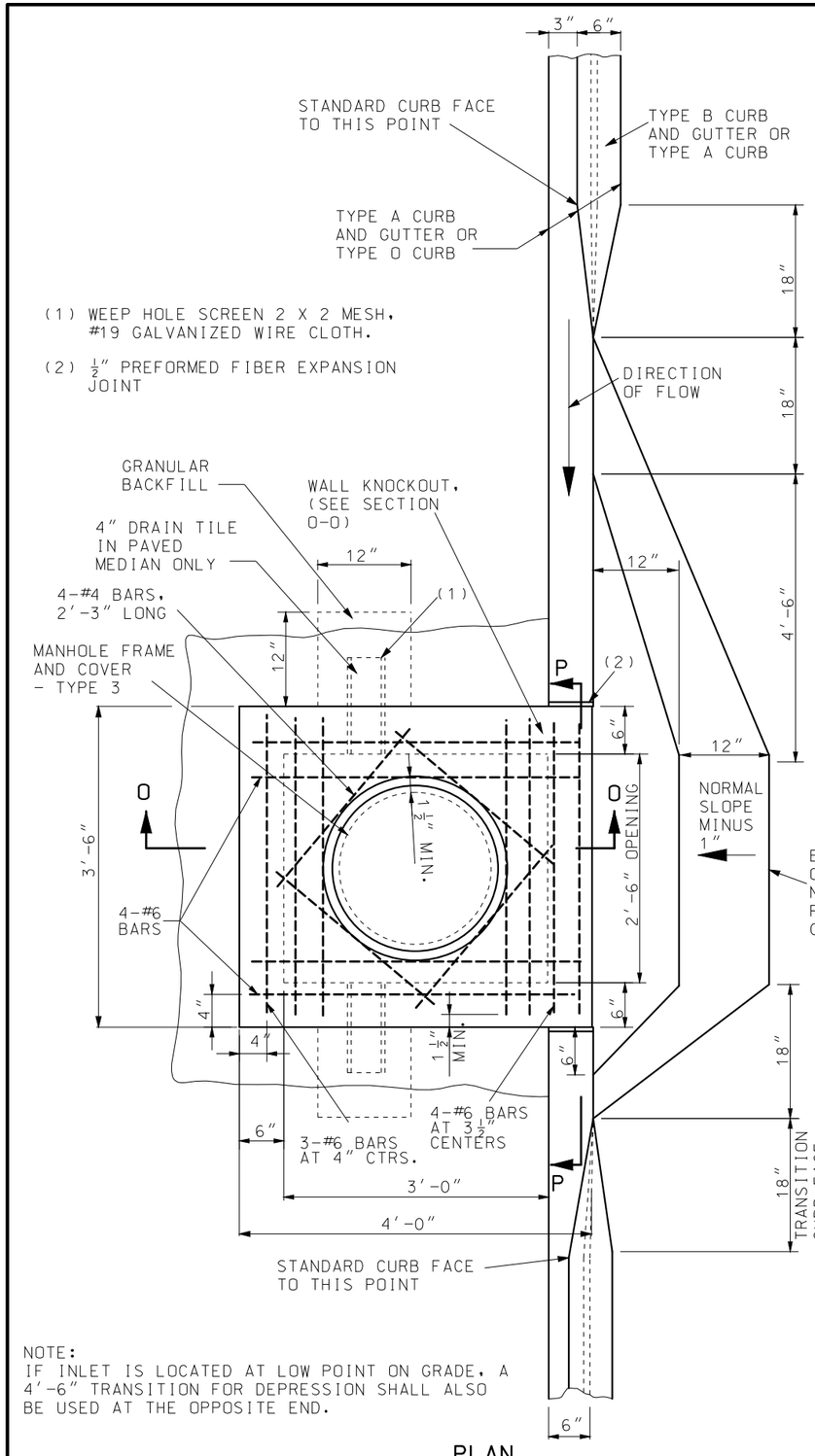

NOTE:
IF INLET IS LOCATED AT LOW POINT ON GRADE, A 4'-6" TRANSITION FOR DEPRESSION SHALL ALSO BE USED AT THE OPPOSITE END.

PLAN

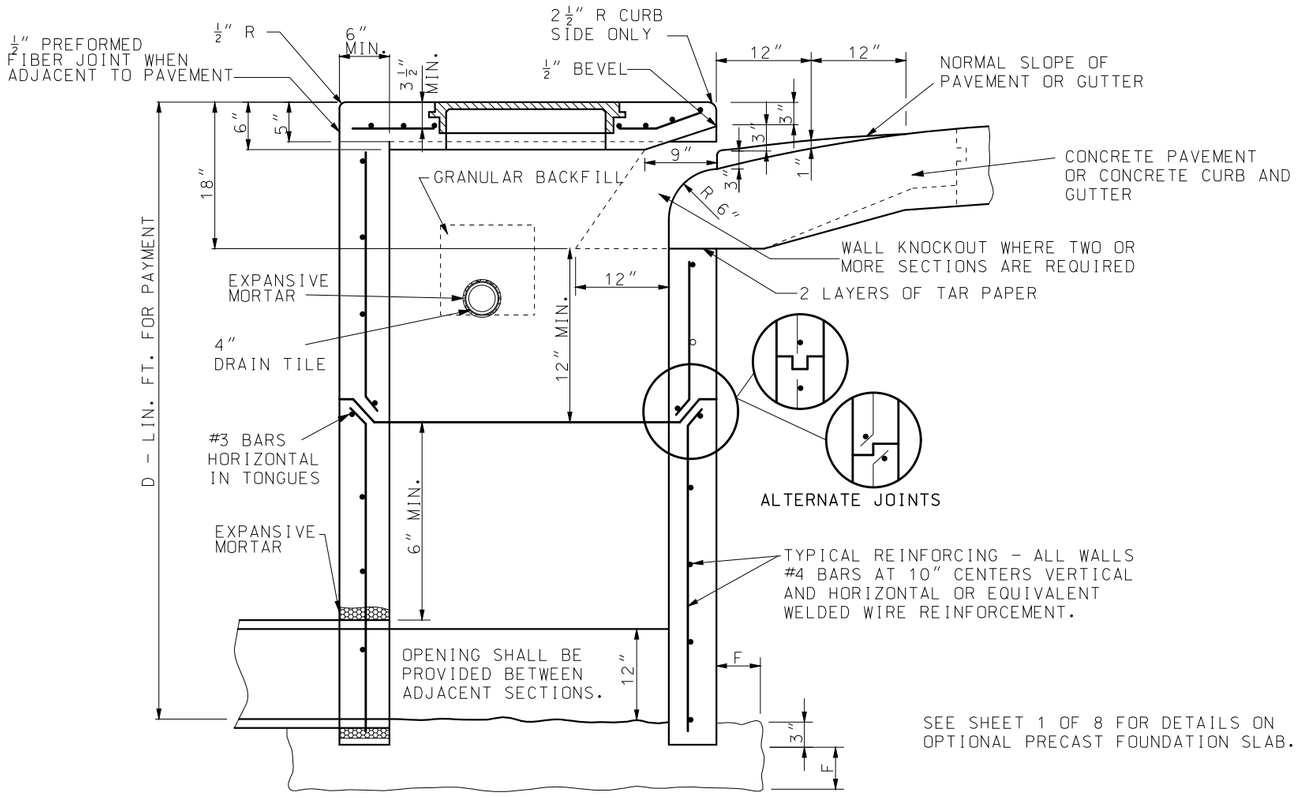

F = 6" FOR D's ≤ 6'.
F = 12" FOR D's > 6'.

SECTION O-O

SEE SHEET 1 OF 8 FOR DETAILS ON OPTIONAL PRECAST FOUNDATION SLAB.

PRECAST BASE SECTION SET ON CONCRETE BLOCKS FOUNDATION SLAB AND INVERT POURED MONOLITHIC.

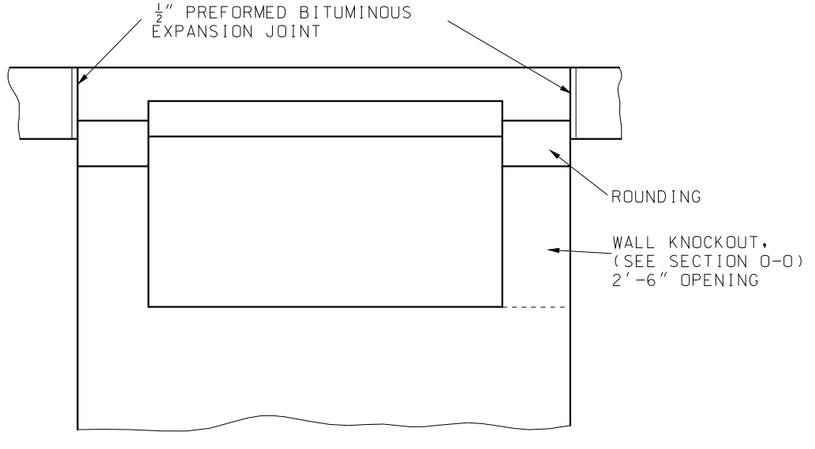

SECTION P-P
DETAILS OF OPENING

IF A SEAL IS PRESENT ON THIS SHEET IT HAS BEEN ELECTRONICALLY SEALED AND DATED.

MISSOURI HIGHWAYS AND TRANSPORTATION COMMISSION
105 WEST CAPITOL
JEFFERSON CITY, MO 65102
1-888-ASK-MODOT (1-888-275-6636)

STATE OF MISSOURI
ERIC E. SCHROETER
NUMBER PE-28411
PROFESSIONAL ENGINEER
THIS SHEET HAS BEEN SIGNED, SEALED AND DATED ELECTRONICALLY.

PRECAST DROP INLET
CURB INLET - TYPE T

DATE EFFECTIVE: 07/01/2016
DATE PREPARED: 8/11/2016

731.10S

SHEET NO.
5 OF 8

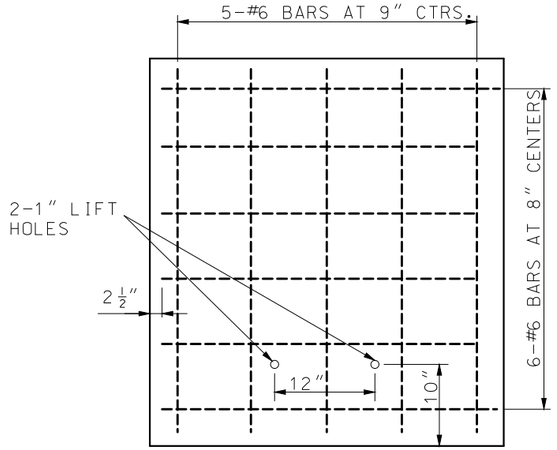

NOTE: REINFORCING FOR LIDS ON UPSTREAM SECTIONS.

LID FOR ADJACENT SECTIONS

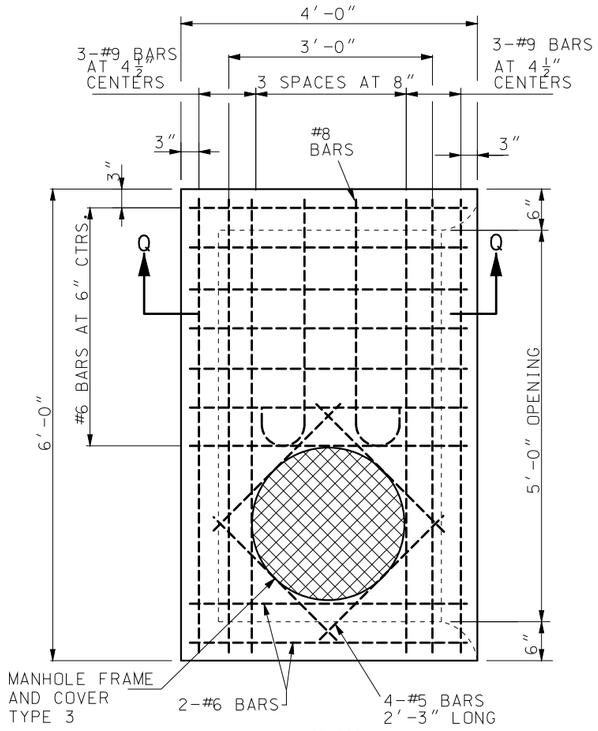

PLAN

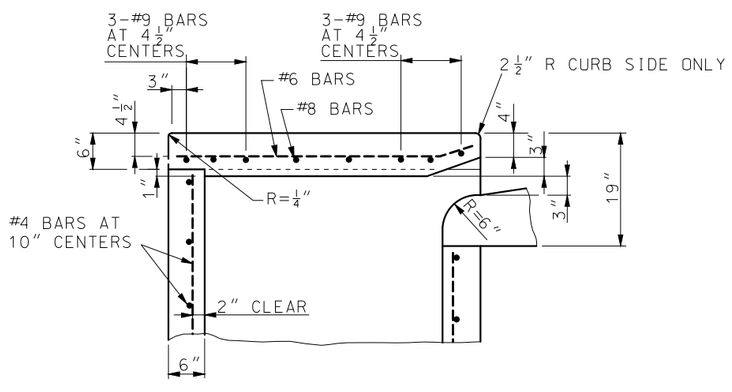

SECTION Q-Q

OPTIONAL PRECAST CURB INLET 5'-0" OPENING

OTHER DETAILS ARESAME AS FOR THE 2'-6" OPENING DROP INLET THIS SHEET.

GENERAL NOTES:

NOTES PERTAINING TO TYPE T:

THE LENGTH AND DEPTH OF THE INLET SHALL BE AS SHOWN ON THE PLANS.

WALLS BETWEEN THE ADJACENT SECTIONS SHALL BE SEALED IN ACCORDANCE WITH SECTION 726.3.1 OF THE STANDARD SPECIFICATIONS.

IF DEPTH OF INLET EXCEEDS 6 FEET THE PRECAST UNITS MAY BE FURNISHED IN TWO OR MORE SECTIONS.

IF TWO OR MORE SECTIONS ARE USED, THE TYPE 3 MANHOLE FRAME AND COVER SHALL BE IN THE DOWNSTREAM SECTION ONLY.

IF A 5 FOOT OPENING IS REQUIRED, TWO 2'-6" OPENING SECTIONS OR ONE 5 FOOT OPEING SECTION MAY BE PROVIDED AT THE CONTRACTOR'S OPTION.

SEE SHEET 1 FOR STEP DETAILS AND SHEET 4 FOR GENERAL NOTES.

IF A SEAL IS PRESENT ON THIS SHEET IT HAS BEEN ELECTRONICALLY SEALED AND DATED.

MISSOURI HIGHWAYS AND TRANSPORTATION COMMISSION
105 WEST CAPITOL
JEFFERSON CITY, MO 65102
1-888-ASK-MODOT (1-888-275-6636)

STATE OF MISSOURI
ERIC E. SCHROETER
NUMBER PE-28411
PROFESSIONAL ENGINEER
THIS SHEET HAS BEEN SIGNED, SEALED AND DATED ELECTRONICALLY.

PRECAST DROP INLET
CURB INLET - TYPE T

DATE EFFECTIVE: 07/01/2016
DATE PREPARED: 5/13/2016

731.10S

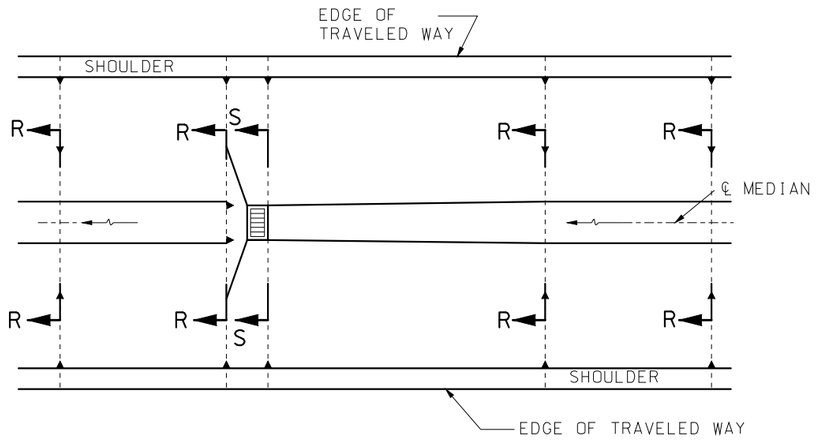

PLAN

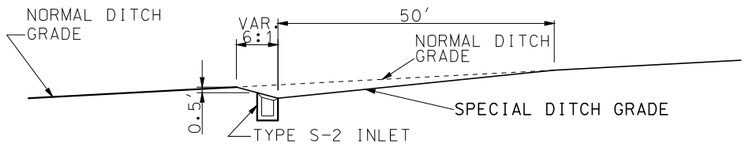

SECTION ALONG CENTERLINE OF MEDIAN RELIEF ON GRADE

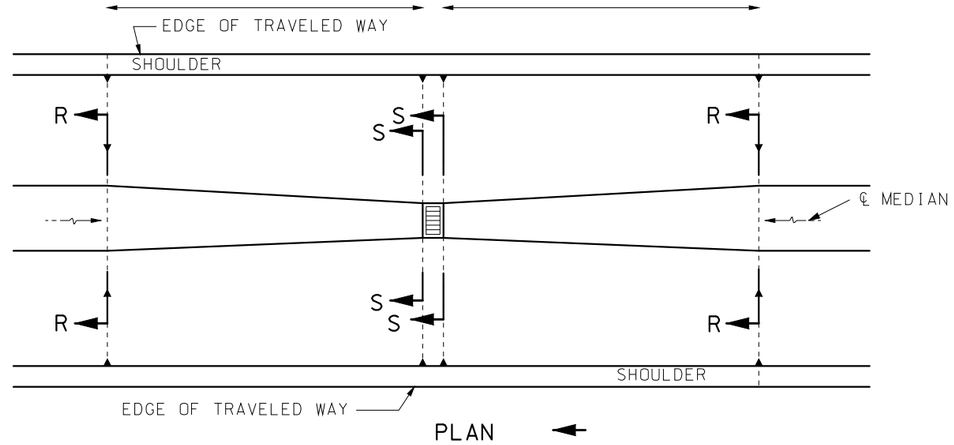

PLAN

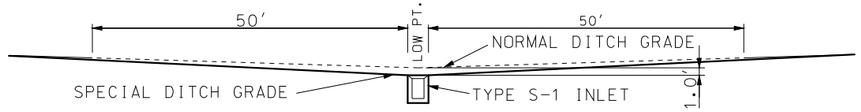

SECTION ALONG CENTERLINE OF MEDIAN RELIEF AT LOW POINT

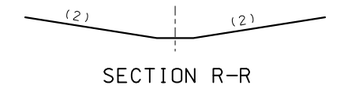

SECTION R-R

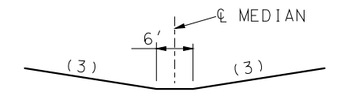

SECTION S-S

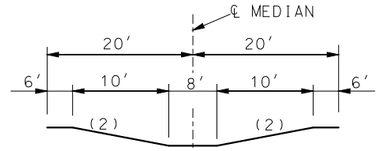

SECTION T-T

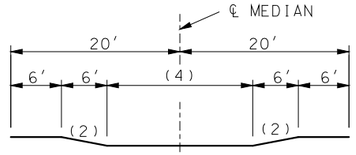

SECTION U-U

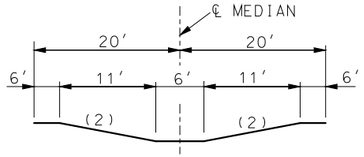

SECTION V-V

DETAILS FOR MEDIAN RELIEF-60' MEDIAN

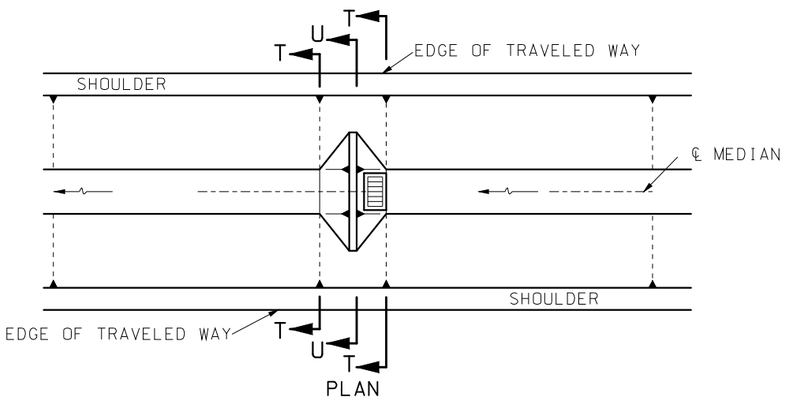

PLAN

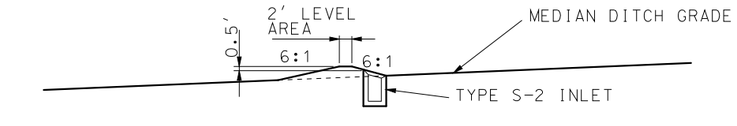

SECTION ALONG CENTERLINE OF MEDIAN RELIEF ON GRADE

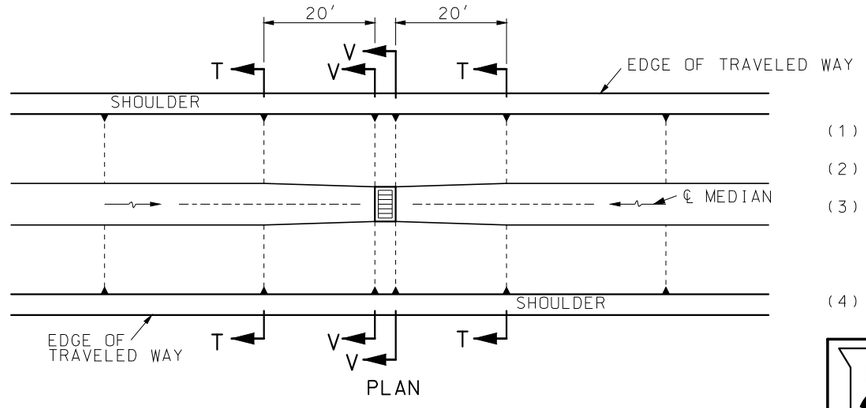

PLAN

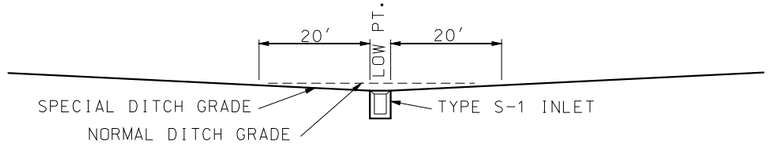

SECTION ALONG CENTERLINE OF MEDIAN RELEIF AT LOW POINT

DETAILS FOR MEDIAN RELIEF-40' MEDIAN

(1) DITCH WIDTH AS GIVEN ON TYPICAL SECTION.

(2) DITCH SLOPE AS GIVEN ON TYPICAL SECTION.

(3) VARY SLOPE TO ACHIEVE MINIMUM 0.5 FT. FREEBOARD ABOVE TOP OF INLET GRATE ON GRADE, OR 1.0 FT. ADDITIONAL DITCH DEPTH BELOW NORMAL DITCH GRADE AT LOW POINT.

(4) VARY WIDTH TO ACHIEVE MINIMUM .05 FEET REEBORAD ABOVE TOP OF INLET GRATE.

MISSOURI HIGHWAYS AND TRANSPORTATION COMMISSION
105 WEST CAPITOL
JEFFERSON CITY, MO 65102
1-888-ASK-MODOT (1-888-275-6636)

STATE OF MISSOURI
ERIC E. SCHROETER
NUMBER PE-28411
PROFESSIONAL ENGINEER
THIS SHEET HAS BEEN SIGNED, SEALED AND DATED ELECTRONICALLY.

PRECAST DROP INLET
TYPICAL LOCATION DETAILS - TYPE S

DATE EFFECTIVE: 07/01/2016
DATE PREPARED: 5/13/2016

731.10S

SHEET NO. 7 OF 8

IF A SEAL IS PRESENT ON THIS SHEET IT HAS BEEN ELECTRONICALLY SEALED AND DATED.

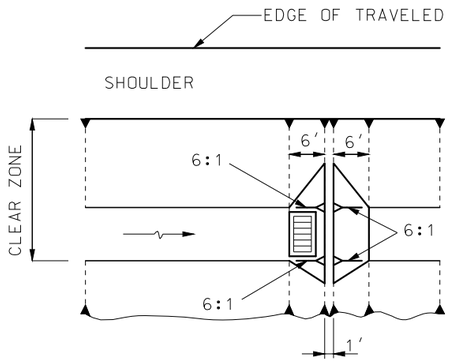

PLAN 1

TYPE S-2 INLET IN ROADWAY DITCH
(FLAT DITCH ON GRADE)

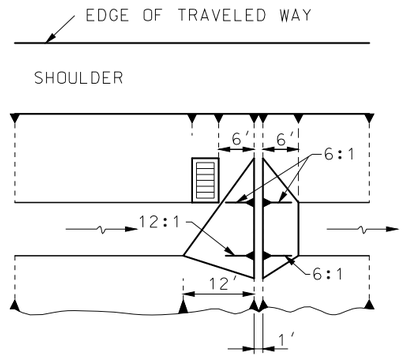

PLAN 2

TYPE S-3 INLET IN ROADWAY DITCH
(FLAT DITCH ON GRADE)

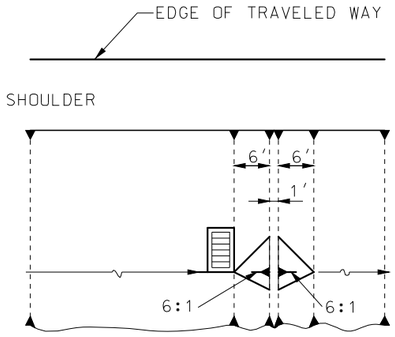

PLAN 3

TYPE S-3 INLET IN ROADWAY DITCH
(V DITCH ON GRADE)

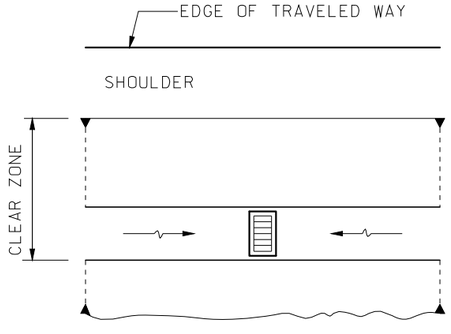

PLAN 4

TYPE S-1 INLET AT LOW POINT
(FLAT DITCH)

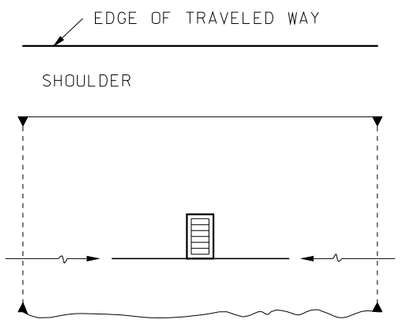

PLAN 5

TYPE S-3 INLET AT LOW POINT
(LOW DITCH)

DETAILS FOR ROADWAY DITCH INLETS LOCATED WITHIN THE CLEAR ZONE

GENERAL NOTES:

THIS DRAWING IS FOR GENERAL INFORMATION ONLY. ACTUAL CONSTRUCTION DETAILS SHALL CONFORM TO THOSE SHOWN ON THE DETAIL PLANS.

DETAILS ON THIS SHEET ARE ONLY FOR USE WITH STRUCTURES LOCATED IN THE MEDIAN OR WITHIN THE CLEAR ZONE.

MISSOURI HIGHWAYS AND TRANSPORTATION COMMISSION
105 WEST CAPITOL
JEFFERSON CITY, MO 65102
1-888-ASK-MODOT (1-888-275-6636)

STATE OF MISSOURI
ERIC E. SCHROETER
NUMBER PE-28411
PROFESSIONAL ENGINEER
THIS SHEET HAS BEEN SIGNED, SEALED AND DATED ELECTRONICALLY.

PRECAST DROP INLET
TYPICAL LOCATION DETAILS – TYPE S

DATE EFFECTIVE: 07/01/2016
DATE PREPARED: 5/13/2016

731.10S

SHEET NO. 8 OF 8

IF A SEAL IS PRESENT ON THIS SHEET IT HAS BEEN ELECTRONICALLY SEALED AND DATED.

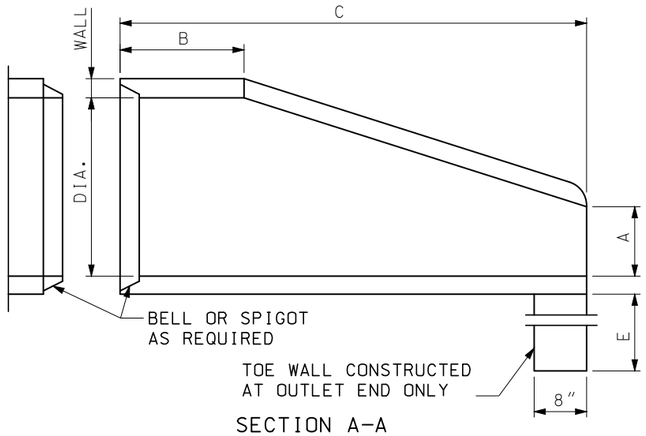

SECTION A-A

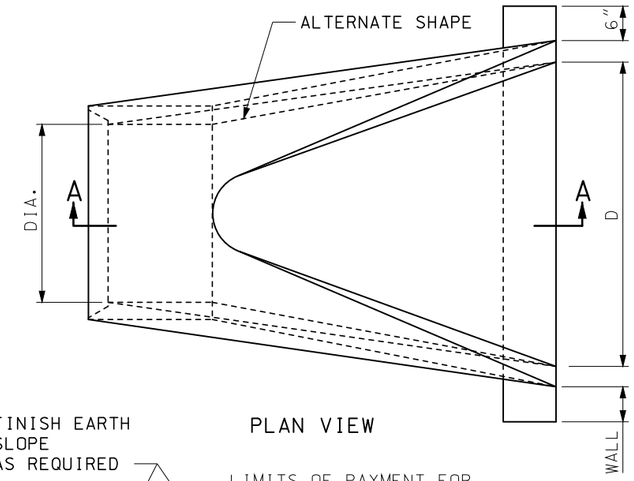

PLAN VIEW

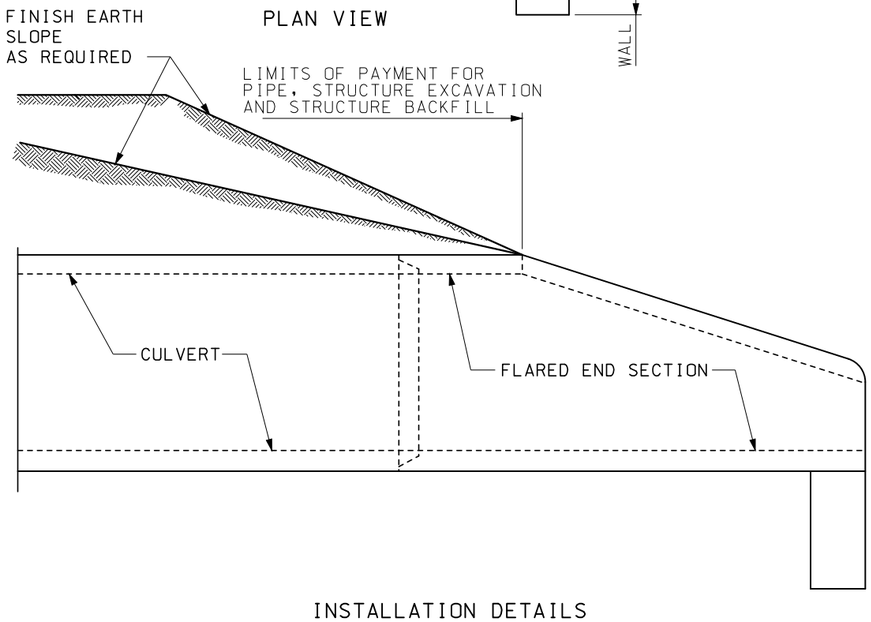

INSTALLATION DETAILS

DIMENSIONS						
DIA.	WALL	A	B MIN.	C MIN.	D	E
12″	2″	4″	4′-0″	6′	2′-0″	18″
15″	2¼″	6″	3′-10″	6′	2′-6″	18″
18″	2½″	9″	3′-10″	6′	3′-0″	18″
21″	2¾″	9″	3′-2″	6′	3′-6″	18″
24″	3″	9½″	2′-6″	6′	4′-0″	24″
27″	3¼″	10½″	2′-1″	6′	4′-6″	24″
30″	3½″	1′-0″	1′-7″	6′	5′-0″	24″
33″	3¾″	1′-2″	1′-7″	6′	5′-6″	24″
36″	4″	1′-3″	2′-10″	8′	6′-0″	24″
42″	4½″	1′-9″	2′-11″	8′	6′-6″	24″
48″	5″	2′-0″	2′-2″	8′	7′-0″	24″
54″	5½″	2′-3″	2′-11″	8′	7′-6″	36″
60″	6″	2′-6″	3′-3″	8′	8′-0″	36″
66″	6½″	2′-0″	1′-9″	8′	8′-6″	36″
72″	7″	2′-0″	2′-9″	10′	9′-0″	36″
78″	7½″	2′-3″	2′-3″	10′	9′-6″	36″
84″	8″	2′-6″	2′-0″	10′	10′-0″	36″

REINFORCEMENT					
ADJOINING PIPE DIA.	BARREL SECTION REINFORCEMENT			FLARE SECTION REINFORCEMENT (ONE LAYER ONLY IN CENTER OF WALL)	
	CIRCULAR		ELLIPTICAL		
	INNER CAGE SQ. IN./ LIN. FT.	OUTER CAGE SQ. IN./ LIN. FT.	SQ. IN./ LIN. FT.	AREA OF LONGITUDINAL SQ. IN./ LIN. FT.	AREA OF TRANSVERSE SQ. IN./ LIN. FT.
12″	0.07			0.048	0.048
15″	0.07			0.054	0.054
18″	0.07		0.07	0.060	0.060
21″	0.07		0.07	0.066	0.066
24″	0.07		0.07	0.072	0.072
27″	0.13		0.11	0.078	0.078
30″	0.14		0.12	0.084	0.084
33″	0.15		0.13	0.090	0.090
36″	0.12	0.09	0.13	0.096	0.096
42″	0.15	0.12	0.17	0.108	0.108
48″	0.18	0.14	0.20	0.120	0.120
54″	0.22	0.16	0.24	0.132	0.132
60″	0.25	0.19	0.28	0.144	0.144
66″	0.31	0.23	0.34	0.156	0.156
72″	0.35	0.21	0.39	0.170	0.170
78″	0.40	0.24	0.44	0.185	0.185
84″	0.46	0.28	0.51	0.205	0.205

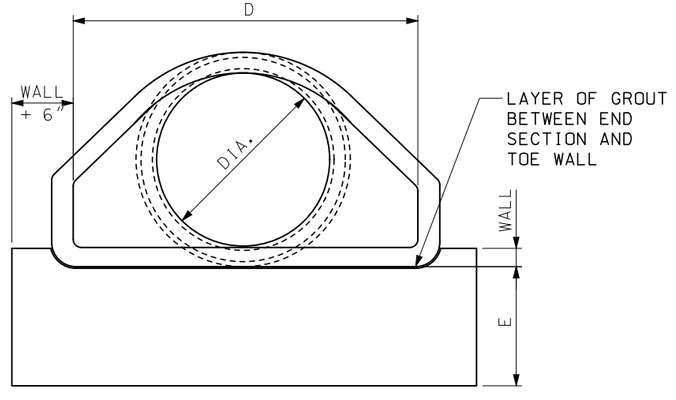

END VIEW

GENERAL NOTES:

SLIGHT VARIATIONS IN BOTH SHAPE AND DIMENSIONS FROM THOSE SHOWN MAY BE ACCEPTED IF APPROVED BY THE ENGINEER.

NOT MORE THAN THREE LIFT HOLES MAY BE DRILLED OR CAST IN THE END SECTION FOR HANDLING AND LAYING.

LIFT LUGS OR BARS WILL BE PERMITTED IN PRECAST TOE WALLS.

TOE WALLS MAY BE CAST-IN-PLACE OR PRECAST.

STEEL FIBERS MAY BE USED IN LIEU OF REBAR OR COLD DRAWN STEEL WIRE AS PER SECTION 1032.3.4.

MISSOURI HIGHWAYS AND TRANSPORTATION COMMISSION
105 WEST CAPITOL
JEFFERSON CITY, MO 65102
1-888-ASK-MODOT (1-888-275-6636)

STATE OF MISSOURI
ERIC E. SCHROETER
NUMBER PE-2841
PROFESSIONAL ENGINEER
THIS SHEET HAS BEEN SIGNED, SEALED AND DATED ELECTRONICALLY.

FLARED END SECTION

PRECAST CONCRETE

DATE EFFECTIVE: 04/01/2016
DATE PREPARED: 2/11/2016

732.00S

SHEET NO. 1 OF 3

IF A SEAL IS PRESENT ON THIS SHEET IT HAS BEEN ELECTRONICALLY SEALED AND DATED.

END SECTIONS FOR ARCH PIPE

TYPE	ARCH DIMENSIONS SPAN x RISE	DIAMETER EQUIVALENT ROUND PIPE IN.	GALVANIZED SHEET THICK IN.	DIMENSIONS (IN.)					APPROXIMATE SLOPE (V:H) (1:SLOPE)	TOE PLATE IF SPECIFIED P, (IN.)
				A 1" TOL.	B MAX.	H 1" TOL.	L 1½" TOL.	W 2" TOL.		
B1	SEE STANDARD PLAN 725.00	15	.064	6	9	6	19	30	2⅛	40
B2		18	.064	7	11	6	23	36	2	46
B3		21	.064	8	12	6	28	42	2⅛	52
B4		24	.064	8	16	6	32	48	2	58
B5		30	.079	10	16	6	39	60	1⅞	70
B6 OR B6A		36	.079	12	18	8	46	75	1¾	85
B7 OR B7A		42	.109	13	21	9	53	85	1⅞	107
B8 OR B8A		48	.109	18	26	12	63	90	1⅞	112
B9 OR B9A		54	.109	18	30	12	70	102	1⅞	124
B10 OR B10A		60	.109	18	33	12	77	114	1⅞	136
B11 OR B11A		66	.109	18	36	12	77	126	1⅝	148
B12 OR B12A		72	.109	18	39	12	77	138	1½	160

END SECTIONS FOR ROUND PIPE

PIPE DIAMETER (IN.)	GALVANIZED SHEET THICK (IN.)	DIMENSIONS (IN.)					APPROXIMATE SLOPE (V:H) (1:SLOPE)	TOE PLATE IF SPECIFIED P, (IN.)
		A 1" TOL.	B MAX.	H 1" TOL.	L 1½" TOL.	W 2" TOL.		
12	.064	6	6	6	21	24	2½	34
15	.064	7	8	6	26	30	2½	40
18	.064	8	10	6	31	36	2½	46
21	.064	9	12	6	36	42	2½	52
24	.064	10	13	6	41	48	2½	58
30	.079	12	16	8	51	60	2½	70
36	.079	14	19	9	60	72	2½	94
42	.109	16	22	11	69	84	2½	106
48	.109	18	27	12	78	90	2½	112
54	.109	18	30	12	84	102	2 OR 2¼	124
60	.109	18	33	12	87	114	1¾ OR 2	136
66	.109	18	36	12	87	120	1½ OR 2	144
72	.109	18	39	12	87	126	1⅓ OR 2	148
78	.109	18	42	12	87	132	1¼ OR 1½	154
84	.109	18	45	12	87	138	1⅙ OR 1½	160

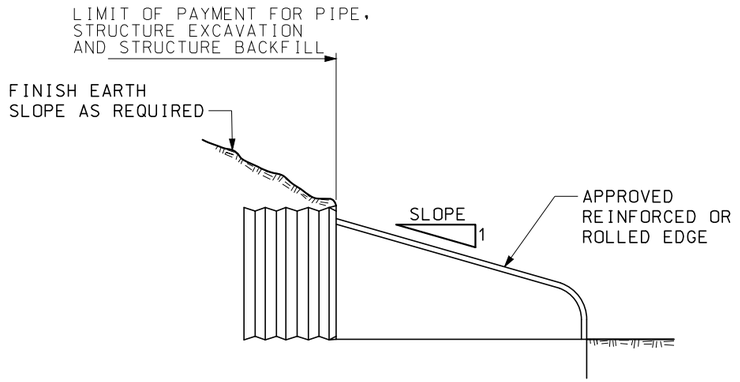

TYPICAL CROSS-SECTION

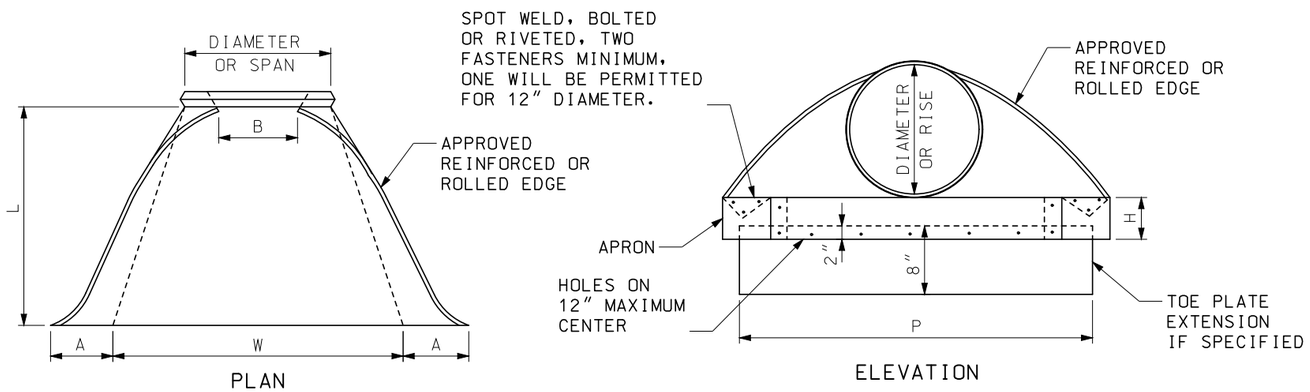

PLAN

ELEVATION

END SECTION FOR PIPE AND PIPE ARCH

GENERAL NOTES:

MINOR VARIATIONS OF DETAIL AND DIMENSIONS WILL BE ACCEPTED TO PERMIT THE USE OF A MANUFACTURER'S STANDARD METHODS OF FABRICATION.

END SECTIONS FABRICATED FROM THICKER METAL THAN INDICATED WILL BE ACCEPTED.

ALL BOLTS SHALL BE ⅜" DIAMETER AND GALVANIZED, UNLESS OTHERWISE SHOWN.

TOE PLATE EXTENSIONS, IF SPECIFIED, SHALL HAVE HOLES TO MATCH HOLES IN TOE PLATE.

SKIRT SECTION IS DEFINED AS THE FLARED PORTION OF THE END SECTION INCLUDING SIDE AND BOTTOM (CENTER) PANELS AND APRON.

SKIRT SECTION FOR 12" THROUGH 24" PIPES SHALL BE MADE IN ONE PIECE.

SKIRT SECTIONS FOR 30" AND LARGER PIPES AND B5 AND LARGER PIPE ARCHES MAY BE MADE FROM UP TO 2 SHEETS JOINED BY RIVETING OR BOLTING ON CENTERLINE.

SKIRT SECTIONS FROM 48" AND LARGER PIPES AND B8 OR LARGER PIPE ARCHES MAY BE MADE FROM UP TO 3 SHEETS JOINED BY RIVETING OR BOLTING EQUAL DISTANCE FROM CENTERLINE.

SKIRT SECTIONS FOR 72" AND LARGER PIPES MAY BE MADE FROM UP TO 4 SHEETS JOINED BY RIVETING AND BOLTING. THE BOTTOM PANEL SHALL BE 2 EQUAL WIDTH SHEETS JOINED ON CENTERLINE.

ALL 3 PIECE AND 4 PIECE SKIRTS FOR 60" OR LARGER PIPES AND B10 AND LARGER PIPE ARCHES SHALL HAVE 0.109" THICK SIDES AND 0.138" THICK BOTTOM (CENTER) PANELS. WIDTH OF BOTTOM PANELS SHALL BE GREATER THAN 20% OF THE PIPE PERIPHERY CONNECTOR SECTIONS. CORNER PLATES AND TOE PLATES SHALL BE GALVANIZED AND OF THE SAME OR GREATER THICKNESS AS THE SKIRT.

SEE SHEET 3 OF 3 FOR CONNECTION DETAILS

IF A SEAL IS PRESENT ON THIS SHEET IT HAS BEEN ELECTRONICALLY SEALED AND DATED.

MISSOURI HIGHWAYS AND TRANSPORTATION COMMISSION
105 WEST CAPITOL
JEFFERSON CITY, MO 65102
1-888-ASK-MODOT (1-888-275-6636)

STATE OF MISSOURI
ERIC E. SCHROETER
NUMBER PE-28411
PROFESSIONAL ENGINEER
THIS SHEET HAS BEEN SIGNED, SEALED AND DATED ELECTRONICALLY.

FLARED END SECTION

METAL

DATE EFFECTIVE: 04/01/2016
DATE PREPARED: 2/11/2016

732.00S

SHEET NO. 2 OF 3

CONNECTION REQUIREMENTS					
TYPE	CONNECTION TYPE	ALLOWABLE SIZE RANGE (IN.)	TAPERED SLEEVE REQUIREMENT		
			CMP	RCP PVC	PP PE
SAFETY END SECTION	2	ALL	N	Y	Y
	6	12–24	N	Y	Y
METAL FLARED END SECTION	1	12–24	N	Y	N
	2	ALL	N	Y	N
	3	ALL	N	Y	N
	4	12–24	N	Y	N
	5	12–24	N	Y	N
	6	12–24	N	Y	N

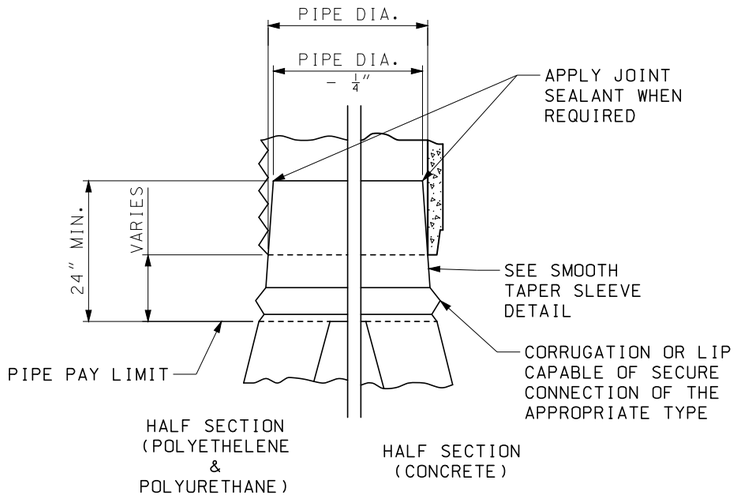

TAPERED SLEEVE CONNECTION FOR CONCRETE AND THERMOPLASTIC PIPE

TAPERED SLEEVE SHALL BE FIRMLY WEDGED INTO PIPE END BEFORE BACKFILLING PIPE PAY LENGTH.

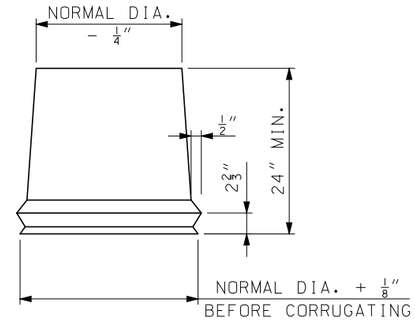

FORM $\frac{1}{2}$" X $2\frac{2}{3}$" CORRUGATIONS.
MAINTAIN INSIDE DIAMETER OF SLEEVE.
FINISHED END TO BE THE SAME DIAMETER AS CORRUGATED STEEL PIPE DIAMETER.

SMOOTH TAPERED SLEEVE DETAIL

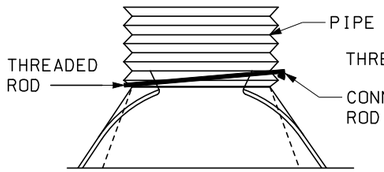

FOR 12" THRU 24" ROUND PIPE ONLY

TYPE 1 CONNECTION

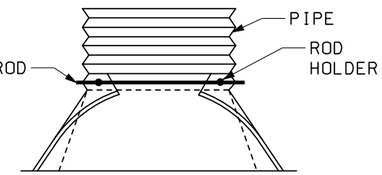

FOR 30" THRU 48" PIPE AND EQUIVALENT PIPE ARCH

TYPE 2 CONNECTION

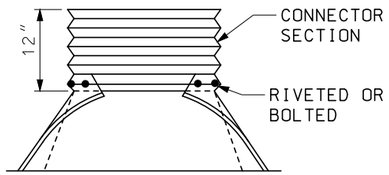

PERMISSIBLE FOR ALL SIZES

TYPE 3 CONNECTION

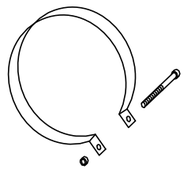

CONNECTOR STRAP

1 INCH WIDE, 0.109" THICK CONNECTOR STRAP OF COMMERCIAL QUALITY STEEL, GALVANIZED WITH SAME WEIGHT COATING AS PIPE, AND 6" × $\frac{1}{2}$" GALVANIZED BAND BOLT AND NUT. USE AS ALTERNATE ON TYPE 1 CONNECTION ONLY.

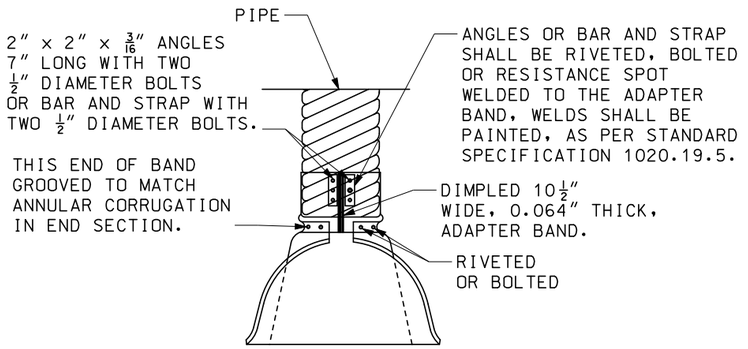

FOR 12" THRU 42" PIPE AND EQUIVALENT PIPE ARCH

TYPE 4 CONNECTION

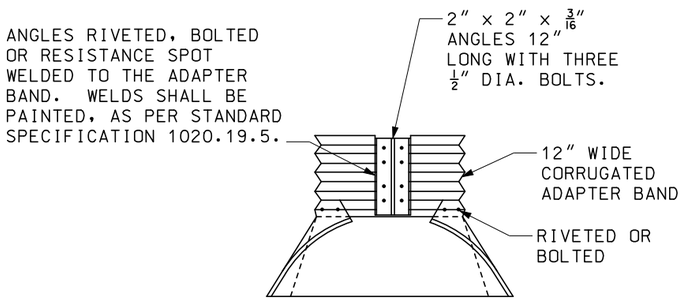

PERMISSIBLE FOR ALL SIZES THROUGH 84" PIPE AND B-12 OR B-12A PIPE ARCH

TYPE 5 CONNECTION

END SECTION FOR PIPE AND PIPE ARCH

GENERAL NOTES:

MINOR VARIATIONS OF DETAIL AND DIMENSIONS WILL BE ACCEPTED TO PERMIT THE USE OF A MANUFACTURER'S STANDARD METHODS OF FABRICATION.

TAPERED SLEEVES SHALL BE FABRICATED FROM SMOOTH 12 GUAGE STEEL COATED IN ACCORDANCE WITH AASHTO M-218.

TAPERED SLEEVES SHALL BE FIRMLY WEDGED INTO THE PIPE END BEFORE BACKFILLING PIPE PAY LENGTH.

THE LENGTH OF TAPERED SLEEVE SHALL BE SIZED TO PROTECT UV SENSITIVE PIPE MATERIALS FROM SUNLIGHT. THE ENTIRE COST OF THE TAPERED SLEEVE, HARDWARE, AND INSTALLATION SHALL BE INCLUDED IN THE COST OF THE PIPE.

TAPERED SLEEVES SHALL HAVE AT A MINIMUM A HALF CORRUGATION OR LIP DESIGNED TO PROVIDE A SECURE CONNECTION WITH THE END SECTION.

ANY ROD OR STRAP USED FOR MAKING A CONNECTION SHALL BE SECURLY SEATED INTO A VALLEY OF THE PIPE CORRUGATION. THE VALLEY CHOOSEN TO HOLD THE ROD OR STRAP SHALL LEAVE AT LEAST ONE FULL INTACT CORRUGATION BEFORE THE END OF THE PIPE. THE FEMALE PORTION OF A BELL END SHALL NOT COUNT AS A FULL INTACT CORRUGATION.

MISSOURI HIGHWAYS AND TRANSPORTATION COMMISSION
105 WEST CAPITOL
JEFFERSON CITY, MO 65102
1-888-ASK-MODOT (1-888-275-6636)

STATE OF MISSOURI
ERIC E. SCHROETER
NUMBER PE-28411
PROFESSIONAL ENGINEER
THIS SHEET HAS BEEN SIGNED, SEALED AND DATED ELECTRONICALLY.

FLARED END SECTION

METAL

DATE EFFECTIVE: 04/01/2016
DATE PREPARED: 2/11/2016

732.00S

SHEET NO. 3 OF 3

IF A SEAL IS PRESENT ON THIS SHEET IT HAS BEEN ELECTRONICALLY SEALED AND DATED.

BEVELED PIPE ENCASEMENT DETAILS

PIPE DIAMETER	SLOPE	A	B	C	D	E	F	G
15"	3:1	5′-5½"	3′-3"	3′-2"	6′-7"	1	9½"	18"
	4:1	7′-2"		4′-1½"	8′-1¼"	2	12½"	24"
	6:1	10′-7¼"		6′-1"	11′-1½"	3	18¼"	36"
18"	3:1	6′-3"	3′-6"	3′-11½"	7′-4"	2	9½"	18"
	4:1	8′-2¼"		5′-1¾"	9′-1"	3	12½"	24"
	6:1	12′-1½"		7′-7¼"	12′-7½"	4	18¼"	36"
21"	3:1	7′-½"	3′-9"	4′-9"	8′-1"	3	9½"	18"
	4:1	9′-2¾"		6′-2¼"	10′-1¼"	3	12½"	24"
	6:1	13′-7¾"		9′-1½"	14′-1½"	5	18¼"	36"
24"	3:1	7′-10"	4′-0"	5′-6½"	8′-10"	3	9½"	18"
	4:1	10′-3"		7′-2½"	11′-1"	4	12½"	24"
	6:1	15′-2"		10′-7¾"	15′-7½"	6	18¼"	36"
27"	3:1	8′-7½"	4′-3"	6′-4"	9′-7"	4	9½"	18"
	4:1	11′-3½"		8′-3"	12′-1¼"	5	12½"	24"
	6:1	16′-8¼"		12′-2"	17′-1½"	7	18¼"	36"
30"	3:1	9′-5"	4′-6"	7′-1½"	10′-4"	4	9½"	18"
	4:1	12′-3¾"		9′-3¼"	13′-1"	6	12½"	24"
	6:1	18′-2½"		13′-8¼"	18′-7½"	8	18¼"	36"
33"	3:1	10′-2¼"	4′-9"	7′-10¾"	11′-¾"	5	9½"	18"
	4:1	13′-4¼"		10′-3¾"	14′-1¼"	6	12½"	24"
	6:1	19′-8¾"		15′-2½"	20′-1½"	9	18¼"	36"
36"	3:1	10′-11¾"	5′-0"	8′-8¼"	11′-10"	5	9½"	18"
	4:1	14′-4½"		11′-4"	15′-1"	7	12½"	24"
	6:1	21′-3"		16′-8¾"	21′-7½"	10	18¼"	36"
42"	3:1	12′-6¾"	5′-6"	10′-3¼"	13′-4"	6	9½"	18"
	4:1	16′-5¼"		13′-4¾"	17′-1¼"	8	12½"	24"
	6:1	24′-3½"		19′-9¼"	24′-7½"	13	18¼"	36"
48"	3:1	14′-1¾"	6′-0"	11′-10¼"	14′-10"	7	9½"	18"
	4:1	18′-6"		15′-5½"	19′-1¼"	10	12½"	24"
	6:1	27′-4"		22′-9¾"	27′-7½"	15	18¼"	36"
54"	3:1	15′-8¾"	6′-6"	13′-5¼"	16′-4"	8	9½"	18"
	4:1	20′-6¾"		17′-6¼"	21′-1¼"	11	12½"	24"
	6:1	30′-4½"		25′-10¼"	30′-7½"	17	18¼"	36"
60"	3:1	17′-3¾"	7′-0"	15′-¼"	17′-10"	9	9½"	18"
	4:1	22′-7½"		19′-7"	23′-1¼"	12	12½"	24"
	6:1	33′-5"		28′-10¾"	33′-7½"	19	18¼"	36"

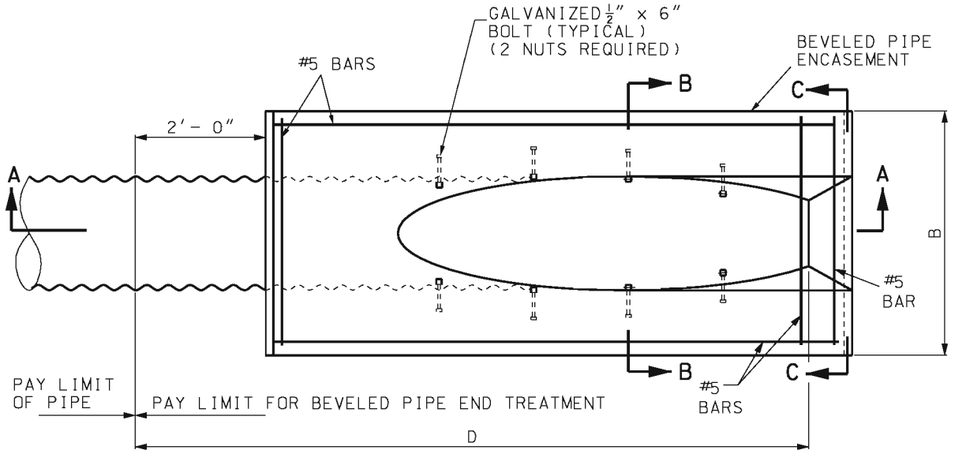

PLAN VIEW FOR HIGHWAYS

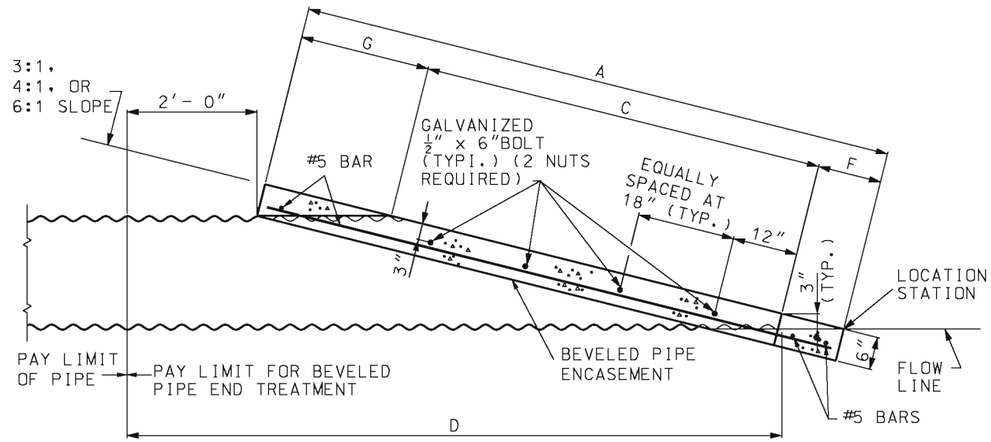

SECTION A-A

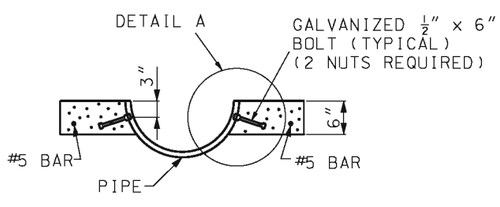

SECTION B-B

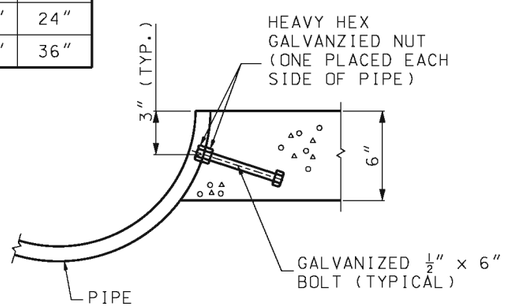

DETAIL A

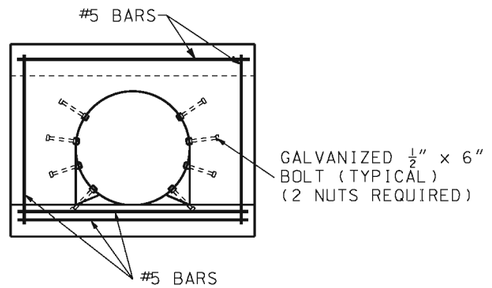

SECTION C-C

GENERAL NOTES:

CONCRETE USED IN CONSTRUCTION OF THE BEVELED PIPE ENCASEMENT SHALL BE CLASS B CONCRETE OR AN APPROVED COMMERCIAL MIX MEETING REQUIREMENTS OF SECTION 501 OF THE STANDARD SPECIFICATIONS.

REINFORCING STEEL USED IN CONSTRUCTION OF THE BEVELED PIPE ENCASEMENT SHALL MEET THE REQUIREMENTS OF SECTION 1036 OF THE STANDARD SPECIFICATIONS.

BEVELED PIPE ENCASEMENT MAY BE USED WITH EITHER POLYETHYLENE OR CORRUGATED METALLIC COATED STEEL PIPE.

THE PRICE BID PER EACH FOR "BEVELED PIPE END TREATMENT" SHALL BE CONSIDERED FULL COMPENSATION FOR FURNISHING ALL MATERIALS AND INSTALLATION OF THE BEVELED PIPE SECTION AND BEVELED PIPE ENCASEMENT AS SHOWN OR AS DIRECTED BY THE ENGINEER.

THE ½" x 6" BOLT AND NUTS SHALL BE GALVANIZED IN ACCORDANCE WITH AASHTO M232 (ASTM A153) SPECIFICATIONS. LOW CARBON STEEL ANCHOR BOLTS SHALL MEET ASTM A307.

BEVELED PIPE SHALL BE DRILLED AT LOCATIONS SHOWN ON PLANS FOR PLACEMENT OF ½" x 6" GALVANIZED BOLTS. THE ½" x 6" GALVANIZED BOLTS SHALL BE "DOUBLE NUTTED" AS SHOWN AND PLACED IN THE VALLEY OF PIPE CORRUGATIONS.

MISSOURI HIGHWAYS AND TRANSPORTATION COMMISSION
105 WEST CAPITOL
JEFFERSON CITY, MO 65102
1-888-ASK-MODOT (1-888-275-6636)

STATE OF MISSOURI
KATHRYN PHILLIPS HARVEY
NUMBER PE-23751
PROFESSIONAL ENGINEER
THIS SHEET HAS BEEN SIGNED, SEALED AND DATED ELECTRONICALLY.

BEVELED PIPE END TREATMENT FOR HIGHWAYS

DATE EFFECTIVE: 07/01/2004
DATE PREPARED: 12/16/2008

732.05C

SHEET NO. 1 OF 2

IF A SEAL IS PRESENT ON THIS SHEET IT HAS BEEN ELECTRONICALLY SEALED AND DATED.

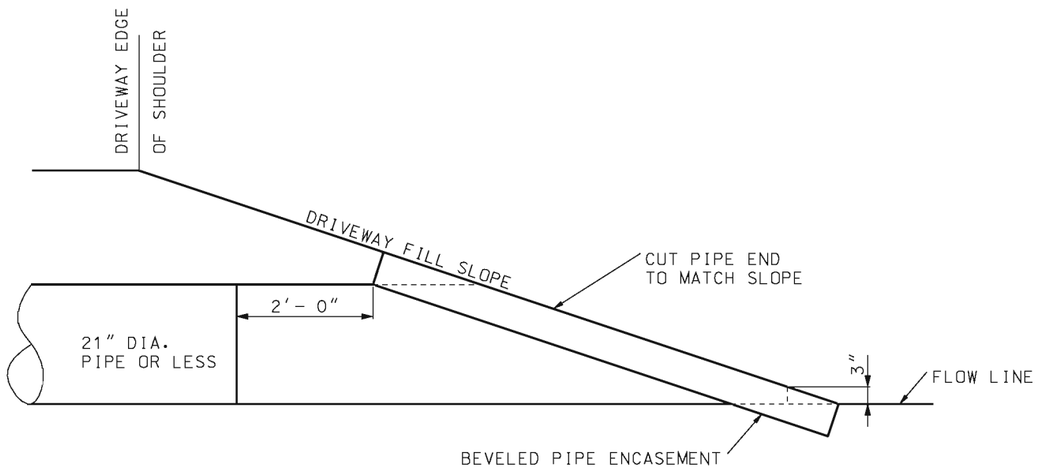

PIPE END DETAILS FOR PARALLEL DRAINAGE STRUCTURES FOR DRIVEWAYS

(SINGLE PIPE INSTALLATION)

NOTE:

FOR MULTIPLE PIPE INSTALLATIONS, END SECTIONS WITH SAFETY BARS SYSTEM OR OPTIONAL BAR GATE SYSTEM SHALL BE PROVIDED. SEE STANDARD PLAN 732.10.

SEE DRIVEWAY STANDARD PLANS FOR BEVELED END SECTION REQUIREMENTS.

GENERAL NOTES:

CONCRETE USED IN CONSTRUCTION OF THE BEVELED PIPE ENCASEMENT SHALL BE CLASS B CONCRETE OR AN APPROVED COMMERCIAL MIX MEETING REQUIREMENTS OF SECTION 501 OF THE STANDARD SPECIFICATIONS.

REINFORCING STEEL USED IN CONSTRUCTION OF THE BEVELED PIPE ENCASEMENT SHALL MEET THE REQUIREMENTS OF SECTION 1036 OF THE STANDARD SPECIFICATIONS.

BEVELED PIPE ENCASEMENT MAY BE USED WITH EITHER POLYETHYLENE OR CORRUGATED METALLIC COATED STEEL PIPE.

THE PRICE BID PER EACH FOR "BEVELED PIPE END TREATMENT" SHALL BE CONSIDERED FULL COMPENSATION FOR FURNISHING ALL MATERIALS AND INSTALLATION OF THE BEVELED PIPE SECTION AND BEVELED PIPE ENCASE-MENT AS SHOWN OR AS DIRECTED BY THE ENGINEER.

THE $\frac{1}{2}$" x 6" BOLT AND NUTS SHALL BE GALVANIZED IN ACCORDANCE WITH AASHTO M232 (ASTM A123) SPE-CIFICATIONS. LOW CARBON STEEL ANCHOR BOLTS SHALL MET ASTM A307.

BEVELED PIPE SHALL BE DRILLED AT LOCATIONS SHOWN ON PLANS FOR PLACEMENT OF $\frac{1}{2}$" x 6" GALVANIZED BOLTS. THE $\frac{1}{2}$" x 6" GALVANIZED BOLTS SHALL BE "DOUBLE NUTTED" AS SHOWN AND PLACED IN THE VALLEY OF PIPE CORRUGATIONS.

IF A SEAL IS PRESENT ON THIS SHEET IT HAS BEEN ELECTRONICALLY SEALED AND DATED.

MISSOURI HIGHWAYS AND TRANSPORTATION COMMISSION
105 WEST CAPITOL
JEFFERSON CITY, MO 65102
1-888-ASK-MODOT (1-888-275-6636)

STATE OF MISSOURI
KATHRYN PHILLIPS HARVEY
NUMBER PE-23751
PROFESSIONAL ENGINEER
THIS SHEET HAS BEEN SIGNED, SEALED AND DATED ELECTRONICALLY.

BEVELED PIPE END TREATMENT FOR DRIVEWAYS

DATE EFFECTIVE:	DATE PREPARED:	732.05C	SHEET NO.
07/01/2004	12/16/2008		2 OF 2

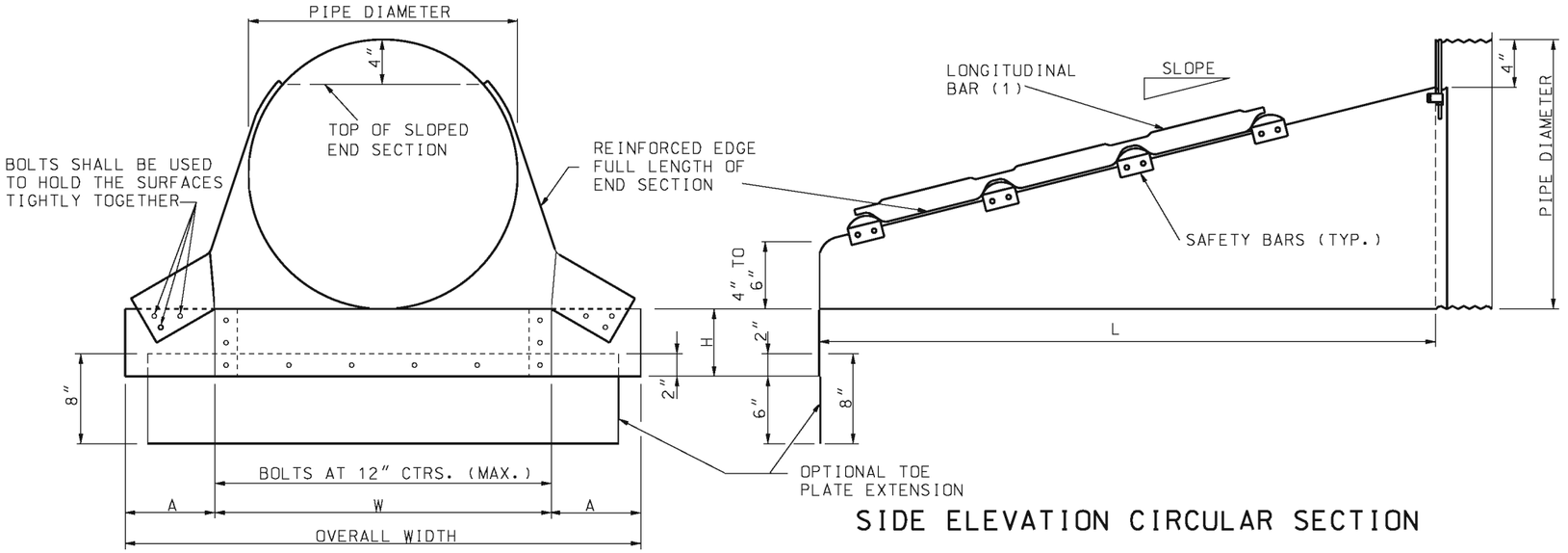

FRONT VIEW CIRCULAR PIPE

SIDE ELEVATION CIRCULAR SECTION

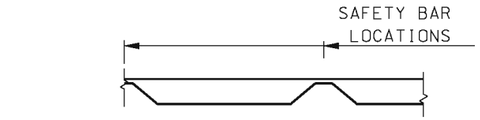

LONGITUDINAL BAR DETAIL

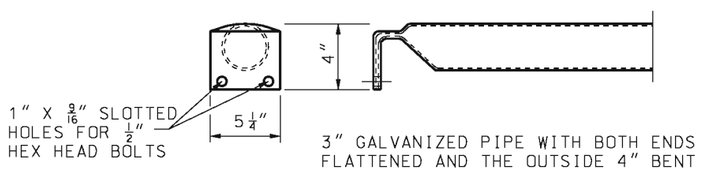

DETAIL OF SAFETY BAR

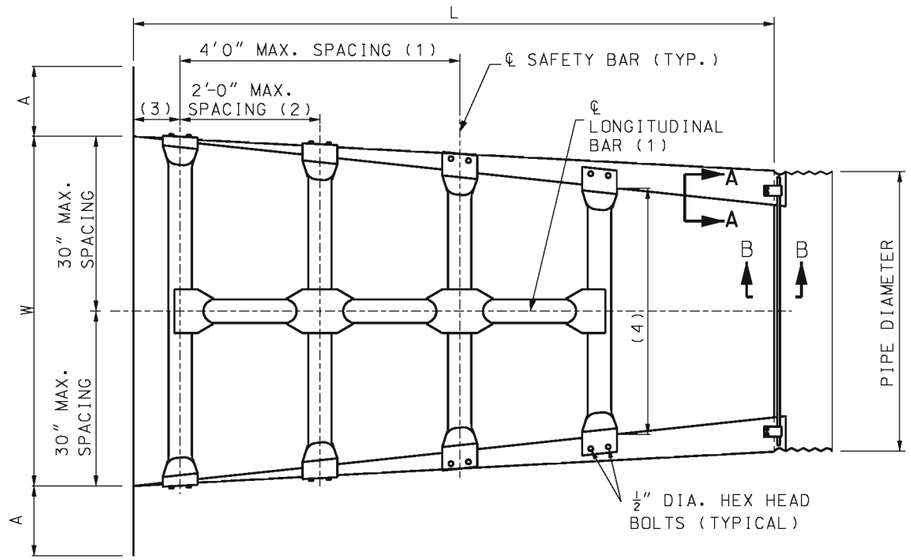

TOP VIEW CIRCULAR SECTION

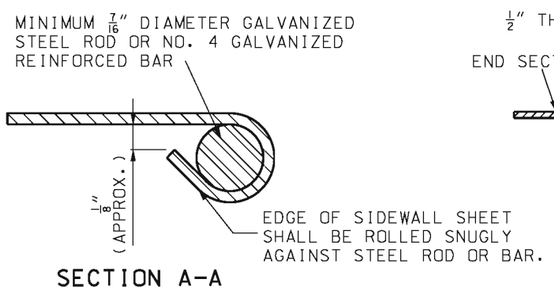

SECTION A-A

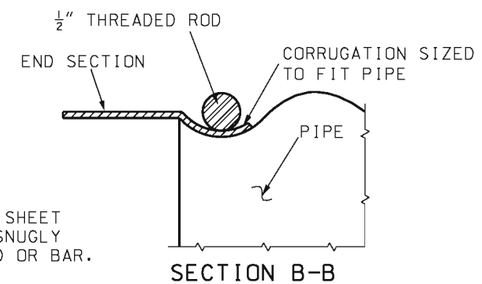

SECTION B-B

LONGITUDINAL BAR, WHEN REQUIRED, SHALL BE WELDED TO SAFETY BARS TO FORM SINGLE GRATE STRUCTURE. LONGITUDINAL BAR IS NOT TO BE USED FOR PARALLEL DRAINAGE STRUCTURES.

NOTES:
(1) FOR CROSSROAD DRAINAGE STRUCTURES ONLY.
(2) FOR PARALLEL DRAINAGE STRUCTURES ONLY.
(3) 4" TO 6" MINIMUM
(4) SAFETY BARS SHALL BE PROVIDED UNTIL THE LATERAL SPAN OF THE OPENING IS LESS THAN OR EQUAL TO 30".

GENERAL NOTES:

END SECTIONS, INCLUDING ALL BOLTS, NUTS, RODS AND STRAPS, SHALL BE FABRICATED FROM GALVANIZED STEEL MEETING THE REQUIREMENTS OF SECTION 1020.

ALL BOLTS UNLESS OTHERWISE SHOWN SHALL BE A307 BOLTS.

WHEN REQUIRED, OPTIONAL TOE PLATE EXTENSION SHALL BE PUNCHED OR DRILLED AND BOLTED TO END SECTION TOE PLATE, STEEL FOR TOE PLATE EXTENSION SHALL BE SAME GAUGE AS END SECTION. DIMENSIONS SHALL BE OVERALL WIDTH LESS 6' BY 8" HIGH.

ATTACHMENT TO CIRCULAR PIPES 15" THROUGH 24" DIAMETER SHALL BE MADE WITH TYPE #1 STRAPS. ALL OTHER SIZES SHALL BE ATTACHED WITH TYPE #2 CONNECTORS.

SAFETY BARS AND LONGITUDINAL BARS SHALL BE FABRICATED FROM STEEL PIPE MEETING THE REQUIREMENTS OF ASTM A-53 SCHEDULE 40 SPECIFICATIONS. SAFETY BARS AND LONGITUDINAL BARS SHALL BE HOT DIPPED GALVANIZED AFTER FABRICATION IN ACCORDANCE WITH SECTION 1020 OF STANDARD SPECIFICATIONS.

INSTALLATION SHALL BE PERFORMED IN ACCORDANCE WITH SECTION 725 AND 732 OF THE STANDARD SPECIFICATIONS.

SLOTTED HOLES FOR SAFETY BAR ATTACHMENT SHALL BE PROVIDED FOR ALL END SECTIONS.

MINOR VARIATIONS OF DETAIL WILL BE ACCECTED TO PERMIT THE USE OF A MANUFACTURER'S STANDARD METHODS OF FABRICATION.

END SECTIONS FABRICATED FROM THICKER METAL THAN INDICATED WILL BE ACCEPTED.

ALL BOLTS SHALL BE 3/8" DIAMETER AND GALVANIZED, UNLESS OTHERWISE SHOWN.

SKIRT SECTION IS DEFINED AS THE FLARED PORTION OF THE END SECTION INCLUDING SIDE AND BOTTOM (CENTER) PANELS AND APRON.

SKIRT SECTION FOR 12" TROUGH 24" PIPES SHALL BE MADE IN ONE PIECE.

SKIRT SECTIONS FOR 30" AND LARGER PIPES MAY BE MADE FROM UP TO 2 SHEETS JOINED BY RIVETING OR BOLTING ON CENTERLINE.

SKIRT SECTIONS FROM 48" AND LARGER PIPES MAY BE MADE FROM UP TO 3 SHEETS JOINED BY RIVETING OR BOLTING EQUAL DISTANCE FROM CENTERLINE.

ALL 3 PIECE SKIRTS FOR 60" PIPES SHALL HAVE 0.109" THICK SIDES AND 0.138" THICK BOTTOM (CENTER) PANELS. WIDTH OF BOTTOM PANELS SHALL BE GREATER THAN 20% OF THE PIPE PERIPHERY CONNECTOR SECTION. CORNER PLATES AND TOE PLATES SHALL BE GALVANIZED AND OF THE SAME OR GREATER THICKNESS AS THE SKIRT.

IF A SEAL IS PRESENT ON THIS SHEET IT HAS BEEN ELECTRONICALLY SEALED AND DATED.

MISSOURI HIGHWAYS AND TRANSPORTATION COMMISSION
105 WEST CAPITOL
JEFFERSON CITY, MO 65102
1-888-ASK-MODOT (1-888-275-6636)

STATE OF MISSOURI
KATHRYN PHILLIPS HARVEY
NUMBER PE-23751
PROFESSIONAL ENGINEER
THIS SHEET HAS BEEN SIGNED, SEALED AND DATED ELECTRONICALLY.

SAFETY SLOPE END SECTION

DATE EFFECTIVE: 06/01/2013
DATE PREPARED: 4/1/2013

732.10H

SHEET NO. 1 OF 3

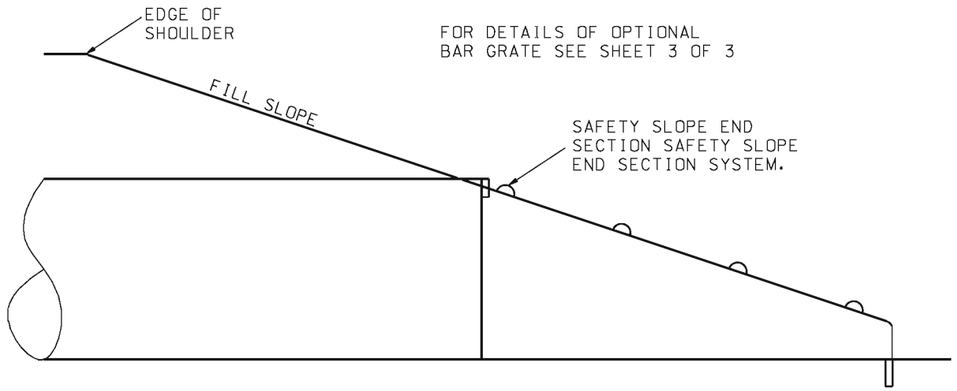

FOR DETAILS OF OPTIONAL
BAR GRATE SEE SHEET 3 OF 3

PIPE END DETAILS FOR DRAINAGE STRUCTURES

(SINGLE PIPE INSTALLATION)

NOTE:
SEE DRIVEWAY STANDARD PLANS FOR
BEVELED END SECTION REQUIREMENT.

FOR CONNECTION DETAILS, SEE 732.00
SHEET 3 OF 3.

METAL END SECTIONS FOR CIRCULAR PIPES												
PIPE DIA. (IN.)	MIN. GAUGE ENDS (IN.) 4:1 & 6:1	MIN. GAUGE ENDS (IN.) 10:1	DIMENSIONS IN INCHES				L DIMENSIONS					
			A 1" TOL.	H 1" TOL.	W 2" TOL.	OVERALL WIDTH	SLOPE	LENGTH (IN.)	SLOPE	LENGTH (IN.)	SLOPE	LENGTH (IN.)
15	16	12	8	6	21	37	4:1	20	6:1	30	10:1	70
18	16	12	8	6	24	40	4:1	32	6:1	48	10:1	100
21	16	12	8	6	27	43	4:1	44	6:1	66	10:1	130
24	16	12	8	6	30	46	4:1	56	6:1	84	10:1	160
30	12		12	9	36	60	4:1	80	6:1	120	10:1	220
36	12		12	9	42	66	4:1	104	6:1	156	10:1	280
42	12		16	12	48	80	4:1	128	6:1	192		
48	12		16	12	54	86	4:1	152	6:1	228		
54	12		16	12	60	92	4:1	176	6:1	264		
60	12		16	12	66	98	4:1	200	6:1	300		

IF A SEAL IS PRESENT ON THIS SHEET IT HAS BEEN ELECTRONICALLY SEALED AND DATED.

MISSOURI HIGHWAYS AND TRANSPORTATION COMMISSION
105 WEST CAPITOL
JEFFERSON CITY, MO 65102
1-888-ASK-MODOT (1-888-275-6636)

STATE OF MISSOURI
KATHRYN PHILLIPS HARVEY
NUMBER PE-23751
PROFESSIONAL ENGINEER
THIS SHEET HAS BEEN SIGNED, SEALED AND DATED ELECTRONICALLY.

SAFETY SLOPE END SECTION

DATE EFFECTIVE: 06/01/2013
DATE PREPARED: 4/1/2013

732.10H

BAR GRATE SYSTEM DATA

DRAIN PIPE SIZE	3:1 SLOPE									4:1 SLOPE									6:1 SLOPE								
	A	B	C	D	E	"F" BARS	G	H	J	A	B	C	D	E	"F" BARS	G	H	J	A	B	C	D	E	"F" BARS	G	H	J
15"**																											
18"**																											
21"**																											
24"	0	4	2'-0"	6"	15"	$\frac{5}{8}$"	8 $\frac{1}{4}$"	3'-3"	18.4°	0	4	2'-0"	15 $\frac{3}{4}$"	15"	$\frac{5}{8}$"	12"	3'-3"	14°	2	4	2'-0"	13 $\frac{1}{8}$"	15"	$\frac{5}{8}$"	12"	3'-3"	9.5°
30"	0	5	2'-6"	15 $\frac{1}{4}$"	18"	$\frac{5}{8}$"	12"	3'-9"	18.4°	1	5	2'-6"	16 $\frac{1}{2}$"	18"	$\frac{5}{8}$"	12"	3'-9"	14°	3	5	2'-6"	19 $\frac{5}{8}$"	18"	$\frac{5}{8}$"	12"	3'-9"	9.5°
36"	1	6	3'-0"	16 $\frac{1}{4}$"	18"	$\frac{3}{4}$"	12"	4'-3"	18.4°	2	6	3'-0"	18"	18"	$\frac{3}{4}$"	17 $\frac{1}{4}$"	4'-3"	14°	5	6	3'-0"	20 $\frac{1}{8}$"	18"	$\frac{3}{4}$"	12"	4'-3"	9.5°
42"	2	7	3'-6"	17 $\frac{1}{4}$"	18"	1"	12"	4'-9"	18.4°	4	7	3'-6"	12"	18"	1"	12"	4'-9"	14°	7	7	3'-6"	11 $\frac{7}{8}$"	18"	1"	9"	4'-9"	10.1°
48"	3	8	4'-0"	18"	18"	1"	12 $\frac{1}{8}$"	5'-3"	18.4°	5	8	4'-0"	18"	18"	1"	12 $\frac{5}{8}$"	5'-3"	14°	7	8	4'-0"	13"	18"	1"	9"	5'-3"	11.9°
54"	4	9	4'-6"	18"	18"	1 $\frac{1}{8}$"	13 $\frac{1}{8}$"	5'-9"	18.4°	6	9	4'-6"	18"	18"	1 $\frac{1}{8}$"	19 $\frac{3}{8}$"	5'-9"	14°	7	9	4'-6"	14 $\frac{1}{4}$"	18"	1 $\frac{1}{8}$"	9"	5'-9"	13.7°

** BAR GRATE SYSTEM IS NOT REQUIRED FOR DRAIN PIPE DIAMETER OF 21" OR LESS, FOR SINGLE PIPE INSTALLATIONS.

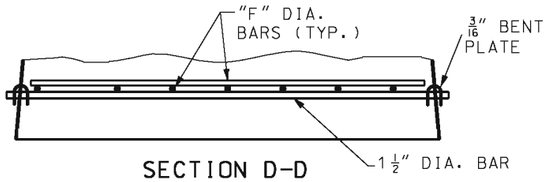

SECTION D-D

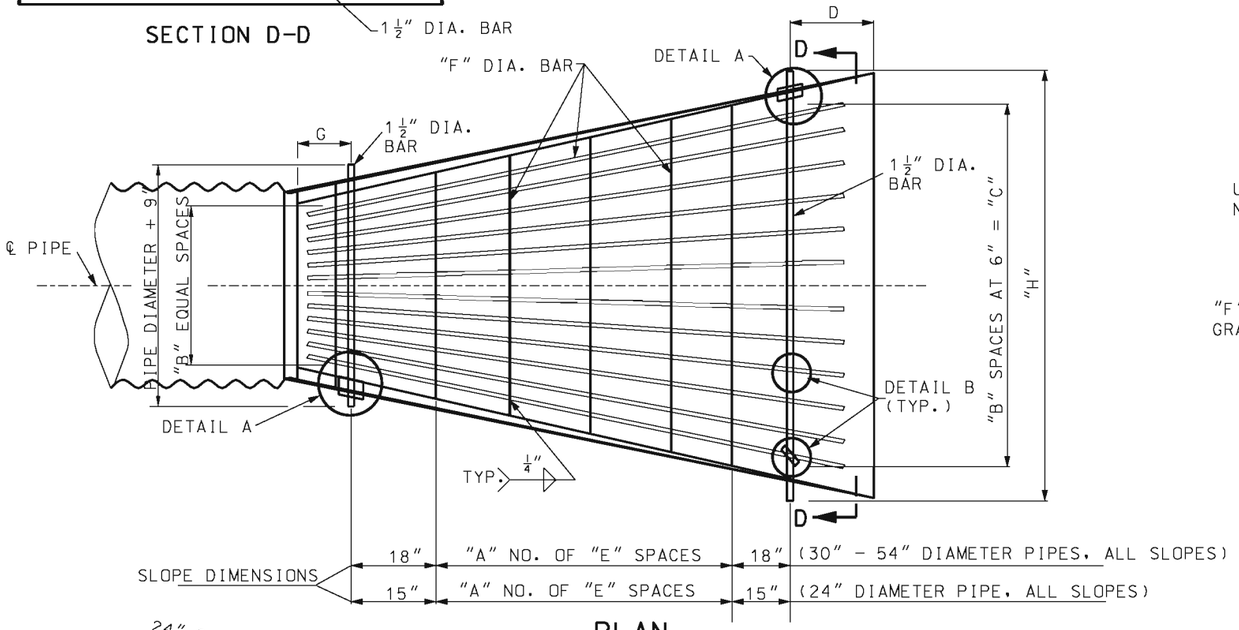

PLAN

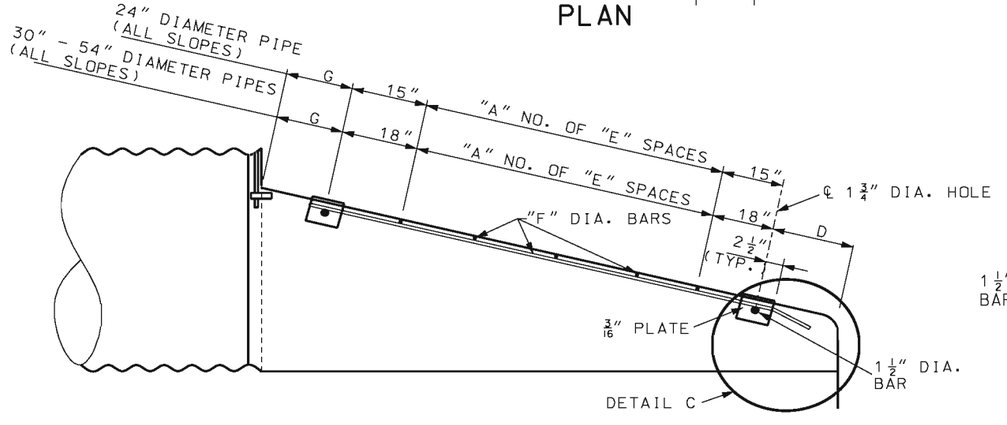

ELEVATION

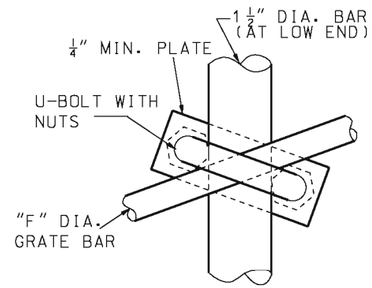

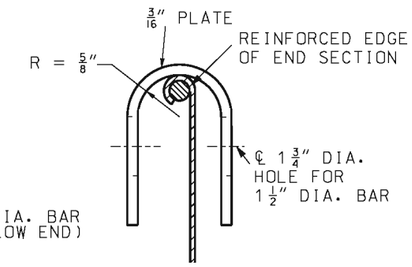

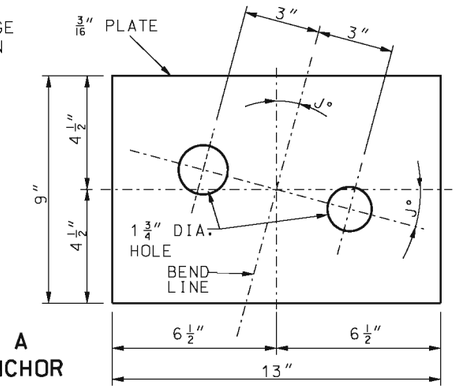

DETAIL A
BENT PLATE ANCHOR

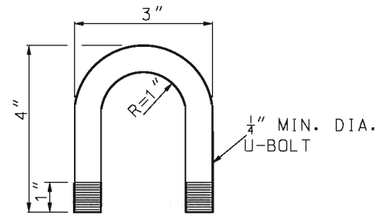

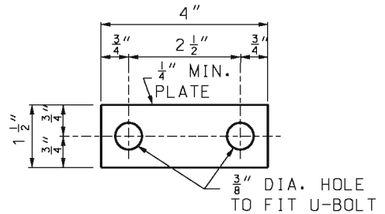

DETAIL B
U-BOLT ANCHOR

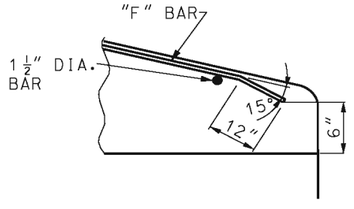

DETAIL C

GENERAL NOTES:

ALL STEEL MATERIAL FOR BAR GRATE SYSTEM SHALL BE IN ACCORDANCE WITH ASTM A575 GRADE 1020 STEEL.

ALL MATERIAL IN GRATE SYSTEM SHALL BE GALVANIZED.

GALVANIZING SHALL BE DONE IN ACCORDANCE WITH ASTM A123.

ALL MATERIALS, FABRICATION AND INSTALLATION OF OPTIONAL BAR GRATE SYSTEM USED IN LIEU OF SAFETY BAR SYSTEM SHALL BE INCLUDED IN CONTRACT UNIT PRICE BID FOR END SECTION (SAFETY SLOPE).

MISSOURI HIGHWAYS AND TRANSPORTATION COMMISSION
105 WEST CAPITOL
JEFFERSON CITY, MO 65102
1-888-ASK-MODOT (1-888-275-6636)

STATE OF MISSOURI
KATHRYN PHILLIPS HARVEY
NUMBER PE-23751
PROFESSIONAL ENGINEER
THIS SHEET HAS BEEN SIGNED, SEALED AND DATED ELECTRONICALLY.

OPTIONAL BAR GRATE SYSTEM FOR SAFETY SLOPE END SECTION

DATE EFFECTIVE: 06/01/2013
DATE PREPARED: 4/1/2013

732.10H

SHEET NO. 3 OF 3

IF A SEAL IS PRESENT ON THIS SHEET IT HAS BEEN ELECTRONICALLY SEALED AND DATED.

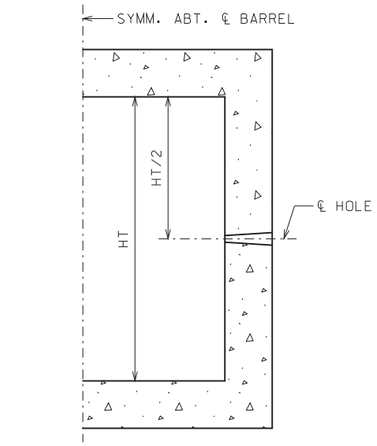

HALF SECTION THRU BARREL

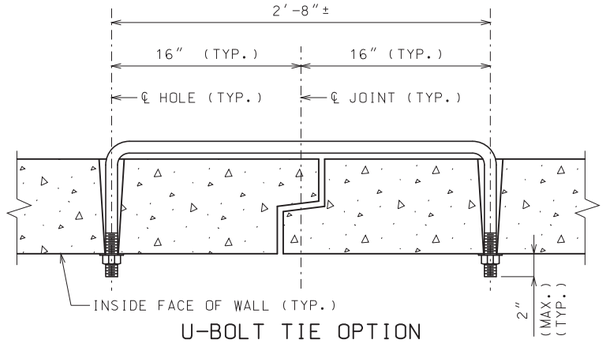

U-BOLT TIE OPTION

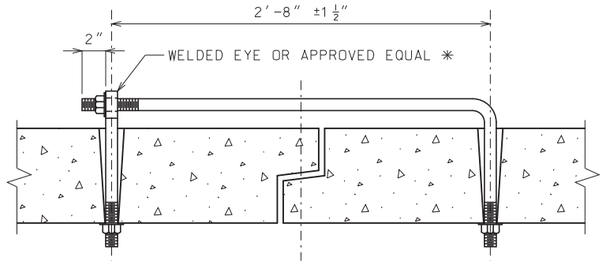

✳ THE CONNECTIONS SHALL BE PLACED AT DOWNSTREAM END WHEN PLACED INSIDE OF STRUCTURE.

EYE BOLT TIE OPTION

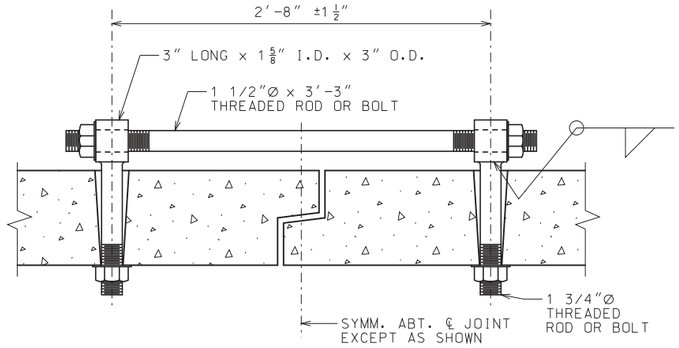

DOUBLE CONNECTION TIE

EXTRA STRENGTH CONNECTION DETAILS

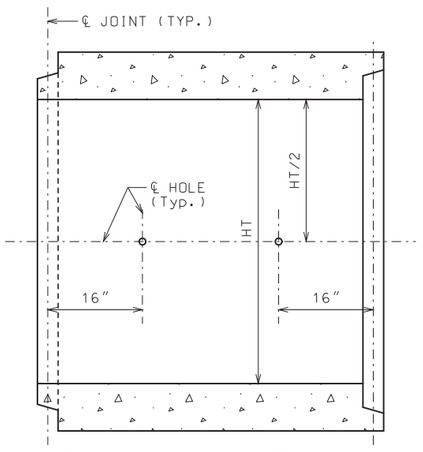

LONGITUDINAL SECTION

PLACEMENT OF HOLES

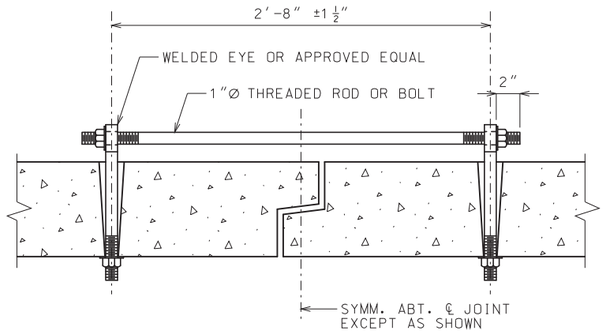

DOUBLE CONNECTION TIE OPTION

REGULAR STRENGTH CONNECTION DETAILS

GENERAL NOTES:

TIES SHALL BE USED ONLY TO HOLD BOX SECTIONS TOGETHER, NOT FOR PULLING SECTIONS TIGHT.

TIE ROD THREADS SHALL PROJECT TO THE INSIDE OF CULVERT EXCEPT AS NOTED ON PLANS.

HOLES:
HOLES SHALL BE CAST OR DRILLED 16 INCHES FROM CENTERLINE OF JOINT AS SHOWN, UNLESS FORMS ARE SET UP FOR 16-INCH SPACING FROM OUTSIDE OF JOINT.

TAPERED HOLES ARE PERMITTED WHEN PRECAST.

REGULAR STRENGTH CONNECTIONS:
REGULAR STRENGTH CULVERT TIES SHALL BE 1″Ø THREADED RODS.

TIE RODS FOR REGULAR STRENGTH CONNECTIONS SHALL BE GALVANIZED IN ACCORDANCE WITH SEC 1081.

EXTRA STRENGTH CONNECTIONS:
THREADED RODS FOR EXTRA STRENGTH CONNECTIONS SHALL BE STAINLESS STEEL IN ACCORDANCE WITH ASTM A193 OR A320.

NUTS FOR EXTRA STRENGTH CONNECTIONS SHALL BE STAINLESS STEEL IN ACCORDANCE WITH ASTM A194 AND OF GRADE EQUIVALENT TO GRADE USED FOR THREADED RODS.

MISSOURI HIGHWAYS AND TRANSPORTATION COMMISSION
105 WEST CAPITOL
JEFFERSON CITY, MO 65102
1-888-ASK-MODOT (1-888-275-6636)

STATE OF MISSOURI
ERIC E. SCHROETER
NUMBER PE-28411
PROFESSIONAL ENGINEER
THIS SHEET HAS BEEN SIGNED, SEALED AND DATED ELECTRONICALLY.

PRECAST CONCRETE BOX CULVERT TIES

DATE EFFECTIVE: 04/01/2018
DATE PREPARED: 2/9/2018

733.00

SHEET NO. 1 OF 1

IF A SEAL IS PRESENT ON THIS SHEET IT HAS BEEN ELECTRONICALLY SEALED AND DATED.

ROCK DITCH CHECK

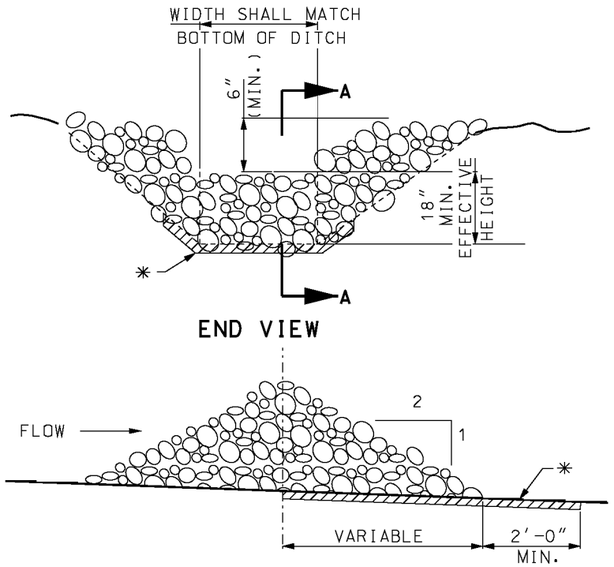

END VIEW

SECTION A-A

* GEOTEXTILE LINING MAY BE INSTALLED AS REQUIRED BY THE ENGINEER.

NOTE:

ROCK DITCH CHECK IN THE CLEAR ZONE SHALL BE REMOVED OR LEVELED (IF ALLOWABLE) AFTER THE VEGETATION HAS SUFFICIENTLY MATURED TO PROTECT THE DITCH OR SWALE.

EXAMPLE DITCH CHECK SPACING FOR STANDARD HEIGHTS (FT.)		
DITCH ℄ SLOPE %	SPACING FOR 9" EFF. HEIGHT	SPACING FOR 18" EFF. HEIGHT
0.5	150	300
1.0	75	150
1.5	50	100
2.0	37	75
2.5	30	60
3.0	25	50
3.5	21	43
4.0	19	38
4.5	16	33
5.0	15	30
5.5	13	27
6.0	12	25
6.5	11	23
7.0	10	21
7.5	10	20
8.0	9	19
8.5	9	18
9.0	8	17
9.5	8	16
10.0	7	15

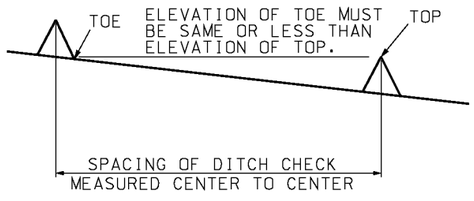

MINIMUM DITCH CHECK SPACING

ALTERNATE DITCH CHECK

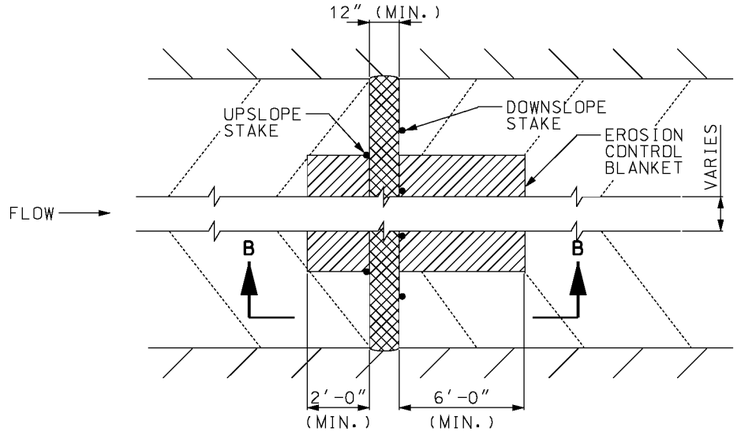

PLAN VIEW

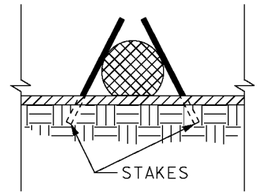

SECTION B-B

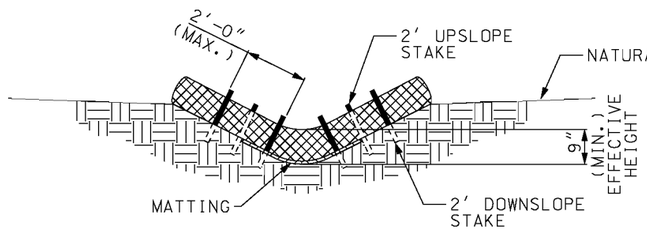

TYPICAL SECTION
VEE DITCH

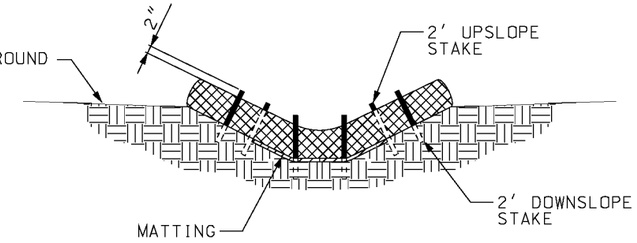

TYPICAL SECTION
TRAPEZOIDAL DITCH

NOTES:

USE MINIMUM 12 IN. DIAMETER LOG/SOCK.

USE 2 FT. WOODEN STAKES WITH A 2 IN. BY 2 IN. NOMINAL CROSS SECTION.

INSTALL LOG/SOCK TO A HEIGHT IN DITCH SO FLOW WILL NOT WASH AROUND LOG/SOCK AND SCOUR DITCH SLOPES OR AS DIRECTED BY ENGINEER.

INSTALL A MINIMUM OF 2 UPSLOPE STAKES AND 4 DOWNSLOPE STAKES AT AN ANGLE TO WEDGE LOG/SOCK TO BOTTOM OF DITCH.

EROSION CONTROL BLANKET SHALL BE ANCHORED ACCORDING TO THE MANUFACTURER'S RECOMMENDATIONS.

GENERAL NOTES:

OTHER PROPRIETARY DITCH CHECKS MAY BE SUBSTITUTED IN ACCORDANCE WITH SEC 806 OR AS DIRECTED BY THE ENGINEER.

INSTALLATION OF PROPRIETARY DITCH CHECKS SHALL BE ACCORDING TO THE MANUFACTURER'S RECOMMENDATIONS.

IF A SEAL IS PRESENT ON THIS SHEET IT HAS BEEN ELECTRONICALLY SEALED AND DATED.

MISSOURI HIGHWAYS AND TRANSPORTATION COMMISSION
105 WEST CAPITOL
JEFFERSON CITY, MO 65102
1-888-ASK-MODOT (1-888-275-6636)

STATE OF MISSOURI
ERIC E. SCHROETER
NUMBER PE-28411
PROFESSIONAL ENGINEER
THIS SHEET HAS BEEN SIGNED, SEALED AND DATED ELECTRONICALLY.

TEMPORARY EROSION CONTROL MEASURES

TEMPORARY DITCH CHECKS

DATE EFFECTIVE: 04/01/2015
DATE PREPARED: 2/20/2015

806.10J

SHEET NO. 1 OF 6

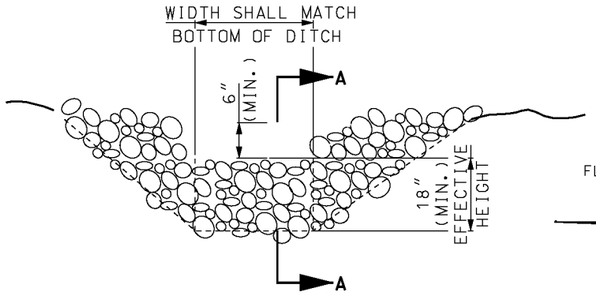

END VIEW

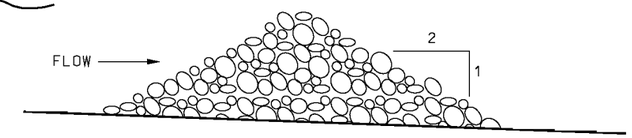

SECTION A-A

SEDIMENT TRAP

NOTE:

SEDIMENT TRAP IN THE CLEAR ZONE SHALL BE REMOVED OR LEVELED (IF ALLOWABLE) AFTER THE VEGETATION HAS SUFFICIENTLY MATURED TO PROTECT THE DITCH OR SWALE.

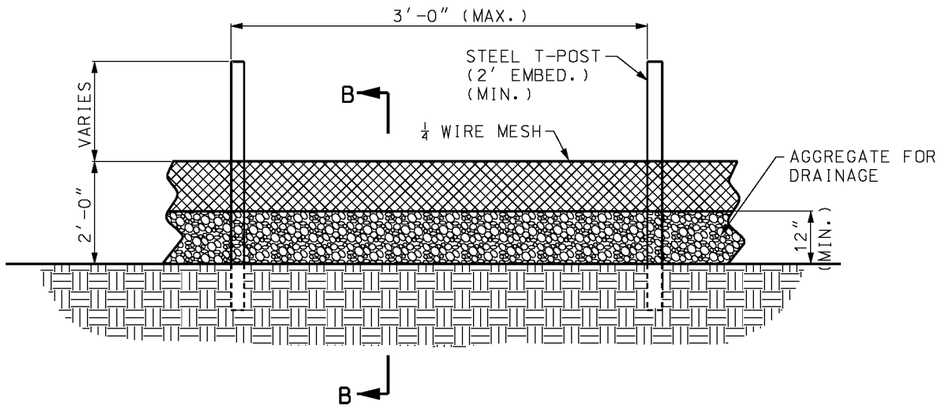

ELEVATION DETAIL

NOTES:

AGGREGATE FOR DRAINAGE SHALL BE IN ACCORDANCE WITH SEC 1009, GRADE 4 OR GRADE 5.

USE HARDWARE CLOTH 24 GAUGE WIRE MESH WITH ¼ INCH MESH OPENINGS.

INSTALL 5 FT. T-POST WITH A 2 FOOT EMBEDMENT DEPTH (MIN.).

ATTACH HARDWARE CLOTH TO POST WITH WIRE STAPLE OR OTHER ACCEPTABLE METHODS

SPACE POST A MAXIMUM OF 3 FT.

FOR INSTALLATION BETWEEN SECTIONS OF SILT FENCE, EXTEND AGGREGATE FOR DRAINAGE A MINIMUM OF 12 INCHES ON EACH SIDE OF SPECIAL SEDIMENT CONTROL FENCE SECTION.

INSTALLATION SHALL BE FOR AREA INLETS AND PERIMETER PROTECTION BMP'S.

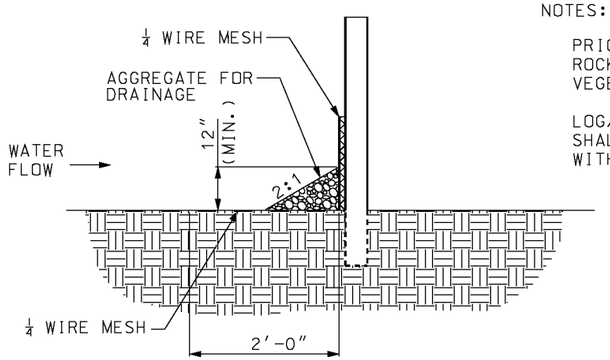

SECTION B-B

ROCK/MESH SEDIMENT CONTROL FENCE

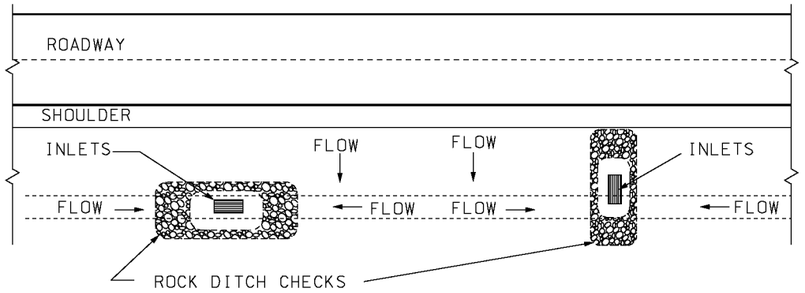

DROP INLET CHECK

SEE SHEET 1 OF 6 FOR DETAILS OF ROCK DITCH CHECK.

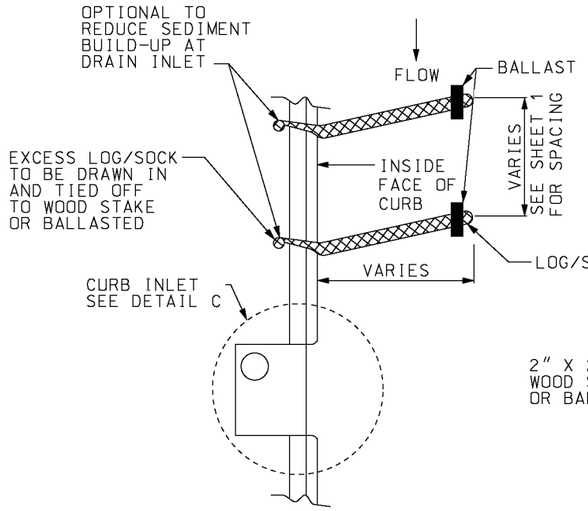

PLAN

NOTES:

PRIOR TO PLACEMENT ALL DEBRIS, ROCK, LARGE CLODS AND WOOD VEGETATION SHALL BE CLEARED.

LOG/SOCK PLACED ON PAVEMENT SHALL BE WEIGHTED DOWN WITH GRAVEL/SAND BALLAST.

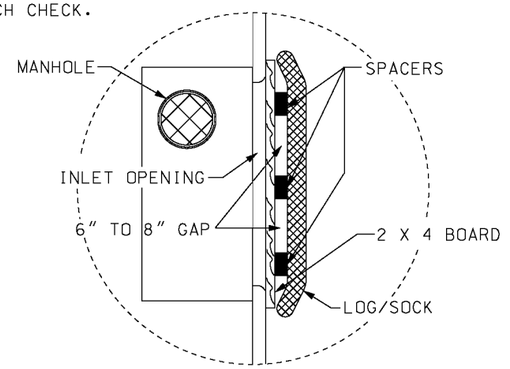

DETAIL C

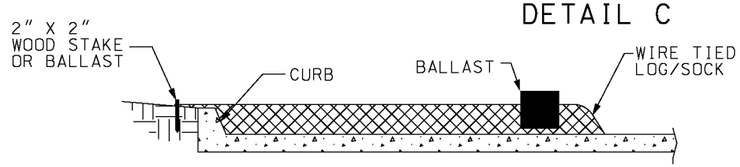

SECTION

INLET PROTECTION DROP CONTAINMENT

GENERAL NOTES:

OTHER PROPERIETARY INLET PROTECTION MAY BE SUBSTITUTED IN ACCORDANCE WITH SEC 806 OR AS DIRECTED BY THE ENGINEER.

FOR SEDIMENT CONTROL SPACING SEE SHEET 1 OF 6.

MISSOURI HIGHWAYS AND TRANSPORTATION COMMISSION
105 WEST CAPITOL
JEFFERSON CITY, MO 65102
1-888-ASK-MODOT (1-888-275-6636)

STATE OF MISSOURI
ERIC E. SCHROETER
NUMBER PE-2841
PROFESSIONAL ENGINEER
THIS SHEET HAS BEEN SIGNED, SEALED AND DATED ELECTRONICALLY.

TEMPORARY EROSION CONTROL MEASURES

DATE EFFECTIVE: 04/01/2015
DATE PREPARED: 2/20/2015

806.10J

SHEET NO. 2 OF 6

IF A SEAL IS PRESENT ON THIS SHEET IT HAS BEEN ELECTRONICALLY SEALED AND DATED.

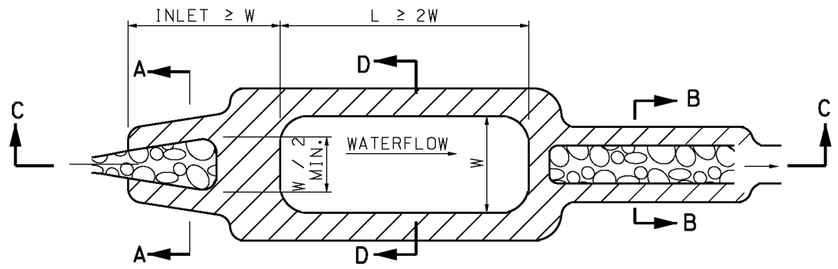

PLAN VIEW

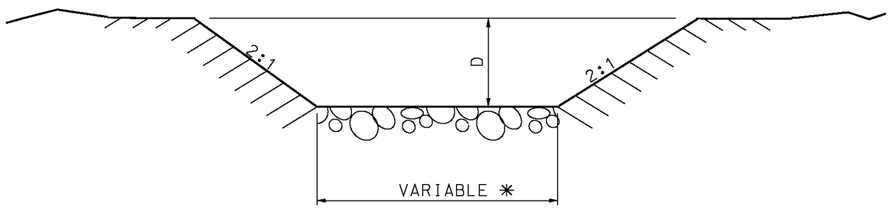

SECTION A-A

INLET

D = 1.0′ + DESIGN FLOW DEPTH-MIN.

✳ VARIES FROM WIDTH OF STREAM AT INLET TO ONE-HALF WIDTH OF POND AT OUTLET.

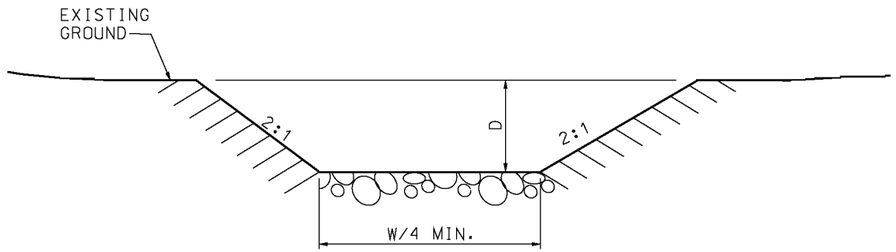

SECTION B-B

OUTLET

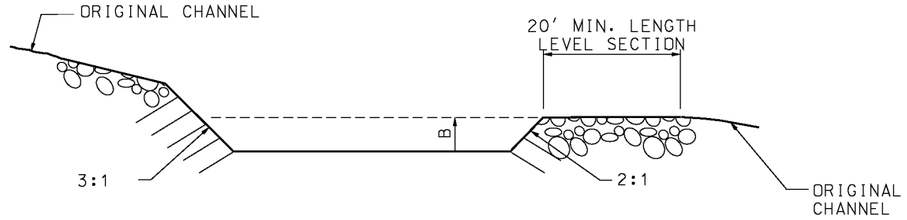

SECTION C-C

EFFECTIVE DEPTH "B" = MIN. 2′, MAX. 6′ DEPENDENT UPON CONFIGURATION REQUIRED BY LOCATION AND ESTIMATED VOLUME.

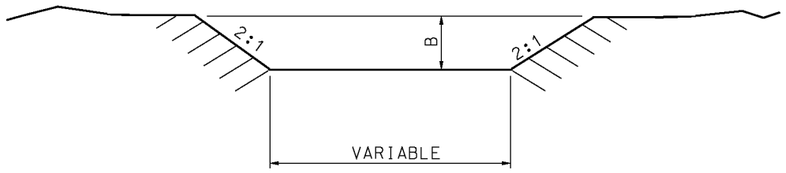

SECTION D-D

LAYER OF APPROVED STABILIZING MATERIAL FOR SCOUR PREVENTION

GENERAL NOTES:

SEDIMENT BASINS ARE TO BE INCLUDED IN THE BMP SYSTEM WHEN THE GEOMETRY OF RIGHT-OF-WAY ALLOWS. WHERE INCLUDED, SEDIMENT BASINS ARE TO BE DESIGNED AND CONSTRUCTED TO PROVIDE STORAGE VOLUME FOR THE LOCAL 2-YR, 24-HOUR STORM FOR DISTURBED ACREAGE DRAINING TO THEM. IF THE DESIGN STORM VOLUME HAS NOT BEEN CALCULATED, BASINS ARE TO BE DESIGNED AND CONSTRUCTED TO PROVIDE A STORAGE VOLUME OF AT LEAST 3,600 CUBIC FEET PER DISTURBED ACRE DRAINING TO THE BASIN(S).

IF SEDIMENT BASIN IS TO BE PERMANENT ITS SLOPES SHALL BE STABILIZED WITH ROCK RIPRAP OR EQUIVALENT.

THE MATERIALS FOR ROCK RIPRAP SHALL MEET THE REQUIREMENTS OF SEC 611.30 FOR TYPE 2 ROCK BLANKET.

SEE PLANS FOR LENGTH, DEPTH AND WIDTH OF BASIN.

SEE PLANS FOR ESTIMATED QUANTITIES OF ROCK RIPRAP - CUBIC YARDS.

MISSOURI HIGHWAYS AND TRANSPORTATION COMMISSION
105 WEST CAPITOL
JEFFERSON CITY, MO 65102
1-888-ASK-MODOT (1-888-275-6636)

STATE OF MISSOURI
ERIC E. SCHROETER
NUMBER PE-28411
PROFESSIONAL ENGINEER
THIS SHEET HAS BEEN SIGNED, SEALED AND DATED ELECTRONICALLY.

TEMPORARY EROSION CONTROL MEASURES

SEDIMENT BASIN

DATE EFFECTIVE:	04/01/2015	806.10J	SHEET NO. 3 OF 6
DATE PREPARED:	2/20/2015		

IF A SEAL IS PRESENT ON THIS SHEET IT HAS BEEN ELECTRONICALLY SEALED AND DATED.

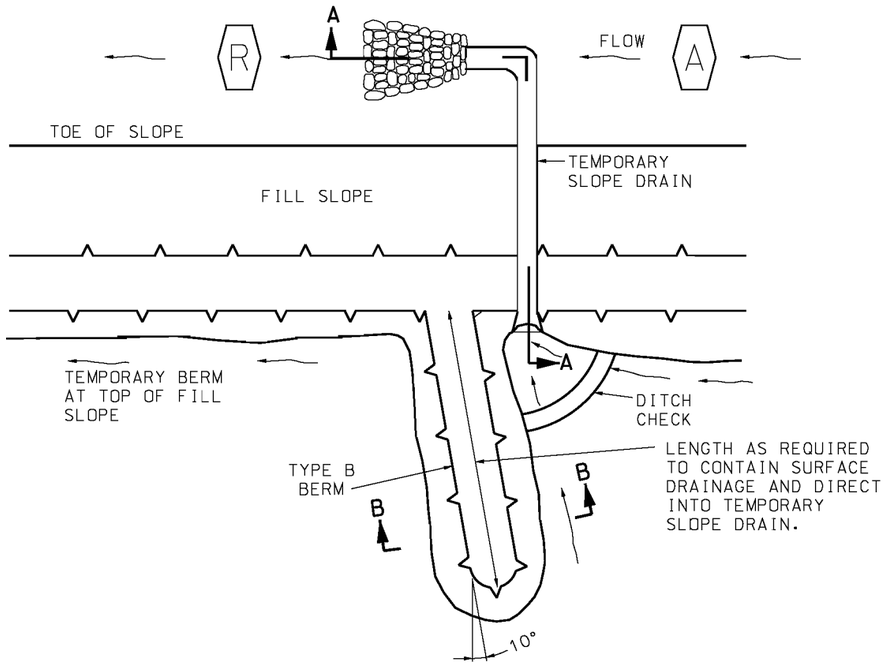

PLAN VIEW

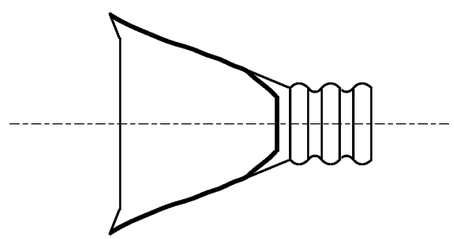

PLAN VIEW

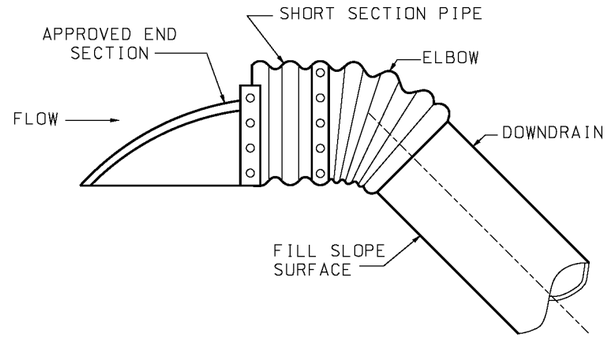

SECTION VIEW

TEMPORARY SLOPE DRAIN INLET TREATMENT

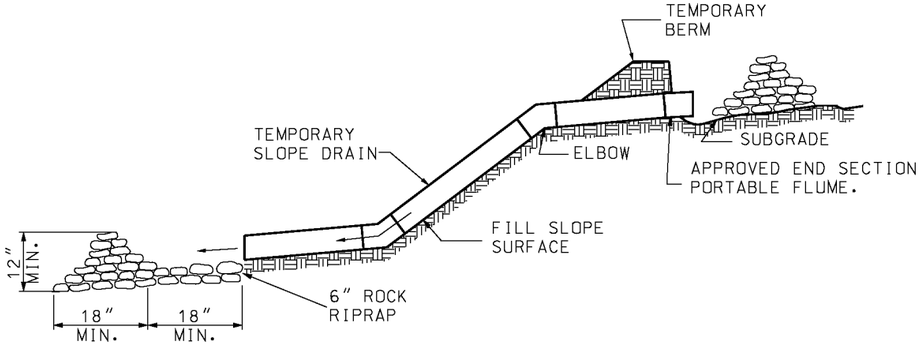

NOTE:

IN SOME CASES IT MAY BE NECESSARY TO EMBED METAL OR PLASTIC PIPE INTO THE FILL SLOPE TO SECURE PROPER ANCHORAGE.

SECTION A-A

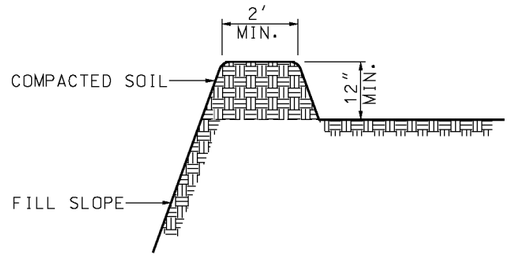

SECTION B-B
TYPE B BERM

TEMPORARY BERM

(METAL, FLEXIBLE RUBBER OR PLASTIC PIPE)

NOTE:
MAXIMUM LENGTH BETWEEN SLOPE DRAINS SHALL BE APPROXIMATELY 500 FEET.

IF A SEAL IS PRESENT ON THIS SHEET IT HAS BEEN ELECTRONICALLY SEALED AND DATED.

MISSOURI HIGHWAYS AND TRANSPORTATION COMMISSION
105 WEST CAPITOL
JEFFERSON CITY, MO 65102
1-888-ASK-MODOT (1-888-275-6636)

STATE OF MISSOURI
ERIC E. SCHROETER
NUMBER PE-28411
PROFESSIONAL ENGINEER
THIS SHEET HAS BEEN SIGNED, SEALED AND DATED ELECTRONICALLY.

TEMPORARY EROSION CONTROL MEASURES

SLOPE DRAINS

DATE EFFECTIVE: 04/01/2015
DATE PREPARED: 2/20/2015

806.10J

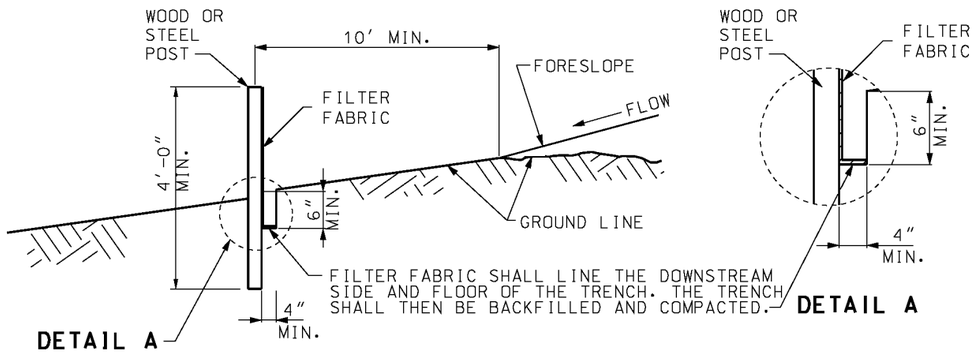

TYPICAL B-B

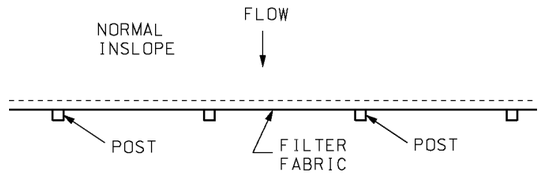

PLAN VIEW

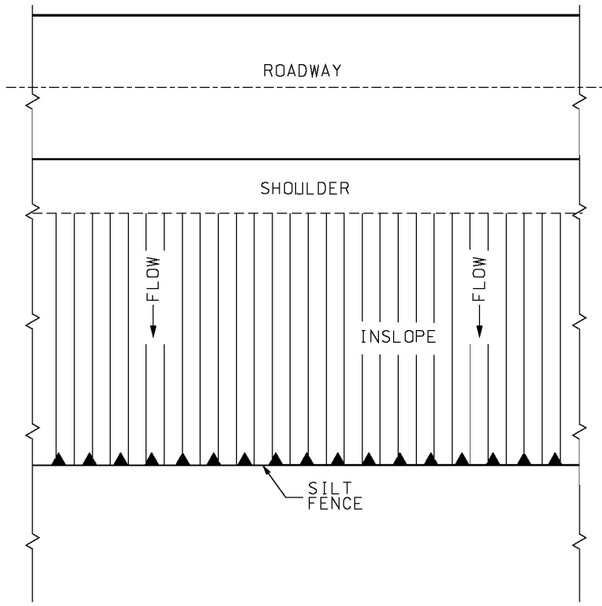

PERIMETER SILT FENCE
FOR TRANSVERSE FLOW

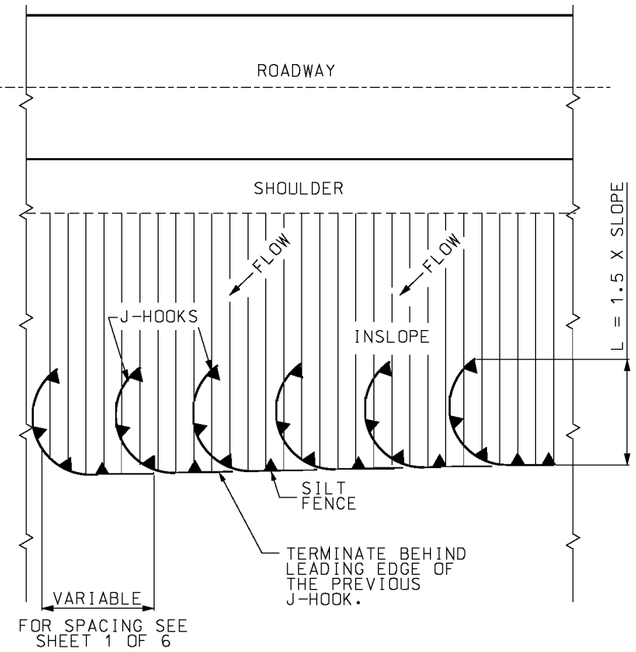

PERIMETER SILT FENCE
FOR ANGULAR FLOW

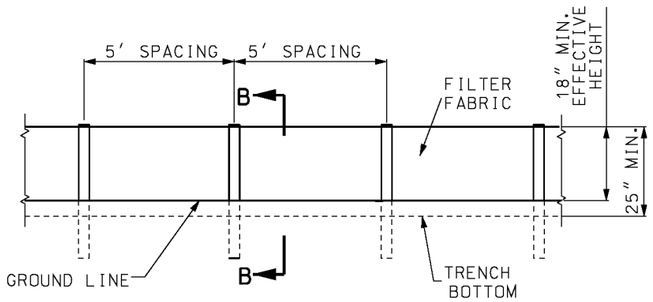

ELEVATION DETAIL
FABRIC SILT FENCE

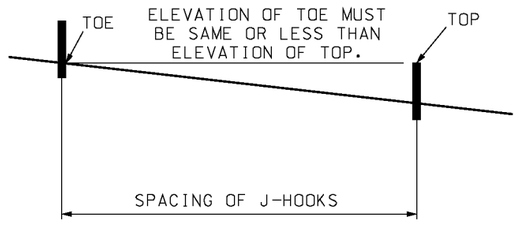

MINIMUM J-HOOK SPACING

GENERAL NOTES:

USE SILT FENCE FOR FILL HEIGHTS GREATER OR EQUAL TO 10 FEET. ON ALL FILLS GREATER THAN 10 FEET HIGH, MID-SLOPE RUNS OF SILT FENCE SHOULD BE CONSIDERED.

FOR FABRIC SILT FENCE:

MINIMUM LONGITUDINAL SPLICE OVERLAP SHALL BE 2' WITH A POST AT EACH END.

SECURE FABRIC TO POSTS.

INSTEAD OF SILT FENCE ACROSS DRAINAGE DITCHES AND DRAINS, DITCH CHECKS SHALL BE USED AS SHOWN ON PLANS OR AS DIRECTED BY ENGINEER.

AT CULVERTS, PLACE SEDIMENT BARRIERS OVER THE TOP OF THE CULVERTS (NOT IN THE STREAM CHANNEL).

MISSOURI HIGHWAYS AND TRANSPORTATION COMMISSION
105 WEST CAPITOL
JEFFERSON CITY, MO 65102
1-888-ASK-MODOT (1-888-275-6636)

STATE OF MISSOURI
ERIC E. SCHROETER
NUMBER PE-28411
PROFESSIONAL ENGINEER
THIS SHEET HAS BEEN SIGNED, SEALED AND DATED ELECTRONICALLY.

TEMPORARY EROSION CONTROL MEASURES

SILT FENCE

DATE EFFECTIVE: 04/01/2015
DATE PREPARED: 2/20/2015

806.10J

SHEET NO. 5 OF 6

IF A SEAL IS PRESENT ON THIS SHEET IT HAS BEEN ELECTRONICALLY SEALED AND DATED.

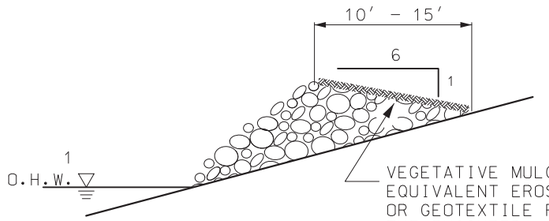

SECTION A–A
TYPE C BERM

(1) TYPE C BERM SHALL BE PLACED ABOVE THE ORDINARY HIGH WATER (O.H.W.) OR AT AN ELEVATION AS DIRECTED BY THE ENGINEER.

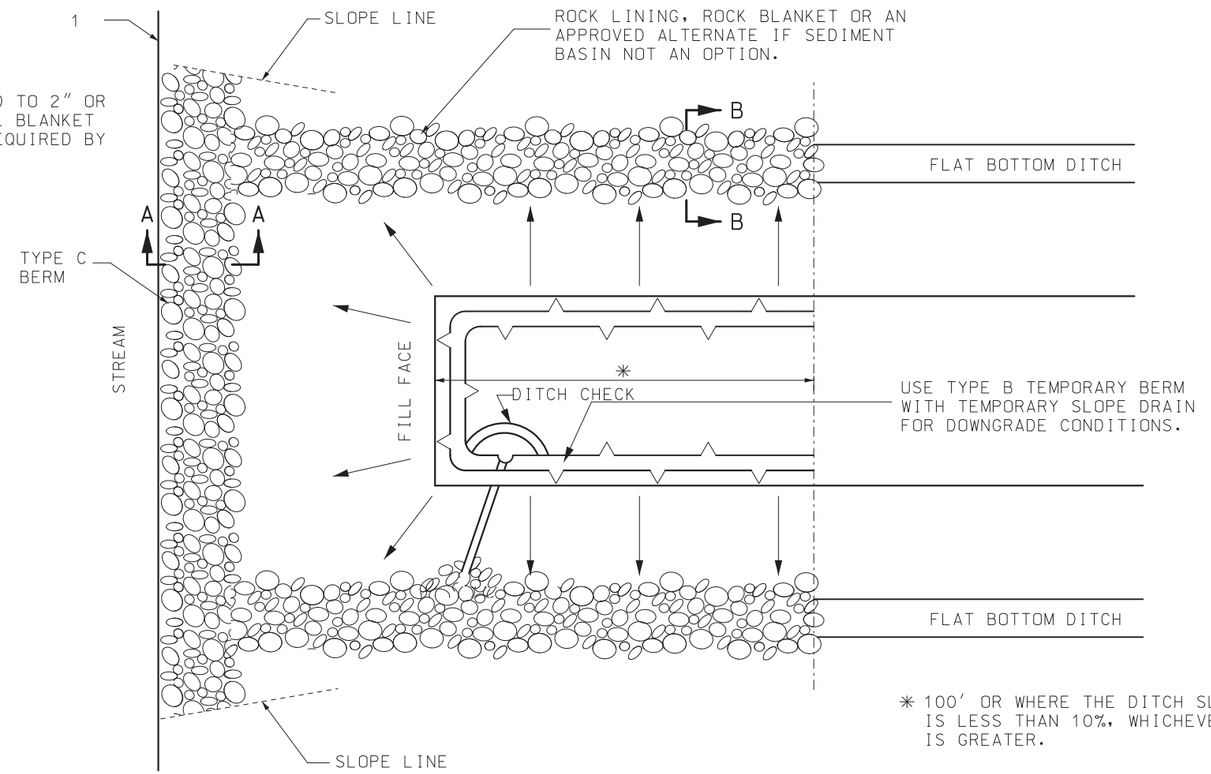

* 100′ OR WHERE THE DITCH SLOPE IS LESS THAN 10%, WHICHEVER IS GREATER.

PLAN VIEW



SECTION B–B

GENERAL NOTES:

TYPE C BERM SHALL BE BUILT TO HANDLE SIGNIFICANT RUN-OFF EVENTS AND SHALL BE INSTALLED PRIOR TO SOIL DISTURBANCE OR PLACEMENT OF FILL IN THE DRAINAGE AREA OF THE BERM.

IF A SEAL IS PRESENT ON THIS SHEET IT HAS BEEN ELECTRONICALLY SEALED AND DATED.

MISSOURI HIGHWAYS AND TRANSPORTATION COMMISSION
105 WEST CAPITOL
JEFFERSON CITY, MO 65102
1-888-ASK-MODOT (1-888-275-6636)

STATE OF MISSOURI
ERIC E. SCHROETER
NUMBER PE-28411
PROFESSIONAL ENGINEER
THIS SHEET HAS BEEN SIGNED, SEALED AND DATED ELECTRONICALLY.

TEMPORARY EROSION CONTROL MEASURES

BRIDGES AND BOX CULVERTS AT STREAM CROSSINGS

DATE EFFECTIVE: 04/01/2019
DATE PREPARED: 1/16/2019

806.10J

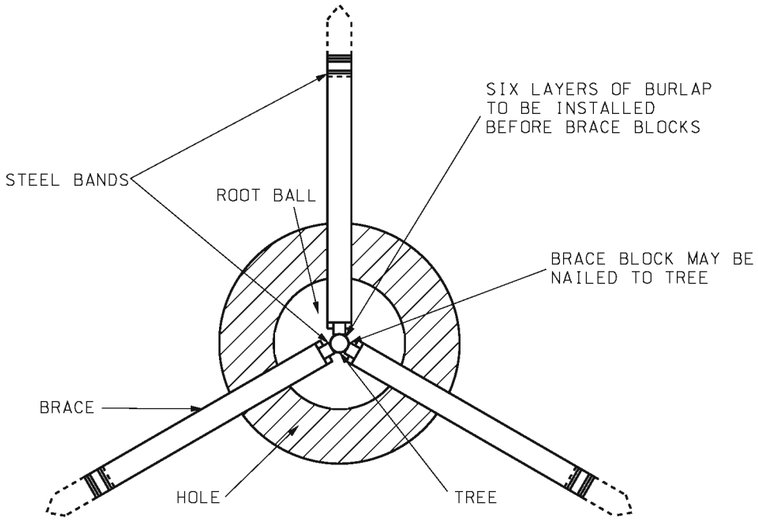

SECTION A-A

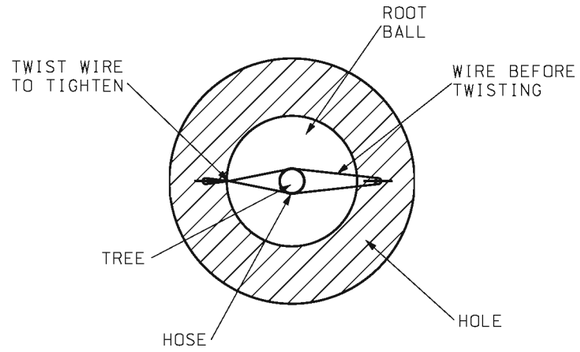

SECTION B-B

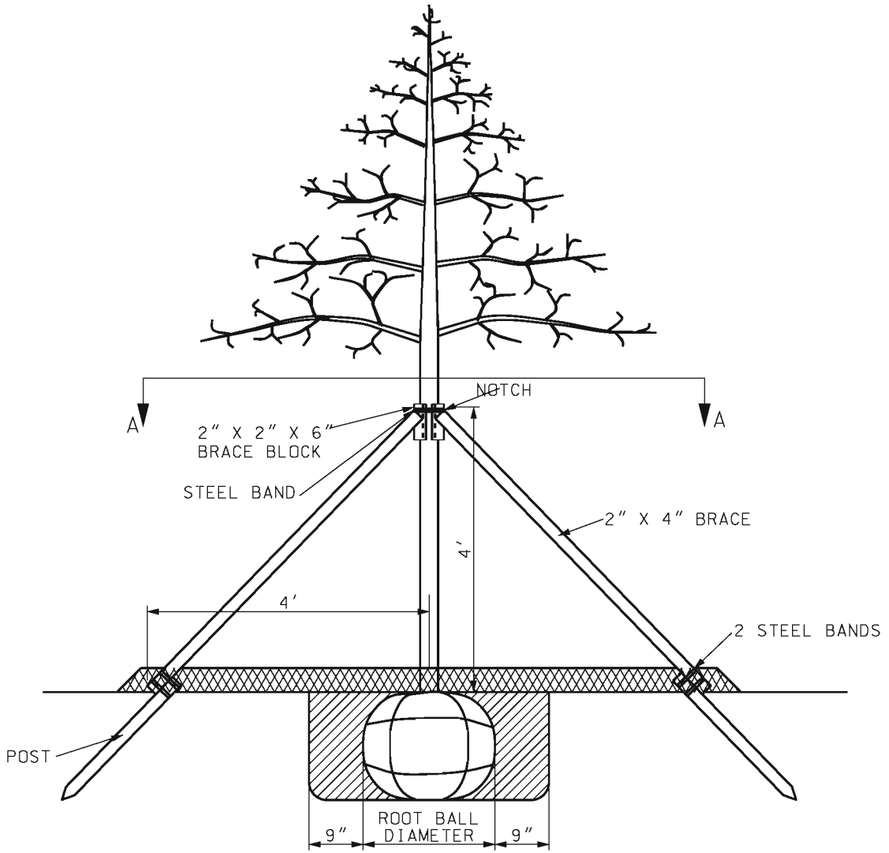

METHOD OF SUPPORTING DECIDUOUS TREES
3" CALIBER OR LARGER

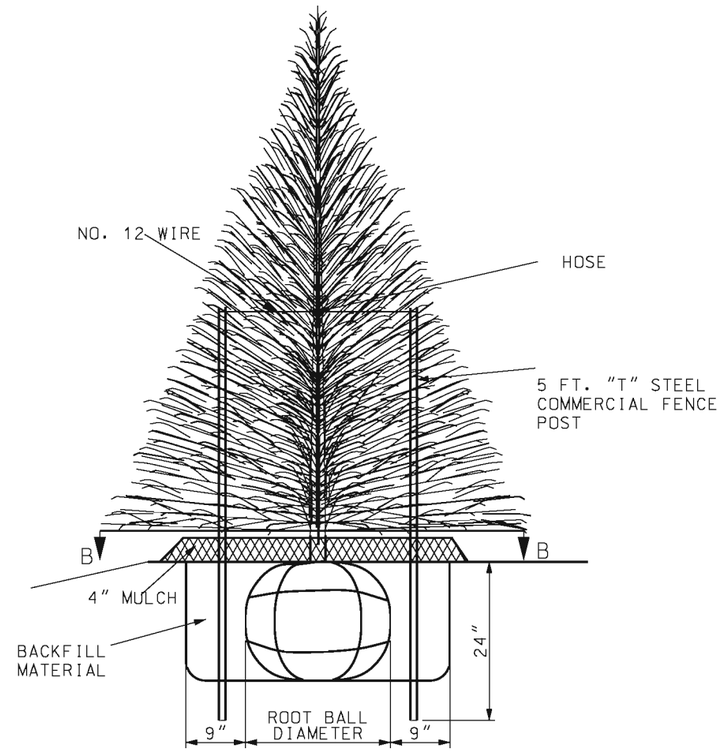

METHOD OF SUPPORTING EVERGREEN TREES
3' OR MORE IN HEIGHT

NOTES:

TREE WRAP SHALL BE INSTALLED BEFORE BRACING.

BRACE SHALL BE NAILED SECURELY TO POST AND BRACE BLOCK.

BANDING SHALL BE DONE WITH A COMMERICAL BANDING MACHINE.

GENERAL NOTE:

ALL NUMBER MEASUREMENTS ARE NOMINAL.

MISSOURI HIGHWAYS AND TRANSPORTATION COMMISSION
105 WEST CAPITOL
JEFFERSON CITY, MO 65102
1-888-ASK-MODOT (1-888-275-6636)

STATE OF MISSOURI
KATHRYN PHILLIPS HARVEY
NUMBER PE-23751
PROFESSIONAL ENGINEER
THIS SHEET HAS BEEN SIGNED, SEALED AND DATED ELECTRONICALLY.

TYPICAL PLANTING ILLUSTRATIONS
METHOD OF SUPPORT

DATE EFFECTIVE: 07/01/2004
DATE PREPARED: 8/26/2009

808.00

SHEET NO. 1 OF 3

IF A SEAL IS PRESENT ON THIS SHEET IT HAS BEEN ELECTRONICALLY SEALED AND DATED.

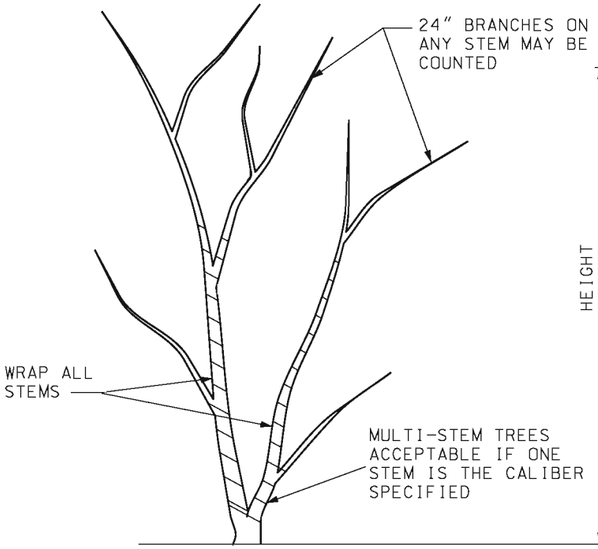

MEASUREMENT OF SMALL TREES

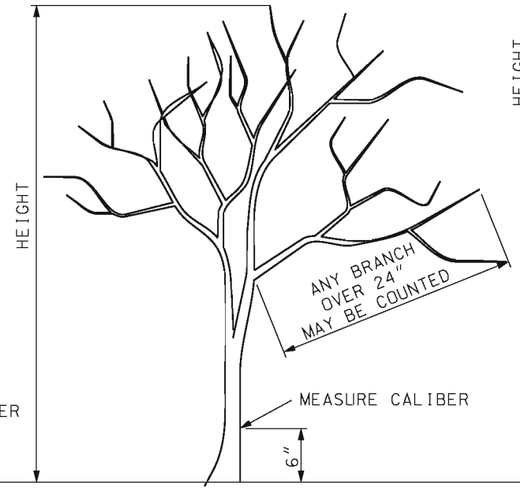

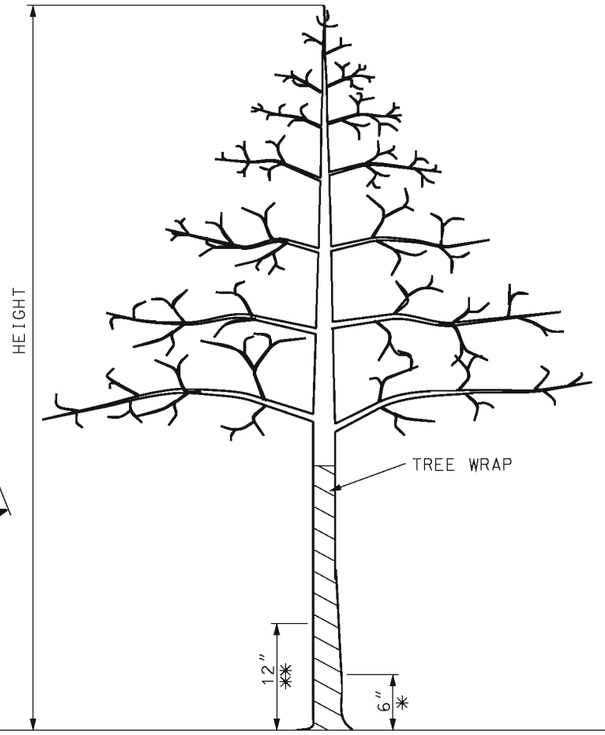

* MEASURE CALIBER FOR TREES 4" OR LESS.

** MEASURE CALIBER FOR TREES MORE THAN 4".

MEASUREMENT OF LARGE TREES

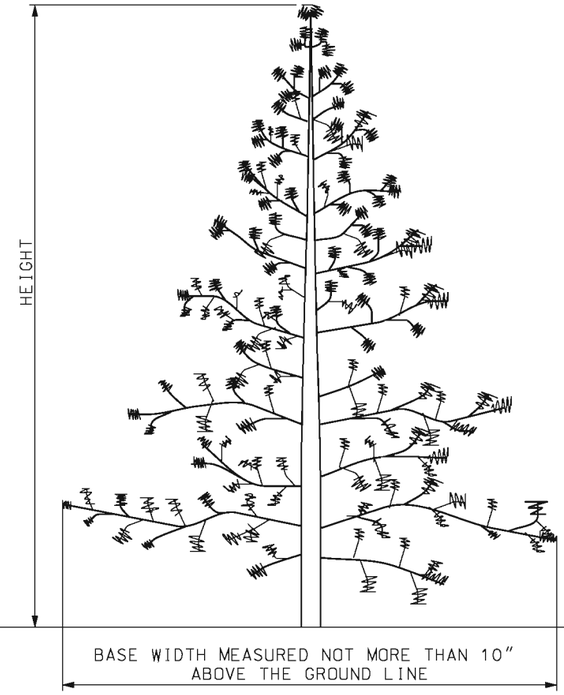

MEASUREMENT OF EVERGREEN TREES

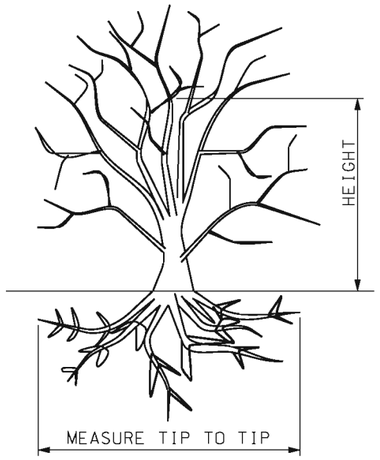

MEASUREMENT OF DECIDUOUS SHRUBS

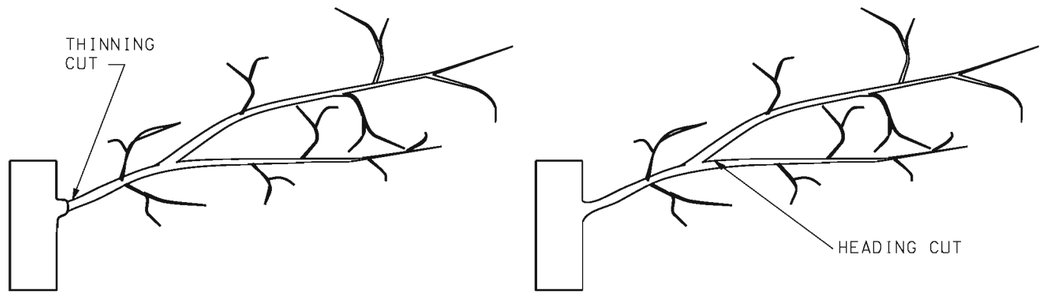

PRUNING CUTS

IF A SEAL IS PRESENT ON THIS SHEET IT HAS BEEN ELECTRONICALLY SEALED AND DATED.

MISSOURI HIGHWAYS AND TRANSPORTATION COMMISSION
105 WEST CAPITOL
JEFFERSON CITY, MO 65102
1-888-ASK-MODOT (1-888-275-6636)

STATE OF MISSOURI
KATHRYN PHILLIPS HARVEY
NUMBER PE-23751
PROFESSIONAL ENGINEER
THIS SHEET HAS BEEN SIGNED, SEALED AND DATED ELECTRONICALLY.

TYPICAL PLANTING ILLUSTRATIONS

MEASUREMENT AND PRUNING CUTS

DATE EFFECTIVE: 07/01/2004
DATE PREPARED: 8/26/2009

808.00

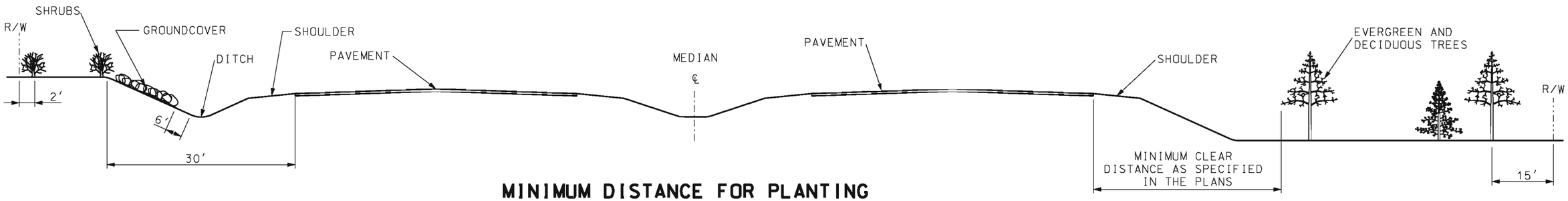

MINIMUM DISTANCE FOR PLANTING ON TYPICAL CROSS SECTION

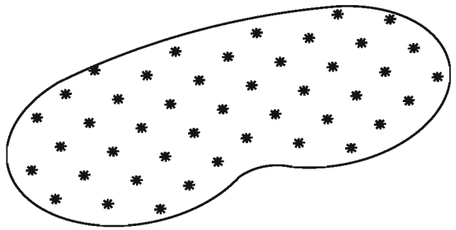

LOCATION OF SHRUBS
IN A TYPICAL PLANT BED

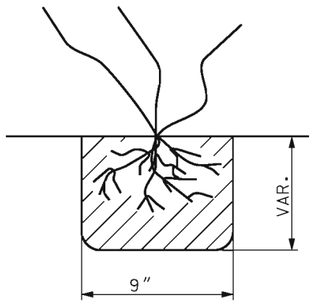

VINES AND SEEDLINGS

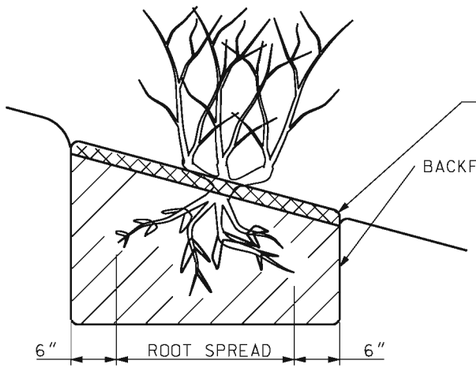

DECIDUOUS SHRUB
SLOPE PLANTING

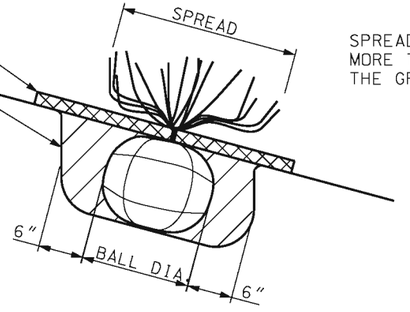

EVERGREEN SHRUB
SLOPE PLANTING

SPREAD MEASURED NO
MORE THAN 10″ ABOVE
THE GROUND LINE.

IF A SEAL IS PRESENT ON THIS SHEET IT HAS BEEN ELECTRONICALLY SEALED AND DATED.

MISSOURI HIGHWAYS AND TRANSPORTATION COMMISSION
105 WEST CAPITOL
JEFFERSON CITY, MO 65102
1-888-ASK-MODOT (1-888-275-6636)

STATE OF MISSOURI
KATHRYN PHILLIPS HARVEY
NUMBER PE-23751
PROFESSIONAL ENGINEER
THIS SHEET HAS BEEN SIGNED, SEALED AND DATED ELECTRONICALLY.

TYPICAL PLANTING ILLUSTRATIONS

LOCATION AND
SLOPE PLANTING

DATE EFFECTIVE: 07/01/2004
DATE PREPARED: 8/26/2009

808.00

SHEET NO.
3 OF 3

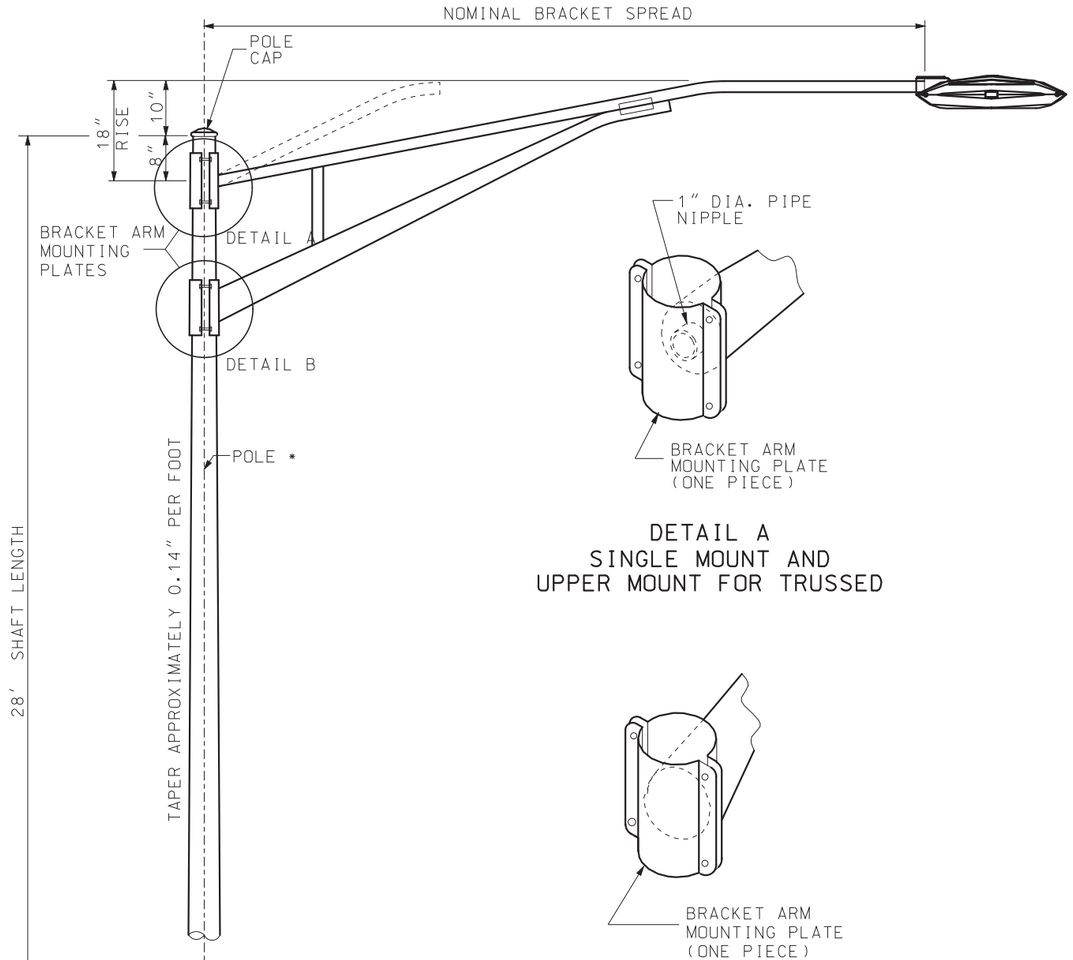

DETAIL A
SINGLE MOUNT AND
UPPER MOUNT FOR TRUSSED

DETAIL B
LOWER MOUNT FOR TRUSSED

TYPICAL BRACKET ARM MOUNTING

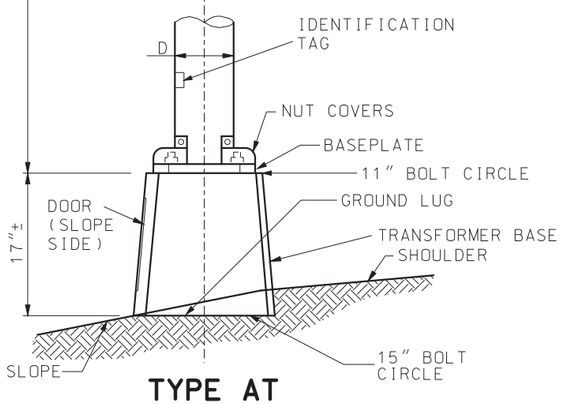

TYPE AT

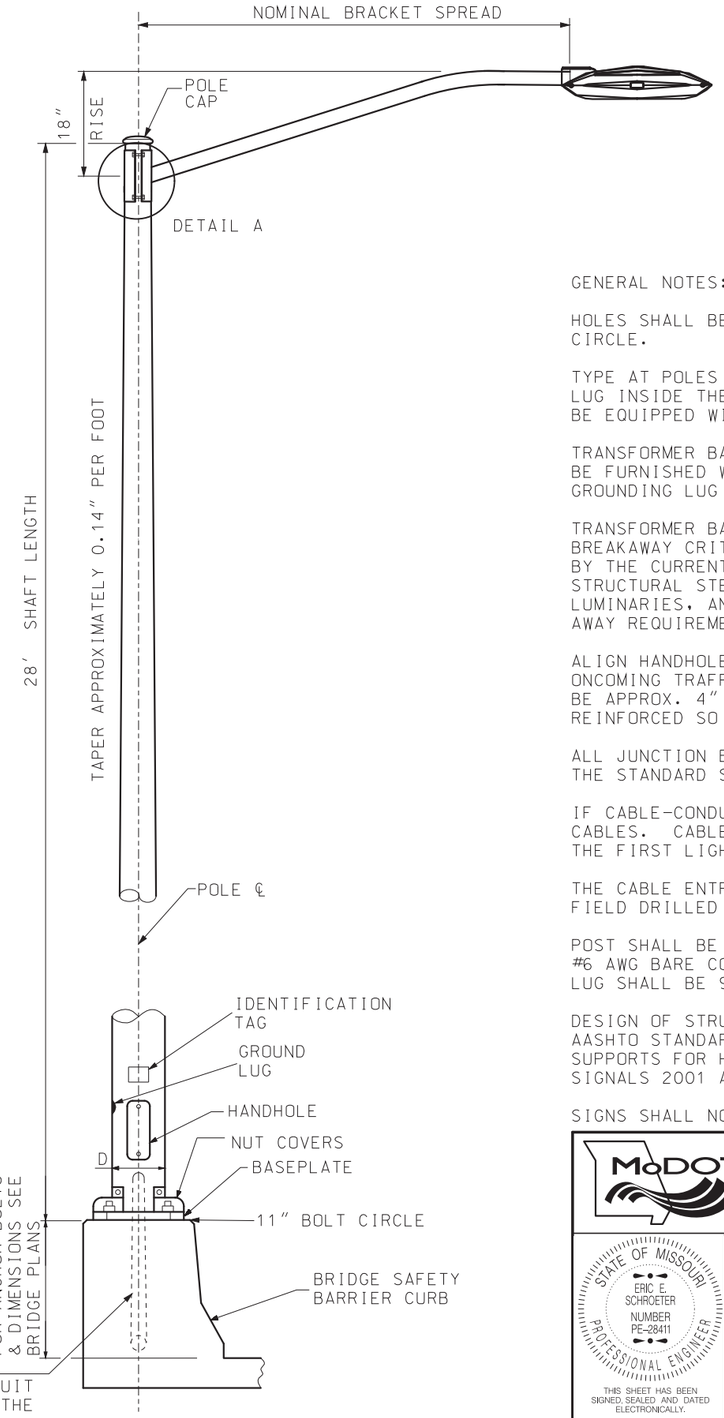

WIRES SHALL BE SPLICED AT FUSED CONNECTOR IN POLE BASE. IF CABLE-CONDUIT IS SPECIFIED, CUT CONDUIT AWAY FROM THE CABLES WHERE CABLE-CONDUIT ENTERS THE RIGID CONDUIT SYSTEM. (SEE DRAWING 901.02)

TYPE B

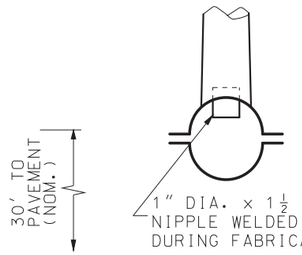

PLAN VIEW OF DETAIL A

GENERAL NOTES:

HOLES SHALL BE PUNCHED ONLY FOR SPECIFIED BOLT CIRCLE.

TYPE AT POLES SHALL BE EQUIPPED WITH THE GROUNDING LUG INSIDE THE TRANSFORMER BASE. TYPE B POLES SHALL BE EQUIPPED WITH A GROUNDING LUG INSIDE THE POLE.

TRANSFORMER BASES FOR 30 FOOT MOUNTING HEIGHT SHALL BE FURNISHED WITH ONE (1) DRILLED AND TAPPED HOLE AND GROUNDING LUG FOR GROUNDING EQUIPMENT.

TRANSFORMER BASE SHALL BE CERTIFIED AS MEETING THE BREAKAWAY CRITERIA AND STRUCTURAL REQUIREMENTS AS SET BY THE CURRENT AASHTO "STANDARD SPECIFICATIONS FOR STRUCTURAL STEEL SUPPORTS FOR HIGHWAY SIGNS, LUMINARIES, AND TRAFFIC SIGNALS" AND MEET THE BREAK-AWAY REQUIREMENTS OF NCHRP 350.

ALIGN HANDHOLE SO THAT THE POLE IS BETWEEN THE ONCOMING TRAFFIC AND THE HANDHOLE. HANDHOLE SHALL BE APPROX. 4″ X 6-1/2″. HANDHOLE FRAME SHALL BE REINFORCED SO THAT THE POLE STRENGTH IS NOT REDUCED.

ALL JUNCTION BOXES SHALL CONFORM TO SECTION 1062 OF THE STANDARD SPECIFICATIONS.

IF CABLE-CONDUIT IS SPECIFIED, CUT CONDUIT AWAY FROM CABLES. CABLES SHALL BE CONTINUOUS AND UNSPLICED TO THE FIRST LIGHT POLE.

THE CABLE ENTRANCE AT THE BRACKET ARM SHALL BE A FIELD DRILLED 1-1/4″ DIAMETER HOLE.

POST SHALL BE GROUNDED FROM GROUND LUG IN POST WITH #6 AWG BARE COPPER WIRE TO CONDUIT SYSTEM. GROUND LUG SHALL BE 90° OR 180° FROM THE HANDHOLE.

DESIGN OF STRUCTURAL SUPPORTS SHALL COMPLY WITH AASHTO STANDARD SPECIFICATIONS FOR STRUCTURAL SUPPORTS FOR HIGHWAY SIGNS, LUMINAIRES AND TRAFFIC SIGNALS 2001 AND INTERIMS THROUGH 2003.

SIGNS SHALL NOT BE MOUNTED ON LIGHTING POLES.

MISSOURI HIGHWAYS AND TRANSPORTATION COMMISSION
105 WEST CAPITOL
JEFFERSON CITY, MO 65102
1-888-ASK-MODOT (1-888-275-6636)

STATE OF MISSOURI
ERIC E. SCHROETER
NUMBER PE-2841
PROFESSIONAL ENGINEER
THIS SHEET HAS BEEN SIGNED, SEALED AND DATED ELECTRONICALLY.

HIGHWAY LIGHTING
POLES, FOUNDATIONS AND APPURTENANCES FOR 30′ MOUNTING HEIGHT

DATE EFFECTIVE: 04/01/2018
DATE PREPARED: 2/9/2018

901.00AB

SHEET NO. 1 OF 4

IF A SEAL IS PRESENT ON THIS SHEET IT HAS BEEN ELECTRONICALLY SEALED AND DATED.

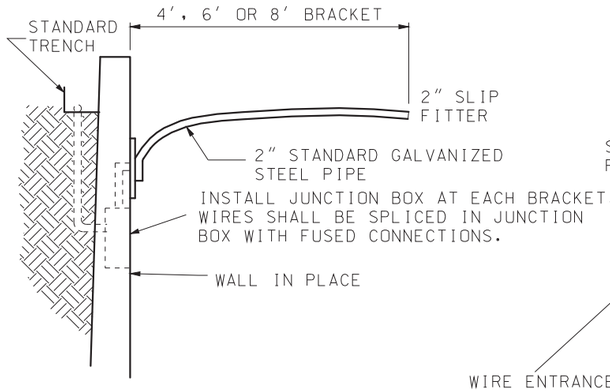

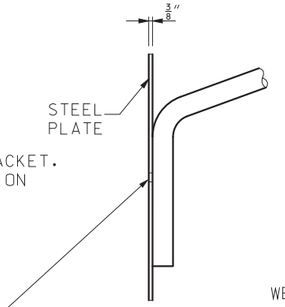

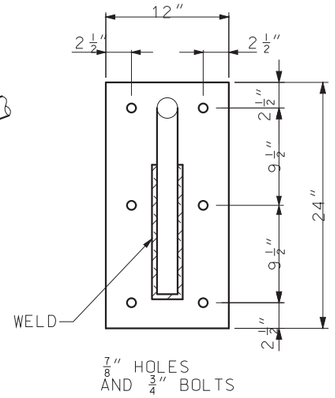

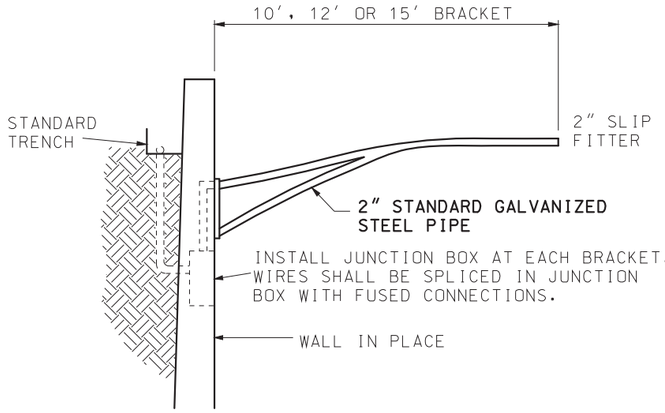

WALL BRACKETS

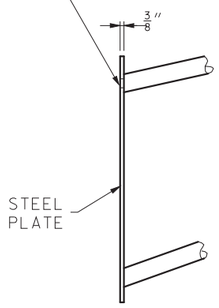

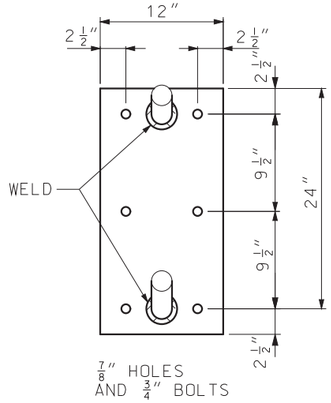

FACE PLATE DETAILS

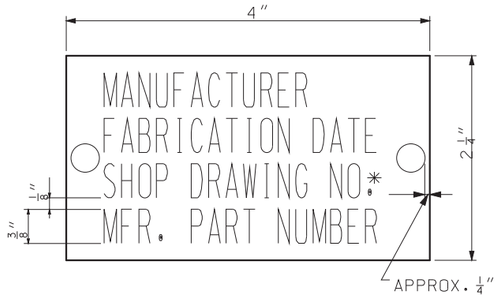

ID TAG NOTE:
TAG SHALL BE ALUMINUM OR STAINLESS STEEL AND ATTACHED TO POLE USING TWO RIVETS OR STAINLESS STEEL DRIVE SCREWS.

* INCLUDING REVISION

IDENTIFICATION TAG

LED LUMINAIRES				
FUSE RATING	DESIGNATION	MAX. WATT	DISTRIBUTION TYPE	BACKLIGHT-UPLIGHT-GLARE (BUG) RATING
3 A	LED-A	103	III	B2-U0-G2
LUMINAIRE PER CHART UNLESS OTHERWISE SPECIFIED ON PLANS.				

TYPE AT POLE				
BRACKET SPREAD		4'-10'	12'	15'
MAX. LUMINAIRE WEIGHT		75 LB	71 LB	66 LB
MAX. PROJECTED AREA		3.3 SQ. FT.		
SINGLE AND TRUSSED BRACKET ARMS				
LOCATION	LENGTH POLE	BRACKET SPREAD	TRANS. BASE BOLT CIRC.	D
SHOULDER	28'	4',6',8', 10',12',15'	15"	8"

TYPE B POLE				
BRACKET SPREAD		4'	6'	8'
MAX. LUMINAIRE WEIGHT		75 LB	75 LB	54 LB
MAX. PROJECTED AREA		3.3 SQ. FT.		
SINGLE BRACKET ARM				
LOCATION	LENGTH POLE	BRACKET SPREAD	D	ANCHOR BOLT DIA.
BRIDGE SAFETY BARRIER CURB	28'	4',6' 8'	8"	1"

GENERAL NOTES:

HOLES SHALL BE PUNCHED ONLY FOR SPECIFIED BOLT CIRCLE.

TYPE AT POLES SHALL BE EQUIPPED WITH THE GROUNDING LUG INSIDE THE TRANSFORMER BASE. TYPE B POLES SHALL BE EQUIPPED WITH A GROUNDING LUG INSIDE THE POLE.

TRANSFORMER BASES FOR 30 FOOT MOUNTING HEIGHT SHALL BE FURNISHED WITH ONE (1) DRILLED AND TAPPED HOLE AND GROUNDING LUG FOR GROUNDING EQUIPMENT.

TRANSFORMER BASE SHALL BE CERTIFIED AS MEETING THE BREAKAWAY CRITERIA AND STRUCTURAL REQUIREMENTS AS SET BY THE CURRENT AASHTO "STANDARD SPECIFICATIONS FOR STRUCTURAL STEEL SUPPORTS FOR HIGHWAY SIGNS, LUMINARIES, AND TRAFFIC SIGNALS" AND MEET THE BREAK-AWAY REQUIREMENTS OF NCHRP 350.

ALIGN HANDHOLE SO THAT THE POLE IS BETWEEN THE ONCOMING TRAFFIC AND THE HANDHOLE. HANDHOLE SHALL BE APPROX. 4" X 6-1/2". HANDHOLE FRAME SHALL BE REINFORCED SO THAT THE POLE STRENGTH IS NOT REDUCED.

ALL JUNCTION BOXES SHALL CONFORM TO SECTION 1062 OF THE STANDARD SPECIFICATIONS.

IF CABLE-CONDUIT IS SPECIFIED, CUT CONDUIT AWAY FROM CABLES. CABLES SHALL BE CONTINUOUS AND UNSPLICED TO THE FIRST LIGHT POLE.

THE CABLE ENTRANCE AT THE BRACKET ARM SHALL BE A FIELD DRILLED 1-1/4" DIA. HOLE.

POST SHALL BE GROUNDED FROM GROUND LUG IN POST WITH #6 AWG BARE COPPER WIRE TO CONDUIT SYSTEM. GROUND LUG SHALL BE 90° OR 180° FROM THE HANDHOLE.

ID TAG HOLES SHALL BE DRILLED INTO POLE PRIOR TO GALVANIZING.

MISSOURI HIGHWAYS AND TRANSPORTATION COMMISSION
105 WEST CAPITOL
JEFFERSON CITY, MO 65102
1-888-ASK-MODOT (1-888-275-6636)

STATE OF MISSOURI
ERIC E. SCHROETER
NUMBER PE-28411
PROFESSIONAL ENGINEER
THIS SHEET HAS BEEN SIGNED, SEALED AND DATED ELECTRONICALLY.

HIGHWAY LIGHTING

POLES, FOUNDATIONS AND APPURTENANCES FOR 30' MOUNTING HEIGHT

DATE EFFECTIVE: 04/01/2018
DATE PREPARED: 2/9/2018

901.00AB

SHEET NO. 2 OF 4

IF A SEAL IS PRESENT ON THIS SHEET IT HAS BEEN ELECTRONICALLY SEALED AND DATED.

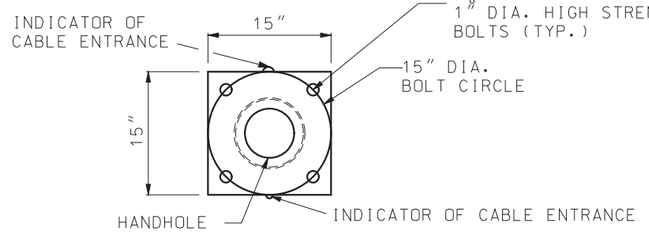

PLAN

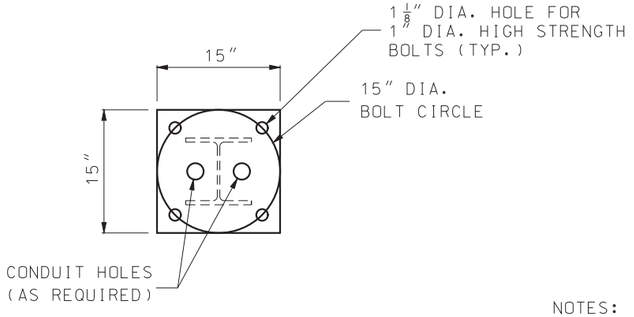

PLAN

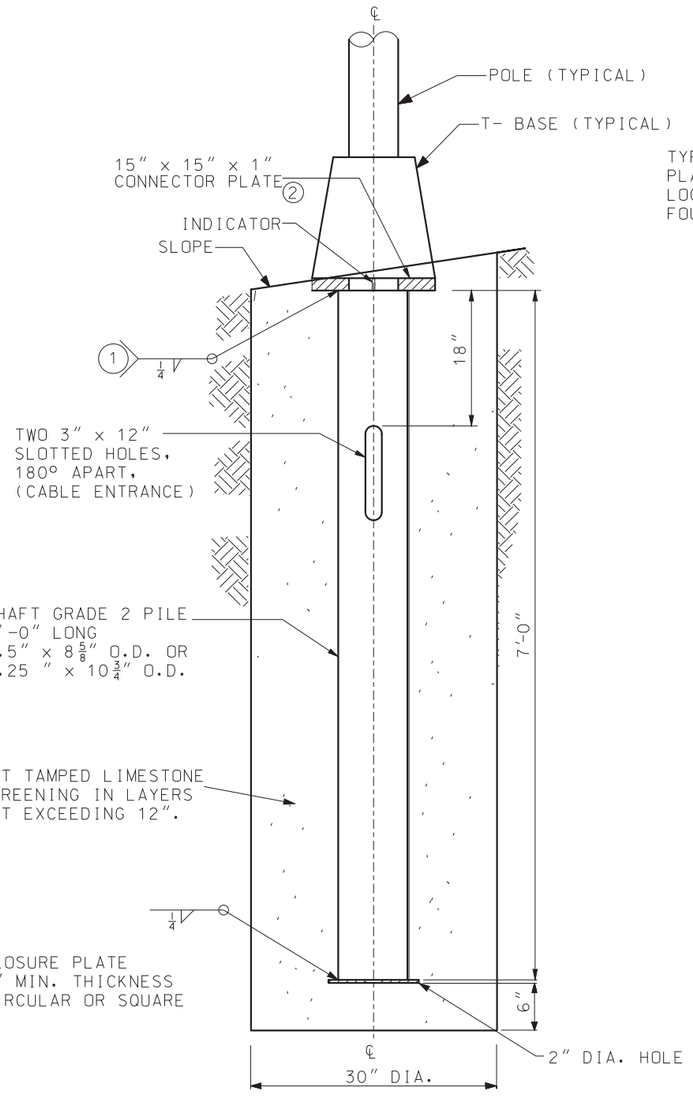

ELEVATION

DETAILS OF CIRCULAR STEEL PILE FOUNDATION

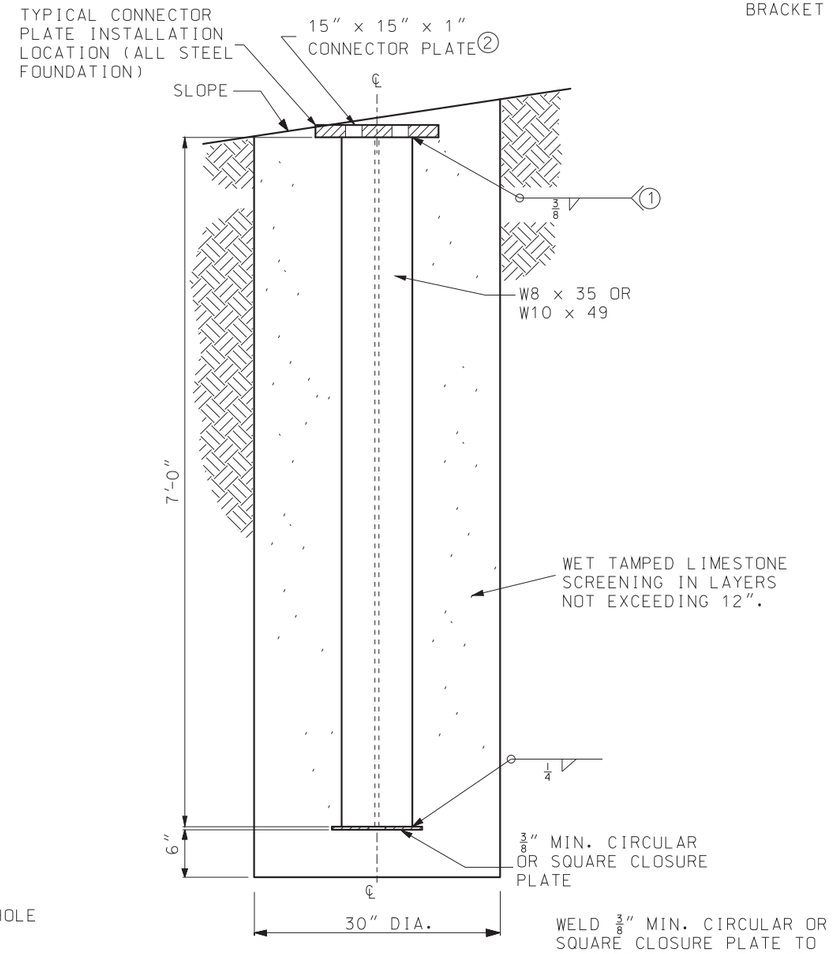

ELEVATION

DETAILS OF STEEL "H" PILE FOUNDATION

NOTES:

① GRIND WELD AS NECESSARY TO CLEAR BOLT HEAD.

② FOUNDATIONS SHALL BE INSTALLED SO THAT CONNECTOR PLATES ARE LEVEL PERPENDICULAR TO THE BRACKET ARM AND SLOPED FOR POLE RAKING PARALLEL TO THE BRACKET ARM.

GENERAL NOTES:

ALL CLASSIFICATIONS ARE ASTM UNLESS OTHERWISE NOTED. SEE STANDARD SPECIFICATIONS FOR CLASSIFICATIONS NOT SHOWN.

ALL CONNECTOR PLATE AND CLOSURE PLATE THICKNESSES SHOWN ARE MINIMUM DIMENSIONS.

ALL ANCHOR BOLTS SHALL BE FULLY GALVANIZED 1″ DIA. HIGH STRENGTH ANCHOR BOLTS.

ALL STEEL COMPONENTS SHALL BE HOT DIP GALVANIZED.

IF A SEAL IS PRESENT ON THIS SHEET IT HAS BEEN ELECTRONICALLY SEALED AND DATED.

MISSOURI HIGHWAYS AND TRANSPORTATION COMMISSION
105 WEST CAPITOL
JEFFERSON CITY, MO 65102
1-888-ASK-MODOT (1-888-275-6636)

STATE OF MISSOURI
ERIC E. SCHROETER
NUMBER PE-28411
PROFESSIONAL ENGINEER
THIS SHEET HAS BEEN SIGNED, SEALED AND DATED ELECTRONICALLY.

HIGHWAY LIGHTING

POLES, FOUNDATIONS AND APPURTENANCES FOR 30′ MOUNTING HEIGHT

DATE EFFECTIVE: 12/01/2013
DATE PREPARED: 2/9/2018

901.00AB

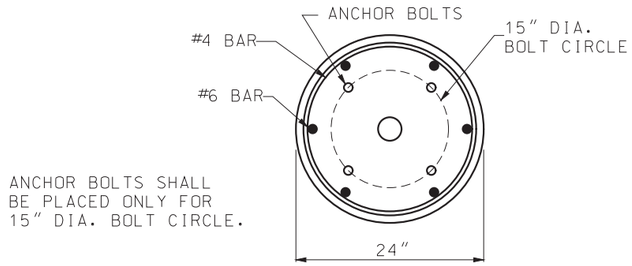

PLAN

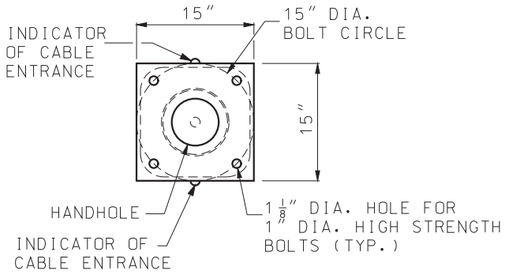

PLAN

DRIVE HOLES WILL BE PERMITTED PROVIDED THAT THEY DO NOT CONFLICT WITH OR COMPROMISE THE STRUCTURAL INTEGRITY OF THE PLATE, THE WELD BETWEEN THE PLATE AND SHAFT, OR THE BOLT HOLES.

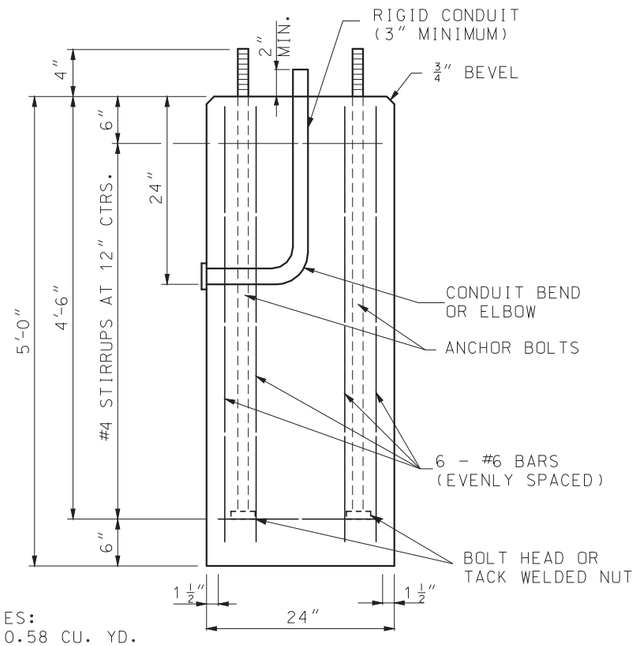

QUANTITIES:
CONC. = 0.58 CU. YD.
REIN. = 64 LBS.

ELEVATION

DETAILS OF CONCRETE FOUNDATION ③

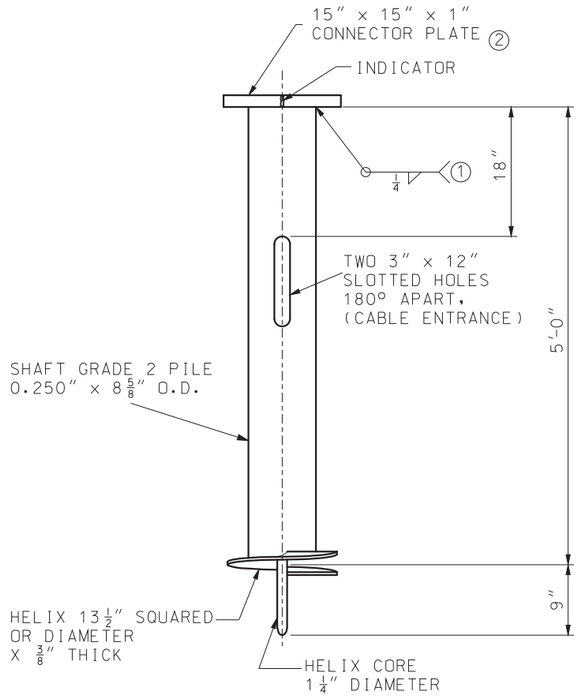

ELEVATION

DETAILS OF SCREW ANCHOR FOUNDATION

NOTES:

1. GRIND WELD AS NECESSARY TO CLEAR BOLT HEAD.
2. FOUNDATIONS SHALL BE INSTALLED SO THAT CONNECTOR PLATES ARE LEVEL PERPENDICULAR TO THE BRACKET ARM AND SLOPED FOR POLE RAKING PARALLEL TO THE BRACKET ARM.
3. AT THE OPTION OF THE CONTRACTOR THE CONCRETE FOUNDATION MAY BE PRECAST. IF PRECAST, THEY SHALL BE SET IN DRILLED HOLES 3 FEET IN DIAMETER AND 6 INCHES DEEPER THAN THE BOTTOM OF THE CONCRETE FOUNDATION. THE BOTTOM 6 INCHES OF THE HOLE AND THE REMAINING SPACE AROUND THE FOUNDATION SHALL BE BACKFILLED WITH WET TAMPED LIMESTONE SCREENINGS IN LAYERS NOT EXCEEDING 12 INCHES.

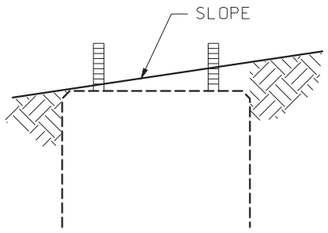

CONCRETE FOUNDATION
EMBEDMENT

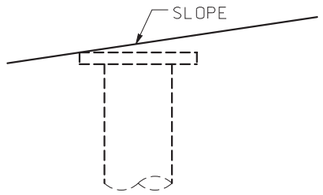

SCREW ANCHOR
EMBEDMENT

GENERAL NOTES:

ALL CLASSIFICATIONS ARE ASTM UNLESS OTHERWISE NOTED. SEE STANDARD SPECIFICATIONS FOR CLASSIFICATIONS NOT SHOWN.

ALL CONNECTOR PLATE AND CLOSURE PLATE THICKNESSES SHOWN ARE MINIMUM DIMENSIONS.

ALL ANCHOR BOLTS SHALL BE FULLY GALVANIZED 1" DIA. HIGH STRENGTH ANCHOR BOLTS.

ALL STEEL COMPONENTS SHALL BE HOT DIP GALVANIZED.

MISSOURI HIGHWAYS AND TRANSPORTATION COMMISSION
105 WEST CAPITOL
JEFFERSON CITY, MO 65102
1-888-ASK-MODOT (1-888-275-6636)

STATE OF MISSOURI
ERIC E. SCHROETER
NUMBER PE-28411
PROFESSIONAL ENGINEER
THIS SHEET HAS BEEN SIGNED, SEALED AND DATED ELECTRONICALLY.

HIGHWAY LIGHTING

POLES, FOUNDATIONS AND APPURTENANCES FOR 30' MOUNTING HEIGHT

DATE EFFECTIVE: 12/01/2013
DATE PREPARED: 2/9/2018

901.00AB

SHEET NO. 4 OF 4

IF A SEAL IS PRESENT ON THIS SHEET IT HAS BEEN ELECTRONICALLY SEALED AND DATED.

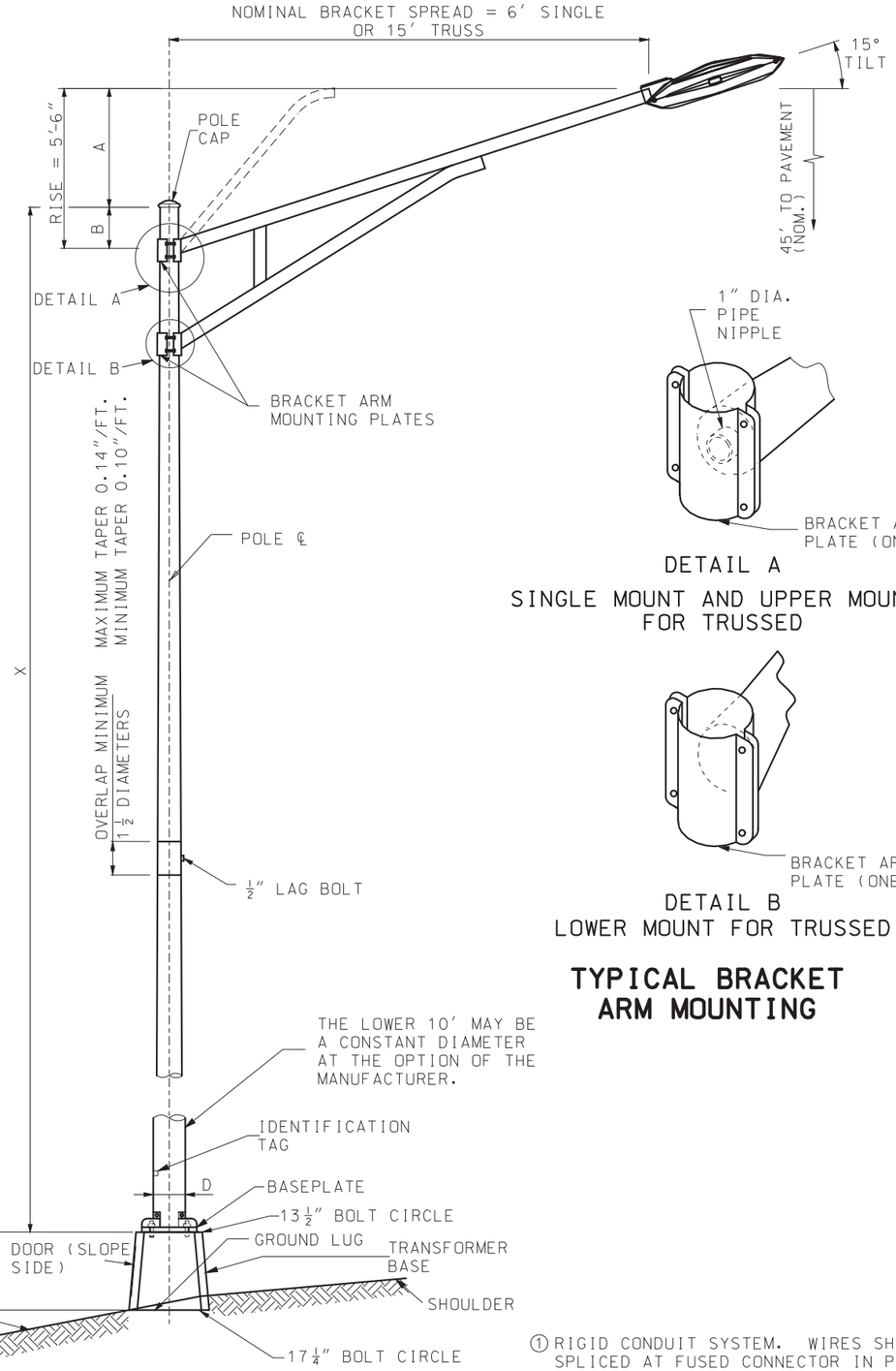

TYPE AT

DETAIL A

SINGLE MOUNT AND UPPER MOUNT FOR TRUSSED

DETAIL B

LOWER MOUNT FOR TRUSSED

TYPICAL BRACKET ARM MOUNTING

① RIGID CONDUIT SYSTEM. WIRES SHALL BE SPLICED AT FUSED CONNECTOR IN POLE BASE. IF CABLE-CONDUIT IS SPECIFIED, CUT CONDUIT AWAY FROM THE CABLES WHERE CABLE-CONDUIT ENTERS THE RIGID CONDUIT SYSTEM. (SEE DRAWING 901.02)

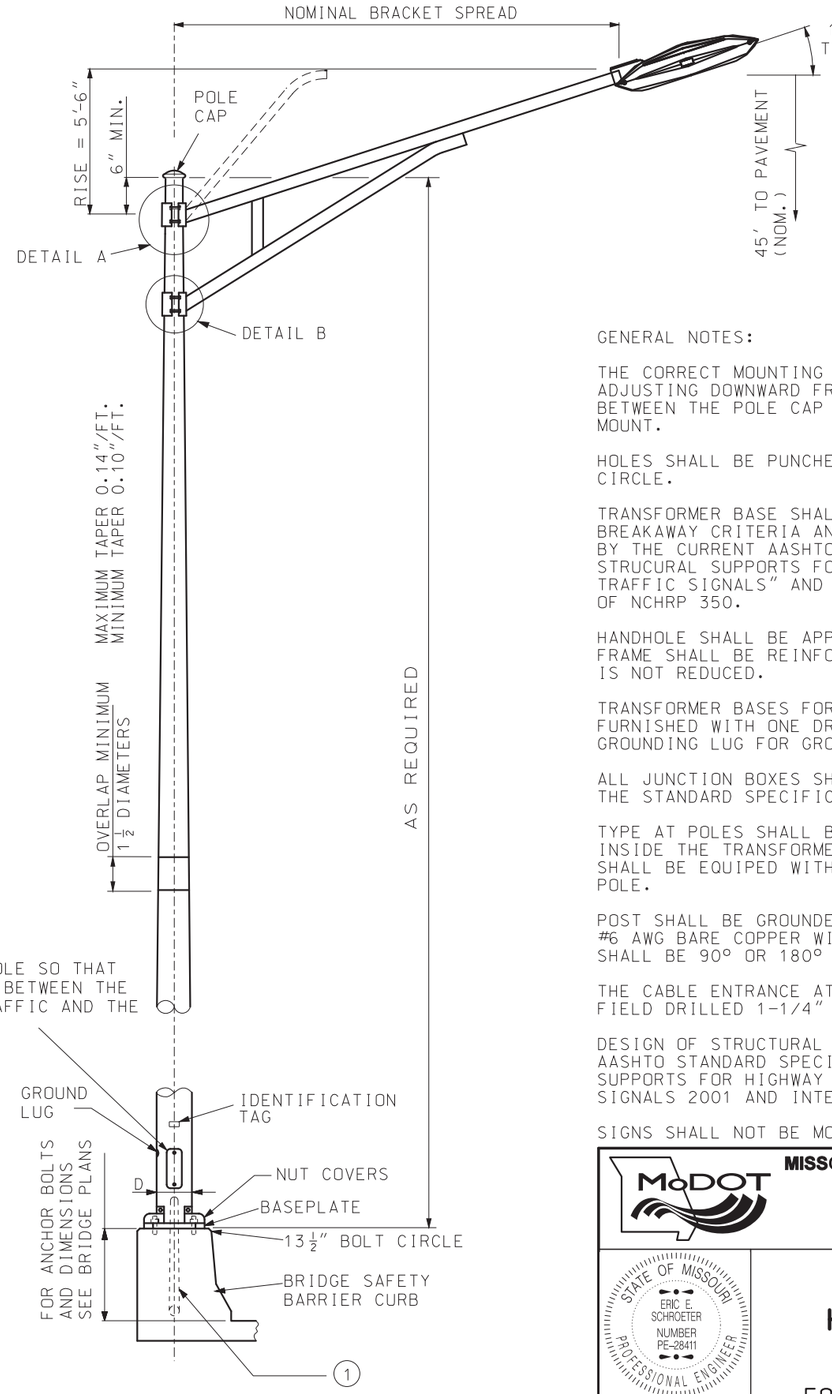

TYPE B

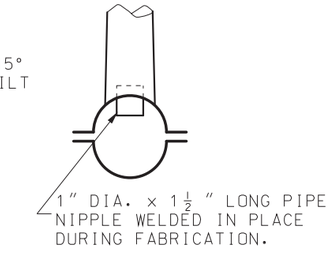

PLAN VIEW OF DETAIL A

GENERAL NOTES:

THE CORRECT MOUNTING HEIGHT WILL BE OBTAINED BY ADJUSTING DOWNWARD FROM THE 6″ MINIMUM CLEARANCE BETWEEN THE POLE CAP AND THE TOP OF THE BRACKET ARM MOUNT.

HOLES SHALL BE PUNCHED ONLY FOR SPECIFIED BOLT CIRCLE.

TRANSFORMER BASE SHALL BE CERTIFIED AS MEETING THE BREAKAWAY CRITERIA AND STRUCTURAL REQUIREMENTS AS SET BY THE CURRENT AASHTO "STANDARD SPECIFICATIONS FOR STRUCURAL SUPPORTS FOR HIGHWAY SIGNS, LUMINARIES, AND TRAFFIC SIGNALS" AND MEET THE BREAKAWAY REQUIREMENTS OF NCHRP 350.

HANDHOLE SHALL BE APPROX. 4″ X 6-1/2″. HANDHOLE FRAME SHALL BE REINFORCED SO THAT THE POLE STRENGTH IS NOT REDUCED.

TRANSFORMER BASES FOR 45′ MOUNTING HEIGHT SHALL BE FURNISHED WITH ONE DRILLED AND TAPPED HOLE AND GROUNDING LUG FOR GROUNDING EQUIPMENT.

ALL JUNCTION BOXES SHALL CONFORM TO SECTION 1062 OF THE STANDARD SPECIFICATIONS.

TYPE AT POLES SHALL BE EQUIPED WITH THE GROUNDING LUG INSIDE THE TRANSFORMER BASE. TYPE B AND MB POLES SHALL BE EQUIPED WITH A GROUNDING LUG INSIDE THE POLE.

POST SHALL BE GROUNDED FROM GROUND LUG IN POST WITH #6 AWG BARE COPPER WIRE TO CONDUIT SYSTEM. GROUND LUG SHALL BE 90° OR 180° FROM HANDHOLE.

THE CABLE ENTRANCE AT THE BRACKET ARM SHALL BE A FIELD DRILLED 1-1/4″ DIA. HOLE.

DESIGN OF STRUCTURAL SUPPORTS SHALL COMPLY WITH AASHTO STANDARD SPECIFICATIONS FOR STRUCTURAL SUPPORTS FOR HIGHWAY SIGNS, LUMINAIRES AND TRAFFIC SIGNALS 2001 AND INTERIMS THROUGH 2003.

SIGNS SHALL NOT BE MOUNTED ON LIGHTING POLES.

IF A SEAL IS PRESENT ON THIS SHEET IT HAS BEEN ELECTRONICALLY SEALED AND DATED.

MISSOURI HIGHWAYS AND TRANSPORTATION COMMISSION
105 WEST CAPITOL
JEFFERSON CITY, MO 65102
1-888-ASK-MODOT (1-888-275-6636)

STATE OF MISSOURI
ERIC E. SCHROETER
NUMBER PE-28411
PROFESSIONAL ENGINEER
THIS SHEET HAS BEEN SIGNED, SEALED AND DATED ELECTRONICALLY.

HIGHWAY LIGHTING
POLES, FOUNDATIONS AND APPURTENANCES FOR 45′ MOUNTING HEIGHT

DATE EFFECTIVE:	04/01/2018	901.01AJ	SHEET NO. 1 OF 6
DATE PREPARED:	2/9/2018		

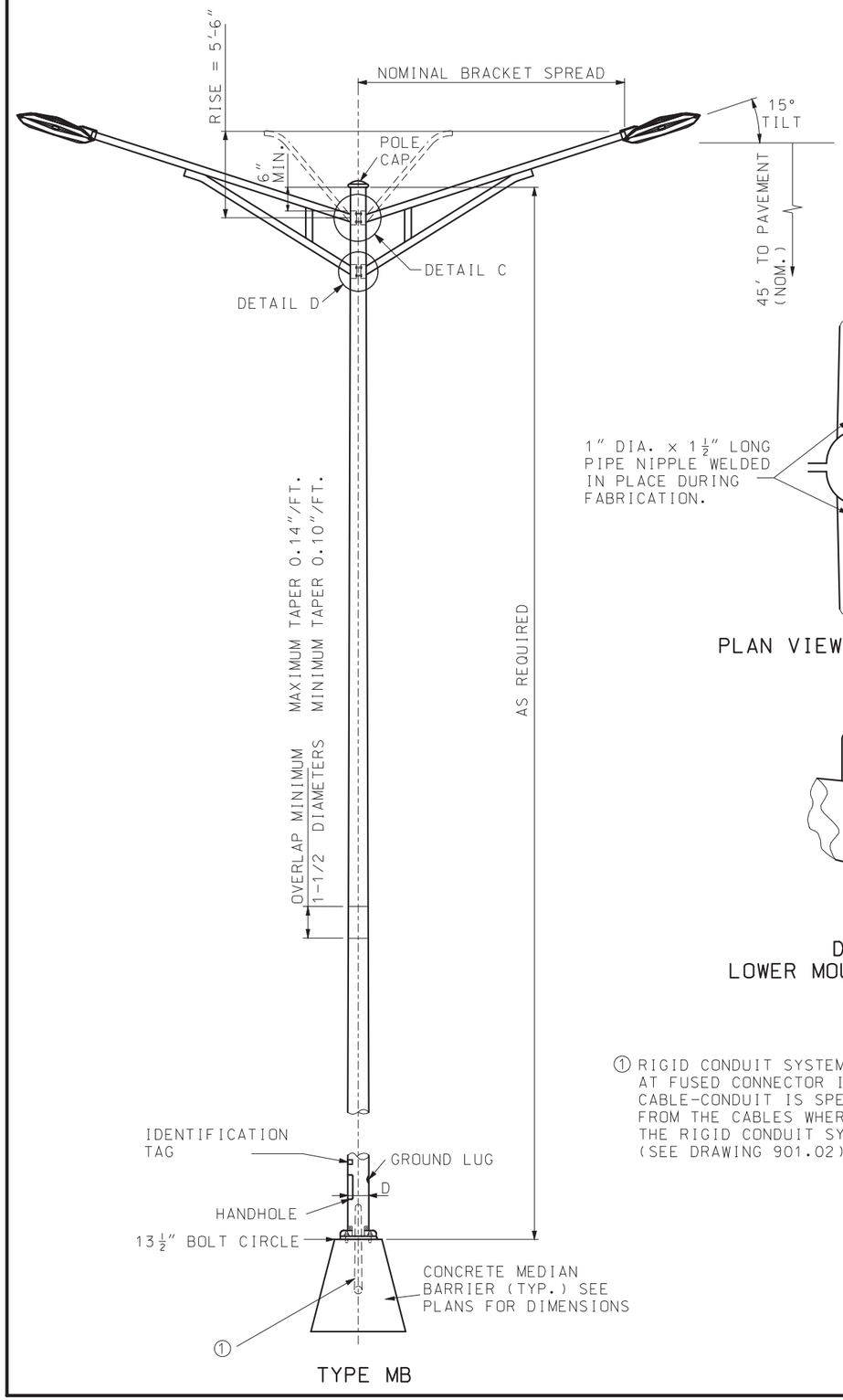

TYPE MB

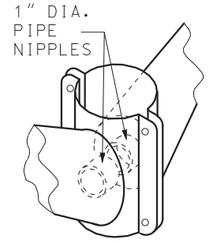

DETAIL C

PLAN VIEW OF DETAIL C

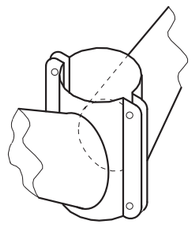

DETAIL D
LOWER MOUNT FOR TRUSSED

① RIGID CONDUIT SYSTEM. WIRES SHALL BE SPLICED AT FUSED CONNECTOR IN POLE BASE. IF CABLE-CONDUIT IS SPECIFIED, CUT CONDUIT AWAY FROM THE CABLES WHERE CABLE-CONDUIT ENTERS THE RIGID CONDUIT SYSTEM. (SEE DRAWING 901.02)

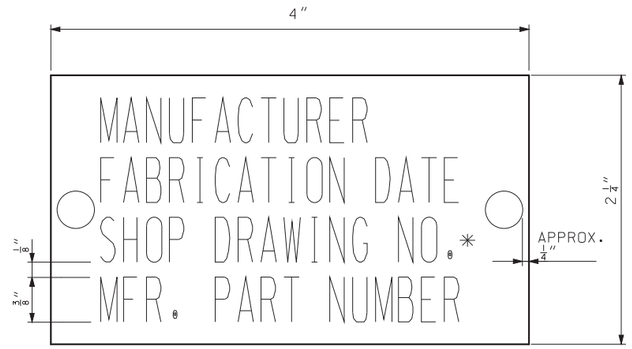

IDENTIFICATION TAG

ID TAG NOTE:

TAG SHALL BE ALUMINUM OR STAINLESS STEEL AND ATTACHED TO POLE USING TWO RIVETS OR STAINLESS STEEL DRIVE SCREWS. ID TAG HOLES SHALL BE DRILLED PRIOR TO GALVANIZING.

* INCLUDING REVISION

GENERAL NOTES:

THE CORRECT MOUNTING HEIGHT WILL BE OBTAINED BY ADJUSTING DOWNWARD FROM THE 6" MINIMUM CLEARANCE BETWEEN THE POLE CAP AND THE TOP OF THE BRACKET ARM MOUNT.

HOLES SHALL BE PUNCHED ONLY FOR SPECIFIED BOLT CIRCLE.

TRANSFORMER BASE SHALL BE CERTIFIED AS MEETING THE BREAKAWAY CRITERIA AND STRUCTURAL REQUIREMENTS AS SET BY THE CURRENT AASHTO "STANDARD SPECIFICATIONS FOR STRUCURAL SUPPORTS FOR HIGHWAY SIGNS, LUMINARIES, AND TRAFFIC SIGNALS" AND MEET THE BREAKAWAY REQUIREMENTS OF NCHRP 350.

HANDHOLE SHALL BE APPROX. 4" X 6-1/2". HANDHOLE FRAME SHALL BE REINFORCED SO THAT THE POLE STRENGTH IS NOT REDUCED.

TRANSFORMER BASES FOR 45' MOUNTING HEIGHT SHALL BE FURNISHED WITH ONE DRILLED AND TAPPED HOLE AND GROUNDING LUG FOR GROUNDING EQUIPMENT.

ALL JUNCTION BOXES SHALL CONFORM TO SECTION 1062 OF THE STANDARD SPECIFICATIONS.

TYPE AT POLES SHALL BE EQUIPED WITH THE GROUNDING LUG INSIDE THE TRANSFORMER BASE. TYPE B AND MB POLES SHALL BE EQUIPED WITH A GROUNDING LUG INSIDE THE POLE.

POST SHALL BE GROUNDED FROM GROUND LUG IN POST WITH #6 AWG BARE COPPER WIRE TO CONDUIT SYSTEM. GROUND LUG SHALL BE 90° OR 180° FROM HANDHOLE.

THE CABLE ENTRANCE AT THE BRACKET ARM SHALL BE A FIELD DRILLED 1-1/4" DIA. HOLE.

SIGNS SHALL NOT BE MOUNTED ON LIGHTING POLES.

MISSOURI HIGHWAYS AND TRANSPORTATION COMMISSION
105 WEST CAPITOL
JEFFERSON CITY, MO 65102
1-888-ASK-MODOT (1-888-275-6636)

STATE OF MISSOURI
ERIC E. SCHROETER
NUMBER PE-28411
PROFESSIONAL ENGINEER
THIS SHEET HAS BEEN SIGNED, SEALED AND DATED ELECTRONICALLY.

HIGHWAY LIGHTING
POLES, FOUNDATIONS AND APPURTENANCES FOR 45' MOUNTING HEIGHT

DATE EFFECTIVE: 04/01/2018
DATE PREPARED: 2/9/2018

901.01AJ

SHEET NO. 2 OF 6

IF A SEAL IS PRESENT ON THIS SHEET IT HAS BEEN ELECTRONICALLY SEALED AND DATED.

TYPE AT POLE				
BRACKET SPREAD				6′ OR 15′
MAX. LUMINAIRE WEIGHT				60 LB
MAX. PROJECTED AREA				3.3 SQ. FT.
AT-45 DESIGN NO.	X	A	B	D ✳ (NOMINAL)
1	50′	VAR.	6″ MIN.	10″
2	45′	VAR.	6″ MIN.	10″
3	40′	VAR.	6″ MIN.	10″
4	35′	VAR.	6″ MIN.	10″
5	30′	VAR.	6″ MIN.	10″

✳ THE MINIMUM ALTERNATE DIAMETER SHALL BE 10″ FOR A 50′ POLE, 9-1/2″ FOR A 45′ POLE, 9″ FOR A 40′ POLE, 8-1/2″ FOR A 35′ POLE AND 8″ FOR A 30′ POLE.

LED LUMINAIRES				
FUSE RATING	DESIGNATION	MAX. WATT	DISTRIBUTION TYPE	BACKLIGHT-UPLIGHT-GLARE (BUG) RATING
3 A	LED-A	103	III	B2-U0-G2
5 A	LED-B	170	III	B3-U0-G3
7 A	LED-C	275	III	B3-U0-G3
LUMINAIRE PER CHART UNLESS OTHERWISE SPECIFIED ON PLANS.				

TYPE B POLE			
BRACKET SPREAD			6′ OR 15′
MAX. LUMINAIRE WEIGHT			60 LB
MAX. PROJECTED AREA			3.3 SQ. FT.
SINGLE BRACKET ARM			
LOCATION	BRACKET SPREAD	D NOM.	ANCHOR BOLT DIA.
BRIDGE SAFETY BARRIER CURB	6′	10″	1-1/4″
TRUSSED BRACKET ARM			
LOCATION	BRACKET SPREAD	D NOM.	ANCHOR BOLT DIA.
BRIDGE SAFETY BARRIER CURB	15′	10″	1-1/4″

TYPE MB POLE		
BRACKET SPREAD		6′ OR 15′
MAX. LUMINAIRE WEIGHT		60 LB
MAX. PROJECTED AREA		3.3 SQ. FT.
DOUBLE BRACKET ARM		
LOCATION	BRACKET SPREAD	D NOM.
MEDIAN BARRIER CURB	6′	10″
DOUBLE TRUSSED BRACKET ARM		
LOCATION	BRACKET SPREAD	D NOM.
MEDIAN BARRIER CURB	15′	10″

GENERAL NOTES:

THE CORRECT MOUNTING HEIGHT WILL BE OBTAINED BY ADJUSTING DOWNWARD FROM THE 6″ MINIMUM CLEARANCE BETWEEN THE POLE CAP AND THE TOP OF THE BRACKET ARM MOUNT.

HOLES SHALL BE PUNCHED ONLY FOR SPECIFIED BOLT CIRCLE.

TRANSFORMER BASE SHALL BE CERTIFIED AS MEETING THE BREAKAWAY CRITERIA AND STRUCTURAL REQUIREMENTS AS SET BY THE CURRENT AASHTO "STANDARD SPECIFICATIONS FOR STRUCURAL SUPPORTS FOR HIGHWAY SIGNS, LUMINARIES, AND TRAFFIC SIGNALS" AND MEET THE BREAKAWAY REQUIREMENTS OF NCHRP 350.

HANDHOLE SHALL BE APPROX. 4″ X 6½″. HANDHOLE FRAME SHALL BE REINFORCED SO THAT THE POLE STRENGTH IS NOT REDUCED.

TRANSFORMER BASES FOR 45′ MOUNTING HEIGHT SHALL BE FURNISHED WITH ONE DRILLED AND TAPPED HOLE AND GROUNDING LUG FOR GROUNDING EQUIPMENT.

ALL JUNCTION BOXES SHALL CONFORM TO SECTION 1062 OF THE STANDARD SPECIFICATIONS.

TYPE AT POLES SHALL BE EQUIPED WITH THE GROUNDING LUG INSIDE THE TRANSFORMER BASE. TYPE B AND MB POLES SHALL BE EQUIPED WITH A GROUNDING LUG INSIDE THE POLE.

POST SHALL BE GROUNDED FROM GROUND LUG IN POST WITH #6 AWG BARE COPPER WIRE TO CONDUIT SYSTEM. GROUND LUG SHALL BE 90° OR 180° FROM HANDHOLE.

THE CABLE ENTRANCE AT THE BRACKET ARM SHALL BE A FIELD DRILLED 1¼″ DIA. HOLE.

IF A SEAL IS PRESENT ON THIS SHEET IT HAS BEEN ELECTRONICALLY SEALED AND DATED.

MISSOURI HIGHWAYS AND TRANSPORTATION COMMISSION
105 WEST CAPITOL
JEFFERSON CITY, MO 65102
1-888-ASK-MODOT (1-888-275-6636)

STATE OF MISSOURI
ERIC E. SCHROETER
NUMBER PE-28411
PROFESSIONAL ENGINEER
THIS SHEET HAS BEEN SIGNED, SEALED AND DATED ELECTRONICALLY.

HIGHWAY LIGHTING
POLES, FOUNDATIONS AND APPURTENANCES FOR 45′ MOUNTING HEIGHT

DATE EFFECTIVE: 04/01/2018
DATE PREPARED: 2/9/2018

901.01AJ

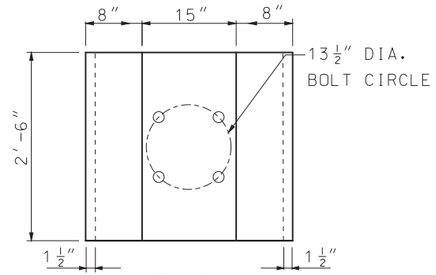

PLAN

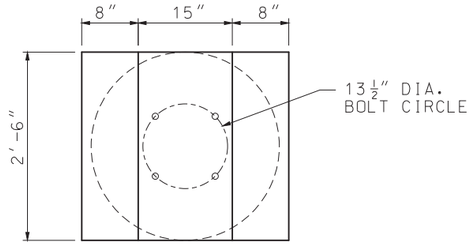

PLAN

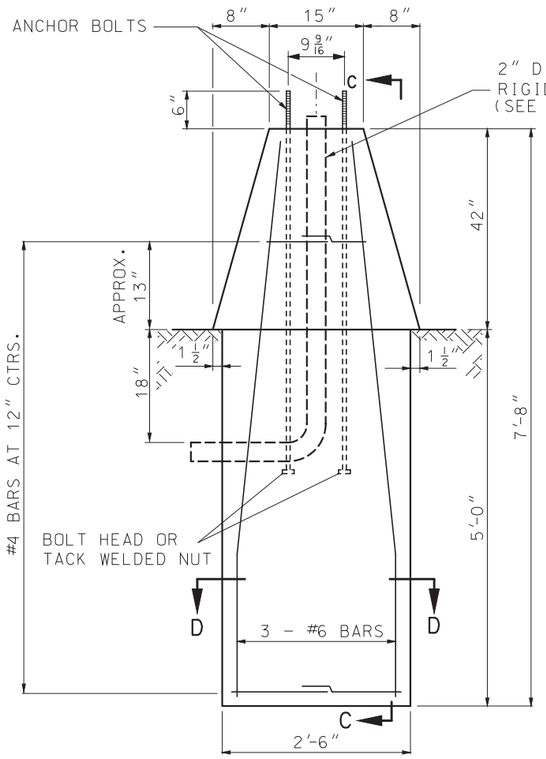

ELEVATION
ALTERNATE 1

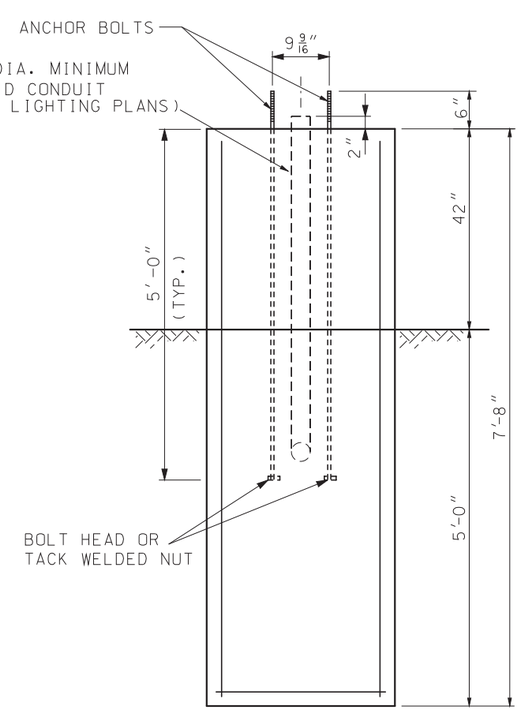

SECTION C–C

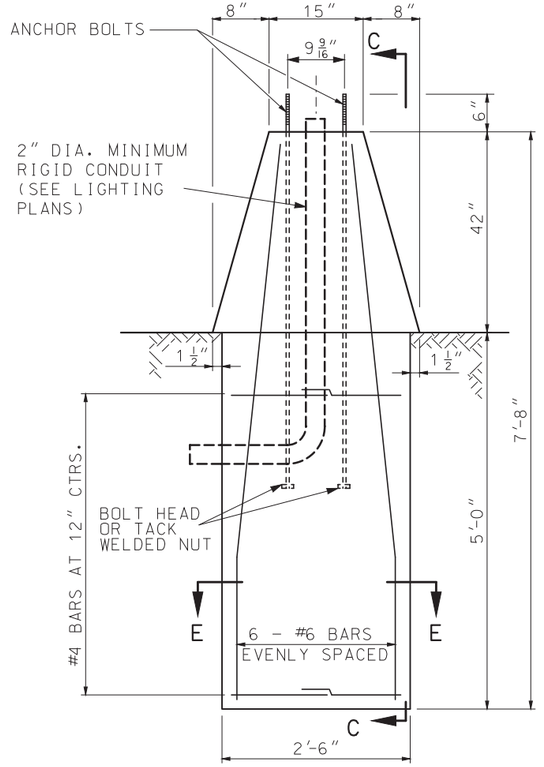

ELEVATION
ALTERNATE 2

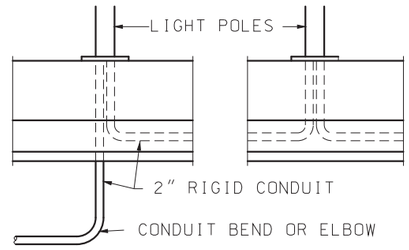

CONDUIT DETAIL FOR
ALTERNATE 1 & 2

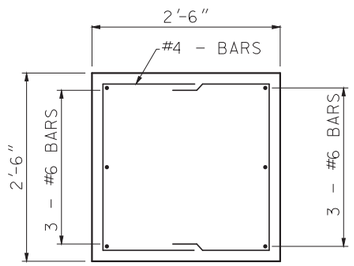

SECTION D–D

CONCRETE MEDIAN BARRIER AND FOUNDATION DESIGN FOR TYPE MB LIGHT POLE

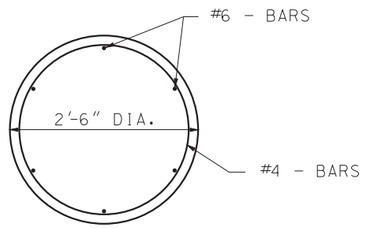

SECTION E–E

GENERAL NOTES:

ALL FOUNDATIONS SHALL INCLUDE 4 ANCHOR BOLTS AND NUTS PLACED AS SHOWN.

ALL ANCHOR BOLTS SHALL BE FULLY GALVANIZED 1¼″ DIAMETER HIGH STRENGTH ANCHOR BOLTS.

TOUNGE AND GROOVE REQUIRED ON MEDIAN BARRIER SECTION FOR TYPEMB POLES WHEN ADJACENT MEDIAN BARRIER IS PRECAST, FOR DETAILS, SEE STANDARD PLANS.

MISSOURI HIGHWAYS AND TRANSPORTATION COMMISSION
105 WEST CAPITOL
JEFFERSON CITY, MO 65102
1-888-ASK-MODOT (1-888-275-6636)

STATE OF MISSOURI
ERIC E. SCHROETER
NUMBER PE-28411
PROFESSIONAL ENGINEER
THIS SHEET HAS BEEN SIGNED, SEALED AND DATED ELECTRONICALLY.

HIGHWAY LIGHTING
POLES, FOUNDATIONS
AND APPURTENANCES
FOR 45′ MOUNTING HEIGHT

DATE EFFECTIVE: 12/01/2013
DATE PREPARED: 2/9/2018

901.01AJ

SHEET NO.
4 OF 6

IF A SEAL IS PRESENT ON THIS SHEET IT HAS BEEN ELECTRONICALLY SEALED AND DATED.

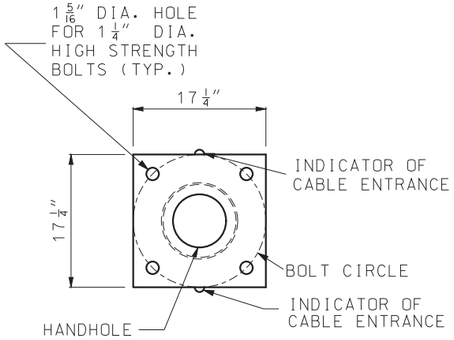

PLAN

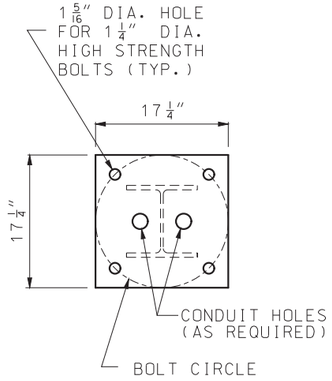

PLAN

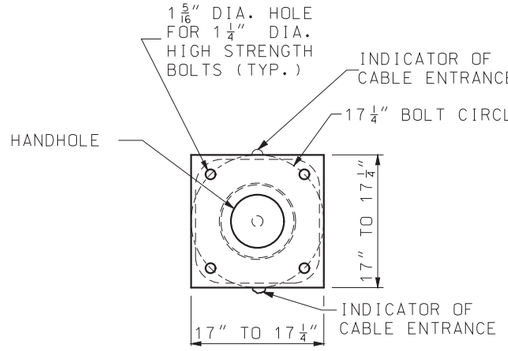

PLAN

NOTE:
DRIVE HOLES WILL BE PERMITTED PROVIDED THEY DO NOT CONFLICT WITH OR COMPROMISE THE STRUCTURAL INTEGRITY OF THE PLATE, THE WELD BETWEEN THE PLATE AND SHAFT, OR THE BOLT HOLES.

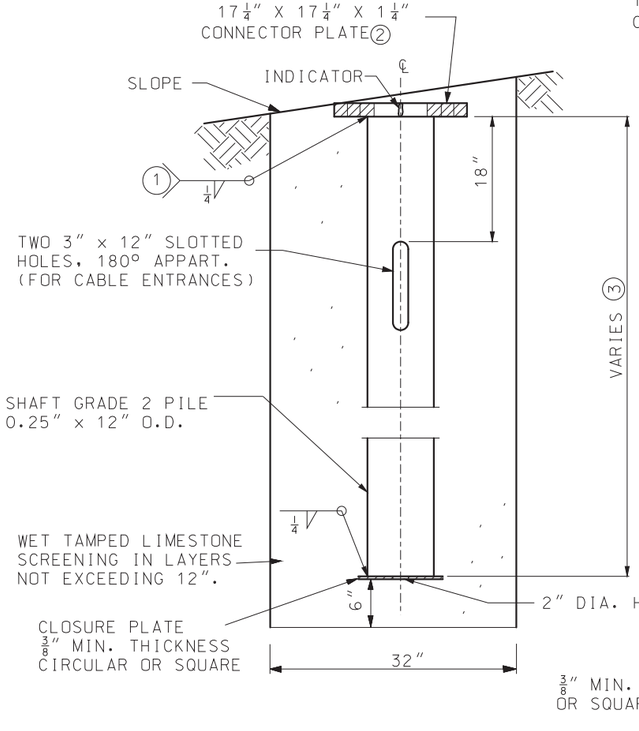

ELEVATION

DETAILS OF CIRCULAR STEEL PILE FOUNDATION

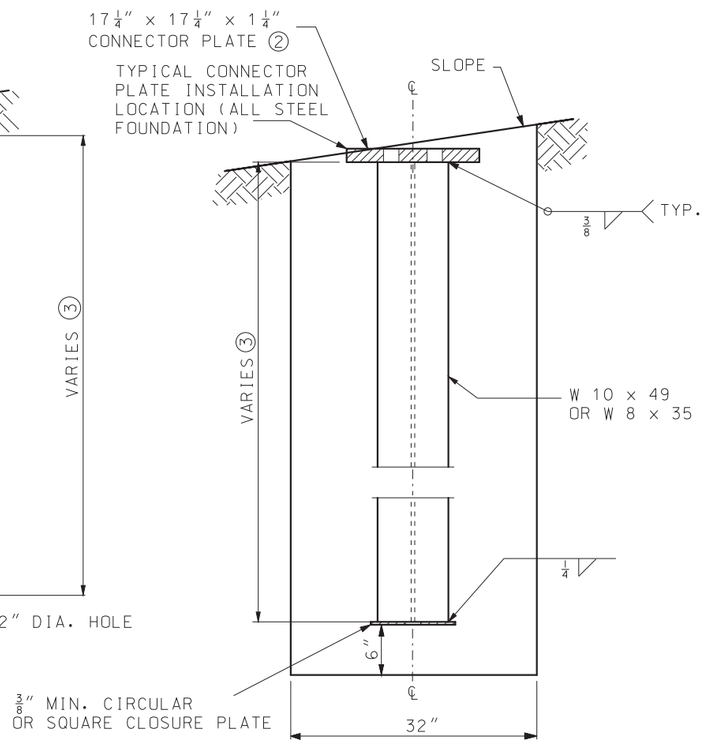

ELEVATION

DETAILS OF STEEL "H" PILE FOUNDATION

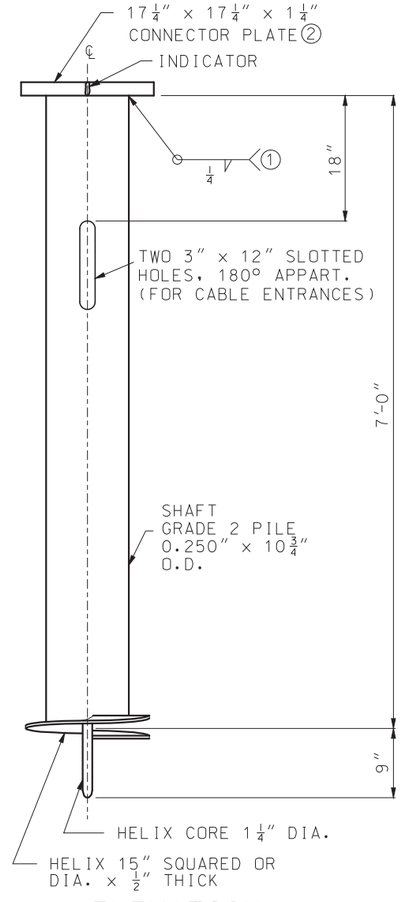

ELEVATION

DETAILS OF SCREW ANCHOR FOUNDATION

① GRIND WELD AS NECESSARY TO CLEAR BOLT HEAD.

② FOUNDATIONS SHALL BE INSTALLED SO THAT CONNECTOR PLATES ARE LEVEL PERPENDICULAR TO THE BRACKET ARM AND SLOPED FOR POLE RAKING PARALLEL TO THE BRACKET ARM.

③ PILE LENGTHS FOR STEEL PILE FOUNDATIONS:

AT-45 DESIGN NO.	PILE LENGTH
4 & 5	8'-0"
2 & 3	9'-0"
1	10'-0"

GENERAL NOTES:

ALL CLASSIFICATIONS ARE ASTM UNLESS OTHERWISE NOTED. SEE STANDARD SPECIFICATIONS FOR CLASSIFICATIONS NOT SHOWN.

ALL BOLT CIRCLES FOR 45' MOUNTING HEIGHT SHALL BE 17 1/4".

ALL CONECTOR PLATE AND CLOSURE PLATE THICKNESSES SHOWN ARE MINIMUM DIMENSIONS.

ALL ANCHOR BOLTS SHALL BE FULLY GALVANIZED 1 1/4" DIAMETER HIGH STRENGTH ANCHOR BOLTS.

ALL STEEL COMPONENTS SHALL BE HOT DIP GALVANIZED.

MISSOURI HIGHWAYS AND TRANSPORTATION COMMISSION
105 WEST CAPITOL
JEFFERSON CITY, MO 65102
1-888-ASK-MODOT (1-888-275-6636)

STATE OF MISSOURI
ERIC E. SCHROETER
NUMBER PE-28411
PROFESSIONAL ENGINEER
THIS SHEET HAS BEEN SIGNED, SEALED AND DATED ELECTRONICALLY.

HIGHWAY LIGHTING

POLES, FOUNDATIONS AND APPURTENANCES FOR 45' MOUNTING HEIGHT

DATE EFFECTIVE: 12/01/2013
DATE PREPARED: 2/9/2018

901.01AJ

SHEET NO. 5 OF 6

IF A SEAL IS PRESENT ON THIS SHEET IT HAS BEEN ELECTRONICALLY SEALED AND DATED.

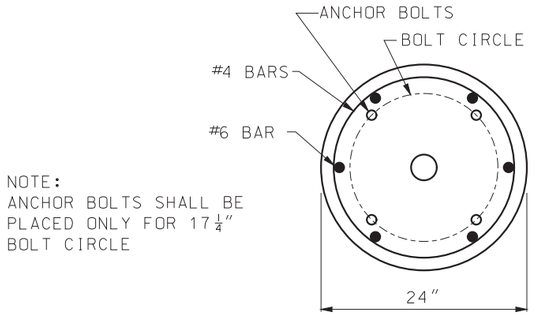

NOTE:
ANCHOR BOLTS SHALL BE PLACED ONLY FOR 17 $\frac{1}{4}$″ BOLT CIRCLE

PLAN

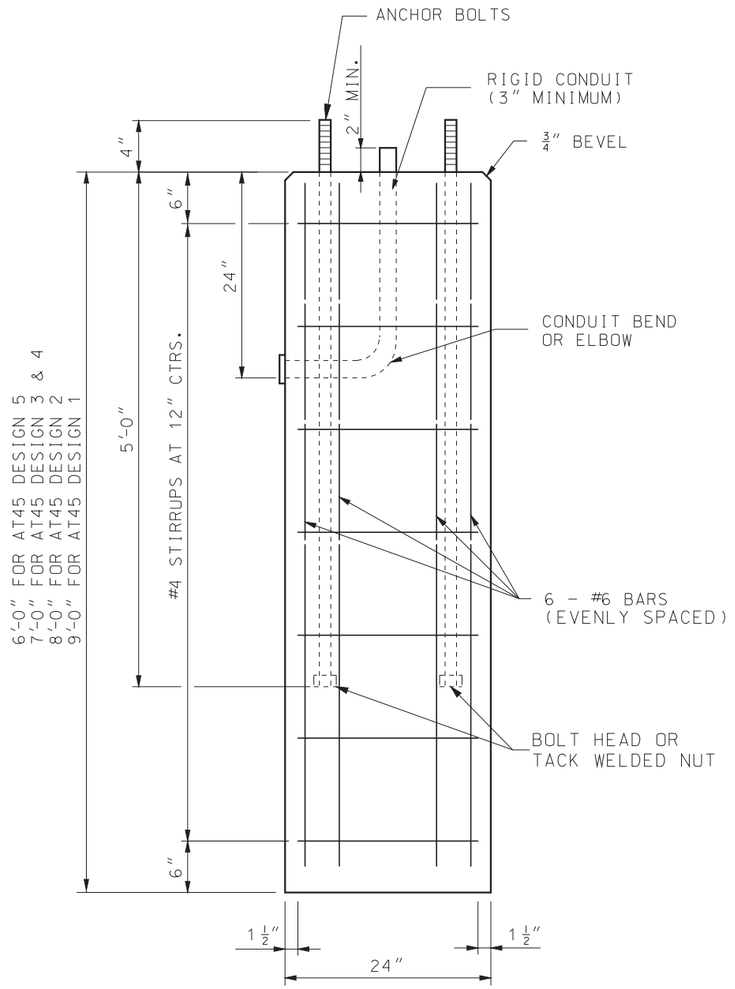

ELEVATION

DETAILS OF CONCRETE FOUNDATION (4)

(4) AT THE OPTION OF THE CONTRACTOR THE CONCRETE FOUNDATIONS MAY BE PRECAST. IF PRECAST, THEY SHALL BE SET IN DRILLED HOLES 3 FEET IN DIAMETER AND 6 INCHES DEEPER THAN THE BOTTOM OF THE CONCRETE FOUNDATION. THE BOTTOM 6 INCHES OF THE HOLE AND THE REMAINING SPACE AROUND THE FOUNDATION SHALL BE BACKFILLED WITH WET TAMPED LIMESTONE SCREENINGS IN LAYERS NOT EXCEEDING 12 INCHES.

QUANTITIES		
	CONC.	REINF.
HEIGHT	CU. YD.	LBS.
6′-0″	.70	80
7′-0″	.81	90
8′-0″	.93	104
9′-0″	1.05	120

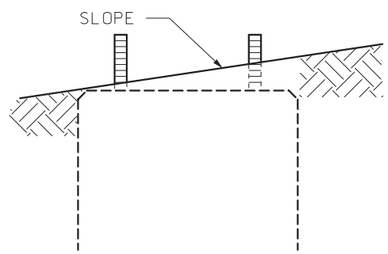

CONCRETE FOUNDATION EMBEDMENT

GENERAL NOTES:

ALL CLASSIFICATIONS ARE ASTM UNLESS OTHERWISE NOTED. SEE STANDARD SPECIFICATIONS FOR CLASSIFICATIONS NOT SHOWN.

ALL BOLT CIRCLES FOR 45′ MOUNTING HEIGHT SHALL BE 17 $\frac{1}{4}$″.

ALL CONECTOR PLATE AND CLOSURE PLATE THICKNESSES SHOWN ARE MINIMUM DIMENSIONS.

ALL ANCHOR BOLTS SHALL BE FULLY GALVANIZED 1 $\frac{1}{4}$″ DIAMETER HIGH STRENGTH ANCHOR BOLTS.

ALL STEEL COMPONENTS SHALL BE HOT DIP GALVANIZED.

IF A SEAL IS PRESENT ON THIS SHEET IT HAS BEEN ELECTRONICALLY SEALED AND DATED.

MISSOURI HIGHWAYS AND TRANSPORTATION COMMISSION
105 WEST CAPITOL
JEFFERSON CITY, MO 65102
1-888-ASK-MODOT (1-888-275-6636)

STATE OF MISSOURI
ERIC E. SCHROETER
NUMBER PE-28411
PROFESSIONAL ENGINEER
THIS SHEET HAS BEEN SIGNED, SEALED AND DATED ELECTRONICALLY.

HIGHWAY LIGHTING
POLES, FOUNDATIONS AND APPURTENANCES FOR 45′ MOUNTING HEIGHT

DATE EFFECTIVE: 12/01/2013
DATE PREPARED: 2/9/2018

901.01AJ

SHEET NO. 6 OF 6

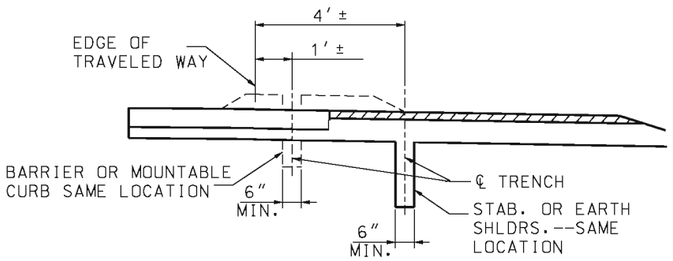

TRENCH LOCATION - INSIDE SHOULDER

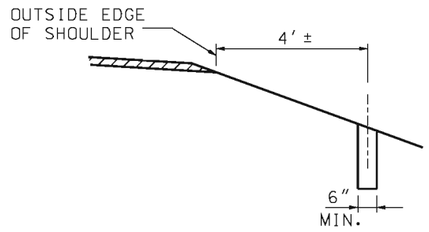

TRENCH LOCATION - OUTSIDE SHOULDER

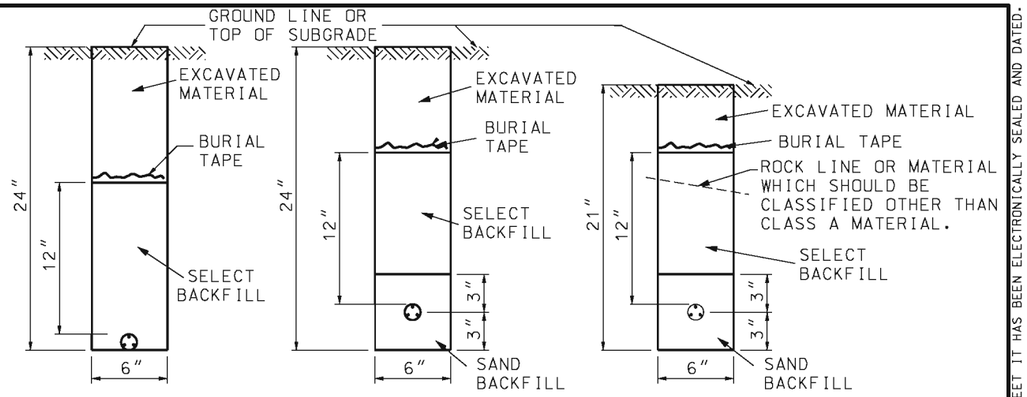

TYPE I TRENCH TYPE II TRENCH TYPE III TRENCH

TRENCHING AND BACKFILLING FOR CABLE-CONDUIT

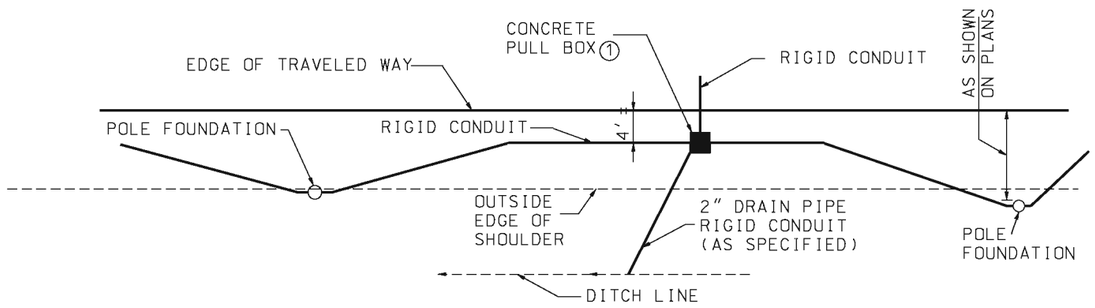

PLAN

INSIDE SHOULDER (ALL SHOULDER TYPES)

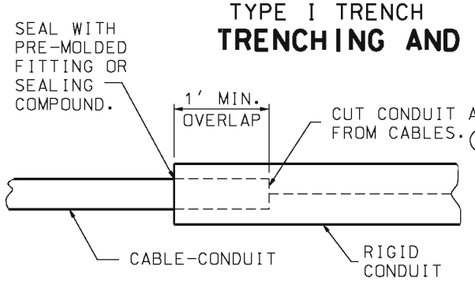

TERMINATION OF CABLE-CONDUIT INTO RIGID CONDUIT SYSTEM

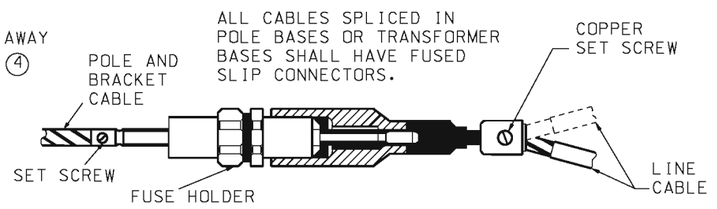

SINGLE OR DUAL CABLE FUSED SLIP CONNECTOR ASSEMBLY ③

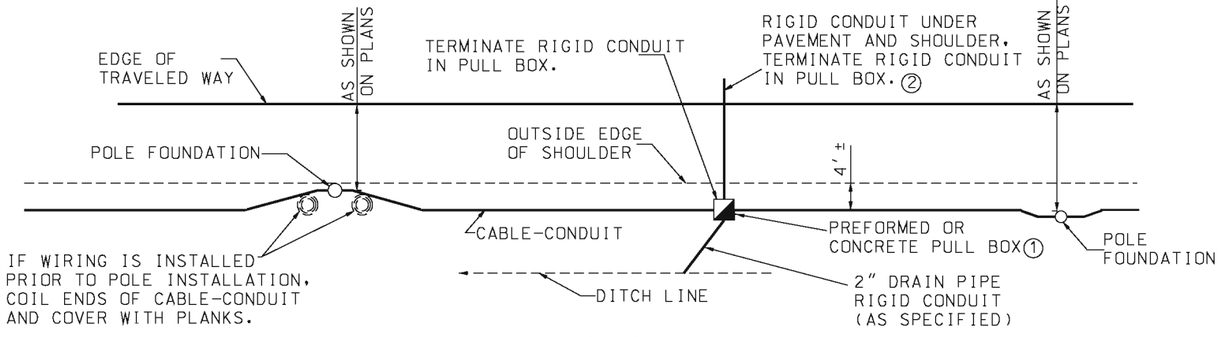

PLAN

OUTSIDE SHOULDER (ALL SHOULDER TYPES)

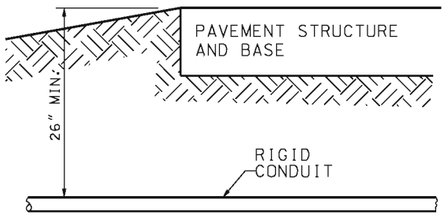

RIGID CONDUIT UNDER PAVEMENT

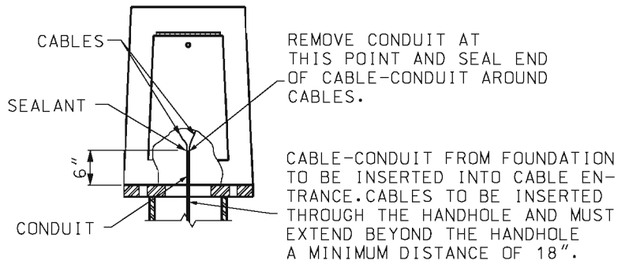

TYPICAL TRANSFORMER BASE ATTACHMENT

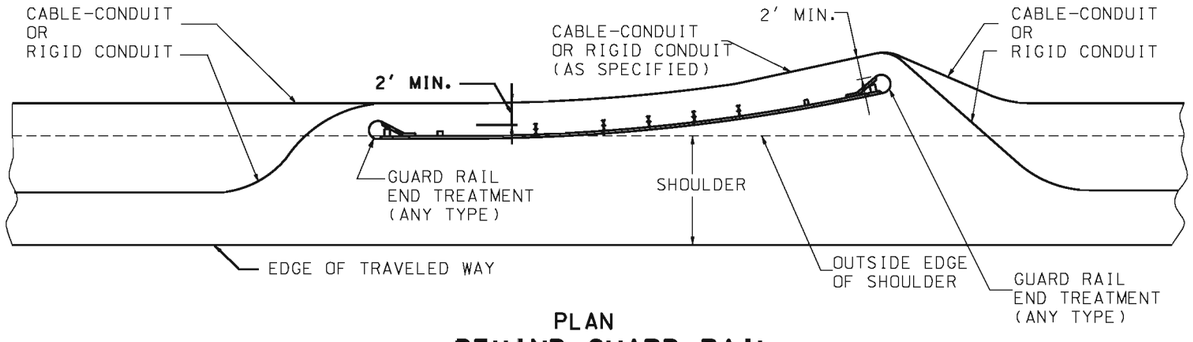

PLAN

BEHIND GUARD RAIL

NOTES:

① SEE DRAWING 902.20 FOR PULL BOXES.

② CONDUIT MAY BE REMOVED FROM CABLES IN RIGID CONDUIT. SPLICES SHALL NOT BE MADE UNLESS SHOWN ON PLANS.

③ BRAND AND MODEL OF FUSE HOLDER SHALL BE APPROVED BY THE ENGINEER.

④ CABLES SHALL BE CONTINUOUS TO THE FIRST LIGHT POLE. SPLICES SHALL NOT BEMADE FOR THE PURPOSE OF TERMINATING CABLE-CONDUIT.

GENERAL NOTES:

THE CONDUIT OF THE CABLE-CONDUIT SHALL BE CUT AWAY FROM THE CABLES WHERE THEY ENTER THE RIGID CONDUIT INSIDE A CONCRETE BARRIER OR STRUCTURE.

IF A SEAL IS PRESENT ON THIS SHEET IT HAS BEEN ELECTRONICALLY SEALED AND DATED.

MISSOURI HIGHWAYS AND TRANSPORTATION COMMISSION
105 WEST CAPITOL
JEFFERSON CITY, MO 65102
1-888-ASK-MODOT (1-888-275-6636)

STATE OF MISSOURI
EILEEN H. RACKERS
NUMBER PE-28336
PROFESSIONAL ENGINEER
THIS SHEET HAS BEEN SIGNED, SEALED AND DATED ELECTRONICALLY.

HIGHWAY LIGHTING
CABLE, CONDUIT AND TRENCHING

DATE EFFECTIVE: 04/01/2002
DATE PREPARED: 3/10/2011

901.02B

SHEET NO. 1 OF 1

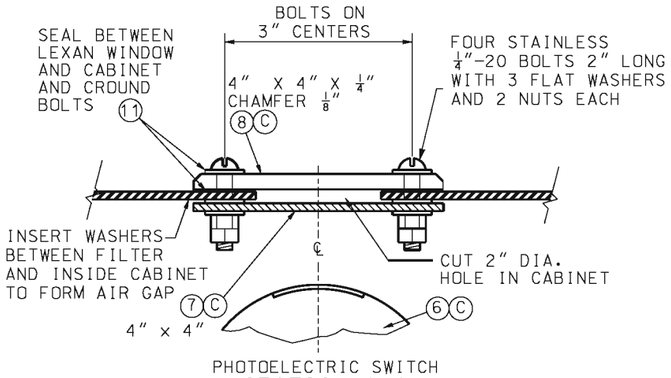

SECTION A-A
WINDOW DETAIL

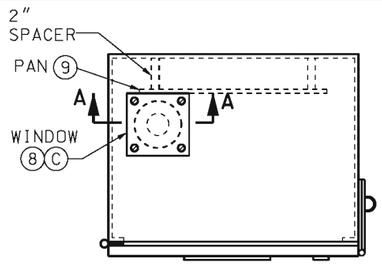

DETAIL A

LIST OF MATERIALS	
ITEM	DESCRIPTION
1	#2 CORBIN LOCK
2	RIGID CONDUIT ✳
3	CLASS B CONCRETE, 0.4 C.Y.±
4	NEMA 4, DUST-TIGHT, WATERTIGHT, CABINET
5	GROUND ROD, ¾" DIA. X 8' MIN.
6	PHOTOELECTRIC SWITCH AND SOCKET, 105/285 V., 1000-WATT
7	TRANSLUCENT, PLEXIGLASS FILTER #W2067, ⅛" THICK
8	CLEAR, LEXAN #9034 WINDOW, ¼" THICK MIN.
9	MOUNTING PAN, 31½" x 12" x ¼" ALUMINUM OR STAINLESS STEEL
10	PLIABLE DUCT SEALANT
11	LIFETIME SILICONE CAULK
12	ANCHOR BOLTS, 5/8-11 x 14" LONG BOLTS, HOT DIP GALVANIZED, 4 REQUIRED.USE BOLT HEAD OR TACK WELDED NUT ON EMBEDDED END
13	WEATHERPROOF ADHESIVE LABEL, VINYL RAISED LETTERING (OR EQUIVALENT, SEE DETAIL)
	✳ - SEE PLANS

NOTES

(A) IF CABLE-CONDUIT IS SPECIFIED, THE CONDUIT SHALL BE CUT AWAY FROM CABINET BETWEEN PULL BOX AND CONTROL STATION.

(B) LIGHTING SYSTEM VOLTAGE AS SPECIFIED ON PLANS.

(C) PHOTOELECTRIC SWITCH BRACKETS MAY VARY. LOCATE CENTER OF WIDOW OVER CENTER OF PHOTOELECTRIC SWITCH.

(D) IF SUBSURFACE CONDITIONS EXIST WHICH PROHIBIT THE PLACEMENT OF THE GROUND ROD IN A VERTICAL POSITION, THE ROD MAY BE DRIVEN AT AN OBLIQUE ANGLE NOT TO EXCEED 45 DEGREES FROM VERTICAL OR BURIED IN A TRENCH AT LEAST 30 IN. DEEP. CONNECTION TO GROUND ROD SHALL BE CADWELDED.

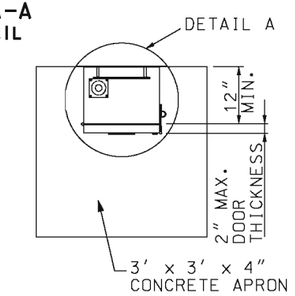

TOP VIEW

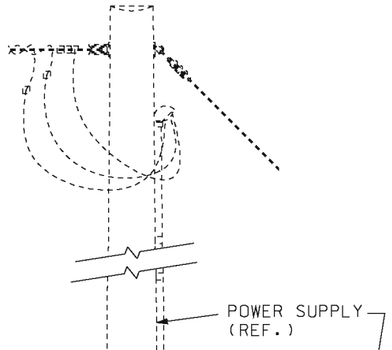

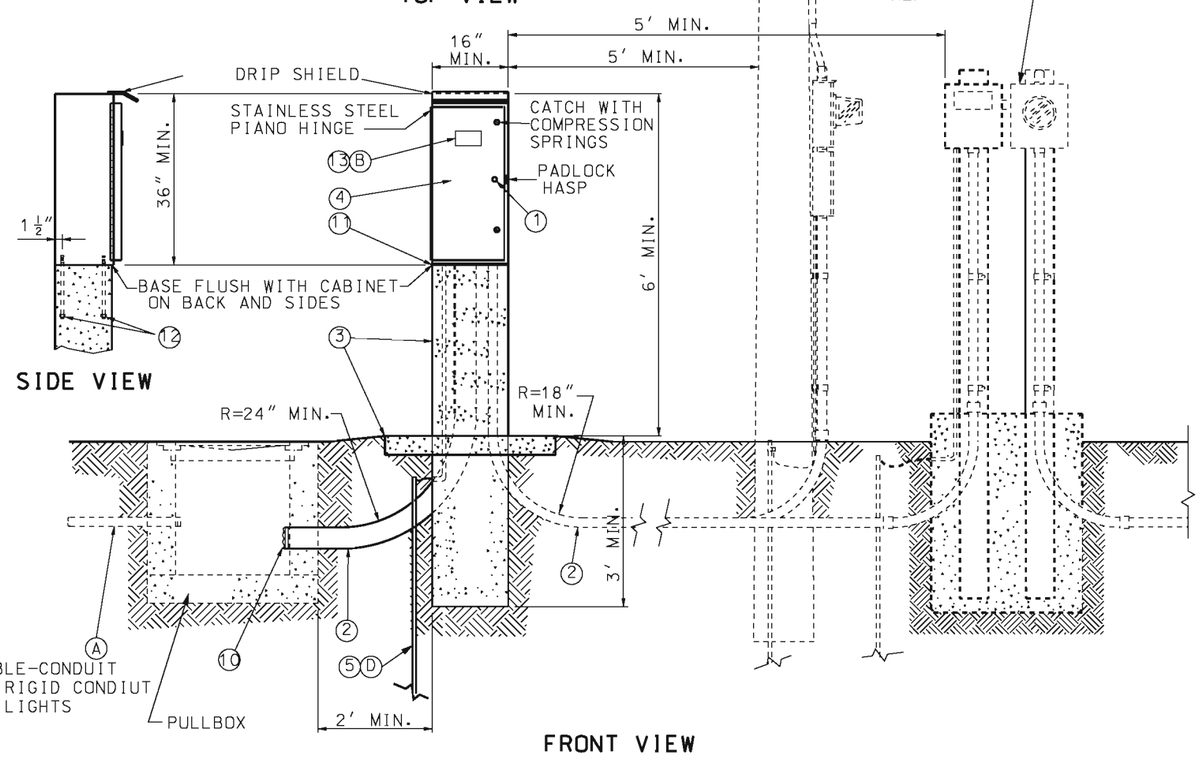

SIDE VIEW

FRONT VIEW

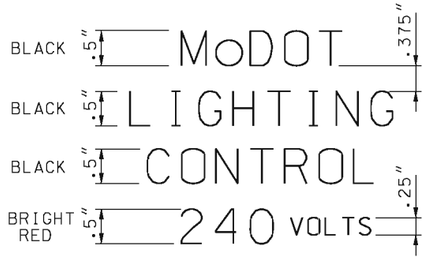

LABEL DETAIL
(240 VOLT) (13)(B)



LABEL DETAIL
(480 VOLT) (13)(B)

GENERAL NOTES:

ALTERNATE CABINET DIMENSIONS WILL BE ALLOWED AS APPROVED BY THE ENGINEER. INTERIOR CABINET VOLUME SHALL BE EQUAL TO OR GREATER THAN THAT SHOWN ON PLANS AND PROPER CLEARANCES SHALL BE PROVIDED FOR ALL EQUIPMENT. CONCRETE BASE DIMENSIONS SHALL BE MODIFIED TO FIT THE CABINET SUPPLIER.

PLACEMENT OF ALL ITEMS SHALL BE APPROVED BY THE ENGINEER.

CABINET SHALL BE LOCATED AWAY FROM TRAFFIC. TOP MOUNT PHOTO CONTROL SHALL FACE AN OPEN SKY. SIDE MOUNT PHOTO CONTROL SHALL FACE NORTH.

SEE PLANS FOR CIRCUIT WIRING; MAXIMUM LOADING PER CIRCUIT IS 7,400 WATTS FOR 240 VOLT AND 11,000 WATTS FOR 480 VOLT.

SCHEMATIC DIAGRAM SHALL BE MOUNTED ON INSIDE OF CABINET DOOR.

THE UTILITY SHALL BE NOTIFIED IN WRITING 30 DAYS PRIOR TO DATE SERVICE WILL BE REQUIRED.

ALL OPENINGS IN CABINET SHALL BE COVERED AND SEALED WITH LIFETIME SILICONE CAULK.

ALL MATERIALS REQUIRED EXCLUDING REFERENCE ITEMS AS SHOWN ON DRAWING SHALL BE INCLUDED IN PRICE BID FOR CONTROL STATION.

IF A SEAL IS PRESENT ON THIS SHEET IT HAS BEEN ELECTRONICALLY SEALED AND DATED.

MISSOURI HIGHWAYS AND TRANSPORTATION COMMISSION
105 WEST CAPITOL
JEFFERSON CITY, MO 65102
1-888-ASK-MODOT (1-888-275-6636)

STATE OF MISSOURI
EILEEN H. RACKERS
NUMBER PE-28336
PROFESSIONAL ENGINEER
THIS SHEET HAS BEEN SIGNED, SEALED AND DATED ELECTRONICALLY.

HIGHWAY LIGHTING
BASE MOUNTED CONTROL STATION 240 V OR 480 V - 4 CIRCUIT

DATE EFFECTIVE: 04/01/2005
DATE PREPARED: 9/14/2010

901.30F

SHEET NO. 1 OF 2

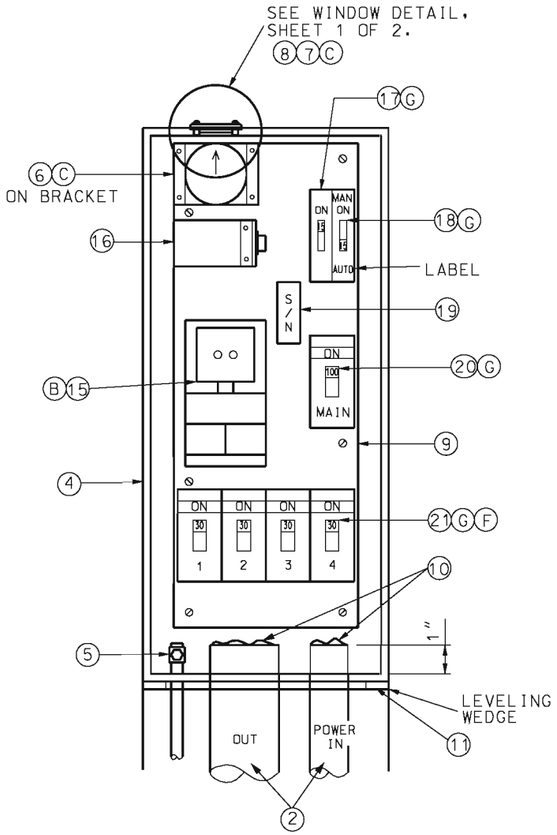

EQUIPMENT LAYOUT

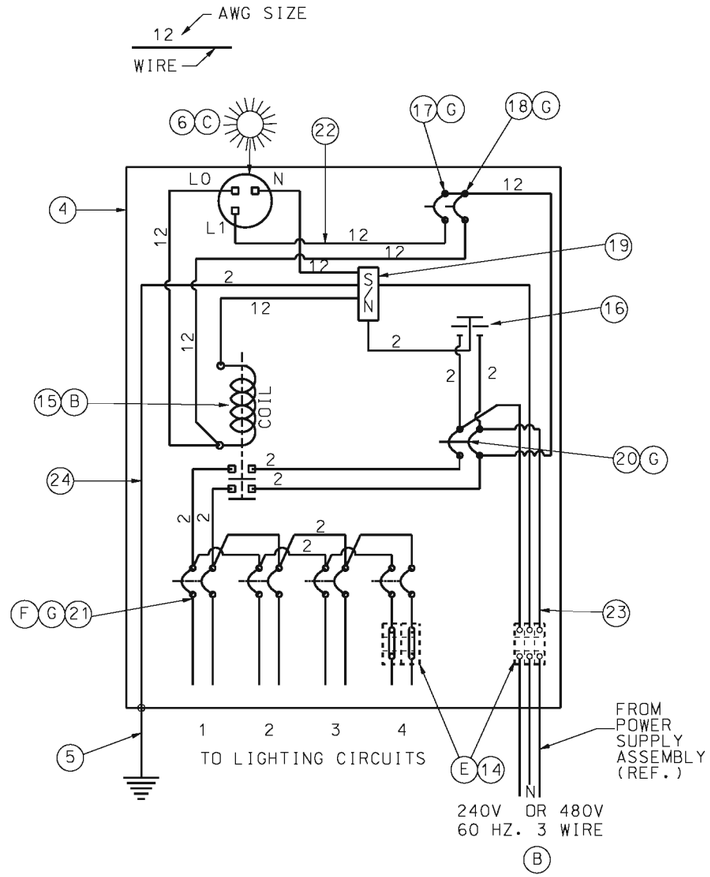

WIRING DIAGRAM

LIST OF MATERIALS	
ITEM	DESCRIPTION
2	RIGID CONDUIT ✳
4	NEMA 4, DUST-TIGHT, WATERTIGHT CABINET
5	GROUND ROD, $\frac{3}{4}$" DIA. X 8' MIN.
6	PHOTOELECTRIC SWITCH AND SOCKET, 105/285 V., 1000 WATT
7	TRANSLUCENT, PLEXIGLASS FILTER #W2067, $\frac{1}{8}$" THICK
8	CLEAR, LEXAN #9034 WINDOW, $\frac{1}{4}$" THICK MIN.
9	MOUNTING PAN, 31$\frac{1}{2}$" x 12" x $\frac{1}{4}$" ALUMINUM OR STAINLESS STEEL
10	PLIABLE SEALANT
11	LIFETIME SILICONE CAULK
14	INSULATED TERMINAL BLOCK, FOR GREATER THAN 4/0 CABLE
15(240V)	2-POLE, 100 AMP, 120V COIL LIGHTING CONTACTOR
15(480V)	2-POLE, 100 AMP, 240V COIL LIGHTING CONTACTOR
16	2-POLE, 650 VOLT LIGHTING ARRESTER
17	1-POLE, 15 AMP, TYPE B CONTROL BREAKER
18	1-POLE, 15 AMP,TYPE B MANUAL-AUTO SWITCH
19	INSULATED GROUNDABLE NEUTRAL, 100 AMP
20	2-POLE, 100 AMP, TYPE A MAIN BREAKER
21	2-POLE, 15 AMP(MIN), TYPE A LIGHTING BREAKERS
22	#12 AWG MIN., 600 V. CONTROL CABLE
23	#2 AWG MIN., 600 V. ✳ POWER CABLE
24	#2 AWG MIN., 600 V. GROUND CABLE
✳	SEE PLANS

NOTES

(B) LIGHTING SYSTEM VOLTAGE AS SPECIFIED ON PLANS.

(C) PHOTOELECTRIC SWITCH BRACKETS MAY VARY. LOCATE CENTER OF WINDOW OVER CENTER OF PHOTOELECTRIC SWITCH.

(E) IF FOR REASONS OF VOLTAGE DROP A WIRE SIZE IS SPECIFIED LARGER THAN THE BREAKER LUGS CAN ACCOMMODATE, AN INSULATED HEAVY DUTY TERMINAL BLOCK SHALL BE INSTALLED TO TERMINATE THE LARGER WIRES AND A SMALLER JUMPER CONNECTED TO THE BREAKER ITSELF.

(F) LIGHTING BREAKER SIZING:

SIZE (AMPS)	240V TOTAL CIRCUIT LOAD (WATTS)	480V TOTAL CIRCUIT LOAD (WATTS)
15	0-2800	0 - 5500
20	2850-3700	5550 - 7400
25	3750-4600	7450 - 9200
30	4650-5500	9250 - 11,000
35	5550-6500	--
40	6550-7400	--

CIRCUIT LOAD INCLUDES LOAD DUE TO LINE LOSS, LAMP, AND BALLAST LOAD.

(G) ALL CIRCUIT BREAKERS SHALL CONFORM TO SECTION 901.4 OF THE STANDARD SPECIFICATIONS.

IF A SEAL IS PRESENT ON THIS SHEET IT HAS BEEN ELECTRONICALLY SEALED AND DATED.

MISSOURI HIGHWAYS AND TRANSPORTATION COMMISSION
105 WEST CAPITOL
JEFFERSON CITY, MO 65102
1-888-ASK-MODOT (1-888-275-6636)

STATE OF MISSOURI
EILEEN H. RACKERS
NUMBER PE-28336
PROFESSIONAL ENGINEER
THIS SHEET HAS BEEN SIGNED, SEALED AND DATED ELECTRONICALLY.

HIGHWAY LIGHTING

BASE MOUNTED
CONTROL STATION
240 V OR 480 V - 4 CIRCUIT

DATE EFFECTIVE: 04/01/2005
DATE PREPARED: 8/26/2009

901.30F

SHEET NO. 2 OF 2

LIST OF MATERIALS	
ITEM	DESCRIPTION
1	SERVICE POLE 30' MIN.,CLASS 4 WOOD, CONTRACTOR PROVIDED, MoDOT OWNED*
2	#2 AWG MIN. CABLE, 600 VOLT *
3	SERVICE ENTRANCE HEAD
4	GUY CABLE, AS REQUIRED
5	RIGID CONDUIT, 2" MIN., WITH PREFORMED ELBOWS
6	LIGHTNING ARRESTER, VALVE TYPE, 2 POLE, 650 VOLT
7	METER SOCKET, 200 AMP, FOR SIGNALS
8	METER SOCKET, 200 AMP, FOR LIGHTING
9	LOCKING, RAINTIGHT, NEMA 4 SERVICE DISCONNECT BOX
10	INSULATED, GROUNDABLE NEUTRAL WIRE, 200 AMP MINIMUM
11	SIGNAL BREAKERS, SINGLE POLE, 40A MIN, TYPE A OR B *
12	LIGHTING BREAKER, 2 POLE, 240 VOLT, 100A, TYPE A OR B
13	1/2" METAL CONDUIT
14	#2 AWG MIN. GROUND WIRE
15	GROUND ROD, 3/4" x 8' MIN.
16	#8 AWG MIN. CABLE, 600 VOLT *
17	CLASS B CONCRETE, 0.92 C.Y.±
18	THREADED CONDUIT HUB WITH SEALING WASHERS
19	WEATHERPROOF ADHESIVE LABEL (LIGHTING), VINYL RAISED LETTERING (OR EQUIVALENT, SEE DETAIL)
20	WEATHERPROOF ADHESIVE LABEL (SIGNALS), VINYL RAISED LETTERING (OR EQUIVALENT, SEE DETAIL)
21	W6 x 9 OR W6 x 15 GALVANIZED POST
22	#2 AWG MIN. CABLE, 600 VOLT
23	RIGID CONDUIT, 2" MINIMUM
*	SEE PLANS

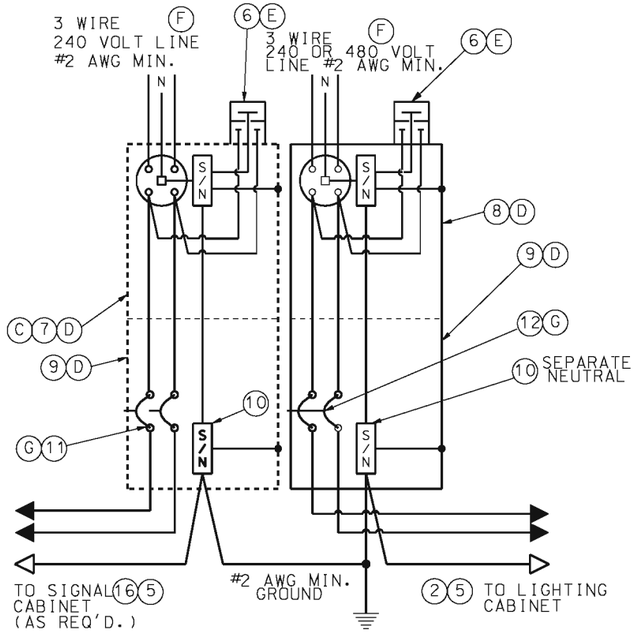

WIRING DIAGRAM

LIGHTING AND/OR SIGNALS

NOTES:

(A) SERVICE POLE SHALL BE GUYED WHEN SPAN OF OVERHEAD SERVICE WIRE EXCEEDS 50 FEET.

(B) INCREASE 1 FOOT FOR EACH 5 FEET ABOVE 30 FEET.

(C) SERVICE DISCONNECT BOXES AND METER BOXES SHALL BE ALUMINUM OR STAINLESS STEEL. ALL HARDWARE, HINGES, CATCHES, ETC. SHALL BE STAINLESS STEEL.METER SOCKET FOR SIGNALS OR LIGHTING AND OTHER EQUIPMENT AND MATERIALS SHALL BE U.L. APPROVED, AND CONFORM TO THE REQUIREMENTS OF THE UTILITY COMPANY OR MUNICIPALITY PROVIDING POWER.

(D) SCHEMATIC DIAGRAM SHALL BE MOUNTED ON INSIDE OF CABINET DOOR.

(E) UTILITY COMPANY SHALL DECIDE IF LIGHTNING ARRESTERS ARE TO BE CONNECTED ON THE LOAD OR LINE SIDE OF THE METER. THE UTILITY COMPANY SHALL ALSO DECIDE IF THE LIGHTNING ARRESTER IS TERMINATED IN THE METER OR DISCONNECT CABINET. IF TERMINATED IN THE DISCONNECT CABINET, IT SHALL BE INSTALLED ON THE DISCONNECT CABINET.

(F) LIGHTING SYSTEM VOLTAGE OF 240 VOLTS OR 480 VOLTS AS SHOWN ON THE PLANS.

(G) BREAKERS SHALL CONFORM TO SEC. 901.4 OF THE STANDARD SPECIFICATIONS.

(H) IF SUBSURFACE CONDITIONS EXIST WHICH PROHIBIT THE PLACEMENT OF THE GROUND ROD IN A VERTICAL POSITION, THE ROD MAY BE DRIVEN AT AN OBLIQUE ANGLE NOT TO EXCEED 45 DEGREES FROM VERTICAL OR BURIED IN A TRENCH AT LEAST 30 IN. DEEP. CONNECTION TO GROUND ROD SHALL BE CADWELDED.

GENERAL NOTES:

FOR CABLE TYPES AND INSTALLATION, SEE STANDARD SPECIFICATIONS.

THE POWER SUPPLY ASSEMBLY TYPE IS SHOWN ON THE PLANS OR IS DESIGNATED IN THE CONTRACT.

THE UTILITY COMPANY SHALL BE NOTIFIED IN WRITING 30 DAYS PRIOR TO DATE SERVICE WILL BE REQUIRED.

WHERE SIGNAL OR LIGHTING POWER ONLY IS DESIGNATED, OMIT ITEMS NOT REQUIRED.

ALL OPENINGS IN ANY SERVICE BOX OR METER BOX SHALL BE COVERED AND SEALED WITH LIFETIME SILICONE CAULK.

ALL MATERIALS REQUIRED AS SHOWN ON DRAWING, INCLUDING CABLE AND CONDUIT FROM POWER SUPPLY ASSEMBLY TO UTILITY COMPANY FACILITIES, SHALL BE INCLUDED IN UNIT BID PRICE FOR POWER SUPPLY ASSEMBLY.

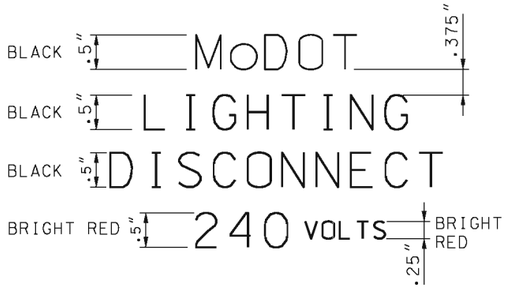

LABEL DETAIL (19) (240 VOLT) (F)

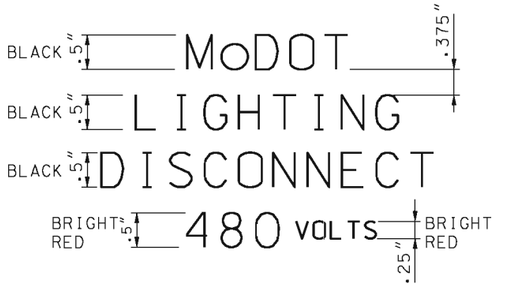

LABEL DETAIL (19) (480 VOLT) (F)

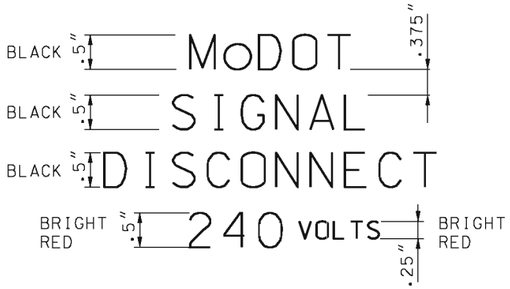

LABEL DETAIL (20)

MISSOURI HIGHWAYS AND TRANSPORTATION COMMISSION
105 WEST CAPITOL
JEFFERSON CITY, MO 65102
1-888-ASK-MODOT (1-888-275-6636)

STATE OF MISSOURI
EILEEN H. RACKERS
NUMBER PE-28336
PROFESSIONAL ENGINEER
THIS SHEET HAS BEEN SIGNED, SEALED AND DATED ELECTRONICALLY.

HIGHWAY LIGHTING
POWER SUPPLY ASSEMBLY
SECONDARY SERVICE

DATE EFFECTIVE: 04/01/2002
DATE PREPARED: 4/1/2010

901.80D

SHEET NO. 1 OF 2

IF A SEAL IS PRESENT ON THIS SHEET IT HAS BEEN ELECTRONICALLY SEALED AND DATED.

PEDESTAL OR NEW STATE-OWNED POLE TO BE SET WITHIN 2′ TO 4′ OF RIGHT-OF-WAY LINE.

ALL SERVICE POWER SUPPLY ASSEMBLIES ARE TO BE LOCATED ON STATE PROPERTY.

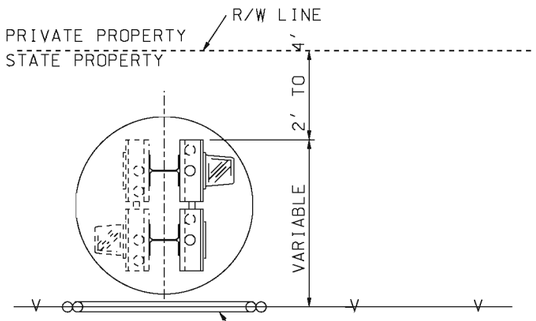

TOP VIEW

IF FENCE BLOCKS ACCESS TO POWER SUPPLY A 3′ MIN. LOCKING GATE IS TO BE INSTALLED. (NO DIRECT PAY)

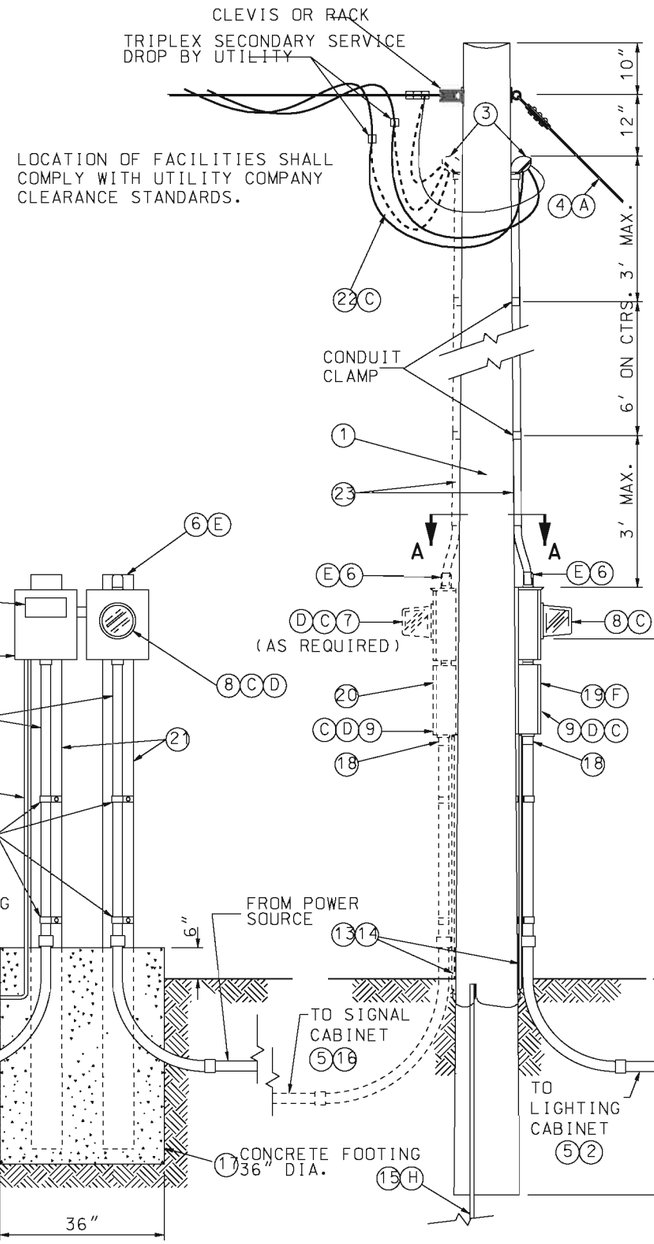

TYPE 1 (POLE) OVERHEAD SERVICE

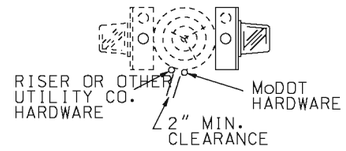

SECTION A-A

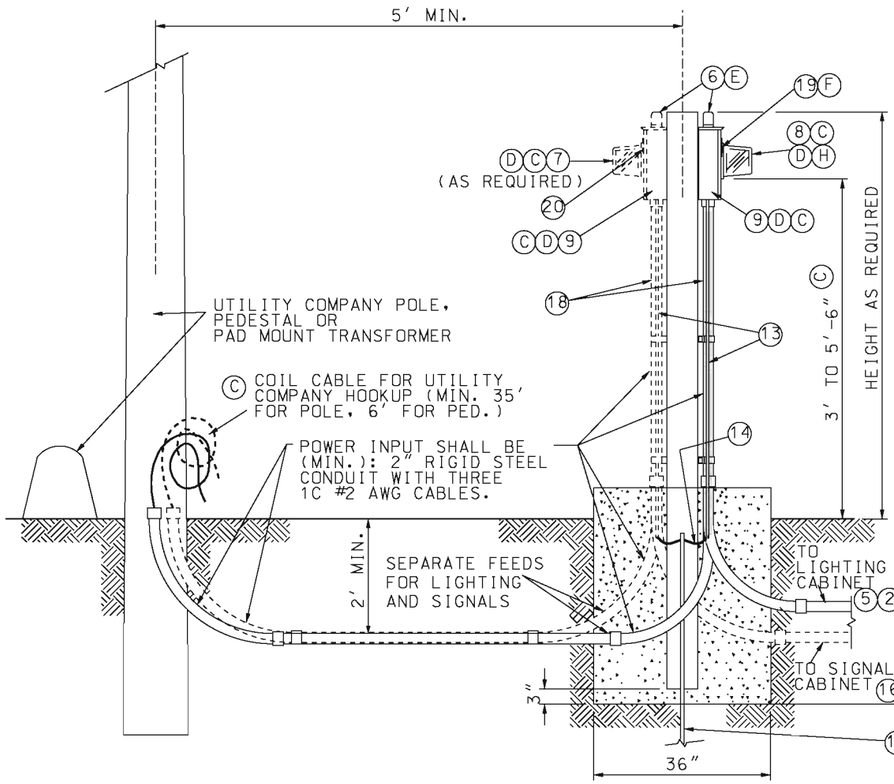

SIDE VIEW

FRONT VIEW

TYPE 2 (PEDESTAL) UNDERGROUND SERVICE

NOTE:
CABLE AND CONDUIT FROM POWER SUPPLY ASSEMBLY TO UTILITY COMPANY FACILITIES SHALL BE INCLUDED IN PRICE BID FOR POWER SUPPLY ASSEMBLY.

IF A SEAL IS PRESENT ON THIS SHEET IT HAS BEEN ELECTRONICALLY SEALED AND DATED.

MISSOURI HIGHWAYS AND TRANSPORTATION COMMISSION
105 WEST CAPITOL
JEFFERSON CITY, MO 65102
1-888-ASK-MODOT (1-888-275-6636)

STATE OF MISSOURI
EILEEN H. RACKERS
NUMBER PE-28336
PROFESSIONAL ENGINEER
THIS SHEET HAS BEEN SIGNED, SEALED AND DATED ELECTRONICALLY.

HIGHWAY LIGHTING
POWER SUPPLY ASSEMBLY SECONDARY SERVICE

DATE EFFECTIVE: 04/01/2002
DATE PREPARED: 5/19/2010

901.80D

SHEET NO. 2 OF 2

LED-C LUMINAIRE

BRACKET ARM

BOLT DOWN LIGHT STANDARD

EXISTING LIGHT STANDARD
AND LUMINAIRE

LED-A LUMINAIRE

LED-B LUMINAIRE

150 WATT UNDERPASS LUMINAIRE

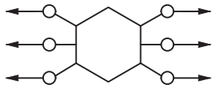

HIGH MAST TOWER WITH
LUMINAIRE AIM

PULL BOX, TYPE I DRAIN, CONCRETE

PULL BOX, TYPE II DRAIN, CONCRETE

PULL BOX, TYPE I DRAIN, PREFORMED

PULL BOX, TYPE II DRAIN, PREFORMED

EXISTING PULL BOX, TYPE I DRAIN, CONCRETE

EXISTING PULL BOX, TYPE II DRAIN, CONCRETE

EXISTING PULL BOX, TYPE I DRAIN, PREFORMED

EXISTING PULL BOX, TYPE II DRAIN, PREFORMED

SERVICE POLE OR PEDESTAL AND
POWER SUPPLY

TRANSFORMER OR SUBSTATION POLE

BASE MOUNTED LIGHTING CONTROL
STATION WITH PAD

EXISTING BASE MOUNTED CONTROL STATION

GROUND CONNECTION

RIGID CONDUIT IN TRENCH

CAPPED RIGID CONDUIT

RIGID CONDUIT PUSHED

EXISTING RIGID CONDUIT

RIGID CONDUIT ON BRIDGE

RIGID CONDUIT IN MEDIAN

CABLE CONDUIT WITH
CIRCUIT NUMBER

EXISTING CABLE CONDUIT

EXPOSED CONDUIT ON UNDER SIDE
OF BRIDGES. NUMBER OF HATCHES
DENOTES NUMBER OF WIRES IN
CONDUIT

IF A SEAL IS PRESENT ON THIS SHEET IT HAS BEEN ELECTRONICALLY SEALED AND DATED.

MISSOURI HIGHWAYS AND TRANSPORTATION COMMISSION

105 WEST CAPITOL
JEFFERSON CITY, MO 65102
1-888-ASK-MODOT (1-888-275-6636)

STATE OF MISSOURI
ERIC E. SCHROETER
NUMBER PE-28411
PROFESSIONAL ENGINEER

THIS SHEET HAS BEEN SIGNED, SEALED AND DATED ELECTRONICALLY.

HIGHWAY LIGHTING SYMBOLS

DATE EFFECTIVE: 04/01/2018
DATE PREPARED: 2/9/2018

901.85B

SHEET NO.
1 OF 1

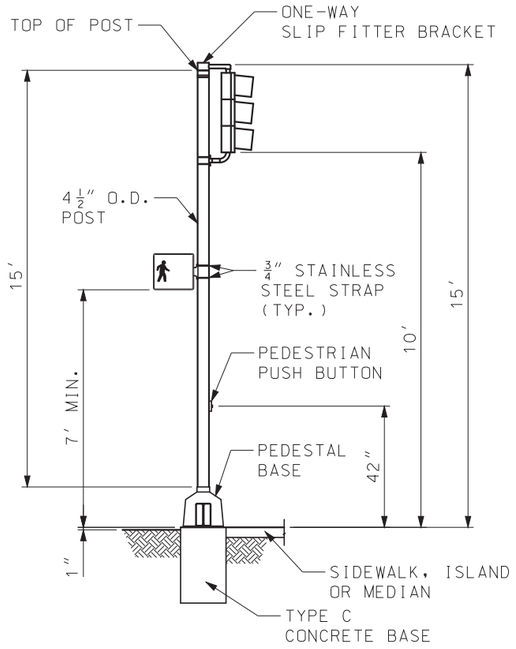

ONE FACE

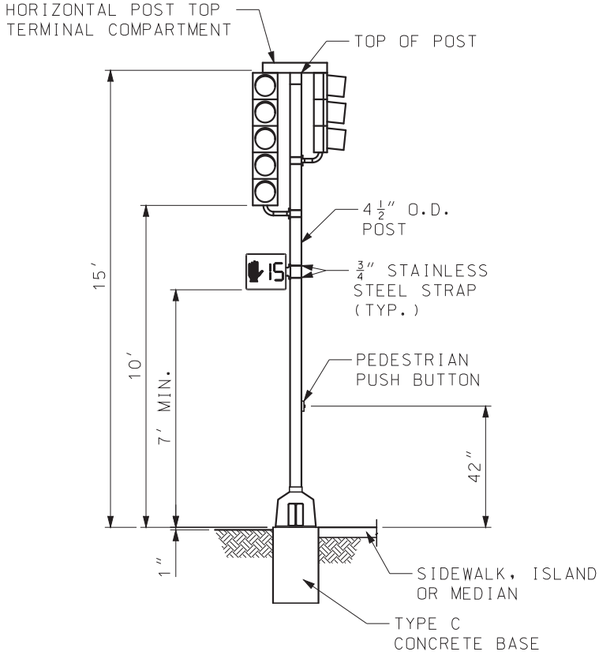

TWO FACE

PEDESTAL POST MOUNTINGS

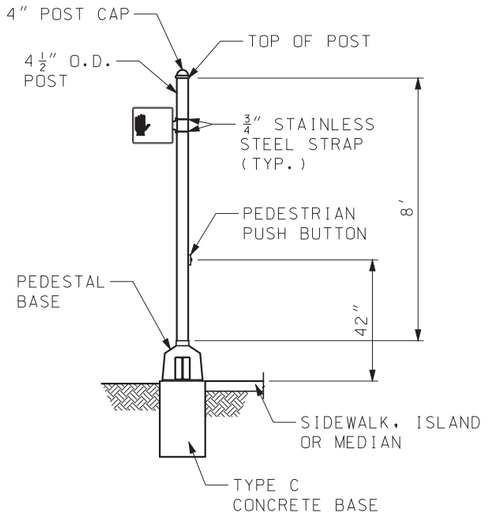

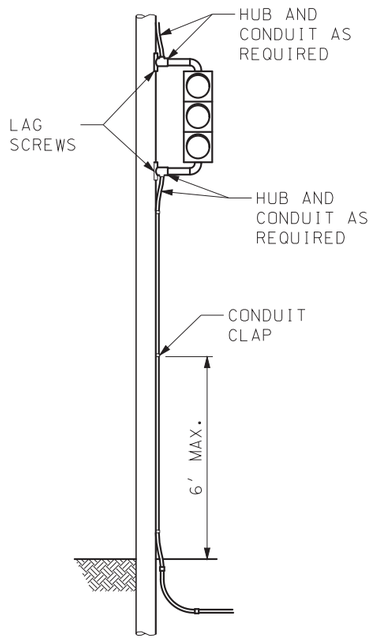

WOOD POLE MOUNTING

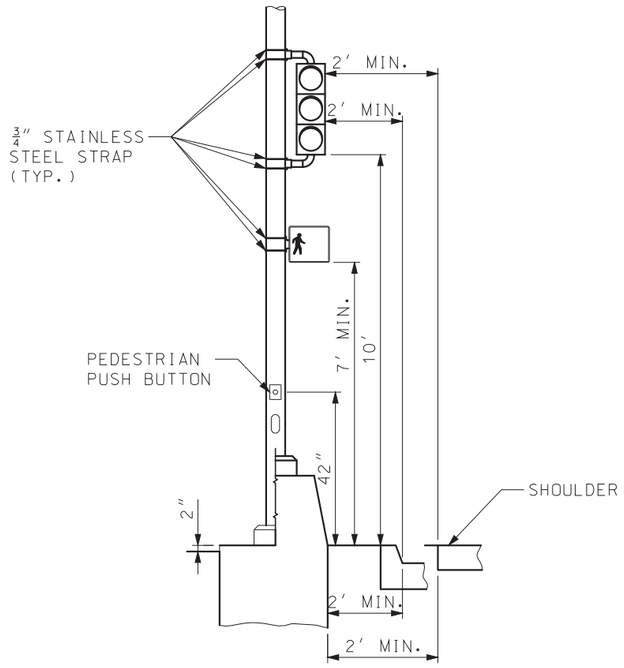

METAL POST MOUNTING

GENERAL NOTES:

ALL POST WIRE OUTLETS SHALL BE DEBURRED AND EQUIPPED WITH BUSHINGS.

BACKPLATES NOT SHOWN IN MOUNTING DIAGRAMS FOR CLARITY.

POSTS SHALL BE GROUNDED WITH #6 AWG BARE COPPER WIRE FROM GROUNDING BUSHING ON CONDUIT TO GROUNDING LUG IN POST BASE IF STEEL CONDUIT IS USED. IF PVC CONDUIT IS USED, PROVIDE #6 AWG BARE COPPER WIRE FROM GROUNDING LUG IN POST TO POWER SUPPLY GROUND BUSS IN CONTROLLER CABINET.

LEADS FROM PEDESTRIAN SIGNAL LAMPS ARE CONNECTED TO THE SIGNAL HEAD TERMINAL COMPARTMENT.

TYPE C MOUNTED SIGNALS SHALL HAVE A DISCONNECT HANGER.

TYPE B MOUNTED SIGNALS SHALL HAVE A TERMINAL COMPARTMENT.

ONE FACE, TOP-MOUNTED (TYPE T) OR SIDE-MOUNTED (TYPE S) SIGNALS HAVE NO TERMINAL COMPARTMENT.
TWO FACE, TOP-MOUNTED (TYPE T) OR SIDE-MOUNTED (TYPE S) SIGNALS SHALL HAVE A HORIZONTAL TERMINAL COMPARTMENT.

SIDE-MOUNTED OPTICALLY LIMITING HEADS SHALL HAVE A MINIMUM POST CLEARANCE OF 5½".

SIGNAL APPURTENANCES SHALL HAVE A HORIZONTAL CLEARANCE NO LESS THAN 2' FROM THE FACE OF A VERTICAL CURB OR FROM THE OUTSIDE EDGE OF A SHOULDER,EXCEPT SIGNALS LOCATED IN A MEDIAN ISLAND.

SEE STANDARD PLAN 902.30 FOR BASE DETAILS AND CONDUIT LOCATIONS.

IF A SEAL IS PRESENT ON THIS SHEET IT HAS BEEN ELECTRONICALLY SEALED AND DATED.

MISSOURI HIGHWAYS AND TRANSPORTATION COMMISSION
105 WEST CAPITOL
JEFFERSON CITY, MO 65102
1-888-ASK-MODOT (1-888-275-6636)

STATE OF MISSOURI
ERIC E. SCHROETER
NUMBER PE-28411
PROFESSIONAL ENGINEER
THIS SHEET HAS BEEN SIGNED, SEALED AND DATED ELECTRONICALLY.

TRAFFIC SIGNALS
SIGNAL HEAD MOUNTING

DATE EFFECTIVE: 07/01/2017
DATE PREPARED: 5/1/2017

902.00P

SHEET NO. 1 OF 2

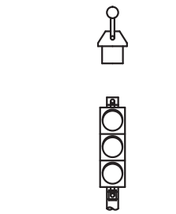

TYPE I BRACKET
ONE FACE

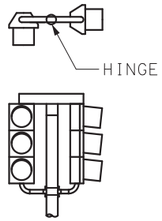

TYPE I BRACKET
TWO FACE

TOP-MOUNT (TYPE T)

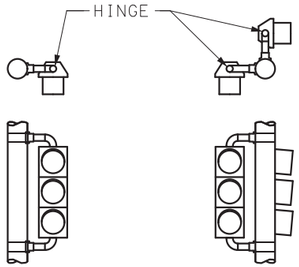

TYPE I BRACKET
ONE FACE

TYPE I BRACKET
TWO FACE

SIDE-MOUNT (TYPE S)

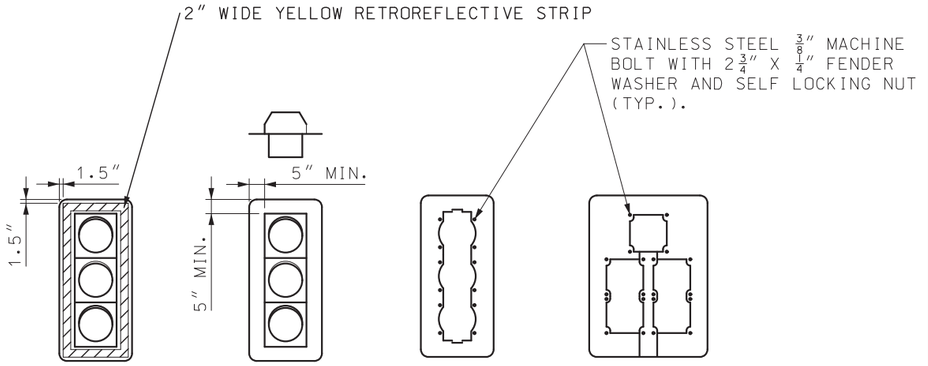

1 THRU 5
SECTION

5
SECTION

BACKPLATES

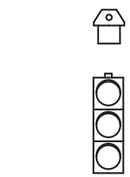

TYPE I BRACKET
ONE FACE

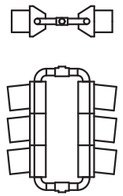

TYPE II BRACKET
TWO FACE

OVERHEAD SPANWIRE
(TYPE C)

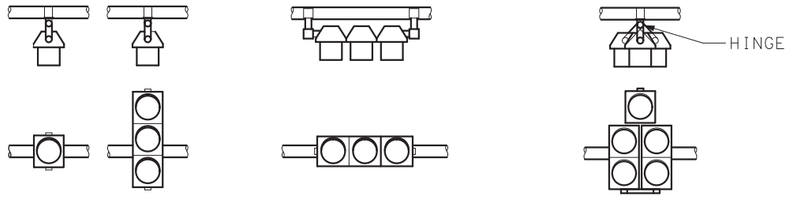

TYPE I BRACKET

TYPE II BRACKET

TYPE III BRACKET

MAST ARM (TYPE B)
(SEE DRAWING 902.40)



TUNNEL

VISORS

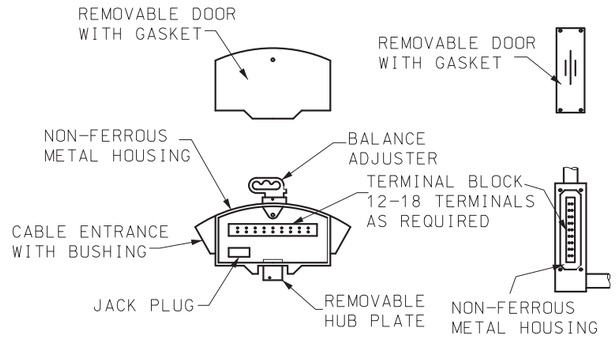

TERMINAL COMPARTMENT

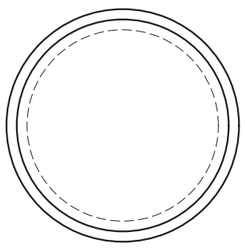

CIRCULAR

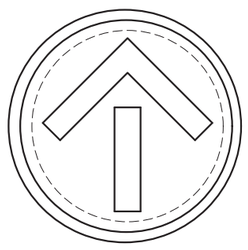

ARROW

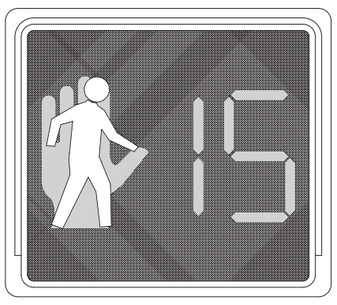

PEDESTRIAN

INDICATIONS

IF A SEAL IS PRESENT ON THIS SHEET IT HAS BEEN ELECTRONICALLY SEALED AND DATED.

MISSOURI HIGHWAYS AND TRANSPORTATION COMMISSION
105 WEST CAPITOL
JEFFERSON CITY, MO 65102
1-888-ASK-MODOT (1-888-275-6636)

STATE OF MISSOURI
NICOLE A. KOLB HOOD
NUMBER PE-2001018754
PROFESSIONAL ENGINEER
THIS SHEET HAS BEEN SIGNED, SEALED AND DATED ELECTRONICALLY.

TRAFFIC SIGNALS

SIGNAL HEAD LOUVERS, VISORS, BACKPLATES AND TERMINAL COMPARTMENT

DATE EFFECTIVE: 07/01/2018
DATE PREPARED: 5/3/2018

902.00P

SHEET NO.
2 OF 2

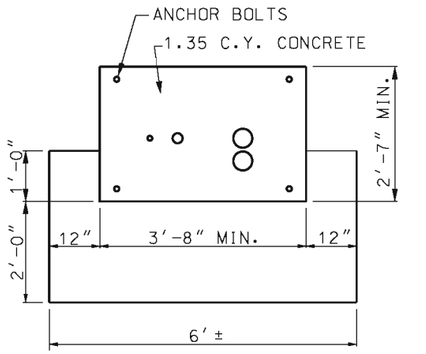

PLAN VIEW

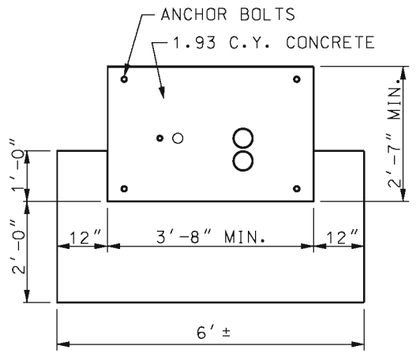

PLAN VIEW

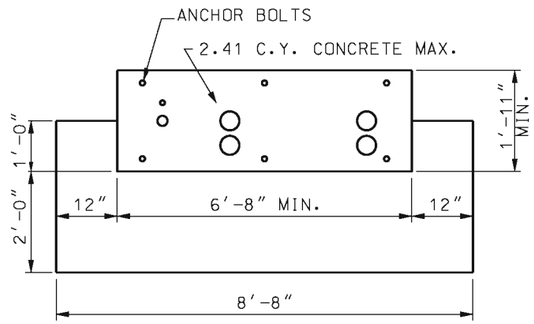

PLAN VIEW

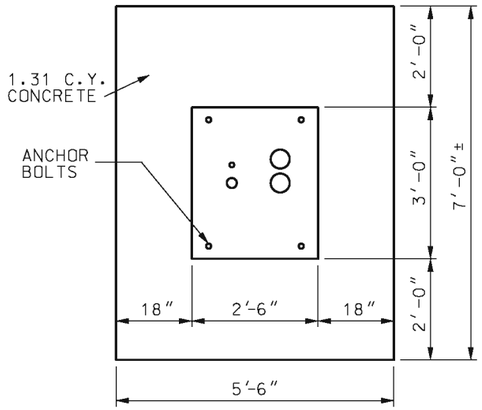

PLAN VIEW

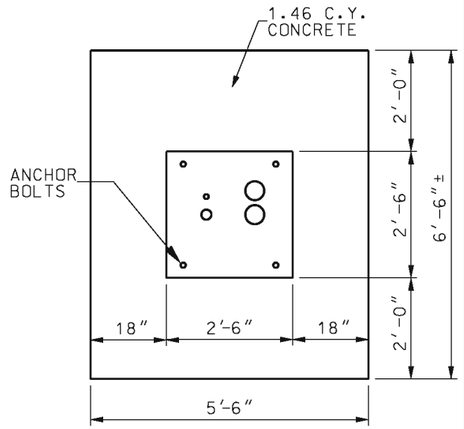

PLAN VIEW

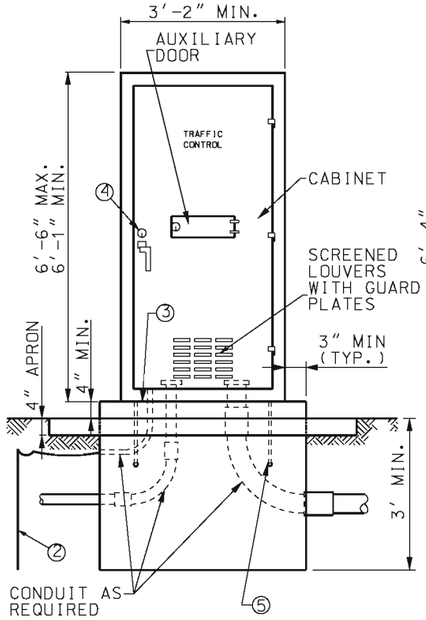

FOR CONTROLLER CABINETS WITH HEIGHTS FROM 6'-1" TO 6'-6"

TYPE E

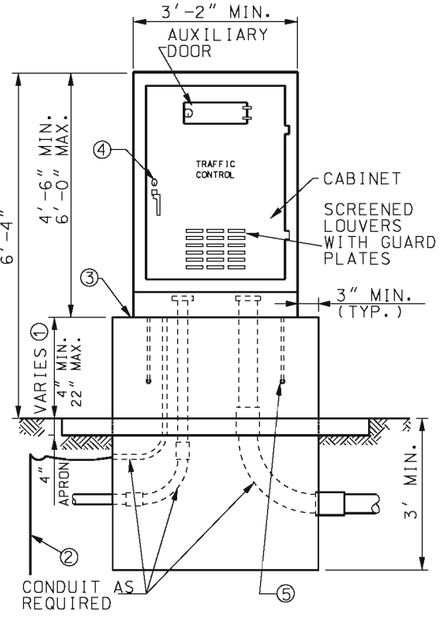

FOR CONTROLLER CABINETS WITH HEIGHTS FROM 4'-4" TO 6'-0"

TYPE EV

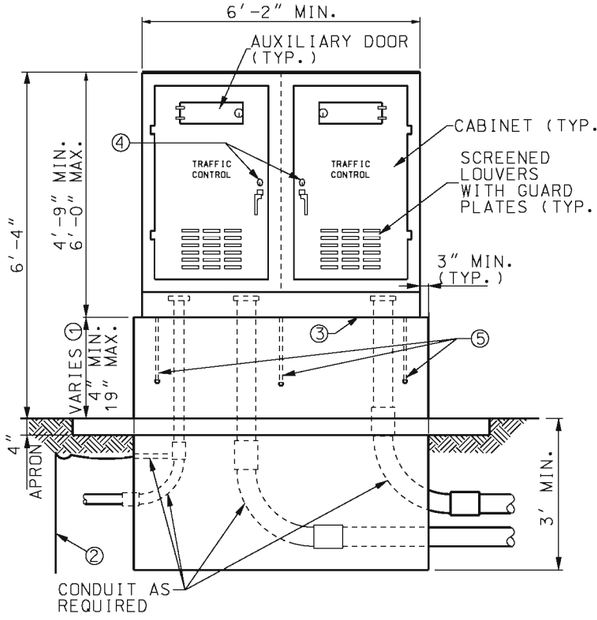

DOUBLE

CONTROLLER CABINETS AND BASE TYPES

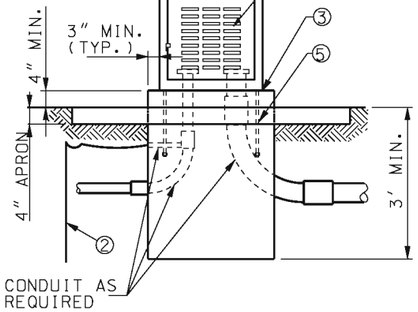

FOR TYPE 170
CONTROLLER CABINETS
TYPE 332

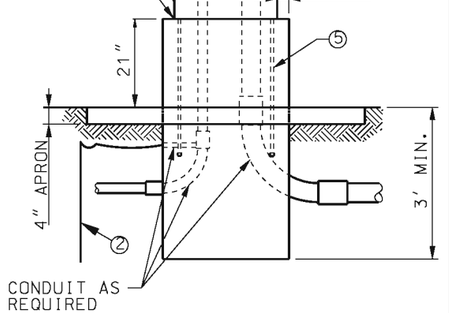

FOR TYPE 170
CONTROLLER CABINETS
TYPE 336S

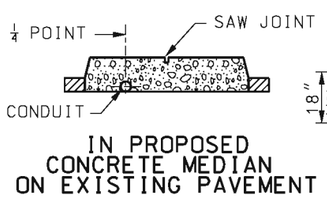

IN PROPOSED CONCRETE MEDIAN ON EXISTING PAVEMENT

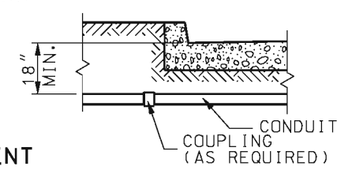

0.5% MINIMUM SLOPE

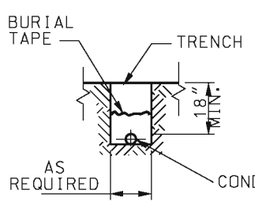

NON-PAVED SURFACED

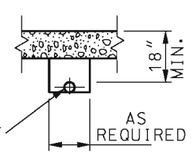

PAVED SURFACE

CONDUIT LOCATIONS

NOTES:

① DIMENSION VARIES ACCORDING TO CABINET HEIGHT.

② GROUND ROD, 3/4" DIA. x 8' MIN. IF SUBSURFACE CONDITIONS EXIST WHICH PROHIBIT THE PLACEMENT OF THE GROUND ROD IN A VERTICAL POSITION, THE ROD MAY BE DRIVEN AT AN OBLIQUE ANGLE NOT TO EXCEED 45 DEGREES FROM VERTICAL OR BURIED IN A TRENCH AT LEAST 30 IN. DEEP. CONNECTION TO GROUND ROD SHALL BE CADWELDED.

③ LIFETIME SILICONE CAULK BETWEEN CABINET AND BASE.

④ #2 CORBIN LOCK

⑤ ANCHOR BOLTS (USE BOLT HEAD OR TACK WELDED NUT ON EMBEDDED END AND SIZE AS SPECIFIED BY CABINET MANUFACTURER).

MISSOURI HIGHWAYS AND TRANSPORTATION COMMISSION
105 WEST CAPITOL
JEFFERSON CITY, MO 65102
1-888-ASK-MODOT (1-888-275-6636)

STATE OF MISSOURI
EILEEN H. RACKERS
NUMBER PE-28336
PROFESSIONAL ENGINEER
THIS SHEET HAS BEEN SIGNED, SEALED AND DATED ELECTRONICALLY.

TRAFFIC SIGNALS
CONTROLLERS
CONDUIT LOCATION

DATE EFFECTIVE: 04/01/2005
DATE PREPARED: 8/26/2009

902.100

SHEET NO. 1 OF 1

IF A SEAL IS PRESENT ON THIS SHEET IT HAS BEEN ELECTRONICALLY SEALED AND DATED.

LIST OF MATERIALS	
ITEM	DESCRIPTION
1	SERVICE POLE 30′ MIN.,CLASS IV WOOD, CONTRACTOR PROVIDED, MoDOT OWNED ✳
2	#8 AWG MIN. CABLE, 600 VOLT ✳
3	SERVICE ENTRANCE HEAD
4	GUY CABLE, AS REQUIRED
5	2″ MIN. RIGID CONDUIT WITH PREFORMED ELBOWS
6	LIGHTNING ARRESTOR, VALVE TYPE, 2 POLE, 650 VOLT
7	METER SOCKET, 200 AMP, FOR SIGNALS
8	2″ MIN. RIGID CONDUIT
9	SERVICE DISCONNECT BOX, LOCKING, RAINTIGHT, NEMA 4
10	INSULATED, GROUNDABLE NEUTRAL, 200 AMP MINIMUM
11	SIGNAL BREAKER, SINGLE POLE, 40A MIN, TYPE A OR B ✳
12	LIGHTING BREAKER, SINGLE POLE, 40A, TYPE A OR B
13	METAL CONDUIT, 1/2″
14	GROUND WIRE, #2 AWG MIN.
15	GROUND ROD, 3/4″ x 8′ MIN.
16	#8 AWG MIN. CABLE, 600 VOLT
17	CLASS B CONCRETE, 0.92 C.Y. ±
18	THREADED CONDUIT HUB WITH SEALING WASHERS
19	LIGHTING CABLES ✳
20	WEATHERPROOF ADHESIVE LABEL (SIGNALS) VINYL RAISED LETTERING
21	TYPE B CONTROLLER AND SIGNAL BREAKER, AS SPECIFIED.
22	TYPE B AUXILIARY BREAKER, 15 AMP
23	W6 x 9 OR W6 x 15 GALVANIZED POST
24	LIGHTING CONTROL CABINET (SEE SHEET 2)
25	#2 AWG MIN. CABLE, 600 VOLT
✳	SEE PLANS

PEDESTAL OR NEW STATE-OWNED POLE TO BE SET WITHIN 2′ TO 4′ OF RIGHT-OF-WAY LINE.

ALL SERVICE POWER SUPPLY ASSEMBLIES ARE TO BE LOCATED ON STATE PROPERTY.

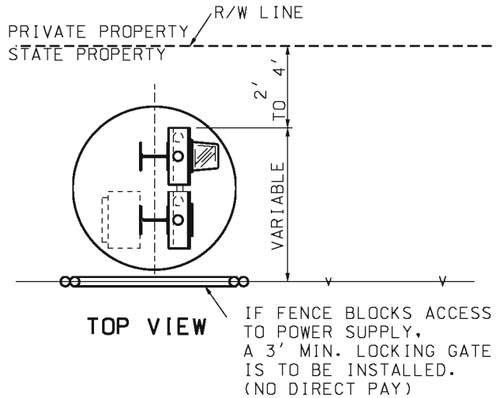

TOP VIEW

NOTES

(A) SERVICE POLE SHALL BE GUYED WHEN SPAN OF OVERHEAD SERVICE WIRE EXCEEDS 50′.

(B) INCREASE 1 FOOT FOR EACH 5 FEET ABOVE 50 FEET.

(C) SERVICE DISCONNECT BOXES AND METER BOXES SHALL BE ALUMINUM OR STAINLESS STEEL, ALL HARDWARE, HINGES, CATCHES, ETC. SHALL BE STAIN-LESS STEEL. METER SOCKET AND OTHER EQUIPMENT AND MATERIALS SHALL BE U.L. APPROVED, AND CONFORM TO THE REQUIREMENTS OF THE UTILITY COMPANY OR MUNICIPALITY PROVIDING POWER.

(D) SCHEMATIC DIAGRAM SHALL BE MOUNTED ON INSIDE OF DOOR.

(E) UTILITY COMPANY SHALL DECIDE IF LIGHTNING ARRESTERS ARE TO BE CONNECTED ON THE LOAD OR LINE SIDE OF THE METER. THE UTILITY COMPANY SHALL ALSO DECIDE IF THE LIGHTNING ARRESTER IS TERMINATED IN THE METER OR DISCONNECT CABINET, IF TERMINATED IN THE DISCONNECT CABINET, IT SHALL BE INSTALLED ON THE CONNECT CABINET

(F) IF LIGHTING IS SPECIFIED, INSTALL LIGHTING CONTROL ON POWER SUPPLY.

(G) BREAKERS SHALL CONFORM TO SEC. 901.4 OF THE STANDARD SPECIFICATIONS.

(H) IF SUBSURFACE CONDITIONS EXIST WHICH PROHIBIT THE PLACEMENT OF THE GROUND ROD IN VERTICAL POSITION, THE ROD MAY BE DRIVEN AT AN OBLIQUE ANGLE NOT TO EXCEED 45 DEGREES FROM VERTICAL OR BURIED IN A TRENCH AT LEAST 30 IN. DEEP. CONNECTION TO GROUND ROD SHALL BE CAD WELDED.

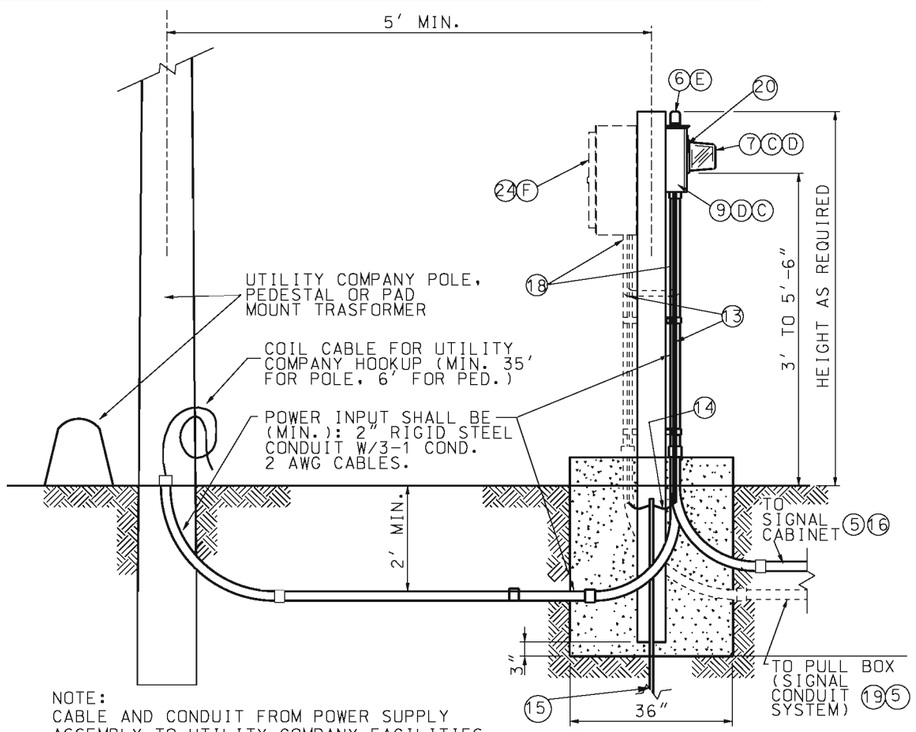

SIDE VIEW

NOTE:
CABLE AND CONDUIT FROM POWER SUPPLY ASSEMBLY TO UTILITY COMPANY FACILITIES SHALL BE INCLUDED IN PRICE BID FOR POWER SUPPLY ASSEMBLY.

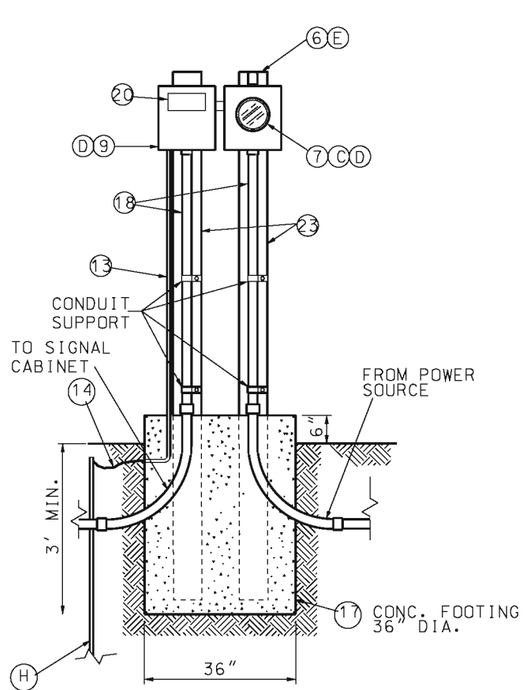

FRONT VIEW

TYPE 2 (PEDESTAL) UNDERGROUND SERVICE

GENERAL NOTES:
FOR CABLE TYPES AND INSTALLATION, SEE STANDARD SPECIFICATIONS.

THE TYPE POWER SUPPLY ASSEMBLY IS SHOWN ON THE PLANS OR IS DESIGNATED IN THE CONTRACT.

THE UTILITY COMPANY SHALL BE NOTIFIED IN WRITING 30 DAYS PRIOR TO DATE SERVICE WILL BE REQUIRED.

WHERE SIGNAL OR LIGHTING POWER ONLY IS DESIGNATED, OMIT ITEMS NOT REQUIRED.

ALL OPENINGS IN ANY SERVICE BOX OR METER BOX SHALL BE COVERED AND SEALED WITH LIFETIME SILICONE CAULK.

ALL MATERIALS REQUIRED EXCLUDING REFERENCE ITEMS AS SHOWN ON DRAWING SHALL BE INCLUDED IN PRICE BID FOR POWER SUPPLY ASSEMBLY.

FOR WIRING DIAGRAM AND LABEL DETAIL SEE SHEET 2 OF 4.

MISSOURI HIGHWAYS AND TRANSPORTATION COMMISSION
105 WEST CAPITOL
JEFFERSON CITY, MO 65102
1-888-ASK-MODOT (1-888-275-6636)

STATE OF MISSOURI
EILEEN H. RACKERS
NUMBER PE-28336
PROFESSIONAL ENGINEER
THIS SHEET HAS BEEN SIGNED, SEALED AND DATED ELECTRONICALLY.

TRAFFIC SIGNALS
POWER SUPPLY ASSEMBLY 240/120 VOLT SERVICE

DATE EFFECTIVE: 07/01/2004	902.15K	SHEET NO.
DATE PREPARED: 8/26/2009		1 OF 3

IF A SEAL IS PRESENT ON THIS SHEET IT HAS BEEN ELECTRONICALLY SEALED AND DATED.

LIST OF MATERIALS	
ITEM	DESCRIPTION
1	SERVICE POLE 30' MIN.,CLASS IV WOOD, CONTRACTOR PROVIDED, MoDOT OWNED ✳
2	#8 AWG MIN. CABLE, 600 VOLT ✳
3	SERVICE ENTRANCE HEAD
4	GUY CABLE, AS REQUIRED
5	2" MIN. RIGID CONDUIT WITH PREFORMED ELBOWS
6	LIGHTNING ARRESTOR, VALVE TYPE, 2 POLE, 650 VOLT
7	METER SOCKET, 200 AMP, FOR SIGNALS
8	2" MIN. RIGID CONDUIT
9	SERVICE DISCONNECT BOX, LOCKING, RAINTIGHT, NEMA 4
10	INSULATED, GROUNDABLE NEUTRAL, 200 AMP MINIMUM
11	SIGNAL BREAKER, SINGLE POLE, 40A MIN, TYPE A OR B ✳
12	LIGHTING BREAKER, SINGLE POLE, 40A, TYPE A OR B
13	METAL CONDUIT, 1/2"
14	GROUND WIRE, #2 AWG MIN.
15	GROUND ROD, 3/4" x 8' MIN.
16	#8 AWG MIN. CABLE, 600 VOLT
17	CLASS B CONCRETE, 0.92 C.Y. ±
18	THREADED CONDUIT HUB WITH SEALING WASHERS
19	LIGHTING CABLES ✳
20	WEATHERPROOF ADHESIVE LABEL (SIGNALS) VINYL RAISED LETTERING
21	TYPE B CONTROLLER AND SIGNAL BREAKER, AS SPECIFIED.
22	TYPE B AUXILIARY BREAKER, 15 AMP
23	W6 x 9 OR W6 x 15 GALVANIZED POST
24	LIGHTING CONTROL CABINET (SEE SHEET 2)
25	#2 AWG MIN. CABLE, 600 VOLT
✳	SEE PLANS

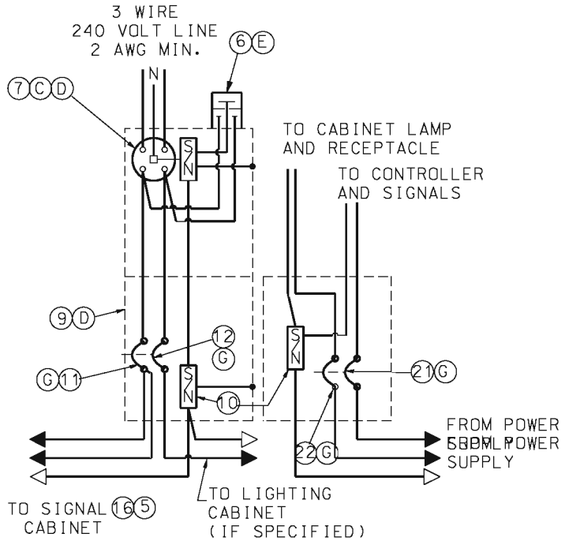

POWER SUPPLY SIGNAL CABINET POWER PANEL

WIRING DIAGRAM
SIGNALS AND/OR LIGHTING

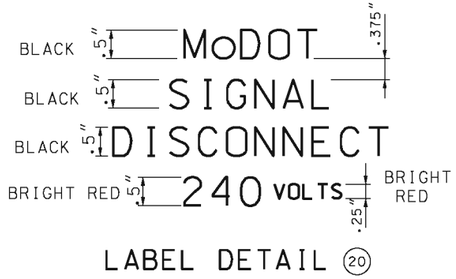

LABEL DETAIL (20)

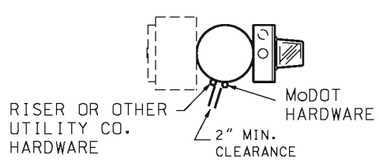

SECTION A-A

TYPE 1 (POLE)
OVERHEAD SERVICE

NOTES

(A) SERVICE POLE SHALL BE GUYED WHEN SPAN OF OVERHEAD SERVICE WIRE EXCEEDS 50'.

(B) INCREASE 1 FOOT FOR EACH 5 FEET ABOVE 50 FEET.

(C) SERVICE DISCONNECT BOXES AND METER BOXES SHALL BE ALUMINUM OR STAINLESS STEEL, ALL HARDWARE, HINGES, CATCHES, ETC. SHALL BE STAIN-LESS STEEL. METER SOCKET AND OTHER EQUIPMENT AND MATERIALS SHALL BE U.L. APPROVED, AND CONFORM TO THE REQUIREMENTS OF THE UTILITY COMPANY OR MUNICIPALITY PROVIDING POWER.

(D) SCHEMATIC DIAGRAM SHALL BE MOUNTED ON INSIDE OF DOOR.

(E) UTILITY COMPANY SHALL DECIDE IF LIGHTNING ARRESTERS ARE TO BE CONNECTED ON THE LOAD OR LINE SIDE OF THE METER. THE UTILITY COMPANY SHALL ALSO DECIDE IF THE LIGHTNING ARRESTER IS TERMINATED IN THE METER OR DISCONNECT CABINET, IF TERMINATED IN THE DISCONNECT CABINET, IT SHALL BE INSTALLED ON THE CONNECT CABINET

(F) IF LIGHTING IS SPECIFIED, INSTALL LIGHTING CONTROL ON POWER SUPPLY.

(G) BREAKERS SHALL CONFORM TO SEC. 901.4 OF THE STANDARD SPECIFICATIONS.

(H) IF SUBSURFACE CONDITIONS EXIST WHICH PROHIBIT THE PLACEMENT OF THE GROUND ROD IN VERTICAL POSITION, THE ROD MAY BE DRIVEN AT AN OBLIQUE ANGLE NOT TO EXCEED 45 DEGREES FROM VERTICAL OR BURIED IN A TRENCH AT LEAST 30 IN. DEEP. CONNECTION TO GROUND ROD SHALL BE CAD WELDED.

GENERAL NOTES:

FOR CABLE TYPES AND INSTALLATION, SEE STANDARD SPECIFICATIONS.

THE TYPE POWER SUPPLY ASSEMBLY IS SHOWN ON THE PLANS OR IS DESIGNATED IN THE CONTRACT.

THE UTILITY COMPANY SHALL BE NOTIFIED IN WRITING 30 DAYS PRIOR TO DATE SERVICE WILL BE REQUIRED.

WHERE SIGNAL OR LIGHTING POWER ONLY IS DESIGNATED, OMIT ITEMS NOT REQUIRED.

ALL OPENINGS IN ANY SERVICE BOX OR METER BOX SHALL BE COVERED AND SEALED WITH LIFETIME SILICONE CAULK.

ALL MATERIALS REQUIRED EXCLUDING REFERENCE ITEMS AS SHOWN ON DRAWING SHALL BE INCLUDED IN PRICE BID FOR POWER SUPPLY ASSEMBLY.

MISSOURI HIGHWAYS AND TRANSPORTATION COMMISSION
105 WEST CAPITOL
JEFFERSON CITY, MO 65102
1-888-ASK-MODOT (1-888-275-6636)

STATE OF MISSOURI
EILEEN H. RACKERS
NUMBER PE-28336
PROFESSIONAL ENGINEER
THIS SHEET HAS BEEN SIGNED, SEALED AND DATED ELECTRONICALLY.

TRAFFIC SIGNALS
POWER SUPPLY ASSEMBLY
240/120 VOLT SERVICE

DATE EFFECTIVE: 07/01/2004
DATE PREPARED: 8/26/2009

902.15K

SHEET NO. 2 OF 3

IF A SEAL IS PRESENT ON THIS SHEET IT HAS BEEN ELECTRONICALLY SEALED AND DATED.

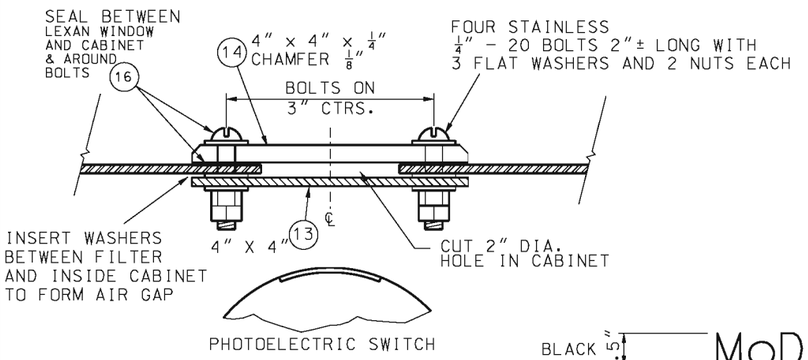

SECTION A-A WINDOW DETAIL

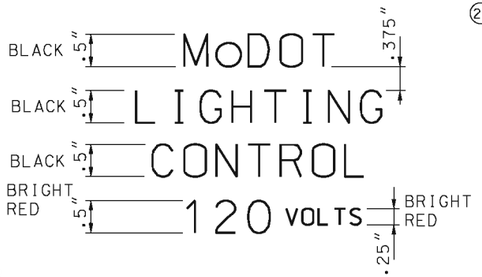

LABEL DETAIL

(18)

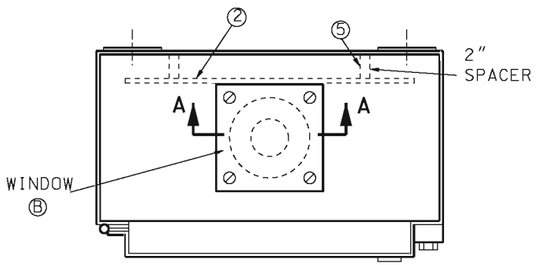

TOP VIEW

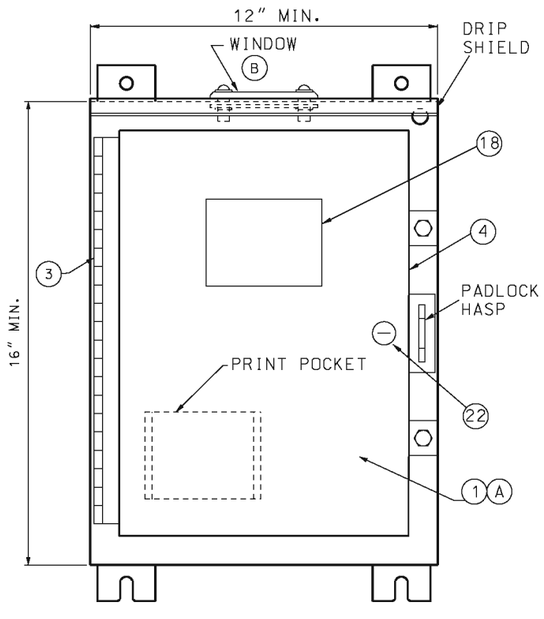

FRONT VIEW

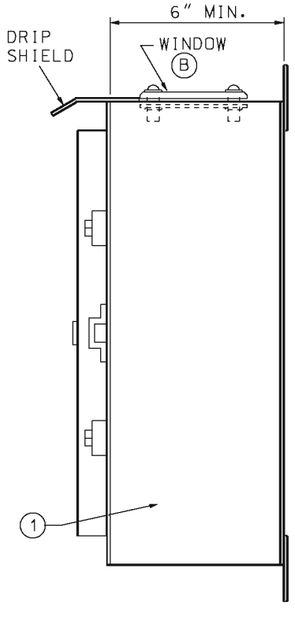

SIDE VIEW

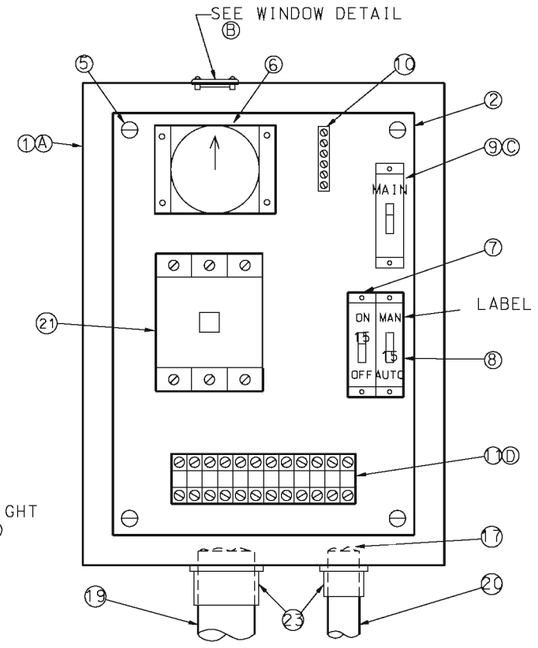

EQUIPMENT LAYOUT

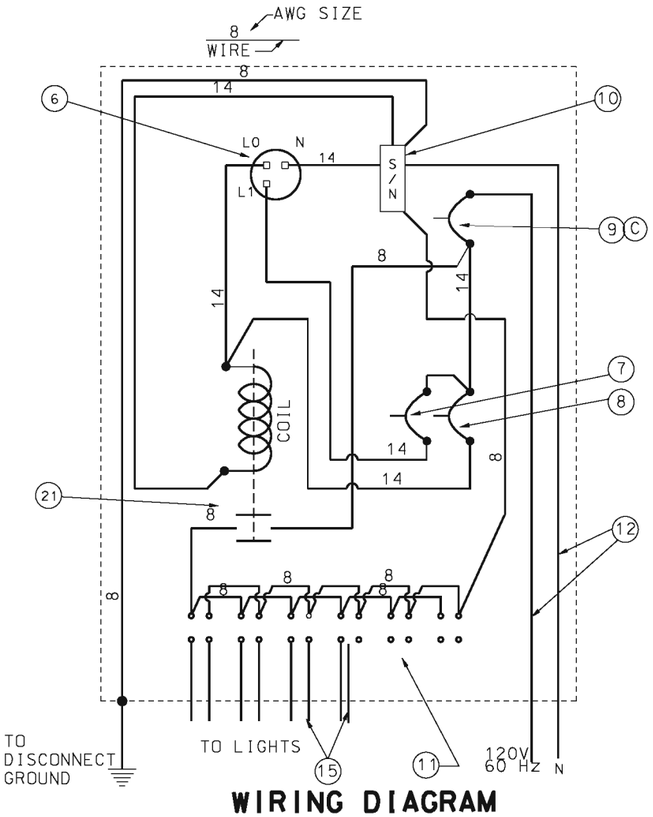

WIRING DIAGRAM

ITEM	LIST OF MATERIALS DESCRIPTION
1	CABINET, WATERTIGHT, NEMA 4, 14 GA MINIMUM THICKNESS
2	PANEL, 12 GA MINIMUM THICKNESS, ALUMINUM OR STAINLESS STEEL
3	CONTINUOUS STAINLESS STEEL HINGE
4	NEOPRENE GASKET DOOR
5	3/8" - 16 COLLAR STUD
6	PHOTOELECTRIC SWITCH AND SOCKET, 105/285 V., 1000 WATT
7	15 AMP CONTROL BREAKER, SINGLE POLE, TYPE B
8	15 AMP AUTO-MANUAL SWITCH, SINGLE POLE BREAKER, TYPE B,WITH LABEL
9	MAIN BREAKER, SINGLE POLE, TYPE B ✳
10	NEUTRAL TERMINAL STRIP
11	LIGHTING TERMINAL BLOCK, INSULATED FROM BACK PANEL,12 POSITION (E)
12	POWER, CABLE, #8 AWG MIN., 600 V.
13	FILTER, TRANSLUCENT, PLEXIGLASS #W2067, 1 8" THICK
14	CLEAR, LEXAN #9034 WINDOW, 1/4" THICK MIN. EXCEPT FOR 15A BREAKER; MIN. WIRE SIZE 10 AWG.
15	CABLE, LIGHTING ✳
16	LIFETIME SILICONE CAULK
17	PLIABLE DUCT SEALANT
18	LABEL-WEATHERPROOF ADHESIVE-VINYL RAISED LETTERING (OR EQUIV.) (SEE DETAIL)
19	CONDUIT, RIGID, 2" MIN. ✳
20	CONDUIT, RIGID, 1" MIN.
21	LIGHTING CONTACTOR, 2 POLE, 30 AMP, 600 VOLT, 120 VOLT COIL
22	#2 CORBIN LOCK
23	THREADED CONDUIT HUB WITH SEALING WASHERS
✳	SEE PLANS

NOTES:

(A) SCHEMATIC DIAGRAM SHALL BE MOUNTED ON INSIDE OF CABINET DOOR.

(B) PHOTOELECTRIC WITCH BARCKETS MAY VARY, LOCATE CENTER OF WINDOW OVER CENTER OF PHOTOELECTRIC SWITCH.

(C) MAIN BREAKER SIZE:

TOTAL LUMINAIRE✳✳ LOAD (WATTS)	BREAKER SIZE (AMPS)	MIN. AWG
0-920	15	10
930-1260	20	8
1270-1600	25	8
1610-1930	30	8

✳✳ EXCLUDING BALLAST LOAD

(D) TERMINAL BLOCK SHALL BE RATED AT 600V, SHALL ACCEPT WIRES UP TO 8 AWG AND SHALL HAVE A BARRIER BETWEEN EACH TERMINAL AND ON EACH END.

GENERAL NOTES:

ALL OPENINGS IN CABINET SHALL BE COVERED AND SEALED WITH LIFETIME SILICONE CAULK.

ALL CIRCUIT BREAKERS SHALL CONFORM TO SECTION 901.4 OF THE STANDARD SPECIFICATIONS.

PLACEMENT OF ALL ITEMS SHALL BE APPROVED BY THE ENGINEER.

CABINET SHALL BE LOCATED AWAY FROM TRAFFIC. TOP MOUNT PHOTO CONTROL SHALL FACE AN OPEN SKY. SIDE MOUNT PHOTO CONTROL SHALL FACE NORTH.

IF A SEAL IS PRESENT ON THIS SHEET IT HAS BEEN ELECTRONICALLY SEALED AND DATED.

MISSOURI HIGHWAYS AND TRANSPORTATION COMMISSION
105 WEST CAPITOL
JEFFERSON CITY, MO 65102
1-888-ASK-MODOT (1-888-275-6636)

STATE OF MISSOURI
EILEEN H. RACKERS
NUMBER PE-28336
PROFESSIONAL ENGINEER
THIS SHEET HAS BEEN SIGNED, SEALED AND DATED ELECTRONICALLY.

TRAFFIC SIGNALS
POWER SUPPLY ASSEMBLY 240/120 VOLT SERVICE

DATE EFFECTIVE: 07/01/2004
DATE PREPARED: 8/26/2009

902.15K

SHEET NO. 3 OF 3

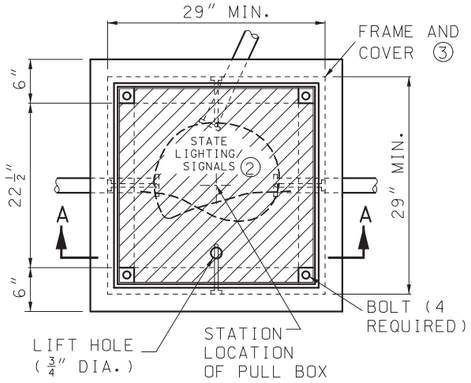

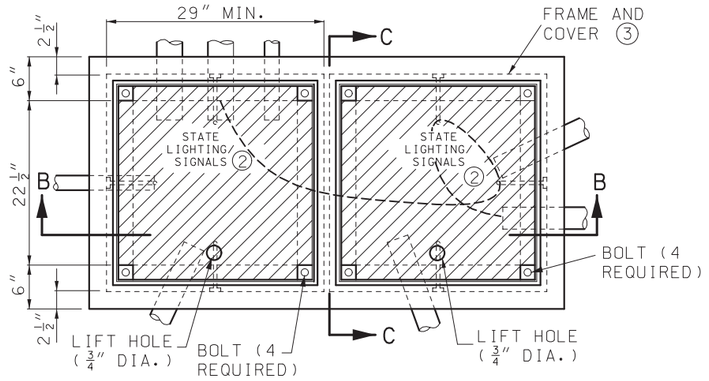

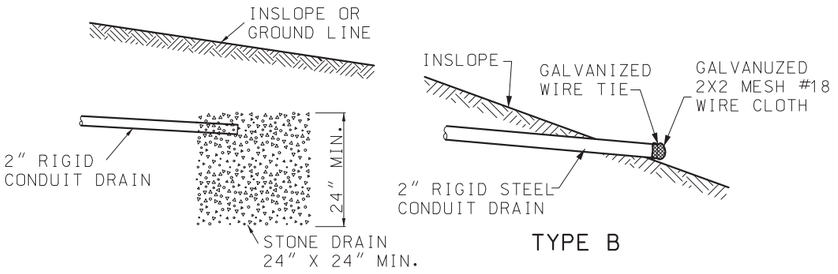

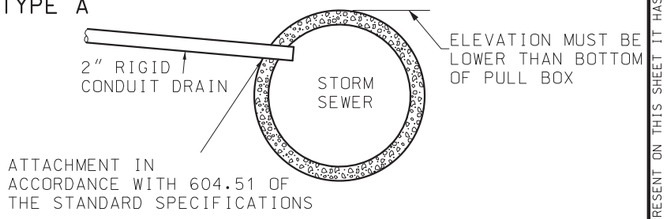

TYPE II DRAIN OUTLET DETAILS

① ALL METAL CONDUITS SHALL BE ELECTRICALLY BONDED BY A GROUND BUSHING AND #6 AWG BARE COPPER WIRE. FOR PVC CONDUIT, ALL GROUND WIRES SHALL BE CONNECTED.

② SIGNAL PULL BOXES SHALL BE EMBOSSED "STATE SIGNALS" AND LIGHTING PULL BOXES "STATE LIGHTING."

③ PULL BOX FRAMES AND COVERS SHALL BE CAST IRON AND THE FOLLOWING MINIMUM DIMENSIONS:

FRAME SIZE:	29" x 29"
FRAME HEIGHT:	4¼"
OPENING SIZE:	22½" x 22½"
FRAME WEIGHT:	120 LBS.
COVER SIZE:	22⅝" x 22⅝"
COVER THICKNESS:	¾"
COVER WEIGHT:	140 LBS.

GENERAL NOTES:

ALL DIMENSIONS SHOWN ARE NOMINAL.

BOLT CLEANOUT DETAIL SHALL BE APPROVED BY ENGINEER.

PAVEMENT AND SUBGRADE SHALL BE AS SHOWN ON PLANS.

STONE DRAIN MATERIAL SHALL CONFORM TO SECTION 1009 OF THE STANDARD SPECIFICATIONS.

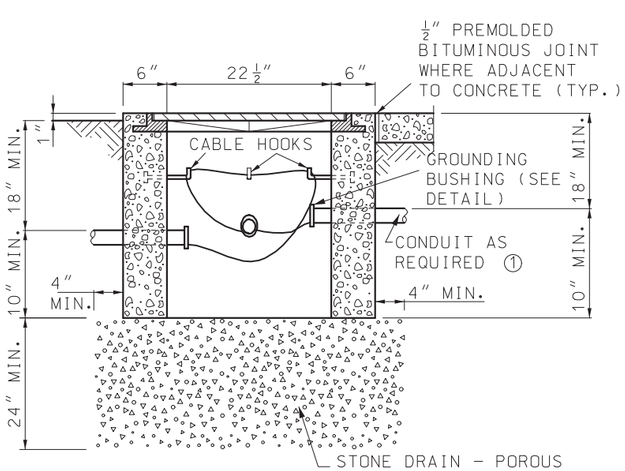

SECTION A–A
TYPE I DRAIN TYPE

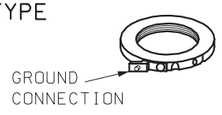

GROUNDING BUSHING (TYP) ①

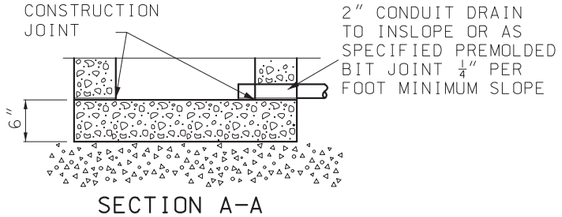

SECTION A–A
TYPE II DRAIN TYPE
(SEE DRAIN OUTLET DETAILS)
(SECTION ABOVE BREAK APPLICABLE TO TYPE I DRAIN)

STANDARD CONCRETE PULL BOX

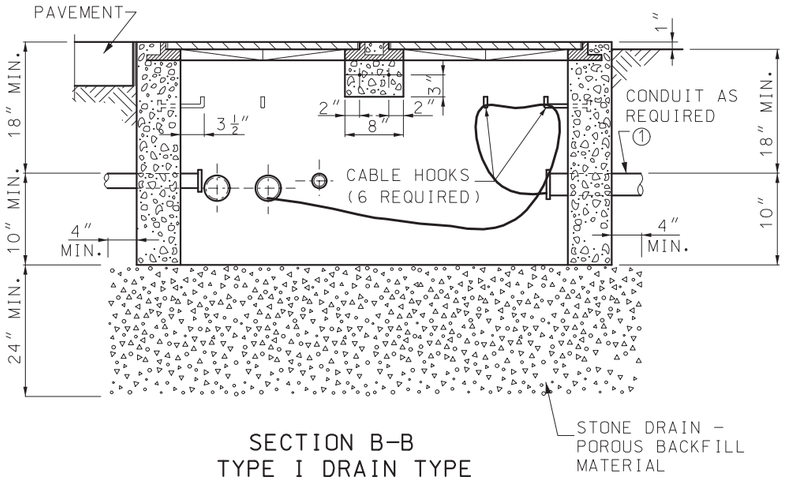

SECTION B–B
TYPE I DRAIN TYPE

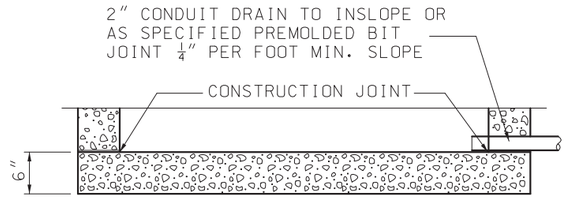

SECTION B–B
TYPE II DRAIN TYPE
(SEE DRAIN OUTLET DETAILS)
(SECTION ABOVE BREAK APPLICABLE TO TYPE I DRAIN)

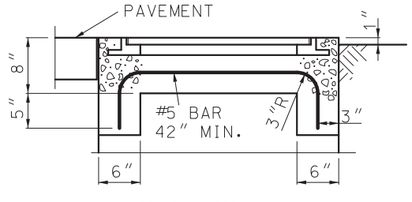

SECTION C–C

DOUBLE CONCRETE PULL BOX, TYPE A

IF A SEAL IS PRESENT ON THIS SHEET IT HAS BEEN ELECTRONICALLY SEALED AND DATED.

MISSOURI HIGHWAYS AND TRANSPORTATION COMMISSION
105 WEST CAPITOL
JEFFERSON CITY, MO 65102
1-888-ASK-MODOT (1-888-275-6636)

STATE OF MISSOURI
ERIC E. SCHROETER
NUMBER PE-28411
PROFESSIONAL ENGINEER
THIS SHEET HAS BEEN SIGNED, SEALED AND DATED ELECTRONICALLY.

TRAFFIC SIGNALS
CONCRETE PULL BOXES

DATE EFFECTIVE: 04/01/2019
DATE PREPARED: 1/16/2019

902.20G

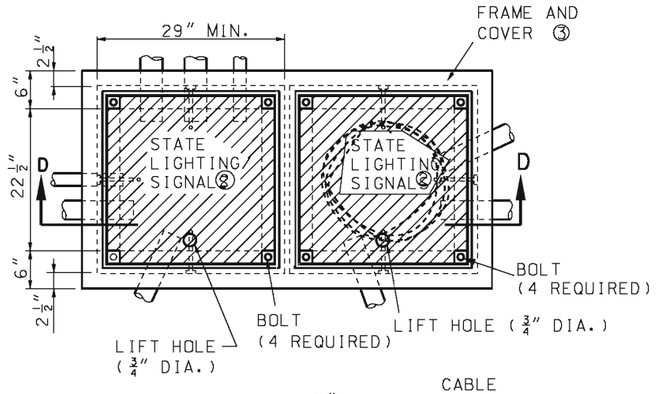

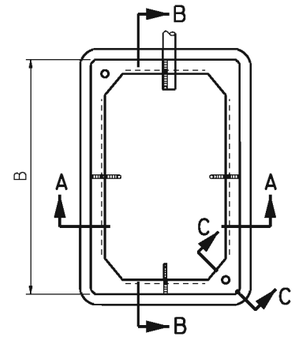

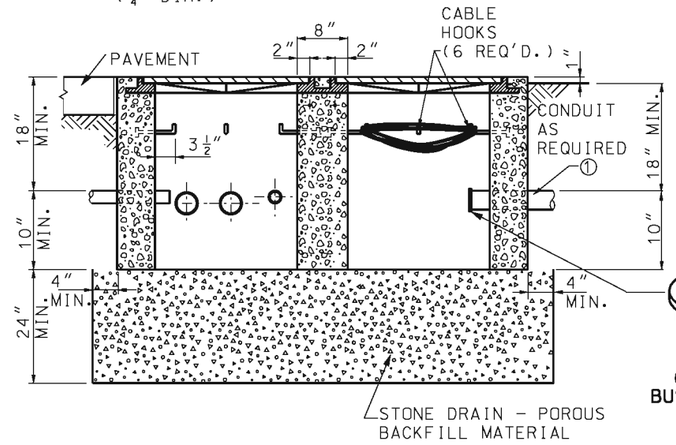

SECTION D-D
TYPE I DRAIN TYPE

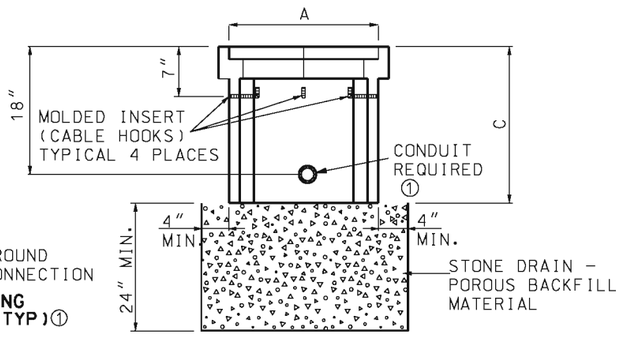

SECTION A-A
TYPE I DRAIN TYPE

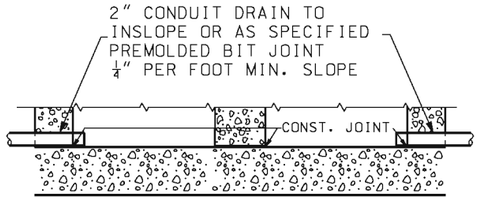

TYPE II DRAIN TYPE
(SEE DRAIN OUTLET DETAILS)
(SECTION ABOVE BREAK APPLICABLE TO TYPE I DRAIN.)

DOUBLE CONCRETE PULL BOX, TYPE B

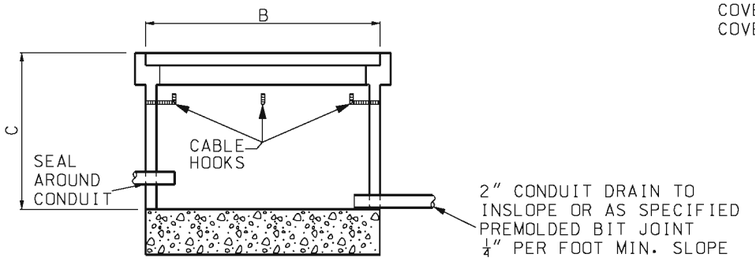

SECTION B-B
TYPE II DRAIN TYPE

PREFORMED PULL BOX

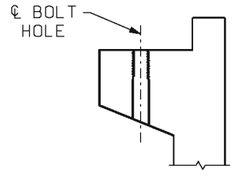

SECTION C-C

TYPICAL BOLT CLEANOUT

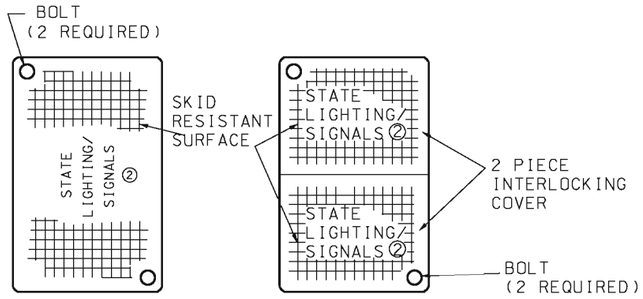

CLASS 1 OR 2 CLASS 3

PREFORMED PULL BOX COVER

NUMBER OF ENTERING CONDUCTORS	CLASS	PREFORMED PULL BOX MINIMUM DIMENSIONS		
		A	B	C
< 23	1	17"	30"	22"
23 – 68	2	24"	36"	24"
> 68	3	30"	48"	36"

① ALL METAL CONDUITS SHALL BE ELECTRICALLY BONDED BY A GROUND BUSHING AND #6 AWG BARE COPPER WIRE. FOR PVC CONDUIT, ALL GROUND WIRES SHALL BE CONNECTED.

② SIGNAL PULL BOXES SHALL BE EMBOSSED "STATE SIGNALS" AND LIGHTING PULL BOXES "STATE LIGHTING."

③ PULL BOX FRAMES AND COVERS SHALL BE CAST IRON AND THE FOLLOWING MINIMUM DIMENSIONS:

FRAME SIZE:	29" X 29"
FRAME HEIGHT:	4¼"
OPENING SIZE:	22½" x 22½"
FRAME WEIGHT:	120 LBS.
COVER SIZE:	22⅝" x 22⅝"
COVER THICKNESS:	¾"
COVER WEIGHT:	140 LBS.

GENERAL NOTES:

IF AN EXTENSION IS USED WITH A PREFORMED BOX, THE LIP OF THE EXTENSION MAY BE INTERIOR OR EXTERIOR. THE EXTENSION SHALL BE COMPATIBLE AND FROM THE SAME MANUFACTURER.

IF PREFORMED PULL BOXES ARE SPECIFIED, THE CONTRACTOR MAY USE THE STANDARD CONCRETE PULL BOX IN LIEU OF THE CLASS 1 OR 2 PREFORMED PULL BOX OR THE DOUBLE CONCRETE PULL BOX, TYPE A, IN LIEU OF THE CLASS 3 PREFORMED PULL BOXES.

IF A SEAL IS PRESENT ON THIS SHEET IT HAS BEEN ELECTRONICALLY SEALED AND DATED.

MISSOURI HIGHWAYS AND TRANSPORTATION COMMISSION
105 WEST CAPITOL
JEFFERSON CITY, MO 65102
1-888-ASK-MODOT (1-888-275-6636)

STATE OF MISSOURI
KATHRYN PHILLIPS HARVEY
NUMBER PE-23751
PROFESSIONAL ENGINEER
THIS SHEET HAS BEEN SIGNED, SEALED AND DATED ELECTRONICALLY.

TRAFFIC SIGNALS
CONCRETE AND PREFORMED PULL BOXES

DATE EFFECTIVE: 11/01/2010
DATE PREPARED: 9/3/2010

902.20G

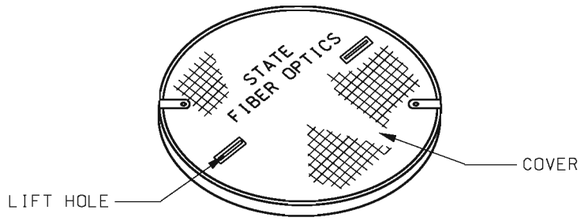

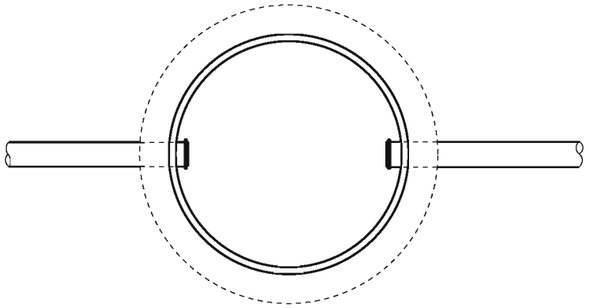

PLAN

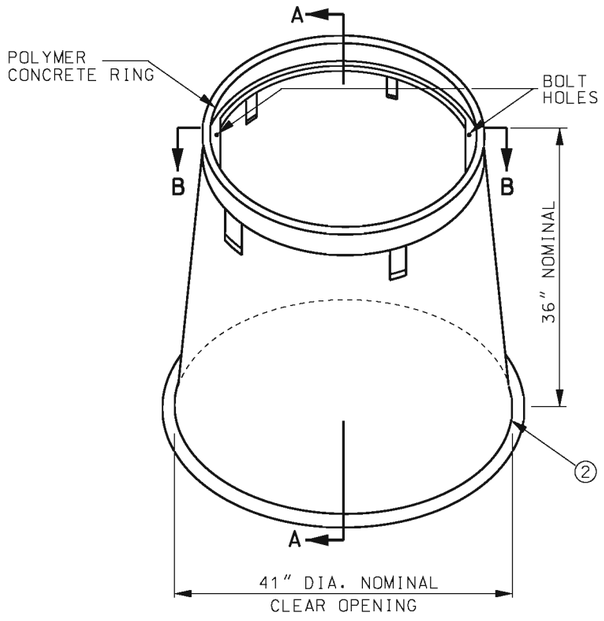

CIRCULAR PULL BOX
CLASS 5

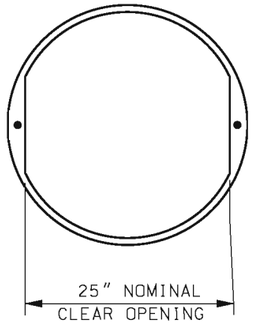

SECTION B-B

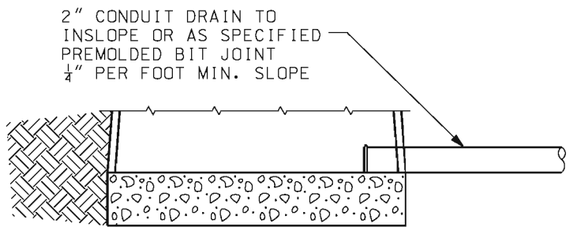

TYPE II DRAIN TYPE
(SEE DRAIN OUTLET DETAILS)
(SECTION ABOVE BREAK APPLICABLE TO TYPE I DRAIN.)

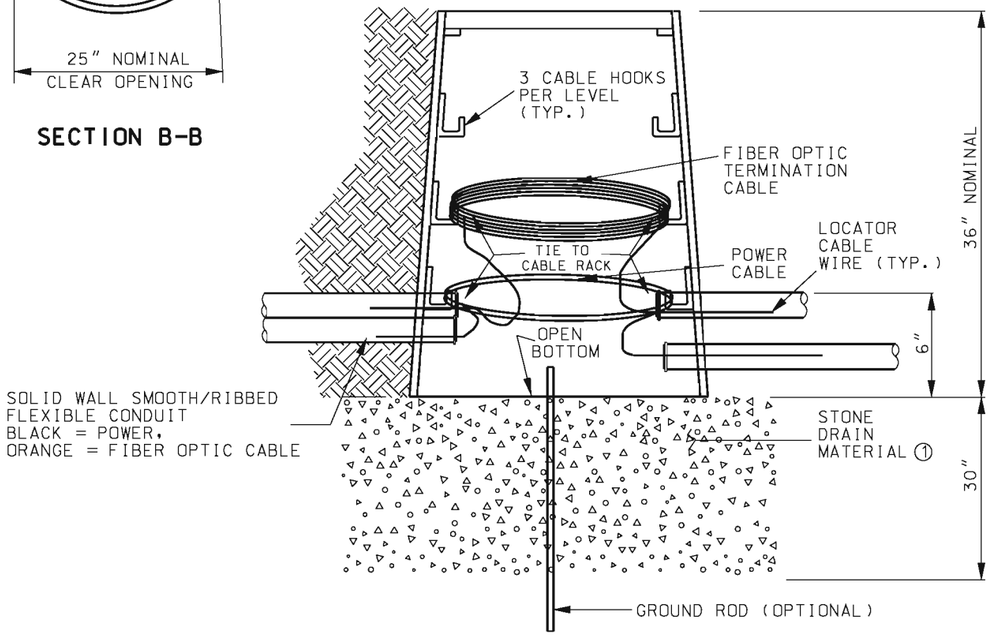

SECTION A-A
TYPE I DRAIN TYPE

(1) AGGREGATE SHALL BE TYPE 1 CONFORMING TO SEC 1007.

(2) BOX SHALL BE OF A FLARE DESIGN AND HAVE A LIP FOR STABILIZATION.

GENERAL NOTES:

A MINIMUM OF NINE HOOKS, INSTALLED IN THREE LEVELS, SHALL BE INCLUDED WITH EACH PULL BOX.

IF SUBSURFACE CONDITIONS EXIST WHICH PROHIBIT THE PLACEMENT OF THE GROUND ROD IN A VERTICAL POSITION, THE ROD MAY BE DRIVEN AT AN OBLIQUE ANGLE NOT TO EXCEED 45 DEGREES FROM VERTICAL OR BURIED IN A TRENCH AT LEAST 30 IN. DEEP. CONNECTION TO GROUND ROD SHALL BE CADWELDED.

THE CIRCULAR PULL BOX COVER SHOULD BE SIZED TO FIT A BOX WITH A CLEAR OPENING OF 25".

IF A SEAL IS PRESENT ON THIS SHEET IT HAS BEEN ELECTRONICALLY SEALED AND DATED.

MISSOURI HIGHWAYS AND TRANSPORTATION COMMISSION
105 WEST CAPITOL
JEFFERSON CITY, MO 65102
1-888-ASK-MODOT (1-888-275-6636)

STATE OF MISSOURI
KATHRYN PHILLIPS HARVEY
NUMBER PE-23751
PROFESSIONAL ENGINEER
THIS SHEET HAS BEEN SIGNED, SEALED AND DATED ELECTRONICALLY.

TRAFFIC SIGNALS
CONCRETE AND PREFORMED PULL BOXES

DATE EFFECTIVE: 11/01/2010
DATE PREPARED: 9/3/2010

902.20G

SHEET NO. 3 OF 3

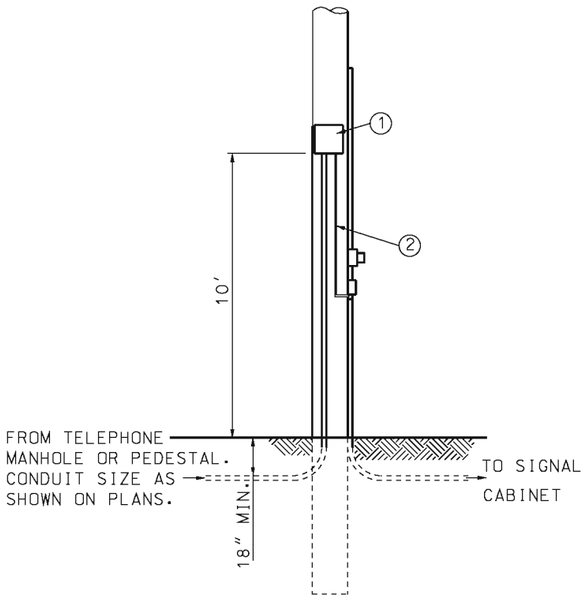

TYPE 902.10-U
USE ON EXISTING ONLY

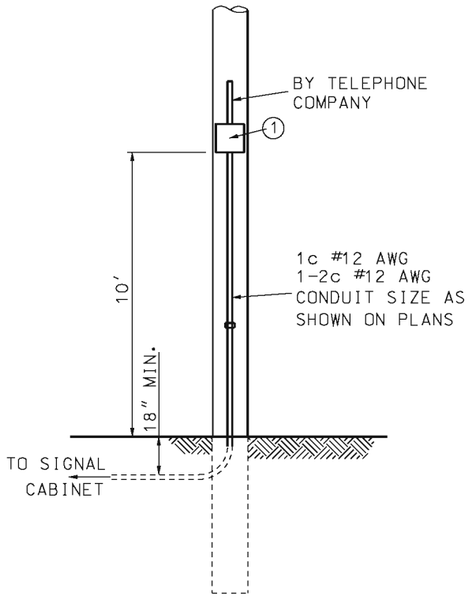

TYPE TPA
USE ON NEW OR EXISTING

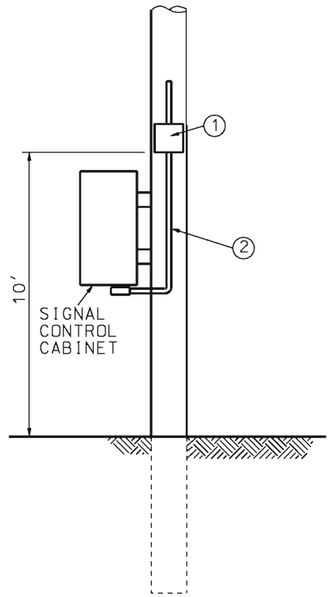

TYPE SWA
USE ON NEW OR EXISTING

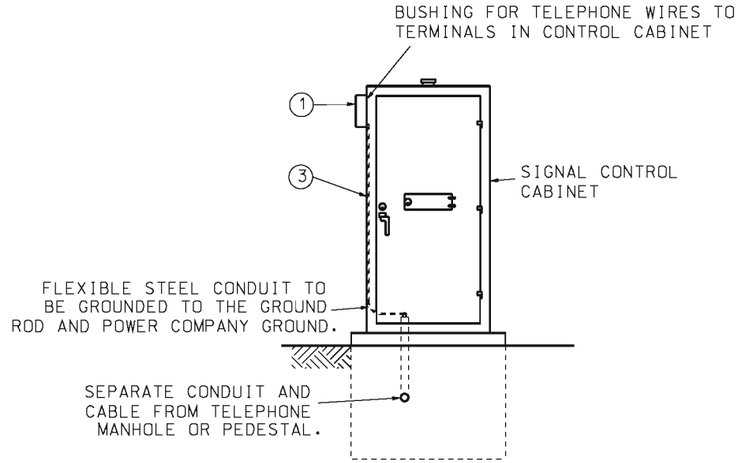

TYPE CU
USE ON NEW ONLY

NOTE:
WIRING FROM TELEPHONE COMPANY PEDESTAL OR MANHOLE WILL BE FURNISHED AND INSTALLED BY TELEPHONE COMPANY.

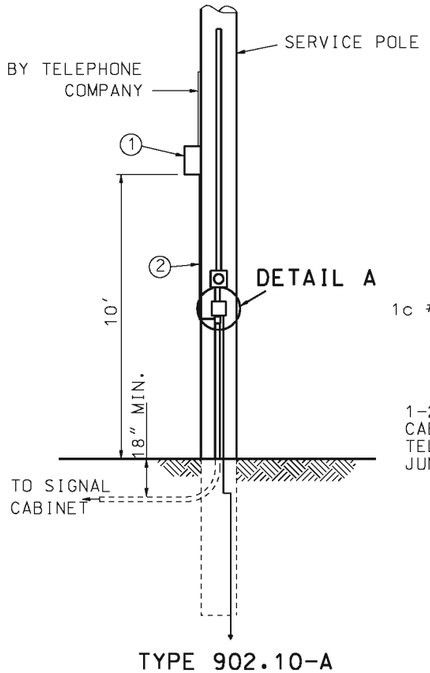

TYPE 902.10-A
USE ON EXISTING ONLY

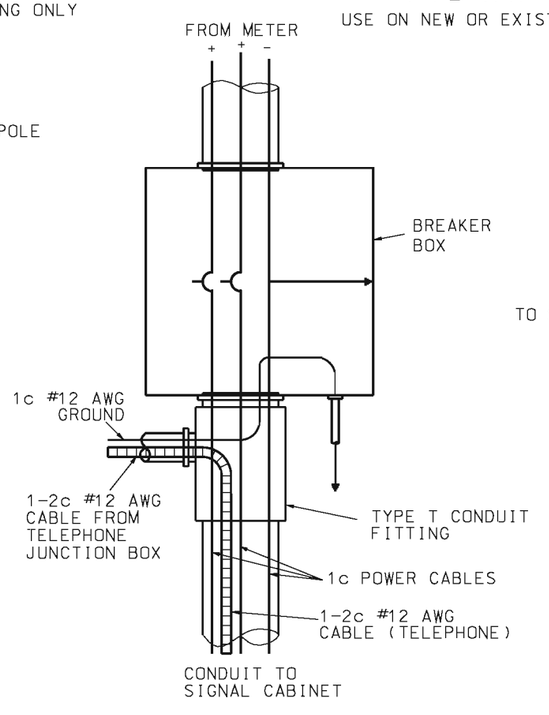

DETAIL A

AERIAL TELEPHONE CONNECTION

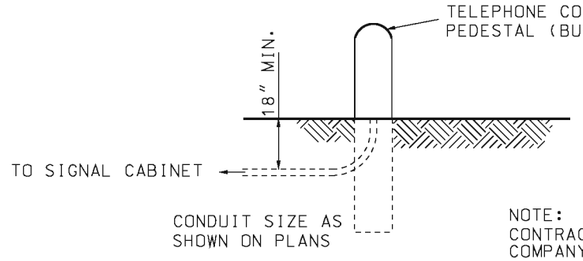

TYPE CP
USE ON NEW OR EXISTING

NOTE:
CONTRACTOR TO NOTIFY TELEPHONE COMPANY FOR ACCESS AND LOCATION OF CONDUIT INTO PEDESTAL.

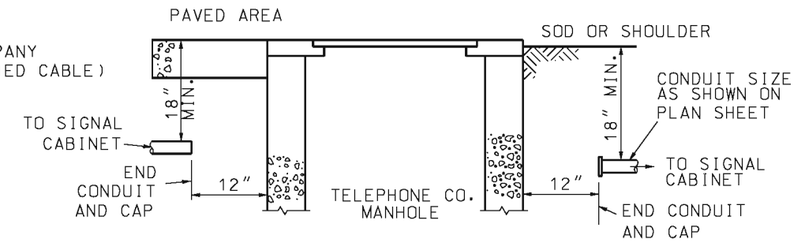

CONDUIT TO BE INSTALLED INTO TELEPHONE CO. MANHOLE BY TELEPHONE CO.

TYPE CM
USE ON NEW OR EXISTING

UNDERGROUND TELEPHONE CONNECTION

NOTE:
SCHEMATIC DIAGRAM APPLIES TO STANDARD PLANS 901.80 AND 902.15.

(1) 12" x 12" x 6" JUNCTION BOX WITH $\frac{3}{4}$" TO $1\frac{1}{2}$" KNOCK-OUT IN BOTTOM.
(2) $\frac{3}{4}$" MINIMUM METAL CONDUIT CONTAINING 1-2c #12 AWG AND 1c #12 AWG.
(3) $\frac{3}{4}$" MINIMUM FLEXIBLE CONDUIT CONTAINING 1-2c #12 AWG AND 1c #12 AWG.
ALL ITEMS CONTRACTOR FURNISHED AND INSTALLED.

MISSOURI HIGHWAYS AND TRANSPORTATION COMMISSION
105 WEST CAPITOL
JEFFERSON CITY, MO 65102
1-888-ASK-MODOT (1-888-275-6636)

STATE OF MISSOURI
EILEEN H. RACKERS
NUMBER PE-28336
PROFESSIONAL ENGINEER
THIS SHEET HAS BEEN SIGNED, SEALED AND DATED ELECTRONICALLY.

TRAFFIC SIGNALS
TELEPHONE INTERCONNECT

DATE EFFECTIVE: 03/01/1996
DATE PREPARED: 8/26/2009

902.21C

SHEET NO. 1 OF 1

IF A SEAL IS PRESENT ON THIS SHEET IT HAS BEEN ELECTRONICALLY SEALED AND DATED.

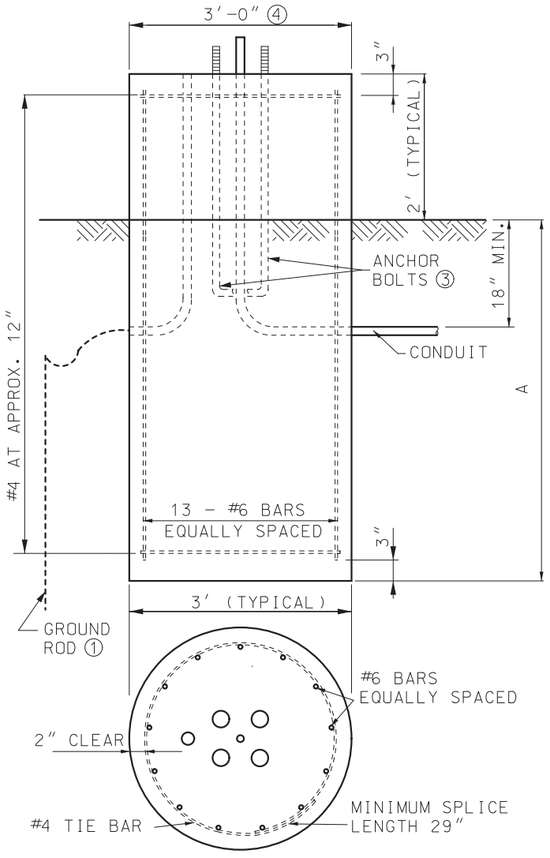

TYPE A (FLAT GROUND)

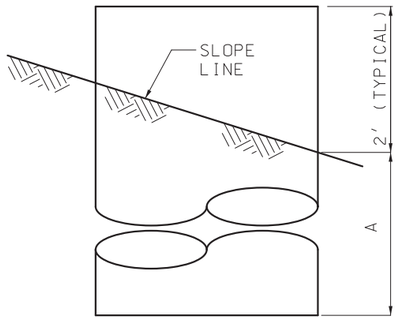

TYPE A (FILL)

(FOR ADDITIONAL DETAILS SEE TYPE A FLAT GROUND)

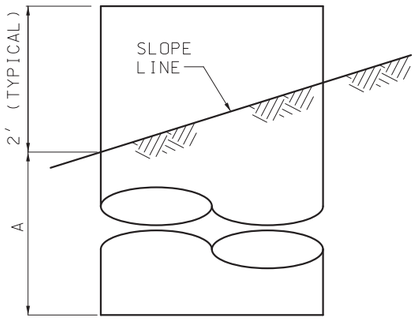

TYPE A (CUT)

(FOR ADDITIONAL DETAILS SEE TYPE A FLAT GROUND)

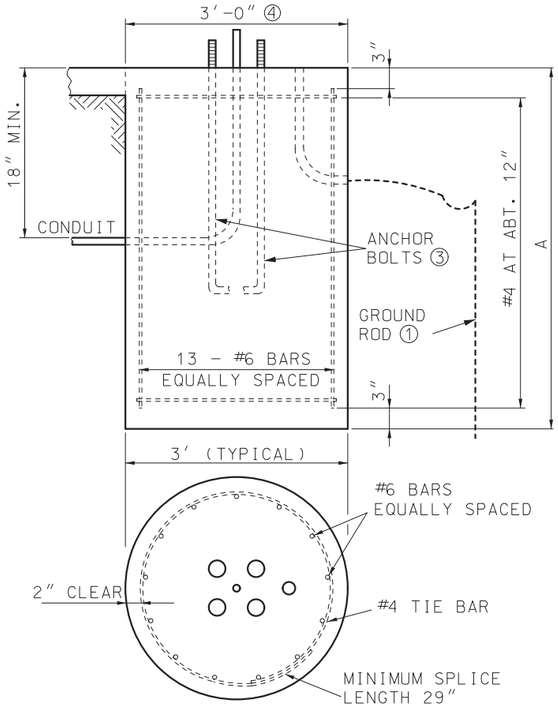

TYPE F

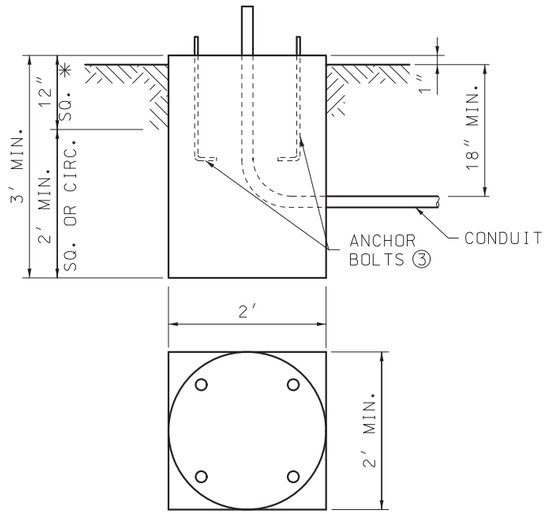

✳ SURFACE OF BASE TO BE CONSTRUCTED SQUARE FOR A DEPTH OF 12″.

TYPE C

POST BASES

POST BASES		
POST TYPE	ARM LENGTH (FEET) ⑤	BASE TYPE ⑥
C OR CL	15 – 25	A-9 OR F-9
C OR CL	30 – 35	A-9.5 OR F-9.5
C OR CL	40 – 55	A-10.5 OR F-10.5
B OR BL	15 – 25	A-10 OR F-10
B OR BL	30 – 35	A-11 OR F-11
B OR BL	40 – 55	A-12 OR F-12

STEEL AND CONCRETE REQUIREMENTS FOR POST BASES ⑨				
BASES		#6 STEEL BAR		CONC.
TYPE	A ⑦	LENGTH	WEIGHT LBS. ⑧	C.Y.
A-9	9′-0″	10′-6″	300	2.88
A-9.5	9′-6″	11′-0″	310	3.01
A-10	10′-0″	11′-6″	320	3.14
A-10.5	10′-6″	12′-0″	330	3.27
A-11	11′-0″	12′-6″	350	3.40
A-12	12′-0″	13′-6″	380	3.67
F-9	9′-0″	8′-6″	240	2.36
F-9.5	9′-6″	9′-0″	250	2.49
F-10	10′-0″	9′-6″	270	2.62
F-10.5	10′-6″	10′-0″	280	2.75
F-11	11′-0″	10′-6″	300	2.88
F-12	12′-0″	11′-6″	320	3.14
C✳				0.44

✳ SURFACE OF BASE TO BE CONSTRUCTED SQUARE FOR A DEPTH OF 12″.

BASE EMBEDMENT IN SOLID ROCK	
SOLID ROCK ENCOUNTER POINT	REQUIRED EMBEDMENT FOR BASE TYPE
	A-10 F-10
AT SURFACE	4′-9″
AT ONE-FOURTH NORMAL DEPTH	4′-0″
AT ONE-HALF NORMAL DEPTH	3′-3″
AT THREE-FOURTHS NORMAL DEPTH	1′-3″

1. REQUIRED EMBEDMENT DEPTHS CAN BE INTERPOLATED BETWEEN ENCOUNTER POINTS FOR OTHER SOLID ROCK ENCOUNTER DEPTHS.
2. NORMAL LENGTHS FOR ANCHOR BOLTS AND REINFORCING STEEL WILL BE REQUIRED.
3. CORE DRILL HOLES FOR ANCHOR BOLTS AND REINFORCING STEEL IN SOLID ROCK SHALL BE PROVIDED. CORE DRILL HOLES SHALL BE TWICE THE DIAMETER OF THE ANCHOR BOLT AND REINFORCING STEEL DIAMETER AND TO WITHIN 3 INCHES OF THE NORMAL BASE DEPTH.
4. IF SOIL, SHALE, GRAVEL, FRACTURED ROCK, OR VOIDS ARE ENCOUNTERED DURING CORE DRILLING, THE ROCK SHALL BE REMOVED TO THE POINT OF ENCOUNTER.
5. ANCHOR BOLTS AND REINFORCING STEEL SHALL BE GROUTED IN THE CORE DRILL HOLES WITH NON-SHRINK GROUT HAVING A MINIMUM STRENGTH OF 9,000 POUNDS IN 24 HOURS.
6. STRAIGHT ANCHOR BOLTS OF THE LENGTH SHOWN IN THE ANCHOR BOLT TABLE UNDER THE COLUMN "BOLT LENGTH" ARE ADEQUATE FOR USE IN GROUTED CORE DRILLED HOLES.

① APPLICABLE ONLY WHERE CONTROLLER IS MOUNTED TO A SIGNAL POLE.

② BASE PLATE SHALL STAY WITHIN THE TOP OF THE POST BASE DIAMETER.

③ ANCHOR BOLT DIMENSIONS ARE SHOWN ON THE MANUFACTURER'S APPROVED DRAWINGS.

④ MAXIMUM BOLT CIRCLE DIAMETER IS 26″. BASE PLATE SHALL STAY WITHIN THE TOP OF THE POST BASE DIAMETER.

⑤ ARM LENGTH DETERMINED BY LENGTH OF LONGEST ARM FOR TYPE B & BL SIGNAL POSTS.

⑥ BASE TYPE A OR F DETERMINED BY LOCATION OF POST BASE.

⑦ SOIL DEPTH, NO ROCK.

⑧ WEIGHT INCLUDES #4 TIE BARS.

⑨ WHEN CONCRETE BASE IS LOCATED WITHIN 8″ CONCRETE DIVISIONAL ISLAND, EMBEDMENT LENGTH MAY BE REDUCED BY ½ DIAMETER OF THE DRILLED SHAFT.

IF A SEAL IS PRESENT ON THIS SHEET IT HAS BEEN ELECTRONICALLY SEALED AND DATED.

MISSOURI HIGHWAYS AND TRANSPORTATION COMMISSION
105 WEST CAPITOL
JEFFERSON CITY, MO 65102
1-888-ASK-MODOT (1-888-275-6636)

STATE OF MISSOURI
NICOLE A. KOLB HOOD
NUMBER PE-2001018754
PROFESSIONAL ENGINEER
THIS SHEET HAS BEEN SIGNED, SEALED AND DATED ELECTRONICALLY.

TRAFFIC SIGNALS

POST BASES

DATE EFFECTIVE: 07/01/2019
DATE PREPARED: 5/20/2019

902.30P

SHEET NO. 1 OF 2

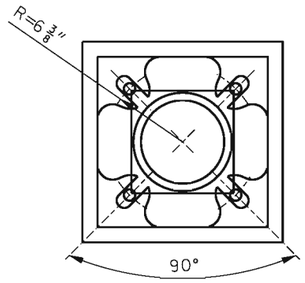

BOLT CIRCLE

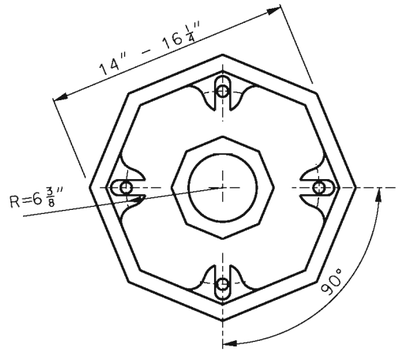

BOLT CIRCLE

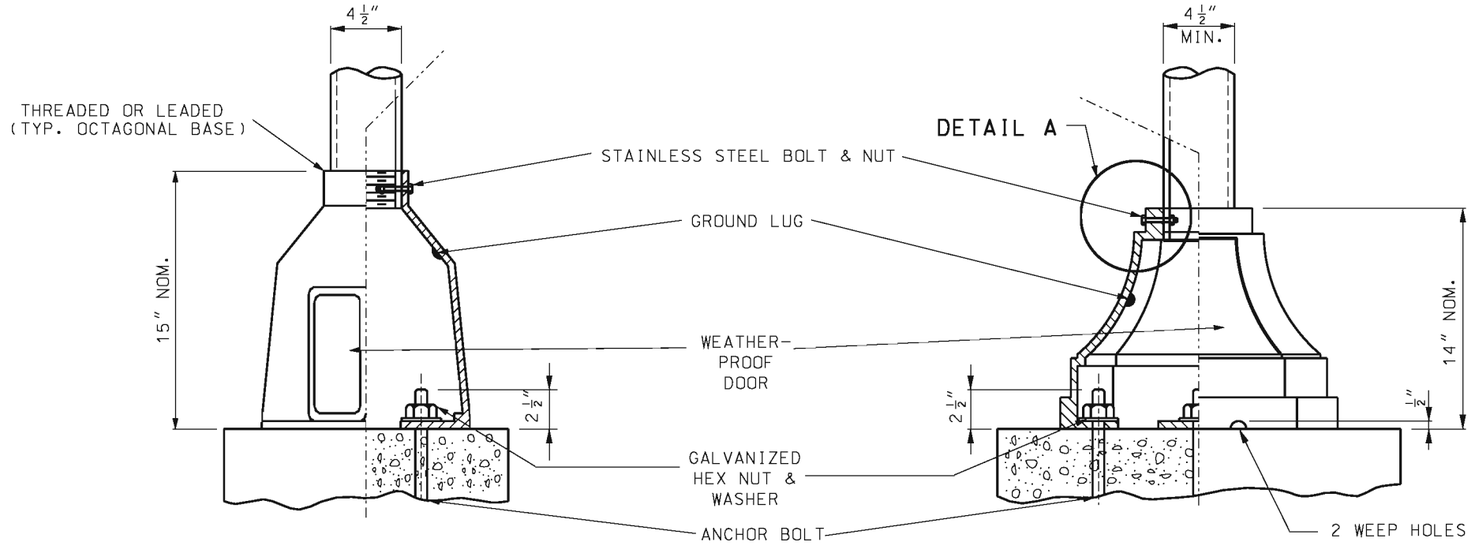

SQUARE

OCTAGONAL

CAST BASE

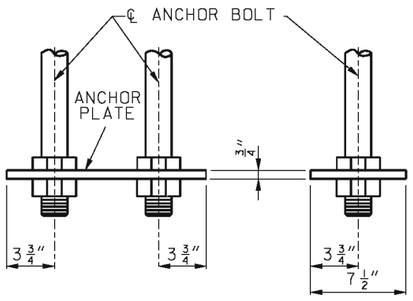

SIDE VIEW END VIEW

TWO BOLTS PER PLATE

HEX NUT OR 5/16" FILLET WELD ALL AROUND BOTH SIDES

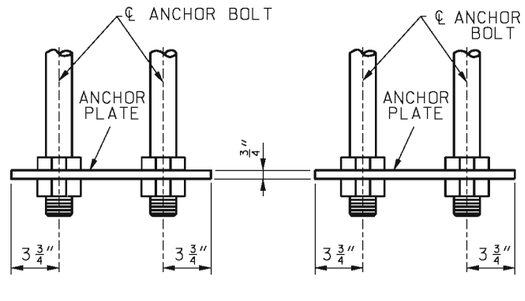

SIDE VIEW END VIEW

FOUR BOLTS PER PLATE

HEX NUT OR 5/16" FILLET WELD ALL AROUND BOTH SIDES

OPTIONAL STEEL PLATE FOR ANCHOR BOLTS

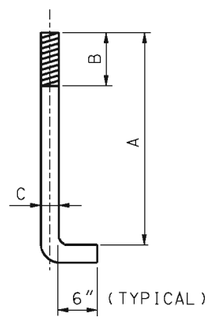

ANCHOR BOLT

NOTE:
ALL ANCHOR BOLTS SHALL BE FULLY GALVANIZED.

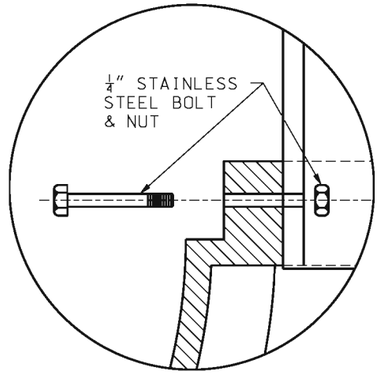

DETAIL A

BOLT LENGTH	VERT. HT. A	THREAD LEN. B	DIA. C
INCHES	INCHES	INCHES	INCHES
19	17	1.50	0.625
57	51	7.00	1.250
79	73	7.50	1.500
94	88	8.00	1.750
121	115	8.50	2.000
120	114	9.00	2.250
146	140	9.50	2.500

IF A SEAL IS PRESENT ON THIS SHEET IT HAS BEEN ELECTRONICALLY SEALED AND DATED.

MISSOURI HIGHWAYS AND TRANSPORTATION COMMISSION
105 WEST CAPITOL
JEFFERSON CITY, MO 65102
1-888-ASK-MODOT (1-888-275-6636)

STATE OF MISSOURI
KATHRYN PHILLIPS HARVEY
NUMBER PE-23751
PROFESSIONAL ENGINEER
THIS SHEET HAS BEEN SIGNED, SEALED AND DATED ELECTRONICALLY.

TRAFFIC SIGNALS

POST BASES

DATE EFFECTIVE: 02/01/2008
DATE PREPARED: 8/26/2009

902.30P

SHEET NO. 2 OF 2

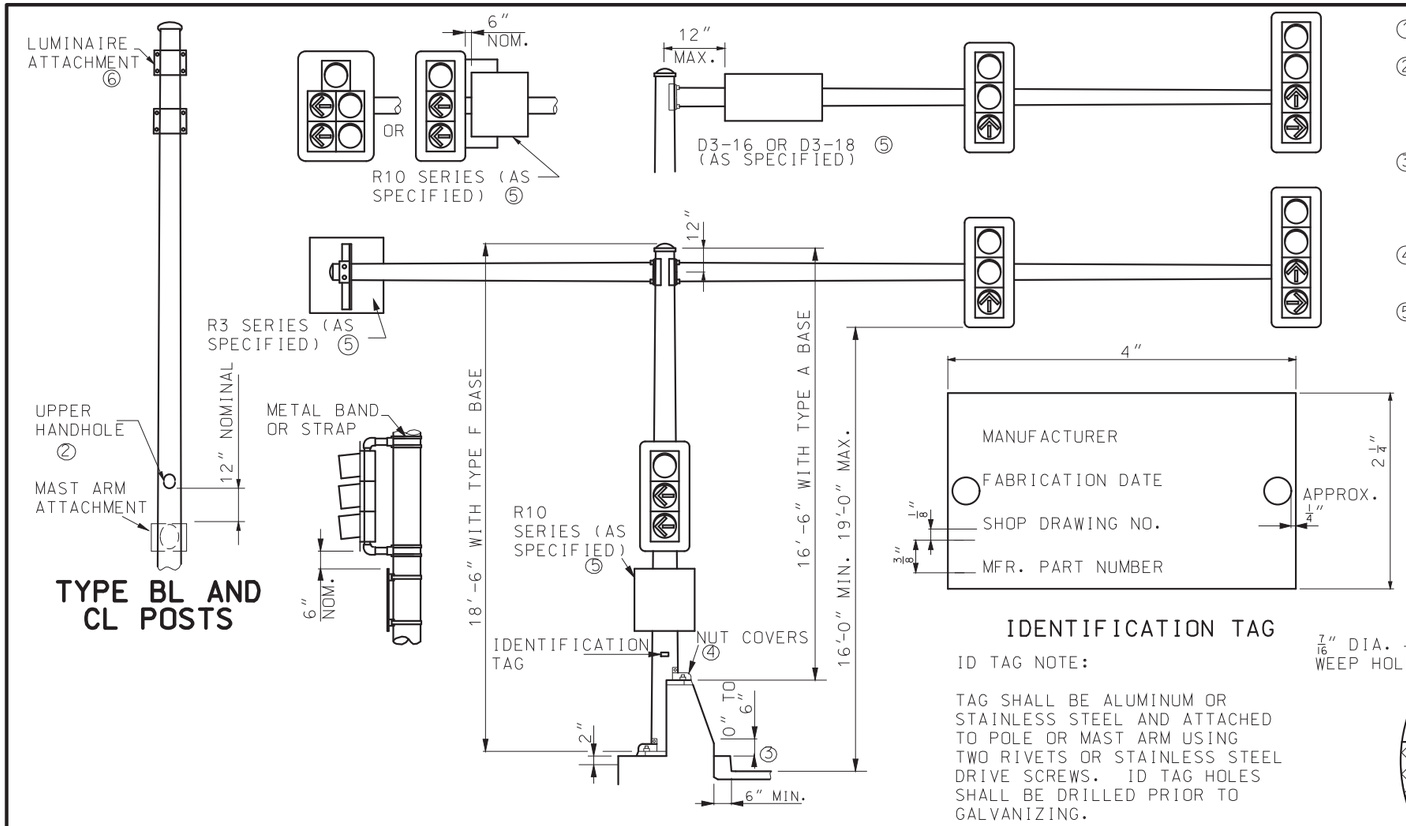

TYPE BL AND CL POSTS

IDENTIFICATION TAG

ID TAG NOTE:

TAG SHALL BE ALUMINUM OR STAINLESS STEEL AND ATTACHED TO POLE OR MAST ARM USING TWO RIVETS OR STAINLESS STEEL DRIVE SCREWS. ID TAG HOLES SHALL BE DRILLED PRIOR TO GALVANIZING.

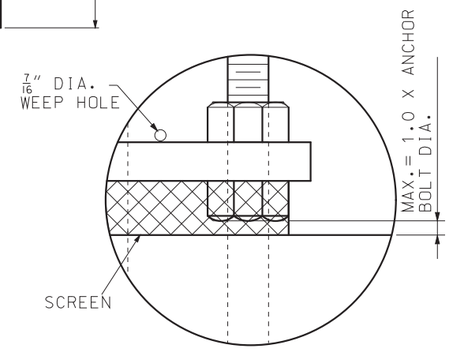

DETAIL A

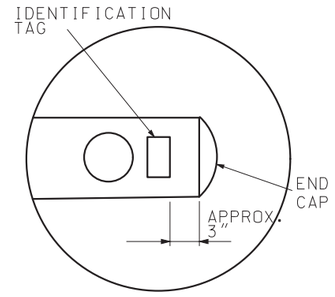

DETAIL B

① ARM LENGTHS SHALL NOT EXCEED 55 FEET.

② HANDHOLES SHALL BE APPROXIMATELY 4" x 6½". HANDHOLE FRAME SHALL BE REINFORCED SO THAT THE POLE STRENGTH IS NOT REDUCED.

③ 0" TO 6" VARIATION IN BASE HEIGHT IS FOR OBTAINING 16'-0" CLEARANCE. 0.13 C.Y. CONCRETE AND 3 LBS. REINFORCING STEEL PER 6".

④ POSTS SHALL BE FURNISHED WITH INDIVIDUAL NUT COVERS.

⑤ NO SIGN IN EXCESS OF 15.0 SQUARE FEET SHALL BE INSTALLED ON POSTS OR MAST ARMS. SIGNS EXCEEDING 8.0 SQUARE FEET SHALL BE LOCATED SO THAT THE EDGE OF THE SIGN IS NO MORE THAN 12" FROM THE CENTERLINE OF THE POST. D3 SERIES SIGNS, AS WELL AS SIGNS INSTALLED ON THE POST, SHALL BE MOUNTED WITH A STRAP TYPE SIGN SUPPORT. R10 SERIES SIGNS INSTALLED ON THE MAST ARM SHALL BE MOUNTED WITH A SIGN BRACKET ASSEMBLY.

⑥ SEE DRAWING 901.00 FOR TYPICAL BRACKET ARM MOUNTING FOR TYPE BL AND TYPE CL POSTS.

⑦ A GALVANIZED SCREEN SHALL BE USED BETWEEN THE POST BASE PLATE AND CONCRETE BASE. SCREENS SHALL BE PRESS-FORMED OF 3 OR 4 MESH, 21 GAGE OR HEAVIER, STAINLESS STEEL OR HOT-DIPPED GALVANIZED WIRE SCREEN OR APPROVED EQUIVALENT, THAT WILL PROVIDE A FRICTION-TIGHT FIT WHEN INSTALLED.

⑧ POST SHALL BE GROUNDED FROM GROUND LUG IN POST WITH # 6 AWG BARE COPPER WIRE TO CONDUIT SYSTEM. GROUND LUG SHALL BE 90° OR 180° FROM THE HANDHOLE.

GENERAL NOTES:

ARMS SHALL BE RAKED UP 0.25" PER FOOT MINIMUM. ARMS SHALL BE PROVIDED WITH A PERMANENT MARKING INDICATING PROPER ORIENTATION FOR INSTALLATION.

SIGNS AND SIGNALS SHALL BE VERTICAL. SIGNAL HEADS ON MAST ARMS SHALL BE TILTED FORWARD FROM THE TOP 3 TO 7 DEGREES FROM VERTICAL.

IF A SIGN EXCEEDS 42" IN LENGTH, TWO STRAP SUPPORTS ARE REQUIRED: AND IF A SIGN EXCEEDS 96" IN LENGTH, THREE STRAP SUPPORTS ARE REQUIRED.

TO DETERMINE LEFT OR RIGHT ON TYPE B OR C SIGNAL POST, VIEWING POSITION SHALL BE FROM THE CENTER OF THE INTERSECTION BEING CONTROLLED AND FACING THE SIGNAL INVOLVED.

TRAFFIC SIGNALS MOUNTED ON MAST ARMS SHALL BE FURNISHED WITH MOUNTING BRACKETS UTILIZING CABLES.

SEE STANDARD 902.30 FOR FOUNDATION AND ANCHOR BOLT DETAILS.

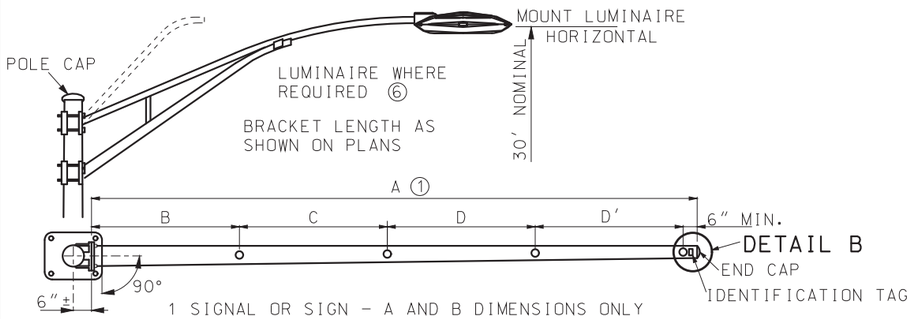

1 SIGNAL OR SIGN - A AND B DIMENSIONS ONLY
2 SIGNALS OR SIGNS - A, B, AND C DIMENSIONS ONLY
3 SIGNALS OR SIGNS - A, B, C AND D DIMENSIONS ONLY
4 SIGNALS OR SIGNS - A, B, C, D AND D' DIMENSIONS
SEE TRAFFIC SIGNAL PLANS FOR DIMENSIONS.

TYPE C AND TYPE CL (WITH LUMINAIRE)

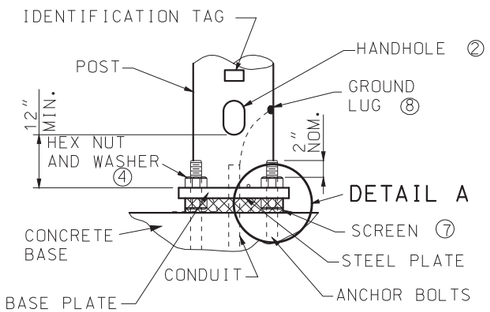

STEEL PLATE AND ANCHOR BASE

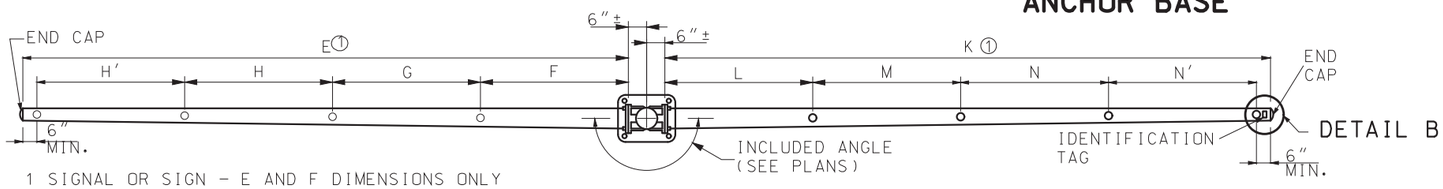

1 SIGNAL OR SIGN - E AND F DIMENSIONS ONLY
2 SIGNALS OR SIGNS - E, F, AND G DIMENSIONS ONLY
3 SIGNALS OR SIGNS - E, F, G, AND H DIMENSIONS ONLY
4 SIGNALS OR SIGNS - E, F, G, H AND H' DIMENSIONS

TYPE B AND TYPE BL (WITH LUMINAIRE)

1 SIGNAL OR SIGN - K AND L DIMENSIONS ONLY
2 SIGNALS OR SIGNS - K, L, AND M DIMENSIONS ONLY
3 SIGNALS OR SIGNS - K, L, M, AND N DIMENSIONS ONLY
4 SIGNALS OR SIGNS - K, L, M, N AND N' DIMENSIONS
SEE TRAFFIC SIGNAL PLANS FOR DIMENSIONS

IF A SEAL IS PRESENT ON THIS SHEET IT HAS BEEN ELECTRONICALLY SEALED AND DATED.

MISSOURI HIGHWAYS AND TRANSPORTATION COMMISSION
105 WEST CAPITOL
JEFFERSON CITY, MO 65102
1-888-ASK-MODOT (1-888-275-6636)

STATE OF MISSOURI
ERIC E. SCHROETER
NUMBER PE-2841
PROFESSIONAL ENGINEER
THIS SHEET HAS BEEN SIGNED, SEALED AND DATED ELECTRONICALLY.

TRAFFIC SIGNALS
TUBULAR STEEL POSTS

DATE EFFECTIVE: 04/01/2018
DATE PREPARED: 2/9/2018

902.40R

SHEET NO. 1 OF 3

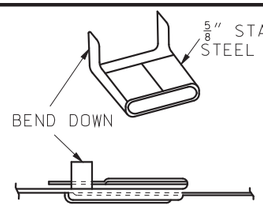

VIEW SHOWING

ENDS OF STRAP CLAMPED IN SEAL

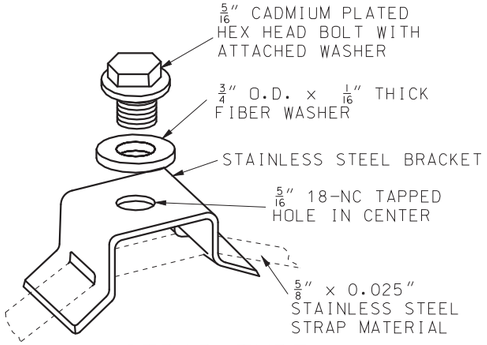

STRAP TYPE SIGN SUPPORT

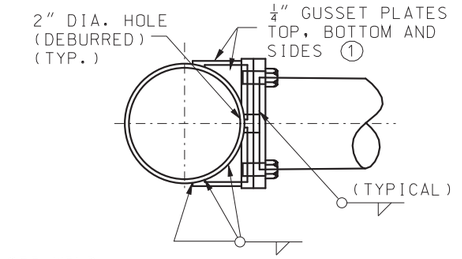

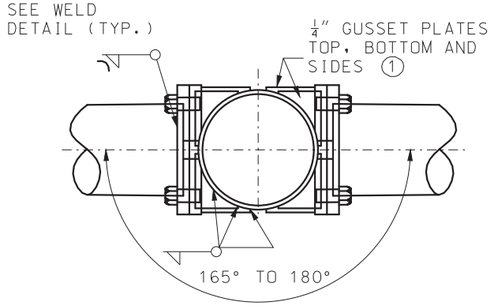

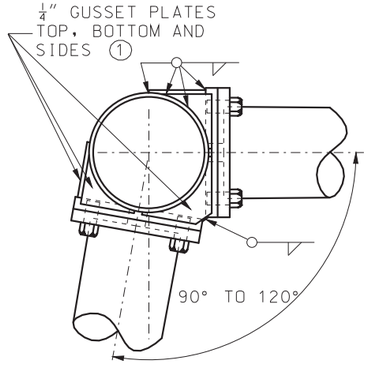

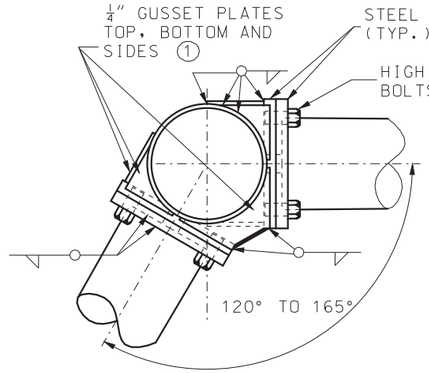

ARM ATTACHMENTS

(1) ANY OPENINGS BETWEEN TOP AND SIDE GUSSET PLATES SHALL BE SEALED WITH LIFETIME CAULK AT TIME OF INSTALLATION.

(2) PLATE AND BOLT SIZES SHALL BE SHOWN ON FABRICATORS SHOP DRAWINGS AND SHALL BE SUBJECT TO APPROVAL.

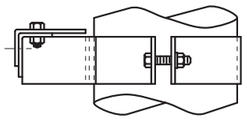

TOP VIEW

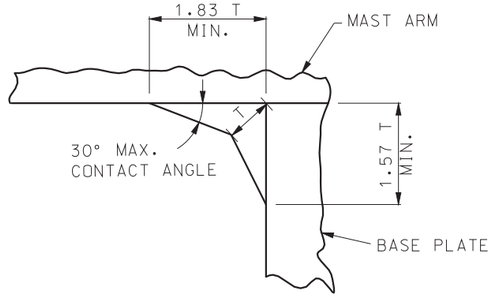

WELD DETAIL

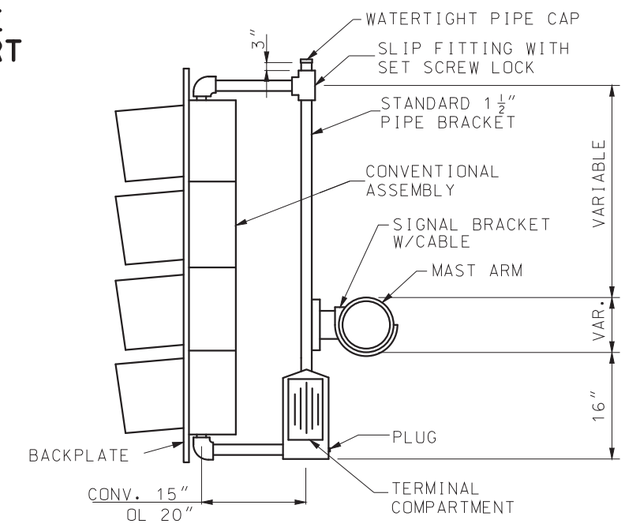

MAST ARM MOUNTED SIGNAL HEAD

(SEE STANDARD 902.00)

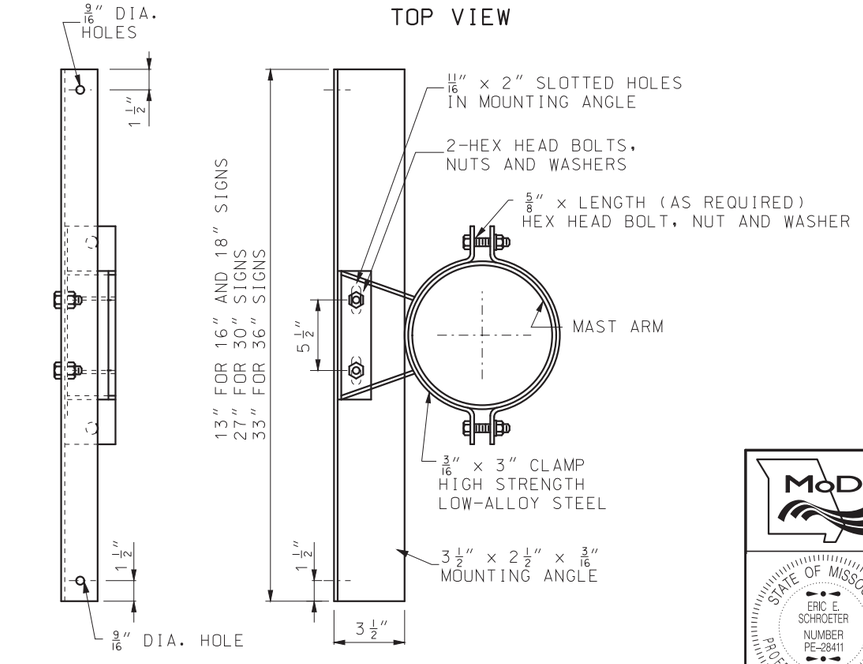

FRONT VIEW SIDE VIEW

SIGN BRACKET ASSEMBLY

ALTERNATE DESIGN MAY BE PROVIDED AS APPROVED BY ENGINEER

MISSOURI HIGHWAYS AND TRANSPORTATION COMMISSION
105 WEST CAPITOL
JEFFERSON CITY, MO 65102
1-888-ASK-MODOT (1-888-275-6636)

STATE OF MISSOURI
ERIC E. SCHROETER
NUMBER PE-28411
PROFESSIONAL ENGINEER
THIS SHEET HAS BEEN SIGNED, SEALED AND DATED ELECTRONICALLY.

TRAFFIC SIGNALS

TUBULAR STEEL POSTS

DATE EFFECTIVE: 04/01/2018
DATE PREPARED: 2/9/2018

902.40R

SHEET NO. 2 OF 3

IF A SEAL IS PRESENT ON THIS SHEET IT HAS BEEN ELECTRONICALLY SEALED AND DATED.

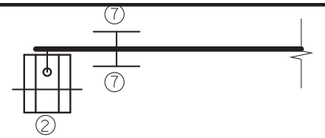

TYPICAL TOP VIEW

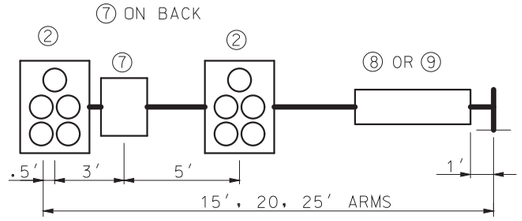

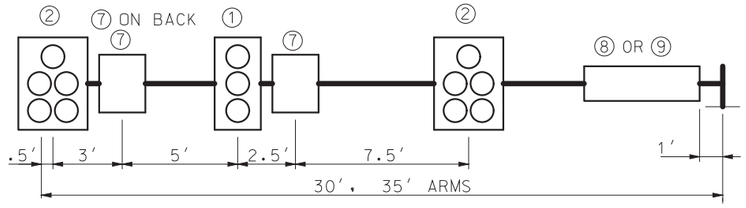

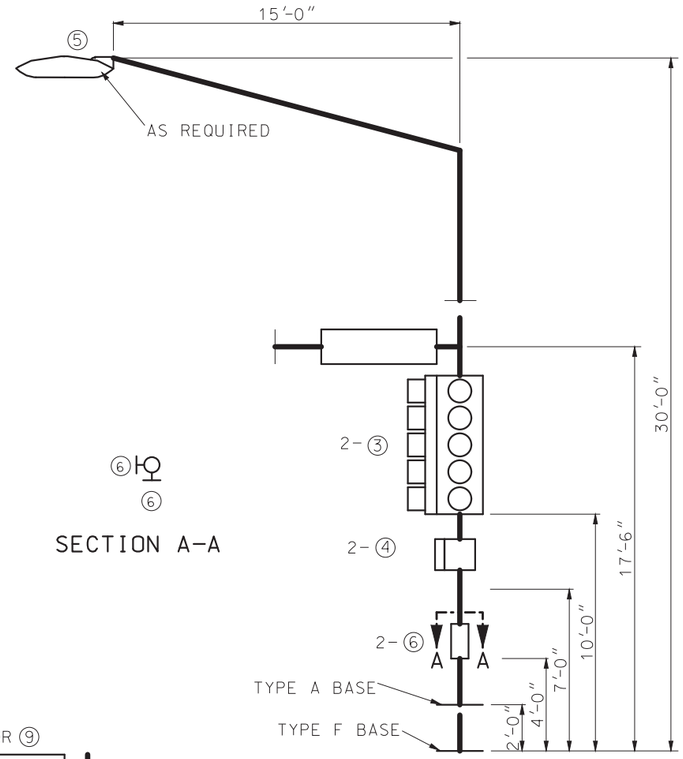

⑥ 부호
⑥

SECTION A-A

TYPICAL POST LOADING

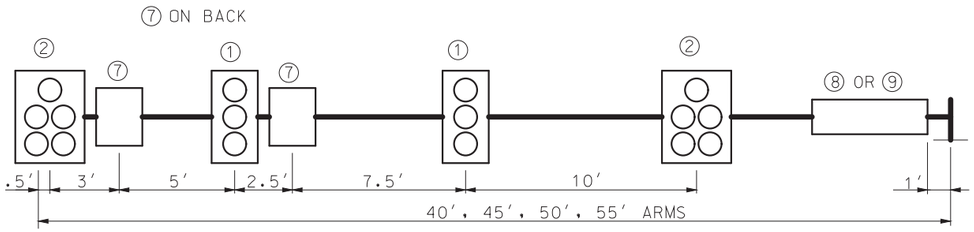

MAST ARM LOADING

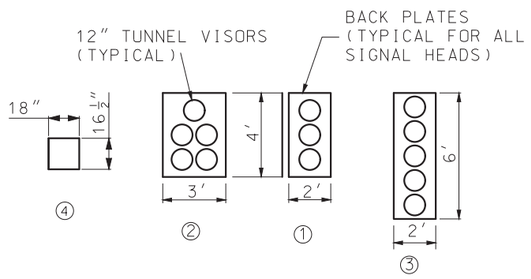

MINIMUM DESIGN LOADING FOR POST AND MAST ARM ATTACHMENTS

ITEM NO.	DESCRIPTION	WEIGHT (LBS.)✳	PROJ. AREA (SQ.FT.)	SURFACE AREA (SQ.FT.)
①	3-SECTION OL HEAD	95.0	8.0	32.5
②	5-SECTION OL HEAD	173.0	12.0	47.5
③	VERT. 5-SECT. OL HEAD	100.0	12.0	50.5
④	1-SECTION PED HEAD	15.0	2.0	XX.X
⑤	LED-A LUMINAIRE	30.0	1.0	3.5
⑥	9″ X 12″ SIGN	2.0	0.8	N/A
⑦	30″ X 36″ SIGN	13.0	7.5	N/A
⑧	120″ X 18″ SIGN	25.0	15.0	N/A
⑨	96″ X 16″ SIGN	18.0	10.7	N/A
	96″ X 18″ SIGN	20.0	12.0	N/A

OL- OPTICALLY LIMITED
✳ MOUNTING HARDWARE INCLUDED

STRUCTURAL DESIGN REQUIREMENTS:

STRUCTURAL SUPPORTS SHALL BE DESIGNED AND FABRICATED TO WITHSTAND THEIR OWN LOADING AND THE ATTACHMENT LOADING SHOWN ON THIS DRAWING OR ON THE PLANS, WHICHEVER IS GREATER. STRUCTURAL MEMBERS INCLUDE POSTS, MAST ARMS AND LUMINAIRE BRACKET ARMS, AS REQUIRED.

DESIGN OF STRUCTURAL SUPPORTS SHALL BE BASED ON AASHTO STANDARD SPECIFICATIONS FOR STRUCTURAL SUPPORTS FOR HIGHWAY SIGNS, LUMINARIES AND TRAFFIC SIGNALS, 1994 OR LATEST REVISION, WITH THESE EXCEPTIONS:

MINIMUM DESIGN WIND SPEED OF 90 MPH AT 30 FEET ABOVE GROUND.

GROUP LOADING:

LOADS	PERCENT OF ALLOWABLE STRESS (ALL MATERIALS)
GROUP I - DL	100
GROUP II - DL + W	133
GROUP III - DL + ICE + 0.5(W✳✳)	133

✳ NO LOAD REDUCTION FACTORS SHALL BE APPLIED IN CONJUNCTION WITH THESE INCREASED ALLOWABLE STRESSES.
✳✳ W TO BE COMPUTED ON THE BASIS OF THE WIND PRESSURE FORMULA, 25 PSF (1197 Pa) MINIMUM FOR W FOR GROUP III.

FOR TYPE B AND BL POSTS, ICE AND DEAD LOADING SHALL BE BASED ON THE COMBINED EFFECT OF DESIGN LOADING ON EACH ARM. WIND LOADING IS APPLIED AS DESCRIBED IN SECTION 1.2.5(5)(b) OF THE STANDARD SPECIFICATIONS FOR STRUCTURAL SUPPORTS, 1994 REVISION.

GENERAL NOTES:

ATTACHMENT LOCATIONS ARE FOR STRUCTURAL DESIGN PURPOSES ONLY. ACTUAL LOCATIONS ARE SHOWN ON THE PLANS.

LUMINAIRE PER MODOT'S STANDARDS AND SPECIFICATIONS UNLESS OTHERWISE NOTED ON PLANS.

MISSOURI HIGHWAYS AND TRANSPORTATION COMMISSION
105 WEST CAPITOL
JEFFERSON CITY, MO 65102
1-888-ASK-MODOT (1-888-275-6636)

STATE OF MISSOURI
ERIC E. SCHROETER
NUMBER PE-2011
PROFESSIONAL ENGINEER
THIS SHEET HAS BEEN SIGNED, SEALED AND DATED ELECTRONICALLY.

TRAFFIC SIGNALS
TUBULAR STEEL POSTS
DESIGN LOADING REQUIREMENTS

DATE EFFECTIVE: 04/01/2018
DATE PREPARED: 2/9/2018

902.40R

SHEET NO. 3 OF 3

IF A SEAL IS PRESENT ON THIS SHEET IT HAS BEEN ELECTRONICALLY SEALED AND DATED.

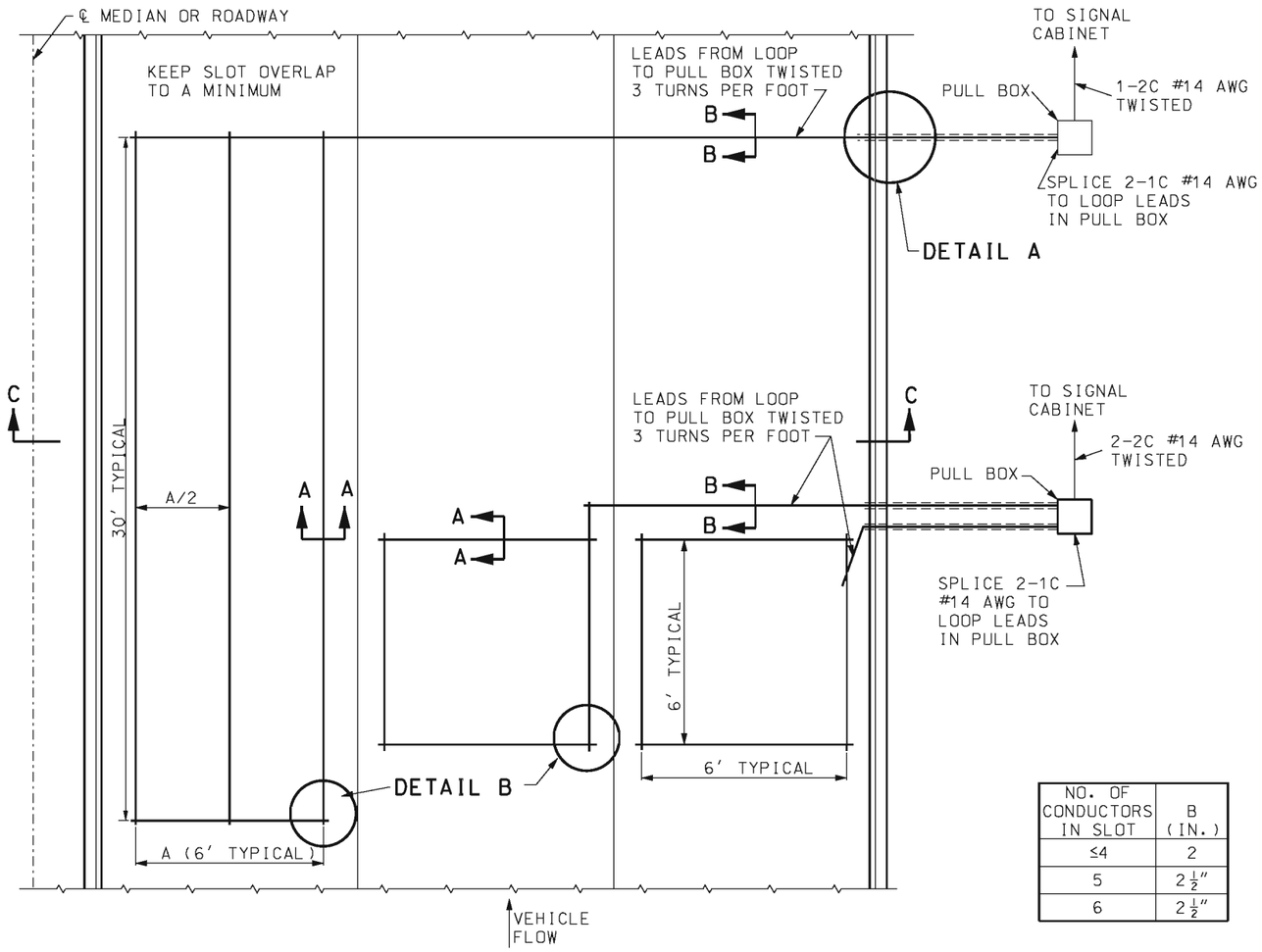

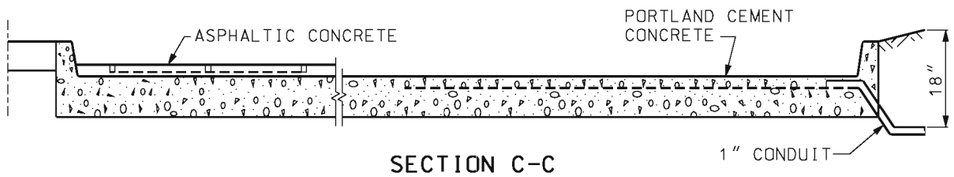

SECTION C-C

LOOP SLOT DETAIL

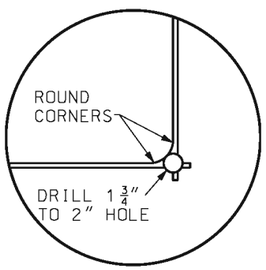

DETAIL B

TYPICAL LOOP CORNER DETAIL

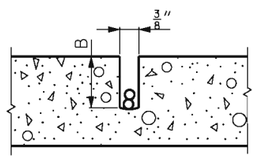

SECTION A-A
LOOP SLOT

NO. OF CONDUCTORS IN SLOT	B (IN.)
≤4	2
5	2½"
6	2½"

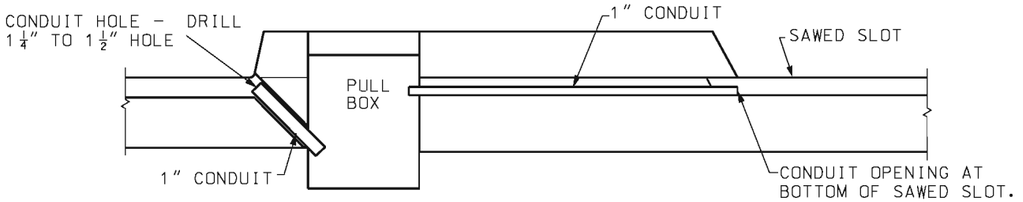

ALTERNATE SECTION D-D MEDIAN OR ISLAND DETAIL

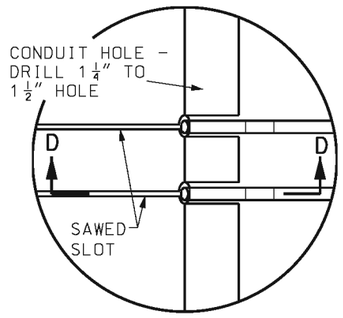

DETAIL A CONDUIT SLOT DETAIL

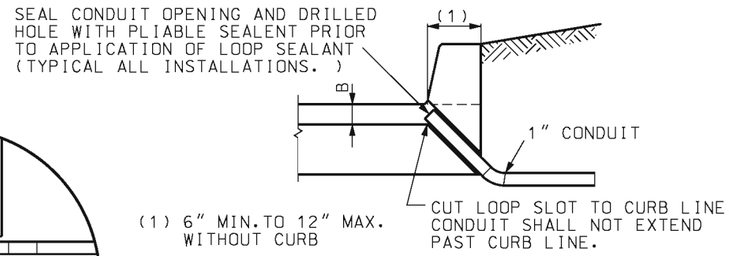

SECTION D-D

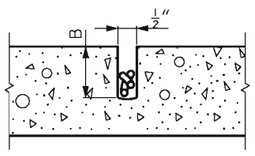

SECTION B-B
LEAD SLOT

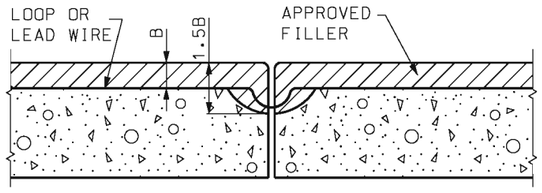

DETAIL OF AN "E" JOINT OR OTHER FULL DEPTH JOINT CROSSING

CAUTION:
WIRE SHALL BE PLACED IN SAWED SLOT WITH DEVICE WHICH WILL NOT DAMAGE THE WIRE INSULATION.

GENERAL NOTES:

SENSOR UNIT SHALL BE HOUSED IN CONTROLLER CABINET UNLESS SPECIFIED OTHERWISE.

LOOPS TO BE INSTALLED, WHEN EXISTING PORTLAND CEMENT CONCRETE OR ASPHALTIC CONCRETE PAVEMENT IS BEING RESURFACED, LOOPS SHALL NOT BE PLACED IN SURFACE COURSE OF THE ASPHALTIC CONCRETE.

THE CONDUIT SLOT MAY BE POWER OR MANUALLY CONSTRUCTED, ANY FORMING NEEDED TO SECURE CONDUIT IN SLOT SHALL BE REMOVED.

A SEPARATE CONDUIT SHALL BE INSTALLED BETWEEN THE SAWED LOOP SLOT AND THE FIRST PULL BOX FOR EACH LOOP. THE CONDUIT OPENING AT THE END OF THE LEAD-IN SLOT SHALL BE AT THE BOTTOM OF THE SAWED SLOT.

AFTER CABLE INSTALLATION, THE CONDUIT OPENING AT THE LOOP LEAD ENTRANCE SHALL BE SEALED.

AVOID "E" JOINTS OR OTHER FULL DEPTH JOINTS. MINOR ADJUSTMENTS TO LOOP LOCATION MAY BE MADE.

USE TYPICAL DIMENSIONS UNLESS OTHERWISE SHOWN ON PLANS.

IF A SEAL IS PRESENT ON THIS SHEET IT HAS BEEN ELECTRONICALLY SEALED AND DATED.

MISSOURI HIGHWAYS AND TRANSPORTATION COMMISSION
105 WEST CAPITOL
JEFFERSON CITY, MO 65102
1-888-ASK-MODOT (1-888-275-6636)

STATE OF MISSOURI
EILEEN H. RACKERS
NUMBER PE-28336
PROFESSIONAL ENGINEER
THIS SHEET HAS BEEN SIGNED, SEALED AND DATED ELECTRONICALLY.

TRAFFIC SIGNALS
INDUCTION LOOP DETECTORS

DATE EFFECTIVE: 06/01/2009
DATE PREPARED: 4/14/2009

902.50L

SHEET NO. 1 OF 2

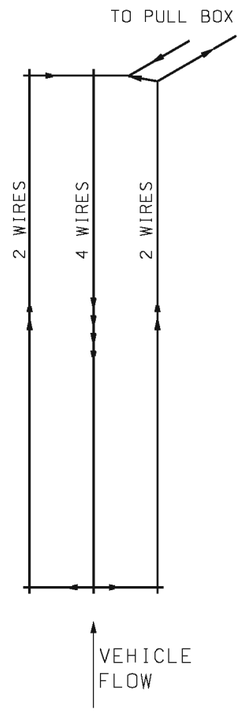

LOOP SHALL BE #14 AWG STRANDED WIRE IN PVC DUCT MADE UP OF 2 NON-TWISTED TURNS IN SINGLE SLOT OR AS RECOMMENDED BY MANUFACTURER OF THE DETECTOR AMPLIFIER. LOOP SHALL BE PLACED IN SAWED SLOTS IN A FIGURE EIGHT MANNER.

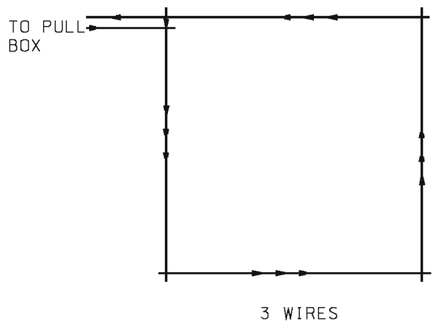

LOOP CONFIGURATION

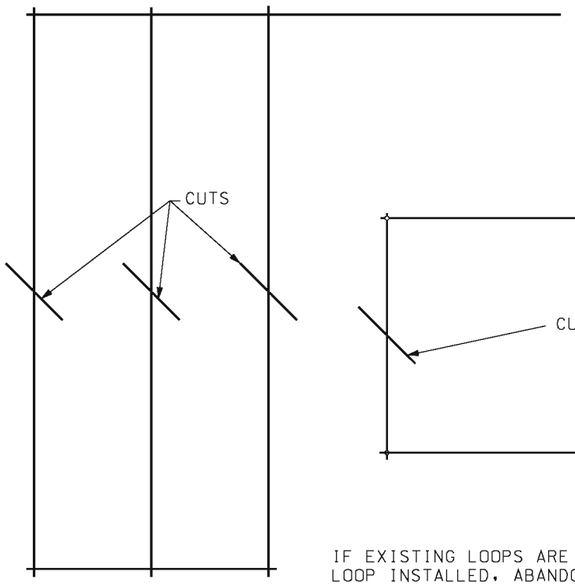

IF EXISTING LOOPS ARE TO BE ABANDONED AND NEW LOOP INSTALLED, ABANDONED LOOP WIRES SHALL BE REMOVED OR CUT COMPLETELY THROUGH.

ABANDONED LOOPS

IF A SEAL IS PRESENT ON THIS SHEET IT HAS BEEN ELECTRONICALLY SEALED AND DATED.

MISSOURI HIGHWAYS AND TRANSPORTATION COMMISSION
105 WEST CAPITOL
JEFFERSON CITY, MO 65102
1-888-ASK-MODOT (1-888-275-6636)

STATE OF MISSOURI
EILEEN H. RACKERS
NUMBER PE-28336
PROFESSIONAL ENGINEER
THIS SHEET HAS BEEN SIGNED, SEALED AND DATED ELECTRONICALLY.

TRAFFIC SIGNALS
INDUCTION LOOP DETECTORS

DATE EFFECTIVE: 06/01/2009
DATE PREPARED: 4/3/2009

902.50L

SHEET NO. 2 OF 2

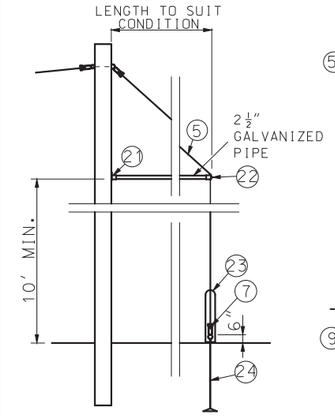

GUY WIRE
LIMITED RIGHT-OF-WAY

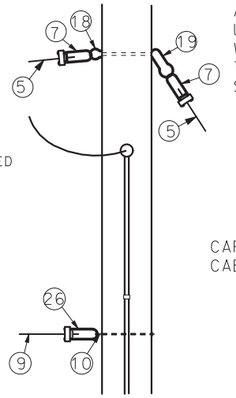

DETAIL A

SEPARATE GUY WIRE, BOLT AND THIMBLEYE SHALL BE USED FOR MESSENGER WIRE WHEN SPAN WIRE EXTENDS TWO DIRECTIONS FROM THE SAME POLE.

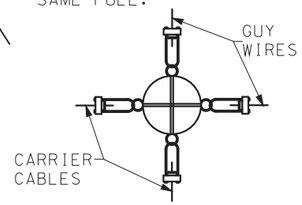

SECTION B-B
(AS REQUIRED)

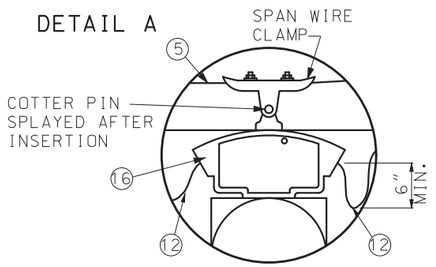

DETAIL B

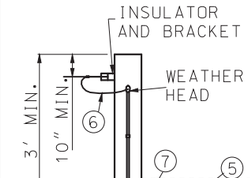

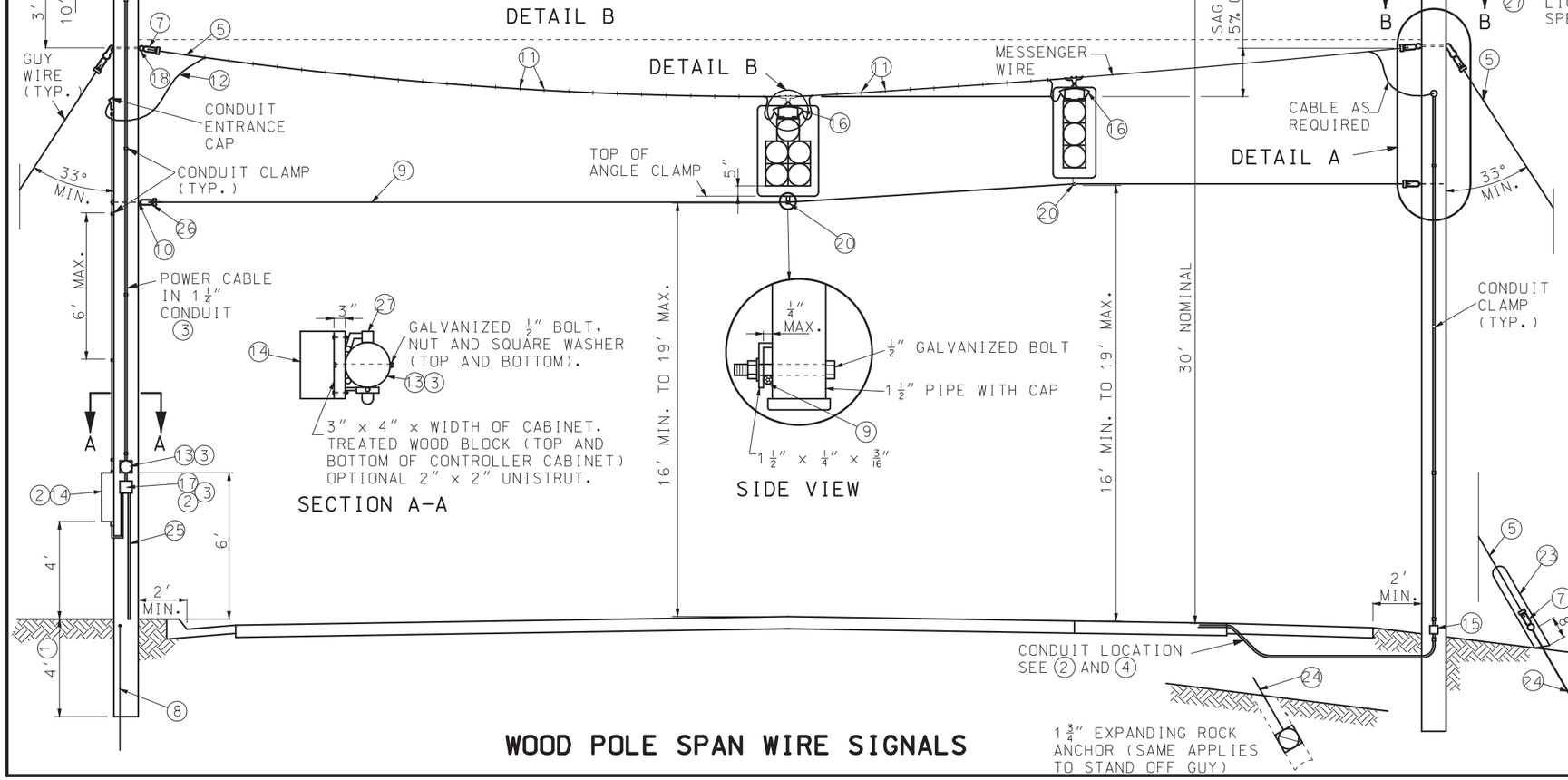

SECTION A-A

SIDE VIEW

WOOD POLE SPAN WIRE SIGNALS

1. INCREASE EMBEDMENT 1' FOR EACH 5' INCREMENT IN POLE LENGTH OVER 20'.
2. ITEMS ARE INSTALLED AS REQUIRED (SEE PLANS).
3. ITEMS ARE INSTALLED IF THE POLE IS USED AS A POWER SUPPLY (SEE GENERAL NOTES).
4. THREE OR MORE ENTERING CONDUITS WILL REQUIRE A PULL BOX OR OTHER APPROVED FITTING.
5. DOUBLE GALVANIZED ⅜" (MIN.) STEEL MESSENGER WIRE - 7 STRAND HIGH STRENGTH GRADE. DOUBLE GALVANIZED ½" STEEL GUY WIRE - 7 STRAND HIGH STRENGTH GRADE.
6. SERVICE WIRE AND SPLIT-BOLT OR SLEEVE CONNECTION BY UTILITY COMPANY. WIRE SPACING AS REQUIRED BY THE UTILITY COMPANY.
7. ⅜" AUTOMATIC JAW-TYPE CABLE FITTING WITH SHORT BAIL. 13,860 LBS. MINIMUM HOLDING STRENGTH.
8. ¾" X 8' MIN. COPPER GROUND ROD. IF SUBSURFACE CONDITIONS EXIST WHICH PROHIBIT THE PLACEMENT OF THE GROUND ROD IN A VERTICAL POSITION, THE ROD MAY BE DRIVEN AT AN OBLIQUE ANGLE NOT TO EXCEED 45 DEGREES FROM VERTICAL OR BURIED IN A TRENCH AT LEAST 30" DEEP. CONNECTION TO GROUND ROD SHALL BE CADWELDED.
9. DOUBLE GALVANIZED ¼" STEEL TETHER WIRE - 7 STRAND HIGH STRENGTH GRADE. INSTALL HORIZONTAL OR BELOW HORIZONTAL.
10. ½" GALVANIZED OVAL EYE BOLT.
11. NON-CORROSIVE METAL CABLE HANGERS AT 12" CENTERS.
12. MULTI-CONDUCTOR CABLE (SEE PLANS).
13. METER SOCKET AND CABINET.
14. CONTROLLER CABINET. ALL CONDUITS SHALL ENTER THE BOTTOM OF THE CABINET. NO HOLES SHALL BE MADE IN THE TOP, BACK OR SIDES OF THE CABINET.
15. JUNCTION BOX (NEMA 4).
16. DISCONNECT HANGER (NOT REQUIRED IF TEMPORARY)
17. CIRCUIT BREAKER. SEE STANDARD 902.15 FOR DETAILS.
18. ⅝" GALVANIZED STRAIGHT THIMBLEYE BOLT WITH GALVANIZED NUT AND 2½" GALVANIZED CURVE WASHER.
19. ⅝" GALVANIZED ANGLE THIMBLEYE.
20. TETHER WIRE AND CLAMP WITH QUICK RELEASE PROVISIONS. SEE DETAIL FOR MOUNTING TO POLE AND SIGNAL. OPTIONAL ATTACHMENT PERMITTED WITH APPROVAL OF ENGINEER.
21. 2½" GALVANIZED POST PLATE FASTENED TO POLE WITH ONE ⅝" GALVANIZED MACHINE BOLT & TWO ⅜" × 4" GALVANIZED LAG SCREWS.
22. 2½" GALVANIZED CONNECTOR END FITTING.
23. ALL LOCATIONS REQUIRE GUY WIRE PROTECTOR. (7' MIN.)
24. ¾" × 8' GALVANIZED THIMBLEYE ANCHOR ROD. (30" MIN. LENGTH IN ROCK).
25. #6 AWG BARE COPPER WIRE IN ½" CONDUIT.
26. ¼" AUTOMATIC JAW TYPE CABLE FITTING WITH SHORT BAIL. 5990 LBS. MINIMUM HOLDING STRENGTH.
27. LIGHTING CIRCUIT BREAKER CABINET (IF LUMINARIES ARE SPECIFIED SEE STANDARD 902.15 FOR DETAILS.

GENERAL NOTES:

DESIGN OF STRUCTURAL SUPPORTS SHALL COMPLY WITH AASHTO STANDARD SPECIFICATIONS FOR STRUCTURAL SUPPORTS FOR HIGHWAY SIGNS, LUMINAIRES AND TRAFFIC SIGNALS 2001 AND CURRENT INTERIMS.

MAXIMUM SPAN LENGTH:
100' FOR ONE OR TWO SPANS OFF POST, WITH ONE 5-SECTION HEAD SIGNAL, TWO 3-SECTION HEAD SIGNALS AND TWO SIGNS PER SPAN.

ALL APPURTENANCES TO BE MOUNTED ON POLE SHALL BE FASTENED TO POLE AS RECOMMENDED BY THE MANUFACTURER.

SCHEDULE 40 POLYETHYLENE OR POLYVINYL CHLORIDE CONDUIT AND WEATHER HEAD SHALL BE USED ON UTILITY COMPANY POLES IN LIEU OF RIGID STEEL CONDUIT.

NO DIRECT PAYMENT WILL BE MADE FOR GUYS, CONDUIT AND JUNCTION BOXES ON POLES, HARDWARE, LIGHTING BRACKET ARMS OR ANY OTHER ITEMS FOR WHICH SEPARATE PAYMENT IS NOT PROVIDED.

ALL GUY WIRES SHALL BE GROUNDED.

IF A SEAL IS PRESENT ON THIS SHEET IT HAS BEEN ELECTRONICALLY SEALED AND DATED.

MISSOURI HIGHWAYS AND TRANSPORTATION COMMISSION
105 WEST CAPITOL
JEFFERSON CITY, MO 65102
1-888-ASK-MODOT (1-888-275-6636)

STATE OF MISSOURI
ERIC E. SCHROETER
NUMBER PE-28411
PROFESSIONAL ENGINEER
THIS SHEET HAS BEEN SIGNED, SEALED AND DATED ELECTRONICALLY.

TRAFFIC SIGNALS

RIGID SPAN WIRE DETAILS

DATE EFFECTIVE: 04/01/2018
DATE PREPARED: 2/9/2018

902.70P

SHEET NO.
1 OF 2

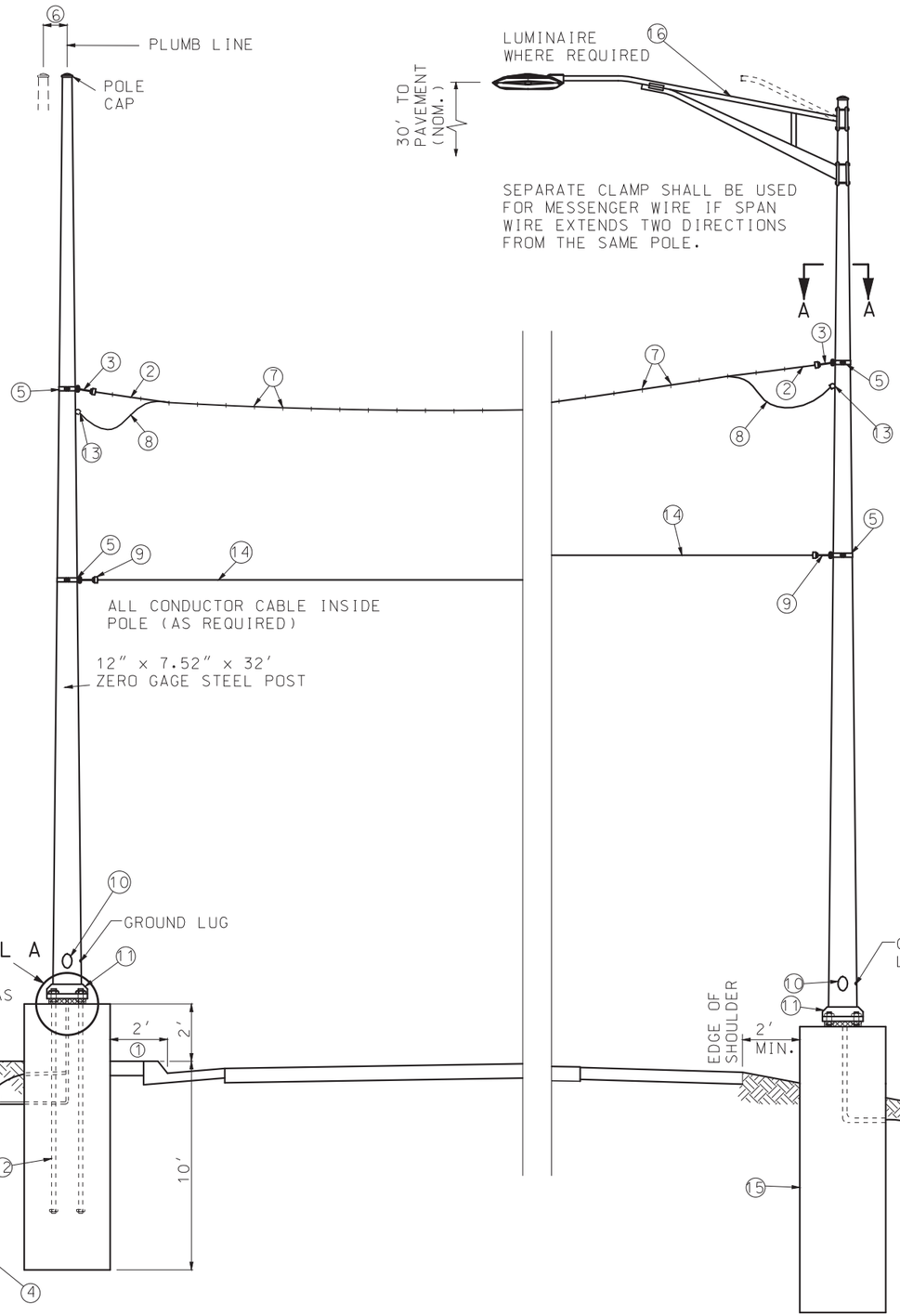

STEEL POST DETAILS

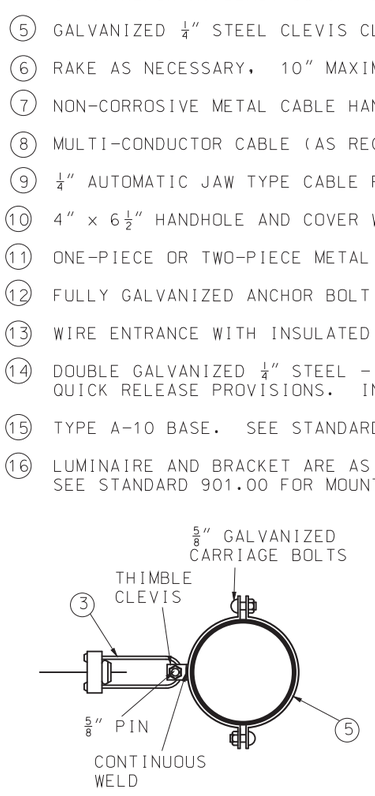

SECTION A-A

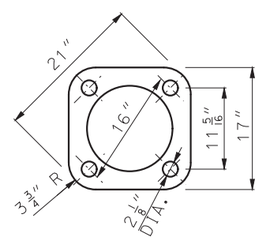

STEEL PLATE

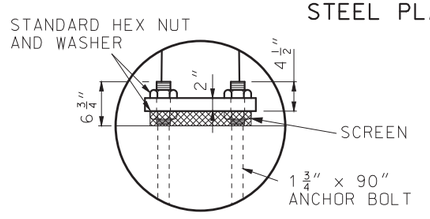

DETAIL A
STEEL PLATE ANCHOR BASE

(1) 6" IF LOCATED WITHIN 4' OF CONCRETE MEDIAN.

(2) DOUBLE GALVANIZED 3/8" (MIN.) STEEL MESSENGER WIRE - 7 STRAND HIGH STRENGTH GRADE.

(3) 3/8" AUTOMATIC JAW TYPE CABLE FITTING WITH SHORT BAIL. 13,860 LBS. MINIMUM HOLDING STRENGTH.

(4) 3/4" x 8' MIN. COPPER GROUND ROD, ONE POLE SHALL BE GROUNDED BY CONNECTING NO. 6 AWG BARE COPPER WIRE FROM GROUNDING LUG INSIDE POLE TO GROUND ROD BY MEANS OF A GALVANIZED WIRE CLAMP LOCATED INSIDE OF POLE. GROUND LUG SHALL BE ORIENTED 90° OR 180° TO HANDHOLE. IF SUBSURFACE CONDITIONS EXIST WHICH PROHIBIT THE PLACEMENT OF THE GROUND ROD IN A VERTICAL POSITION, THE ROD MAY BE DRIVEN AT AN OBLIQUE ANGLE NOT TO EXCEED 45° FROM VERTICAL OR BURIED IN A TRENCH AT LEAST 30 IN. DEEP. CONNECTION TO GROUND ROD SHALL BE CADWELDED.

(5) GALVANIZED 1/4" STEEL CLEVIS CLAMP TO FASTEN TO THE POLE WITH 5/8" GALVANIZED CARRIAGE BOLTS.

(6) RAKE AS NECESSARY, 10" MAXIMUM.

(7) NON-CORROSIVE METAL CABLE HANGERS AT 12" CENTERS.

(8) MULTI-CONDUCTOR CABLE (AS REQUIRED).

(9) 1/4" AUTOMATIC JAW TYPE CABLE FITTING WITH SHORT BAIL. 5990 LBS. MINIMUM HOLDING STRENGTH.

(10) 4" x 6 1/2" HANDHOLE AND COVER WITH REINFORCED FRAME WELDED TO POLE.

(11) ONE-PIECE OR TWO-PIECE METAL BASE COVER OR INDIVIDUAL NUT COVERS.

(12) FULLY GALVANIZED ANCHOR BOLT WITH BOLT HEAD OR TACK WELDED NUT ON EMBEDDED END.

(13) WIRE ENTRANCE WITH INSULATED WEATHERPROOF BUSHING (AS REQUIRED).

(14) DOUBLE GALVANIZED 1/4" STEEL - 7 STRAND HIGH STRENGTH GRADE TETHER WIRE AND CLAMP WITH QUICK RELEASE PROVISIONS. INSTALL HORIZONTAL OR BELOW HORIZONTAL.

(15) TYPE A-10 BASE. SEE STANDARD 902.30 FOR DETAILS.

(16) LUMINAIRE AND BRACKET ARE AS SPECIFIED ON PLANS. SEE STANDARD 901.00 FOR MOUNTING DETAILS.

GENERAL NOTES:
DESIGN OF STRUCTURAL SUPPORTS SHALL COMPLY WITH AASHTO STANDARD SPECIFICATIONS FOR STRUCTURAL SUPPORTS FOR HIGHWAY SIGNS, LUMINAIRES AND TRAFFIC SIGNALS 2001 AND CURRENT INTERIMS.

MAXIMUM SPAN LENGTH:
160' FOR ONE ONE OR TWO SPANS OFF POST, WITH GUY WIRE, ONE 5-SECTION HEAD SIGNAL, TWO 3-SECTION HEAD SIGNALS AND TWO SIGNS PER SPAN.

100' FOR ONE SPAN OFF POST, WITHOUT GUY WIRE, WITH THREE 3-SECTION HEAD SIGNALS AND TWO SIGNS PER SPAN.

100' FOR TWO SPANS OFF POST, WITHOUT GUY WIRE, WITH TWO 3-SECTION HEAD SIGNALS AND ONE SIGN PER SPAN.

CONCRETE POLE EMBEDMENT SHALL BE CLASS B CONCRETE.

SEE SHEET 1 FOR DOWN GUY INFORMATION WHEN DOWN GUY IS SPECIFIED ON PLANS.

EXPANSIVE GROUT SHALL BE USED BETWEEN THE POLE BASE PLATE AND THE CONCRETE BASE WHEN INDIVIDUAL NUT COVERS ARE USED. SEE STANDARD 902.40 FOR SCREEN DETAILS.

MISSOURI HIGHWAYS AND TRANSPORTATION COMMISSION
105 WEST CAPITOL
JEFFERSON CITY, MO 65102
1-888-ASK-MODOT (1-888-275-6636)

STATE OF MISSOURI
ERIC E. SCHROETER
NUMBER PE-28411
PROFESSIONAL ENGINEER
THIS SHEET HAS BEEN SIGNED, SEALED AND DATED ELECTRONICALLY.

TRAFFIC SIGNALS

RIGID SPAN WIRE DETAILS

DATE EFFECTIVE: 04/01/2018
DATE PREPARED: 2/9/2018

902.70P

SHEET NO. 2 OF 2

IF A SEAL IS PRESENT ON THIS SHEET IT HAS BEEN ELECTRONICALLY SEALED AND DATED.

OPTICALLY LIMITING SIGNAL HEAD WITH BACKPLATE

OPTICALLY LIMITING & CONVENTIONAL SIGNAL HEAD WITH BACKPLATE

CONVENTIONAL SIGNAL HEAD WITH BACKPLATE

SIGNAL HEAD – PEDESTRIAN

POST MOUNTED SIGNAL HEAD WITH SIGN AND BACKPLATE

STOP LINE

LANE USE

TYPE A BASE

TYPE F BASE

TYPE C BASE

EXISTING POST BASE

WOOD POLE WITH DOWN GUY

STEEL POLE

STEEL POLE WITH DOWN GUY

CONTROLLER WITH PAD

EXISTING CONTROLLER

PULL BOX, TYPE I DRAIN, CONCRETE

PULL BOX, TYPE II DRAIN, CONCRETE

PULL BOX, TYPE I DRAIN, PREFORMED

PULL BOX, TYPE II DRAIN, PREFORMED

DOUBLE PULL BOX, TYPE A, TYPE I DRAIN, CONCRETE

DOUBLE PULL BOX, TYPE A, TYPE II DRAIN, CONCRETE

DOUBLE PULL BOX, TYPE B, TYPE I DRAIN

DOUBLE PULL BOX, TYPE B, TYPE II DRAIN

PULL BOX, CLASS 5, TYPE I DRAIN, PREFORMED

PULL BOX, CLASS 5, TYPE II DRAIN, PREFORMED

EXISTING PULL BOX

SERVICE POLE OR PEDESTAL AND POWER SUPPLY

EXISTING SERVICE POLE

150-WATT HPS LUMINAIRE

SPAN WIRE WITH SIGNAL HEAD

MAST ARM WITH SIGNAL HEADS AND 150 WATT LUMINAIRE

MAST ARM WITH OVERHEAD SIGN

INDUCTION LOOP DETECTOR

V

VIDEO DETECTION ZONE

PUSH BUTTON DETECTOR

CAPPED RIGID CONDUIT

RIGID CONDUIT IN TRENCH

RIGID CONDUIT PUSHED

EXISTING RIGID CONDUIT

B B

RIGID CONDUIT ON BRIDGE

M M

RIGID CONDUIT IN MEDIAN

3"

SIZE OF CONDUIT

3-7C #16

NUMBER & AWG SIZE OF CABLE

7

SIGNAL FACE NUMBER

(7)

POST NUMBER

⟨7⟩

DETECTOR NUMBER

[7]

PULL BOX NUMBER

WALK INTERVAL

DON'T WALK INTERVAL

FLASHING DON'T WALK INTERVAL

ALL 12 INCH WITH TUNNEL VISOR

R	RED (CIRCULAR)
FR	FLASHING RED (CIRCULAR)
RL	RED LEFT ARROW
Y	YELLOW (CIRCULAR)
FY	FLASHING YELLOW (CIRCULAR)
FYA	FLASHING YELLOW ARROW
FYL	FLASHING YELLOW LEFT ARROW
FYR	FLASHING YELLOW RIGHT ARROW
YL	YELLOW LEFT ARROW
YR†	YELLOW RIGHT ARROW
G	GREEN (CIRCULAR)
S	GREEN STRAIGHT ARROW
L	GREEN LEFT ARROW
R†	GREEN RIGHT ARROW
R	TUNNEL VISOR WITH LOUVER

SIGN	LEGEND
R10 – 10L	LEFT TURN SIGNAL
R10 – 10R	RIGHT TURN SIGNAL
R3 – 5L	LEFT ARROW (SYMBOL) ONLY
R3 – 5R	RIGHT ARROW (SYMBOL) ONLY
R3 – 5A	STRAIGHT ARROW (SYMBOL) ONLY
R3 – 6L	LEFT ARROW – STRAIGHT ARROW (SYMBOL)
R3 – 6R	RIGHT ARROW – STRAIGHT ARROW (SYMBOL)
R3 – 2	NO LEFT TURN (SYMBOL)
R3 – 1	NO RIGHT TURN (SYMBOL)
R3 – 3	NO TURNS
D3 – 1	STREET NAME (ONE LINE)
D3 – 1B	STREET NAME (TWO LINE)
R10 – 3E	CROSSWALK (PEDESTRIAN SYMBOL)
R10 – 11A	NO TURN ON RED
R10 – 13	EMERGENCY SIGNAL
R10 – 27A	LEFT TURN YIELD ON FLASHING ARROW

IF A SEAL IS PRESENT ON THIS SHEET IT HAS BEEN ELECTRONICALLY SEALED AND DATED.

MoDOT

MISSOURI HIGHWAYS AND TRANSPORTATION COMMISSION

105 WEST CAPITOL
JEFFERSON CITY, MO 65102
1-888-ASK-MODOT (1-888-275-6636)

STATE OF MISSOURI
ERIC E. SCHROETER
NUMBER PE-28411
PROFESSIONAL ENGINEER

THIS SHEET HAS BEEN SIGNED, SEALED AND DATED ELECTRONICALLY.

TRAFFIC SIGNALS
TRAFFIC SIGNAL SYMBOLS

DATE EFFECTIVE: 07/01/2017
DATE PREPARED: 5/1/2017

902.80L

SHEET NO.
1 OF 1

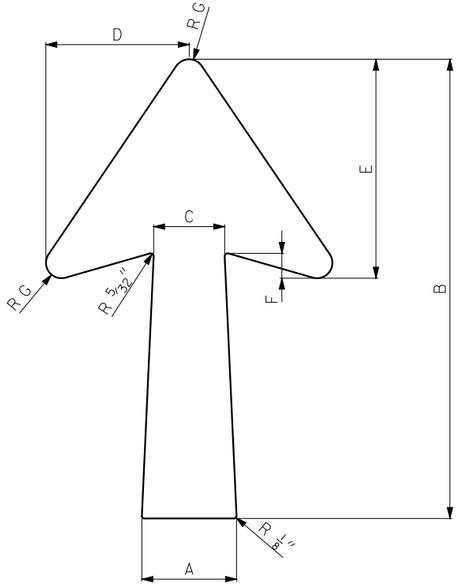

TYPE A

TYPE A ARROW TABLE							
LETTER SIZE	A	B	C	D	E	F	RG
8" U.C.	5"	25"	3 3/4"	7 9/16"	11 9/16"	1 5/16"	13/16"
10.67" & 13.33" U.C.	6"	30"	4 1/2"	9 1/8"	14"	1 1/2"	3/4"
16" U.C.	7 1/8"	35"	5 3/8"	11 1/8"	17"	1 3/4"	1"

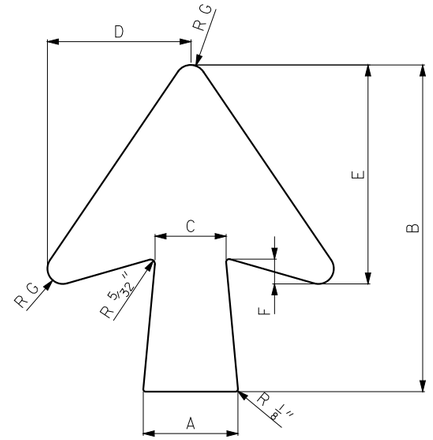

TYPE B

TYPE B ARROW TABLE							
LETTER SIZE	A	B	C	D	E	F	RG
8" - 10.67" U.C.	5"	17"	3 3/4"	7 9/16"	11 9/16"	1 5/16"	13/16"
13.33" U.C.	6"	20"	4 1/2"	9 1/8"	14"	1 1/2"	3/4"
16" U.C.	7 1/8"	25"	5 3/8"	11 1/8"	17"	1 3/4"	1"

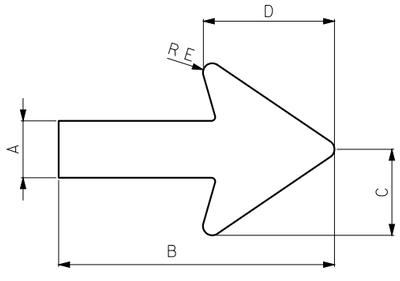

TYPE D

TYPE D ARROW TABLE					
LETTER SIZE	A	B	C	D	RE
6" U.C.*	2 1/4"	9" MIN.	3"	4 1/2"	7/16"
8" U.C.	2 3/4"	12 1/4"	3 9/16"	6 1/8"	9/16"
10.67" U.C.	3 1/4"	14 1/2"	4 3/8"	7 1/4"	5/8"
13.33" U.C.	3 3/4"	16 3/4"	5 1/16"	8 3/8"	3/4"
16" U.C.	4 1/2"	20"	6 1/16"	10"	7/8"
20" U.C.	5 1/2"	24 1/2"	7 1/2"	11 1/8"	1 1/8"

* FOR HORIZONTAL PLACEMENT UNDER LEGEND, DIMENSION "B" WILL BE EXTENDED, AT 1 FOOT INCREMENTS, TO APPROXIMATELY 50% OF THE MAXIMUM LEGEND WIDTH.

** FOR USE ON SIGNS WITH TYPE L-1 OR L-3 LEGENDS.

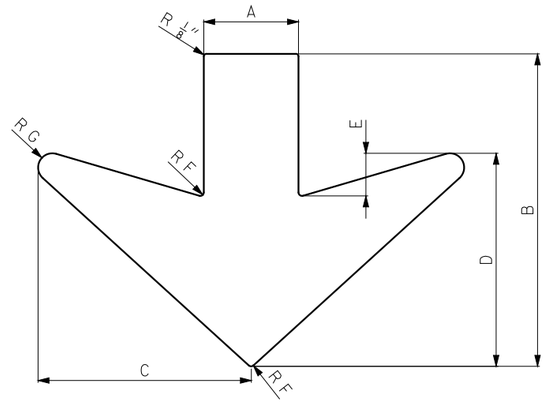

TYPE C

TYPE C OVERHEAD ARROW DIMENSIONS						
A	B	C	D	E	RF	RG
6 1/2"	22"	16"	16"	3"	3/16"	1"

GENERAL NOTES:

ARROWS FOR REFERENCE ONLY.

ARROW DETAILS AVAILABLE FROM TRAFFIC AND HIGHWAY SAFETY DIVISION.

MISSOURI HIGHWAYS AND TRANSPORTATION COMMISSION
105 WEST CAPITOL
JEFFERSON CITY, MO 65102
1-888-ASK-MODOT (1-888-275-6636)

STATE OF MISSOURI
EILEEN H. RACKERS
NUMBER PE-28336
PROFESSIONAL ENGINEER
THIS SHEET HAS BEEN SIGNED, SEALED AND DATED ELECTRONICALLY.

STANDARD ARROW DETAILS

DATE EFFECTIVE: 10/01/2016
DATE PREPARED: 8/11/2016

903.01J

SHEET NO. 1 OF 2

IF A SEAL IS PRESENT ON THIS SHEET IT HAS BEEN ELECTRONICALLY SEALED AND DATED.

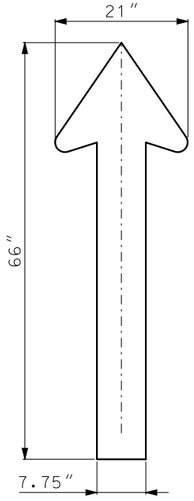

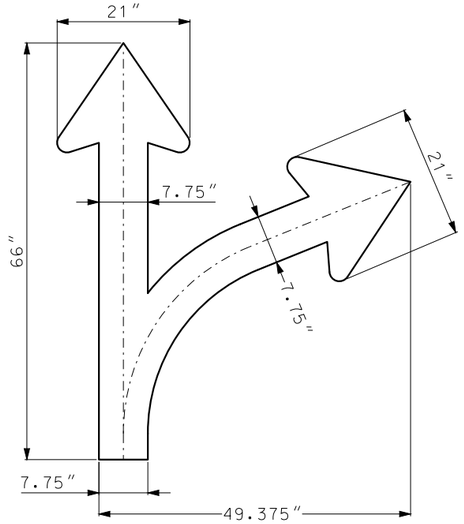

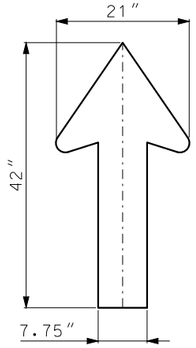

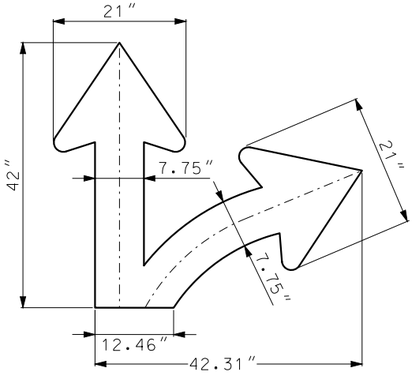

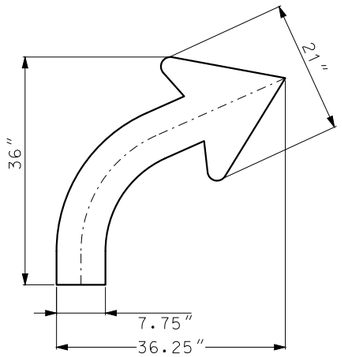

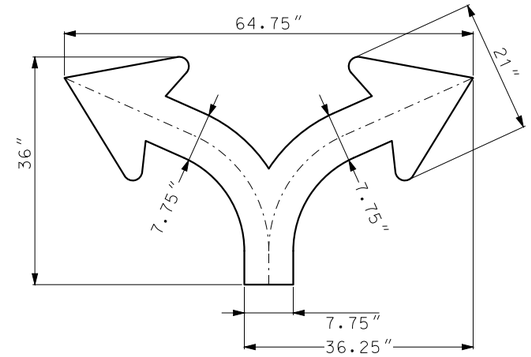

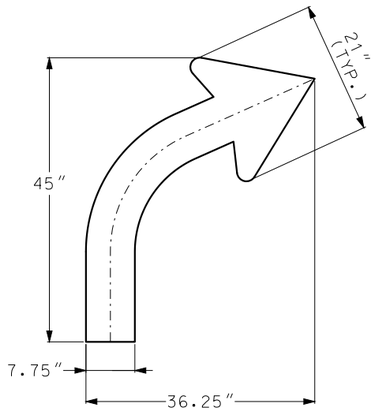

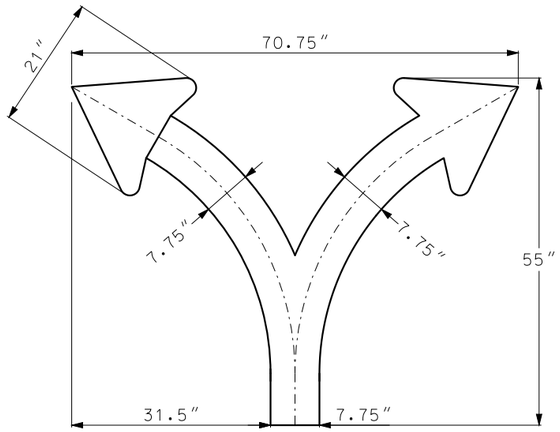

MUTCD ARROWS

MODOT ARROWS

GENERAL NOTES:

ARROWS FOR REFERENCE ONLY.

ARROW DETAILS AVAILABLE FROM TRAFFIC AND HIGHWAY SAFETY DIVISION.

MISSOURI HIGHWAYS AND TRANSPORTATION COMMISSION
105 WEST CAPITOL
JEFFERSON CITY, MO 65102
1-888-ASK-MODOT (1-888-275-6636)

STATE OF MISSOURI
EILEEN H. RACKERS
NUMBER PE-28336
PROFESSIONAL ENGINEER
THIS SHEET HAS BEEN SIGNED, SEALED AND DATED ELECTRONICALLY.

STANDARD ARROW DETAILS

DATE EFFECTIVE: 10/01/2016
DATE PREPARED: 8/11/2016

903.01J

SHEET NO. 2 OF 2

IF A SEAL IS PRESENT ON THIS SHEET IT HAS BEEN ELECTRONICALLY SEALED AND DATED.

STRUCTURAL SIGN DATA

DESIGNATION	COLOR SCHEME		SHEETING	
	LEGEND	BACKGROUND	LEGEND	BACKGROUND
STRUCTURAL (ST)	BLACK	WHITE	OPAQUE BLACK FILM	ASTM TYPE 4
	WHITE	RED	ASTM TYPE 9 OR 11	ASTM TYPE 4
	WHITE	GREEN	ASTM TYPE 9 OR 11	ASTM TYPE 4
	WHITE	BLUE	ASTM TYPE 9 OR 11	ASTM TYPE 4
	WHITE	BROWN	ASTM TYPE 9 OR 11	ASTM TYPE 4
STRUCTURAL FLUORESCENT (STF)	BLACK	FL YELLOW	OPAQUE BLACK FILM	ASTM TYPE 9 OR 11
	BLACK	FL YELLOW GREEN	OPAQUE BLACK FILM	ASTM TYPE 9 OR 11
	BLACK	FL ORANGE	OPAQUE BLACK FILM	ASTM TYPE 9 OR 11

NOTE: WHITE LEGEND IS DIRECT APPLIED UNLESS SPECIFIED OTHERWISE.

FLAT SHEET SIGN DATA

DESIGNATION	COLOR SCHEME		SHEETING
	LEGEND	BACKGROUND	
FLAT SHEET (SH)	BLACK **	WHITE	ASTM TYPE 4 WHITE
	WHITE	BLACK **	ASTM TYPE 4 WHITE
	RED	WHITE	ASTM TYPE 4 WHITE
	WHITE	RED	ASTM TYPE 4 WHITE
	WHITE	GREEN	ASTM TYPE 4 WHITE
	GREEN	WHITE	ASTM TYPE 4 WHITE
	WHITE	BLUE	ASTM TYPE 4 WHITE
	WHITE	BROWN	ASTM TYPE 4 WHITE
FLAT SHEET FLUORESCENT (SHF)	BLACK **	FL YELLOW	ASTM TYPE 9 OR 11 FL YELLOW
	BLACK **	FL YELLOW GREEN	ASTM TYPE 9 OR 11 FL YELLOW GREEN
	BLACK **	FL ORANGE	ASTM TYPE 9 OR 11 FL ORANGE

** OPAQUE INK OR FILM

NOTE: LEGEND AND BACKGROUND COLORS ARE ACHIEVED THROUGH TRANSLUCENT INKS AND FILMS.

FLAT SHEET THICKNESS	
SIGN SIZE	THICKNESS
9 SF OR LESS	0.080 IN.
OVER 9 SF TO 16 SF	0.100 IN.
16 SF OR LARGER	0.125 IN.

GENERAL NOTES:

GROUND MOUNTED SIGNS GREATER THAN 5 FEET WIDE OR SIGNS GREATER THAN 30 SQUARE FEET SHALL BE STRUCTURAL.

ALL NON STANDARD SIGNS NOT FOUND IN THE MUTCD SHS MANUAL SHALL BE DETAILED BY THE TRAFFIC AND HIGHWAY SAFETY DIVISION OFFICE.

REFER TO STANDARD SPECIFICATION SEC 1042 FOR SHEETING, SUBSTRATE AND FABRICATION DETAILS.

FOR MOUNTING DETAILS, SEE STANDARD PLANS 903.02.

MISSOURI HIGHWAYS AND TRANSPORTATION COMMISSION
105 WEST CAPITOL
JEFFERSON CITY, MO 65102
1-888-ASK-MODOT (1-888-275-6636)

STATE OF MISSOURI
EILEEN H. RACKERS
NUMBER PE-28336
PROFESSIONAL ENGINEER
THIS SHEET HAS BEEN SIGNED, SEALED AND DATED ELECTRONICALLY.

HIGHWAY SIGNING

GENERAL SIGN DATA

DATE EFFECTIVE: 01/01/2017
DATE PREPARED: 10/28/2016

903.02AN

SHEET NO. 1 OF 8

IF A SEAL IS PRESENT ON THIS SHEET IT HAS BEEN ELECTRONICALLY SEALED AND DATED.

MODOT ID LABEL DETAILS

PLACED ON THE SIGN FACE

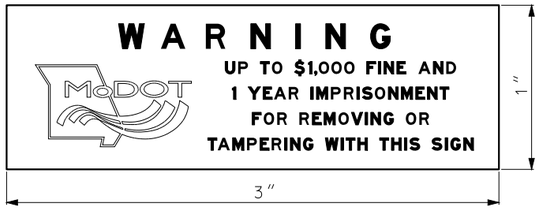

(1) USED ON SIGNS 9 SF AND LARGER



(1) USED ON SIGNS LESS THAN 9 SF

VENDOR ID LABEL DETAILS

PLACED ON THE BACK OF THE SIGN



OPTIONAL

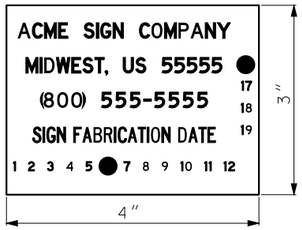

(2)

OPTIONAL

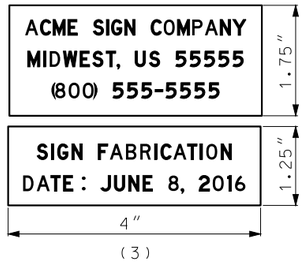

(3)

(1) MODOT ID LABEL DETAILS AVAILABLE FROM TRAFFIC AND HIGHWAY SAFETY DIVISION.

(2) TO FACILITATE MASS PRODUCTION OF LABELS, THE FABRICATION DATE MAY BE INDICATED BY DISPLAYING NUMBERS FOR MONTHS ALONG THE BOTTOM OF THE LABEL AND NUMBERS FOR YEARS ALONG THE RIGHT SIDE OF THE LABEL. THE FABRICATION DATE WOULD BE INDICATED BY HOLE PUNCHING THE APPROPRIATE NUMBERS (OR SOME EQUIVALENT PERMANENT METHOD TO BLOCK OUT OF THE NUMBERS) FOR THE MONTH AND YEAR BEFORE THE LABEL IS APPLIED TO THE SIGN.

(3) INDIVIDUAL DECALS MAY BE USED TO DISPLAY THE VENDOR INFORMATION AND THE FABRICATION DATE. DECALS SHALL BE INSTALLED IN CLOSE VERTICAL PROXIMITY.

(4) THE MODOT ID LABEL MAY BE PLACED ON THE BACK OF THE SIGN ABOVE THE VENDOR ID LABEL IF THERE IS INSUFFICIENT SPACE AVAILABLE TO DISPLAY THE ID LABEL ON THE SIGN FACE WITHOUT INTERFERING WITH THE SIGN LEGEND OR BOARDER.

GENERAL NOTES:

ALL DECALS SHALL BE SILK SCREEN PRINTED WITH MATCHED COMPONENT INK AND SHEETING MATERIALS TO PROVIDE A LABEL THAT HAS AN EQUAL LIFE EXPECTANCY AS THE SIGN FACE.

MODOT ID LABELS SHALL BE PRINTED ON CLEAR ELECTROCUT FILM BACKGROUND WITH BLACK INK OR IT MAY BE INCORPORATED INTO THE SILK SCREEN DETAIL AND PRINTED ALONG WITH THE SIGN FACE. IF THE LABEL IS APPLIED IN THIS MANNER THE LEGEND OF THE LABEL SHALL MATCH THE COLOR OF THE SIGN LEGEND IT IS BEING APPLIED TO. THE LABEL SHALL NOT HAVE ANY BACKGROUND COLOR OR BORDER.

VENDOR ID LABEL SHALL CONTAIN THE COMPANY CONTACT INFORMATION (INCLUDING FULL NAME, CITY, STATE, PHONE NUMBER) AND THE SIGN FABRICATION DATE.

VENDOR ID LABEL SHALL BE PRINTED ON A WHITE BACKGROUND WITH BLACK INK AND THE LEGEND SHALL BE A MINIMUM OF 1/4".

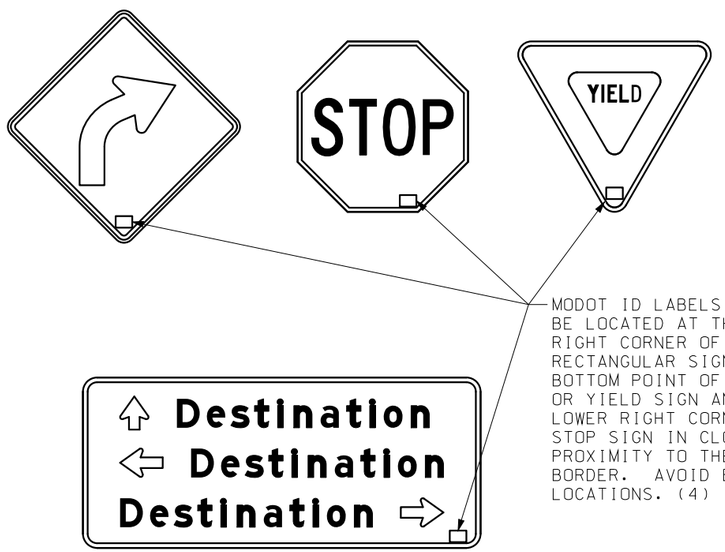

MODOT ID LABELS SHALL BE LOCATED AT THE BOTTOM RIGHT CORNER OF ANY RECTANGULAR SIGN, IN THE BOTTOM POINT OF A DIAMOND OR YIELD SIGN AND AT THE LOWER RIGHT CORNER OF A STOP SIGN IN CLOSE PROXIMITY TO THE SIGN BORDER. AVOID BOLT HOLE LOCATIONS. (4)

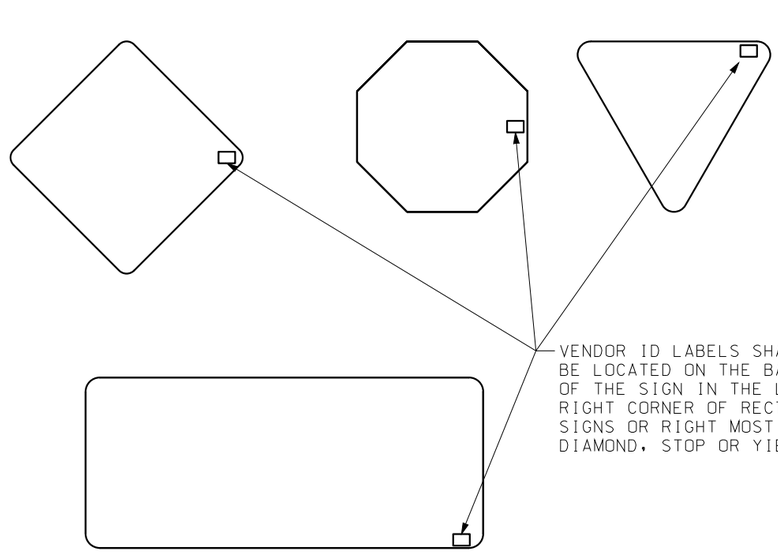

VENDOR ID LABELS SHALL BE LOCATED ON THE BACK OF THE SIGN IN THE LOWER RIGHT CORNER OF RECTANGULAR SIGNS OR RIGHT MOST EDGE OF DIAMOND, STOP OR YIELD SIGNS.

MISSOURI HIGHWAYS AND TRANSPORTATION COMMISSION
105 WEST CAPITOL
JEFFERSON CITY, MO 65102
1-888-ASK-MODOT (1-888-275-6636)

STATE OF MISSOURI
EILEEN H. RACKERS
NUMBER PE-28336
PROFESSIONAL ENGINEER
THIS SHEET HAS BEEN SIGNED, SEALED AND DATED ELECTRONICALLY.

HIGHWAY SIGNING

GENERAL SIGN DATA

DATE EFFECTIVE: 01/01/2017
DATE PREPARED: 10/28/2016

903.02AN

SHEET NO. 2 OF 8

IF A SEAL IS PRESENT ON THIS SHEET IT HAS BEEN ELECTRONICALLY SEALED AND DATED.

STATE NUMBER ROUTE SHIELD GUIDE SIGN USE

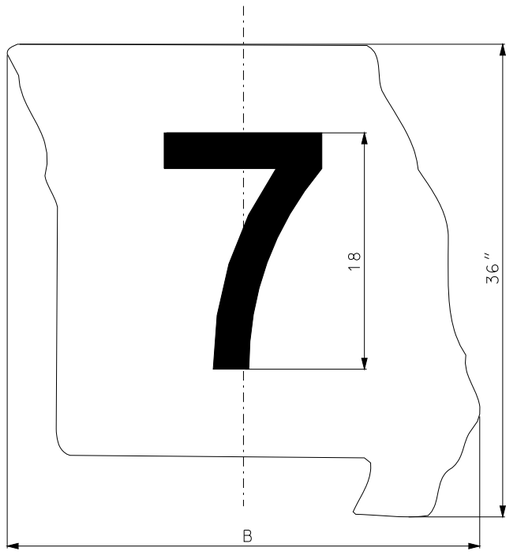

STATE LETTER ROUTE SHIELD GUIDE SIGN USE

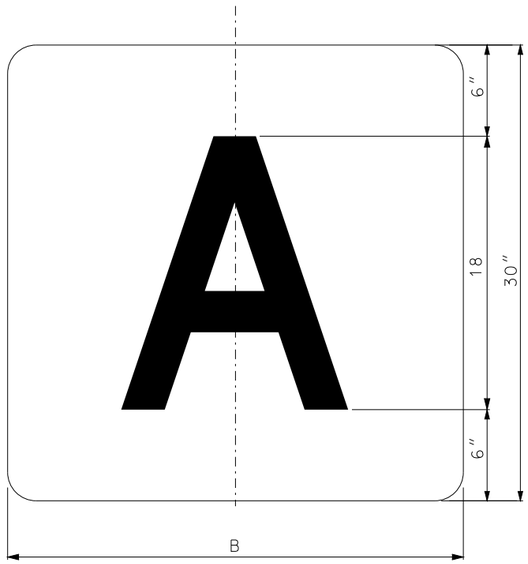

STATE NUMBER ROUTE SHIELD INDEPENDENT USE

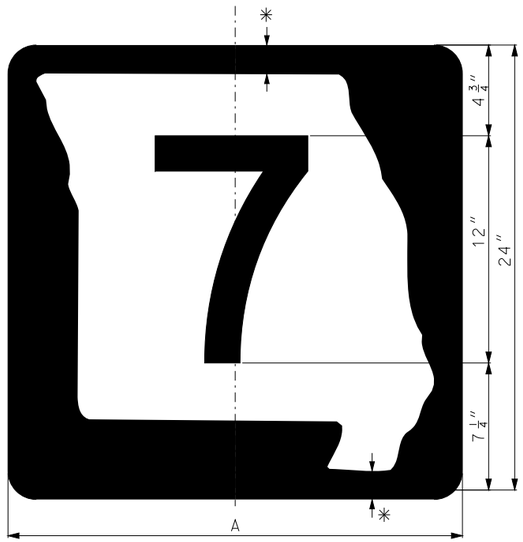

✳ DIMENSIONS SHALL BE EQUAL

STATE LETTER ROUTE SHIELD INDEPENDENT USE

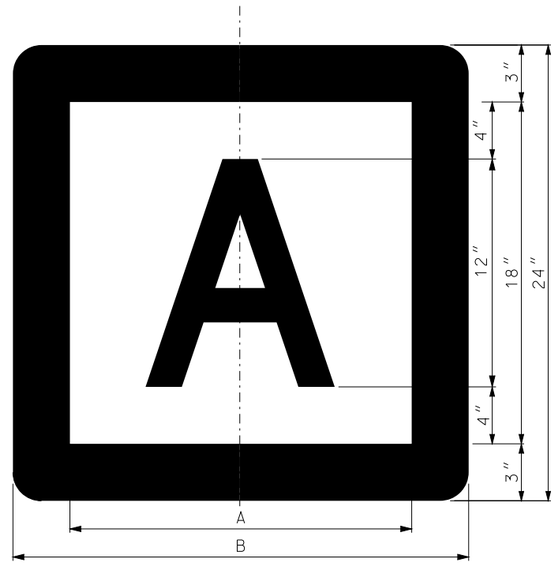

LOCATION	NO. OF LETTERS	DIMENSIONS (INCHES)		LEGEND FONTS
		A	B	
INDEPENDENT USE	1	18	24	D
INDEPENDENT USE	2	24	30	D
GUIDE SIGN USE	1	–	30	D
GUIDE SIGN USE	2	–	36	D

STATE LETTER ROUTE SHIELD

LOCATION	ROUTE NUMBER	DIMENSIONS (INCHES)		LEGEND FONTS
		A	B	
INDEPENDENT USE	1 & 2 DIGITS	24	24	D,C
INDEPENDENT USE	3 DIGITS	30	30	D,C,B
GUIDE SIGN USE	1 & 2 DIGITS	–	36	D,C
GUIDE SIGN USE	3 DIGITS	–	45	D,C,B

STATE NUMBER ROUTE SHIELD





GENERAL NOTES:

REFER TO STANDARD SPECIFICATION SEC 1042 FOR SHEETING AND SUBSTRATE DETAILS.

FOR HOLE PUNCHING AND MOUNTING DETAILS SEE OTHER DRAWINGS.

FOR GENERAL SIGN DATA DETAILS SEE OTHER DRAWINGS.

THE MISSOURI SHAPE DETAIL MAY BE OBTAINED FROM THE TRAFFIC AND HIGHWAY SAFETY DIVISION OFFICE.

GUIDE SIGN USE SHALL BE DIRECT APPLIED. POST MOUNTED USE SHALL BE APPLIED TO ALUMINUM SUBSTRATE.

FOR NUMBERED ROUTES WITH MORE THAN 1 DIGIT THE LEGEND FONT MAY NEED TO BE REDUCED TO C OR B FONT.

SEE MUTCD SHS FOR DETAILS FOR US AND INTERSTATE ROUTE SHIELDS.

NON-STANDARD SHIELD SIZES MAY BE OBTAINED FROM THE TRAFFIC AND HIGHWAY SAFETY DIVISION OFFICE.

IF A SEAL IS PRESENT ON THIS SHEET IT HAS BEEN ELECTRONICALLY SEALED AND DATED.

MISSOURI HIGHWAYS AND TRANSPORTATION COMMISSION
105 WEST CAPITOL
JEFFERSON CITY, MO 65102
1-888-ASK-MODOT (1-888-275-6636)

STATE OF MISSOURI
EILEEN H. RACKERS
NUMBER PE-28336
PROFESSIONAL ENGINEER
THIS SHEET HAS BEEN SIGNED, SEALED AND DATED ELECTRONICALLY.

HIGHWAY SIGNING
STANDARD SHIELDS FOR INDEPENDENT AND GUIDE SIGN USE

DATE EFFECTIVE: 01/01/2017
DATE PREPARED: 10/28/2016

903.02AN

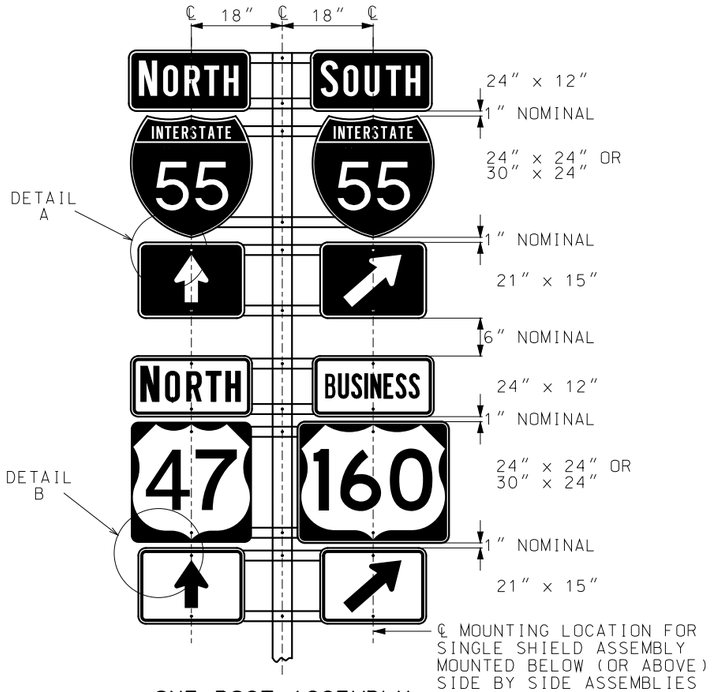

ONE POST ASSEMBLY

USE TO SUPPORT UP TO 4 ROUTE MARKERS

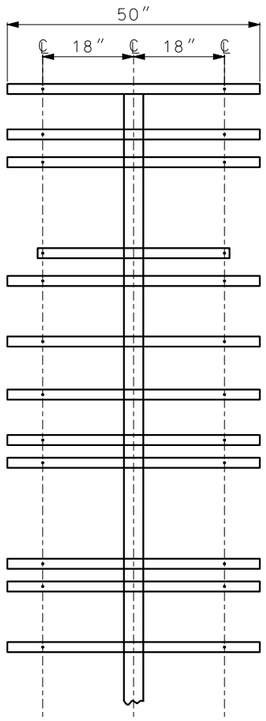

STANDARD BACKING BAR LAYOUT

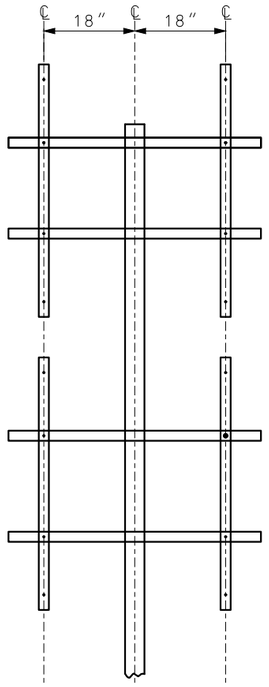

OPTIONAL BACKING BAR LAYOUT

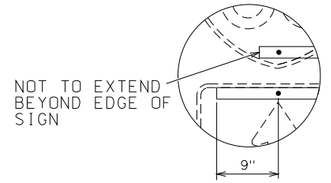

DETAIL A

SEE GENERAL NOTES

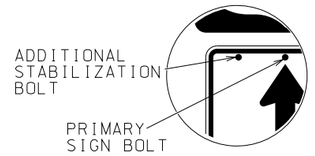

DETAIL B

SEE GENERAL NOTES

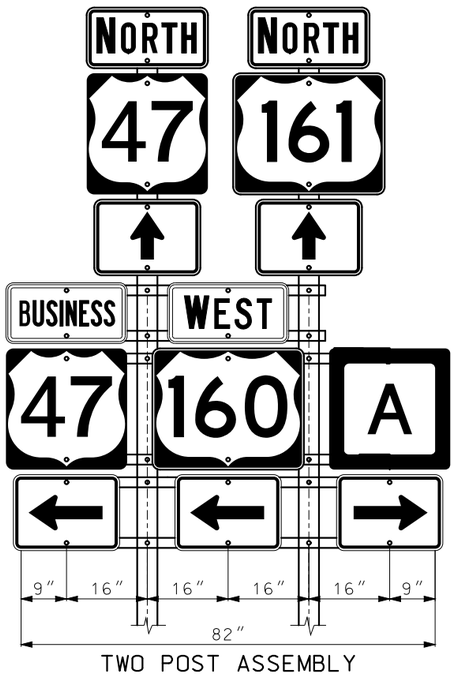

TWO POST ASSEMBLY

USE TO SUPPORT 5 OR 6 ROUTE MARKERS

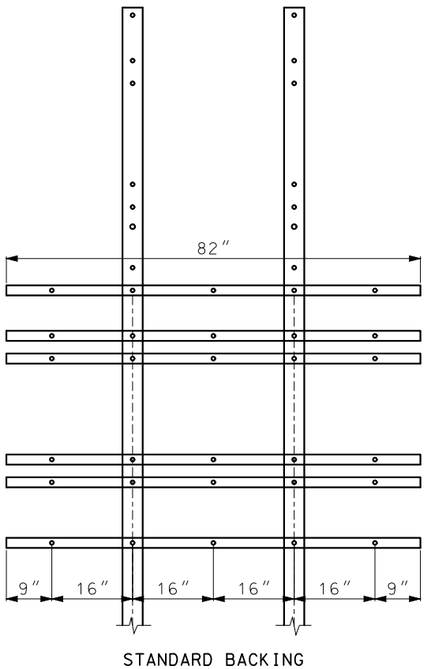

STANDARD BACKING BAR LAYOUT

TWO POST ASSEMBLY NOTE:

OPTIONAL BACKING BAR LAYOUT MAY BE USED WITH TWO POST ASSEMBLY.

FOR 6 ROUTE SHIELD ASSEMBLY ADDITIONAL BACKING BARS ARE REQUIRED.

POST SELECTION

SINGLE POST ASSEMBLIES SHALL USE A 4″ PIPE POST OR A $2\frac{1}{2}$″ PSST POST.

TWO POST ASSEMBLIES SHALL USE TWO 4″ PIPE POSTS OR TWO $2\frac{1}{2}$″ PSST POST WITH $2\frac{1}{4}$″ PSST INSERTS AND BREAKAWAYS. (SEE STANDARD PLAN 903.03)

GENERAL NOTES:

ALL BACKING BARS SHALL BE 2″x $\frac{3}{8}$″ STEEL, GALVANIZED AFTER PUNCHING. WEIGHT = 2.55 LBS. PER FOOT. HOLES IN BARS SHALL BE $\frac{3}{8}$″ AND SHALL BE PUNCHED AS SHOWN ON THIS DRAWING.

DETAIL A – FOR SIGNS INSTALLED ON TWO PARALLEL HORIZONTAL BACKING BARS, ONE ADDITIONAL BOLT SHALL BE ADDED TO THE LEFT SIGN TO KEEP ASSEMBLY SQUARE.

DETAIL B – THE END OF THE HORIZONTAL BACKING BARS SHALL EXTEND MAXIMUM OF 9 INCHES PAST THE SIGN BOLT, BUT SHALL NOT EXTEND PAST THE EDGE OF THE SIGN.

WHEN USING OPTIONAL BACKING BAR LAYOUT, VERTICAL BARS SHALL BE MOUNTED BEHIND HORIZONTAL BARS.

BACKING BARS SHALL MEET MISSOURI STANDARD PLANS OR APPROVED PRODUCTS LIST.

BACKING BARS PAID FOR AS STRUCTURAL STEEL, PER POUND.

ALL SIGNS TO BE INSTALLED ALONG VERTICAL CENTERLINES.

FOR POST AND FOOTING DATA AND DETAILS OF SHIELDS AND PLAQUES, SEE OTHER DRAWINGS.

NOMINAL VERTICAL SPACING INDICATED BETWEEN SIGNS TO BE ACHIEVED BY USING THE CLOSEST AVAILABLE HOLES WHEN USING PSST.

MISSOURI HIGHWAYS AND TRANSPORTATION COMMISSION
105 WEST CAPITOL
JEFFERSON CITY, MO 65102
1-888-ASK-MODOT (1-888-275-6636)

STATE OF MISSOURI
EILEEN H. RACKERS
NUMBER PE-28336
PROFESSIONAL ENGINEER
THIS SHEET HAS BEEN SIGNED, SEALED AND DATED ELECTRONICALLY.

HIGHWAY SIGNING
BACKING BARS SHEET SIGN MOUNTING ROUTE SHIELD AND MARKER ASSEMBLIES

DATE EFFECTIVE: 01/01/2017
DATE PREPARED: 10/28/2016

903.02AN

SHEET NO. 4 OF 8

IF A SEAL IS PRESENT ON THIS SHEET IT HAS BEEN ELECTRONICALLY SEALED AND DATED.

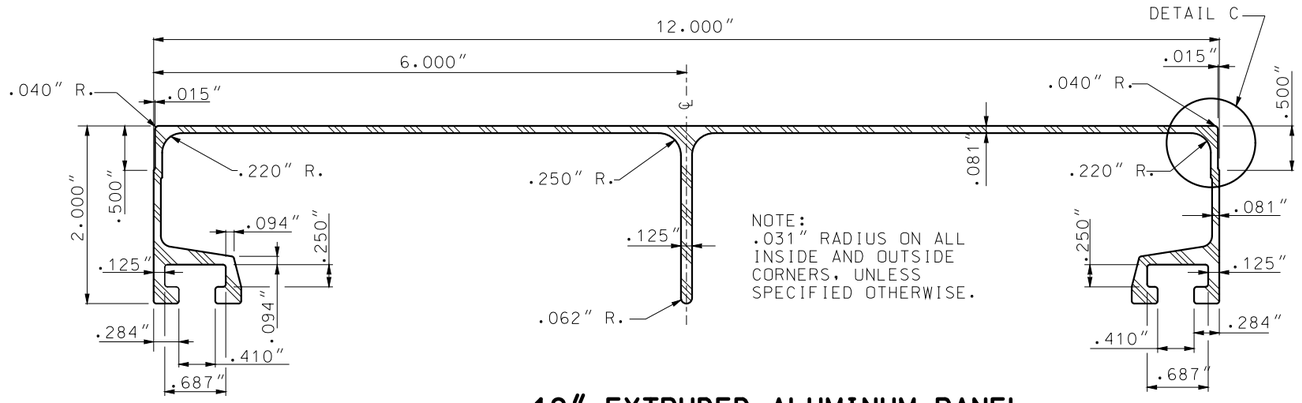

12" EXTRUDED ALUMINUM PANEL

MINIMUM WT. = 2.40 LBS./FT.

NOTE:
MINIMUM WEIGHT AND THICKNESS DIMENSIONS SHOWN.
HEAVIER PANELS MAY BE USED.

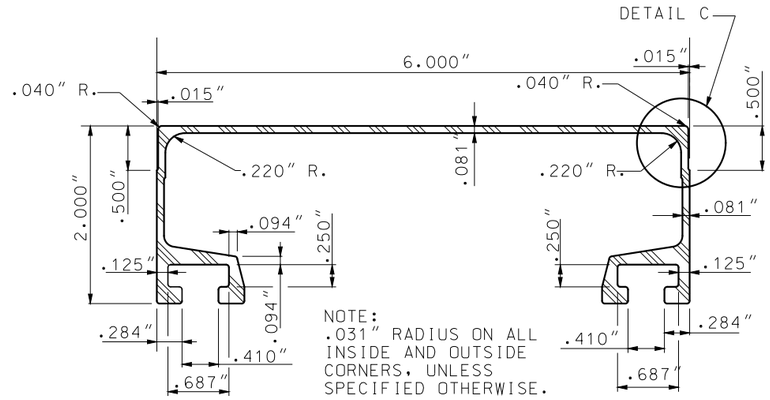

6" EXTRUDED ALUMINUM PANEL

MINIMUM WT. = 2.40 LBS./FT.

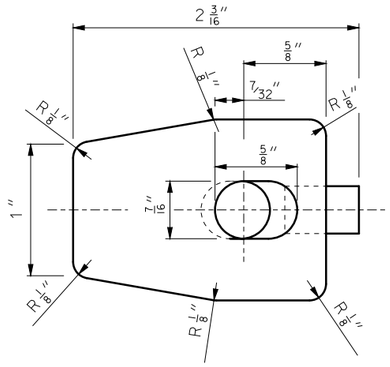

PLAN VIEW

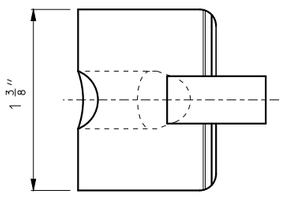

END VIEW

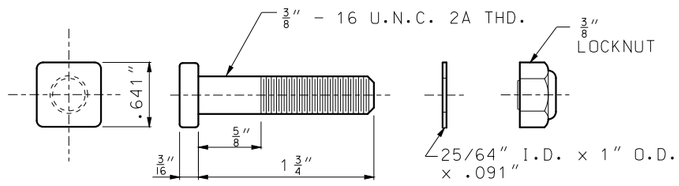

POST CLIP BOLT
WITH FLAT WASHER AND LOCKNUT

NOTE:
SQUARE BOLT HEAD SHOWN.
RECTANGULAR BOLT HEAD WITH
LEAST DIMENSION OF .641" MAY
BE USED.

BOLT - 1 3/4 x 3/8 ALUMINUM
HEX LOCKNUT - 3/8" ALUMINUM
WASHER - ALUMINUM

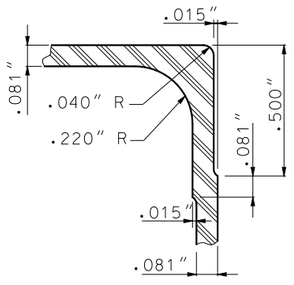

DETAIL C

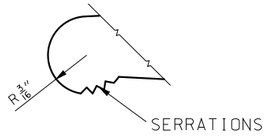

DETAIL A
ENLARGED VIEW OF
SERRATIONS

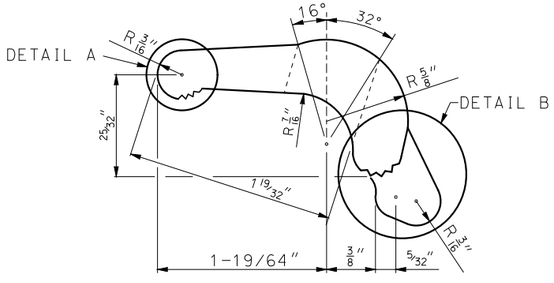

ELEVATION VIEW

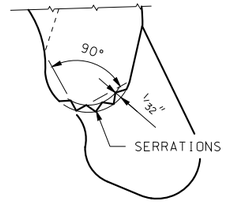

DETAIL B
ENLARGED DETAIL OF SERRATIONS

POST CLIP

POST CLIPS SHALL BE ASTM B 108, 356-T6 ALUMINUM ALLOY.

SAW GATING AS SHOWN
(APPROXIMATELY FLAT PERMISSABLE)

IF A SEAL IS PRESENT ON THIS SHEET IT HAS BEEN ELECTRONICALLY SEALED AND DATED.

MISSOURI HIGHWAYS AND TRANSPORTATION COMMISSION
105 WEST CAPITOL
JEFFERSON CITY, MO 65102
1-888-ASK-MODOT (1-888-275-6636)

STATE OF MISSOURI
EILEEN H. RACKERS
NUMBER PE-28336
PROFESSIONAL ENGINEER
THIS SHEET HAS BEEN SIGNED, SEALED AND DATED ELECTRONICALLY.

HIGHWAY SIGNING
EXTRUDED ALUMINUM PANEL DETAILS

DATE EFFECTIVE: 01/01/2017
DATE PREPARED: 10/28/2016

903.02AN

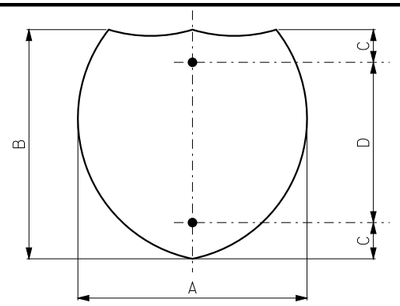

DIMENSIONS (IN.)			
A	B	C	D
24	24	3	18
30	24	3	18
36	36	6	24
45	36	6	24

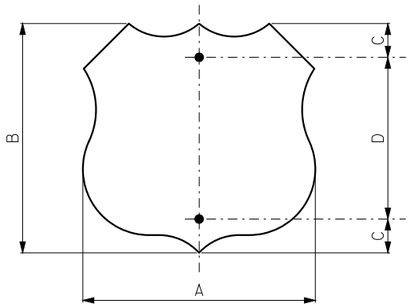

DIMENSIONS (IN.)			
A	B	C	D
24	24	3	18
30	24	3	18
36	36	6	24
45	36	6	24

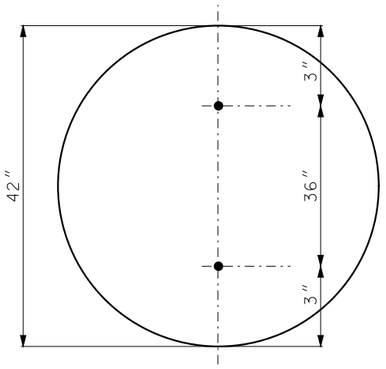

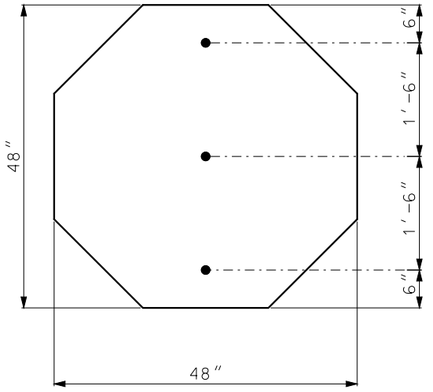

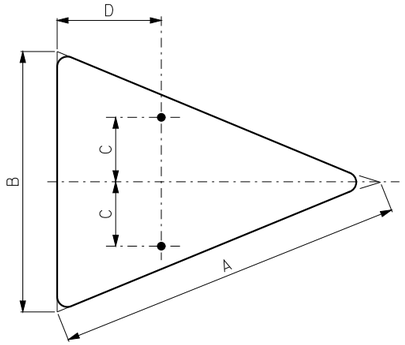

DIMENSIONS (IN.)				
A	B	C	D	RADIUS
40	30	7.5	12	1.875
48	36	9	15	2.25

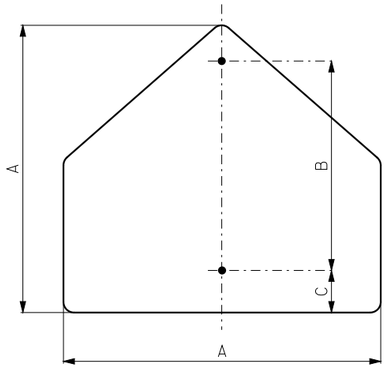

DIMENSIONS (IN.)			
A	B	C	RADIUS
36	24	3	2.25

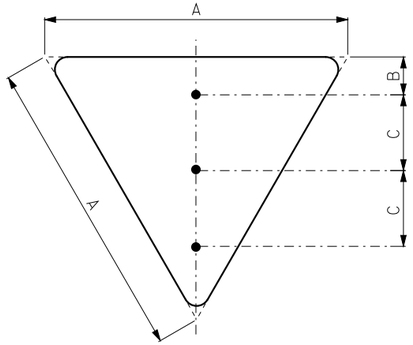

DIMENSIONS (IN.)			
A	B	C	RADIUS
48	6	12	3
60	8	15	4

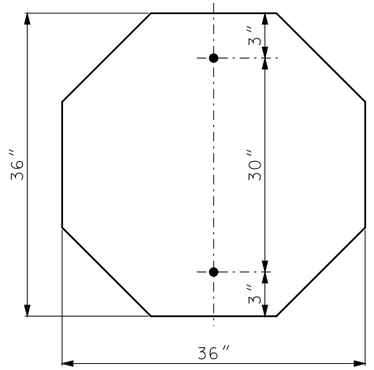

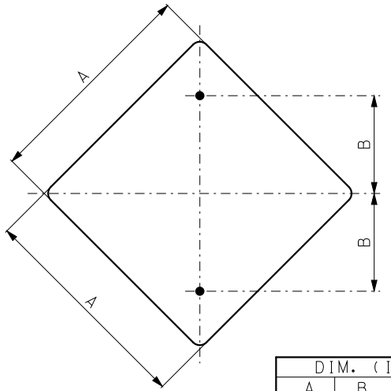

DIM. (IN.)		
A	B	RADIUS
18	9	1.5
24	12	1.5
30	15	1.875
36	18	2.25

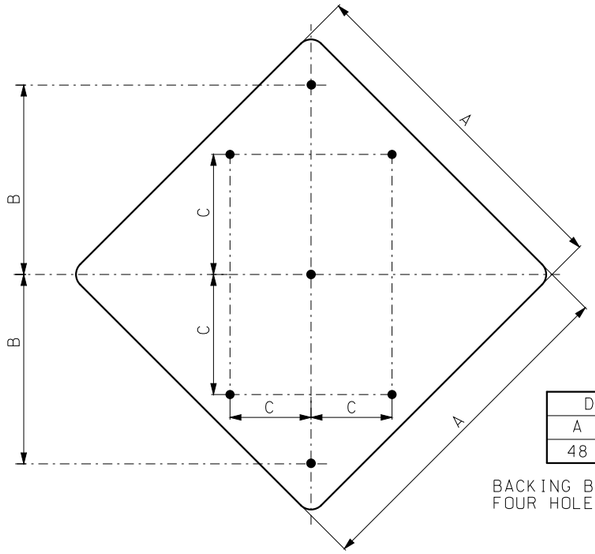

DIMENSIONS (IN.)			
A	B	C	RADIUS
48	24	15	3

BACKING BARS ONLY REQUIRED FOR FOUR HOLE PUNCH INSTALLATION.

GENERAL NOTES:

SIGNS WITH FOUR OR MORE HOLES REQUIRE BACKING BARS OR MULTIPLE POSTS.

HOLES IN SIGNS SHALL BE $\frac{3}{8}$" AND PUNCHED AS SHOWN ON THIS DRAWING.

FLAT SHEET FOR SIGNS SHALL BE THE FOLLOWING THICKNESS:

9 SQUARE FEET OR LESS - .080 IN.,

OVER 9 SQUARE FEET BUT LESS THAN 16 SQUARE FEET - .100 IN.,

16 SQUARE FEET OR LARGER - .125 IN.

FOR MOUNTING DETAILS, SEE OTHER DRAWINGS.

IF A SEAL IS PRESENT ON THIS SHEET IT HAS BEEN ELECTRONICALLY SEALED AND DATED.

MISSOURI HIGHWAYS AND TRANSPORTATION COMMISSION
105 WEST CAPITOL
JEFFERSON CITY, MO 65102
1-888-ASK-MODOT (1-888-275-6636)

STATE OF MISSOURI
EILEEN H. RACKERS
NUMBER PE-28336
PROFESSIONAL ENGINEER
THIS SHEET HAS BEEN SIGNED, SEALED AND DATED ELECTRONICALLY.

HIGHWAY SIGNING

HOLE PUNCHING

DATE EFFECTIVE: 01/01/2017
DATE PREPARED: 10/28/2016

903.02AN

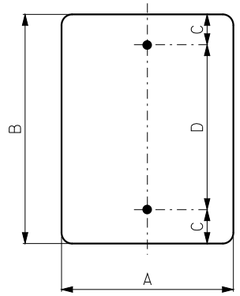

DIMENSIONS (IN.)				
A	B	C	D	RADIUS
4	16	0.75	14.5	SQ
6	12	1.5	9	1
9	12	3.5	5	1.5
9	15	3.75	7.5	1.5
12	18	3	12	1.5
12	24	3	18	1.5
12	36	3	30	1.5
12	48	3	42	1.5
15	21	3	15	1.5
18	24	3	18	1.5
24	30	3	24	1.5
24	36	3	30	1.5
30	36	3	30	1.875
30	42	3	36	1.875
30	48	6	36	1.875

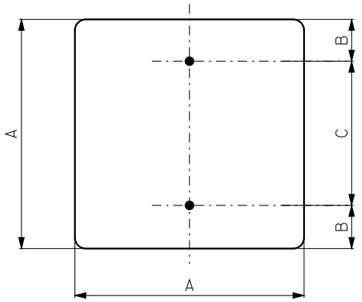

DIMENSIONS (IN.)			
A	B	C	RADIUS
12	1.5	9	1.5
18	3	12	1.5
24	3	18	1.5
30	3	24	1.875
36	6	24	2.25

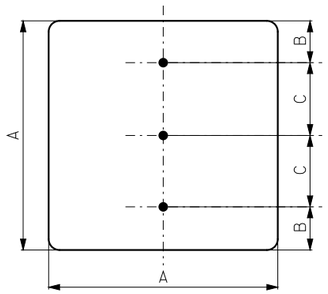

DIMENSIONS (IN.)			
A	B	C	RADIUS
48	6	18	3

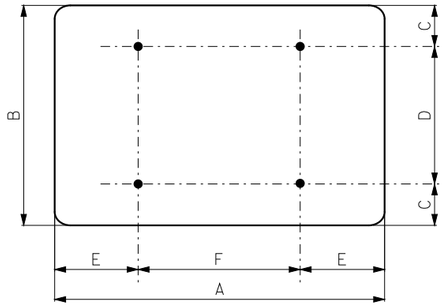

DIMENSIONS (IN.)						
A	B	C	D	E	F	RADIUS
48	12	1.5	9	9	30	1.5
48	18	1.5	15	9	30	1.5
48	24	3	18	9	30	1.5
48	30	3	24	9	30	1.875
48	36	6	24	9	30	2.25
54	18	1.5	15	9	36	1.5
60	12	1.5	9	12	36	1.5
60	18	1.5	15	12	36	1.5
60	24	3	18	12	36	1.5
60	30	3	24	12	36	1.875
60	36	6	24	12	36	2.25
60	48	6	36	12	36	3
72	36	6	24	12	48	2.25
72	48	6	36	12	48	3

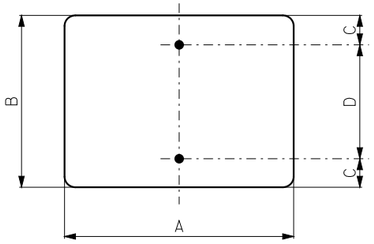

DIMENSIONS (IN.)				
A	B	C	D	RADIUS
4	5	1.5	2	1.5
12	9	1.5	6	1.5
18	9	1.5	6	1.5
18	12	1.5	9	1.5
21	15	1.5	12	1.5
24	8	1.5	5	1.5
24	12	1.5	9	1.5
24	18	3	12	1.5
30	8	1.5	5	1.5
30	12	1.5	9	1.5
30	18	3	12	1.5
30	24	3	18	1.5
36	8	1.5	5	1.5
36	12	1.5	9	1.5
36	18	3	12	1.5
36	24	3	18	1.5
36	30	3	24	1.875
42	8	1.5	5	1.5
42	18	3	12	1.5
42	24	3	18	1.5
42	30	3	24	1.875
42	36	3	30	2.25
48	8	1.5	5	1.5

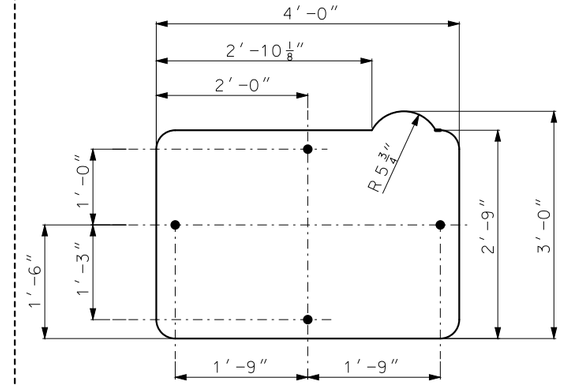

ADOPT A HIGHWAY
PRIMARY SIGN AND
NAME PANEL

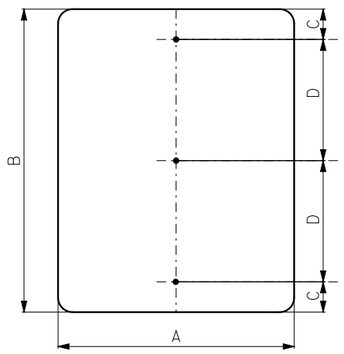

DIMENSIONS (IN.)				
A	B	C	D	RADIUS
4	72	6	30	SQ
12	72	6	30	1.5
18	60	6	24	1.5
24	48	6	18	1.5
36	48	6	18	2.25
36	60	6	24	2.25
36	72	6	30	2.25

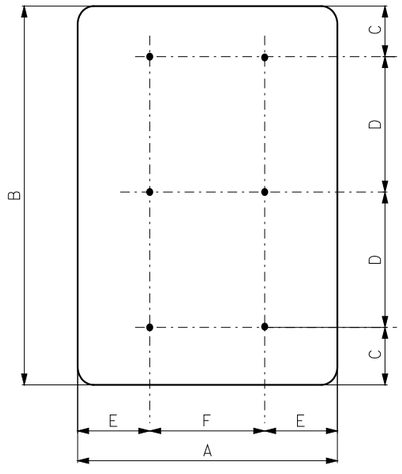

DIMENSIONS (IN.)						
A	B	C	D	E	F	RADIUS
48	60	6	24	9	30	3
48	72	6	30	9	30	3
48	84	6	36	9	30	3
48	96	6	42	9	30	3

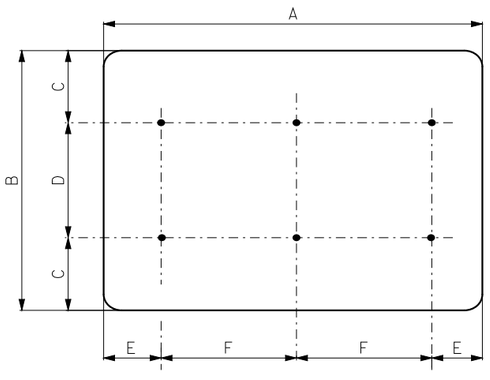

DIMENSIONS (IN.)						
A	B	C	D	E	F	RADIUS
84	24	3	18	12	30	3
96	48	6	36	16	32	3

DIMENSIONS (IN.) FOR SIGNS REQUIRING NO HOLE PUNCHING		
A	B	RADIUS
66	18	1.5
72	18	1.5
78	18	1.5
84	18	1.5
90	18	1.5
96	18	1.5
36	78	2.25

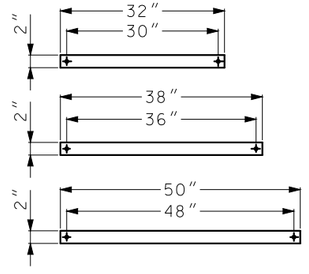

BACKING BARS FOR SINGLE POST SIGNS

GENERAL NOTES:

REFER TO GENERAL NOTES ON SHEET 6 OF 8.

IF A SEAL IS PRESENT ON THIS SHEET IT HAS BEEN ELECTRONICALLY SEALED AND DATED.

MISSOURI HIGHWAYS AND TRANSPORTATION COMMISSION
105 WEST CAPITOL
JEFFERSON CITY, MO 65102
1-888-ASK-MODOT (1-888-275-6636)

STATE OF MISSOURI
EILEEN H. RACKERS
NUMBER PE-28336
PROFESSIONAL ENGINEER
THIS SHEET HAS BEEN SIGNED, SEALED AND DATED ELECTRONICALLY.

HIGHWAY SIGNING

HOLE PUNCHING

DATE EFFECTIVE: 01/01/2017
DATE PREPARED: 10/28/2016

903.02AN

SHEET NO. 7 OF 8

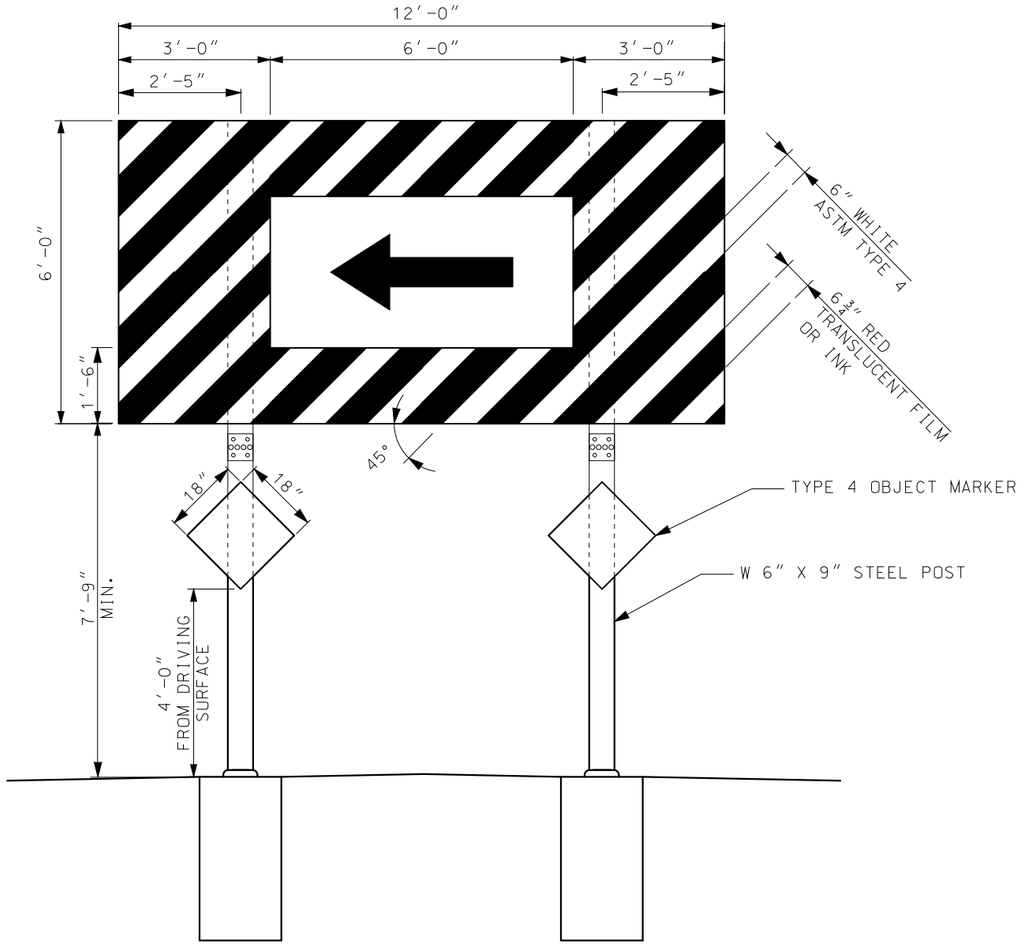

SEE STANDARD PLAN 903.03
FOR MOUNTING HEIGHT ON UNLEVEL GROUND

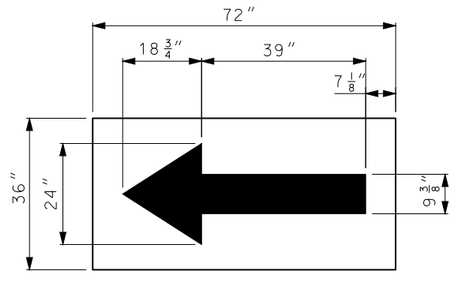

W1-6

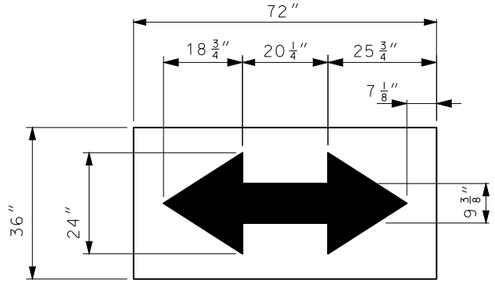

W1-7

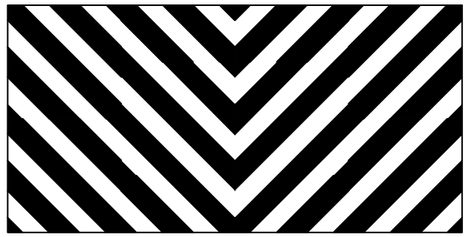

DEAD END

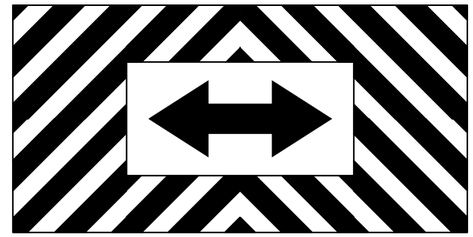

T-INTERSECTION

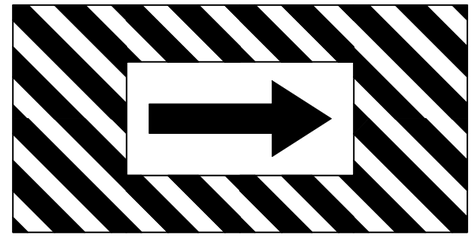

GENERAL NOTES:

SEE STANDARD PLAN 903.03 FOR WIDE FLANGE INSTALLATION.

SIGN BARRICADE SHALL BE CONSTRUCTED AS A STRUCTURAL (ST) SIGN.

DIRECTIONAL ARROWS SHALL BE SHF AND CONSIDERED INCIDENTAL TO THE SIGN.

ALL REFLECTORIZED SURFACES SHALL BE RETROREFLECTIVE SHEETING IN ACCORDANCE WITH SEC 1042.

MISSOURI HIGHWAYS AND TRANSPORTATION COMMISSION
105 WEST CAPITOL
JEFFERSON CITY, MO 65102
1-888-ASK-MODOT (1-888-275-6636)

STATE OF MISSOURI
EILEEN H. RACKERS
NUMBER PE-28336
PROFESSIONAL ENGINEER
THIS SHEET HAS BEEN SIGNED, SEALED AND DATED ELECTRONICALLY.

HIGHWAY SIGNING

SIGN BARRICADE

DATE EFFECTIVE: 01/01/2017
DATE PREPARED: 10/28/2016

903.02AN

SHEET NO. 8 OF 8

IF A SEAL IS PRESENT ON THIS SHEET IT HAS BEEN ELECTRONICALLY SEALED AND DATED.

STRUCTUAL STEEL POST FOR GROUND MOUNTED SIGNS

POST		BOLT			WASHER			BASE CONNECTION DATA TABLE (IN.)								
DES. NO.	NOM SIZE (IN. X LBS/FT)	DIA IN.	LENGTH IN.	TORQUE IN./LB.	OD IN.	ID IN.	THICK IN.	A	B	C	D	E	F	G	W	R
1	W6x9															
2	W6x15	$\frac{5}{8}$	$2\frac{3}{4}$	345	$1\frac{5}{16}$	$\frac{11}{16}$	$\frac{1}{8}$	5	2	$1\frac{1}{4}$	$2\frac{3}{4}$	$1\frac{1}{8}$	$\frac{3}{4}$	$\frac{1}{2}$	$\frac{1}{4}$	$\frac{11}{32}$
3	W8x18															
4	W10x22															
5	W10x26	$\frac{3}{4}$	$3\frac{1}{2}$	555	$1\frac{15}{32}$	$\frac{13}{16}$	$\frac{1}{8}$	6	$2\frac{1}{4}$	$1\frac{3}{8}$	$3\frac{1}{2}$	$1\frac{1}{4}$	1	$\frac{3}{4}$	$\frac{5}{16}$	$\frac{13}{32}$
6	W12x35															

POST AND FOOTING DATA TABLE

POST					FOOTING									
POST DES. NO.	NOM. SIZE	WEIGHT LBS/FT	WEIGHT LBS/IN	STUB LENGTH	DIA.	LEVEL GROUND DEPTH	LEVEL GROUND C.Y.	6:1 GRADE DEPTH	6:1 GRADE C.Y.	4:1 GRADE DEPTH	4:1 GRADE C.Y.	3:1 OR 2:1 GRADE DEPTH	3:1 OR 2:1 GRADE C.Y.
1	W6	9.0	0.75	3'-0"	15"	3'-0"	0.14	3'-2"	0.15	3'-3"	0.16	3'-6"	0.17
2	W6	15.0	1.25	4'-0"	24"	4'-0"	0.47	4'-2"	0.50	4'-3"	0.51	4'-6"	0.54
3	W8	18.0	1.50	4'-6"	28"	4'-6"	0.71	4'-8"	0.73	4'-9"	0.74	5'-0"	0.78
4	W10	22.0	1.83	5'-0"	36"	5'-0"	1.31	5'-2"	1.36	5'-3"	1.39	5'-6"	1.45
5	W10	26.0	2.17	5'-0"	36"	5'-0"	1.31	5'-3"	1.37	5'-5"	1.43	5'-9"	1.52
6	W12	35.0	2.92	5'-6"	36"	5'-6"	1.44	5'-9"	1.52	5'-11"	1.56	6'-3"	1.65

SHEET METAL BOLT RETAINER CUT FROM 30 GAGE GALVANIZED SHEET METAL. PLACE BETWEEN BASE PLATES. SIZE VARIES TO FIT PLATE. BOLT HOLES TO BE $\frac{1}{16}$" LARGER THAN REQUIRED BOLT SIZE.



BOLT RETAINER

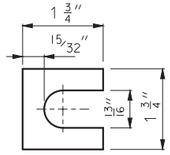

SHIM

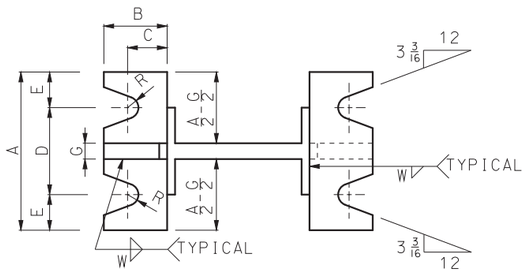

SECTION A-A SECTION B-B
POST AND FOOTING

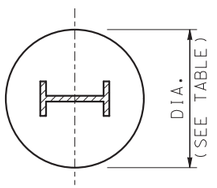

SECTION C-C

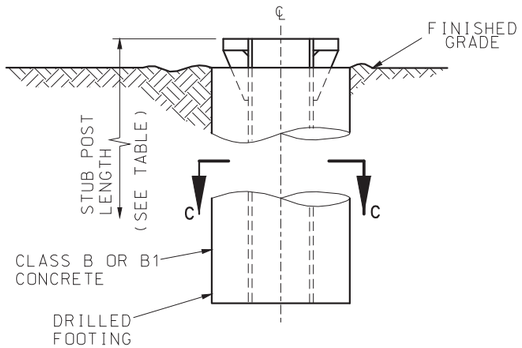

STUB DETAIL

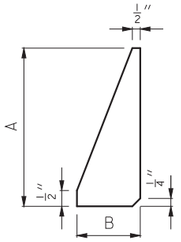

STIFFENER PLATE

ELEVATION

DETAIL A

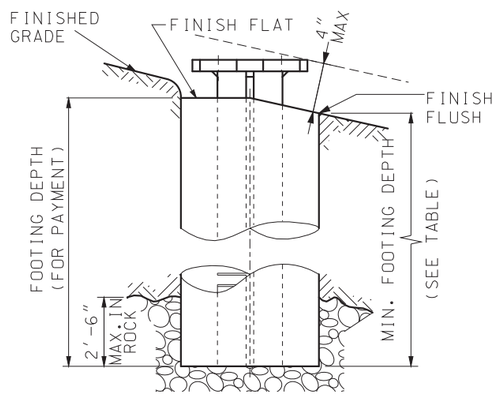

FOOTING DETAIL

GENERAL NOTES:

DESIGN SPECS: AASHTO STANDARD SPECIFICATIONS FOR STRUCTURAL SUPPORTS FOR HIGHWAY SIGNS. LUMINAIRES AND TRAFFIC SIGNALS - 1985 (EXCEPT 2001 AND LATEST INTERIMS FOR STRUCTURAL STEEL POSTS).

POSTS, PERFORATED FUSE PLATE AND SPLICE PLATE TO BE GALVANIZED AFTER FABRICATION.

METAL PROJECTING BEYOND THE PLANE OF THE PLATE FACE WILL NOT BE ALLOWED.

REMOVE ALL GALVANIZING RUNS OR BEADS IN THE WASHER AREA.

ALL STRUCTURAL STEEL STIFFENER PLATES AND BASE PLATES, FOR GROUND MOUNTED SIGNS SHALL MEET THE REQUIREMENTS OF ASTM A 36 OR AASHTO M 270 GRADE 50, MINIMUM YIELD 50,000 PSI.

IN THE EVENT THE DISTANCE BETWEEN THE TOP OF THE FOOTING AND THE BOTTOM OF THE SIGN IS LESS THAN 7'-9", THE SIGN HEIGHT AND POST LENGTH IS TO BE INCREASED SUFFICIENTLY TO ACCOMMODATE THIS MINIMUM SPACING.

HINGE PLATES NOT REQUIRED ON SINGLE POST SIGNS OR ANY SIGNS USING PIPE POSTS.

NUTS ON HINGE PLATE BOLTS SHALL BE TIGHTENED TO THE REQUIRED MINIMUM BOLT TENSION VALUES SHOWN IN TABLE 1 SEC. 1080 OF THE STANDARD SPECIFICATIONS.

THE NUT SHALL BE FREE RUNNING. IF THE NUT WILL NOT SPIN ON THE BOLT BECAUSE OF GALVANIZING IRREGULARITIES, A LUBRICANT SHALL BE APPLIED.

ALL BREAKAWAY ASSEMBLY BOLTS SHALL BE TIGHTENED IN A SYSTEMATIC MANNER TO THE PRESCRIBED TORQUE SHOWN ON THIS DRAWING.

EACH BREAKAWAY ASSEMBLY BOLT SHALL BE LOOSENED AND RE-TIGHTENED TO THE REQUIRED TORQUE IN THE SAME ORDER AS THE INITIAL TIGHTENING.

THE THREADS SHALL BE BURRED AT THE NUT USING A CENTER PUNCH TO PREVENT NUT FROM LOOSENING.

POST LENGTH QUANTITY SHOWN ON PLANS INCLUDES STUB.

1" X $2\frac{1}{2}$" HIGH STRENGTH BOLTS FOR PIPE POSTS SHALL BE OF THE DESIGNATION AASHTO M 164 OR ASTM A 449. ALL OTHER H.S. BOLTS SHALL BE OF THE DESIGNATION AASHTO M 164.

FURNISH TWO .012"± AND TWO .0032"± THICK SHIMS PER POST FROM BRASS SHIM STOCK OR STRIP, DESIGNATION ASTM B 36. SHIM AS REQUIRED TO PLUMB POST.

HIGH STRENGTH BOLTS WITH HEX NUT AND THREE WASHERS WITH EACH BOLT ARE TO BE GALVANIZED.

OPTIONAL HOLES ($\frac{13}{16}$" ROUND FOR "I" SHAPE POSTS AND $\frac{9}{16}$" ROUND FOR PIPE POST BASE PLATES) AS SHOWN IN "ELEVATIONS" ARE TO BE USED AS AID FOR GALVANIZING ONLY.

IF A SEAL IS PRESENT ON THIS SHEET IT HAS BEEN ELECTRONICALLY SEALED AND DATED.

MISSOURI HIGHWAYS AND TRANSPORTATION COMMISSION
105 WEST CAPITOL
JEFFERSON CITY, MO 65102
1-888-ASK-MODOT (1-888-275-6636)

STATE OF MISSOURI
ERIC E. SCHROETER
NUMBER PE-2841
PROFESSIONAL ENGINEER
THIS SHEET HAS BEEN SIGNED, SEALED AND DATED ELECTRONICALLY.

POST INSTALLATION DETAILS

POST AND FOOTING DETAILS WIDE FLANGE (WF) POSTS

DATE EFFECTIVE: 07/01/2017
DATE PREPARED: 5/1/2017

903.03BL

SHEET NO. 1 OF 16

WIDE FLANGE STRUCTURAL STEEL POSTS DESIGN DATA

POST DES. NO.	NOM. SIZE (IN.)	WEIGHT LB/FT	WEIGHT LB/IN	DEPTH (IN.)	FLANGE WIDTH (IN.)	FLANGE THICK (IN.)	WEB THICK (IN.)
1	W6	9	0.75	5 7/8	4	3/16	3/16
2	W6	15	1.25	6	6	1/4	1/4
3	W8	18	1.50	8 1/8	5 1/4	5/16	1/4
4	W10	22	1.83	10 1/8	5 3/4	3/8	1/4
5	W10	26	2.17	10 3/8	5 3/4	7/16	1/4
6	W12	35	2.92	12 1/2	6 1/2	1/2	5/16

THE WEIGHT OF STRUCTURAL STEEL POSTS SHOWN IN THE CONTRACT HAS BEEN COMPUTED USING THE WEIGHTS SHOWN.

PERFORATED FUSE PLATE DATA TABLE

POST DESIGN NO.	F (IN.)	G (IN.)	H (IN.)	J (IN.)	K (IN.)	L (IN.)	M (IN.)	N (IN.)	d1 (IN.)	d2 (IN.)	P (IN.)	BOLT DIA. (IN.)	WT. (EA.) (LBS.)
1	4 1/4	1	1 1/8	4	2 1/4	7/8	1	1/2	9/16	3/4	3/16	1/2	0.76
2	5	1 1/4	1 1/4	6	3 1/2	1 1/4	1 1/2	3/4	11/16	1 1/4	1/4	5/8	1.67
3	5	1 1/4	1 1/4	5 1/4	2 3/4	1 1/4	1 1/4	3/4	11/16	1 1/16	1/4	5/8	1.51
4	6	1 1/2	1 1/2	5 3/4	2 3/4	1 1/2	1 3/8	13/16	13/16	1 1/8	5/16	3/4	2.52
5	6	1 1/2	1 1/2	5 3/4	2 3/4	1 1/2	1 3/8	13/16	13/16	1 1/8	5/16	3/4	2.52
6	6	1 1/2	1 1/2	6 1/2	3 1/2	1 1/2	1 5/8	13/16	13/16	1 5/16	3/8	3/4	3.35

SPLICE PLATE DATA TABLE

POST DESIGN NO.	J (IN.)	K (IN.)	L (IN.)	U (IN.)	d1 (IN.)	BOLT DIA. (IN.)	WT. (EA.) (LBS.)	WASHER OD IN.	WASHER ID IN.	WASHER THICK IN.
1	4	2 1/4	7/8	3/16	9/16	1/2	2.45	1 3/16	5/8	1/8
2	6	3 1/2	1 1/4	1/4	11/16	5/8	4.89	1 5/16	11/16	1/8
3	5 1/4	2 3/4	1 1/4	5/16	11/16	5/8	5.32			
4	5 3/4	2 3/4	1 1/2	5/16	13/16	3/4	5.75	1 15/32	13/16	1/8
5	5 3/4	2 3/4	1 1/2	7/16	13/16	3/4	8.04			
6	6 1/2	3 1/2	1 1/2	1/2	13/16	3/4	10.47			

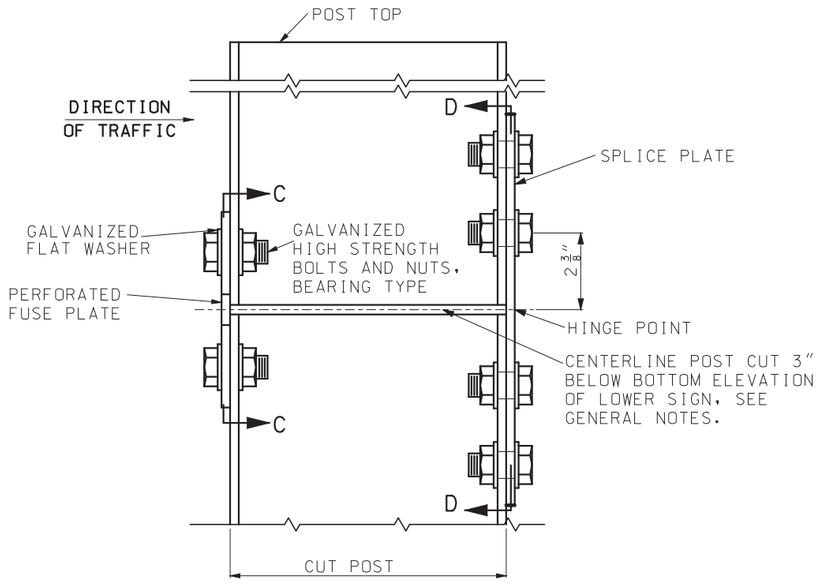

ONE DIRECTION BREAKAWAY

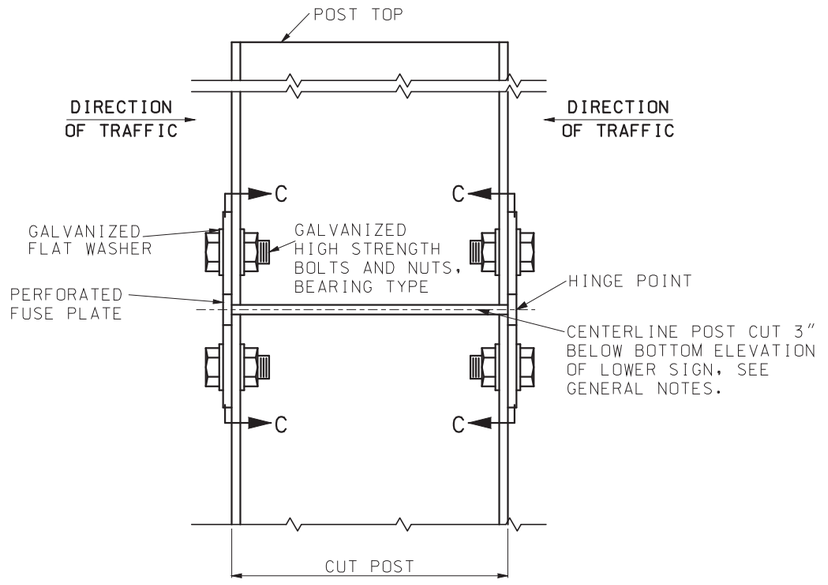

TWO DIRECTION BREAKAWAY

PERFORATED FUSE PLATE AND SPLICE PLATE DETAIL

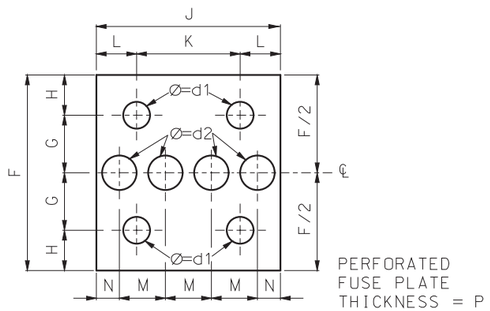

ELEVATION C–C

ALL HOLES SHALL BE DRILLED. ALL PLATE CUTS SHALL PREFERABLY BE SAW CUTS. HOWEVER: FLAME CUTTING WILL BE PERMITTED PROVIDED ALL EDGES ARE GROUND.

PERFORATED FUSE PLATE AND SPICE PLATE SHALL BE FABRICATED FROM ASTM A 36 STRUCTURAL STEEL.

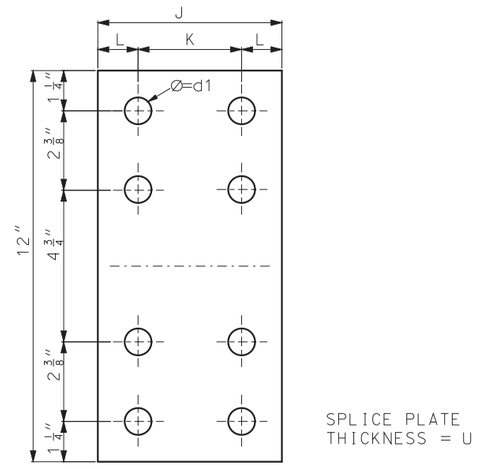

ELEVATION D–D

NOTES:

FOR GENERAL NOTES, SEE SHEET 1 OF 16.

FOR ROADWAYS WHERE TRAFFIC MAY STRIKE THE BACKSIDE OF THE POST, PERFORATED FUSE PLATES SHALL BE INSTALLED ON BOTH SIDES OF THE POST.

MISSOURI HIGHWAYS AND TRANSPORTATION COMMISSION
105 WEST CAPITOL
JEFFERSON CITY, MO 65102
1-888-ASK-MODOT (1-888-275-6636)

STATE OF MISSOURI
ERIC E. SCHROETER
NUMBER PE-28411
PROFESSIONAL ENGINEER
THIS SHEET HAS BEEN SIGNED, SEALED AND DATED ELECTRONICALLY.

POST INSTALLATION DETAILS
HINGE DETAILS
WIDE FLANGE (WF) POSTS

DATE EFFECTIVE: 07/01/2017
DATE PREPARED: 5/1/2017

903.03BL

SHEET NO. 2 OF 16

IF A SEAL IS PRESENT ON THIS SHEET IT HAS BEEN ELECTRONICALLY SEALED AND DATED.

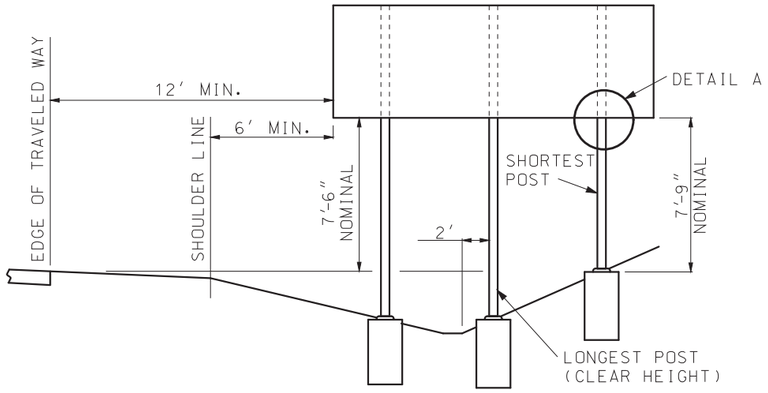

DITCH SECTION

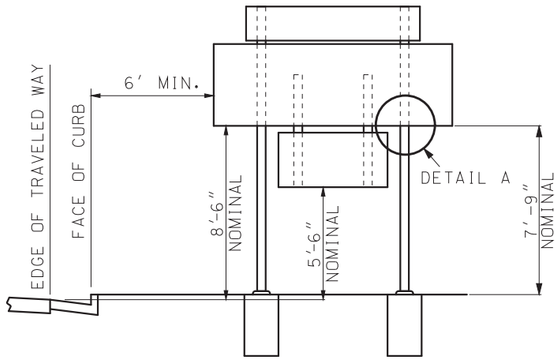

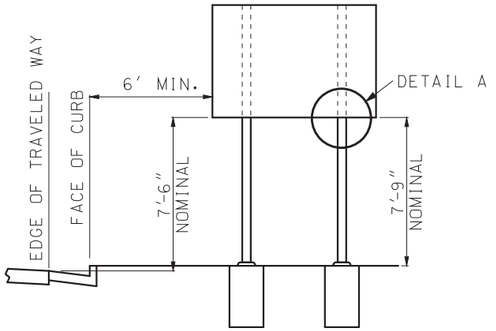

BARRIER CURB SECTIONS

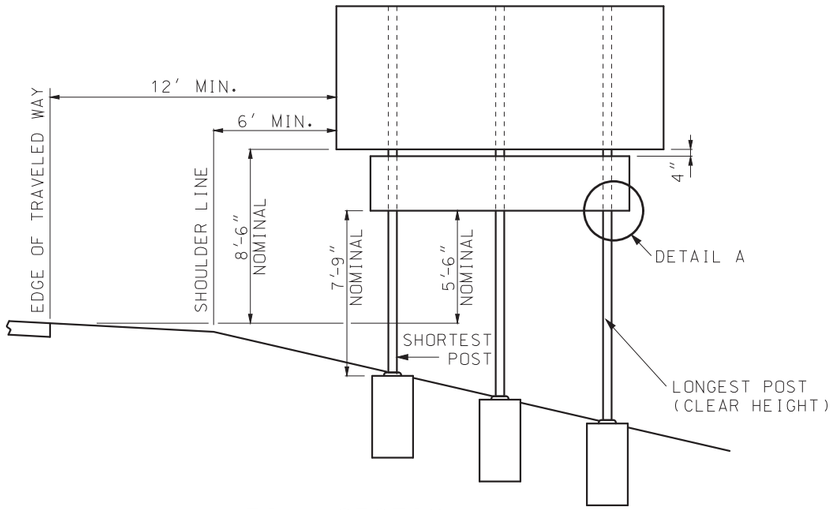

FILL SECTION

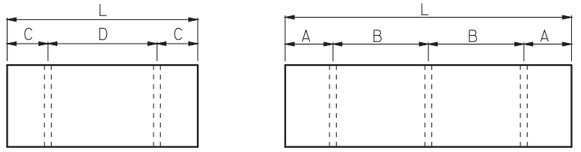

POST SPACING

FOR POST DESIGNS NUMBERS 3, 4, 5 AND 6 HAVING WEIGHTS GREATER THAN 18LBS./FT., POSTS SHALL BE SPACED AT LEAST 7′ APART.

FOR POST DESIGNS NUMBERS 1 AND 2, POSTS MAY BE SPACED LESS THAN 7′ APART.

DO NOT USE THREE NUMBER 1 OR 2 POSTS FOR L LESS THAN 11′.

FOR L GREATER THAN 11′ AND LESS THAN 17′, 3 POSTS MAY BE USED DEPENDING ON SOIL CONDITIONS.

FOR L OF 6′ TO 17′ TYPICALLY USE 2 POSTS.

FOR L GREATER THAN 17′ TYPICALLY USE 3 POSTS.

GENERAL NOTES:

FOR GENERAL NOTES, SEE SHEET 1 OF 16.

VERTICAL CLEARANCE FROM THE ROADWAY SHALL BE MET AND INCREASED ONLY TO MEET THE 7′9″ MINIMUM VERTICAL CLEARANCE FROM THE GROUND.

POST SIZE IS DETERMINED USING SIGN HEIGHT, SIGN WIDTH AND CLEAR HEIGHT. THE CLEAR HEIGHT IS EQUAL TO THE LENGTH OF THE LONGEST POST MEASURED FROM THE GROUND TO THE BOTTOM OF THE SIGN.

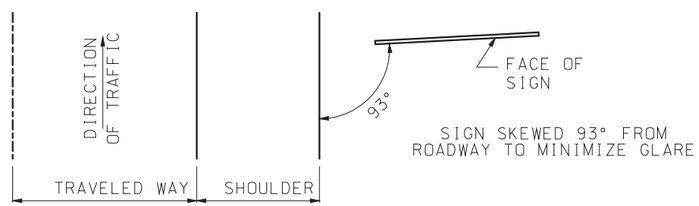

SIGN ORIENTATION

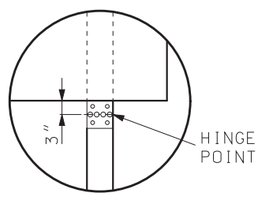

DETAIL A

NOTE: SEE SHEET 2 FOR FUSE PLATE DETAILS.

IF A SEAL IS PRESENT ON THIS SHEET IT HAS BEEN ELECTRONICALLY SEALED AND DATED.

MISSOURI HIGHWAYS AND TRANSPORTATION COMMISSION
105 WEST CAPITOL
JEFFERSON CITY, MO 65102
1-888-ASK-MODOT (1-888-275-6636)

STATE OF MISSOURI
ERIC E. SCHROETER
NUMBER PE-28411
PROFESSIONAL ENGINEER
THIS SHEET HAS BEEN SIGNED, SEALED AND DATED ELECTRONICALLY.

POST INSTALLATION DETAILS
TYPICAL SECTION, MOUNTING HEIGHT AND POST SPACING WIDE FLANGE (WF) POSTS

DATE EFFECTIVE: 07/01/2017
DATE PREPARED: 10/23/2017

903.03BL

SHEET NO. 3 OF 16

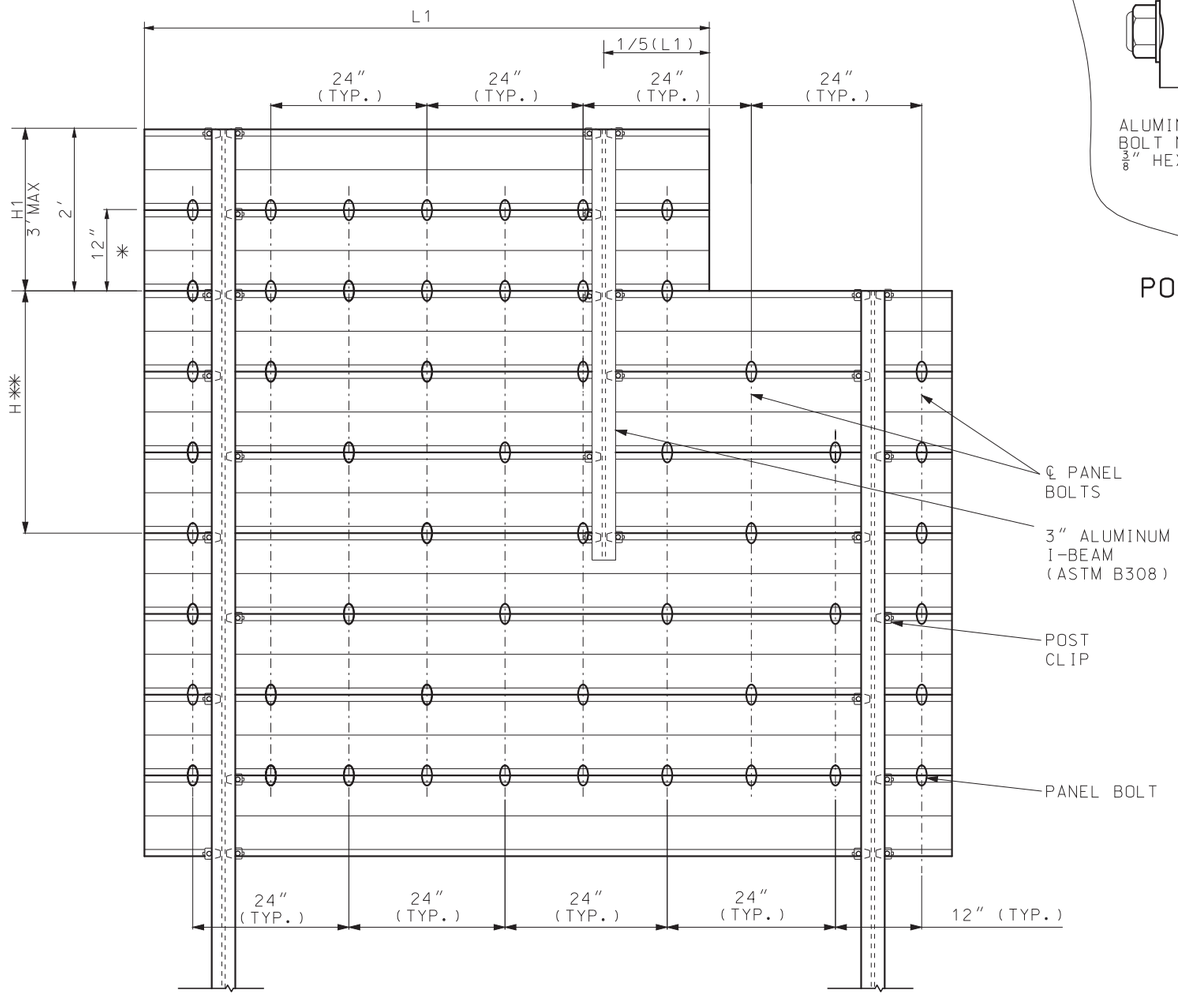

PANEL BOLT LOCATION

* EXTRUDED ALUMINUM PANEL.

** H = H1 + 12". H APPLIES TO SIGNS SUSPENDED ABOVE OR BELOW THE PRIMARY SIGN IF SECONDARY SIGN IS NOT ATTACHED TO THE MAIN SIGN POSTS.

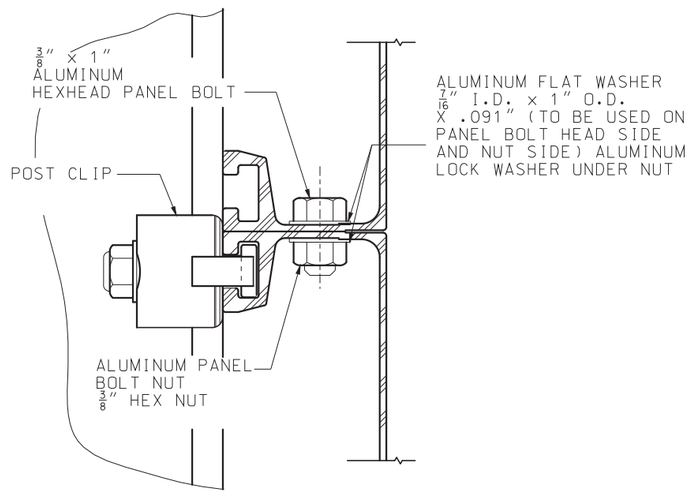

POST CLIP DETAIL

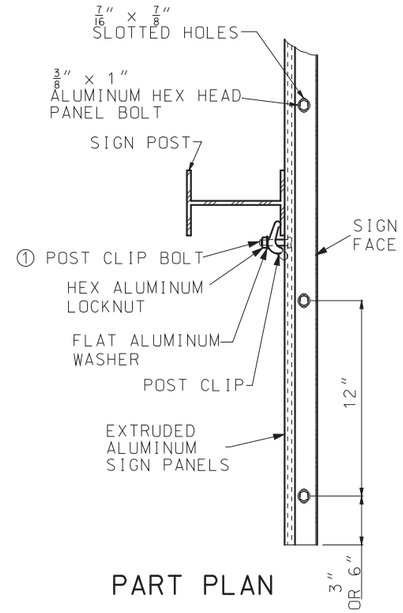

PART PLAN

① SIGNS SHALL BE FIELD ATTACHED TO POSTS WITH POST CLIPS AND BOLTS, SEE POST CLIP DETAIL. THE SHANK OF THE POST CLIP BOLT SHALL FIT TIGHTLY AGAINST THE POST FLANGE AFTER THE LOCKNUTS ARE TORQUED. LOCKNUTS ON THE POST CLIP BOLTS SHALL BE TORQUED TO 225 INCH-POUNDS WHEN USING DRY, CLEAN, UNLUBRICATED THREADS.

NOTES:

FOR GENERAL NOTES, SEE SHEET 1 OF 16.

FOR EXTRUDED ALUMINUM PANEL AND POST CLIP DETAILS, SEE STANDARD PLANS 903.02 SHEET 4 OF 7.

IF A SEAL IS PRESENT ON THIS SHEET IT HAS BEEN ELECTRONICALLY SEALED AND DATED.

MISSOURI HIGHWAYS AND TRANSPORTATION COMMISSION
105 WEST CAPITOL
JEFFERSON CITY, MO 65102
1-888-ASK-MODOT (1-888-275-6636)

STATE OF MISSOURI
ERIC E. SCHROETER
NUMBER PE-28411
PROFESSIONAL ENGINEER
THIS SHEET HAS BEEN SIGNED, SEALED AND DATED ELECTRONICALLY.

SIGN MOUNTING DETAILS

WIDE FLANGE (WF) POSTS

DATE EFFECTIVE: 07/01/2017
DATE PREPARED: 5/1/2017

903.03BL

ROUND PIPE POST FOR GROUND MOUNTED SIGNS												
POST	BOLT			WASHER			BASE CONNECTION DATA TABLE (IN.)					
NOM SIZE (IN.-ID)	DIA	LENGTH	TORQUE	OD	ID	THICK	A	B	C	R	T	W
	IN.	IN.	IN./LB.	IN.	IN.	IN.						
$2\frac{1}{2}$	$\frac{1}{2}$	$3\frac{1}{2}$	140	$1\frac{1}{16}$	$^{17}/_{32}$	$\frac{1}{8}$	$6\frac{1}{4}$	9	$\frac{1}{4}$	$^{9}/_{32}$	1	$\frac{1}{4}$
3												
4	$\frac{5}{8}$	$3\frac{3}{4}$	345	$1\frac{5}{16}$	$\frac{11}{16}$	$\frac{1}{8}$	$7\frac{3}{16}$	10	$\frac{1}{4}$	$\frac{3}{8}$	1	$\frac{5}{16}$

ROUND PIPE POST AND FOOTING DATA TABLE						
NOM. SIZE (IN.)	WEIGHT		STUB LENGTH	FOOTING		CONCRETE
	LBS/FT	LBS/IN		DIA.	DEPTH	C.Y.
$2\frac{1}{2}$	5.79	0.48	4′ - $3\frac{1}{2}$″	12″	4′-6″	0.13
3	7.58	0.63	4′ - $3\frac{1}{2}$″	12″	4′-6″	0.13
4	10.79	0.90	5′ - $3\frac{1}{2}$″	18″	5′-6″	0.36

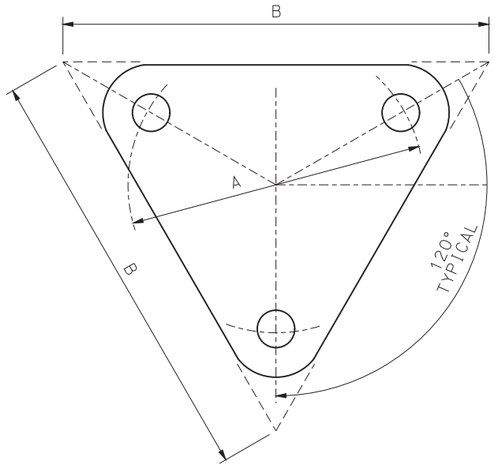

BOLT RETAINER

SHEET METAL BOLT RETAINER CUT FROM 30 GUAGE GALVANIZED SHEET METAL. PLACE BETWEEN BASE PLATES. SIZE VARIES TO FIT PLATE. BOLT HOLES SHALL BE $\frac{1}{16}$″ LARGER THAN REQUIRED BOLT SIZE.

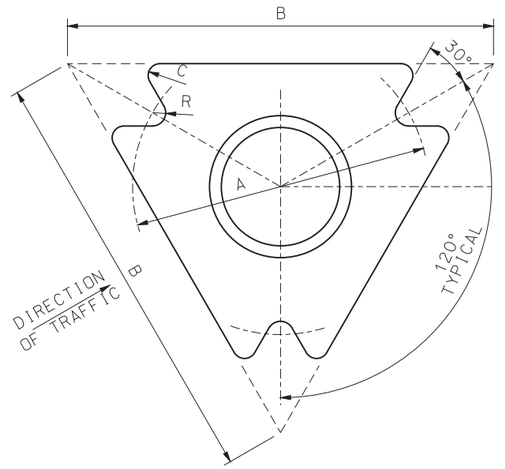

PLAN VIEW

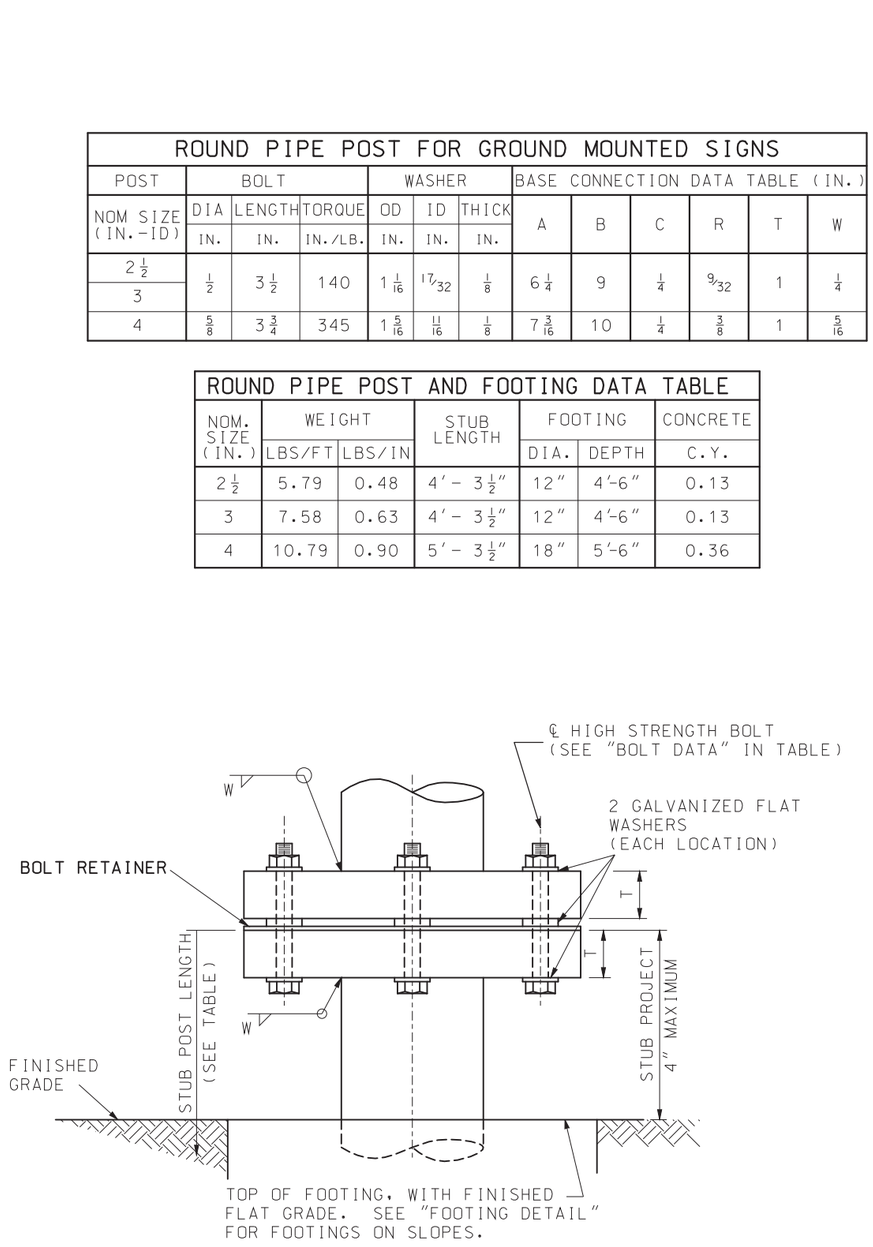

ELEVATION
(STEEL PIPE POST BASE CONNECTION)

MULTI-DIRECTION SLIP BASE

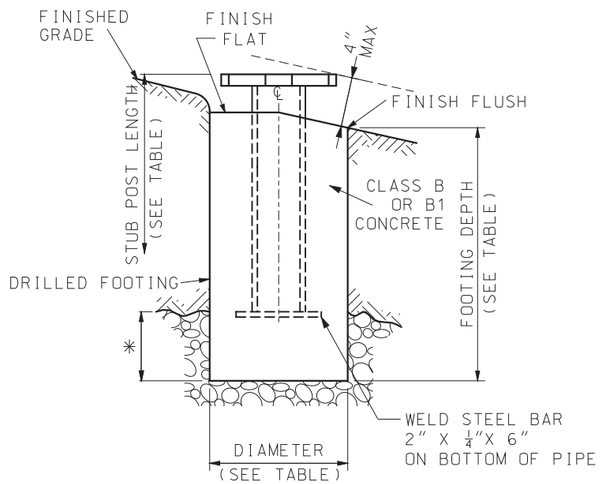

FOOTING DETAIL

* PIPE 3" DIA. AND UNDER: 2′ MAXIMUM IN ROCK, PIPE OVER 3" DIA.: 3′ MAXIMUM IN ROCK

ROLLED CRIMP TO ENGAGE PIPE O.D.

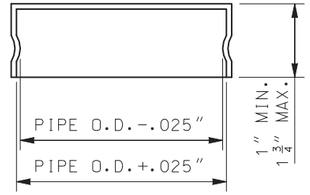

FRICTION CAP

NOTE:

FOR GENERAL NOTES, SEE SHEET 1 OF 16.

FOR MOUNTING HEIGHT AND OFFSET DETAILS, SEE STANDARD PLANS SHEET 10 OF 16.

MISSOURI HIGHWAYS AND TRANSPORTATION COMMISSION
105 WEST CAPITOL
JEFFERSON CITY, MO 65102
1-888-ASK-MODOT (1-888-275-6636)

STATE OF MISSOURI
ERIC E. SCHROETER
NUMBER PE-28411
PROFESSIONAL ENGINEER
THIS SHEET HAS BEEN SIGNED, SEALED AND DATED ELECTRONICALLY.

POST INSTALLATION DETAILS

PIPE POST

DATE EFFECTIVE: 07/01/2017
DATE PREPARED: 5/1/2017

903.03BL

SHEET NO. 5 OF 16

IF A SEAL IS PRESENT ON THIS SHEET IT HAS BEEN ELECTRONICALLY SEALED AND DATED.

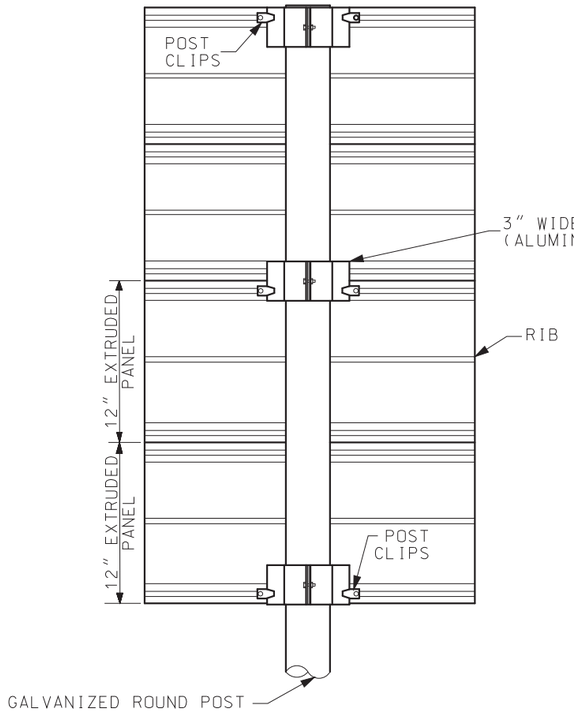

PROFILE VIEW

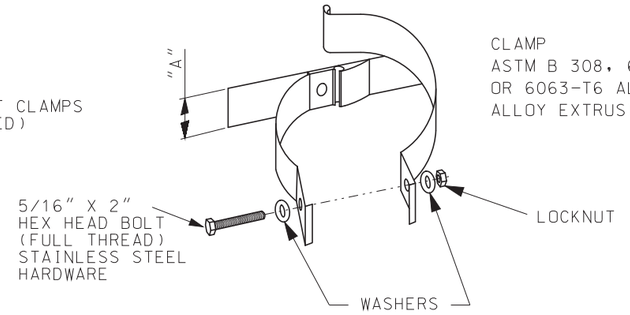

CLAMP TYPE SIGN SUPPORT FOR PIPE POST

WIDTH OF PIPE POST CLAMP	
SIGN TYPE	MINIMUM "A"
FLAT	1 1/4"
STRUCTURAL	3"

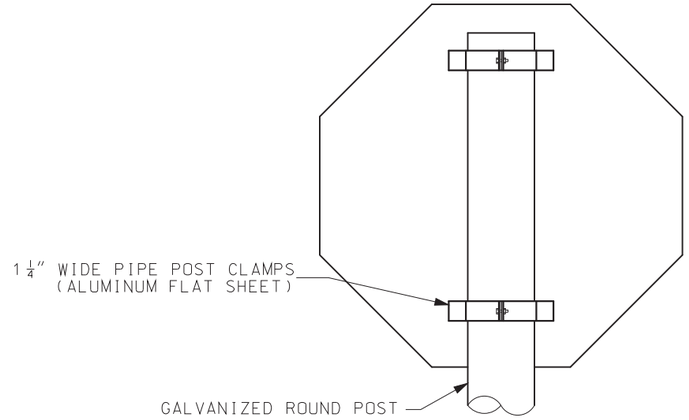

PROFILE VIEW

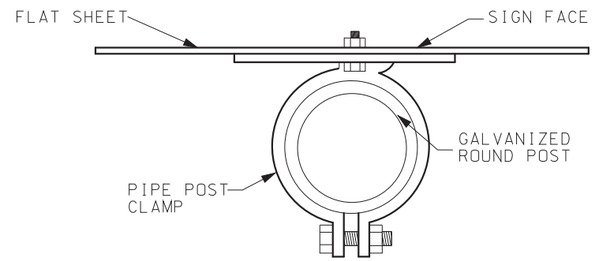

PLAN VIEW

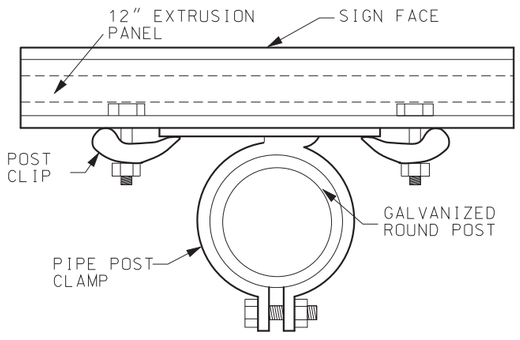

PLAN VIEW

MOUNTING DETAILS FOR EXTRUDED PANELS ON PIPE POST

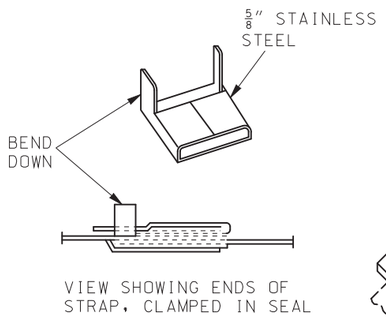

STRAP SEAL

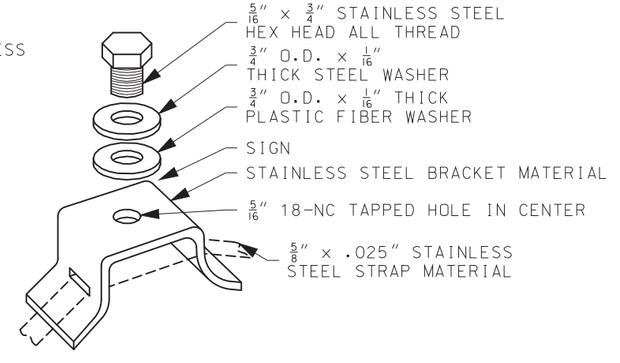

FLARED LEG SIGN BRACKET

MOUNTING DETAILS FOR FLAT SHEET SIGNS ON ROUND STRUCTURES >4" PIPE POST

MOUNTING DETAILS FOR FLAT SHEET ON PIPE POST

NOTES:

FOR GENERAL NOTES, SHEET 1 OF 16.

FOR MOUNTING HEIGHT AND OFFSET DETAILS, SEE SHEET 10 OF 16.

FOR DETAILS OF EXTRUDED ALUMINUM PANEL AND POST CLIP DETAILS, SEE STANDARD PLANS 903.02 SHEET 4 OF 7.

MISSOURI HIGHWAYS AND TRANSPORTATION COMMISSION
105 WEST CAPITOL
JEFFERSON CITY, MO 65102
1-888-ASK-MODOT (1-888-275-6636)

STATE OF MISSOURI
ERIC E. SCHROETER
NUMBER PE-28411
PROFESSIONAL ENGINEER
THIS SHEET HAS BEEN SIGNED, SEALED AND DATED ELECTRONICALLY.

SIGN MOUNTING DETAILS
PIPE POST

DATE EFFECTIVE: 07/01/2017
DATE PREPARED: 5/1/2017

903.03BL

SHEET NO. 6 OF 16

IF A SEAL IS PRESENT ON THIS SHEET IT HAS BEEN ELECTRONICALLY SEALED AND DATED.

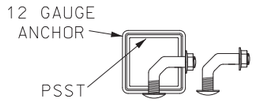

$\frac{5}{16}$" CORNER BOLT AND NUT

ANCHOR BOLT DETAIL FOR 2" PSST
MINIMUM 1 CORNER BOLT REQUIRED

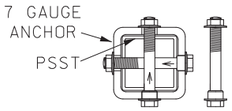

$\frac{3}{8}$" x 3.5" SHOULDER BOLT AND NUT
ANCHOR BOLT DETAIL FOR
2.5" AND 2"+ 2.5" PSST
2 SHOULDER BOLTS REQUIRED
INSTALLED PERPENDICULAR TO EACH OTHER

ANCHOR BOLT DETAIL

2.5" + 2.25" POST COMPRISED OF A $2\frac{1}{2}$" PSST POST WITH A 2.25" PIECE OF PSST INSERTED INSIDE TO INCREASE POST CAPACITY, USE AS INDICATED BY POST SELECTION CHARTS

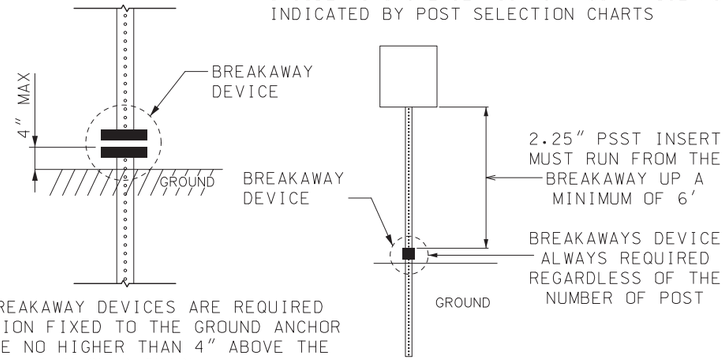

WHEN BREAKAWAY DEVICES ARE REQUIRED THE PORTION FIXED TO THE GROUND ANCHOR SHALL BE NO HIGHER THAN 4" ABOVE THE FINISHED GRADE.

BREAKAWAY DETAILS
2.5" + 2.25" POST DETAIL

ANCHOR TUBE SHALL BE 7 GUAGE

1/2" X 4 1/2"GALVANIZED MECHANICAL FASTENERS SHALL BE USED TO ATTACH ANCHOR TO BARRIER WALL

SHOULDER BOLTS SHALL BE USED TO ATTACH PSST POST TO ANCHOR (SEE STANDARD PLAN 903.03)

ANCHOR SHALL BE HOT DIPPED GALVANIZED AFTER FABRICATION PER SECTION 1080

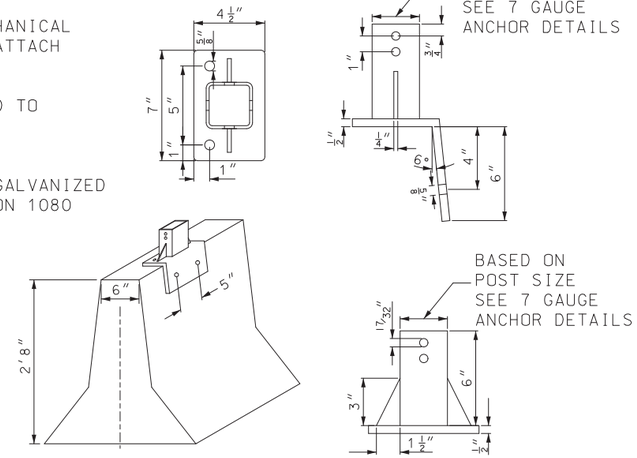

BARRIER WALL
MOUNTING DETAIL

THE ANCHOR SHOULD BE A MAXIMUM OF 2.5" ABOVE THE GROUND LEVEL

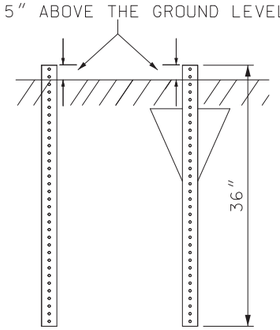

12 GAUGE

THE ANCHOR SHOULD BE A MAXIMUM OF 2.5" ABOVE THE GROUND LEVEL

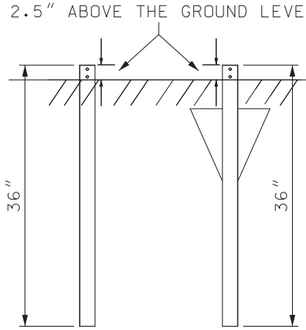

7 GAUGE

ANCHOR INSTALLATION DETAIL

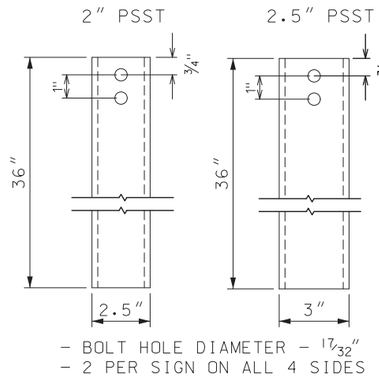

- BOLT HOLE DIAMETER - $\frac{17}{32}$"
- 2 PER SIGN ON ALL 4 SIDES

7 GAUGE ANCHOR
FABRICATION DETAIL

POST AND ANCHOR DATA TABLE						
POST		ANCHOR NORMAL OR OMNI-DIRECTIONAL		BREAKAWAY NEEDED NUMBER OF POSTS		
GUAGE	SIZE	GUAGE	SIZE	1	2	3
12	2"x2"	12	2.25" X 2.25" X 36" OD	NO	NO	YES
		7 ✳	2.5" X 2.5" X 36" OD	NO	NO	YES
12	2.5"x2.5"	7 ✳	3" X 3" X 36" OD	NO	YES	YES
12	(2.5"x2.5")+(2.25"X2.25")	7 ✳	3" X 3" X 36" OD	YES	YES	YES

✳ TO BE USED WITH CONCRETE FOOTINGS OR IS AN OPTION IN ROCK SOIL CONDITIONS

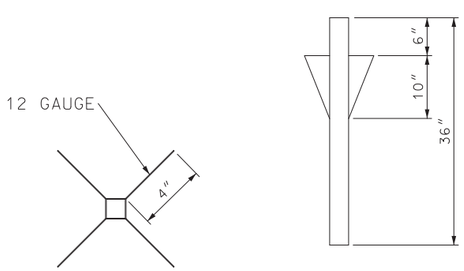

OMNI-DIRECTIONAL ANCHOR DETAIL
FOR BOTH 12 AND 7 GAUGE

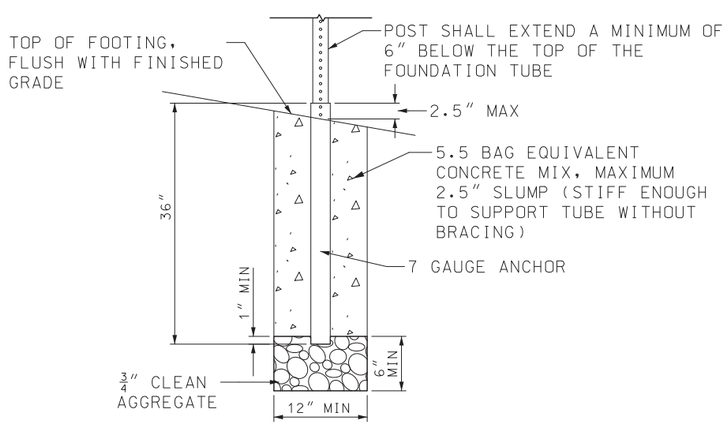

CONCRETE FOOTING DETAIL

NOTES:

FOR GENERAL NOTES, SEE SHEET 1 OF 16.

FOR MOUNTING HEIGHT AND OFFSET DETAILS, SEE SHEET 10 OF 16.

ALL BREAKAWAY DEVICES USED ON AN INSTALLATION SHALL BE CERTIFIED NCHRP 350 COMPLIANT.

48" FOOTINGS MAY BE USED WITH 12 GAUGE OR 7 GAUGE ANCHORS.

MISSOURI HIGHWAYS AND TRANSPORTATION COMMISSION
105 WEST CAPITOL
JEFFERSON CITY, MO 65102
1-888-ASK-MODOT (1-888-275-6636)

STATE OF MISSOURI
NICOLE A. KOLB HOOD
NUMBER PE-2001018754
PROFESSIONAL ENGINEER
THIS SHEET HAS BEEN SIGNED, SEALED AND DATED ELECTRONICALLY.

POST INSTALLATION DETAILS
PERFORATED SQUARE STEEL TUBE (PSST)

DATE EFFECTIVE: 07/01/2018
DATE PREPARED: 5/3/2018

903.03BL

SHEET NO. 7 OF 16

REV.

IF A SEAL IS PRESENT ON THIS SHEET IT HAS BEEN ELECTRONICALLY SEALED AND DATED.

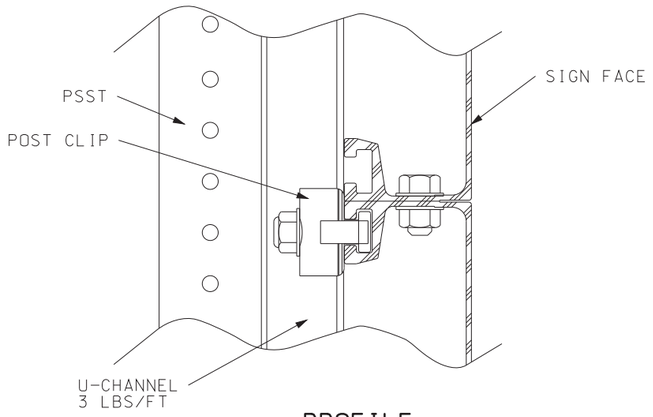

PROFILE

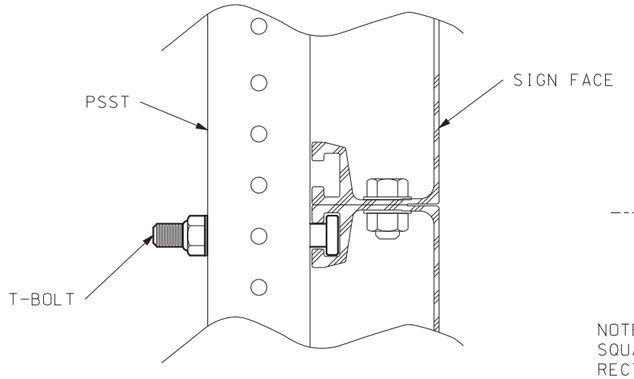

PROFILE

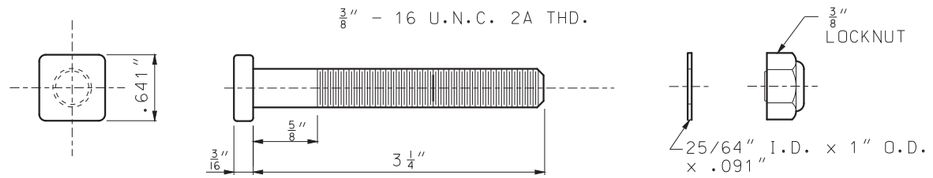

NOTE:
SQUARE BOLT HEAD SHOWN MAY BE REPLACED WITH RECTANGULAR BOLT HEAD WITH THE NARROW DIMENSION EQUAL TO .641".

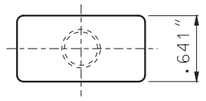

BOLT - $1\frac{3}{4}$ x $\frac{3}{8}$ ALUMINUM
BOLT - $3\frac{1}{4}$ x $\frac{3}{8}$ ALUMINUM
HEX LOCKNUT - $\frac{3}{8}$" ALUMINUM
WASHER - ALUMINUM

T-BOLT DETAIL

NOTES:
- ALUMINUM BOLTS SHALL BE ASTM B 211, 2024-T4 OR 6061-T6
- ALUMINUM FLAT WASHERS SHALL BE ASTM B 209, ALCLAD 2024-T4 OR 2024-T4
- ALUMINUM LOCK NUTS (NYLON INSERT) SHALL BE ASTM B 211 OR 2017-T4

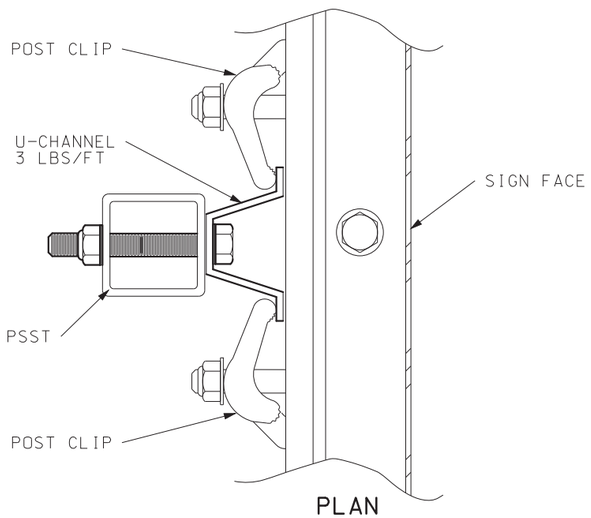

PLAN

POST CLIP METHOD

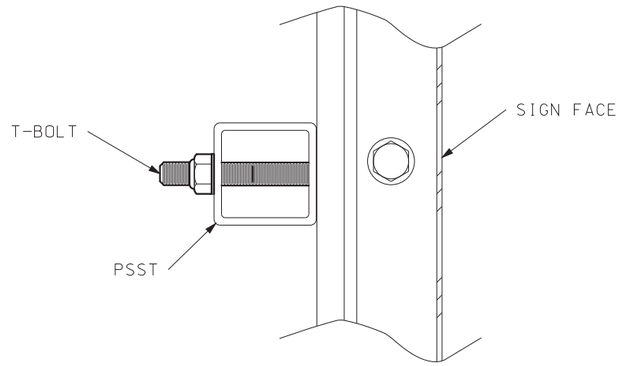

PLAN

T-BOLT METHOD

EXTRUDED PANEL MOUNTING DETAIL

NUMBER OF BOLTS TO ATTACH STEEL CHANNEL TO PSST POST	
SIGN HEIGHT	NO. OF BOLTS PER PSST POST USED
1'	2
2'	3
3'	4
4'	5
5'	6
6'	7
7'	8

NOTES:

FOR THE GENERAL NOTES, SEE SHEET 1 OF 16.

FOR MOUNTING HEIGHT AND OFFSET DETAILS, SEE SHEET 10 OF 16.

FOR POST CLIP DETAILS, SEE STANDARD PLANS 903.02 SHEET 4 OF 7.

ALTERNATE PSST MOUNTING HARDWARE USE SHALL BE ON APPROVED LIST.

MISSOURI HIGHWAYS AND TRANSPORTATION COMMISSION
105 WEST CAPITOL
JEFFERSON CITY, MO 65102
1-888-ASK-MODOT (1-888-275-6636)

STATE OF MISSOURI
ERIC E. SCHROETER
NUMBER PE-28411
PROFESSIONAL ENGINEER
THIS SHEET HAS BEEN SIGNED, SEALED AND DATED ELECTRONICALLY.

SIGN MOUNTING DETAILS
PERFORATED SQUARE STEEL TUBE (PSST)

DATE EFFECTIVE: 07/01/2017
DATE PREPARED: 5/1/2017

903.03BL

SHEET NO. 8 OF 16

IF A SEAL IS PRESENT ON THIS SHEET IT HAS BEEN ELECTRONICALLY SEALED AND DATED.

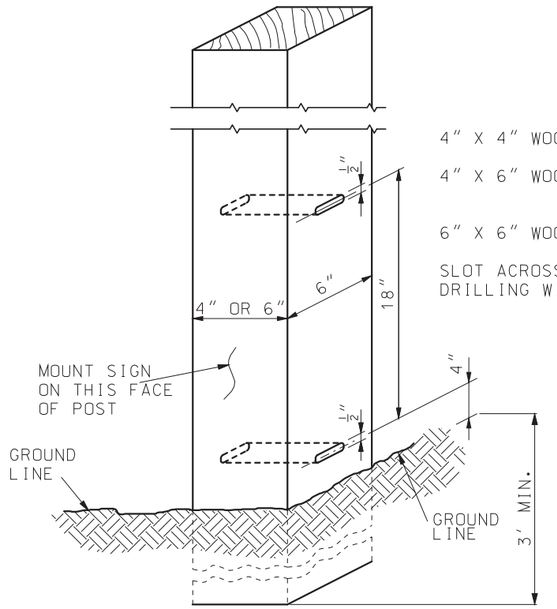

4" X 4" WOOD POST - NO SLOTS OR HOLES REQUIRED

4" X 6" WOOD POST - $1\frac{1}{2}$" X $\frac{1}{2}$" SLOT ON 6" SIDE OR $1\frac{1}{2}$" DIA. HOLE ON 6" SIDE

6" X 6" WOOD POST - 2" X $\frac{1}{2}$" SLOT OR 2" DIA. HOLE

SLOT ACROSS NEUTRAL AXIS FORMED BY SUCCESSIVE DRILLING WITH $\frac{1}{2}$" BIT.

WOOD POST DETAIL

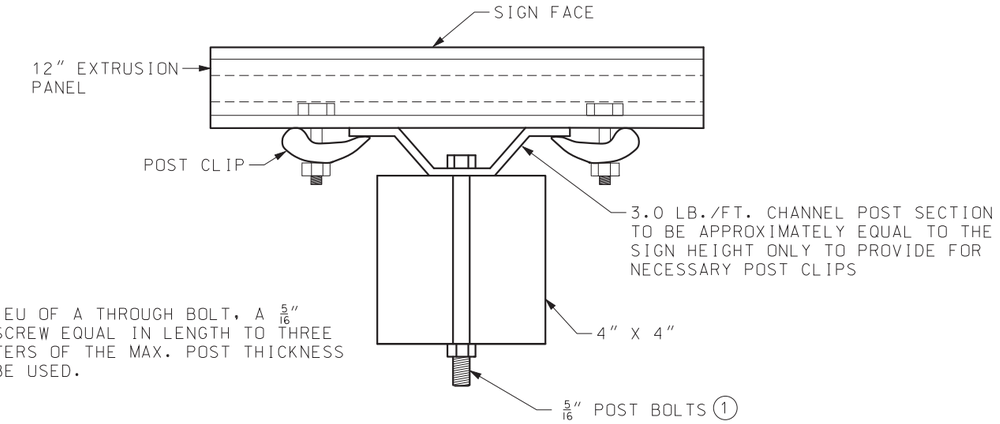

(1) IN LIEU OF A THROUGH BOLT, A $\frac{5}{16}$" LAG SCREW EQUAL IN LENGTH TO THREE QUARTERS OF THE MAX. POST THICKNESS MAY BE USED.

PLAN VIEW

MOUNTING DETAILS FOR EXTRUDED PANELS ON WOOD POST

NUMBER OF BOLTS TO ATTACH STEEL CHANNEL TO WOOD POST	
SIGN HEIGHT	NO. OF BOLTS PER WOOD POST USED
1'	2
2'	3
3'	4
4'	5
5'	6
6'	7
7'	8

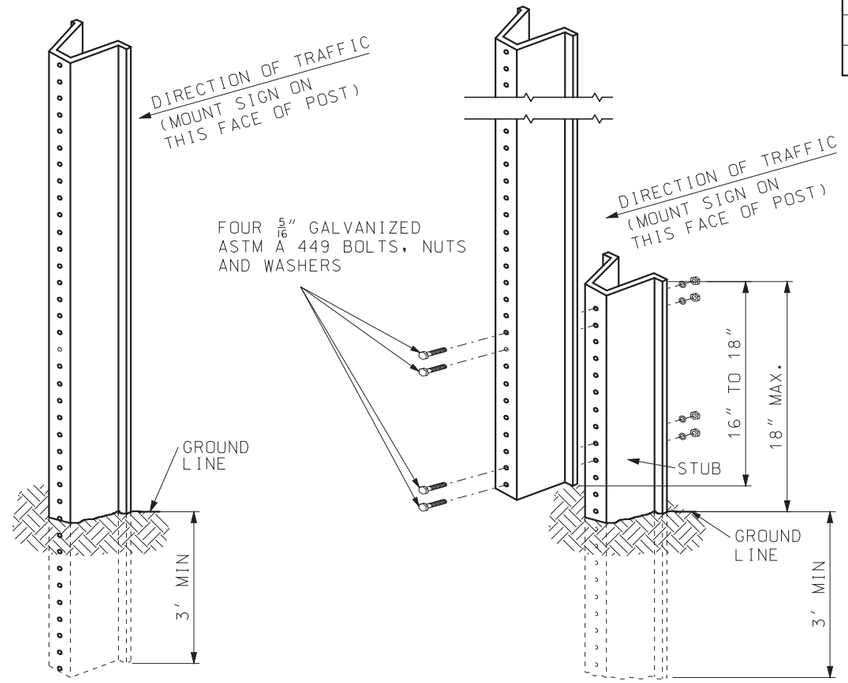

U-CHANNEL POST-STUB DETAIL

U-CHANNEL POST DETAIL OPTIONAL INSTALLATION

	POST TYPE	
SIGN AREA (SQ.FT.)	U-CHANNEL	WOOD
≤ 10	1 - 3.0 LB./FT.*	1 - 4" X 4"*
> 10 ≤ 16	2 - 3.0 LB./FT.	2 - 4" X 4" 1 - 4" X 6"*
> 16 ≤ 24	2 - 3.0 LB./FT.	2 - 4" X 6"
> 24 ≤ 30	3 - 3.0 LB./FT.	2 - 4" X 6"
> 30 ≤ 50	N/A	2 - 6" X 6"

* SIGNS GREATER THAN 4 FEET IN WIDTH REQUIRE TWO POSTS, EXCEPT DIAMOND SHAPED WARNING SIGNS, YIELD SIGNS, AND ONE WAY SIGNS.

POST SIZE REQUIREMENTS

NOTES:

FOR GENERAL NOTES, SEE SHEET 1 OF 16.

ALL POSTS SHALL BE EMBEDDED A MINIMUM OF 3 FEET INTO THE GROUND.

U-CHANNEL POST-STUB OVERLAP SHALL BE POSITIONED ENTIRELY BETWEEN GROUND LINE AND 18" ABOVE GROUND LINE.

FOR POST SIZING SEE ENGINEERING POLICY GUIDE.

FOR POST CLIP DETAILS, SEE STANDARD PLANS 903.02 SHEET 4 OF 7.

FOR MOUNTING HEIGHT AND OFFSET DETAILS, SEE SHEET 10 OF 16.

MISSOURI HIGHWAYS AND TRANSPORTATION COMMISSION
105 WEST CAPITOL
JEFFERSON CITY, MO 65102
1-888-ASK-MODOT (1-888-275-6636)

STATE OF MISSOURI
ERIC E. SCHROETER
NUMBER PE-2841
PROFESSIONAL ENGINEER
THIS SHEET HAS BEEN SIGNED, SEALED AND DATED ELECTRONICALLY.

SIGN MOUNTING DETAILS
WOOD AND U-CHANNEL POST

DATE EFFECTIVE: 01/01/2018
DATE PREPARED: 10/23/2017

903.03BL

SHEET NO. 9 OF 16

IF A SEAL IS PRESENT ON THIS SHEET IT HAS BEEN ELECTRONICALLY SEALED AND DATED.

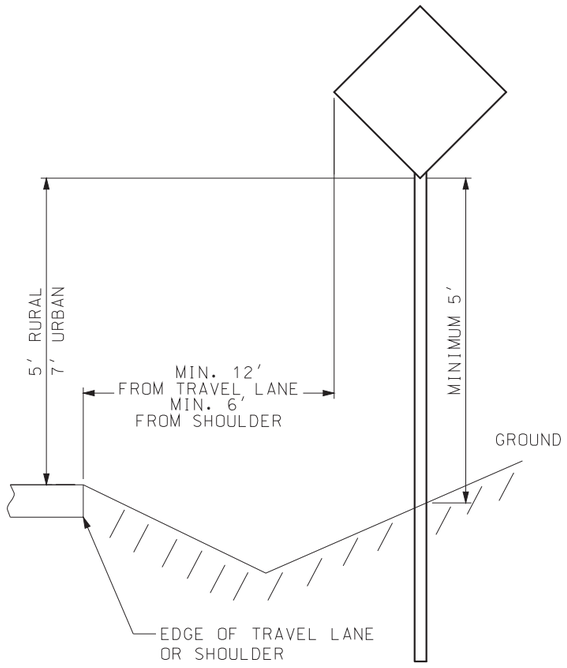

ONE POST – SINGLE SIGN

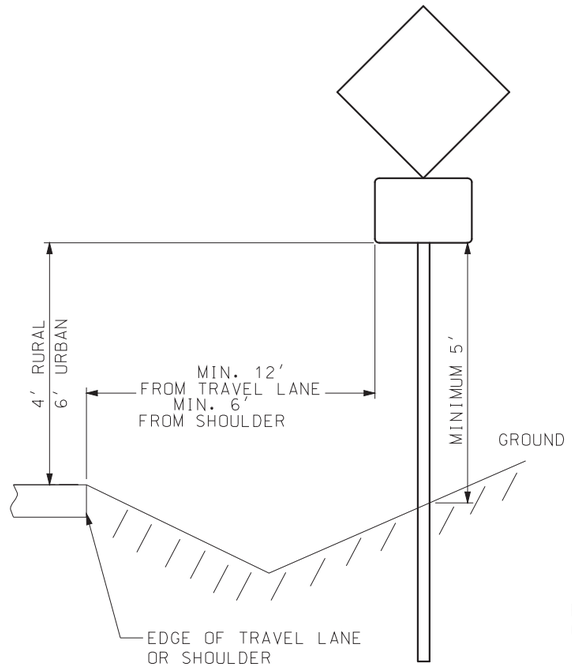

ONE POST – SINGLE SIGN WITH SUPPLEMENTAL PLAGUE

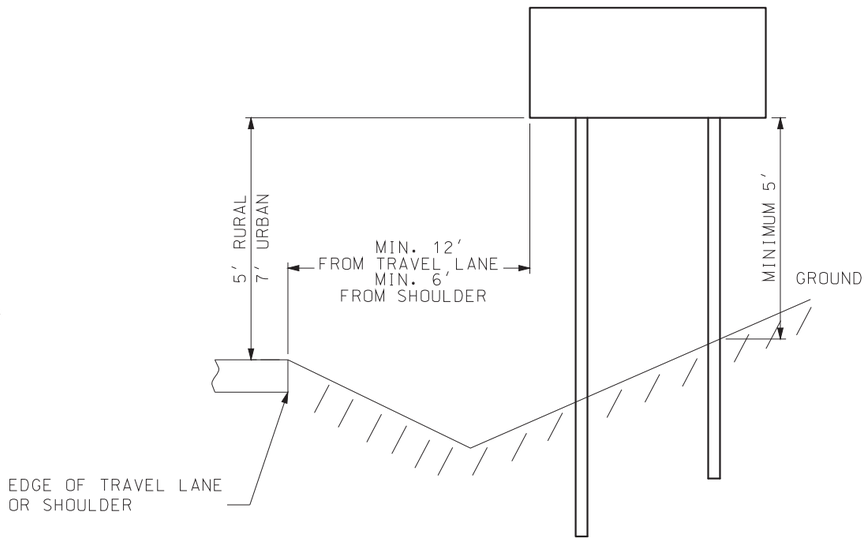

TWO POST

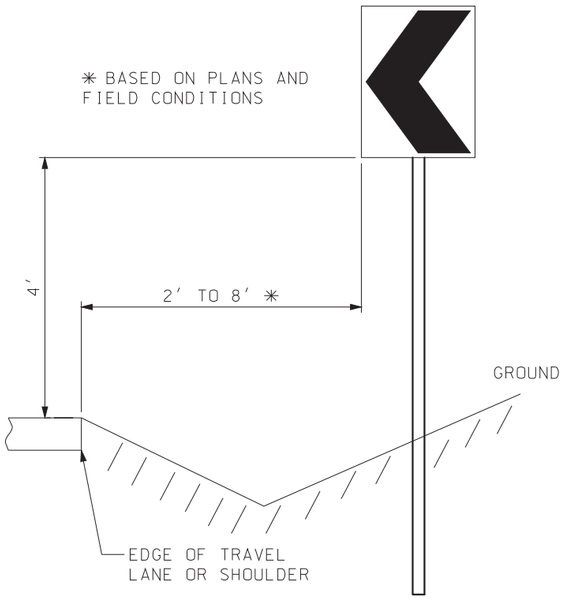

CHEVRON SIGN

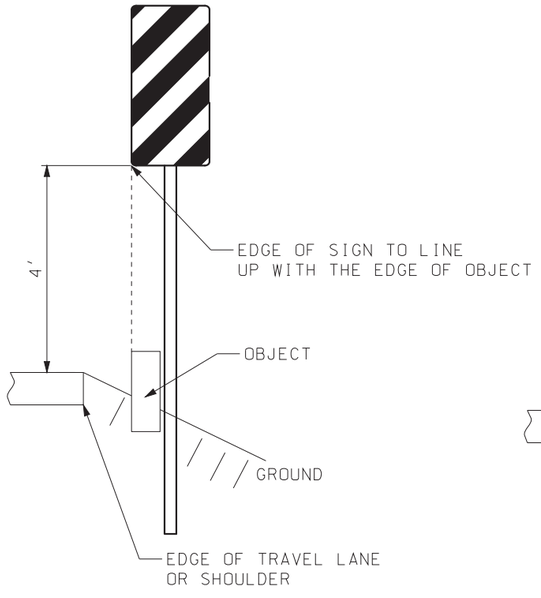

TYPE III OBJECT MARKER

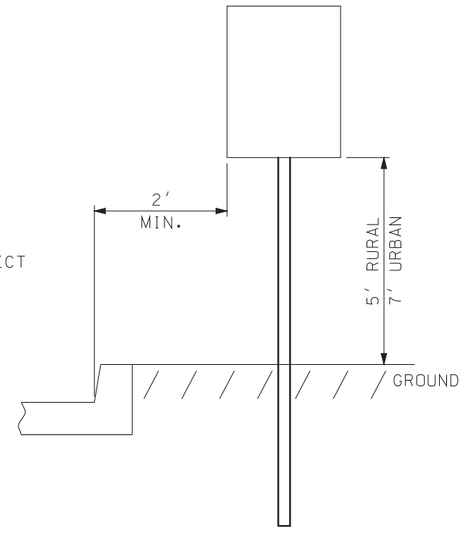

ADJACENT TO CURB

GENERAL NOTES:

SIGN MOUNTING BOLTS SHALL BE INSTALLED WITH A NYLON WASHER AGAINST THE SIGN FACE WITH A STEEL WASHER BETWEEN THE NYLON WASHER AND BOLT HEAD.

A LOCKNUT SHALL BE USED TO FASTEN THE SIGN TO THE POST.

VERTICAL CLEARANCE FROM THE ROADWAY SHALL BE MET AND INCREASED ONLY TO MEET THE 5′ MINIMUM VERTICAL CLEARANCE FROM THE GROUND.

HORIZONTAL OFFSET MAY BE ADJUSTED BASED ON FIELD CONDITIONS.

MOUNTING HEIGHT DETAILS

IF A SEAL IS PRESENT ON THIS SHEET IT HAS BEEN ELECTRONICALLY SEALED AND DATED.

MISSOURI HIGHWAYS AND TRANSPORTATION COMMISSION
105 WEST CAPITOL
JEFFERSON CITY, MO 65102
1-888-ASK-MODOT (1-888-275-6636)

STATE OF MISSOURI
ERIC E. SCHROETER
NUMBER PE-28411
PROFESSIONAL ENGINEER
THIS SHEET HAS BEEN SIGNED, SEALED AND DATED ELECTRONICALLY.

SIGN MOUNTING DETAILS
MOUNTING HEIGHT & OFFSET PIPE POSTS, PSST, WOOD & U-CHANNEL POSTS

DATE EFFECTIVE: 07/01/2017
DATE PREPARED: 5/1/2017

903.03BL

SHEET NO. 10 OF 16

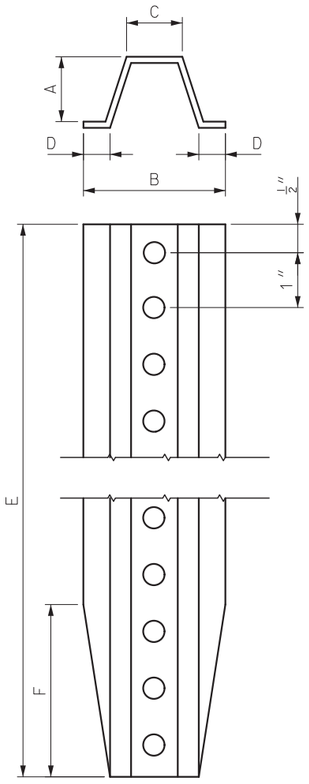

GROUND MOUNT
U-CHANNEL

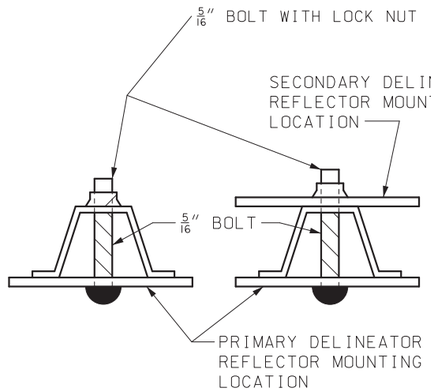

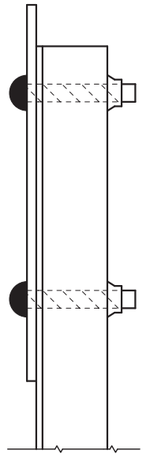

HOLE PUNCHING TO EQUAL 3/8" DIAMETER HOLES, ONE INCH CENTER TO CENTER, BEGINNING ONE-HALF INCH FROM THE END AND CONTINUING THE ENTIRE LENGTH OF THE POST.

CHANNEL POST DELINEATOR							
LIMITS	LBS/FT (2)	DIMENSIONS - INCHES					
		A	B	C	D	E	F
NOMINAL	1.12	1	2 1/4	7/8	3/8	84	1
TOLERANCE	± 5%	±1/8	±1/8	±1/8	±1/8	±1	±1/4

(2) WEIGHT BEFORE GALVANIZING OR PUNCHING.

THE CHANNEL POST FOR DELINEATORS SHALL BE MANUFACTURED FROM DUCTILE ASTM A 36 OR ASTM A 1011 GR 60.

CHANNEL POST DELINEATOR AND FASTENER DETAILS

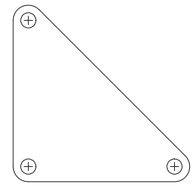

DELINEATOR PLACEMENT LOCATED AT THE RADIUS POINTS

TUBULAR DELINEATOR PLACEMENT FOR ISLANDS



DELINEATOR PLACEMENT FOR MEDIAN STRIPS

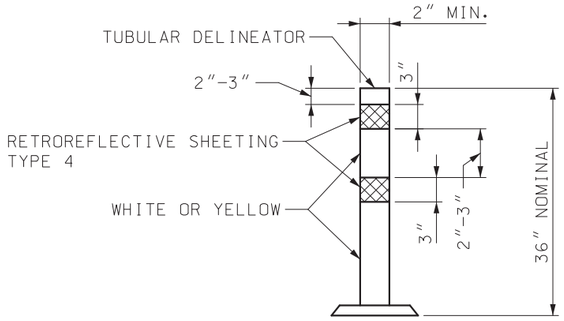

36 INCH SURFACE-MOUNT DELINEATOR POST

TUBULAR DELINEATOR DETAIL

COLOR OF TUBULAR DELINEATOR AND REFLECTIVE SHEETING SHALL MATCH THE COLOR OF THE CLOSEST PAVEMENT MARKING OR CURB MARKING.

TUBULAR DELINEATOR SHAPE MAY BE ROUND OR T-SHAPED. TUBULAR DELINEATOR SHALL BE PERMANENTLY MOUNTED TO THE PAVEMENT SURFACE IN ACCORDANCE WITH THE MANUFACTURER'S RECOMMENDATIONS.

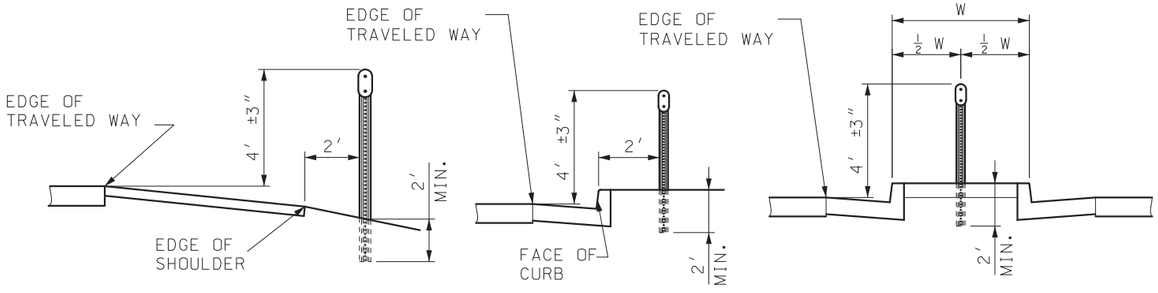

SHOULDER MOUNTED

OUTSIDE BARRIER CURB

NARROW PAVED MEDIAN

CHANNEL POST DELINEATOR MOUNTING DETAILS

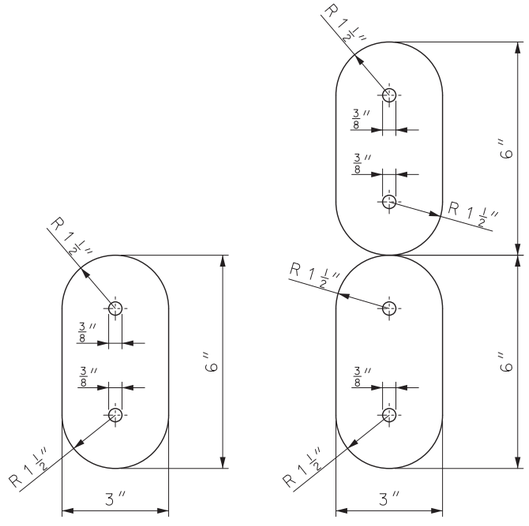

SINGLE

DOUBLE STACKED

CHANNEL POST DELINEATOR REFLECTOR

NOTES:

RETROREFLECTIVE YELLOW, WHITE OR RED SHEETING IN ACCORDANCE WITH ASTM D4956 TYPE 9 OR 11 SHALL BE APPLIED TO ONLY ONE SIDE OF THE DELINEATOR REFLECTOR BODY.

RETROREFLECTIVE SHEETING SHALL FOLLOW GUIDELINES OUTLINED IN SEC 1042.2.7.5 FOR CORRECT APPLICATION OF SHEETING TO DELINEATOR BODY. THE COLOR OF THE SHEETING SHALL MATCH THE CLOSEST ADJACENT PAVEMENT MARKING.

3" X 6" DELINEATOR BODY SHALL BE MADE FROM 0.080 INCH ALUMINUM.

MISSOURI HIGHWAYS AND TRANSPORTATION COMMISSION
105 WEST CAPITOL
JEFFERSON CITY, MO 65102
1-888-ASK-MODOT (1-888-275-6636)

STATE OF MISSOURI
NICOLE A. KOLB HOOD
NUMBER PE-2001018754
PROFESSIONAL ENGINEER
THIS SHEET HAS BEEN SIGNED, SEALED AND DATED ELECTRONICALLY.

SIGN MOUNTING DETAILS
DELINEATORS

DATE EFFECTIVE: 07/01/2019
DATE PREPARED: 5/20/2019

903.03BL

SHEET NO. 11 OF 16

IF A SEAL IS PRESENT ON THIS SHEET IT HAS BEEN ELECTRONICALLY SEALED AND DATED.

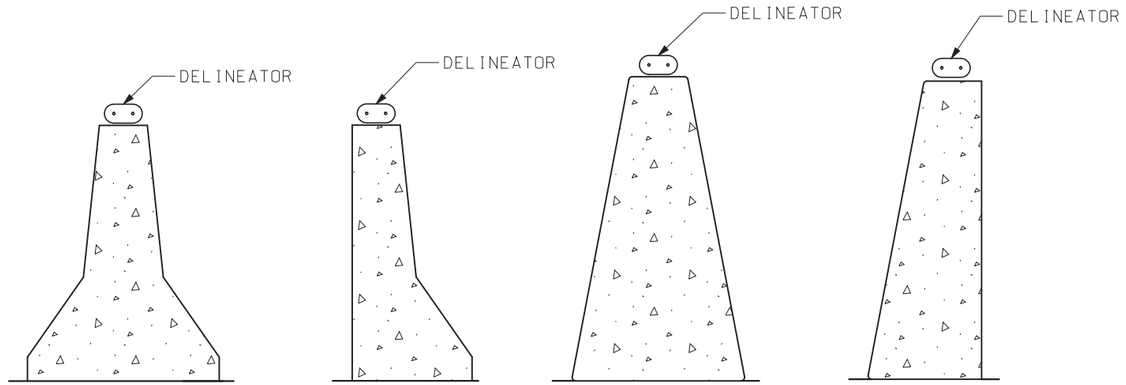

DELINEATORS ON CONCRETE TRAFFIC BARRIER

FOR CONCRETE BARRIER DETAILS,
SEE STD PLANS 617.10 OR BRIDGE PLANS.

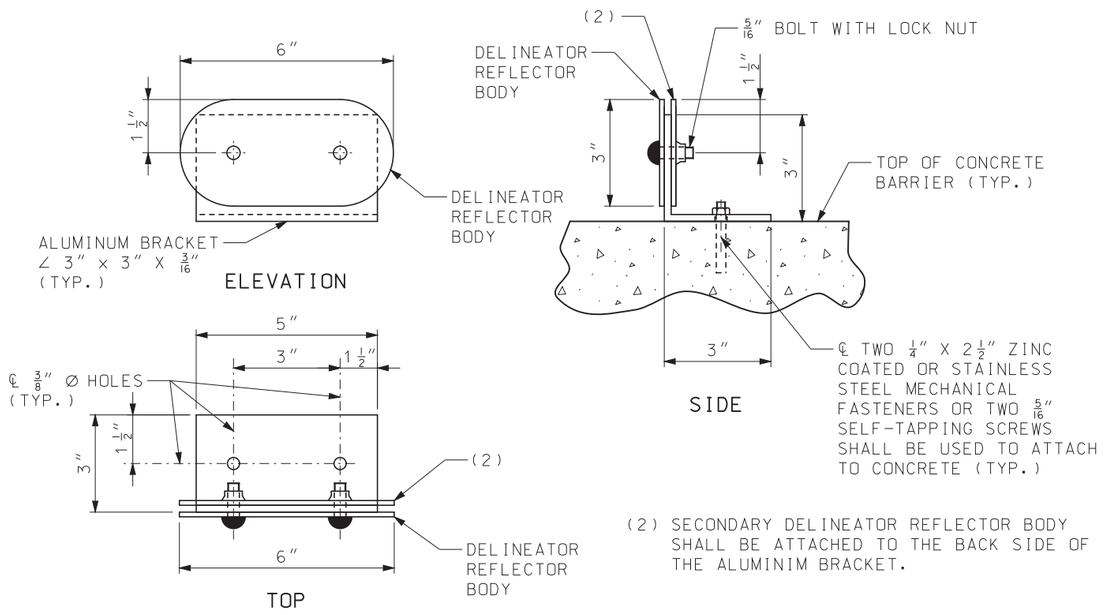

(2) SECONDARY DELINEATOR REFLECTOR BODY SHALL BE ATTACHED TO THE BACK SIDE OF THE ALUMINIM BRACKET.

DELINEATOR CONNECTION ON CONCRETE TRAFFIC BARRIER DETAIL

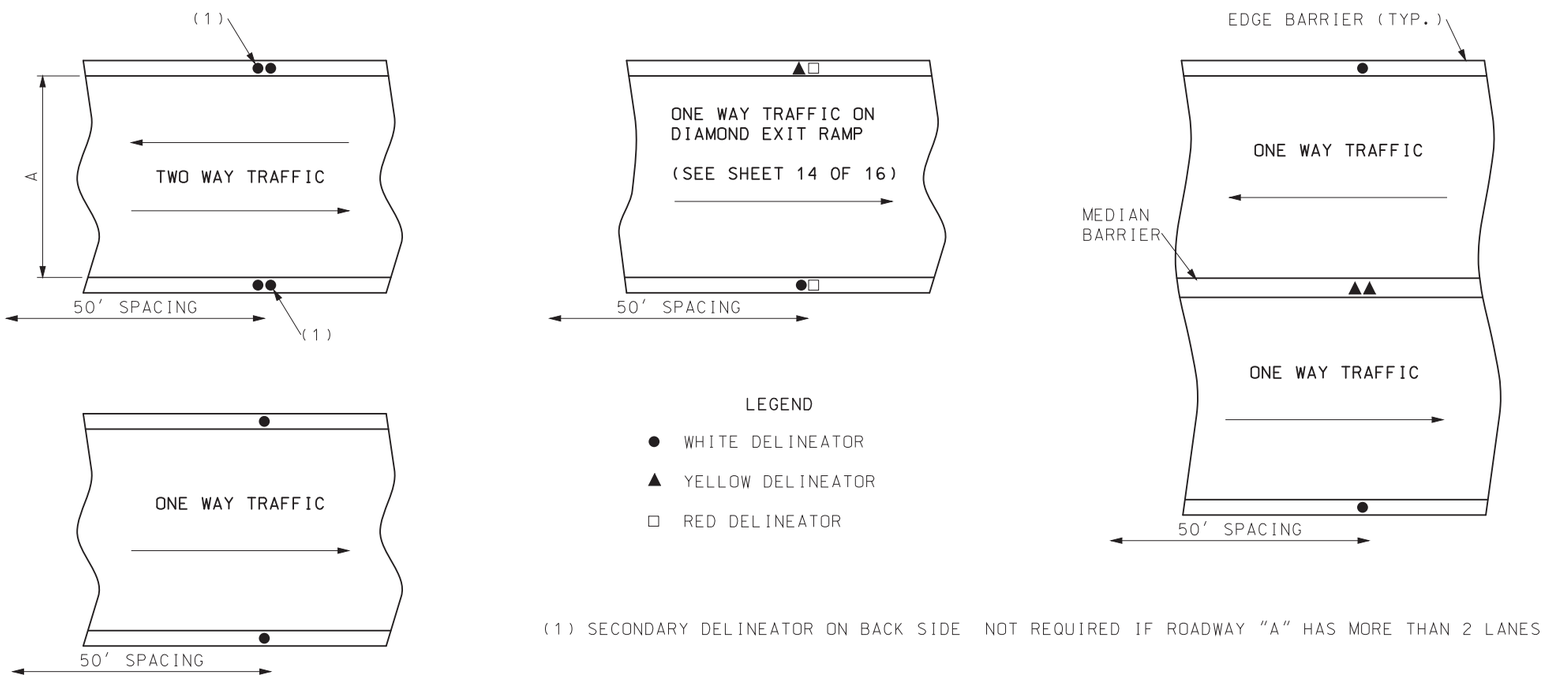

(1) SECONDARY DELINEATOR ON BACK SIDE NOT REQUIRED IF ROADWAY "A" HAS MORE THAN 2 LANES

ROADWAY OR BRIDGE CONCRETE TRAFFIC BARRIER DELINEATION

NOTES:

FOR GENERAL NOTES, SEE SHEET 1 OF 16.

RETROREFLECTIVE YELLOW, WHITE OR RED SHEETING IN ACCORDANCE WITH ASTM D 4956 TYPE 5 OR 8 SHALL BE APPLIED TO ONLY ONE SIDE OF THE DELINEATOR REFLECTOR BODY.

RETROREFLECTIVE SHEETING SHALL FOLLOW GUIDELINES OUTLINED IN SEC 1042.2.7 FOR CORRECT APPLICATION OF SHEETING TO DELINEATOR BODY. THE COLOR OF THE SHEETING SHALL MATCH THE CLOSEST ADJACENT PAVEMENT MARKING.

MISSOURI HIGHWAYS AND TRANSPORTATION COMMISSION
105 WEST CAPITOL
JEFFERSON CITY, MO 65102
1-888-ASK-MODOT (1-888-275-6636)

STATE OF MISSOURI
ERIC E. SCHROETER
NUMBER PE-28411
PROFESSIONAL ENGINEER
THIS SHEET HAS BEEN SIGNED, SEALED AND DATED ELECTRONICALLY.

SIGN MOUNTING DETAILS
CONCRETE BARRIER DELINEATORS

DATE EFFECTIVE: 07/01/2017
DATE PREPARED: 5/1/2017

903.03BL

SHEET NO.
12 OF 16

IF A SEAL IS PRESENT ON THIS SHEET IT HAS BEEN ELECTRONICALLY SEALED AND DATED.

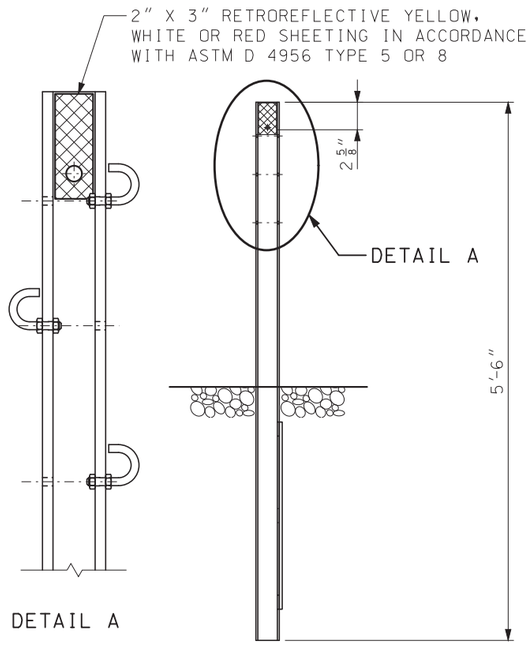

DETAIL A

DELINEATORS ON THREE-STRAND MEDIAN GUARD CABLE

FOR THREE-STRAND GUARD CABLE DETAILS SEE STD PLANS 606.41.

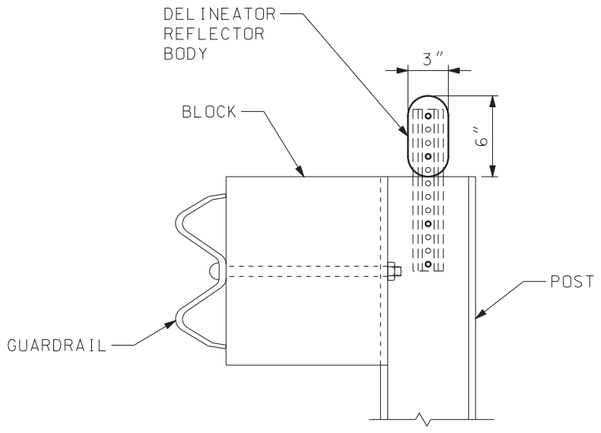

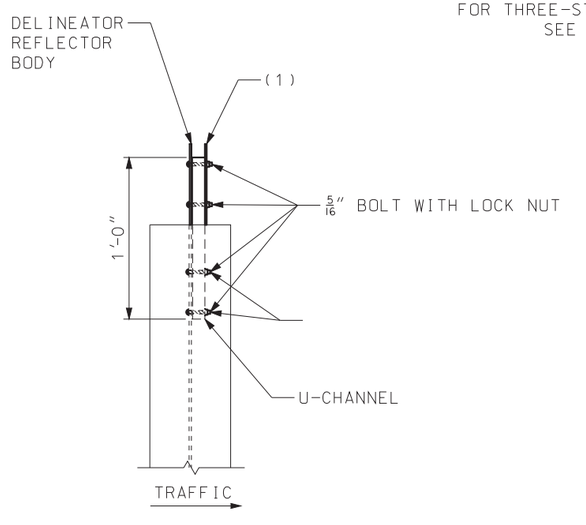

DELINEATORS ON GUARDRAIL

FOR GUARDRAIL DETAILS, SEE STD PLANS 606.00 AND 606.50.

(1) A SECONDARY DELINEATOR WITH RED SHEETING SHALL BE ATTACHED TO THE BACK SIDE OF THE CHANNEL WHEN THE DELINEATION IS PLACED ALONG AN INTERCHANGE RAMP AND COULD BE VIEWED BY WRONG WAY TRAFFIC.

NOTES:

FOR GENERAL NOTES, SEE SHEET 1 OF 16.

RETROREFLECTIVE YELLOW, WHITE OR RED SHEETING IN ACCORDANCE WITH ASTM D 4956 TYPE 5 OR 8 SHALL BE APPLIED TO ONLY ONE SIDE OF THE CHANNEL POST DELINEATOR MOUNTED TOWARDS THE CHANNEL POST.

RETROREFLECTIVE SHEETING SHALL FOLLOW GUIDELINES OUTLINED IN SEC 1042.2.7 FOR CORRECT APPLICATION OF SHEETING TO DELINEATOR BODY. THE COLOR OF THE SHEETING SHALL MATCH THE CLOSEST ADJACENT PAVEMENT MARKING.

MISSOURI HIGHWAYS AND TRANSPORTATION COMMISSION
105 WEST CAPITOL
JEFFERSON CITY, MO 65102
1-888-ASK-MODOT (1-888-275-6636)

STATE OF MISSOURI
ERIC E. SCHROETER
NUMBER PE-28411
PROFESSIONAL ENGINEER
THIS SHEET HAS BEEN SIGNED, SEALED AND DATED ELECTRONICALLY.

SIGN MOUNTING DETAILS
GUARDRAIL AND GUARDCABLE DELINEATORS

DATE EFFECTIVE: 07/01/2017
DATE PREPARED: 5/1/2017

903.03BL

SHEET NO.
13 OF 16

IF A SEAL IS PRESENT ON THIS SHEET IT HAS BEEN ELECTRONICALLY SEALED AND DATED.

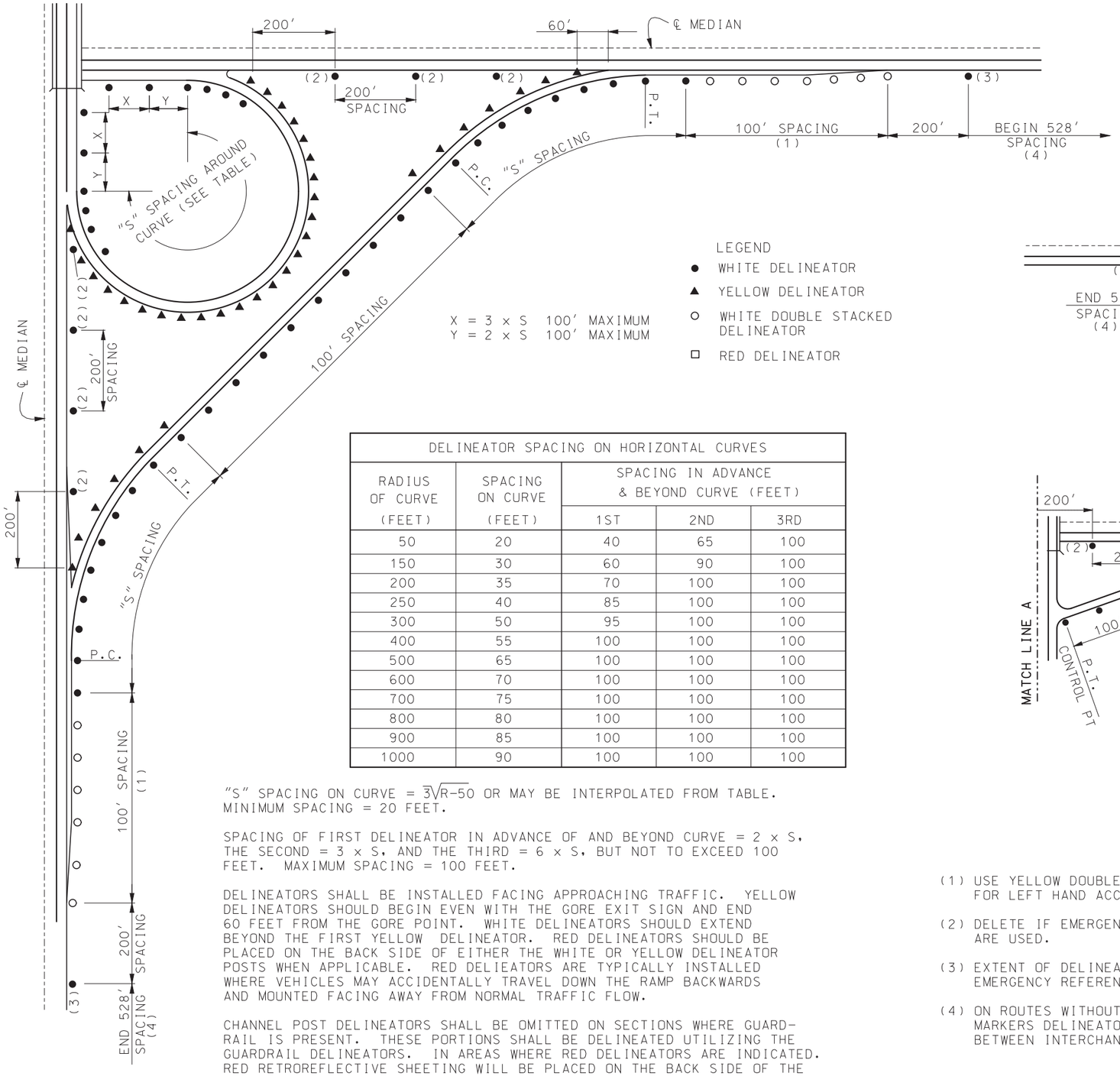

DELINEATOR SPACING ON HORIZONTAL CURVES				
RADIUS OF CURVE (FEET)	SPACING ON CURVE (FEET)	SPACING IN ADVANCE & BEYOND CURVE (FEET)		
		1ST	2ND	3RD
50	20	40	65	100
150	30	60	90	100
200	35	70	100	100
250	40	85	100	100
300	50	95	100	100
400	55	100	100	100
500	65	100	100	100
600	70	100	100	100
700	75	100	100	100
800	80	100	100	100
900	85	100	100	100
1000	90	100	100	100

"S" SPACING ON CURVE = $\sqrt[3]{R-50}$ OR MAY BE INTERPOLATED FROM TABLE. MINIMUM SPACING = 20 FEET.

SPACING OF FIRST DELINEATOR IN ADVANCE OF AND BEYOND CURVE = 2 × S, THE SECOND = 3 × S, AND THE THIRD = 6 × S, BUT NOT TO EXCEED 100 FEET. MAXIMUM SPACING = 100 FEET.

DELINEATORS SHALL BE INSTALLED FACING APPROACHING TRAFFIC. YELLOW DELINEATORS SHOULD BEGIN EVEN WITH THE GORE EXIT SIGN AND END 60 FEET FROM THE GORE POINT. WHITE DELINEATORS SHOULD EXTEND BEYOND THE FIRST YELLOW DELINEATOR. RED DELINEATORS SHOULD BE PLACED ON THE BACK SIDE OF EITHER THE WHITE OR YELLOW DELINEATOR POSTS WHEN APPLICABLE. RED DELIEATORS ARE TYPICALLY INSTALLED WHERE VEHICLES MAY ACCIDENTALLY TRAVEL DOWN THE RAMP BACKWARDS AND MOUNTED FACING AWAY FROM NORMAL TRAFFIC FLOW.

CHANNEL POST DELINEATORS SHALL BE OMITTED ON SECTIONS WHERE GUARD-RAIL IS PRESENT. THESE PORTIONS SHALL BE DELINEATED UTILIZING THE GUARDRAIL DELINEATORS. IN AREAS WHERE RED DELINEATORS ARE INDICATED. RED RETROREFLECTIVE SHEETING WILL BE PLACED ON THE BACK SIDE OF THE GUARDRAIL DELINEATOR.

REFLECTIVE SHEETING SHALL BE IN ACCORDANCE WITH SEC 1042.2.7.3.

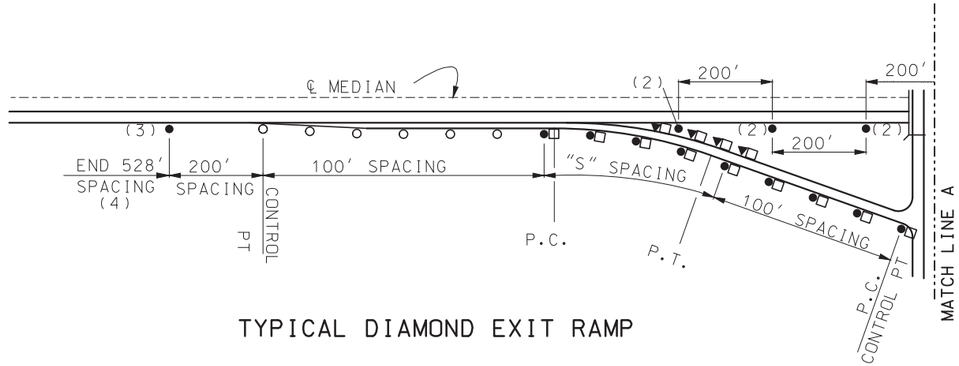

TYPICAL DIAMOND EXIT RAMP

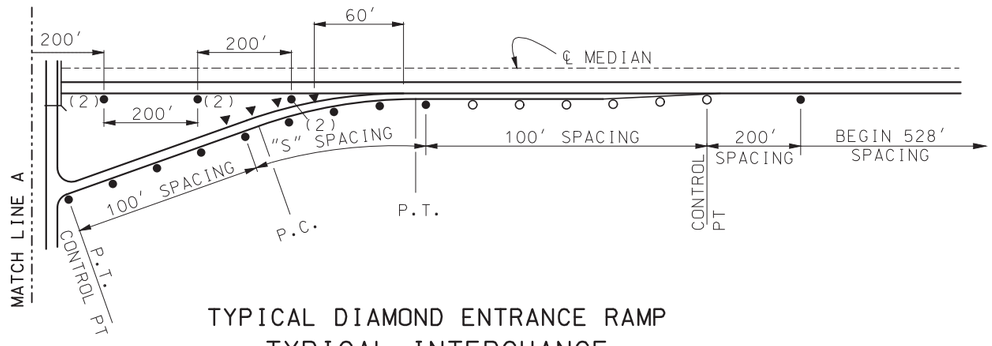

TYPICAL DIAMOND ENTRANCE RAMP
TYPICAL INTERCHANGE

(1) USE YELLOW DOUBLE STACKED DELINEATORS FOR LEFT HAND ACCEL/DECEL LANES.

(2) DELETE IF EMERGENCY REFERENCE MARKERS ARE USED.

(3) EXTENT OF DELINEATION ON ROUTES WITH EMERGENCY REFERENCE MARKERS.

(4) ON ROUTES WITHOUT EMERGENCY REFERENCE MARKERS DELINEATORS SHALL BE INSTALLED BETWEEN INTERCHANGES EVERY 528′.

NOTES:

FOR GENERAL NOTES, SEE SHEET 1 OF 16.

THE CONTRACT UNIT PRICE FOR EACH CHANNEL POST DELINEATOR SHALL INCLUDE THE REFLECTOR, FASTENERS AND POST.

MISSOURI HIGHWAYS AND TRANSPORTATION COMMISSION
105 WEST CAPITOL
JEFFERSON CITY, MO 65102
1-888-ASK-MODOT (1-888-275-6636)

STATE OF MISSOURI
ERIC E. SCHROETER
NUMBER PE-2841
PROFESSIONAL ENGINEER
THIS SHEET HAS BEEN SIGNED, SEALED AND DATED ELECTRONICALLY.

SIGN MOUNTING DETAILS
INTERCHANGE DELINEATION

DATE EFFECTIVE: 07/01/2017
DATE PREPARED: 5/1/2017

903.03BL

SHEET NO. 14 OF 16

IF A SEAL IS PRESENT ON THIS SHEET IT HAS BEEN ELECTRONICALLY SEALED AND DATED.

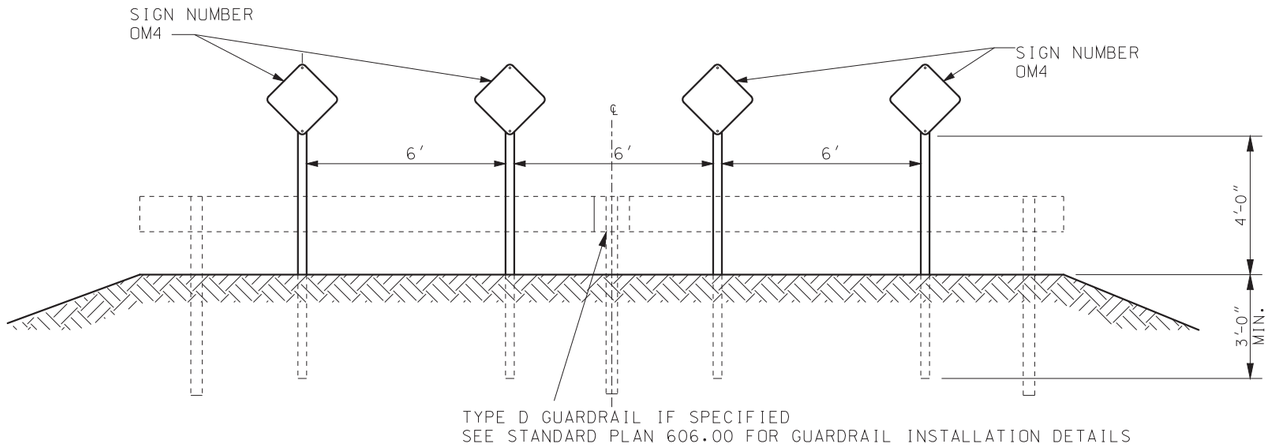

TYPE 4 OBJECT MARKER INSTALLATION

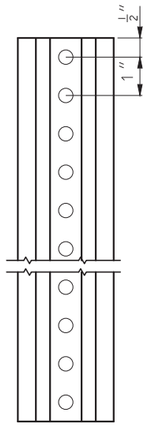

STEEL OBJECT MARKER POST					
LIMITS	LBS/FT (2)	DIMENSIONS – INCHES			
		A	B	C	D
MIN.	2.40	1 1/4	2 1/2	1	1/2
MAX.	2.80	1 5/8	3 1/4	1 3/8	3/4

(2) WEIGHT BEFORE GALVANIZING OR PUNCHING. LIMITS SHOWN ARE ABSOLUTE. NO FURTHER WEIGHT, DIMENSIONAL OR COMMERCIAL TOLERANCE WILL BE ACCEPTABLE.

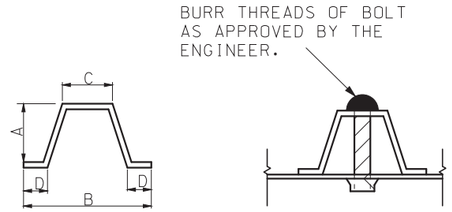

HOLE PUNCHING TO EQUAL 3/8″ DIAMETER HOLES, ONE INCH CENTER TO CENTER, BEGINNING ONE-HALF INCH FROM THE END AND CONTINUING THE ENTIRE LENGTH OF THE POST.

OBJECT MARKER POST AND FASTENER DETAILS

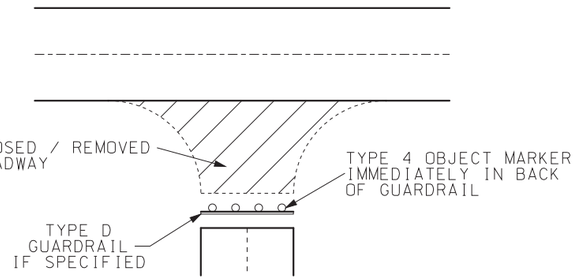

TYPICAL ROAD CLOSURE

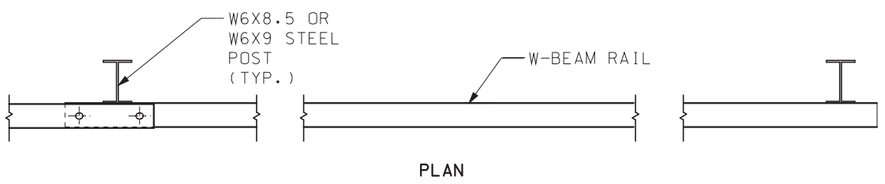

PLAN

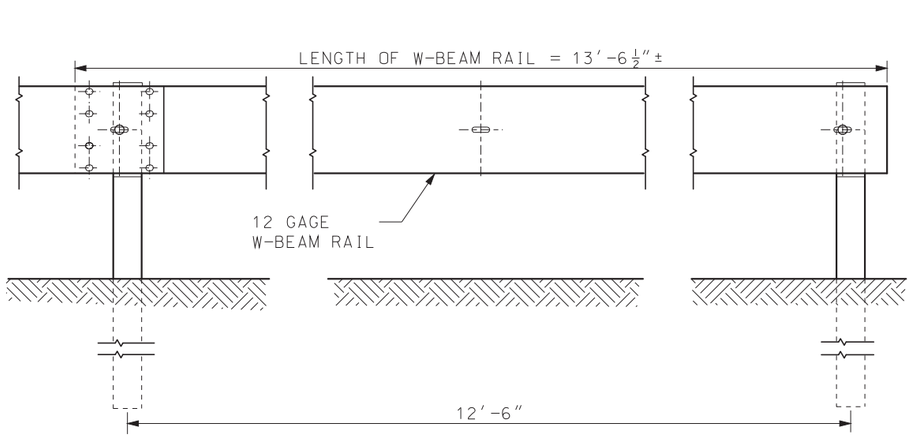

ELEVATION

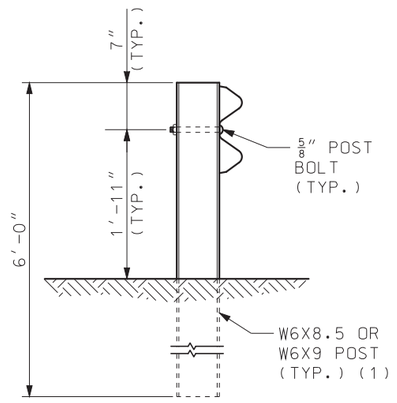

STEEL POST

(1) THE CONTRACTOR MAY FURNISH EQUIVALENT SECTIONS FABRICATED FROM MATERIAL MEETING AND IN ACCORDANCE WITH SEC 1040.

TYPE D GUARDRAIL

NOTES:

FOR GENERAL NOTES, SEE SHEET 1 OF 16.

TYPE D GUARDRAIL IS ACCESS RESTRAINT AND VISUAL TARGET VALUE ONLY. IT HAS NO REDIRECTIVE CAPABILITY.

MISSOURI HIGHWAYS AND TRANSPORTATION COMMISSION
105 WEST CAPITOL
JEFFERSON CITY, MO 65102
1-888-ASK-MODOT (1-888-275-6636)

STATE OF MISSOURI
ERIC E. SCHROETER
NUMBER PE-28411
PROFESSIONAL ENGINEER
THIS SHEET HAS BEEN SIGNED, SEALED AND DATED ELECTRONICALLY.

SIGN MOUNTING DETAILS OBJECT MARKERS FOR ROAD CLOSURE

DATE EFFECTIVE: 07/01/2017
DATE PREPARED: 5/1/2017

903.03BL

SHEET NO. 15 OF 16

IF A SEAL IS PRESENT ON THIS SHEET IT HAS BEEN ELECTRONICALLY SEALED AND DATED.

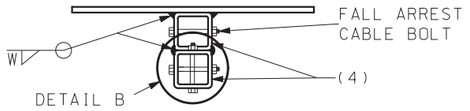

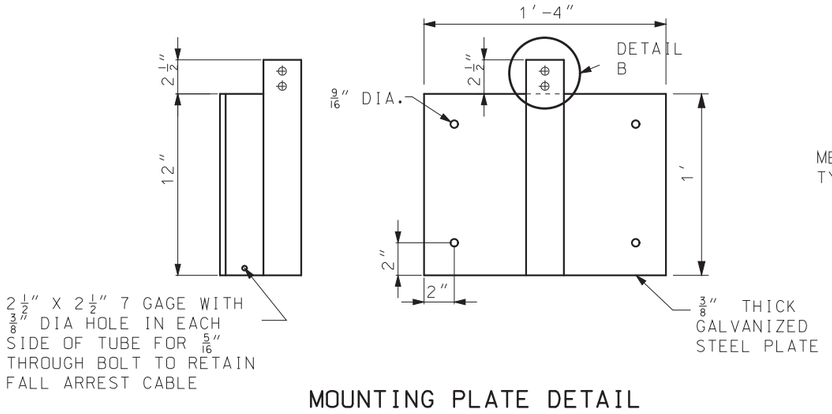

MOUNTING PLATE DETAIL

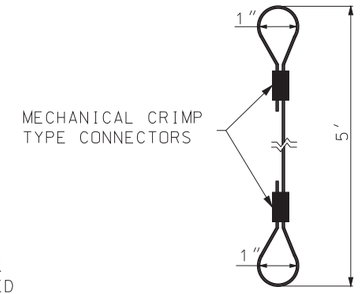

FALL ARREST CABLE DETAIL

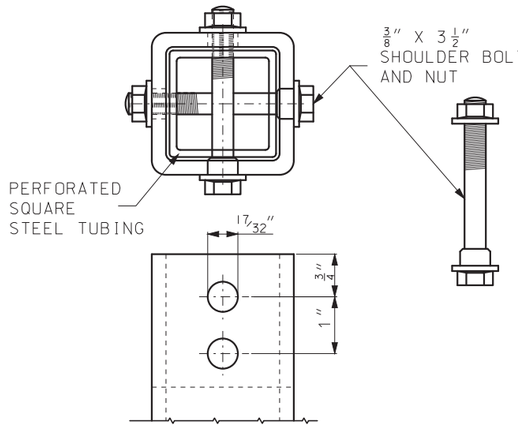

DETAIL B SHOULDER BOLT

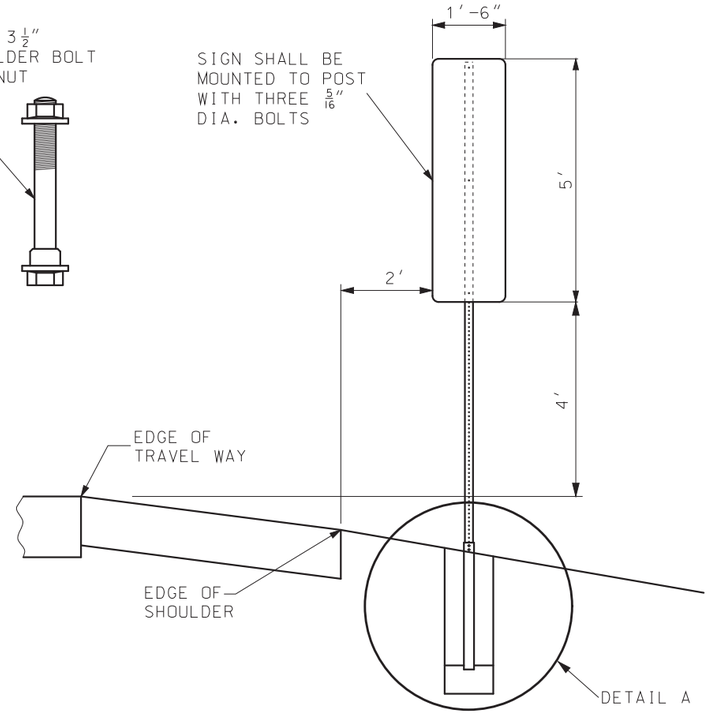

GROUND INSTALLATION

BARRIER WALL INSTALLATION

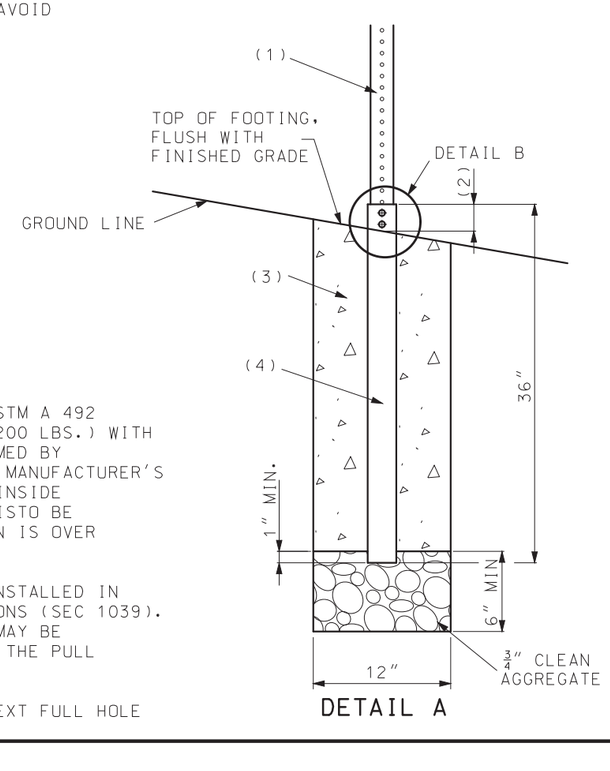

DETAIL A

(1) PERFORATED SQUARE STEEL TUBE 2″ X 2″ (O.D.) 12 GAUGE. TUBE SHALL EXTEND A MINIMUM OF 6″ BELOW THE TOP OF THE FOUNDATION TUBE.

(2) TUBE TO EXTEND ABOVE FOUNDATION ONLY ENOUGH TO ALLOW BOLT TO BE INSERTED 2½″ MAXIMUM.

(3) CONCRETE MIX TO HOLD FOUNDATION TUBE PLUMB WITH-OUT BRACING SHALL HAVE A MINIMUM OF 5.5 SACKS OF CEMENT PER CUBIC YARD AND A MAXIMUM SLUMP OF 2½″.

(4) 2½″ × 2½″ (O.D.) SQUARE TUBE GALVANIZED 7 GAGE WITH TWO 17/32″ DIAMETER HOLES IN EACH FACE ¾″ BELOW TOP OF TUBE.

(5) ⅛″× 5′ LONG STAINLESS STEEL CABLE (ASTM A 492 TYPE 304 MINIMUIM BREAKING STRENGTH 200 LBS.) WITH A 1″ DIA. LOOP AT EACH END LOOPS FORMED BY MECHANICAL CRIMP TYPE CONNECTION PER MANUFACTURER'S SPECIFICATIONS. CABLE IS TO BE RUN INSIDE PERFORATED SQUARE STEEL TUBE. CABLE ISTO BE USED ONLY WHEN SIGN MOUNTING LOCATION IS OVER ANOTHER TRAVELWAY.

(6) ½″ DIAMETER RESIN ANCHORS SHALL BE INSTALLED IN ACCORDANCE WITH STANDARD SPECIFICATIONS (SEC 1039). AN APPROVED MAECHANICAL TYPE ANCHOR MAY BE USED IF THE DEVICE EQUALS OR EXCEEDS THE PULL TEST REQUIREMENTS OF SEC. 1039.

(7) FALL ARREST CABLE TO BE SECURED TO NEXT FULL HOLE BELOW SIGN

NOTES:

FOR GENERAL NOTES, SEE SHEET 1 OF 16.

PERFORATED SQUARE STEEL TUBE SHALL BE SECURED TO FOUNDATION TUBE OR BARRIER WALL MOUNTING PLATE WITH A SHOULDER BOLT PER PERFORATED SQUARE STEEL TUBE MANUFACTURER'S SPECIFICATION.

MISSOURI HIGHWAYS AND TRANSPORTATION COMMISSION
105 WEST CAPITOL
JEFFERSON CITY, MO 65102
1-888-ASK-MODOT (1-888-275-6636)

STATE OF MISSOURI
ERIC E. SCHROETER
NUMBER PE-28411
PROFESSIONAL ENGINEER
THIS SHEET HAS BEEN SIGNED, SEALED AND DATED ELECTRONICALLY.

SIGN MOUNTING DETAILS
EMERGENCY REFERENCE MARKERS

DATE EFFECTIVE: 07/01/2017
DATE PREPARED: 5/1/2017

903.03BL

SHEET NO. 16 OF 16

IF A SEAL IS PRESENT ON THIS SHEET IT HAS BEEN ELECTRONICALLY SEALED AND DATED.

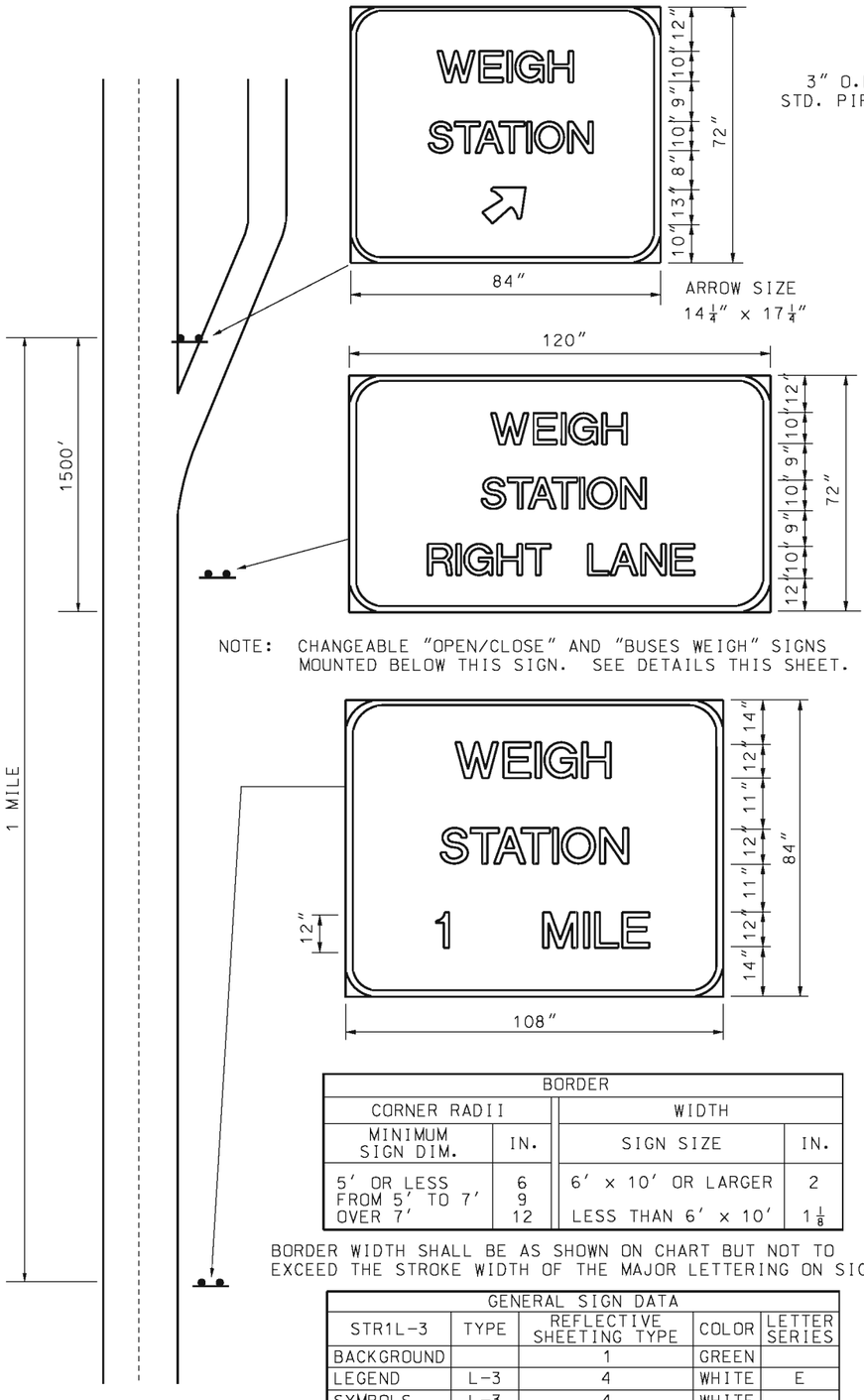

NOTE: CHANGEABLE "OPEN/CLOSE" AND "BUSES WEIGH" SIGNS MOUNTED BELOW THIS SIGN. SEE DETAILS THIS SHEET.

BORDER			
CORNER RADII		WIDTH	
MINIMUM SIGN DIM.	IN.	SIGN SIZE	IN.
5′ OR LESS	6	6′ x 10′ OR LARGER	2
FROM 5′ TO 7′	9		
OVER 7′	12	LESS THAN 6′ x 10′	1⅛

BORDER WIDTH SHALL BE AS SHOWN ON CHART BUT NOT TO EXCEED THE STROKE WIDTH OF THE MAJOR LETTERING ON SIGN.

GENERAL SIGN DATA				
STR1L-3	TYPE	REFLECTIVE SHEETING TYPE	COLOR	LETTER SERIES
BACKGROUND		1	GREEN	
LEGEND	L-3	4	WHITE	E
SYMBOLS	L-3	4	WHITE	
BORDER	L-3	4	WHITE	
SUBSTRATE	STRUCTURAL			

GUIDE SIGN DETAIL

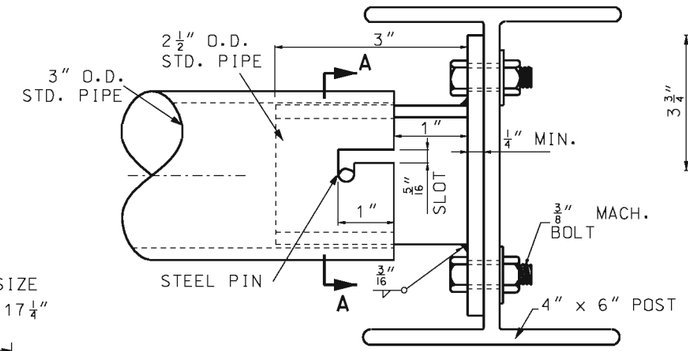

ASSEMBLY SHALL BE GALVANIZED AFTER FABRICATION

PLAN VIEW

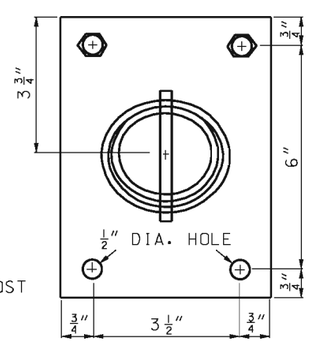

SECTION A-A

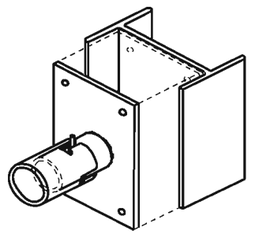

ISOMETRIC VIEW

BUSES WEIGH MOUNTING ASSEMBLY

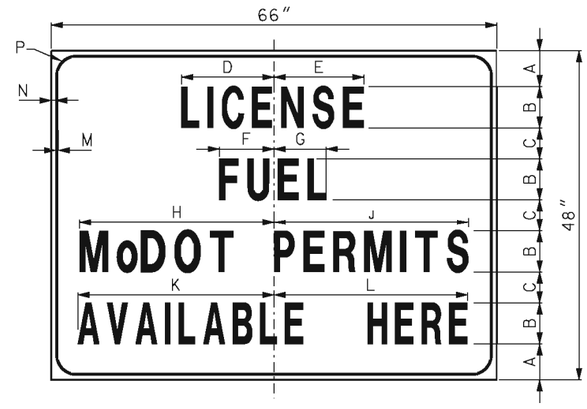

SIGN	A	B	C	D	E	F	G	H	J	K	L	M	N	P
R21-1	5¼″	6″	4½″	13½″	13⅛″	8″	7⅝″	28⅜″	28⅜″	28⅝″	28¼″	⅜″	⅝″	3″

GENERAL SIGN DATA				
SHR1L-1	TYPE	REFLECTIVE SHEETING TYPE	COLOR	LETTER SERIES
BACKGROUND		1	WHITE	
LEGEND	L-1		BLACK	C
SYMBOLS				
BORDER	L-1		BLACK	
SUBSTRATE	SHEET			

PERMIT SIGN DETAIL

FOR OPEN AND CLOSED SIGN SEE SPECIAL PROVISIONS



MAXIMUM HEIGHT FROM BOTTOM OF BUSES WEIGH SIGN TO GROUND SHALL BE 60″.

GENERAL SIGN DATA				
SHR1L-3	TYPE	REFLECTIVE SHEETING TYPE	COLOR	LETTER SERIES
BACKGROUND		1	GREEN	
LEGEND	L-3	4	WHITE	E
SYMBOLS				
BORDER	L-3	4	WHITE	
SUBSTRATE	SHEET			

CHANGEABLE SIGN DETAIL

SUBSTRATE
ST STRUCTURAL
SH SHEET

LEGEND, SYMBOLS, & BORDER
L-1 SCREEN PRINT
L-3 DIRECT APPLIED (CUT FROM MATERIAL SHOWN ON PLANS.)

REFLECTIVE SHEETING
R1 ENGINEERING GRADE IN ACCORDANCE WITH SEC 1042.2.7.1
R4 PRISMATIC IN ACCORDANCE WITH SEC 1042.2.7.3

MATERIAL LIST		
NO.	DESCRIPTION	LB.
2	¼″ STEEL PLATE	2.26
1	3″ STANDARD PIPE	32.44
2	2-1/2″ STANDARD PIPE	3.89
8	⅜″ GALV. MACH. BOLT	
8	GALV. WASHER	

GENERAL NOTES:

DESIGN SPECS: AASHTO STANDARD SPECIFCATIONS FOR STRUCTURAL SUPPORTS FOR HIGHWAY SIGNS, LUMINARES, AND TRAFFIC SIGNALS - 1975.

MATERIALS AND FABRICATION SHALL CONFORM TO THE REQUIREMENTS OF THE STATE HIGHWAY AND TRANSPORTATION COMMISSION STANDARD SPECIFICATIONS AND PROVISIONS.

MISSOURI HIGHWAYS AND TRANSPORTATION COMMISSION
105 WEST CAPITOL
JEFFERSON CITY, MO 65102
1-888-ASK-MODOT (1-888-275-6636)

STATE OF MISSOURI
KATHRYN PHILLIPS HARVEY
NUMBER PE-23751
PROFESSIONAL ENGINEER
THIS SHEET HAS BEEN SIGNED, SEALED AND DATED ELECTRONICALLY.

HIGHWAY SIGNING
WEIGH STATION

DATE EFFECTIVE: 02/01/2012
DATE PREPARED: 12/19/2011

903.04F

SHEET NO. 1 OF 1

IF A SEAL IS PRESENT ON THIS SHEET IT HAS BEEN ELECTRONICALLY SEALED AND DATED.

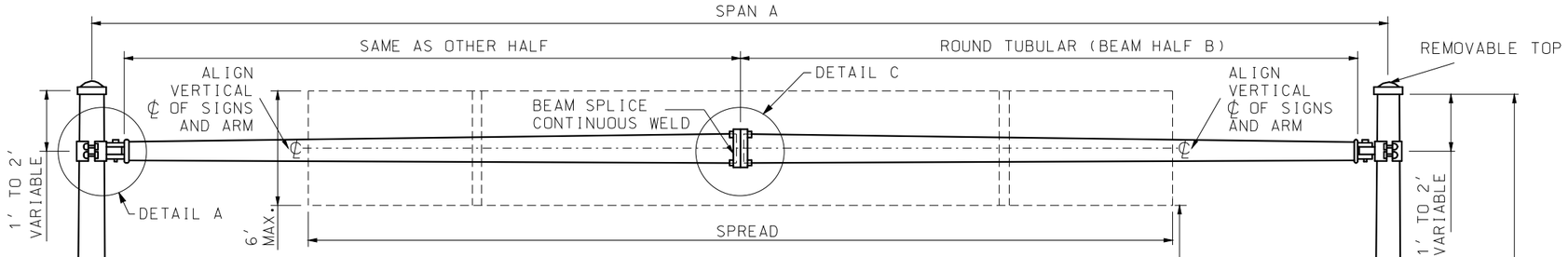

SPAN A	SPREAD FEET											
	15	20	25	30	35	40	45	50	55	60	65	70
31'-6"	143	152			MAXIMUM SIGN AREA							
35'-0"	126	138	153		SQUARE FEET							
41'-3"	106	120	130	144								
41'-6"	124	134	144	155								
45'-0"	102	112	121	132	144							
51'-3"	78	88	98	108	118	129						
51'-6"	109	119	129	141	154	168						
55'-0"	88	98	108	119	131	142	155					
61'-3"	69	80	91	101	110	121	130	142				
61'-6"		115	124	133	144	157	170	182				
65'-0"		98	107	117	128	140	152	164	176			
71'-3"		80	89	98	109	121	132	144	156	164		
71'-6"		110	121	131	142	152	162	173	184	197		
75'-0"		94	104	114	124	139	144	154	165	176	187	
81'-3"		84	94	104	116	126	131	146	157	168	179	190

W=40 POUNDS PER SQUARE FOOT.

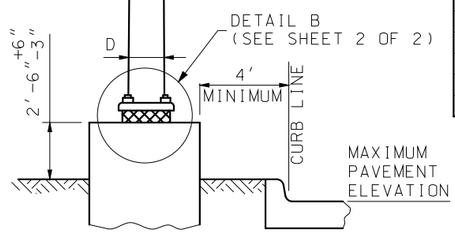

TYPE NO.	SPAN A	GA.	DIMENSIONS	END POST GA.	END POST D
S-1310	31'-6" THRU 41'-3"	3	8.8" x 6" x 20'	3	10"
S-1310	41'-6" THRU 51'-3"	3	9.5" x 6" x 25'	3	10"
S-1310	51'-6" THRU 61'-3"	3	10.5" x 6.3" x 30'	3	10"
S-1312	61'-6" THRU 71'-3"	7	14" x 9.1" x 35'	3	12"
S-1312	71'-6" THRU 81'-3"	7	16" x 10.4" x 40'	3	12"

NOTES:
DESIGN SPANS IN EVEN 3" INCREMENTS. SPECIFY SPAN A REQUIRED. FOR SPAN LENGTHS LESS THAN MAXIMUM FOR A DESIGNATED RANGE, THE LARGER DIAMETER OF THE CROSS BEAM IS HELD AND THE SMALLER DIAMETER WILL INCREASE AS LENGTH IS REDUCED. DESIGN POSTS IN EVEN 1" INCREMENTS.

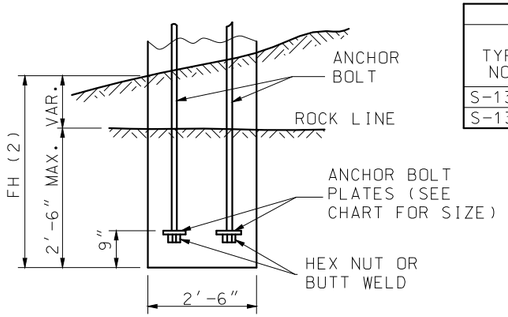

REINFORCEMENT PLACED SAME AS STANDARD FOOTING.
CONCRETE TO BE POURED TO EXCAVATED FACE OF ROCK.

MODIFIED FOOTING IN SOLID ROCK

(2) NOT TO EXCEED 5' FOR S-1310,
NOT TO EXCEED 6'-6" FOR S-1312.

ESTIMATED QUANTITIES FOOTING								
TYPE NO.	DIA. FD	CLASS B CONCRETE 1' DEPTH CU. YD.	CLASS B CONCRETE 1" DEPTH CU. YD.	REINFORCING STEEL #5 NO.	#5 LENGTH	#4 (3) NO.	#4 (3) LENGTH	TOTAL LBS.
S-1310	2'-6"	0.1818	0.01515	6	8'-9"	10	7'-2"	103
S-1312	2'-6"	0.1818	0.01515	6	10'-3"	12	7'-2"	121

(3) ESTIMATED QUANTITY FOR REINFORCING STEEL IS BASED ON A 1V:2H SLOPE.

MODIFIED FOOTING IN SOLID ROCK		
TYPE NO.	ANCHOR BOLT (1)	ANCHOR BOLT PLATE
S-1310	1 1/2" DIA.	3 1/2" x 3 1/2" x 3/4"
S-1312	1 3/4" DIA.	3 1/2" x 3 1/2" x 3/4"

(1) ANCHOR BOLT LENGTH AS REQUIRED

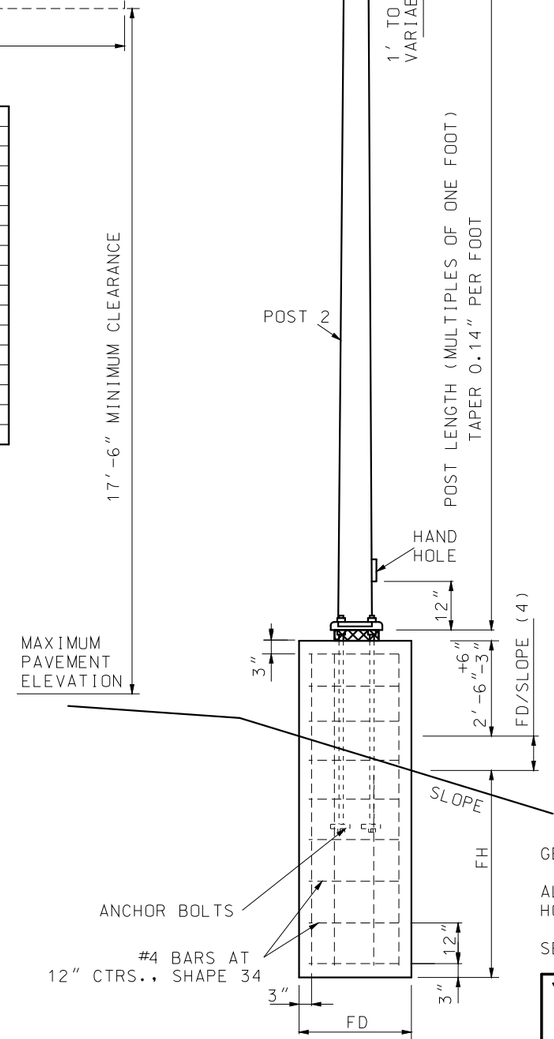

ELEVATION

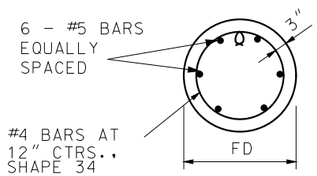

PLAN
FOOTINGS

(4) EXAMPLE: IF SLOPE IS 1V:6H, THE DENOMINATOR IS 6

GENERAL NOTES:

ALL SIGNS SHALL BE CENTERED VERTICALLY ABOUT THE HORIZONTAL ℄ OF THE ARM.

SEE SHEET 2 OF 2 FOR DETAILS A, B AND C.

IF A SEAL IS PRESENT ON THIS SHEET IT HAS BEEN ELECTRONICALLY SEALED AND DATED.

MISSOURI HIGHWAYS AND TRANSPORTATION COMMISSION
105 WEST CAPITOL
JEFFERSON CITY, MO 65102
1-888-ASK-MODOT (1-888-275-6636)

STATE OF MISSOURI
EILEEN H. RACKERS
NUMBER PE-28336
PROFESSIONAL ENGINEER
THIS SHEET HAS BEEN SIGNED, SEALED AND DATED ELECTRONICALLY.

HIGHWAY SIGNING

TUBULAR SUPPORT STEEL
TYPE S
ONE TUBE

DATE EFFECTIVE: 10/01/2016
DATE PREPARED: 8/11/2016

903.05J

SHEET NO. 1 OF 2

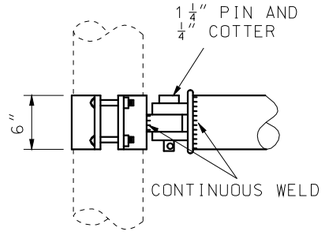

TUBE DIAMETER EQUAL TO
OR LESS THAN 10½"
AT CENTER OF SPAN

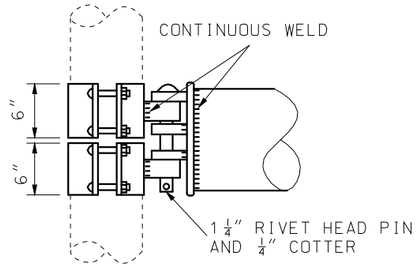

TUBE DIAMETER GREATER THAN 10½"
AT CENTER OF SPAN

DETAIL A

BEAM CLAMP

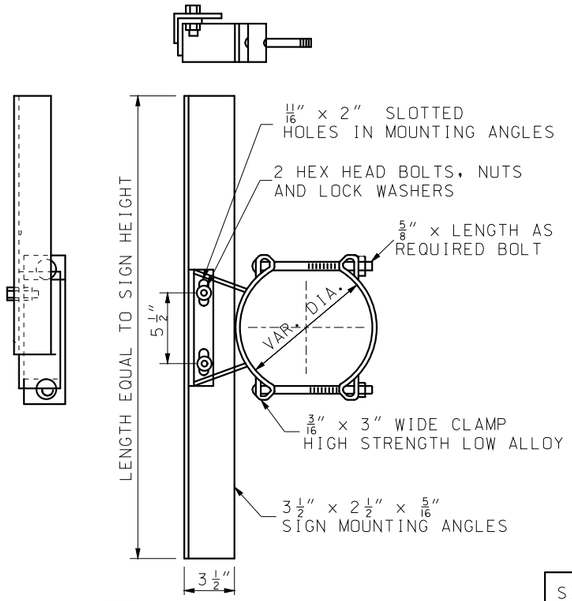

NOTE:
MINIMUM OF TWO BRACKETS ARE REQUIRED
FOR SIGNS OVER 42" IN LENGTH.

SIGN HEIGHT (INCHES)	MAXIMUM LIN. FT. OF SIGN WIDTH PER BRACKET
48 & UNDER	13
60	8
72	5

GALVANIZED SIGN BRACKET ASSEMBLY

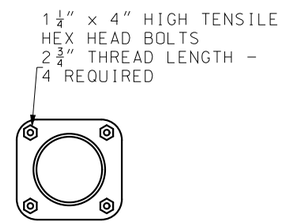

SECTION A-A

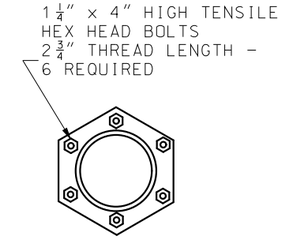

SECTION B-B

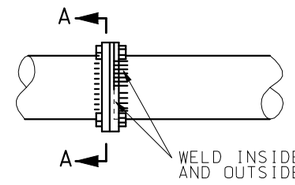

TUBE DIAMETER 9½"
AND UNDER

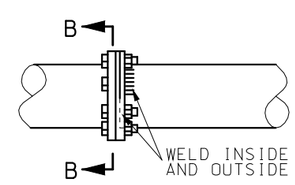

TUBE DIAMETER
OVER 9½"

DETAIL C

BEAM SPLICE

POST BASE DIMENSIONS AND DATA												
TYPE NO.	BOLT CIRCLE	C	F	H	S	R	P	T	E	ANCHOR BOLT	FOOTING	
											FH	FD
S-1310	13½"	17½"	9 9/16"	1¾"	14⅛"	3⅜"	3¾"	1½"	7"	1½" x 60"	5'-0"	2'-6"
S-1312	16"	21"	11 5/16"	2⅛"	17"	3¾"	4½"	2"	7½"	1¾" x 90"	6'-6"	2'-6"

ANCHOR BOLTS AS SPECIFIED.
THREAD UPPER PORTION E.
GALVANIZE ENTIRE LENGTH OF
BOLT AND ALL NUTS AND WASHERS.

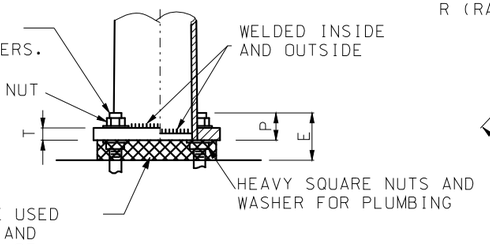

A GALVANIZED SCREEN SHALL BE USED BETWEEN THE POST BASE PLATE AND CONCRETE BASE. SCREENS SHALL BE PRESS-FORMED OF 3 OR 4 MESH. 21 GAGE OR HEAVIER. STAINLESS STEEL OR HOT-DIPPED GALVANIZED WIRE SCREEN OR APPROVED EQUIVALENT. THAT WILL PROVIDE A FRICTION-TIGHT FIT WHEN INSTALLED.

ELEVATION

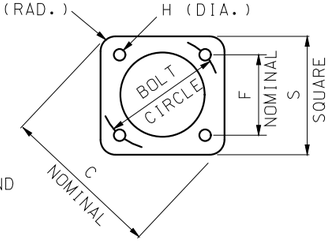

PLAN

DETAIL B

POST BASE

IF A SEAL IS PRESENT ON THIS SHEET IT HAS BEEN ELECTRONICALLY SEALED AND DATED.

MISSOURI HIGHWAYS AND TRANSPORTATION COMMISSION
105 WEST CAPITOL
JEFFERSON CITY, MO 65102
1-888-ASK-MODOT (1-888-275-6636)

STATE OF MISSOURI
EILEEN H. RACKERS
NUMBER PE-28336
PROFESSIONAL ENGINEER
THIS SHEET HAS BEEN SIGNED, SEALED AND DATED ELECTRONICALLY.

HIGHWAY SIGNING

TUBULAR SUPPORT STEEL
TYPE S
ONE TUBE

DATE EFFECTIVE: 10/01/2016
DATE PREPARED: 8/11/2016

903.05J

SHEET NO.
2 OF 2

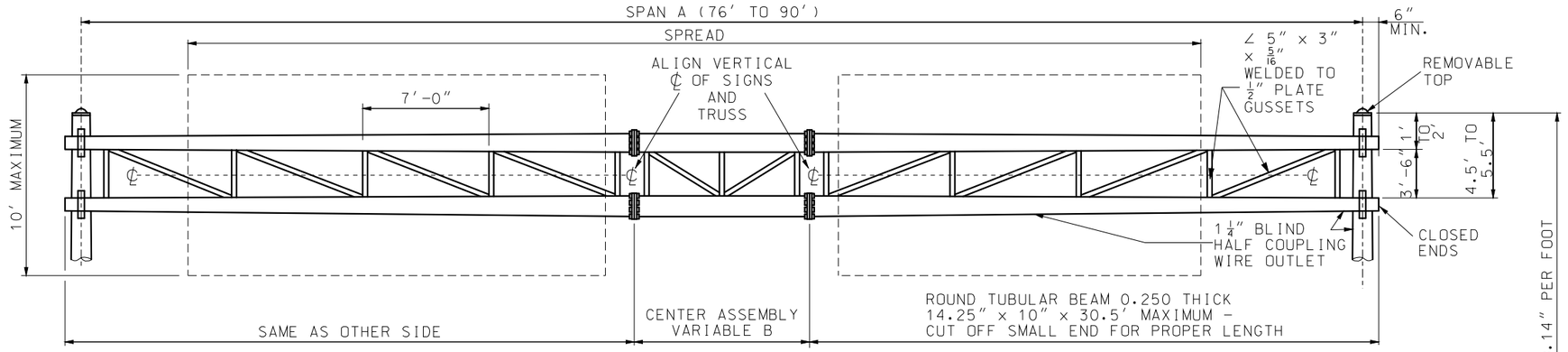

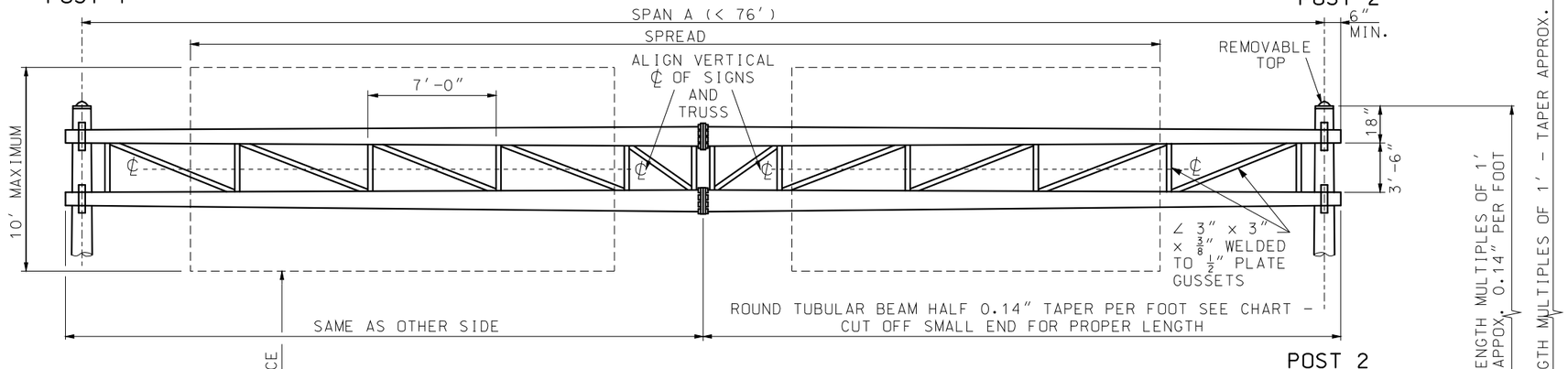

TWO END POST			
TYPE	GA	D INCHES	ALLOWABLE MOMENT-FT-LBS.
S-2315	3	15	120 000
S-2316.5	3	16.5	147 000
S-2318	3	18	177 000
S-27716	7+7	16	214 000
S-2018	0	18	222 000
S-27718	7+7	18	255 000
S-23316.5	3+3	16.5	292 000
S-23317	3+3	17	328 000
S-20018	0+0	18	453 000

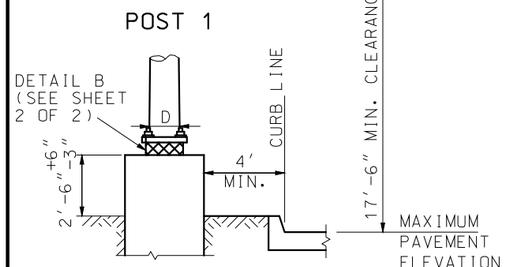

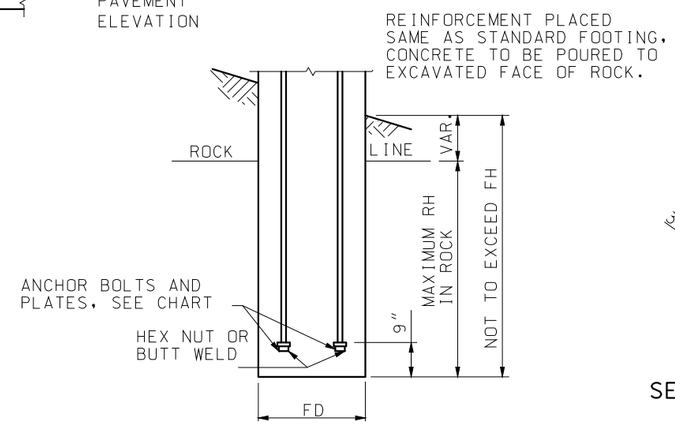

MODIFIED FOOTING IN SOLID ROCK

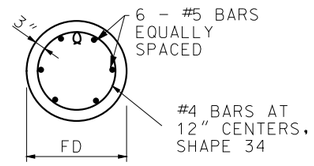

SECTION A-A

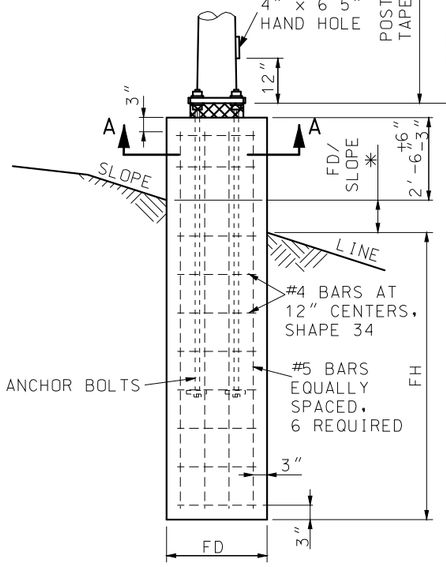

ELEVATION

* EXAMPLE: IF SLOPE IS 1V:6H, THE DENOMINATOR IS 6

GENERAL NOTES:

USE LONGEST POST AND SPAN A (NEXT GREATER IF NOT CHARTED) TO DETERMINE END POSTS AND STRUCTURE DESIGNS. MAXIMUM SIGN AREA FOR GIVEN SPREAD (INTERPOLATE FOR UNCHARTED SPREADS) NOT TO BE EXCEEDED. SUPPORTS DESIGNED BY END POST TYPE AND SPAN A (I.E. S-2315-40 ETC.).

ALL SIGNS SHALL BE CENTERED VERTICALLY ABOUT THE HORIZONTAL ℄ OF THE TRUSS.

IF A SEAL IS PRESENT ON THIS SHEET IT HAS BEEN ELECTRONICALLY SEALED AND DATED.

MISSOURI HIGHWAYS AND TRANSPORTATION COMMISSION
105 WEST CAPITOL
JEFFERSON CITY, MO 65102
1-888-ASK-MODOT (1-888-275-6636)

STATE OF MISSOURI
EILEEN H. RACKERS
NUMBER PE-28336
PROFESSIONAL ENGINEER
THIS SHEET HAS BEEN SIGNED, SEALED AND DATED ELECTRONICALLY.

HIGHWAY SIGNING

TUBULAR SUPPORT STEEL
TYPE S
TWO TUBES

DATE EFFECTIVE: 10/01/2016
DATE PREPARED: 8/11/2016

903.06J

SHEET NO. 1 OF 2

FOOTINGS

SPAN A	SPREAD IN FEET													STRUCTURE						POSTS FOR MAXIMUM AREA								
														TUBULAR BEAMS			CENTER SECTION B			LENGTH OF POSTS IN FEET								
FEET	30	35	40	45	50	55	60	65	70	75	80	85	90	GA	LARGE DIA.	MIN. L	THICK-NESS	O.D.	LENGTH	18	19	20	21	22	23	24	25	26	27
40	300													3	9.5"	20.5'				S-2315	S-2315	S-2315	S-2316.5	S-2316.5	S-2316.5	S-2318	S-2318	S-2318	S-2318
45	264	288												3	9.5"	23.0'				S-2315	S-2315	S-2315	S-2316.5	S-2316.5	S-2316.5	S-2318	S-2318	S-2318	S-2318
50	282	308	336											3	10.5"	25.5'				S-2315	S-2316.5	S-2316.5	S-2316.5	S-2318	S-2318	S-2318	S-27716	S-27716	S-27716
55	238	262	284	310										3	10.5"	28.0'				S-2315	S-2316.5	S-2316.5	S-2316.5	S-2318	S-2318	S-2318	S-2318	S-27716	S-27716
60	266	288	314	340	364									7	14.0"	30.5'				S-2318	S-27716	S-27716	S-27716	S-2018	S-27718	S-27718	S-27718	S-23316.5	S-23316.5
65	234	256	280	304	328	352								7	14.0"	33.0'				S-2318	S-27716	S-27716	S-27716	S-27716	S-27718	S-27718	S-27718	S-23316.5	S-23316.5
70	262	284	304	324	346	368	394							3	14.0"	35.5'				S-27716	S-27716	S-27716	S-27718	S-27718	S-27718	S-23316.5	S-23316.5	S-23316.5	S-23317
75	228	248	268	288	308	330	352	374						3	14.0"	38.0'				S-27716	S-27716	S-27716	S-2018	S-27718	S-27718	S-27718	S-23316.5	S-23316.5	S-23316.5
76	295	308	326	350	370	397	425	450	472	502				3	14.25"	30.5'	312"	14.238"	16'	S-27716	S-27718	S-27718	S-27718	S-23316.5	S-23316.5	S-23317	S-23317	S-23317	S-20018
79	310	326	347	366	384	410	432	460	490	520				3	14.25"	28.5'	312"	14.238"	23'	S-2018	S-27718	S-27718	S-23316.5	S-23316.5	S-23317	S-23317	S-23317	S-20018	S-20018
83	277	288	300	322	340	360	385	412	434	465	498			3	14.25"	30.5'	312"	14.238"	23'	S-27716	S-2018	S-27718	S-27718	S-23316.5	S-23316.5	S-23316.5	S-23317	S-23317	S-20018
86	297	309	322	337	356	378	402	425	447	473	500	522		3	14.25"	28.0'	312"	14.238"	30'	S-2018	S-27718	S-27718	S-23316.5	S-23316.5	S-23317	S-23317	S-23317	S-20018	S-20018
90	269	280	294	310	327	345	363	385	403	426	446	466	485	3	14.25"	30.5'	312"	14.238"	30'	S-27716	S-27718	S-27718	S-23316.5	S-23316.5	S-23316.5	S-23317	S-23317	S-20018	S-20018

MAXIMUM SIGN AREA IN SQ. FEET

TYPE NO.	BOLT CIRCLE	C	F	H	P	R	S	T	E	FOOTINGS IN EARTH DIA. FD	FH	ANCHOR BOLTS DIA.	ANCHOR BOLTS LENGTH	FOOTINGS IN SOLID ROCK RH MAX	ANCHOR BOLTS DIA.	ANCHOR BOLTS LENGTH	PLATES	ESTIMATED QUANTITIES OF STANDARD FOOTINGS CLASS B CONC CY/FT	CY/IN	REINFORCING STEEL #5 BARS NO.	#5 BARS LENGTH	#4 BARS * NO.	#4 BARS * LENGTH	TOTAL LBS.
S-2315	22"	$28\frac{5}{8}$"	$15\frac{1}{2}$"	$2\frac{3}{8}$"	$4\frac{3}{4}$"	$4\frac{5}{8}$"	23"	2"	$8\frac{1}{2}$"	2'-6"	8'	2"	96"	3'	2"	AS REQUIRED SEE ROCK FOOTING	3.5" x 3.5" x 0.75"	0.1818	0.01515	6	11'-9"	13	7'-2"	136
S-2316.5	$23\frac{1}{2}$"	$30\frac{1}{2}$"	$16\frac{5}{8}$"	$2\frac{3}{8}$"	$4\frac{3}{4}$"	5"	$24\frac{1}{2}$"	2"	$8\frac{1}{2}$"	3'-0"	10'	2"	96"	3'	2"		3.5" x 3.5" x 0.75"	0.2618	0.0218	6	14'-0"	15	8'-9"	176
S-2318	$25\frac{1}{2}$"	33"	18"	$2\frac{3}{8}$"	$4\frac{3}{4}$"	$5\frac{1}{2}$"	$26\frac{1}{2}$"	2"	$8\frac{1}{2}$"	3'-0"	10'	2"	96"	3'	2"		3.5" x 3.5" x 0.75"	0.2618	0.0218	6	14'-0"	15	8'-9"	176
S-27716	$23\frac{1}{2}$"	$30\frac{1}{2}$"	$16\frac{5}{8}$"	$2\frac{5}{8}$"	5"	$5\frac{1}{2}$"	$24\frac{1}{2}$"	$2\frac{1}{2}$"	$9\frac{1}{2}$"	3'-0"	10'	$2\frac{1}{4}$"	96"	3'	$2\frac{1}{4}$"		4.5" x 4.5" x 0.75"	0.2618	0.0218	6	14'-0"	15	8'-9"	176
S-2018	$25\frac{1}{2}$"	33"	18"	$2\frac{5}{8}$"	$5\frac{1}{2}$"	$5\frac{1}{2}$"	$26\frac{1}{2}$"	$2\frac{1}{2}$"	$9\frac{1}{2}$"	3'-6"	11'	$2\frac{1}{4}$"	96"	4'	$2\frac{1}{4}$"		4.5" x 4.5" x 0.75"	0.3563	0.0297	6	15'-3"	17	10'-4"	212
S-27718	$25\frac{1}{2}$"	33"	16"	$2\frac{7}{8}$"	6"	$5\frac{1}{2}$"	$26\frac{1}{2}$"	$2\frac{1}{2}$"	$10\frac{1}{2}$"	3'-6"	11'	$2\frac{1}{2}$"	120"	4'	$2\frac{1}{2}$"		5" x 5" x 1"	0.3563	0.0297	6	15'-3"	17	10'-4"	212
S-23316.5	$23\frac{1}{2}$"	$30\frac{1}{2}$"	$16\frac{5}{8}$"	$3\frac{3}{8}$"	7"	5"	$24\frac{1}{2}$"	3"	12"	3'-6"	12'	3"	144"	4'	3"		5" x 5" x 1"	0.3563	0.0297	6	16'-3"	18	10'-4"	226
S-23317	$25\frac{1}{2}$"	33"	18"	$3\frac{3}{8}$"	7"	$5\frac{1}{2}$"	$26\frac{1}{2}$"	3"	12"	3'-6"	12'	3"	144"	4'	3"		5" x 5" x 1"	0.3563	0.0297	6	16'-3"	18	10'-4"	226
S-20018	$25\frac{1}{2}$"	33"	18"	$3\frac{3}{8}$"	7"	$5\frac{1}{2}$"	$26\frac{1}{2}$"	3"	12"	4'-0"	12'	3"	144"	5'	3"		5" x 5" x 1"	0.4654	0.0388	6	16'-6"	18	11'-10"	245

* ESTIMATED QUANTITY FOR REINFORCING STEEL IS BASED ON A 2:1 (H:V) SLOPE.

TUBE DIA.	A	B	NO. OF BOLTS
$9\frac{1}{2}$"	$11\frac{1}{2}$"	$12\frac{1}{2}$"	4
$10\frac{1}{2}$"	$14\frac{5}{8}$"	14"	4
14.0"	$17\frac{1}{4}$"	17"	6

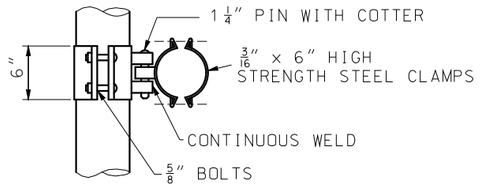

BEAM CLAMP DETAIL

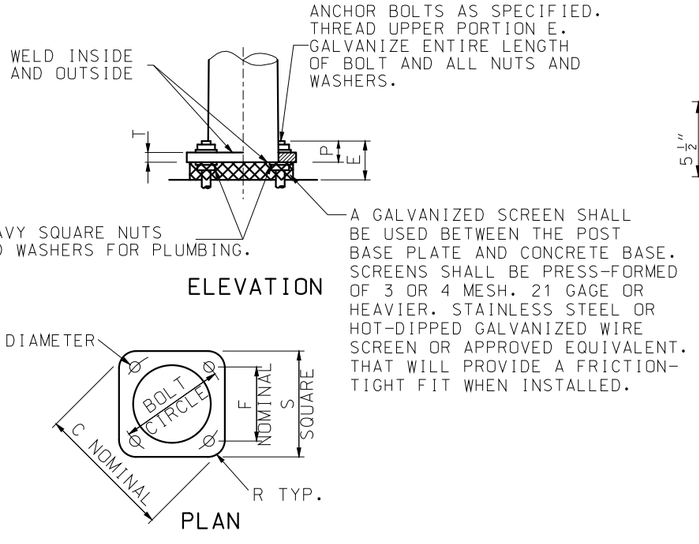

ELEVATION

PLAN

DETAIL B

POST BASE DETAIL

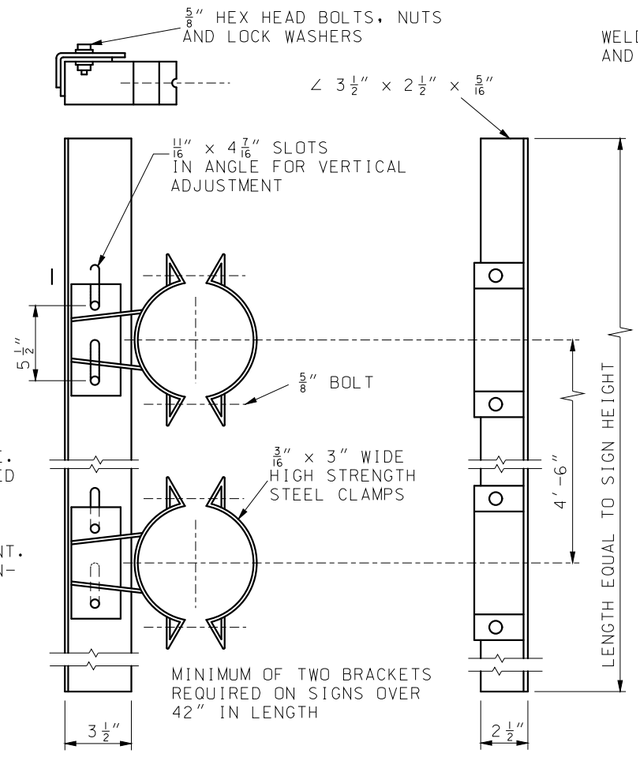

GALVANIZED SIGN BRACKET ASSEMBLY

SIGN HEIGHT INCHES	MAX. LIN. FT. OF SIGN WIDTH PER BRACKET
48 & UNDER	16
60	16
72	15
84	11
96	6
108	4
120	3

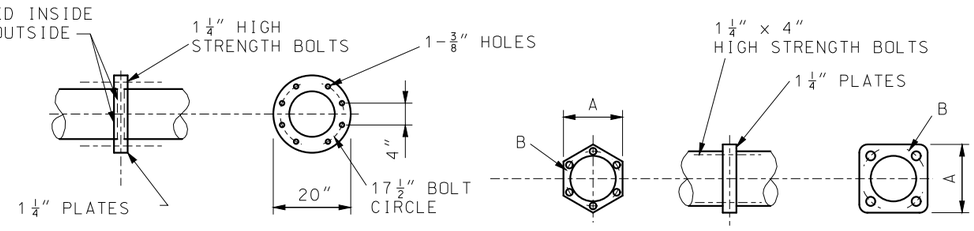

SPANS 76' TO 90'

SPANS UP TO 76'

BEAM SPLICE DETAIL

MISSOURI HIGHWAYS AND TRANSPORTATION COMMISSION
105 WEST CAPITOL
JEFFERSON CITY, MO 65102
1-888-ASK-MODOT (1-888-275-6636)

STATE OF MISSOURI
EILEEN H. RACKERS
NUMBER PE-28336
PROFESSIONAL ENGINEER
THIS SHEET HAS BEEN SIGNED, SEALED AND DATED ELECTRONICALLY.

HIGHWAY SIGNING

TUBULAR SUPPORT STEEL
TYPE S
TWO TUBES

DATE EFFECTIVE: 10/01/2016
DATE PREPARED: 8/11/2016

903.06J

SHEET NO. 2 OF 2

IF A SEAL IS PRESENT ON THIS SHEET IT HAS BEEN ELECTRONICALLY SEALED AND DATED.

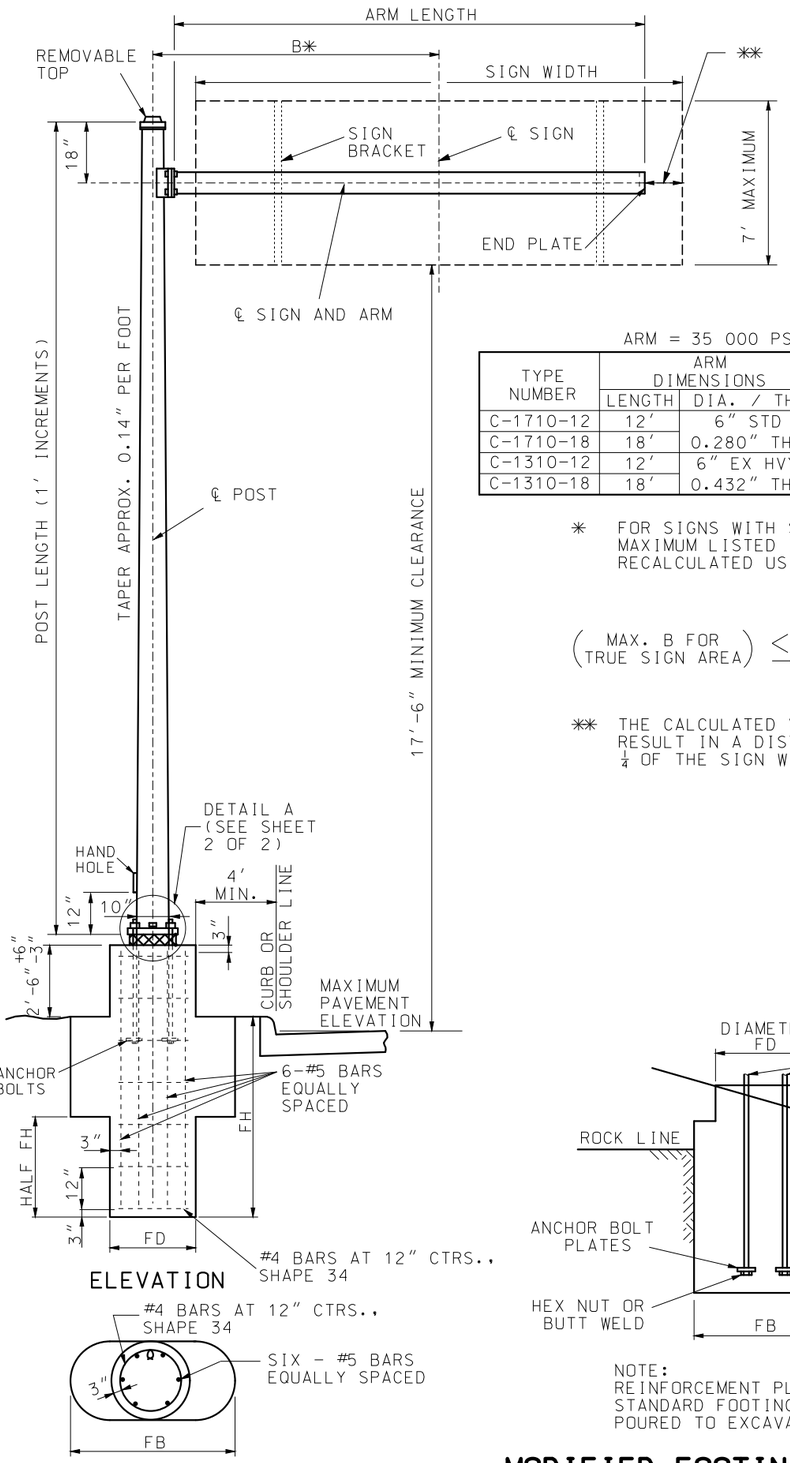

ELEVATION

PLAN

SINGLE ARM CANTILEVER

SIGN BRACKETS	
SIGN HT. (IN.)	MAX. LIN. FT. OF SIGN WIDTH PER BRACKET
	1 CLAMP TYPE
42	16
48	13
60	8
72	5
84	3

ARM = 35 000 PSI

TYPE NUMBER	ARM DIMENSIONS		POST		MAX SIGN AREA	MAX. B WITH MAX. SIGN AREA
	LENGTH	DIA. / THK	GA	DIA.	SQ. FT.	
C-1710-12	12'	6" STD 0.280" THK	7	10"	41	8'-0"
C-1710-18	18'					
C-1310-12	12'	6" EX HVY 0.432" THK	3	10"	59	8'-9"
C-1310-18	18'					

* FOR SIGNS WITH SIGN AREAS LESS THAN THE MAXIMUM LISTED IN THE TABLE ABOVE, B CAN BE RECALCULATED USING THE FOLLOWING EQUATION:

$$\left(\text{MAX. B FOR TRUE SIGN AREA}\right) \leq \frac{\left(\text{MAX SIGN AREA}\right) \times \left(\text{MAX. B WITH MAX. SIGN AREA}\right)}{\left(\text{TRUE SIGN AREA}\right)}$$

** THE CALCULATED VALUE OF B CANNOT RESULT IN A DISTANCE GREATER THAN $\frac{1}{4}$ OF THE SIGN WIDTH

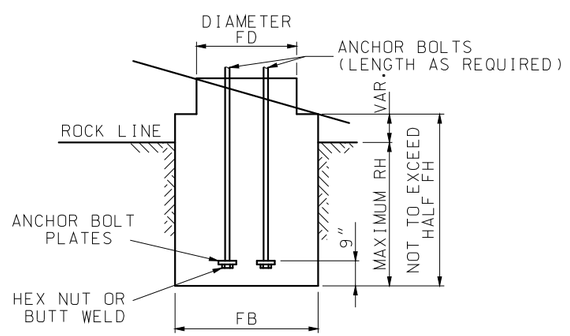

NOTE:
REINFORCEMENT PLACED SAME AS STANDARD FOOTING. CONCRETE TO BE POURED TO EXCAVATED FACE OF ROCK.

MODIFIED FOOTING IN SOLID ROCK

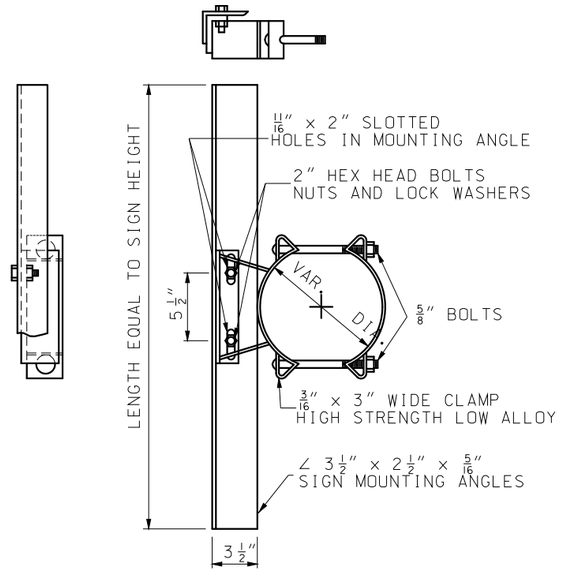

GALVANIZED SIGN BRACKET ASSEMBLY

ESTIMATED QUANTITIES											
TYPE NUMBER	DIAMETER		CU YD CLASS B CONCRETE FOOTING				REINFORCING STEEL				
			FD SECTION		FB SECTION		#5		#4 (1)		TOTAL LBS
	FD	FB	1' DEPTH	1" DEPTH	1' DEPTH	1" DEPTH	NO.	FT-IN	NO.	FT-IN	
C-1710	2'	4'	0.11635	0.0097	0.2645	0.0220	6	7'-6"	9	5'-7"	81
C-1310	2'	4'	0.11635	0.0097	0.2645	0.0220	6	7'-6"	9	5'-7"	81

(1) ESTIMATED QUANTITY FOR REINFORCING STEEL IS BASED ON A 2:1 (H:V) SLOPE.

MODIFIED FOOTING IN SOLID ROCK							
TYPE NUMBER	ANCHOR BOLT DIA.	ANCHOR BOLT PLATE	FOOTING			CLASS B CONCRETE FOOTING FB SECTION CU. YD.	
			RH	FD	FB	1' DEPTH	1" DEPTH
C-1710 & C-1310	1 1/2"	3 1/2" x 3 1/2" x 3/4"	2'-6"	2'-0"	3'-0"	1904	0159
C-2315	2"	3 1/2" x 3 1/2" x 3/4"	3'-0"	3'-0"	3'-6"	3173	0264
C-2318	2"	3 1/2" x 3 1/2" x 3/4"	3'-6"	3'-6"	3'-6"	3563	0297
C-2018	2 1/4"	4 1/2" x 4 1/2" x 3/4"	3'-6"	3'-6"	3'-6"	3563	0297

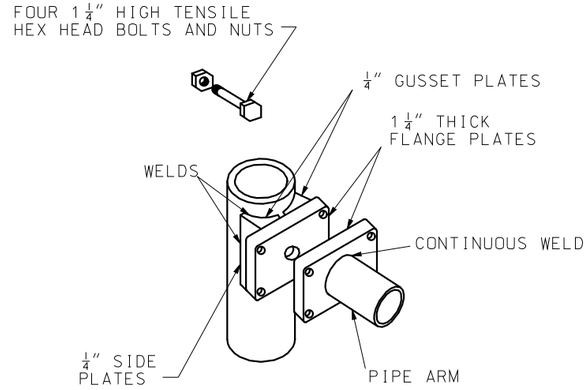

FOR POLE DIAMETER UNDER 12"
ARM ATTACHMENT

GENERAL NOTE:

ALL SIGNS SHALL BE CENTERED VERTICALLY ABOUT THE HORIZONTAL ℄ OF THE ARM.

MISSOURI HIGHWAYS AND TRANSPORTATION COMMISSION
105 WEST CAPITOL
JEFFERSON CITY, MO 65102
1-888-ASK-MODOT (1-888-275-6636)

STATE OF MISSOURI
EILEEN H. RACKERS
NUMBER PE-28336
PROFESSIONAL ENGINEER
THIS SHEET HAS BEEN SIGNED, SEALED AND DATED ELECTRONICALLY.

HIGHWAY SIGNING
TUBULAR SUPPORT STEEL
TYPE C

DATE EFFECTIVE: 10/01/2016
DATE PREPARED: 8/11/2016

903.07J

SHEET NO. 1 OF 2

IF A SEAL IS PRESENT ON THIS SHEET IT HAS BEEN ELECTRONICALLY SEALED AND DATED.

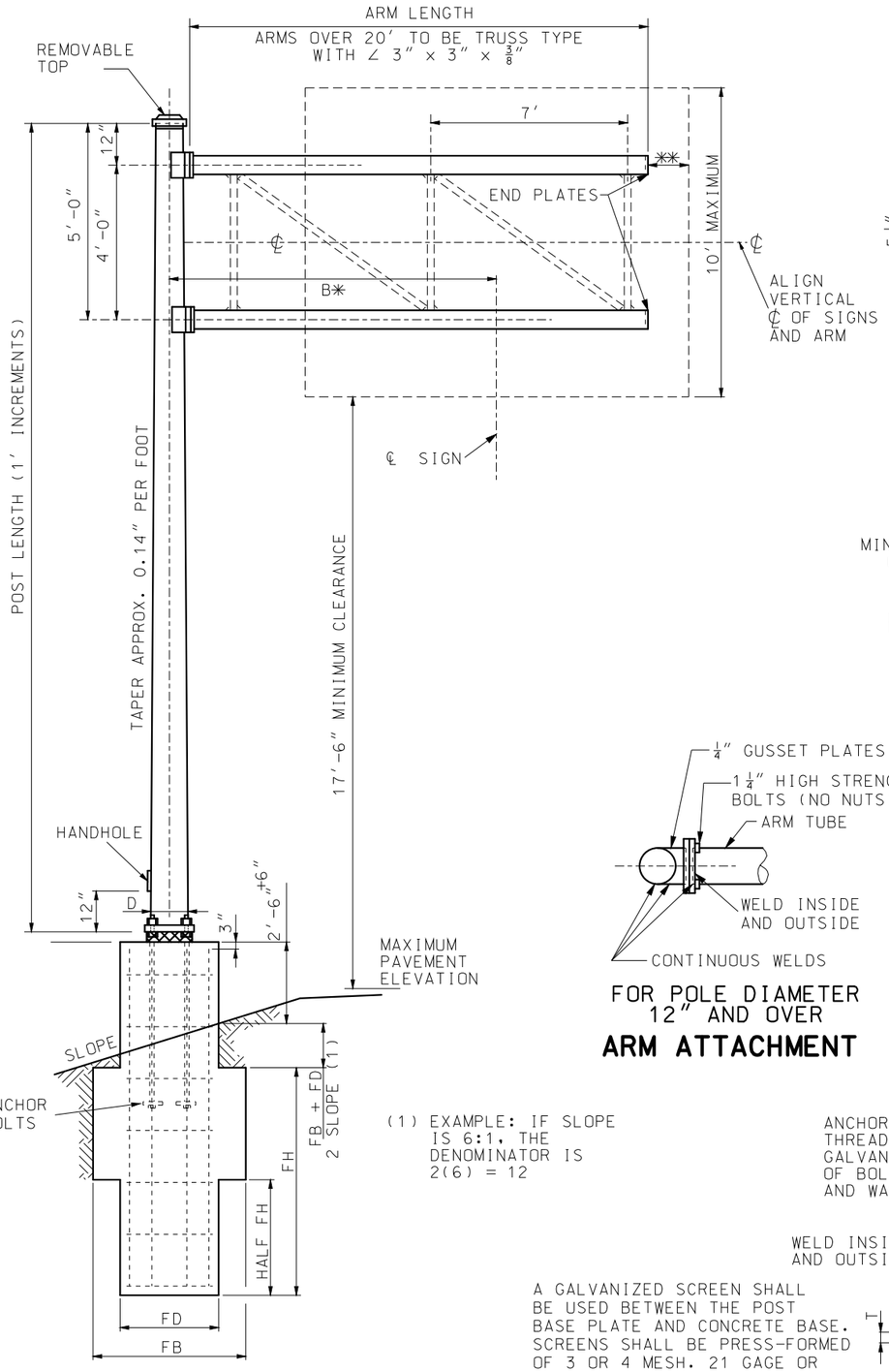

ELEVATION

DOUBLE ARM CANTILEVER

(1) EXAMPLE: IF SLOPE IS 6:1, THE DENOMINATOR IS 2(6) = 12

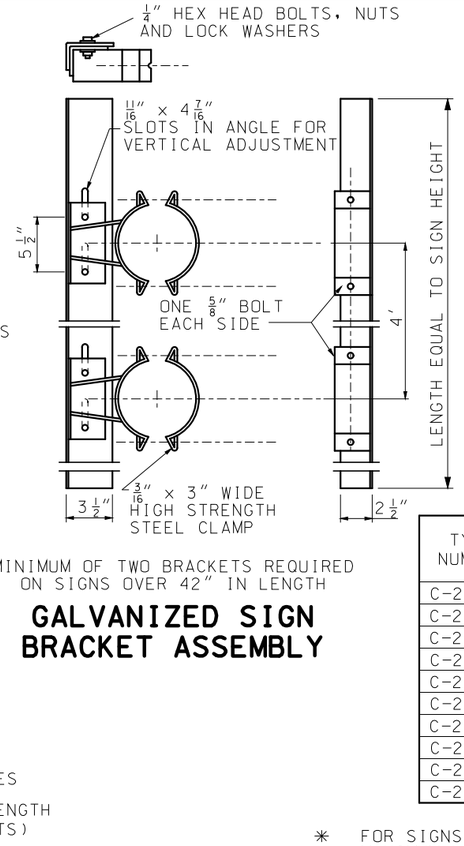

MINIMUM OF TWO BRACKETS REQUIRED ON SIGNS OVER 42″ IN LENGTH

GALVANIZED SIGN BRACKET ASSEMBLY

FOR POLE DIAMETER 12″ AND OVER

ARM ATTACHMENT

DETAIL A
ELEVATION

ESTIMATED QUANTITIES											
TYPE NUMBER	DIAMETER		CU. YD. CLASS B CONCRETE FOOTING				REINFORCING STEEL				
			FD SECTION		FB SECTION		#5		#4 (2)		TOTAL LBS.
	FD	FB	1′ DEPTH	1″ DEPTH	1′ DEPTH	1″ DEPTH	NO.	FT-IN	NO.	FT-IN	
C-2315	3′	4′	0.2618	0.0218	0.3729	0.0311	6	11′-3″	13	8′-9″	146
C-2318	3′-6″	5′	0.3563	0.0297	0.5507	0.0459	6	12′-2″	13	10′-4″	166
C-2018	3′-6″	5′	0.3563	0.0297	0.5507	0.0459	6	12′-8″	14	10′-4″	176

(2) ESTIMATED QUANTITY FOR REINFORCING STEEL IS BASED ON A 2:1 (H:V) SLOPE.

TYPE NUMBER	POST		ARM		B *	MAX. AREA SQ FT
	GA	DIA.	GA	DIMENSIONS		
C-2315-12	3	15″	7	7.5″ x 5.82″ x 12′	8′	130
C-2315-16	3	15″	7	9.0″ x 6.76″ x 16′	12′	120
C-2315-20	3	15″	3	10″ x 7.2″ x 20′	16′	115
C-2315-24	3	15″	3	11″ x 7.64″ x 24′	20′	100
C-2318-18	3	18″	7	9.0″ x 6.48″ x 18′	10′	145
C-2318-22	3	18″	7	11″ x 7.92″ x 22′	14′	150
C-2318-26	3	18″	7	12.5″ x 8.86″ x 26′	18′	150
C-2018-24	0	18″	7	12.5″ x 9.14″ x 24′	14′	205
C-2018-28	0	18″	3	12.5″ x 8.58″ x 28′	18′	215
C-2018-34	0	18″	0	13″ x 8.24″ x 34′	24′	190

SIGN HT. (IN.)	MAX. LIN. FT. OF SIGN WIDTH PER BRACKET
	2 CLAMP TYPE
42	16
48	16
60	16
72	15
84	11
96	6
108	4
120	3

* FOR SIGNS WITH SIGN AREAS LESS THAN THE MAXIMUM LISTED IN THE TABLE ABOVE, B CAN BE RECALCULATED USING THE FOLLOWING EQUATION:

$$(\text{MAX. B FOR TRUE SIGN AREA}) \leq \frac{(\text{MAX SIGN AREA}) \times (\text{MAX. B WITH MAX. SIGN AREA})}{(\text{TRUE SIGN AREA})}$$

** THE CALCULATED VALUE OF B CANNOT RESULT IN A DISTANCE GREATER THAN 1/4 OF THE SIGN WIDTH

POST BASE DIMENSIONS												
TYPE NUMBER	Y	X	E	F	H	P	R	S	T	ANCHOR BOLTS	FOOTING		
											FH	FD	FB
C-1710 & C-1310	13 1/2″	17 1/2″	7″	9 9/16″	1 3/4″	3 3/4″	3 1/8″	14 1/8″	1 1/2″	1 1/2″ x 60″	5′	2′	4′
C-2315	22″	28 5/8″	8 1/2″	15 1/2″	2 3/8″	4 3/4″	4 5/8″	23″	2″	2″ x 96″	7′	3′	4′
C-2318	25 1/2″	33″	8 1/2″	18″	2 3/8″	4 3/4″	5 1/2″	26 1/2″	2″	2″ x 96″	7′-6″	3′-6″	5′
C-2018	25 1/2″	33″	9 1/2″	18″	2 5/8″	5 1/2″	5 1/2″	26 1/2″	2 1/2″	2 1/4″ x 96″	8′	3′-6″	5′

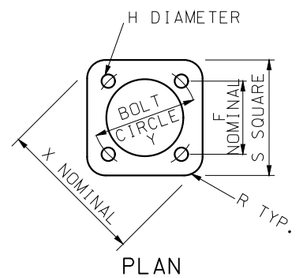

PLAN

POST BASE DETAIL

IF A SEAL IS PRESENT ON THIS SHEET IT HAS BEEN ELECTRONICALLY SEALED AND DATED.

MISSOURI HIGHWAYS AND TRANSPORTATION COMMISSION
105 WEST CAPITOL
JEFFERSON CITY, MO 65102
1-888-ASK-MODOT (1-888-275-6636)

STATE OF MISSOURI
EILEEN H. RACKERS
NUMBER PE-28336
PROFESSIONAL ENGINEER
THIS SHEET HAS BEEN SIGNED, SEALED AND DATED ELECTRONICALLY.

HIGHWAY SIGNING
TUBULAR SUPPORT STEEL
TYPE C

DATE EFFECTIVE: 10/01/2016
DATE PREPARED: 8/11/2016

903.07J

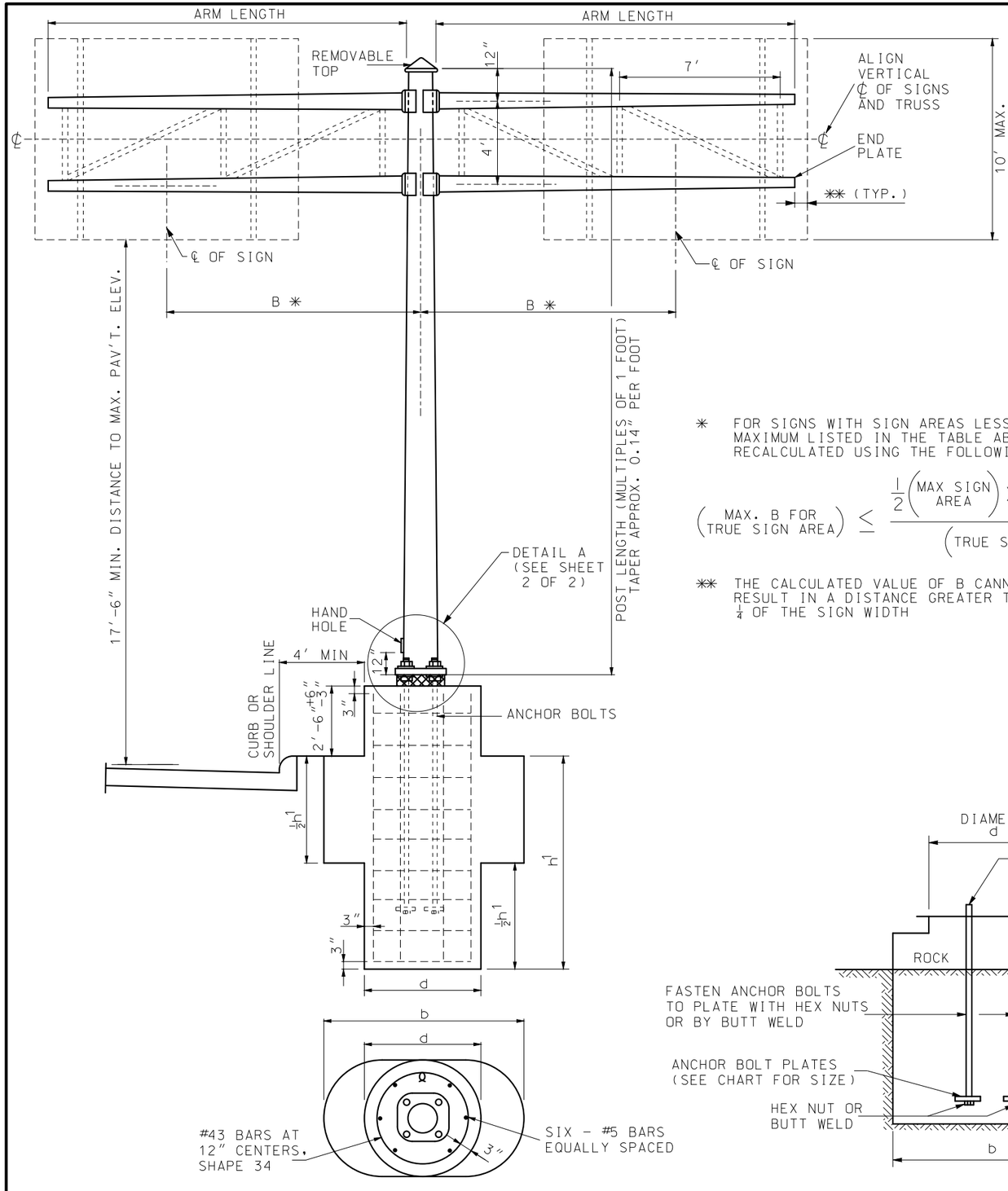

PLAN FOOTING

* FOR SIGNS WITH SIGN AREAS LESS THAN THE MAXIMUM LISTED IN THE TABLE ABOVE, B CAN BE RECALCULATED USING THE FOLLOWING EQUATION:

$$\left(\begin{array}{c}\text{MAX. B FOR}\\ \text{TRUE SIGN AREA}\end{array}\right) \leq \frac{\frac{1}{2}\left(\begin{array}{c}\text{MAX SIGN}\\ \text{AREA}\end{array}\right) \times \left(\begin{array}{c}\text{MAX. B}\\ \text{WITH MAX.}\\ \text{SIGN AREA}\end{array}\right)}{\left(\text{TRUE SIGN AREA}\right)}$$

** THE CALCULATED VALUE OF B CANNOT RESULT IN A DISTANCE GREATER THAN $\frac{1}{4}$ OF THE SIGN WIDTH

REINFORCEMENT SAME AS STANDARD FOOTING

CONCRETE TO BE POURED TO EXCAVATED FACE OF ROCK

MODIFIED FOOTINGS IN SOLID ROCK

TYPE NUMBER	POST GA.	POST "B"*	POST DIA.	ARM GA.	ARM DIMENSIONS	MAX. AREA (2) SQ. FT.
B-2018	0	8'	18"	7	7.5" x 5.82" x 12'	260
	0	12'	18"	7	9.0" x 6.76" x 16'	240
	0	16'	18"	3	10.0" x 7.2" x 20'	230
	0	20'	18"	3	11.0" x 7.64" x 24' (1)	200
B-23318	3+3	10'	18"	7	9" x 6.48" x 18'	290
	3+3	14'	18"	7	11" x 7.92" x 22' (1)	300
	3+3	18'	18"	7	12.5" x 8.86" x 26' (1)	300
B-20018	0+0	14'	18"	7	12.5" x 9.14" x 24' (1)	410
	0+0	18'	18"	3	12.5" x 8.58" x 28' (1)	430
	0+0	24'	18"	0	13" x 24" x 34' (1)	430

NOTES:
(1) ARMS OVER 20' TO BE TRUSS TYPE WITH ∠ 3" x 3" x $\frac{3}{8}$" ANGLES.

(2) MAX SIGN AREA ON EACH SIDE EQUALS HALF THE TOTAL IN CHART.

W = 40# PER SQUARE FOOT

TYPE NUMBER	DIA. "d"	DIA. "b"	CLASS B CONCRETE FOOTING (C.Y.) "d" SECTION 1' DEPTH	"d" SECTION 1" DEPTH	"b" SECTION 1' DEPTH	"b" SECTION 1" DEPTH	REINFORCING STEEL #5 NO.	#5 FT.-IN.	#4 (3) NO.	#4 (3) FT.-IN.	TOTAL LBS.
B-2018	3'-6"	6'-0"	0.3563	0.0297	0.6800	0.0567	6	10'-0"	11	10'-4"	139
B-23318	3'-6"	7'-0"	0.3563	0.0297	0.8100	0.0675	6	10'-6"	12	10'-4"	149
B-20018	3'-6"	7'-0"	0.3563	0.0297	0.8100	0.0675	6	12'-0"	13	10'-4"	165

ESTIMATED QUANTITIES

(3) ESTIMATED QUANTITY FOR REINFORCING STEEL IS BASED ON A 2:1 (H:V) SLOPE.

TYPE NUMBER	ANCHOR BOLT (4) (DIA.)	ANCHOR BOLT PLATE	FOOTING "h2"	FOOTING "d"	FOOTING "b"	CLASS B CONCRETE FOOTING CU. YD. "b" SECTION 1' DEPTH	"b" SECTION 1" DEPTH
B-2018	2¼"	4½" x 4½" x ¾"	3'-6"	3'-6"	3'-6"	0.3563	0.0297
B-23318	3"	5½" x 5½" x 1"	4'-0"	3'-6"	4'-6"	0.4860	0.0405
B-20018	3"	5½" x 5½" x 1"	5'-0"	3'-6"	4'-6"	0.4860	0.0405

MODIFIED FOOTING IN SOLID ROCK

(4) ANCHOR BOLT LENGTH AS REQUIRED

GENERAL NOTE:

ALL SIGNS SHALL BE CENTERED VERTICALLY ABOUT THE HORIZONTAL ℄ OF THE TRUSS.

IF A SEAL IS PRESENT ON THIS SHEET IT HAS BEEN ELECTRONICALLY SEALED AND DATED.

MISSOURI HIGHWAYS AND TRANSPORTATION COMMISSION
105 WEST CAPITOL
JEFFERSON CITY, MO 65102
1-888-ASK-MODOT (1-888-275-6636)

STATE OF MISSOURI
EILEEN H. RACKERS
NUMBER PE-28336
PROFESSIONAL ENGINEER
THIS SHEET HAS BEEN SIGNED, SEALED AND DATED ELECTRONICALLY.

HIGHWAY SIGNING
TUBULAR SUPPORT STEEL TYPE B

DATE EFFECTIVE: 10/01/2016
DATE PREPARED: 8/11/2016

903.08H

SHEET NO. 1 OF 2

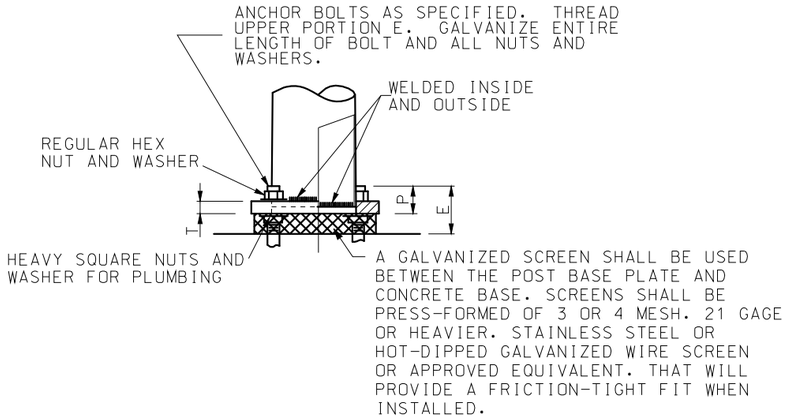

DETAIL A

ELEVATION BASE DETAIL

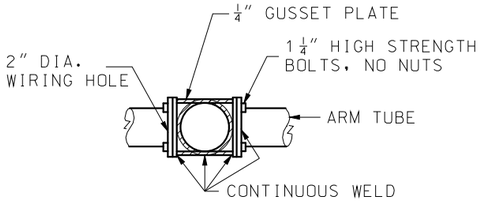

ARM ATTACHMENT DETAIL

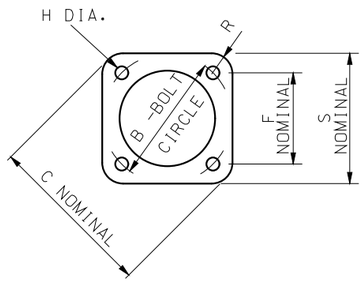

PLAN POST BASE DETAIL

POST BASE DIMENSIONS													
TYPE NUMBER	B	C	F	H	S	R	P	T	E	ANCHOR BOLTS	FOOTING "h1"	FOOTING "d"	FOOTING "b"
B-2018	25½"	33"	18"	2⅝"	26½"	5½"	5½"	2½"	9½"	2¼" x 96"	7'-6"	3'-6"	6'-0"
B-23318	25½"	33"	18"	3⅜"	26½"	5½"	7"	3"	12"	3" x 120"	8'-0"	3'-6"	7'-0"
B-20018	25½"	33"	18"	3⅜"	26½"	5½"	7"	3"	12"	3" x 120"	9'-6"	3'-6"	7'-0"

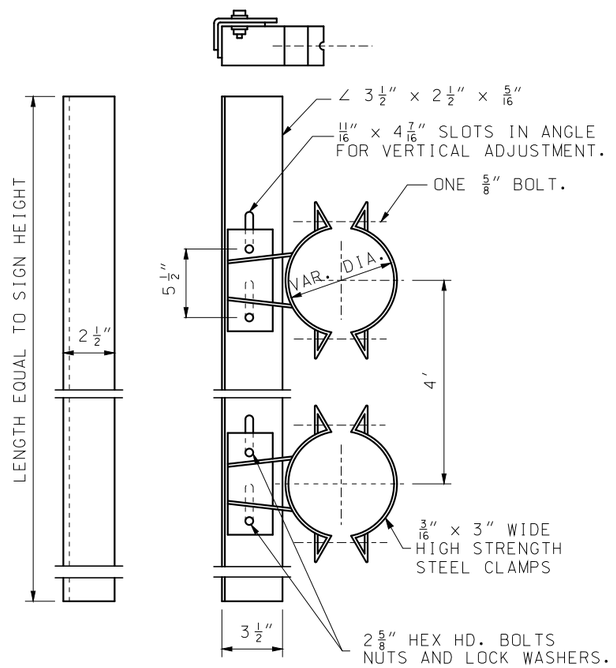

GALVANIZED SIGN BRACKET ASSEMBLY ✳

SIGN HEIGHT INCHES	MAX. LIN. FT. OF SIGN WIDTH PER BRACKET
48 & UNDER	16
60	16
72	15
84	11
96	6
108	4
120	3

✳ MINIMUM OF TWO BRACKETS REQUIRED ON SIGNS OVER 42" IN LENGTH

IF A SEAL IS PRESENT ON THIS SHEET IT HAS BEEN ELECTRONICALLY SEALED AND DATED.

MISSOURI HIGHWAYS AND TRANSPORTATION COMMISSION
105 WEST CAPITOL
JEFFERSON CITY, MO 65102
1-888-ASK-MODOT (1-888-275-6636)

STATE OF MISSOURI
EILEEN H. RACKERS
NUMBER PE-28336
PROFESSIONAL ENGINEER
THIS SHEET HAS BEEN SIGNED, SEALED AND DATED ELECTRONICALLY.

HIGHWAY SIGNING
TUBULAR SUPPORT STEEL
TYPE B

DATE EFFECTIVE: 10/01/2016
DATE PREPARED: 8/11/2016

903.08H

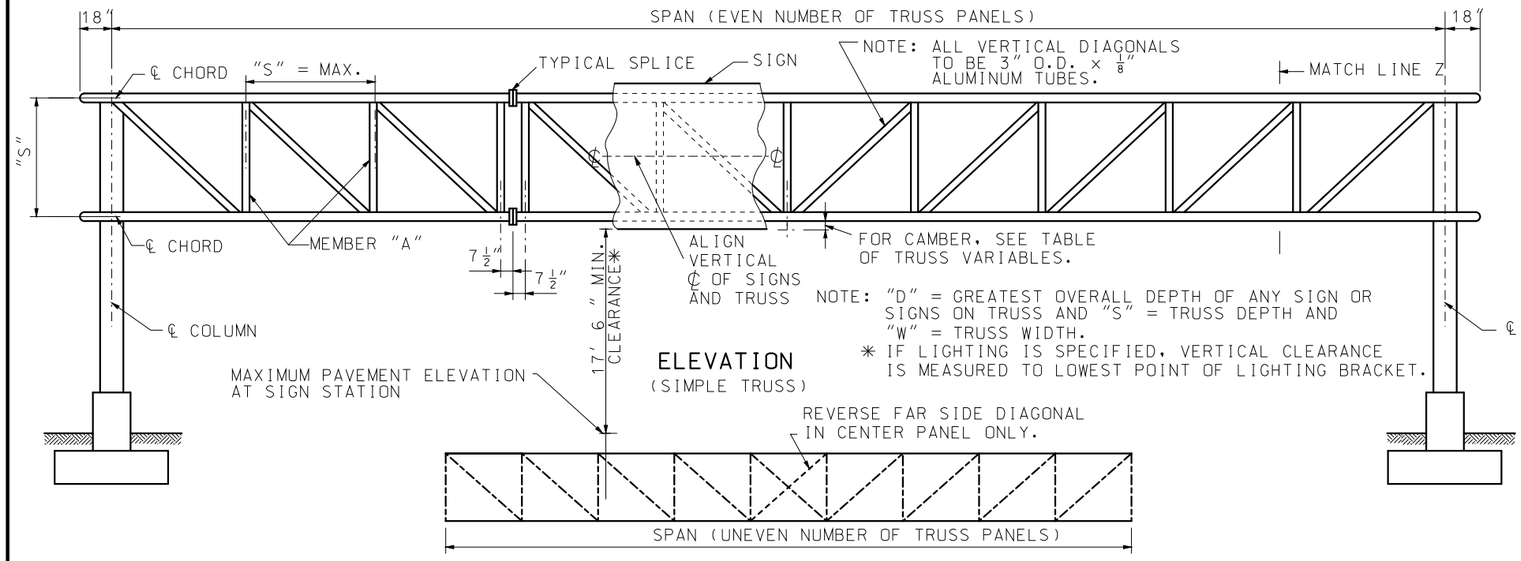

TRUSS ELEVATION

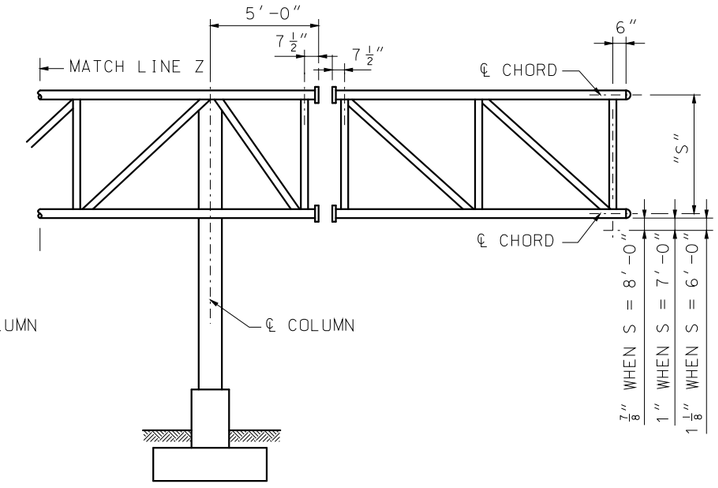

ELEVATION
(SIMPLE TRUSS MODIFIED FOR CANTILEVER SPAN)

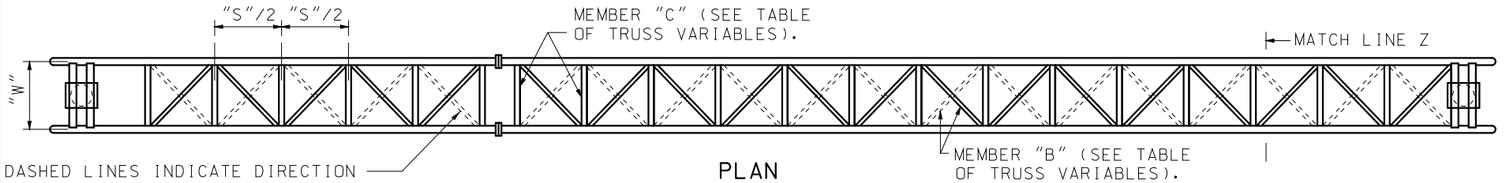

PLAN

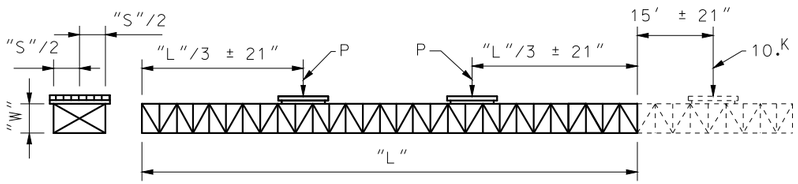

$$P = \frac{84aW}{L} - 0.02\,L$$

WHERE:
- P = CONCENTRATED LOAD IN KIPS.
- a = AREA OF ONE CHORD TUBE IN SQUARE INCHES. (USE 0.76a FOR 4″ DIA. × 1/4″ AND 4 1/2″ DIA. × 1/4″ CHORDS)
- W = WIDTH OF TRUSS IN FEET.
- L = SPAN LENGTH IN FEET.

SAMPLE, GIVEN: a = 4.123 SQ. IN., W = 6′-0″ AND L = 100′.

SOLUTION: $P = \frac{84 \times 4.123 \times 6.0}{100} - 0.02 \times 100 = 20.8 - 2 = 18.8$

NOTE:
IF CANTILEVERED, REMOVE CONCENTRATED LOAD NEAREST CANTILEVER END AND LOAD CANTILEVER SPAN AS SHOWN ABOVE.

15′ OR LESS CANTILEVER SPANS NEED NOT BE TESTED.

REPEAT ABOVE TESTS BY ROTATING 180° (TO SIMULATE WIND REVERSAL). NO VERTICAL LOAD (D.L.) TEST WILL BE REQUIRED.

LOADS P SHALL NOT BE MORE THAN 16° FOR SPANS LESS THAN 55 FEET AND 20°. FOR ALL OTHERS.

SIMULATED WIND-SHOP TEST LOADING

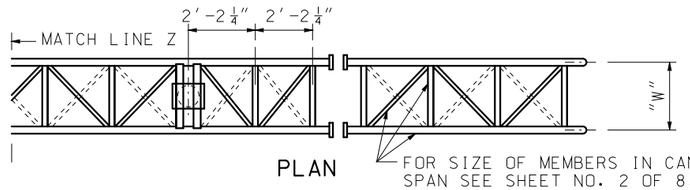

PLAN

FOR SIZE OF MEMBERS IN CANTILEVER SPAN SEE SHEET NO. 2 OF 8.

TRUSS VARIABLES						
SPAN	"S"	"W"	MEMBER "A"	MEMBER "B"	MEMBER "C"	SHOP CAMBER
UP TO 70′-6″	6′-0″	5′-0″	2 1/2″ DIA. × 1/8″	2 1/2″ DIA. × 1/8″	1 3/4″ DIA. × 1/8″	3/4″
71′ TO 80′-6″	6′-0″	6′-0″	2 1/2″ DIA. × 1/8″	2 1/2″ DIA. × 1/8″	2″ DIA. × 1/8″	1 1/4″
81′ TO 90′-6″	6′-0″	6′-0″	2 1/2″ DIA. × 1/8″	2 3/4″ DIA. × 1/8″	2″ DIA. × 1/8″	1 1/2″
91′ TO 100′-6″	6′-0″	6′-0″	2 1/2″ DIA. × 1/8″	2 3/4″ DIA. × 1/8″	2″ DIA. × 1/8″	2 1/4″
101′ TO 110′-6″	7′-0″	7′-0″	2 1/2″ DIA. × 1/8″	3″ DIA. × 1/8″	2 1/4″ DIA. × 1/8″	2 1/2″
111′ TO 120′-6″	7′-0″	7′-0″	2 1/2″ DIA. × 1/8″	3 1/2″ DIA. × 1/8″	2 1/4″ DIA. × 1/8″	2 3/4″
121′ TO 130′-6″	7′-0″	7′-0″	3″ DIA. × 1/8″	3 1/2″ DIA. × 1/8″	2 1/4″ DIA. × 1/8″	3 3/4″
131′ TO 140′-6″	8′-0″	7′-0″	3″ DIA. × 1/8″	3 3/4″ DIA. × 1/8″	2 1/2″ DIA. × 1/8″	3″
141′ TO 150′-6″	8′-0″	7′-0″	3″ DIA. × 1/8″	3 3/4″ DIA. × 1/8″	2 3/4″ DIA. × 1/8″	3 3/4″
151′ TO 160′-6″	8′-0″	7′-0″	3″ DIA. × 1/8″	3 3/4″ DIA. × 1/8″	2 3/4″ DIA. × 1/8″	4 1/2″

NOTE:
FOR SIZE OF CHORD MEMBERS, SEE DATA SHEET. SHOP CAMBER MAY BE PARABOLIC OR STRAIGHT, BUT SHALL BE SYMMETRICAL ABOUT CENTERLINE OF SPAN.

GENERAL NOTES:

ALL STRUCTURAL STEEL AND COLUMN BASE PLATES ASTM A36.

ALL ANCHOR BOLTS ASTM A307.

PROPOSED FIELD SPLICES SHALL BE SHOWN ON SHOP DRAWINGS FOR APPROVAL OF THE ENGINEER.

TRUSSES SHALL BE FABRICATED WITH A MINIMUM OF SPLICING IN TRUSS CHORDS.

FIELD SPLICING WILL NOT BE PERMITTED WITHIN THE MIDDLE ONE-THIRD OF SPAN.

PERMISSIBLE VENT HOLES (MAXIMUM 1/8 DIAMETER) SHALL BE PLACED A MINIMUM OF 3″ FROM WELD ON LOW SIDE OF HORIZONTAL, VERTICAL AND DIAGONAL TUBES.

ALL SIGNS SHALL BE CENTERED VERTICALLY ABOUT THE HORIZONTAL ℄ OF THE TRUSS.

FOR ADDITIONAL INFORMATION SEE DATA SHEET.

MISSOURI HIGHWAYS AND TRANSPORTATION COMMISSION
105 WEST CAPITOL
JEFFERSON CITY, MO 65102
1-888-ASK-MODOT (1-888-275-6636)

STATE OF MISSOURI
EILEEN H. RACKERS
NUMBER PE-28336
PROFESSIONAL ENGINEER
THIS SHEET HAS BEEN SIGNED, SEALED AND DATED ELECTRONICALLY.

OVERHEAD SIGN TRUSSES

ALUMINUM

DATE EFFECTIVE: 10/01/2016
DATE PREPARED: 8/11/2016

903.10BC

SHEET NO. 1 OF 6

IF A SEAL IS PRESENT ON THIS SHEET IT HAS BEEN ELECTRONICALLY SEALED AND DATED.

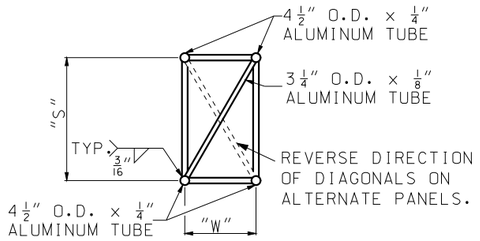

SECTION A-A

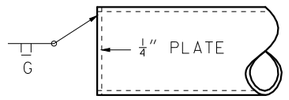

DETAIL OF ALTERNATE END CAP

NOTE:
WHEN THE VERTICALS, STRUTS AND SWAYS OBSTRUCT THE PLACING OF BOLTS IN THE FLANGES THESE MEMBERS MAY BE MOVED BACK IN ORDER TO CLEAR THE BOLTS. (ONE SIDE OF SPLICE ONLY).

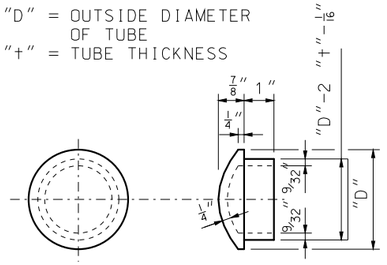

DETAIL OF END CAP CASTING
(DRIVE FIT TYPE)

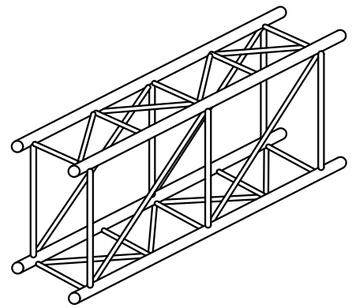

TYPICAL ISOMETRIC VIEW OF TRUSS

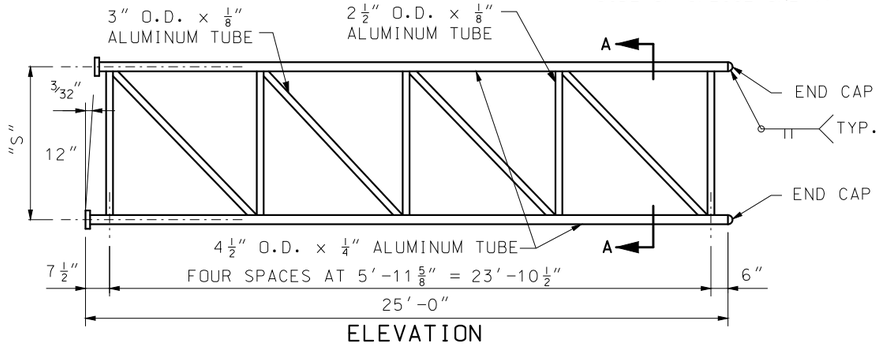

ELEVATION

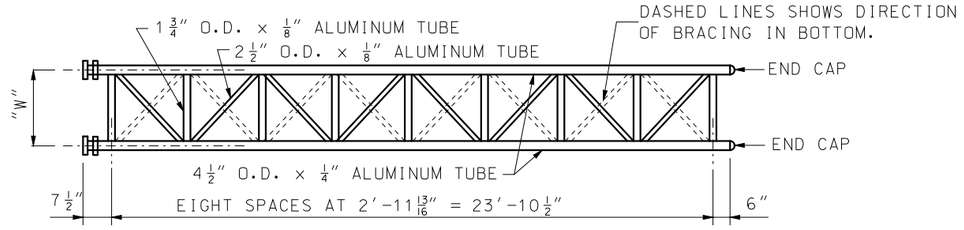

PLAN

25' - CANTILEVER SECTIONS

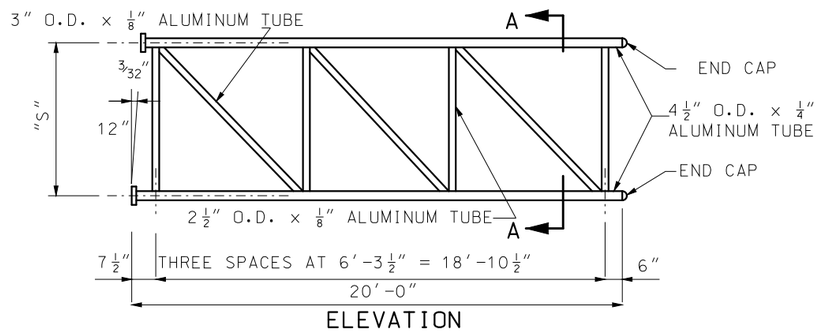

ELEVATION

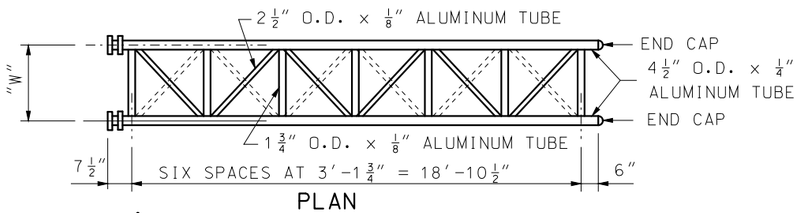

PLAN

20' - CANTILEVER SECTIONS

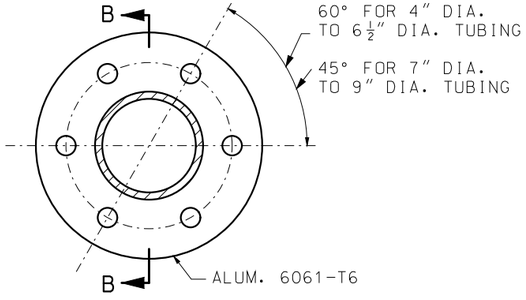

PLAN OF FLANGE PLATE

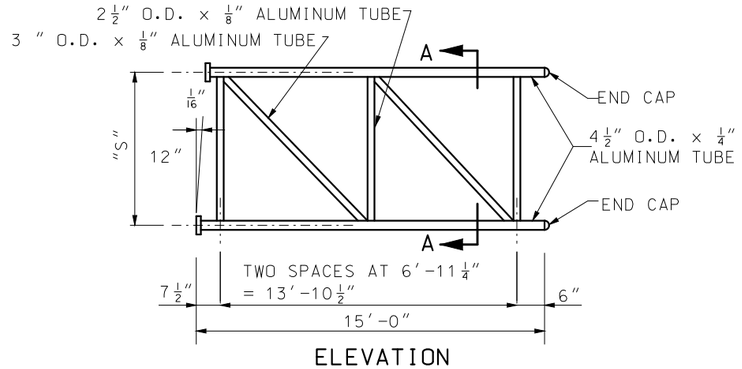

ELEVATION

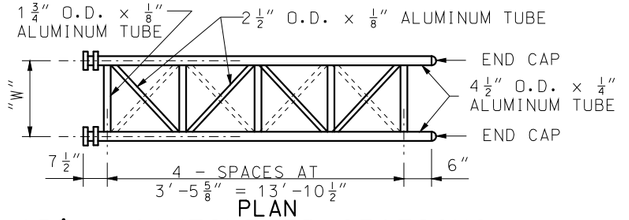

PLAN

15' - CANTILEVER SECTIONS

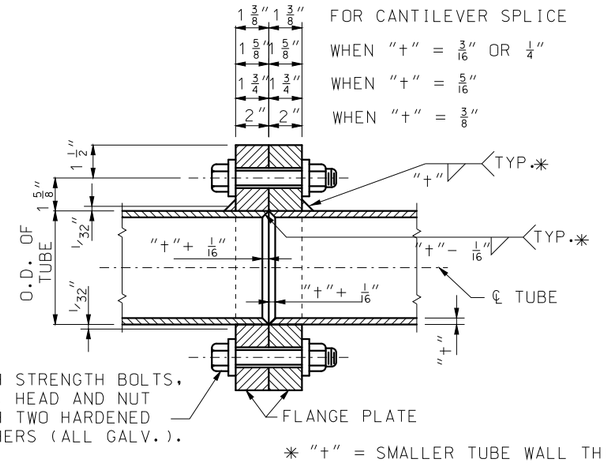

* "+" = SMALLER TUBE WALL THICKNESS.

SECTION B-B

NOTE:
A WELDING SEQUENCE ASSURING FULL CONTACT OF FLANGE FACES SHALL BE REQUIRED. DRILL OR REAM FLANGE HOLES 1/16" LARGER THAN NORMAL DIAMETER OF BOLTS OR TUBING.

TUBE SIZE	BOLT NO. AND DIA.	TORQUE
4" DIA. TO ALL DIAMETERS	6- ¾" DIA.	320 FT.LB. OR ONE-HALF TURN
4½" DIA. THROUGH 6½" DIA.	6- ¾" DIA.	320 FT.LB. OR ONE-HALF TURN
7" DIA. THROUGH 7½" DIA.	8- ¾" DIA.	320 FT.LB. OR ONE-HALF TURN
8" DIA. THROUGH 9" DIA.	8- ⅞" DIA.	470 FT.LB. OR ONE-HALF TURN

MISSOURI HIGHWAYS AND TRANSPORTATION COMMISSION
105 WEST CAPITOL
JEFFERSON CITY, MO 65102
1-888-ASK-MODOT (1-888-275-6636)

STATE OF MISSOURI
EILEEN H. RACKERS
NUMBER PE-28336
PROFESSIONAL ENGINEER
THIS SHEET HAS BEEN SIGNED, SEALED AND DATED ELECTRONICALLY.

OVERHEAD SIGN TRUSSES

ALUMINUM

DATE EFFECTIVE: 10/01/2016
DATE PREPARED: 8/11/2016

903.10BC

SHEET NO. 2 OF 6

IF A SEAL IS PRESENT ON THIS SHEET IT HAS BEEN ELECTRONICALLY SEALED AND DATED.

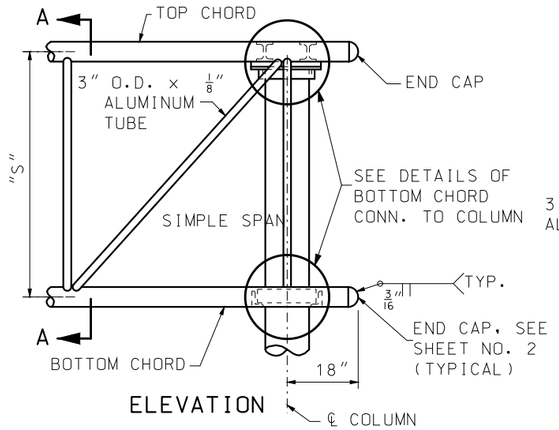

ELEVATION

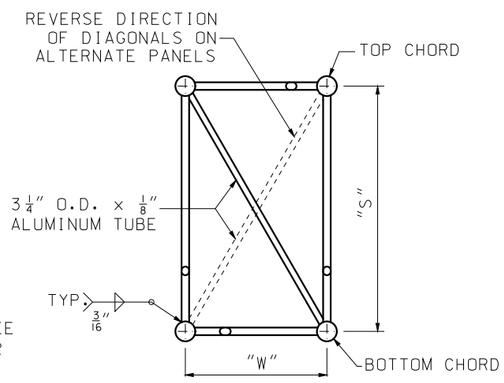

SECTION A–A

NOTE:
FOR DIMENSIONS "S" AND "W" SEE SHEET NO. 1.

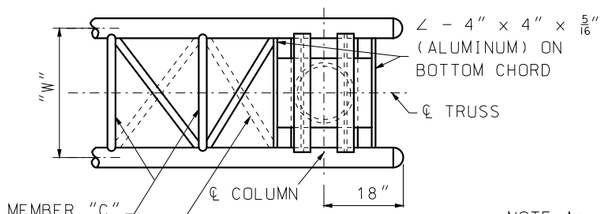

PLAN

TRUSS END WITHOUT CANTILEVER

NOTE A:
CONNECTIONS IN WHICH STEEL AND ALUMINUM ARE IN CONTACT SHALL BE PROTECTED AS FOLLOWS:
ONE COAT ZINC CHROMATE ON ALUMINUM SURFACES.
NORMAL CLEANING AND PAINTING ON STEEL SURFACES.
ONE ZINC CHROMATE REQUIRED IF STEEL IS GALVANIZED.

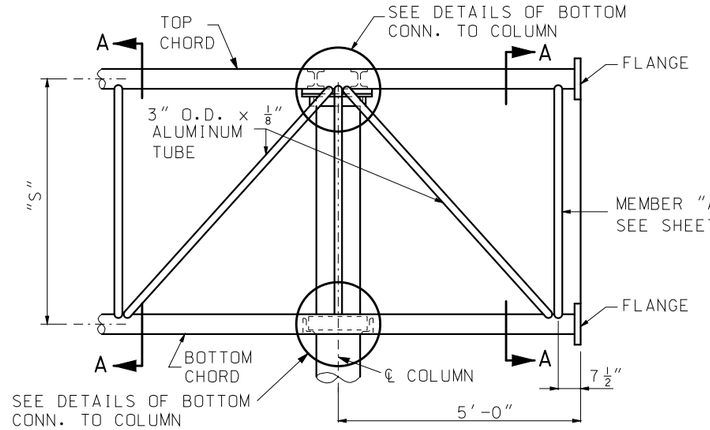

ELEVATION

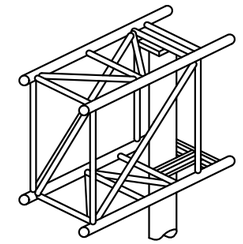

TYPICAL ISOMETRIC VIEW OF END SECTION

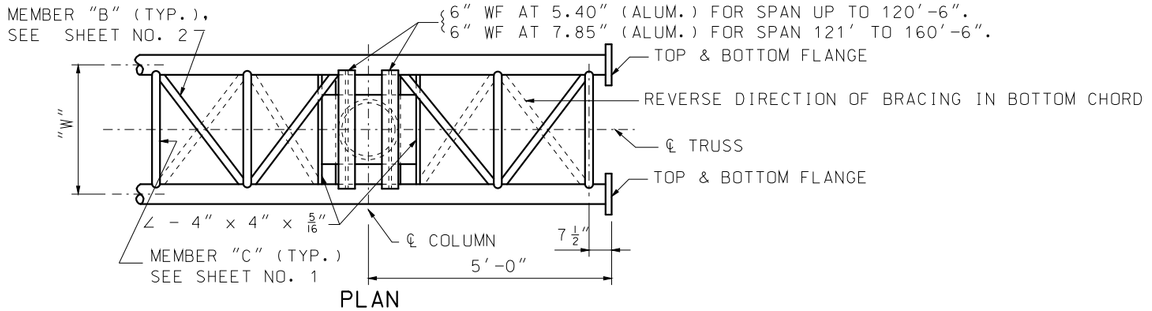

PLAN

TRUSS END MODIFIED FOR CANTILEVER

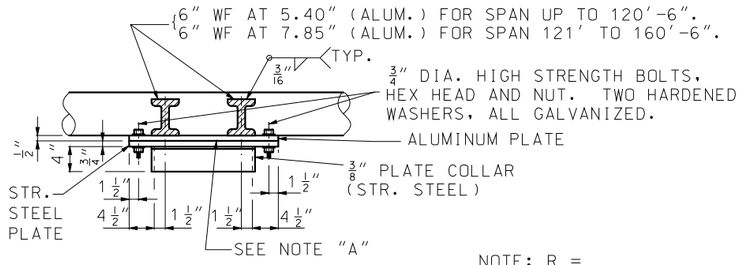

SECTION B–B

NOTE: R = O.D. PIPE COL. / 2 + 1/16"

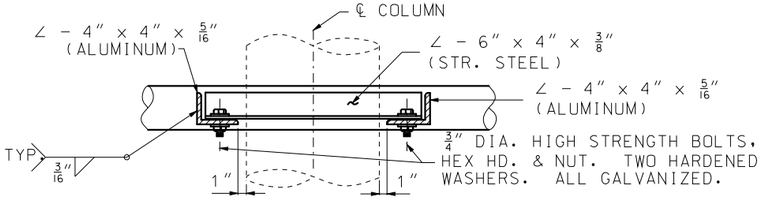

SECTION C–C

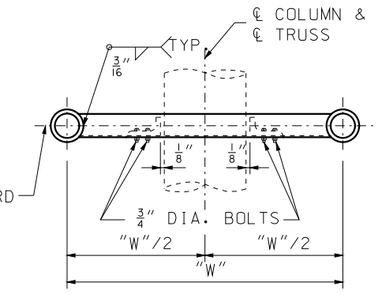

END ELEVATION

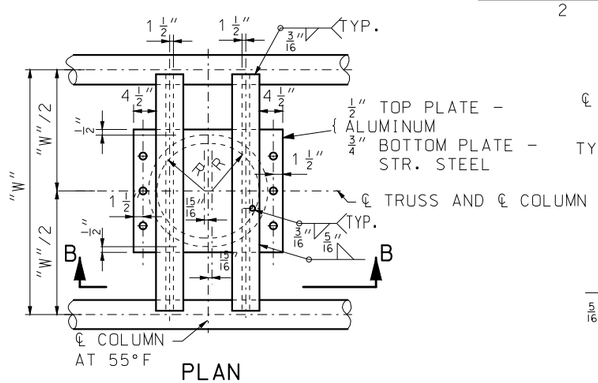

PLAN

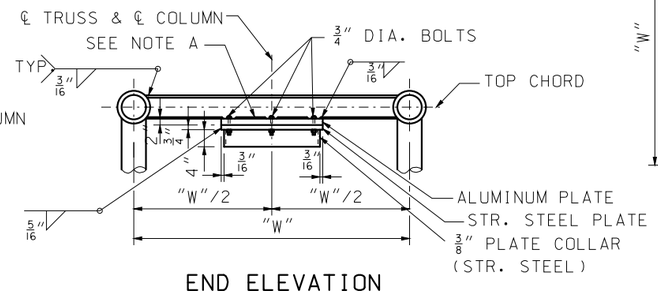

END ELEVATION

DETAIL OF TOP CHORD CONNECTION TO COLUMN

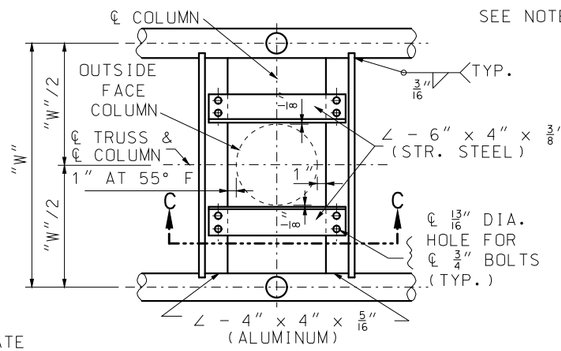

PLAN

DETAILS OF BOTTOM CHORD CONNECTION TO COLUMN

MISSOURI HIGHWAYS AND TRANSPORTATION COMMISSION
105 WEST CAPITOL
JEFFERSON CITY, MO 65102
1-888-ASK-MODOT (1-888-275-6636)

STATE OF MISSOURI
EILEEN H. RACKERS
NUMBER PE-28336
PROFESSIONAL ENGINEER
THIS SHEET HAS BEEN SIGNED, SEALED AND DATED ELECTRONICALLY.

OVERHEAD SIGN TRUSSES

ALUMINUM

DATE EFFECTIVE: 10/01/2016
DATE PREPARED: 8/11/2016

903.10BC

SHEET NO. 3 OF 6

IF A SEAL IS PRESENT ON THIS SHEET IT HAS BEEN ELECTRONICALLY SEALED AND DATED.

POST TYPE	PIPE COLUMN	DIMENSION "E"	SPLIT	BASE PLATE SIZE*	ANCHOR BOLTS DIA.	PEDESTAL SIZE* a	PEDESTAL SIZE* b	FOOTING SIZE*	LONGITUDINAL FOOTING REINFORCEMENT TOP	LONGITUDINAL FOOTING REINFORCEMENT BOTTOM	CONCRETE C.Y.
I	12" STD. AT 65.42	8½"	6"	2'-6"x 23"x 1½"	6 AT 2¼"	4'-0"	2'-11"	7'-0"x 14'-6"	7-#5 BARS	7-#6 BARS	10.9
II	14" O.D. AT 72.09	8½"	9½"	3'-0"x 2'-0"x 1½"	6 AT 2¼"	4'-4"	3'-0"	8'-0"x 16'-0"	8-#5 BARS	9-#6 BARS	13.2
III	16" O.D. AT 82.77	8¾"	11½"	3'-4"x 2'-2"x 1¾"	6 AT 2¼"	4'-8"	3'-2"	8'-6"x 17'-6"	9-#5 BARS	9-#7 BARS	15.2
IV	18" O.D. AT 93.45	9½"	12½"	3'-7"x 2'-4"x 2"	6 AT 2½"	5'-1"	3'-4"	9'-6"x 19'-0"	10-#5 BARS	10-#8 BARS	18.1
V	20" O.D. AT 104.13	9½"	13"	3'-10"x 2'-9"x 2"	8 AT 2½"	5'-4"	3'-9"	10'-0"x 20'-0"	10-#5 BARS	10-#8 BARS	20.6
VI	24" O.D. AT 125.49	9½"	10½"	4'-0"x 3'-3"x 2"	8 AT 2½"	5'-6"	4'-3"	10'-6"x 21'-0"	11-#5 BARS	11-#8 BARS	23.3
VII	24" O.D. AT 125.49	9½"	13½"	4'-3"x 3'-3"x 2"	8 AT 2½"	5'-9"	4'-3"	11'-0"x 22'-0"	11-#5 BARS	11-#9 BARS	25.1

* BASE PLATES, PEDESTAL, AND FOOTINGS, LONGER SIDES SHALL BE NORMAL TO AXIS OF SIGN.

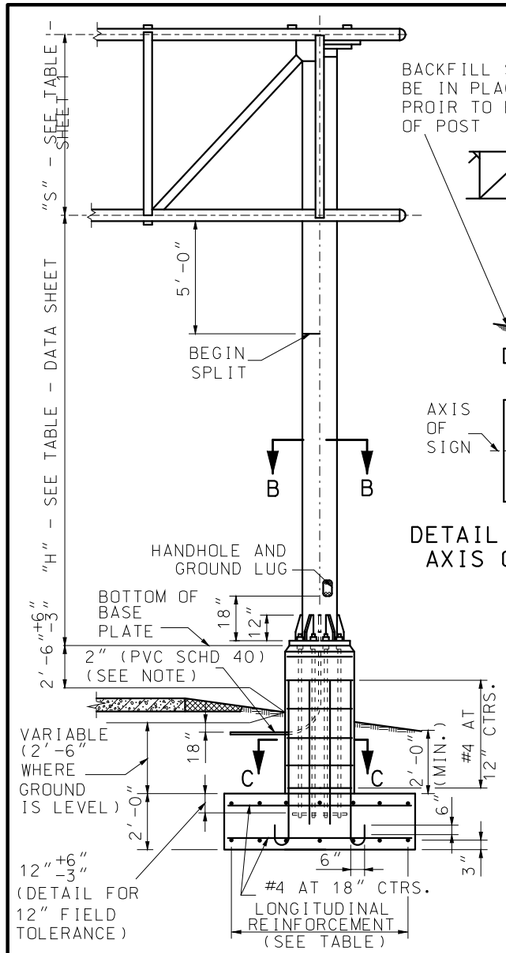

ELEVATION

NOTE:
THE 2" CONDUIT IN THE CONCRETE PEDESTAL SHALL BE PVC SCHEDULE 40 AND SHALL BE PLACED WITH A MINUMUM RADIUS BEND OF 9½".

DETAIL SHOWING AXIS OF SIGN

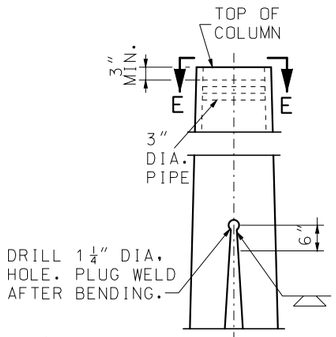

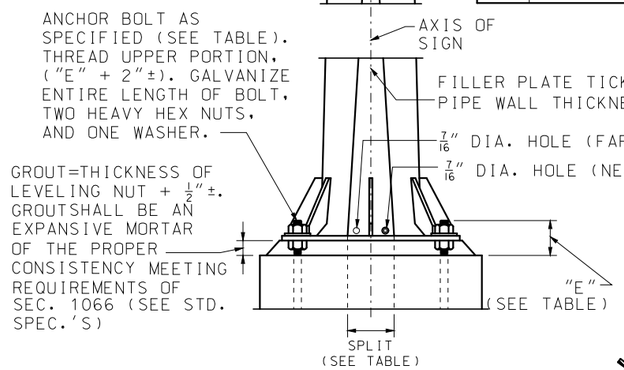

PART ELEVATION

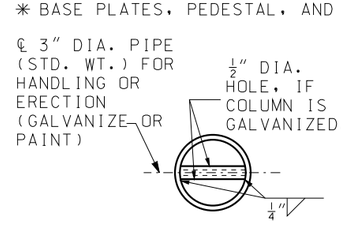

PART SECTION E-E

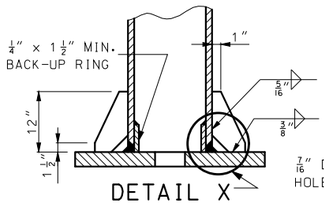

DETAIL X

PART SECTION A-A

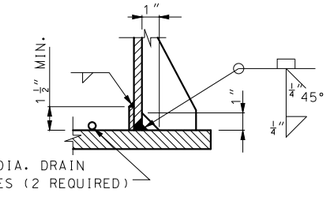

DETAIL X

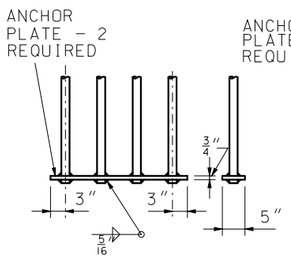

(SHOWN FOR 4 BOLTS - SIMILAR FOR 3 BOLTS)

ANCHORAGE DETAIL A

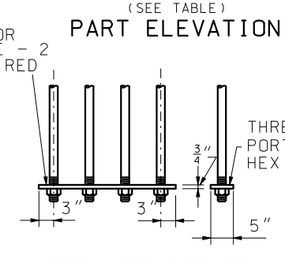

(SHOWN FOR 4 BOLTS - SIMILAR FOR 3 BOLTS)

ANCHORAGE DETAIL B (OPTIONAL)

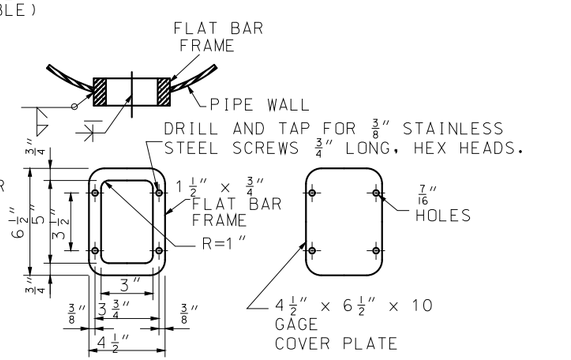

HANDHOLE AND COVER DETAIL

NOTE: HANDHOLE REQUIRED ONLY IN POWER COLUMN.

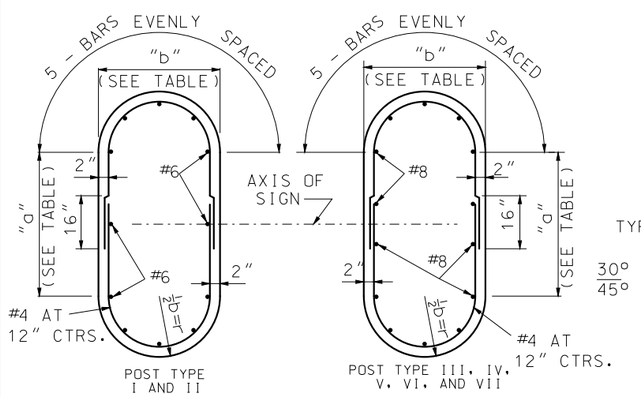

SECTION C-C

(TYPICAL SECTION SHOWING REINFORCING STEEL)
NOTE: FOR DETAILS OF ALTERNATE PEDESTAL, SEE SHEET NO. 5 OF 6.

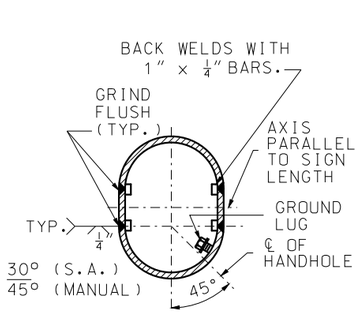

SECTION B-B

(FOR SPLIT COLUMNS ONLY)

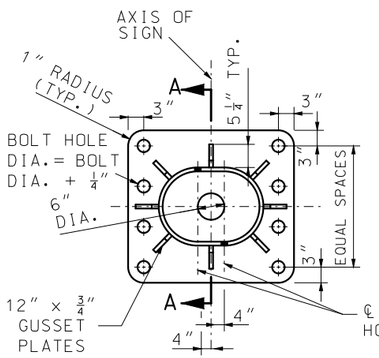

8 ANCHOR TYPE

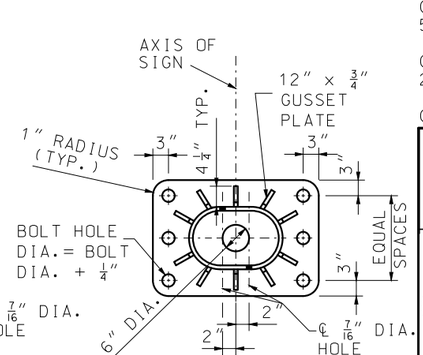

6 ANCHOR TYPE

TYPICAL BASE PLATES

GENERAL NOTES:

A TAPERED TUBE OF EQUIVALENT SIZE AND THICKNESS MAY BE SUBSTITUTED FOR PIPE POST.

ALL STEEL PIPE COLUMNS SHALL BE EITHER GRADE "B" SEAMLESS STEEL PIPE OR GRADE "B" ELECTRIC RESISTANCE WELDED STEEL PIPE; A.S.T.M. SPECIFICATION A53. NO OBJECTIONABLE SEAMS WILL BE PERMITTED.

ALL STRUCTURES SHALL BE GROUNDED.

BURR THREADS ON ALL ANCHOR BOLTS.

A HORIZONTAL WELDED SPLICE MAY BE FABRICATED IN THE COLUMN BETWEEN THE TOP OF PIPE AND 4'-0" BELOW THE BOTTOM CHORDS OF THE TRUSS WHEN DETAILED ON THE PIPE AND 4'-0" BELOW THE BOTTOM CHORDS OF THE TRUSS WHEN DETAILED ON THE SHOP DRAWINGS AND APPROVED BY THE ENGINEER.

GROUND LUGS SHALL BE LOCATED INSIDE COLUMN NEAR HAND HOLE.

QUANTITIES FOR PEDESTAL, BASED ON NOMINAL HEIGHT OF 5'-0".

QUANTITIES FOR FOOTING, BASED ON NOMINAL DEPTH OF 2'-0".

QUANTITIES SHOWN ARE FOR ONE COLUMN ONLY.

IF A SEAL IS PRESENT ON THIS SHEET IT HAS BEEN ELECTRONICALLY SEALED AND DATED.

MISSOURI HIGHWAYS AND TRANSPORTATION COMMISSION
105 WEST CAPITOL
JEFFERSON CITY, MO 65102
1-888-ASK-MODOT (1-888-275-6636)

STATE OF MISSOURI
EILEEN H. RACKERS
NUMBER PE-28336
PROFESSIONAL ENGINEER
THIS SHEET HAS BEEN SIGNED, SEALED AND DATED ELECTRONICALLY.

OVERHEAD SIGN TRUSSES

ALUMINUM

DATE EFFECTIVE: 10/01/2016
DATE PREPARED: 8/11/2016

903.10BC

SHEET NO. 4 OF 6

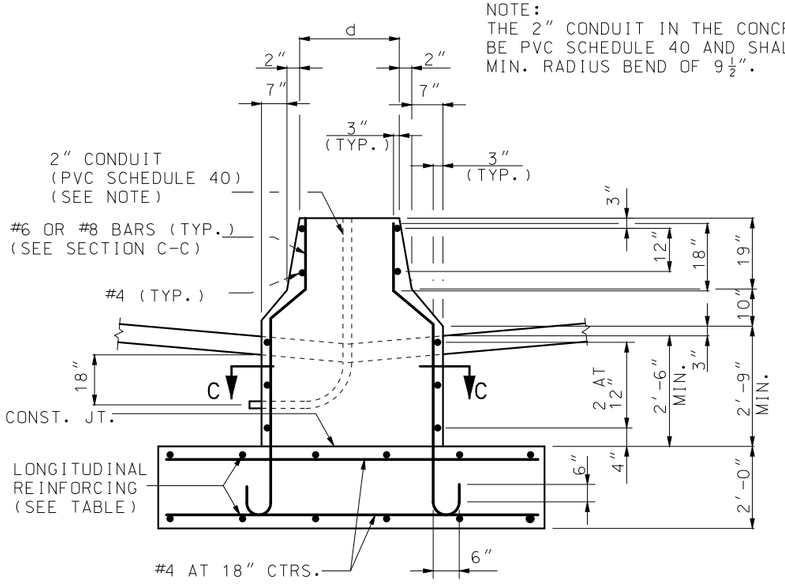

NOTE:
THE 2" CONDUIT IN THE CONCRETE PEDESTAL SHALL BE PVC SCHEDULE 40 AND SHALL BE PLACED WITH A MIN. RADIUS BEND OF 9½".

PART ELEVATION
(TYPE A CONCRETE TRAFFIC BARRIER)

POST TYPE	PIPE COLUMN	PEDESTAL SIZE ✳		FOOTING SIZE ✳	LONGITUDINAL FOOTING REINFORCEMENT		CONCRETE C.Y.	
		c	d		TOP	BOTTOM	TYPE A MEDIAN BARRIER	TYPE C MEDIAN BARRIER
I	12" STD. AT 65.42	5'-9"	2'-1"	7'-0" x 14'-6"	7 - #5 BARS	7 - #6 BARS	10.9	11.6
II	14" O.D. AT 72.09	6'-2"	2'-2"	8'-0" x 16'-0"	8 - #5 BARS	9 - #6 BARS	13.2	14.0
III	16" O.D. AT 82.77	6'-7"	2'-4"	8'-6" x 17'-6"	9 - #5 BARS	9 - #7 BARS	15.2	16.1
IV	18" O.D. AT 93.45	7'-1"	2'-6"	9'-6" x 19'-0"	10 - #5 BARS	10 - #8 BARS	18.1	19.1
V	20" O.D. AT 104.13	7'-8"	2'-11"	10'-0" x 20'-0"	10 - #5 BARS	10 - #8 BARS	20.6	21.7
VI	24" O.D. AT 125.49	8'-3"	3'-5"	10'-6" x 21'-0"	11 - #5 BARS	11 - #8 BARS	23.3	24.6
VII	24" O.D. AT 125.49	8'-6"	3'-5"	11'-0" x 22'-0"	11 - #5 BARS	11 - #9 BARS	25.1	26.5

✳ BASE PLATES, PEDESTAL, AND FOOTINGS LONGER SIDES SHALL BE NORMAL TO AXIS OF SIGN.

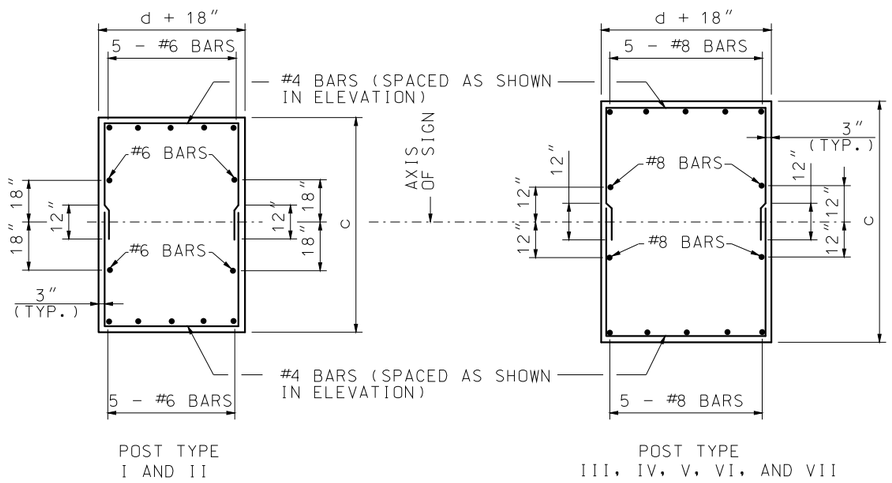

SECTION C-C

TYPICAL SECTION SHOWING
REINFORCING STEEL

NOTE:
THE 2" CONDUIT IN THE CONCRETE PEDESTAL SHALL BE PVC SCHEDULE 40 AND SHALL BE PLACED WITH A MIN. RADIUS BEND OF 9½".

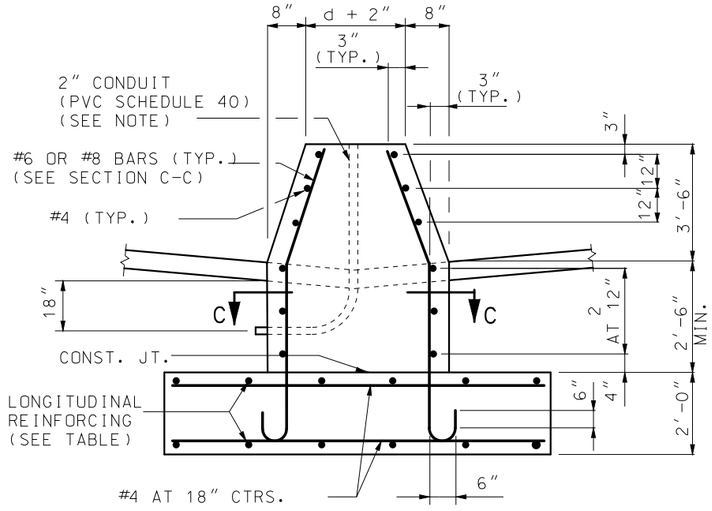

PART ELEVATION
(TYPE C CONCRETE TRAFFIC BARRIER)

GENERAL NOTES:

A TAPERED TUBE OF EQUILVALENT SIZE AND THICKNESS MAY BE SUBSTITUTED FOR PIPE POST.

ALL STEEL PIPE COLUMNS SHALL BE EITHER GRADE "B" SEAMLESS STEEL PIPE OR GRADE "B" ELECTRIC RESISTANCE WELDED STEEL PIPE; A.S.T.M. SPECIFICATION A53.

NO OBJECTIONABLE SEAMS WILL BE PERMITTED.

ALL STRUCTURES SHALL BE GROUNDED.

BURR THREADS ON ALL ANCHOR BOLTS.

PIPE COLUMN, BASE PLATE, ANCHOR BOLTS AND NOTES PERTAINING TO THESE ITEMS HAVE BEEN OMITTED FOR CLARITY. REFER TO SHEET NO. 4 OF 6 FOR DETAILS OF THESE ITEMS.

GROUND LUGS SHALL BE LOCATED INSIDE COLUMN NEAR HAND HOLE.

QUANTITIES FOR PEDESTAL, BASED ON NOMINAL HEIGHT OF 5'-2" (TYPE A MEDIAN BARRIER) OR 6'-0" (TYPE C MEDIAN BARRIER).

QUANTITIES FOR FOOTING, BASED ON NOMINAL DEPTH OF 2'-0".

QUANTITIES SHOWN ARE FOR ONE COLUMN ONLY.

DETAILS OF ALTERNATE PEDESTAL

(TO BE USED ADJACENT TO TYPE "A" OR "C" MEDIAN BARRIER)

IF A SEAL IS PRESENT ON THIS SHEET IT HAS BEEN ELECTRONICALLY SEALED AND DATED.

MISSOURI HIGHWAYS AND TRANSPORTATION COMMISSION
105 WEST CAPITOL
JEFFERSON CITY, MO 65102
1-888-ASK-MODOT (1-888-275-6636)

STATE OF MISSOURI
EILEEN H. RACKERS
NUMBER PE-28336
PROFESSIONAL ENGINEER
THIS SHEET HAS BEEN SIGNED, SEALED AND DATED ELECTRONICALLY.

OVERHEAD SIGN TRUSSES

ALUMINUM

DATE EFFECTIVE: 10/01/2016
DATE PREPARED: 8/11/2016

903.10BC

SHEET NO. 5 OF 6

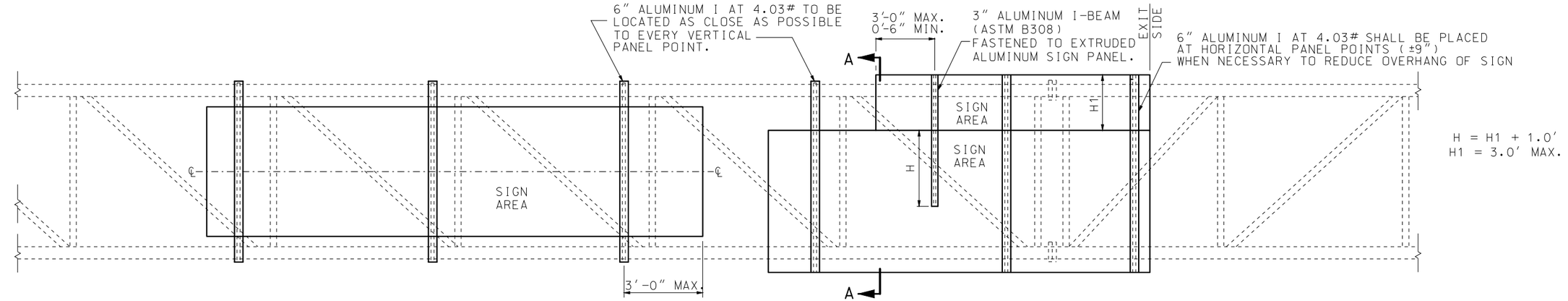

TYPICAL ELEVATION OF SIGN COMPONENTS

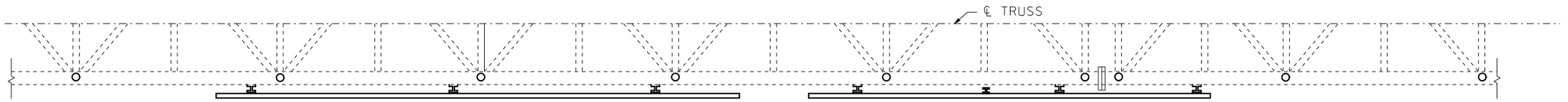

TYPICAL HALF PLAN OF SIGN COMPONENTS

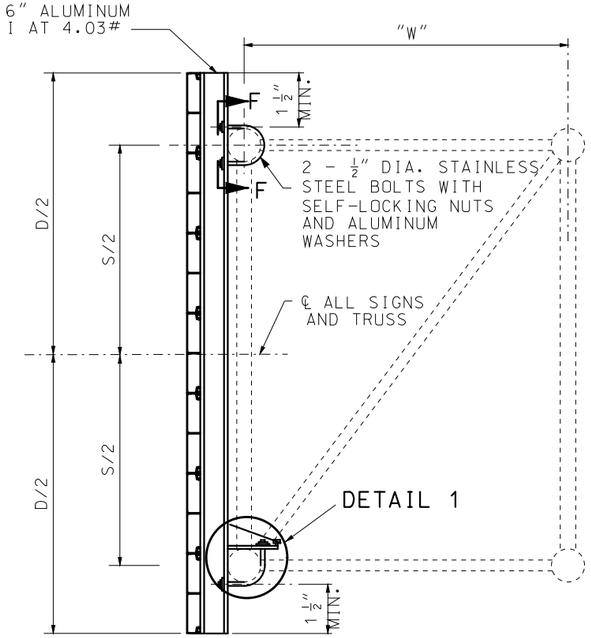

SECTION A-A

TYPICAL SECTION OF SIGN SUPPORT

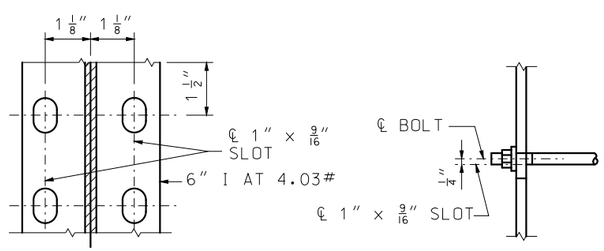

SECTION F-F

DETAIL 2

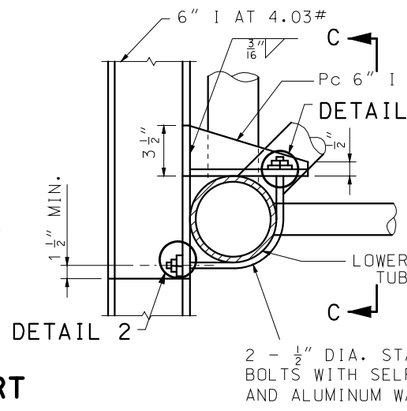

DETAIL 1

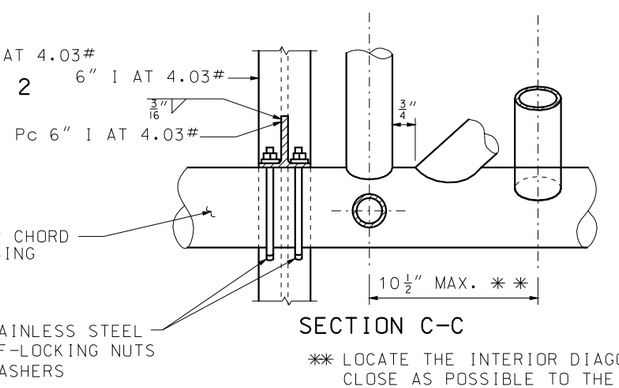

SECTION C-C

** LOCATE THE INTERIOR DIAGONAL AS CLOSE AS POSSIBLE TO THE CENTERLINE OF THE PANEL POINT WITHOUT OVER-LAPPING WELDS.

GENERAL NOTES:

EXIT NO. PANELS SHALL BE MOUNTED FLUSH WITH THE EXIT SIDE OF THE GUIDE SIGN.

ALL SIGNS SHALL BE CENTERED VERTICALLY ABOUT THE HORIZONTAL ℄ OF THE TRUSS.

SEE STD. PLAN 903.09 FOR LIGHTING DETAILS IF LIGHTING THE SIGN IS NECESSARY.

SEE STD. PLAN 903.03 FOR SIGN MOUNTING DETAILS.

ALL MATERIAL ALUMINUM EXCEPT AS NOTED.

MISSOURI HIGHWAYS AND TRANSPORTATION COMMISSION
105 WEST CAPITOL
JEFFERSON CITY, MO 65102
1-888-ASK-MODOT (1-888-275-6636)

STATE OF MISSOURI
EILEEN H. RACKERS
NUMBER PE-28336
PROFESSIONAL ENGINEER
THIS SHEET HAS BEEN SIGNED, SEALED AND DATED ELECTRONICALLY.

OVERHEAD SIGN TRUSSES

SIGN MOUNTING DETAIL

DATE EFFECTIVE: 10/01/2016
DATE PREPARED: 8/11/2016

903.10BC

SHEET NO. 6 OF 6

IF A SEAL IS PRESENT ON THIS SHEET IT HAS BEEN ELECTRONICALLY SEALED AND DATED.

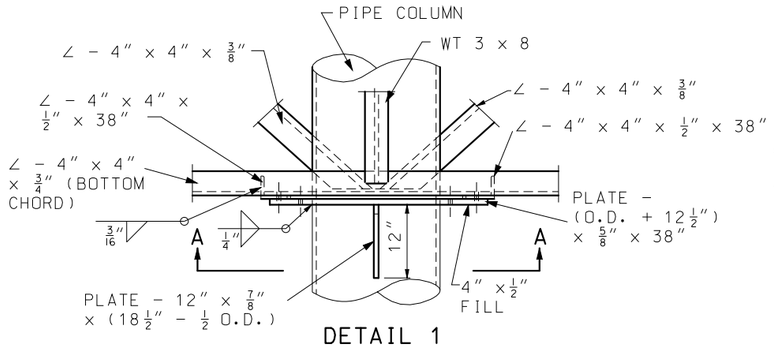

DETAIL 1
TRUSS BOTTOM CONNECTION TO COLUMN

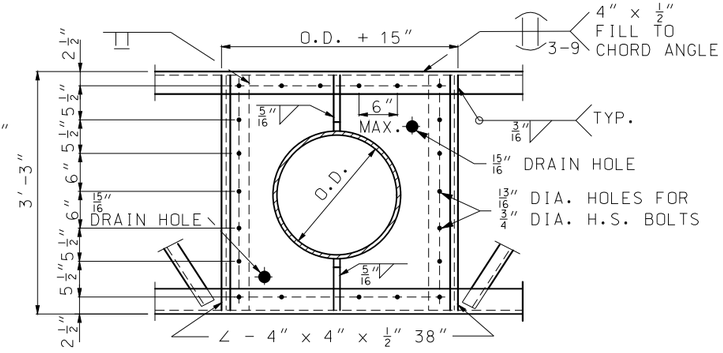

SECTION A–A

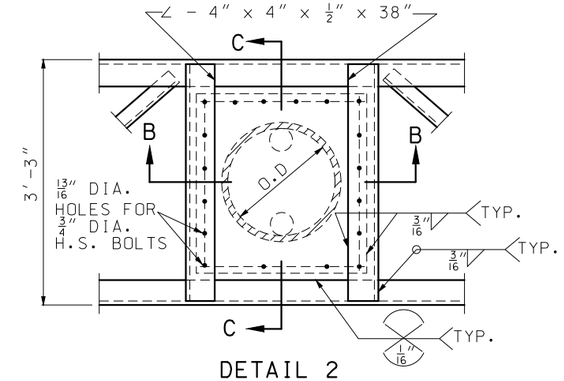

DETAIL 2
TRUSS TOP CONNECTION TO COLUMN

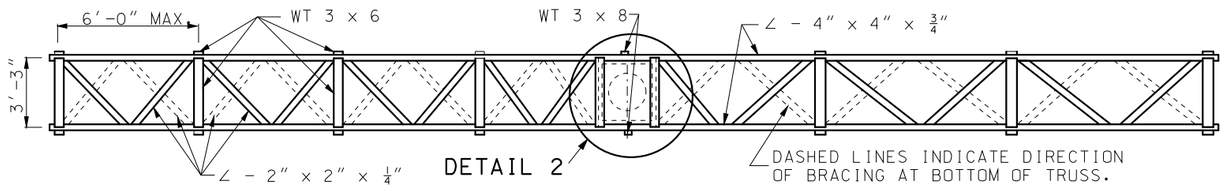

PLAN

✳ $1\frac{1}{2}$" FOR POST TYPE VII
$1\frac{3}{4}$" FOR ALL OTHER POST TYPES

✳✳ 3" FOR POST TYPE VII
$3\frac{1}{2}$" FOR ALL OTHER POST TYPES

✳✳✳ $5\frac{1}{2}$" FOR POST TYPE VII
6" FOR ALL OTHER POST TYPES

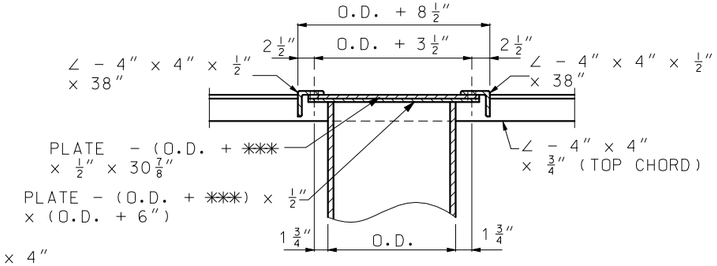

SECTION B–B

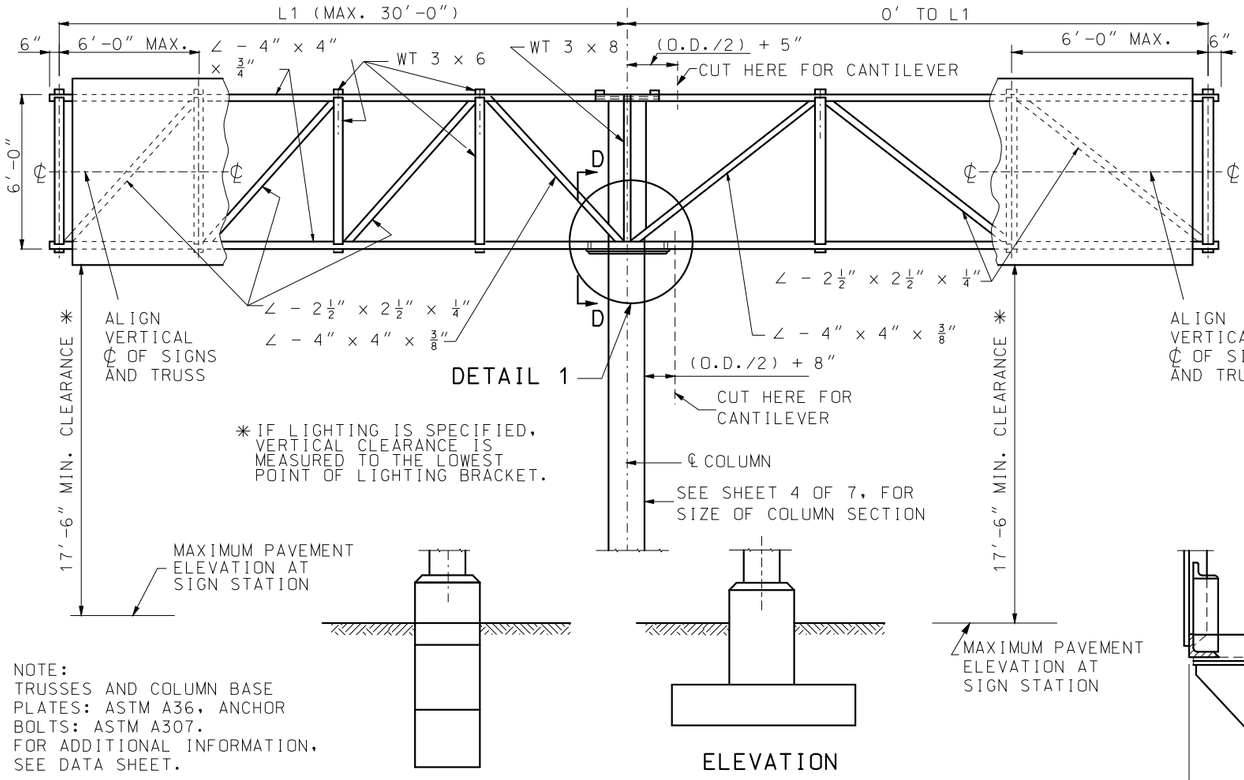

NOTE:
TRUSSES AND COLUMN BASE PLATES: ASTM A36, ANCHOR BOLTS: ASTM A307.
FOR ADDITIONAL INFORMATION, SEE DATA SHEET.

ELEVATION
DRILLED SHAFT OPTION

ELEVATION
SPREAD FOOTING OPTION

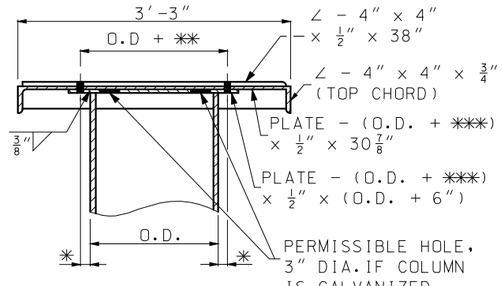

SECTION C–C

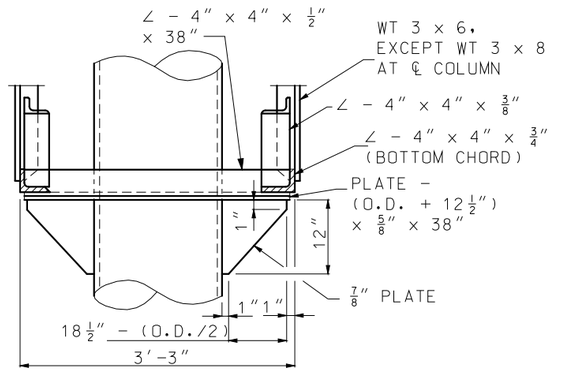

SECTION D–D

GENERAL NOTES:

ALL FASTENERS SHALL HAVE A HARDENED WASHER UNDER THE NUT OR BOLT HEAD, WHICHEVER IS TURNED IN TIGHTENING.

ZINC CHROMATE PRIMER SHALL MEET THE REQUIREMENTS OF FEDERAL SPECIFICATION TT-P-645 OR TT-P-1757 AND SHALL BE ACCEPTED ON THE BASIS OF THE LABEL SHOWING CONFORMANCE OR A MANUFACTURER'S CERTIFICATION.

DESIGN OF STRUCTURAL SUPPORTS SHALL COMPLY WITH AASHTO STANDARD SPECIFICATIONS FOR STRUCTURAL SUPPORTS FOR HIGHWAY SIGNS, LUMINAIRES AND TRAFFIC SIGNALS 2001 AND CURRENT INTERIMS.

DESIGN OF SPREAD FOOTINGS SHALL COMPLY WITH 1994 AASHTO STANDARD SPECIFICATIONS FOR STRUCTURAL SUPPORTS FOR HIGHWAY SIGNS, LUMINAIRES AND TRAFFIC SIGNALS.

ALL SIGNS SHALL BE CENTERED VERTICALLY ABOUT THE HORIZONTAL ℄ OF THE TRUSS.

MISSOURI HIGHWAYS AND TRANSPORTATION COMMISSION
105 WEST CAPITOL
JEFFERSON CITY, MO 65102
1-888-ASK-MODOT (1-888-275-6636)

STATE OF MISSOURI
EILEEN H. RACKERS
NUMBER PE-28336
PROFESSIONAL ENGINEER
THIS SHEET HAS BEEN SIGNED, SEALED AND DATED ELECTRONICALLY.

OVERHEAD SIGN TRUSSES
BUTTERFLY AND CANTILEVER STRUCTURAL STEEL

DATE EFFECTIVE: 10-01-2016
DATE PREPARED: 8/11/2016

903.12Z

SHEET NO. 1 OF 7

IF A SEAL IS PRESENT ON THIS SHEET IT HAS BEEN ELECTRONICALLY SEALED AND DATED.

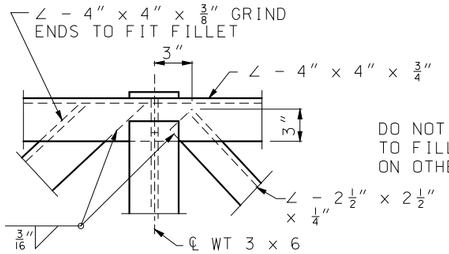

DETAIL 1

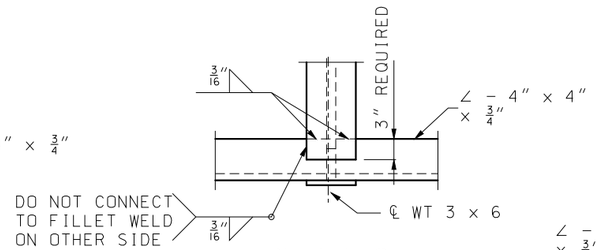

DETAIL 2

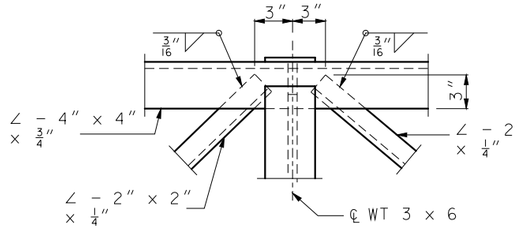

DETAIL 3

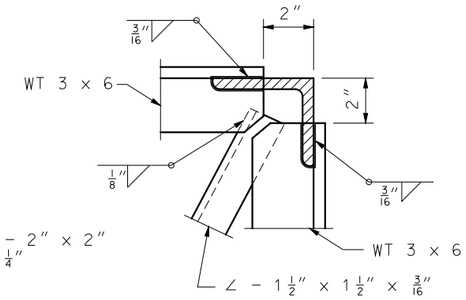

DETAIL 4

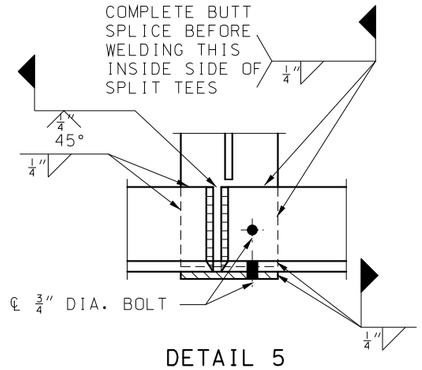

DETAIL 5

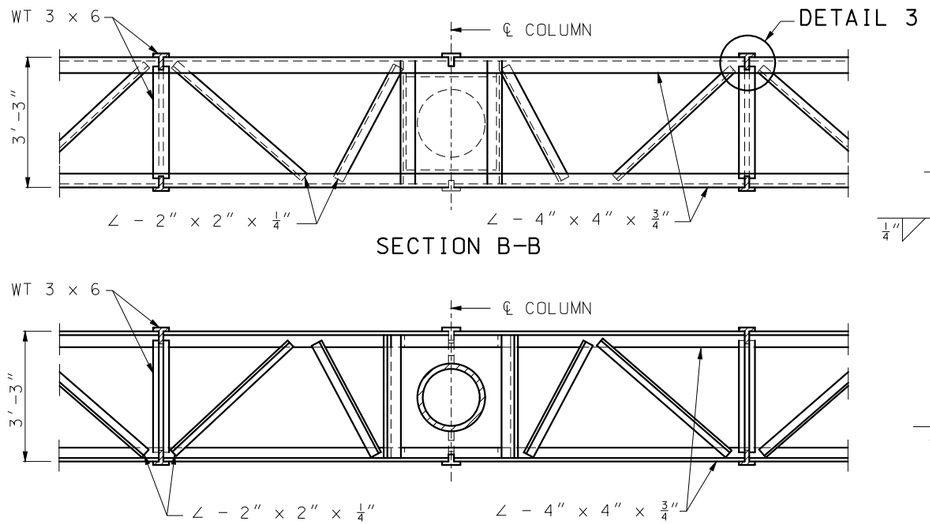

SECTION B–B

SECTION C–C

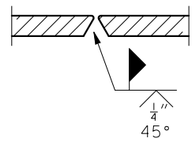

SECTION D–D

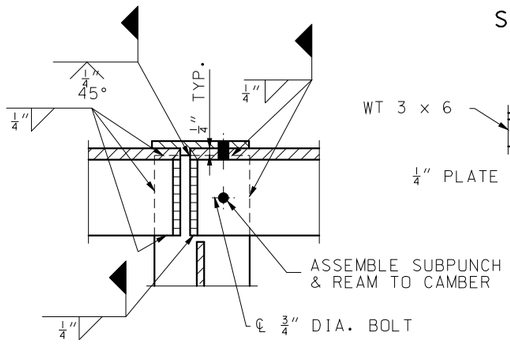

SECTION F–F

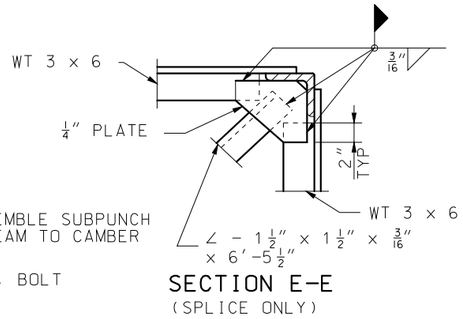

SECTION E–E
(SPLICE ONLY)

NOTE: ¾″ DIA. BOLTS SHALL BE REMOVED AFTER WELDING IS COMPLETE. BOLT HOLES SHALL BE PLUGGED AND THE OUTSIDE FACE GROUND SMOOTH.

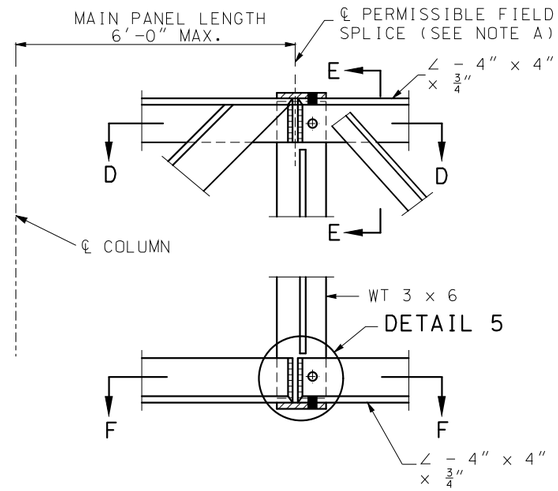

LOCATION OF FIELD SPLICE

NOTE A: SPLICING CHORD ANGLES IN THE SHOP AND THE FIELD SPLICE SHOWN IN THIS SHEET WILL NOT BE ALLOWED WITHOUT SPECIAL PERMISSION. IF PERMISSION IS GRANTED SUCH SPLICES SHALL BE LOCATED AT THE CENTER LINE OF MAIN PANEL POINT NEXT TO COLUMN.

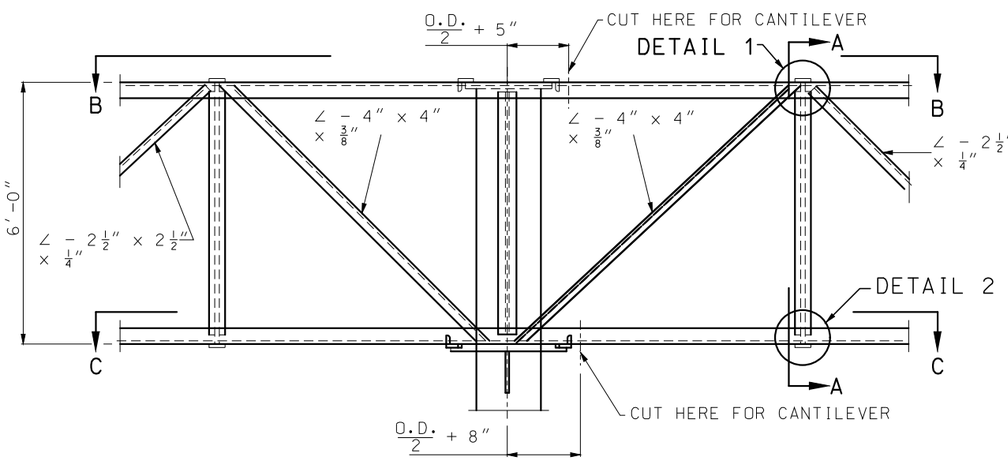

PART ELEVATION OF BUTTERFLY TRUSS

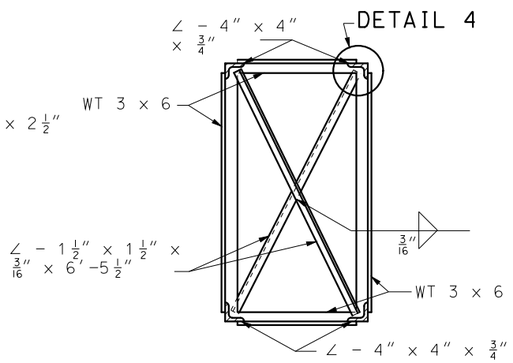

SECTION A–A

NOTE: SHRINK ∠ – 1½″ x 1½″ x 3/16″ IF NECESSARY TO TAKE UP DISTORTIONAL SLACK.

MISSOURI HIGHWAYS AND TRANSPORTATION COMMISSION
105 WEST CAPITOL
JEFFERSON CITY, MO 65102
1-888-ASK-MODOT (1-888-275-6636)

STATE OF MISSOURI
EILEEN H. RACKERS
NUMBER PE-28336
PROFESSIONAL ENGINEER
THIS SHEET HAS BEEN SIGNED, SEALED AND DATED ELECTRONICALLY.

OVERHEAD SIGN TRUSSES
BUTTERFLY & CANTILEVER STRUCTURAL STEEL

DATE EFFECTIVE: 10-01-2016
DATE PREPARED: 8/11/2016

903.12Z

SHEET NO. 2 OF 7

IF A SEAL IS PRESENT ON THIS SHEET IT HAS BEEN ELECTRONICALLY SEALED AND DATED.

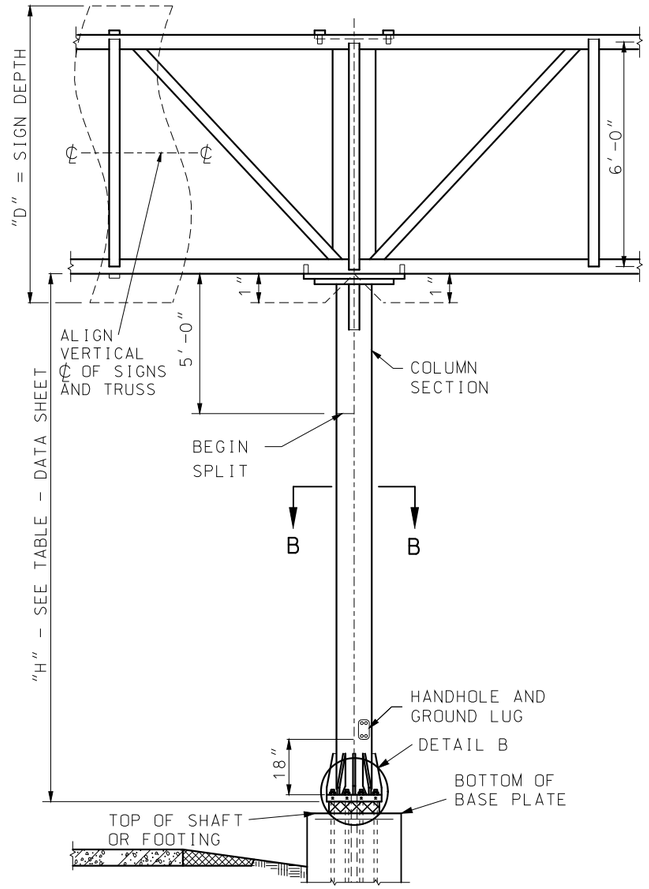

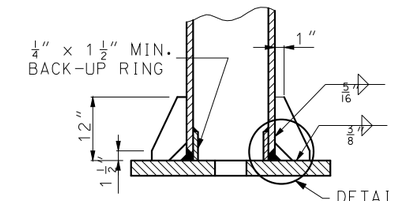

DETAIL B
(SECTION VIEW SHOWN)

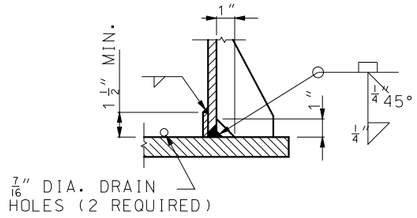

DETAIL C

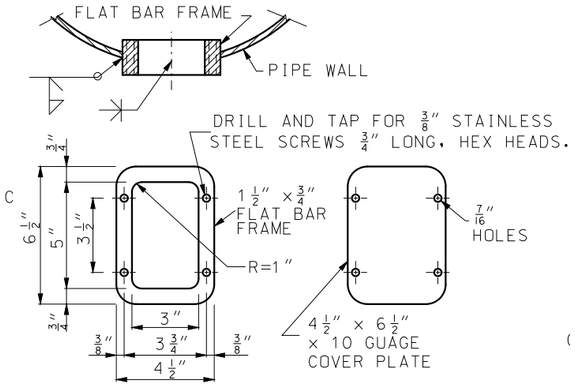

HANDHOLE AND COVER DETAILS

NOTE:
HANDHOLE REQUIRED ONLY IN POWER COLUMN.

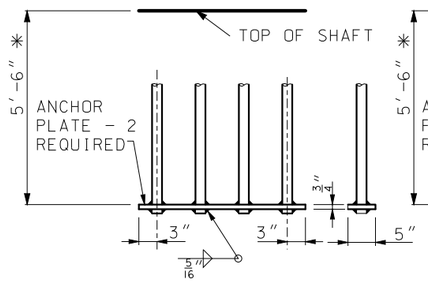

DETAIL A
ANCHORAGE

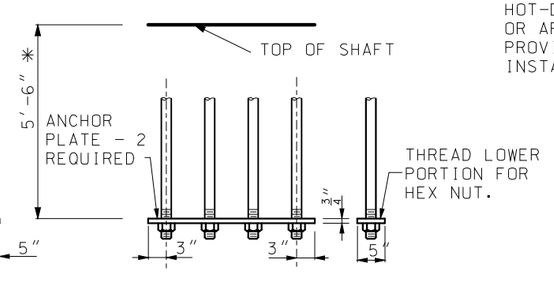

DETAIL A
OPTIONAL ANCHORAGE

(BOTH DETAILS ARE SHOWN FOR 4 BOLTS - SIMILAR FOR 3 BOLTS)
* DIMENSION SHOWN FOR DRILLED SHAFT OPTION. FOR SPREAD FOOTING OPTION REFER TO SHEET 6 OF 7.

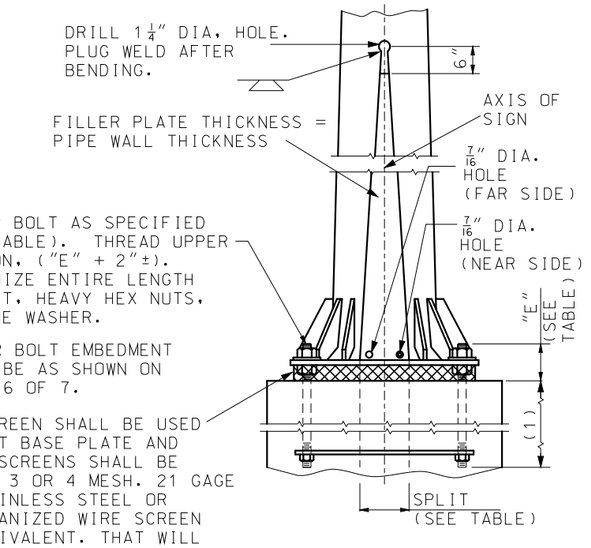

(1) ANCHOR BOLT EMBEDMENT SHALL BE AS SHOWN ON SHEET 6 OF 7.

A GALVANIZED SCREEN SHALL BE USED BETWEEN THE POST BASE PLATE AND CONCRETE BASE. SCREENS SHALL BE PRESS-FORMED OF 3 OR 4 MESH. 21 GAGE OR HEAVIER. STAINLESS STEEL OR HOT-DIPPED GALVANIZED WIRE SCREEN OR APPROVED EQUIVALENT. THAT WILL PROVIDE A FRICTION-TIGHT FIT WHEN INSTALLED.

PART ELEVATION

GENERAL NOTES:

SUBSTRUCTURE SHALL BE BACKFILLED PRIOR TO ERECTION OF POST.

ASTM A 106 GRADE B STEEL PIPE OR A TAPERED TUBE OF EQUIVALENT SIZE AND THICKNESS MAY BE SUBSTITUTED FOR PIPE POST.

ALL STEEL PIPE COLUMNS SHALL BE EITHER GRADE "B" SEAMLESS STEEL PIPE OR GRADE "B" ELECTRIC RESISTANCE WELDED STEEL PIPE; A.S.T.M. SPECIFICATION A53.

ALL STRUCTURES SHALL BE GROUNDED.

BURR THREADS ON ALL ANCHOR BOLTS.

A HORIZONTAL WELDED SPLICE MAY BE FABRICATED IN THE COLUMN BETWEEN THE TOP OF PIPE AND 4'-0" BELOW THE BOTTOM CHORDS OF THE TRUSS WHEN DETAILED ON THE SHOP DRAWINGS AND APPROVED BY THE ENGINEER.

GROUND LUGS SHALL BE LOCATED INSIDE COLUMN NEAR HAND HOLE.

ALL SIGNS SHALL BE CENTERED VERTICALLY ABOUT THE HORIZONTAL ℄ OF THE TRUSS.

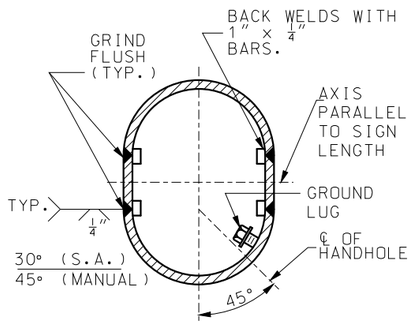

SECTION B-B
(FOR SPLIT COLUMNS ONLY)

TYPICAL BASE PLATE (10 ANCHOR TYPE) BUTTERFLY AND CANTILEVER (B.C.)					
	III	IV	V	VI	VII
A	8"	9"	8"	9"	10½"
B	10"	10"	10"	10"	11"
C	32"	34"	32"	34"	38"
D	13"	14"	16½"	18"	20"
E	32"	34"	39"	42"	46"
F	6"	6"	6"	6"	6"

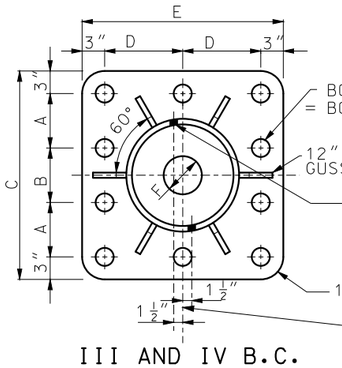

III AND IV B.C.

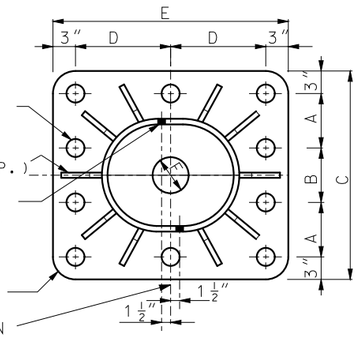

V, VI, AND VII B.C.

TYPICAL BASE PLATES

NOTE:
FOR DETAILS OF OPTIONAL SUBSTRUCTURES, SEE OTHER SHEETS.

ANCHOR BOLTS AND PLATE NOT SHOWN.

IF A SEAL IS PRESENT ON THIS SHEET IT HAS BEEN ELECTRONICALLY SEALED AND DATED.

MISSOURI HIGHWAYS AND TRANSPORTATION COMMISSION
105 WEST CAPITOL
JEFFERSON CITY, MO 65102
1-888-ASK-MODOT (1-888-275-6636)

STATE OF MISSOURI
EILEEN H. RACKERS
NUMBER PE-28336
PROFESSIONAL ENGINEER
THIS SHEET HAS BEEN SIGNED, SEALED AND DATED ELECTRONICALLY.

OVERHEAD SIGN TRUSS
COLUMN AND BASE PLATES

DATE EFFECTIVE: 10-01-2016
DATE PREPARED: 8/11/2016

903.12Z

SHEET NO. 3 OF 7

DRILLED SHAFT OPTION

POST TYPE	PIPE COLUMN O.D.	PIPE COLUMN WEIGHT (LBS.)	"E"	SPLIT	BASE PLATE SIZE**	ANCHOR BOLT NO.	ANCHOR BOLT DIA.	C	FA	FB	FC	FD	FH	COLLAR REINFORCEMENT MOMENT-C1 BARS	MOMENT-C1 SPACING	SHEAR-C2 BARS	SHEAR-C2 SPACING	SKIN-C3 BARS	SKIN-C3 SPACING	SHAFT REINFORCEMENT LONGITUDINAL S1 QUANTITY	LONGITUDINAL S1 BARS	SHEAR-S2 BARS	SHEAR-S2 SPACING	REBAR TOTAL (LBS.)	CONCRETE (CU.YDS.)
III	18"	93.45	8½"	0"	2'-8" x 2'-8" x 1¾"	10	2"	2'-10"	4'-0"	7'-6"	1'-6"	4'-6"	14'-0"	#6	6"	#4	12"	#4	12"	19	#10	#5	6"	2126	12.4
IV	20"	104.13	8½"	0"	2'-10" x 2'-10" x 2"	10	2¼"	3'-0"	4'-0"	7'-6"	1'-6"	4'-6"	14'-0"	#6	6"	#4	12"	#4	12"	19	#10	#5	6"	2126	12.4
V	18"	93.45	8½"	7"	3'-3" x 2'-8" x 2"	10	2¼"	2'-10"	5'-0"	13'-6"	4'-0"	5'-6"	17'-0"	#6	6"	#4	12"	#4	12"	22	#11	#6	6"	3901	26.5
VI	20"	104.13	8½"	8"	3'-6' x 2'-10" x 2¼"	10	2¼"	3'-0"	5'-0"	14'-0"	4'-0"	6'-0"	18'-0"	#6	6"	#4	12"	#4	12"	27	#11	#6	6"	4742	31.8
VII	24"	125.49	9"	8"	3'-10" x 3'-2" x 2¼"	10	2½"	3'-4"	5'-0"	14'-0"	4'-0"	6'-0"	18'-0"	#6	6"	#4	12"	#4	12"	27	#11	#6	6"	4742	31.8

ALTERNATE PEDESTALS

POST TYPE	REBAR TOTAL (LBS.) TYPE A	REBAR TOTAL (LBS.) TYPE C	CONCRETE (CU.YDS.) TYPE A	CONCRETE (CU.YDS.) TYPE C
III	2066	2077	13.4	14.5
IV	2066	2077	13.5	14.6
V	3763	3782	28.8	30.7
VI	4528	4547	34.1	36.2
VII	4528	4547	34.5	36.8

SPREAD FOOTING OPTION

POST TYPE	PIPE COLUMN O.D.	PIPE COLUMN WEIGHT (LBS.)	"E"	SPLIT	BASE PLATE SIZE**	ANCHOR BOLT NO.	ANCHOR BOLT DIA.	PEDESTAL SIZE * a	PEDESTAL SIZE * b	FOOTING SIZE *	LONGITUDINAL FOOTING REINFORCEMENT TOP NO.	TOP BARS	BOTTOM NO.	BOTTOM BARS	PEDESTAL REINFORCEMENT NO.	PEDESTAL REINFORCEMENT BARS	NO.	BARS	REBAR TOTAL (LBS.)	CONCRETE (CU.YDS.)
III	18"	93.45	8½"	0"	2'-8" x 2'-8" x 1¾"	10	2"	4'-2"	3'-8"	10'-0" x 13'-0"	10	#5	10	#5	10	#4	14	#8	695	14.4
IV	20"	104.13	8½"	0"	2'-10" x 2'-10" x 2"	10	2¼"	4'-4"	3'-10"	10'-0' x 14'-0"	10	#5	10	#5	10	#4	14	#8	733	15.6
V	18"	93.45	8½"	7"	3'-3" x 2'-8" x 2"	10	2¼"	4'-9"	3'-8"	9'-0" x 17'-0"	9	#5	10	#7	10	#4	14	#8	955	16.5
VI	20"	104.13	8½"	8"	3'-6' x 2'-10" x 2¼"	10	2¼"	5'-0"	3'-10"	9'-0" x 19'-0"	9	#5	10	#7	10	#4	14	#8	1028	18.4
VII	24"	125.49	9"	8"	3'-10" x 3'-2" x 2¼"	10	2½"	5'-4"	4'-2"	10'-0" x 20'-0"	9	#5	12	#7	10	#4	14	#8	1196	21.5

SPREAD FOOTING OPTION WITH ALTERNATE PEDESTALS

POST TYPE	PIPE COLUMN O.D.	PIPE COLUMN WEIGHT (LBS.)	"E"	SPLIT	BASE PLATE SIZE**	ANCHOR BOLT NO.	ANCHOR BOLT DIA.	PEDESTAL SIZE * c	PEDESTAL SIZE * d	PEDESTAL SIZE * e	FOOTING SIZE *	TYPE A LONGITUDINAL FOOTING REINFORCEMENT TOP NO.	TOP BARS	BOTTOM NO.	BOTTOM BARS	TYPE A PEDESTAL REINFORCEMENT NO.	BARS	NO.	BARS	TYPE A REBAR TOTAL (LBS.)	TYPE A CONCRETE (CU.YDS.)	TYPE C LONGITUDINAL FOOTING REINFORCEMENT TOP NO.	TOP BARS	BOTTOM NO.	BOTTOM BARS	TYPE C PEDESTAL REINFORCEMENT NO.	BARS	NO.	BARS	TYPE C REBAR TOTAL (LBS.)	TYPE C CONCRETE (CU.YDS.)
III	18"	93.45	8½"	0"	2'-8" x 2'-8" x 1¾"	10	2"	2'-10"	6'-6"	15"	10'-0" x 13'-0"	10	#5	10	#5	10	#4	14	#8	757	14.4	10	#4	10	#5	12	#4	14	#8	800	15.3
IV	20"	104.13	8½"	0"	2'-10" x 2'-10" x 2"	10	2¼"	3'-0"	6'-9"	18"	10'-0' x 14'-0"	10	#5	10	#5	10	#4	14	#8	795	15.6	10	#4	10	#5	12	#4	14	#8	839	16.5
V	18"	93.45	8½"	7"	3'-3" x 2'-8" x 2"	10	2¼"	2'-10"	7'-0"	12"	9'-0" x 17'-0"	9	#5	10	#7	10	#4	14	#8	1015	16.5	10	#4	10	#7	12	#4	14	#8	1059	17.5
VI	20"	104.13	8½"	8"	3'-6' x 2'-10" x 2¼"	10	2¼"	3'-0"	7'-6"	15"	9'-0" x 19'-0"	9	#5	10	#7	10	#4	14	#8	1099	18.4	10	#4	10	#7	12	#4	14	#8	1134	19.5
VII	24"	125.49	9"	8"	3'-10" x 3'-2" x 2¼"	10	2½"	3'-4"	7'-10"	15"	10'-0" x 20'-0"	9	#5	12	#7	10	#4	14	#8	1257	21.5	10	#4	12	#7	12	#4	14	#8	1302	22.6

* BASE PLATES, PEDESTAL AND FOOTINGS, LONGER SIDES SHALL BE NORMAL TO AXIS OF SIGN.
** BASE PLATES, PEDESTAL AND FOUNDATIONS, LONGER SIDES SHALL BE NORMAL TO AXIS OF SIGN.

IF A SEAL IS PRESENT ON THIS SHEET IT HAS BEEN ELECTRONICALLY SEALED AND DATED.

MISSOURI HIGHWAYS AND TRANSPORTATION COMMISSION
105 WEST CAPITOL
JEFFERSON CITY, MO 65102
1-888-ASK-MODOT (1-888-275-6636)

STATE OF MISSOURI
EILEEN H. RACKERS
NUMBER PE-28336
PROFESSIONAL ENGINEER
THIS SHEET HAS BEEN SIGNED, SEALED AND DATED ELECTRONICALLY.

OVERHEAD SIGN TRUSSES
OPTIONAL SUBSTRUCTURE DATA

DATE EFFECTIVE: 10-01-2016
DATE PREPARED: 8/11/2016

903.12Z

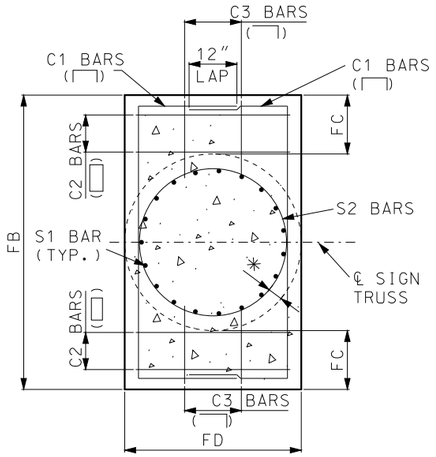

SECTION A-A

(TYPICAL SECTION SHOWING REINFORCING STEEL)

✳ 4" CLEAR FOR FD = 4'-6"
6" CLEAR FOR FD > 4'-6"

VERTICAL LEG OF C3 SHALL BE PLACED INSIDE SHAFT S2 BARS.

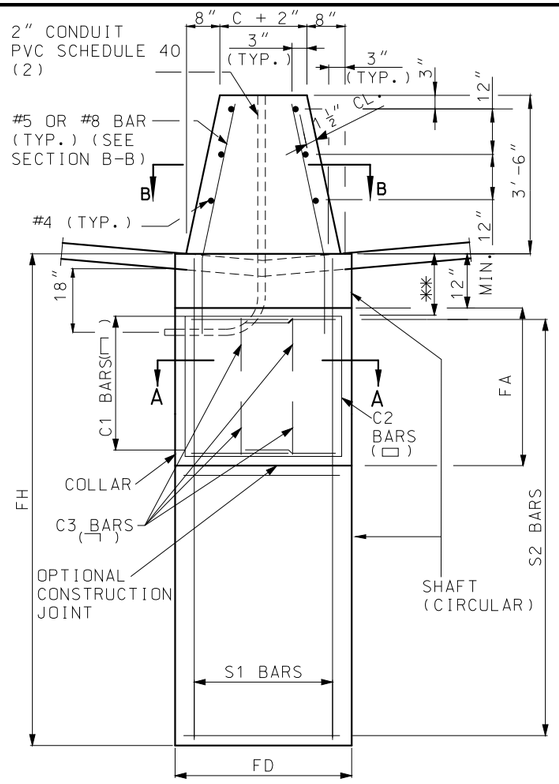

PART ELEVATION
(TYPE C CONCRETE TRAFFIC BARRIER)

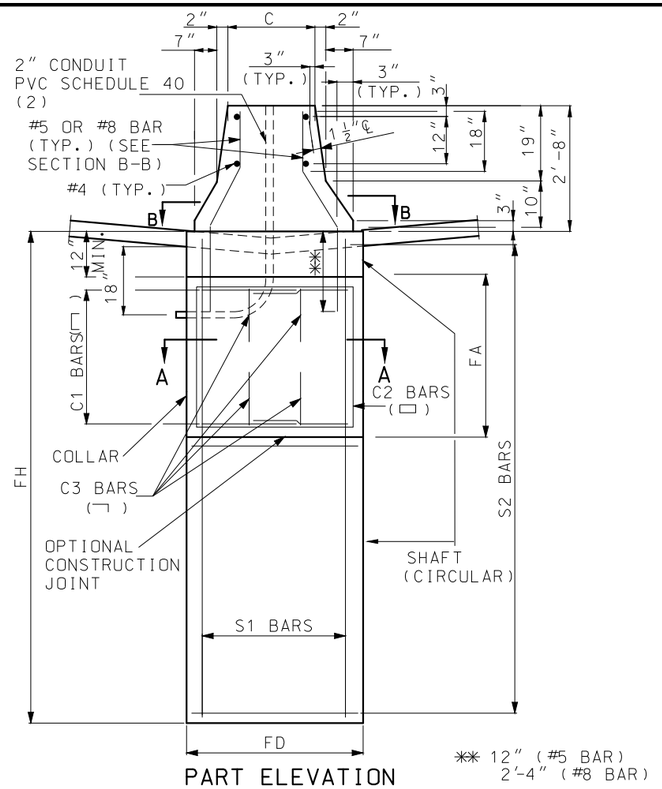

PART ELEVATION
(TYPE A CONCRETE TRAFFIC BARRIER)

✳✳ 12" (#5 BAR)
2'-4" (#8 BAR)

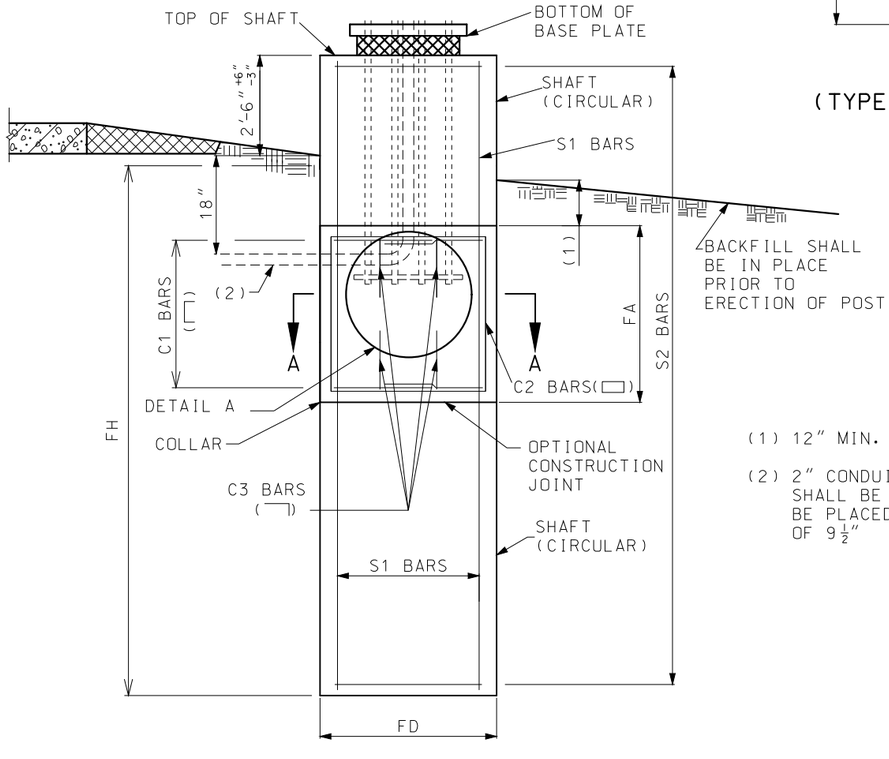

ELEVATION

DETAILS OF ALTERNATE PEDESTAL

(TO BE USED ADJACENT TO TYPE A OR TYPE C MEDIAN BARRIER)

(1) 12" MIN. TO 24" MAX.

(2) 2" CONDUIT IN THE CONCRETE PEDESTAL SHALL BE PVC SCHEDULE 40 AND SHALL BE PLACED WITH A MINIMUM BEND RADIUS OF 9½"

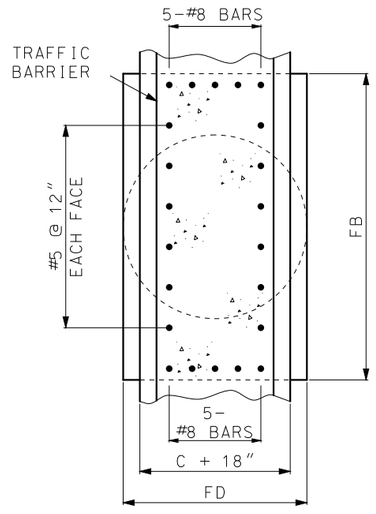

SECTION B-B

GENERAL NOTES:

SHAFT AND COLLAR SHALL BE CLASS B (P.C.C.).

MINIMUM CLEARANCE TO REINFORCEMENT IS 3" EXCEPT AS SHOWN.

WHEN ROCK IS ENCOUNTERED AT A DEPTH NOT EXCEEDING "FH"/2 FOR FD > 3'-0" OR "FH"/4 FOR FD ≤ 3'-0", THE DIMENSION "FH" MAY BE ADJUSTED TO A MINIMUM OF 3 X "FD", SUBJECT TO APPROVAL BY THE ENGINEER.

CONTACT THE ENGINEER IF WATER TABLE IS ENCOUNTERED DURING EXCAVATION.

PIPE COLUMN, BASE PLATE, ANCHOR BOLTS AND NOTES PERTAINING TO THESE ITEMS HAVE BEEN OMITTED FOR CLARITY. REFER TO SHEET 3 OF 7 FOR DETAILS OF THESE ITEMS.

MISSOURI HIGHWAYS AND TRANSPORTATION COMMISSION
105 WEST CAPITOL
JEFFERSON CITY, MO 65102
1-888-ASK-MODOT (1-888-275-6636)

STATE OF MISSOURI
EILEEN H. RACKERS
NUMBER PE-28336
PROFESSIONAL ENGINEER
THIS SHEET HAS BEEN SIGNED, SEALED AND DATED ELECTRONICALLY.

OVERHEAD SIGN TRUSSES
DRILLED SHAFT OPTION

DATE EFFECTIVE: 10-01-2016
DATE PREPARED: 8/11/2016

903.12Z

SHEET NO. 5 OF 7

IF A SEAL IS PRESENT ON THIS SHEET IT HAS BEEN ELECTRONICALLY SEALED AND DATED.

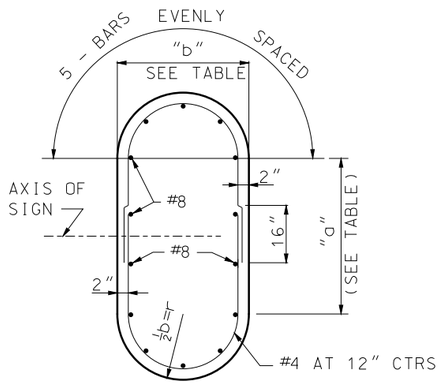

SECTION A-A
(TYPICAL SECTION SHOWING REINFORCING STEEL)

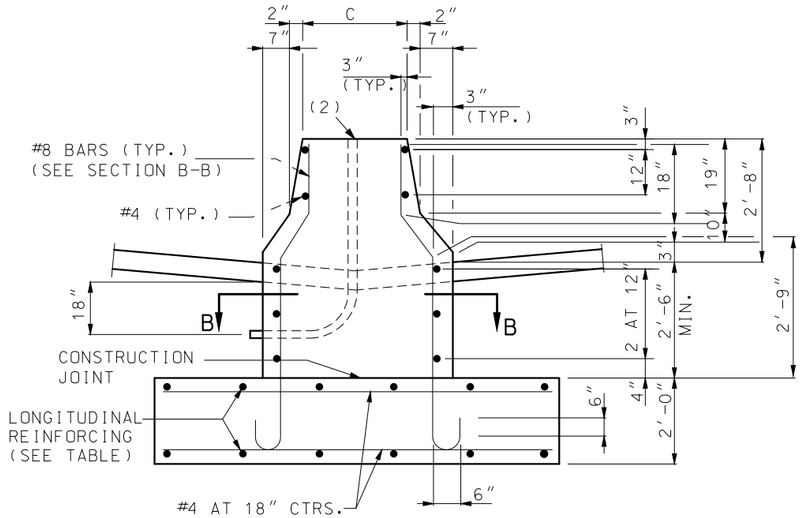

PART ELEVATION
(TYPE A CONCRETE TRAFFIC BARRIER)

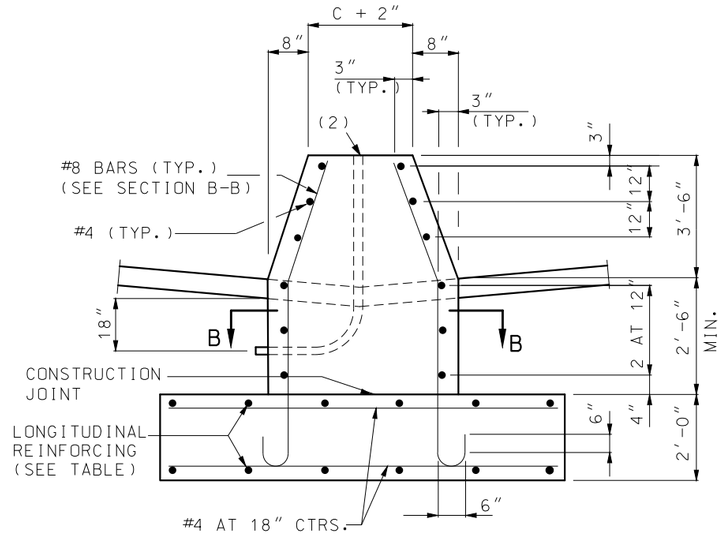

PART ELEVATION
(TYPE C CONCRETE TRAFFIC BARRIER)

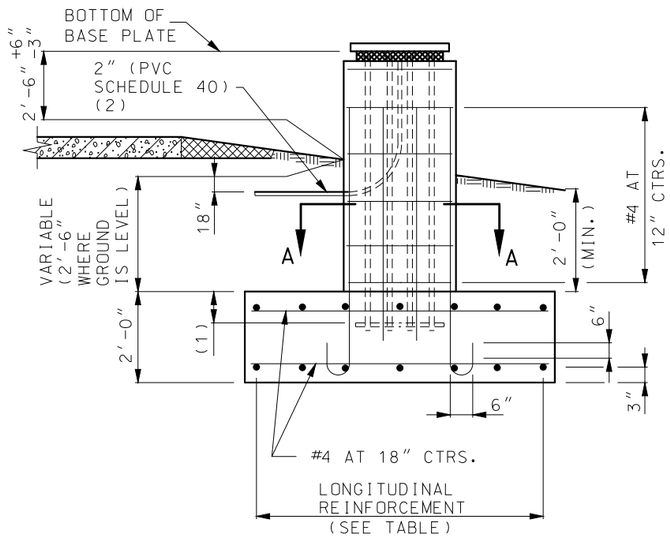

ELEVATION

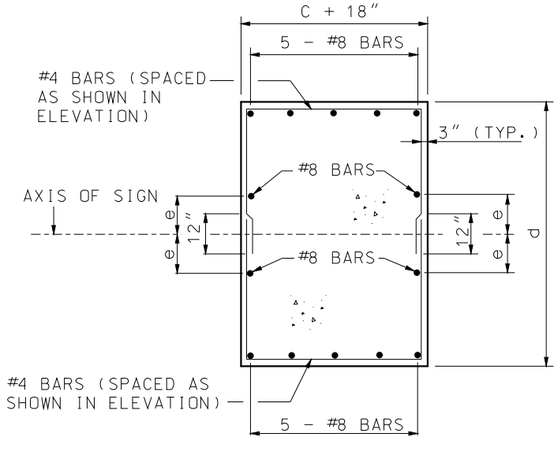

SECTION B-B
TYPICAL SECTION SHOWING
REINFORCING STEEL

DETAILS OF ALTERNATE PEDESTAL

(1) 12"$^{+6"}_{-3"}$ (DETAIL FOR 12" FIELD TOLERANCE)

(2) 2" CONDUIT IN THE CONCRETE PEDESTAL SHALL BE PVC SCHEDULE 40 AND SHALL BE PLACED WITH A MINUMUM BEND RADIUS OF 9½".

GENERAL NOTES:

PEDESTAL AND FOOTING SHALL BE CLASS B (P.C.C.).

MINIMUM CLEARANCE TO REINFORCEMENT IS 3" EXCEPT AS SHOWN.

CONTACT THE ENGINEER IF WATER TABLE IS ENCOUNTERED DURING EXCAVATION.

PIPE COLUMN, BASE PLATE, ANCHOR BOLTS AND NOTES PETAINING TO THESE ITEMS HAVE BEEN OMITTED FOR CLARITY. REFER TO SHEET 3 OF 7 FOR DETAILS OF THESE ITEMS.

IF A SEAL IS PRESENT ON THIS SHEET IT HAS BEEN ELECTRONICALLY SEALED AND DATED.

MISSOURI HIGHWAYS AND TRANSPORTATION COMMISSION
105 WEST CAPITOL
JEFFERSON CITY, MO 65102
1-888-ASK-MODOT (1-888-275-6636)

STATE OF MISSOURI
EILEEN H. RACKERS
NUMBER PE-28336
PROFESSIONAL ENGINEER
THIS SHEET HAS BEEN SIGNED, SEALED AND DATED ELECTRONICALLY.

OVERHEAD SIGN TRUSSES
SPREAD FOOTING

DATE EFFECTIVE: 10-01-2016
DATE PREPARED: 8/11/2016

903.12Z

SHEET NO. 6 OF 7

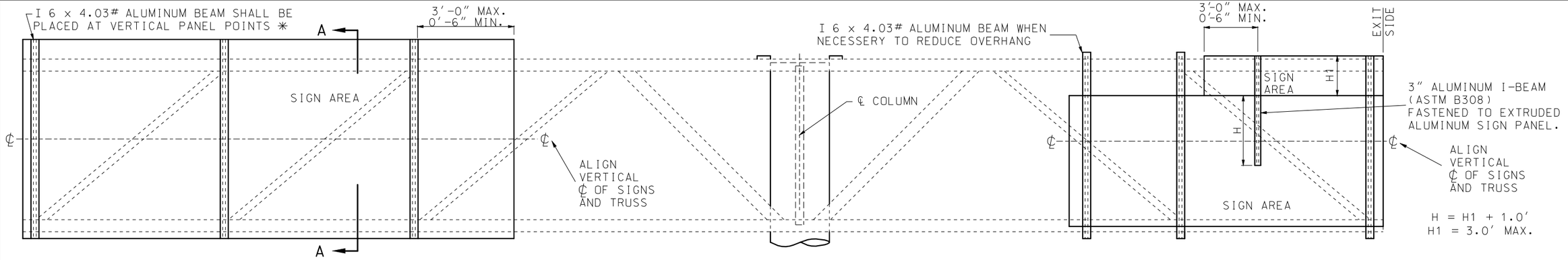

TYPICAL ELEVATION OF SIGNS COMPONENTS

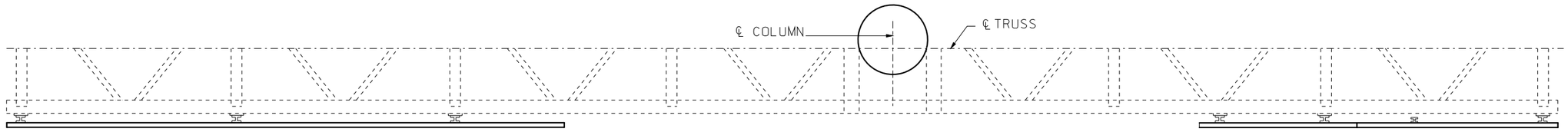

TYPICAL PLAN OF SIGN COMPONENTS

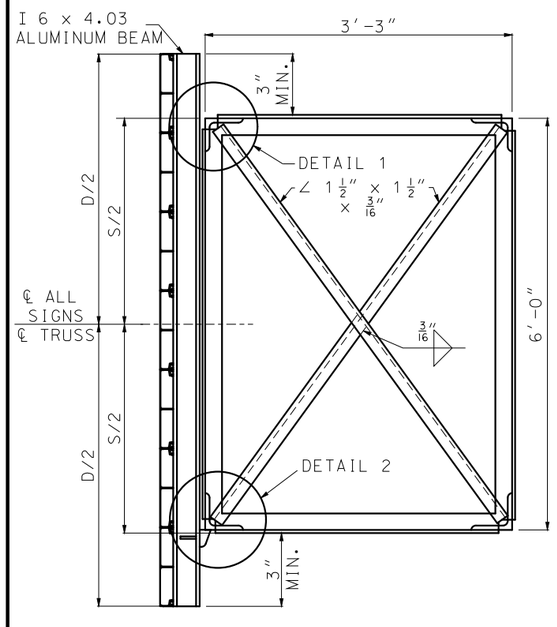

SECTION A-A
TYPICAL SECTION
OF SIGN SUPPORT

NOTE:
"D" = GREATEST OVERALL DEPTH OF ANY SIGNS ON TRUSSES.

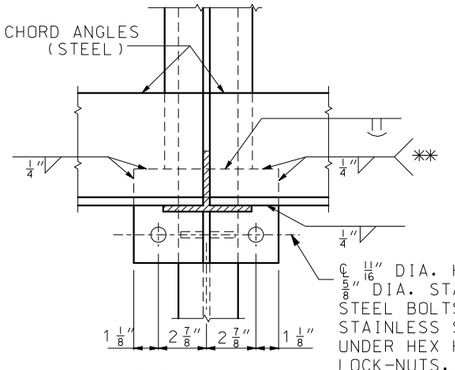

SECTION C-C

9/16" DIA. HOLES IN ALUMINUM FLANGE.
9/16" x 1" SLOT IN 5/8" ℄ FOR ½" DIA. STAINLESS STEEL HEX HEAD BOLTS AND LOCK-NUTS WITH FLAT STAINLESS STEEL WASHERS.

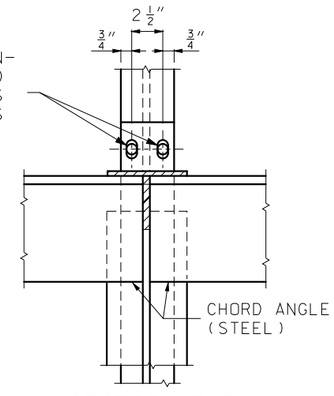

SECTION F-F

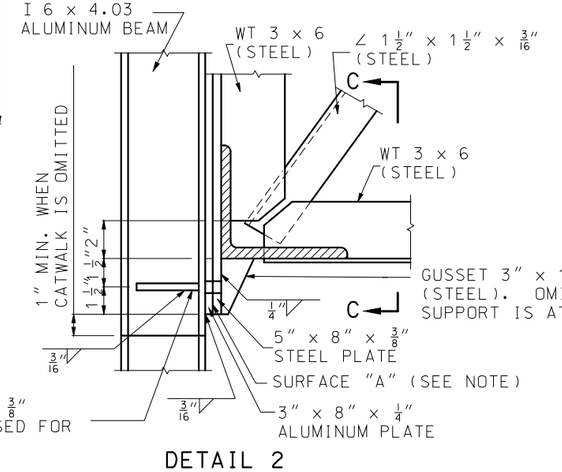

TWO - GUSSETS 5" x 1" x 3/8" (ALUM.) OMIT WHEN NOT USED FOR CATWALK SUPPORT.

DETAIL 2

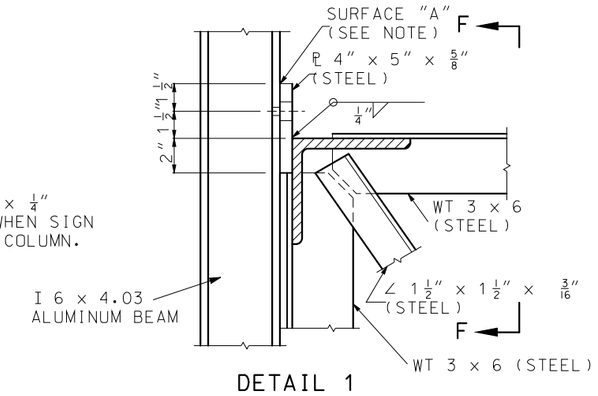

DETAIL 1

NOTE:
SURFACE "A", ZINC CHROMATE ON ALUMINUM SURFACES. NORMAL CLEANING AND PAINTING ON STEEL SURFACES. ZINC CHROMATE IS NOT REQUIRED WHEN STEEL IS GALVANIZED.

✳ FOR SIGN HEIGHTS GREATER THAN 17'-0", BUT LESS THAN OR EQUAL TO 20'-0" USE ADDITIONAL I 6 x 4.03 ALUMINUM BEAMS TO ACHIEVE A MAXIMUM SPACING OF 4'-0" BETWEEN SIGN SUPPORTS.

✳✳ WHEN SIGN SUPPORTS ARE PLACED BETWEEN VERTICAL PANEL POINTS AS ILLUSTRATED IN TYPICAL ELEVATION OF SIGNS COMPONENTS, WELD THE ⅜" STEEL PLATE TO THE BOTTOM CHORD WITH A ¼" FILLET WELD.

GENERAL NOTES:

EXIT NO. PANELS SHALL BE MONTED FLUSH WITH THE EXIT SIDE OF THE GUIDE SIGN.

ALL SIGNS SHALL BE CENTERED VERTICALLY ABOUT THE HORIZONTAL ℄ OF THE TRUSS.

FOR SIGN MOUNTING DETAILS, SEE STANDARD PLANS 903.03.

MISSOURI HIGHWAYS AND TRANSPORTATION COMMISSION
105 WEST CAPITOL
JEFFERSON CITY, MO 65102
1-888-ASK-MODOT (1-888-275-6636)

STATE OF MISSOURI
EILEEN H. RACKERS
NUMBER PE-28336
PROFESSIONAL ENGINEER
THIS SHEET HAS BEEN SIGNED, SEALED AND DATED ELECTRONICALLY.

OVERHEAD SIGN TRUSSES
STRUCTURAL STEEL BUTTERFLY AND CANTILEVER

DATE EFFECTIVE: 10-01-2016
DATE PREPARED: 8/11/2016

903.12Z

SHEET NO. 7 OF 7

IF A SEAL IS PRESENT ON THIS SHEET IT HAS BEEN ELECTRONICALLY SEALED AND DATED.

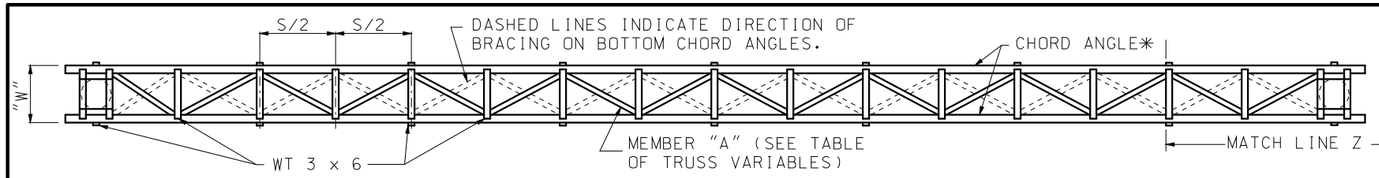

PART PLAN

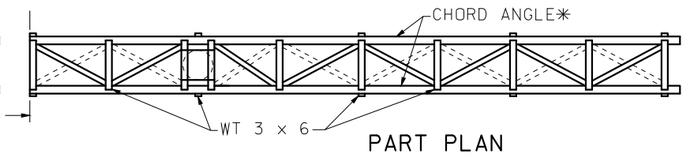

PART PLAN

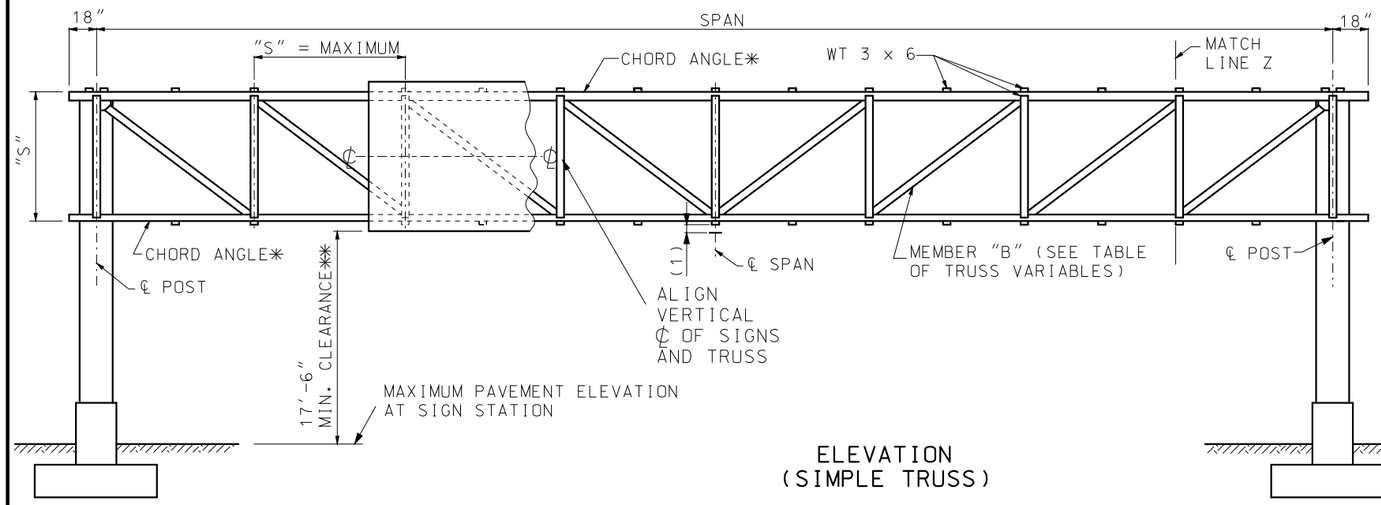

ELEVATION
(SIMPLE TRUSS)

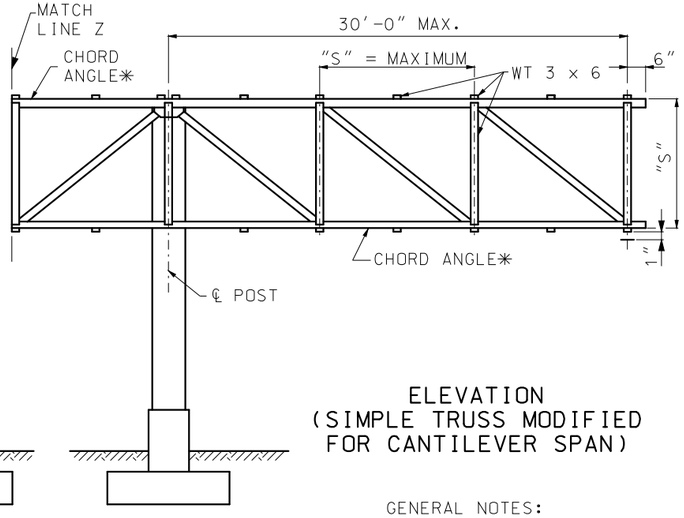

ELEVATION
(SIMPLE TRUSS MODIFIED FOR CANTILEVER SPAN)

NOTES:

SHOP SPLICES ON CHORD ANGLES WILL BE ALLOWED ONLY BY SPECIAL PERMISSION. IF PERMISSION IS GRANTED, SUCH SPLICES MUST BE LOCATED AT THE CENTERLINE OF MAIN PANEL POINTS.

"D" = GREATEST OVERALL DEPTH OF ANY SIGN OR SIGNS ON TRUSS AND "S" = TRUSS DEPTH, AND "W" = TRUSS WIDTH.

$\frac{3}{4}$" DIA. BOLTS SHALL BE REMOVED AFTER WELDING IS COMPLETE. BOLT HOLES SHALL BE PLUGGED AND THE OUTSIDE FACE GROUND SMOOTH.

* SEE GENERAL NOTES THIS SHEET FOR CHARPY V-NOTCH REQUIREMENTS.

** IF LIGHTING IS SPECIFIED, VERTICAL CLEARANCE IS MEASURED TO LOWEST POINT OF LIGHTING BRACKET.

(1) FOR PARABOLIC CAMBER SEE TABLE OF TRUSS VARIABLES

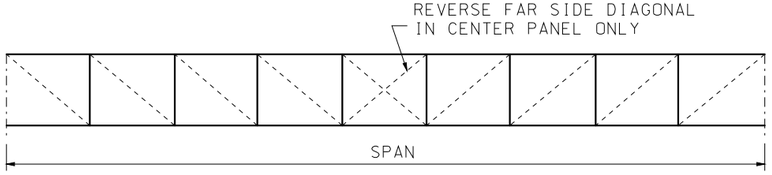

TRUSS ELEVATION
(UNEVEN NUMBER OF TRUSS PANELS)

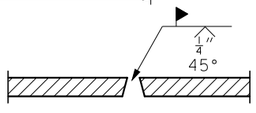

SECTION A-A

TRUSS VARIABLES					
SPAN	"S"	"W"	MEMBER "A"	MEMBER "B"	SHOP CAMBER
UP TO 80'-6"	6'-0"	4'-0"	L $2\frac{1}{2}$" x $2\frac{1}{2}$" x $\frac{1}{4}$"	L $2\frac{1}{2}$" x $2\frac{1}{2}$" x $\frac{1}{4}$"	2"
81' TO 100'-6"	6'-0"	5'-0"	L 3" x 3" x $\frac{1}{4}$"	L $2\frac{1}{2}$" x $2\frac{1}{2}$" x $\frac{1}{4}$"	$2\frac{1}{2}$"
101' TO 130'-6"	7'-0"	6'-0"	L 3" x 3" x $\frac{1}{4}$"	L 3" x 3" x $\frac{1}{4}$"	$3\frac{1}{2}$"
131' TO 150'-6"	8'-0"	6'-0"	L $3\frac{1}{2}$" x $3\frac{1}{2}$" x $\frac{5}{16}$"	L $3\frac{1}{2}$" x $3\frac{1}{2}$" x $\frac{5}{16}$"	$4\frac{1}{2}$"
151' TO 160'-6"	8'-0"	7'-0"	L $3\frac{1}{2}$" x $3\frac{1}{2}$" x $\frac{5}{16}$"	L $3\frac{1}{2}$" x $3\frac{1}{2}$" x $\frac{5}{16}$"	$5\frac{1}{2}$"

NOTE: FOR SIZE OF CHORD MEMBERS SEE DATA SHEET.

GENERAL NOTES:

ALL STRUCTURAL STEEL AND COLUMN BASE PLATES ASTM A36, EXCEPT THAT CHORD ANGLES GREATER THAN $\frac{1}{2}$" IN THICKNESS SHALL BE AASHTO M183 WITH SUPPLEMENTAL REQUIREMENTS: S5, CHARPY V-NOTCH IMPACT TEST FOR TEMPERATURE ZONE 2.

ALL ANCHOR BLOTS ASTM A370.

PROPOSED FIELD SPLICES SHALL BE SHOWN ON SHOP DRAWINGS FOR APPROVAL OF THE ENGINEER.

TRUSSES SHALL BE FABRICATED WITH A MINIMUM OF SPLICING IN TRUSS CHORDS. FIELD SPLICING WILL NOT BE PERMITTED WITHIN THE MIDDLE ONE-THIRD OF SPAN.

FOR ADDITIONAL INFORMATION SEE DATA SHEET.

ZINC CHROMATE PRIMER SHALL MEET THE REQUIREMENTS OF FEDERAL SPECIFICATIONS TT-P-645 OR TT-P-1757 AND SHALL BE ACCEPTED ON THE BASIS OF THE LABEL SHOWING CONFORMANCE OR A MANUFACTURER'S CERTIFICATION.

ALL SIGNS SHALL BE CENTERED VERTICALLY ABOUT THE HORIZONTAL ℄ OF THE TRUSS.

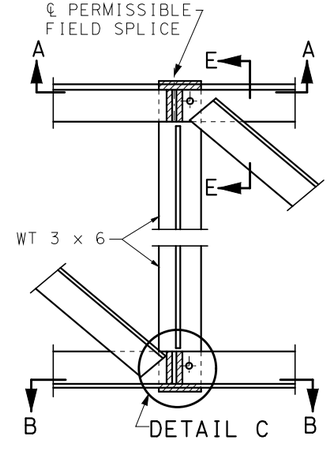

SECTION THROUGH TRUSS LOCATING SPLICES

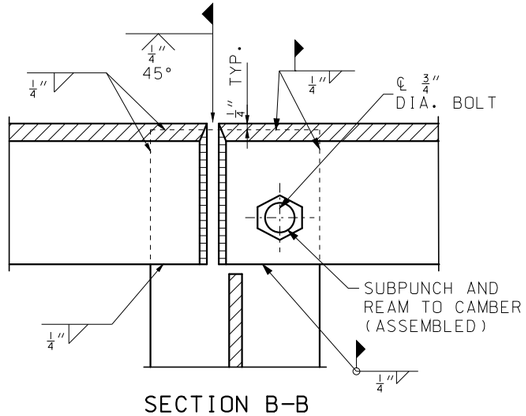

SECTION B-B

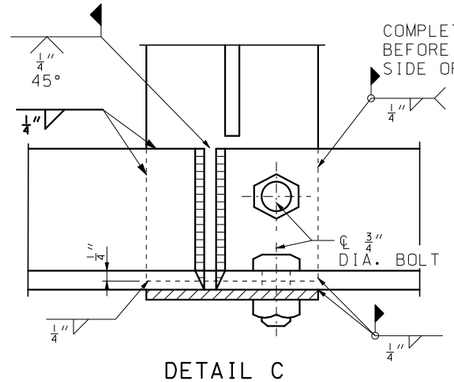

DETAIL C

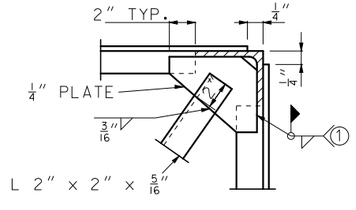

SECTION E-E
(FIELD SPLICE ONLY)

DETAIL OF FIELD SPLICES
(IF ANY)

① SEE SHEET 2

MISSOURI HIGHWAYS AND TRANSPORTATION COMMISSION
105 WEST CAPITOL
JEFFERSON CITY, MO 65102
1-888-ASK-MODOT (1-888-275-6636)

STATE OF MISSOURI
EILEEN H. RACKERS
NUMBER PE-28336
PROFESSIONAL ENGINEER
THIS SHEET HAS BEEN SIGNED, SEALED AND DATED ELECTRONICALLY.

OVERHEAD SIGN TRUSSES

STRUCTURAL STEEL

DATE EFFECTIVE: 10/01/2016
DATE PREPARED: 8/11/2016

903.60AB

SHEET NO. 1 OF 5

IF A SEAL IS PRESENT ON THIS SHEET IT HAS BEEN ELECTRONICALLY SEALED AND DATED.

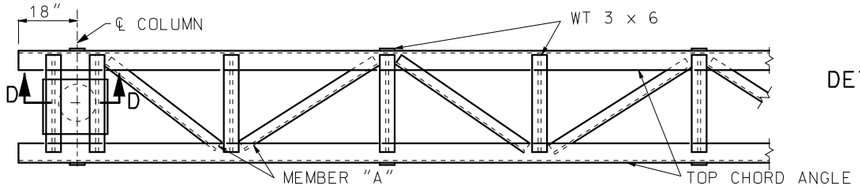

PLAN

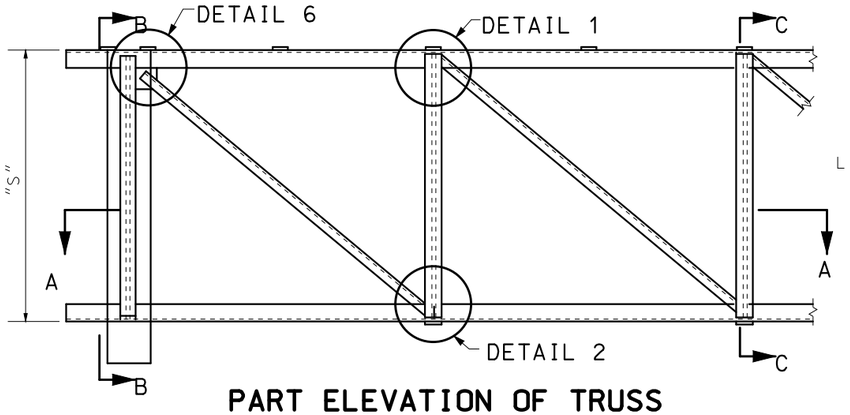

PART ELEVATION OF TRUSS

NOTE: FOR SIZE OF MEMBER "A" SEE TABLE OF TRUSS VARIABLES, SHEET NO 1.

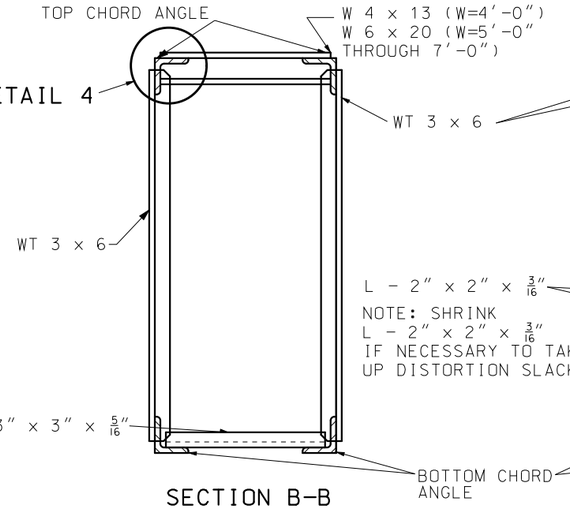

SECTION B-B

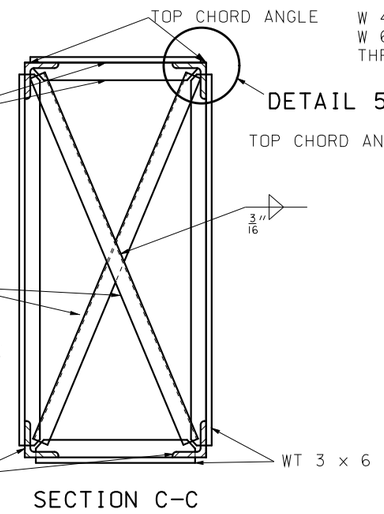

SECTION C-C

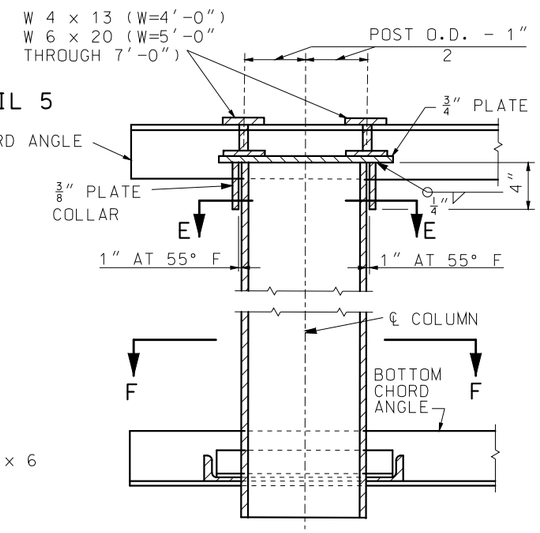

SECTION D-D

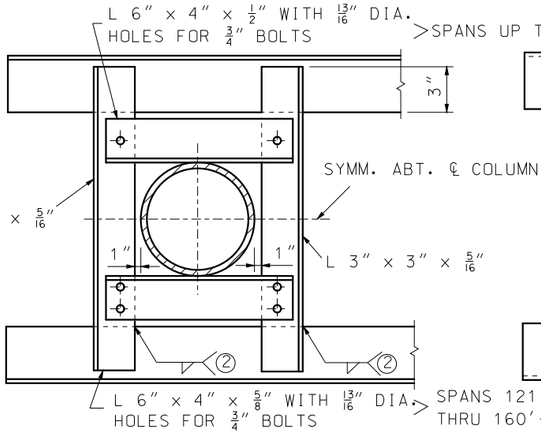

NOTE: BOLTS SHALL BE HIGH STRENGTH STEEL WITH HARDENED WASHERS UNDER HEAD AND NUT.

SECTION F-F

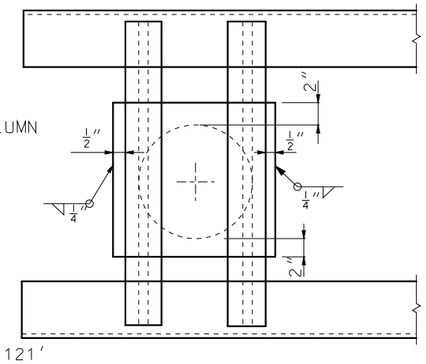

PLAN OF POST

NOTE: FILLET WELD 2 (SHOP OR FIELD) SHALL BE 3/16" WHEN "+" IS 1/2" OR LESS AND 1/4" WHEN "+" IS GREATER THAN 1/2".

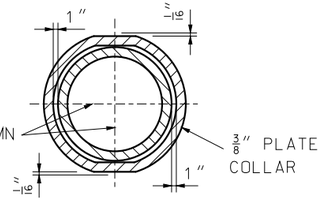

SECTION E-E

NOTE: DETAILS OF CANTILEVER END SECTION ARE SIMILAR TO THOSE SHOWN ON THIS SHEET.

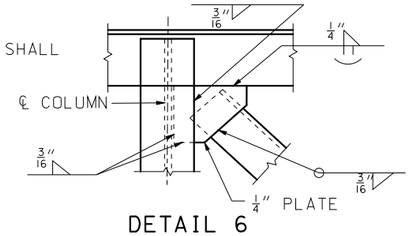

DETAIL 6

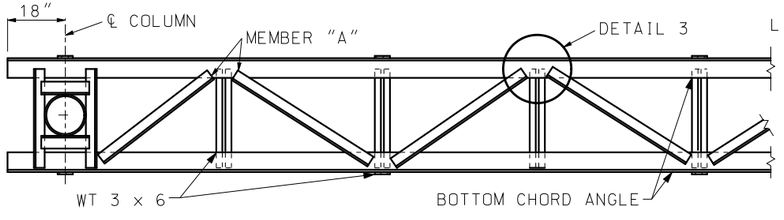

SECTION A-A

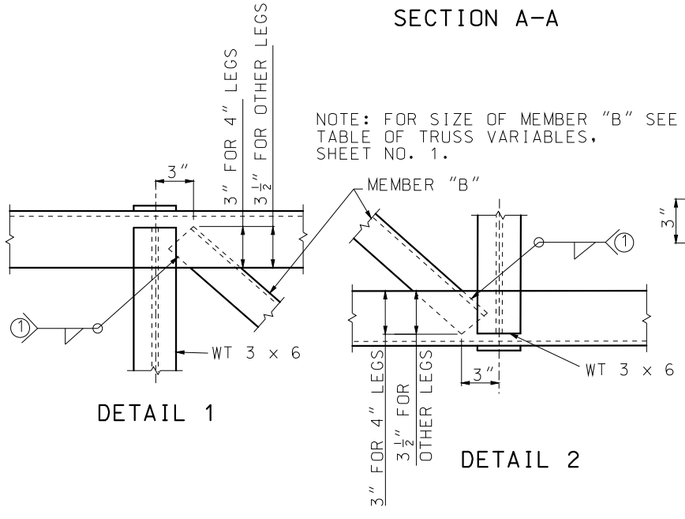

NOTE: FOR SIZE OF MEMBER "B" SEE TABLE OF TRUSS VARIABLES, SHEET NO. 1.

DETAIL 1

DETAIL 2

IF DESIRED THE OUTSTANDING LEGS OF DIAGONAL ANGLES MAY BE CLIPPED AT 45° TO FACILITATE ASSEMBLY AND WELDING.

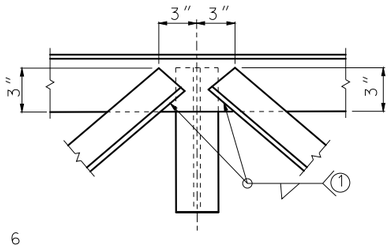

DETAIL 3

TYPICAL FOR ALL PANEL POINT FRAMING EXCEPT AT FIELD SPLICES, IF ANY, AND COLUMN SUPPORTS.

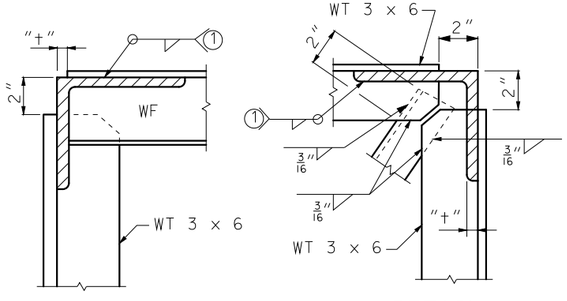

DETAIL 4

DETAIL 5

SLOT WEB OF STRUCTURAL TEE'S AND WIDE FLANGES TO RECEIVE LEG OF CHORD ANGLES (TYPICAL).

FILLET WELD 1 SHALL BE 5/16" WHEN "+" IS 1/2" OR LESS AND 1/4" WHEN "+" IS GREATER THAN 1/2".

IF A SEAL IS PRESENT ON THIS SHEET IT HAS BEEN ELECTRONICALLY SEALED AND DATED.

MISSOURI HIGHWAYS AND TRANSPORTATION COMMISSION
105 WEST CAPITOL
JEFFERSON CITY, MO 65102
1-888-ASK-MODOT (1-888-275-6636)

STATE OF MISSOURI
EILEEN H. RACKERS
NUMBER PE-28336
PROFESSIONAL ENGINEER
THIS SHEET HAS BEEN SIGNED, SEALED AND DATED ELECTRONICALLY.

OVERHEAD SIGN TRUSSES

STRUCTURAL STEEL

DATE EFFECTIVE: 10/01/2016
DATE PREPARED: 8/11/2016

903.60AB

SHEET NO. 2 OF 5

POST TYPE	PIPE COLUMN	DIMENSION "E"	SPLIT	BASE PLATE SIZE*	ANCHOR BOLTS DIA.	PEDESTAL SIZE* a	PEDESTAL SIZE* b	FOOTING SIZE*	LONGITUDINAL FOOTING REINFORCEMENT TOP	LONGITUDINAL FOOTING REINFORCEMENT BOTTOM	CONCRETE C.Y.
I	12" STD. AT 65.42	8½"	6"	2'-6"x 23"x 1½"	6 AT 2¼"	4'-0"	2'-11"	7'-0"x 14'-6"	7-#5 BARS	7-#6 BARS	10.9
II	14" O.D. AT 72.09	8½"	9½"	3'-0"x 2'-0"x 1½"	6 AT 2¼"	4'-4"	3'-0"	8'-0"x 16'-0"	8-#5 BARS	9-#6 BARS	13.2
III	16" O.D. AT 82.77	8¾"	11½"	3'-4"x 2'-2"x 1¾"	6 AT 2¼"	4'-8"	3'-2"	8'-6"x 17'-6"	9-#5 BARS	9-#7 BARS	15.2
IV	18" O.D. AT 93.45	9½"	12½"	3'-7"x 2'-4"x 2"	6 AT 2½"	5'-1"	3'-4"	9'-6"x 19'-0"	10-#5 BARS	10-#8 BARS	18.1
V	20" O.D. AT 104.13	9½"	13"	3'-10"x 2'-9"x 2"	8 AT 2½"	5'-4"	3'-9"	10'-0"x 20'-0"	10-#5 BARS	10-#8 BARS	20.6
VI	24" O.D. AT 125.49	9½"	10½"	4'-0"x 3'-3"x 2"	8 AT 2½"	5'-6"	4'-3"	10'-6"x 21'-0"	11-#5 BARS	11-#8 BARS	23.3
VII	24" O.D. AT 125.49	9½"	13½"	4'-3"x 3'-3"x 2"	8 AT 2½"	5'-9"	4'-3"	11'-0"x 22'-0"	11-#5 BARS	11-#9 BARS	25.1

* BASE PLATES, PEDESTAL, AND FOOTINGS, LONGER SIDES SHALL BE NORMAL TO AXIS OF SIGN.

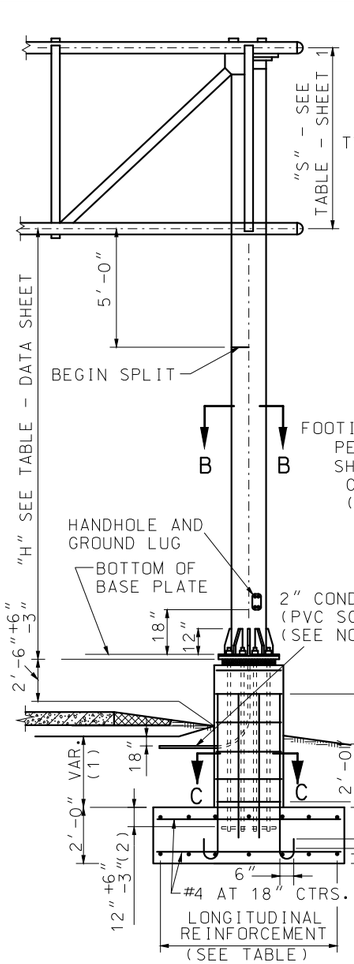

SECTION B-B

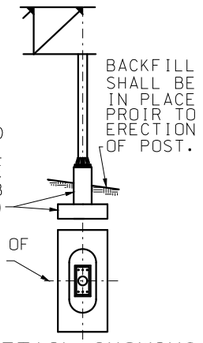

DETAIL SHOWING AXIS OF SIGN

NOTE: THE 2" CONDUIT IN THE CONCRETE PEDESTAL SHALL BE PVC SCHEDULE 40 AND SHALL BE PLACED WITH A MINUMUM RADIUS BEND OF 9½".

ELEVATION

SECTION C-C
(TYPICAL SECTION SHOWING REINFORCING STEEL)

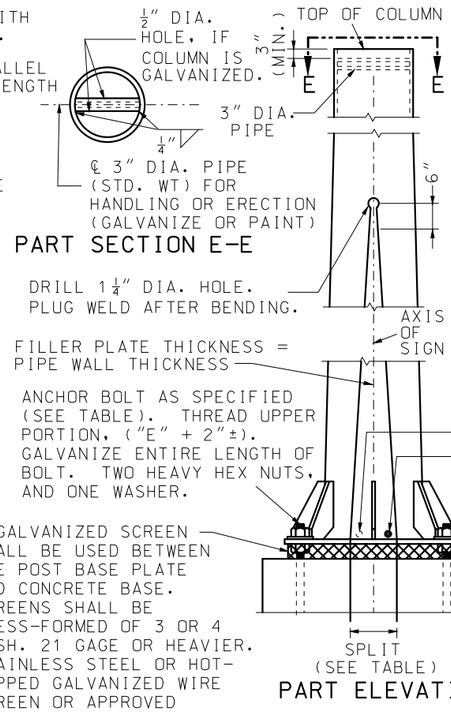

PART SECTION E-E

PART ELEVATION

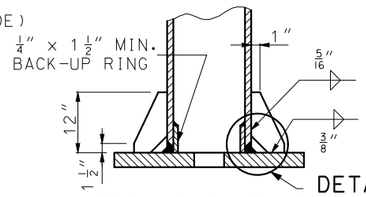

PART SECTION A-A

DETAIL X

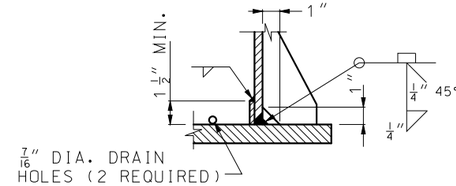

DETAIL X

(1) 2'-6" WHERE GROUND IS LEVEL
(2) DETAIL FOR 12" FIELD TOLERANCE.

(SHOWN FOR 4 BOLTS - SIMILAR FOR 3 BOLTS)

ANCHORAGE DETAIL A

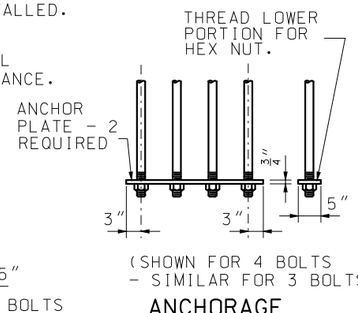

(SHOWN FOR 4 BOLTS - SIMILAR FOR 3 BOLTS)

ANCHORAGE DETAIL B
(OPTIONAL)

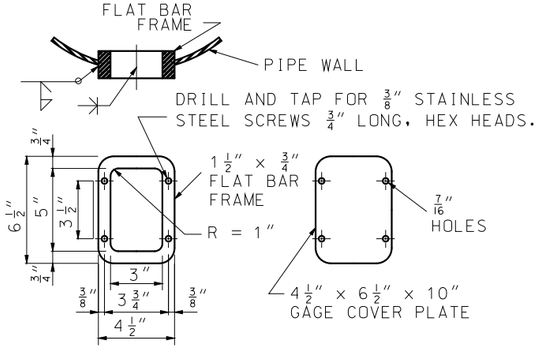

HANDHOLE AND COVER DETAILS

NOTE: HANDHOLE REQUIRED ONLY IN POWER COLUMN.

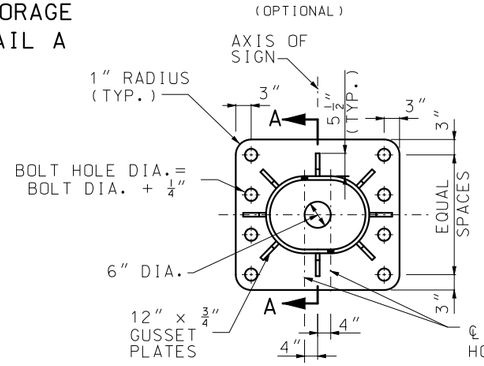

8 ANCHOR TYPE

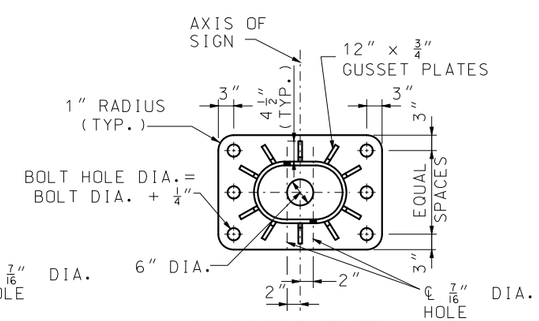

6 ANCHOR TYPE

TYPICAL BASE PLATES

NOTE:
FOR DETAILS OF ALTERNATE PEDESTAL, SEE SHEET NO. 4 OF 5.

GENERAL NOTES:
A TAPERED TUBE OF EQUIVALENT SIZE AND THICKNESS MAY BE SUBSTITUTED FOR PIPE POST.

ALL STEEL PIPE COLUMNS SHALL BE EITHER GRADE "B" SEAMLESS STEEEL PIPE OR GRADE "B" ELECTRIC RESISTANCE WELDED STEEL PIPE; A.S.T.M. SPECIFICATION A53. NO OBJECTIONABLE SEAMS WILL BE PERMITTED.

ALL STRUCTURES SHALL BE GROUNDED.

BURR THREADS ON ALL ANCHOR BOLTS.

A HORIZONTAL WELDED SPLICE MAY BE FABRICATED IN THE COLUMN BETWEEN THE TOP OF PIPE AND 4'- 0" BELOW THE BOTTOM CHORDS OF THE TRUSS WHEN DETAILED ON THE SHOP DRAWINGS AND APPROVED BY THE ENGINEER.

GROUND LUGS SHALL BE LOCATED INSIDE COLUMN NEAR HAND HOLE.

QUANTITIES FOR PEDESTAL, BASED ON NOMINAL HEIGHT OF 5'- 0".

QUANTITIES FOR FOOTING, BASED ON NOMINAL DEPTH OF 2'- 0".

QUANTITIES SHOWN ARE FOR ONE COLUMN ONLY.

IF A SEAL IS PRESENT ON THIS SHEET IT HAS BEEN ELECTRONICALLY SEALED AND DATED.

MISSOURI HIGHWAYS AND TRANSPORTATION COMMISSION
105 WEST CAPITOL
JEFFERSON CITY, MO 65102
1-888-ASK-MODOT (1-888-275-6636)

STATE OF MISSOURI
EILEEN H. RACKERS
NUMBER PE-28336
PROFESSIONAL ENGINEER
THIS SHEET HAS BEEN SIGNED, SEALED AND DATED ELECTRONICALLY.

OVERHEAD SIGN TRUSSES

STRUCTURAL STEEL

DATE EFFECTIVE: 10/01/2016
DATE PREPARED: 8/11/2016

903.60AB

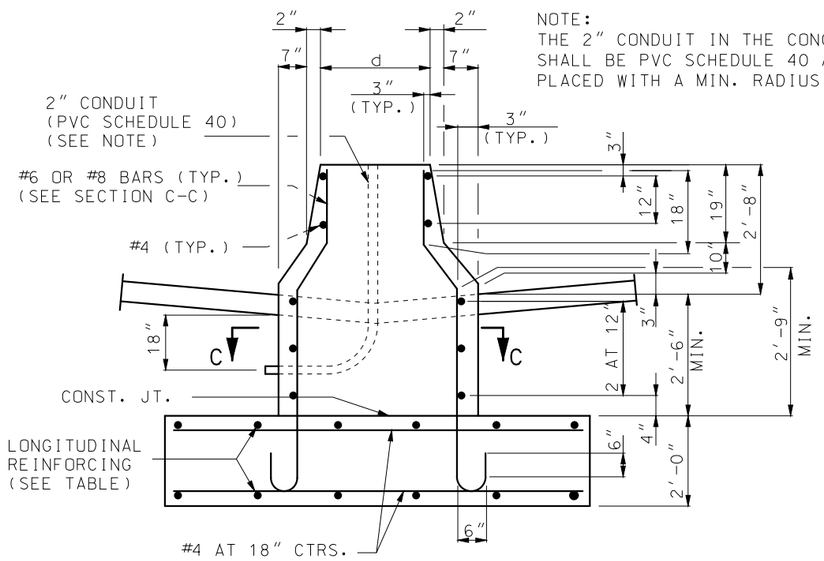

NOTE:
THE 2" CONDUIT IN THE CONCRETE PEDESTAL SHALL BE PVC SCHEDULE 40 AND SHALL BE PLACED WITH A MIN. RADIUS BEND OF 9½".

PART ELEVATION
(TYPE A CONCRETE TRAFFIC BARRIER)

POST TYPE	PIPE COLUMN	PEDESTAL SIZE✱		FOOTING SIZE✱	LONGITUDINAL FOOTING REINFORCEMENT		CONCRETE C.Y.	
		c	d		TOP	BOTTOM	TYPE A MEDIAN BARRIER	TYPE C MEDIAN BARRIER
I	12" STD. AT 65.42	5'-9"	2'-1"	7'-0"x 14'-6"	7-#5 BARS	7-#6 BARS	10.9	11.6
II	14" O.D. AT 72.09	6'-2"	2'-2"	8'-0"x 16'-0"	8-#5 BARS	9-#6 BARS	13.2	14.0
III	16" O.D. AT 82.77	6'-7"	2'-4"	8'-6"x 17'-6"	9-#5 BARS	9-#7 BARS	15.2	16.1
IV	18" O.D. AT 93.45	7'-1"	2'-6"	9'-6"x 19'-0"	10-#5 BARS	10-#8 BARS	18.1	19.1
V	20" O.D. AT 104.13	7'-8"	2'-11"	10'-0"x 20'-0"	10-#5 BARS	10-#8 BARS	20.6	21.7
VI	24" O.D. AT 125.49	8'-3"	3'-5"	10'-6"x 21'-0"	11-#5 BARS	11-#8 BARS	23.3	24.6
VII	24" O.D. AT 125.49	8'-6"	3'-5"	11'-0"x 22'-0"	11-#5 BARS	11-#9 BARS	25.1	26.5

✱ BASE PLATES, PEDESTAL, AND FOOTINGS LONGER SIDES SHALL BE NORMAL TO AXIS OF SIGN.

GENERAL NOTES:

A TAPERED TUBE OF EQUILVALENT SIZE AND THICKNESS MAY BE SUBSTITUTED FOR PIPE POST.

ALL STEEL PIPE COLUMNS SHALL BE EITHER GRADE "B" SEAMLESS STEEL PIPE OR GRADE "B" ELECTRIC RESISTANCE WELDED STEEL PIPE; A.S.T.M. SPECIFICATION A53.

NO OBJECTIONABLE SEAMS WILL BE PERMITTED.

ALL STRUCTURES SHALL BE GROUNDED.

BURR THREADS ON ALL ANCHOR BOLTS.

PIPE COLUMN, BASE PLATE, ANCHOR BOLTS AND NOTES PERTAINING TO THESE ITEMS HAVE BEEN OMITTED FOR CLARITY. REFER TO SHEET 3 OF 5 FOR DETAILS OF THESE ITEMS.

GROUND LUGS SHALL BE LOCATED INSIDE COLUMN NEAR HAND HOLE.

QUANTITIES FOR PEDESTAL ARE BASED ON NOMINAL HEIGHT OF 5'-2" (TYPE A MEDIAN BARRIER) OR 6'-0" (TYPE C MEDIAN BARRIER).

QUANTITIES FOR FOOTING ARE BASED ON NOMINAL DEPTH OF 2'-0".

QUANTITIES SHOWN ARE FOR ONE COLUMN ONLY.

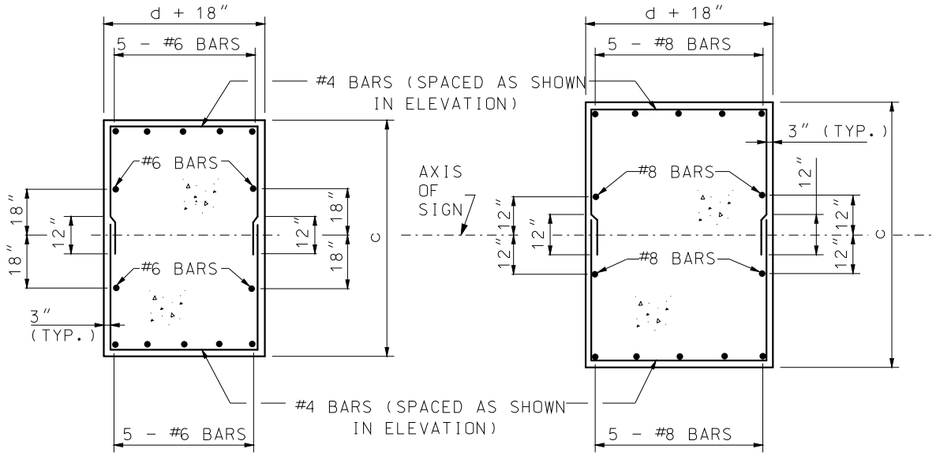

POST TYPE I AND II

POST TYPEIII, IV, V, VI, AND VII

SECTION C-C
TYPICAL SECTION SHOWING
REINFORCING STEEL

NOTE:
THE 2" CONDUIT IN THE CONCRETE PEDESTAL SHALL BE PVC SCHEDULE 40 AND SHALL BE PLACED WITH A MIN. RADIUS BEND OF 9½".

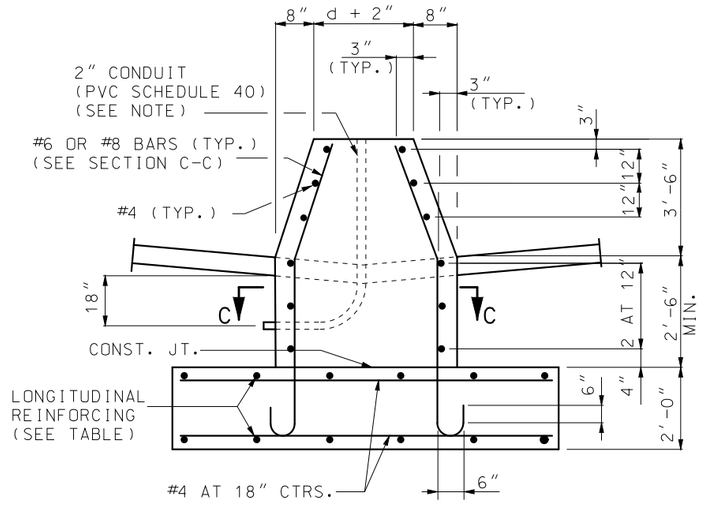

PART ELEVATION
(TYPE C CONCRETE TRAFFIC BARRIER)

DETAILS OF ALTERNATE PEDESTAL

(TO BE USED ADJACENT TO TYPE "A" OR "C" MEDIAN BARRIER)

IF A SEAL IS PRESENT ON THIS SHEET IT HAS BEEN ELECTRONICALLY SEALED AND DATED.

MISSOURI HIGHWAYS AND TRANSPORTATION COMMISSION
105 WEST CAPITOL
JEFFERSON CITY, MO 65102
1-888-ASK-MODOT (1-888-275-6636)

STATE OF MISSOURI
EILEEN H. RACKERS
NUMBER PE-28336
PROFESSIONAL ENGINEER
THIS SHEET HAS BEEN SIGNED, SEALED AND DATED ELECTRONICALLY.

OVERHEAD SIGN TRUSSES

STRUCTURAL STEEL

DATE EFFECTIVE: 10/01/2016
DATE PREPARED: 8/11/2016

903.60AB

SHEET NO. 4 OF 5

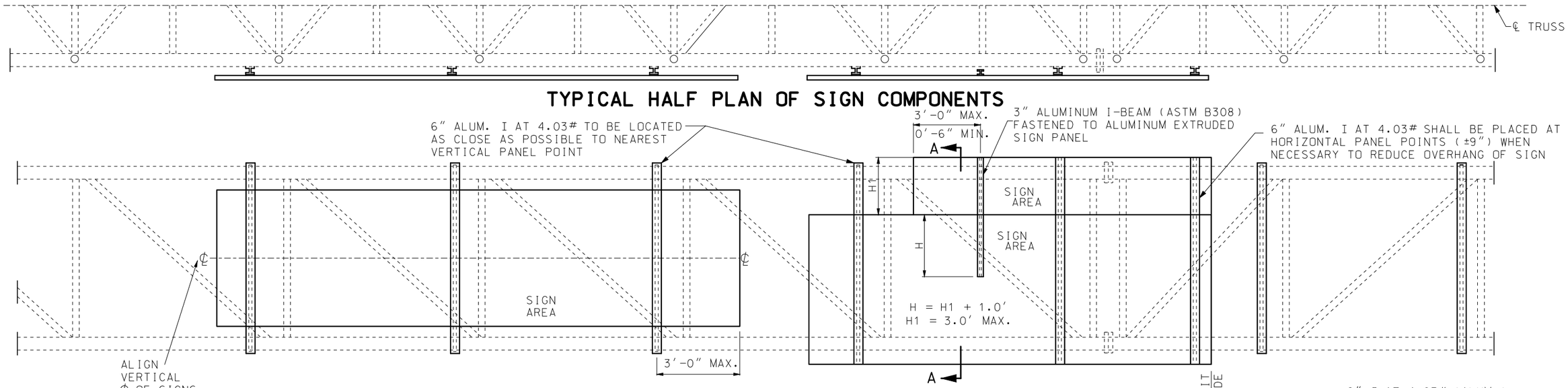

TYPICAL HALF PLAN OF SIGN COMPONENTS

TYPICAL ELEVATION OF SIGN COMPONENTS

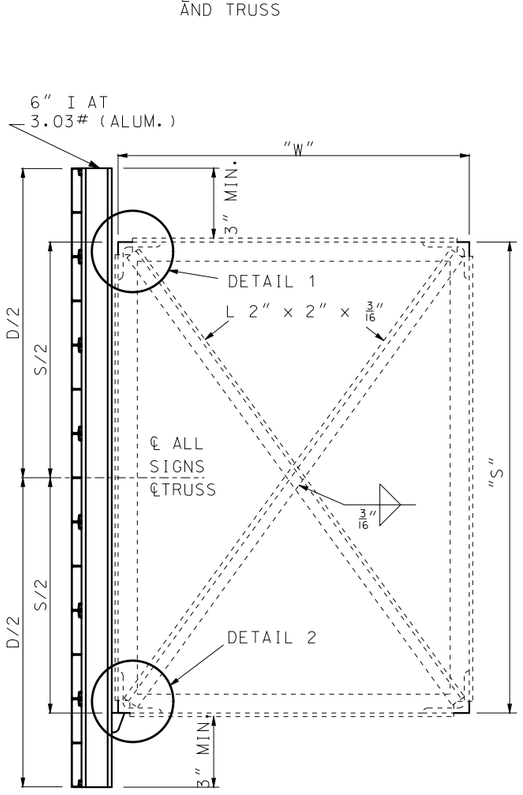

SECTION A-A

TYPICAL SECTION OF SIGN SUPPORT

NOTE: "D" = GREATEST OVERALL DEPTH OF ANY SIGN OR SIGNS ON TRUSSES AND "S"= TRUSS DEPTH. SEE SHEET NO. 5 OF 7 FOR LOCATION OF SECTION A-A.

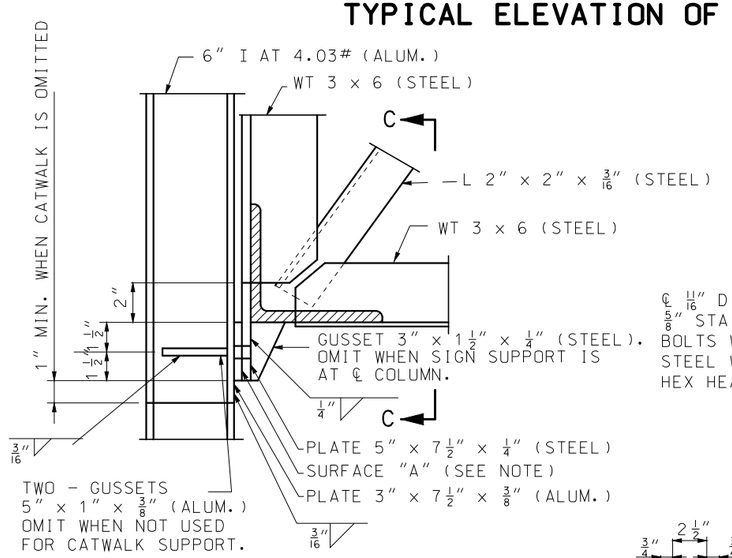

DETAIL 2

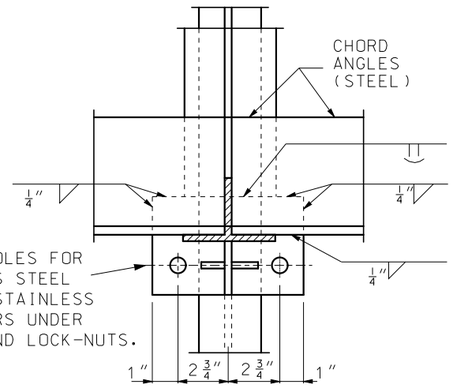

SECTION C-C

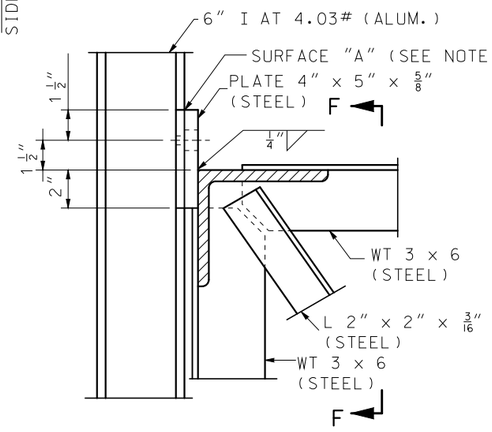

DETAIL 1

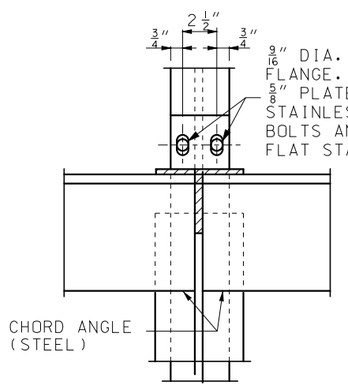

SECTION F-F

NOTE:
SURFACE "A", ZINC CHROMATE ON ALUMINUM SURFACES. NORMAL CLEANING AND PAINTING ON STEEL SURFACES. ZINC CHROMATE IS NOT REQUIRED WHEN STEEL IS GALVANIZED.

GENERAL NOTES:

EXIT NO. PANELS SHALL BE MOUNTED FLUSH WITH THE EXIT SIDE OF THE GUIDE SIGN.

ALL SIGNS SHALL BE CENTEREDVERTICALLY ABOUT THE HORIZONTAL ℄ OF THE TRUSS.

MISSOURI HIGHWAYS AND TRANSPORTATION COMMISSION
105 WEST CAPITOL
JEFFERSON CITY, MO 65102
1-888-ASK-MODOT (1-888-275-6636)

STATE OF MISSOURI
EILEEN H. RACKERS
NUMBER PE-28336
PROFESSIONAL ENGINEER
THIS SHEET HAS BEEN SIGNED, SEALED AND DATED ELECTRONICALLY.

OVERHEAD SIGN TRUSSES

STRUCTURAL STEEL

DATE EFFECTIVE: 10/01/2016
DATE PREPARED: 8/11/2016

903.60AB

SHEET NO. 5 OF 5

IF A SEAL IS PRESENT ON THIS SHEET IT HAS BEEN ELECTRONICALLY SEALED AND DATED.