CONCEPT STUDY AND REHABILITATION REPORT

US169 Buck O'Neil Bridge over Missouri River

Bridges No. A4646 and A4649

March 29, 2017

Prepared for:
Missouri Department of Transportation
Project No. J4S3085

March 29, 2017

Attn: Mr. Michael Harms
Bridge Division
Missouri Department of Transportation
105 W. Capital Ave., P.O. Box 270
Jefferson City, MO 65102

RE: 2016 Buck O'Neil Bridge Concept Study and Rehabilitation Report
Project No. J4S3085
Structure No. A4646 & A4649
US-169 over the Missouri River

Dear Mr. Harms:

In accordance with our agreement approved on October 26, 2016, we are submitting this report for the concept study and rehabilitation of the Buck O'Neil Bridge (Bridges A4646 and A4649) carrying US-169 (Broadway Blvd.) over the Missouri River at Kansas City, Missouri.

If you should have any questions please feel free to call.

Sincerely,

HDR Engineering, Inc.

Cory Imhoff, P.E., V.P.
Project Manager

Enclosures

hdrinc.com

4435 Main St., Suite 1000, Kansas City, MO 64111

Contents

1 General 1
1.1 Bridge Description 2
1.2 Location Map and Aerial Photograph 3
1.3 General Plan & Elevation and Bridge Typical Sections 4
2 Risk Assessment 7
3 Maintenance of Traffic 8
3.1 Road Closure – South End 8
3.2 Road Closure – North End 9
4 Short Term Repair Option 10
4.1 A4649 Main Spans 11
4.2 A4649 South Approach 13
4.3 A4649 North Approach 14
4.4 A4646 15
4.5 Additional Items 17
4.6 Short Term Repair Option Cost Opinion 17
5 Long Term Rehabilitation Option 17
5.1 A4649 Main Spans 17
5.2 A4649 South Approach 21
5.3 A4649 North Approach 23
5.4 A4646 24
5.5 Additional Items 26
5.6 Long Term Rehabilitation Option Cost Opinion 26
6 Hybrid – Rehabilitation / Repair Option A 26
6.1 A4649 Main Spans 26
6.2 A4649 South Approach 27
6.3 A4649 North Approach 27
6.4 A4646 27
6.5 Additional Items 28
6.6 Hybrid – Rehabilitation / Repair Option A Cost Opinion 28
7 Hybrid – Rehabilitation / Replace Option B 28
7.1 A4649 Main Spans 29
7.2 A4649 South Approach 29
7.3 A4649 North Approach 29
7.4 A4646 30
7.5 Additional Items 30
7.6 Hybrid – Rehabilitation / Replace Option B Cost Opinion 30
8 Replacement in Kind 31
9 Summary and Recommendation 31

Tables

Table 1-1. Summary of Studied Options 2
Table 4-1. Short Term Repair Option Cost Summary 17
Table 5-1. Long Term Rehabilitation Option Cost Summary 26
Table 6-1. Hybrid – Rehabilitation / Repair Option A Cost Summary 28
Table 7-1. Hybrid – Rehabilitation / Replace Option B Cost Summary 30
Table 8-1. Replacement in Kind Cost Summary 31
Table 9-1. Yearly Cost for Studied Options 32

Figures

Figure 1-1. Location Map 3
Figure 1-2. Aerial Photo 3
Figure 1-3. Bridge A4649 General Plan of South Approach and Main Spans 4
Figure 1-4. Bridge A4649 General Plan of Main Spans and North Approach 4
Figure 1-5. Bridge A4649 General Elevation of South Approach (Spans 1 thru 10) 4
Figure 1-6. Bridge A4649 General Elevation of Main Spans (Spans 11 thru 13) 5
Figure 1-7. Bridge A4649 General Elevation of North Approach (Spans 14 thru 16) 5
Figure 1-8. Bridge A4649 Typical Section (Span 1) 5
Figure 1-9. Bridge A4649 Typical Section (Spans 2, 3, 4, 5, 6 and 10) 5
Figure 1-10. Bridge A4649 Typical Section (Spans 7, 8 and 9) 6
Figure 1-11. Bridge A4649 Typical Section (Spans 11, 12 and 13) 6
Figure 1-12. Bridge A4649 Typical Section (Spans 14, 15 and 16) 6
Figure 1-13. Bridge A4646 General Plan of North Approach SB Lanes Only 7
Figure 1-14. Bridge A4646 Typical Section of North Approach SB Lanes Only 7
Figure 3-1. Maintenance of Traffic Concept at South End 9
Figure 3-2. Maintenance of Traffic Concept at North End 10

Appendices

Appendix A – Short Term Repair Option Cost Estimate

Appendix B – Long Term Rehabilitation Option Cost Estimate

Appendix C – Hybrid Rehabilitation / Repair Option A Cost Estimate

Appendix D – Hybrid Rehabilitation / Replace Option B Cost Estimate

Appendix E – Replacement in Kind Cost Estimate

Appendix F – Fatigue Analysis Summary

Appendix G – A4649 Main Spain Floorbeam Fatigue Analysis

Appendix H – A4649 South Approach Spans Fatigue Analysis

Appendix I – A4649 North Approach Spans Fatigue Analysis

Appendix J – A4646 Girder Fatigue Analysis

1 General

This document presents the results of a conceptual study of the repair and rehabilitation work proposed for the Buck O'Neil Bridge. This study is based on the results of the inspection and an evaluation of remaining service life based on current conditions. For the purposes of this study the major components of the bridge were defined as Bridge A4649 Main Spans, Bridge A4649 South Approach, Bridge A4649 North Approach and Bridge A4646.

Four scenarios were studied: a Short Term Repair option, a Long Term Rehabilitation option, a "hybrid" of these first two and a second "hybrid" of these two with some span replacements. Additionally, a replacement-in-kind option was estimated so that the full range of repair/rehabilitation work could be compared to a baseline-type value. The replacement-in-kind option was developed using the same width and area as the existing structure.

The Hybrid Option A consists of a short term repair approach to A4649 South Approach, A4649 North Approach and A4646; and a long term rehabilitation approach to A4649 Main Spans. The Hybrid Option B consists of replacement structures for the A4649 South Approach, the A4649 North Approach and A4646; and a long term rehabilitation approach to A4649 Main Spans.

The Short Term Repair Option results in significant disruption to traffic without extensive enough repairs to preserve the structure for long term service. It is simply a project that will extend the life of the structures enough to allow planning, design and construction of another project to address the long term needs of the traveling public at this location. Undertaking the Short Term Repair Option would presume that a replacement project can be successfully planned, designed, funded and constructed within 10 years of additional service life.

Hybrid Option A is a project that will provide significant repairs to the Main Spans to prolong their service life for 35 years but will only extend the approach spans' service life enough for another project to be planned, designed and constructed. That future approach span project would presumably contemplate a modification of geometry to improve connectivity, performance and driver expectations and would require extensive public input and involvement and additional schedule to achieve consensus prior to beginning design.

Hybrid Option B is a project that would undertake the same long term rehabilitation of the Main Spans but would proceed with undertaking the approach span reconstruction as part of one project instead of two. This project has the inherent risk of schedule delay that is likely to occur with the public input and involvement process necessary to reconstruct the approach spans with changes in access or geometry that may be contemplated. The pricing included in Hybrid Option B assumes the proposed geometry would match the current configuration, but studies to determine what could or should be undertaken with regard to geometric improvements of the approach spans are recommended for further study. The City owned structures underlying the south approach spans would need to be included in these additional studies.

The Long Term Rehabilitation Option is a project that aggressively addresses structural deterioration, corrosion, drainage control, painting, pier concrete deterioration, deck replacement and fatigue retrofits in a manner that will provide 35 years of additional service life for the existing Buck O'Neil Bridge and its approaches. Since it includes a full deck replacement in all spans this option allows for construction of pedestrian facilities. This option preserves the existing structure in its current form without geometric or operational improvements.

The Replacement in Kind option is included to provide a comparison to the repair and rehabilitation options considered. This option is not intended to represent the cross section, location or structure type that would be expected from an actual replacement structure. The selection of the proper bridge configuration and location requires further study beyond the scope of this report.

A fatigue life study was performed for various bridge components and is included in the appendices of this report. The fatigue study addresses the methodology employed for the analysis, the details studied, the results of the analysis and recommendations.

The findings of the concept study include descriptions of the various deterioration and fatigue related items to be addressed from the inspection and commentary on the repair / rehabilitation approaches to address these items. Summaries of the items included in each option and the cost opinions developed for the items in each option are included in the appendices.

Table 1-1. Summary of Studied Options

Description	Estimated Cost
Short Term Repair Option	$18,760,000
Long Term Rehabilitation Option	$52,260,000
Hybrid Option A	$37,980,000
Hybrid Option B	$58,680,000
Replacement in Kind	$83,000,000

1.1 Bridge Description

The Buck O'Neil Bridge (Bridge A4649) carries four lanes of traffic over the Missouri River, Union Pacific Railroad, BNSF Railway, 3rd Street, 4th Street and Woodswether Road on the south side and over Richards Road on the north side. See the following Location Map and Aerial Photograph. For more detailed sketches and dimensions of this bridge please refer to the Inspection Report.

The southbound approach structure (Bridge A4646) carries two lanes of traffic over Richards Road to connect to Bridge A4649. The bridges were originally constructed under a combined plan set for the City of Kansas City and were divided later for operations and maintenance after being acquired by MoDOT. For more detailed sketches and dimensions of this bridge please refer to the Inspection Report.

1.2 Location Map and Aerial Photograph

Figure 1-1. Location Map

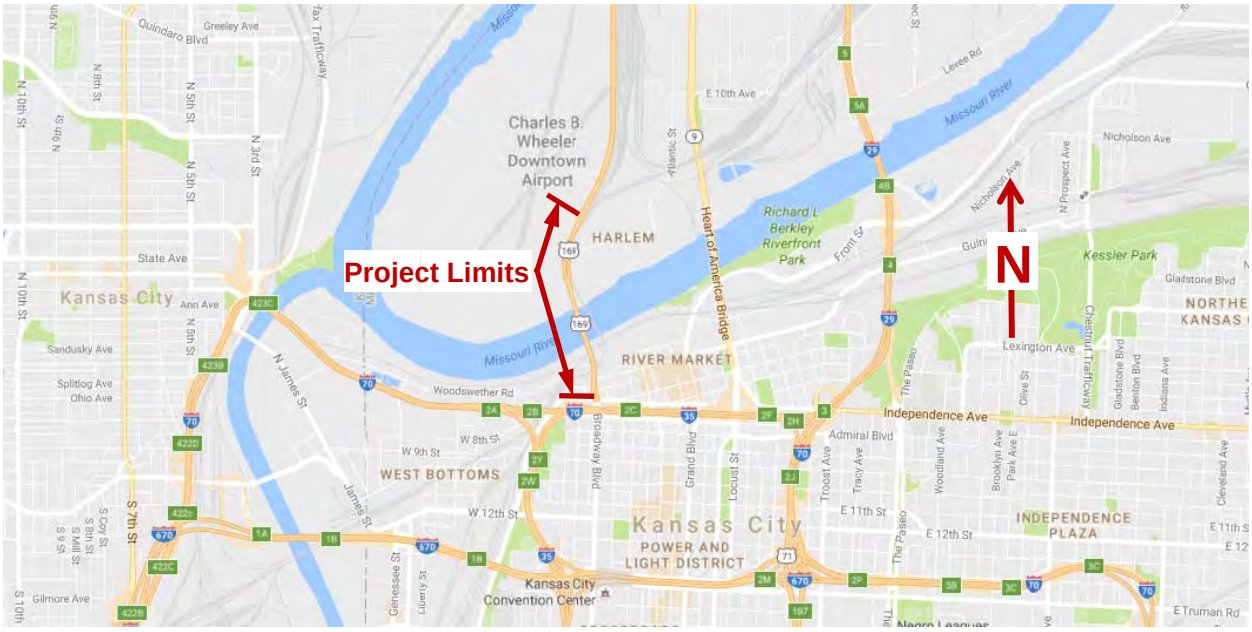

Figure 1-2. Aerial Photo

1.3 General Plan & Elevation and Bridge Typical Sections

The following sketches illustrate the major components of bridges A4649 and A4646 addressed in the following paragraphs describing the repairs and rehabilitation scenarios. These bridges are broken into A4649 South Approach, A4649 Main Spans, A4649 North Approach and A4646. The plan and sections are intended to give a general overall layout, for more detailed sketches see the full inspection report.

Figure 1-3. Bridge A4649 General Plan of South Approach and Main Spans

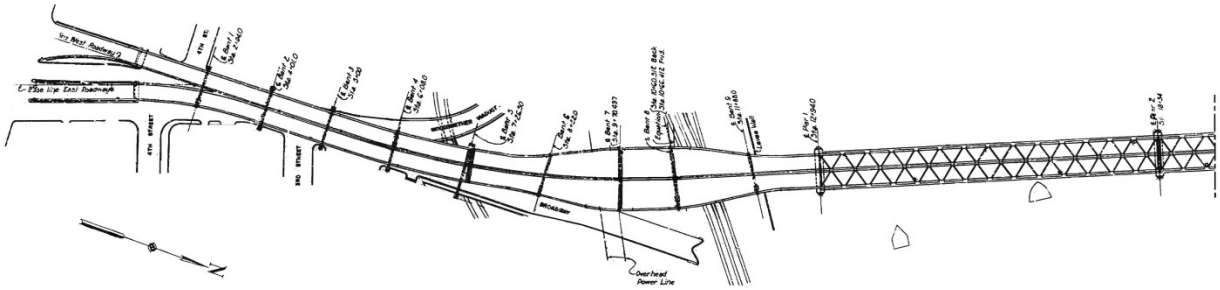

Figure 1-4. Bridge A4649 General Plan of Main Spans and North Approach

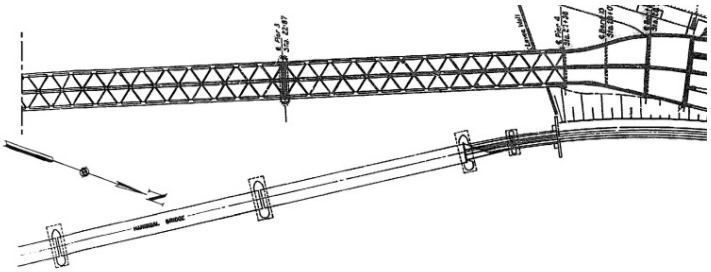

Figure 1-5. Bridge A4649 General Elevation of South Approach (Spans 1 thru 10)

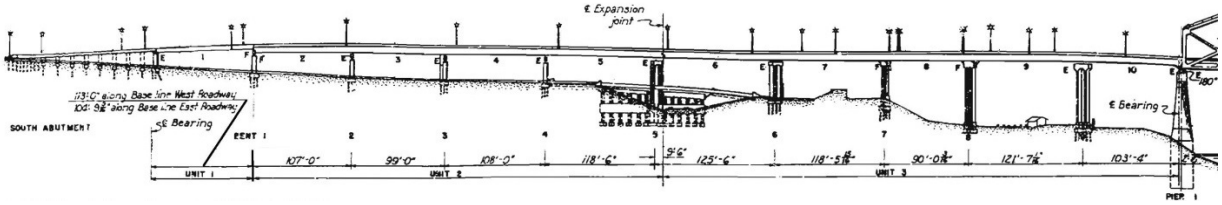

Figure 1-6. Bridge A4649 General Elevation of Main Spans (Spans 11 thru 13)

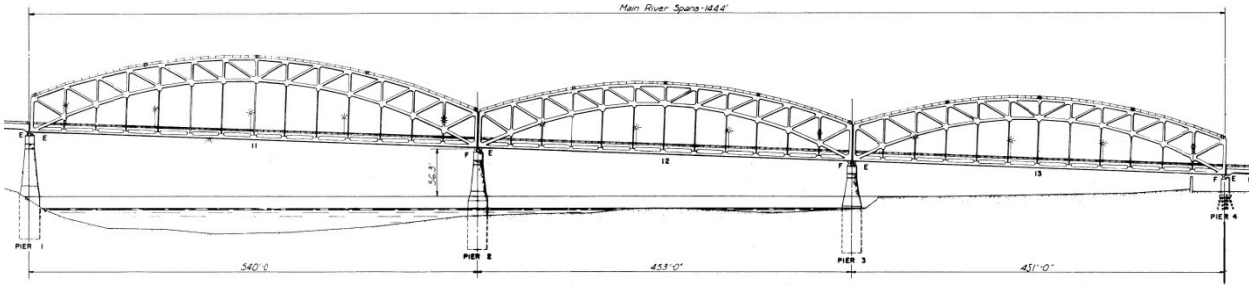

Figure 1-7. Bridge A4649 General Elevation of North Approach (Spans 14 thru 16)

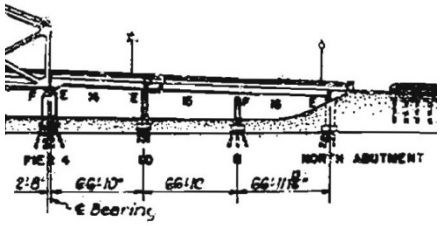

Figure 1-8. Bridge A4649 Typical Section (Span 1)

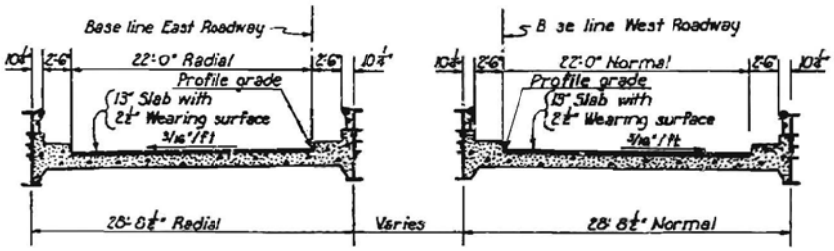

TYPICAL SECTION SPAN 1

Figure 1-9. Bridge A4649 Typical Section (Spans 2, 3, 4, 5, 6 and 10)

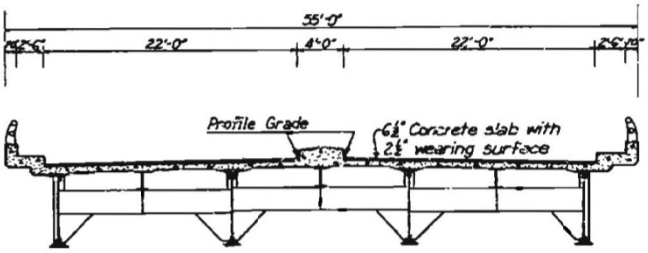

TYPICAL SECTION SPANS 2, 3, 4, 5, 6, AND 10
(Warping or super-elevation not shown)

Figure 1-10. Bridge A4649 Typical Section (Spans 7, 8 and 9)

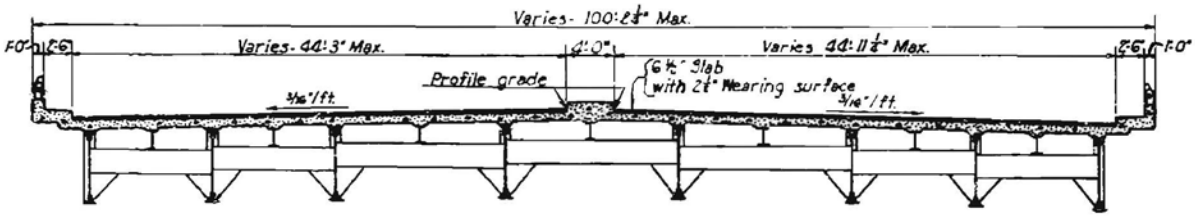

Figure 1-11. Bridge A4649 Typical Section (Spans 11, 12 and 13)

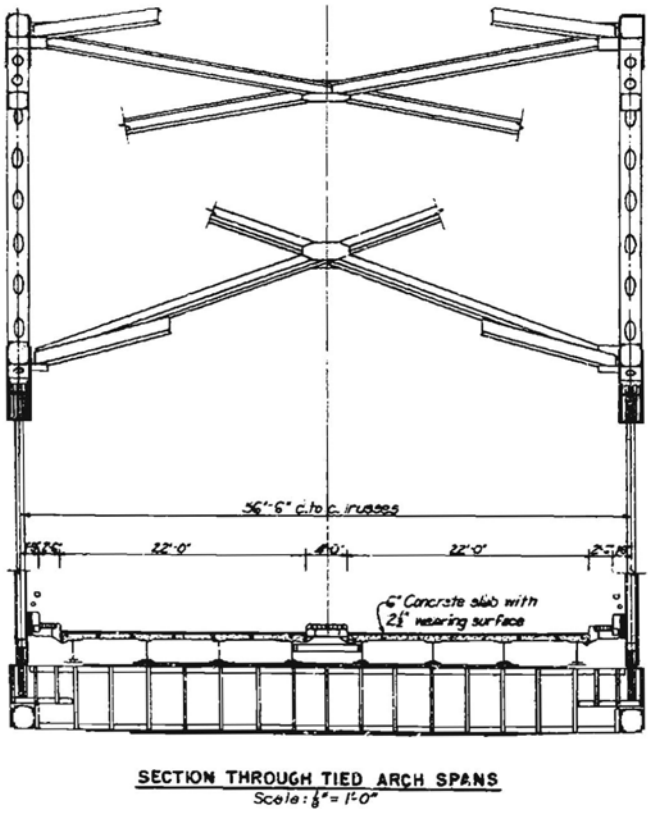

Figure 1-12. Bridge A4649 Typical Section (Spans 14, 15 and 16)

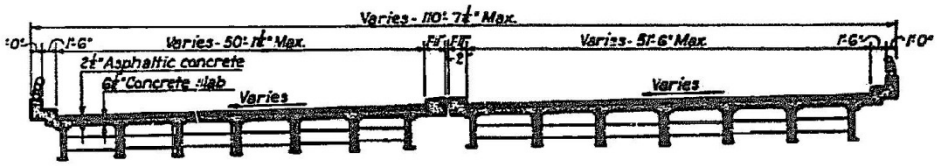

Note: View is looking backstation to the south.

Figure 1-13. Bridge A4646 General Plan of North Approach SB Lanes Only

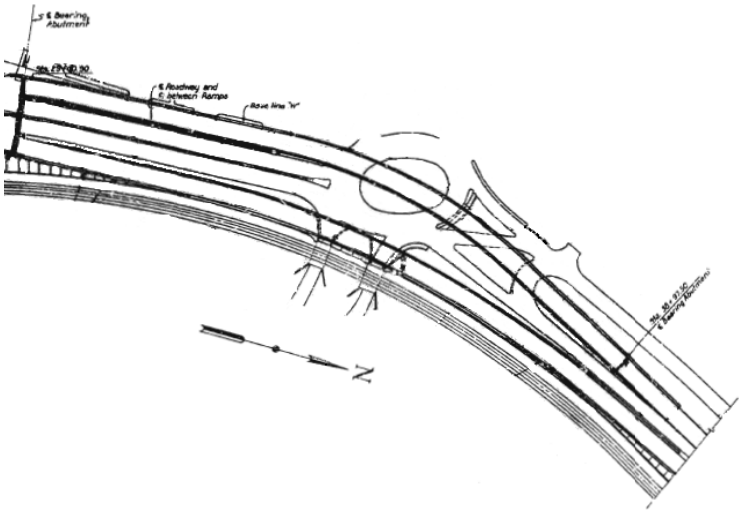

Figure 1-14. Bridge A4646 Typical Section of North Approach SB Lanes Only

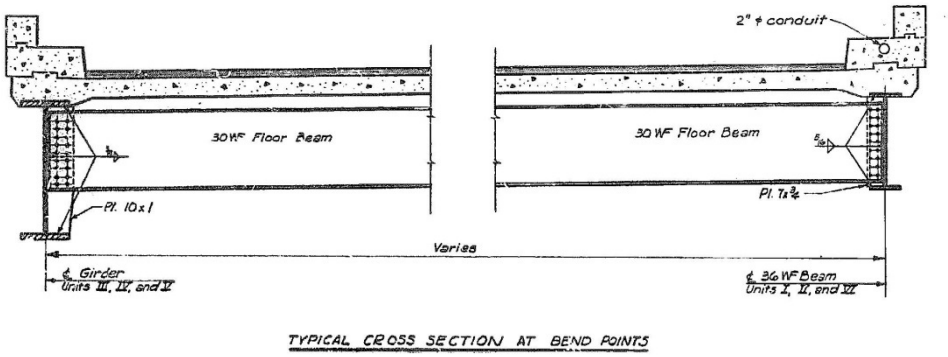

Note: View is looking backstation to the south.

2 Risk Assessment

There are several project conditions that may affect the overall risk of the project in regard to cost and schedule. These include the inherent variables with a rehabilitation effort. Not all the defects are visually evident at time of inspection and some additional details may be uncovered as work continues. The quantities used in the development of the cost opinions for these options are generally conservative but may not encompass these unknown items. Additionally, the unit costs used in the development of the cost opinions were based on historical data and professional evaluation and may not reflect the trends in place at the time of contract bidding. As noted in the cost opinions no factors for inflation or contingency have been included.

Construction of the repairs and rehabilitation itself carries intrinsic risks as related to phasing, stability and constructability. To address these items we would recommend review of the plans by specialty construction engineering consultants and/or contractors subcontracted to HDR during the design phase of the project. HDR would design the

project with constructability and phasing considerations and involvement from our construction engineering professionals, but this outside review during plan development is recommended to mitigate bidding risks for a complex project such as this. These reviews may yield valuable cost saving information that can be addressed during the design process and mitigate potential construction change orders or other value engineering proposals resulting in the most competitive bidding and least total cost to MoDOT.

Some of the biggest risks include removal and replacement of main span pier shell concrete, placement of scour countermeasures, involvement of the Federal Aviation Administration (FAA) and limitations on construction imposed by the FAA 7460 Permit, protection of properties adjacent to and in some cases under the approach spans during demolition and painting, interaction with and protection of both BNSF and UPRR tracks, protection of Kansas City and North Kansas City administered levees and floodwalls.

Lastly, the schedule of the project may be affected by the permitting processes; delays due to these items may increase costs simply with the effect of inflation. Similarly the schedule may be affected by weather manifesting itself in river level fluctuations, impacts to concrete placement and the timing and scheduling of painting.

3 Maintenance of Traffic

Several scenarios were studied to determine the safest and most economical approach to the maintenance of traffic during the rehabilitation project. For a total replacement project on alignment the site would have to be closed to traffic and alternate detour routes established. With the repair and rehabilitation options traffic could either be staged or a complete closure could be used. After careful consideration and discussion the recommended course of action is to close the bridge during any scenario and detour traffic to other river crossings, primarily the Heart of America Bridge.

The posted detour would likely use Route 9 over the Heart of America bridge and the ramps to and from US-169 for through movement traffic in both directions. Local access to the Downtown Airport from the south would use the Heart of America bridge and make a U-turn movement at NW Briarcliff Drive. Traffic leaving the Downtown Airport needing to go south would proceed north on US-169 and use the existing ramp movements to southbound Route 9 over Heart of America bridge. Direct access to the Downtown Airport for emergency vehicles would be maintained from locations south of the river over the Heart of America Bridge and then via E. 10th Avenue, Atlantic Street, North Grand Avenue and Harlem Road.

3.1 Road Closure – South End

Advance warning signs and changeable message boards will be needed on Broadway Boulevard north bound, I-70 west bound, I-70 east bound, I-35 north bound , 3rd Street, 4th Street, 5th Street, Beardsley Road, Independence Avenue and Woodswether Road. Signs and message boards on Broadway Boulevard and the interstate highways should be located far enough from the project to allow the public to make corrections to their route. Temporary local traffic restrictions may be needed on Broadway Boulevard under the bridge and along the adjacent city streets.

Figure 3-1. Maintenance of Traffic Concept at South End

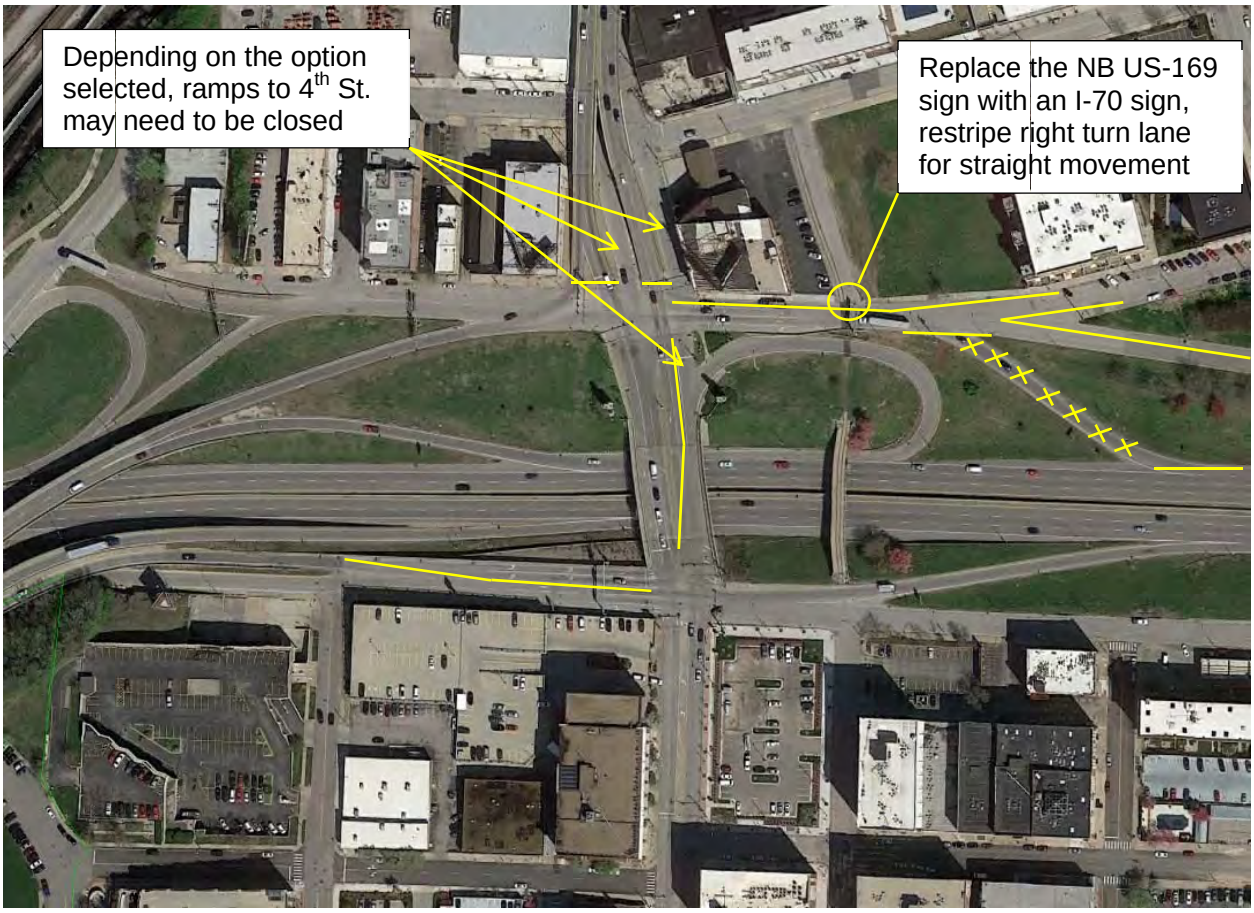

3.2 Road Closure – North End

Advance warning signs and changeable message boards will be needed on US-169 south bound, I-29 south bound and Route 9 in both directions. Signs and message boards on US-169 and I-29 should be located far enough away from their intersection to allow the public to make corrections to their route. Signs may also be needed on north collector roads such as NW Platte Drive and NW Briarcliff Parkway. Temporary local traffic restrictions may be needed on Richards Road and Harlem Road.

Figure 3-2. Maintenance of Traffic Concept at North End

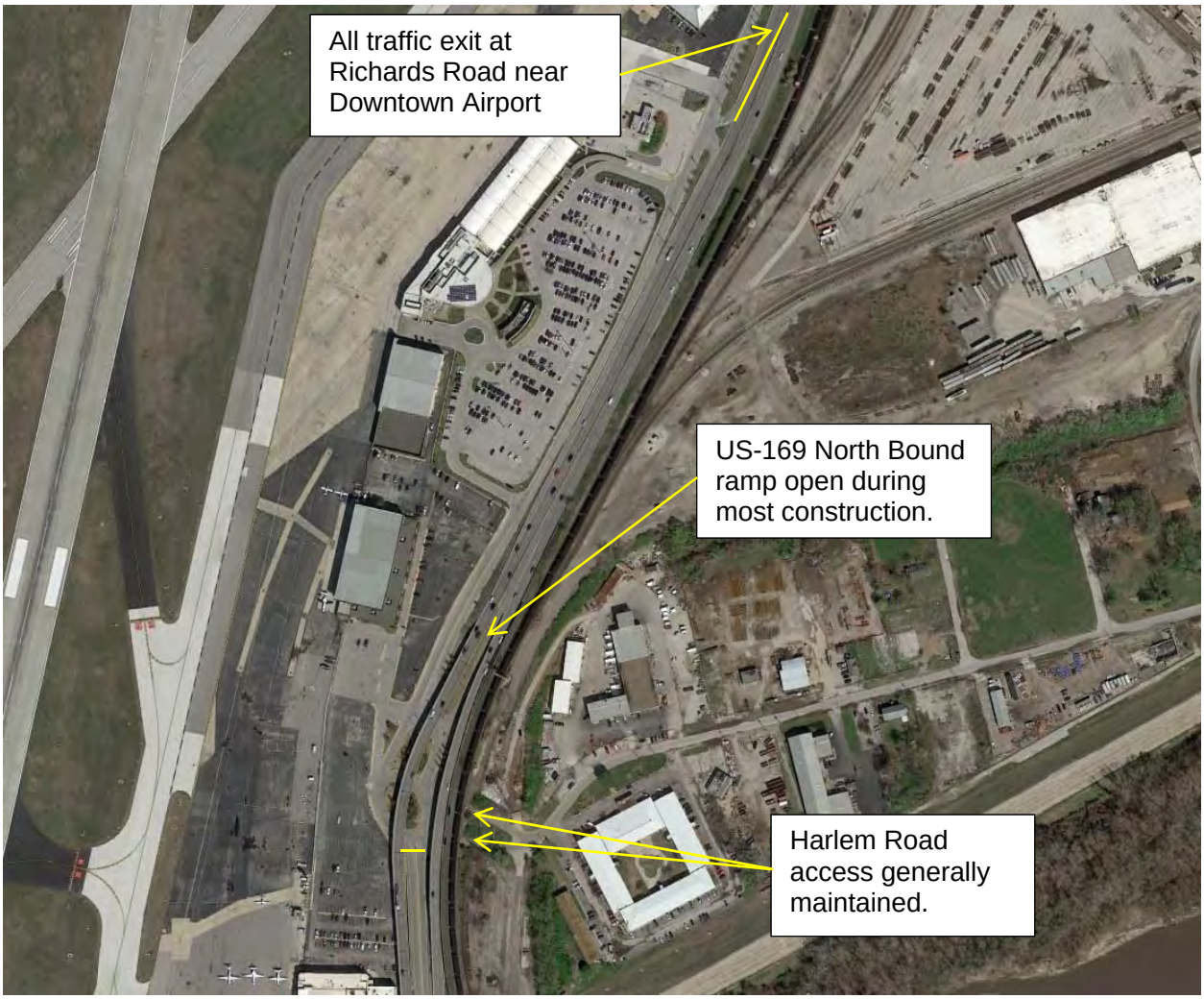

4 Short Term Repair Option

The Short Term Repair Option includes the more immediate repairs necessary to carry the bridge through for another ten years of service. These repairs focus on the more severe sections of bridge deterioration as noted in the inspection report. Areas of heavy section loss and deterioration such as the stringer ends of the Main Spans, keeper plates and floorbeam webs are repaired. Additionally, this option includes work which is intended to mitigate the projected deterioration of other items. Replacement of expansion joints and partial repainting fall into this category. With the completion of these items the more immediate repairs indicated by the findings of the inspection will be addressed to the point where it may be reasonably anticipated the bridge will continue in service without other major repair items for the next ten years. These repairs can be completed in 9 to 12 months of construction with a complete closure of the road.

4.1 A4649 Main Spans

Deck Repairs

The general condition of the deck was made by visual observations only, the deck has a low slump overlay and stay-in-place forms which limited the observations of cracks and spalls on the top and corrosion and spalls on the bottom of the deck. With these limitations the deck repairs have been estimated as 20% of deck area for half-sole repairs and 15% of the deck area for full depth repairs. The existing low slump overlay will be removed and replaced.

Stringer End and Bearing Replacements

Due to the long term exposure to chloride contaminated runoff from the deck through the open joints and curbs, the ends of the stringers are exhibiting serious deterioration and section loss. The stringers are supported on steel plate bearings which are also deteriorating with extensive pack rust between the steel plate bearings and the bottom flange of the stringers. This repair will consist of removing a portion of the deck, removal of the ends of the stringers and the bearings. New sections of stringers will be spliced on to the existing stringers with new neoprene bearings installed. The deck end sections will then be replaced when the expansion joints and contraction joints are installed.

Expansion Joint Replacements

The finger plate expansion joints at each end of the main spans have no drainage collection system and roadway drainage is flowing onto the underlying structural steel and the pier tops. The finger plate joints themselves are in satisfactory condition but the support structure below the joints is deteriorating and is unlikely to continue in service for the next decade. Finger plate joints will be replaced with modular expansion joints. The compression seal joints at the contraction locations of each of the main spans have failed (filler material of the compression seals is missing and armoring is missing or damaged) and are allowing drainage onto the underlying structural steel. These will be replaced with strip seal joints.

Cable Keeper Replacements

At each of the cable hanger supports on the main spans from panel points T2 to T2' the lower sockets of the cables are retained by keeper angles. These angles were attached with tap bolts to the socket bearing plate. Pack rust has formed between the keeper angles and the bearing plate prying the keeper angles away from the bearing plate, in some instances the bolts have failed and the keeper angles are no longer in place. The angles will be removed, new angles installed with fully tensioned high strength bolts and nuts.

Floorbeam Repairs

There are floorbeams supporting the stringers at each end portal and at each interior hanger location. These locations are subject to deterioration due to the uncontrolled runoff of chloride contaminated deck drainage. This deterioration is documented in the inspection report and consists of several locations where holes have formed in the webs,

where areas of the webs are exhibiting moderate to heavy section loss, and areas where pack rust has formed due to the wide rivet spacing and resulting in scalloping and prying of the connected plates. The scope of this repair includes several types of rehabilitation to meet the aforementioned needs. Individual holes in the webs will be plated over with bolted cover plates. Areas of thinning web will be strengthened with larger cover plates. And locations of heavy pack rust will be addressed with removal of existing rivets and pack rust, the addition of clamping plates or replacement of stiffening angles and the installation of new high strength bolts to seal up these areas. These repairs will include localized treatment of corrosion and pack rust with sealers and repainting.

Stringer Repairs

There are numerous areas on the stringers requiring repair outside of the stringer ends being replaced at the expansion and contraction joints. These areas are primarily located at the intermediate floorbeams and are exhibiting section loss with pack rust at the plate bearings. These location will have the rivets removed, pack rust removed, additional flange plates added to replace deteriorated material and new high strength bolts installed. An allowance has also been included for areas of flange and web loss along the fascias and along the median. These repairs will include localized treatment of corrosion and pack rust with sealers and repainting.

Railing Repairs

The inspection identified numerous areas with collision damage to the aluminum tube railing and/or the concrete curb. There are also several areas of spalling of the concrete curb due to the combination of inadequate cover on the reinforcing steel and the exposure to roadway runoff and splash. The areas of damaged aluminum railing will be removed and replaced and the areas of barrier damaged by collision will be repaired with formed concrete patching. The deteriorated areas will be repaired by removing the deteriorated concrete, replacing reinforcing steel where required and the formed placement of concrete in these locations.

Lower Lateral Repairs

The lower lateral system is heavily deteriorated under the median and the outside curbs where uncontrolled drainage has caused the most damage. Damaged areas to be repaired include vertical hangers that are connecting the lateral bracing to the stringers that have either heavy section loss or broken connections. Additional plates will be added where there is extreme section loss to either the web or the flange of the lateral bracing tee sections. The gusset plates at the median and at the tie girder have areas of heavy pack rust where clamping and reinforcing plates will be installed after the pack rust is cleaned out. Further refinement of these repairs may lead to full replacement of the lateral bracing system.

Tie Girder Repairs

All along the tie girders are the remnants of attachments for the support of utilities that have since been removed. These are generally riveted attachments that have pockets of pack rust behind them due to the low number and high spacing of attachment rivets. These will be removed and the pack rust cleaned off. High strength bolts will be installed

to replace the rivets. There is extensive additional deterioration in the tie girder that will need to be monitored closely since this option is not addressing the pack rust and deterioration in the tie girder beyond spot sealing and painting.

Scour Remediation

Bathymetric studies over several years have documented the large scour area around Pier 2. This area is up to 20-25 feet deep in locations around the perimeter of the pier tapering up to the stream bed away from the pier. This scoured area will be filled with D_{50} = 18" stone up to the existing stream bed elevation. This approach will provide protection for the base of the pier against further scour and potential undermining of the footing, which is founded only one foot into the underlying shale formation. If the scour hole is not addressed in this manner, there is a risk of long term degradation and abrasion of the shale and loss of embedment of the caisson.

Partial Repainting

Several of the preceding paragraphs have outlined modification and repairs to the structural steel which will be repainted to protect them from future exposure from the deck runoff. In addition to the repair areas there will be specific areas of the existing structural steel (such as the exterior faces of the stringers exposed to deck runoff and lower joints of the arches within the splash zone) which will be "area/spot" painted to protect against continued corrosion, pack rust and section loss.

4.2 A4649 South Approach

Deck Repairs

The south approach span deck was of similar construction as the main spans with the same observation limitations. Therefore the same assumptions have been applied to the deck repair areas. The deck repairs have been estimated as 20% of deck area for half-sole repairs and 15% of the deck area for full depth repairs. The existing low slump overlay will be removed and replaced.

Drain Replacements

South of Pier 1 in Span 10 there are existing deck drains along east and west fascias as well as the median. These drains have downspouts that extend approximately an inch below the bottom of the deck. This has resulted in corrosion damage to the web and bottom flanges of the girders. These drains will be replaced with drains and downspouts extending below the bottom flange of the girder. Collection systems will be provided where necessary.

Girder Repairs

There are several areas on the girders requiring "spot" repairs. These include areas where there is pack rust prying between flange angles and cover plates. The rivets will be removed, pack rust cleaned out and rivets replaced with high strength bolts. Also in the area of the existing deck drains pack rust has formed along the bottom flanges that has scalloped the bottom flange angles. The rivets will be removed, pack rust cleaned

out, clamping plates installed and rivets replaced with high strength bolts. Other repair areas include stiffeners with holes or heavy section loss that will be reinforced with additional bolted plates or angles.

Approach Bent Repairs

The steel approach bents have several areas where the exterior plates of the cap beams are attached with rivets spaced at large distances allowing pack rust to develop between the plates. These areas of pack rust are prying the plates apart and will be cleaned out and repaired. The rivets in these areas will be removed, pack rust cleaned out, clamping plated installed with high strength bolts through the existing rivet holes. These repairs will need be completed cautiously and in specific sequences or at specific times to avoid destabilizing the bent.

Railing Repairs

Similar to the main spans, the inspection identified numerous areas where there has been collision damage to the aluminum tube railing and/or the concrete curb or spalling of the concrete curb. The repairs applied to the south approach will be similar in scope to those mentioned for the main spans.

Hinge Modifications

The inspection uncovered fatigue cracks at the web stiffening plate supporting the shelf bearings near Bent 21 of Bridge A4646. These cracks were reported to MoDOT, a retrofit detail was developed and the repairs made for that location. A similar detail appears at locations in the south approach spans where there is a girder hinge support. These locations should be proactively reinforced prior to the occurrence of a failure. The retrofit of the hinges will be similar to the emergency repair that was completed on A4646 immediately after the inspection was completed.

Partial Repainting

Several of the preceding paragraphs have outlined modification and repairs to the structural steel which will be repainted to protect them from future exposure from the deck runoff. In addition to the repair areas there will be specific areas of the existing structural steel (such as the exterior faces of the girders) which will be "area/spot" painted to protect against continued corrosion, pack rust and section loss.

4.3 A4649 North Approach

Deck Repairs

The general condition of the deck was made by visual observations only, the deck has a low slump overlay which limited the observations of cracks and spalls on the top. The bottom of the deck has several areas of saturation. With the limitation of top of deck observation, the deck repairs have been estimated as 20% of deck area for half-sole repairs and 15% of the deck area for full depth repairs similar to other areas of the bridge. The existing low slump overlay will be removed and replaced.

Railing Repairs

Similar to the main spans, the inspection identified numerous areas where there has been collision damage to the aluminum tube railing and/or the concrete curb or spalling of the concrete curb. The repairs applied to the south approach will be similar in scope to those mentioned for the main spans.

Cover Plate Retrofit

The beams have cover plates that are generally similar width to the flange and taper down to a "point" with a transverse weld across the end. Fatigue analysis has indicated that these Category E details should be retrofitted in order to prolong the fatigue life of the beam. This repair will consist of removing a portion of the deck for the details on the top flange, removing the tapered portion of the cover plate, removing the weld along the sides of the remaining cover plate section a few inches, installing a bolted cover plate over the new end of the cover plate and finally repairing the concrete deck at each location.

Bearing Support Shelf Modifications

The inspection uncovered fatigue cracks at the web stiffening plate supporting the shelf bearings near Bent 21 of Bridge A4646. These cracks were reported to MoDOT, a retrofit detail was developed and the repairs made for this location. A similar detail appears where the south end of Bridge A4646 bears on the ends of girders of the north approach spans for Bridge A4649. These locations should be proactively reinforced prior to a crack initiation which could lead to failure of Bridge A4646. The retrofit will be similar to the emergency repair that was completed on A4646 immediately after the inspection was completed.

Partial Repainting

Several of the preceding paragraphs have outlined modification and repairs to the structural steel which will be repainted to protect them from future exposure from the deck runoff. In addition to the repair areas there will be specific areas of the existing structural steel (such as the exterior faces of the stringers exposed to deck runoff and lower joints of the arches within the splash zone) which will "area/spot" painted to protect against continued corrosion, pack rust and section loss.

4.4 A4646

Deck Repairs

The general condition of the deck was made by visual observations only; the deck has a asphalt overlay which limited the observations to cracks and spalls on the bottom of the deck. Similar to bridge A4649, the deck repairs have been estimated as 20% of deck area for half-sole repairs and 15% of the deck area for full depth repairs. The existing asphalt overlay will be removed and replaced with a low slump overlay.

Railing Repairs

Similar to bridge A4649, the inspection identified numerous areas where there has been collision damage to the aluminum tube railing and/or the concrete curb or spalling of the concrete curb. The repairs applied to the south approach will be similar in scope to those mentioned for the main spans.

Stiffener Retrofit

Numerous areas of girder web and stiffener to web weld are exhibiting cracks due to distortion induced fatigue caused by the floorbeam connection to the stringer. These areas are multiplying in each inspection cycle. This trend is expected to continue. Crack arrest holes have been attempted at several locations with some success but a next step repair is warranted. A proven repair for this type of detail has been the installation of clip angles tying the transverse stiffener/connection plate to the top flange. This will be installed on these stringers by removing a portion of the deck, drilling holes in the top flange and the stiffener, installing the clip angles with high strength bolts and patching the deck over the repair location. Alternatively, repairs such as these can be achieved using welded studs to eliminate the need to remove portions of deck to accommodate through bolting.

Cover Plate Retrofit

The girders have cover plates that are generally similar width as the flange and taper down to a "point" with a transverse weld across the end. Fatigue analysis has indicated that these Category E details should be retrofitted in order to prolong the fatigue life of the girder. This repair will consist of removing a portion of the deck for the details on the top flange, removing the tapered portion of the cover plate, removing the weld along the sides of the remaining cover plate section a few inches, installing a bolted cover plate over the new end of the cover plate and finally repairing the concrete deck at each location.

Hinge Modifications

The inspection uncovered fatigue cracking occurring at the web stiffener plate supporting the shelf bearings near Bent 21. These cracks were reported to MoDOT, a retrofit detail was developed and the repairs made for this location. This same detail appears at every location where there is a girder hinge support. To reinforce these areas prior to the appearance of additional cracks or failures, this retrofit will be made at all similar detail locations.

Partial Repainting

Several of the preceding paragraphs have outlined modification and repairs to the structural steel which will be repainted to protect them from future exposure. In addition to the repair areas there will be specific areas of the existing structural steel (such as the ends of the girders and floorbeams adjacent to the expansion joints and exposed to deck runoff) which will be painted to protect against continued corrosion, pack rust and section loss.

4.5 Additional Items

Based on current status of discussions with the public by MoDOT Area Engineers, the recommended approach is to close the structure to traffic during this work. Costs for these activities have been included under the item "Maintenance of Traffic" which includes advance signage, barriers and detours. At the north abutment of the north approach spans and the north end of A4646 there will be some roadway tie-in construction required which is rolled up in the item "Miscellaneous Roadway Improvements". Additional work to improve the south end of approach spans is included in "Roadway Improvements to South End". Construction access, equipment and supply items and mobilization are accounted for in the "Mobilization" item.

4.6 Short Term Repair Option Cost Opinion

The following table summarizes the estimated cost for the Short Term Repair Option. The complete, detailed cost opinion may be found in Appendix A. This cost estimate does not include any allowance for inflation or contingency. Recommendations for these allowances are 2-3% per year and 10% respectively.

Table 4-1. Short Term Repair Option Cost Summary

Location	Estimated Cost
A4649 Main Spans	$10,280,000
A4649 South Approach	$2,850,000
A4649 North Approach	$1,090,000
A4646	$1,930,000
Additional Items	$2,610,000
Total	**$18,760,000**

5 Long Term Rehabilitation Option

The items outlined in this approach are generally more robust in comparison to the repair items outlined in the Short Term Repair Option, though some of the repair items will be identical. The goal of these modifications and repairs is to carry the bridge forward for 35 years with no major rehabilitations anticipated. For example, the replacement of the deck, floor system, expansion joints, installation of a drainage system and repainting will add protection for the remainder of the structure. This rehabilitation can be completed in 18 to 24 months of construction with a complete closure of the road.

5.1 A4649 Main Spans

Deck and Stringer Replacement

The deck is exhibiting signs of deterioration befitting a deck of its age. To reach the desired goal of 35 additional years the deck would require frequent and potentially extensive repairs. The most desirable option for minimizing future maintenance costs is

to replace the deck in its entirety. When this is undertaken, the steel stringers of the floor system would be replaced. Due to prolonged exposure the stringers are in need of major rehabilitation at a minimum. Replacement of the stringers with a composite design will provide a stronger and more durable deck. The top flanges of the floorbeams will be cleaned of pack rust and the existing bearings will be replaced with new elastomeric bearings for the stringers. The new deck would be configured to control drainage with barrier curbs and removal of brush curbs and two tube railing.

There is a possibility of constructing a single 6' wide sidewalk on the west side of the structures. The sidewalk would require construction of a switchback ramp structure on the north side to tie down adjacent to Richards Road near the intersection with Lou Holland Drive. This area is currently fenced and it is assumed for this study that the area is within MoDOT Right of Way or that an agreement could be reached with the City. MoDOT would need to coordinate this access point with Kansas City, Missouri Public Works and Aviation Departments. On the south end of the bridge, the sidewalk would connect to Independence Avenue adjacent to the ramp connecting to southbound I35. Reconfiguration of the ramp islands and pedestrian facilities at this intersection will be required if MoDOT elects to provide pedestrian facilities on the structure. Accommodating pedestrian facilities cannot be accomplished without complication. The switchback structure at the north end will be a complex design to accommodate access and meet ADA requirements. The connection at the south end becomes complicated in Span 1 where the width is constricted by the thru plate girders. There is only 27' of clearance between the existing two tube railing for deck, barrier and sidewalk. The existing braced two tube railing is constructed outside of this 27' clearance. The geometry at all other locations can accommodate four 11' lanes with a 6' sidewalk, but not in Span 1. In Span 1, the lane widths would need to be dropped to 10' with a 1' barrier constructed on the east side of southbound Span 1 to protect the thru plate girder with the existing two tube braced railing reconstructed in its current configuration on the west side to accommodate a 6' wide sidewalk along the west edge of southbound Span 1. Another option would be to reconstruct Span 1 and the south abutment to provide additional width for another barrier and additional lane width. The estimated cost for the Long Term Rehabilitation Option does not include reconstruction of Span 1.

Cable Keeper Replacements

Similar to the work described in the short term repair option, the cable retainer angles will be replaced at each of the cable hanger supports on the main spans from panel points T2 to T2'.

Floorbeam Repairs

Similar to the approach described in the short term repair option, the deterioration of the floorbeams will be repaired. Holes in the web, areas of thin webs due to pitting and pack rust at the stiffening angles will be repaired.

Tie Girder Rivet Replacement

The existing tie girders are comprised of plates and angles in a box section. The top flange plate of the box is attached to the connection angles with a single row of rivets. The spacing of these rivets is approximately 6" and has allowed for chloride laden spray

from the deck and rainfall to seep into the joint. Pack rust has formed and in many areas has deflected the edges of the top plate, in some places 1" above it original alignment. The approach to arrest and correct this condition will be a rivet replacement program wherein a section of rivets along one edge of the plate will be removed, the pack rust cleaned out and a clamping plate installed with high strength bolts to close the previously rust-filled joint and provide appropriate clamping force. Rust penetrating sealers and coatings will be utilized during this process to further arrest and prevent corrosion and pack rust formation.

Outer Gusset Rivet Replacement

The existing gusset connects the tie girder to the end of the floorbeam. It also acts as a tie girder splice plate at each even numbered panel point. To remove the pack rust that is forming between the gusset plate and the floorbeam, the rivets should be removed, the pack rust cleaned out and the connection reestablished with bolts. The replacement will be done in phases so as not to lose the connection to the floorbeam while removing as many bolts as possible in each phase to allow removal of the pack rust. Additionally, pack rust is forming along the top edge of the tie girder between the girder web and the gusset plate. These rivets should also be removed and replaced in a staged manner to allow removal of the pack rust while maintaining the stability of the connection. After the edges of the gusset plate are reconnected, the remaining interior rivets should then be replaced as well to provide and all bolted connection for each gusset. Some section loss in the gusset plate was noted during the inspection along the edges with pack rust. Since these gussets mostly act as hangers for the tie girder without diagonal members framed in that would cause more complicated stress patterns through the plate, it is assumed for this report that replacement of the plates is not necessary. The capacity of the plates should be verified during final design. Some localized reinforcing of the gusset plates may be necessary but is not included in this cost estimate.

Lower Portal Frame Rivet Replacement

The portal frames at each end of each arch span consist of built up box members that frame from the lower joint to the upper joint, over the roadway and back down to the opposite side lower joint. Pack rust was found between the various web plates and the connecting angles. The pack rust began just above the lower joint vertical gusset plates and continued to the top of the splash zone approximately three feet above the top of the existing rail. After all of the curb and expansion joint attachments are removed, a systematic rivet replacement should be undertaken to allow removal of the pack rust. The rivet removal will need to be phased around the member to reach all four corners and limit the unbraced length of the edge of the plates. While pack rust was found consistently at most lower portals, it had not advanced to the stage of deforming the member plates. Therefore a clamping plate is not envisioned at these locations and not included in this cost estimate.

Tie Girder Attachment Repairs

Similar to the short term repair option, the remnants of previous utility attachments have pack rust and minor section loss. These will be removed and the pack rust cleaned off and high strength bolts will be installed to replace the rivets.

Expansion Joint Replacements

When the deck and stringers are removed, the deteriorated finger plate expansion joints between each main span and the contraction joints in each main span will also be removed. The expansion joints between the spans will be replaced with modular joints while the contraction joints will be replaced with strip seals.

Sidewalk and Barriers

With the replacement of the deck there is an opportunity to adjust the barrier and lane alignments to provide room for a six foot wide sidewalk on the bridge. This will be possible due to the use of 12" wide barriers, the deletion of the median and shifting the lanes approximately three feet east from structure centerline. The sidewalk will be a 6" raised walkway and have a pedestrian railing installed on the barrier along its exterior. As noted previously, the sidewalk, lane and barrier configuration in Span 1 is unique from all other spans to accommodate sidewalk.

Deck Drainage System

As indicated by the extensive deterioration documented in the inspection report, the primary contributing factor is the lack of controlled deck drainage. The current drainage scheme allows free flow through open curbs, median and joints. An enclosed drainage system is proposed consisting of deck drains and downspouts to carry the runoff below the low steel of the structure. Clearances to navigation will be assessed in order to extend the downspouts as far as possible below the structural steel. In general, based on prior similar projects, the downspouts will not extend below the current low clearance point over the navigation span without USCG approval to do otherwise.

Roadway Lighting

A complete new roadway and sidewalk lighting system will be installed to meet the current design requirements for the site. The light system will be designed for required roadway lighting as well as the appropriate light levels to provide safe, adequate lighting for the sidewalk. There are existing conduits and wiring systems on the bridge now which are in varying stages of disrepair. The existing systems will be completely removed and replaced with all new conduits, wiring and junction boxes.

Note: The existing aviation and river navigation systems will be retained in the rehabilitated structure, not replaced. The existing systems will be provided temporary power during the rehabilitation. New conduit and wiring may be required due to the major rehabilitation underway on the remainder of the bridge. The aesthetic light fixtures and photo cells will be reused but new conduit and wiring will be required as the rehabilitation will remove the current system and the light mounting mechanism will need to be updated.

Lower Lateral Replacement

As noted in the short term repair option, the lower lateral system is heavily deteriorated in many locations. To ensure the system will operate correctly without continuing maintenance for the full 35-year design, the entire system should be replaced.

Replacement of the lower laterals will be done one bay at a time. Replacement of the traction frames can occur at any time once the deck is removed.

Pier Repairs

Decades of exposure to chloride contaminated runoff has caused extensive deterioration to the top and faces of the piers. This concrete is exhibiting high levels of chloride contamination such that corrosion and deterioration of the reinforcing steel will continue and further cracking and spalling of the concrete will follow. The approach to repairing this situation will be to remove the outer 6"-7" of concrete with hydrodemolition using staggered vertical strips, repair reinforcing steel as needed, install sacrificial galvanic anodes, and form up concrete repairs for the new "shell" of concrete, 6"-7" thick. In addition to the surface repairs the bearing seats will be rebuilt where they are deteriorating and spalling. It is not intended that any jacking of the superstructure will be required. Temporary river navigation lights and panels may be needed while the piers are being reconstructed.

Scour Remediation

Similar to the Short Term Repair, the large scour area around Pier 2 should be addressed. This area is up to 20-25 feet deep in locations around the perimeter of the pier tapering up to the stream bed away from the pier. This scoured area will be filled with D_{50} = 18" stone up to the existing stream bed elevation. This approach will provide protection for the base of the pier against further scour and potential undermining of the footing, which is founded only one foot into the underlying shale formation. If the scour hole was not addressed in this manner, there is a risk of long term degradation and abrasion of the shale and loss of embedment of the caisson.

Repainting of Structural Steel

All remaining structural steel will have the existing coating completely removed and a three coat (prime-intermediate-final) System G paint system will be applied.

5.2 A4649 South Approach

Deck Replacement

Similar to the main spans, the best option for minimizing future maintenance costs is to replace the deck in its entirety.

Bearings

The girder bearings at Pier 1 and the abutments are exhibiting pack rust and damage to the keeper plates. Often these bearings, when they have reached this stage, will have hidden damage that will only present itself during an attempted rehabilitation increasing costs during construction. The more economical long-term approach is to plan for replacement of these bearings with laminated neoprene bearings during this rehabilitation. The other bearings supporting these spans will be cleaned and rehabilitated.

Sidewalk and Barriers

As discussed for the main spans, there is an opportunity to adjust the barrier and lane alignments to provide room for a six foot wide sidewalk on the bridge. The sidewalk will be a 6" raised walkway and have a pedestrian railing installed on the barrier along its exterior. This configuration works in all spans except Span 1 where narrower 10' lanes and unique railing configurations will be necessary to accommodate the 6' sidewalk through this span. This was discussed in detail in Section 5.1 of this report.

Deck Drainage System

The existing drainage system will be replaced with a new system when the deck is replaced. An enclosed drainage system is proposed consisting of deck drains and downspouts to carry the runoff below the low steel of the structure. Piping will be installed to carry the drainage away from city streets, parking areas and the railroad right-of-way. The drainage will be directed to tie into the city system where possible after investigation of the system condition and verification of the system capacity.

Girder Repairs

There are several areas on the girders requiring "spot" repairs. These include areas where there is pack rust prying between flange angles and cover plates. The rivets will be removed, pack rust cleaned out and rivets replaced with high strength bolts. Also in the area of the existing drains pack rust has formed along the bottom flanges that have scalloped the bottom flange angles. The rivets will be removed, pack rust cleaned out, clamping plates installed and rivets replaced with high strength bolts. Other repair areas include stiffeners with holes or heavy section loss that will be reinforced with additional bolted plates

Approach Bent Repairs

The steel approach bents have several areas where the exterior plates of the cap beams are attached with rivets spaced at large distances allowing pack rust to develop between the plates. These areas of pack rust are prying the plates apart and will be cleaned out and repaired. The rivets in these areas will be removed, pack rust cleaned out, clamping plated installed with high strength bolts through the existing rivet holes. These repairs will need be completed cautiously and in specific sequences or at specific times to avoid destabilizing the bent.

Roadway Lighting

Similar to the main spans, a complete new roadway and sidewalk lighting system will be installed to meet the current design requirements for the site. The existing conduit systems will be completely removed and replaced with all new conduits, wiring and junction boxes.

Girder Rivet Replacement

The South Approach girders were analyzed for remaining fatigue life and the stresses in the girder are high enough that the rivets, a Category D detail, should be replaced with high strength bolts, a Category B detail. This replacement program will be systematic in

nature and will extend the full length of the girders at flanges in tension and reversal zones.

Shear Connectors

The fatigue analysis of the South Approach girders has indicated that to reduce stress levels and increase the anticipated fatigue service life the girders should be made composite. After the deck has been removed the top flange will be prepared and shear connectors installed for the full length of the girders.

Hinge Modifications

Similar to the short term repair option, the girder hinge details in the south approach spans should be proactively reinforced prior to the occurrence of a failure. The reinforcing will follow the approach used to reinforce the bearing shelves near Bent 21 of Bridge A4646.

Repainting of Structural Steel

The structural steel will have the existing coating completely removed and have a three coat (prime-intermediate-final) System G paint system applied.

5.3 A4649 North Approach

Deck Replacement

Similar to the other parts of the bridge, the best option for minimizing future maintenance costs is to replace the deck in its entirety.

Bearings

The girder bearings at Pier 4 and the north abutment are exhibiting pack rust and damage to the keeper plates. Similar to the bearings on the South Approach, the more economical long-term approach is to replace these bearings with laminated neoprene bearings during this rehabilitation. The remaining bearings supporting these spans will be cleaned and rehabilitated.

Sidewalk and Barriers

With the replacement of the deck there is an opportunity to adjust the barrier and lane alignments to provide room for a six foot wide sidewalk on the bridge. The sidewalk will be a 6" raised walkway and have a pedestrian railing installed on the barrier along its exterior. The sidewalk, if constructed, will depart the north approach spans and connect to a new switchback structure connecting the pedestrian facility to Richards Road near the intersection with Lou Holland Drive.

Deck Drainage System

The existing drainage system will be replaced with a new system when the deck is replaced. An enclosed drainage system is proposed consisting of deck drains and downspouts to carry the runoff below the low steel of the structure. Piping will be

installed to carry the drainage away from city streets, parking areas and the electrical substation. Similar to the south end, the drainage will be directed to city systems after investigation of the system of the condition and verification of the system capacity.

Cover Plate Retrofit

The beams have cover plates that are generally similar width to the flange and taper down to a "point" with a transverse weld across the end. Fatigue analysis has indicated that these Category E details should be retrofitted in order to prolong the fatigue life of the beams. This repair will consist of removing the tapered portion of the cover plate, removing the weld along the sides of the remaining cover plate section a few inches and installing a bolted cover plate over the new end of the existing cover.

Roadway Lighting

Similar to the main spans, a complete new roadway and sidewalk lighting system will be installed to meet the current design requirements for the site. The existing conduit systems will be completely removed and replaced with all new conduits, wiring and junction boxes.

Shear Connectors

The fatigue analysis of the North Approach beams has indicated that to reduce stress levels and increase the anticipated fatigue service life the beams should be made composite. After the deck has been removed the top flange will be prepared and shear connectors installed for the full length of the beams

Bearing Support Shelf Modifications

The inspection uncovered fatigue cracks at the web stiffening plate supporting the shelf bearings near Bent 21 of Bridge A4646. These cracks were reported to MoDOT, a retrofit detail was developed and the repairs made for this location. A similar detail appears where the south end of Bridge A4646 bears on the ends of girders in the north approach spans. These locations should be proactively reinforced prior to a crack initiation which could lead to failure of Bridge A4646.

Repainting of Structural Steel

The structural steel will have the existing coating completely removed and have a three coat (prime-intermediate-final) System G paint system applied.

5.4 A4646

Deck Replacement

For the Long Term Rehabilitation Option, replacement of the superstructure on Bridge A4646 is recommended. The deck for the A4646 structure will be removed with the superstructure demolition. The new deck will be composite with the new girders and will be approximately the same width as existing utilizing barriers similar to the main spans. The deck replacement will also include a deck drainage system to connect to the existing drainage system below the bridge.

Girder Replacement

The entire steel superstructure will be replaced to achieve the goal of eliminating the existing two girder bridge and replacing it with a redundant multiple-beam superstructure and eliminating the problematic girder / floorbeam connections. The new girders will be weathering steel plate girders, made composite with the deck and framed into new transverse steel framed cap beams that will be designed to be internally redundant but still fracture critical. Internal redundancy is achieved by constructing the transverse steel framed cap from bolted elements with sufficient reserve strength in other elements of the beam to prevent collapse should any one element fracture. The assumption is that the bolted connections prevent propagation of the fracture from the initiating element into the rest of the cross section.

Steel Framed Cap Beams

As part of the superstructure replacement, new cap beams will be included between each of the existing columns. These cap beams are necessary to maintain the profile grade of the existing roadway as closely as possible and the added requirement of maintaining vehicle clearance on city streets below the bridge. As discussed in the previous section, these cap beams will be fracture critical but will be designed to be internally redundant. To facilitate future inspections, the cap beams and the adjacent portions of the girders will be painted to match the color of the new girders.

Bearings

With the replacement of the two-girder superstructure the existing bearing devices will need to be placed. The new bearings will support the new steel framed cap beams.

Column Rehabilitation

The existing columns and foundations will be reused in the rehabilitated structure. The columns will have existing spalls and cracks repaired and then the entire column will be fiber-wrapped to provide additional confinement, capacity and durability. The tops of the columns will be retrofit to accept the anchorage and bearing attachments of the new steel cap beams.

Expansion Joints

Along with the new deck, the expansion joints will be replaced with strip seal joints eliminating flow to the girders and cap beams below

Roadway Lighting

A complete new roadway lighting system will be installed to meet the current design requirements for the site. The existing system will be completely removed with the deck and superstructure and replaced with all new conduits, wiring and junction boxes.

Painting of Structural Steel

The structural steel cap beams will have a three coat (prime-intermediate-final) System G paint system applied.

5.5 Additional Items

Based on current status of discussions with the public by MoDOT Area Engineers, the recommended approach is to close the structure to traffic during this work. Costs for these activities have been included under the item "Maintenance of Traffic" which includes advance signage, barriers and detours. At the north abutment of the north approach spans and the north end of A4646 there will be some roadway tie-in construction required which is rolled up in the item "Miscellaneous Roadway Improvements". Additional work to improve the south end of approach spans is included in "Roadway Improvements to South End". This option includes a ramp structure for pedestrian access from the bridge to the existing sidewalks on the north end and is included in "Pedestrian Ramp". Construction access, equipment and supply items and mobilization are accounted for in the "Mobilization" item.

5.6 Long Term Rehabilitation Option Cost Opinion

The following table summarizes the estimated cost for the Long Term Rehabilitation Option. The complete, detailed cost opinion may be found in Appendix B. This cost estimate does not include any allowance for inflation or contingency. Recommendations for these allowances are 2-3% per year and 10% respectively.

Table 5-1. Long Term Rehabilitation Option Cost Summary

Location	Estimated Cost
A4649 Main Spans	$26,570,000
A4649 South Approach	$11,120,000
A4649 North Approach	$2,230,000
A4646	$4,280,000
Additional Items	$8,060,000
Total	**$52,260,000**

6 Hybrid – Rehabilitation / Repair Option A

This is a hybrid blend of the Short Term Repair Option and the Long Term Rehabilitation Option. The A4649 Main Spans' scope of work will include the items listed under the Long Term Rehabilitation Option described above. The A4649 South Approach, the A4649 North Approach and A4646 will have a scope of work conforming to the Short Term Repair Option spelled out previously. The Main Span cross section will not include a sidewalk, but the deck width is sufficient to incorporate a six foot sidewalk if the approaches are modified for a sidewalk in the future. This rehabilitation can be completed in 18 to 24 months of construction with a complete closure of the road.

6.1 A4649 Main Spans

- Deck and Stringer Replacement

- Cable Keeper Replacements
- Floorbeam Repairs
- Tie Girder Rivet Replacement
- Outer Gusset Rivet Replacement
- Lower Portal Rivet Replacement
- Tie Girder Attachment Repair
- Expansion Joint Replacements
- Barriers
- Deck Drainage System
- Roadway Lighting
- Lower Lateral Replacement
- Pier Repairs
- Scour Remediation
- Repainting of Structural Steel

6.2 A4649 South Approach

- Deck Repairs
- Drain Replacements
- Girder Repairs
- Approach Bent Repairs
- Railing Repairs
- Hinge Modifications
- Partial Repainting

6.3 A4649 North Approach

- Deck Repairs
- Railing Repairs
- Cover Plate Retrofit
- Bearing Support Shelf Modifications
- Partial Repainting

6.4 A4646

- Deck Repairs

- Railing Repairs
- Stiffener Retrofit
- Cover Plate Retrofit
- Hinge Modifications
- Partial Repainting

6.5 Additional Items

Based on current status of discussions with the public by MoDOT Area Engineers, the recommended approach is to close the structure to traffic during this work. Costs for these activities have been included under the item "Maintenance of Traffic" which includes advance signage, barriers and detours. At the north abutment of the north approach spans and the north end of A4646 there will be some roadway tie-in construction required which is rolled up in the item "Miscellaneous Roadway Improvements". Additional work to improve the south end of approach spans is included in "Roadway Improvements to South End". Construction access, equipment and supply items and mobilization are accounted for in the "Mobilization" item.

6.6 Hybrid – Rehabilitation / Repair Option A Cost Opinion

The following table summarizes the estimated cost for the Hybrid Option A. The complete, detailed cost opinion may be found in Appendix C. This cost estimate does not include any allowance for inflation or contingency. Recommendations for these allowances are 2-3% per year and 10% respectively.

Table 6-1. Hybrid – Rehabilitation / Repair Option A Cost Summary

Location	Estimated Cost
A4649 Main Spans	$26,260,000
A4649 South Approach	$2,850,000
A4649 North Approach	$1,090,000
A4646	$1,930,000
Additional Items	$5,850,000
Total	**$37,980,000**

7 Hybrid – Rehabilitation / Replace Option B

A second hybrid approach to the overall bridge rehabilitation is Option B. In this scenario the A4649 Main Spans' scope of work will include the items listed under the Long Term Rehabilitation Option described above. The A4649 South Approach, the A4649 North Approach and A4646 will be replaced on alignment with structure widths that match the main span and approach roadway geometry and eliminate the long-term maintenance concerns of a rehabilitated structure. This rehabilitation can be completed in 18 to 24 months of construction with a complete closure of the road.

7.1 A4649 Main Spans

- Deck and Stringer Replacement
- Cable Keeper Replacements
- Floorbeam Repairs
- Tie Girder Rivet Replacement
- Outer Gusset Rivet Replacement
- Lower Portal Rivet Replacement
- Tie Girder Attachment Repairs
- Expansion Joint Replacements
- Sidewalk and Barriers
- Deck Drainage System
- Roadway Lighting
- Lower Lateral Replacement
- Pier Repairs
- Scour Remediation
- Repainting of Structural Steel

7.2 A4649 South Approach

Starting at the touchdown of the walls at the south end the "split" section of the South Approach has out-to-out widths of 34 feet for the southbound and 28 feet for the northbound. The difference is due to the six foot sidewalk adjacent to the southbound lanes.

The split sections join together at approximately existing Bent 1 to form one out-to out superstructure with a width of 62 feet. From this point to approximately existing Bent 2 the bridge width will transition to 57 feet out-to-out. This width will allow for two foot shoulders on each side. The bridge width will transition again within 50 feet of Pier 1 to match the width of the rehabilitated main spans which are based on a 53 foot deck width.

7.3 A4649 North Approach

The Long Term Rehabilitation Option for the Main Spans is based on a 53 foot deck width. This width includes six feet for the sidewalk on the west side. This sidewalk will continue to the north for about half the length of this unit. At this point a switchback ramp structure is proposed to bring the sidewalk down to grade on Richards Road at the Downtown Airport. The switchback ramp is estimated to be a steel-framed structure with concrete decks, pedestrian railings and lighting.

The main deck section of the North Approach will flare out to a width equal to the new bridge replacing A4646 (28'-0") and the existing ramps and the northbound lanes (~82'). A steel superstructure is anticipated for this bridge replacement.

7.4 A4646

Starting at the north end of the approach walls and continuing south to the existing North Abutment of the North Approach unit, a new bridge will replace A4646. This new bridge will have an out-to-out deck width of 28 feet which will consist of a 26 foot roadway and two 12" barriers. This bridge is anticipated to be a steel superstructure on concrete piers. The shallow structure depth of the steel superstructure will be required to maintain vertical clearance over the city streets below.

7.5 Additional Items

Based on current status of discussions with the public by MoDOT Area Engineers, the recommended approach is to close the structure to traffic during this work. Costs for these activities have been included under the item "Maintenance of Traffic" which includes advance signage, barriers and detours. At the north abutment of the north approach spans and the north end of A4646 there will be some roadway tie-in construction required which is rolled up in the item "Miscellaneous Roadway Improvements". Additional work to improve the south end of approach spans is included in "Roadway Improvements to South End". This option includes a ramp structure for pedestrian access from the bridge to the existing sidewalks on the north end and is included in "Pedestrian Ramp". Construction access, equipment and supply items and mobilization are accounted for in the "Mobilization" item.

7.6 Hybrid – Rehabilitation / Replace Option B Cost Opinion

The following table summarizes the estimated cost for the Hybrid Option B. The complete, detailed cost opinion may be found in Appendix D. This cost estimate does not include any allowance for inflation or contingency. Recommendations for these allowances are 2-3% per year and 10% respectively.

Table 7-1. Hybrid – Rehabilitation / Replace Option B Cost Summary

Location	Estimated Cost
A4649 Main Spans	$26,570,000
A4649 South Approach	$15,170,000
A4649 North Approach	$2,720,000
A4646	$5,320,000
Additional Items	$8,900,000
Total	**$58,680,000**

8 Replacement in Kind

A replacement-in-kind option was estimated so that the full range of repair / rehabilitation work could be compared to a baseline-type value. This estimate was based on an approximation of the existing deck plan areas as a basis for utilizing square foot unit costs. The square foot unit costs used were $150 for the north approach spans and A4646, $175 for the south approach spans and $600 for the main spans. The $600 unit cost in the main spans accommodates a high cost per square foot for structure types similar in kind to the existing structure. These unit costs include both superstructure and substructure construction. An additional $25 per square foot was included for demolition of the existing south approach and main spans and $15 per square foot for the north approach spans and A4646. A replacement of the bridge would require additional study of the roadway width and pedestrian facility, the proper span arrangement and structure type selection. Additionally, the location of a replacement structure should be studied to determine the true cost of building on alignment or an adjacent alignment. Additional right of way may be required depending on the outcome of studying the other factors. Consideration of these items for a possible replacement structure is outside the scope of this report. This cost estimate does not include any allowance for inflation or contingency. Recommendations for these allowances are 2-3% per year and 10% respectively. Reconstruction of the bridge is estimated to take 24 to 30 months of construction with a complete closure of the road.

Table 8-1. Replacement in Kind Cost Summary

Location	Estimated Cost
A4649 Main Spans	$49,500,000
A4649 South Approach	$16,780,000
A4649 North Approach	$2,780,000
A4646	$5,490,000
Additional Items	$8,450,000
Total	**$83,000,000**

Note: The cost above is to replacement the bridge with existing configuration on the existing alignment.

9 Summary and Recommendation

In evaluating alternatives for a project such as this, it is informative to look at a normalized cost per service year for the investment being made for each scenario. Funding availability, condition of the existing structure, timing and schedule available for planning, design and construction are all factors in selecting the preferred alternative for a project such as this.

Table 9-1. Yearly Cost for Studied Options

Description	Estimated Cost	Assumed Life	Cost per Year	Road Closure
Short Term Repair Option	$18,760,000	10 – 15 Years	$1,876,000 - $1,251,000	9 – 12 Months
Long Term Rehabilitation Option	$52,260,000	35 – 50 Years	$1,493,000 - $1,045,000	18 – 24 Months
Hybrid Option A[1]	$37,980,000	10 – 15 Years	$3,798,000 - $2,532,000	18 – 24 Months
Hybrid Option B[1]	$58,680,000	35 – 50 years	$1,677,000 - $1,174,000	18 – 24 Months
Replacement in Kind[2]	$94,310,000	75 – 100 Years	$1,258,000 - $943,000	24 – 30 Months
Short Term Repair Option – plus – Replacement in Kind[2]	$113,070,000	85 – 110 Years	$1,330,000 - $1,028,000	9 – 12 Months – plus – 24 – 30 Months

Note 1: The Hybrid Options are limited to the service life the approach spans for Option A and the main spans for Option B.
Note 2: Price shown includes initial capital outlay to build the bridge and one assumed redecking during the bridge life with a cost of $11,310,000. The redecking was priced with current unit costs and not adjusted for inflation. No additional structure width, geometric improvements, operation improvements, etc. are contemplated with this alternative.

If funding were not constrained and the planning process and conclusions from that planning process resulted in a replacement in kind alternative being acceptable to the public and other coordinating agencies, the Replacement in Kind alternative would provide the best value on a cost per service year basis. It is also noted that replacement in kind is not a practical approach and a replacement structure would likely require additional width to accommodate wider lanes, shoulders and mixed use bicycle / pedestrian facilities. This additional bridge width and possible additional right of way will increase the cost beyond that shown here, but a full accounting of these costs is beyond the scope of this report. Sufficient funding may not be available at this time to undertake a replacement alternative, nor is the public processes advanced sufficiently to inform the decision on its acceptability to the public or coordinating agencies. Therefore, the Replacement in Kind alternative is not preferred within the limitations of this concept study.

The Short Term Repair option results in the least initial investment but the cost per service year is relatively high as compared to the Long Term Rehabilitation option and the Replacement in Kind option. Recognizing the Short Term Repair option was developed as a stop gap alternative to bridge the schedule gap to a replacement alternative, a combination of construction costs and service life can be extrapolated for comparison as another point of consideration. This combination of costs and service life results in favorable comparisons to the Long Term Rehabilitation Option. An investment of this amount of funds for such a short duration repair with significant impact to traffic and regional mobility may not be preferred.

Neither of the Hybrid Options are suitable from an investment and public acceptance perspective, so they are not being considered further.

The alternative that appears to have the right blend of initial investment, service life, easing of maintenance burdens, preserving public safety, and ensuring that this important cross river transportation link is preserved as soon as possible is the Long Term Rehabilitation Option. Based on all data developed and our understanding of ongoing public processes and the current funding constraints the Long Term Rehabilitation Option should be undertaken as soon as practical.

This page is intentionally left blank.

Appendix A. Short Term Repair Option Cost Estimate

This page is intentionally left blank.

Short Term Repair Option

Bridge	Unit	Item	Unit	Quantity	Unit Cost	Total Cost
A4649	Main Spans	Total Surface Hydrodemolition	SY	7040	$68	$478,720
A4649	Main Spans	Low Slump Concrete Wearing Surface	SY	7040	$71	$499,840
A4649	Main Spans	Partial Removal of Deck (Stringer Ends)	SF	7920	$63	$498,960
A4649	Main Spans	Joint Replacements-Modular	LF	176	$2,250	$396,000
A4649	Main Spans	Joint Replacements-Strip Seal	LF	264	$342	$90,288
A4649	Main Spans	Slab on Steel (Stringer Ends)	SY	880	$314	$276,320
A4649	Main Spans	Keeper Replacement	Each	116	$1,100	$127,600
A4649	Main Spans	Partial Stringer Replacement	Each	144	$17,000	$2,448,000
A4649	Main Spans	Stringer Bearing Replacements	Each	48	$450	$21,600
A4649	Main Spans	Floorbeam Web Repairs	LS	1	$250,000	$250,000
A4649	Main Spans	Floorbeam Stiffener Repairs	Each	86	$2,500	$215,000
A4649	Main Spans	Stringer Repairs	Each	131	$5,000	$655,000
A4649	Main Spans	Railing Repairs	Each	25	$5,000	$125,000
A4649	Main Spans	Full Depth Deck Repairs (15%)	SF	9504	$84	$798,336
A4649	Main Spans	Surface Prep. For Recoating Str. Steel	SF	67,500	$6.00	$405,000
A4649	Main Spans	Field Application of Inorganic Zinc Primer	SF	67,500	$2.00	$135,000
A4649	Main Spans	Intermediate Field Coat (System G)	SF	67,500	$2.00	$135,000
A4649	Main Spans	Finish Field Coat (System G)	SF	67,500	$2.00	$135,000
A4649	Main Spans	Lower Lateral Repair	LBS	34,990	$10	$349,900
A4649	Main Spans	Tie Girder Attachment Repair	Each	221	$1,100	$243,100
A4649	Main Spans	Scour Remediation	LS	1	$2,000,000	$2,000,000
A4649		**Rounded Sub-Total of Main Spans**				**$10,280,000**
A4649	South Appr.	Rem. of Existing Drains	Each	46	$2,072	$95,312
A4649	South Appr.	Deck Drains	Each	46	$459	$21,114
A4649	South Appr.	Girder Repairs	Each	2	$25,000	$50,000

Short Term Repair Option

Bridge	Unit	Item	Unit	Quantity	Unit Cost	Total Cost
A4649	South Appr.	Approach Bent Repairs	Each	27	$10,000	$270,000
A4649	South Appr.	Railing Repairs	Each	8	$5,000	$40,000
A4649	South Appr.	Total Surface Hydrodemolition	SY	8172	$68	$555,696
A4649	South Appr.	Low Slump Concrete Wearing Surface	SY	8172	$71	$580,212
A4649	South Appr.	Full Depth Deck Repairs (15%)	SF	11,032	$84	$926,688
A4649	South Appr.	Surface Prep. For Recoating Str. Steel	SF	18,030	$6.00	$108,180
A4649	South Appr.	Field Application of Inorganic Zinc Primer	SF	18,030	$2.00	$36,060
A4649	South Appr.	Intermediate Field Coat (System G)	SF	18,030	$2.00	$36,060
A4649	South Appr.	Finish Field Coat (System G)	SF	18,030	$2.00	$36,060
A4649	South Appr.	Hinge Modification	Each	8	$12,000	$96,000
A4649		**Rounded Sub-Total of South Approach**				**$2,850,000**
A4649	North Appr.	Deck Removal (cover plate)	SF	300	$63	$18,900
A4649	North Appr.	Slab on Steel (cover plate)	SY	33	$314	$10,362
A4649	North Appr.	Cover Plate Retrofit	Each	100	$5,000	$500,000
A4649	North Appr.	Railing Repairs	Each	3	$5,000	$15,000
A4649	North Appr.	Total Surface Hydrodemolition	SY	1870	$68	$127,160
A4649	North Appr.	Low Slump Concrete Wearing Surface	SY	1870	$71	$132,770
A4649	North Appr.	Full Depth Deck Repairs (15%)	SF	2524	$84	$212,016
A4649	North Appr.	Surface Prep. For Recoating Str. Steel	SF	4125	$6.00	$24,750
A4649	North Appr.	Field Application of Inorganic Zinc Primer	SF	4125	$2.00	$8,250
A4649	North Appr.	Intermediate Field Coat (System G)	SF	4125	$2.00	$8,250
A4649	North Appr.	Finish Field Coat (System G)	SF	4125	$2.00	$8,250
A4649	North Appr.	Bearing Support Shelf Modification	Each	2	$12,000	$24,000
A4649		**Rounded Sub-Total of North Approach**				**$1,090,000**

Short Term Repair Option

Bridge	Unit	Item	Unit	Quantity	Unit Cost	Total Cost
A4646		Deck Removal (stiffener)	SF	232	$63	$14,616
A4646		Slab on Steel (stiffener)	SY	26	$314	$8,164
A4646		Deck Removal (cover plate)	SF	72	$63	$4,536
A4646		Slab on Steel (cover plate)	SY	8	$314	$2,512
A4646		Total Surface Hydrodemolition	SY	3018	$68	$205,224
A4646		Low Slump Concrete Wearing Surface	SY	3018	$71	$214,278
A4646		Full Depth Deck Repairs (15%)	SF	4074	$84	$342,216
A4646		Stiffener Connection	Each	232	$2,500	$580,000
A4646		Cover Plate Retrofit	Each	24	$5,000	$120,000
A4646		Surface Prep. For Recoating Str. Steel	SF	5063	$6.00	$30,378
A4646		Field Application of Inorganic Zinc Primer	SF	5063	$2.00	$10,126
A4646		Intermediate Field Coat (System G)	SF	5063	$2.00	$10,126
A4646		Finish Field Coat (System G)	SF	5063	$2.00	$10,126
A4646		Hinge Modification	Each	21	$12,000	$252,000
A4646		Railing Repairs	Each	26	$5,000	$130,000
A4646		**Rounded Sub-Total of Southbound North Approach**				**$1,930,000**
		Maintenance of Traffic	LS	1	$500,000	$500,000
		Misc. Roadway Improvements	LS	1	$100,000	$100,000
		Roadway Improvements to South End	LS	1	$300,000	$300,000
		Mobilization (10%)				$1,705,906
		Rounded Sub-Total of Additional Items				**$2,610,000**
		Rounded Total of Short Term Repair Option				**$18,760,000**

This page is intentionally left blank.

Appendix B. Long Term Rehabilitation Option Cost Estimate

This page is intentionally left blank.

Long Term Rehabilitation Option

Bridge	Unit	Item	Unit	Quantity	Unit Cost	Total Cost
A4649	Main Spans	Barrier Removal	LF	4320	$60	$259,200
A4649	Main Spans	Deck Removal	SF	63,360	$10	$633,600
A4649	Main Spans	Stringer Removal	LS	1	$907,200	$907,200
A4649	Main Spans	Lower Lat. Bracing Rem.	LS	1	$245,000	$245,000
A4649	Main Spans	Stringer Replacement	LBS	1,430,000	$2.00	$2,860,000
A4649	Main Spans	Stringer Bearing Replacements	Each	328	$450	$147,600
A4649	Main Spans	Lower Lat. Replacement	LBS	349,900	$3.00	$1,049,700
A4649	Main Spans	Keeper Replacement	Each	116	$1,100	$127,600
A4649	Main Spans	Floorbeam Web Repairs	LS	1	$250,000	$250,000
A4649	Main Spans	Floorbeam Stiffener Repairs	Each	86	$2,500	$215,000
A4649	Main Spans	Tie Girder Rivet Replacement Program	Each	9120	$130	$1,185,600
A4649	Main Spans	Outer Gusset Rivet Replacement	Each	8780	$50	$439,000
A4649	Main Spans	Lower Portal Frame Rivet Replacement	Each	3216	$60	$192,960
A4649	Main Spans	Tie Girder Attachment Repair	Each	221	$1,100	$243,100
A4649	Main Spans	Modular Joint	LF	212	$2,250	$477,000
A4649	Main Spans	Strip Seal	LF	318	$342	$108,756
A4649	Main Spans	Slab on Steel	SY	8480	$314	$2,662,720
A4649	Main Spans	Sidewalk	SF	7200	$20	$144,000
A4649	Main Spans	Barrier Rail	LF	2880	$120	$345,600
A4649	Main Spans	Pedestrian Fence	LF	1440	$120	$172,800
A4649	Main Spans	Tubular Markers	Each	720	$42	$30,240
A4649	Main Spans	Drainage System	LS	1	$50,000	$50,000
A4649	Main Spans	Roadway Lighting	LS	1	$30,000	$30,000
A4649	Main Spans	Surface Prep. For Recoating Str. Steel	SF	559,113	$6.00	$3,354,678
A4649	Main Spans	Field Application of Inorganic Zinc Primer	SF	559,113	$2.00	$1,118,226

Long Term Rehabilitation Option

Bridge	Unit	Item	Unit	Quantity	Unit Cost	Total Cost
A4649	Main Spans	Intermediate Field Coat (System G)	SF	559,113	$2.00	$1,118,226
A4649	Main Spans	Finish Field Coat (System G)	SF	559,113	$2.00	$1,118,226
A4649	Main Spans	Intermediate Field Coat (System G)(New Str.)	SF	90,000	$2.00	$180,000
A4649	Main Spans	Finish Field Coat (System G)(New Str.)	SF	90,000	$2.00	$180,000
A4649	Main Spans	Scour Remediation	LS	1	$2,000,000	$2,000,000
A4649	Pier 1	Complete Surface Hydrodemolition	SY	1153	$160	$184,480
A4649	Pier 1	Substructure Repair (Formed)	SF	10,374	$134	$1,390,116
A4649	Pier 1	Embedded Galvanic Anode	Each	2593	$39	$101,127
A4649	Pier 2	Complete Surface Hydrodemolition	SY	961	$160	$153,760
A4649	Pier 2	Substructure Repair (Formed)	SF	8648	$134	$1,158,832
A4649	Pier 2	Embedded Galvanic Anode	Each	2162	$39	$84,318
A4649	Pier 3	Complete Surface Hydrodemolition	SY	817	$160	$130,720
A4649	Pier 3	Substructure Repair (Formed)	SF	7348	$134	$984,632
A4649	Pier 3	Embedded Galvanic Anode	Each	1837	$39	$71,643
A4649	Pier 4	Complete Surface Hydrodemolition	SY	321	$160	$51,360
A4649	Pier 4	Substructure Repair (Formed)	SF	2889	$134	$387,126
A4649	Pier 4	Embedded Galvanic Anode	Each	722	$39	$28,158
A4649		**Rounded Sub-Total of Main Spans**				**$26,570,000**
A4649	South Appr.	Barrier Removal	LF	1873	$160	$299,680
A4649	South Appr.	Deck Removal	SF	73,550	$10	$735,500
A4649	South Appr.	Bearing Rehabilitation	Each	28	$4,100	$114,800
A4649	South Appr.	Bearing Replacement	Each	16	$6,000	$96,000
A4649	South Appr.	Slab on Steel	SY	8172	$314	$2,566,008
A4649	South Appr.	Sidewalk	SF	5517	$20	$110,340
A4649	South Appr.	Barrier Rail	LF	2207	$120	$264,840

Long Term Rehabilitation Option

Bridge	Unit	Item	Unit	Quantity	Unit Cost	Total Cost
A4649	South Appr.	Pedestrian Fence	LF	1104	$120	$132,480
A4649	South Appr.	Drainage System	LS	1	$50,000	$50,000
A4649	South Appr.	Girder Repairs	Each	2	$25,000	$50,000
A4649	South Appr.	Approach Bent Repairs	Each	27	$10,000	$270,000
A4649	South Appr.	Surface Prep. For Recoating Str. Steel	SF	180,302	$6.00	$1,081,812
A4649	South Appr.	Field Application of Inorganic Zinc Primer	SF	180,302	$2.00	$360,604
A4649	South Appr.	Intermediate Field Coat (System G)	SF	180,302	$2.00	$360,604
A4649	South Appr.	Finish Field Coat (System G)	SF	180,302	$2.00	$360,604
A4649	South Appr.	Roadway Lighting	LS	1	$50,000	$50,000
A4649	South Appr.	Girder & Bent Rivet Replacement Program	Each	80,000	$50	$4,000,000
A4649	South Appr.	Shear Connectors	Each	18,398	$6.50	$119,587
A4649	South Appr.	Hinge Modification	Each	8	$12,000	$96,000
A4649		**Rounded Sub-Total of South Approach**				**$11,120,000**
A4649	North Appr.	Barrier Removal	LF	406	$160	$64,960
A4649	North Appr.	Deck Removal	SF	16,827	$10	$168,270
A4649	North Appr.	Bearing Rehabilitation	Each	28	$4,100	$114,800
A4649	North Appr.	Bearing Replacement	Each	18	$6,000	$108,000
A4649	North Appr.	Slab on Steel	SY	1870	$314	$587,180
A4649	North Appr.	Sidewalk	SF	1013	$20	$20,260
A4649	North Appr.	Barrier Rail	LF	405	$120	$48,600
A4649	North Appr.	Pedestrian Fence	LF	203	$120	$24,360
A4649	North Appr.	Drainage System	LS	1	$25,000	$25,000
A4649	North Appr.	Surface Prep. For Recoating Str. Steel	SF	41,250	$6.00	$247,500
A4649	North Appr.	Field Application of Inorganic Zinc Primer	SF	41,250	$2.00	$82,500
A4649	North Appr.	Intermediate Field Coat (System G)	SF	41,250	$2.00	$82,500

Long Term Rehabilitation Option

Bridge	Unit	Item	Unit	Quantity	Unit Cost	Total Cost
A4649	North Appr.	Finish Field Coat (System G)	SF	41,250	$2.00	$82,500
A4649	North Appr.	Cover Plate Retrofit	Each	100	$5,000	$500,000
A4649	North Appr.	Roadway Lighting	LS	1	$20,000	$20,000
A4649	North Appr.	Shear Connectors	Each	4842	$6.50	$31,473
A4649	North Appr.	Bearing Support Shelf Modification	Each	2	$12,000	$24,000
A4649		**Rounded Sub-Total of North Approach**				**$2,230,000**
A4646		Barrier Removal	LF	1873	$160	$299,680
A4646		Deck Removal	SF	27161	$10	$271,610
A4646		Stringer Removal	LS	1	$100,000	$100,000
A4646		Fiber Wrap Columns	SY	465	$457	$212,505
A4646		Steel Capbeams (Painted)	EACH	17	$40,000	$680,000
A4646		Fab Structural Steel (Weathering)	LBS	555,000	$2.00	$1,110,000
A4646		Bearing Assemblies	EACH	34	$2,000	$68,000
A4646		Strip Seal Exp. Device	LF	203	$342	$69,426
A4646		Slab on Steel	SY	3018	$314	$947,652
A4646		Barrier Rail	LF	1873	$120	$224,760
A4646		Pedestrian Fence	LF	945	$120	$113,400
A4646		Roadway Lighting	LS	1	$50,000	$50,000
A4646		Intermediate Field Coat (System G)	SF	32,900	$2.00	$65,800
A4646		Finish Field Coat (System G)	SF	32,900	$2.00	$65,800
A4646		**Rounded Sub-Total of Southbound North Approach**				**$4,280,000**

Long Term Rehabilitation Option

Pedestrian Ramp	SF	3456	$100	$345,600
Maintenance of Traffic	LS	1	$500,000	$500,000
Misc. Roadway Improvements	LS	1	$100,000	$100,000
Roadway Improvements to South End	LS	1	$300,000	$300,000
Mobilization (15%)				$6,817,095
Rounded Sub-Total of Additional Items				**$8,060,000**
Rounded Total of Long Term Rehabilitation Option				**$52,260,000**

This page is intentionally left blank.

Appendix C. Hybrid – Rehabilitation / Repair Option A Cost Estimate

This page is intentionally left blank.

Hybrid Rehabilitation Option A (Long Term Rehab. of the Main Spans and Short Term Repair on the remainder)

Bridge	Unit	Item	Unit	Quantity	Unit Cost	Total Cost
A4649	Main Spans	Barrier Removal	LF	4320	$60.00	$259,200
A4649	Main Spans	Deck Removal	SF	63,360	$10.00	$633,600
A4649	Main Spans	Stringer Removal	LS	1	$907,200	$907,200
A4649	Main Spans	Lower Lat. Bracing Rem.	LS	1	$245,000	$245,000
A4649	Main Spans	Stringer Replacement	LBS	1,430,000	$2.00	$2,860,000
A4649	Main Spans	Stringer Bearing Replacements	Each	328	$450	$147,600
A4649	Main Spans	Lower Lat. Replacement	LBS	349,900	$3.00	$1,049,700
A4649	Main Spans	Keeper Replacement	Each	116	$1,100	$127,600
A4649	Main Spans	Floorbeam Web Repairs	LS	1	$250,000	$250,000
A4649	Main Spans	Floorbeam Stiffener Repairs	Each	86	$2,500	$215,000
A4649	Main Spans	Tie Girder Rivet Replacement Program	Each	9120	$130	$1,185,600
A4649	Main Spans	Outer Gusset Rivet Replacement	Each	8780	$50	$439,000
A4649	Main Spans	Lower Portal Frame Rivet Replacement	Each	3216	$60	$192,960
A4649	Main Spans	Tie Girder Attachment Repair	Each	221	$1,100	$243,100
A4649	Main Spans	Modular Joint	LF	212	$2,250	$477,000
A4649	Main Spans	Strip Seal	LF	318	$342	$108,756
A4649	Main Spans	Slab on Steel	SY	8480	$314	$2,662,720
A4649	Main Spans	Barrier Rail	LF	2880	$120	$345,600
A4649	Main Spans	Tubular Markers	Each	720	$42	$30,240
A4649	Main Spans	Drainage System	LS	1	$50,000	$50,000
A4649	Main Spans	Roadway Lighting	LS	1	$30,000	$30,000
A4649	Main Spans	Surface Prep. For Recoating Str. Steel	SF	559,113	$6.00	$3,354,678
A4649	Main Spans	Field Application of Inorganic Zinc Primer	SF	559,113	$2.00	$1,118,226
A4649	Main Spans	Intermediate Field Coat (System G)	SF	559,113	$2.00	$1,118,226
A4649	Main Spans	Finish Field Coat (System G)	SF	559,113	$2.00	$1,118,226

Hybrid Rehabilitation Option A (Long Term Rehab. of the Main Spans and Short Term Repair on the remainder)

Bridge	Unit	Item	Unit	Quantity	Unit Cost	Total Cost
A4649	Main Spans	Intermediate Field Coat (System G)(New Str.)	SF	90,000	$2.00	$180,000
A4649	Main Spans	Finish Field Coat (System G)(New Str.)	SF	90,000	$2.00	$180,000
A4649	Main Spans	Scour Remediation	LS	1	$2,000,000	$2,000,000
A4649	Pier 1	Complete Surface Hydrodemolition	SY	1153	$160	$184,480
A4649	Pier 1	Substructure Repair (Formed)	SF	10,374	$134	$1,390,116
A4649	Pier 1	Embedded Galvanic Anode	Each	2593	$39	$101,127
A4649	Pier 2	Complete Surface Hydrodemolition	SY	961	$160	$153,760
A4649	Pier 2	Substructure Repair (Formed)	SF	8648	$134	$1,158,832
A4649	Pier 2	Embedded Galvanic Anode	Each	2162	$39	$84,318
A4649	Pier 3	Complete Surface Hydrodemolition	SY	817	$160	$130,720
A4649	Pier 3	Substructure Repair (Formed)	SF	7348	$134	$984,632
A4649	Pier 3	Embedded Galvanic Anode	Each	1837	$39	$71,643
A4649	Pier 4	Complete Surface Hydrodemolition	SY	321	$160	$51,360
A4649	Pier 4	Substructure Repair (Formed)	SF	2889	$134	$387,126
A4649	Pier 4	Embedded Galvanic Anode	Each	722	$39	$28,158
A4649		**Rounded Sub-Total of Main Spans**				**$26,260,000**
A4649	South Appr.	Rem. of Existing Drains	Each	46	$2,072	$95,312
A4649	South Appr.	Deck Drains	Each	46	$459	$21,114
A4649	South Appr.	Girder Repairs	Each	2	$25,000	$50,000
A4649	South Appr.	Approach Bent Repairs	Each	27	$10,000	$270,000
A4649	South Appr.	Railing Repairs	Each	8	$5,000	$40,000
A4649	South Appr.	Total Surface Hydrodemolition	SY	8172	$68	$555,696
A4649	South Appr.	Low Slump Concrete Wearing Surface	SY	8172	$71	$580,212
A4649	South Appr.	Full Depth Deck Repairs (15%)	SF	11,032	$84	$926,688
A4649	South Appr.	Surface Prep. For Recoating Str. Steel	SF	18,030	$6.00	$108,180

Hybrid Rehabilitation Option A (Long Term Rehab. of the Main Spans and Short Term Repair on the remainder)

Bridge	Unit	Item	Unit	Quantity	Unit Cost	Total Cost
A4649	South Appr.	Field Application of Inorganic Zinc Primer	SF	18,030	$2.00	$36,060
A4649	South Appr.	Intermediate Field Coat (System G)	SF	18,030	$2.00	$36,060
A4649	South Appr.	Finish Field Coat (System G)	SF	18,030	$2.00	$36,060
A4649	South Appr.	Hinge Modification	Each	8	$12,000	$96,000
A4649		**Rounded Sub-Total of South Approach**				**$2,850,000**
A4649	North Appr.	Deck Removal (cover plate)	SF	300	$63	$18,900
A4649	North Appr.	Slab on Steel (cover plate)	SY	33	$314	$10,362
A4649	North Appr.	Cover Plate Retrofit	Each	100	$5,000	$500,000
A4649	North Appr.	Railing Repairs	Each	3	$5,000	$15,000
A4649	North Appr.	Total Surface Hydrodemolition	SY	1870	$68	$127,160
A4649	North Appr.	Low Slump Concrete Wearing Surface	SY	1870	$71	$132,770
A4649	North Appr.	Full Depth Deck Repairs (15%)	SF	2524	$84	$212,016
A4649	North Appr.	Surface Prep. For Recoating Str. Steel	SF	4125	$6.00	$24,750
A4649	North Appr.	Field Application of Inorganic Zinc Primer	SF	4125	$2.00	$8,250
A4649	North Appr.	Intermediate Field Coat (System G)	SF	4125	$2.00	$8,250
A4649	North Appr.	Finish Field Coat (System G)	SF	4125	$2.00	$8,250
A4649	North Appr.	Bearing Support Shelf Modification	Each	2	$12,000	$24,000
A4649		**Rounded Sub-Total of North Approach**				**$1,090,000**
A4646		Deck Removal (stiffener)	SF	232	$63	$14,616
A4646		Slab on Steel (stiffener)	SY	26	$314	$8,164
A4646		Deck Removal (cover plate)	SF	72	$63	$4,536
A4646		Slab on Steel (cover plate)	SY	8	$314	$2,512
A4646		Total Surface Hydrodemolition	SY	3018	$68	$205,224
A4646		Low Slump Concrete Wearing Surface	SY	3018	$71	$214,278
A4646		Full Depth Deck Repairs (15%)	SF	4074	$84	$342,216

Hybrid Rehabilitation Option A (Long Term Rehab. of the Main Spans and Short Term Repair on the remainder)

Bridge	Unit	Item	Unit	Quantity	Unit Cost	Total Cost
A4646		Stiffener Connection	Each	232	$2,500	$580,000
A4646		Cover Plate Retrofit	Each	24	$5,000	$120,000
A4646		Surface Prep. For Recoating Str. Steel	SF	5063	$6.00	$30,378
A4646		Field Application of Inorganic Zinc Primer	SF	5063	$2.00	$10,126
A4646		Intermediate Field Coat (System G)	SF	5063	$2.00	$10,126
A4646		Finish Field Coat (System G)	SF	5063	$2.00	$10,126
A4646		Hinge Modification	Each	21	$12,000	$252,000
A4646		Railing Repairs	Each	26	$5,000	$130,000
A4646		**Rounded Sub-Total of Southbound North Approach**				**$1,930,000**
		Maintenance of Traffic	LS	1	$500,000	$500,000
		Misc. Roadway Improvements	LS	1	$100,000	$100,000
		Roadway Improvements to South End	LS	1	$300,000	$300,000
		Mobilization (15%)				$4,954,634
		Rounded Sub-Total of Additional Items				**$5,850,000**
		Rounded Total of Hybrid Option A				**$37,980,000**

Appendix D. Hybrid – Rehabilitation / Replace Option B Cost Estimate

This page is intentionally left blank.

Hybrid Rehabilitation Option B (Long Term Rehab. of the Main Spans and Replacement of Approaches & A4646)

Bridge	Unit	Item	Unit	Quantity	Unit Cost	Total Cost
A4649	Main Spans	Barrier Removal	LF	4320	$60	$259,200
A4649	Main Spans	Deck Removal	SF	63,360	$10	$633,600
A4649	Main Spans	Stringer Removal	LS	1	$907,200	$907,200
A4649	Main Spans	Lower Lat. Bracing Rem.	LS	1	$245,000	$245,000
A4649	Main Spans	Stringer Replacement	LBS	1,430,000	$2.00	$2,860,000
A4649	Main Spans	Stringer Bearing Replacements	Each	328	$450	$147,600
A4649	Main Spans	Lower Lat. Replacement	LBS	349,900	$3.00	$1,049,700
A4649	Main Spans	Keeper Replacement	Each	116	$1,100	$127,600
A4649	Main Spans	Floorbeam Web Repairs	LS	1	$250,000	$250,000
A4649	Main Spans	Floorbeam Stiffener Repairs	Each	86	$2,500	$215,000
A4649	Main Spans	Tie Girder Rivet Replacement Program	Each	9120	$130	$1,185,600
A4649	Main Spans	Outer Gusset Rivet Replacement	Each	8780	$50	$439,000
A4649	Main Spans	Lower Portal Frame Rivet Replacement	Each	3216	$60	$192,960
A4649	Main Spans	Tie Girder Attachment Repair	Each	221	$1,100	$243,100
A4649	Main Spans	Modular Joint	LF	212	$2,250	$477,000
A4649	Main Spans	Strip Seal	LF	318	$342	$108,756
A4649	Main Spans	Slab on Steel	SY	8480	$314	$2,662,720
A4649	Main Spans	Sidewalk	SF	7200	$20	$144,000
A4649	Main Spans	Barrier Rail	LF	2880	$120	$345,600
A4649	Main Spans	Pedestrian Fence	LF	1440	$120	$172,800
A4649	Main Spans	Tubular Markers	Each	720	$42	$30,240
A4649	Main Spans	Drainage System	LS	1	$50,000	$50,000
A4649	Main Spans	Roadway Lighting	LS	1	$30,000	$30,000
A4649	Main Spans	Surface Prep. For Recoating Str. Steel	SF	559,113	$6.00	$3,354,678
A4649	Main Spans	Field Application of Inorganic Zinc Primer	SF	559,113	$2.00	$1,118,226

Hybrid Rehabilitation Option B (Long Term Rehab. of the Main Spans and Replacement of Approaches & A4646)

Bridge	Unit	Item	Unit	Quantity	Unit Cost	Total Cost
A4649	Main Spans	Intermediate Field Coat (System G)	SF	559,113	$2.00	$1,118,226
A4649	Main Spans	Finish Field Coat (System G)	SF	559,113	$2.00	$1,118,226
A4649	Main Spans	Intermediate Field Coat (System G)(New Str.)	SF	90,000	$2.00	$180,000
A4649	Main Spans	Finish Field Coat (System G)(New Str.)	SF	90,000	$2.00	$180,000
A4649	Main Spans	Scour Remediation	LS	1	$2,000,000	$2,000,000
A4649	Pier 1	Complete Surface Hydrodemolition	SY	1153	$160	$184,480
A4649	Pier 1	Substructure Repair (Formed)	SF	10,374	$134	$1,390,116
A4649	Pier 1	Embedded Galvanic Anode	Each	2593	$39	$101,127
A4649	Pier 2	Complete Surface Hydrodemolition	SY	961	$160	$153,760
A4649	Pier 2	Substructure Repair (Formed)	SF	8648	$134	$1,158,832
A4649	Pier 2	Embedded Galvanic Anode	Each	2162	$39	$84,318
A4649	Pier 3	Complete Surface Hydrodemolition	SY	817	$160	$130,720
A4649	Pier 3	Substructure Repair (Formed)	SF	7348	$134	$984,632
A4649	Pier 3	Embedded Galvanic Anode	Each	1837	$39	$71,643
A4649	Pier 4	Complete Surface Hydrodemolition	SY	321	$160	$51,360
A4649	Pier 4	Substructure Repair (Formed)	SF	2889	$134	$387,126
A4649	Pier 4	Embedded Galvanic Anode	Each	722	$39	$28,158
A4649		**Rounded Sub-Total of Main Spans**				**$26,570,000**
A4649	South Appr.	Removal	SF	83,910	$25	$2,097,750
A4649	South Appr.	Replacement	SF	74,717	$175	$13,075,475
A4649		**Rounded Sub-Total of South Approach**				**$15,170,000**
A4649	North Appr.	Removal	SF	16,827	$15	$252,405
A4649	North Appr.	Replacement	SF	16,472	$150	$2,470,800
A4649		**Rounded Sub-Total of North Approach**				**$2,720,000**

Hybrid Rehabilitation Option B (Long Term Rehab. of the Main Spans and Replacement of Approaches & A4646)

Bridge	Unit	Item	Unit	Quantity	Unit Cost	Total Cost
A4646		Removal	SF	33,299	$15	$499,485
A4646		Replacement	SF	32,150	$150	$4,822,500
A4646		**Rounded Sub-Total of Southbound North Approach**				**$5,320,000**
		Pedestrian Ramp	SF	3456	$100	$345,600
		Maintenance of Traffic	LS	1	$500,000	$500,000
		Misc. Roadway Improvements	LS	1	$100,000	$100,000
		Roadway Improvements to South End	LS	1	$300,000	$300,000
		Mobilization (15%)				$7,655,448
		Rounded Sub-Total of Additional Items				**$8,900,000**
		Rounded Total of Hybrid Option B				**$58,680,000**

This page is intentionally left blank.

Appendix E. Replacement in Kind Cost Estimate

This page is intentionally left blank.

Replacement in Kind (Same bridge configuration on existing alignment)

Bridge	Unit	Item	Unit	Quantity	Unit Cost	Total Cost
A4649	Main Spans	Demolition	SF	79,200	$25	$1,980,000
A4649	Main Spans	Replacement	SF	79,200	$600	$47,520,000
A4649		**Rounded Sub-Total of Main Spans**				**$49,500,000**
A4649	South Appr.	Demolition	SF	83,910	$25	$2,097,750
A4649	South Appr.	Replacement	SF	83,910	$175	$14,684,250
A4649		**Rounded Sub-Total of South Approach**				**$16,780,000**
A4649	North Appr.	Demolition	SF	16,827	$15	$252,405
A4649	North Appr.	Replacement	SF	16,827	$150	$2,524,050
A4649		**Rounded Sub-Total of North Approach**				**$2,780,000**
A4646		Demolition	SF	33,299	$15	$499,485
A4646		Replacement	SF	33,299	$150	$4,994,850
A4646		**Rounded Sub-Total of Southbound North Approach**				**$5,490,000**
		Maintenance of Traffic	LS	1	$500,000	$500,000
		Misc. Roadway Improvements	LS	1	$100,000	$100,000
		Roadway Improvements to South End	LS	1	$300,000	$300,000
		Mobilization (10%)				$7,545,279
		Rounded Sub-Total of Additional Items				**$8,450,000**
		Rounded Total of Replacement in Kind				**$83,000,000**

This page is intentionally left blank.

Appendix F. Fatigue Analysis Summary

This page is intentionally left blank.

F. Fatigue Analysis Summary

A concept level fatigue analysis was performed on select components of the Buck O'Neil Bridge main spans and approach spans. The objective of the analysis was to evaluate the fatigue details encountered during the inspection and concept study for infinite life. Both composite and noncomposite configurations were evaluated for select girders in select units of the approach spans. The results are reported at the extreme fiber and at a location equal to four times the web thickness (noted as 4T in the sections below). The second result generally gives results that are on the opposite side of the flange in question (bottom of the top flange for example). This location is important to evaluate the flange to web weld and also attachments to the flange such as stiffeners. The main span floorbeams were also evaluated. After completion of the structural analysis, stress ranges were compared to infinite life fatigue threshold stress ranges for each fatigue detail encountered. Members experiencing stress ranges less than the corresponding infinite life fatigue thresholds were deemed adequate for infinite life fatigue.

F.1 A4649 Main Span Floorbeam

Methodology:

Longitudinal line girder was performed to find maximum and minimum reactions at interior and end floorbeams. Reactions were resolved into two wheels for transverse line girder runs and applied directly to floorbeams as moving loads transversely. Maximum and algebraic minimum moments were gathered from FEM analysis and converted to stresses using the gross section for both the interior and end floorbeams in order to calculate maximum stress ranges. A net section amplification factor was calculated taking out the rivet holes and calculating I_{gross}/I_{net}. This factor was applied to the maximum stress range in the floorbeam. A load factor of 1.5 was applied to all live load forces for infinite life and 15% impact was used. The fatigue calculations for the Main Span floorbeam can be found in Appendix F.

Fatigue Details of Concern:

- The main span structure is fully riveted. Rivets are fatigue Category D with an Infinite Life Threshold of 7 ksi.

Findings:

- Interior floorbeam max. stress range on net section: 5.58 ksi.
- End floorbeam max. stress range on net section: 6.08 ksi.

Recommendations:

The main span floorbeams pass the fatigue Category D with 7 ksi infinite life threshold. The floorbeams are adequate for fatigue as is. No consideration was made for the section loss found during the inspection. All of the repair / rehabilitation options account for the section loss in the floorbeams.

F.2 A4649 South Approach (Unit 1 Thru-Girder)

Methodology

A line girder run was performed in STLBRIDGE for longest span girder of the four girders. Distribution factor was hand calculated using simple span distribution for one lane loaded fatigue truck. Model was run noncomposite since deck will not contribute to girder stiffness. The average of variable web depths was used for simplicity. This is an approximation but is adequate for concept level design. The fatigue analysis for the South Approach spans can be found in Appendix G.

Fatigue Details of Concern:

- Rivets in top and bottom flanges of thru girders, Category D, Infinite Life Threshold: 7 ksi.
- Longitudinal welds in web, Category B, Threshold: 16 ksi.
- Transverse welds in web and flanges, Category C', Threshold: 12 ksi.

Findings

- Gross sections were used in analysis. Maximum stress range in bottom flange was found to be 5.64 ksi. A net section amplifier (I_{gross}/I_{net}) was calculated to be 1.22 giving an amplified stress of 6.88 ksi which is less than the 7 ksi threshold, so the girder is ok for Category D infinite fatigue life.

Recommendations

No rehabilitations needed for fatigue.

F.3 A4649 South Approach (Units 2 and 3)

Methodology

For Unit 3, Girders H, G, and F were analyzed in STLBRIDGE. Girder F was run as an interior and exterior girder, neglecting the opposite portions, to fully capture fatigue stress ranges. The equivalent S_{xx} was found and the girders were analyzed as plate girders. The net section amplification factor (I_{gross}/I_{net}) was calculated to be approximately 1.13 or a 13% increase for Units 2 and 3. For Unit 2, Girder F was run as an exterior girder only. The fatigue analysis for the South Approach spans can be found in Appendix G.

Fatigue Details of Concern:

- Rivets connecting flange cover plates to flange angles and stiffening angles at many locations along the web. Rivets are considered open holes with fatigue Category D, Threshold: 7 ksi.
- Small welds connecting stiffeners to top flange of girders, Category C', Threshold: 12 ksi.
- Miscellaneous attachments and open holes as found during the inspection.

Findings

- Unit 3:
  - Girder H (Exterior):
    - Noncomposite:
      - Top Flange: Max. extreme fiber: 11.27 ksi, at 4T away from extreme fiber: 10.52 ksi.
      - Bottom Flange: Max. extreme fiber: 11.27 ksi, at 4T away from extreme fiber: 10.52 ksi.
    - Fully Composite:
      - Top Flange: Max. extreme fiber: 7.22 ksi, at 4T away from extreme fiber: 6.68 ksi.
      - Bottom Flange: Max. extreme fiber: 10.46 ksi, at 4T away from extreme fiber: 9.89 ksi.
  - Girder G (Interior):
    - Noncomposite:
      - Top Flange: Max. extreme fiber: 8.27 ksi, at 4T away from extreme fiber: 7.70 ksi.
      - Bottom Flange: Max. extreme fiber: 8.27 ksi, at 4T away from extreme fiber: 7.70 ksi.
    - Fully Composite:
      - Top Flange: Max. extreme fiber: 5.57 ksi, at 4T away from extreme fiber: 5.14 ksi.
      - Bottom Flange: Max. extreme fiber: 7.70 ksi, at 4T away from extreme fiber: 7.28 ksi.
  - Girder F (Interior/Exterior):
    - Noncomposite (Analyzed as interior girder):
      - Top Flange: Max. extreme fiber: 9.42 ksi, at 4T away from extreme fiber: 8.72 ksi.
      - Bottom Flange: Max. extreme fiber: 9.42 ksi, at 4T away from extreme fiber: 8.72 ksi.
    - Fully Composite (Analyzed as interior girder):
      - Top Flange: Max. extreme fiber: 5.09 ksi, at 4T away from extreme fiber: 4.68 ksi.
      - Bottom Flange: Max. extreme fiber: 7.94 ksi, at 4T away from extreme fiber: 7.47 ksi.
    - Noncomposite (Analyzed as exterior girder):

            - Top Flange: Max. extreme fiber: 12.83 ksi, at 4T away from extreme fiber: 11.87 ksi.
            - Bottom Flange: Max. extreme fiber: 12.83 ksi, at 4T away from extreme fiber: 11.87 ksi.
        - Fully Composite (Analyzed as exterior girder):
            - Top Flange: Max. extreme fiber: 6.72 ksi, at 4T away from extreme fiber: 6.03 ksi.
            - Bottom Flange: Max. extreme fiber: 11.59 ksi, at 4T away from extreme fiber: 10.90 ksi.
- Unit 2:
    - Girder F (Exterior):
        - Noncomposite:
            - Top Flange: Max. extreme fiber: 9.86 ksi, at 4T away from extreme fiber: 9.13 ksi.
            - Bottom Flange: Max. extreme fiber: 9.86 ksi, at 4T away from extreme fiber: 9.13 ksi.
        - Fully Composite
            - Top Flange: Max. extreme fiber: 7.46 ksi, at 4T away from extreme fiber: 6.75 ksi.
            - Bottom Flange: Max. extreme fiber: 8.83 ksi, at 4T away from extreme fiber: 8.29 ksi.

Recommendations:

Fatigue stresses greater than infinite life fatigue threshold were found. Analysis with composite section considered shows decreased fatigue stress ranges. Fatigue stresses at shear stud locations on the top flange are below the infinite life fatigue threshold. Full or partial rivet replacement with fully tensioned bolts will be needed to reach infinite fatigue life. The small welds at the tip of stiffeners to the flanges may need a bolted connection retrofit. Further analysis is needed to identify the regions where bolted clip angles will be needed.

F.4 A4649 North Approach (Interior and Exterior Girders)

Methodology

Girder A and Girder B were evaluated due to maximum span lengths. These girders were run as exterior and interior girders, respectively. Girder B was analyzed as an interior girder using STLBRIDGE with varying girder spacing. Girder A was analyzed two ways. The first analysis used the lever rule and averaging of the distribution factors and the effective widths across the respective spans. The second analysis used varying girder spacing and assumed a 2' constant overhang from CL girder to curb line (actual overhang varies throughout spans, for concept level study, 2' was considered

conservative). The second method was found to result in slightly lower stress ranges and is also believed to be more accurate and is presented below. The fatigue analysis for the North Approach spans can be found in Appendix H.

Fatigue Details of Concern

- Top and bottom flange welded cover plate terminations, Category E', Infinite Life Threshold: 2.6 ksi.
- Stiffeners welded to webs of girders (top and bottom flanges are close-fit or mill-to-bear), Category C', Threshold: 12 ksi.
- Terminations of weld access holes, these are most likely located at bend points where welded splices are located, these were found during inspection at bend locations, Category C, Threshold: 10 ksi.
- Rivets (rivets are treated as open holes) at bend locations.
- Bearing Shelf Supports have prematurely terminated flanges and fatigue prone welds. Also has rivets, called stud bolts in the plans but do not appear to be tensioned high strength bolts so treated as rivets, Category D, Threshold: 7 ksi.
- Transverse welds at girder splices, Category B, Threshold: 16 ksi.
- Miscellaneous open holes in girders from past attachments, Category D, Threshold: 7 ksi.
- Miscellaneous welded attachments, varies from Categories B to E' depending on attachment, varying infinite life fatigue threshold.

Findings:

- Girder A:
    - Noncomposite:
        - Top Flange: Max. extreme fiber: 16.36 ksi, at 4T location away from extreme fiber: 13.22 ksi.
        - Bottom Flange: Max. extreme fiber: 16.36 ksi, at 4T location away from extreme fiber: 13.22 ksi.
    - Fully Composite:
        - Top Flange: Max. extreme fiber: 9.55 ksi, at 4T location away from extreme fiber: 7.58 ksi.
        - Bottom Flange: Max. extreme fiber: 13.66 ksi, at 4T location away from extreme fiber: 11.54 ksi.
- Girder B:
    - Noncomposite:
        - Top Flange: Max. extreme fiber: 13.17 ksi, at 4T location away from extreme fiber: 10.65 ksi.

        - Bottom Flange: Max. extreme fiber: 13.17 ksi, at 4T location away from extreme fiber: 10.65 ksi.
    - Composite:
        - Top Flange: Max. extreme fiber: 6.68 ksi, at 4T location away from extreme fiber: 5.33 ksi.
        - Bottom Flange: Max. extreme fiber: 11.01 ksi, at 4T location away from extreme fiber: 9.34 ksi.

Recommendations:

- For the noncomposite section, any detail with a fatigue threshold lower than 17 ksi needs to be rehabilitated to achieve infinite life. Therefore, a full or partial deck replacement will likely be needed fix the top flange cover plate terminations at a Category E' 2.6 ksi threshold, among others, and achieve overall desirable stress ranges.
- For the composite option evaluated the stresses are reduced in both the top and bottom flange. Shear connectors would pass the infinite life fatigue threshold of Category C at 10 ksi. Intermediate stiffener details would pass the fatigue threshold of 12 ksi assuming they are connected at the 4T locations away from the extreme fiber. Intermediate stiffeners may need to be evaluated by location to confirm the location of the weld away from the extreme fiber. For the composite option, any details with a threshold below 12 ksi should be rehabilitated to achieve infinite life.

F.5 A4646 (Unit 1, Unit 3 and Unit 4)

Methodology:

Units 1, 3 and 4 were run in STLBRIDGE using lever rule for distribution factors and 12 x slab thickness for effective width (per LFD standard spec). Cover plates were input into STLBRIDGE using a spreadsheet to calculate an equivalent S_{xx} value for each section. Web depth and thickness were kept constant. Flange width was kept constant. Flange thickness was manipulated to achieve S_{xx} equivalent for each section. The west girder was run due to slightly longer span lengths through the bridge. Girders were run both noncomposite and composite. The fatigue analysis for the bridge A4646 girders can be found in Appendix I.

Fatigue Details of Concern:

- Top and bottom flange welded cover plate terminations, Category E', Infinite Life Threshold: 2.6 ksi.
- Stiffeners welded to webs of girders (top and bottom flanges are close-fit or mill-to-bear), Category C', Threshold: 12 ksi.
- Hinges: several prematurely terminated flanges and fatigue prone welds, see girder repair fix HDR previously performed.
- If girders are made composite, shear connectors at top flange, Category C, threshold: 10 ksi.

- Bolts at field splices, Category B (tensioned, assuming designed as slip-critical), Threshold: 16 ksi.
- Terminations of weld access holes, these are most likely located at bend points where welded splices are located, these were found on the North Approach just north of the main span as well, Category C, Threshold: 10 ksi.
- Miscellaneous open holes in girders from past attachments, Category D, Threshold: 7 ksi.
- Miscellaneous welded attachments, varies from Categories B to E' depending on attachment, varying infinite life fatigue threshold.
- Floorbeam connections at bend points, appear to be welded to top flange, Category C', Threshold: 12 ksi.
- Transverse welds at girder splices, Category B, Threshold: 16 ksi.

Findings:

- Unit 1: Noncomposite: Max. stress range in extreme fiber: Top Flange: 10.31 ksi, Bottom Flange: 10.31 ksi.
- Unit 1: Fully Composite: Max. stress range in extreme fiber: Top Flange: 7.29 ksi, Bottom Flange: 7.82 ksi.
- Unit 3: Noncomposite: Max. stress range in extreme fiber: Top Flange: 8.91 ksi, Bottom Flange: 8.91 ksi.
- Unit 3: Fully Composite: Max. stress range in extreme fiber: Top Flange: 6.46 ksi, Bottom Flange: 7.12 ksi.
- Unit 4: Noncomposite: Max. stress range in extreme fiber: Top Flange: 11.17 ksi, Bottom Flange: 8.94 ksi.
- Unit 4: Fully Composite: Max. stress range in extreme fiber, Top Flange: 10.00 ksi, Bottom Flange: 7.92 ksi.

Recommendations:

- At a minimum a partial deck replacement will be needed to fix the top flange cover plate terminations at a Category E' 2.6 ksi threshold.
- A new composite deck would also help to mitigate the distortion-induced fatigue cracks already occurring in the girders. With the composite option, the stresses are reduced in both the top and bottom flange. Shear connectors would pass the infinite life fatigue threshold of Category C at 10 ksi. All other fatigue details on the bottom flange with an infinite life fatigue threshold of 8 ksi or lower would need to be rehabilitated to achieve infinite life.

This page is intentionally left blank.

Appendix G. A4649 Main Span Floorbeam Fatigue Analysis

This page is intentionally left blank.

Broadway Bridge Fatigue Details

Mainspan Floorbeam

Fatigue Details of Concern:

- Mainspan structure is fully riveted

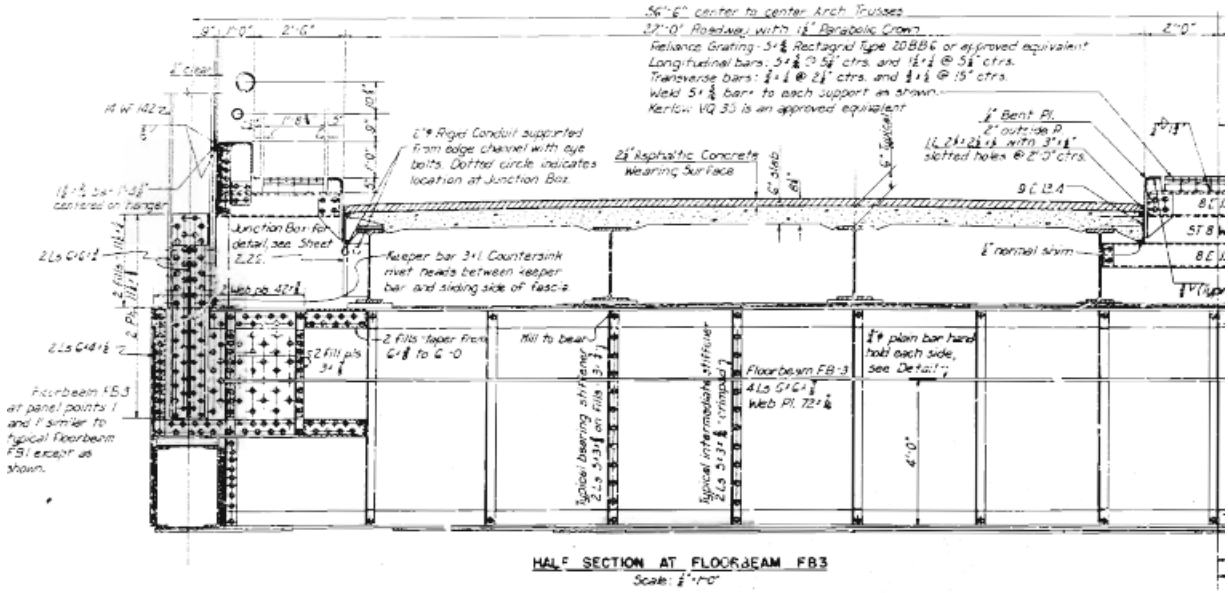

Project:	BROADWAY BRIDGE	Computed:	KG	Date:	1/9/17
Subject:	FATIGUE ANALYSIS	Checked:	MMD	Date:	2/14/17
Task:	MAINSPAN FLOORBEAM	Page:	1	of:	78
Job #:	133-10047358	No:			

MAINSPAN FLOORBEAM

FATIGUE TRUCK:

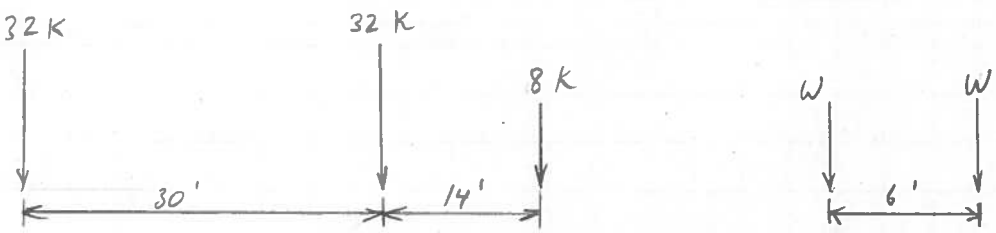

- TREAT FLOORBEAM AS SIMPLY SUPPORTED. MAX STRESS WILL OCCUR WITH MAX MOMENT. 15% IMPACT, 1.5 LF FOR INFINITE LIFE.

- 2 RUNS, ONE INTERMEDIATE FLOORBEAM, AND ONE END FLOORBEAM.

INTERMEDIATE FLOORBEAM

SPACINGS: SPAN 11: ≈ 38'-4 13/16" ← USE 38'-6" (CONSERVATIVE)
SPAN 12: ≈ 37'-4 11/16"
SPAN 13: ≈ 37'-4 11/16"

- ASSUME DISTRIBUTION TRANSVERSE AND LONGITUDINAL ARE INDEPENDENT OF EACHOTHER. USE SUPERPOSITION.

SPAN 11:

SPAN 12 + 13: ← CONTROLS, RUN FOR ALL 3 RUNS.

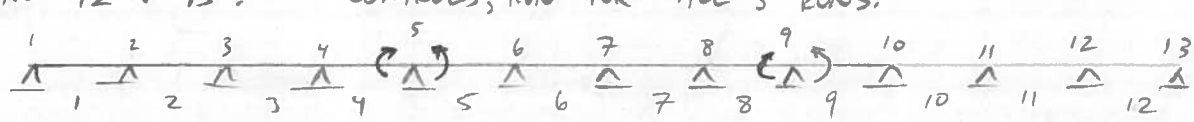

Project:	BROADWAY BRIDGE	Computed:	KG	Date:	1/9/17
Subject:	FATIGUE ANALYSIS	Checked:	MMD	Date:	2/14/17
Task:	MAINSPAN FLOORBEAM	Page:	2	of:	FB
Job #:	133-10047358	No:			

- STRINGERS ARE 24WF110. ESSENTIALLY 2 STRINGERS PER LANE. APPROXIMATE 2 STRINGERS w/ 1 EQ S_{xx} SHAPE IN LARSA FOR ANALYSIS STIFFNESS.

24WF110 : $I_{xx} = 3315 \text{ in}^4$ ← 1967 HANDBOOK of STEEL CONSTRUCTION

$2 \times 3315 = 6630 \text{ in}^4$ ← USE W24x207 ($I = 6820 \text{ in}^4$) FOR ANALYSIS, SAY OK

- RUN LARSA MODEL, FIND MAX REACTION FOR ONE TRUCK.

MAX REACTION RANGE : MAX = 52.69 KIPS, MIN = −4.61 KIPS } 57.30 KIP RANGE

LENGTH OF FLOORBEAM = 56'-6" (℄ ARCH TO ℄ ARCH)

APPLY MAX REACTION : (NEGLECT STRINGER LOCATIONS)

END FB
MAX = 0.5(36.46) = 18.23 K
MIN = 0.5(−2.88) = −1.44 K

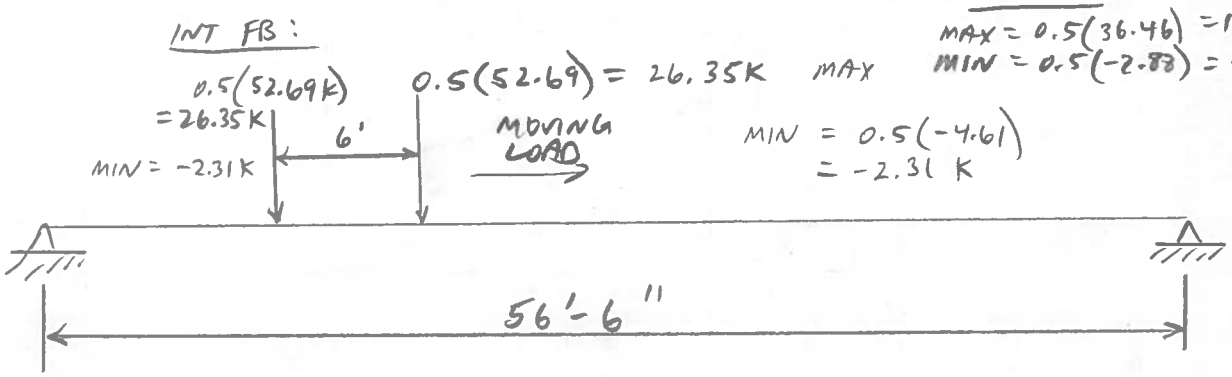

FOR SECTION : USE INTERMEDIATE FB DIMENSIONS, USE MIDSPAN SECTION FOR ANALYSIS, SAY OK

RUN ANALYSIS WITH GROSS SECTION.
MODIFY FOR RIVET HOLE REDUCTIONS POST ANALYSIS w/ A HAND CALC.

Project:	BROADWAY BRIDGE	Computed:	KG	Date:	1/9/17
Subject:	FATIGUE ANALYSIS	Checked:	MMD	Date:	2/14/17
Task:	MAINSPAN FLOORBEAM	Page:	3	of:	FB
Job #:	133-10047358	No:			

ANALYSIS SECTION @ MIDSPAN
(NEGLECT HOLES FOR ANALYSIS)

$\angle 6 \times 6 \times 7/8$: $A = 9.75 \text{ in}^2$
$I = 31.9 \text{ in}^4$

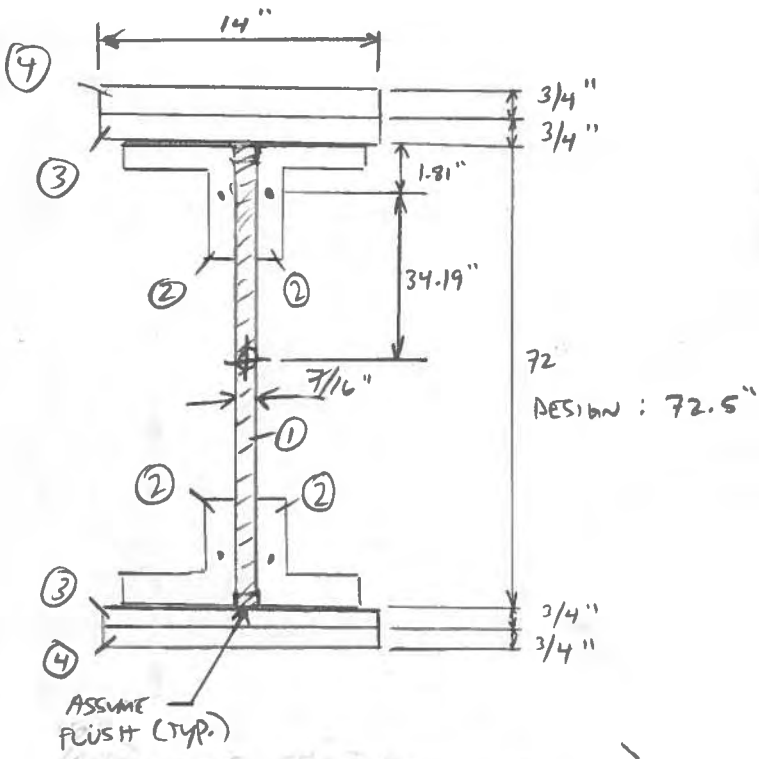

(USE 1/4" GAP FOR DESIGN, POST ANALYSIS)

PART	A (in²)	d (in)	Ad² (in³)	I (in⁴)	I+Ad² (in⁴)
①	(72)(7/16") = ~~31.5~~ in²	0"	0	1/12(7/16)(72)³ = 13608	13608
②	(4)(9.75) = 39 in²	34.19" DESIGN = 34.44"	45589.3 DES = 46258	(4)(31.9) = 127.6	45716.9 DES = 46386
③	(14)(3/4)(2) = 21 in²	(72)/2 + 0.75/2 = 36.375" DES = 36.625"	27785.95 DES = 28169	(2)1/12(14)(3/4)³ = 0.984 in⁴	27786.9 DES = 28170
④	2(14)(3/4) = 21 in²	(72)/2 + 0.75 + 0.75/2 = 37.125 in DES = 37.375"	28943.6 DES = 29334.7	(SEE ABOVE) 0.984 in⁴	28944.6 DES = 29336
Σ =	112.5 in²			Σ =	119944.4 in⁴

DESIGN = 117500 in⁴

Project:	BROADWAY BRIDGE	Computed:	KG	Date:	1/9/17
Subject:	FATIGUE ANALYSIS	Checked:	MMD	Date:	2/14/17
Task:	MAINSPAN FLOORBEAM	Page:	1	of:	NET
Job #:	133-10047358	No:			

NET SECTION : INTERIOR FB

MAX STRESS RANGE FROM ANALYSIS = 4.81 ksi @ MIDSPAN FLOORBEAM INTF AND BF

GROSS SECTION PROPERTIES WERE USED. NET SECTION STIFFNESS CHANGES NEED TO BE INCLUDED.

SKETCH FROM SHOP DRAWINGS (BEST INTERPRETATION OF RIVET SPACING)
ALL RIVETS 7/8" ø

- ASSUME CENTROID REMAINS AT CENTER OF BEAM. DEDUCT HOLES FROM STIFFNESS. (FOR CONCEPT STUDY, THIS IS ACCURATE ENOUGH)

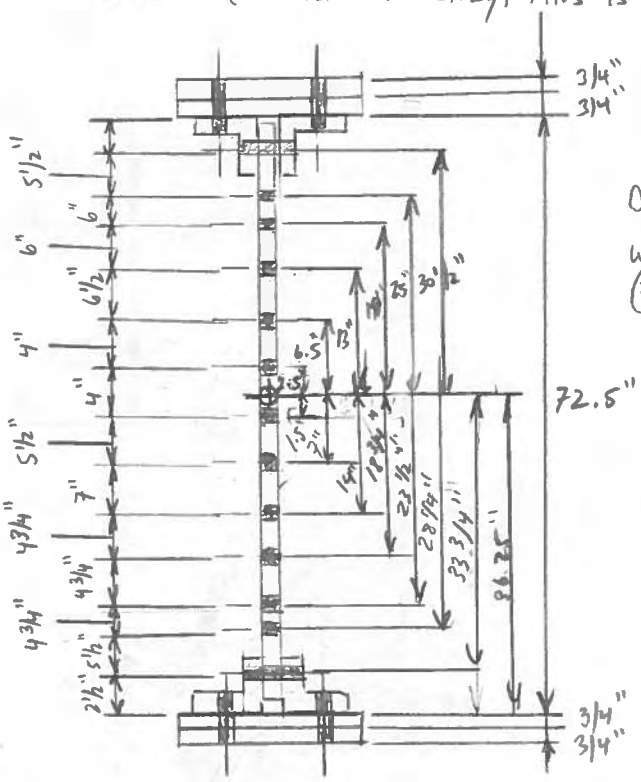

$I_g = 117500 \text{ in}^4$

DEDUCT:

WEB HOLES $= 13(1/12)(7/16)(7/8)^3 + (7/16)(7/8)\left[(2.5)^2 + (6.5)^2 + (13)^2 + (19)^2 + (25)^2 + (30.5)^2 + (1.5)^2 + (7)^2 + (14)^2 + (18.75)^2 + (23.5)^2 + (28.25)^2 + (33.75)^2\right]$

$= 0.3175 \text{ in}^4 + 1999.02 \text{ in}^4$

$= 1999.34 \text{ in}^4$

ANGLE HOLES:

$8\left(1/12\,(7/8)(7/8)^3\right)$
$+ 2(7/8)(7/8)(33.75)^2$
$+ 2(7/8)(7/8)(36.25 - 0.875/2)^2$
$+ 2(7/8)(7/8)(30.5)^2$
$+ 2(7/8)(7/8)(72.5 - 36.25 - 0.875/2)^2$
$= 0.39 + 1744.2 + 1963.9 + 1424.4 + 1963.9$
$= 7096.79 \text{ in}^4$

COVER PLATES:

$4(1/12)(0.375)(1.5)^3 + 4(7/8)(1.5)(37)^2$
$= 0.98 + 7187.25$
$= 7188.23 \text{ in}^4$

TOTAL = WEB + ANGLES + COVER PLATES
$= 1999.34 \text{ in}^4 + 7096.79 \text{ in}^4 + 7188.23 \text{ in}^4$
$= 16284.36 \text{ in}^4$

$I_{NET} = 117500 - 16284.36 = 101215.64 \text{ in}^4$

% INCREASE $= \frac{117500}{101215.64} = 1.161$
$\approx 116\%$

ADJUSTED STRESS RANGE:
$(4.81)(1.16) = \underline{\underline{5.58 \text{ ksi}}} < 7$

@CAT D

Project:	BROADWAY BRIDGE	Computed:	KG	Date:	1/10/17
Subject:	FATIGUE ANALYSIS	Checked:	MMD	Date:	2/14/17
Task:	MAINSPAN FLOORBEAM	Page:	1	of:	END
Job #:	133-10047358	No:			

END FLOORBEAM STIFFNESS

BASE SHAPE:

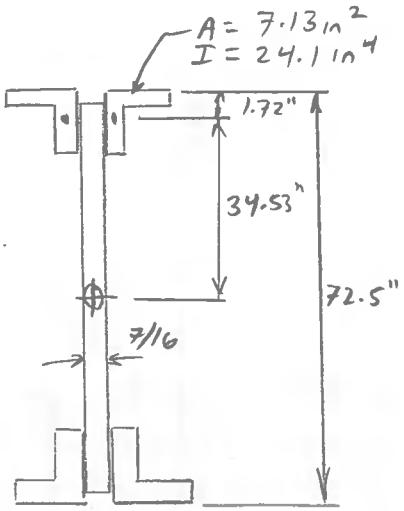

$$A_{BASE} = 4(7.13) + (7/16)(72) = 60.02 \text{ in}^2$$

$$I_{BASE} = 1/12(7/16)(72)^3 + 4(24.1 \text{ in}^4) + 4(7.13 \text{ in}^2)(34.53)^2 = 47709.4 \text{ in}^4$$

COVER PLATES ADDED IN SPREADSHEET

END SECTION @ EXTREME LOCATION USE DEDUCTS
(ASSUME CENTROID LOCATION STAYS CONSTANT, CLOSE ENOUGH FOR CONCEPT)
7/8" ϕ RIVET HOLES

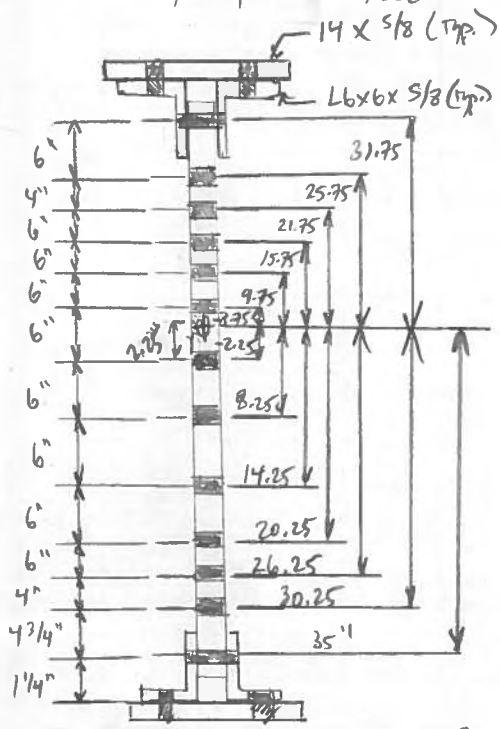

$I_g = 71104.3 \text{ in}^4$ MAX STRESS RANGE @ GROSS SECTION = 5.33 ksi

DEDUCT: WEB HOLES:

$$(13)1/12(7/16)(7/8)^3 + (7/8)(7/16)\left[(3.75)^2 + (9.75)^2 + (15.75)^2 + (21.75)^2 + (25.75)^2 + (31.75)^2 + (2.25)^2 + (8.25)^2 + (14.25)^2 + (20.25)^2 + (26.25)^2 + (30.25)^2 + (35)^2\right]$$

$$= 0.32 \text{ in}^4 + 2303.3 \text{ in}^4 = 2303.6 \text{ in}^4$$

ANGLES:

$$4(1/12)(0.875)(0.625)^3 + 4(7/8)(5/8)(72.5/2 - (5/8)/2)^2 + 4(1/12)(0.625)(0.875)^3 + 2(7/8)(5/8)(31.75)^2 + 2(7/8)(5/8)(35)^2$$

$$= 0.07 + 2825.2 + 0.14 + 1102.6 + 1339.8 = 5267.8 \text{ in}^4$$

COVER PLATES: $4(1/12)(7/8)(5/8)^3 + (7/8)(5/8)(72.5/2 + 0.625/2)^2$
$= 0.07 + 731.07$
$= 731.14 \text{ in}^4$

$\Sigma = 8302.5 \text{ in}^4$

STRESS INCREASE $= \dfrac{71104.3}{(71104.3 - 8302.5)} \approx 1.14$

$5.33 \times 1.14 = 6.08$ ksi < 7 @

Mainspan Floorbeam Section Properties

		Base Built-up Shape		Top Flange Cover Plate 1					
		I_{xx}	d	b_f	t_f	I	A	d	$I+Ad^2$
FB		in^4	in	in	in	in^4	in^2	in	in^4
Int.	One 72x7/16" Web+Four 6x6x7/8" Angles	59994.0	72.5	0	0	0	0	36.25	0
Int.	One 72x7/16" Web+Four 6x6x7/8" Angles + One 14x3/4" CP T&B	59994.0	72.5	14	0.75	0.49	10.50	36.63	14085.09
Int.	One 72x7/16" Web+Four 6x6x7/8" Angles + Two 14x3/4" CP T&B	59994.0	72.5	14	0.75	0.49	10.50	36.63	14085.09
End	One 72x7/16" Web+Four 6x6x5/8" Angles + One 14x5/8" CP T&B	47709.4	72.5	14	0.63	0.28	8.75	36.56	11697.43

Mainspan Floorbeam Section Properties

		Bottom Flange Cover Plate 1					
		b_f	t_f	I	A	d	$I+Ad^2$
FB		in	in	in^4	in^2	in	in^4
Int.	One 72x7/16" Web+Four 6x6x7/8" Angles	0	0	0	0	36.25	0
Int.	One 72x7/16" Web+Four 6x6x7/8" Angles + One 14x3/4" CP T&B	14	0.75	0.49	10.50	36.63	14085.09
Int.	One 72x7/16" Web+Four 6x6x7/8" Angles + Two 14x3/4" CP T&B	14	0.75	0.49	10.50	36.63	14085.09
End	One 72x7/16" Web+Four 6x6x5/8" Angles + One 14x5/8" CP T&B	14	0.63	0.28	8.75	36.56	11697.43

Mainspan Floorbeam Section Properties

		Top Fange Cover Plate 2					
		b_f	t_f	I	A	d	$I+Ad^2$
FB		in	in	in^4	in^2	in	in^4
Int.	One 72x7/16" Web+Four 6x6x7/8" Angles	0	0	0	0	36.25	0
Int.	One 72x7/16" Web+Four 6x6x7/8" Angles + One 14x3/4" CP T&B	0	0	0	0	37.00	0
Int.	One 72x7/16" Web+Four 6x6x7/8" Angles + Two 14x3/4" CP T&B	14	0.75	0.49	10.5	37.38	14667.84
End	One 72x7/16" Web+Four 6x6x5/8" Angles + One 14x5/8" CP T&B	0	0	0	0	36.88	0

Mainspan Floorbeam Section Properties

		Bottom Flange Cover Plate 2					
		bf	tf	I	A	d	$I+Ad^2$
FB		in	in	in^4	in^2	in	in^4
Int.	One 72x7/16" Web+Four 6x6x7/8" Angles	0	0	0	0	36.25	0
Int.	One 72x7/16" Web+Four 6x6x7/8" Angles + One 14x3/4" CP T&B	0	0	0	0	37.00	0
Int.	One 72x7/16" Web+Four 6x6x7/8" Angles + Two 14x3/4" CP T&B	14	0.75	0.49	10.5	37.38	14667.84
End	One 72x7/16" Web+Four 6x6x5/8" Angles + One 14x5/8" CP T&B	0	0	0	0	36.88	0

Mainspan Floorbeam Section Properties

FB		Total I_{total} in^4	c_{top} in	c_{bottom} in	$S_{xx,top}$ in^3	$S_{xx,bottom}$ in^3
Int.	One 72x7/16" Web+Four 6x6x7/8" Angles	59994.00	36.25	36.25	1655.01	1655.01
Int.	One 72x7/16" Web+Four 6x6x7/8" Angles + One 14x3/4" CP T&B	88164.19	37.00	37.00	2382.82	2382.82
Int.	One 72x7/16" Web+Four 6x6x7/8" Angles + Two 14x3/4" CP T&B	117499.88	37.75	37.75	3112.58	3112.58
End	One 72x7/16" Web+Four 6x6x5/8" Angles + One 14x5/8" CP T&B	71104.26	36.88	36.88	1928.25	1928.25

LARSA Results for Intermediate Floorbeam

Max Reaction

Joint	Result Case	Force X (kips)	Force Y (kips)	Force Z (kips)	Moment X (kips-ft)	Moment Y (kips-ft)	Moment Z (kips-ft)
1	HL93 Fatigue: s44.	0.00	0.00	36.46	0.00	0.00	0.00
2	HL93 Fatigue: s61.88	0.00	0.00	52.61	0.00	0.00	0.00
3	HL93 Fatigue: s95.81	0.00	0.00	50.13	0.00	0.00	0.00
4	HL93 Fatigue: s136.2	0.00	0.00	52.69	0.00	0.00	0.00
5	HL93 Fatigue: s168.2	0.00	0.00	40.73	0.00	0.00	0.00
6	HL93 Fatigue: s215.6	0.00	0.00	52.69	0.00	0.00	0.00
7	HL93 Fatigue: s256.	0.00	0.00	50.16	0.00	0.00	0.00
8	HL93 Fatigue: s290.4	0.00	0.00	52.69	0.00	0.00	0.00
9	HL93 Fatigue: s337.8	0.00	0.00	40.73	0.00	0.00	0.00
10	HL93 Fatigue: s369.8	0.00	0.00	52.69	0.00	0.00	0.00
11	HL93 Fatigue: s410.2	0.00	0.00	50.13	0.00	0.00	0.00
12	HL93 Fatigue: s444.1	0.00	0.00	52.61	0.00	0.00	0.00
13	HL93 Fatigue: s491.5	0.00	0.00	35.82	0.00	0.00	0.00
			Max	52.69			
			Location	6.00			

Min Reaction

Joint	Result Case	Force X (kips)	Force Y (kips)	Force Z (kips)	Moment X (kips-ft)	Moment Y (kips-ft)	Moment Z (kips-ft)	Range
1	HL93 Fatigue: s65.37	0.00	0.00	-2.88	0.00	0.00	0.00	39.34
2	HL93 Fatigue: s103.8	0.00	0.00	-4.62	0.00	0.00	0.00	57.24
3	HL93 Fatigue: s143.7	0.00	0.00	-5.99	0.00	0.00	0.00	56.12
4	HL93 Fatigue: s93.81	0.00	0.00	-4.59	0.00	0.00	0.00	57.29
5	HL93 Fatigue: s219.1	0.00	0.00	-2.85	0.00	0.00	0.00	43.58
6	HL93 Fatigue: s258.	0.00	0.00	-4.61	0.00	0.00	0.00	57.30
7	HL93 Fatigue: s297.9	0.00	0.00	-5.99	0.00	0.00	0.00	56.15
8	HL93 Fatigue: s248.	0.00	0.00	-4.61	0.00	0.00	0.00	57.30
9	HL93 Fatigue: s286.9	0.00	0.00	-2.85	0.00	0.00	0.00	43.58
10	HL93 Fatigue: s412.2	0.00	0.00	-4.59	0.00	0.00	0.00	57.29
11	HL93 Fatigue: s362.3	0.00	0.00	-5.99	0.00	0.00	0.00	56.12
12	HL93 Fatigue: s402.2	0.00	0.00	-4.62	0.00	0.00	0.00	57.24
13	HL93 Fatigue: s440.6	0.00	0.00	-2.88	0.00	0.00	0.00	38.70
			Min	-5.99			Max	57.30
			Location	7.00			Location	6

Transverse Results
Max Loading

x location (ft)	Member	Station	Result Case	Force X (kips)	Force Y (kips)	Force Z (kips)	Moment X (kips-ft)	Moment Y (kips-ft)	Moment Z (kips-ft)
0.000	1	0	Max Loading: s28.05	0.00	29.33	0.00	0.00	0.00	0.00
2.825	1	1	Max Loading: s9.352	0.00	46.78	0.00	0.00	0.00	132.14
5.650	1	2	Max Loading: s12.3	0.00	44.02	0.00	0.00	0.00	248.72
8.475	1	3	Max Loading: s14.77	0.00	35.55	0.00	0.00	0.00	350.69
11.300	1	4	Max Loading: s17.23	0.00	19.05	0.00	0.00	0.00	439.45
14.125	1	5	Max Loading: s20.18	0.00	15.06	0.00	0.00	0.00	515.34
16.950	1	6	Max Loading: s23.13	0.00	33.92	0.00	0.00	0.00	574.97
19.775	1	7	Max Loading: s25.59	0.00	20.92	0.00	0.00	0.00	617.10
22.600	1	8	Max Loading: s28.05	0.00	4.42	0.00	0.00	0.00	647.92
25.425	1	9	Max Loading: s31.01	0.00	0.43	0.00	0.00	0.00	664.58
28.250	1	10	Max Loading: s29.04	0.00	2.06	0.00	0.00	0.00	665.34
31.075	1	11	Max Loading: s31.01	0.00	-25.92	0.00	0.00	0.00	664.01
33.900	1	12	Max Loading: s33.96	0.00	-3.56	0.00	0.00	0.00	650.12
36.725	1	13	Max Loading: s36.91	0.00	-7.55	0.00	0.00	0.00	618.92
39.550	1	14	Max Loading: s39.87	0.00	-11.54	0.00	0.00	0.00	572.59
42.375	1	15	Max Loading: s42.33	0.00	-28.04	0.00	0.00	0.00	512.74
45.200	1	16	Max Loading: s44.79	0.00	-38.98	0.00	0.00	0.00	440.46
48.025	1	17	Max Loading: s47.74	0.00	-41.73	0.00	0.00	0.00	353.69
50.850	1	18	Max Loading: s50.7	0.00	-26.17	0.00	0.00	0.00	248.61
53.675	1	19	Max Loading: s52.66	0.00	-46.32	0.00	0.00	0.00	130.86
56.500	1	20	Max Loading: s20.18	0.00	-16.02	0.00	0.00	0.00	0.00

Transverse Results
Min Loading

x location (ft)	Member	Station	Result Case	Force X (kips)	Force Y (kips)	Force Z (kips)	Moment X (kips-ft)	Moment Y (kips-ft)	Moment Z (kips-ft)
0.000	1	0	Min Loading: s28.05	0.00	-2.57	0.00	0.00	0.00	0.00
2.825	1	1	Min Loading: s9.352	0.00	-4.10	0.00	0.00	0.00	-11.58
5.650	1	2	Min Loading: s12.3	0.00	-3.86	0.00	0.00	0.00	-21.80
8.475	1	3	Min Loading: s14.77	0.00	-3.12	0.00	0.00	0.00	-30.74
11.300	1	4	Min Loading: s17.23	0.00	-1.67	0.00	0.00	0.00	-38.52
14.125	1	5	Min Loading: s20.18	0.00	-1.32	0.00	0.00	0.00	-45.18
16.950	1	6	Min Loading: s23.13	0.00	-2.97	0.00	0.00	0.00	-50.40
19.775	1	7	Min Loading: s25.59	0.00	-1.83	0.00	0.00	0.00	-54.10
22.600	1	8	Min Loading: s28.05	0.00	-0.39	0.00	0.00	0.00	-56.80
25.425	1	9	Min Loading: s31.01	0.00	-0.04	0.00	0.00	0.00	-58.26
28.250	1	10	Min Loading: s29.04	0.00	-0.18	0.00	0.00	0.00	-58.33
31.075	1	11	Min Loading: s31.01	0.00	2.27	0.00	0.00	0.00	-58.21
33.900	1	12	Min Loading: s33.96	0.00	0.31	0.00	0.00	0.00	-56.99
36.725	1	13	Min Loading: s36.91	0.00	0.66	0.00	0.00	0.00	-54.26
39.550	1	14	Min Loading: s39.87	0.00	1.01	0.00	0.00	0.00	-50.20
42.375	1	15	Min Loading: s42.33	0.00	2.46	0.00	0.00	0.00	-44.95
45.200	1	16	Min Loading: s44.79	0.00	3.42	0.00	0.00	0.00	-38.61
48.025	1	17	Min Loading: s47.74	0.00	3.66	0.00	0.00	0.00	-31.01
50.850	1	18	Min Loading: s50.7	0.00	2.29	0.00	0.00	0.00	-21.79
53.675	1	19	Min Loading: s52.66	0.00	4.06	0.00	0.00	0.00	-11.47
56.500	1	20	Min Loading: s20.18	0.00	1.40	0.00	0.00	0.00	0.00

Factored Moments

LF Infinite Life	Impact %	x location ft	Base Unfactored Max Moment k-ft	Max Factored Moment k-ft	Base Unfactored Min Moment k-ft	Min. Factored Moment k-ft
1.5	1.15	0.000	0.00	0.00	0.00	0.00
1.5	1.15	2.825	132.14	227.94	-11.58	-19.98
1.5	1.15	5.650	248.72	429.04	-21.80	-37.61
1.5	1.15	5.750	252.33	435.27	-22.12	-38.16
1.5	1.15	5.750	252.33	435.27	-22.12	-38.16
1.5	1.15	8.475	350.69	604.94	-30.74	-53.03
1.5	1.15	10.250	406.46	701.14	-35.63	-61.47
1.5	1.15	10.250	406.46	701.14	-35.63	-61.47
1.5	1.15	11.300	439.45	758.05	-38.52	-66.46
1.5	1.15	14.125	515.34	888.97	-45.18	-77.93
1.5	1.15	16.950	574.97	991.82	-50.40	-86.95
1.5	1.15	19.775	617.10	1064.51	-54.10	-93.32
1.5	1.15	22.600	647.92	1117.67	-56.80	-97.98
1.5	1.15	25.425	664.58	1146.40	-58.26	-100.50
1.5	1.15	28.250	665.34	1147.71	-58.33	-100.61
1.5	1.15	31.075	664.01	1145.43	-58.21	-100.41
1.5	1.15	33.900	650.12	1121.46	-56.99	-98.31
1.5	1.15	36.725	618.92	1067.64	-54.26	-93.60
1.5	1.15	39.550	572.59	987.71	-50.20	-86.59
1.5	1.15	42.375	512.74	884.48	-44.95	-77.54
1.5	1.15	45.200	440.46	759.79	-38.61	-66.61
1.5	1.15	46.250	408.21	704.16	-35.79	-61.73
1.5	1.15	46.250	408.21	704.16	-35.79	-61.73
1.5	1.15	48.025	353.69	610.11	-31.01	-53.49
1.5	1.15	50.750	252.33	435.26	-22.12	-38.16
1.5	1.15	50.750	252.33	435.26	-22.12	-38.16
1.5	1.15	50.850	248.61	428.85	-21.79	-37.60
1.5	1.15	53.675	130.86	225.74	-11.47	-19.79
1.5	1.15	56.500	0.00	0.00	0.00	0.00

Section Properties

Section	I_{xx} in^4	c_{top} in	c_{bottom} in	$S_{xx,top}$ in^3	$S_{xx,bottom}$ in^3
(1) 72x7/16" Web + (4) 6x6x7/8" Angles	59994.00	36.25	36.25	1655.01	1655.01
(1) 72x7/16" Web + (4) 6x6x7/8" Angles	59994.00	36.25	36.25	1655.01	1655.01
(1) 72x7/16" Web + (4) 6x6x7/8" Angles	59994.00	36.25	36.25	1655.01	1655.01
(1) 72x7/16" Web + (4) 6x6x7/8" Angles	59994.00	36.25	36.25	1655.01	1655.01
(1) 72x7/16" Web+(4) 6x6x7/8" Angles + (1) 14x3/4" CP T&B	88164.19	37.00	37.00	2382.82	2382.82
(1) 72x7/16" Web+(4) 6x6x7/8" Angles + (1) 14x3/4" CP T&B	88164.19	37.00	37.00	2382.82	2382.82
(1) 72x7/16" Web+(4) 6x6x7/8" Angles + (1) 14x3/4" CP T&B	88164.19	37.00	37.00	2382.82	2382.82
(1) 72x7/16" Web + (4) 6x6x7/8" Angles + (2) 14x3/4" CP T&B	117499.88	37.75	37.75	3112.58	3112.58
(1) 72x7/16" Web + (4) 6x6x7/8" Angles + (2) 14x3/4" CP T&B	117499.88	37.75	37.75	3112.58	3112.58
(1) 72x7/16" Web + (4) 6x6x7/8" Angles + (2) 14x3/4" CP T&B	117499.88	37.75	37.75	3112.58	3112.58
(1) 72x7/16" Web + (4) 6x6x7/8" Angles + (2) 14x3/4" CP T&B	117499.88	37.75	37.75	3112.58	3112.58
(1) 72x7/16" Web + (4) 6x6x7/8" Angles + (2) 14x3/4" CP T&B	117499.88	37.75	37.75	3112.58	3112.58
(1) 72x7/16" Web + (4) 6x6x7/8" Angles + (2) 14x3/4" CP T&B	117499.88	37.75	37.75	3112.58	3112.58
(1) 72x7/16" Web + (4) 6x6x7/8" Angles + (2) 14x3/4" CP T&B	117499.88	37.75	37.75	3112.58	3112.58
(1) 72x7/16" Web + (4) 6x6x7/8" Angles + (2) 14x3/4" CP T&B	117499.88	37.75	37.75	3112.58	3112.58
(1) 72x7/16" Web + (4) 6x6x7/8" Angles + (2) 14x3/4" CP T&B	117499.88	37.75	37.75	3112.58	3112.58
(1) 72x7/16" Web + (4) 6x6x7/8" Angles + (2) 14x3/4" CP T&B	117499.88	37.75	37.75	3112.58	3112.58
(1) 72x7/16" Web + (4) 6x6x7/8" Angles + (2) 14x3/4" CP T&B	117499.88	37.75	37.75	3112.58	3112.58
(1) 72x7/16" Web + (4) 6x6x7/8" Angles + (2) 14x3/4" CP T&B	117499.88	37.75	37.75	3112.58	3112.58
(1) 72x7/16" Web+(4) 6x6x7/8" Angles + (1) 14x3/4" CP T&B	88164.19	37.00	37.00	2382.82	2382.82
(1) 72x7/16" Web+(4) 6x6x7/8" Angles + (1) 14x3/4" CP T&B	88164.19	37.00	37.00	2382.82	2382.82
(1) 72x7/16" Web+(4) 6x6x7/8" Angles + (1) 14x3/4" CP T&B	88164.19	37.00	37.00	2382.82	2382.82
(1) 72x7/16" Web + (4) 6x6x7/8" Angles	59994.00	36.25	36.25	1655.01	1655.01
(1) 72x7/16" Web + (4) 6x6x7/8" Angles	59994.00	36.25	36.25	1655.01	1655.01
(1) 72x7/16" Web + (4) 6x6x7/8" Angles	59994.00	36.25	36.25	1655.01	1655.01
(1) 72x7/16" Web + (4) 6x6x7/8" Angles	59994.00	36.25	36.25	1655.01	1655.01

Resulting Stress Range

HL-93 Fatigue Truck x 1.5 Infinite Life x 1.15 Impact				Gross Section	
Min LL Fiber Stress		Maximum LL Fiber Stress		Extreme Fiber Stress Range	
Top Flange	Bottom Flange	Top Flange	Bottom Flange	Top Flg	Bottom Flg
ksi	ksi	ksi	ksi		
0.00	0.00	0.00	0.00	0.00	0.00
-0.14	-0.14	1.65	1.65	1.80	1.80
-0.27	-0.27	3.11	3.11	3.38	3.38
-0.28	-0.28	3.16	3.16	3.43	3.43
-0.19	-0.19	2.19	2.19	2.38	2.38
-0.27	-0.27	3.05	3.05	3.31	3.31
-0.31	-0.31	3.53	3.53	3.84	3.84
-0.24	-0.24	2.70	2.70	2.94	2.94
-0.26	-0.26	2.92	2.92	3.18	3.18
-0.30	-0.30	3.43	3.43	3.73	3.73
-0.34	-0.34	3.82	3.82	4.16	4.16
-0.36	-0.36	4.10	4.10	4.46	4.46
-0.38	-0.38	4.31	4.31	4.69	4.69
-0.39	-0.39	4.42	4.42	4.81	4.81
-0.39	-0.39	4.42	4.42	4.81	4.81
-0.39	-0.39	4.42	4.42	4.80	4.80
-0.38	-0.38	4.32	4.32	4.70	4.70
-0.36	-0.36	4.12	4.12	4.48	4.48
-0.33	-0.33	3.81	3.81	4.14	4.14
-0.30	-0.30	3.41	3.41	3.71	3.71
-0.26	-0.26	2.93	2.93	3.19	3.19
-0.24	-0.24	2.71	2.71	2.95	2.95
-0.31	-0.31	3.55	3.55	3.86	3.86
-0.27	-0.27	3.07	3.07	3.34	3.34
-0.19	-0.19	2.19	2.19	2.38	2.38
-0.28	-0.28	3.16	3.16	3.43	3.43
-0.27	-0.27	3.11	3.11	3.38	3.38
-0.14	-0.14	1.64	1.64	1.78	1.78
0.00	0.00	0.00	0.00	0.00	0.00

Max stress for Int. FB
4.81ksi * 1.16 = 5.58 ksi

LARSA Results for End Floorbeam

Max Reaction

Joint	Result Case	Force X (kips)	Force Y (kips)	Force Z (kips)	Moment X (kips-ft)	Moment Y (kips-ft)	Moment Z (kips-ft)
1	HL93 Fatigue: s44.	0.00	0.00	36.46	0.00	0.00	0.00
2	HL93 Fatigue: s61.88	0.00	0.00	52.61	0.00	0.00	0.00
3	HL93 Fatigue: s95.81	0.00	0.00	50.13	0.00	0.00	0.00
4	HL93 Fatigue: s136.2	0.00	0.00	52.69	0.00	0.00	0.00
5	HL93 Fatigue: s168.2	0.00	0.00	40.73	0.00	0.00	0.00
6	HL93 Fatigue: s215.6	0.00	0.00	52.69	0.00	0.00	0.00
7	HL93 Fatigue: s256.	0.00	0.00	50.16	0.00	0.00	0.00
8	HL93 Fatigue: s290.4	0.00	0.00	52.69	0.00	0.00	0.00
9	HL93 Fatigue: s337.8	0.00	0.00	40.73	0.00	0.00	0.00
10	HL93 Fatigue: s369.8	0.00	0.00	52.69	0.00	0.00	0.00
11	HL93 Fatigue: s410.2	0.00	0.00	50.13	0.00	0.00	0.00
12	HL93 Fatigue: s444.1	0.00	0.00	52.61	0.00	0.00	0.00
13	HL93 Fatigue: s491.5	0.00	0.00	35.82	0.00	0.00	0.00
			Max	52.69			
			Location	6.00			

Min Reaction

Joint	Result Case	Force X (kips)	Force Y (kips)	Force Z (kips)	Moment X (kips-ft)	Moment Y (kips-ft)	Moment Z (kips-ft)	Range
1	HL93 Fatigue: s65.37	0.00	0.00	-2.88	0.00	0.00	0.00	39.34
2	HL93 Fatigue: s103.8	0.00	0.00	-4.62	0.00	0.00	0.00	57.24
3	HL93 Fatigue: s143.7	0.00	0.00	-5.99	0.00	0.00	0.00	56.12
4	HL93 Fatigue: s93.81	0.00	0.00	-4.59	0.00	0.00	0.00	57.29
5	HL93 Fatigue: s219.1	0.00	0.00	-2.85	0.00	0.00	0.00	43.58
6	HL93 Fatigue: s258.	0.00	0.00	-4.61	0.00	0.00	0.00	57.30
7	HL93 Fatigue: s297.9	0.00	0.00	-5.99	0.00	0.00	0.00	56.15
8	HL93 Fatigue: s248.	0.00	0.00	-4.61	0.00	0.00	0.00	57.30
9	HL93 Fatigue: s286.9	0.00	0.00	-2.85	0.00	0.00	0.00	43.58
10	HL93 Fatigue: s412.2	0.00	0.00	-4.59	0.00	0.00	0.00	57.29
11	HL93 Fatigue: s362.3	0.00	0.00	-5.99	0.00	0.00	0.00	56.12
12	HL93 Fatigue: s402.2	0.00	0.00	-4.62	0.00	0.00	0.00	57.24
13	HL93 Fatigue: s440.6	0.00	0.00	-2.88	0.00	0.00	0.00	38.70
			Min	-5.99			Max	57.30
			Location	7.00			Location	6

Transverse Results
Max Loading

x location (ft)	Member	Station	Result Case	Force X (kips)	Force Y (kips)	Force Z (kips)	Moment X (kips-ft)	Moment Y (kips-ft)	Moment Z (kips-ft)
0.000	1	0	Max: s28.05	0.00	20.29	0.00	0.00	0.00	0.00
2.825	1	1	Max: s9.352	0.00	32.36	0.00	0.00	0.00	91.42
5.650	1	2	Max: s12.3	0.00	30.46	0.00	0.00	0.00	172.07
8.475	1	3	Max: s14.77	0.00	24.59	0.00	0.00	0.00	242.62
11.300	1	4	Max: s17.23	0.00	13.18	0.00	0.00	0.00	304.03
14.125	1	5	Max: s20.18	0.00	10.42	0.00	0.00	0.00	356.54
16.950	1	6	Max: s23.13	0.00	23.47	0.00	0.00	0.00	397.78
19.775	1	7	Max: s25.59	0.00	14.47	0.00	0.00	0.00	426.94
22.600	1	8	Max: s28.05	0.00	3.06	0.00	0.00	0.00	448.26
25.425	1	9	Max: s31.01	0.00	0.30	0.00	0.00	0.00	459.78
28.250	1	10	Max: s29.04	0.00	1.43	0.00	0.00	0.00	460.31
31.075	1	11	Max: s31.01	0.00	-17.93	0.00	0.00	0.00	459.39
33.900	1	12	Max: s33.96	0.00	-2.46	0.00	0.00	0.00	449.78
36.725	1	13	Max: s36.91	0.00	-5.22	0.00	0.00	0.00	428.19
39.550	1	14	Max: s39.87	0.00	-7.98	0.00	0.00	0.00	396.14
42.375	1	15	Max: s42.33	0.00	-19.40	0.00	0.00	0.00	354.74
45.200	1	16	Max: s44.79	0.00	-26.97	0.00	0.00	0.00	304.73
48.025	1	17	Max: s47.74	0.00	-28.87	0.00	0.00	0.00	244.70
50.850	1	18	Max: s50.7	0.00	-18.10	0.00	0.00	0.00	172.00
53.675	1	19	Max: s52.66	0.00	-32.05	0.00	0.00	0.00	90.54
56.500	1	20	Max: s20.18	0.00	-11.09	0.00	0.00	0.00	0.00

Transverse Results
Min Loading

x location (ft)	Member	Station	Result Case	Force X (kips)	Force Y (kips)	Force Z (kips)	Moment X (kips-ft)	Moment Y (kips-ft)	Moment Z (kips-ft)
0.000	1	0	Min: s28.05	0.00	-1.60	0.00	0.00	0.00	0.00
2.825	1	1	Min: s9.352	0.00	-2.56	0.00	0.00	0.00	-7.22
5.650	1	2	Min: s12.3	0.00	-2.41	0.00	0.00	0.00	-13.59
8.475	1	3	Min: s14.77	0.00	-1.94	0.00	0.00	0.00	-19.16
11.300	1	4	Min: s17.23	0.00	-1.04	0.00	0.00	0.00	-24.02
14.125	1	5	Min: s20.18	0.00	-0.82	0.00	0.00	0.00	-28.16
16.950	1	6	Min: s23.13	0.00	-1.85	0.00	0.00	0.00	-31.42
19.775	1	7	Min: s25.59	0.00	-1.14	0.00	0.00	0.00	-33.72
22.600	1	8	Min: s28.05	0.00	-0.24	0.00	0.00	0.00	-35.41
25.425	1	9	Min: s31.01	0.00	-0.02	0.00	0.00	0.00	-36.32
28.250	1	10	Min: s29.04	0.00	-0.11	0.00	0.00	0.00	-36.36
31.075	1	11	Min: s31.01	0.00	1.42	0.00	0.00	0.00	-36.29
33.900	1	12	Min: s33.96	0.00	0.19	0.00	0.00	0.00	-35.53
36.725	1	13	Min: s36.91	0.00	0.41	0.00	0.00	0.00	-33.82
39.550	1	14	Min: s39.87	0.00	0.63	0.00	0.00	0.00	-31.29
42.375	1	15	Min: s42.33	0.00	1.53	0.00	0.00	0.00	-28.02
45.200	1	16	Min: s44.79	0.00	2.13	0.00	0.00	0.00	-24.07
48.025	1	17	Min: s47.74	0.00	2.28	0.00	0.00	0.00	-19.33
50.850	1	18	Min: s50.7	0.00	1.43	0.00	0.00	0.00	-13.59
53.675	1	19	Min: s52.66	0.00	2.53	0.00	0.00	0.00	-7.15
56.500	1	20	Min: s20.18	0.00	0.88	0.00	0.00	0.00	0.00

Factored Moments

LF Infinite Life	Impact %	x location ft	Base Unfactored Max Moment k-ft	Max Factored Moment k-ft	Base Unfactored Min Moment k-ft	Min. Factored Moment k-ft
1.5	1.15	0.000	0.00	0.00	0.00	0.00
1.5	1.15	2.825	91.42	157.70	-7.22	-12.46
1.5	1.15	5.650	172.07	296.83	-13.59	-23.45
1.5	1.15	8.475	242.62	418.52	-19.16	-33.06
1.5	1.15	11.300	304.03	524.45	-24.02	-41.43
1.5	1.15	14.125	356.54	615.02	-28.16	-48.58
1.5	1.15	16.950	397.78	686.18	-31.42	-54.20
1.5	1.15	19.775	426.94	736.47	-33.72	-58.17
1.5	1.15	22.600	448.26	773.25	-35.41	-61.08
1.5	1.15	25.425	459.78	793.13	-36.32	-62.65
1.5	1.15	28.250	460.31	794.03	-36.36	-62.72
1.5	1.15	31.075	459.39	792.45	-36.29	-62.60
1.5	1.15	33.900	449.78	775.87	-35.53	-61.29
1.5	1.15	36.725	428.19	738.64	-33.82	-58.35
1.5	1.15	39.550	396.14	683.34	-31.29	-53.98
1.5	1.15	42.375	354.74	611.92	-28.02	-48.34
1.5	1.15	45.200	304.73	525.65	-24.07	-41.52
1.5	1.15	48.025	244.70	422.10	-19.33	-33.34
1.5	1.15	50.850	172.00	296.69	-13.59	-23.44
1.5	1.15	53.675	90.54	156.18	-7.15	-12.34
1.5	1.15	56.500	0.00	0.00	0.00	0.00

Section Properties

Section	I_{xx}	c_{top}	c_{bottom}	$S_{xx,top}$	$S_{xx,bottom}$
	in^4	in	in	in^3	in^3
(1) 72x7/16" Web + (4) 6x6x5/8" Angles + (1) 14x5/8" CP T&B	71104.26	36.88	36.88	1928.25	1928.25
(1) 72x7/16" Web + (4) 6x6x5/8" Angles + (1) 14x5/8" CP T&B	71104.26	36.88	36.88	1928.25	1928.25
(1) 72x7/16" Web + (4) 6x6x5/8" Angles + (1) 14x5/8" CP T&B	71104.26	36.88	36.88	1928.25	1928.25
(1) 72x7/16" Web + (4) 6x6x5/8" Angles + (1) 14x5/8" CP T&B	71104.26	36.88	36.88	1928.25	1928.25
(1) 72x7/16" Web + (4) 6x6x5/8" Angles + (1) 14x5/8" CP T&B	71104.26	36.88	36.88	1928.25	1928.25
(1) 72x7/16" Web + (4) 6x6x5/8" Angles + (1) 14x5/8" CP T&B	71104.26	36.88	36.88	1928.25	1928.25
(1) 72x7/16" Web + (4) 6x6x5/8" Angles + (1) 14x5/8" CP T&B	71104.26	36.88	36.88	1928.25	1928.25
(1) 72x7/16" Web + (4) 6x6x5/8" Angles + (1) 14x5/8" CP T&B	71104.26	36.88	36.88	1928.25	1928.25
(1) 72x7/16" Web + (4) 6x6x5/8" Angles + (1) 14x5/8" CP T&B	71104.26	36.88	36.88	1928.25	1928.25
(1) 72x7/16" Web + (4) 6x6x5/8" Angles + (1) 14x5/8" CP T&B	71104.26	36.88	36.88	1928.25	1928.25
(1) 72x7/16" Web + (4) 6x6x5/8" Angles + (1) 14x5/8" CP T&B	71104.26	36.88	36.88	1928.25	1928.25
(1) 72x7/16" Web + (4) 6x6x5/8" Angles + (1) 14x5/8" CP T&B	71104.26	36.88	36.88	1928.25	1928.25
(1) 72x7/16" Web + (4) 6x6x5/8" Angles + (1) 14x5/8" CP T&B	71104.26	36.88	36.88	1928.25	1928.25
(1) 72x7/16" Web + (4) 6x6x5/8" Angles + (1) 14x5/8" CP T&B	71104.26	36.88	36.88	1928.25	1928.25
(1) 72x7/16" Web + (4) 6x6x5/8" Angles + (1) 14x5/8" CP T&B	71104.26	36.88	36.88	1928.25	1928.25
(1) 72x7/16" Web + (4) 6x6x5/8" Angles + (1) 14x5/8" CP T&B	71104.26	36.88	36.88	1928.25	1928.25
(1) 72x7/16" Web + (4) 6x6x5/8" Angles + (1) 14x5/8" CP T&B	71104.26	36.88	36.88	1928.25	1928.25
(1) 72x7/16" Web + (4) 6x6x5/8" Angles + (1) 14x5/8" CP T&B	71104.26	36.88	36.88	1928.25	1928.25
(1) 72x7/16" Web + (4) 6x6x5/8" Angles + (1) 14x5/8" CP T&B	71104.26	36.88	36.88	1928.25	1928.25

Resulting Stress Range

HL-93 Fatigue Truck x 1.5 Infinite Life x 1.15 Impact				Gross Section	
Min LL Fiber Stress		Maximum LL Fiber Stress		Extreme Fiber Stress Range	
Top Flange	Bottom Flange	Top Flange	Bottom Flange	Top Flg	Bottom Flg
ksi	ksi	ksi	ksi	ksi	ksi
0.00	0.00	0.00	0.00	0.00	0.00
-0.08	-0.08	0.98	0.98	1.06	1.06
-0.15	-0.15	1.85	1.85	1.99	1.99
-0.21	-0.21	2.60	2.60	2.81	2.81
-0.26	-0.26	3.26	3.26	3.52	3.52
-0.30	-0.30	3.83	3.83	4.13	4.13
-0.34	-0.34	4.27	4.27	4.61	4.61
-0.36	-0.36	4.58	4.58	4.95	4.95
-0.38	-0.38	4.81	4.81	5.19	5.19
-0.39	-0.39	4.94	4.94	5.33	5.33
-0.39	-0.39	4.94	4.94	5.33	5.33
-0.39	-0.39	4.93	4.93	5.32	5.32
-0.38	-0.38	4.83	4.83	5.21	5.21
-0.36	-0.36	4.60	4.60	4.96	4.96
-0.34	-0.34	4.25	4.25	4.59	4.59
-0.30	-0.30	3.81	3.81	4.11	4.11
-0.26	-0.26	3.27	3.27	3.53	3.53
-0.21	-0.21	2.63	2.63	2.83	2.83
-0.15	-0.15	1.85	1.85	1.99	1.99
-0.08	-0.08	0.97	0.97	1.05	1.05
0.00	0.00	0.00	0.00	0.00	0.00

Max stress for End FB
5.33 ksi * 1.14 = 6.08 ksi

HDR Inc.

Longitudinal Distribution Mainspan Floorbeam

Wednesday, February 15, 2017	KGRIBBLE HDR Inc.	4435 Main Street, Suite 1000 Kansas City, MO 64111 Tel:

PROJECT SUMMARY

INPUT PROPERTIES	Count
Universal Restraints	Rx
Materials	1
Sections	1
User Coordinate System	NONE
Spring Curves	NONE
Isolater Property	NONE
Creep Definitions	NONE

INPUT GEOMETRY	Count
Joints	13
Members	12
Plates	NONE
Springs	NONE
Isolaters / Bearings	NONE
Mass Elements	NONE
Slave / Masters	NONE
Tendons	NONE

Load Cases	Count
Load Cases	1
Combination Cases	NONE
Construction Stages	NONE
Linked Databases	1

LARSA

TABLE OF CONTENTS

INPUTS	Page#
- INPUT : Joints	Page 5
- INPUT : Members	Page 5
- INPUT : Member Fixity	Page 6
- DATABASE:: HL93 Fatigue Truck on C:\Users\mdierks\Desktop\Broadway STLBridge\KG	Page 6
- STRUCTURE GROUP SUMMARY	Page 7

Results	Page#
- RESULT ENVELOPE :Reactions @ Force Z (kips)	Page 7

Graphics View 1

Zoom 1.000X
Load Case Unit Moving Load (units: kips, ft)

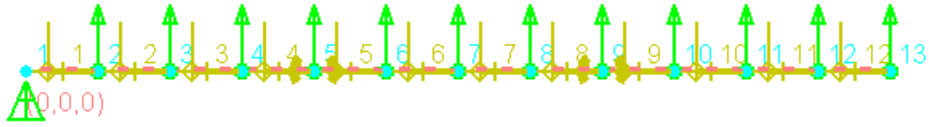

KGRIBBLE
HDR Inc.
C:\Users\mdierks\Desktop\Broadway STLBridge\KG Runs\Longitudinal Distribution Mainspan Floorbeam.lar
Last Analysis Run : 2/15/2017 10:30:02 AM

INPUT : Joints

ID	X (ft)	Y (ft)	Z (ft)	Translation DOF	Rotation DOF [x fixed]	Displacement UCS	Assignment
1	0.0000	0.0000	0.0000	all fixed	all free	Global	Yes
2	38.5000	0.0000	0.0000	y, z fixed	all free	Global	Yes
3	77.0000	0.0000	0.0000	y, z fixed	all free	Global	Yes
4	115.5000	0.0000	0.0000	y, z fixed	all free	Global	Yes
5	154.0000	0.0000	0.0000	y, z fixed	all free	Global	Yes
6	192.5000	0.0000	0.0000	y, z fixed	all free	Global	Yes
7	231.0000	0.0000	0.0000	y, z fixed	all free	Global	Yes
8	269.5000	0.0000	0.0000	y, z fixed	all free	Global	Yes
9	308.0000	0.0000	0.0000	y, z fixed	all free	Global	Yes
10	346.5000	0.0000	0.0000	y, z fixed	all free	Global	Yes
11	385.0000	0.0000	0.0000	y, z fixed	all free	Global	Yes
12	423.5000	0.0000	0.0000	y, z fixed	all free	Global	Yes
13	462.0000	0.0000	0.0000	y, z fixed	all free	Global	Yes

INPUT : Members

ID	I-Joint	J-Joint	Span	Type	Section at Start	Section at End	Material	Prestress Force (kips)	Length (ft)	Rigid Zone from Start (x/L)	Rigid Zone from End (x/L)	Orientation Angle (deg)	Casting (day)	Structure Group
1	1	2	-	Beam	W24x207 [DB:American]	(same as start)	A242	0.0000	38.5	0.0000	0.0000	90.0000	0	(none)
2	2	3	-	Beam	W24x207 [DB:American]	(same as start)	A242	0.0000	38.5	0.0000	0.0000	90.0000	0	(none)
3	3	4	-	Beam	W24x207 [DB:American]	(same as start)	A242	0.0000	38.5	0.0000	0.0000	90.0000	0	(none)
4	4	5	-	Beam	W24x207 [DB:American]	(same as start)	A242	0.0000	38.5	0.0000	0.0000	90.0000	0	(none)
5	5	6	-	Beam	W24x207 [DB:American]	(same as start)	A242	0.0000	38.5	0.0000	0.0000	90.0000	0	(none)
6	6	7	-	Beam	W24x207 [DB:American]	(same as start)	A242	0.0000	38.5	0.0000	0.0000	90.0000	0	(none)
7	7	8	-	Beam	W24x207 [DB:American]	(same as start)	A242	0.0000	38.5	0.0000	0.0000	90.0000	0	(none)
8	8	9	-	Beam	W24x207 [DB:American]	(same as start)	A242	0.0000	38.5	0.0000	0.0000	90.0000	0	(none)
9	9	10	-	Beam	W24x207 [DB:American]	(same as start)	A242	0.0000	38.5	0.0000	0.0000	90.0000	0	(none)
10	10	11	-	Beam	W24x207 [DB:American]	(same as start)	A242	0.0000	38.5	0.0000	0.0000	90.0000	0	(none)
11	11	12	-	Beam	W24x207 [DB:American]	(same as start)	A242	0.0000	38.5	0.0000	0.0000	90.0000	0	(none)
12	12	13	-	Beam	W24x207 [DB:American]	(same as start)	A242	0.0000	38.5	0.0000	0.0000	90.0000	0	(none)

INPUT : Member Fixity

Member ID	Start Force Fx	Start Force Fy	Start Force Fz	Start Moment Mx	Start Moment My	Start Moment Mz	End Force Fx	End Force Fy	End Force Fz	End Moment Mx	End Moment My	End Moment Mz
4	Fixed	Fixed	Fixed	Fixed	Fixed	Fixed	Fixed	Fixed	Fixed	Fixed	Fixed	Free
5	Fixed	Fixed	Fixed	Fixed	Fixed	Free	Fixed	Fixed	Fixed	Fixed	Fixed	Fixed
8	Fixed	Fixed	Fixed	Fixed	Fixed	Fixed	Fixed	Fixed	Fixed	Fixed	Fixed	Free
9	Fixed	Fixed	Fixed	Fixed	Fixed	Free	Fixed	Fixed	Fixed	Fixed	Fixed	Fixed

DATABASE:: HL93 Fatigue Truck on C:\Users\mdierks\Desktop\Broadway STLBridge\KG Runs\HL93_Fatigue_KG.dml

Type	Magnitude at Start (kips or kips-ft)	Magnitude at End (kips or kips-ft)	Location Start (ft)	Location End (ft)	Transverse Offset (ft)	Transverse Width (ft)
Point Force	32.0000	32.0000	44.0000	44.0000	0.0000	0.0000
Point Force	32.0000	32.0000	14.0000	14.0000	0.0000	0.0000
Point Force	8.0000	8.0000	0.0000	0.0000	0.0000	0.0000

POST-COMPUTED RESULT CASES SUMMARY

Influence Based Case: HL93 Fatigue

Influence Coefficients	Influence Line - Unit Moving Load
Vehicle	HL93 Fatigue Truck - Lane Configuration - UDL Factor: 0
Transverse Offset	0
Lane Loading Method	Constant Loading
Lane Load	0
Include Lane Load Under Vehicles	Yes
Back-to-Front Vehicle Spacing	0
Side-to-Side Vehicle Spacing	0
Load for Extreme Force Effects	Yes
AASHTO-LFD Point Loading	No
Complete Patterns Only	No
Vehicle Placement	Standard Method
Design Lane Width	0
Design Lane Margin	0
Multiple Presence Factors	
Overall Factor	1

Result Cases Summary

Influence-Based: HL93 Fatigue

Influence Line - Unit Moving Load

HL93 Fatigue Truck

RESULT ENVELOPE :Reactions @ Force Z (kips) Result Cases

HL93 Fatigue		

RESULT ENVELOPE :Reactions @ Force Z (kips)

Joint	Result Case	Force X (kips)	Force Y (kips)	Force Z (kips)	Moment X (kips-ft)	Moment Y (kips-ft)	Moment Z (kips-ft)
1	HL93 Fatigue: s65.37	0.0000	0.0000	-2.8794	0.0000	0.0000	0.0000
1	HL93 Fatigue: s44.	0.0000	0.0000	36.4649	0.0000	0.0000	0.0000
2	HL93 Fatigue: s103.8	0.0000	0.0000	-4.6238	0.0000	0.0000	0.0000
2	HL93 Fatigue: s61.88	0.0000	0.0000	52.6121	0.0000	0.0000	0.0000

Max reaction range occurs at joint 6

RESULT ENVELOPE :Reactions @ Force Z (kips)

Joint	Result Case	Force X (kips)	Force Y (kips)	Force Z (kips)	Moment X (kips-ft)	Moment Y (kips-ft)	Moment Z (kips-ft)
3	HL93 Fatigue: s143.7	0.0000	0.0000	-5.9931	0.0000	0.0000	0.0000
3	HL93 Fatigue: s95.81	0.0000	0.0000	50.1270	0.0000	0.0000	0.0000
4	HL93 Fatigue: s93.81	0.0000	0.0000	-4.5940	0.0000	0.0000	0.0000
4	HL93 Fatigue: s136.2	0.0000	0.0000	52.6937	0.0000	0.0000	0.0000
5	HL93 Fatigue: s219.1	0.0000	0.0000	-2.8477	0.0000	0.0000	0.0000
5	HL93 Fatigue: s168.2	0.0000	0.0000	40.7328	0.0000	0.0000	0.0000
6	HL93 Fatigue: s258.	0.0000	0.0000	-4.6073	0.0000	0.0000	0.0000
6	HL93 Fatigue: s215.6	0.0000	0.0000	52.6932	0.0000	0.0000	0.0000
7	HL93 Fatigue: s297.9	0.0000	0.0000	-5.9903	0.0000	0.0000	0.0000
7	HL93 Fatigue: s256.	0.0000	0.0000	50.1594	0.0000	0.0000	0.0000
8	HL93 Fatigue: s248.	0.0000	0.0000	-4.6073	0.0000	0.0000	0.0000
8	HL93 Fatigue: s290.4	0.0000	0.0000	52.6931	0.0000	0.0000	0.0000
9	HL93 Fatigue: s286.9	0.0000	0.0000	-2.8477	0.0000	0.0000	0.0000
9	HL93 Fatigue: s337.8	0.0000	0.0000	40.7340	0.0000	0.0000	0.0000
10	HL93 Fatigue: s412.2	0.0000	0.0000	-4.5939	0.0000	0.0000	0.0000
10	HL93 Fatigue: s369.8	0.0000	0.0000	52.6937	0.0000	0.0000	0.0000
11	HL93 Fatigue: s362.3	0.0000	0.0000	-5.9931	0.0000	0.0000	0.0000
11	HL93 Fatigue: s410.2	0.0000	0.0000	50.1269	0.0000	0.0000	0.0000
12	HL93 Fatigue: s402.2	0.0000	0.0000	-4.6238	0.0000	0.0000	0.0000
12	HL93 Fatigue: s444.1	0.0000	0.0000	52.6121	0.0000	0.0000	0.0000
13	HL93 Fatigue: s440.6	0.0000	0.0000	-2.8794	0.0000	0.0000	0.0000
13	HL93 Fatigue: s491.5	0.0000	0.0000	35.8249	0.0000	0.0000	0.0000

HDR Inc.

Intermediate Floorbeam Transverse Distribution

Wednesday, February 15, 2017	KGRIBBLE HDR Inc.	4435 Main Street, Suite 1000 Kansas City, MO 64111 Tel:

PROJECT SUMMARY

INPUT PROPERTIES	Count
Universal Restraints	Rx
Materials	1
Sections	1
User Coordinate System	NONE
Spring Curves	NONE
Isolater Property	NONE
Creep Definitions	NONE

INPUT GEOMETRY	Count
Joints	2
Members	1
Plates	NONE
Springs	NONE
Isolaters / Bearings	NONE
Mass Elements	NONE
Slave / Masters	NONE
Tendons	NONE

Load Cases	Count
Load Cases	1
Combination Cases	NONE
Construction Stages	NONE
Linked Databases	2

LARSA

TABLE OF CONTENTS

INPUTS	Page#
- INPUT : Joints	Page 5
- INPUT : Members	Page 5
- DATABASE:: Max Transverse Load on C:\Users\mdierks\Desktop\Broadway STLBridge\KG	Page 5
- DATABASE:: Min Transverse Load on C:\Users\mdierks\Desktop\Broadway STLBridge\KG	Page 5
- STRUCTURE GROUP SUMMARY	Page 6

Results	Page#
- RESULT ENVELOPE :Member Sectional Forces @ Moment Z (kips-ft)	Page 7

Graphics View 1

Zoom 1.250X
Load Case Unit Influence Load (units: kips, ft)

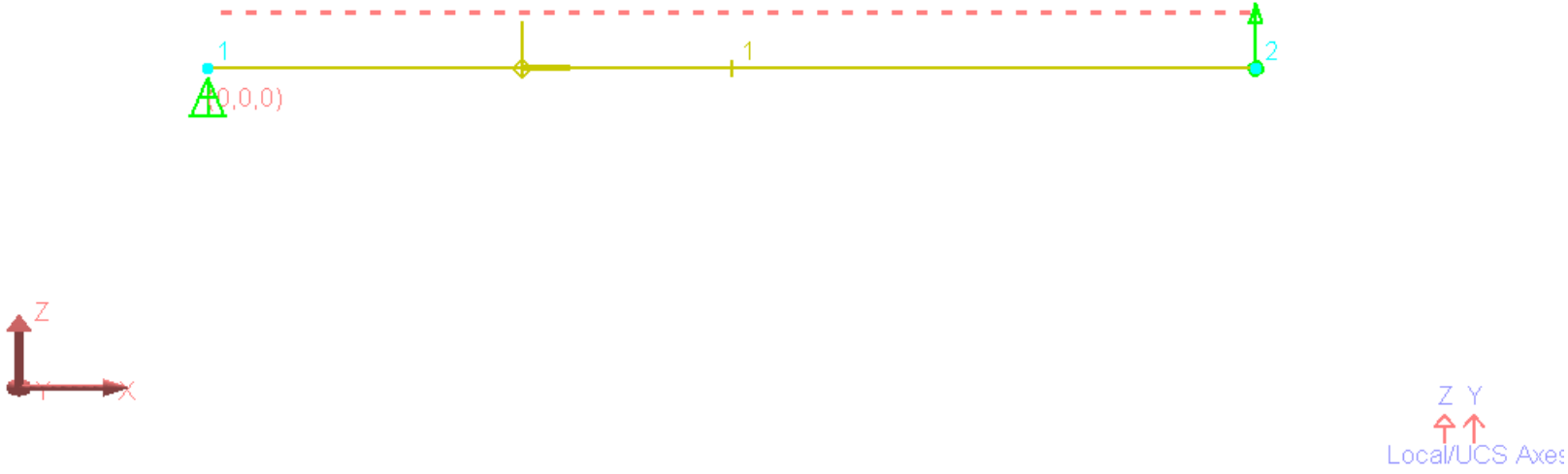

INPUT : Joints

ID	X (ft)	Y (ft)	Z (ft)	Translation DOF	Rotation DOF [x fixed]	Displacement UCS	Assignment
1	0.0000	0.0000	0.0000	all fixed	all free	Global	Yes
2	56.5000	0.0000	0.0000	y, z fixed	all free	Global	Yes

INPUT : Members

ID	I-Joint	J-Joint	Span	Type	Section at Start	Section at End	Material	Prestress Force (kips)	Length (ft)	Rigid Zone from Start (x/L)	Rigid Zone from End (x/L)	Orientation Angle (deg)	Casting (day)	Structure Group
1	1	2	-	Beam	Composer Floorbeam	(same as start)	A36	0.0000	56.5	0.0000	0.0000	90.0000	0	(none)

DATABASE:: Max Transverse Load on C:\Users\mdierks\Desktop\Broadway STLBridge\KG Runs\Transverse_Fatigue.dml

Type	Magnitude at Start (kips or kips-ft)	Magnitude at End (kips or kips-ft)	Location Start (ft)	Location End (ft)	Transverse Offset (ft)	Transverse Width (ft)
Point Force	26.3500	26.3500	0.0000	0.0000	0.0000	0.0000
Point Force	26.3500	26.3500	6.0000	6.0000	0.0000	0.0000

DATABASE:: Min Transverse Load on C:\Users\mdierks\Desktop\Broadway STLBridge\KG Runs\Transverse_Fatigue.dml

Type	Magnitude at Start (kips or kips-ft)	Magnitude at End (kips or kips-ft)	Location Start (ft)	Location End (ft)	Transverse Offset (ft)	Transverse Width (ft)
Point Force	-2.3100	-2.3100	0.0000	0.0000	0.0000	0.0000
Point Force	-2.3100	-2.3100	6.0000	6.0000	0.0000	0.0000

POST-COMPUTED RESULT CASES SUMMARY

Influence Based Case: Max Transverse Load	
Influence Coefficients	Influence Line - Unit Influence Load
Vehicle	Max Transverse Load - Lane Configuration - UDL Factor:
Transverse Offset	0
Lane Loading Method	Constant Loading
Lane Load	0
Include Lane Load Under Vehicles	Yes
Back-to-Front Vehicle Spacing	0
Side-to-Side Vehicle Spacing	0
Load for Extreme Force Effects	Yes
AASHTO-LFD Point Loading	No
Complete Patterns Only	No
Vehicle Placement	Standard Method
Design Lane Width	0
Design Lane Margin	0
Multiple Presence Factors	
Overall Factor	1
Influence Based Case: Min Transverse Load	
Influence Coefficients	Influence Line - Unit Influence Load
Vehicle	Min Transverse Load - Lane Configuration - UDL Factor:
Transverse Offset	0
Lane Loading Method	Constant Loading
Lane Load	0
Include Lane Load Under Vehicles	Yes
Back-to-Front Vehicle Spacing	0
Side-to-Side Vehicle Spacing	0
Load for Extreme Force Effects	Yes
AASHTO-LFD Point Loading	No
Complete Patterns Only	No
Vehicle Placement	Standard Method
Design Lane Width	0
Design Lane Margin	0
Multiple Presence Factors	
Overall Factor	1

Result Cases Summary

Influence-Based: Max Transverse Load
Influence Line - Unit Influence Load

Max Transverse Load

Influence-Based: Min Transverse Load
Influence Line - Unit Influence Load

Min Transverse Load

RESULT ENVELOPE :Member Sectional Forces @ Moment Z (kips-ft) Result Cases

Max Transverse Load	Min Transverse Load	

RESULT ENVELOPE :Member Sectional Forces @ Moment Z (kips-ft)

Member	Station	Result Case	Force X (kips)	Force Y (kips)	Force Z (kips)	Moment X (kips-ft)	Moment Y (kips-ft)	Moment Z (kips-ft)
1	0	Max Transverse Load: s14.03	0.0000	42.4143	0.0000	0.0000	0.0000	0.0000
1	0	Max Transverse Load: s28.05	0.0000	29.3304	0.0000	0.0000	0.0000	0.0000
1	1	Min Transverse Load: s9.352	0.0000	-4.1006	0.0000	0.0000	0.0000	-11.5843
1	1	Max Transverse Load: s9.352	0.0000	46.7756	0.0000	0.0000	0.0000	132.1411
1	2	Min Transverse Load: s12.3	0.0000	-3.8592	0.0000	0.0000	0.0000	-21.8042
1	2	Max Transverse Load: s12.3	0.0000	44.0211	0.0000	0.0000	0.0000	248.7193
1	3	Min Transverse Load: s14.77	0.0000	-3.1165	0.0000	0.0000	0.0000	-30.7438
1	3	Max Transverse Load: s14.77	0.0000	35.5499	0.0000	0.0000	0.0000	350.6917
1	4	Min Transverse Load: s17.23	0.0000	-1.6701	0.0000	0.0000	0.0000	-38.5247
1	4	Max Transverse Load: s17.23	0.0000	19.0502	0.0000	0.0000	0.0000	439.4480
1	5	Min Transverse Load: s20.18	0.0000	-1.3203	0.0000	0.0000	0.0000	-45.1781
1	5	Max Transverse Load: s20.18	0.0000	15.0605	0.0000	0.0000	0.0000	515.3432
1	6	Min Transverse Load: s23.13	0.0000	-2.9737	0.0000	0.0000	0.0000	-50.4049
1	6	Max Transverse Load: s23.13	0.0000	33.9213	0.0000	0.0000	0.0000	574.9652
1	7	Min Transverse Load: s25.59	0.0000	-1.8341	0.0000	0.0000	0.0000	-54.0991
1	7	Max Transverse Load: s25.59	0.0000	20.9211	0.0000	0.0000	0.0000	617.1046
1	8	Min Transverse Load: s28.05	0.0000	-0.3876	0.0000	0.0000	0.0000	-56.8007
1	8	Max Transverse Load: s28.05	0.0000	4.4214	0.0000	0.0000	0.0000	647.9218
1	9	Min Transverse Load: s31.01	0.0000	-0.0379	0.0000	0.0000	0.0000	-58.2612
1	9	Max Transverse Load: s31.01	0.0000	0.4318	0.0000	0.0000	0.0000	664.5810

RESULT ENVELOPE :Member Sectional Forces @ Moment Z (kips-ft)

Member	Station	Result Case	Force X (kips)	Force Y (kips)	Force Z (kips)	Moment X (kips-ft)	Moment Y (kips-ft)	Moment Z (kips-ft)
1	10	Min Transverse Load: s29.04	0.0000	-0.1808	0.0000	0.0000	0.0000	-58.3275
1	10	Max Transverse Load: s29.04	0.0000	2.0622	0.0000	0.0000	0.0000	665.3375
1	11	Min Transverse Load: s31.01	0.0000	2.2721	0.0000	0.0000	0.0000	-58.2115
1	11	Max Transverse Load: s31.01	0.0000	-25.9182	0.0000	0.0000	0.0000	664.0149
1	12	Min Transverse Load: s33.96	0.0000	0.3119	0.0000	0.0000	0.0000	-56.9938
1	12	Max Transverse Load: s33.96	0.0000	-3.5579	0.0000	0.0000	0.0000	650.1245
1	13	Min Transverse Load: s36.91	0.0000	0.6617	0.0000	0.0000	0.0000	-54.2584
1	13	Max Transverse Load: s36.91	0.0000	-7.5476	0.0000	0.0000	0.0000	618.9213
1	14	Min Transverse Load: s39.87	0.0000	1.0114	0.0000	0.0000	0.0000	-50.1965
1	14	Max Transverse Load: s39.87	0.0000	-11.5372	0.0000	0.0000	0.0000	572.5876
1	15	Min Transverse Load: s42.33	0.0000	2.4579	0.0000	0.0000	0.0000	-44.9503
1	15	Max Transverse Load: s42.33	0.0000	-28.0370	0.0000	0.0000	0.0000	512.7443
1	16	Min Transverse Load: s44.79	0.0000	3.4171	0.0000	0.0000	0.0000	-38.6131
1	16	Max Transverse Load: s44.79	0.0000	-38.9785	0.0000	0.0000	0.0000	440.4567
1	17	Min Transverse Load: s47.74	0.0000	3.6586	0.0000	0.0000	0.0000	-31.0063
1	17	Max Transverse Load: s47.74	0.0000	-41.7330	0.0000	0.0000	0.0000	353.6870
1	18	Min Transverse Load: s50.7	0.0000	2.2939	0.0000	0.0000	0.0000	-21.7943
1	18	Max Transverse Load: s50.7	0.0000	-26.1660	0.0000	0.0000	0.0000	248.6061
1	19	Min Transverse Load: s52.66	0.0000	4.0610	0.0000	0.0000	0.0000	-11.4724
1	19	Max Transverse Load: s52.66	0.0000	-46.3238	0.0000	0.0000	0.0000	130.8648
1	20	Max Transverse Load: s32.48	0.0000	-27.5014	0.0000	0.0000	0.0000	0.0000
1	20	Max Transverse Load: s20.18	0.0000	-16.0242	0.0000	0.0000	0.0000	0.0000

Max and min moment

Graphics View 1

Zoom 1.250X
Member Forces - Moment Mz - Max Transverse Load, Min Transverse Load
(load units: kips, ft)

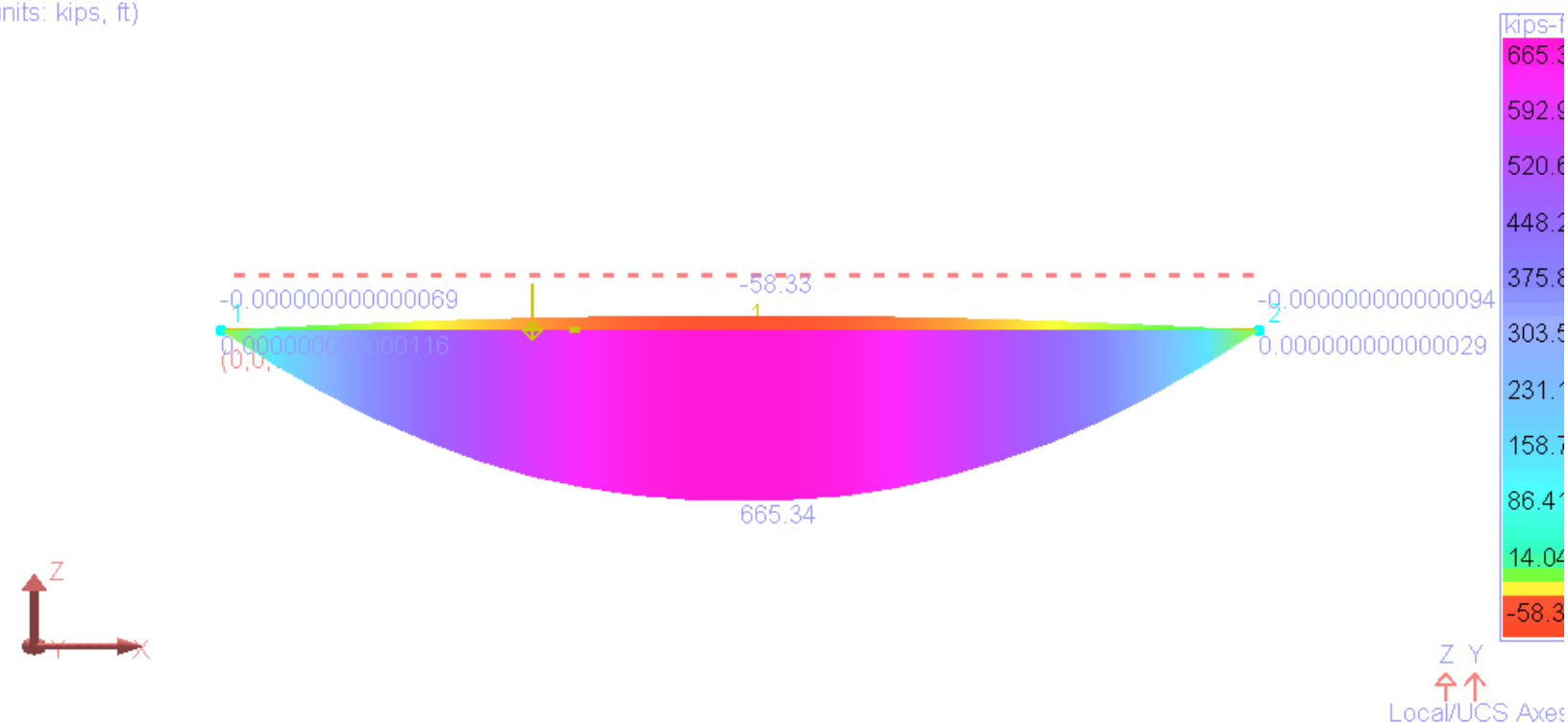

KGRIBBLE
HDR Inc.
C:\Users\mdierks\Desktop\Broadway STLBridge\KG Runs\Transverse Distribution Mainspan Floorbeam.lar
Last Analysis Run : 2/15/2017 10:47:32 AM

Graphics View 1

Zoom 1.250X
Member Forces - Moment Mz - Min Transverse Load
(load units: kips, ft)

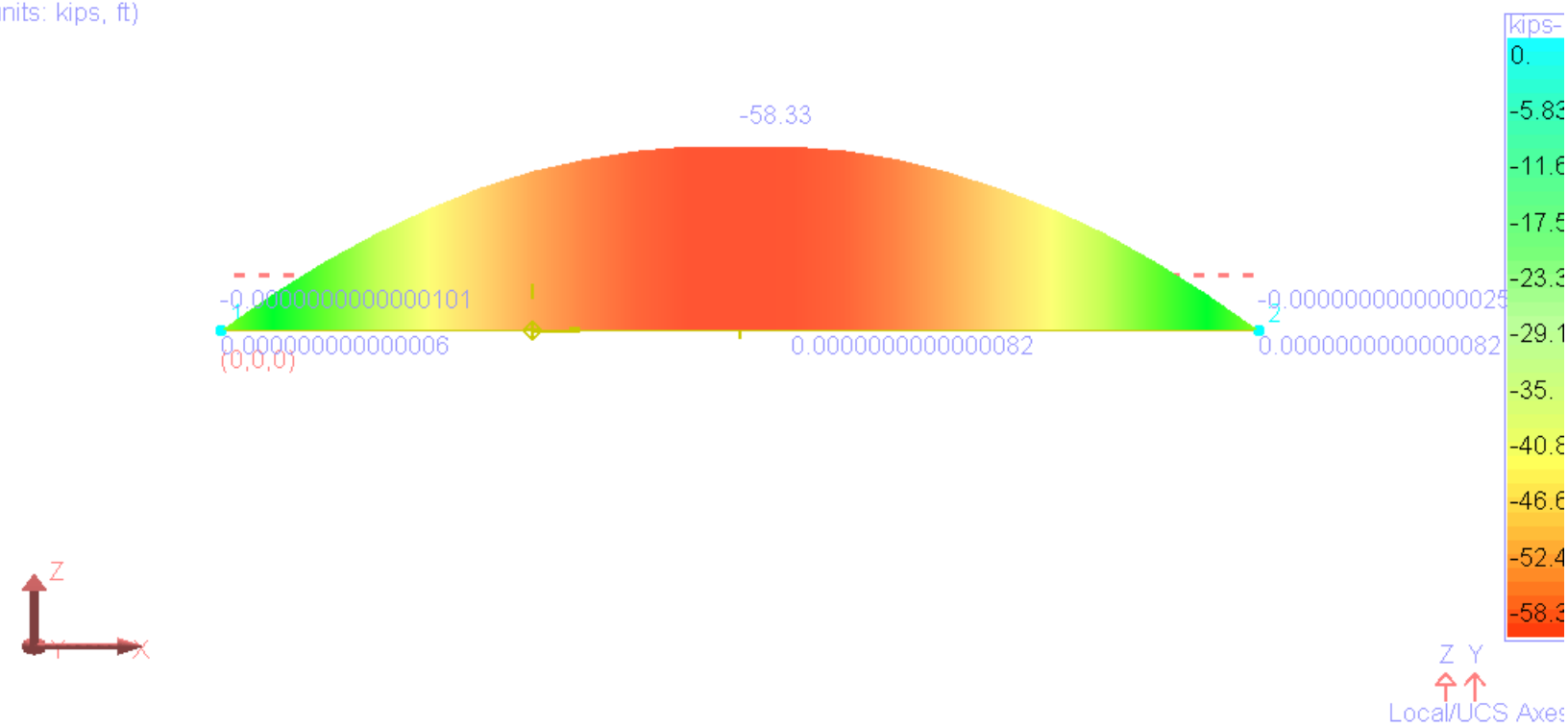

KGRIBBLE
HDR Inc.
C:\Users\mdierks\Desktop\Broadway STLBridge\KG Runs\Transverse Distribution Mainspan Floorbeam.lar
Last Analysis Run : 2/15/2017 10:47:32 AM

HDR Inc.

End Floorbeam Transverse Distribution

Wednesday, February 15, 2017	KGRIBBLE HDR Inc.	4435 Main Street, Suite 1000 Kansas City, MO 64111 Tel:

PROJECT SUMMARY

INPUT PROPERTIES	Count
Universal Restraints	Rx
Materials	1
Sections	1
User Coordinate System	NONE
Spring Curves	NONE
Isolater Property	NONE
Creep Definitions	NONE

INPUT GEOMETRY	Count
Joints	2
Members	1
Plates	NONE
Springs	NONE
Isolaters / Bearings	NONE
Mass Elements	NONE
Slave / Masters	NONE
Tendons	NONE

Load Cases	Count
Load Cases	1
Combination Cases	NONE
Construction Stages	NONE
Linked Databases	2

LARSA

TABLE OF CONTENTS

INPUTS	Page#
- INPUT : Joints	Page 5
- INPUT : Members	Page 5
- DATABASE:: Max Transverse Load on C:\Users\mdierks\Desktop\Broadway STLBridge\KG	Page 5
- DATABASE:: Min Transverse Load on C:\Users\mdierks\Desktop\Broadway STLBridge\KG	Page 5
- STRUCTURE GROUP SUMMARY	Page 6

Results	Page#
- RESULT ENVELOPE :Member Sectional Forces @ Moment Z (kips-ft)	Page 7

Graphics View 1

Zoom 1.250X
Load Case Unit Influence Load (units: kips, ft)

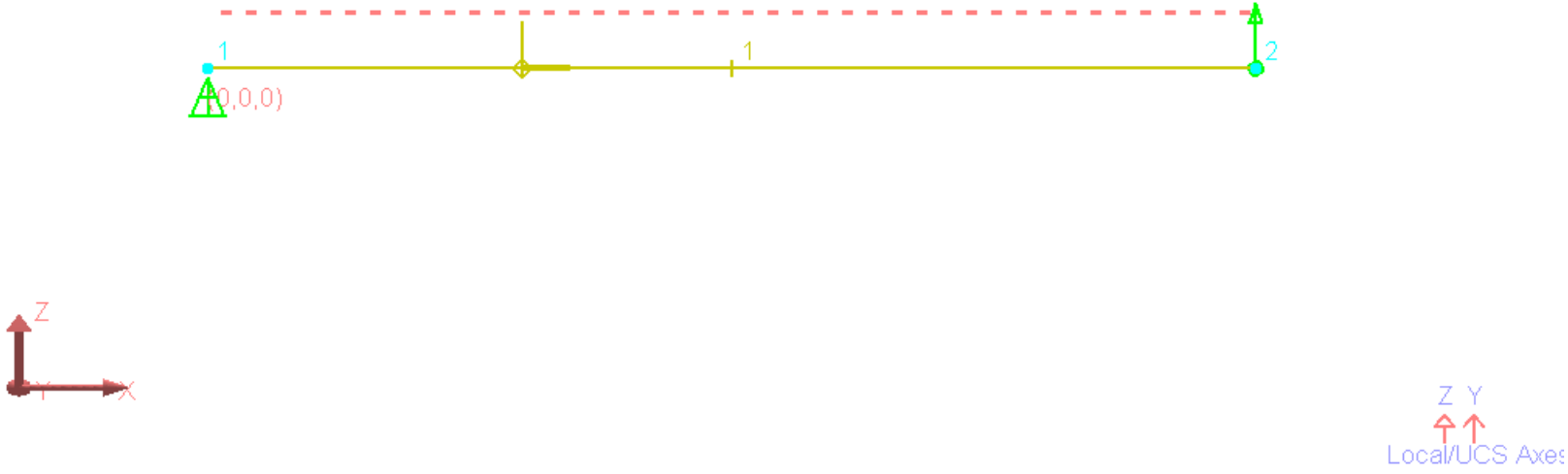

INPUT : Joints

ID	X (ft)	Y (ft)	Z (ft)	Translation DOF	Rotation DOF [x fixed]	Displacement UCS	Assignment
1	0.0000	0.0000	0.0000	all fixed	all free	Global	Yes
2	56.5000	0.0000	0.0000	y, z fixed	all free	Global	Yes

INPUT : Members

ID	I-Joint	J-Joint	Span	Type	Section at Start	Section at End	Material	Prestress Force (kips)	Length (ft)	Rigid Zone from Start (x/L)	Rigid Zone from End (x/L)	Orientation Angle (deg)	Casting (day)	Structure Group
1	1	2	-	Beam	Composer Floorbeam	(same as start)	A36	0.0000	56.5	0.0000	0.0000	90.0000	0	(none)

DATABASE:: Max Transverse Load on C:\Users\mdierks\Desktop\Broadway STLBridge\KG Runs\End_FB_Transverse_Fatigue.dml

Type	Magnitude at Start (kips or kips-ft)	Magnitude at End (kips or kips-ft)	Location Start (ft)	Location End (ft)	Transverse Offset (ft)	Transverse Width (ft)
Point Force	18.2300	18.2300	0.0000	0.0000	0.0000	0.0000
Point Force	18.2300	18.2300	6.0000	6.0000	0.0000	0.0000

DATABASE:: Min Transverse Load on C:\Users\mdierks\Desktop\Broadway STLBridge\KG Runs\End_FB_Transverse_Fatigue.dml

Type	Magnitude at Start (kips or kips-ft)	Magnitude at End (kips or kips-ft)	Location Start (ft)	Location End (ft)	Transverse Offset (ft)	Transverse Width (ft)
Point Force	-1.4400	-1.4400	0.0000	0.0000	0.0000	0.0000
Point Force	-1.4400	-1.4400	6.0000	6.0000	0.0000	0.0000

POST-COMPUTED RESULT CASES SUMMARY

Influence Based Case: Max Transverse Load	
Influence Coefficients	Influence Line - Unit Influence Load
Vehicle	Max Transverse Load - Lane Configuration - UDL Factor:
Transverse Offset	0
Lane Loading Method	Constant Loading
Lane Load	0
Include Lane Load Under Vehicles	Yes
Back-to-Front Vehicle Spacing	0
Side-to-Side Vehicle Spacing	0
Load for Extreme Force Effects	Yes
AASHTO-LFD Point Loading	No
Complete Patterns Only	No
Vehicle Placement	Standard Method
Design Lane Width	0
Design Lane Margin	0
Multiple Presence Factors	
Overall Factor	1
Influence Based Case: Max Transverse Load	
Influence Coefficients	Influence Line - Unit Influence Load
Vehicle	Max Transverse Load - Lane Configuration - UDL Factor:
Transverse Offset	0
Lane Loading Method	Constant Loading
Lane Load	0
Include Lane Load Under Vehicles	Yes
Back-to-Front Vehicle Spacing	0
Side-to-Side Vehicle Spacing	0
Load for Extreme Force Effects	Yes
AASHTO-LFD Point Loading	No
Complete Patterns Only	No
Vehicle Placement	Standard Method
Design Lane Width	0
Design Lane Margin	0
Multiple Presence Factors	
Overall Factor	1

Influence Based Case: Min Transverse Load	
Influence Coefficients	Influence Line - Unit Influence Load
Vehicle	Min Transverse Load - Lane Configuration - UDL Factor:
Transverse Offset	0
Lane Loading Method	Constant Loading
Lane Load	0
Include Lane Load Under Vehicles	Yes
Back-to-Front Vehicle Spacing	0
Side-to-Side Vehicle Spacing	0
Load for Extreme Force Effects	Yes
AASHTO-LFD Point Loading	No
Complete Patterns Only	No
Vehicle Placement	Standard Method
Design Lane Width	0
Design Lane Margin	0
Multiple Presence Factors	
Overall Factor	1

Result Cases Summary

Influence-Based: Max Transverse Load
Influence Line - Unit Influence Load

Max Transverse Load

Influence-Based: Min Transverse Load
Influence Line - Unit Influence Load

Min Transverse Load

RESULT ENVELOPE :Member Sectional Forces @ Moment Z (kips-ft) Result Cases

Max Transverse Load	Min Transverse Load	

RESULT ENVELOPE :Member Sectional Forces @ Moment Z (kips-ft)

Member	Station	Result Case	Force X (kips)	Force Y (kips)	Force Z (kips)	Moment X (kips-ft)	Moment Y (kips-ft)	Moment Z (kips-ft)
1	0	Max Transverse Load: s14.03	0.0000	29.3439	0.0000	0.0000	0.0000	0.0000
1	0	Max Transverse Load: s28.05	0.0000	20.2920	0.0000	0.0000	0.0000	0.0000
1	1	Min Transverse Load: s9.352	0.0000	-2.5562	0.0000	0.0000	0.0000	-7.2214

RESULT ENVELOPE :Member Sectional Forces @ Moment Z (kips-ft)

Member	Station	Result Case	Force X (kips)	Force Y (kips)	Force Z (kips)	Moment X (kips-ft)	Moment Y (kips-ft)	Moment Z (kips-ft)
1	1	Max Transverse Load: s9.352	0.0000	32.3613	0.0000	0.0000	0.0000	91.4206
1	2	Min Transverse Load: s12.3	0.0000	-2.4057	0.0000	0.0000	0.0000	-13.5922
1	2	Max Transverse Load: s12.3	0.0000	30.4556	0.0000	0.0000	0.0000	172.0741
1	3	Min Transverse Load: s14.77	0.0000	-1.9428	0.0000	0.0000	0.0000	-19.1649
1	3	Max Transverse Load: s14.77	0.0000	24.5949	0.0000	0.0000	0.0000	242.6228
1	4	Min Transverse Load: s17.23	0.0000	-1.0411	0.0000	0.0000	0.0000	-24.0154
1	4	Max Transverse Load: s17.23	0.0000	13.1797	0.0000	0.0000	0.0000	304.0280
1	5	Min Transverse Load: s20.18	0.0000	-0.8230	0.0000	0.0000	0.0000	-28.1630
1	5	Max Transverse Load: s20.18	0.0000	10.4195	0.0000	0.0000	0.0000	356.5354
1	6	Min Transverse Load: s23.13	0.0000	-1.8538	0.0000	0.0000	0.0000	-31.4213
1	6	Max Transverse Load: s23.13	0.0000	23.4681	0.0000	0.0000	0.0000	397.7843
1	7	Min Transverse Load: s25.59	0.0000	-1.1433	0.0000	0.0000	0.0000	-33.7241
1	7	Max Transverse Load: s25.59	0.0000	14.4741	0.0000	0.0000	0.0000	426.9380
1	8	Min Transverse Load: s28.05	0.0000	-0.2416	0.0000	0.0000	0.0000	-35.4083
1	8	Max Transverse Load: s28.05	0.0000	3.0589	0.0000	0.0000	0.0000	448.2586
1	9	Min Transverse Load: s31.01	0.0000	-0.0236	0.0000	0.0000	0.0000	-36.3187
1	9	Max Transverse Load: s31.01	0.0000	0.2987	0.0000	0.0000	0.0000	459.7841
1	10	Min Transverse Load: s29.04	0.0000	-0.1127	0.0000	0.0000	0.0000	-36.3600
1	10	Max Transverse Load: s29.04	0.0000	1.4267	0.0000	0.0000	0.0000	460.3075
1	11	Min Transverse Load: s31.01	0.0000	1.4164	0.0000	0.0000	0.0000	-36.2877
1	11	Max Transverse Load: s31.01	0.0000	-17.9313	0.0000	0.0000	0.0000	459.3924
1	12	Min Transverse Load: s33.96	0.0000	0.1944	0.0000	0.0000	0.0000	-35.5286
1	12	Max Transverse Load: s33.96	0.0000	-2.4615	0.0000	0.0000	0.0000	449.7825
1	13	Min Transverse Load: s36.91	0.0000	0.4125	0.0000	0.0000	0.0000	-33.8234
1	13	Max Transverse Load: s36.91	0.0000	-5.2217	0.0000	0.0000	0.0000	428.1949
1	14	Min Transverse Load: s39.87	0.0000	0.6305	0.0000	0.0000	0.0000	-31.2913
1	14	Max Transverse Load: s39.87	0.0000	-7.9819	0.0000	0.0000	0.0000	396.1393
1	15	Min Transverse Load: s42.33	0.0000	1.5322	0.0000	0.0000	0.0000	-28.0209
1	15	Max Transverse Load: s42.33	0.0000	-19.3971	0.0000	0.0000	0.0000	354.7373
1	16	Min Transverse Load: s44.79	0.0000	2.1301	0.0000	0.0000	0.0000	-24.0705
1	16	Max Transverse Load: s44.79	0.0000	-26.9669	0.0000	0.0000	0.0000	304.7258
1	17	Min Transverse Load: s47.74	0.0000	2.2807	0.0000	0.0000	0.0000	-19.3286
1	17	Max Transverse Load: s47.74	0.0000	-28.8726	0.0000	0.0000	0.0000	244.6950
1	18	Min Transverse Load: s50.7	0.0000	1.4299	0.0000	0.0000	0.0000	-13.5861

Max and min moment

RESULT ENVELOPE :Member Sectional Forces @ Moment Z (kips-ft)

Member	Station	Result Case	Force X (kips)	Force Y (kips)	Force Z (kips)	Moment X (kips-ft)	Moment Y (kips-ft)	Moment Z (kips-ft)
1	18	Max Transverse Load: s50.7	0.0000	-18.1027	0.0000	0.0000	0.0000	171.9958
1	19	Min Transverse Load: s52.66	0.0000	2.5315	0.0000	0.0000	0.0000	-7.1516
1	19	Max Transverse Load: s52.66	0.0000	-32.0487	0.0000	0.0000	0.0000	90.5376
1	20	Max Transverse Load: s32.48	0.0000	-19.0266	0.0000	0.0000	0.0000	0.0000
1	20	Max Transverse Load: s20.18	0.0000	-11.0862	0.0000	0.0000	0.0000	0.0000

Graphics View 1

Zoom 1.250X
Member Forces - Moment Mz - Max Transverse Load, Max Transverse Load, Min Transverse Load
(load units: kips, ft)

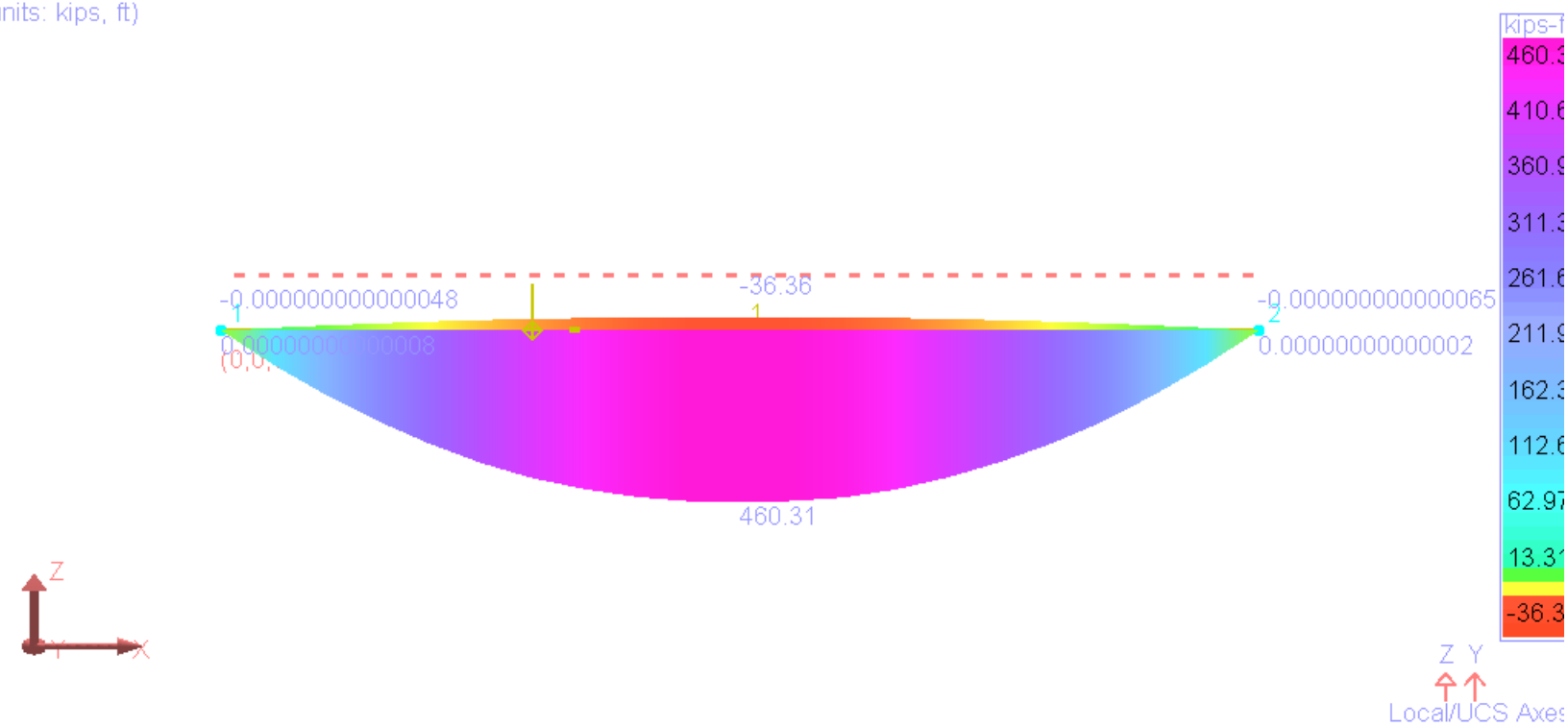

KGRIBBLE
HDR Inc.
C:\Users\mdierks\Desktop\Broadway STLBridge\KG Runs\End FB Transverse Distribution Mainspan Floorbeam.lar
Last Analysis Run : 2/15/2017 11:02:15 AM

Graphics View 1

Zoom 1.250X
Member Forces - Moment Mz - Min Transverse Load
(load units: kips, ft)

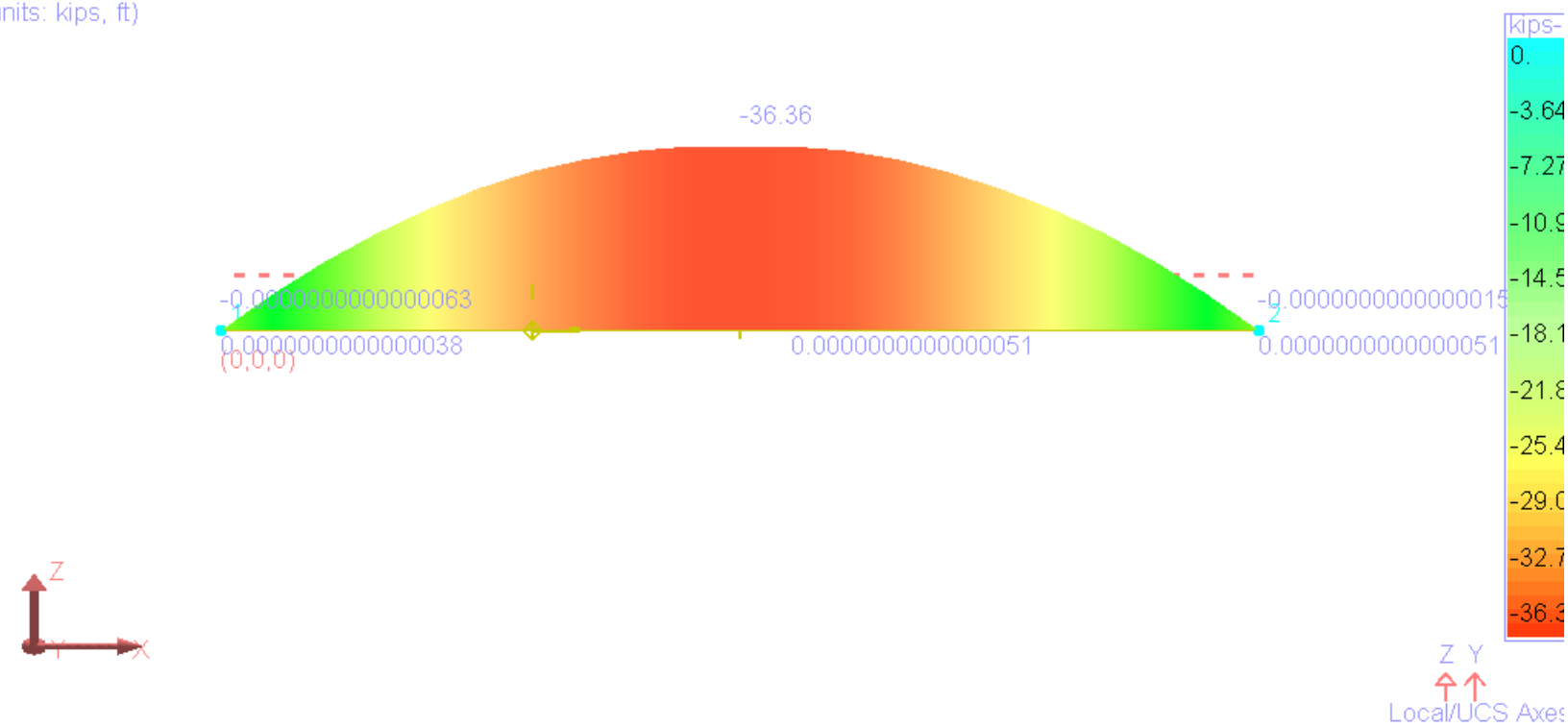

KGRIBBLE
HDR Inc.
C:\Users\mdierks\Desktop\Broadway STLBridge\KG Runs\End FB Transverse Distribution Mainspan Floorbeam.lar
Last Analysis Run : 2/15/2017 11:02:15 AM

Appendix H. A4649 South Approach Spans Fatigue Analysis

This page is intentionally left blank.

Broadway Bridge Fatigue Details

Thru-Girder South Approach

Fatigue Details of Concern:

- Rivets in top and bottom flanges of thru girders

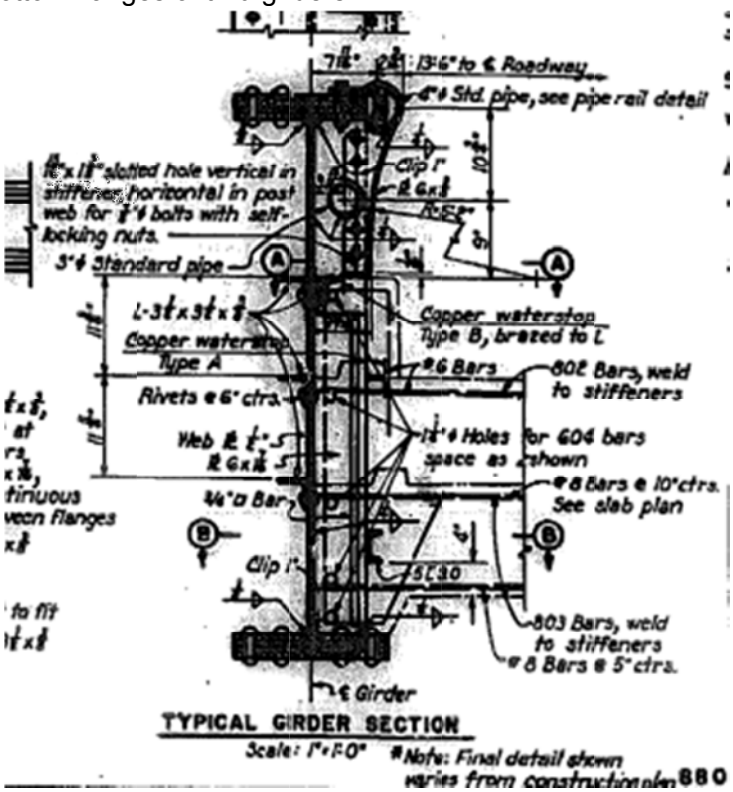

- Longitudinal welds in web (PB070009)

- Transverse welds in web and flanges

Project:	BROADWAY BRIDGE	Computed:	KG	Date:	1/17/17
Subject:	FATIGUE ANALYSIS	Checked:	MMD	Date:	2/14/17
Task:	THRU GIRDER : NET SECTION	Page:	1	of:	THRUNET
Job #:	133-10047358	No:			

NET SECTION: THRU GIRDER SOUTH APR.

- USE AVG DEPTH @ MIDSPAN
- RIVETS APPEAR TO BE STAGGERED, CONSIDER IN LINE W/ SECTION FOR CONSERVATISM, SIMPLICITY.
- RIVETS 7/8" ϕ

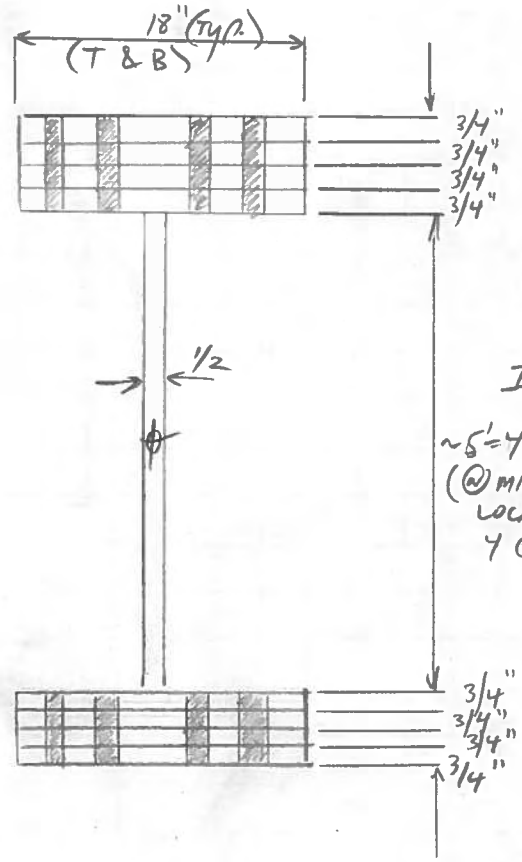

$$I_g = 1/12(1/2)(64)^3 + 8(1/12(18)(3/4)^3) + 2(3/4)(18)(64/2 + 0.75/2)^2 + 2(3/4)(18)(64/2 + 0.75 + 0.75/2)^2 + 2(3/4)(18)(64/2 + 0.75 + 0.75 + 0.75/2)^2 + 2(3/4)(18)(64/2 + 0.75 + 0.75 + 0.75 + 0.75/2)^2$$

$$= 10922.7 + 5.06 + 28299.8 + 29626.2 + 30982.9 + 32370$$

$$I_g = \underline{132206.7 \text{ in}^4}$$

DEDUCT: $8\left[1/12(7/8)(4 \times 3/4)^3\right] + 8\left[(7/8)(3)(64/2 + 1.5)^2\right]$

$$= 15.75 \text{ in}^4 + 23567.25 \text{ in}^4$$

$$= 23583 \text{ in}^4$$

$$I_{NET} = 132206.7 - 23583$$

$$= \underline{108623.7 \text{ in}^4}$$

$$I_g / I_{NET} = 132206.7 \text{ in}^4 / 108623.7 \text{ in}^4 = 1.217$$

$$\approx 1.22$$

$\therefore$ 22% INCREASE

MAX σ_{RANGE} = 5.64 ksi × 1.22

= 6.88 < 7 ksi $\therefore$ OK FOR CATEGORY D INFINITE LIFE

Project:	BROADWAY BRIDGE	Computed:	KG	Date:	1/17/17
Subject:	FATIGUE ANALYSIS	Checked:	MMD	Date:	2/14/17
Task:	SOUTH APP: THRU GIRDER	Page:	1	of:	THRU
Job #:		No:			

SOUTH APPROACH: THRU - GIRDER

RUN G1 (G2 OPPOSITE HAND) DUE TO SLIGHTLY LONGER SPAN.

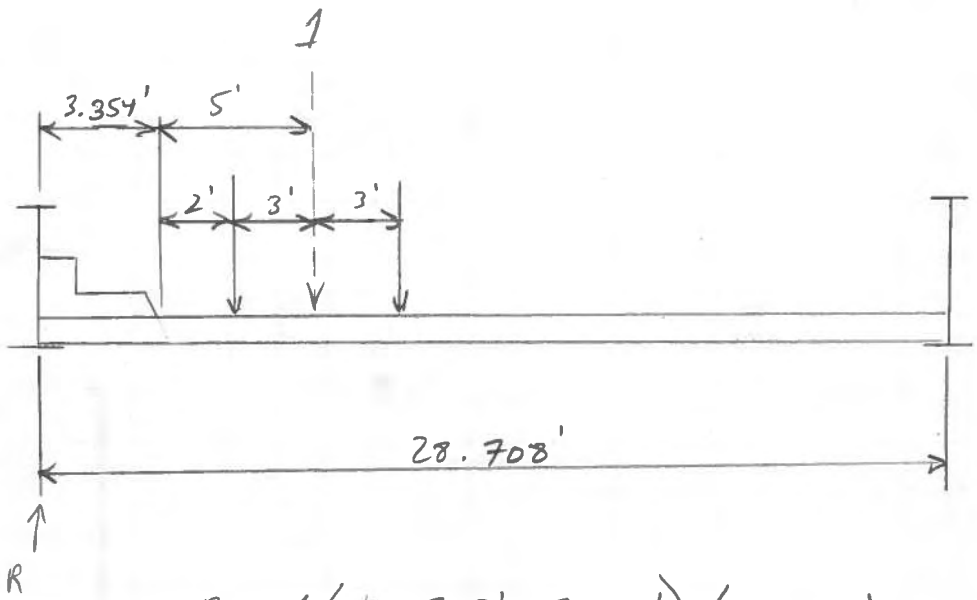

$R = 1(28.708' - 8.354')/28.708'$

$= 0.709$ LANES $\times$ 2 WHEELS

$= 1.418$ WHEELS (FATIGUE)

THRU GIRDER 1 SOUTH APPROACH.STR

STLBRIDGE LRFD

STEEL BRIDGE DESIGN SOFTWARE

Copyright 2014 BRIDGESOFT, Inc. All Rights Reserved

STRESS OUTPUT

Title: Thur Girder 1 South Approach
Input Filename: THRU GIRDER 1 SOUTH APPROACH
Output Filename: THRU GIRDER 1 SOUTH APPROACH.STR
Time:15:12:46
Date:01-17-2017
AASHTO LRFD Code: 7TH Edition

♀

Thur Girder 1 South Approach 01-17-2017 15:12:46 STLBRIDGE LRFD Page 1

--- INPUT ECHO ---

"2DBRIDGE I Girder"
"ENGLISH"
"Thur Girder 1 South Approach"

Page 1

THRU GIRDER 1 SOUTH APPROACH.STR

```
"LRFD v61"
0
1,"HL93",8,"0",0,0,0,0,0,0,0,0
3000,150,13,0,2.5,490,3155.9,29000,9.1,27.3
1,10,0,1.5,1.25,1.5,1.75
0,0,0
1,1,1.3
0,0,1.5
1.25,1.5,1.75
1.25,1.55,1.8,1.33,1,1
1.25,1.5,1.6
1.3,1.3,1
1,1,3,0,0,0,1,0
113,0,0
1.418,1.418,1.418,1.418,1.418
0
0
0
0
1,5,54,55.8,0
1,13,55.8,58.68,0
1,23,58.68,62.28,0
1,35,62.28,66.612,0
1,80,66.612,77.544,0
1,91,77.544,79.176,0
1,102,79.176,80.796,0
1,113,80.796,82.428,0
2,5,18,.75,36
2,13,18,1.5,36
2,23,18,2.25,36
2,35,18,3,36
2,80,18,3,36
2,91,18,2.25,36
2,102,18,1.5,36
2,113,18,.75,36
3,5,18,.75,36
3,13,18,1.5,36
3,23,18,2.25,36
3,35,18,3,36
3,80,18,3,36
3,91,18,2.25,36
3,102,18,1.5,36
3,113,18,.75,36
4,113,1,28.708,0
5,113,0,0,0
6,113,0,0,0
7,5,0,.5,36
♀
 Thur Girder 1 South Approach  01-17-2017  15:12:46  STLBRIDGE LRFD Page  2
                                --- INPUT ECHO ---
7,13,0,.5,36
7,23,0,.5,36
7,35,0,.5,36
7,80,0,.5,36
7,91,0,.5,36
7,102,0,.5,36
7,113,99999,.5,36
♀
```

--- FATIGUE REPORT ---

All Units: ksi

SPAN 1 - FATIGUE STRESS RANGE (ksi) -
(EXT - EXTREME FIBER, 4T=4*tw, 6T=6*tw)

LOCA	REBAR RANGE	-----TOP FLANGE----- EXT	4T	6T	-----BOTTOM FLANGE----- EXT	INS	4T	6T
1.0	0.00	0.00	0.00	0.00	0.00	0.00	0.00	0.00

Page 5

THRU GIRDER 1 SOUTH APPROACH.STR

1.044	0.00	0.00	0.00	0.00	0.00	0.00	0.00	0.00
1.044	0.00	0.00	0.00	0.00	0.00	0.00	0.00	0.00
1.1	0.00	-4.80	-4.25	-4.10	4.80	4.57	4.25	4.10
1.115	0.00	-5.26	-4.67	-4.49	5.26	5.01	4.67	4.49
1.115	0.00	-3.70	-3.20	-3.08	3.70	3.44	3.20	3.08
1.2	0.00	-5.41	-4.72	-4.55	5.41	5.04	4.72	4.55
1.203	0.00	-5.45	-4.75	-4.59	5.45	5.08	4.75	4.59
1.204	0.00	-4.20	-3.59	-3.46	4.20	3.83	3.59	3.46
1.3	0.00	-5.02	-4.33	-4.19	5.02	4.61	4.33	4.19
1.310	0.00	-5.05	-4.35	-4.21	5.05	4.63	4.35	4.21
1.310	0.00	-5.05	-4.35	-4.22	5.05	4.63	4.35	4.22
1.4	0.00	-5.37	-4.65	-4.51	5.37	4.94	4.65	4.51
1.5	0.00	-5.13	-4.47	-4.34	5.13	4.73	4.47	4.34
1.6	0.00	-4.94	-4.32	-4.20	4.94	4.57	4.32	4.20
1.7	0.00	-4.24	-3.73	-3.63	4.24	3.93	3.73	3.63
1.708	0.00	-4.15	-3.65	-3.55	4.15	3.85	3.65	3.55
1.708	0.00	-5.34	-4.79	-4.66	5.34	5.05	4.79	4.66
1.8	0.00	-4.12	-3.70	-3.60	4.12	3.90	3.70	3.60
1.805	0.00	-4.03	-3.62	-3.52	4.03	3.81	3.62	3.52
1.805	0.00	-5.64	-5.16	-5.02	5.64	5.43	5.16	5.02
1.9	0.00	-3.26	-2.99	-2.91	3.26	3.14	2.99	2.91
1.903	0.00	-3.17	-2.91	-2.83	3.17	3.06	2.91	2.83
1.903	0.00	-5.28	-4.93	-4.80	5.28	5.18	4.93	4.80
2.0	0.00	0.00	0.00	0.00	0.00	0.00	0.00	0.00

Note: For locations which do not experience tensile stresses
the fatigue stress range is output as a negative number.

Max stress
5.64 ksi * 1.22 = 6.88 ksi

Broadway Bridge Fatigue Details

South Approach (Units 2 and 3)

Fatigue Details of Concern:

- Rivet connection to cover plates and web-to-stiffener angles

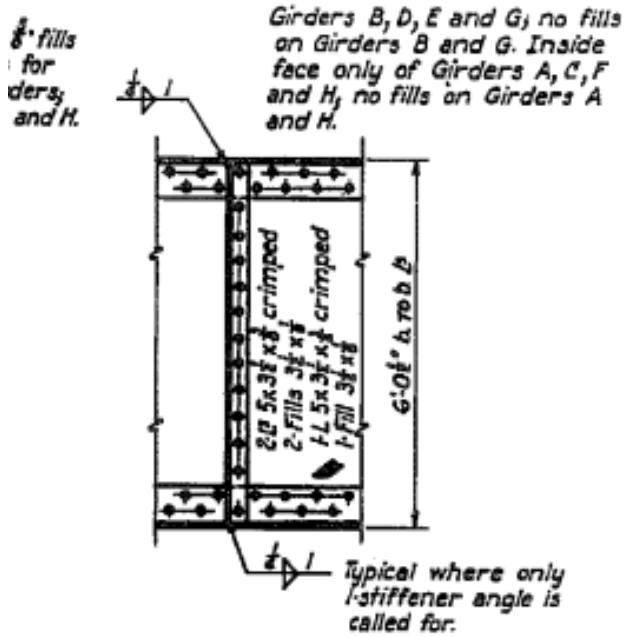

INTERMEDIATE STIFFENER

- Small weld connecting stiffeners to top flanges of girder

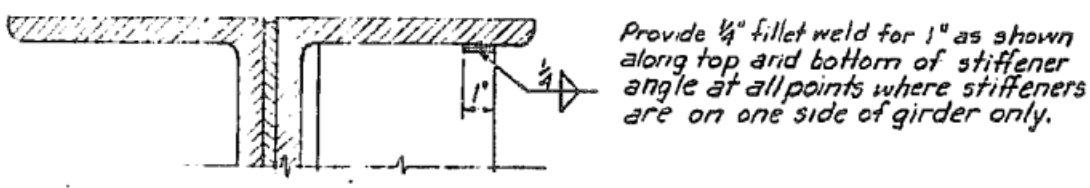

- Miscellaneous attachments and open holes

Project:	BROADWAY BRIDGE	Computed:	KG	Date:	1/10/17
Subject:	FATIGUE ANALYSIS	Checked:	MMD	Date:	2/7/17
Task:	SOUTH APPROACH	Page:	1	of:	SOUTH
Job #:	133-10047358	No:			

SOUTH APPROACH : UNITS 2 AND 3

- PERFORM FATIGUE ANALYSIS FOR GIRDERS, FLOORBEAMS, AND STRINGERS FOR UNITS 2 AND 3 OF SOUTHBOUND APPROACH. USE STLBRIDGE FOR GIRDER RUNS.

UNIT 3

- PERFORM 4 RUNS FOR UNIT 3:
  - GIRDER H: RUN AS EXTERIOR, VARY GIRDER SPACING AND OVERHANGS WITH GIRDER SPACING TOOL
  - GIRDER G: RUN AS INTERIOR GIRDER, VARY GIRDER SPACING, LET STLBRIDGE CALC DF'S
  - GIRDER F: RUN 1: RUN AS INTERIOR GIRDER FOR SPANS 2,3,4
    RUN 2: RUN AS EXT. GIRDER W/ LEVER RULE FOR SPANS 1 AND 5.

H: BASE SHAPE - GROSS SECTION

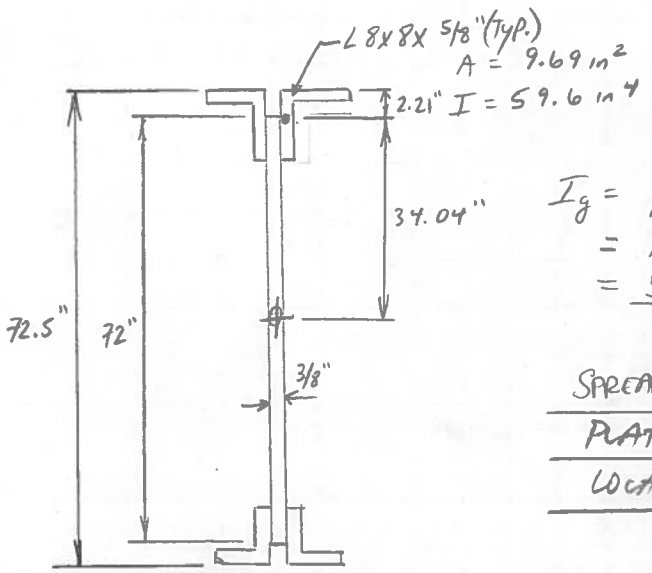

$$I_g = 1/12(3/8)(72)^3 + 4(59.6\,in^4 + 9.69(34.04)^2)$$
$$= 1164 + 45150.45$$
$$= \underline{56814\ in^4}$$

SPREADSHEET WRITTEN TO DETERMINE EQUIVALENT PLATE GIRDER DIMENSIONS AT EVERY LOCATION TO BE ABLE TO UTILIZE STLBRIDGE

Project:	BROADWAY BRIDGE	Computed:	KG	Date:	1/12/17
Subject:	FATIGUE ANALYSIS	Checked:	MMD	Date:	2/7/17
Task:	SOUTH APPROACH - UNIT 2	Page:	1	of:	UNIT 2
Job #:	133-10047358	No:			

BASE SHAPE - GROSS SECTION : UNIT 2, GIRDER F, 5/8" WEB SECTION

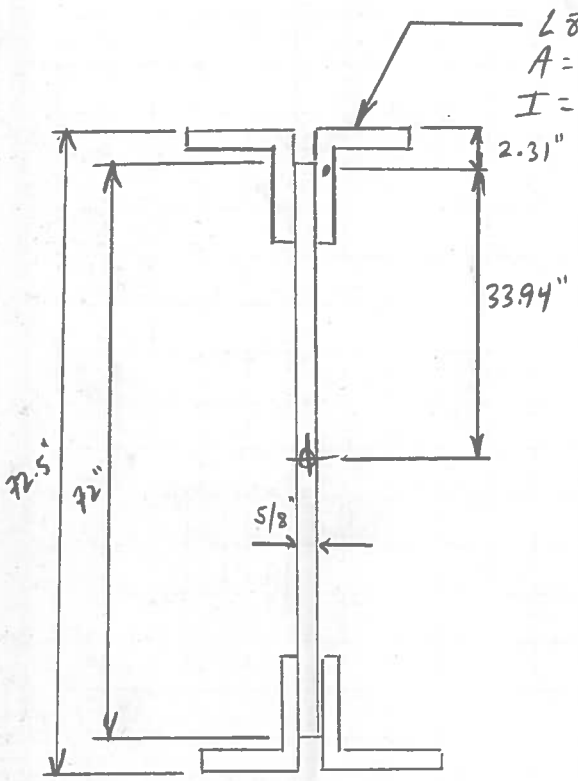

w/ 5/8" WEB

$$I_g = 1/12(5/8)(72)^3 + 4(79.7) + 4(13.3)(33.94)^2$$
$$= \underline{81041.1 \text{ in}^4 \text{ w/ } 5/8\text{" WEB}}$$

w/ 3/8" WEB

$$I_g = 1/12(3/8)(72)^3 + 4(79.7) + 4(13.3)(33.94)^2$$
$$= \underline{73265.14 \text{ in}^4 \text{ w/ } 3/8\text{" WEB}}$$

Project:	BROADWAY BRIDGE	Computed:	KG	Date:	1/11/17
Subject:	FATIGUE ANALYSIS	Checked:	MMD	Date:	2/7/17
Task:	SOUTH APPROACH	Page:	3	of:	SOUTH
Job #:	133-10047358	No:			

F: BASE SHAPE - GROSS SECTION

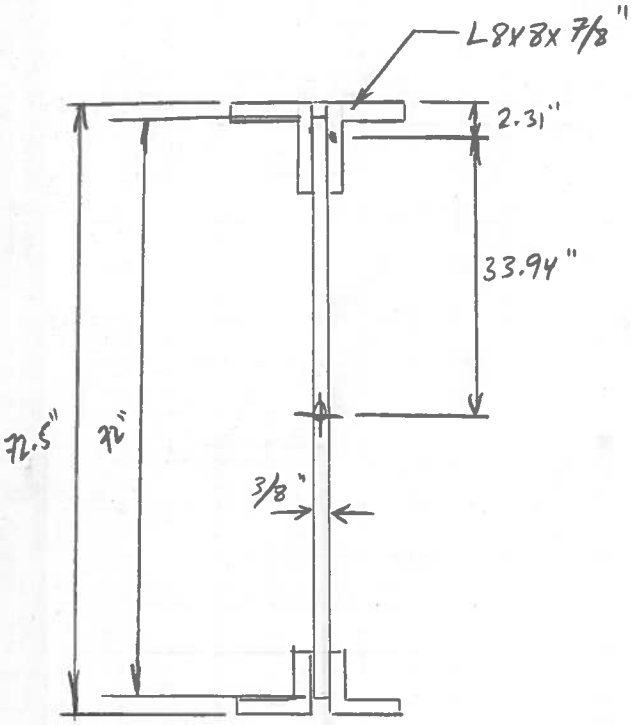

$A = 13.3 \text{ in}^2$
$I = 79.7 \text{ in}^4$

$$I_g = 1/12(3/8)(72)^3 + 4(79.7 + 13.3(33.94)^2)$$
$$= 11664 + 61601.14 \text{ in}^4$$
$$= \underline{73265 \text{ in}^4}$$

Project:	BROADWAY BRIDGE	Computed:	KG	Date:	1/11/17
Subject:	FATIGUE ANALYSIS	Checked:	MMD	Date:	2/7/17
Task:	SOUTH APPROACH	Page:	2	of:	SOUTH
Job #:	133-10047358	No:			

G: BASE SHAPE - GROSS SECTION

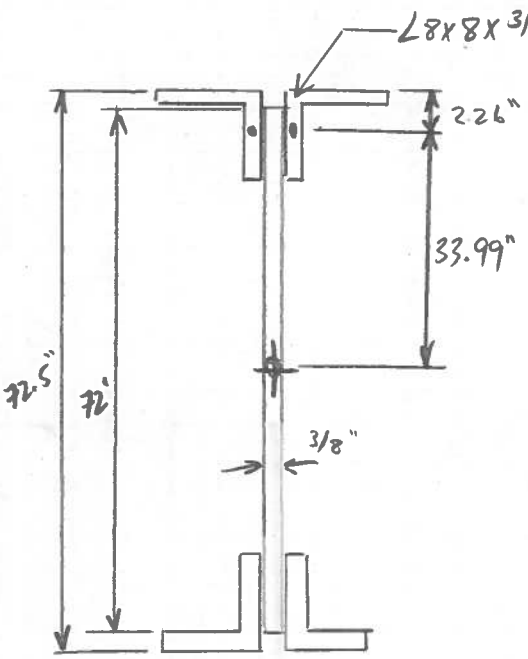

$A = 11.5 \text{ in}^2$

$I = 69.9 \text{ in}^4$

$$I_g = 1/12(3/8)(72)^3 + 4(69.9 \text{ in}^4 + 11.5(33.99)^2)$$
$$= 11664 + 53424 \text{ in}^4$$
$$= \underline{65088 \text{ in}^4}$$

Project:	BROADWAY BRIDGE	Computed:	KG	Date:	1/17/17
Subject:	FATIGUE ANALYSIS	Checked:	MMD	Date:	2/7/17
Task:	NET SECTION	Page:	1	of:	NET
Job #:	133-10047358	No:			

NET SECTION AT PANEL POINT

- PERFORM FOR 1 COVER PLATED SECTION AT A PANEL POINT
- ASSUME RIVET HOLE LOCATIONS SYMMETRICAL TO CENTROID

USE GIRDER F, 3/8" WEB, 4-L 8"x8"x7/8", ONE 18"x5/8" CP

- 7/8" RIVET HOLES, SPACING AND NUMBER OF RIVETS ASSUMED BASED ON DESIGN PLANS (NO SHOPDRAWINGS PROVIDED)

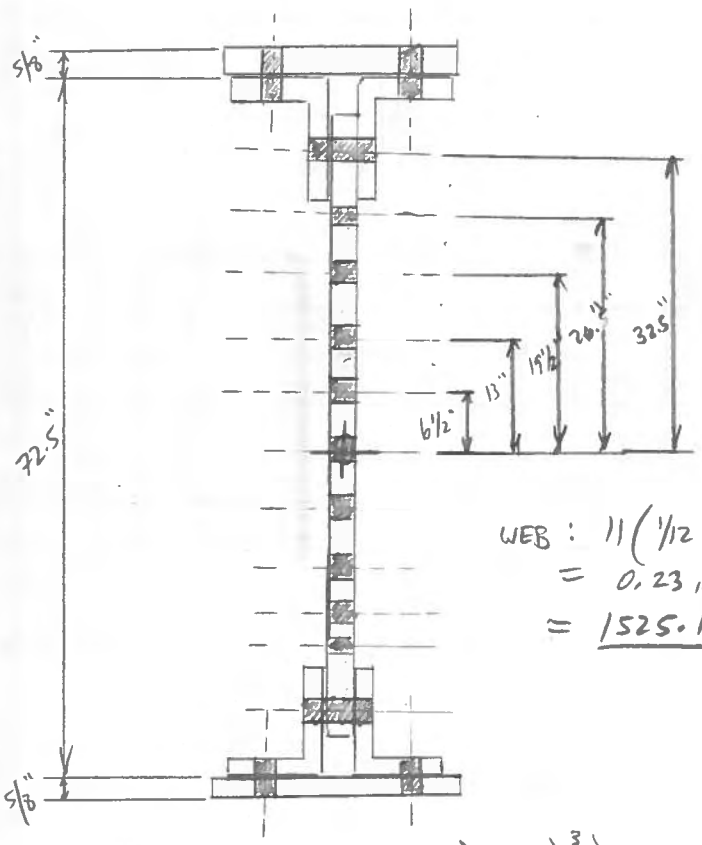

$I_g = 103344 \text{ in}^4$

LENGTHS TYP. TOP & BOTTOM

DEDUCT:

WEB: $11\left(\frac{1}{12}\left(\frac{3}{8}\right)\left(\frac{7}{8}\right)^3\right) + 2\left(\frac{3}{8}\right)\left(\frac{7}{8}\right)\left(6.5^2 + 13^2 + 19.5^2 + 26^2 + 32.5^2\right)$

$= 0.23 \text{ in}^4 + 1524.96 \text{ in}^4$

$= \underline{1525.19 \text{ in}^4}$

ANGLES: $4\left(\frac{1}{12}\left(\frac{7}{8}\right)\left(\frac{7}{8}\right)^3\right) + 4\left(\frac{7}{8}\right)\left(\frac{7}{8}\right)\left(32.5^2\right)$

$+ 4\left(\frac{1}{12}\left(\frac{7}{8}\right)\left(\frac{7}{8}\right)^3\right) + 4\left(\frac{7}{8}\right)\left(\frac{7}{8}\right)\left(72.5/2 - 0.875/2\right)^2$

$= 0.195 + 3234.77 + 0.195 + 3927.8$

$= \underline{7162.96 \text{ in}^4}$

COVER PLATES: $4\left(\frac{1}{12}\left(\frac{7}{8}\right)\left(\frac{5}{8}\right)^3\right) + 4\left(\frac{7}{8}\right)\left(\frac{5}{8}\right)\left(72.5/2 + 0.625/2\right)^2$

$= 0.071 \text{ in}^4 + 2924.29 \text{ in}^4$

$= \underline{2924.36 \text{ in}^4}$

Σ WEB + ANGLES + CP'S $= 11612.51 \text{ in}^4$

$I_{NET} = 103344 \text{ in}^4 - 11612.51 \text{ in}^4$

$= 91731.49 \text{ in}^4$

$I_g / I_{net} = \frac{103344}{91732} \approx 1.127$

$\approx \underline{13\% \text{ INCREASE}}$

Equivalent Plate Girder Input
South Approach Girders

			Base Built-up Shape	
			I_{xx}	d
			in^4	in
Girder H	Unit 3	One 72x3/8" Web+Four 8x8x5/8	56814.00	72.5
Girder H	Unit 3	One 72x3/8" Web+Four 8x8x5/8 + 1 CP 18x1/2	56814.00	72.5
Girder H	Unit 3	One 72x3/8" Web+Four 8x8x5/8 + 2CP 18x1/2	56814.00	72.5
Girder H	Unit 3	One 72x3/8" Web+Four 8x8x5/8 + 3CP 18x1/2	56814.00	72.5
Girder H	Unit 3	One 72x3/8" Web+Four 8x8x5/8 + 1CP 18x3/8	56814.00	72.5
Girder H	Unit 3	One 72x3/8" Web+Four 8x8x5/8 + 2CP 18x3/8	56814.00	72.5
Girder H	Unit 3	One 72x3/8" Web+Four 8x8x5/8 + 1CP 18x5/8	56814.00	72.5
Girder H	Unit 3	One 72x3/8" Web+Four 8x8x5/8 + 1CP 18x5/8 + 1CP 18x1/2	56814.00	72.5
Girder G	Unit 3	One 72x3/8" Web+Four 8x8x3/4	65088.00	72.5
Girder G	Unit 3	One 72x3/8" Web+Four 8x8x3/4 + 1CP 18x5/8	65088.00	72.5
Girder G	Unit 3	One 72x3/8" Web+Four 8x8x3/4 + 1CP 18x5/8 + 1CP18x1/2	65088.00	72.5
Girder G	Unit 3	One 72x3/8" Web+Four 8x8x3/4 + 1CP 18x3/4	65088.00	72.5
Girder G	Unit 3	One 72x3/8" Web+Four 8x8x3/4 + 1CP 18x3/4 + 1CP 18x1/2	65088.00	72.5
Girder F	Unit 3	One 72x3/8" Web+Four 8x8x7/8	73265.00	72.5
Girder F	Unit 3	One 72x3/8" Web+Four 8x8x7/8 + 1CP 18x5/8	73265.00	72.5
Girder F	Unit 3	One 72x3/8" Web+Four 8x8x7/8 + 2CP 18x5/8	73265.00	72.5
Girder F	Unit 3	One 72x3/8" Web+Four 8x8x7/8 + 1CP 18x3/4	73265.00	72.5
Girder F	Unit 3	One 72x3/8" Web+Four 8x8x7/8 + 2CP 18x3/4	73265.00	72.5
Girder F	Unit 3	One 72x3/8" Web+Four 8x8x7/8 + 3CP 18x3/4	73265.00	72.5
Girder F	Unit 3	One 72x3/8" Web+Four 8x8x7/8 + 3CP 18x5/8	73265.00	72.5
Girder F	Unit 2	One 72x5/8" Web+Four 8x8x7/8	81041.10	72.5
Girder F	Unit 2	One 72x5/8" Web+Four 8x8x7/8+ 1CP 18x5/8"	81041.10	72.5
Girder F	Unit 2	One 72x5/8" Web+Four 8x8x7/8+ 2CP 18x5/8"	81041.10	72.5
Girder F	Unit 2	One 72x3/8" Web+Four 8x8x7/8+ 2CP 18x5/8"	73265.14	72.5
Girder F	Unit 2	One 72x3/8" Web+Four 8x8x7/8+ 1CP 18x5/8"	73265.14	72.5
Girder F	Unit 2	One 72x3/8" Web+Four 8x8x7/8	73265.14	72.5
Girder F	Unit 2	One 72x3/8" Web+Four 8x8x7/8 + 1CP 18x3/4"	73265.14	72.5
Girder F	Unit 2	One 72x3/8" Web+Four 8x8x7/8 + 2CP 18x3/4"	73265.14	72.5
Girder F	Unit 2	One 72x3/8" Web+Four 8x8x7/8 + 2CP 18x3/4" +1CP18x5/8"	73265.14	72.5
Girder F	Unit 2	One 72x3/8" Web+Four 8x8x7/8 +1CP18x5/8"	73265.14	72.5
Girder F	Unit 2	One 72x3/8" Web+Four 8x8x7/8 +1CP18x5/8"+ 1 CP18x1/2	73265.14	72.5

Equivalent Plate Girder Input
South Approach Girders

			Top Flange Cover Plate 1					
			b_f	t_f	I	A	d	$I+Ad^2$
			in	in	in^4	in^2	in	in^4
Girder H	Unit 3	One 72x3/8" Web+Four 8x8x5/8	0	0	0	0	36.25	0
Girder H	Unit 3	One 72x3/8" Web+Four 8x8x5/8 + 1 CP 18x1/2	18	0.500	0.188	9.00	36.50	11990.44
Girder H	Unit 3	One 72x3/8" Web+Four 8x8x5/8 + 2CP 18x1/2	18	0.500	0.188	9.00	36.50	11990.44
Girder H	Unit 3	One 72x3/8" Web+Four 8x8x5/8 + 3CP 18x1/2	18	0.500	0.188	9.00	36.50	11990.44
Girder H	Unit 3	One 72x3/8" Web+Four 8x8x5/8 + 1CP 18x3/8	18	0.375	0.079	6.75	36.44	8962.00
Girder H	Unit 3	One 72x3/8" Web+Four 8x8x5/8 + 2CP 18x3/8	18	0.375	0.079	6.75	36.44	8962.00
Girder H	Unit 3	One 72x3/8" Web+Four 8x8x5/8 + 1CP 18x5/8	18	0.625	0.366	11.25	36.56	15039.55
Girder H	Unit 3	One 72x3/8" Web+Four 8x8x5/8 + 1CP 18x5/8 + 1CP 18x1/2	18	0.625	0.366	11.25	36.56	15039.55
Girder G	Unit 3	One 72x3/8" Web+Four 8x8x3/4	0	0	0	0	36.25	0
Girder G	Unit 3	One 72x3/8" Web+Four 8x8x3/4 + 1CP 18x5/8	18	0.625	0.366	11.25	36.56	15039.55
Girder G	Unit 3	One 72x3/8" Web+Four 8x8x3/4 + 1CP 18x5/8 + 1CP18x1/2	18	0.625	0.366	11.25	36.56	15039.55
Girder G	Unit 3	One 72x3/8" Web+Four 8x8x3/4 + 1CP 18x3/4	18	0.750	0.633	13.50	36.63	18109.41
Girder G	Unit 3	One 72x3/8" Web+Four 8x8x3/4 + 1CP 18x3/4 + 1CP 18x1/2	18	0.750	0.633	13.50	36.63	18109.41
Girder F	Unit 3	One 72x3/8" Web+Four 8x8x7/8	0	0	0	0	36.25	0
Girder F	Unit 3	One 72x3/8" Web+Four 8x8x7/8 + 1CP 18x5/8	18	0.625	0.366	11.25	36.56	15039.55
Girder F	Unit 3	One 72x3/8" Web+Four 8x8x7/8 + 2CP 18x5/8	18	0.625	0.366	11.25	36.56	15039.55
Girder F	Unit 3	One 72x3/8" Web+Four 8x8x7/8 + 1CP 18x3/4	18	0.750	0.633	13.50	36.63	18109.41
Girder F	Unit 3	One 72x3/8" Web+Four 8x8x7/8 + 2CP 18x3/4	18	0.750	0.633	13.50	36.63	18109.41
Girder F	Unit 3	One 72x3/8" Web+Four 8x8x7/8 + 3CP 18x3/4	18	0.750	0.633	13.50	36.63	18109.41
Girder F	Unit 3	One 72x3/8" Web+Four 8x8x7/8 + 3CP 18x5/8	18	0.625	0.366	11.25	36.56	15039.55
Girder F	Unit 2	One 72x5/8" Web+Four 8x8x7/8	0	0	0	0	36.25	0
Girder F	Unit 2	One 72x5/8" Web+Four 8x8x7/8+ 1CP 18x5/8"	18	0.625	0.366	11.25	36.56	15039.55
Girder F	Unit 2	One 72x5/8" Web+Four 8x8x7/8+ 2CP 18x5/8"	18	0.625	0.366	11.25	36.56	15039.55
Girder F	Unit 2	One 72x3/8" Web+Four 8x8x7/8+ 2CP 18x5/8"	18	0.625	0.366	11.25	36.56	15039.55
Girder F	Unit 2	One 72x3/8" Web+Four 8x8x7/8+ 1CP 18x5/8"	18	0.625	0.366	11.25	36.56	15039.55
Girder F	Unit 2	One 72x3/8" Web+Four 8x8x7/8	0	0	0	0	36.25	0
Girder F	Unit 2	One 72x3/8" Web+Four 8x8x7/8 + 1CP 18x3/4"	18	0.750	0.633	13.50	36.63	18109.41
Girder F	Unit 2	One 72x3/8" Web+Four 8x8x7/8 + 2CP 18x3/4"	18	0.750	0.633	13.50	36.63	18109.41
Girder F	Unit 2	One 72x3/8" Web+Four 8x8x7/8 + 2CP 18x3/4" +1CP18x5/8"	18	0.750	0.633	13.50	36.63	18109.41
Girder F	Unit 2	One 72x3/8" Web+Four 8x8x7/8 +1CP18x5/8"	18	0.625	0.366	11.25	36.56	15039.55
Girder F	Unit 2	One 72x3/8" Web+Four 8x8x7/8 +1CP18x5/8"+ 1 CP18x1/2	18	0.625	0.366	11.25	36.5625	15039.55

Equivalent Plate Girder Input
South Approach Girders

			Bottom Flange Cover Plate 1					
			b_f	t_f	I	A	d	$I+Ad^2$
			in	in	in^4	in^2	in	in^4
Girder H	Unit 3	One 72x3/8" Web+Four 8x8x5/8	0	0	0	0	36.25	0
Girder H	Unit 3	One 72x3/8" Web+Four 8x8x5/8 + 1 CP 18x1/2	18	0.500	0.188	9	36.5	11990.438
Girder H	Unit 3	One 72x3/8" Web+Four 8x8x5/8 + 2CP 18x1/2	18	0.500	0.188	9	36.5	11990.438
Girder H	Unit 3	One 72x3/8" Web+Four 8x8x5/8 + 3CP 18x1/2	18	0.500	0.188	9	36.5	11990.438
Girder H	Unit 3	One 72x3/8" Web+Four 8x8x5/8 + 1CP 18x3/8	18	0.375	0.079	6.75	36.4375	8961.9961
Girder H	Unit 3	One 72x3/8" Web+Four 8x8x5/8 + 2CP 18x3/8	18	0.375	0.079	6.75	36.4375	8961.9961
Girder H	Unit 3	One 72x3/8" Web+Four 8x8x5/8 + 1CP 18x5/8	18	0.625	0.366	11.25	36.5625	15039.551
Girder H	Unit 3	One 72x3/8" Web+Four 8x8x5/8 + 1CP 18x5/8 + 1CP 18x1/2	18	0.625	0.366	11.25	36.5625	15039.551
Girder G	Unit 3	One 72x3/8" Web+Four 8x8x3/4	0	0	0	0	36.25	0
Girder G	Unit 3	One 72x3/8" Web+Four 8x8x3/4 + 1CP 18x5/8	18	0.625	0.366	11.25	36.5625	15039.551
Girder G	Unit 3	One 72x3/8" Web+Four 8x8x3/4 + 1CP 18x5/8 + 1CP18x1/2	18	0.625	0.366	11.25	36.5625	15039.551
Girder G	Unit 3	One 72x3/8" Web+Four 8x8x3/4 + 1CP 18x3/4	18	0.750	0.633	13.5	36.625	18109.406
Girder G	Unit 3	One 72x3/8" Web+Four 8x8x3/4 + 1CP 18x3/4 + 1CP 18x1/2	18	0.750	0.633	13.5	36.625	18109.406
Girder F	Unit 3	One 72x3/8" Web+Four 8x8x7/8	0	0	0	0	36.25	0
Girder F	Unit 3	One 72x3/8" Web+Four 8x8x7/8 + 1CP 18x5/8	18	0.625	0.366	11.25	36.5625	15039.551
Girder F	Unit 3	One 72x3/8" Web+Four 8x8x7/8 + 2CP 18x5/8	18	0.625	0.366	11.25	36.5625	15039.551
Girder F	Unit 3	One 72x3/8" Web+Four 8x8x7/8 + 1CP 18x3/4	18	0.750	0.633	13.5	36.625	18109.406
Girder F	Unit 3	One 72x3/8" Web+Four 8x8x7/8 + 2CP 18x3/4	18	0.750	0.633	13.5	36.625	18109.406
Girder F	Unit 3	One 72x3/8" Web+Four 8x8x7/8 + 3CP 18x3/4	18	0.750	0.633	13.5	36.625	18109.406
Girder F	Unit 3	One 72x3/8" Web+Four 8x8x7/8 + 3CP 18x5/8	18	0.625	0.366	11.25	36.5625	15039.551
Girder F	Unit 2	One 72x5/8" Web+Four 8x8x7/8	0	0	0	0	36.25	0
Girder F	Unit 2	One 72x5/8" Web+Four 8x8x7/8+ 1CP 18x5/8"	18	0.625	0.366	11.25	36.5625	15039.551
Girder F	Unit 2	One 72x5/8" Web+Four 8x8x7/8+ 2CP 18x5/8"	18	0.625	0.366	11.25	36.5625	15039.551
Girder F	Unit 2	One 72x3/8" Web+Four 8x8x7/8+ 2CP 18x5/8"	18	0.625	0.366	11.25	36.5625	15039.551
Girder F	Unit 2	One 72x3/8" Web+Four 8x8x7/8+ 1CP 18x5/8"	18	0.625	0.366	11.25	36.5625	15039.551
Girder F	Unit 2	One 72x3/8" Web+Four 8x8x7/8	0	0	0	0	36.25	0
Girder F	Unit 2	One 72x3/8" Web+Four 8x8x7/8 + 1CP 18x3/4"	18	0.750	0.633	13.5	36.625	18109.406
Girder F	Unit 2	One 72x3/8" Web+Four 8x8x7/8 + 2CP 18x3/4"	18	0.750	0.633	13.5	36.625	18109.406
Girder F	Unit 2	One 72x3/8" Web+Four 8x8x7/8 + 2CP 18x3/4" +1CP18x5/8"	18	0.750	0.633	13.5	36.625	18109.406
Girder F	Unit 2	One 72x3/8" Web+Four 8x8x7/8 +1CP18x5/8"	18	0.625	0.366	11.25	36.5625	15039.551
Girder F	Unit 2	One 72x3/8" Web+Four 8x8x7/8 +1CP18x5/8"+ 1 CP18x1/2	18	0.625	0.366	11.25	36.5625	15039.551

Equivalent Plate Girder Input
South Approach Girders

			Top Flange Cover Plate 2					
			b_f	t_f	I	A	d	$I+Ad^2$
			in	in	in^4	in^2	in	in^4
Girder H	Unit 3	One 72x3/8" Web+Four 8x8x5/8	0	0	0	0	36.25	0
Girder H	Unit 3	One 72x3/8" Web+Four 8x8x5/8 + 1 CP 18x1/2	0	0	0	0	36.75	0
Girder H	Unit 3	One 72x3/8" Web+Four 8x8x5/8 + 2CP 18x1/2	18	0.500	0.188	9	37.00	12321.188
Girder H	Unit 3	One 72x3/8" Web+Four 8x8x5/8 + 3CP 18x1/2	18	0.500	0.188	9	37.00	12321.188
Girder H	Unit 3	One 72x3/8" Web+Four 8x8x5/8 + 1CP 18x3/8	0	0	0	0	36.63	0
Girder H	Unit 3	One 72x3/8" Web+Four 8x8x5/8 + 2CP 18x3/8	18	0.375	0.079	6.75	36.81	9147.4102
Girder H	Unit 3	One 72x3/8" Web+Four 8x8x5/8 + 1CP 18x5/8	0	0	0	0	36.88	0
Girder H	Unit 3	One 72x3/8" Web+Four 8x8x5/8 + 1CP 18x5/8 + 1CP 18x1/2	18	0.5	0.188	9	37.13	12404.578
Girder G	Unit 3	One 72x3/8" Web+Four 8x8x3/4	0	0	0	0	36.25	0
Girder G	Unit 3	One 72x3/8" Web+Four 8x8x3/4 + 1CP 18x5/8	0	0	0	0	36.88	0
Girder G	Unit 3	One 72x3/8" Web+Four 8x8x3/4 + 1CP 18x5/8 + 1CP18x1/2	18	0.500	0.188	9	37.13	12404.578
Girder G	Unit 3	One 72x3/8" Web+Four 8x8x3/4 + 1CP 18x3/4	0	0	0	0	37.00	0
Girder G	Unit 3	One 72x3/8" Web+Four 8x8x3/4 + 1CP 18x3/4 + 1CP 18x1/2	18	0.500	0.188	9	37.25	12488.25
Girder F	Unit 3	One 72x3/8" Web+Four 8x8x7/8	0	0	0	0	36.25	0
Girder F	Unit 3	One 72x3/8" Web+Four 8x8x7/8 + 1CP 18x5/8	0	0	0	0	36.88	0
Girder F	Unit 3	One 72x3/8" Web+Four 8x8x7/8 + 2CP 18x5/8	18	0.625	0.366	11.25	37.19	15558.105
Girder F	Unit 3	One 72x3/8" Web+Four 8x8x7/8 + 1CP 18x3/4	0	0	0	0	37.00	0
Girder F	Unit 3	One 72x3/8" Web+Four 8x8x7/8 + 2CP 18x3/4	18	0.750	0.633	13.50	37.38	18858.656
Girder F	Unit 3	One 72x3/8" Web+Four 8x8x7/8 + 3CP 18x3/4	18	0.750	0.633	13.50	37.38	18858.656
Girder F	Unit 3	One 72x3/8" Web+Four 8x8x7/8 + 3CP 18x5/8	18	0.625	0.366	11.25	37.19	15558.105
Girder F	Unit 2	One 72x5/8" Web+Four 8x8x7/8	0	0	0	0	36.25	0
Girder F	Unit 2	One 72x5/8" Web+Four 8x8x7/8+ 1CP 18x5/8"	0	0	0	0	36.88	0
Girder F	Unit 2	One 72x5/8" Web+Four 8x8x7/8+ 2CP 18x5/8"	18	0.625	0.366	11.25	37.19	15558.105
Girder F	Unit 2	One 72x3/8" Web+Four 8x8x7/8+ 2CP 18x5/8"	18	0.625	0.366	11.25	37.19	15558.105
Girder F	Unit 2	One 72x3/8" Web+Four 8x8x7/8+ 1CP 18x5/8"	0	0	0	0	36.88	0
Girder F	Unit 2	One 72x3/8" Web+Four 8x8x7/8	0	0	0	0	36.25	0
Girder F	Unit 2	One 72x3/8" Web+Four 8x8x7/8 + 1CP 18x3/4"	0	0	0	0	37.00	0
Girder F	Unit 2	One 72x3/8" Web+Four 8x8x7/8 + 2CP 18x3/4"	18	0.750	0.633	13.50	37.38	18858.656
Girder F	Unit 2	One 72x3/8" Web+Four 8x8x7/8 + 2CP 18x3/4" +1CP18x5/8"	18	0.750	0.633	13.50	37.38	18858.656
Girder F	Unit 2	One 72x3/8" Web+Four 8x8x7/8 +1CP18x5/8"	0	0	0	0	36.88	0
Girder F	Unit 2	One 72x3/8" Web+Four 8x8x7/8 +1CP18x5/8"+ 1 CP18x1/2	18	0.500	0.188	9.00	37.13	12404.578

Equivalent Plate Girder Input
South Approach Girders

			Bottom Flange Cover Plate 2					
			b_f	t_f	I	A	d	$I+Ad^2$
			in	in	in^4	in^2	in	in^4
Girder H	Unit 3	One 72x3/8" Web+Four 8x8x5/8	0	0	0	0	36.25	0
Girder H	Unit 3	One 72x3/8" Web+Four 8x8x5/8 + 1 CP 18x1/2	0	0	0	0	36.75	0
Girder H	Unit 3	One 72x3/8" Web+Four 8x8x5/8 + 2CP 18x1/2	18	0.500	0.188	9.00	37.00	12321.188
Girder H	Unit 3	One 72x3/8" Web+Four 8x8x5/8 + 3CP 18x1/2	18	0.500	0.188	9.00	37.00	12321.188
Girder H	Unit 3	One 72x3/8" Web+Four 8x8x5/8 + 1CP 18x3/8	0	0	0	0	36.63	0
Girder H	Unit 3	One 72x3/8" Web+Four 8x8x5/8 + 2CP 18x3/8	18	0.375	0.079	6.75	36.81	9147.4102
Girder H	Unit 3	One 72x3/8" Web+Four 8x8x5/8 + 1CP 18x5/8	0	0	0	0	36.88	0
Girder H	Unit 3	One 72x3/8" Web+Four 8x8x5/8 + 1CP 18x5/8 + 1CP 18x1/2	18	0.500	0.188	9.00	37.13	12404.578
Girder G	Unit 3	One 72x3/8" Web+Four 8x8x3/4	0	0	0	0	36.25	0
Girder G	Unit 3	One 72x3/8" Web+Four 8x8x3/4 + 1CP 18x5/8	0	0	0	0	36.88	0
Girder G	Unit 3	One 72x3/8" Web+Four 8x8x3/4 + 1CP 18x5/8 + 1CP18x1/2	0	0	0	0	36.88	0
Girder G	Unit 3	One 72x3/8" Web+Four 8x8x3/4 + 1CP 18x3/4	0	0	0	0	37.00	0
Girder G	Unit 3	One 72x3/8" Web+Four 8x8x3/4 + 1CP 18x3/4 + 1CP 18x1/2	18	0.500	0.188	9.00	37.25	12488.25
Girder F	Unit 3	One 72x3/8" Web+Four 8x8x7/8	0	0	0	0	36.25	0
Girder F	Unit 3	One 72x3/8" Web+Four 8x8x7/8 + 1CP 18x5/8	0	0	0	0	36.88	0
Girder F	Unit 3	One 72x3/8" Web+Four 8x8x7/8 + 2CP 18x5/8	18	0.625	0.366	11.25	37.19	15558.105
Girder F	Unit 3	One 72x3/8" Web+Four 8x8x7/8 + 1CP 18x3/4	0	0	0	0	37.00	0
Girder F	Unit 3	One 72x3/8" Web+Four 8x8x7/8 + 2CP 18x3/4	18	0.750	0.633	13.50	37.38	18858.656
Girder F	Unit 3	One 72x3/8" Web+Four 8x8x7/8 + 3CP 18x3/4	18	0.750	0.633	13.50	37.38	18858.656
Girder F	Unit 3	One 72x3/8" Web+Four 8x8x7/8 + 3CP 18x5/8	18	0.625	0.366	11.25	37.19	15558.105
Girder F	Unit 2	One 72x5/8" Web+Four 8x8x7/8	0	0	0	0	36.25	0
Girder F	Unit 2	One 72x5/8" Web+Four 8x8x7/8+ 1CP 18x5/8"	0	0	0	0	36.88	0
Girder F	Unit 2	One 72x5/8" Web+Four 8x8x7/8+ 2CP 18x5/8"	18	0.625	0.366	11.25	37.19	15558.105
Girder F	Unit 2	One 72x3/8" Web+Four 8x8x7/8+ 2CP 18x5/8"	18	0.625	0.366	11.25	37.19	15558.105
Girder F	Unit 2	One 72x3/8" Web+Four 8x8x7/8+ 1CP 18x5/8"	0	0	0	0	36.88	0
Girder F	Unit 2	One 72x3/8" Web+Four 8x8x7/8	0	0	0	0	36.25	0
Girder F	Unit 2	One 72x3/8" Web+Four 8x8x7/8 + 1CP 18x3/4"	0	0	0	0	37.00	0
Girder F	Unit 2	One 72x3/8" Web+Four 8x8x7/8 + 2CP 18x3/4"	18	0.750	0.633	13.50	37.38	18858.656
Girder F	Unit 2	One 72x3/8" Web+Four 8x8x7/8 + 2CP 18x3/4" +1CP18x5/8"	18	0.750	0.633	13.50	37.38	18858.656
Girder F	Unit 2	One 72x3/8" Web+Four 8x8x7/8 +1CP18x5/8"	0	0	0	0	36.88	0
Girder F	Unit 2	One 72x3/8" Web+Four 8x8x7/8 +1CP18x5/8"+ 1 CP18x1/2	18	0.500	0.188	9.00	37.13	12404.578

Equivalent Plate Girder Input
South Approach Girders

			Top Flange Cover Plate 3					
			b_f	t_f	I	A	d	$I+Ad^2$
			in	in	in^4	in^2	in	in^4
Girder H	Unit 3	One 72x3/8" Web+Four 8x8x5/8	0	0	0	0	36.25	0
Girder H	Unit 3	One 72x3/8" Web+Four 8x8x5/8 + 1 CP 18x1/2	0	0	0	0	36.75	0
Girder H	Unit 3	One 72x3/8" Web+Four 8x8x5/8 + 2CP 18x1/2	0	0	0	0	37.25	0
Girder H	Unit 3	One 72x3/8" Web+Four 8x8x5/8 + 3CP 18x1/2	18	0.500	0.188	9	37.50	12656.438
Girder H	Unit 3	One 72x3/8" Web+Four 8x8x5/8 + 1CP 18x3/8	0	0	0	0	36.63	0
Girder H	Unit 3	One 72x3/8" Web+Four 8x8x5/8 + 2CP 18x3/8	0	0	0	0	37.00	0
Girder H	Unit 3	One 72x3/8" Web+Four 8x8x5/8 + 1CP 18x5/8	0	0	0	0	36.88	0
Girder H	Unit 3	One 72x3/8" Web+Four 8x8x5/8 + 1CP 18x5/8 + 1CP 18x1/2	0	0	0	0	37.38	0
Girder G	Unit 3	One 72x3/8" Web+Four 8x8x3/4	0	0	0	0	36.25	0
Girder G	Unit 3	One 72x3/8" Web+Four 8x8x3/4 + 1CP 18x5/8	0	0	0	0	36.88	0
Girder G	Unit 3	One 72x3/8" Web+Four 8x8x3/4 + 1CP 18x5/8 + 1CP18x1/2	0	0	0	0	37.38	0
Girder G	Unit 3	One 72x3/8" Web+Four 8x8x3/4 + 1CP 18x3/4	0	0	0	0	37.00	0
Girder G	Unit 3	One 72x3/8" Web+Four 8x8x3/4 + 1CP 18x3/4 + 1CP 18x1/2	0	0	0	0	37.50	0
Girder F	Unit 3	One 72x3/8" Web+Four 8x8x7/8	0	0	0	0	36.25	0
Girder F	Unit 3	One 72x3/8" Web+Four 8x8x7/8 + 1CP 18x5/8	0	0	0	0	36.88	0
Girder F	Unit 3	One 72x3/8" Web+Four 8x8x7/8 + 2CP 18x5/8	0	0	0	0	37.50	0
Girder F	Unit 3	One 72x3/8" Web+Four 8x8x7/8 + 1CP 18x3/4	0	0	0	0	37.00	0
Girder F	Unit 3	One 72x3/8" Web+Four 8x8x7/8 + 2CP 18x3/4	0	0	0	0	37.75	0
Girder F	Unit 3	One 72x3/8" Web+Four 8x8x7/8 + 3CP 18x3/4	18	0.750	0.633	13.5	38.13	19623.094
Girder F	Unit 3	One 72x3/8" Web+Four 8x8x7/8 + 3CP 18x5/8	18	0.625	0.366	11.25	37.81	16085.449
Girder F	Unit 2	One 72x5/8" Web+Four 8x8x7/8	0	0	0	0	36.25	0
Girder F	Unit 2	One 72x5/8" Web+Four 8x8x7/8+ 1CP 18x5/8"	0	0	0	0	36.88	0
Girder F	Unit 2	One 72x5/8" Web+Four 8x8x7/8+ 2CP 18x5/8"	0	0	0	0	37.50	0
Girder F	Unit 2	One 72x3/8" Web+Four 8x8x7/8+ 2CP 18x5/8"	0	0	0	0	37.50	0
Girder F	Unit 2	One 72x3/8" Web+Four 8x8x7/8+ 1CP 18x5/8"	0	0	0	0	36.88	0
Girder F	Unit 2	One 72x3/8" Web+Four 8x8x7/8	0	0	0	0	36.25	0
Girder F	Unit 2	One 72x3/8" Web+Four 8x8x7/8 + 1CP 18x3/4"	0	0	0	0	37.00	0
Girder F	Unit 2	One 72x3/8" Web+Four 8x8x7/8 + 2CP 18x3/4"	0	0	0	0	37.75	0
Girder F	Unit 2	One 72x3/8" Web+Four 8x8x7/8 + 2CP 18x3/4" +1CP18x5/8"	18	0.625	0.366	11.25	38.06	16298.848
Girder F	Unit 2	One 72x3/8" Web+Four 8x8x7/8 +1CP18x5/8"	0	0	0	0	36.88	0
Girder F	Unit 2	One 72x3/8" Web+Four 8x8x7/8 +1CP18x5/8"+ 1 CP18x1/2	0	0	0	0	37.38	0

Equivalent Plate Girder Input
South Approach Girders

			Bottom Flange Cover Plate 3					
			b_f	t_f	I	A	d	$I+Ad^2$
			in	in	in^4	in^2	in	in^4
Girder H	Unit 3	One 72x3/8" Web+Four 8x8x5/8	0	0	0	0	36.25	0
Girder H	Unit 3	One 72x3/8" Web+Four 8x8x5/8 + 1 CP 18x1/2	0	0	0	0	36.75	0
Girder H	Unit 3	One 72x3/8" Web+Four 8x8x5/8 + 2CP 18x1/2	0	0	0	0	37.25	0
Girder H	Unit 3	One 72x3/8" Web+Four 8x8x5/8 + 3CP 18x1/2	18	0.500	0.188	9.00	37.50	12656.438
Girder H	Unit 3	One 72x3/8" Web+Four 8x8x5/8 + 1CP 18x3/8	0	0	0	0	36.63	0
Girder H	Unit 3	One 72x3/8" Web+Four 8x8x5/8 + 2CP 18x3/8	0	0	0	0	37.00	0
Girder H	Unit 3	One 72x3/8" Web+Four 8x8x5/8 + 1CP 18x5/8	0	0	0	0	36.88	0
Girder H	Unit 3	One 72x3/8" Web+Four 8x8x5/8 + 1CP 18x5/8 + 1CP 18x1/2	0	0	0	0	37.38	0
Girder G	Unit 3	One 72x3/8" Web+Four 8x8x3/4	0	0	0	0	36.25	0
Girder G	Unit 3	One 72x3/8" Web+Four 8x8x3/4 + 1CP 18x5/8	0	0	0	0	36.88	0
Girder G	Unit 3	One 72x3/8" Web+Four 8x8x3/4 + 1CP 18x5/8 + 1CP18x1/2	0	0	0	0	36.88	0
Girder G	Unit 3	One 72x3/8" Web+Four 8x8x3/4 + 1CP 18x3/4	0	0	0	0	37.00	0
Girder G	Unit 3	One 72x3/8" Web+Four 8x8x3/4 + 1CP 18x3/4 + 1CP 18x1/2	0	0	0	0	37.50	0
Girder F	Unit 3	One 72x3/8" Web+Four 8x8x7/8	0	0	0	0	36.25	0
Girder F	Unit 3	One 72x3/8" Web+Four 8x8x7/8 + 1CP 18x5/8	0	0	0	0	36.88	0
Girder F	Unit 3	One 72x3/8" Web+Four 8x8x7/8 + 2CP 18x5/8	0	0	0	0	37.50	0
Girder F	Unit 3	One 72x3/8" Web+Four 8x8x7/8 + 1CP 18x3/4	0	0	0	0	37.00	0
Girder F	Unit 3	One 72x3/8" Web+Four 8x8x7/8 + 2CP 18x3/4	0	0	0	0	37.75	0
Girder F	Unit 3	One 72x3/8" Web+Four 8x8x7/8 + 3CP 18x3/4	18	0.750	0.633	13.50	38.13	19623.094
Girder F	Unit 3	One 72x3/8" Web+Four 8x8x7/8 + 3CP 18x5/8	18	0.625	0.366	11.25	37.81	16085.449
Girder F	Unit 2	One 72x5/8" Web+Four 8x8x7/8	0	0	0	0	36.25	0
Girder F	Unit 2	One 72x5/8" Web+Four 8x8x7/8+ 1CP 18x5/8"	0	0	0	0	36.88	0
Girder F	Unit 2	One 72x5/8" Web+Four 8x8x7/8+ 2CP 18x5/8"	0	0	0	0	37.50	0
Girder F	Unit 2	One 72x3/8" Web+Four 8x8x7/8+ 2CP 18x5/8"	0	0	0	0	37.50	0
Girder F	Unit 2	One 72x3/8" Web+Four 8x8x7/8+ 1CP 18x5/8"	0	0	0	0	36.88	0
Girder F	Unit 2	One 72x3/8" Web+Four 8x8x7/8	0	0	0	0	36.25	0
Girder F	Unit 2	One 72x3/8" Web+Four 8x8x7/8 + 1CP 18x3/4"	0	0	0	0	37.00	0
Girder F	Unit 2	One 72x3/8" Web+Four 8x8x7/8 + 2CP 18x3/4"	0	0	0	0	37.75	0
Girder F	Unit 2	One 72x3/8" Web+Four 8x8x7/8 + 2CP 18x3/4" +1CP18x5/8"	18	0.625	0.366	11.25	38.06	16298.848
Girder F	Unit 2	One 72x3/8" Web+Four 8x8x7/8 +1CP18x5/8"	0	0	0	0	36.88	0
Girder F	Unit 2	One 72x3/8" Web+Four 8x8x7/8 +1CP18x5/8"+ 1 CP18x1/2	0	0	0	0	37.38	0

Equivalent Plate Girder Input
South Approach Girders

			Total					
			I_{total}	c_{top}	c_{bottom}	$S_{xx,top}$	$S_{xx,bottom}$	$S_{xx,actual}$
			in^4	in	in	in^3	in^3	in^3
Girder H	Unit 3	One 72x3/8" Web+Four 8x8x5/8	56814.00	36.25	36.25	1567.28	1567.28	1567.28
Girder H	Unit 3	One 72x3/8" Web+Four 8x8x5/8 + 1 CP 18x1/2	80794.88	36.75	36.75	2198.50	2198.50	2198.50
Girder H	Unit 3	One 72x3/8" Web+Four 8x8x5/8 + 2CP 18x1/2	105437.25	37.25	37.25	2830.53	2830.53	2830.53
Girder H	Unit 3	One 72x3/8" Web+Four 8x8x5/8 + 3CP 18x1/2	130750.13	37.75	37.75	3463.58	3463.58	3463.58
Girder H	Unit 3	One 72x3/8" Web+Four 8x8x5/8 + 1CP 18x3/8	74737.99	36.63	36.63	2040.63	2040.63	2040.63
Girder H	Unit 3	One 72x3/8" Web+Four 8x8x5/8 + 2CP 18x3/8	93032.81	37.00	37.00	2514.40	2514.40	2514.40
Girder H	Unit 3	One 72x3/8" Web+Four 8x8x5/8 + 1CP 18x5/8	86893.10	36.88	36.88	2356.42	2356.42	2356.42
Girder H	Unit 3	One 72x3/8" Web+Four 8x8x5/8 + 1CP 18x5/8 + 1CP 18x1/2	111702.26	37.38	37.38	2988.69	2988.69	2988.69
Girder G	Unit 3	One 72x3/8" Web+Four 8x8x3/4	65088.00	36.25	36.25	1795.53	1795.53	1795.53
Girder G	Unit 3	One 72x3/8" Web+Four 8x8x3/4 + 1CP 18x5/8	95167.10	36.88	36.88	2580.80	2580.80	2580.80
Girder G	Unit 3	One 72x3/8" Web+Four 8x8x3/4 + 1CP 18x5/8 + 1CP18x1/2	107571.68	37.38	37.38	2878.17	2878.17	2878.17
Girder G	Unit 3	One 72x3/8" Web+Four 8x8x3/4 + 1CP 18x3/4	101306.81	37.00	37.00	2738.02	2738.02	2738.02
Girder G	Unit 3	One 72x3/8" Web+Four 8x8x3/4 + 1CP 18x3/4 + 1CP 18x1/2	126283.31	37.50	37.50	3367.56	3367.56	3367.56
Girder F	Unit 3	One 72x3/8" Web+Four 8x8x7/8	73265.00	36.25	36.25	2021.10	2021.10	2021.10
Girder F	Unit 3	One 72x3/8" Web+Four 8x8x7/8 + 1CP 18x5/8	103344.10	36.88	36.88	2802.55	2802.55	2802.55
Girder F	Unit 3	One 72x3/8" Web+Four 8x8x7/8 + 2CP 18x5/8	134460.31	37.50	37.50	3585.61	3585.61	3585.61
Girder F	Unit 3	One 72x3/8" Web+Four 8x8x7/8 + 1CP 18x3/4	109483.81	37.00	37.00	2959.02	2959.02	2959.02
Girder F	Unit 3	One 72x3/8" Web+Four 8x8x7/8 + 2CP 18x3/4	147201.13	37.75	37.75	3899.37	3899.37	3899.37
Girder F	Unit 3	One 72x3/8" Web+Four 8x8x7/8 + 3CP 18x3/4	186447.31	38.50	38.50	4842.79	4842.79	4842.79
Girder F	Unit 3	One 72x3/8" Web+Four 8x8x7/8 + 3CP 18x5/8	166631.21	38.13	38.13	4370.65	4370.65	4370.65
Girder F	Unit 2	One 72x5/8" Web+Four 8x8x7/8	81041.10	36.25	36.25	2235.62	2235.62	2235.62
Girder F	Unit 2	One 72x5/8" Web+Four 8x8x7/8+ 1CP 18x5/8"	111120.20	36.88	36.88	3013.43	3013.43	3013.43
Girder F	Unit 2	One 72x5/8" Web+Four 8x8x7/8+ 2CP 18x5/8"	142236.41	37.50	37.50	3792.97	3792.97	3792.97
Girder F	Unit 2	One 72x3/8" Web+Four 8x8x7/8+ 2CP 18x5/8"	134460.45	37.50	37.50	3585.61	3585.61	3585.61
Girder F	Unit 2	One 72x3/8" Web+Four 8x8x7/8+ 1CP 18x5/8"	103344.24	36.88	36.88	2802.56	2802.56	2802.56
Girder F	Unit 2	One 72x3/8" Web+Four 8x8x7/8	73265.14	36.25	36.25	2021.11	2021.11	2021.11
Girder F	Unit 2	One 72x3/8" Web+Four 8x8x7/8 + 1CP 18x3/4"	109483.95	37.00	37.00	2959.03	2959.03	2959.03
Girder F	Unit 2	One 72x3/8" Web+Four 8x8x7/8 + 2CP 18x3/4"	147201.27	37.75	37.75	3899.37	3899.37	3899.37
Girder F	Unit 2	One 72x3/8" Web+Four 8x8x7/8 + 2CP 18x3/4" +1CP18x5/8"	179798.96	38.38	38.38	4685.31	4685.31	4685.31
Girder F	Unit 2	One 72x3/8" Web+Four 8x8x7/8 +1CP18x5/8"	103344.24	36.88	36.88	2802.56	2802.56	2802.56
Girder F	Unit 2	One 72x3/8" Web+Four 8x8x7/8 +1CP18x5/8"+ 1 CP18x1/2	128153.40	37.38	37.38	3428.85	3428.85	3428.85

Equivalent Plate Girder Input
South Approach Girders

			$S_{xx,equiv}$ in^3	% Conservative
Girder H	Unit 3	One 72x3/8" Web+Four 8x8x5/8	1560.15	0.46
Girder H	Unit 3	One 72x3/8" Web+Four 8x8x5/8 + 1 CP 18x1/2	2189.62	0.41
Girder H	Unit 3	One 72x3/8" Web+Four 8x8x5/8 + 2CP 18x1/2	2821.12	0.33
Girder H	Unit 3	One 72x3/8" Web+Four 8x8x5/8 + 3CP 18x1/2	3457.43	0.18
Girder H	Unit 3	One 72x3/8" Web+Four 8x8x5/8 + 1CP 18x3/8	2033.82	0.33
Girder H	Unit 3	One 72x3/8" Web+Four 8x8x5/8 + 2CP 18x3/8	2507.87	0.26
Girder H	Unit 3	One 72x3/8" Web+Four 8x8x5/8 + 1CP 18x5/8	2345.47	0.47
Girder H	Unit 3	One 72x3/8" Web+Four 8x8x5/8 + 1CP 18x5/8 + 1CP 18x1/2	2982.38	0.21
Girder G	Unit 3	One 72x3/8" Web+Four 8x8x3/4	1787.21	0.47
Girder G	Unit 3	One 72x3/8" Web+Four 8x8x3/4 + 1CP 18x5/8	2572.84	0.31
Girder G	Unit 3	One 72x3/8" Web+Four 8x8x3/4 + 1CP 18x5/8 + 1CP18x1/2	2869.23	0.31
Girder G	Unit 3	One 72x3/8" Web+Four 8x8x3/4 + 1CP 18x3/4	2728.81	0.34
Girder G	Unit 3	One 72x3/8" Web+Four 8x8x3/4 + 1CP 18x3/4 + 1CP 18x1/2	3359.77	0.23
Girder F	Unit 3	One 72x3/8" Web+Four 8x8x7/8	2011.75	0.47
Girder F	Unit 3	One 72x3/8" Web+Four 8x8x7/8 + 1CP 18x5/8	2793.81	0.31
Girder F	Unit 3	One 72x3/8" Web+Four 8x8x7/8 + 2CP 18x5/8	3574.66	0.31
Girder F	Unit 3	One 72x3/8" Web+Four 8x8x7/8 + 1CP 18x3/4	2948.56	0.35
Girder F	Unit 3	One 72x3/8" Web+Four 8x8x7/8 + 2CP 18x3/4	3890.07	0.24
Girder F	Unit 3	One 72x3/8" Web+Four 8x8x7/8 + 3CP 18x3/4	4834.25	0.18
Girder F	Unit 3	One 72x3/8" Web+Four 8x8x7/8 + 3CP 18x5/8	4361.14	0.22
Girder F	Unit 2	One 72x5/8" Web+Four 8x8x7/8	2234.82	0.04
Girder F	Unit 2	One 72x5/8" Web+Four 8x8x7/8+ 1CP 18x5/8"	3012.27	0.04
Girder F	Unit 2	One 72x5/8" Web+Four 8x8x7/8+ 2CP 18x5/8"	3792.52	0.01
Girder F	Unit 2	One 72x3/8" Web+Four 8x8x7/8+ 2CP 18x5/8"	3585.08	0.01
Girder F	Unit 2	One 72x3/8" Web+Four 8x8x7/8+ 1CP 18x5/8"	2801.61	0.03
Girder F	Unit 2	One 72x3/8" Web+Four 8x8x7/8	2020.84	0.01
Girder F	Unit 2	One 72x3/8" Web+Four 8x8x7/8 + 1CP 18x3/4"	2958.96	0.00
Girder F	Unit 2	One 72x3/8" Web+Four 8x8x7/8 + 2CP 18x3/4"	3899.20	0.00
Girder F	Unit 2	One 72x3/8" Web+Four 8x8x7/8 + 2CP 18x3/4" +1CP18x5/8"	4683.87	0.03
Girder F	Unit 2	One 72x3/8" Web+Four 8x8x7/8 +1CP18x5/8"	2801.61	0.03
Girder F	Unit 2	One 72x3/8" Web+Four 8x8x7/8 +1CP18x5/8"+ 1 CP18x1/2	3427.48	0.04

Equivalent Plate Girder Input
South Approach Girders

			Top Flange					
			t_{tf}	b_{tf}	A_{tf}	y_{bar}	Ay_{bar}	I_{tf}
			in	in	in^2	in	in^3	in^4
Girder H	Unit 3	One 72x3/8" Web+Four 8x8x5/8	0.950	18	17.10	73.93	1264.12	1.29
Girder H	Unit 3	One 72x3/8" Web+Four 8x8x5/8 + 1 CP 18x1/2	1.435	18	25.83	74.65	1928.27	4.43
Girder H	Unit 3	One 72x3/8" Web+Four 8x8x5/8 + 2CP 18x1/2	1.921	18	34.58	75.38	2606.54	10.63
Girder H	Unit 3	One 72x3/8" Web+Four 8x8x5/8 + 3CP 18x1/2	2.410	18	43.38	76.12	3301.87	21.00
Girder H	Unit 3	One 72x3/8" Web+Four 8x8x5/8 + 1CP 18x3/8	1.315	18	23.67	74.47	1762.76	3.41
Girder H	Unit 3	One 72x3/8" Web+Four 8x8x5/8 + 2CP 18x3/8	1.680	18	30.24	75.02	2268.60	7.11
Girder H	Unit 3	One 72x3/8" Web+Four 8x8x5/8 + 1CP 18x5/8	1.555	18	27.99	74.83	2094.56	5.64
Girder H	Unit 3	One 72x3/8" Web+Four 8x8x5/8 + 1CP 18x5/8 + 1CP 18x1/2	2.045	18	36.81	75.57	2781.64	12.83
Girder G	Unit 3	One 72x3/8" Web+Four 8x8x3/4	1.125	18	20.25	74.19	1502.30	2.14
Girder G	Unit 3	One 72x3/8" Web+Four 8x8x3/4 + 1CP 18x5/8	1.730	18	31.14	75.10	2338.46	7.77
Girder G	Unit 3	One 72x3/8" Web+Four 8x8x3/4 + 1CP 18x5/8 + 1CP18x1/2	1.958	18	35.24	75.44	2658.70	11.26
Girder G	Unit 3	One 72x3/8" Web+Four 8x8x3/4 + 1CP 18x3/4	1.850	18	33.30	75.28	2506.66	9.50
Girder G	Unit 3	One 72x3/8" Web+Four 8x8x3/4 + 1CP 18x3/4 + 1CP 18x1/2	2.335	18	42.03	76.00	3194.39	19.10
Girder F	Unit 3	One 72x3/8" Web+Four 8x8x7/8	1.298	18	23.36	74.45	1739.38	3.28
Girder F	Unit 3	One 72x3/8" Web+Four 8x8x7/8 + 1CP 18x5/8	1.900	18	34.20	75.35	2576.97	10.29
Girder F	Unit 3	One 72x3/8" Web+Four 8x8x7/8 + 2CP 18x5/8	2.500	18	45.00	76.25	3431.25	23.44
Girder F	Unit 3	One 72x3/8" Web+Four 8x8x7/8 + 1CP 18x3/4	2.019	18	36.34	75.53	2744.86	12.35
Girder F	Unit 3	One 72x3/8" Web+Four 8x8x7/8 + 2CP 18x3/4	2.742	18	49.36	76.61	3781.31	30.92
Girder F	Unit 3	One 72x3/8" Web+Four 8x8x7/8 + 3CP 18x3/4	3.465	18	62.37	77.70	4845.99	62.40
Girder F	Unit 3	One 72x3/8" Web+Four 8x8x7/8 + 3CP 18x5/8	3.103	18	55.85	77.15	4309.39	44.82
Girder F	Unit 2	One 72x5/8" Web+Four 8x8x7/8	1.307	18	23.53	74.46	1751.76	3.35
Girder F	Unit 2	One 72x5/8" Web+Four 8x8x7/8+ 1CP 18x5/8"	1.908	18	34.34	75.36	2588.23	10.42
Girder F	Unit 2	One 72x5/8" Web+Four 8x8x7/8+ 2CP 18x5/8"	2.510	18	45.18	76.27	3445.65	23.72
Girder F	Unit 2	One 72x3/8" Web+Four 8x8x7/8+ 2CP 18x5/8"	2.508	18	45.14	76.26	3442.77	23.66
Girder F	Unit 2	One 72x3/8" Web+Four 8x8x7/8+ 1CP 18x5/8"	1.906	18	34.31	75.36	2585.42	10.39
Girder F	Unit 2	One 72x3/8" Web+Four 8x8x7/8	1.305	18	23.49	74.46	1749.01	3.33
Girder F	Unit 2	One 72x3/8" Web+Four 8x8x7/8 + 1CP 18x3/4"	2.027	18	36.49	75.54	2756.17	12.49
Girder F	Unit 2	One 72x3/8" Web+Four 8x8x7/8 + 2CP 18x3/4"	2.749	18	49.48	76.62	3791.48	31.16
Girder F	Unit 2	One 72x3/8" Web+Four 8x8x7/8 + 2CP 18x3/4" +1CP18x5/8"	3.350	18	60.30	77.53	4674.76	56.39
Girder F	Unit 2	One 72x3/8" Web+Four 8x8x7/8 +1CP18x5/8"	1.906	18	34.31	75.36	2585.42	10.39
Girder F	Unit 2	One 72x3/8" Web+Four 8x8x7/8 +1CP18x5/8"+ 1 CP18x1/2	2.387	18	42.97	76.08	3268.87	20.40

Equivalent Plate Girder Input
South Approach Girders

			Web					
			t_{web}	D_{web}	A_{web}	y_{bar}	Ay_{bar}	I_{web}
			in	in	in^2	in	in^3	in^4
Girder H	Unit 3	One 72x3/8" Web+Four 8x8x5/8	0.375	72.5	27.1875	37.2	1011.375	11908.691
Girder H	Unit 3	One 72x3/8" Web+Four 8x8x5/8 + 1 CP 18x1/2	0.375	72.5	27.1875	37.685	1024.5609	11908.691
Girder H	Unit 3	One 72x3/8" Web+Four 8x8x5/8 + 2CP 18x1/2	0.375	72.5	27.1875	38.171	1037.7741	11908.691
Girder H	Unit 3	One 72x3/8" Web+Four 8x8x5/8 + 3CP 18x1/2	0.375	72.5	27.1875	38.66	1051.0688	11908.691
Girder H	Unit 3	One 72x3/8" Web+Four 8x8x5/8 + 1CP 18x3/8	0.375	72.5	27.1875	37.565	1021.2984	11908.691
Girder H	Unit 3	One 72x3/8" Web+Four 8x8x5/8 + 2CP 18x3/8	0.375	72.5	27.1875	37.93	1031.2219	11908.691
Girder H	Unit 3	One 72x3/8" Web+Four 8x8x5/8 + 1CP 18x5/8	0.375	72.5	27.1875	37.805	1027.8234	11908.691
Girder H	Unit 3	One 72x3/8" Web+Four 8x8x5/8 + 1CP 18x5/8 + 1CP 18x1/2	0.375	72.5	27.1875	38.295	1041.1453	11908.691
Girder G	Unit 3	One 72x3/8" Web+Four 8x8x3/4	0.375	72.5	27.1875	37.375	1016.1328	11908.691
Girder G	Unit 3	One 72x3/8" Web+Four 8x8x3/4 + 1CP 18x5/8	0.375	72.5	27.1875	37.98	1032.5813	11908.691
Girder G	Unit 3	One 72x3/8" Web+Four 8x8x3/4 + 1CP 18x5/8 + 1CP18x1/2	0.375	72.5	27.1875	38.208	1038.78	11908.691
Girder G	Unit 3	One 72x3/8" Web+Four 8x8x3/4 + 1CP 18x3/4	0.375	72.5	27.1875	38.1	1035.8438	11908.691
Girder G	Unit 3	One 72x3/8" Web+Four 8x8x3/4 + 1CP 18x3/4 + 1CP 18x1/2	0.375	72.5	27.1875	38.585	1049.0297	11908.691
Girder F	Unit 3	One 72x3/8" Web+Four 8x8x7/8	0.375	72.5	27.1875	37.548	1020.8363	11908.691
Girder F	Unit 3	One 72x3/8" Web+Four 8x8x7/8 + 1CP 18x5/8	0.375	72.5	27.1875	38.15	1037.2031	11908.691
Girder F	Unit 3	One 72x3/8" Web+Four 8x8x7/8 + 2CP 18x5/8	0.375	72.5	27.1875	38.75	1053.5156	11908.691
Girder F	Unit 3	One 72x3/8" Web+Four 8x8x7/8 + 1CP 18x3/4	0.375	72.5	27.1875	38.269	1040.4384	11908.691
Girder F	Unit 3	One 72x3/8" Web+Four 8x8x7/8 + 2CP 18x3/4	0.375	72.5	27.1875	38.992	1060.095	11908.691
Girder F	Unit 3	One 72x3/8" Web+Four 8x8x7/8 + 3CP 18x3/4	0.375	72.5	27.1875	39.715	1079.7516	11908.691
Girder F	Unit 3	One 72x3/8" Web+Four 8x8x7/8 + 3CP 18x5/8	0.375	72.5	27.1875	39.353	1069.9097	11908.691
Girder F	Unit 2	One 72x5/8" Web+Four 8x8x7/8	0.625	72.5	45.3125	37.557	1701.8016	19847.819
Girder F	Unit 2	One 72x5/8" Web+Four 8x8x7/8+ 1CP 18x5/8"	0.625	72.5	45.3125	38.158	1729.0344	19847.819
Girder F	Unit 2	One 72x5/8" Web+Four 8x8x7/8+ 2CP 18x5/8"	0.625	72.5	45.3125	38.76	1756.3125	19847.819
Girder F	Unit 2	One 72x3/8" Web+Four 8x8x7/8+ 2CP 18x5/8"	0.375	72.5	27.1875	38.758	1053.7331	11908.691
Girder F	Unit 2	One 72x3/8" Web+Four 8x8x7/8+ 1CP 18x5/8"	0.375	72.5	27.1875	38.156	1037.3663	11908.691
Girder F	Unit 2	One 72x3/8" Web+Four 8x8x7/8	0.375	72.5	27.1875	37.555	1021.0266	11908.691
Girder F	Unit 2	One 72x3/8" Web+Four 8x8x7/8 + 1CP 18x3/4"	0.375	72.5	27.1875	38.277	1040.6559	11908.691
Girder F	Unit 2	One 72x3/8" Web+Four 8x8x7/8 + 2CP 18x3/4"	0.375	72.5	27.1875	38.999	1060.2853	11908.691
Girder F	Unit 2	One 72x3/8" Web+Four 8x8x7/8 + 2CP 18x3/4" +1CP18x5/8"	0.375	72.5	27.1875	39.6	1076.625	11908.691
Girder F	Unit 2	One 72x3/8" Web+Four 8x8x7/8 +1CP18x5/8"	0.375	72.5	27.1875	38.156	1037.3663	11908.691
Girder F	Unit 2	One 72x3/8" Web+Four 8x8x7/8 +1CP18x5/8"+ 1 CP18x1/2	0.375	72.5	27.1875	38.637	1050.4434	11908.691

Equivalent Plate Girder Input
South Approach Girders

			Bottom Flange						
			t_{bf}	b_{bf}	A_{bf}	y_{bar}	Ay_{bar}	I_{bf}	$y_{bartotal}$
			in	in	in^2	in	in^3	in^4	in
Girder H	Unit 3	One 72x3/8" Web+Four 8x8x5/8	0.950	18	17.10	0.48	8.12	1.29	37.20
Girder H	Unit 3	One 72x3/8" Web+Four 8x8x5/8 + 1 CP 18x1/2	1.435	18	25.83	0.72	18.53	4.43	37.69
Girder H	Unit 3	One 72x3/8" Web+Four 8x8x5/8 + 2CP 18x1/2	1.921	18	34.58	0.96	33.21	10.63	38.17
Girder H	Unit 3	One 72x3/8" Web+Four 8x8x5/8 + 3CP 18x1/2	2.410	18	43.38	1.21	52.27	21.00	38.66
Girder H	Unit 3	One 72x3/8" Web+Four 8x8x5/8 + 1CP 18x3/8	1.315	18	23.67	0.66	15.56	3.41	37.57
Girder H	Unit 3	One 72x3/8" Web+Four 8x8x5/8 + 2CP 18x3/8	1.680	18	30.24	0.84	25.40	7.11	37.93
Girder H	Unit 3	One 72x3/8" Web+Four 8x8x5/8 + 1CP 18x5/8	1.555	18	27.99	0.78	21.76	5.64	37.81
Girder H	Unit 3	One 72x3/8" Web+Four 8x8x5/8 + 1CP 18x5/8 + 1CP 18x1/2	2.045	18	36.81	1.02	37.64	12.83	38.30
Girder G	Unit 3	One 72x3/8" Web+Four 8x8x3/4	1.125	18	20.25	0.56	11.39	2.14	37.38
Girder G	Unit 3	One 72x3/8" Web+Four 8x8x3/4 + 1CP 18x5/8	1.730	18	31.14	0.87	26.94	7.77	37.98
Girder G	Unit 3	One 72x3/8" Web+Four 8x8x3/4 + 1CP 18x5/8 + 1CP18x1/2	1.958	18	35.24	0.98	34.50	11.26	38.21
Girder G	Unit 3	One 72x3/8" Web+Four 8x8x3/4 + 1CP 18x3/4	1.850	18	33.30	0.93	30.80	9.50	38.10
Girder G	Unit 3	One 72x3/8" Web+Four 8x8x3/4 + 1CP 18x3/4 + 1CP 18x1/2	2.335	18	42.03	1.17	49.07	19.10	38.59
Girder F	Unit 3	One 72x3/8" Web+Four 8x8x7/8	1.298	18	23.36	0.65	15.16	3.28	37.55
Girder F	Unit 3	One 72x3/8" Web+Four 8x8x7/8 + 1CP 18x5/8	1.900	18	34.20	0.95	32.49	10.29	38.15
Girder F	Unit 3	One 72x3/8" Web+Four 8x8x7/8 + 2CP 18x5/8	2.500	18	45.00	1.25	56.25	23.44	38.75
Girder F	Unit 3	One 72x3/8" Web+Four 8x8x7/8 + 1CP 18x3/4	2.019	18	36.34	1.01	36.69	12.35	38.27
Girder F	Unit 3	One 72x3/8" Web+Four 8x8x7/8 + 2CP 18x3/4	2.742	18	49.36	1.37	67.67	30.92	38.99
Girder F	Unit 3	One 72x3/8" Web+Four 8x8x7/8 + 3CP 18x3/4	3.465	18	62.37	1.73	108.06	62.40	39.72
Girder F	Unit 3	One 72x3/8" Web+Four 8x8x7/8 + 3CP 18x5/8	3.103	18	55.85	1.55	86.66	44.82	39.35
Girder F	Unit 2	One 72x5/8" Web+Four 8x8x7/8	1.307	18	23.53	0.65	15.37	3.35	37.56
Girder F	Unit 2	One 72x5/8" Web+Four 8x8x7/8+ 1CP 18x5/8"	1.908	18	34.34	0.95	32.76	10.42	38.16
Girder F	Unit 2	One 72x5/8" Web+Four 8x8x7/8+ 2CP 18x5/8"	2.510	18	45.18	1.26	56.70	23.72	38.76
Girder F	Unit 2	One 72x3/8" Web+Four 8x8x7/8+ 2CP 18x5/8"	2.508	18	45.14	1.25	56.61	23.66	38.76
Girder F	Unit 2	One 72x3/8" Web+Four 8x8x7/8+ 1CP 18x5/8"	1.906	18	34.31	0.95	32.70	10.39	38.16
Girder F	Unit 2	One 72x3/8" Web+Four 8x8x7/8	1.305	18	23.49	0.65	15.33	3.33	37.56
Girder F	Unit 2	One 72x3/8" Web+Four 8x8x7/8 + 1CP 18x3/4"	2.027	18	36.49	1.01	36.98	12.49	38.28
Girder F	Unit 2	One 72x3/8" Web+Four 8x8x7/8 + 2CP 18x3/4"	2.749	18	49.48	1.37	68.01	31.16	39.00
Girder F	Unit 2	One 72x3/8" Web+Four 8x8x7/8 + 2CP 18x3/4" +1CP18x5/8"	3.350	18	60.30	1.68	101.00	56.39	39.60
Girder F	Unit 2	One 72x3/8" Web+Four 8x8x7/8 +1CP18x5/8"	1.906	18	34.31	0.95	32.70	10.39	38.16
Girder F	Unit 2	One 72x3/8" Web+Four 8x8x7/8 +1CP18x5/8"+ 1 CP18x1/2	2.387	18	42.97	1.19	51.28	20.40	38.64

Equivalent Plate Girder Input
South Approach Girders

			Top Flange		Web		Bottom Flange	
			d_{tf}	$I+Ad^2$	d_{web}	$I+Ad^2$	d_{bf}	$I+Ad^2$
			in	in^4	in	in^4	in	in^4
Girder H	Unit 3	One 72x3/8" Web+Four 8x8x5/8	36.73	23064.49	0	11908.69	36.73	23064.49
Girder H	Unit 3	One 72x3/8" Web+Four 8x8x5/8 + 1 CP 18x1/2	36.97	35303.61	0	11908.69	36.97	35303.61
Girder H	Unit 3	One 72x3/8" Web+Four 8x8x5/8 + 2CP 18x1/2	37.21	47888.07	0	11908.69	37.21	47888.07
Girder H	Unit 3	One 72x3/8" Web+Four 8x8x5/8 + 3CP 18x1/2	37.46	60877.80	0	11908.69	37.46	60877.80
Girder H	Unit 3	One 72x3/8" Web+Four 8x8x5/8 + 1CP 18x3/8	36.91	32245.82	0	11908.69	36.91	32245.82
Girder H	Unit 3	One 72x3/8" Web+Four 8x8x5/8 + 2CP 18x3/8	37.09	41607.32	0	11908.69	37.09	41607.32
Girder H	Unit 3	One 72x3/8" Web+Four 8x8x5/8 + 1CP 18x5/8	37.03	38380.93	0	11908.69	37.03	38380.93
Girder H	Unit 3	One 72x3/8" Web+Four 8x8x5/8 + 1CP 18x5/8 + 1CP 18x1/2	37.27	51150.73	0	11908.69	37.27	51150.73
Girder G	Unit 3	One 72x3/8" Web+Four 8x8x3/4	36.81	27444.13	0	11908.69	36.81	27444.13
Girder G	Unit 3	One 72x3/8" Web+Four 8x8x3/4 + 1CP 18x5/8	37.12	42903.84	0	11908.69	37.12	42903.84
Girder G	Unit 3	One 72x3/8" Web+Four 8x8x3/4 + 1CP 18x5/8 + 1CP18x1/2	37.23	48859.39	0	11908.69	37.23	48859.39
Girder G	Unit 3	One 72x3/8" Web+Four 8x8x3/4 + 1CP 18x3/4	37.18	46029.45	0	11908.69	37.18	46029.45
Girder G	Unit 3	One 72x3/8" Web+Four 8x8x3/4 + 1CP 18x3/4 + 1CP 18x1/2	37.42	58864.01	0	11908.69	37.42	58864.01
Girder F	Unit 3	One 72x3/8" Web+Four 8x8x7/8	36.90	31814.21	0	11908.69	36.90	31814.21
Girder F	Unit 3	One 72x3/8" Web+Four 8x8x7/8 + 1CP 18x5/8	37.20	47337.62	0	11908.69	37.20	47337.62
Girder F	Unit 3	One 72x3/8" Web+Four 8x8x7/8 + 2CP 18x5/8	37.50	63304.69	0	11908.69	37.50	63304.69
Girder F	Unit 3	One 72x3/8" Web+Four 8x8x7/8 + 1CP 18x3/4	37.26	50464.87	0	11908.69	37.26	50464.87
Girder F	Unit 3	One 72x3/8" Web+Four 8x8x7/8 + 2CP 18x3/4	37.62	69886.43	0	11908.69	37.62	69886.43
Girder F	Unit 3	One 72x3/8" Web+Four 8x8x7/8 + 3CP 18x3/4	37.98	90041.75	0	11908.69	37.98	90041.75
Girder F	Unit 3	One 72x3/8" Web+Four 8x8x7/8 + 3CP 18x5/8	37.80	79857.58	0	11908.69	37.80	79857.58
Girder F	Unit 2	One 72x5/8" Web+Four 8x8x7/8	36.90	32042.66	0	19847.82	36.90	32042.66
Girder F	Unit 2	One 72x5/8" Web+Four 8x8x7/8+ 1CP 18x5/8"	37.20	47547.24	0	19847.82	37.20	47547.24
Girder F	Unit 2	One 72x5/8" Web+Four 8x8x7/8+ 2CP 18x5/8"	37.51	63575.04	0	19847.82	37.51	63575.04
Girder F	Unit 2	One 72x3/8" Web+Four 8x8x7/8+ 2CP 18x5/8"	37.50	63520.96	0	11908.69	37.50	63520.96
Girder F	Unit 2	One 72x3/8" Web+Four 8x8x7/8+ 1CP 18x5/8"	37.20	47494.83	0	11908.69	37.20	47494.83
Girder F	Unit 2	One 72x3/8" Web+Four 8x8x7/8	36.90	31991.89	0	11908.69	36.90	31991.89
Girder F	Unit 2	One 72x3/8" Web+Four 8x8x7/8 + 1CP 18x3/4"	37.26	50675.80	0	11908.69	37.26	50675.80
Girder F	Unit 2	One 72x3/8" Web+Four 8x8x7/8 + 2CP 18x3/4"	37.62	70078.03	0	11908.69	37.62	70078.03
Girder F	Unit 2	One 72x3/8" Web+Four 8x8x7/8 + 2CP 18x3/4" +1CP18x5/8"	37.93	86786.22	0	11908.69	37.93	86786.22
Girder F	Unit 2	One 72x3/8" Web+Four 8x8x7/8 +1CP18x5/8"	37.20	47494.83	0	11908.69	37.20	47494.83
Girder F	Unit 2	One 72x3/8" Web+Four 8x8x7/8 +1CP18x5/8"+ 1 CP18x1/2	37.44	60259.41	0	11908.69	37.44	60259.41

Equivalent Plate Girder Input
South Approach Girders

			A_{EQ}	I_{EQ}	Shear A_{EQ}
			in^2	in^4	in^2
Girder H	Unit 3	One 72x3/8" Web+Four 8x8x5/8	61.39	58037.68	27.19
Girder H	Unit 3	One 72x3/8" Web+Four 8x8x5/8 + 1 CP 18x1/2	78.85	82515.91	27.19
Girder H	Unit 3	One 72x3/8" Web+Four 8x8x5/8 + 2CP 18x1/2	96.34	107684.83	27.19
Girder H	Unit 3	One 72x3/8" Web+Four 8x8x5/8 + 3CP 18x1/2	113.95	133664.29	27.19
Girder H	Unit 3	One 72x3/8" Web+Four 8x8x5/8 + 1CP 18x3/8	74.53	76400.34	27.19
Girder H	Unit 3	One 72x3/8" Web+Four 8x8x5/8 + 2CP 18x3/8	87.67	95123.32	27.19
Girder H	Unit 3	One 72x3/8" Web+Four 8x8x5/8 + 1CP 18x5/8	83.17	88670.55	27.19
Girder H	Unit 3	One 72x3/8" Web+Four 8x8x5/8 + 1CP 18x5/8 + 1CP 18x1/2	100.81	114210.14	27.19
Girder G	Unit 3	One 72x3/8" Web+Four 8x8x3/4	67.69	66796.95	27.19
Girder G	Unit 3	One 72x3/8" Web+Four 8x8x3/4 + 1CP 18x5/8	89.47	97716.37	27.19
Girder G	Unit 3	One 72x3/8" Web+Four 8x8x3/4 + 1CP 18x5/8 + 1CP18x1/2	97.68	109627.47	27.19
Girder G	Unit 3	One 72x3/8" Web+Four 8x8x3/4 + 1CP 18x3/4	93.79	103967.60	27.19
Girder G	Unit 3	One 72x3/8" Web+Four 8x8x3/4 + 1CP 18x3/4 + 1CP 18x1/2	111.25	129636.71	27.19
Girder F	Unit 3	One 72x3/8" Web+Four 8x8x7/8	73.92	75537.12	27.19
Girder F	Unit 3	One 72x3/8" Web+Four 8x8x7/8 + 1CP 18x5/8	95.59	106583.92	27.19
Girder F	Unit 3	One 72x3/8" Web+Four 8x8x7/8 + 2CP 18x5/8	117.19	138518.07	27.19
Girder F	Unit 3	One 72x3/8" Web+Four 8x8x7/8 + 1CP 18x3/4	99.87	112838.42	27.19
Girder F	Unit 3	One 72x3/8" Web+Four 8x8x7/8 + 2CP 18x3/4	125.90	151681.55	27.19
Girder F	Unit 3	One 72x3/8" Web+Four 8x8x7/8 + 3CP 18x3/4	151.93	191992.19	27.19
Girder F	Unit 3	One 72x3/8" Web+Four 8x8x7/8 + 3CP 18x5/8	138.90	171623.85	27.19
Girder F	Unit 2	One 72x5/8" Web+Four 8x8x7/8	92.36	83933.14	45.31
Girder F	Unit 2	One 72x5/8" Web+Four 8x8x7/8+ 1CP 18x5/8"	114.00	114942.30	45.31
Girder F	Unit 2	One 72x5/8" Web+Four 8x8x7/8+ 2CP 18x5/8"	135.67	146997.90	45.31
Girder F	Unit 2	One 72x3/8" Web+Four 8x8x7/8+ 2CP 18x5/8"	117.48	138950.61	27.19
Girder F	Unit 2	One 72x3/8" Web+Four 8x8x7/8+ 1CP 18x5/8"	95.80	106898.35	27.19
Girder F	Unit 2	One 72x3/8" Web+Four 8x8x7/8	74.17	75892.46	27.19
Girder F	Unit 2	One 72x3/8" Web+Four 8x8x7/8 + 1CP 18x3/4"	100.16	113260.29	27.19
Girder F	Unit 2	One 72x3/8" Web+Four 8x8x7/8 + 2CP 18x3/4"	126.15	152064.75	27.19
Girder F	Unit 2	One 72x3/8" Web+Four 8x8x7/8 + 2CP 18x3/4" +1CP18x5/8"	147.79	185481.14	27.19
Girder F	Unit 2	One 72x3/8" Web+Four 8x8x7/8 +1CP18x5/8"	95.80	106898.35	27.19
Girder F	Unit 2	One 72x3/8" Web+Four 8x8x7/8 +1CP18x5/8"+ 1 CP18x1/2	113.12	132427.51	27.19

Equivalent Plate Girder Input
South Approach Girders

			$c_{topfiber}$	$c_{bottomfiber}$	S_{xtop}	$S_{xbottom}$	F_y
			in	in	in^3	in^3	ksi
Girder H	Unit 3	One 72x3/8" Web+Four 8x8x5/8	37.20	37.20	1560.15	1560.15	36
Girder H	Unit 3	One 72x3/8" Web+Four 8x8x5/8 + 1 CP 18x1/2	37.69	37.69	2189.62	2189.62	36
Girder H	Unit 3	One 72x3/8" Web+Four 8x8x5/8 + 2CP 18x1/2	38.17	38.17	2821.12	2821.12	36
Girder H	Unit 3	One 72x3/8" Web+Four 8x8x5/8 + 3CP 18x1/2	38.66	38.66	3457.43	3457.43	36
Girder H	Unit 3	One 72x3/8" Web+Four 8x8x5/8 + 1CP 18x3/8	37.57	37.57	2033.82	2033.82	36
Girder H	Unit 3	One 72x3/8" Web+Four 8x8x5/8 + 2CP 18x3/8	37.93	37.93	2507.87	2507.87	36
Girder H	Unit 3	One 72x3/8" Web+Four 8x8x5/8 + 1CP 18x5/8	37.81	37.81	2345.47	2345.47	36
Girder H	Unit 3	One 72x3/8" Web+Four 8x8x5/8 + 1CP 18x5/8 + 1CP 18x1/2	38.30	38.30	2982.38	2982.38	36
Girder G	Unit 3	One 72x3/8" Web+Four 8x8x3/4	37.38	37.38	1787.21	1787.21	36
Girder G	Unit 3	One 72x3/8" Web+Four 8x8x3/4 + 1CP 18x5/8	37.98	37.98	2572.84	2572.84	36
Girder G	Unit 3	One 72x3/8" Web+Four 8x8x3/4 + 1CP 18x5/8 + 1CP18x1/2	38.21	38.21	2869.23	2869.23	36
Girder G	Unit 3	One 72x3/8" Web+Four 8x8x3/4 + 1CP 18x3/4	38.10	38.10	2728.81	2728.81	36
Girder G	Unit 3	One 72x3/8" Web+Four 8x8x3/4 + 1CP 18x3/4 + 1CP 18x1/2	38.59	38.59	3359.77	3359.77	36
Girder F	Unit 3	One 72x3/8" Web+Four 8x8x7/8	37.55	37.55	2011.75	2011.75	36
Girder F	Unit 3	One 72x3/8" Web+Four 8x8x7/8 + 1CP 18x5/8	38.15	38.15	2793.81	2793.81	36
Girder F	Unit 3	One 72x3/8" Web+Four 8x8x7/8 + 2CP 18x5/8	38.75	38.75	3574.66	3574.66	36
Girder F	Unit 3	One 72x3/8" Web+Four 8x8x7/8 + 1CP 18x3/4	38.27	38.27	2948.56	2948.56	36
Girder F	Unit 3	One 72x3/8" Web+Four 8x8x7/8 + 2CP 18x3/4	38.99	38.99	3890.07	3890.07	36
Girder F	Unit 3	One 72x3/8" Web+Four 8x8x7/8 + 3CP 18x3/4	39.72	39.72	4834.25	4834.25	36
Girder F	Unit 3	One 72x3/8" Web+Four 8x8x7/8 + 3CP 18x5/8	39.35	39.35	4361.14	4361.14	36
Girder F	Unit 2	One 72x5/8" Web+Four 8x8x7/8	37.56	37.56	2234.82	2234.82	36
Girder F	Unit 2	One 72x5/8" Web+Four 8x8x7/8+ 1CP 18x5/8"	38.16	38.16	3012.27	3012.27	36
Girder F	Unit 2	One 72x5/8" Web+Four 8x8x7/8+ 2CP 18x5/8"	38.76	38.76	3792.52	3792.52	36
Girder F	Unit 2	One 72x3/8" Web+Four 8x8x7/8+ 2CP 18x5/8"	38.76	38.76	3585.08	3585.08	36
Girder F	Unit 2	One 72x3/8" Web+Four 8x8x7/8+ 1CP 18x5/8"	38.16	38.16	2801.61	2801.61	36
Girder F	Unit 2	One 72x3/8" Web+Four 8x8x7/8	37.56	37.56	2020.84	2020.84	36
Girder F	Unit 2	One 72x3/8" Web+Four 8x8x7/8 + 1CP 18x3/4"	38.28	38.28	2958.96	2958.96	36
Girder F	Unit 2	One 72x3/8" Web+Four 8x8x7/8 + 2CP 18x3/4"	39.00	39.00	3899.20	3899.20	36
Girder F	Unit 2	One 72x3/8" Web+Four 8x8x7/8 + 2CP 18x3/4" +1CP18x5/8"	39.60	39.60	4683.87	4683.87	36
Girder F	Unit 2	One 72x3/8" Web+Four 8x8x7/8 +1CP18x5/8"	38.16	38.16	2801.61	2801.61	36
Girder F	Unit 2	One 72x3/8" Web+Four 8x8x7/8 +1CP18x5/8"+ 1 CP18x1/2	38.64	38.64	3427.48	3427.48	36

Unit 3 Girder H Section Properties

	Increment	x location in span	Feet	Inches	Section	t_{web} in	d_{web} in	t_{tf} in	b_{tf} in	t_{bf} in	b_{bf} in
Begin Span	0.00	0.000	0	0.000	One 72x3/8" Web+Four 8x8x5/8	0.375	72.5	0.950	18	0.95	18
	9.02	9.021	9	0.250	One 72x3/8" Web+Four 8x8x5/8	0.375	72.5	0.950	18	0.95	18
	0.00	9.021	9	0.250	One 72x3/8" Web+Four 8x8x5/8 + 1 CP 18x1/2	0.375	72.5	1.435	18	1.435	18
	4.50	13.521	13	6.250	One 72x3/8" Web+Four 8x8x5/8 + 1 CP 18x1/2	0.375	72.5	1.435	18	1.435	18
	0.00	13.521	13	6.250	One 72x3/8" Web+Four 8x8x5/8 + 2CP 18x1/2	0.375	72.5	1.921	18	1.921	18
	4.50	18.021	18	0.250	One 72x3/8" Web+Four 8x8x5/8 + 2CP 18x1/2	0.375	72.5	1.921	18	1.921	18
	0.00	18.021	18	0.250	One 72x3/8" Web+Four 8x8x5/8 + 3CP 18x1/2	0.375	72.5	2.410	18	2.41	18
End Span	7.50	25.521	25	6.250	One 72x3/8" Web+Four 8x8x5/8 + 3CP 18x1/2	0.375	72.5	2.410	18	2.41	18
Begin Span	0.00	0.000	0	0.000	One 72x3/8" Web+Four 8x8x5/8 + 3CP 18x1/2	0.375	72.5	2.410	18	2.41	18
	7.50	7.500	7	6.000	One 72x3/8" Web+Four 8x8x5/8 + 3CP 18x1/2	0.375	72.5	2.410	18	2.41	18
	0.00	7.500	7	6.000	One 72x3/8" Web+Four 8x8x5/8 + 2CP 18x1/2	0.375	72.5	1.921	18	1.921	18
	4.50	12.000	12	0.000	One 72x3/8" Web+Four 8x8x5/8 + 2CP 18x1/2	0.375	72.5	1.921	18	1.921	18
	0.00	12.000	12	0.000	One 72x3/8" Web+Four 8x8x5/8 + 1 CP 18x1/2	0.375	72.5	1.435	18	1.435	18
	4.50	16.500	16	6.000	One 72x3/8" Web+Four 8x8x5/8 + 1 CP 18x1/2	0.375	72.5	1.435	18	1.435	18
	0.00	16.500	16	6.000	One 72x3/8" Web+Four 8x8x5/8	0.375	72.5	0.950	18	0.95	18
	20.49	36.992	36	11.906	One 72x3/8" Web+Four 8x8x5/8	0.375	72.5	0.950	18	0.95	18
	0.00	36.992	36	11.906	One 72x3/8" Web+Four 8x8x5/8 + 1CP 18x3/8	0.375	72.5	1.315	18	1.315	18
	10.00	46.992	46	11.906	One 72x3/8" Web+Four 8x8x5/8 + 1CP 18x3/8	0.375	72.5	1.315	18	1.315	18
	0.00	46.992	46	11.906	One 72x3/8" Web+Four 8x8x5/8 + 2CP 18x3/8	0.375	72.5	1.680	18	1.68	18
	38.25	85.242	85	2.906	One 72x3/8" Web+Four 8x8x5/8 + 2CP 18x3/8	0.375	72.5	1.680	18	1.68	18
	0.00	85.242	85	2.906	One 72x3/8" Web+Four 8x8x5/8 + 1CP 18x3/8	0.375	72.5	1.315	18	1.315	18
	9.50	94.742	94	8.906	One 72x3/8" Web+Four 8x8x5/8 + 1CP 18x3/8	0.375	72.5	1.315	18	1.315	18
	0.00	94.742	94	8.906	One 72x3/8" Web+Four 8x8x5/8	0.375	72.5	0.950	18	0.95	18
	18.50	113.242	113	2.906	One 72x3/8" Web+Four 8x8x5/8	0.375	72.5	0.950	18	0.95	18
	0.00	113.242	113	2.906	One 72x3/8" Web+Four 8x8x5/8 + 1 CP 18x1/2	0.375	72.5	1.435	18	1.435	18
	4.50	117.742	117	8.906	One 72x3/8" Web+Four 8x8x5/8 + 1 CP 18x1/2	0.375	72.5	1.435	18	1.435	18
	0.00	117.742	117	8.906	One 72x3/8" Web+Four 8x8x5/8 + 2CP 18x1/2	0.375	72.5	1.921	18	1.921	18
	4.50	122.242	122	2.906	One 72x3/8" Web+Four 8x8x5/8 + 2CP 18x1/2	0.375	72.5	1.921	18	1.921	18
	0.00	122.242	122	2.906	One 72x3/8" Web+Four 8x8x5/8 + 3CP 18x1/2	0.375	72.5	2.410	18	2.41	18
End Span	7.50	129.742	129	8.906	One 72x3/8" Web+Four 8x8x5/8 + 3CP 18x1/2	0.375	72.5	2.410	18	2.41	18
Begin Span	0.00	0.000	0	0.000	One 72x3/8" Web+Four 8x8x5/8 + 3CP 18x1/2	0.375	72.5	2.410	18	2.41	18
	7.50	7.500	7	6.000	One 72x3/8" Web+Four 8x8x5/8 + 3CP 18x1/2	0.375	72.5	2.410	18	2.41	18
	0.00	7.500	7	6.000	One 72x3/8" Web+Four 8x8x5/8 + 2CP 18x1/2	0.375	72.5	1.921	18	1.921	18
	4.50	12.000	12	0.000	One 72x3/8" Web+Four 8x8x5/8 + 2CP 18x1/2	0.375	72.5	1.921	18	1.921	18
	0.00	12.000	12	0.000	One 72x3/8" Web+Four 8x8x5/8 + 1 CP 18x1/2	0.375	72.5	1.435	18	1.435	18

Unit 3 Girder H Section Properties

	Increment	x location in span	Feet	Inches	Section	t_{web} in	d_{web} in	t_{tf} in	b_{tf} in	t_{bf} in	b_{bf} in
	4.50	16.500	16	6.000	One 72x3/8" Web+Four 8x8x5/8 + 1 CP 18x1/2	0.375	72.5	1.435	18	1.435	18
	0.00	16.500	16	6.000	One 72x3/8" Web+Four 8x8x5/8	0.375	72.5	0.950	18	0.95	18
	15.00	31.500	31	6.000	One 72x3/8" Web+Four 8x8x5/8	0.375	72.5	0.950	18	0.95	18
	0.00	31.500	31	6.000	One 72x3/8" Web+Four 8x8x5/8 + 1CP 18x3/8	0.375	72.5	1.315	18	1.315	18
	30.00	61.500	61	6.000	One 72x3/8" Web+Four 8x8x5/8 + 1CP 18x3/8	0.375	72.5	1.315	18	1.315	18
	0.00	61.500	61	6.000	One 72x3/8" Web+Four 8x8x5/8	0.375	72.5	0.950	18	0.95	18
	19.87	81.370	81	4.438	One 72x3/8" Web+Four 8x8x5/8	0.375	72.5	0.950	18	0.95	18
	0.00	81.370	81	4.438	One 72x3/8" Web+Four 8x8x5/8 + 1CP 18x5/8	0.375	72.5	1.555	18	1.555	18
	7.00	88.370	88	4.438	One 72x3/8" Web+Four 8x8x5/8 + 1CP 18x5/8	0.375	72.5	1.555	18	1.555	18
	0.00	88.370	88	4.438	One 72x3/8" Web+Four 8x8x5/8 + 1CP 18x5/8 + 1CP 18x1/2	0.375	72.5	2.045	18	2.045	18
End Span	7.50	95.870	95	10.438	One 72x3/8" Web+Four 8x8x5/8 + 1CP 18x5/8 + 1CP 18x1/2	0.375	72.5	2.045	18	2.045	18
Begin Span	0.00	0.000	0	0.000	One 72x3/8" Web+Four 8x8x5/8 + 1CP 18x5/8 + 1CP 18x1/2	0.375	72.5	2.045	18	2.045	18
	7.50	7.500	7	6.000	One 72x3/8" Web+Four 8x8x5/8 + 1CP 18x5/8 + 1CP 18x1/2	0.375	72.5	2.045	18	2.045	18
	0.00	7.500	7	6.000	One 72x3/8" Web+Four 8x8x5/8 + 1CP 18x5/8	0.375	72.5	1.555	18	1.555	18
	7.25	14.750	14	9.000	One 72x3/8" Web+Four 8x8x5/8 + 1CP 18x5/8	0.375	72.5	1.555	18	1.555	18
	0.00	14.750	14	9.000	One 72x3/8" Web+Four 8x8x5/8	0.375	72.5	0.950	18	0.95	18
	22.25	37.000	37	0.000	One 72x3/8" Web+Four 8x8x5/8	0.375	72.5	0.950	18	0.95	18
	0.00	37.000	37	0.000	One 72x3/8" Web+Four 8x8x5/8 + 1CP 18x3/8	0.375	72.5	1.315	18	1.315	18
	9.50	46.500	46	6.000	One 72x3/8" Web+Four 8x8x5/8 + 1CP 18x3/8	0.375	72.5	1.315	18	1.315	18
	0.00	46.500	46	6.000	One 72x3/8" Web+Four 8x8x5/8 + 2CP 18x3/8	0.375	72.5	1.680	18	1.68	18
	31.00	77.500	77	6.000	One 72x3/8" Web+Four 8x8x5/8 + 2CP 18x3/8	0.375	72.5	1.680	18	1.68	18
	0.00	77.500	77	6.000	One 72x3/8" Web+Four 8x8x5/8 + 1CP 18x3/8	0.375	72.5	1.315	18	1.315	18
	11.50	89.000	89	0.000	One 72x3/8" Web+Four 8x8x5/8 + 1CP 18x3/8	0.375	72.5	1.315	18	1.315	18
	0.00	89.000	89	0.000	One 72x3/8" Web+Four 8x8x5/8	0.375	72.5	0.950	18	0.95	18
	22.61	111.612	111	7.344	One 72x3/8" Web+Four 8x8x5/8	0.375	72.5	0.950	18	0.95	18
	0.00	111.612	111	7.344	One 72x3/8" Web+Four 8x8x5/8 + 1 CP 18x1/2	0.375	72.5	1.435	18	1.435	18
	4.50	116.112	116	1.344	One 72x3/8" Web+Four 8x8x5/8 + 1 CP 18x1/2	0.375	72.5	1.435	18	1.435	18
	0.00	116.112	116	1.344	One 72x3/8" Web+Four 8x8x5/8 + 2CP 18x1/2	0.375	72.5	1.921	18	1.921	18
End Span	7.50	123.612	123	7.344	One 72x3/8" Web+Four 8x8x5/8 + 2CP 18x1/2	0.375	72.5	1.921	18	1.921	18
Begin Span	0.00	0.000	0	0.000	One 72x3/8" Web+Four 8x8x5/8 + 2CP 18x1/2	0.375	72.5	1.921	18	1.921	18
	7.50	7.500	7	6.000	One 72x3/8" Web+Four 8x8x5/8 + 2CP 18x1/2	0.375	72.5	1.921	18	1.921	18
	0.00	7.500	7	6.000	One 72x3/8" Web+Four 8x8x5/8 + 1 CP 18x1/2	0.375	72.5	1.435	18	1.435	18
	4.50	12.000	12	0.000	One 72x3/8" Web+Four 8x8x5/8 + 1 CP 18x1/2	0.375	72.5	1.435	18	1.435	18
	0.00	12.000	12	0.000	One 72x3/8" Web+Four 8x8x5/8	0.375	72.5	0.950	18	0.95	18
End Span	3.43	15.435	15	5.219	One 72x3/8" Web+Four 8x8x5/8	0.375	72.5	0.950	18	0.95	18

Unit 3 Girder G Section Properties

	Increment	x location in span	Feet	Inches	Section	t_{web} in	d_{web} in	t_{tf} in	b_{tf} in	t_{bf} in	b_{bf} in
Begin Span	0.00	0.000	0	0.000	One 72x3/8" Web+Four 8x8x3/4	0.375	72.5	1.125	18	1.125	18
	16.24	16.237	16	2.844	One 72x3/8" Web+Four 8x8x3/4	0.375	72.5	1.125	18	1.125	18
	0.00	16.237	16	2.844	One 72x3/8" Web+Four 8x8x3/4 + 1CP 18x5/8	0.375	72.5	1.73	18	1.73	18
	12.00	28.237	28	2.844	One 72x3/8" Web+Four 8x8x3/4 + 1CP 18x5/8	0.375	72.5	1.73	18	1.73	18
	0.00	28.237	28	2.844	One 72x3/8" Web+Four 8x8x3/4 + 1CP 18x5/8 + 1CP18x1/2	0.375	72.5	1.958	18	1.958	18
	53.00	81.237	81	2.844	One 72x3/8" Web+Four 8x8x3/4 + 1CP 18x5/8 + 1CP18x1/2	0.375	72.5	1.958	18	1.958	18
	0.00	81.237	81	2.844	One 72x3/8" Web+Four 8x8x3/4 + 1CP 18x5/8	0.375	72.5	1.73	18	1.73	18
	12.00	93.237	93	2.844	One 72x3/8" Web+Four 8x8x3/4 + 1CP 18x5/8	0.375	72.5	1.73	18	1.73	18
	0.00	93.237	93	2.844	One 72x3/8" Web+Four 8x8x3/4	0.375	72.5	1.125	18	1.125	18
	21.00	114.237	114	2.844	One 72x3/8" Web+Four 8x8x3/4	0.375	72.5	1.125	18	1.125	18
	0.00	114.237	114	2.844	One 72x3/8" Web+Four 8x8x3/4 + 1CP 18x3/4	0.375	72.5	1.85	18	1.85	18
	5.00	119.237	119	2.844	One 72x3/8" Web+Four 8x8x3/4 + 1CP 18x3/4	0.375	72.5	1.85	18	1.85	18
	0.00	119.237	119	2.844	One 72x3/8" Web+Four 8x8x3/4 + 1CP 18x3/4 + 1CP 18x1/2	0.375	72.5	2.335	18	2.335	18
End Span	8.00	127.237	127	2.844	One 72x3/8" Web+Four 8x8x3/4 + 1CP 18x3/4 + 1CP 18x1/2	0.375	72.5	2.335	18	2.335	18
Begin Span	0.00	0.000	0	0.000	One 72x3/8" Web+Four 8x8x3/4 + 1CP 18x3/4 + 1CP 18x1/2	0.375	72.5	2.335	18	2.335	18
	8.00	8.000	8	0.000	One 72x3/8" Web+Four 8x8x3/4 + 1CP 18x3/4 + 1CP 18x1/2	0.375	72.5	2.335	18	2.335	18
	0.00	8.000	8	0.000	One 72x3/8" Web+Four 8x8x3/4 + 1CP 18x3/4	0.375	72.5	1.85	18	1.85	18
	5.00	13.000	13	0.000	One 72x3/8" Web+Four 8x8x3/4 + 1CP 18x3/4	0.375	72.5	1.85	18	1.85	18
	0.00	13.000	13	0.000	One 72x3/8" Web+Four 8x8x3/4	0.375	72.5	1.125	18	1.125	18
	68.43	81.427	81	5.125	One 72x3/8" Web+Four 8x8x3/4	0.375	72.5	1.125	18	1.125	18
	0.00	81.427	81	5.125	One 72x3/8" Web+Four 8x8x3/4 + 1CP 18x3/4	0.375	72.5	1.85	18	1.85	18
	5.00	86.427	86	5.125	One 72x3/8" Web+Four 8x8x3/4 + 1CP 18x3/4	0.375	72.5	1.85	18	1.85	18
	0.00	86.427	86	5.125	One 72x3/8" Web+Four 8x8x3/4 + 1CP 18x3/4 + 1CP 18x1/2	0.375	72.5	2.335	18	2.335	18
End Span	8.00	94.427	94	5.125	One 72x3/8" Web+Four 8x8x3/4 + 1CP 18x3/4 + 1CP 18x1/2	0.375	72.5	2.335	18	2.335	18
Begin Span	0.00	0.000	0	0.000	One 72x3/8" Web+Four 8x8x3/4 + 1CP 18x3/4 + 1CP 18x1/2	0.375	72.5	2.335	18	2.335	18
	8.00	8.000	8	0.000	One 72x3/8" Web+Four 8x8x3/4 + 1CP 18x3/4 + 1CP 18x1/2	0.375	72.5	2.335	18	2.335	18
	0.00	8.000	8	0.000	One 72x3/8" Web+Four 8x8x3/4 + 1CP 18x3/4	0.375	72.5	1.85	18	1.85	18
	4.60	12.599	12	7.187	One 72x3/8" Web+Four 8x8x3/4 + 1CP 18x3/4	0.375	72.5	1.85	18	1.85	18
	0.00	12.599	12	7.187	One 72x3/8" Web+Four 8x8x3/4	0.375	72.5	1.125	18	1.125	18
	19.40	32.000	32	0.000	One 72x3/8" Web+Four 8x8x3/4	0.375	72.5	1.125	18	1.125	18
	0.00	32.000	32	0.000	One 72x3/8" Web+Four 8x8x3/4 + 1CP 18x5/8	0.375	72.5	1.73	18	1.73	18
	12.00	44.000	44	0.000	One 72x3/8" Web+Four 8x8x3/4 + 1CP 18x5/8	0.375	72.5	1.73	18	1.73	18
	0.00	44.000	44	0.000	One 72x3/8" Web+Four 8x8x3/4 + 1CP 18x5/8 + 1CP18x1/2	0.375	72.5	1.958	18	1.958	18
	53.00	97.000	97	0.000	One 72x3/8" Web+Four 8x8x3/4 + 1CP 18x5/8 + 1CP18x1/2	0.375	72.5	1.958	18	1.958	18
	0.00	97.000	97	0.000	One 72x3/8" Web+Four 8x8x3/4 + 1CP 18x5/8	0.375	72.5	1.73	18	1.73	18

Unit 3 Girder G Section Properties

	Increment	x location in span	Feet	Inches	Section	t_{web} in	d_{web} in	t_{tf} in	b_{tf} in	t_{bf} in	b_{bf} in
	12.00	109.000	109	0.000	One 72x3/8" Web+Four 8x8x3/4 + 1CP 18x5/8	0.375	72.5	1.73	18	1.73	18
	0.00	109.000	109	0.000	One 72x3/8" Web+Four 8x8x3/4	0.375	72.5	1.125	18	1.125	18
End Span	14.33	123.331	123	3.969	One 72x3/8" Web+Four 8x8x3/4	0.375	72.5	1.125	18	1.125	18

Unit 3 Girder F Section Properties

	Increment	x location in span	Feet	Inches	Section	t_{web} in	d_{web} in	t_{tf} in	b_{tf} in	t_{bf} in	b_{bf} in
Begin Span	0.00	0.0000	0	0.000	One 72x3/8" Web+Four 8x8x7/8	0.375	72.5	1.298	18	1.298	18
	13.40	13.4010	13	4.812	One 72x3/8" Web+Four 8x8x7/8	0.375	72.5	1.298	18	1.298	18
	0.00	13.4010	13	4.812	One 72x3/8" Web+Four 8x8x7/8 + 1CP 18x5/8	0.375	72.5	1.900	18	1.900	18
	12.00	25.4010	25	4.812	One 72x3/8" Web+Four 8x8x7/8 + 1CP 18x5/8	0.375	72.5	1.900	18	1.900	18
	0.00	25.4010	25	4.812	One 72x3/8" Web+Four 8x8x7/8 + 2CP 18x5/8	0.375	72.5	2.500	18	2.500	18
	40.00	65.4010	65	4.812	One 72x3/8" Web+Four 8x8x7/8 + 2CP 18x5/8	0.375	72.5	2.500	18	2.500	18
	0.00	65.4010	65	4.812	One 72x3/8" Web+Four 8x8x7/8 + 1CP 18x5/8	0.375	72.5	1.900	18	1.900	18
	12.00	77.4010	77	4.812	One 72x3/8" Web+Four 8x8x7/8 + 1CP 18x5/8	0.375	72.5	1.900	18	1.900	18
	0.00	77.4010	77	4.812	One 72x3/8" Web+Four 8x8x7/8	0.375	72.5	1.298	18	1.298	18
	20.01	97.4063	97	4.875	One 72x3/8" Web+Four 8x8x7/8	0.375	72.5	1.298	18	1.298	18
	0.00	97.4063	97	4.875	One 72x3/8" Web+Four 8x8x7/8 + 1CP 18x3/4	0.375	72.5	2.019	18	2.019	18
	6.00	103.4063	103	4.875	One 72x3/8" Web+Four 8x8x7/8 + 1CP 18x3/4	0.375	72.5	2.019	18	2.019	18
	0.00	103.4063	103	4.875	One 72x3/8" Web+Four 8x8x7/8 + 2CP 18x3/4	0.375	72.5	2.742	18	2.742	18
	2.50	105.9063	105	10.875	One 72x3/8" Web+Four 8x8x7/8 + 2CP 18x3/4	0.375	72.5	2.742	18	2.742	18
	0.00	105.9063	105	10.875	One 72x3/8" Web+Four 8x8x7/8 + 3CP 18x3/4	0.375	72.5	3.465	18	3.465	18
End Span	7.50	113.4063	113	4.875	One 72x3/8" Web+Four 8x8x7/8 + 3CP 18x3/4	0.375	72.5	3.465	18	3.465	18
Being Span	0.00	0.0000	0	0.000	One 72x3/8" Web+Four 8x8x7/8 + 3CP 18x3/4	0.375	72.5	3.465	18	3.465	18
	7.50	7.5000	7	6.000	One 72x3/8" Web+Four 8x8x7/8 + 3CP 18x3/4	0.375	72.5	3.465	18	3.465	18
	0.00	7.5000	7	6.000	One 72x3/8" Web+Four 8x8x7/8 + 2CP 18x3/4	0.375	72.5	2.742	18	2.742	18
	2.50	10.0000	10	0.000	One 72x3/8" Web+Four 8x8x7/8 + 2CP 18x3/4	0.375	72.5	2.742	18	2.742	18
	0.00	10.0000	10	0.000	One 72x3/8" Web+Four 8x8x7/8 + 1CP 18x3/4	0.375	72.5	2.019	18	2.019	18
	5.00	15.0000	15	0.000	One 72x3/8" Web+Four 8x8x7/8 + 1CP 18x3/4	0.375	72.5	2.019	18	2.019	18
	0.00	15.0000	15	0.000	One 72x3/8" Web+Four 8x8x7/8	0.375	72.5	1.298	18	1.298	18
	24.00	39.0000	39	0.000	One 72x3/8" Web+Four 8x8x7/8	0.375	72.5	1.298	18	1.298	18
	0.00	39.0000	39	0.000	One 72x3/8" Web+Four 8x8x7/8 + 1CP 18x5/8	0.375	72.5	1.900	18	1.900	18
	53.00	92.0000	92	0.000	One 72x3/8" Web+Four 8x8x7/8 + 1CP 18x5/8	0.375	72.5	1.900	18	1.900	18
	0.00	92.0000	92	0.000	One 72x3/8" Web+Four 8x8x7/8	0.375	72.5	1.298	18	1.298	18
	23.29	115.2943	115	3.531	One 72x3/8" Web+Four 8x8x7/8	0.375	72.5	1.298	18	1.298	18
	0.00	115.2943	115	3.531	One 72x3/8" Web+Four 8x8x7/8 + 1CP 18x5/8	0.375	72.5	1.900	18	1.900	18
	2.50	117.7943	117	9.531	One 72x3/8" Web+Four 8x8x7/8 + 1CP 18x5/8	0.375	72.5	1.900	18	1.900	18
	0.00	117.7943	117	9.531	One 72x3/8" Web+Four 8x8x7/8 + 2CP 18x5/8	0.375	72.5	2.500	18	2.500	18
End Span	7.50	125.2943	125	3.531	One 72x3/8" Web+Four 8x8x7/8 + 2CP 18x5/8	0.375	72.5	2.500	18	2.500	18
Begin Span	0.00	0.0000	0	0.000	One 72x3/8" Web+Four 8x8x7/8 + 2CP 18x5/8	0.375	72.5	2.500	18	2.500	18
	7.50	7.5000	7	6.000	One 72x3/8" Web+Four 8x8x7/8 + 2CP 18x5/8	0.375	72.5	2.500	18	2.500	18
	0.00	7.5000	7	6.000	One 72x3/8" Web+Four 8x8x7/8 + 1CP 18x5/8	0.375	72.5	1.900	18	1.900	18

Unit 3 Girder F Section Properties

	Increment	x location in span	Feet	Inches	Section	t_{web} in	d_{web} in	t_{tf} in	b_{tf} in	t_{bf} in	b_{bf} in
	2.50	10.0000	10	0.000	One 72x3/8" Web+Four 8x8x7/8 + 1CP 18x5/8	0.375	72.5	1.900	18	1.900	18
	0.00	10.0000	10	0.000	One 72x3/8" Web+Four 8x8x7/8	0.375	72.5	1.298	18	1.298	18
	72.99	82.9870	82	11.844	One 72x3/8" Web+Four 8x8x7/8	0.375	72.5	1.298	18	1.298	18
	0.00	82.9870	82	11.844	One 72x3/8" Web+Four 8x8x7/8 + 1CP 18x5/8	0.375	72.5	1.900	18	1.900	18
	2.50	85.4870	85	5.844	One 72x3/8" Web+Four 8x8x7/8 + 1CP 18x5/8	0.375	72.5	1.900	18	1.900	18
	0.00	85.4870	85	5.844	One 72x3/8" Web+Four 8x8x7/8 + 2CP 18x5/8	0.375	72.5	2.500	18	2.500	18
End Span	7.50	92.9870	92	11.844	One 72x3/8" Web+Four 8x8x7/8 + 2CP 18x5/8	0.375	72.5	2.500	18	2.500	18
Begin Span	0.00	0.0000	0	0.000	One 72x3/8" Web+Four 8x8x7/8 + 2CP 18x5/8	0.375	72.5	2.500	18	2.500	18
	7.50	7.5000	7	6.000	One 72x3/8" Web+Four 8x8x7/8 + 2CP 18x5/8	0.375	72.5	2.500	18	2.500	18
	0.00	7.5000	7	6.000	One 72x3/8" Web+Four 8x8x7/8 + 1CP 18x5/8	0.375	72.5	1.900	18	1.900	18
	2.50	10.0000	10	0.000	One 72x3/8" Web+Four 8x8x7/8 + 1CP 18x5/8	0.375	72.5	1.900	18	1.900	18
	0.00	10.0000	10	0.000	One 72x3/8" Web+Four 8x8x7/8	0.375	72.5	1.298	18	1.298	18
	22.68	32.6849	32	8.219	One 72x3/8" Web+Four 8x8x7/8	0.375	72.5	1.298	18	1.298	18
	0.00	32.6849	32	8.219	One 72x3/8" Web+Four 8x8x7/8 + 1CP 18x5/8	0.375	72.5	1.900	18	1.900	18
	54.00	86.6849	86	8.219	One 72x3/8" Web+Four 8x8x7/8 + 1CP 18x5/8	0.375	72.5	1.900	18	1.900	18
	0.00	86.6849	86	8.219	One 72x3/8" Web+Four 8x8x7/8	0.375	72.5	1.298	18	1.298	18
	24.00	110.6849	110	8.219	One 72x3/8" Web+Four 8x8x7/8	0.375	72.5	1.298	18	1.298	18
	0.00	110.6849	110	8.219	One 72x3/8" Web+Four 8x8x7/8 + 1CP 18x5/8	0.375	72.5	1.900	18	1.900	18
	3.00	113.6849	113	8.219	One 72x3/8" Web+Four 8x8x7/8 + 1CP 18x5/8	0.375	72.5	1.900	18	1.900	18
	0.00	113.6849	113	8.219	One 72x3/8" Web+Four 8x8x7/8 + 2CP 18x5/8	0.375	72.5	2.500	18	2.500	18
	2.50	116.1849	116	2.219	One 72x3/8" Web+Four 8x8x7/8 + 2CP 18x5/8	0.375	72.5	2.500	18	2.500	18
	0.00	116.1849	116	2.219	One 72x3/8" Web+Four 8x8x7/8 + 3CP 18x5/8	0.375	72.5	3.103	18	3.103	18
End Span	7.50	123.6849	123	8.219	One 72x3/8" Web+Four 8x8x7/8 + 3CP 18x5/8	0.375	72.5	3.103	18	3.103	18
Begin Span	0.00	0.0000	0	0.000	One 72x3/8" Web+Four 8x8x7/8 + 3CP 18x5/8	0.375	72.5	3.103	18	3.103	18
	7.50	7.5000	7	6.000	One 72x3/8" Web+Four 8x8x7/8 + 3CP 18x5/8	0.375	72.5	3.103	18	3.103	18
	0.00	7.5000	7	6.000	One 72x3/8" Web+Four 8x8x7/8 + 2CP 18x5/8	0.375	72.5	2.500	18	2.500	18
	2.50	10.0000	10	0.000	One 72x3/8" Web+Four 8x8x7/8 + 2CP 18x5/8	0.375	72.5	2.500	18	2.500	18
	0.00	10.0000	10	0.000	One 72x3/8" Web+Four 8x8x7/8 + 1CP 18x5/8	0.375	72.5	1.900	18	1.900	18
	3.00	13.0000	13	0.000	One 72x3/8" Web+Four 8x8x7/8 + 1CP 18x5/8	0.375	72.5	1.900	18	1.900	18
	0.00	13.0000	13	0.000	One 72x3/8" Web+Four 8x8x7/8	0.375	72.5	1.298	18	1.298	18
	26.99	39.9922	39	11.906	One 72x3/8" Web+Four 8x8x7/8	0.375	72.5	1.298	18	1.298	18
	0.00	39.9922	39	11.906	One 72x3/8" Web+Four 8x8x7/8 + 1CP 18x5/8	0.375	72.5	1.900	18	1.900	18
	42.00	81.9922	81	11.906	One 72x3/8" Web+Four 8x8x7/8 + 1CP 18x5/8	0.375	72.5	1.900	18	1.900	18
	0.00	81.9922	81	11.906	One 72x3/8" Web+Four 8x8x7/8	0.375	72.5	1.298	18	1.298	18
End Span	16.87	98.8620	98	10.344	One 72x3/8" Web+Four 8x8x7/8	0.375	72.5	1.298	18	1.298	18

Unit 2 Girder F Section Properties

	Increment	x location in span	Feet	Inches	Section	t_{web} in	d_{web} in	t_{tf} in	b_{tf} in	t_{bf} in	b_{bf} in
Begin Span	0.00	0.0000	0	0.000	One 72x5/8" Web+Four 8x8x7/8	0.625	72.5	1.307	18	1.307	18
	14.00	14.0000	14	0.000	One 72x5/8" Web+Four 8x8x7/8	0.625	72.5	1.307	18	1.307	18
	0.00	14.0000	14	0.000	One 72x5/8" Web+Four 8x8x7/8+ 1CP 18x5/8"	0.625	72.5	1.908	18	1.908	18
	8.00	22.0000	22	0.000	One 72x5/8" Web+Four 8x8x7/8+ 1CP 18x5/8"	0.625	72.5	1.908	18	1.908	18
	0.00	22.0000	22	0.000	One 72x5/8" Web+Four 8x8x7/8+ 2CP 18x5/8"	0.625	72.5	2.510	18	2.510	18
	2.90	24.9036	24	10.844	One 72x5/8" Web+Four 8x8x7/8+ 2CP 18x5/8"	0.625	72.5	2.510	18	2.510	18
	0.00	24.9036	24	10.844	One 72x3/8" Web+Four 8x8x7/8+ 2CP 18x5/8"	0.375	72.5	2.508	18	2.508	18
	42.10	67.0000	67	0.000	One 72x3/8" Web+Four 8x8x7/8+ 2CP 18x5/8"	0.375	72.5	2.508	18	2.508	18
	0.00	67.0000	67	0.000	One 72x3/8" Web+Four 8x8x7/8+ 1CP 18x5/8"	0.375	72.5	1.906	18	1.906	18
	15.50	82.5000	82	6.000	One 72x3/8" Web+Four 8x8x7/8+ 1CP 18x5/8"	0.375	72.5	1.906	18	1.906	18
	0.00	82.5000	82	6.000	One 72x3/8" Web+Four 8x8x7/8	0.375	72.5	1.305	18	1.305	18
	12.50	95.0000	95	0.000	One 72x3/8" Web+Four 8x8x7/8	0.375	72.5	1.305	18	1.305	18
	0.00	95.0000	95	0.000	One 72x3/8" Web+Four 8x8x7/8 + 1CP 18x3/4"	0.375	72.5	2.027	18	2.027	18
	4.50	99.5000	99	6.000	One 72x3/8" Web+Four 8x8x7/8 + 1CP 18x3/4"	0.375	72.5	2.027	18	2.027	18
	0.00	99.5000	99	6.000	One 72x3/8" Web+Four 8x8x7/8 + 2CP 18x3/4"	0.375	72.5	2.749	18	2.749	18
End Span	7.50	107.0000	107	0.000	One 72x3/8" Web+Four 8x8x7/8 + 2CP 18x3/4"	0.375	72.5	2.749	18	2.749	18
Begin Span	0.00	0.0000	0	0.000	One 72x3/8" Web+Four 8x8x7/8 + 2CP 18x3/4"	0.375	72.5	2.749	18	2.749	18
	7.50	7.5000	7	6.000	One 72x3/8" Web+Four 8x8x7/8 + 2CP 18x3/4"	0.375	72.5	2.749	18	2.749	18
	0.00	7.5000	7	6.000	One 72x3/8" Web+Four 8x8x7/8 + 1CP 18x3/4"	0.375	72.5	2.027	18	2.027	18
	5.50	13.0000	13	0.000	One 72x3/8" Web+Four 8x8x7/8 + 1CP 18x3/4"	0.375	72.5	2.027	18	2.027	18
	0.00	13.0000	13	0.000	One 72x3/8" Web+Four 8x8x7/8	0.375	72.5	1.305	18	1.305	18
	78.00	91.0000	91	0.000	One 72x3/8" Web+Four 8x8x7/8	0.375	72.5	1.305	18	1.305	18
	0.00	91.0000	91	0.000	One 72x3/8" Web+Four 8x8x7/8 + 1CP 18x3/4"	0.375	72.5	2.027	18	2.027	18
End Span	8.00	99.0000	99	0.000	One 72x3/8" Web+Four 8x8x7/8 + 1CP 18x3/4"	0.375	72.5	2.027	18	2.027	18
Begin Span	0.00	0.0000	0	0.000	One 72x3/8" Web+Four 8x8x7/8 + 1CP 18x3/4"	0.375	72.5	2.027	18	2.027	18
	7.00	7.0000	7	0.000	One 72x3/8" Web+Four 8x8x7/8 + 1CP 18x3/4"	0.375	72.5	2.027	18	2.027	18
	0.00	7.0000	7	0.000	One 72x3/8" Web+Four 8x8x7/8	0.375	72.5	1.305	18	1.305	18
	85.84	92.8359	92	10.031	One 72x3/8" Web+Four 8x8x7/8	0.375	72.5	1.305	18	1.305	18
	0.00	92.8359	92	10.031	One 72x3/8" Web+Four 8x8x7/8 + 1CP 18x3/4"	0.375	72.5	2.027	18	2.027	18
	7.00	99.8359	99	10.031	One 72x3/8" Web+Four 8x8x7/8 + 1CP 18x3/4"	0.375	72.5	2.027	18	2.027	18
	0.00	99.8359	99	10.031	One 72x3/8" Web+Four 8x8x7/8 + 2CP 18x3/4"	0.375	72.5	2.749	18	2.749	18
	2.00	101.8359	101	10.031	One 72x3/8" Web+Four 8x8x7/8 + 2CP 18x3/4"	0.375	72.5	2.749	18	2.749	18
	0.00	101.8359	101	10.031	One 72x3/8" Web+Four 8x8x7/8 + 2CP 18x3/4" +1CP18x5/8"	0.375	72.5	3.350	18	3.350	18
End Span	8.00	109.8359	109	10.031	One 72x3/8" Web+Four 8x8x7/8 + 2CP 18x3/4" +1CP18x5/8"	0.375	72.5	3.350	18	3.350	18
Begin Span	0.00	0.0000	0	0.000	One 72x3/8" Web+Four 8x8x7/8 + 2CP 18x3/4" +1CP18x5/8"	0.375	72.5	3.350	18	3.350	18

Unit 2 Girder F Section Properties

	Increment	x location in span	Feet	Inches	Section	t_{web} in	d_{web} in	t_{tf} in	b_{tf} in	t_{bf} in	b_{bf} in
	7.00	7.0000	7	0.000	One 72x3/8" Web+Four 8x8x7/8 + 2CP 18x3/4" +1CP18x5/8"	0.375	72.5	3.350	18	3.350	18
	0.00	7.0000	7	0.000	One 72x3/8" Web+Four 8x8x7/8 + 2CP 18x3/4"	0.375	72.5	2.749	18	2.749	18
	2.00	9.0000	9	0.000	One 72x3/8" Web+Four 8x8x7/8 + 2CP 18x3/4"	0.375	72.5	2.749	18	2.749	18
	0.00	9.0000	9	0.000	One 72x3/8" Web+Four 8x8x7/8 + 1CP 18x3/4"	0.375	72.5	2.027	18	2.027	18
	6.00	15.0000	15	0.000	One 72x3/8" Web+Four 8x8x7/8 + 1CP 18x3/4"	0.375	72.5	2.027	18	2.027	18
	0.00	15.0000	15	0.000	One 72x3/8" Web+Four 8x8x7/8	0.375	72.5	1.305	18	1.305	18
	18.72	33.7188	33	8.625	One 72x3/8" Web+Four 8x8x7/8	0.375	72.5	1.305	18	1.305	18
	0.00	33.7188	33	8.625	One 72x3/8" Web+Four 8x8x7/8 +1CP18x5/8"	0.375	72.5	1.906	18	1.906	18
	11.00	44.7188	44	8.625	One 72x3/8" Web+Four 8x8x7/8 +1CP18x5/8"	0.375	72.5	1.906	18	1.906	18
	0.00	44.7188	44	8.625	One 72x3/8" Web+Four 8x8x7/8 +1CP18x5/8"+ 1 CP18x1/2	0.375	72.5	2.387	18	2.387	18
	41.00	85.7188	85	8.625	One 72x3/8" Web+Four 8x8x7/8 +1CP18x5/8"+ 1 CP18x1/2	0.375	72.5	2.387	18	2.387	18
	0.00	85.7188	85	8.625	One 72x3/8" Web+Four 8x8x7/8 +1CP18x5/8"	0.375	72.5	1.906	18	1.906	18
End Span	32.00	117.7188	117	8.625	One 72x3/8" Web+Four 8x8x7/8 +1CP18x5/8"	0.375	72.5	1.906	18	1.906	18
Begin Span	0.00	0.0000	0	0.000	One 72x3/8" Web+Four 8x8x7/8 +1CP18x5/8"	0.375	72.5	1.906	18	1.906	18
	3.58	3.5833	3	7.000	One 72x3/8" Web+Four 8x8x7/8 +1CP18x5/8"	0.375	72.5	1.906	18	1.906	18
	0.00	3.5833	3	7.000	One 72x3/8" Web+Four 8x8x7/8	0.375	72.5	1.305	18	1.305	18
End Span	8.59	12.1693	12	2.031	One 72x3/8" Web+Four 8x8x7/8	0.375	72.5	1.305	18	1.305	18

Girder H Noncomposite.STR

STLBRIDGE LRFD

STEEL BRIDGE DESIGN SOFTWARE

Copyright 2014 BRIDGESOFT, Inc. All Rights Reserved

STRESS OUTPUT

Title: Broadway South Approach Girder H
Input Filename: Girder H Noncomposite
Output Filename: Girder H Noncomposite.STR
Time:11:00:02
Date:02-14-2017
AASHTO LRFD Code: 7TH Edition

♀

Broadway South Approach Girder H 02-14-2017 11:00:02 STLBRIDGE LRFD Page 1

--- INPUT ECHO ---

"2DBRIDGE I Girder"
"ENGLISH"
"Broadway South Approach Girder H"

Page 1

```
"LRFD v61"
0
5,"HL93",8,"0",0,0,0,0,0,0,0,0
4000,150,6.5,2,2.5,490,3644,29000,8,24
1,10,0,1.5,1.25,1.5,1.75
0,0,0
1,1,1.3
0,0,1.5
1.25,1.5,1.75
1.25,1.55,1.8,1.33,1,1
1.25,1.5,1.6
1.3,1.3,1
4,2,8,0,.96,1.709,2,0
25.521,0,0
0,0,0,0,0
129.742,0,0
0,0,0,0,0
95.87,0,0
0,0,0,0,0
123.612,0,0
0,0,0,0,0
15.435,0,0
0,0,0,0,0
0
0
0
0
1,9.021,72.5,72.5,0
1,13.521,72.5,72.5,0
1,18.021,72.5,72.5,0
1,25.521,72.5,72.5,0
2,9.021,18,.95,36
2,13.521,18,1.435,36
2,18.021,18,1.921,36
2,25.521,18,2.41,36
3,9.021,18,.95,36
3,13.521,18,1.435,36
3,18.021,18,1.921,36
3,25.521,18,2.41,36
4,0,4,2.5,0
4,25.521,4,5,0
5,0,0,0,0
5,25.521,0,0,0
6,0,0,0,0
6,25.521,0,0,0
7,9.021,0,.375,36
7,13.521,0,.375,36
```

♀

--- INPUT ECHO ---

```
7,18.021,0,.375,36
7,25.521,99999,.375,36
1,7.5,72.5,72.5,0
1,12,72.5,72.5,0
1,16.5,72.5,72.5,0
1,36.992,72.5,72.5,0
1,46.992,72.5,72.5,0
1,85.242,72.5,72.5,0
1,94.742,72.5,72.5,0
1,113.242,72.5,72.5,0
1,117.742,72.5,72.5,0
1,122.242,72.5,72.5,0
1,129.742,72.5,72.5,0
```

```
2,7.5,18,2.41,36
2,12,18,1.921,36
2,16.5,18,1.435,36
2,36.992,18,.95,36
2,46.992,18,1.315,36
2,85.242,18,1.68,36
2,94.742,18,1.315,36
2,113.242,18,.95,36
2,117.742,18,1.435,36
2,122.242,18,1.921,36
2,129.742,18,2.41,36
3,7.5,18,2.41,36
3,12,18,1.921,36
3,16.5,18,1.435,36
3,36.992,18,.95,36
3,46.992,18,1.315,36
3,85.242,18,1.68,36
3,94.742,18,1.315,36
3,113.242,18,.95,36
3,117.742,18,1.435,36
3,122.242,18,1.921,36
3,129.742,18,2.41,36
4,0,4,2.5,0
4,91.211,4,10.875,0
4,129.742,4,10.875,0
5,0,0,0,0
5,91.211,0,0,0
5,129.742,0,0,0
6,0,0,0,0
6,91.211,0,0,0
6,129.742,0,0,0
7,7.5,0,.375,36
7,12,0,.375,36
7,16.5,0,.375,36
7,36.992,0,.375,36
7,46.992,0,.375,36
7,85.242,0,.375,36
```

♀

--- INPUT ECHO ---

```
7,94.742,0,.375,36
7,113.242,0,.375,36
7,117.742,0,.375,36
7,122.242,0,.375,36
7,129.742,99999,.375,36
1,7.5,72.5,72.5,0
1,12,72.5,72.5,0
1,16.5,72.5,72.5,0
1,31.5,72.5,72.5,0
1,61.5,72.5,72.5,0
1,81.37,72.5,72.5,0
1,88.37,72.5,72.5,0
1,95.87,72.5,72.5,0
2,7.5,18,2.41,36
2,12,18,1.921,36
2,16.5,18,1.435,36
2,31.5,18,.95,36
2,61.5,18,1.315,36
2,81.37,18,.95,36
2,88.3698,18,1.555,36
2,95.87,18,2.045,36
3,7.5,18,2.41,36
3,12,18,1.921,36
```

```
3,16.5,18,1.435,36
3,31.5,18,.95,36
3,61.5,18,1.315,36
3,81.37,18,.95,36
3,88.3698,18,1.555,36
3,95.87,18,2.045,36
4,0,4,10.875,0
4,95.87,4,10.875,0
5,0,0,0,0
5,95.87,0,0,0
6,0,0,0,0
6,95.87,0,0,0
7,7.5,0,.375,36
7,12,0,.375,36
7,16.5,0,.375,36
7,31.5,0,.375,36
7,61.5,0,.375,36
7,81.37,0,.375,36
7,88.37,0,.375,36
7,95.87,99999,.375,36
1,7.5,72.5,72.5,0
1,14.75,72.5,72.5,0
1,37,72.5,72.5,0
1,46.5,72.5,72.5,0
1,77.5,72.5,72.5,0
1,89,72.5,72.5,0
1,111.612,72.5,72.5,0
```

♀

--- INPUT ECHO ---

```
1,116.112,72.5,72.5,0
1,123.612,72.5,72.5,0
2,7.5,18,2.045,36
2,14.75,18,1.555,36
2,37,18,.95,36
2,46.5,18,1.315,36
2,77.5,18,1.68,36
2,89,18,1.315,36
2,111.612,18,.95,36
2,116.112,18,1.435,36
2,123.612,18,1.921,36
3,7.5,18,2.045,36
3,14.75,18,1.555,36
3,37,18,.95,36
3,46.5,18,1.315,36
3,77.5,18,1.68,36
3,89,18,1.315,36
3,111.612,18,.95,36
3,116.112,18,1.435,36
3,123.612,18,1.921,36
4,0,4,10.875,0
4,11.326,4,10.875,0
4,123.612,4,2.5,0
5,0,0,0,0
5,11.326,0,0,0
5,123.612,0,0,0
6,0,0,0,0
6,11.326,0,0,0
6,123.612,0,0,0
7,7.5,0,.375,36
7,14.75,0,.375,36
7,37,0,.375,36
7,46.5,0,.375,36
```

```
7,77.5,0,.375,36
7,89,0,.375,36
7,111.612,0,.375,36
7,116.112,0,.375,36
7,123.612,99999,.375,36
1,7.5,72.5,72.5,0
1,12,72.5,72.5,0
1,15.435,72.5,72.5,0
2,7.5,18,1.921,36
2,12,18,1.435,36
2,15.435,18,.95,36
3,7.5,18,1.921,36
3,12,18,1.435,36
3,15.435,18,.95,36
4,0,4,5,0
4,15.435,4,2.5,0
5,0,0,0,0
♀
 Broadway South Approach Girder H  02-14-2017  11:00:02  STLBRIDGE LRFD Page  5
                                --- INPUT ECHO ---
5,15.435,0,0,0
6,0,0,0,0
6,15.435,0,0,0
7,7.5,0,.375,36
7,12,0,.375,36
7,15.435,99999,.375,36
♀
 Broadway South Approach Girder H  02-14-2017  11:00:02  STLBRIDGE LRFD Page  6
                                --- INPUT ECHO ---
```

--- FATIGUE REPORT ---

All Units: ksi

SPAN 1 - FATIGUE STRESS RANGE (ksi) -
(EXT - EXTREME FIBER, 4T=4*tw, 6T=6*tw)

LOCA	REBAR RANGE	-----TOP FLANGE----- EXT	4T	6T	-----BOTTOM FLANGE----- EXT	INS	4T	6T
1.0	0.00	0.00	0.00	0.00	0.00	0.00	0.00	0.00
1.1	0.00	1.51	1.41	1.38	-1.51	-1.47	-1.41	-1.38
1.2	0.00	2.86	2.67	2.62	-2.86	-2.79	-2.67	-2.62
1.3	0.00	4.08	3.82	3.73	-4.08	-3.98	-3.82	-3.73
1.353	0.00	4.65	4.35	4.25	-4.65	-4.53	-4.35	-4.25
1.354	0.00	3.32	3.06	3.00	-3.32	-3.20	-3.06	-3.00
1.4	0.00	3.67	3.39	3.32	-3.67	-3.53	-3.39	-3.32

Page 17

1.5	0.00	4.50	4.15	4.06	-4.50	-4.33	-4.15	-4.06
1.529	0.00	4.68	4.32	4.22	-4.68	-4.50	-4.32	-4.22
1.530	0.00	3.64	3.31	3.24	-3.64	-3.46	-3.31	-3.24
1.6	0.00	3.98	3.62	3.55	-3.98	-3.78	-3.62	-3.55
1.7	0.00	4.29	3.91	3.82	-4.29	-4.08	-3.91	-3.82
1.706	0.00	4.35	3.96	3.88	-4.35	-4.13	-3.96	-3.88
1.707	0.00	3.56	3.20	3.13	-3.56	-3.34	-3.20	-3.13
1.8	0.00	4.33	3.89	3.80	-4.33	-4.06	-3.89	-3.80
1.9	0.00	4.87	4.38	4.28	-4.87	-4.56	-4.38	-4.28
2.0	0.00	5.41	4.86	4.76	-5.41	-5.07	-4.86	-4.76

Note: For locations which do not experience tensile stresses
the fatigue stress range is output as a negative number.

♀

Broadway South Approach Girder H 02-14-2017 11:00:03 Page 24

--- FATIGUE REPORT ---

All Units: ksi

SPAN 2 - FATIGUE STRESS RANGE (ksi) -
(EXT - EXTREME FIBER, 4T=4*tw, 6T=6*tw)

LOCA	REBAR RANGE	-----TOP FLANGE----- EXT	4T	6T	-----BOTTOM FLANGE----- EXT	INS	4T	6T
2.0	0.00	5.41	4.86	4.76	-5.41	-5.07	-4.86	-4.76
2.058	0.00	4.06	3.65	3.57	-4.06	-3.81	-3.65	-3.57
2.058	0.00	4.97	4.53	4.43	-4.97	-4.72	-4.53	-4.43
2.092	0.00	3.99	3.63	3.55	-3.99	-3.79	-3.63	-3.55
2.093	0.00	5.13	4.73	4.63	-5.13	-4.94	-4.73	-4.63
2.1	0.00	4.86	4.48	4.38	-4.86	-4.67	-4.48	-4.38
2.127	0.00	4.18	3.85	3.77	-4.18	-4.02	-3.85	-3.77
2.127	0.00	5.86	5.47	5.36	-5.86	-5.71	-5.47	-5.36
2.2	0.00	3.30	3.08	3.02	3.30	3.22	3.08	3.02
2.285	0.00	-4.03	-3.76	-3.68	4.03	3.92	3.76	3.68
2.285	0.00	-3.09	-2.86	-2.80	3.09	2.98	2.86	2.80
2.3	0.00	-3.19	-2.95	-2.88	3.19	3.07	2.95	2.88
2.362	0.00	-4.76	-4.40	-4.31	4.76	4.59	4.40	4.31
2.362	0.00	-3.86	-3.54	-3.46	3.86	3.69	3.54	3.46
2.4	0.00	-4.64	-4.25	-4.16	4.64	4.43	4.25	4.16
2.5	0.00	-6.00	-5.50	-5.38	6.00	5.73	5.50	5.38
2.6	0.00	-6.38	-5.85	-5.72	6.38	6.10	5.85	5.72
2.657	0.00	6.24	5.71	5.59	6.24	5.96	5.71	5.59
2.657	0.00	7.69	7.11	6.96	7.69	7.42	7.11	6.96
2.7	0.00	7.56	6.99	6.84	7.56	7.29	6.99	6.84
2.730	0.00	7.19	6.65	6.51	7.19	6.94	6.65	6.51
2.730	0.00	9.37	8.75	8.56	9.37	9.13	8.75	8.56
2.8	0.00	8.25	7.71	7.54	8.25	8.04	7.71	7.54
2.873	0.00	6.65	6.22	6.08	6.65	6.48	6.22	6.08
2.873	0.00	4.74	4.37	4.28	4.74	4.56	4.37	4.28
2.9	0.00	4.32	3.98	3.89	-4.32	-4.15	-3.98	-3.89
2.907	0.00	4.44	4.10	4.01	-4.44	-4.28	-4.10	-4.01
2.908	0.00	3.45	3.14	3.07	-3.45	-3.28	-3.14	-3.07
2.942	0.00	3.92	3.57	3.49	-3.92	-3.72	-3.57	-3.49
2.942	0.00	3.20	2.87	2.81	-3.20	-3.00	-2.87	-2.81
3.0	0.00	3.83	3.44	3.37	-3.83	-3.59	-3.44	-3.37

Note: For locations which do not experience tensile stresses
the fatigue stress range is output as a negative number.

♀

Broadway South Approach Girder H 02-14-2017 11:00:03 Page 25

Girder H Noncomposite.STR

--- FATIGUE REPORT ---

Max stress range, top & bottom flange
@ Ext: 9.97 ksi * 1.13 = 11.27 ksi
@ 4T: 9.31 ksi * 1.13 = 10.52 ksi

All Units: ksi

SPAN 3 - FATIGUE STRESS RANGE (ksi) -
(EXT - EXTREME FIBER, 4T=4*tw, 6T=6*tw)

LOCA	REBAR RANGE	TOP FLANGE EXT	TOP FLANGE 4T	TOP FLANGE 6T	BOTTOM FLANGE EXT	BOTTOM FLANGE INS	BOTTOM FLANGE 4T	BOTTOM FLANGE 6T
3.0	0.00	3.83	3.44	3.37	-3.83	-3.59	-3.44	-3.37
3.078	0.00	3.49	3.14	3.07	-3.49	-3.27	-3.14	-3.07
3.078	0.00	4.28	3.89	3.81	-4.28	-4.06	-3.89	-3.81
3.1	0.00	4.16	3.79	3.71	-4.16	-3.95	-3.79	-3.71
3.125	0.00	4.31	3.93	3.84	-4.31	-4.09	-3.93	-3.84
3.125	0.00	5.56	5.12	5.01	-5.56	-5.35	-5.12	-5.01
3.172	0.00	5.92	5.46	5.34	-5.92	-5.70	-5.46	-5.34
3.172	0.00	8.31	7.77	7.60	-8.31	-8.10	-7.77	-7.60
3.2	0.00	8.62	8.05	7.88	8.62	8.40	8.05	7.88
3.3	0.00	9.88	9.23	9.03	9.88	9.62	9.23	9.03
3.328	0.00	9.97	9.31	9.11	9.97	9.71	9.31	9.11
3.329	0.00	7.65	7.07	6.92	7.65	7.38	7.07	6.92
3.4	0.00	7.82	7.24	7.08	7.82	7.55	7.24	7.08
3.5	0.00	7.29	6.75	6.60	7.29	7.04	6.75	6.60
3.6	0.00	7.36	6.81	6.66	7.36	7.11	6.81	6.66
3.641	0.00	7.21	6.67	6.53	7.21	6.96	6.67	6.53
3.642	0.00	9.40	8.78	8.59	9.40	9.16	8.78	8.59
3.7	0.00	9.13	8.52	8.34	9.13	8.89	8.52	8.34
3.8	0.00	7.73	7.22	7.07	7.73	7.53	7.22	7.07
3.849	0.00	7.11	6.64	6.50	7.11	6.93	6.64	6.50
3.849	0.00	4.73	4.34	4.25	4.73	4.53	4.34	4.25
3.9	0.00	4.29	3.94	3.86	-4.29	-4.11	-3.94	-3.86
3.922	0.00	4.45	4.09	4.00	-4.45	-4.26	-4.09	-4.00
3.922	0.00	3.50	3.18	3.11	-3.50	-3.31	-3.18	-3.11
4.0	0.00	3.95	3.58	3.50	-3.95	-3.74	-3.58	-3.50

Note: For locations which do not experience tensile stresses
the fatigue stress range is output as a negative number.

Broadway South Approach Girder H 02-14-2017 11:00:03 Page 26

--- FATIGUE REPORT ---

All Units: ksi

SPAN 4 - FATIGUE STRESS RANGE (ksi) -
(EXT - EXTREME FIBER, 4T=4*tw, 6T=6*tw)

LOCA	REBAR RANGE	TOP FLANGE EXT	TOP FLANGE 4T	TOP FLANGE 6T	BOTTOM FLANGE EXT	BOTTOM FLANGE INS	BOTTOM FLANGE 4T	BOTTOM FLANGE 6T
4.0	0.00	3.95	3.58	3.50	-3.95	-3.74	-3.58	-3.50
4.061	0.00	3.54	3.21	3.14	-3.54	-3.35	-3.21	-3.14
4.061	0.00	4.50	4.14	4.05	-4.50	-4.32	-4.14	-4.05
4.1	0.00	4.17	3.83	3.75	-4.17	-4.00	-3.83	-3.75
4.119	0.00	4.37	4.02	3.93	4.37	4.19	4.02	3.93
4.119	0.00	6.57	6.14	6.01	6.57	6.40	6.14	6.01
4.2	0.00	7.85	7.33	7.17	7.85	7.65	7.33	7.17
4.299	0.00	9.13	8.53	8.34	9.13	8.89	8.53	8.34
4.299	0.00	7.00	6.48	6.34	7.00	6.76	6.48	6.34

4.3	0.00	7.01	6.48	6.34	7.01	6.76	6.48	6.34
4.376	0.00	7.00	6.47	6.33	7.00	6.75	6.47	6.33
4.376	0.00	5.67	5.20	5.09	5.67	5.42	5.20	5.09
4.4	0.00	-5.67	-5.19	-5.08	5.67	5.42	5.19	5.08
4.5	0.00	-5.17	-4.74	-4.64	5.17	4.95	4.74	4.64
4.6	0.00	-3.80	-3.49	-3.41	3.80	3.64	3.49	3.41
4.627	0.00	-3.39	-3.11	-3.04	3.39	3.24	3.11	3.04
4.627	0.00	-4.18	-3.87	-3.78	4.18	4.03	3.87	3.78
4.7	0.00	-2.81	-2.60	-2.54	2.81	2.71	2.60	2.54
4.720	0.00	-2.72	-2.51	-2.46	2.72	2.62	2.51	2.46
4.720	0.00	-3.54	-3.31	-3.24	3.54	3.45	3.31	3.24
4.8	0.00	3.08	2.88	2.82	3.08	3.00	2.88	2.82
4.9	0.00	5.05	4.72	4.62	-5.05	-4.92	-4.72	-4.62
4.903	0.00	5.22	4.88	4.77	-5.22	-5.09	-4.88	-4.77
4.903	0.00	3.73	3.44	3.36	-3.73	-3.59	-3.44	-3.36
4.939	0.00	5.28	4.87	4.77	-5.28	-5.08	-4.87	-4.77
4.939	0.00	4.10	3.74	3.66	-4.10	-3.90	-3.74	-3.66
5.0	0.00	6.12	5.57	5.45	-6.12	-5.81	-5.57	-5.45

Note: For locations which do not experience tensile stresses
the fatigue stress range is output as a negative number.

♀

Broadway South Approach Girder H 02-14-2017 11:00:03 Page 27

--- FATIGUE REPORT ---

All Units: ksi

SPAN 5 - FATIGUE STRESS RANGE (ksi) -
(EXT - EXTREME FIBER, 4T=4*tw, 6T=6*tw)

	REBAR	-----TOP FLANGE-----			-----BOTTOM FLANGE-----			
LOCA	RANGE	EXT	4T	6T	EXT	INS	4T	6T
5.0	0.00	6.12	5.57	5.45	-6.12	-5.81	-5.57	-5.45
5.1	0.00	5.51	5.01	4.90	-5.51	-5.23	-5.01	-4.90
5.2	0.00	4.90	4.46	4.36	-4.90	-4.65	-4.46	-4.36
5.3	0.00	4.29	3.90	3.82	-4.29	-4.07	-3.90	-3.82
5.4	0.00	3.67	3.34	3.27	-3.67	-3.48	-3.34	-3.27
5.485	0.00	3.15	2.86	2.80	-3.15	-2.99	-2.86	-2.80
5.487	0.00	4.04	3.73	3.65	-4.04	-3.89	-3.73	-3.65
5.5	0.00	3.94	3.63	3.55	-3.94	-3.79	-3.63	-3.55
5.6	0.00	3.16	2.91	2.85	-3.16	-3.04	-2.91	-2.85
5.7	0.00	2.37	2.18	2.14	-2.37	-2.28	-2.18	-2.14
5.777	0.00	1.79	1.65	1.62	-1.79	-1.72	-1.65	-1.62
5.778	0.00	2.50	2.34	2.29	-2.50	-2.44	-2.34	-2.29
5.8	0.00	2.27	2.12	2.08	-2.27	-2.21	-2.12	-2.08
5.9	0.00	1.17	1.09	1.07	-1.17	-1.14	-1.09	-1.07
6.0	0.00	0.00	0.00	0.00	0.00	0.00	0.00	0.00

Note: For locations which do not experience tensile stresses
the fatigue stress range is output as a negative number.

♀

Girder H Fully Composite.STR

STLBRIDGE LRFD

STEEL BRIDGE DESIGN SOFTWARE

Copyright 2014 BRIDGESOFT, Inc. All Rights Reserved

STRESS OUTPUT

Title: Broadway South Approach Girder H
Input Filename: Girder H Fully Composite
Output Filename: Girder H Fully Composite.STR
Time:11:06:16
Date:02-14-2017
AASHTO LRFD Code: 7TH Edition

♀

Broadway South Approach Girder H 02-14-2017 11:06:16 STLBRIDGE LRFD Page 1

--- INPUT ECHO ---

"2DBRIDGE I Girder"
"ENGLISH"
"Broadway South Approach Girder H"

Page 1

```
"LRFD v61"
0
5,"HL93",8,"0",0,0,0,0,0,0,0,0
4000,150,6.5,2,2.5,490,3644,29000,8,24
3,10,0,1.5,1.25,1.5,1.75
0,0,0
1,1,1.3
0,0,1.5
1.25,1.5,1.75
1.25,1.55,1.8,1.33,1,1
1.25,1.5,1.6
1.3,1.3,1
4,2,8,0,.96,1.709,2,0
25.521,0,0
0,0,0,0,0
129.742,0,0
0,0,0,0,0
95.87,0,0
0,0,0,0,0
123.612,0,0
0,0,0,0,0
15.435,0,0
0,0,0,0,0
0
0
0
0
1,9.021,72.5,72.5,0
1,13.521,72.5,72.5,0
1,18.021,72.5,72.5,0
1,25.521,72.5,72.5,0
2,9.021,18,.95,36
2,13.521,18,1.435,36
2,18.021,18,1.921,36
2,25.521,18,2.41,36
3,9.021,18,.95,36
3,13.521,18,1.435,36
3,18.021,18,1.921,36
3,25.521,18,2.41,36
4,0,4,2.5,0
4,25.521,4,5,0
5,0,0,0,0
5,25.521,0,0,0
6,0,0,0,0
6,25.521,0,0,0
7,9.021,0,.375,36
7,13.521,0,.375,36
```

♀

--- INPUT ECHO ---

```
7,18.021,0,.375,36
7,25.521,99999,.375,36
1,7.5,72.5,72.5,0
1,12,72.5,72.5,0
1,16.5,72.5,72.5,0
1,36.992,72.5,72.5,0
1,46.992,72.5,72.5,0
1,85.242,72.5,72.5,0
1,94.742,72.5,72.5,0
1,113.242,72.5,72.5,0
1,117.742,72.5,72.5,0
1,122.242,72.5,72.5,0
1,129.742,72.5,72.5,0
```

```
2,7.5,18,2.41,36
2,12,18,1.921,36
2,16.5,18,1.435,36
2,36.992,18,.95,36
2,46.992,18,1.315,36
2,85.242,18,1.68,36
2,94.742,18,1.315,36
2,113.242,18,.95,36
2,117.742,18,1.435,36
2,122.242,18,1.921,36
2,129.742,18,2.41,36
3,7.5,18,2.41,36
3,12,18,1.921,36
3,16.5,18,1.435,36
3,36.992,18,.95,36
3,46.992,18,1.315,36
3,85.242,18,1.68,36
3,94.742,18,1.315,36
3,113.242,18,.95,36
3,117.742,18,1.435,36
3,122.242,18,1.921,36
3,129.742,18,2.41,36
4,0,4,2.5,0
4,91.211,4,10.875,0
4,129.742,4,10.875,0
5,0,0,0,0
5,91.211,0,0,0
5,129.742,0,0,0
6,0,0,0,0
6,91.211,0,0,0
6,129.742,0,0,0
7,7.5,0,.375,36
7,12,0,.375,36
7,16.5,0,.375,36
7,36.992,0,.375,36
7,46.992,0,.375,36
7,85.242,0,.375,36
```

♀

--- INPUT ECHO ---

```
7,94.742,0,.375,36
7,113.242,0,.375,36
7,117.742,0,.375,36
7,122.242,0,.375,36
7,129.742,99999,.375,36
1,7.5,72.5,72.5,0
1,12,72.5,72.5,0
1,16.5,72.5,72.5,0
1,31.5,72.5,72.5,0
1,61.5,72.5,72.5,0
1,81.37,72.5,72.5,0
1,88.37,72.5,72.5,0
1,95.87,72.5,72.5,0
2,7.5,18,2.41,36
2,12,18,1.921,36
2,16.5,18,1.435,36
2,31.5,18,.95,36
2,61.5,18,1.315,36
2,81.37,18,.95,36
2,88.37,18,1.555,36
2,95.87,18,2.045,36
3,7.5,18,2.41,36
3,12,18,1.921,36
```

```
3,16.5,18,1.435,36
3,31.5,18,.95,36
3,61.5,18,1.315,36
3,81.37,18,.95,36
3,88.37,18,1.555,36
3,95.87,18,2.045,36
4,0,4,10.875,0
4,95.87,4,10.875,0
5,0,0,0,0
5,95.87,0,0,0
6,0,0,0,0
6,95.87,0,0,0
7,7.5,0,.375,36
7,12,0,.375,36
7,16.5,0,.375,36
7,31.5,0,.375,36
7,61.5,0,.375,36
7,81.37,0,.375,36
7,88.37,0,.375,36
7,95.87,99999,.375,36
1,7.5,72.5,72.5,0
1,14.75,72.5,72.5,0
1,37,72.5,72.5,0
1,46.5,72.5,72.5,0
1,77.5,72.5,72.5,0
1,89,72.5,72.5,0
1,111.612,72.5,72.5,0
```

♀

--- INPUT ECHO ---

```
1,116.112,72.5,72.5,0
1,123.612,72.5,72.5,0
2,7.5,18,2.045,36
2,14.75,18,1.555,36
2,37,18,.95,36
2,46.5,18,1.315,36
2,77.5,18,1.68,36
2,89,18,1.315,36
2,111.612,18,.95,36
2,116.112,18,1.435,36
2,123.612,18,1.921,36
3,7.5,18,2.045,36
3,14.75,18,1.555,36
3,37,18,.95,36
3,46.5,18,1.315,36
3,77.5,18,1.68,36
3,89,18,1.315,36
3,111.612,18,.95,36
3,116.112,18,1.435,36
3,123.612,18,1.921,36
4,0,4,10.875,0
4,11.326,4,10.875,0
4,123.612,4,2.5,0
5,0,0,0,0
5,11.326,0,0,0
5,123.612,0,0,0
6,0,0,0,0
6,11.326,0,0,0
6,123.612,0,0,0
7,7.5,0,.375,36
7,14.75,0,.375,36
7,37,0,.375,36
7,46.5,0,.375,36
```

```
7,77.5,0,.375,36
7,89,0,.375,36
7,111.612,0,.375,36
7,116.112,0,.375,36
7,123.612,99999,.375,36
1,7.5,72.5,72.5,0
1,12,72.5,72.5,0
1,15.435,72.5,72.5,0
2,7.5,18,1.921,36
2,12,18,1.435,36
2,15.435,18,.95,36
3,7.5,18,1.921,36
3,12,18,1.435,36
3,15.435,18,.95,36
4,0,4,5,0
4,15.435,4,2.5,0
5,0,0,0,0
♀
 Broadway South Approach Girder H  02-14-2017  11:06:16  STLBRIDGE LRFD Page  5
                                --- INPUT ECHO ---
5,15.435,0,0,0
6,0,0,0,0
6,15.435,0,0,0
7,7.5,0,.375,36
7,12,0,.375,36
7,15.435,99999,.375,36
♀
 Broadway South Approach Girder H  02-14-2017  11:06:16  STLBRIDGE LRFD Page  6
                                --- INPUT ECHO ---
```

--- FATIGUE REPORT ---

All Units: ksi

SPAN 1 - FATIGUE STRESS RANGE (ksi) -
(EXT - EXTREME FIBER, 4T=4*tw, 6T=6*tw)

LOCA	REBAR RANGE	-----TOP FLANGE----- EXT	4T	6T	-----BOTTOM FLANGE----- EXT	INS	4T	6T
1.0	0.00	0.00	0.00	0.00	0.00	0.00	0.00	0.00
1.1	1.22	1.18	1.10	1.07	-1.39	-1.36	-1.31	-1.28
1.2	2.36	2.29	2.13	2.08	-2.66	-2.60	-2.50	-2.45
1.3	3.42	3.32	3.09	3.02	-3.80	-3.71	-3.56	-3.49
1.353	3.95	3.84	3.57	3.48	-4.34	-4.23	-4.07	-3.98
1.354	2.86	2.82	2.59	2.53	-3.13	-3.01	-2.90	-2.84
1.4	3.19	3.14	2.88	2.81	-3.46	-3.34	-3.21	-3.14

Page 17

1.5	3.93	3.87	3.55	3.47	-4.21	-4.05	-3.89	-3.81
1.529	4.09	4.03	3.70	3.62	-4.37	-4.21	-4.04	-3.96
1.530	3.19	3.18	2.89	2.82	-3.41	-3.24	-3.11	-3.05
1.6	3.49	3.48	3.16	3.09	-3.70	-3.52	-3.38	-3.31
1.7	3.82	3.81	3.46	3.38	-4.05	-3.85	-3.70	-3.62
1.706	3.86	3.85	3.50	3.42	-4.10	-3.90	-3.74	-3.67
1.707	3.15	3.19	2.85	2.79	-3.36	-3.16	-3.03	-2.97
1.8	3.77	3.82	3.42	3.34	-4.03	-3.79	-3.63	-3.56
1.9	4.24	4.28	3.84	3.75	-4.53	-4.26	-4.08	-4.00
2.0	4.71	4.76	4.27	4.17	-5.04	-4.73	-4.54	-4.45

Note: For locations which do not experience tensile stresses
the fatigue stress range is output as a negative number.

♀

Broadway South Approach Girder H 02-14-2017 11:06:18 Page 24

--- FATIGUE REPORT ---

All Units: ksi

SPAN 2 - FATIGUE STRESS RANGE (ksi) -
(EXT - EXTREME FIBER, 4T=4*tw, 6T=6*tw)

	REBAR	-----TOP FLANGE-----			-----BOTTOM FLANGE-----			
LOCA	RANGE	EXT	4T	6T	EXT	INS	4T	6T
2.0	4.78	4.83	4.33	4.23	-5.05	-4.74	-4.55	-4.45
2.058	3.51	3.55	3.18	3.11	-3.74	-3.52	-3.38	-3.30
2.058	4.31	4.30	3.90	3.82	-4.57	-4.35	-4.17	-4.09
2.092	3.38	3.38	3.06	3.00	-3.62	-3.44	-3.30	-3.24
2.093	4.34	4.28	3.93	3.84	-4.63	-4.46	-4.29	-4.20
2.1	4.09	4.02	3.70	3.61	-4.37	-4.21	-4.04	-3.96
2.127	3.43	3.38	3.10	3.03	-3.76	-3.63	-3.48	-3.41
2.127	4.74	4.60	4.28	4.18	-5.22	-5.09	-4.89	-4.80
2.2	2.20	2.13	1.96	1.91	2.91	2.85	2.75	2.69
2.285	-1.95	-1.87	-1.69	-1.63	3.71	3.63	3.52	3.47
2.285	-1.69	-1.64	-1.47	-1.43	2.94	2.86	2.77	2.73
2.3	-1.66	-1.62	-1.45	-1.40	3.06	2.98	2.88	2.84
2.362	-2.49	-2.42	-2.16	-2.10	4.48	4.36	4.22	4.16
2.362	-2.21	-2.18	-1.93	-1.88	3.72	3.59	3.47	3.42
2.4	-2.63	-2.60	-2.30	-2.23	4.43	4.28	4.14	4.07
2.5	-3.36	-3.32	-2.94	-2.85	5.64	5.44	5.26	5.17
2.6	-3.61	-3.57	-3.17	-3.08	5.93	5.72	5.54	5.44
2.657	-3.61	-3.57	-3.18	-3.09	5.82	5.61	5.43	5.33
2.657	-4.19	-4.08	-3.67	-3.56	7.04	6.85	6.62	6.51
2.7	-4.22	-4.12	-3.70	-3.59	6.94	6.75	6.53	6.42
2.730	4.17	4.07	3.67	3.57	6.60	6.42	6.20	6.10
2.730	5.09	4.90	4.47	4.33	8.38	8.21	7.94	7.81
2.8	5.06	4.89	4.48	4.36	7.43	7.27	7.02	6.90
2.873	4.89	4.73	4.38	4.27	6.14	6.00	5.78	5.67
2.873	3.58	3.52	3.21	3.13	4.45	4.30	4.14	4.06
2.9	3.49	3.44	3.14	3.07	-4.09	-3.94	-3.79	-3.72
2.907	3.64	3.58	3.28	3.20	-4.23	-4.08	-3.92	-3.85
2.908	2.86	2.85	2.58	2.52	-3.31	-3.15	-3.03	-2.97
2.942	3.38	3.38	3.05	2.98	-3.81	-3.63	-3.49	-3.42
2.942	2.77	2.80	2.50	2.44	-3.13	-2.94	-2.83	-2.77
3.0	3.47	3.51	3.14	3.07	-3.81	-3.58	-3.44	-3.37

Note: For locations which do not experience tensile stresses
the fatigue stress range is output as a negative number.

♀

Broadway South Approach Girder H 02-14-2017 11:06:18 Page 25

Girder H Fully Composite.STR

--- FATIGUE REPORT ---

Max stress range, top flange
@ Ext: 6.39 ksi * 1.13 = 7.22 ksi
@ 4T: 5.91 ksi * 1.13 = 6.68 ksi

Max stress range, bottom flange
@ Ext: 9.26 ksi * 1.13 = 10.46 ksi
@ 4T: 8.75 ksi * 1.13 = 9.89 ksi

All Units: ksi

SPAN 3 - FATIGUE STRESS RANGE (ksi) -
(EXT - EXTREME FIBER, 4T=4*tw, 6T=6*tw)

LOCA	REBAR RANGE	TOP FLANGE EXT	TOP FLANGE 4T	TOP FLANGE 6T	BOTTOM FLANGE EXT	BOTTOM FLANGE INS	BOTTOM FLANGE 4T	BOTTOM FLANGE 6T
3.0	3.47	3.51	3.14	3.07	-3.81	-3.58	-3.44	-3.37
3.078	3.16	3.20	2.86	2.79	-3.50	-3.29	-3.16	-3.09
3.078	3.88	3.87	3.50	3.42	-4.27	-4.06	-3.90	-3.82
3.1	3.77	3.76	3.41	3.33	-4.16	-3.96	-3.81	-3.73
3.125	3.78	3.77	3.41	3.33	-4.30	-4.10	-3.94	-3.86
3.125	4.83	4.75	4.36	4.25	-5.50	-5.31	-5.10	-5.00
3.172	4.81	4.73	4.32	4.21	-5.82	-5.62	-5.41	-5.31
3.172	6.59	6.39	5.91	5.77	-8.04	-7.85	-7.56	-7.42
3.2	6.53	6.32	5.84	5.69	8.28	8.09	7.80	7.65
3.3	6.32	6.10	5.60	5.44	9.22	9.03	8.72	8.56
3.328	6.17	5.95	5.45	5.30	9.26	9.06	8.75	8.60
3.329	4.97	4.86	4.41	4.29	7.27	7.05	6.81	6.69
3.4	4.72	4.61	4.17	4.05	7.35	7.14	6.90	6.78
3.5	4.09	3.99	3.58	3.48	6.79	6.60	6.38	6.28
3.6	4.27	4.17	3.75	3.64	6.91	6.71	6.49	6.38
3.641	4.36	4.26	3.85	3.74	6.81	6.62	6.40	6.29
3.642	5.34	5.15	4.69	4.56	8.65	8.47	8.19	8.05
3.7	5.56	5.37	4.91	4.77	8.49	8.32	8.04	7.90
3.8	5.63	5.45	5.02	4.89	7.41	7.25	6.99	6.86
3.849	5.67	5.50	5.09	4.97	-6.92	-6.76	-6.51	-6.39
3.849	3.88	3.83	3.49	3.40	-4.69	-4.52	-4.35	-4.26
3.9	3.85	3.80	3.47	3.39	-4.31	-4.14	-3.98	-3.90
3.922	3.97	3.92	3.58	3.50	-4.45	-4.28	-4.11	-4.03
3.922	3.14	3.14	2.83	2.77	-3.52	-3.34	-3.21	-3.15
4.0	3.49	3.49	3.15	3.08	-3.92	-3.73	-3.58	-3.51

Note: For locations which do not experience tensile stresses
the fatigue stress range is output as a negative number.

Broadway South Approach Girder H 02-14-2017 11:06:18 Page 26

--- FATIGUE REPORT ---

All Units: ksi

SPAN 4 - FATIGUE STRESS RANGE (ksi) -
(EXT - EXTREME FIBER, 4T=4*tw, 6T=6*tw)

LOCA	REBAR RANGE	TOP FLANGE EXT	TOP FLANGE 4T	TOP FLANGE 6T	BOTTOM FLANGE EXT	BOTTOM FLANGE INS	BOTTOM FLANGE 4T	BOTTOM FLANGE 6T
4.0	3.49	3.49	3.15	3.08	-3.92	-3.73	-3.58	-3.51
4.061	2.98	2.99	2.69	2.63	-3.42	-3.25	-3.12	-3.06
4.061	3.76	3.72	3.39	3.31	-4.32	-4.15	-3.99	-3.91
4.1	3.34	3.30	3.01	2.94	-3.90	-3.75	-3.61	-3.54
4.119	3.37	3.33	3.03	2.96	4.08	3.93	3.78	3.71
4.119	4.92	4.77	4.42	4.31	6.02	5.88	5.66	5.55
4.2	4.94	4.77	4.38	4.27	7.06	6.90	6.67	6.55
4.299	-5.02	-4.84	-4.42	-4.28	8.11	7.94	7.68	7.55
4.299	-4.13	-4.03	-3.64	-3.54	6.39	6.21	6.00	5.90

4.3	-4.13	-4.03	-3.64	-3.54	6.40	6.21	6.01	5.90
4.376	-3.98	-3.88	-3.50	-3.40	6.40	6.22	6.02	5.91
4.376	-3.43	-3.39	-3.03	-2.94	5.29	5.10	4.92	4.84
4.4	-3.40	-3.37	-3.00	-2.92	5.29	5.10	4.93	4.84
4.5	-3.05	-3.02	-2.69	-2.61	4.86	4.69	4.53	4.46
4.6	-2.25	-2.22	-1.98	-1.92	3.63	3.50	3.39	3.33
4.627	-2.00	-1.98	-1.76	-1.71	3.25	3.13	3.03	2.98
4.627	-2.27	-2.21	-1.98	-1.92	3.92	3.81	3.69	3.62
4.7	-1.47	-1.43	-1.28	-1.24	2.64	2.57	2.49	2.45
4.720	-1.53	-1.49	-1.34	-1.30	2.55	2.48	2.40	2.36
4.720	-1.78	-1.71	-1.55	-1.50	3.21	3.15	3.05	3.00
4.8	2.17	2.10	1.94	1.89	2.77	2.71	2.61	2.56
4.9	4.47	4.34	4.04	3.94	-4.82	-4.70	-4.52	-4.43
4.903	4.62	4.48	4.17	4.08	-4.98	-4.86	-4.67	-4.57
4.903	3.33	3.28	3.01	2.94	-3.59	-3.45	-3.32	-3.25
4.939	4.70	4.62	4.25	4.15	-5.00	-4.82	-4.63	-4.53
4.939	3.66	3.65	3.31	3.24	-3.91	-3.72	-3.57	-3.49
5.0	5.44	5.43	4.93	4.82	-5.76	-5.48	-5.26	-5.15

Note: For locations which do not experience tensile stresses
the fatigue stress range is output as a negative number.

♀

Broadway South Approach Girder H 02-14-2017 11:06:18 Page 27

--- FATIGUE REPORT ---

All Units: ksi

SPAN 5 - FATIGUE STRESS RANGE (ksi) -
(EXT - EXTREME FIBER, 4T=4*tw, 6T=6*tw)

	REBAR	-----TOP FLANGE-----			-----BOTTOM FLANGE-----			
LOCA	RANGE	EXT	4T	6T	EXT	INS	4T	6T
5.0	5.35	5.34	4.84	4.73	-5.74	-5.46	-5.25	-5.14
5.1	4.82	4.81	4.37	4.27	-5.17	-4.92	-4.72	-4.63
5.2	4.30	4.29	3.89	3.80	-4.60	-4.38	-4.20	-4.11
5.3	3.76	3.75	3.40	3.33	-4.02	-3.82	-3.67	-3.60
5.4	3.23	3.22	2.92	2.86	-3.45	-3.28	-3.15	-3.08
5.485	2.77	2.77	2.51	2.46	-2.96	-2.82	-2.70	-2.65
5.487	3.56	3.50	3.22	3.15	-3.79	-3.65	-3.50	-3.43
5.5	3.47	3.41	3.14	3.07	-3.69	-3.55	-3.41	-3.34
5.6	2.78	2.74	2.52	2.46	-2.95	-2.84	-2.73	-2.67
5.7	2.11	2.08	1.91	1.87	-2.25	-2.16	-2.08	-2.04
5.777	1.59	1.57	1.44	1.41	-1.71	-1.64	-1.58	-1.55
5.778	2.20	2.14	1.99	1.94	-2.36	-2.30	-2.21	-2.17
5.8	1.99	1.93	1.80	1.76	-2.14	-2.09	-2.01	-1.97
5.9	1.01	0.98	0.91	0.89	-1.10	-1.07	-1.03	-1.01
6.0	0.00	0.00	0.00	0.00	0.00	0.00	0.00	0.00

Note: For locations which do not experience tensile stresses
the fatigue stress range is output as a negative number.

♀

GIRDER G NONCOMPOSITE.STR

STLBRIDGE LRFD

STEEL BRIDGE DESIGN SOFTWARE

Copyright 2014 BRIDGESOFT, Inc. All Rights Reserved

STRESS OUTPUT

Title: Broadway Bridge South Approach Girder G
Input Filename: GIRDER G NONCOMPOSITE
Output Filename: GIRDER G NONCOMPOSITE.STR
Time:09:44:26
Date:02-20-2017
AASHTO LRFD Code: 7TH Edition

♀
Broadway Bridge South Approach Girder G 02-20-2017 09:44:26 STLBRIDGE LRFD
Page 1

--- INPUT ECHO ---

"2DBRIDGE I Girder"
"ENGLISH"

Page 1

```
"Broadway Bridge South Approach Girder G"
"LRFD v61"
0
3,"HL93",8,"0",0,0,0,0,0,0,0,0
3000,150,6.5,2,2.5,490,3155,29000,9.1,27.3
1,10,0,1.5,1.25,1.5,1.75
0,0,0
1,1,1.3
0,0,1.5
1.25,1.5,1.75
1.25,1.55,1.8,1.33,1,1
1.25,1.5,1.6
1.3,1.3,1
4,1,8,0,0,0,1,0
127.237,0,0
0,0,0,0,0
94.427,0,0
0,0,0,0,0
123.331,0,0
0,0,0,0,0
0
0
0
0
1,16.237,72.5,72.5,0
1,28.237,72.5,72.5,0
1,81.237,72.5,72.5,0
1,93.237,72.5,72.5,0
1,114.237,72.5,72.5,0
1,119.237,72.5,72.5,0
1,127.237,72.5,72.5,0
2,16.237,18,1.125,36
2,28.237,18,1.73,36
2,81.237,18,1.958,36
2,93.237,18,1.73,36
2,114.237,18,1.125,36
2,119.237,18,1.85,36
2,127.237,18,2.335,36
3,16.237,18,1.125,36
3,28.237,18,1.73,36
3,81.237,18,1.958,36
3,93.237,18,1.73,36
3,114.237,18,1.125,36
3,119.237,18,1.85,36
3,127.237,18,2.335,36
4,0,2.5,2.5,0
4,105.107,10.875,10.875,0
4,127.237,10.875,10.875,0
```

♀

--- INPUT ECHO ---

```
5,0,0,0,0
5,105.107,0,0,0
5,127.237,0,0,0
6,0,0,0,0
6,105.107,0,0,0
6,127.237,0,0,0
7,16.237,0,.375,36
7,28.237,0,.375,36
7,81.237,0,.375,36
7,93.237,0,.375,36
7,114.237,0,.375,36
```

```
    7,119.237,0,.375,36
    7,127.237,99999,.375,36
    1,8,72.5,72.5,0
    1,13,72.5,72.5,0
    1,81.427,72.5,72.5,0
    1,86.427,72.5,72.5,0
    1,94.427,72.5,72.5,0
    2,8,18,2.335,36
    2,13,18,1.85,36
    2,81.427,18,1.125,36
    2,86.427,18,1.85,36
    2,94.427,18,2.335,36
    3,8,18,2.335,36
    3,13,18,1.85,36
    3,81.427,18,1.125,36
    3,86.427,18,1.85,36
    3,94.427,18,2.335,36
    4,0,10.875,10.875,0
    4,94.427,10.875,10.875,0
    5,0,0,0,0
    5,94.427,0,0,0
    6,0,0,0,0
    6,94.427,0,0,0
    7,8,0,.375,36
    7,13,0,.375,36
    7,81.427,0,.375,36
    7,86.427,0,.375,36
    7,94.427,99999,.375,36
    1,8,72.5,72.5,0
    1,12.599,72.5,72.5,0
    1,32,72.5,72.5,0
    1,44,72.5,72.5,0
    1,97,72.5,72.5,0
    1,109,72.5,72.5,0
    1,123.331,72.5,72.5,0
    2,8,18,2.335,36
    2,12.599,18,1.85,36
    2,32,18,1.125,36
    2,44,18,1.73,36
♀
     Broadway Bridge South Approach Girder G  02-20-2017  09:44:26  STLBRIDGE LRFD
Page  3
                                    --- INPUT ECHO ---
    2,97,18,1.958,36
    2,109,18,1.73,36
    2,123.331,18,1.125,36
    3,8,18,2.335,36
    3,12.599,18,1.85,36
    3,32,18,1.125,36
    3,44,18,1.73,36
    3,97,18,1.958,36
    3,109,18,1.73,36
    3,123.331,18,1.125,36
    4,0,10.875,10.875,0
    4,20.672,10.875,10.875,0
    4,123.331,2.5,2.5,0
    5,0,0,0,0
    5,20.672,0,0,0
    5,123.331,0,0,0
    6,0,0,0,0
    6,20.672,0,0,0
    6,123.331,0,0,0
    7,8,0,.375,36
```

```
    7,12.599,0,.375,36
    7,32,0,.375,36
    7,44,0,.375,36
    7,97,0,.375,36
    7,109,0,.375,36
    7,123.331,99999,.375,36
♀
```


--- INPUT ECHO ---

--- FATIGUE REPORT ---

All Units: ksi

SPAN 1 - FATIGUE STRESS RANGE (ksi) -
(EXT - EXTREME FIBER, 4T=4*tw, 6T=6*tw)

LOCA	REBAR RANGE	-----TOP FLANGE----- EXT	4T	6T	-----BOTTOM FLANGE----- EXT	INS	4T	6T
1.0	0.00	0.00	0.00	0.00	0.00	0.00	0.00	0.00
1.1	0.00	-2.73	-2.54	-2.48	2.73	2.65	2.54	2.48
1.128	0.00	-3.36	-3.13	-3.06	3.36	3.26	3.13	3.06
1.128	0.00	-2.34	-2.14	-2.09	2.34	2.23	2.14	2.09
1.2	0.00	-3.49	-3.19	-3.13	3.49	3.33	3.19	3.13
1.222	0.00	-3.77	-3.45	-3.37	3.77	3.60	3.45	3.37
1.222	0.00	-3.38	-3.08	-3.01	3.38	3.21	3.08	3.01
1.3	0.00	-4.27	-3.89	-3.80	4.27	4.05	3.89	3.80
1.4	0.00	-5.01	-4.56	-4.46	5.01	4.76	4.56	4.46
1.5	0.00	-5.18	-4.71	-4.61	5.18	4.91	4.71	4.61
1.6	0.00	-4.96	-4.51	-4.41	4.96	4.70	4.51	4.41
1.638	0.00	-4.71	-4.28	-4.19	4.71	4.47	4.28	4.19
1.639	0.00	-5.25	-4.81	-4.70	5.25	5.01	4.81	4.70
1.7	0.00	-4.81	-4.40	-4.31	4.81	4.59	4.40	4.31
1.733	0.00	4.51	4.12	4.03	4.51	4.30	4.12	4.03
1.733	0.00	6.49	6.03	5.90	6.49	6.29	6.03	5.90

1.8	0.00	5.58	5.19	5.08	5.58	5.41	5.19	5.08
1.898	0.00	3.94	3.66	3.58	-3.94	-3.82	-3.66	-3.58
1.898	0.00	2.58	2.35	2.30	-2.58	-2.45	-2.35	-2.30
1.9	0.00	2.55	2.33	2.28	-2.55	-2.43	-2.33	-2.28
1.937	0.00	3.19	2.91	2.84	-3.19	-3.03	-2.91	-2.84
1.937	0.00	2.59	2.33	2.28	-2.59	-2.43	-2.33	-2.28
2.0	0.00	3.46	3.12	3.05	-3.46	-3.25	-3.12	-3.05

Note: For locations which do not experience tensile stresses
the fatigue stress range is output as a negative number.

Broadway Bridge South Approach Girder G
02-20-2017 09:44:27 Page 16

--- FATIGUE REPORT ---

Max stress range, top & bottom flange
@ Ext: 7.32 ksi * 1.13 = 8.27 ksi
@ 4T: 6.81 ksi * 1.13 = 7.70 ksi

All Units: ksi

SPAN 2 - FATIGUE STRESS RANGE (ksi) -
(EXT - EXTREME FIBER, 4T=4*tw, 6T=6*tw)

	REBAR	-----TOP FLANGE-----			-----BOTTOM FLANGE-----			
LOCA	RANGE	EXT	4T	6T	EXT	INS	4T	6T
2.0	0.00	3.46	3.12	3.05	-3.46	-3.25	-3.12	-3.05
2.085	0.00	3.09	2.79	2.73	-3.09	-2.91	-2.79	-2.73
2.085	0.00	3.81	3.47	3.40	-3.81	-3.62	-3.47	-3.40
2.1	0.00	3.73	3.40	3.33	-3.73	-3.55	-3.40	-3.33
2.138	0.00	3.89	3.55	3.47	-3.89	-3.70	-3.55	-3.47
2.138	0.00	5.94	5.52	5.41	-5.94	-5.76	-5.52	-5.41
2.2	0.00	6.36	5.91	5.78	-6.36	-6.16	-5.91	-5.78
2.3	0.00	7.08	6.58	6.44	7.08	6.87	6.58	6.44
2.4	0.00	7.32	6.81	6.66	7.32	7.10	6.81	6.66
2.5	0.00	6.80	6.32	6.18	6.80	6.59	6.32	6.18
2.6	0.00	7.21	6.70	6.56	7.21	6.99	6.70	6.56
2.7	0.00	6.91	6.42	6.29	6.91	6.70	6.42	6.29
2.8	0.00	6.12	5.69	5.57	-6.12	-5.94	-5.69	-5.57
2.862	0.00	5.69	5.29	5.18	-5.69	-5.52	-5.29	-5.18
2.862	0.00	3.73	3.40	3.33	-3.73	-3.55	-3.40	-3.33
2.9	0.00	3.56	3.24	3.17	-3.56	-3.38	-3.24	-3.17
2.915	0.00	3.65	3.32	3.25	-3.65	-3.47	-3.32	-3.25
2.915	0.00	2.96	2.67	2.61	-2.96	-2.78	-2.67	-2.61
3.0	0.00	3.37	3.03	2.97	-3.37	-3.17	-3.03	-2.97

Note: For locations which do not experience tensile stresses
the fatigue stress range is output as a negative number.

Broadway Bridge South Approach Girder G
02-20-2017 09:44:27 Page 17

--- FATIGUE REPORT ---

All Units: ksi

SPAN 3 - FATIGUE STRESS RANGE (ksi) -
(EXT - EXTREME FIBER, 4T=4*tw, 6T=6*tw)

	REBAR	-----TOP FLANGE-----			-----BOTTOM FLANGE-----			
LOCA	RANGE	EXT	4T	6T	EXT	INS	4T	6T
3.0	0.00	3.37	3.03	2.97	-3.37	-3.17	-3.03	-2.97

3.065	0.00	2.59	2.33	2.28	-2.59	-2.44	-2.33	-2.28
3.065	0.00	3.19	2.91	2.85	-3.19	-3.03	-2.91	-2.85
3.1	0.00	2.67	2.44	2.38	-2.67	-2.54	-2.44	-2.38
3.102	0.00	2.69	2.46	2.40	-2.69	-2.56	-2.46	-2.40
3.102	0.00	4.11	3.82	3.74	-4.11	-3.99	-3.82	-3.74
3.2	0.00	5.61	5.22	5.10	5.61	5.44	5.22	5.10
3.259	0.00	6.60	6.14	6.01	6.60	6.40	6.14	6.01
3.260	0.00	4.59	4.20	4.11	4.59	4.38	4.20	4.11
3.3	0.00	-5.06	-4.63	-4.53	5.06	4.83	4.63	4.53
3.357	0.00	-5.38	-4.92	-4.82	5.38	5.13	4.92	4.82
3.357	0.00	-4.82	-4.39	-4.29	4.82	4.58	4.39	4.29
3.4	0.00	-5.04	-4.59	-4.49	5.04	4.79	4.59	4.49
3.5	0.00	-5.09	-4.63	-4.53	5.09	4.83	4.63	4.53
3.6	0.00	-4.91	-4.46	-4.37	4.91	4.65	4.46	4.37
3.7	0.00	-4.18	-3.80	-3.72	4.18	3.96	3.80	3.72
3.786	0.00	-3.25	-2.95	-2.89	3.25	3.08	2.95	2.89
3.787	0.00	-3.62	-3.31	-3.24	3.62	3.45	3.31	3.24
3.8	0.00	-3.46	-3.16	-3.09	3.46	3.30	3.16	3.09
3.884	0.00	-2.09	-1.91	-1.87	2.09	2.00	1.91	1.87
3.884	0.00	-3.01	-2.80	-2.74	3.01	2.92	2.80	2.74
3.9	0.00	-2.63	-2.44	-2.39	2.63	2.55	2.44	2.39
4.0	0.00	0.00	0.00	0.00	0.00	0.00	0.00	0.00

Note: For locations which do not experience tensile stresses
the fatigue stress range is output as a negative number.

♀

Girder G Fully Composite.STR

STLBRIDGE LRFD

STEEL BRIDGE DESIGN SOFTWARE

Copyright 2014 BRIDGESOFT, Inc. All Rights Reserved

STRESS OUTPUT

Title: Broadway Bridge South Approach Girder G
Input Filename: Girder G Fully Composite
Output Filename: Girder G Fully Composite.STR
Time:14:33:12
Date:02-14-2017
AASHTO LRFD Code: 7TH Edition

♀
Broadway Bridge South Approach Girder G 02-14-2017 14:33:12 STLBRIDGE LRFD
Page 1

--- INPUT ECHO ---

"2DBRIDGE I Girder"
"ENGLISH"

Page 1

```
"Broadway Bridge South Approach Girder G"
"LRFD v61"
0
3,"HL93",8,"0",0,0,0,0,0,0,0,0
4000,150,6.5,2,2.5,490,3644,29000,8,24
3,10,0,1.5,1.25,1.5,1.75
0,0,0
1,1,1.3
0,0,1.5
1.25,1.5,1.75
1.25,1.55,1.8,1.33,1,1
1.25,1.5,1.6
1.3,1.3,1
4,1,8,0,0,0,1,0
127.237,0,0
0,0,0,0,0
94.427,0,0
0,0,0,0,0
123.331,0,0
0,0,0,0,0
0
0
0
0
1,16.237,72.5,72.5,0
1,28.237,72.5,72.5,0
1,81.237,72.5,72.5,0
1,93.237,72.5,72.5,0
1,114.237,72.5,72.5,0
1,119.237,72.5,72.5,0
1,127.237,72.5,72.5,0
2,16.237,18,1.125,36
2,28.237,18,1.73,36
2,81.237,18,1.958,36
2,93.237,18,1.73,36
2,114.237,18,1.125,36
2,119.237,18,1.85,36
2,127.237,18,2.335,36
3,16.237,18,1.125,36
3,28.237,18,1.73,36
3,81.237,18,1.958,36
3,93.237,18,1.73,36
3,114.237,18,1.125,36
3,119.237,18,1.85,36
3,127.237,18,2.335,36
4,0,2.5,2.5,0
4,105.107,10.875,10.875,0
4,127.237,10.875,10.875,0
```

♀

--- INPUT ECHO ---

```
5,0,0,0,0
5,105.107,0,0,0
5,127.237,0,0,0
6,0,0,0,0
6,105.107,0,0,0
6,127.237,0,0,0
7,16.237,0,.375,36
7,28.237,0,.375,36
7,81.237,0,.375,36
7,93.237,0,.375,36
7,114.237,0,.375,36
```

```
7,119.237,0,.375,36
7,127.237,99999,.375,36
1,8,72.5,72.5,0
1,13,72.5,72.5,0
1,81.427,72.5,72.5,0
1,86.427,72.5,72.5,0
1,94.427,72.5,72.5,0
2,8,18,2.335,36
2,13,18,1.85,36
2,81.427,18,1.125,36
2,86.427,18,1.85,36
2,94.427,18,2.335,36
3,8,18,2.335,36
3,13,18,1.85,36
3,81.427,18,1.125,36
3,86.427,18,1.85,36
3,94.427,18,2.335,36
4,0,10.875,10.875,0
4,94.427,10.875,10.875,0
5,0,0,0,0
5,94.427,0,0,0
6,0,0,0,0
6,94.427,0,0,0
7,8,0,.375,36
7,13,0,.375,36
7,81.427,0,.375,36
7,86.427,0,.375,36
7,94.427,99999,.375,36
1,8,72.5,72.5,0
1,12.599,72.5,72.5,0
1,32,72.5,72.5,0
1,44,72.5,72.5,0
1,97,72.5,72.5,0
1,109,72.5,72.5,0
1,123.331,72.5,72.5,0
2,8,18,2.335,36
2,12.599,18,1.85,36
2,32,18,1.125,36
2,44,18,1.73,36
```

♀

--- INPUT ECHO ---

```
2,97,18,1.958,36
2,109,18,1.73,36
2,123.331,18,1.125,36
3,8,18,2.335,36
3,12.599,18,1.85,36
3,32,18,1.125,36
3,44,18,1.73,36
3,97,18,1.958,36
3,109,18,1.73,36
3,123.331,18,1.125,36
4,0,10.875,10.875,0
4,20.672,10.875,10.875,0
4,123.331,2.5,2.5,0
5,0,0,0,0
5,20.672,0,0,0
5,123.331,0,0,0
6,0,0,0,0
6,20.672,0,0,0
6,123.331,0,0,0
7,8,0,.375,36
```

```
    7,12.599,0,.375,36
    7,32,0,.375,36
    7,44,0,.375,36
    7,97,0,.375,36
    7,109,0,.375,36
    7,123.331,99999,.375,36
♀
```


--- INPUT ECHO ---

--- FATIGUE REPORT ---

All Units: ksi

SPAN 1 - FATIGUE STRESS RANGE (ksi) -
(EXT - EXTREME FIBER, 4T=4*tw, 6T=6*tw)

LOCA	REBAR RANGE	-----TOP FLANGE----- EXT	4T	6T	-----BOTTOM FLANGE----- EXT	INS	4T	6T
1.0	0.00	0.00	0.00	0.00	0.00	0.00	0.00	0.00
1.1	-1.56	-1.51	-1.37	-1.33	2.41	2.36	2.28	2.24
1.128	-1.87	-1.81	-1.65	-1.60	2.97	2.89	2.80	2.75
1.128	-1.48	-1.46	-1.31	-1.27	2.14	2.05	1.98	1.95
1.2	-2.08	-2.07	-1.84	-1.79	3.17	3.05	2.95	2.90
1.222	-2.21	-2.19	-1.96	-1.90	3.41	3.29	3.18	3.12
1.222	-2.06	-2.06	-1.83	-1.77	3.09	2.96	2.86	2.81
1.3	-2.47	-2.47	-2.18	-2.12	3.87	3.71	3.58	3.52
1.4	-2.76	-2.76	-2.43	-2.36	4.51	4.33	4.18	4.11
1.5	-2.78	-2.78	-2.44	-2.37	4.64	4.45	4.30	4.23
1.6	-2.66	-2.66	-2.34	-2.27	4.45	4.27	4.13	4.06
1.638	-2.56	-2.56	-2.25	-2.18	4.23	4.06	3.92	3.86
1.639	-2.77	-2.74	-2.43	-2.35	4.68	4.51	4.36	4.29
1.7	-2.62	-2.59	-2.30	-2.23	4.30	4.14	4.00	3.94
1.733	-2.53	-2.50	-2.23	-2.16	4.01	3.86	3.73	3.67
1.733	-3.36	-3.26	-2.95	-2.86	5.59	5.46	5.28	5.19

1.8	3.23	3.13	2.86	2.78	4.79	4.67	4.51	4.43
1.898	2.92	2.85	2.62	2.56	-3.54	-3.44	-3.31	-3.25
1.898	1.95	1.94	1.75	1.71	-2.36	-2.25	-2.17	-2.12
1.9	1.94	1.93	1.74	1.70	-2.34	-2.23	-2.15	-2.11
1.937	2.65	2.64	2.39	2.33	-3.06	-2.92	-2.81	-2.75
1.937	2.16	2.18	1.95	1.90	-2.50	-2.36	-2.27	-2.22
2.0	3.13	3.16	2.83	2.77	-3.50	-3.30	-3.17	-3.10

Note: For locations which do not experience tensile stresses
the fatigue stress range is output as a negative number.

Broadway Bridge South Approach Girder G
02-14-2017 14:33:13 Page 16

--- FATIGUE REPORT ---

Max stress range , top flange
@ Ext: 4.93 ksi * 1.13 = 5.57 ksi
@ 4T: 4.55 ksi * 1.13 = 5.14 ksi

Max stress range, bottom flange
@ Ext: 6.81 ksi * 1.13 = 7.70
@ 4T: 6.44 ksi * 1.13 = 7.28

All Units: ksi

SPAN 2 - FATIGUE STRESS RANGE (ksi) -
(EXT - EXTREME FIBER, 4T=4*tw, 6T=6*tw)

LOCA	REBAR RANGE	-----TOP FLANGE----- EXT	4T	6T	-----BOTTOM FLANGE----- EXT	INS	4T	6T
2.0	3.13	3.16	2.83	2.77	-3.50	-3.30	-3.17	-3.10
2.085	2.81	2.84	2.54	2.48	-3.16	-2.97	-2.86	-2.80
2.085	3.47	3.45	3.13	3.06	-3.87	-3.69	-3.55	-3.47
2.1	3.40	3.38	3.07	3.00	-3.79	-3.62	-3.48	-3.41
2.138	3.35	3.34	3.02	2.94	-3.94	-3.76	-3.62	-3.55
2.138	5.06	4.93	4.55	4.44	-5.93	-5.76	-5.55	-5.44
2.2	4.86	4.73	4.34	4.23	-6.25	-6.08	-5.86	-5.75
2.3	4.54	4.41	4.01	3.90	6.74	6.57	6.35	6.24
2.4	3.99	3.87	3.49	3.38	6.81	6.65	6.44	6.33
2.5	3.35	3.24	2.91	2.81	6.23	6.09	5.90	5.81
2.6	3.87	3.75	3.38	3.28	6.68	6.53	6.32	6.21
2.7	4.37	4.24	3.86	3.76	6.58	6.42	6.20	6.09
2.8	4.65	4.53	4.16	4.05	-6.03	-5.87	-5.66	-5.55
2.862	4.82	4.70	4.34	4.23	-5.69	-5.53	-5.33	-5.22
2.862	3.20	3.19	2.88	2.81	-3.78	-3.61	-3.47	-3.41
2.9	3.23	3.22	2.92	2.85	-3.63	-3.46	-3.33	-3.26
2.915	3.31	3.29	2.98	2.91	-3.71	-3.54	-3.40	-3.33
2.915	2.68	2.71	2.42	2.37	-3.03	-2.85	-2.74	-2.69
3.0	3.01	3.04	2.72	2.65	-3.40	-3.21	-3.08	-3.02

Note: For locations which do not experience tensile stresses
the fatigue stress range is output as a negative number.

Broadway Bridge South Approach Girder G
02-14-2017 14:33:13 Page 17

--- FATIGUE REPORT ---

All Units: ksi

SPAN 3 - FATIGUE STRESS RANGE (ksi) -
(EXT - EXTREME FIBER, 4T=4*tw, 6T=6*tw)

LOCA	REBAR RANGE	-----TOP FLANGE----- EXT	4T	6T	-----BOTTOM FLANGE----- EXT	INS	4T	6T
3.0	3.01	3.04	2.72	2.65	-3.40	-3.21	-3.08	-3.02

3.065	2.13	2.15	1.92	1.87	-2.49	-2.35	-2.26	-2.21
3.065	2.61	2.59	2.35	2.29	-3.04	-2.91	-2.80	-2.74
3.1	2.01	2.00	1.81	1.76	-2.44	-2.33	-2.24	-2.20
3.102	2.02	2.01	1.81	1.77	-2.45	-2.35	-2.26	-2.21
3.102	3.02	2.95	2.71	2.65	-3.68	-3.59	-3.45	-3.39
3.2	3.29	3.20	2.92	2.84	4.83	4.71	4.55	4.47
3.259	-3.47	-3.36	-3.05	-2.96	5.64	5.50	5.32	5.23
3.260	-2.59	-2.57	-2.29	-2.22	4.04	3.89	3.76	3.69
3.3	-2.74	-2.71	-2.41	-2.34	4.45	4.28	4.14	4.07
3.357	-2.84	-2.81	-2.49	-2.41	4.73	4.56	4.41	4.33
3.357	-2.62	-2.62	-2.31	-2.24	4.28	4.10	3.97	3.90
3.4	-2.71	-2.70	-2.38	-2.31	4.48	4.29	4.15	4.08
3.5	-2.76	-2.76	-2.43	-2.36	4.56	4.37	4.23	4.16
3.6	-2.73	-2.72	-2.40	-2.33	4.42	4.23	4.09	4.02
3.7	-2.44	-2.44	-2.16	-2.10	3.80	3.64	3.52	3.46
3.786	-2.00	-1.99	-1.77	-1.72	2.97	2.84	2.74	2.69
3.787	-2.15	-2.13	-1.90	-1.85	3.28	3.16	3.05	2.99
3.8	-2.07	-2.05	-1.83	-1.78	3.13	3.02	2.91	2.86
3.884	-1.34	-1.33	-1.19	-1.16	1.92	1.84	1.78	1.75
3.884	-1.70	-1.65	-1.50	-1.46	2.66	2.60	2.51	2.47
3.9	-1.51	-1.47	-1.34	-1.30	2.33	2.28	2.20	2.16
4.0	0.00	0.00	0.00	0.00	0.00	0.00	0.00	0.00

Note: For locations which do not experience tensile stresses
the fatigue stress range is output as a negative number.

♀

GIRDER F NONCOMPOSITE INTERIOR RUN.STR

STLBRIDGE LRFD

STEEL BRIDGE DESIGN SOFTWARE

Copyright 2014 BRIDGESOFT, Inc. All Rights Reserved

STRESS OUTPUT

Title: Broadway Bridge South Approach Girder F
Input Filename: GIRDER F NONCOMPOSITE INTERIOR RUN
Output Filename: GIRDER F NONCOMPOSITE INTERIOR RUN.STR
Time:10:11:55
Date:02-20-2017
AASHTO LRFD Code: 7TH Edition

♀
Broadway Bridge South Approach Girder F 02-20-2017 10:11:55 STLBRIDGE LRFD
Page 1

--- INPUT ECHO ---

"2DBRIDGE I Girder"
"ENGLISH"

Page 1

```
"Broadway Bridge South Approach Girder F"
"LRFD v61"
0
5,"HL93",8,"0",0,0,0,0,0,0,0,0
3000,150,6.5,2,2.5,490,3155,29000,9.1,27.3
1,10,0,1.5,1.25,1.5,1.75
0,0,0
1,1,1.3
0,0,1.5
1.25,1.5,1.75
1.25,1.55,1.8,1.33,1,1
1.25,1.5,1.6
1.3,1.3,1
4,1,8,0,0,0,1,0
113.406,0,0
0,0,0,0,0
125.294,0,0
0,0,0,0,0
92.987,0,0
0,0,0,0,0
123.685,0,0
0,0,0,0,0
98.862,0,0
0,0,0,0,0
0
0
0
0
1,13.401,72.5,72.5,0
1,25.401,72.5,72.5,0
1,65.401,72.5,72.5,0
1,77.401,72.5,72.5,0
1,97.406,72.5,72.5,0
1,103.406,72.5,72.5,0
1,105.906,72.5,72.5,0
1,113.406,72.5,72.5,0
2,13.401,18,1.298,36
2,25.401,18,1.9,36
2,65.401,18,2.5,36
2,77.401,18,1.9,36
2,97.406,18,1.298,36
2,103.406,18,2.019,36
2,105.906,18,2.742,36
2,113.406,18,3.465,36
3,13.401,18,1.298,36
3,25.401,18,1.9,36
3,65.401,18,2.5,36
3,77.401,18,1.9,36
```

♀

--- INPUT ECHO ---

```
3,97.406,18,1.298,36
3,103.406,18,2.019,36
3,105.906,18,2.742,36
3,113.406,18,3.465,36
4,0,4,15.333,0
4,87.021,9,15.333,0
4,113.406,9,15.333,0
5,0,0,0,0
5,87.021,0,0,0
5,113.406,0,0,0
6,0,0,0,0
```

```
    6,87.021,0,0,0
    6,113.406,0,0,0
    7,13.401,0,.375,36
    7,25.401,0,.375,36
    7,65.401,0,.375,36
    7,77.401,0,.375,36
    7,97.406,0,.375,36
    7,103.406,0,.375,36
    7,105.906,0,.375,36
    7,113.406,99999,.375,36
    1,7.5,72.5,72.5,0
    1,10,72.5,72.5,0
    1,15,72.5,72.5,0
    1,39,72.5,72.5,0
    1,92,72.5,72.5,0
    1,115.294,72.5,72.5,0
    1,117.794,72.5,72.5,0
    1,125.294,72.5,72.5,0
    2,7.5,18,3.465,36
    2,10,18,2.742,36
    2,15,18,2.019,36
    2,39,18,1.298,36
    2,92,18,1.9,36
    2,115.294,18,1.298,36
    2,117.794,18,1.9,36
    2,125.294,18,2.5,36
    3,7.5,18,3.465,36
    3,10,18,2.742,36
    3,15,18,2.019,36
    3,39,18,1.298,36
    3,92,18,1.9,36
    3,115.294,18,1.298,36
    3,117.794,18,1.9,36
    3,125.294,18,2.5,36
    4,0,2.5,15.333,0
    4,103.685,10.875,15.333,0
    4,125.294,10.875,15.333,0
    5,0,0,0,0
    5,103.685,0,0,0
♀
     Broadway Bridge South Approach Girder F  02-20-2017  10:11:55  STLBRIDGE LRFD
Page  3
                                    --- INPUT ECHO ---
    5,125.294,0,0,0
    6,0,0,0,0
    6,103.685,0,0,0
    6,125.294,0,0,0
    7,7.5,0,.375,36
    7,10,0,.375,36
    7,15,0,.375,36
    7,39,0,.375,36
    7,92,0,.375,36
    7,115.294,0,.375,36
    7,117.794,0,.375,36
    7,125.294,99999,.375,36
    1,7.5,72.5,72.5,0
    1,10,72.5,72.5,0
    1,82.987,72.5,72.5,0
    1,85.487,72.5,72.5,0
    1,92.987,72.5,72.5,0
    2,7.5,18,2.5,36
    2,10,18,1.9,36
    2,82.987,18,1.298,36
```

```
2,85.487,18,1.9,36
2,92.987,18,2.5,36
3,7.5,18,2.5,36
3,10,18,1.9,36
3,82.987,18,1.298,36
3,85.487,18,1.9,36
3,92.987,18,2.5,36
4,0,10.875,15.333,0
4,92.987,10.875,15.333,0
5,0,0,0,0
5,92.987,0,0,0
6,0,0,0,0
6,92.987,0,0,0
7,7.5,0,.375,36
7,10,0,.375,36
7,82.987,0,.375,36
7,85.487,0,.375,36
7,92.987,99999,.375,36
1,7.5,72.5,72.5,0
1,10,72.5,72.5,0
1,32.685,72.5,72.5,0
1,86.685,72.5,72.5,0
1,110.685,72.5,72.5,0
1,113.685,72.5,72.5,0
1,116.185,72.5,72.5,0
1,123.685,72.5,72.5,0
2,7.5,18,2.5,36
2,10,18,1.9,36
2,32.685,18,1.298,36
2,86.685,18,1.9,36
```

♀

--- INPUT ECHO ---

```
2,110.685,18,1.298,36
2,113.685,18,1.9,36
2,116.185,18,2.5,36
2,123.685,18,3.103,36
3,7.5,18,2.5,36
3,10,18,1.9,36
3,32.685,18,1.298,36
3,86.685,18,1.9,36
3,110.685,18,1.298,36
3,113.685,18,1.9,36
3,116.185,18,2.5,36
3,123.685,18,3.103,36
4,0,10.875,15.333,0
4,13.904,10.875,15.333,0
4,123.685,2.5,15.333,0
5,0,0,0,0
5,13.904,0,0,0
5,123.685,0,0,0
6,0,0,0,0
6,13.904,0,0,0
6,123.685,0,0,0
7,7.5,0,.375,36
7,10,0,.375,36
7,32.685,0,.375,36
7,86.685,0,.375,36
7,110.685,0,.375,36
7,113.685,0,.375,36
7,116.185,0,.375,36
7,123.685,99999,.375,36
```

```
    1,7.5,72.5,72.5,0
    1,10,72.5,72.5,0
    1,13,72.5,72.5,0
    1,39.992,72.5,72.5,0
    1,81.992,72.5,72.5,0
    1,98.862,72.5,72.5,0
    2,7.5,18,3.103,36
    2,10,18,2.5,36
    2,13,18,1.9,36
    2,39.992,18,1.298,36
    2,81.992,18,1.9,36
    2,98.862,18,1.298,36
    3,7.5,18,3.103,36
    3,10,18,2.5,36
    3,13,18,1.9,36
    3,39.992,18,1.298,36
    3,81.992,18,1.9,36
    3,98.862,18,1.298,36
    4,0,9,15.333,0
    4,16.195,9,15.333,0
    4,98.862,4,15.333,0
♀
     Broadway Bridge South Approach Girder F  02-20-2017  10:11:55  STLBRIDGE LRFD
Page  5
                                    --- INPUT ECHO ---
    5,0,0,0,0
    5,16.195,0,0,0
    5,98.862,0,0,0
    6,0,0,0,0
    6,16.195,0,0,0
    6,98.862,0,0,0
    7,7.5,0,.375,36
    7,10,0,.375,36
    7,13,0,.375,36
    7,39.992,0,.375,36
    7,81.992,0,.375,36
    7,98.862,99999,.375,36
♀
     Broadway Bridge South Approach Girder F  02-20-2017  10:11:55  STLBRIDGE LRFD
Page  6
                                    --- INPUT ECHO ---
```

Girder F is interior girder for spans 2-4

--- FATIGUE REPORT ---

All Units: ksi

SPAN 1 - FATIGUE STRESS RANGE (ksi) -
(EXT - EXTREME FIBER, 4T=4*tw, 6T=6*tw)

LOCA	REBAR RANGE	-----TOP FLANGE----- EXT	4T	6T	-----BOTTOM FLANGE----- EXT	INS	4T	6T
1.0	0.00	0.00	0.00	0.00	0.00	0.00	0.00	0.00
1.1	0.00	-3.43	-3.17	-3.10	3.43	3.31	3.17	3.10
1.118	0.00	-3.93	-3.64	-3.56	3.93	3.80	3.64	3.56
1.118	0.00	-2.83	-2.58	-2.53	2.83	2.69	2.58	2.53
1.2	0.00	-4.48	-4.08	-3.99	4.48	4.25	4.08	3.99
1.224	0.00	-4.81	-4.38	-4.29	4.81	4.57	4.38	4.29
1.224	0.00	-3.76	-3.38	-3.30	3.76	3.52	3.38	3.30
1.3	0.00	-4.60	-4.12	-4.03	4.60	4.30	4.12	4.03
1.4	0.00	-5.11	-4.58	-4.48	5.11	4.78	4.58	4.48
1.5	0.00	-5.24	-4.70	-4.59	5.24	4.90	4.70	4.59
1.577	0.00	-5.14	-4.61	-4.51	5.14	4.81	4.61	4.51
1.577	0.00	-6.58	-6.00	-5.87	6.58	6.25	6.00	5.87
1.6	0.00	6.55	5.96	5.83	6.55	6.22	5.96	5.83
1.682	0.00	5.91	5.39	5.27	5.91	5.62	5.39	5.27
1.683	0.00	8.21	7.60	7.44	8.21	7.93	7.60	7.44
1.7	0.00	8.03	7.43	7.27	8.03	7.75	7.43	7.27
1.8	0.00	6.39	5.91	5.78	6.39	6.17	5.91	5.78
1.859	0.00	5.55	5.14	5.03	-5.55	-5.36	-5.14	-5.03
1.859	0.00	3.79	3.44	3.36	-3.79	-3.59	-3.44	-3.36
1.9	0.00	3.39	3.08	3.01	-3.39	-3.21	-3.08	-3.01
1.912	0.00	3.41	3.10	3.03	-3.41	-3.23	-3.10	-3.03
1.912	0.00	2.59	2.31	2.26	-2.59	-2.41	-2.31	-2.26
1.934	0.00	2.62	2.34	2.29	-2.62	-2.44	-2.34	-2.29
1.934	0.00	2.11	1.85	1.81	-2.11	-1.93	-1.85	-1.81
2.0	0.00	2.20	1.92	1.88	-2.20	-2.01	-1.92	-1.88

Page 18

Note: For locations which do not experience tensile stresses
the fatigue stress range is output as a negative number.

♀

Broadway Bridge South Approach Girder F
02-20-2017 10:11:56 Page 26

--- FATIGUE REPORT ---

All Units: ksi

SPAN 2 - FATIGUE STRESS RANGE (ksi) -
(EXT - EXTREME FIBER, 4T=4*tw, 6T=6*tw)

LOCA	REBAR RANGE	TOP FLANGE EXT	TOP FLANGE 4T	TOP FLANGE 6T	BOTTOM FLANGE EXT	BOTTOM FLANGE INS	BOTTOM FLANGE 4T	BOTTOM FLANGE 6T
2.0	0.00	2.20	1.92	1.88	-2.20	-2.01	-1.92	-1.88
2.060	0.00	2.14	1.87	1.83	-2.14	-1.95	-1.87	-1.83
2.060	0.00	2.66	2.37	2.32	-2.66	-2.47	-2.37	-2.32
2.080	0.00	2.63	2.34	2.29	-2.63	-2.45	-2.34	-2.29
2.080	0.00	3.47	3.15	3.08	-3.47	-3.29	-3.15	-3.08
2.1	0.00	3.44	3.12	3.05	-3.44	-3.26	-3.12	-3.05
2.120	0.00	3.56	3.24	3.17	-3.56	-3.38	-3.24	-3.17
2.120	0.00	5.23	4.84	4.73	-5.23	-5.04	-4.84	-4.73
2.2	0.00	5.99	5.54	5.42	5.99	5.78	5.54	5.42
2.3	0.00	6.63	6.14	6.00	6.63	6.40	6.14	6.00
2.311	0.00	6.78	6.27	6.14	6.78	6.54	6.27	6.14
2.311	0.00	4.88	4.45	4.35	4.88	4.64	4.45	4.35
2.4	0.00	5.71	5.21	5.09	5.71	5.43	5.21	5.09
2.5	0.00	-5.52	-5.02	-4.92	5.52	5.24	5.02	4.92
2.6	0.00	-5.44	-4.96	-4.85	5.44	5.17	4.96	4.85
2.7	0.00	-4.75	-4.33	-4.24	4.75	4.52	4.33	4.24
2.734	0.00	4.49	4.09	4.00	4.49	4.27	4.09	4.00
2.734	0.00	6.24	5.77	5.65	6.24	6.02	5.77	5.65
2.8	0.00	5.54	5.13	5.02	5.54	5.35	5.13	5.02
2.9	0.00	3.95	3.66	3.58	-3.95	-3.82	-3.66	-3.58
2.920	0.00	4.39	4.06	3.97	-4.39	-4.23	-4.06	-3.97
2.920	0.00	3.16	2.88	2.82	-3.16	-3.00	-2.88	-2.82
2.940	0.00	3.47	3.16	3.09	-3.47	-3.29	-3.16	-3.09
2.940	0.00	2.71	2.43	2.38	-2.71	-2.54	-2.43	-2.38
3.0	0.00	3.43	3.08	3.01	-3.43	-3.21	-3.08	-3.01

Note: For locations which do not experience tensile stresses
the fatigue stress range is output as a negative number.

♀

Broadway Bridge South Approach Girder F
02-20-2017 10:11:56 Page 27

--- FATIGUE REPORT ---

All Units: ksi

SPAN 3 - FATIGUE STRESS RANGE (ksi) -
(EXT - EXTREME FIBER, 4T=4*tw, 6T=6*tw)

LOCA	REBAR RANGE	TOP FLANGE EXT	TOP FLANGE 4T	TOP FLANGE 6T	BOTTOM FLANGE EXT	BOTTOM FLANGE INS	BOTTOM FLANGE 4T	BOTTOM FLANGE 6T
3.0	0.00	3.43	3.08	3.01	-3.43	-3.21	-3.08	-3.01
3.081	0.00	3.09	2.77	2.71	-3.09	-2.89	-2.77	-2.71

3.081	0.00	3.95	3.59	3.52	-3.95	-3.75	-3.59	-3.52
3.1	0.00	3.84	3.50	3.42	-3.84	-3.65	-3.50	-3.42
3.107	0.00	3.87	3.53	3.45	-3.87	-3.68	-3.53	-3.45
3.108	0.00	5.38	4.98	4.87	-5.38	-5.19	-4.98	-4.87
3.2	0.00	5.91	5.47	5.35	5.91	5.70	5.47	5.35
3.3	0.00	6.78	6.28	6.14	6.78	6.55	6.28	6.14
3.4	0.00	7.02	6.50	6.36	7.02	6.78	6.50	6.36
3.5	0.00	6.55	6.06	5.93	6.55	6.32	6.06	5.93
3.6	0.00	6.95	6.43	6.30	6.95	6.71	6.43	6.30
3.7	0.00	6.71	6.21	6.08	6.71	6.48	6.21	6.08
3.8	0.00	5.82	5.38	5.27	5.82	5.61	5.38	5.27
3.892	0.00	5.16	4.78	4.68	-5.16	-4.98	-4.78	-4.68
3.893	0.00	3.72	3.39	3.31	-3.72	-3.53	-3.39	-3.31
3.9	0.00	3.68	3.35	3.28	-3.68	-3.50	-3.35	-3.28
3.919	0.00	3.79	3.46	3.38	-3.79	-3.61	-3.46	-3.38
3.919	0.00	2.97	2.66	2.60	-2.97	-2.77	-2.66	-2.60
4.0	0.00	3.34	3.00	2.93	-3.34	-3.13	-3.00	-2.93

Note: For locations which do not experience tensile stresses
the fatigue stress range is output as a negative number.

Broadway Bridge South Approach Girder F
02-20-2017 10:11:56 Page 28

--- FATIGUE REPORT ---

Max stress range, top & bottom flange
@ Ext: 8.34 ksi * 1.13 = 9.42 ksi
@ 4T: 7.72 ksi * 1.13 = 8.72 ksi

All Units: ksi

SPAN 4 - FATIGUE STRESS RANGE (ksi) -
(EXT - EXTREME FIBER, 4T=4*tw, 6T=6*tw)

LOCA	REBAR RANGE	-----TOP FLANGE----- EXT	4T	6T	-----BOTTOM FLANGE----- EXT	INS	4T	6T
4.0	0.00	3.34	3.00	2.93	-3.34	-3.13	-3.00	-2.93
4.061	0.00	2.65	2.38	2.33	-2.65	-2.48	-2.38	-2.33
4.061	0.00	3.39	3.09	3.02	-3.39	-3.22	-3.09	-3.02
4.081	0.00	3.10	2.82	2.76	-3.10	-2.94	-2.82	-2.76
4.081	0.00	4.30	3.98	3.89	-4.30	-4.15	-3.98	-3.89
4.1	0.00	3.91	3.62	3.54	-3.91	-3.77	-3.62	-3.54
4.2	0.00	5.47	5.06	4.95	5.47	5.28	5.06	4.95
4.264	0.00	6.40	5.92	5.79	6.40	6.18	5.92	5.79
4.264	0.00	4.61	4.20	4.11	4.61	4.38	4.20	4.11
4.3	0.00	4.98	4.54	4.44	4.98	4.73	4.54	4.44
4.4	0.00	-5.37	-4.89	-4.79	5.37	5.11	4.89	4.79
4.5	0.00	-5.33	-4.86	-4.75	5.33	5.07	4.86	4.75
4.6	0.00	-5.50	-5.01	-4.90	5.50	5.22	5.01	4.90
4.7	0.00	6.02	5.49	5.37	6.02	5.72	5.49	5.37
4.701	0.00	6.01	5.47	5.36	6.01	5.71	5.47	5.36
4.701	0.00	8.34	7.72	7.55	8.34	8.05	7.72	7.55
4.8	0.00	5.61	5.19	5.08	5.61	5.42	5.19	5.08
4.895	0.00	4.18	3.87	3.79	-4.18	-4.04	-3.87	-3.79
4.895	0.00	3.01	2.74	2.68	-3.01	-2.86	-2.74	-2.68
4.9	0.00	2.96	2.69	2.64	-2.96	-2.81	-2.69	-2.64
4.919	0.00	3.09	2.82	2.76	-3.09	-2.94	-2.82	-2.76
4.919	0.00	2.42	2.17	2.12	-2.42	-2.26	-2.17	-2.12
4.939	0.00	2.53	2.27	2.22	-2.53	-2.37	-2.27	-2.22
4.939	0.00	2.08	1.83	1.79	-2.08	-1.91	-1.83	-1.79
5.0	0.00	2.36	2.08	2.04	-2.36	-2.17	-2.08	-2.04

Note: For locations which do not experience tensile stresses
the fatigue stress range is output as a negative number.

Broadway Bridge South Approach Girder F
02-20-2017 10:11:56 Page 29

--- FATIGUE REPORT ---

All Units: ksi

SPAN 5 - FATIGUE STRESS RANGE (ksi) -
(EXT - EXTREME FIBER, 4T=4*tw, 6T=6*tw)

LOCA	REBAR RANGE	-----TOP FLANGE----- EXT	4T	6T	-----BOTTOM FLANGE----- EXT	INS	4T	6T
5.0	0.00	2.36	2.08	2.04	-2.36	-2.17	-2.08	-2.04
5.076	0.00	2.25	1.98	1.94	-2.25	-2.07	-1.98	-1.94
5.076	0.00	2.74	2.46	2.41	-2.74	-2.56	-2.46	-2.41
5.1	0.00	2.70	2.42	2.37	-2.70	-2.52	-2.42	-2.37
5.101	0.00	2.70	2.43	2.37	-2.70	-2.53	-2.43	-2.37
5.101	0.00	3.46	3.15	3.09	-3.46	-3.29	-3.15	-3.09
5.131	0.00	3.68	3.35	3.28	-3.68	-3.49	-3.35	-3.28
5.132	0.00	5.11	4.73	4.63	-5.11	-4.93	-4.73	-4.63
5.2	0.00	5.79	5.36	5.24	5.79	5.59	5.36	5.24
5.3	0.00	7.15	6.62	6.47	7.15	6.90	6.62	6.47
5.4	0.00	6.95	6.43	6.30	6.95	6.71	6.43	6.30
5.404	0.00	7.00	6.48	6.34	7.00	6.76	6.48	6.34
5.405	0.00	5.04	4.59	4.49	5.04	4.79	4.59	4.49
5.5	0.00	5.79	5.28	5.16	5.79	5.50	5.28	5.16
5.6	0.00	-5.64	-5.14	-5.02	5.64	5.36	5.14	5.02
5.7	0.00	-5.05	-4.60	-4.50	5.05	4.80	4.60	4.50
5.8	0.00	-3.82	-3.48	-3.40	3.82	3.63	3.48	3.40
5.829	0.00	-3.36	-3.06	-3.00	3.36	3.20	3.06	3.00
5.829	0.00	-4.67	-4.32	-4.23	4.67	4.51	4.32	4.23
5.9	0.00	-3.14	-2.91	-2.84	3.14	3.03	2.91	2.84
6.0	0.00	0.00	0.00	0.00	0.00	0.00	0.00	0.00

Note: For locations which do not experience tensile stresses
the fatigue stress range is output as a negative number.

GIRDER F FULLY COMPOSITE INTERIOR RUN.STR

STLBRIDGE LRFD

STEEL BRIDGE DESIGN SOFTWARE

Copyright 2014 BRIDGESOFT, Inc. All Rights Reserved

STRESS OUTPUT

Title: Broadway Bridge South Approach Girder F
Input Filename: GIRDER F FULLY COMPOSITE INTERIOR RUN
Output Filename: GIRDER F FULLY COMPOSITE INTERIOR RUN.STR
Time:15:19:19
Date:02-14-2017
AASHTO LRFD Code: 7TH Edition

♀
Broadway Bridge South Approach Girder F 02-14-2017 15:19:19 STLBRIDGE LRFD
Page 1

--- INPUT ECHO ---

"2DBRIDGE I Girder"
"ENGLISH"

Page 1

```
"Broadway Bridge South Approach Girder F"
"LRFD v61"
0
5,"HL93",8,"0",0,0,0,0,0,0,0,0
4000,150,6.5,2,2.5,490,3644,29000,8,24
3,10,0,1.5,1.25,1.5,1.75
0,0,0
1,1,1.3
0,0,1.5
1.25,1.5,1.75
1.25,1.55,1.8,1.33,1,1
1.25,1.5,1.6
1.3,1.3,1
4,1,8,0,0,0,1,0
113.406,0,0
0,0,0,0,0
125.294,0,0
0,0,0,0,0
92.987,0,0
0,0,0,0,0
123.685,0,0
0,0,0,0,0
98.862,0,0
0,0,0,0,0
0
0
0
0
1,13.401,72.5,72.5,0
1,25.401,72.5,72.5,0
1,65.401,72.5,72.5,0
1,77.401,72.5,72.5,0
1,97.406,72.5,72.5,0
1,103.406,72.5,72.5,0
1,105.906,72.5,72.5,0
1,113.406,72.5,72.5,0
2,13.401,18,1.298,36
2,25.401,18,1.9,36
2,65.401,18,2.5,36
2,77.401,18,1.9,36
2,97.406,18,1.298,36
2,103.406,18,2.019,36
2,105.906,18,2.742,36
2,113.406,18,3.465,36
3,13.401,18,1.298,36
3,25.401,18,1.9,36
3,65.401,18,2.5,36
3,77.401,18,1.9,36
```

♀

--- INPUT ECHO ---

```
3,97.406,18,1.298,36
3,103.406,18,2.019,36
3,105.906,18,2.742,36
3,113.406,18,3.465,36
4,0,4,15.333,0
4,87.021,9,15.333,0
4,113.406,9,15.333,0
5,0,0,0,0
5,87.021,0,0,0
5,113.406,0,0,0
6,0,0,0,0
```

```
6,87.021,0,0,0
6,113.406,0,0,0
7,13.401,0,.375,36
7,25.401,0,.375,36
7,65.401,0,.375,36
7,77.401,0,.375,36
7,97.406,0,.375,36
7,103.406,0,.375,36
7,105.906,0,.375,36
7,113.406,99999,.375,36
1,7.5,72.5,72.5,0
1,10,72.5,72.5,0
1,15,72.5,72.5,0
1,39,72.5,72.5,0
1,92,72.5,72.5,0
1,115.294,72.5,72.5,0
1,117.794,72.5,72.5,0
1,125.294,72.5,72.5,0
2,7.5,18,3.465,36
2,10,18,2.742,36
2,15,18,2.019,36
2,39,18,1.298,36
2,92,18,1.9,36
2,115.294,18,1.298,36
2,117.794,18,1.9,36
2,125.294,18,2.5,36
3,7.5,18,3.465,36
3,10,18,2.742,36
3,15,18,2.019,36
3,39,18,1.298,36
3,92,18,1.9,36
3,115.294,18,1.298,36
3,117.794,18,1.9,36
3,125.294,18,2.5,36
4,0,2.5,15.333,0
4,103.685,10.875,15.333,0
4,125.294,10.875,15.333,0
5,0,0,0,0
5,103.685,0,0,0
```

♀

--- INPUT ECHO ---

```
5,125.294,0,0,0
6,0,0,0,0
6,103.685,0,0,0
6,125.294,0,0,0
7,7.5,0,.375,36
7,10,0,.375,36
7,15,0,.375,36
7,39,0,.375,36
7,92,0,.375,36
7,115.294,0,.375,36
7,117.794,0,.375,36
7,125.294,99999,.375,36
1,7.5,72.5,72.5,0
1,10,72.5,72.5,0
1,82.987,72.5,72.5,0
1,85.487,72.5,72.5,0
1,92.987,72.5,72.5,0
2,7.5,18,2.5,36
2,10,18,1.9,36
2,82.987,18,1.298,36
```

```
2,85.487,18,1.9,36
2,92.987,18,2.5,36
3,7.5,18,2.5,36
3,10,18,1.9,36
3,82.987,18,1.298,36
3,85.487,18,1.9,36
3,92.987,18,2.5,36
4,0,10.875,15.333,0
4,92.987,10.875,15.333,0
5,0,0,0,0
5,92.987,0,0,0
6,0,0,0,0
6,92.987,0,0,0
7,7.5,0,.375,36
7,10,0,.375,36
7,82.987,0,.375,36
7,85.487,0,.375,36
7,92.987,99999,.375,36
1,7.5,72.5,72.5,0
1,10,72.5,72.5,0
1,32.685,72.5,72.5,0
1,86.685,72.5,72.5,0
1,110.685,72.5,72.5,0
1,113.685,72.5,72.5,0
1,116.185,72.5,72.5,0
1,123.685,72.5,72.5,0
2,7.5,18,2.5,36
2,10,18,1.9,36
2,32.685,18,1.298,36
2,86.685,18,1.9,36
```

♀

--- INPUT ECHO ---

```
2,110.685,18,1.298,36
2,113.685,18,1.9,36
2,116.185,18,2.5,36
2,123.685,18,3.103,36
3,7.5,18,2.5,36
3,10,18,1.9,36
3,32.685,18,1.298,36
3,86.685,18,1.9,36
3,110.685,18,1.298,36
3,113.685,18,1.9,36
3,116.185,18,2.5,36
3,123.685,18,3.103,36
4,0,10.875,15.333,0
4,13.904,10.875,15.333,0
4,123.685,2.5,15.333,0
5,0,0,0,0
5,13.904,0,0,0
5,123.685,0,0,0
6,0,0,0,0
6,13.904,0,0,0
6,123.685,0,0,0
7,7.5,0,.375,36
7,10,0,.375,36
7,32.685,0,.375,36
7,86.685,0,.375,36
7,110.685,0,.375,36
7,113.685,0,.375,36
7,116.185,0,.375,36
7,123.685,99999,.375,36
```

```
    1,7.5,72.5,72.5,0
    1,10,72.5,72.5,0
    1,13,72.5,72.5,0
    1,39.992,72.5,72.5,0
    1,81.992,72.5,72.5,0
    1,98.862,72.5,72.5,0
    2,7.5,18,3.103,36
    2,10,18,2.5,36
    2,13,18,1.9,36
    2,39.992,18,1.298,36
    2,81.992,18,1.9,36
    2,98.862,18,1.298,36
    3,7.5,18,3.103,36
    3,10,18,2.5,36
    3,13,18,1.9,36
    3,39.992,18,1.298,36
    3,81.992,18,1.9,36
    3,98.862,18,1.298,36
    4,0,9,15.333,0
    4,16.195,9,15.333,0
    4,98.862,4,15.333,0
♀
```


--- INPUT ECHO ---

```
    5,0,0,0,0
    5,16.195,0,0,0
    5,98.862,0,0,0
    6,0,0,0,0
    6,16.195,0,0,0
    6,98.862,0,0,0
    7,7.5,0,.375,36
    7,10,0,.375,36
    7,13,0,.375,36
    7,39.992,0,.375,36
    7,81.992,0,.375,36
    7,98.862,99999,.375,36
♀
```


--- INPUT ECHO ---

Girder F is interior girder for spans 2-4

--- FATIGUE REPORT ---

All Units: ksi

SPAN 1 - FATIGUE STRESS RANGE (ksi) -
(EXT - EXTREME FIBER, 4T=4*tw, 6T=6*tw)

LOCA	REBAR RANGE	TOP FLANGE EXT	TOP FLANGE 4T	TOP FLANGE 6T	BOTTOM FLANGE EXT	BOTTOM FLANGE INS	BOTTOM FLANGE 4T	BOTTOM FLANGE 6T
1.0	0.00	0.00	0.00	0.00	0.00	0.00	0.00	0.00
1.1	-1.33	-1.29	-1.13	-1.09	3.00	2.93	2.84	2.80
1.118	-1.54	-1.49	-1.31	-1.26	3.43	3.35	3.25	3.20
1.118	-1.28	-1.27	-1.10	-1.06	2.57	2.47	2.40	2.36
1.2	-2.01	-2.00	-1.74	-1.68	4.03	3.88	3.76	3.70
1.224	-2.17	-2.16	-1.87	-1.81	4.33	4.17	4.04	3.98
1.224	-1.87	-1.91	-1.63	-1.58	3.46	3.28	3.18	3.13
1.3	-2.29	-2.34	-2.00	-1.93	4.22	4.01	3.88	3.82
1.4	-2.61	-2.66	-2.28	-2.20	4.70	4.46	4.32	4.25
1.5	-2.76	-2.81	-2.41	-2.34	4.82	4.58	4.43	4.35
1.577	-2.80	-2.85	-2.46	-2.38	4.75	4.50	4.36	4.28
1.577	-3.34	-3.33	-2.92	-2.82	5.97	5.73	5.55	5.46
1.6	-3.37	-3.35	-2.94	-2.85	5.94	5.71	5.53	5.43
1.682	3.29	3.28	2.89	2.80	5.41	5.19	5.02	4.93
1.683	4.26	4.15	3.72	3.61	7.31	7.11	6.88	6.77
1.7	4.25	4.15	3.73	3.61	7.16	6.96	6.74	6.63
1.8	4.15	4.06	3.69	3.59	5.85	5.68	5.48	5.38
1.859	4.11	4.03	3.68	3.59	-5.17	-5.01	-4.82	-4.73
1.859	2.86	2.86	2.57	2.50	-3.58	-3.41	-3.28	-3.22
1.9	2.80	2.80	2.52	2.46	-3.23	-3.07	-2.95	-2.89
1.912	2.83	2.84	2.56	2.50	-3.25	-3.09	-2.97	-2.91
1.912	2.15	2.19	1.94	1.89	-2.48	-2.32	-2.23	-2.18
1.934	2.20	2.24	1.98	1.94	-2.51	-2.35	-2.26	-2.21
1.934	1.76	1.83	1.59	1.56	-2.03	-1.86	-1.79	-1.75
2.0	1.88	1.95	1.70	1.66	-2.11	-1.93	-1.86	-1.82

Page 18

Note: For locations which do not experience tensile stresses
the fatigue stress range is output as a negative number.

♀

Broadway Bridge South Approach Girder F
02-14-2017 15:19:20 Page 26

--- FATIGUE REPORT ---

All Units: ksi

SPAN 2 - FATIGUE STRESS RANGE (ksi) -
(EXT - EXTREME FIBER, 4T=4*tw, 6T=6*tw)

LOCA	REBAR RANGE	-----TOP FLANGE----- EXT	4T	6T	-----BOTTOM FLANGE----- EXT	INS	4T	6T
2.0	1.90	1.98	1.72	1.69	-2.12	-1.94	-1.86	-1.82
2.060	1.82	1.90	1.65	1.61	-2.05	-1.88	-1.81	-1.77
2.060	2.28	2.32	2.06	2.01	-2.55	-2.37	-2.28	-2.23
2.080	2.24	2.29	2.02	1.98	-2.52	-2.35	-2.26	-2.21
2.080	2.96	2.96	2.67	2.61	-3.31	-3.14	-3.02	-2.96
2.1	2.91	2.91	2.63	2.56	-3.27	-3.11	-2.99	-2.93
2.120	2.91	2.91	2.62	2.56	-3.39	-3.22	-3.10	-3.04
2.120	4.22	4.13	3.79	3.70	-4.91	-4.76	-4.58	-4.49
2.2	4.08	3.99	3.64	3.54	5.56	5.39	5.20	5.11
2.3	3.79	3.70	3.33	3.24	6.12	5.95	5.76	5.66
2.311	3.79	3.70	3.33	3.23	6.22	6.05	5.85	5.75
2.311	2.92	2.91	2.58	2.51	4.60	4.41	4.26	4.19
2.4	-2.98	-2.97	-2.61	-2.53	5.20	5.00	4.84	4.76
2.5	-2.60	-2.59	-2.25	-2.18	4.97	4.78	4.63	4.56
2.6	-2.54	-2.53	-2.20	-2.13	4.87	4.69	4.54	4.47
2.7	-2.45	-2.44	-2.14	-2.07	4.33	4.16	4.03	3.96
2.734	-2.43	-2.42	-2.13	-2.06	4.08	3.92	3.79	3.73
2.734	-3.14	-3.06	-2.74	-2.65	5.52	5.37	5.20	5.11
2.8	3.16	3.09	2.79	2.71	4.90	4.76	4.60	4.52
2.9	2.96	2.90	2.66	2.59	-3.62	-3.51	-3.38	-3.31
2.920	3.43	3.36	3.08	3.01	-4.10	-3.97	-3.82	-3.74
2.920	2.49	2.48	2.24	2.19	-2.98	-2.85	-2.74	-2.69
2.940	2.82	2.81	2.54	2.48	-3.32	-3.17	-3.05	-2.99
2.940	2.21	2.24	1.99	1.94	-2.61	-2.46	-2.36	-2.32
3.0	2.97	3.01	2.68	2.62	-3.41	-3.20	-3.08	-3.02

Note: For locations which do not experience tensile stresses
the fatigue stress range is output as a negative number.

♀

Broadway Bridge South Approach Girder F
02-14-2017 15:19:20 Page 27

--- FATIGUE REPORT ---

All Units: ksi

SPAN 3 - FATIGUE STRESS RANGE (ksi) -
(EXT - EXTREME FIBER, 4T=4*tw, 6T=6*tw)

LOCA	REBAR RANGE	-----TOP FLANGE----- EXT	4T	6T	-----BOTTOM FLANGE----- EXT	INS	4T	6T
3.0	2.97	3.01	2.68	2.62	-3.41	-3.20	-3.08	-3.02
3.081	2.67	2.71	2.41	2.36	-3.06	-2.88	-2.77	-2.71

3.081	3.42	3.41	3.09	3.01	-3.90	-3.72	-3.57	-3.50
3.1	3.33	3.32	3.00	2.93	-3.80	-3.62	-3.48	-3.41
3.107	3.32	3.31	2.99	2.92	-3.82	-3.64	-3.50	-3.43
3.108	4.60	4.50	4.14	4.04	-5.26	-5.09	-4.90	-4.80
3.2	4.31	4.22	3.85	3.75	5.69	5.52	5.32	5.22
3.3	3.95	3.85	3.47	3.37	6.32	6.14	5.94	5.84
3.4	3.56	3.47	3.10	3.00	6.42	6.25	6.05	5.95
3.5	2.99	2.91	2.58	2.49	5.92	5.76	5.59	5.50
3.6	3.48	3.38	3.02	2.93	6.34	6.17	5.98	5.88
3.7	3.85	3.76	3.38	3.28	6.23	6.05	5.85	5.75
3.8	4.19	4.10	3.74	3.64	5.58	5.42	5.22	5.13
3.892	4.43	4.34	3.99	3.90	-5.06	-4.90	-4.71	-4.62
3.893	3.20	3.19	2.88	2.81	-3.68	-3.51	-3.37	-3.30
3.9	3.21	3.20	2.89	2.82	-3.65	-3.48	-3.34	-3.27
3.919	3.30	3.29	2.97	2.90	-3.75	-3.57	-3.44	-3.37
3.919	2.57	2.61	2.32	2.27	-2.95	-2.77	-2.66	-2.61
4.0	2.87	2.91	2.59	2.53	-3.29	-3.09	-2.97	-2.91

Note: For locations which do not experience tensile stresses
the fatigue stress range is output as a negative number.

Broadway Bridge South Approach Girder F
02-14-2017 15:19:20 Page 28

--- FATIGUE REPORT ---

Max stress range, top flange
@ Ext: 4.50 ksi * 1.13 = 5.09 ksi
@ 4T: 4.14 ksi * 1.13 = 4.68 ksi

Max stress range, bottom flange
@ Ext: 7.03 ksi * 1.13 = 7.94 ksi
@ 4T: 6.61 ksi * 1.13 = 7.47 ksi

All Units: ksi

SPAN 4 - FATIGUE STRESS RANGE (ksi) -
(EXT - EXTREME FIBER, 4T=4*tw, 6T=6*tw)

LOCA	REBAR RANGE	-----TOP FLANGE----- EXT	4T	6T	-----BOTTOM FLANGE----- EXT	INS	4T	6T
4.0	2.87	2.91	2.59	2.53	-3.29	-3.09	-2.97	-2.91
4.061	2.15	2.18	1.94	1.89	-2.55	-2.39	-2.30	-2.26
4.061	2.74	2.74	2.47	2.41	-3.24	-3.09	-2.97	-2.91
4.081	2.44	2.43	2.19	2.14	-2.92	-2.79	-2.68	-2.63
4.081	3.35	3.28	3.01	2.94	-4.01	-3.88	-3.74	-3.66
4.1	2.94	2.88	2.64	2.57	-3.60	-3.48	-3.35	-3.29
4.2	3.15	3.07	2.78	2.70	4.84	4.71	4.55	4.47
4.264	-3.20	-3.12	-2.80	-2.71	5.60	5.45	5.27	5.18
4.264	-2.48	-2.47	-2.18	-2.11	4.14	3.98	3.85	3.78
4.3	-2.54	-2.53	-2.22	-2.15	4.46	4.29	4.15	4.08
4.4	-2.52	-2.51	-2.18	-2.11	4.79	4.61	4.47	4.40
4.5	-2.44	-2.43	-2.11	-2.04	4.75	4.57	4.43	4.36
4.6	-2.77	-2.76	-2.42	-2.34	4.94	4.74	4.59	4.52
4.7	3.27	3.26	2.88	2.80	5.21	5.00	4.83	4.75
4.701	3.27	3.25	2.88	2.79	5.20	4.99	4.82	4.74
4.701	4.22	4.11	3.70	3.58	7.03	6.84	6.61	6.50
4.8	3.59	3.51	3.19	3.11	5.07	4.93	4.75	4.67
4.895	3.41	3.34	3.07	3.00	-3.95	-3.82	-3.68	-3.60
4.895	2.48	2.47	2.23	2.18	-2.87	-2.74	-2.63	-2.58
4.9	2.47	2.46	2.22	2.17	-2.82	-2.69	-2.59	-2.54
4.919	2.62	2.61	2.36	2.31	-2.96	-2.82	-2.71	-2.66
4.919	2.05	2.08	1.85	1.81	-2.33	-2.19	-2.10	-2.06
4.939	2.17	2.20	1.96	1.91	-2.44	-2.29	-2.20	-2.16
4.939	1.77	1.83	1.60	1.57	-2.01	-1.86	-1.78	-1.75
5.0	2.06	2.13	1.87	1.83	-2.28	-2.11	-2.03	-1.98

Note: For locations which do not experience tensile stresses
the fatigue stress range is output as a negative number.

Broadway Bridge South Approach Girder F
02-14-2017 15:19:20 Page 29

--- FATIGUE REPORT ---

All Units: ksi

SPAN 5 - FATIGUE STRESS RANGE (ksi) -
(EXT - EXTREME FIBER, 4T=4*tw, 6T=6*tw)

LOCA	REBAR RANGE	-----TOP FLANGE----- EXT	4T	6T	-----BOTTOM FLANGE----- EXT	INS	4T	6T
5.0	2.03	2.09	1.84	1.80	-2.28	-2.11	-2.02	-1.98
5.076	1.92	1.97	1.73	1.69	-2.19	-2.03	-1.95	-1.91
5.076	2.34	2.38	2.12	2.07	-2.67	-2.50	-2.40	-2.36
5.1	2.30	2.33	2.07	2.03	-2.63	-2.47	-2.37	-2.33
5.101	2.30	2.33	2.07	2.03	-2.64	-2.48	-2.38	-2.33
5.101	2.94	2.93	2.65	2.59	-3.36	-3.20	-3.08	-3.01
5.131	2.96	2.95	2.66	2.60	-3.55	-3.39	-3.26	-3.20
5.132	4.07	3.98	3.65	3.57	-4.87	-4.72	-4.54	-4.46
5.2	4.05	3.96	3.61	3.52	-5.44	-5.28	-5.09	-5.00
5.3	4.04	3.94	3.55	3.45	6.51	6.33	6.12	6.02
5.4	-3.61	-3.52	-3.15	-3.05	6.45	6.28	6.08	5.98
5.404	-3.62	-3.52	-3.15	-3.05	6.48	6.31	6.11	6.01
5.405	-2.83	-2.82	-2.48	-2.40	4.80	4.61	4.47	4.39
5.5	-2.97	-2.96	-2.59	-2.51	5.30	5.09	4.93	4.85
5.6	-2.76	-2.75	-2.39	-2.32	5.14	4.95	4.79	4.72
5.7	-2.39	-2.38	-2.07	-2.00	4.59	4.41	4.28	4.21
5.8	-1.78	-1.77	-1.54	-1.49	3.48	3.35	3.25	3.20
5.829	-1.56	-1.56	-1.35	-1.31	3.06	2.95	2.86	2.81
5.829	-1.90	-1.84	-1.62	-1.56	4.11	4.00	3.88	3.82
5.9	-1.25	-1.21	-1.07	-1.03	2.75	2.68	2.60	2.56
6.0	0.00	0.00	0.00	0.00	0.00	0.00	0.00	0.00

Note: For locations which do not experience tensile stresses
the fatigue stress range is output as a negative number.

GIRDER F NONCOMPOSITE EXTERIOR RUN.STR

STLBRIDGE LRFD

STEEL BRIDGE DESIGN SOFTWARE

Copyright 2014 BRIDGESOFT, Inc. All Rights Reserved

STRESS OUTPUT

Title: Broadway Bridge South Approach Girder F
Input Filename: GIRDER F NONCOMPOSITE EXTERIOR RUN
Output Filename: GIRDER F NONCOMPOSITE EXTERIOR RUN.STR
Time:14:54:49
Date:02-14-2017
AASHTO LRFD Code: 7TH Edition

♀
Broadway Bridge South Approach Girder F 02-14-2017 14:54:49 STLBRIDGE LRFD
Page 1

--- INPUT ECHO ---

"2DBRIDGE I Girder"
"ENGLISH"

Page 1

```
"Broadway Bridge South Approach Girder F"
"LRFD v61"
0
5,"HL93",8,"0",0,0,0,0,0,0,0,0
4000,150,6.5,2,2.5,490,3644,29000,7,24
1,10,0,1.5,1.25,1.5,1.75
0,0,0
1,1,1.3
0,0,1.5
1.25,1.5,1.75
1.25,1.55,1.8,1.33,1,1
1.25,1.5,1.6
1.3,1.3,1
4,2,4,0,1.539,2.095,1.83,0
113.406,0,0
0,0,0,0,0
125.294,0,0
0,0,0,0,0
92.987,0,0
0,0,0,0,0
123.685,0,0
0,0,0,0,0
98.862,0,0
0,0,0,0,0
0
0
0
0
1,13.401,72.5,72.5,0
1,25.401,72.5,72.5,0
1,65.401,72.5,72.5,0
1,77.401,72.5,72.5,0
1,97.406,72.5,72.5,0
1,103.406,72.5,72.5,0
1,105.906,72.5,72.5,0
1,113.406,72.5,72.5,0
2,13.401,18,1.298,36
2,25.401,18,1.9,36
2,65.401,18,2.5,36
2,77.401,18,1.9,36
2,97.406,18,1.298,36
2,103.406,18,2.019,36
2,105.906,18,2.742,36
2,113.406,18,3.465,36
3,13.401,18,1.298,36
3,25.401,18,1.9,36
3,65.401,18,2.5,36
3,77.401,18,1.9,36
```

♀

--- INPUT ECHO ---

```
3,97.406,18,1.298,36
3,103.406,18,2.019,36
3,105.906,18,2.742,36
3,113.406,18,3.465,36
4,0,4,15.333,0
4,87.021,9,15.333,0
4,113.406,9,15.333,0
5,0,0,0,0
5,87.021,0,0,0
5,113.406,0,0,0
6,0,0,0,0
```

```
    6,87.021,0,0,0
    6,113.406,0,0,0
    7,13.401,0,.375,36
    7,25.401,0,.375,36
    7,65.401,0,.375,36
    7,77.401,0,.375,36
    7,97.406,0,.375,36
    7,103.406,0,.375,36
    7,105.906,0,.375,36
    7,113.406,99999,.375,36
    1,7.5,72.5,72.5,0
    1,10,72.5,72.5,0
    1,15,72.5,72.5,0
    1,39,72.5,72.5,0
    1,92,72.5,72.5,0
    1,115.294,72.5,72.5,0
    1,117.794,72.5,72.5,0
    1,125.294,72.5,72.5,0
    2,7.5,18,3.465,36
    2,10,18,2.742,36
    2,15,18,2.019,36
    2,39,18,1.298,36
    2,92,18,1.9,36
    2,115.294,18,1.298,36
    2,117.794,18,1.9,36
    2,125.294,18,2.5,36
    3,7.5,18,3.465,36
    3,10,18,2.742,36
    3,15,18,2.019,36
    3,39,18,1.298,36
    3,92,18,1.9,36
    3,115.294,18,1.298,36
    3,117.794,18,1.9,36
    3,125.294,18,2.5,36
    4,0,2.5,15.333,0
    4,103.685,10.875,15.333,0
    4,125.294,10.875,15.333,0
    5,0,0,0,0
    5,103.685,0,0,0
♀
     Broadway Bridge South Approach Girder F  02-14-2017  14:54:49  STLBRIDGE LRFD
Page  3
                                    --- INPUT ECHO ---
    5,125.294,0,0,0
    6,0,0,0,0
    6,103.685,0,0,0
    6,125.294,0,0,0
    7,7.5,0,.375,36
    7,10,0,.375,36
    7,15,0,.375,36
    7,39,0,.375,36
    7,92,0,.375,36
    7,115.294,0,.375,36
    7,117.794,0,.375,36
    7,125.294,99999,.375,36
    1,7.5,72.5,72.5,0
    1,10,72.5,72.5,0
    1,82.987,72.5,72.5,0
    1,85.487,72.5,72.5,0
    1,92.987,72.5,72.5,0
    2,7.5,18,2.5,36
    2,10,18,1.9,36
    2,82.987,18,1.298,36
```

```
2,85.487,18,1.9,36
2,92.987,18,2.5,36
3,7.5,18,2.5,36
3,10,18,1.9,36
3,82.987,18,1.298,36
3,85.487,18,1.9,36
3,92.987,18,2.5,36
4,0,10.875,15.333,0
4,92.987,10.875,15.333,0
5,0,0,0,0
5,92.987,0,0,0
6,0,0,0,0
6,92.987,0,0,0
7,7.5,0,.375,36
7,10,0,.375,36
7,82.987,0,.375,36
7,85.487,0,.375,36
7,92.987,99999,.375,36
1,7.5,72.5,72.5,0
1,10,72.5,72.5,0
1,32.685,72.5,72.5,0
1,86.685,72.5,72.5,0
1,110.685,72.5,72.5,0
1,113.685,72.5,72.5,0
1,116.185,72.5,72.5,0
1,123.685,72.5,72.5,0
2,7.5,18,2.5,36
2,10,18,1.9,36
2,32.685,18,1.298,36
2,86.685,18,1.9,36
```

♀

--- INPUT ECHO ---

```
2,110.685,18,1.298,36
2,113.685,18,1.9,36
2,116.185,18,2.5,36
2,123.685,18,3.103,36
3,7.5,18,2.5,36
3,10,18,1.9,36
3,32.685,18,1.298,36
3,86.685,18,1.9,36
3,110.685,18,1.298,36
3,113.685,18,1.9,36
3,116.185,18,2.5,36
3,123.685,18,3.103,36
4,0,10.875,15.333,0
4,13.904,10.875,15.333,0
4,123.685,2.5,15.333,0
5,0,0,0,0
5,13.904,0,0,0
5,123.685,0,0,0
6,0,0,0,0
6,13.904,0,0,0
6,123.685,0,0,0
7,7.5,0,.375,36
7,10,0,.375,36
7,32.685,0,.375,36
7,86.685,0,.375,36
7,110.685,0,.375,36
7,113.685,0,.375,36
7,116.185,0,.375,36
7,123.685,99999,.375,36
```

```
    1,7.5,72.5,72.5,0
    1,10,72.5,72.5,0
    1,13,72.5,72.5,0
    1,39.992,72.5,72.5,0
    1,81.992,72.5,72.5,0
    1,98.862,72.5,72.5,0
    2,7.5,18,3.103,36
    2,10,18,2.5,36
    2,13,18,1.9,36
    2,39.992,18,1.298,36
    2,81.992,18,1.9,36
    2,98.862,18,1.298,36
    3,7.5,18,3.103,36
    3,10,18,2.5,36
    3,13,18,1.9,36
    3,39.992,18,1.298,36
    3,81.992,18,1.9,36
    3,98.862,18,1.298,36
    4,0,9,15.333,0
    4,16.195,9,15.333,0
    4,98.862,4,15.333,0
♀
```


--- INPUT ECHO ---

```
    5,0,0,0,0
    5,16.195,0,0,0
    5,98.862,0,0,0
    6,0,0,0,0
    6,16.195,0,0,0
    6,98.862,0,0,0
    7,7.5,0,.375,36
    7,10,0,.375,36
    7,13,0,.375,36
    7,39.992,0,.375,36
    7,81.992,0,.375,36
    7,98.862,99999,.375,36
♀
```


--- INPUT ECHO ---

--- FATIGUE REPORT ---

Max stress range, top & bottom flange
@ Ext: 11.35 ksi * 1.13 = 12.83 ksi
@ 4T: 10.50 ksi * 1.13 = 11.87 ksi

All Units: ksi

SPAN 1 - FATIGUE STRESS RANGE (ksi) -
(EXT - EXTREME FIBER, 4T=4*tw, 6T=6*tw)

LOCA	REBAR RANGE	-----TOP FLANGE----- EXT	4T	6T	-----BOTTOM FLANGE----- EXT	INS	4T	6T
1.0	0.00	0.00	0.00	0.00	0.00	0.00	0.00	0.00
1.1	0.00	-4.94	-4.57	-4.47	4.94	4.77	4.57	4.47
1.118	0.00	-5.62	-5.21	-5.09	5.62	5.43	5.21	5.09
1.118	0.00	-4.06	-3.69	-3.61	4.06	3.85	3.69	3.61
1.2	0.00	-6.29	-5.73	-5.60	6.29	5.98	5.73	5.60
1.224	0.00	-6.73	-6.13	-6.00	6.73	6.39	6.13	6.00
1.224	0.00	-5.26	-4.72	-4.62	5.26	4.92	4.72	4.62
1.3	0.00	-6.35	-5.69	-5.57	6.35	5.94	5.69	5.57
1.4	0.00	-7.00	-6.28	-6.14	7.00	6.55	6.28	6.14
1.5	0.00	-7.19	-6.44	-6.30	7.19	6.72	6.44	6.30
1.577	0.00	7.07	6.34	6.20	7.07	6.61	6.34	6.20
1.577	0.00	9.05	8.24	8.06	9.05	8.59	8.24	8.06
1.6	0.00	9.00	8.20	8.02	9.00	8.55	8.20	8.02
1.682	0.00	8.17	7.44	7.28	8.17	7.77	7.44	7.28
1.683	0.00	11.35	10.50	10.27	11.35	10.95	10.50	10.27
1.7	0.00	11.10	10.28	10.05	11.10	10.72	10.28	10.05
1.8	0.00	8.88	8.22	8.05	8.88	8.58	8.22	8.05
1.859	0.00	7.75	7.17	7.02	-7.75	-7.48	-7.17	-7.02
1.859	0.00	5.28	4.80	4.69	-5.28	-5.01	-4.80	-4.69
1.9	0.00	4.74	4.31	4.21	-4.74	-4.49	-4.31	-4.21
1.912	0.00	4.76	4.33	4.23	-4.76	-4.51	-4.33	-4.23
1.912	0.00	3.61	3.22	3.15	-3.61	-3.36	-3.22	-3.15
1.934	0.00	3.64	3.25	3.18	-3.64	-3.39	-3.25	-3.18
1.934	0.00	2.93	2.56	2.51	-2.93	-2.68	-2.56	-2.51
2.0	0.00	3.00	2.63	2.57	-3.00	-2.74	-2.63	-2.57

GIRDER F NONCOMPOSITE EXTERIOR RUN.STR

Note: For locations which do not experience tensile stresses
the fatigue stress range is output as a negative number.

♀

Broadway Bridge South Approach Girder F
02-14-2017 14:54:50 Page 26

--- FATIGUE REPORT ---

All Units: ksi

Girder F is exterior girder for spans 1 & 5

SPAN 2 - FATIGUE STRESS RANGE (ksi) -
(EXT - EXTREME FIBER, 4T=4*tw, 6T=6*tw)

LOCA	REBAR RANGE	TOP FLANGE EXT	TOP FLANGE 4T	TOP FLANGE 6T	BOTTOM FLANGE EXT	BOTTOM FLANGE INS	BOTTOM FLANGE 4T	BOTTOM FLANGE 6T
2.0	0.00	3.00	2.63	2.57	-3.00	-2.74	-2.63	-2.57
2.060	0.00	2.96	2.59	2.54	-2.96	-2.70	-2.59	-2.54
2.060	0.00	3.68	3.28	3.21	-3.68	-3.42	-3.28	-3.21
2.080	0.00	3.66	3.27	3.19	-3.66	-3.41	-3.27	-3.19
2.080	0.00	4.83	4.39	4.29	-4.83	-4.58	-4.39	-4.29
2.1	0.00	4.81	4.37	4.27	-4.81	-4.56	-4.37	-4.27
2.120	0.00	5.01	4.55	4.45	-5.01	-4.75	-4.55	-4.45
2.120	0.00	7.35	6.80	6.66	-7.35	-7.10	-6.80	-6.66
2.2	0.00	8.57	7.93	7.76	8.57	8.28	7.93	7.76
2.3	0.00	9.48	8.77	8.58	9.48	9.15	8.77	8.58
2.311	0.00	9.66	8.94	8.74	9.66	9.32	8.94	8.74
2.311	0.00	6.96	6.34	6.20	6.96	6.61	6.34	6.20
2.4	0.00	7.99	7.28	7.12	7.99	7.59	7.28	7.12
2.5	0.00	-7.62	-6.94	-6.79	7.62	7.24	6.94	6.79
2.6	0.00	-7.29	-6.64	-6.50	7.29	6.93	6.64	6.50
2.7	0.00	6.18	5.63	5.51	6.18	5.87	5.63	5.51
2.734	0.00	5.79	5.28	5.16	5.79	5.50	5.28	5.16
2.734	0.00	8.04	7.44	7.28	8.04	7.76	7.44	7.28
2.8	0.00	7.01	6.49	6.35	7.01	6.77	6.49	6.35
2.9	0.00	4.96	4.59	4.49	-4.96	-4.79	-4.59	-4.49
2.920	0.00	5.56	5.15	5.04	-5.56	-5.37	-5.15	-5.04
2.920	0.00	4.01	3.65	3.57	-4.01	-3.81	-3.65	-3.57
2.940	0.00	4.44	4.05	3.96	-4.44	-4.22	-4.05	-3.96
2.940	0.00	3.47	3.12	3.05	-3.47	-3.25	-3.12	-3.05
3.0	0.00	4.49	4.03	3.94	-4.49	-4.20	-4.03	-3.94

Note: For locations which do not experience tensile stresses
the fatigue stress range is output as a negative number.

♀

Broadway Bridge South Approach Girder F
02-14-2017 14:54:50 Page 27

--- FATIGUE REPORT ---

All Units: ksi

SPAN 3 - FATIGUE STRESS RANGE (ksi) -
(EXT - EXTREME FIBER, 4T=4*tw, 6T=6*tw)

LOCA	REBAR RANGE	TOP FLANGE EXT	TOP FLANGE 4T	TOP FLANGE 6T	BOTTOM FLANGE EXT	BOTTOM FLANGE INS	BOTTOM FLANGE 4T	BOTTOM FLANGE 6T
3.0	0.00	4.49	4.03	3.94	-4.49	-4.20	-4.03	-3.94
3.081	0.00	4.03	3.62	3.54	-4.03	-3.77	-3.62	-3.54

3.081	0.00	5.16	4.70	4.60	-5.16	-4.90	-4.70	-4.60
3.1	0.00	5.02	4.57	4.47	-5.02	-4.77	-4.57	-4.47
3.107	0.00	5.05	4.60	4.50	-5.05	-4.80	-4.60	-4.50
3.108	0.00	7.01	6.49	6.35	-7.01	-6.77	-6.49	-6.35
3.2	0.00	7.55	6.99	6.84	7.55	7.29	6.99	6.84
3.3	0.00	8.52	7.88	7.71	8.52	8.22	7.88	7.71
3.4	0.00	8.69	8.04	7.87	8.69	8.39	8.04	7.87
3.5	0.00	8.03	7.43	7.27	8.03	7.75	7.43	7.27
3.6	0.00	8.62	7.97	7.80	8.62	8.32	7.97	7.80
3.7	0.00	8.44	7.81	7.64	8.44	8.15	7.81	7.64
3.8	0.00	7.46	6.91	6.76	7.46	7.20	6.91	6.76
3.892	0.00	6.66	6.16	6.03	-6.66	-6.43	-6.16	-6.03
3.893	0.00	4.79	4.37	4.27	-4.79	-4.56	-4.37	-4.27
3.9	0.00	4.75	4.33	4.23	-4.75	-4.51	-4.33	-4.23
3.919	0.00	4.91	4.47	4.37	-4.91	-4.66	-4.47	-4.37
3.919	0.00	3.84	3.44	3.37	-3.84	-3.59	-3.44	-3.37
4.0	0.00	4.35	3.90	3.82	-4.35	-4.07	-3.90	-3.82

Note: For locations which do not experience tensile stresses
the fatigue stress range is output as a negative number.

Broadway Bridge South Approach Girder F
02-14-2017 14:54:50 Page 28

--- FATIGUE REPORT ---

Girder F is exterior girder for spans 1 & 5

All Units: ksi

SPAN 4 - FATIGUE STRESS RANGE (ksi) -
(EXT - EXTREME FIBER, 4T=4*tw, 6T=6*tw)

LOCA	REBAR RANGE	-----TOP FLANGE----- EXT	4T	6T	-----BOTTOM FLANGE----- EXT	INS	4T	6T
4.0	0.00	4.35	3.90	3.82	-4.35	-4.07	-3.90	-3.82
4.061	0.00	3.38	3.03	2.96	-3.38	-3.16	-3.03	-2.96
4.061	0.00	4.32	3.93	3.85	-4.32	-4.10	-3.93	-3.85
4.081	0.00	3.91	3.56	3.48	-3.91	-3.71	-3.56	-3.48
4.081	0.00	5.42	5.02	4.91	-5.42	-5.23	-5.02	-4.91
4.1	0.00	4.88	4.51	4.42	-4.88	-4.71	-4.51	-4.42
4.2	0.00	6.95	6.43	6.30	6.95	6.71	6.43	6.30
4.264	0.00	8.29	7.67	7.51	8.29	8.00	7.67	7.51
4.264	0.00	5.97	5.44	5.32	5.97	5.67	5.44	5.32
4.3	0.00	6.51	5.93	5.80	6.51	6.18	5.93	5.80
4.4	0.00	-7.22	-6.58	-6.44	7.22	6.86	6.58	6.44
4.5	0.00	-7.37	-6.71	-6.57	7.37	7.00	6.71	6.57
4.6	0.00	7.68	7.00	6.84	7.68	7.30	7.00	6.84
4.7	0.00	8.50	7.74	7.57	8.50	8.07	7.74	7.57
4.701	0.00	8.48	7.72	7.55	8.48	8.05	7.72	7.55
4.701	0.00	11.77	10.89	10.65	11.77	11.36	10.89	10.65
4.8	0.00	7.99	7.39	7.24	7.99	7.71	7.39	7.24
4.895	0.00	5.87	5.43	5.31	-5.87	-5.67	-5.43	-5.31
4.895	0.00	4.22	3.85	3.76	-4.22	-4.01	-3.85	-3.76
4.9	0.00	4.14	3.77	3.69	-4.14	-3.94	-3.77	-3.69
4.919	0.00	4.32	3.93	3.85	-4.32	-4.10	-3.93	-3.85
4.919	0.00	3.37	3.03	2.96	-3.37	-3.16	-3.03	-2.96
4.939	0.00	3.52	3.15	3.09	-3.52	-3.29	-3.15	-3.09
4.939	0.00	2.88	2.55	2.49	-2.88	-2.66	-2.55	-2.49
5.0	0.00	3.24	2.86	2.80	-3.24	-2.98	-2.86	-2.80

Note: For locations which do not experience tensile stresses
the fatigue stress range is output as a negative number.

Broadway Bridge South Approach Girder F
02-14-2017 14:54:50 Page 29

--- FATIGUE REPORT ---

All Units: ksi

SPAN 5 - FATIGUE STRESS RANGE (ksi) -
(EXT - EXTREME FIBER, 4T=4*tw, 6T=6*tw)

LOCA	REBAR RANGE	-----TOP FLANGE----- EXT	4T	6T	-----BOTTOM FLANGE----- EXT	INS	4T	6T
5.0	0.00	3.24	2.86	2.80	-3.24	-2.98	-2.86	-2.80
5.076	0.00	3.08	2.72	2.66	-3.08	-2.84	-2.72	-2.66
5.076	0.00	3.76	3.37	3.30	-3.76	-3.51	-3.37	-3.30
5.1	0.00	3.70	3.31	3.24	-3.70	-3.46	-3.31	-3.24
5.101	0.00	3.70	3.32	3.25	-3.70	-3.47	-3.32	-3.25
5.101	0.00	4.74	4.32	4.23	-4.74	-4.51	-4.32	-4.23
5.131	0.00	5.04	4.59	4.49	-5.04	-4.79	-4.59	-4.49
5.132	0.00	7.00	6.48	6.34	-7.00	-6.76	-6.48	-6.34
5.2	0.00	7.95	7.35	7.19	7.95	7.67	7.35	7.19
5.3	0.00	9.73	9.01	8.81	9.73	9.40	9.01	8.81
5.4	0.00	9.48	8.77	8.58	9.48	9.15	8.77	8.58
5.404	0.00	9.54	8.83	8.64	9.54	9.21	8.83	8.64
5.405	0.00	6.87	6.26	6.12	6.87	6.53	6.26	6.12
5.5	0.00	7.85	7.15	6.99	7.85	7.46	7.15	6.99
5.6	0.00	7.62	6.94	6.79	7.62	7.24	6.94	6.79
5.7	0.00	-6.89	-6.28	-6.14	6.89	6.55	6.28	6.14
5.8	0.00	-5.21	-4.74	-4.64	5.21	4.95	4.74	4.64
5.829	0.00	-4.61	-4.20	-4.11	4.61	4.38	4.20	4.11
5.829	0.00	-6.39	-5.92	-5.79	6.39	6.17	5.92	5.79
5.9	0.00	-4.39	-4.07	-3.98	4.39	4.24	4.07	3.98
6.0	0.00	0.00	0.00	0.00	0.00	0.00	0.00	0.00

Note: For locations which do not experience tensile stresses
the fatigue stress range is output as a negative number.

GIRDER F FULLY COMPOSITE EXTERIOR RUN.STR

STLBRIDGE LRFD

STEEL BRIDGE DESIGN SOFTWARE

Copyright 2014 BRIDGESOFT, Inc. All Rights Reserved

STRESS OUTPUT

Title: Broadway Bridge South Approach Girder F
Input Filename: GIRDER F FULLY COMPOSITE EXTERIOR RUN
Output Filename: GIRDER F FULLY COMPOSITE EXTERIOR RUN.STR
Time:14:56:50
Date:02-14-2017
AASHTO LRFD Code: 7TH Edition

♀
Broadway Bridge South Approach Girder F 02-14-2017 14:56:50 STLBRIDGE LRFD
Page 1

--- INPUT ECHO ---

"2DBRIDGE I Girder"
"ENGLISH"

Page 1

```
"Broadway Bridge South Approach Girder F"
"LRFD v61"
0
5,"HL93",8,"0",0,0,0,0,0,0,0,0
4000,150,6.5,2,2.5,490,3644,29000,8,24
3,10,0,1.5,1.25,1.5,1.75
0,0,0
1,1,1.3
0,0,1.5
1.25,1.5,1.75
1.25,1.55,1.8,1.33,1,1
1.25,1.5,1.6
1.3,1.3,1
4,2,4,0,1.539,2.095,1.83,0
113.406,0,0
0,0,0,0,0
125.294,0,0
0,0,0,0,0
92.987,0,0
0,0,0,0,0
123.685,0,0
0,0,0,0,0
98.862,0,0
0,0,0,0,0
0
0
0
0
1,13.401,72.5,72.5,0
1,25.401,72.5,72.5,0
1,65.401,72.5,72.5,0
1,77.401,72.5,72.5,0
1,97.406,72.5,72.5,0
1,103.406,72.5,72.5,0
1,105.906,72.5,72.5,0
1,113.406,72.5,72.5,0
2,13.401,18,1.298,36
2,25.401,18,1.9,36
2,65.401,18,2.5,36
2,77.401,18,1.9,36
2,97.406,18,1.298,36
2,103.406,18,2.019,36
2,105.906,18,2.742,36
2,113.406,18,3.465,36
3,13.401,18,1.298,36
3,25.401,18,1.9,36
3,65.401,18,2.5,36
3,77.401,18,1.9,36
```

♀

--- INPUT ECHO ---

```
3,97.406,18,1.298,36
3,103.406,18,2.019,36
3,105.906,18,2.742,36
3,113.406,18,3.465,36
4,0,4,15.333,0
4,87.021,9,15.333,0
4,113.406,9,15.333,0
5,0,0,0,0
5,87.021,0,0,0
5,113.406,0,0,0
6,0,0,0,0
```

```
6,87.021,0,0,0
6,113.406,0,0,0
7,13.401,0,.375,36
7,25.401,0,.375,36
7,65.401,0,.375,36
7,77.401,0,.375,36
7,97.406,0,.375,36
7,103.406,0,.375,36
7,105.906,0,.375,36
7,113.406,99999,.375,36
1,7.5,72.5,72.5,0
1,10,72.5,72.5,0
1,15,72.5,72.5,0
1,39,72.5,72.5,0
1,92,72.5,72.5,0
1,115.294,72.5,72.5,0
1,117.794,72.5,72.5,0
1,125.294,72.5,72.5,0
2,7.5,18,3.465,36
2,10,18,2.742,36
2,15,18,2.019,36
2,39,18,1.298,36
2,92,18,1.9,36
2,115.294,18,1.298,36
2,117.794,18,1.9,36
2,125.294,18,2.5,36
3,7.5,18,3.465,36
3,10,18,2.742,36
3,15,18,2.019,36
3,39,18,1.298,36
3,92,18,1.9,36
3,115.294,18,1.298,36
3,117.794,18,1.9,36
3,125.294,18,2.5,36
4,0,2.5,15.333,0
4,103.685,10.875,15.333,0
4,125.294,10.875,15.333,0
5,0,0,0,0
5,103.685,0,0,0
```

♀

--- INPUT ECHO ---

```
5,125.294,0,0,0
6,0,0,0,0
6,103.685,0,0,0
6,125.294,0,0,0
7,7.5,0,.375,36
7,10,0,.375,36
7,15,0,.375,36
7,39,0,.375,36
7,92,0,.375,36
7,115.294,0,.375,36
7,117.794,0,.375,36
7,125.294,99999,.375,36
1,7.5,72.5,72.5,0
1,10,72.5,72.5,0
1,82.987,72.5,72.5,0
1,85.487,72.5,72.5,0
1,92.987,72.5,72.5,0
2,7.5,18,2.5,36
2,10,18,1.9,36
2,82.987,18,1.298,36
```

```
2,85.487,18,1.9,36
2,92.987,18,2.5,36
3,7.5,18,2.5,36
3,10,18,1.9,36
3,82.987,18,1.298,36
3,85.487,18,1.9,36
3,92.987,18,2.5,36
4,0,10.875,15.333,0
4,92.987,10.875,15.333,0
5,0,0,0,0
5,92.987,0,0,0
6,0,0,0,0
6,92.987,0,0,0
7,7.5,0,.375,36
7,10,0,.375,36
7,82.987,0,.375,36
7,85.487,0,.375,36
7,92.987,99999,.375,36
1,7.5,72.5,72.5,0
1,10,72.5,72.5,0
1,32.685,72.5,72.5,0
1,86.685,72.5,72.5,0
1,110.685,72.5,72.5,0
1,113.685,72.5,72.5,0
1,116.185,72.5,72.5,0
1,123.685,72.5,72.5,0
2,7.5,18,2.5,36
2,10,18,1.9,36
2,32.685,18,1.298,36
2,86.685,18,1.9,36
```

♀

--- INPUT ECHO ---

```
2,110.685,18,1.298,36
2,113.685,18,1.9,36
2,116.185,18,2.5,36
2,123.685,18,3.103,36
3,7.5,18,2.5,36
3,10,18,1.9,36
3,32.685,18,1.298,36
3,86.685,18,1.9,36
3,110.685,18,1.298,36
3,113.685,18,1.9,36
3,116.185,18,2.5,36
3,123.685,18,3.103,36
4,0,10.875,15.333,0
4,13.904,10.875,15.333,0
4,123.685,2.5,15.333,0
5,0,0,0,0
5,13.904,0,0,0
5,123.685,0,0,0
6,0,0,0,0
6,13.904,0,0,0
6,123.685,0,0,0
7,7.5,0,.375,36
7,10,0,.375,36
7,32.685,0,.375,36
7,86.685,0,.375,36
7,110.685,0,.375,36
7,113.685,0,.375,36
7,116.185,0,.375,36
7,123.685,99999,.375,36
```

```
    1,7.5,72.5,72.5,0
    1,10,72.5,72.5,0
    1,13,72.5,72.5,0
    1,39.992,72.5,72.5,0
    1,81.992,72.5,72.5,0
    1,98.862,72.5,72.5,0
    2,7.5,18,3.103,36
    2,10,18,2.5,36
    2,13,18,1.9,36
    2,39.992,18,1.298,36
    2,81.992,18,1.9,36
    2,98.862,18,1.298,36
    3,7.5,18,3.103,36
    3,10,18,2.5,36
    3,13,18,1.9,36
    3,39.992,18,1.298,36
    3,81.992,18,1.9,36
    3,98.862,18,1.298,36
    4,0,9,15.333,0
    4,16.195,9,15.333,0
    4,98.862,4,15.333,0
♀
     Broadway Bridge South Approach Girder F  02-14-2017  14:56:50  STLBRIDGE LRFD
Page  5
                                    --- INPUT ECHO ---
    5,0,0,0,0
    5,16.195,0,0,0
    5,98.862,0,0,0
    6,0,0,0,0
    6,16.195,0,0,0
    6,98.862,0,0,0
    7,7.5,0,.375,36
    7,10,0,.375,36
    7,13,0,.375,36
    7,39.992,0,.375,36
    7,81.992,0,.375,36
    7,98.862,99999,.375,36
♀
     Broadway Bridge South Approach Girder F  02-14-2017  14:56:50  STLBRIDGE LRFD
Page  6
                                    --- INPUT ECHO ---
```

Max stress range, top flange
@ Ext: 5.95 ksi * 1.13 = 6.72 ksi
@ 4T: 5.34 ksi * 1.13 = 6.03 ksi

Max stress range, bottom flange
@ Ext: 10.26 ksi * 1.13 = 11.59 ksi
@ 4T: 9.65 ksi * 1.13 = 10.90 ksi

--- FATIGUE REPORT ---

All Units: ksi

SPAN 1 - FATIGUE STRESS RANGE (ksi) -
(EXT - EXTREME FIBER, 4T=4*tw, 6T=6*tw)

LOCA	REBAR RANGE	-----TOP FLANGE----- EXT	4T	6T	-----BOTTOM FLANGE----- EXT	INS	4T	6T
1.0	0.00	0.00	0.00	0.00	0.00	0.00	0.00	0.00
1.1	-1.95	-1.89	-1.65	-1.59	4.38	4.27	4.14	4.08
1.118	-2.23	-2.16	-1.90	-1.82	4.98	4.85	4.71	4.64
1.118	-1.85	-1.85	-1.60	-1.54	3.72	3.58	3.47	3.42
1.2	-2.88	-2.87	-2.48	-2.40	5.73	5.52	5.35	5.26
1.224	-3.09	-3.08	-2.67	-2.58	6.13	5.90	5.72	5.63
1.224	-2.66	-2.71	-2.32	-2.25	4.89	4.65	4.50	4.43
1.3	-3.24	-3.30	-2.82	-2.73	5.90	5.61	5.43	5.34
1.4	-3.65	-3.72	-3.19	-3.09	6.52	6.19	5.99	5.89
1.5	-3.87	-3.94	-3.39	-3.29	6.70	6.35	6.15	6.04
1.577	-3.95	-4.02	-3.47	-3.37	6.61	6.27	6.06	5.96
1.577	-4.73	-4.71	-4.13	-4.01	8.31	7.99	7.73	7.60
1.6	-4.77	-4.76	-4.17	-4.05	8.28	7.96	7.70	7.57
1.682	4.69	4.68	4.13	4.01	7.58	7.28	7.03	6.91
1.683	6.10	5.95	5.34	5.18	10.26	9.98	9.65	9.49
1.7	6.10	5.95	5.36	5.20	10.06	9.79	9.47	9.31
1.8	5.93	5.79	5.27	5.13	8.24	8.00	7.72	7.58
1.859	5.88	5.75	5.27	5.14	-7.30	-7.07	-6.81	-6.68
1.859	4.08	4.08	3.66	3.57	-5.05	-4.81	-4.63	-4.54
1.9	4.00	4.00	3.60	3.52	-4.57	-4.35	-4.18	-4.09
1.912	4.03	4.03	3.64	3.55	-4.59	-4.36	-4.19	-4.11
1.912	3.05	3.11	2.75	2.69	-3.50	-3.26	-3.14	-3.07
1.934	3.10	3.16	2.80	2.73	-3.52	-3.28	-3.15	-3.09
1.934	2.48	2.58	2.24	2.19	-2.84	-2.60	-2.50	-2.45
2.0	2.58	2.69	2.34	2.28	-2.89	-2.65	-2.54	-2.49

GIRDER F FULLY COMPOSITE EXTERIOR RUN.STR

Note: For locations which do not experience tensile stresses
the fatigue stress range is output as a negative number.

♀

Broadway Bridge South Approach Girder F
02-14-2017 14:56:52 Page 26

--- FATIGUE REPORT ---

Girder F is exterior girder for spans 1 & 5

All Units: ksi

SPAN 2 - FATIGUE STRESS RANGE (ksi) -
(EXT - EXTREME FIBER, 4T=4*tw, 6T=6*tw)

LOCA	REBAR RANGE	-----TOP FLANGE----- EXT	4T	6T	-----BOTTOM FLANGE----- EXT	INS	4T	6T
2.0	2.62	2.72	2.37	2.32	-2.89	-2.65	-2.54	-2.49
2.060	2.53	2.64	2.29	2.24	-2.87	-2.63	-2.52	-2.47
2.060	3.16	3.23	2.86	2.79	-3.55	-3.32	-3.18	-3.12
2.080	3.12	3.19	2.82	2.76	-3.54	-3.31	-3.18	-3.11
2.080	4.12	4.12	3.72	3.63	-4.65	-4.42	-4.25	-4.16
2.1	4.06	4.06	3.66	3.58	-4.63	-4.40	-4.23	-4.15
2.120	4.07	4.08	3.67	3.58	-4.82	-4.59	-4.41	-4.33
2.120	5.88	5.76	5.29	5.16	-6.98	-6.76	-6.50	-6.38
2.2	5.75	5.62	5.12	4.98	8.02	7.79	7.52	7.38
2.3	5.32	5.19	4.66	4.52	8.83	8.58	8.30	8.16
2.311	5.31	5.18	4.65	4.51	8.95	8.70	8.42	8.28
2.311	4.12	4.10	3.63	3.52	6.62	6.35	6.14	6.04
2.4	-4.16	-4.15	-3.63	-3.52	7.36	7.07	6.84	6.73
2.5	-3.60	-3.58	-3.12	-3.01	6.94	6.67	6.47	6.36
2.6	-3.33	-3.31	-2.87	-2.78	6.59	6.35	6.15	6.06
2.7	-3.12	-3.10	-2.71	-2.63	5.69	5.47	5.30	5.21
2.734	-3.06	-3.05	-2.68	-2.59	5.32	5.11	4.95	4.86
2.734	-3.93	-3.82	-3.41	-3.30	7.18	6.99	6.77	6.66
2.8	3.90	3.80	3.43	3.33	6.25	6.08	5.87	5.77
2.9	3.75	3.68	3.37	3.28	-4.59	-4.45	-4.29	-4.20
2.920	4.39	4.31	3.95	3.85	-5.26	-5.10	-4.90	-4.81
2.920	3.20	3.19	2.87	2.80	-3.83	-3.66	-3.52	-3.45
2.940	3.65	3.64	3.28	3.20	-4.31	-4.11	-3.96	-3.88
2.940	2.86	2.90	2.58	2.52	-3.39	-3.19	-3.07	-3.01
3.0	3.92	3.97	3.53	3.45	-4.51	-4.24	-4.08	-3.99

Note: For locations which do not experience tensile stresses
the fatigue stress range is output as a negative number.

♀

Broadway Bridge South Approach Girder F
02-14-2017 14:56:52 Page 27

--- FATIGUE REPORT ---

All Units: ksi

SPAN 3 - FATIGUE STRESS RANGE (ksi) -
(EXT - EXTREME FIBER, 4T=4*tw, 6T=6*tw)

LOCA	REBAR RANGE	-----TOP FLANGE----- EXT	4T	6T	-----BOTTOM FLANGE----- EXT	INS	4T	6T
3.0	3.92	3.97	3.53	3.45	-4.51	-4.24	-4.08	-3.99
3.081	3.52	3.57	3.17	3.10	-4.06	-3.81	-3.66	-3.59

Page 19

3.081	4.50	4.49	4.06	3.96	-5.16	-4.92	-4.73	-4.64
3.1	4.38	4.37	3.95	3.86	-5.02	-4.79	-4.61	-4.51
3.107	4.36	4.35	3.93	3.84	-5.05	-4.82	-4.63	-4.54
3.108	6.04	5.92	5.44	5.31	-6.95	-6.73	-6.47	-6.34
3.2	5.62	5.50	5.02	4.89	7.36	7.14	6.88	6.76
3.3	5.26	5.13	4.64	4.51	8.07	7.84	7.58	7.45
3.4	4.68	4.56	4.09	3.96	8.09	7.87	7.62	7.49
3.5	3.90	3.79	3.37	3.26	7.39	7.19	6.97	6.86
3.6	4.59	4.47	4.01	3.88	8.01	7.79	7.54	7.42
3.7	5.14	5.02	4.54	4.41	7.97	7.75	7.49	7.36
3.8	5.49	5.37	4.90	4.77	7.25	7.03	6.78	6.65
3.892	5.82	5.71	5.25	5.13	-6.60	-6.39	-6.15	-6.02
3.893	4.20	4.19	3.79	3.70	-4.79	-4.57	-4.39	-4.31
3.9	4.21	4.20	3.80	3.71	-4.75	-4.53	-4.35	-4.27
3.919	4.33	4.32	3.91	3.82	-4.90	-4.67	-4.49	-4.40
3.919	3.38	3.43	3.05	2.98	-3.85	-3.61	-3.47	-3.40
4.0	3.78	3.84	3.42	3.34	-4.34	-4.07	-3.91	-3.83

Note: For locations which do not experience tensile stresses
the fatigue stress range is output as a negative number.

Broadway Bridge South Approach Girder F
02-14-2017 14:56:52 Page 28

--- FATIGUE REPORT ---

All Units: ksi

SPAN 4 - FATIGUE STRESS RANGE (ksi) -
(EXT - EXTREME FIBER, 4T=4*tw, 6T=6*tw)

LOCA	REBAR RANGE	-----TOP FLANGE----- EXT	4T	6T	-----BOTTOM FLANGE----- EXT	INS	4T	6T
4.0	3.78	3.84	3.42	3.34	-4.34	-4.07	-3.91	-3.83
4.061	2.79	2.82	2.51	2.45	-3.29	-3.09	-2.98	-2.92
4.061	3.55	3.54	3.20	3.12	-4.18	-3.99	-3.84	-3.76
4.081	3.12	3.11	2.81	2.74	-3.74	-3.57	-3.44	-3.37
4.081	4.29	4.21	3.86	3.77	-5.13	-4.97	-4.79	-4.69
4.1	3.72	3.64	3.34	3.26	-4.55	-4.41	-4.25	-4.16
4.2	3.89	3.79	3.42	3.32	6.21	6.04	5.84	5.74
4.264	-4.03	-3.92	-3.50	-3.39	7.32	7.12	6.90	6.78
4.264	-3.14	-3.13	-2.75	-2.66	5.42	5.21	5.04	4.96
4.3	-3.25	-3.23	-2.83	-2.74	5.89	5.66	5.48	5.39
4.4	-3.31	-3.30	-2.86	-2.76	6.51	6.27	6.07	5.98
4.5	-3.38	-3.36	-2.92	-2.82	6.65	6.40	6.20	6.10
4.6	-3.85	-3.84	-3.35	-3.25	6.98	6.71	6.50	6.39
4.7	4.55	4.53	4.00	3.88	7.43	7.13	6.89	6.78
4.701	4.54	4.53	4.00	3.88	7.41	7.11	6.88	6.76
4.701	5.83	5.68	5.10	4.94	10.01	9.74	9.43	9.27
4.8	5.07	4.95	4.49	4.37	7.29	7.08	6.84	6.72
4.895	4.77	4.67	4.29	4.19	-5.59	-5.41	-5.21	-5.11
4.895	3.47	3.46	3.13	3.05	-4.07	-3.88	-3.73	-3.66
4.9	3.45	3.44	3.11	3.04	-4.00	-3.81	-3.67	-3.59
4.919	3.66	3.65	3.30	3.23	-4.18	-3.98	-3.83	-3.75
4.919	2.87	2.91	2.59	2.53	-3.28	-3.08	-2.96	-2.90
4.939	3.04	3.08	2.74	2.68	-3.43	-3.22	-3.09	-3.03
4.939	2.49	2.56	2.25	2.20	-2.82	-2.61	-2.50	-2.45
5.0	2.89	2.97	2.61	2.55	-3.17	-2.93	-2.81	-2.76

Note: For locations which do not experience tensile stresses
the fatigue stress range is output as a negative number.

Broadway Bridge South Approach Girder F
02-14-2017 14:56:52 Page 29

--- FATIGUE REPORT ---

All Units: ksi

SPAN 5 - FATIGUE STRESS RANGE (ksi) -
(EXT - EXTREME FIBER, 4T=4*tw, 6T=6*tw)

LOCA	REBAR RANGE	-----TOP FLANGE----- EXT	4T	6T	-----BOTTOM FLANGE----- EXT	INS	4T	6T
5.0	2.85	2.93	2.58	2.52	-3.17	-2.93	-2.81	-2.75
5.076	2.69	2.77	2.43	2.37	-3.04	-2.82	-2.70	-2.65
5.076	3.29	3.34	2.97	2.90	-3.70	-3.48	-3.34	-3.27
5.1	3.23	3.27	2.91	2.85	-3.65	-3.43	-3.30	-3.23
5.101	3.23	3.27	2.91	2.85	-3.66	-3.44	-3.30	-3.24
5.101	4.13	4.12	3.73	3.65	-4.67	-4.45	-4.27	-4.19
5.131	4.15	4.14	3.74	3.65	-4.93	-4.71	-4.53	-4.44
5.132	5.72	5.61	5.14	5.02	-6.78	-6.56	-6.32	-6.19
5.2	5.69	5.56	5.08	4.94	7.56	7.34	7.08	6.94
5.3	5.76	5.62	5.08	4.93	9.02	8.77	8.47	8.33
5.4	5.13	5.00	4.48	4.34	8.94	8.69	8.42	8.28
5.404	5.14	5.01	4.49	4.35	8.97	8.73	8.45	8.31
5.405	3.99	3.98	3.51	3.40	6.64	6.38	6.17	6.07
5.5	-4.16	-4.14	-3.63	-3.52	7.27	6.99	6.76	6.65
5.6	-3.84	-3.83	-3.34	-3.24	7.03	6.76	6.55	6.44
5.7	-3.35	-3.33	-2.90	-2.81	6.34	6.10	5.91	5.82
5.8	-2.48	-2.47	-2.15	-2.08	4.81	4.63	4.48	4.41
5.829	-2.19	-2.18	-1.90	-1.83	4.25	4.09	3.96	3.90
5.829	-2.67	-2.59	-2.28	-2.20	5.70	5.55	5.39	5.31
5.9	-1.78	-1.73	-1.52	-1.47	3.89	3.79	3.68	3.62
6.0	0.00	0.00	0.00	0.00	0.00	0.00	0.00	0.00

Note: For locations which do not experience tensile stresses
the fatigue stress range is output as a negative number.

Unit 2 Girder F Noncomposite Exterior Girder.STR

STLBRIDGE LRFD

STEEL BRIDGE DESIGN SOFTWARE

Copyright 2014 BRIDGESOFT, Inc. All Rights Reserved

STRESS OUTPUT

Title: Unit 2 Girder F South Approach
Input Filename: Unit 2 Girder F Noncomposite Exterior Girder
Output Filename: Unit 2 Girder F Noncomposite Exterior
Girder.STR

Time:15:42:15
Date:02-14-2017
AASHTO LRFD Code: 7TH Edition

♀

Unit 2 Girder F South Approach 02-14-2017 15:42:15 STLBRIDGE LRFD Page 1

--- INPUT ECHO ---

"2DBRIDGE I Girder"
"ENGLISH"

Page 1

```
"Unit 2 Girder F South Approach"
"LRFD v61"
0
5,"HL93",8,"0",0,0,0,0,0,0,0,0
4000,150,6.5,2,2.5,490,3644,29000,8,24
1,10,0,1.5,1.25,1.5,1.75
0,0,0
1,1,1.3
0,0,1.5
1.25,1.5,1.75
1.25,1.55,1.8,1.33,1,1
1.25,1.5,1.6
1.3,1.3,1
4,2,4,0,1.539,2.095,1,0
107,0,0
0,0,0,0,0
99,0,0
0,0,0,0,0
109.836,0,0
0,0,0,0,0
117.719,0,0
0,0,0,0,0
12.17,0,0
0,0,0,0,0
0
0
0
0
1,14,72.5,72.5,0
1,22,72.5,72.5,0
1,24.904,72.5,72.5,0
1,67,72.5,72.5,0
1,82.5,72.5,72.5,0
1,95,72.5,72.5,0
1,99.5,72.5,72.5,0
1,107,72.5,72.5,0
2,14,18,1.307,36
2,22,18,1.908,36
2,24.904,18,2.51,36
2,67,18,2.508,36
2,82.5,18,1.906,36
2,95,18,1.305,36
2,99.5,18,2.027,36
2,107,18,2.749,36
3,14,18,1.307,36
3,22,18,1.908,36
3,24.904,18,2.51,36
3,67,18,2.508,36
```

♀

--- INPUT ECHO ---

```
3,82.5,18,1.906,36
3,95,18,1.305,36
3,99.5,18,2.027,36
3,107,18,2.749,36
4,107,4,15.333,0
5,107,0,0,0
6,107,0,0,0
7,14,0,.625,36
7,22,0,.625,36
7,24.904,0,.625,36
7,67,0,.375,36
7,82.5,0,.375,36
```

```
7,95,0,.375,36
7,99.5,0,.375,36
7,107,99999,.375,36
1,7.5,72.5,72.5,0
1,13,72.5,72.5,0
1,91,72.5,72.5,0
1,99,72.5,72.5,0
2,7.5,18,2.749,36
2,13,18,2.027,36
2,91,18,1.305,36
2,99,18,2.027,36
3,7.5,18,2.749,36
3,13,18,2.027,36
3,91,18,1.305,36
3,99,18,2.027,36
4,99,4,15.333,0
5,99,0,0,0
6,99,0,0,0
7,7.5,0,.375,36
7,13,0,.375,36
7,91,0,.375,36
7,99,99999,.375,36
1,7,72.5,72.5,0
1,92.836,72.5,72.5,0
1,99.836,72.5,72.5,0
1,101.836,72.5,72.5,0
1,109.836,72.5,72.5,0
2,7,18,2.027,36
2,92.836,18,1.305,36
2,99.836,18,2.027,36
2,101.836,18,2.749,36
2,109.836,18,3.35,36
3,7,18,2.027,36
3,92.836,18,1.305,36
3,99.836,18,2.027,36
3,101.836,18,2.749,36
3,109.836,18,3.35,36
4,109.836,4,15.333,0
```

♀

--- INPUT ECHO ---

```
5,109.836,0,0,0
6,109.836,0,0,0
7,7,0,.375,36
7,92.836,0,.375,36
7,99.836,0,.375,36
7,101.836,0,.375,36
7,109.836,99999,.375,36
1,7,72.5,72.5,0
1,9,72.5,72.5,0
1,15,72.5,72.5,0
1,33.7188,72.5,72.5,0
1,44.719,72.5,72.5,0
1,85.719,72.5,72.5,0
1,117.719,72.5,72.5,0
2,7,18,3.35,36
2,9,18,2.749,36
2,15,18,2.027,36
2,33.719,18,1.305,36
2,44.719,18,1.906,36
2,85.719,18,2.387,36
2,117.719,18,1.906,36
3,7,18,3.35,36
```

```
3,9,18,2.749,36
3,15,18,2.027,36
3,33.719,18,1.305,36
3,44.719,18,1.906,36
3,85.719,18,2.387,36
3,117.719,18,1.906,36
4,117.719,4,15.333,0
5,117.719,0,0,0
6,117.719,0,0,0
7,7,0,.375,36
7,9,0,.375,36
7,15,0,.375,36
7,33.7188,0,.375,36
7,44.719,0,.375,36
7,85.719,0,.375,36
7,117.719,99999,.375,36
1,3.583,72.5,72.5,0
1,12.17,72.5,72.5,0
2,3.583,18,1.906,36
2,12.17,18,1.305,36
3,3.583,18,1.906,36
3,12.17,18,1.305,36
4,12.17,4,15.333,0
5,12.17,0,0,0
6,12.17,0,0,0
7,3.583,0,.375,36
7,12.17,99999,.375,36
```

♀

--- INPUT ECHO ---

All Units: ksi

SPAN 1 - FATIGUE STRESS RANGE (ksi) -
(EXT - EXTREME FIBER, 4T=4*tw, 6T=6*tw)

LOCA	REBAR RANGE	-----TOP FLANGE----- EXT	4T	6T	-----BOTTOM FLANGE----- EXT	INS	4T	6T
1.0	0.00	0.00	0.00	0.00	0.00	0.00	0.00	0.00
1.1	0.00	-3.96	-3.56	-3.43	3.96	3.82	3.56	3.43
1.131	0.00	-4.80	-4.32	-4.16	4.80	4.64	4.32	4.16
1.131	0.00	-3.57	-3.16	-3.04	3.57	3.39	3.16	3.04
1.2	0.00	-4.97	-4.40	-4.23	4.97	4.72	4.40	4.23
1.206	0.00	-5.05	-4.47	-4.30	5.05	4.80	4.47	4.30
1.206	0.00	-4.01	-3.49	-3.36	4.01	3.75	3.49	3.36
1.233	0.00	-4.31	-3.75	-3.62	4.31	4.03	3.75	3.62
1.233	0.00	-4.56	-4.09	-4.00	4.56	4.27	4.09	4.00
1.3	0.00	-5.35	-4.80	-4.70	5.35	5.01	4.80	4.70
1.4	0.00	-5.87	-5.27	-5.15	5.87	5.49	5.27	5.15
1.5	0.00	-5.99	-5.37	-5.25	5.99	5.60	5.37	5.25
1.6	0.00	5.85	5.24	5.13	5.85	5.47	5.24	5.13
1.626	0.00	5.67	5.08	4.97	5.67	5.30	5.08	4.97
1.626	0.00	7.25	6.60	6.46	7.25	6.89	6.60	6.46
1.7	0.00	6.59	6.00	5.87	6.59	6.26	6.00	5.87
1.771	0.00	5.55	5.06	4.95	5.55	5.27	5.06	4.95
1.771	0.00	7.69	7.12	6.96	7.69	7.42	7.12	6.96
1.8	0.00	7.11	6.58	6.44	7.11	6.86	6.58	6.44
1.888	0.00	5.51	5.09	4.98	-5.51	-5.31	-5.09	-4.98
1.888	0.00	3.76	3.41	3.34	-3.76	-3.56	-3.41	-3.34
1.9	0.00	3.61	3.27	3.20	-3.61	-3.42	-3.27	-3.20
1.930	0.00	3.83	3.48	3.40	-3.83	-3.63	-3.48	-3.40
1.930	0.00	2.91	2.59	2.53	-2.91	-2.70	-2.59	-2.53
2.0	0.00	3.30	2.94	2.88	-3.30	-3.07	-2.94	-2.88

Note: For locations which do not experience tensile stresses
the fatigue stress range is output as a negative number.

♀

--- FATIGUE REPORT ---

All Units: ksi

SPAN 2 - FATIGUE STRESS RANGE (ksi) -
(EXT - EXTREME FIBER, 4T=4*tw, 6T=6*tw)

LOCA	REBAR RANGE	TOP FLANGE EXT	TOP FLANGE 4T	TOP FLANGE 6T	BOTTOM FLANGE EXT	BOTTOM FLANGE INS	BOTTOM FLANGE 4T	BOTTOM FLANGE 6T
2.0	0.00	3.30	2.94	2.88	-3.30	-3.07	-2.94	-2.88
2.076	0.00	2.94	2.62	2.57	-2.94	-2.74	-2.62	-2.57
2.076	0.00	3.88	3.52	3.45	-3.88	-3.67	-3.52	-3.45
2.1	0.00	3.73	3.39	3.31	-3.73	-3.53	-3.39	-3.31
2.131	0.00	3.91	3.55	3.47	-3.91	-3.70	-3.55	-3.47
2.131	0.00	5.73	5.30	5.19	-5.73	-5.53	-5.30	-5.19
2.2	0.00	6.32	5.84	5.72	6.32	6.10	5.84	5.72
2.3	0.00	7.48	6.92	6.77	7.48	7.22	6.92	6.77
2.4	0.00	7.87	7.29	7.13	7.87	7.60	7.29	7.13
2.5	0.00	7.45	6.89	6.74	7.45	7.19	6.89	6.74
2.6	0.00	7.85	7.26	7.10	7.85	7.57	7.26	7.10
2.7	0.00	7.54	6.98	6.83	7.54	7.28	6.98	6.83
2.8	0.00	6.44	5.96	5.83	6.44	6.22	5.96	5.83
2.9	0.00	5.40	4.99	4.89	-5.40	-5.21	-4.99	-4.89
2.919	0.00	5.54	5.12	5.01	-5.54	-5.34	-5.12	-5.01
2.919	0.00	3.78	3.43	3.36	-3.78	-3.58	-3.43	-3.36
3.0	0.00	4.18	3.79	3.71	-4.18	-3.96	-3.79	-3.71

Note: For locations which do not experience tensile stresses
the fatigue stress range is output as a negative number.

♀

--- FATIGUE REPORT ---

All Units: ksi

SPAN 3 - FATIGUE STRESS RANGE (ksi) -
(EXT - EXTREME FIBER, 4T=4*tw, 6T=6*tw)

LOCA	REBAR RANGE	TOP FLANGE EXT	TOP FLANGE 4T	TOP FLANGE 6T	BOTTOM FLANGE EXT	BOTTOM FLANGE INS	BOTTOM FLANGE 4T	BOTTOM FLANGE 6T
3.0	0.00	4.18	3.79	3.71	-4.18	-3.96	-3.79	-3.71
3.064	0.00	3.55	3.22	3.16	-3.55	-3.36	-3.22	-3.16
3.064	0.00	5.20	4.81	4.71	-5.20	-5.02	-4.81	-4.71
3.1	0.00	4.68	4.33	4.23	-4.68	-4.51	-4.33	-4.23
3.2	0.00	5.99	5.54	5.42	5.99	5.78	5.54	5.42
3.3	0.00	7.38	6.82	6.68	7.38	7.12	6.82	6.68
3.4	0.00	7.90	7.31	7.15	7.90	7.63	7.31	7.15
3.5	0.00	7.73	7.15	7.00	7.73	7.46	7.15	7.00
3.6	0.00	7.97	7.38	7.22	7.97	7.69	7.38	7.22
3.7	0.00	7.31	6.77	6.62	7.31	7.06	6.77	6.62
3.8	0.00	5.86	5.42	5.31	5.86	5.66	5.42	5.31
3.845	0.00	5.45	5.04	4.93	-5.45	-5.26	-5.04	-4.93
3.845	0.00	3.72	3.38	3.30	-3.72	-3.52	-3.38	-3.30
3.9	0.00	3.38	3.07	3.00	-3.38	-3.20	-3.07	-3.00
3.909	0.00	3.50	3.18	3.11	-3.50	-3.31	-3.18	-3.11
3.909	0.00	2.66	2.37	2.32	-2.66	-2.47	-2.37	-2.32

3.927	0.00	2.85	2.54	2.48	-2.85	-2.65	-2.54	-2.48
3.927	0.00	2.37	2.08	2.04	-2.37	-2.17	-2.08	-2.04
4.0	0.00	3.01	2.64	2.59	-3.01	-2.76	-2.64	-2.59

Note: For locations which do not experience tensile stresses
the fatigue stress range is output as a negative number.

Unit 2 Girder F South Approach 02-14-2017 15:42:16 Page 22

--- FATIGUE REPORT ---

Max stress range, top & bottom flange
@ Ext: 8.73 ksi * 1.13 = 9.86 ksi
@ 4T: 8.08 ksi * 1.13 = 9.13 ksi

All Units: ksi

SPAN 4 - FATIGUE STRESS RANGE (ksi) -
(EXT - EXTREME FIBER, 4T=4*tw, 6T=6*tw)

LOCA	REBAR RANGE	TOP FLANGE EXT	TOP FLANGE 4T	TOP FLANGE 6T	BOTTOM FLANGE EXT	BOTTOM FLANGE INS	BOTTOM FLANGE 4T	BOTTOM FLANGE 6T
4.0	0.00	3.01	2.64	2.59	-3.01	-2.76	-2.64	-2.59
4.059	0.00	2.83	2.49	2.43	-2.83	-2.60	-2.49	-2.43
4.060	0.00	3.40	3.03	2.97	-3.40	-3.16	-3.03	-2.97
4.076	0.00	3.34	2.98	2.92	-3.34	-3.11	-2.98	-2.92
4.077	0.00	4.41	4.00	3.91	-4.41	-4.17	-4.00	-3.91
4.1	0.00	4.29	3.90	3.81	-4.29	-4.07	-3.90	-3.81
4.127	0.00	4.57	4.15	4.06	-4.57	-4.33	-4.15	-4.06
4.128	0.00	6.69	6.19	6.06	-6.69	-6.46	-6.19	-6.06
4.2	0.00	7.76	7.18	7.02	7.76	7.49	7.18	7.02
4.286	0.00	8.73	8.08	7.90	8.73	8.42	8.08	7.90
4.287	0.00	6.30	5.73	5.61	6.30	5.98	5.73	5.61
4.3	0.00	6.41	5.83	5.71	6.41	6.09	5.83	5.71
4.380	0.00	6.45	5.87	5.74	6.45	6.12	5.87	5.74
4.380	0.00	5.27	4.74	4.64	5.27	4.94	4.74	4.64
4.4	0.00	5.28	4.75	4.64	5.28	4.95	4.75	4.64
4.5	0.00	-4.75	-4.27	-4.18	4.75	4.46	4.27	4.18
4.6	0.00	-3.87	-3.48	-3.40	3.87	3.63	3.48	3.40
4.7	0.00	-2.45	-2.21	-2.16	2.45	2.30	2.21	2.16
4.728	0.00	-2.28	-2.05	-2.00	2.28	2.14	2.05	2.00
4.728	0.00	-2.78	-2.54	-2.48	2.78	2.65	2.54	2.48
4.8	0.00	2.24	2.04	1.99	2.24	2.12	2.04	1.99
4.9	0.00	4.20	3.83	3.74	-4.20	-3.99	-3.83	-3.74
5.0	0.00	7.66	6.97	6.82	-7.66	-7.28	-6.97	-6.82

Note: For locations which do not experience tensile stresses
the fatigue stress range is output as a negative number.

Unit 2 Girder F South Approach 02-14-2017 15:42:16 Page 23

--- FATIGUE REPORT ---

All Units: ksi

SPAN 5 - FATIGUE STRESS RANGE (ksi) -
(EXT - EXTREME FIBER, 4T=4*tw, 6T=6*tw)

LOCA	REBAR RANGE	TOP FLANGE EXT	TOP FLANGE 4T	TOP FLANGE 6T	BOTTOM FLANGE EXT	BOTTOM FLANGE INS	BOTTOM FLANGE 4T	BOTTOM FLANGE 6T
5.0	0.00	7.66	6.97	6.82	-7.66	-7.28	-6.97	-6.82
5.1	0.00	6.89	6.28	6.14	-6.89	-6.55	-6.28	-6.14
5.2	0.00	6.13	5.58	5.46	-6.13	-5.82	-5.58	-5.46

5.294	0.00	5.41	4.93	4.82	-5.41	-5.14	-4.93	-4.82
5.295	0.00	7.49	6.93	6.78	-7.49	-7.23	-6.93	-6.78
5.3	0.00	7.44	6.88	6.73	-7.44	-7.18	-6.88	-6.73
5.4	0.00	6.37	5.89	5.77	-6.37	-6.15	-5.89	-5.77
5.5	0.00	5.31	4.91	4.81	-5.31	-5.12	-4.91	-4.81
5.6	0.00	4.24	3.92	3.84	-4.24	-4.09	-3.92	-3.84
5.7	0.00	3.19	2.95	2.89	-3.19	-3.08	-2.95	-2.89
5.8	0.00	2.13	1.97	1.93	-2.13	-2.05	-1.97	-1.93
5.9	0.00	1.08	1.00	0.98	-1.08	-1.04	-1.00	-0.98
6.0	0.00	0.00	0.00	0.00	0.00	0.00	0.00	0.00

Note: For locations which do not experience tensile stresses
the fatigue stress range is output as a negative number.

♀

Unit 2 Girder F Fully Composite Exterior Girder.STR

STLBRIDGE LRFD

STEEL BRIDGE DESIGN SOFTWARE

Copyright 2014 BRIDGESOFT, Inc. All Rights Reserved

STRESS OUTPUT

Title: Unit 2 Girder F South Approach
Input Filename: Unit 2 Girder F Fully Composite Exterior Girder

Output Filename: Unit 2 Girder F Fully Composite Exterior Girder.STR

Time:15:43:52
Date:02-14-2017
AASHTO LRFD Code: 7TH Edition

♀

Unit 2 Girder F South Approach 02-14-2017 15:43:52 STLBRIDGE LRFD Page 1

--- INPUT ECHO ---

"2DBRIDGE I Girder"

Page 1

```
"ENGLISH"
"Unit 2 Girder F South Approach"
"LRFD v61"
0
5,"HL93",8,"0",0,0,0,0,0,0,0,0
4000,150,6.5,2,2.5,490,3644,29000,8,24
3,10,0,1.5,1.25,1.5,1.75
0,0,0
1,1,1.3
0,0,1.5
1.25,1.5,1.75
1.25,1.55,1.8,1.33,1,1
1.25,1.5,1.6
1.3,1.3,1
4,2,4,0,1.539,2.095,1,0
107,0,0
0,0,0,0,0
99,0,0
0,0,0,0,0
109.836,0,0
0,0,0,0,0
117.719,0,0
0,0,0,0,0
12.17,0,0
0,0,0,0,0
0
0
0
0
1,14,72.5,72.5,0
1,22,72.5,72.5,0
1,24.904,72.5,72.5,0
1,67,72.5,72.5,0
1,82.5,72.5,72.5,0
1,95,72.5,72.5,0
1,99.5,72.5,72.5,0
1,107,72.5,72.5,0
2,14,18,1.307,36
2,22,18,1.908,36
2,24.904,18,2.51,36
2,67,18,2.508,36
2,82.5,18,1.906,36
2,95,18,1.305,36
2,99.5,18,2.027,36
2,107,18,2.749,36
3,14,18,1.307,36
3,22,18,1.908,36
3,24.904,18,2.51,36
3,67,18,2.508,36
```

♀

--- INPUT ECHO ---

```
3,82.5,18,1.906,36
3,95,18,1.305,36
3,99.5,18,2.027,36
3,107,18,2.749,36
4,107,4,15.333,0
5,107,0,0,0
6,107,0,0,0
7,14,0,.625,36
7,22,0,.625,36
7,24.904,0,.625,36
7,67,0,.375,36
```

```
7,82.5,0,.375,36
7,95,0,.375,36
7,99.5,0,.375,36
7,107,99999,.375,36
1,7.5,72.5,72.5,0
1,13,72.5,72.5,0
1,91,72.5,72.5,0
1,99,72.5,72.5,0
2,7.5,18,2.749,36
2,13,18,2.027,36
2,91,18,1.305,36
2,99,18,2.027,36
3,7.5,18,2.749,36
3,13,18,2.027,36
3,91,18,1.305,36
3,99,18,2.027,36
4,99,4,15.333,0
5,99,0,0,0
6,99,0,0,0
7,7.5,0,.375,36
7,13,0,.375,36
7,91,0,.375,36
7,99,99999,.375,36
1,7,72.5,72.5,0
1,92.836,72.5,72.5,0
1,99.836,72.5,72.5,0
1,101.836,72.5,72.5,0
1,109.836,72.5,72.5,0
2,7,18,2.027,36
2,92.836,18,1.305,36
2,99.836,18,2.027,36
2,101.836,18,2.749,36
2,109.836,18,3.35,36
3,7,18,2.027,36
3,92.836,18,1.305,36
3,99.836,18,2.027,36
3,101.836,18,2.749,36
3,109.836,18,3.35,36
4,109.836,4,15.333,0
```

♀

--- INPUT ECHO ---

```
5,109.836,0,0,0
6,109.836,0,0,0
7,7,0,.375,36
7,92.836,0,.375,36
7,99.836,0,.375,36
7,101.836,0,.375,36
7,109.836,99999,.375,36
1,7,72.5,72.5,0
1,9,72.5,72.5,0
1,15,72.5,72.5,0
1,33.7188,72.5,72.5,0
1,44.719,72.5,72.5,0
1,85.719,72.5,72.5,0
1,117.719,72.5,72.5,0
2,7,18,3.35,36
2,9,18,2.749,36
2,15,18,2.027,36
2,33.719,18,1.305,36
2,44.719,18,1.906,36
2,85.719,18,2.387,36
2,117.719,18,1.906,36
```

```
3,7,18,3.35,36
3,9,18,2.749,36
3,15,18,2.027,36
3,33.719,18,1.305,36
3,44.719,18,1.906,36
3,85.719,18,2.387,36
3,117.719,18,1.906,36
4,117.719,4,15.333,0
5,117.719,0,0,0
6,117.719,0,0,0
7,7,0,.375,36
7,9,0,.375,36
7,15,0,.375,36
7,33.7188,0,.375,36
7,44.719,0,.375,36
7,85.719,0,.375,36
7,117.719,99999,.375,36
1,3.583,72.5,72.5,0
1,12.17,72.5,72.5,0
2,3.583,18,1.906,36
2,12.17,18,1.305,36
3,3.583,18,1.906,36
3,12.17,18,1.305,36
4,12.17,4,15.333,0
5,12.17,0,0,0
6,12.17,0,0,0
7,3.583,0,.375,36
7,12.17,99999,.375,36
```

♀

--- INPUT ECHO ---

--- FATIGUE REPORT ---

All Units: ksi

SPAN 1 - FATIGUE STRESS RANGE (ksi) -
(EXT - EXTREME FIBER, 4T=4*tw, 6T=6*tw)

LOCA	REBAR RANGE	-----TOP FLANGE----- EXT	4T	6T	-----BOTTOM FLANGE----- EXT	INS	4T	6T
1.0	0.00	0.00	0.00	0.00	0.00	0.00	0.00	0.00
1.1	-1.64	-1.59	-1.34	-1.26	3.35	3.26	3.10	3.02
1.131	-2.01	-1.95	-1.65	-1.55	4.06	3.96	3.76	3.66
1.131	-1.69	-1.69	-1.41	-1.33	3.15	3.03	2.87	2.79
1.2	-2.39	-2.38	-1.99	-1.88	4.40	4.23	4.00	3.89
1.206	-2.43	-2.42	-2.02	-1.91	4.46	4.29	4.07	3.95
1.206	-2.11	-2.15	-1.77	-1.68	3.64	3.45	3.27	3.17
1.233	-2.28	-2.32	-1.92	-1.82	3.91	3.71	3.51	3.41
1.233	-2.32	-2.36	-2.02	-1.96	4.22	4.00	3.88	3.81
1.3	-2.75	-2.80	-2.40	-2.32	4.94	4.69	4.54	4.47
1.4	-3.09	-3.15	-2.71	-2.62	5.41	5.14	4.97	4.89
1.5	-3.26	-3.32	-2.86	-2.78	5.52	5.23	5.06	4.97
1.6	-3.32	-3.37	-2.92	-2.84	5.39	5.10	4.93	4.85
1.626	-3.26	-3.32	-2.88	-2.80	5.22	4.94	4.78	4.69
1.626	-3.91	-3.90	-3.43	-3.33	6.56	6.30	6.09	5.99
1.7	-3.78	-3.77	-3.33	-3.24	5.97	5.73	5.54	5.44
1.771	3.50	3.49	3.11	3.03	5.05	4.84	4.67	4.58
1.771	4.61	4.50	4.08	3.97	6.84	6.65	6.42	6.31
1.8	4.51	4.41	4.01	3.90	6.35	6.16	5.95	5.84
1.888	4.27	4.18	3.84	3.74	-5.04	-4.88	-4.70	-4.61
1.888	2.95	2.96	2.66	2.60	-3.49	-3.32	-3.19	-3.13
1.9	2.92	2.92	2.63	2.57	-3.36	-3.19	-3.07	-3.01
1.930	3.19	3.19	2.88	2.81	-3.64	-3.46	-3.33	-3.26
1.930	2.43	2.48	2.19	2.14	-2.78	-2.60	-2.49	-2.44
2.0	2.91	2.97	2.63	2.57	-3.29	-3.07	-2.95	-2.89

Note: For locations which do not experience tensile stresses
the fatigue stress range is output as a negative number.

Unit 2 Girder F South Approach 02-14-2017 15:43:53 Page 20

--- FATIGUE REPORT ---

All Units: ksi

SPAN 2 - FATIGUE STRESS RANGE (ksi) -
(EXT - EXTREME FIBER, 4T=4*tw, 6T=6*tw)

LOCA	REBAR RANGE	TOP FLANGE EXT	TOP FLANGE 4T	TOP FLANGE 6T	BOTTOM FLANGE EXT	BOTTOM FLANGE INS	BOTTOM FLANGE 4T	BOTTOM FLANGE 6T
2.0	2.91	2.97	2.63	2.57	-3.29	-3.07	-2.95	-2.89
2.076	2.64	2.69	2.38	2.33	-2.99	-2.79	-2.68	-2.62
2.076	3.48	3.48	3.14	3.07	-3.91	-3.72	-3.57	-3.50
2.1	3.36	3.37	3.04	2.97	-3.79	-3.60	-3.46	-3.39
2.131	3.36	3.36	3.03	2.96	-3.96	-3.77	-3.62	-3.55
2.131	4.86	4.76	4.37	4.27	-5.73	-5.55	-5.34	-5.23
2.2	4.76	4.66	4.25	4.14	6.24	6.05	5.83	5.72
2.3	4.67	4.56	4.12	4.01	7.14	6.94	6.71	6.59
2.4	4.34	4.23	3.80	3.68	7.37	7.17	6.94	6.82
2.5	3.73	3.63	3.24	3.13	6.86	6.68	6.47	6.37
2.6	4.14	4.04	3.62	3.51	7.21	7.02	6.79	6.68
2.7	4.46	4.35	3.93	3.82	6.99	6.80	6.57	6.46
2.8	4.53	4.43	4.04	3.93	6.10	5.91	5.70	5.60
2.9	4.60	4.51	4.15	4.05	-5.22	-5.05	-4.86	-4.76
2.919	4.73	4.64	4.26	4.16	-5.35	-5.18	-4.98	-4.88
2.919	3.25	3.25	2.93	2.86	-3.69	-3.51	-3.37	-3.31
3.0	3.61	3.61	3.26	3.18	-4.08	-3.88	-3.73	-3.65

Note: For locations which do not experience tensile stresses
the fatigue stress range is output as a negative number.

Unit 2 Girder F South Approach 02-14-2017 15:43:53 Page 21

--- FATIGUE REPORT ---

All Units: ksi

SPAN 3 - FATIGUE STRESS RANGE (ksi) -
(EXT - EXTREME FIBER, 4T=4*tw, 6T=6*tw)

LOCA	REBAR RANGE	TOP FLANGE EXT	TOP FLANGE 4T	TOP FLANGE 6T	BOTTOM FLANGE EXT	BOTTOM FLANGE INS	BOTTOM FLANGE 4T	BOTTOM FLANGE 6T
3.0	3.61	3.61	3.26	3.18	-4.08	-3.88	-3.73	-3.65
3.064	3.01	3.01	2.71	2.65	-3.46	-3.29	-3.17	-3.10
3.064	4.37	4.28	3.93	3.84	-5.02	-4.85	-4.67	-4.58
3.1	3.86	3.78	3.47	3.39	-4.50	-4.36	-4.19	-4.11
3.2	3.93	3.84	3.49	3.40	5.62	5.46	5.27	5.18
3.3	4.03	3.93	3.53	3.42	6.80	6.61	6.40	6.29
3.4	-3.83	-3.73	-3.32	-3.21	7.21	7.02	6.80	6.69
3.5	-3.57	-3.47	-3.08	-2.98	7.03	6.84	6.63	6.53
3.6	-4.05	-3.94	-3.52	-3.41	7.35	7.15	6.93	6.81
3.7	4.23	4.13	3.72	3.61	6.86	6.67	6.45	6.34
3.8	4.16	4.07	3.71	3.61	5.68	5.51	5.32	5.22
3.845	4.18	4.09	3.74	3.65	-5.29	-5.13	-4.94	-4.85
3.845	2.93	2.94	2.63	2.57	-3.67	-3.50	-3.37	-3.30
3.9	2.89	2.90	2.61	2.55	-3.32	-3.16	-3.04	-2.98
3.909	2.99	2.99	2.70	2.63	-3.42	-3.25	-3.13	-3.06

3.909	2.28	2.32	2.05	2.01	-2.61	-2.44	-2.34	-2.30
3.927	2.42	2.47	2.19	2.14	-2.76	-2.58	-2.48	-2.43
3.927	2.01	2.09	1.82	1.78	-2.31	-2.12	-2.04	-2.00
4.0	2.50	2.59	2.26	2.21	-2.82	-2.59	-2.49	-2.44

Note: For locations which do not experience tensile stresses
the fatigue stress range is output as a negative number.

Unit 2 Girder F South Approach 02-14-2017 15:43:53 Page 22

--- FATIGUE REPORT ---

Max stress range, top flange
@ Ext: 6.60 ksi * 1.13 = 7.46 ksi
@ 4T: 5.97 ksi * 1.13 = 6.75 ksi

Max stress range, bottom flange
@ Ext: 7.81 ksi * 1.13 = 8.83 ksi
@ 4T: 7.34 ksi * 1.13 = 8.29 ksi

All Units: ksi

SPAN 4 - FATIGUE STRESS RANGE (ksi) -
(EXT - EXTREME FIBER, 4T=4*tw, 6T=6*tw)

LOCA	REBAR RANGE	-----TOP FLANGE----- EXT	4T	6T	-----BOTTOM FLANGE----- EXT	INS	4T	6T
4.0	2.50	2.59	2.26	2.21	-2.82	-2.59	-2.49	-2.44
4.059	2.34	2.43	2.12	2.07	-2.68	-2.46	-2.36	-2.32
4.060	2.82	2.88	2.54	2.49	-3.20	-2.99	-2.87	-2.81
4.076	2.76	2.82	2.49	2.43	-3.16	-2.94	-2.83	-2.77
4.077	3.63	3.64	3.28	3.20	-4.13	-3.93	-3.78	-3.70
4.1	3.52	3.53	3.18	3.10	-4.04	-3.84	-3.69	-3.62
4.127	3.55	3.55	3.19	3.11	-4.28	-4.08	-3.92	-3.85
4.128	5.10	5.00	4.58	4.47	-6.19	-5.99	-5.77	-5.66
4.2	5.05	4.94	4.49	4.38	7.05	6.84	6.60	6.48
4.286	4.90	4.78	4.31	4.18	7.81	7.59	7.34	7.21
4.287	3.78	3.76	3.34	3.24	5.77	5.54	5.35	5.25
4.3	3.77	3.76	3.33	3.24	5.87	5.63	5.44	5.34
4.380	-3.52	-3.51	-3.09	-3.00	5.87	5.63	5.45	5.36
4.380	-3.03	-3.07	-2.68	-2.60	4.87	4.62	4.47	4.39
4.4	-2.99	-3.03	-2.63	-2.55	4.87	4.62	4.47	4.39
4.5	-2.52	-2.56	-2.21	-2.14	4.38	4.16	4.03	3.96
4.6	-1.89	-1.91	-1.64	-1.59	3.53	3.36	3.26	3.20
4.7	-1.06	-1.07	-0.91	-0.88	2.20	2.10	2.04	2.01
4.728	-1.10	-1.12	-0.95	-0.92	2.08	1.98	1.92	1.88
4.728	-1.23	-1.23	-1.06	-1.03	2.49	2.40	2.33	2.29
4.8	1.42	1.42	1.26	1.22	2.12	2.03	1.96	1.92
4.9	3.52	3.51	3.17	3.09	-4.11	-3.92	-3.77	-3.69
5.0	6.62	6.60	5.97	5.83	-7.49	-7.14	-6.86	-6.72

Note: For locations which do not experience tensile stresses
the fatigue stress range is output as a negative number.

Unit 2 Girder F South Approach 02-14-2017 15:43:53 Page 23

--- FATIGUE REPORT ---

All Units: ksi

SPAN 5 - FATIGUE STRESS RANGE (ksi) -
(EXT - EXTREME FIBER, 4T=4*tw, 6T=6*tw)

LOCA	REBAR RANGE	-----TOP FLANGE----- EXT	4T	6T	-----BOTTOM FLANGE----- EXT	INS	4T	6T
5.0	6.62	6.60	5.97	5.83	-7.49	-7.14	-6.86	-6.72
5.1	5.96	5.94	5.38	5.25	-6.74	-6.43	-6.18	-6.05

Unit 2 Girder F Fully Composite Exterior Girder.STR

5.2	5.29	5.28	4.77	4.66	-5.99	-5.71	-5.49	-5.37
5.294	4.67	4.66	4.22	4.12	-5.29	-5.04	-4.84	-4.75
5.295	6.44	6.31	5.80	5.67	-7.25	-7.02	-6.75	-6.61
5.3	6.39	6.27	5.77	5.63	-7.21	-6.97	-6.70	-6.57
5.4	5.48	5.38	4.95	4.83	-6.18	-5.98	-5.75	-5.64
5.5	4.56	4.48	4.12	4.02	-5.15	-4.98	-4.79	-4.69
5.6	3.65	3.58	3.29	3.22	-4.12	-3.99	-3.83	-3.76
5.7	2.74	2.69	2.47	2.42	-3.09	-2.99	-2.88	-2.82
5.8	1.83	1.80	1.65	1.61	-2.06	-2.00	-1.92	-1.88
5.9	0.92	0.90	0.83	0.81	-1.05	-1.02	-0.98	-0.96
6.0	0.00	0.00	0.00	0.00	0.00	0.00	0.00	0.00

Note: For locations which do not experience tensile stresses
the fatigue stress range is output as a negative number.

♀

Appendix I. A4649 North Approach Spans Fatigue Analysis

This page is intentionally left blank.

Broadway Bridge Fatigue Details

North Approach

Fatigue Details of Concern

- Top and bottom flange welded cover plate terminations

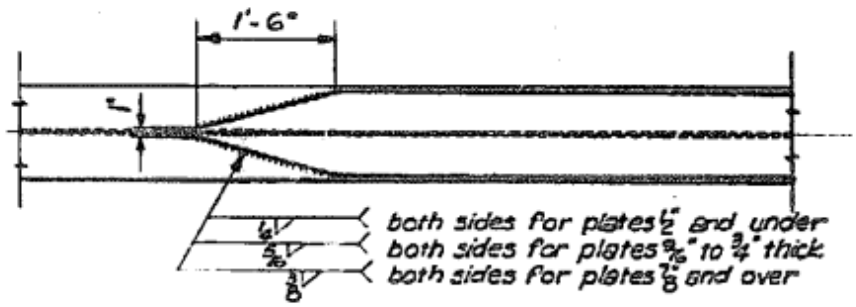

END OF COVER PLATE DETAIL

Scale: 3/4" = 1'-0"

- Webs of stiffeners welded to webs of girders. Top and bottom flange are close-fit.

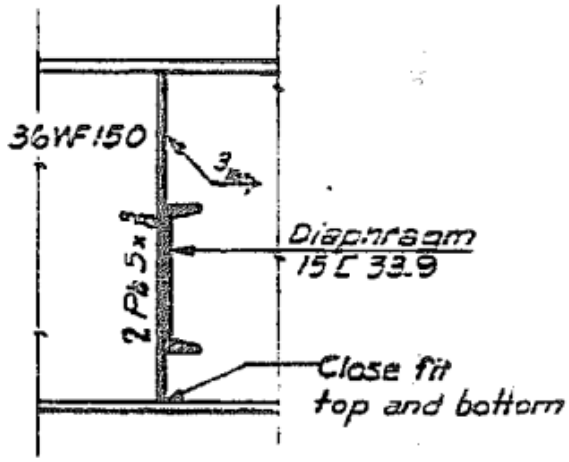

INTERMEDIATE STIFFENER

Scale: 3/4" = 1'-0"

Typical for all beams except A and N.
Beams A and N similar except that
Pl. 5 x 3/8 is omitted on fascia side.

North Approach Continued

- Terminations of weld access holes and rivets in bottom flange at bend points

- Bearing Shelf Supports

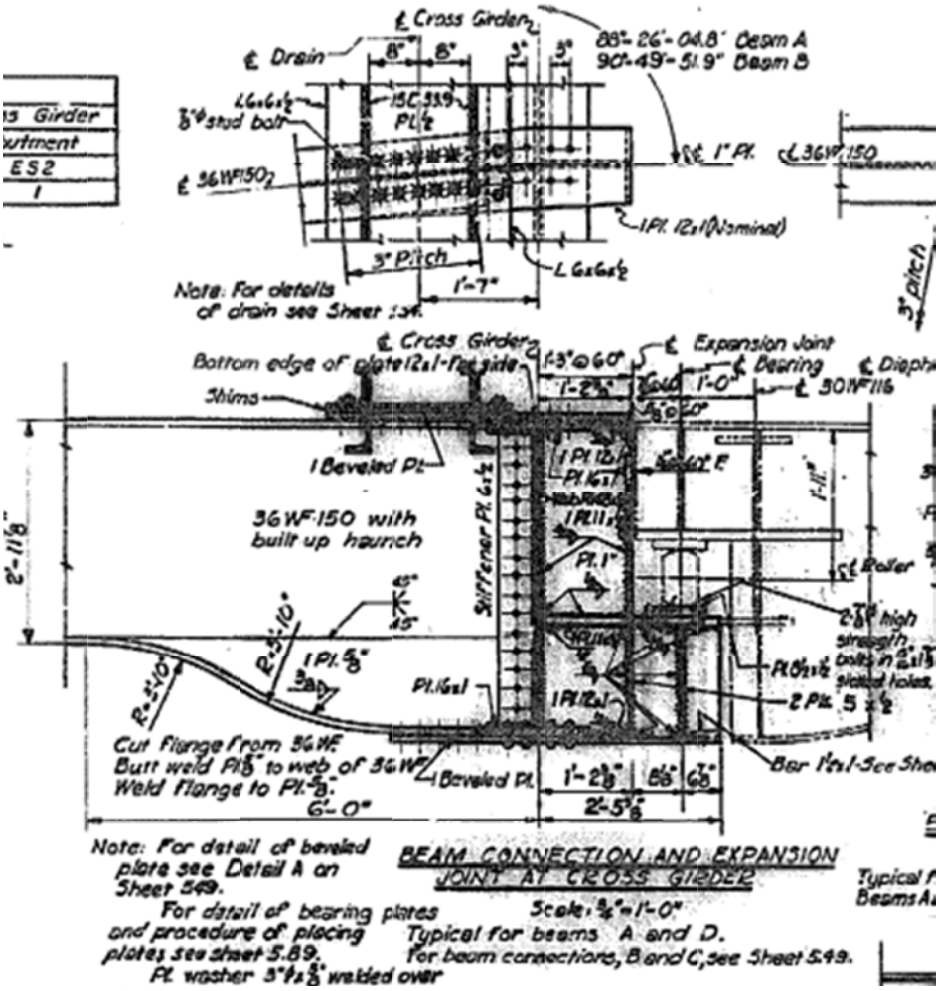

North Approach Continued

- Transverse welds at girder splices

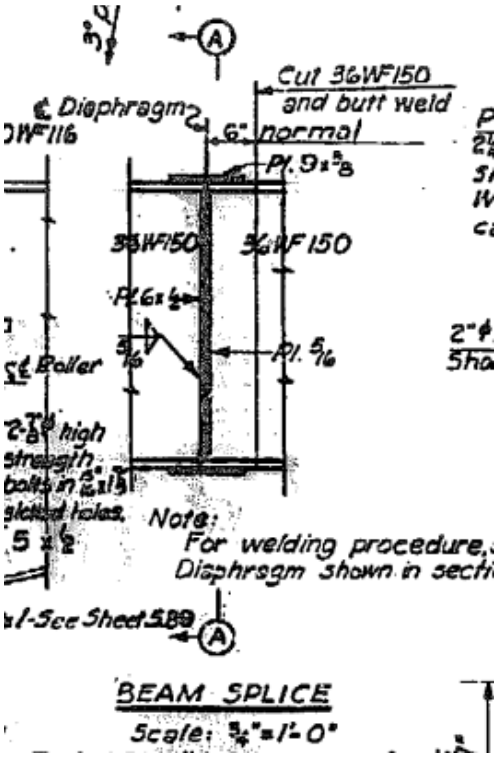

- Miscellaneous open holes in girders from past attachments (P1010233)

North Approach Continued

- Miscellaneous welded attachments (P1010232)

Project:	BROADWAY BRIDGE - A4649	Computed:	KG	Date:	1/4/17
Subject:	FATIGUE ANALYSIS	Checked:	MMD	Date:	2/7/17
Task:	STLBRIDGE	Page:	1	of:	N. APP.
Job #:	133 - 10047358	No:			

NORTH APPROACH - A4649

- PERFORM INTERIOR AND EXTERIOR LINE GIRDER RUNS.
- GIRDER A: EXTERIOR } LONGEST SPANS
  B: INTERIOR } FOR INT + EXT GIRDER TYPES.

- SECTIONS ARE 36 WF150 PLUS VARIOUS COVER PLATES.

- RUN AS STRAIGHT GIRDERS IN STLBRIDGE TO GET FATIGUE STRESS RANGE. LATERAL FLANGE BENDING STRESSES WILL INHERENTLY BE NEGLECTED DUE TO BENDS IN GIRDER AND RESTORING FORCES FROM DIAPHRAGM "CROSS-FRAMES."

Project:	BROADWAY BRIDGE - A4649	Computed:	KG	Date:	1/4/17
Subject:	FATIGUE ANALYSIS	Checked:	MMD	Date:	2/7/17
Task:	STLBRIDGE	Page:	2	of:	N. APP.
Job #:	133-10047358	No:			

STLBRIDGE INPUTS

TITLE: A4649 NORTH APPROACH GIRDER A EXTERIOR
UNITS: ENGLISH

CONCRETE: ~~ASSUME CLASS 30 LIKE SB N. APPROACH, 3,000 psi~~

$f'_c = 4{,}000$ psi

$E_c = 33000(1.0)(0.145)^{1.5}\sqrt{4}$
$= 3644$ ksi

DENSITY = 150 pcf

REBAR, $f_y = 60$ ksi ← SAME AS SB N. APP., NOT USED IN ANALYSIS FOR NONCOMPOSITE OR FULLY COMPOSITE ANALYSIS.

$n = \frac{29000}{3644} = 8.0$

$3n = 24.0$

LOAD COMBINATIONS: FATIGUE LL+IM: LF = 1.5 (INFINITE LIFE ∴ USE FATIGUE I)

NUMBER OF SPANS: 3 (EXTERIOR) (GIRDER A)
2 (INTERIOR) (GIRDER B)

GIRDER A

SPAN 1: 68'-5 1/2" = 68.458'
SPAN 2: 71'-9 7/16" = 71.786'
SPAN 3: 71'-1 3/16" = 71.100'

GIRDER B

SPAN 1: 70'-9 1/8" = 70.760'
SPAN 2: 70'-4 7/8" = 70.406'

Project:	BROADWAY BRIDGE - A4649	Computed:	KG	Date:	1/4/17
Subject:	FATIGUE ANALYSIS	Checked:	MMD	Date:	2/7/17
Task:	STLBRIDGE	Page:	3	of:	N. APP.
Job #:	133-10047358	No:			

DECK : THICKNESS = 6 1/2" (USE MIN)

INTEGRAL WEARING SURFACE = 2 1/2" ASPHALTIC CONCRETE WEARING SURFACE (NOT CONSIDERED EFFECTIVE FOR PROPERTY CALCULATIONS)

HAUNCH THICKNESS : VARIES,

USE 10" - 6 1/2" - 2 1/2" = 2" SAY OK FOR AVG ESTIMATE

+1"

↑ TOP FLANGE

Project: BROADWAY BRIDGE - A4649	Computed: KG	Date: 1/9/17	
Subject: FATIGUE ANALYSIS	Checked: MMD	Date: 2/7/17	
Task: STLBRIDGE	Page: 4	of: N. APP.	
Job #: 133 - 10047358	No:		

VARY GIRDER SPACING IN STLBRIDGE FOR INTERIOR GIRDER
LET STLBRIDGE CALCULATE DISTRIBUTION FACTORS AND EFFECTIVE WIDTHS
GIRDERS : 7

	GIRDER SPACING LEFT	GIRDER SPACING RIGHT	LOCATION FROM LEFT SUPPORT
SPAN 1:	4'-9 1/4"	4'-9 1/4"	0
	7'-2"	7'-2"	(17'-7 3/8") + (19'-7 1/4") + (19'-7 1/4") = 56.823
	7'-4 7/8"	7'-4 7/8"	76.76'
SPAN 2:	7'-4 7/8"	7'-4 7/8"	0
	8'-5"	8'-5"	70.406'

USE ALL DF, IMPACT, AND EFF WIDTH STLBRIDGE PROGRAM DEFAULTS

Broadway Bridge A4649 Fatigue Analysis

Girder A

x (ft)	Point	Section	Actual S_{xx} with cover plates in^3	Equivalent Sxx in^3	% Conservative	Original WF Shape S_{xx} in^3	I_{xx} in^4	d in
0.000	1	36WF150	503.62	498.36	1.06	504.00	9040	35.9
6.000	2	36WF150	503.62	498.36	1.06	504.00	9040	35.9
6.000	3	36WF150 + 11" x 0.75" CP	779.76	779.33	0.06	504.00	9040	35.9
52.000	4	36WF150 + 11" x 0.75" CP	779.76	779.33	0.06	504.00	9040	35.9
52.000	5	36WF150	503.62	498.36	1.06	504.00	9040	35.9
63.958	6	36WF150	503.62	498.36	1.06	504.00	9040	35.9
63.958	7	36WF150 + 11" x 0.75" CP	779.76	779.33	0.06	504.00	9040	35.9
68.458	8	36WF150 + 11" x 0.75" CP	779.76	779.33	0.06	504.00	9040	35.9
0.000	9	36WF150 + 11" x 0.75" CP	779.76	779.33	0.06	504.00	9040	35.9
4.500	10	36WF150 + 11" x 0.75" CP	779.76	779.33	0.06	504.00	9040	35.9
4.500	11	36WF150	503.62	498.36	1.06	504.00	9040	35.9
67.286	12	36WF150	503.62	498.36	1.06	504.00	9040	35.9
67.286	13	36WF150 + 11" x 0.75" CP	779.76	779.33	0.06	504.00	9040	35.9
71.786	14	36WF150 + 11" x 0.75" CP	779.76	779.33	0.06	504.00	9040	35.9
0.000	15	36WF150 + 11" x 0.75" CP	779.76	779.33	0.06	504.00	9040	35.9
4.500	16	36WF150 + 11" x 0.75" CP	779.76	779.33	0.06	504.00	9040	35.9
4.500	17	36WF150	503.62	498.36	1.06	504.00	9040	35.9
18.099	18	36WF150	503.62	498.36	1.06	504.00	9040	35.9
18.099	19	36WF150 + 11" x 0.875" CP	826.01	826.02	0.00	504.00	9040	35.9
65.099	20	36WF150 + 11" x 0.875" CP	826.01	826.02	0.00	504.00	9040	35.9
65.099	21	36WF150	503.62	498.36	1.06	504.00	9040	35.9
71.100	22	36WF150	503.62	498.36	1.06	504.00	9040	35.9

Broadway Bridge A4649 Fatigue Analysis

Girder A

			Top Flange Cover Plate						Bottom Flange Cover Plate					
x (ft)	Point	Section	b_f	t_f	I	A	d	$I+Ad^2$	b_f	t_f	I	A	d	$I+Ad^2$
			in	in	in^4	in^2	in	in^4	in	in	in^4	in^2	in	in^4
0.000	1	36WF150	0	0	0	0	17.95	0	0	0	0	0	17.95	0
6.000	2	36WF150	0	0	0	0	17.95	0	0	0	0	0	17.95	0
6.000	3	36WF150 + 11" x 0.75" CP	11	0.750	0.387	8.25	18.33	2770.78	11	0.750	0.387	8.25	18.33	2770.78
52.000	4	36WF150 + 11" x 0.75" CP	11	0.750	0.387	8.25	18.33	2770.78	11	0.750	0.387	8.25	18.33	2770.78
52.000	5	36WF150	0	0	0	0	17.95	0	0	0	0	0	17.95	0
63.958	6	36WF150	0	0	0	0	17.95	0	0	0	0	0	17.95	0
63.958	7	36WF150 + 11" x 0.75" CP	11	0.750	0.387	8.25	18.33	2770.78	11	0.750	0.387	8.25	18.33	2770.78
68.458	8	36WF150 + 11" x 0.75" CP	11	0.750	0.387	8.25	18.33	2770.78	11	0.750	0.387	8.25	18.33	2770.78
0.000	9	36WF150 + 11" x 0.75" CP	11	0.750	0.387	8.25	18.33	2770.78	11	0.750	0.387	8.25	18.33	2770.78
4.500	10	36WF150 + 11" x 0.75" CP	11	0.750	0.387	8.25	18.33	2770.78	11	0.750	0.387	8.25	18.33	2770.78
4.500	11	36WF150	0	0	0	0	17.95	0	0	0	0	0	17.95	0
67.286	12	36WF150	0	0	0	0	17.95	0	0	0	0	0	17.95	0
67.286	13	36WF150 + 11" x 0.75" CP	11	0.750	0.387	8.25	18.33	2770.78	11	0.750	0.387	8.25	18.33	2770.78
71.786	14	36WF150 + 11" x 0.75" CP	11	0.750	0.387	8.25	18.33	2770.78	11	0.750	0.387	8.25	18.33	2770.78
0.000	15	36WF150 + 11" x 0.75" CP	11	0.750	0.387	8.25	18.33	2770.78	11	0.750	0.387	8.25	18.33	2770.78
4.500	16	36WF150 + 11" x 0.75" CP	11	0.750	0.387	8.25	18.33	2770.78	11	0.750	0.387	8.25	18.33	2770.78
4.500	17	36WF150	0	0	0	0	17.95	0	0	0	0	0	17.95	0
18.099	18	36WF150	0	0	0	0	17.95	0	0	0	0	0	17.95	0
18.099	19	36WF150 + 11" x 0.875" CP	11	0.875	0.614	9.63	18.39	3254.83	11	0.875	0.614	9.63	18.39	3254.83
65.099	20	36WF150 + 11" x 0.875" CP	11	0.875	0.614	9.63	18.39	3254.83	11	0.875	0.614	9.63	18.39	3254.83
65.099	21	36WF150	0	0	0	0	17.95	0	0	0	0	0	17.95	0
71.100	22	36WF150	0	0	0	0	17.95	0	0	0	0	0	17.95	0

Broadway Bridge A4649 Fatigue Analysis

Girder A

			Total					Input for STLBridge as Plate Girder Equivalent Top Flange					
x (ft)	Point	Section	I_{total}	c_{top}	c_{bottom}	$S_{xx,top}$	$S_{xx,bottom}$	t_{tf}	b_{tf}	A_{tf}	y_{bar}	Ay_{bar}	I_{tf}
			in^4	in	in	in^3	in^3	in	in	in^2	in	in^3	in^4
0.000	1	36WF150	9040.00	17.95	17.95	503.62	503.62	0.94	12	11.28	35.43	399.65	0.83
6.000	2	36WF150	9040.00	17.95	17.95	503.62	503.62	0.94	12	11.28	35.43	399.65	0.83
6.000	3	36WF150 + 11" x 0.75" CP	14581.57	18.70	18.70	779.76	779.76	1.635	12	19.62	36.47	715.59	4.37
52.000	4	36WF150 + 11" x 0.75" CP	14581.57	18.70	18.70	779.76	779.76	1.635	12	19.62	36.47	715.59	4.37
52.000	5	36WF150	9040.00	17.95	17.95	503.62	503.62	0.94	12	11.28	35.43	399.65	0.83
63.958	6	36WF150	9040.00	17.95	17.95	503.62	503.62	0.94	12	11.28	35.43	399.65	0.83
63.958	7	36WF150 + 11" x 0.75" CP	14581.57	18.70	18.70	779.76	779.76	1.635	12	19.62	36.47	715.59	4.37
68.458	8	36WF150 + 11" x 0.75" CP	14581.57	18.70	18.70	779.76	779.76	1.635	12	19.62	36.47	715.59	4.37
0.000	9	36WF150 + 11" x 0.75" CP	14581.57	18.70	18.70	779.76	779.76	1.635	12	19.62	36.47	715.59	4.37
4.500	10	36WF150 + 11" x 0.75" CP	14581.57	18.70	18.70	779.76	779.76	1.635	12	19.62	36.47	715.59	4.37
4.500	11	36WF150	9040.00	17.95	17.95	503.62	503.62	0.94	12	11.28	35.43	399.65	0.83
67.286	12	36WF150	9040.00	17.95	17.95	503.62	503.62	0.94	12	11.28	35.43	399.65	0.83
67.286	13	36WF150 + 11" x 0.75" CP	14581.57	18.70	18.70	779.76	779.76	1.635	12	19.62	36.47	715.59	4.37
71.786	14	36WF150 + 11" x 0.75" CP	14581.57	18.70	18.70	779.76	779.76	1.635	12	19.62	36.47	715.59	4.37
0.000	15	36WF150 + 11" x 0.75" CP	14581.57	18.70	18.70	779.76	779.76	1.635	12	19.62	36.47	715.59	4.37
4.500	16	36WF150 + 11" x 0.75" CP	14581.57	18.70	18.70	779.76	779.76	1.635	12	19.62	36.47	715.59	4.37
4.500	17	36WF150	9040.00	17.95	17.95	503.62	503.62	0.94	12	11.28	35.43	399.65	0.83
18.099	18	36WF150	9040.00	17.95	17.95	503.62	503.62	0.94	12	11.28	35.43	399.65	0.83
18.099	19	36WF150 + 11" x 0.875" CP	15549.66	18.83	18.83	826.01	826.01	1.75	12	21.00	36.65	769.55	5.36
65.099	20	36WF150 + 11" x 0.875" CP	15549.66	18.83	18.83	826.01	826.01	1.75	12	21.00	36.65	769.55	5.36
65.099	21	36WF150	9040.00	17.95	17.95	503.62	503.62	0.94	12	11.28	35.43	399.65	0.83
71.100	22	36WF150	9040.00	17.95	17.95	503.62	503.62	0.94	12	11.28	35.43	399.65	0.83

Broadway Bridge A4649 Fatigue Analysis

Girder A

x (ft)	Point	Section	Equivalent Web t_{web} in	D_{web} in	A_{web} in^2	y_{bar} in	Ay_{bar} in^3	I_{web} in^4
0.000	1	36WF150	0.625	34.02	21.26	17.95	381.66	2050.70
6.000	2	36WF150	0.625	34.02	21.26	17.95	381.66	2050.70
6.000	3	36WF150 + 11" x 0.75" CP	0.625	34.02	21.26	18.65	396.44	2050.70
52.000	4	36WF150 + 11" x 0.75" CP	0.625	34.02	21.26	18.65	396.44	2050.70
52.000	5	36WF150	0.625	34.02	21.26	17.95	381.66	2050.70
63.958	6	36WF150	0.625	34.02	21.26	17.95	381.66	2050.70
63.958	7	36WF150 + 11" x 0.75" CP	0.625	34.02	21.26	18.65	396.44	2050.70
68.458	8	36WF150 + 11" x 0.75" CP	0.625	34.02	21.26	18.65	396.44	2050.70
0.000	9	36WF150 + 11" x 0.75" CP	0.625	34.02	21.26	18.65	396.44	2050.70
4.500	10	36WF150 + 11" x 0.75" CP	0.625	34.02	21.26	18.65	396.44	2050.70
4.500	11	36WF150	0.625	34.02	21.26	17.95	381.66	2050.70
67.286	12	36WF150	0.625	34.02	21.26	17.95	381.66	2050.70
67.286	13	36WF150 + 11" x 0.75" CP	0.625	34.02	21.26	18.65	396.44	2050.70
71.786	14	36WF150 + 11" x 0.75" CP	0.625	34.02	21.26	18.65	396.44	2050.70
0.000	15	36WF150 + 11" x 0.75" CP	0.625	34.02	21.26	18.65	396.44	2050.70
4.500	16	36WF150 + 11" x 0.75" CP	0.625	34.02	21.26	18.65	396.44	2050.70
4.500	17	36WF150	0.625	34.02	21.26	17.95	381.66	2050.70
18.099	18	36WF150	0.625	34.02	21.26	17.95	381.66	2050.70
18.099	19	36WF150 + 11" x 0.875" CP	0.625	34.02	21.26	18.76	398.88	2050.70
65.099	20	36WF150 + 11" x 0.875" CP	0.625	34.02	21.26	18.76	398.88	2050.70
65.099	21	36WF150	0.625	34.02	21.26	17.95	381.66	2050.70
71.100	22	36WF150	0.625	34.02	21.26	17.95	381.66	2050.70

Broadway Bridge A4649 Fatigue Analysis

Girder A

			Equivalent Bottom Flange						
x (ft)	Point	Section	t_{bf}	b_{bf}	A_{bf}	y_{bar}	Ay_{bar}	I_{bf}	$y_{bartotal}$
			in	in	in^2	in	in^3	in^4	in
0.000	1	36WF150	0.94	12	11.28	0.47	5.30	0.83	17.95
6.000	2	36WF150	0.94	12	11.28	0.47	5.30	0.83	17.95
6.000	3	36WF150 + 11" x 0.75" CP	1.635	12	19.62	0.82	16.04	4.37	18.65
52.000	4	36WF150 + 11" x 0.75" CP	1.635	12	19.62	0.82	16.04	4.37	18.65
52.000	5	36WF150	0.94	12	11.28	0.47	5.30	0.83	17.95
63.958	6	36WF150	0.94	12	11.28	0.47	5.30	0.83	17.95
63.958	7	36WF150 + 11" x 0.75" CP	1.635	12	19.62	0.82	16.04	4.37	18.65
68.458	8	36WF150 + 11" x 0.75" CP	1.635	12	19.62	0.82	16.04	4.37	18.65
0.000	9	36WF150 + 11" x 0.75" CP	1.635	12	19.62	0.82	16.04	4.37	18.65
4.500	10	36WF150 + 11" x 0.75" CP	1.635	12	19.62	0.82	16.04	4.37	18.65
4.500	11	36WF150	0.94	12	11.28	0.47	5.30	0.83	17.95
67.286	12	36WF150	0.94	12	11.28	0.47	5.30	0.83	17.95
67.286	13	36WF150 + 11" x 0.75" CP	1.635	12	19.62	0.82	16.04	4.37	18.65
71.786	14	36WF150 + 11" x 0.75" CP	1.635	12	19.62	0.82	16.04	4.37	18.65
0.000	15	36WF150 + 11" x 0.75" CP	1.635	12	19.62	0.82	16.04	4.37	18.65
4.500	16	36WF150 + 11" x 0.75" CP	1.635	12	19.62	0.82	16.04	4.37	18.65
4.500	17	36WF150	0.94	12	11.28	0.47	5.30	0.83	17.95
18.099	18	36WF150	0.94	12	11.28	0.47	5.30	0.83	17.95
18.099	19	36WF150 + 11" x 0.875" CP	1.75	12	21.00	0.88	18.38	5.36	18.76
65.099	20	36WF150 + 11" x 0.875" CP	1.75	12	21.00	0.88	18.38	5.36	18.76
65.099	21	36WF150	0.94	12	11.28	0.47	5.30	0.83	17.95
71.100	22	36WF150	0.94	12	11.28	0.47	5.30	0.83	17.95

Broadway Bridge A4649 Fatigue Analysis

Girder A

			Top Flange		Web		Bottom Flange	
x (ft)	Point	Section	d_{tf}	$I+Ad^2$	d_{web}	$I+Ad^2$	d_{bf}	$I+Ad^2$
			in	in^4	in	in^4	in	in^4
0.000	1	36WF150	17.48	3447.44	0	2050.70	17.48	3447.44
6.000	2	36WF150	17.48	3447.44	0	2050.70	17.48	3447.44
6.000	3	36WF150 + 11" x 0.75" CP	17.83	6239.99	0	2050.70	17.83	6239.99
52.000	4	36WF150 + 11" x 0.75" CP	17.83	6239.99	0	2050.70	17.83	6239.99
52.000	5	36WF150	17.48	3447.44	0	2050.70	17.48	3447.44
63.958	6	36WF150	17.48	3447.44	0	2050.70	17.48	3447.44
63.958	7	36WF150 + 11" x 0.75" CP	17.83	6239.99	0	2050.70	17.83	6239.99
68.458	8	36WF150 + 11" x 0.75" CP	17.83	6239.99	0	2050.70	17.83	6239.99
0.000	9	36WF150 + 11" x 0.75" CP	17.83	6239.99	0	2050.70	17.83	6239.99
4.500	10	36WF150 + 11" x 0.75" CP	17.83	6239.99	0	2050.70	17.83	6239.99
4.500	11	36WF150	17.48	3447.44	0	2050.70	17.48	3447.44
67.286	12	36WF150	17.48	3447.44	0	2050.70	17.48	3447.44
67.286	13	36WF150 + 11" x 0.75" CP	17.83	6239.99	0	2050.70	17.83	6239.99
71.786	14	36WF150 + 11" x 0.75" CP	17.83	6239.99	0	2050.70	17.83	6239.99
0.000	15	36WF150 + 11" x 0.75" CP	17.83	6239.99	0	2050.70	17.83	6239.99
4.500	16	36WF150 + 11" x 0.75" CP	17.83	6239.99	0	2050.70	17.83	6239.99
4.500	17	36WF150	17.48	3447.44	0	2050.70	17.48	3447.44
18.099	18	36WF150	17.48	3447.44	0	2050.70	17.48	3447.44
18.099	19	36WF150 + 11" x 0.875" CP	17.89	6722.70	0	2050.70	17.89	6722.70
65.099	20	36WF150 + 11" x 0.875" CP	17.89	6722.70	0	2050.70	17.89	6722.70
65.099	21	36WF150	17.48	3447.44	0	2050.70	17.48	3447.44
71.100	22	36WF150	17.48	3447.44	0	2050.70	17.48	3447.44

Broadway Bridge A4649 Fatigue Analysis

Girder A

			Equivalent Section Properties							
x (ft)	Point	Section	A_{EQ}	I_{EQ}	Shear A_{EQ}	$c_{topfiber}$	$c_{bottomfiber}$	S_{xtop}	$S_{xbottom}$	F_y
			in^2	in^4	in^2	in	in	in^3	in^3	ksi
0.000	1	36WF150	43.82	8945.58	21.26	17.95	17.95	498.36	498.36	36
6.000	2	36WF150	43.82	8945.58	21.26	17.95	17.95	498.36	498.36	36
6.000	3	36WF150 + 11" x 0.75" CP	60.50	14530.69	21.26	18.65	18.65	779.33	779.33	36
52.000	4	36WF150 + 11" x 0.75" CP	60.50	14530.69	21.26	18.65	18.65	779.33	779.33	36
52.000	5	36WF150	43.82	8945.58	21.26	17.95	17.95	498.36	498.36	36
63.958	6	36WF150	43.82	8945.58	21.26	17.95	17.95	498.36	498.36	36
63.958	7	36WF150 + 11" x 0.75" CP	60.50	14530.69	21.26	18.65	18.65	779.33	779.33	36
68.458	8	36WF150 + 11" x 0.75" CP	60.50	14530.69	21.26	18.65	18.65	779.33	779.33	36
0.000	9	36WF150 + 11" x 0.75" CP	60.50	14530.69	21.26	18.65	18.65	779.33	779.33	36
4.500	10	36WF150 + 11" x 0.75" CP	60.50	14530.69	21.26	18.65	18.65	779.33	779.33	36
4.500	11	36WF150	43.82	8945.58	21.26	17.95	17.95	498.36	498.36	36
67.286	12	36WF150	43.82	8945.58	21.26	17.95	17.95	498.36	498.36	36
67.286	13	36WF150 + 11" x 0.75" CP	60.50	14530.69	21.26	18.65	18.65	779.33	779.33	36
71.786	14	36WF150 + 11" x 0.75" CP	60.50	14530.69	21.26	18.65	18.65	779.33	779.33	36
0.000	15	36WF150 + 11" x 0.75" CP	60.50	14530.69	21.26	18.65	18.65	779.33	779.33	36
4.500	16	36WF150 + 11" x 0.75" CP	60.50	14530.69	21.26	18.65	18.65	779.33	779.33	36
4.500	17	36WF150	43.82	8945.58	21.26	17.95	17.95	498.36	498.36	36
18.099	18	36WF150	43.82	8945.58	21.26	17.95	17.95	498.36	498.36	36
18.099	19	36WF150 + 11" x 0.875" CP	63.26	15496.09	21.26	18.76	18.76	826.02	826.02	36
65.099	20	36WF150 + 11" x 0.875" CP	63.26	15496.09	21.26	18.76	18.76	826.02	826.02	36
65.099	21	36WF150	43.82	8945.58	21.26	17.95	17.95	498.36	498.36	36
71.100	22	36WF150	43.82	8945.58	21.26	17.95	17.95	498.36	498.36	36

Broadway Bridge A4649 Fatigue Analysis

Girder B

x (ft)	Point	Section	Actual S_{xx} with cover plates in^3	Equivalent S_{xx} in^3	% Conservative	Original WF Shape S_{xx} in^3	I_{xx} in^4	d in
0.000	1	36WF150	503.621	498.36	1.06	504.00	9040	35.9
14.000	2	36WF150	503.621	498.36	1.06	504.00	9040	35.9
14.000	3	36WF150 + 8x3/8 CP	601.030	599.22	0.30	504.00	9040	35.9
42.000	4	36WF150 + 8x3/8 CP	601.030	599.22	0.30	504.00	9040	35.9
42.000	5	36WF150	503.621	498.36	1.06	504.00	9040	35.9
66.260	6	36WF150	503.621	498.36	1.06	504.00	9040	35.9
66.260	7	36WF150 + 11x7/8 CP	826.011	826.02	0.00	504.00	9040	35.9
70.760	8	36WF150 + 11x7/8 CP	826.011	826.02	0.00	504.00	9040	35.9
0.000	9	36WF150 + 11x7/8 CP	826.011	826.02	0.00	504.00	9040	35.9
4.500	10	36WF150 + 11x7/8 CP	826.011	826.02	0.00	504.00	9040	35.9
4.500	11	36WF150	503.621	498.36	1.06	504.00	9040	35.9
19.406	12	36WF150	503.621	498.36	1.06	504.00	9040	35.9
19.406	13	36WF150 + 11x7/8 CP	826.011	826.02	0.00	504.00	9040	35.9
65.406	14	36WF150 + 11x7/8 CP	826.011	826.02	0.00	504.00	9040	35.9
65.406	15	36WF150	503.621	498.36	1.06	504.00	9040	35.9
70.406	16	36WF150	503.621	498.36	1.06	504.00	9040	35.9

Broadway Bridge A4649 Fatigue Analysis

Girder B

			Top Flange Cover Plate						Bottom Flange Cover Plate					
x (ft)	Point	Section	b_f	t_f	I	A	d	$I+Ad^2$	bf	tf	I	A	d	$I+Ad^2$
			in	in	in^4	in^2	in	in^4	in	in	in^4	in^2	in	in^4
0.000	1	36WF150	0	0	0	0	17.95	0	0	0	0	0	17.95	0
14.000	2	36WF150	0	0	0	0	17.95	0	0	0	0	0	17.95	0
14.000	3	36WF150 + 8x3/8 CP	8	0.375	0.035	3	18.14	986.94	8	0.375	0.035	3	18.14	986.94
42.000	4	36WF150 + 8x3/8 CP	8	0.375	0.035	3	18.14	986.94	8	0.375	0.035	3	18.14	986.94
42.000	5	36WF150	0	0	0	0	17.95	0	0	0	0	0	17.95	0
66.260	6	36WF150	0	0	0	0	17.95	0	0	0	0	0	17.95	0
66.260	7	36WF150 + 11x7/8 CP	11	0.875	0.614	9.63	18.39	3254.83	11	0.875	0.614	9.625	18.39	3254.83
70.760	8	36WF150 + 11x7/8 CP	11	0.875	0.614	9.63	18.39	3254.83	11	0.875	0.614	9.625	18.39	3254.83
0.000	9	36WF150 + 11x7/8 CP	11	0.875	0.614	9.63	18.39	3254.83	11	0.875	0.614	9.625	18.39	3254.83
4.500	10	36WF150 + 11x7/8 CP	11	0.875	0.614	9.63	18.39	3254.83	11	0.875	0.614	9.625	18.39	3254.83
4.500	11	36WF150	0	0	0	0	17.95	0	0	0	0	0	17.95	0
19.406	12	36WF150	0	0	0	0	17.95	0	0	0	0	0	17.95	0
19.406	13	36WF150 + 11x7/8 CP	11	0.875	0.614	9.63	18.39	3254.83	11	0.875	0.614	9.625	18.39	3254.83
65.406	14	36WF150 + 11x7/8 CP	11	0.875	0.614	9.63	18.39	3254.83	11	0.875	0.614	9.625	18.39	3254.83
65.406	15	36WF150	0	0	0	0	17.95	0	0	0	0	0	17.95	0
70.406	16	36WF150	0	0	0	0	17.95	0	0	0	0	0	17.95	0

Broadway Bridge A4649 Fatigue Analysis

Girder B

x (ft)	Point	Section	Total I_{total} in^4	c_{top} in	c_{bottom} in	$S_{xx,top}$ in^3	$S_{xx,bottom}$ in^3	Input for STLBridge as Plate Girder Equivalent Top Flange t_{tf} in	b_{tf} in	A_{tf} in^2	y_{bar} in	Ay_{bar} in^3	I_{tf} in^4
0.000	1	36WF150	9040.00	17.95	17.95	503.62	503.62	0.94	12	11.28	35.43	399.65	0.83
14.000	2	36WF150	9040.00	17.95	17.95	503.62	503.62	0.94	12	11.28	35.43	399.65	0.83
14.000	3	36WF150 + 8x3/8 CP	11013.88	18.33	18.33	601.03	601.03	1.19	12	14.28	35.81	511.30	1.69
42.000	4	36WF150 + 8x3/8 CP	11013.88	18.33	18.33	601.03	601.03	1.19	12	14.28	35.81	511.30	1.69
42.000	5	36WF150	9040.00	17.95	17.95	503.62	503.62	0.94	12	11.28	35.43	399.65	0.83
66.260	6	36WF150	9040.00	17.95	17.95	503.62	503.62	0.94	12	11.28	35.43	399.65	0.83
66.260	7	36WF150 + 11x7/8 CP	15549.66	18.83	18.83	826.01	826.01	1.75	12	21.00	36.65	769.55	5.36
70.760	8	36WF150 + 11x7/8 CP	15549.66	18.83	18.83	826.01	826.01	1.75	12	21.00	36.65	769.55	5.36
0.000	9	36WF150 + 11x7/8 CP	15549.66	18.83	18.83	826.01	826.01	1.75	12	21.00	36.65	769.55	5.36
4.500	10	36WF150 + 11x7/8 CP	15549.66	18.83	18.83	826.01	826.01	1.75	12	21.00	36.65	769.55	5.36
4.500	11	36WF150	9040.00	17.95	17.95	503.62	503.62	0.94	12	11.28	35.43	399.65	0.83
19.406	12	36WF150	9040.00	17.95	17.95	503.62	503.62	0.94	12	11.28	35.43	399.65	0.83
19.406	13	36WF150 + 11x7/8 CP	15549.66	18.83	18.83	826.01	826.01	1.75	12	21.00	36.65	769.55	5.36
65.406	14	36WF150 + 11x7/8 CP	15549.66	18.83	18.83	826.01	826.01	1.75	12	21.00	36.65	769.55	5.36
65.406	15	36WF150	9040.00	17.95	17.95	503.62	503.62	0.94	12	11.28	35.43	399.65	0.83
70.406	16	36WF150	9040.00	17.95	17.95	503.62	503.62	0.94	12	11.28	35.43	399.65	0.83

Broadway Bridge A4649 Fatigue Analysis

Girder B

			Equivalent Web						Equivalent Bottom Flange						
x (ft)	Point	Section	t_{web}	D_{web}	A_{web}	y_{bar}	Ay_{bar}	I_{web}	t_{bf}	b_{bf}	A_{bf}	y_{bar}	Ay_{bar}	I_{bf}	$y_{bartotal}$
			in	in	in^2	in	in^3	in^4	in	in	in^2	in	in^3	in^4	in
0.000	1	36WF150	0.625	34.02	21.26	17.95	381.66	2050.70	0.94	12	11.28	0.47	5.30	0.83	17.95
14.000	2	36WF150	0.625	34.02	21.26	17.95	381.66	2050.70	0.94	12	11.28	0.47	5.30	0.83	17.95
14.000	3	36WF150 + 8x3/8 CP	0.625	34.02	21.26	18.20	386.98	2050.70	1.19	12	14.28	0.60	8.50	1.69	18.20
42.000	4	36WF150 + 8x3/8 CP	0.625	34.02	21.26	18.20	386.98	2050.70	1.19	12	14.28	0.60	8.50	1.69	18.20
42.000	5	36WF150	0.625	34.02	21.26	17.95	381.66	2050.70	0.94	12	11.28	0.47	5.30	0.83	17.95
66.260	6	36WF150	0.625	34.02	21.26	17.95	381.66	2050.70	0.94	12	11.28	0.47	5.30	0.83	17.95
66.260	7	36WF150 + 11x7/8 CP	0.625	34.02	21.26	18.76	398.88	2050.70	1.75	12	21.00	0.88	18.38	5.36	18.76
70.760	8	36WF150 + 11x7/8 CP	0.625	34.02	21.26	18.76	398.88	2050.70	1.75	12	21.00	0.88	18.38	5.36	18.76
0.000	9	36WF150 + 11x7/8 CP	0.625	34.02	21.26	18.76	398.88	2050.70	1.75	12	21.00	0.88	18.38	5.36	18.76
4.500	10	36WF150 + 11x7/8 CP	0.625	34.02	21.26	18.76	398.88	2050.70	1.75	12	21.00	0.88	18.38	5.36	18.76
4.500	11	36WF150	0.625	34.02	21.26	17.95	381.66	2050.70	0.94	12	11.28	0.47	5.30	0.83	17.95
19.406	12	36WF150	0.625	34.02	21.26	17.95	381.66	2050.70	0.94	12	11.28	0.47	5.30	0.83	17.95
19.406	13	36WF150 + 11x7/8 CP	0.625	34.02	21.26	18.76	398.88	2050.70	1.75	12	21.00	0.88	18.38	5.36	18.76
65.406	14	36WF150 + 11x7/8 CP	0.625	34.02	21.26	18.76	398.88	2050.70	1.75	12	21.00	0.88	18.38	5.36	18.76
65.406	15	36WF150	0.625	34.02	21.26	17.95	381.66	2050.70	0.94	12	11.28	0.47	5.30	0.83	17.95
70.406	16	36WF150	0.625	34.02	21.26	17.95	381.66	2050.70	0.94	12	11.28	0.47	5.30	0.83	17.95

Broadway Bridge A4649 Fatigue Analysis

Girder B

			Top Flange		Web		Bottom Flange		Equivalent Section Properties		
x (ft)	Point	Section	d_{tf}	$I+Ad^2$	d_{web}	$I+Ad^2$	d_{bf}	$I+Ad^2$	A_{EQ}	I_{EQ}	Shear A_{EQ}
			in	in^4	in	in^4	in	in^4	in^2	in^4	in^2
0.000	1	36WF150	17.48	3447.44	0	2050.70	17.48	3447.44	43.82	8945.58	21.26
14.000	2	36WF150	17.48	3447.44	0	2050.70	17.48	3447.44	43.82	8945.58	21.26
14.000	3	36WF150 + 8x3/8 CP	17.61	4427.57	0	2050.70	17.61	4427.57	49.82	10905.84	21.26
42.000	4	36WF150 + 8x3/8 CP	17.61	4427.57	0	2050.70	17.61	4427.57	49.82	10905.84	21.26
42.000	5	36WF150	17.48	3447.44	0	2050.70	17.48	3447.44	43.82	8945.58	21.26
66.260	6	36WF150	17.48	3447.44	0	2050.70	17.48	3447.44	43.82	8945.58	21.26
66.260	7	36WF150 + 11x7/8 CP	17.89	6722.70	0	2050.70	17.89	6722.70	63.26	15496.09	21.26
70.760	8	36WF150 + 11x7/8 CP	17.89	6722.70	0	2050.70	17.89	6722.70	63.26	15496.09	21.26
0.000	9	36WF150 + 11x7/8 CP	17.89	6722.70	0	2050.70	17.89	6722.70	63.26	15496.09	21.26
4.500	10	36WF150 + 11x7/8 CP	17.89	6722.70	0	2050.70	17.89	6722.70	63.26	15496.09	21.26
4.500	11	36WF150	17.48	3447.44	0	2050.70	17.48	3447.44	43.82	8945.58	21.26
19.406	12	36WF150	17.48	3447.44	0	2050.70	17.48	3447.44	43.82	8945.58	21.26
19.406	13	36WF150 + 11x7/8 CP	17.89	6722.70	0	2050.70	17.89	6722.70	63.26	15496.09	21.26
65.406	14	36WF150 + 11x7/8 CP	17.89	6722.70	0	2050.70	17.89	6722.70	63.26	15496.09	21.26
65.406	15	36WF150	17.48	3447.44	0	2050.70	17.48	3447.44	43.82	8945.58	21.26
70.406	16	36WF150	17.48	3447.44	0	2050.70	17.48	3447.44	43.82	8945.58	21.26

Broadway Bridge A4649 Fatigue Analysis

Girder B

x (ft)	Point	Section	$c_{topfiber}$ in	$c_{bottomfiber}$ in	S_{xtop} in^3	$S_{xbottom}$ in^3	F_y ksi
0.000	1	36WF150	17.95	17.95	498.36	498.36	36
14.000	2	36WF150	17.95	17.95	498.36	498.36	36
14.000	3	36WF150 + 8x3/8 CP	18.20	18.20	599.22	599.22	36
42.000	4	36WF150 + 8x3/8 CP	18.20	18.20	599.22	599.22	36
42.000	5	36WF150	17.95	17.95	498.36	498.36	36
66.260	6	36WF150	17.95	17.95	498.36	498.36	36
66.260	7	36WF150 + 11x7/8 CP	18.76	18.76	826.02	826.02	36
70.760	8	36WF150 + 11x7/8 CP	18.76	18.76	826.02	826.02	36
0.000	9	36WF150 + 11x7/8 CP	18.76	18.76	826.02	826.02	36
4.500	10	36WF150 + 11x7/8 CP	18.76	18.76	826.02	826.02	36
4.500	11	36WF150	17.95	17.95	498.36	498.36	36
19.406	12	36WF150	17.95	17.95	498.36	498.36	36
19.406	13	36WF150 + 11x7/8 CP	18.76	18.76	826.02	826.02	36
65.406	14	36WF150 + 11x7/8 CP	18.76	18.76	826.02	826.02	36
65.406	15	36WF150	17.95	17.95	498.36	498.36	36
70.406	16	36WF150	17.95	17.95	498.36	498.36	36

Girder A Noncomposite Alt Run w variable girder spacing.STR

STLBRIDGE LRFD

STEEL BRIDGE DESIGN SOFTWARE

Copyright 2014 BRIDGESOFT, Inc. All Rights Reserved

STRESS OUTPUT

Title: A4649 North Approach Girder A Exterior
Input Filename: Girder A Noncomposite Alt Run w variable girder spacing
Output Filename: Girder A Noncomposite Alt Run w variable girder spacing.STR
Time:15:46:12
Date:02-13-2017
AASHTO LRFD Code: 7TH Edition

♀
A4649 North Approach Girder A Exterior 02-13-2017 15:46:12 STLBRIDGE LRFD Page 1

--- INPUT ECHO ---
Page 1

```
"2DBRIDGE I Girder"
"ENGLISH"
"A4649 North Approach Girder A Exterior"
"LRFD v61"
0
3,"HL93",8,"0",0,0,0,0,0,0,0,0
4000,150,6.5,2,2.5,490,3644,29000,8,24
1,10,0,1.5,1.25,1.5,1.75
0,0,0
1,1,1.3
0,0,1.5
1.25,1.5,1.75
1.25,1.5,1.8,1.33,1,1
1.25,1.5,1.6
1.3,1.3,1
1,2,4,0,1.423,1.423,2,0
68.458,0,0
0,0,0,0,0
71.786,0,0
0,0,0,0,0
71.1,0,0
0,0,0,0,0
0
0
0
0
1,6,34.02,34.02,0
1,52,34.02,34.02,0
1,63.958,34.02,34.02,0
1,68.458,34.02,34.02,0
2,6,12,.94,36
2,52,12,1.635,36
2,63.958,12,.94,36
2,68.458,12,1.635,36
3,6,12,.94,36
3,52,12,1.635,36
3,63.958,12,.94,36
3,68.458,12,1.635,36
4,0,4,6.667,0
4,54.339,4,8.417,0
4,68.458,4,9.542,0
5,0,0,0,0
5,54.339,0,0,0
5,68.458,0,0,0
6,0,0,0,0
6,54.339,0,0,0
6,68.458,0,0,0
7,6,0,.625,36
7,52,0,.625,36
7,63.958,0,.625,36
```

♀

--- INPUT ECHO ---

```
7,68.458,99999,.625,36
1,4.5,34.02,34.02,0
1,67.286,34.02,34.02,0
1,71.786,34.02,34.02,0
2,4.5,12,1.635,36
2,67.286,12,.94,36
2,71.786,12,1.635,36
3,4.5,12,1.635,36
3,67.286,12,.94,36
```

```
3,71.786,12,1.635,36
4,0,4,4.771,0
4,57.734,4,7.167,0
4,71.786,4,7.406,0
5,0,0,0,0
5,57.734,0,0,0
5,71.786,0,0,0
6,0,0,0,0
6,57.734,0,0,0
6,71.786,0,0,0
7,4.5,0,.625,36
7,67.286,0,.625,36
7,71.786,99999,.625,36
1,4.5,34.02,34.02,0
1,18.099,34.02,34.02,0
1,65.099,34.02,34.02,0
1,71.1,34.02,34.02,0
2,4.5,12,1.635,36
2,18.099,12,.94,36
2,65.099,12,1.75,36
2,71.1,12,.94,36
3,4.5,12,1.635,36
3,18.099,12,.94,36
3,65.099,12,1.75,36
3,71.1,12,.94,36
4,0,4,7.406,0
4,71.1,4,8.417,0
5,0,0,0,0
5,71.1,0,0,0
6,0,0,0,0
6,71.1,0,0,0
7,4.5,0,.625,36
7,18.099,0,.625,36
7,65.099,0,.625,36
7,71.1,99999,.625,36
```

♀

--- INPUT ECHO ---

--- FATIGUE REPORT ---

All Units: ksi

SPAN 1 - FATIGUE STRESS RANGE (ksi) -
(EXT - EXTREME FIBER, 4T=4*tw, 6T=6*tw)

LOCA	REBAR RANGE	-----TOP FLANGE----- EXT	4T	6T	-----BOTTOM FLANGE----- EXT	INS	4T	6T
1.0	0.00	0.00	0.00	0.00	0.00	0.00	0.00	0.00
1.087	0.00	-7.02	-5.67	-5.18	7.02	6.65	5.67	5.18
1.088	0.00	-4.50	-3.50	-3.20	4.50	4.11	3.50	3.20
1.1	0.00	-5.13	-3.99	-3.65	5.13	4.68	3.99	3.65
1.2	0.00	-8.57	-6.67	-6.09	8.57	7.82	6.67	6.09
1.3	0.00	-10.92	-8.50	-7.77	10.92	9.97	8.50	7.77
1.4	0.00	12.10	9.42	8.61	12.10	11.04	9.42	8.61
1.5	0.00	12.10	9.42	8.61	12.10	11.04	9.42	8.61
1.6	0.00	12.50	9.72	8.89	12.50	11.40	9.72	8.89
1.7	0.00	11.43	8.90	8.13	11.43	10.43	8.90	8.13
1.759	0.00	10.07	7.84	7.16	10.07	9.19	7.84	7.16
1.760	0.00	15.74	12.73	11.63	15.74	14.92	12.73	11.63
1.8	0.00	14.30	11.56	10.57	14.30	13.55	11.56	10.57
1.9	0.00	12.14	9.81	8.96	12.14	11.50	9.81	8.96
1.934	0.00	12.22	9.88	9.03	-12.22	-11.58	-9.88	-9.03
1.934	0.00	7.82	6.08	5.56	-7.82	-7.13	-6.08	-5.56
2.0	0.00	7.92	6.17	5.63	-7.92	-7.23	-6.17	-5.63

Note: For locations which do not experience tensile stresses
the fatigue stress range is output as a negative number.

♀

Page 9

--- FATIGUE REPORT ---

All Units: ksi

SPAN 2 - FATIGUE STRESS RANGE (ksi) -
(EXT - EXTREME FIBER, 4T=4*tw, 6T=6*tw)

LOCA	REBAR RANGE	TOP FLANGE EXT	TOP FLANGE 4T	TOP FLANGE 6T	BOTTOM FLANGE EXT	BOTTOM FLANGE INS	BOTTOM FLANGE 4T	BOTTOM FLANGE 6T
2.0	0.00	7.92	6.17	5.63	-7.92	-7.23	-6.17	-5.63
2.063	0.00	6.85	5.33	4.87	-6.85	-6.25	-5.33	-4.87
2.063	0.00	10.71	8.66	7.91	-10.71	-10.15	-8.66	-7.91
2.1	0.00	9.72	7.85	7.18	-9.72	-9.21	-7.85	-7.18
2.2	0.00	11.67	9.43	8.62	11.67	11.06	9.43	8.62
2.3	0.00	14.05	11.36	10.38	14.05	13.31	11.36	10.38
2.4	0.00	15.03	12.15	11.10	15.03	14.24	12.15	11.10
2.5	0.00	14.27	11.53	10.54	14.27	13.52	11.53	10.54
2.6	0.00	15.28	12.35	11.29	15.28	14.48	12.35	11.29
2.7	0.00	14.41	11.65	10.65	14.41	13.66	11.65	10.65
2.8	0.00	12.06	9.75	8.91	12.06	11.43	9.75	8.91
2.9	0.00	11.49	9.28	8.48	-11.49	-10.88	-9.28	-8.48
2.937	0.00	11.67	9.44	8.62	-11.67	-11.06	-9.44	-8.62
2.937	0.00	7.47	5.81	5.31	-7.47	-6.81	-5.81	-5.31
3.0	0.00	7.67	5.97	5.45	-7.67	-7.00	-5.97	-5.45

Note: For locations which do not experience tensile stresses
the fatigue stress range is output as a negative number.

--- FATIGUE REPORT ---

Max stress range, top & bottom flange
@ Ext: 16.36 ksi
@ 4T: 13.22 ksi

All Units: ksi

SPAN 3 - FATIGUE STRESS RANGE (ksi) -
(EXT - EXTREME FIBER, 4T=4*tw, 6T=6*tw)

LOCA	REBAR RANGE	TOP FLANGE EXT	TOP FLANGE 4T	TOP FLANGE 6T	BOTTOM FLANGE EXT	BOTTOM FLANGE INS	BOTTOM FLANGE 4T	BOTTOM FLANGE 6T
3.0	0.00	7.67	5.97	5.45	-7.67	-7.00	-5.97	-5.45
3.063	0.00	7.11	5.54	5.06	-7.11	-6.49	-5.54	-5.06
3.063	0.00	11.12	8.99	8.22	-11.12	-10.54	-8.99	-8.22
3.1	0.00	10.62	8.58	7.84	-10.62	-10.06	-8.58	-7.84
3.2	0.00	14.19	11.47	10.49	14.19	13.45	11.47	10.49
3.254	0.00	16.36	13.22	12.08	16.36	15.50	13.22	12.08
3.255	0.00	9.88	7.64	6.98	9.88	8.95	7.64	6.98
3.3	0.00	10.96	8.48	7.75	10.96	9.94	8.48	7.75
3.4	0.00	12.25	9.47	8.66	12.25	11.10	9.47	8.66
3.5	0.00	12.12	9.37	8.56	12.12	10.99	9.37	8.56
3.6	0.00	-12.16	-9.40	-8.59	12.16	11.03	9.40	8.59
3.7	0.00	-11.16	-8.63	-7.89	11.16	10.12	8.63	7.89
3.8	0.00	-8.78	-6.79	-6.21	8.78	7.96	6.79	6.21
3.9	0.00	-5.88	-4.55	-4.16	5.88	5.33	4.55	4.16
3.915	0.00	-4.97	-3.85	-3.52	4.97	4.51	3.85	3.52
3.916	0.00	-8.22	-6.64	-6.07	8.22	7.79	6.64	6.07
4.0	0.00	0.00	0.00	0.00	0.00	0.00	0.00	0.00

Girder A Noncomposite Alt Run w variable girder spacing.STR
Note: For locations which do not experience tensile stresses
the fatigue stress range is output as a negative number.
♀

Girder A Fully Composite Alt Run w variable girder spacing.STR

STLBRIDGE LRFD

STEEL BRIDGE DESIGN SOFTWARE

Copyright 2014 BRIDGESOFT, Inc. All Rights Reserved

STRESS OUTPUT

Title: A4649 North Approach Girder A Exterior
Input Filename: Girder A Fully Composite Alt Run w variable girder spacing
Output Filename: Girder A Fully Composite Alt Run w variable girder spacing.STR
Time:15:48:58
Date:02-13-2017
AASHTO LRFD Code: 7TH Edition

♀
A4649 North Approach Girder A Exterior 02-13-2017 15:48:58 STLBRIDGE LRFD Page 1

--- INPUT ECHO ---
Page 1

```
       Girder A Fully Composite Alt Run w variable girder spacing.STR
"2DBRIDGE I Girder"
"ENGLISH"
"A4649 North Approach Girder A Exterior"
"LRFD v61"
0
3,"HL93",8,"0",0,0,0,0,0,0,0,0
4000,150,6.5,2,2.5,490,3644,29000,8,24
3,10,0,1.5,1.25,1.5,1.75
0,0,0
1,1,1.3
0,0,1.5
1.25,1.5,1.75
1.25,1.5,1.8,1.33,1,1
1.25,1.5,1.6
1.3,1.3,1
1,2,4,0,1.423,1.423,2,0
68.458,0,0
0,0,0,0,0
71.786,0,0
0,0,0,0,0
71.1,0,0
0,0,0,0,0
0
0
0
0
1,6,34.02,34.02,0
1,52,34.02,34.02,0
1,63.958,34.02,34.02,0
1,68.458,34.02,34.02,0
2,6,12,.94,36
2,52,12,1.635,36
2,63.958,12,.94,36
2,68.458,12,1.635,36
3,6,12,.94,36
3,52,12,1.635,36
3,63.958,12,.94,36
3,68.458,12,1.635,36
4,0,4,6.667,0
4,54.339,4,8.417,0
4,68.458,4,9.542,0
5,0,0,0,0
5,54.339,0,0,0
5,68.458,0,0,0
6,0,0,0,0
6,54.339,0,0,0
6,68.458,0,0,0
7,6,0,.625,36
7,52,0,.625,36
7,63.958,0,.625,36
♀
 A4649 North Approach Girder A Exterior  02-13-2017  15:48:58  STLBRIDGE LRFD
Page  2
                                --- INPUT ECHO ---
7,68.458,99999,.625,36
1,4.5,34.02,34.02,0
1,67.286,34.02,34.02,0
1,71.786,34.02,34.02,0
2,4.5,12,1.635,36
2,67.286,12,.94,36
2,71.786,12,1.635,36
3,4.5,12,1.635,36
3,67.286,12,.94,36
                                      Page 2
```

```
        Girder A Fully Composite Alt Run w variable girder spacing.STR
3,71.786,12,1.635,36
4,0,4,4.771,0
4,57.734,4,7.167,0
4,71.786,4,7.406,0
5,0,0,0,0
5,57.734,0,0,0
5,71.786,0,0,0
6,0,0,0,0
6,57.734,0,0,0
6,71.786,0,0,0
7,4.5,0,.625,36
7,67.286,0,.625,36
7,71.786,99999,.625,36
1,4.5,34.02,34.02,0
1,18.099,34.02,34.02,0
1,65.099,34.02,34.02,0
1,71.1,34.02,34.02,0
2,4.5,12,1.635,36
2,18.099,12,.94,36
2,65.099,12,1.75,36
2,71.1,12,.94,36
3,4.5,12,1.635,36
3,18.099,12,.94,36
3,65.099,12,1.75,36
3,71.1,12,.94,36
4,0,4,7.406,0
4,71.1,4,8.417,0
5,0,0,0,0
5,71.1,0,0,0
6,0,0,0,0
6,71.1,0,0,0
7,4.5,0,.625,36
7,18.099,0,.625,36
7,65.099,0,.625,36
7,71.1,99999,.625,36
♀
     A4649 North Approach Girder A Exterior  02-13-2017  15:48:58  STLBRIDGE LRFD
Page  3
                                    --- INPUT ECHO ---
```

--- FATIGUE REPORT ---

All Units: ksi

SPAN 1 - FATIGUE STRESS RANGE (ksi) -
(EXT - EXTREME FIBER, 4T=4*tw, 6T=6*tw)

LOCA	REBAR RANGE	-----TOP FLANGE----- EXT	4T	6T	-----BOTTOM FLANGE----- EXT	INS	4T	6T
1.0	0.00	0.00	0.00	0.00	0.00	0.00	0.00	0.00
1.087	-2.56	-2.33	-1.57	-1.29	5.60	5.39	4.84	4.56
1.088	-2.00	-1.94	-1.30	-1.10	3.87	3.61	3.22	3.03
1.1	-2.28	-2.21	-1.48	-1.25	4.41	4.12	3.67	3.45
1.2	-3.89	-3.78	-2.54	-2.17	7.40	6.91	6.16	5.78
1.3	-5.04	-4.90	-3.31	-2.83	9.40	8.77	7.81	7.33
1.4	-5.78	-5.63	-3.84	-3.30	10.47	9.76	8.68	8.14
1.5	-6.10	-5.94	-4.11	-3.56	10.53	9.80	8.70	8.15
1.6	-6.56	-6.39	-4.47	-3.89	10.91	10.16	9.00	8.42
1.7	6.51	6.35	4.53	3.98	10.08	9.36	8.26	7.71
1.759	6.23	6.08	4.41	3.91	8.98	8.32	7.31	6.80
1.760	9.20	8.55	6.45	5.68	13.40	12.83	11.30	10.54
1.8	9.08	8.47	6.47	5.75	12.36	11.81	10.36	9.64
1.9	9.55	8.97	7.07	6.38	-10.84	-10.32	-8.94	-8.25
1.934	10.01	9.41	7.44	6.72	-11.13	-10.59	-9.16	-8.45
1.934	6.36	6.23	4.73	4.28	-7.26	-6.67	-5.76	-5.31
2.0	6.87	6.73	5.14	4.66	-7.60	-6.97	-6.01	-5.53

Note: For locations which do not experience tensile stresses
the fatigue stress range is output as a negative number.

♀

--- FATIGUE REPORT ---

All Units: ksi

SPAN 2 - FATIGUE STRESS RANGE (ksi) -
(EXT - EXTREME FIBER, 4T=4*tw, 6T=6*tw)

LOCA	REBAR RANGE	-----TOP FLANGE----- EXT	4T	6T	-----BOTTOM FLANGE----- EXT	INS	4T	6T
2.0	7.05	6.91	5.29	4.81	-7.64	-7.00	-6.03	-5.54
2.063	6.03	5.91	4.51	4.09	-6.67	-6.12	-5.27	-4.85
2.063	9.48	8.91	7.08	6.41	-10.24	-9.73	-8.40	-7.73
2.1	8.49	7.98	6.32	5.72	-9.33	-8.87	-7.67	-7.07
2.2	8.33	7.78	6.01	5.37	10.69	10.20	8.92	8.28
2.3	8.23	7.64	5.72	5.03	12.37	11.85	10.45	9.76
2.4	7.66	7.07	5.16	4.46	12.86	12.34	10.95	10.26
2.5	6.74	6.20	4.45	3.81	12.12	11.64	10.36	9.73
2.6	7.87	7.26	5.30	4.59	13.17	12.63	11.21	10.50
2.7	8.48	7.87	5.89	5.17	12.82	12.28	10.83	10.11
2.8	8.68	8.11	6.25	5.58	11.24	10.73	9.39	8.71
2.9	9.78	9.19	7.28	6.58	-10.80	-10.28	-8.89	-8.19
2.937	10.16	9.55	7.58	6.86	-11.03	-10.49	-9.06	-8.34
2.937	6.44	6.30	4.81	4.36	-7.18	-6.59	-5.68	-5.23
3.0	6.80	6.66	5.10	4.63	-7.41	-6.79	-5.85	-5.38

Note: For locations which do not experience tensile stresses
the fatigue stress range is output as a negative number.

--- FATIGUE REPORT ---

Max stress range, top flange
@ Ext: 9.55 ksi
@ 4T: 7.58 ksi

Max stress range, bottom flange
@ Ext: 13.66 ksi
@ 4T: 11.54 ksi

All Units: ksi

SPAN 3 - FATIGUE STRESS RANGE (ksi) -
(EXT - EXTREME FIBER, 4T=4*tw, 6T=6*tw)

LOCA	REBAR RANGE	-----TOP FLANGE----- EXT	4T	6T	-----BOTTOM FLANGE----- EXT	INS	4T	6T
3.0	6.80	6.66	5.10	4.63	-7.41	-6.79	-5.85	-5.38
3.063	6.01	5.88	4.48	4.06	-6.73	-6.18	-5.33	-4.91
3.063	9.46	8.89	7.05	6.38	-10.34	-9.83	-8.49	-7.82
3.1	8.70	8.17	6.46	5.83	-9.71	-9.24	-8.00	-7.38
3.2	8.92	8.32	6.36	5.65	12.06	11.53	10.11	9.40
3.254	9.14	8.49	6.37	5.60	13.66	13.08	11.54	10.76
3.255	5.95	5.86	4.21	3.72	8.70	8.02	7.05	6.56
3.3	6.21	6.11	4.33	3.80	9.60	8.87	7.82	7.30
3.4	-6.35	-6.24	-4.33	-3.77	10.63	9.85	8.72	8.16
3.5	-5.98	-5.87	-4.02	-3.47	10.48	9.72	8.63	8.08
3.6	-5.67	-5.56	-3.74	-3.21	10.47	9.73	8.66	8.12
3.7	-4.97	-4.88	-3.24	-2.76	9.58	8.91	7.94	7.46
3.8	-3.79	-3.72	-2.44	-2.07	7.54	7.02	6.27	5.89
3.9	-2.38	-2.33	-1.52	-1.28	4.86	4.53	4.05	3.81
3.915	-2.01	-1.97	-1.28	-1.08	4.11	3.83	3.42	3.22
3.916	-2.63	-2.37	-1.55	-1.25	6.24	6.01	5.41	5.11
4.0	0.00	0.00	0.00	0.00	0.00	0.00	0.00	0.00

Girder A Fully Composite Alt Run w variable girder spacing.STR
Note: For locations which do not experience tensile stresses
the fatigue stress range is output as a negative number.
♀

GIRDER B NONCOMPOSITE VARIED SPACING.STR

STLBRIDGE LRFD

STEEL BRIDGE DESIGN SOFTWARE

Copyright 2014 BRIDGESOFT, Inc. All Rights Reserved

STRESS OUTPUT

Title: A4649 Broadway Girder B North Approach
Input Filename: GIRDER B NONCOMPOSITE VARIED SPACING
Output Filename: GIRDER B NONCOMPOSITE VARIED SPACING.STR
Time:15:52:04
Date:02-13-2017
AASHTO LRFD Code: 7TH Edition

♀
A4649 Broadway Girder B North Approach 02-13-2017 15:52:04 STLBRIDGE LRFD
Page 1

--- INPUT ECHO ---

"2DBRIDGE I Girder"
"ENGLISH"

Page 1

```
"A4649 Broadway Girder B North Approach"
"LRFD v61"
0
2,"HL93",8,"0",0,0,0,0,0,0,0,0
4000,150,6.5,2,2.5,490,3644,29000,8,24
1,10,0,1.5,1.25,1.5,1.75
0,0,0
1,1,1.3
0,0,1.5
1.25,1.5,1.75
1.25,1.55,1.8,1.33,1,1
1.25,1.5,1.6
1.3,1.3,1
7,1,4,0,0,0,1,0
70.76,0,0
0,0,0,0,0
70.406,0,0
0,0,0,0,0
0
0
0
0
1,14,34.02,34.02,0
1,42,34.02,34.02,0
1,66.26,34.02,34.02,0
1,70.76,34.02,34.02,0
2,14,12,.94,36
2,42,12,1.19,36
2,66.26,12,.94,36
2,70.76,12,1.75,36
3,14,12,.94,36
3,42,12,1.19,36
3,66.26,12,.94,36
3,70.76,12,1.75,36
4,0,4.771,4.771,0
4,56.823,7.167,7.167,0
4,70.76,7.406,7.406,0
5,0,0,0,0
5,56.823,0,0,0
5,70.76,0,0,0
6,0,0,0,0
6,56.823,0,0,0
6,70.76,0,0,0
7,14,0,.625,36
7,42,0,.625,36
7,66.26,0,.625,36
7,70.76,99999,.625,36
1,4.5,34.02,34.02,0
♀
```


--- INPUT ECHO ---

```
1,19.406,34.02,34.02,0
1,65.406,34.02,34.02,0
1,70.406,34.02,34.02,0
2,4.5,12,1.75,36
2,19.406,12,.94,36
2,65.406,12,1.75,36
2,70.406,12,.94,36
3,4.5,12,1.75,36
3,19.406,12,.94,36
3,65.406,12,1.75,36
3,70.406,12,.94,36
```

```
    4,0,7.406,7.406,0
    4,70.406,8.417,8.417,0
    5,0,0,0,0
    5,70.406,0,0,0
    6,0,0,0,0
    6,70.406,0,0,0
    7,4.5,0,.625,36
    7,19.406,0,.625,36
    7,65.406,0,.625,36
    7,70.406,99999,.625,36
♀
```


--- INPUT ECHO ---

```
                        --- FATIGUE REPORT ---

All Units: ksi

 SPAN  2         - FATIGUE STRESS RANGE (ksi) -
            (EXT - EXTREME FIBER, 4T=4*tw, 6T=6*tw)

       REBAR  -----TOP FLANGE-----    -----BOTTOM FLANGE-----
                                 Page 7
```

GIRDER B NONCOMPOSITE VARIED SPACING.STR

LOCA	RANGE	EXT	4T	6T	EXT	INS	4T	6T
2.0	0.00	4.29	3.32	3.03	-4.29	-3.89	-3.32	-3.03
2.064	0.00	4.74	3.66	3.35	-4.74	-4.30	-3.66	-3.35
2.064	0.00	7.86	6.35	5.80	-7.86	-7.44	-6.35	-5.80
2.1	0.00	8.27	6.69	6.11	-8.27	-7.84	-6.69	-6.11
2.2	0.00	10.91	8.82	8.06	10.91	10.34	8.82	8.06
2.275	0.00	13.17	10.65	9.73	13.17	12.48	10.65	9.73
2.276	0.00	7.95	6.15	5.62	7.95	7.21	6.15	5.62
2.3	0.00	8.39	6.49	5.93	8.39	7.61	6.49	5.93
2.4	0.00	9.28	7.18	6.56	9.28	8.42	7.18	6.56
2.5	0.00	-9.13	-7.06	-6.45	9.13	8.28	7.06	6.45
2.6	0.00	-9.11	-7.05	-6.44	9.11	8.26	7.05	6.44
2.7	0.00	-8.30	-6.42	-5.87	8.30	7.53	6.42	5.87
2.8	0.00	-6.58	-5.09	-4.65	6.58	5.97	5.09	4.65
2.9	0.00	-3.79	-2.93	-2.68	3.79	3.44	2.93	2.68
2.929	0.00	-2.70	-2.09	-1.91	2.70	2.45	2.09	1.91
2.929	0.00	-4.45	-3.60	-3.29	4.45	4.22	3.60	3.29
3.0	0.00	0.00	0.00	0.00	0.00	0.00	0.00	0.00

Note: For locations which do not experience tensile stresses
the fatigue stress range is output as a negative number.

♀

Max stress range, top & bottom flange
@ Ext: 13.17 ksi
@ 4T: 10.65 ksi

GIRDER B FULLY COMPOSITE VARIED SPACING.STR

STLBRIDGE LRFD

STEEL BRIDGE DESIGN SOFTWARE

Copyright 2014 BRIDGESOFT, Inc. All Rights Reserved

STRESS OUTPUT

Title: A4649 Broadway Girder B North Approach
Input Filename: GIRDER B FULLY COMPOSITE VARIED SPACING
Output Filename: GIRDER B FULLY COMPOSITE VARIED SPACING.STR
Time:15:54:11
Date:02-13-2017
AASHTO LRFD Code: 7TH Edition

♀
A4649 Broadway Girder B North Approach 02-13-2017 15:54:11 STLBRIDGE LRFD
Page 1

--- INPUT ECHO ---

"2DBRIDGE I Girder"
"ENGLISH"

Page 1

```
"A4649 Broadway Girder B North Approach"
"LRFD v61"
0
2,"HL93",8,"0",0,0,0,0,0,0,0,0
4000,150,6.5,2,2.5,490,3644,29000,8,24
3,10,0,1.5,1.25,1.5,1.75
0,0,0
1,1,1.3
0,0,1.5
1.25,1.5,1.75
1.25,1.55,1.8,1.33,1,1
1.25,1.5,1.6
1.3,1.3,1
7,1,4,0,0,0,1,0
70.76,0,0
0,0,0,0,0
70.406,0,0
0,0,0,0,0
0
0
0
0
1,14,34.02,34.02,0
1,42,34.02,34.02,0
1,66.26,34.02,34.02,0
1,70.76,34.02,34.02,0
2,14,12,.94,36
2,42,12,1.19,36
2,66.26,12,.94,36
2,70.76,12,1.75,36
3,14,12,.94,36
3,42,12,1.19,36
3,66.26,12,.94,36
3,70.76,12,1.75,36
4,0,4.771,4.771,0
4,56.823,7.167,7.167,0
4,70.76,7.406,7.406,0
5,0,0,0,0
5,56.823,0,0,0
5,70.76,0,0,0
6,0,0,0,0
6,56.823,0,0,0
6,70.76,0,0,0
7,14,0,.625,36
7,42,0,.625,36
7,66.26,0,.625,36
7,70.76,99999,.625,36
1,4.5,34.02,34.02,0
♀
```


--- INPUT ECHO ---

```
1,19.406,34.02,34.02,0
1,65.406,34.02,34.02,0
1,70.406,34.02,34.02,0
2,4.5,12,1.75,36
2,19.406,12,.94,36
2,65.406,12,1.75,36
2,70.406,12,.94,36
3,4.5,12,1.75,36
3,19.406,12,.94,36
3,65.406,12,1.75,36
3,70.406,12,.94,36
```

```
    4,0,7.406,7.406,0
    4,70.406,8.417,8.417,0
    5,0,0,0,0
    5,70.406,0,0,0
    6,0,0,0,0
    6,70.406,0,0,0
    7,4.5,0,.625,36
    7,19.406,0,.625,36
    7,65.406,0,.625,36
    7,70.406,99999,.625,36
♀
```


--- INPUT ECHO ---

--- FATIGUE REPORT ---

All Units: ksi

SPAN 1 - FATIGUE STRESS RANGE (ksi) -
(EXT - EXTREME FIBER, 4T=4*tw, 6T=6*tw)

LOCA	REBAR RANGE	-----TOP FLANGE----- EXT	4T	6T	-----BOTTOM FLANGE----- EXT	INS	4T	6T
1.0	0.00	0.00	0.00	0.00	0.00	0.00	0.00	0.00
1.1	-1.94	-1.77	-1.22	-1.02	4.00	3.85	3.45	3.25
1.198	-3.34	-3.05	-2.10	-1.76	6.81	6.55	5.87	5.52
1.198	-2.99	-2.80	-1.92	-1.62	5.85	5.57	4.98	4.68
1.2	-3.01	-2.82	-1.94	-1.64	5.90	5.62	5.02	4.72
1.3	-3.95	-3.70	-2.55	-2.16	7.63	7.26	6.48	6.09
1.4	-4.54	-4.26	-2.96	-2.53	8.52	8.11	7.23	6.79
1.5	-4.86	-4.57	-3.23	-2.77	8.65	8.22	7.31	6.86
1.593	5.21	4.91	3.51	3.04	8.84	8.39	7.45	6.98
1.594	6.02	5.55	4.03	3.47	10.37	9.95	8.84	8.29
1.6	6.06	5.58	4.05	3.50	10.38	9.96	8.85	8.30
1.7	6.21	5.76	4.29	3.75	9.62	9.22	8.15	7.61
1.8	6.17	5.76	4.44	3.95	8.08	7.72	6.75	6.27
1.9	6.85	6.43	5.09	4.60	-7.59	-7.23	-6.25	-5.76
1.936	7.07	6.65	5.31	4.82	-7.39	-7.03	-6.05	-5.56
1.937	4.16	4.11	3.13	2.84	-4.52	-4.12	-3.54	-3.26
2.0	4.31	4.25	3.29	3.00	-4.25	-3.85	-3.29	-3.00

Note: For locations which do not experience tensile stresses
the fatigue stress range is output as a negative number.

A4649 Broadway Girder B North Approach02-13-2017 15:54:11 Page 9

--- FATIGUE REPORT ---

All Units: ksi

SPAN 2 - FATIGUE STRESS RANGE (ksi) -
(EXT - EXTREME FIBER, 4T=4*tw, 6T=6*tw)

REBAR -----TOP FLANGE----- -----BOTTOM FLANGE-----

GIRDER B FULLY COMPOSITE VARIED SPACING.STR

LOCA	RANGE	EXT	4T	6T	EXT	INS	4T	6T
2.0	4.31	4.25	3.29	3.00	-4.25	-3.85	-3.29	-3.00
2.064	4.19	4.13	3.14	2.85	-4.57	-4.17	-3.59	-3.30
2.064	7.10	6.68	5.33	4.83	-7.47	-7.10	-6.11	-5.62
2.1	6.90	6.48	5.12	4.62	-7.71	-7.34	-6.35	-5.86
2.2	6.84	6.38	4.86	4.31	9.43	9.01	7.91	7.36
2.275	6.88	6.36	4.70	4.09	11.01	10.55	9.34	8.74
2.276	4.47	4.40	3.10	2.72	7.03	6.50	5.74	5.36
2.3	4.53	4.45	3.11	2.72	7.38	6.83	6.04	5.64
2.4	-4.50	-4.42	-3.01	-2.59	8.05	7.47	6.64	6.23
2.5	-4.15	-4.07	-2.72	-2.32	7.87	7.31	6.52	6.12
2.6	-3.83	-3.75	-2.44	-2.06	7.78	7.24	6.47	6.09
2.7	-3.30	-3.23	-2.06	-1.72	7.07	6.59	5.91	5.56
2.8	-2.48	-2.43	-1.52	-1.26	5.57	5.20	4.66	4.40
2.9	-1.39	-1.36	-0.83	-0.68	3.25	3.04	2.73	2.58
2.929	-0.99	-0.96	-0.59	-0.48	2.31	2.16	1.94	1.83
2.929	-1.29	-1.15	-0.70	-0.54	3.50	3.38	3.06	2.89
3.0	0.00	0.00	0.00	0.00	0.00	0.00	0.00	0.00

Note: For locations which do not experience tensile stresses
the fatigue stress range is output as a negative number.

♀

Max stress range, top flange
@ Ext: 6.68 ksi
@ 4T: 5.33 ksi

Max stress range, bottom flange
@ Ext: 11.01 ksi
@ 4T: 9.34 ksi

This page is intentionally left blank.

Appendix J. A4646 Girder Fatigue Analysis

This page is intentionally left blank.

Broadway Bridge Fatigue Details

Southbound North Approach

- Top and Bottom Flange Welded Cover Plate Terminations (DSCF1109)

- Webs of Stiffeners Welded to Webs of Girders

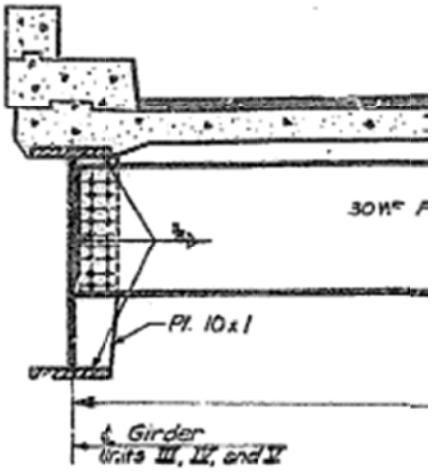

Southbound North Approach Continued

- Prematurely terminated flanges at hinge locations

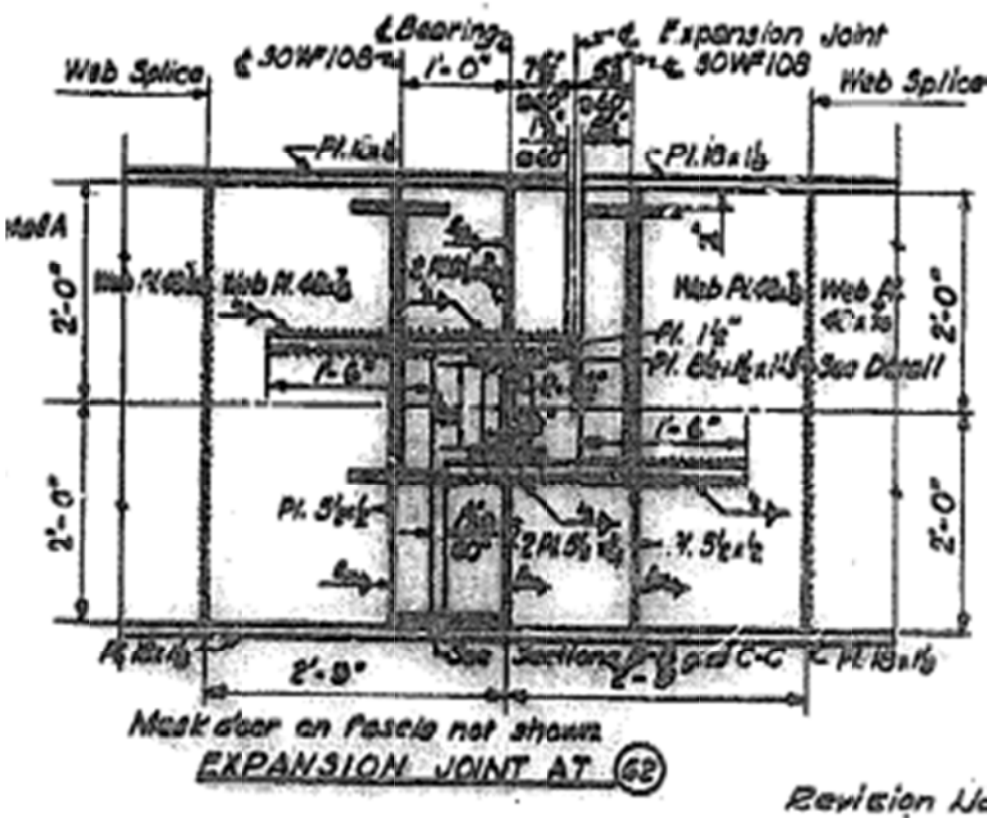

- Bolts at field splices

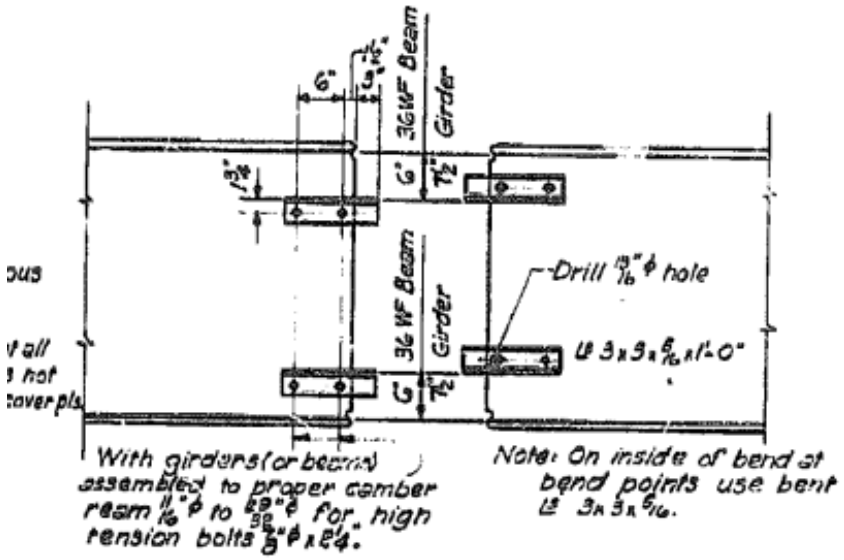

Southbound North Approach Continued

- Shear connectors at top flange if made composite
- Miscellaneous open holes and welds in girders from past attachments (DSCF1006, DSCF1085, DSCF1417)

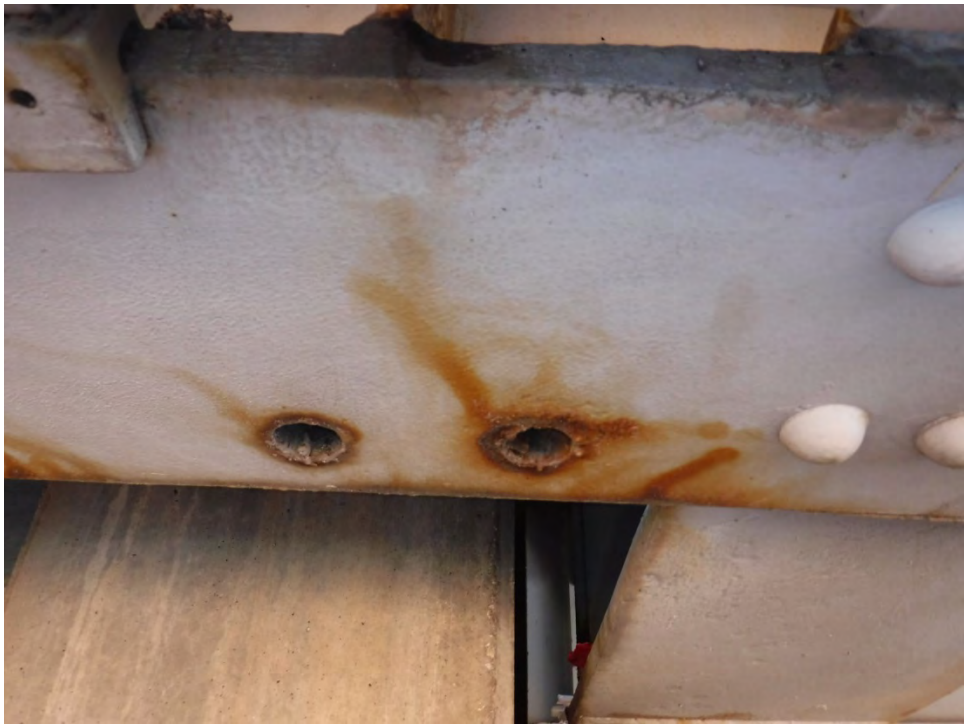

Southbound North Approach Continued

Southbound North Approach Continued

- Floorbeam connections at bend points

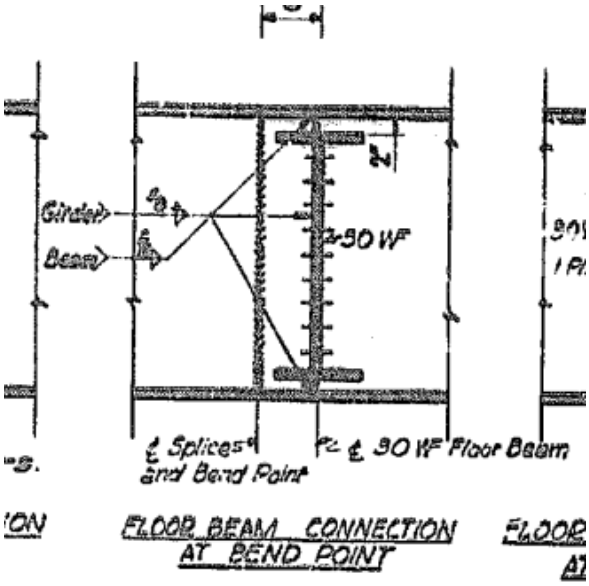

- Transverse welds at girder splices

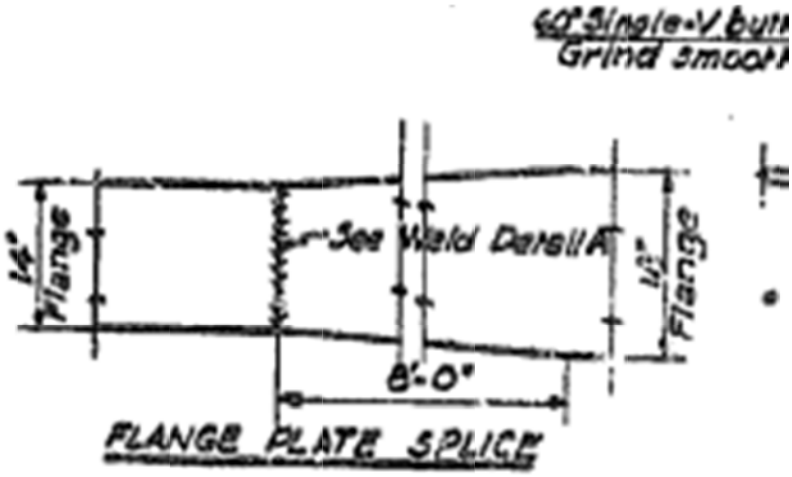

Project:	BROADWAY BRIDGE	Computed:	KG	Date:	12/22/16
Subject:	FATIGUE ANALYSIS	Checked:	MMD	Date:	2/3/17
Task:	STLBRIDGE	Page:	1	of:	STLBRIDGE
Job #:	133-10047358	No:			

SOUTHBOUND - NORTH APPROACH : A4646 (USE 1955 DATE FOR UNKNOWN PROPERTIES)

- RUN LINE GIRDER IN STLBRIDGE : PICK 1 GIRDER, USE SPAN LENGTHS THAT ARE THE MOST CONSERVATIVE THAT OCCUR WITHIN THE BRIDGE LENGTH CONSECUTIVELY.

- HAND CALCULATE DISTRIBUTION FACTORS, STLBRIDGE DOES NOT CALCULATE DISTRIBUTION FACTORS FOR ≤ 3 GIRDER CROSS-SECTIONS.

- USE WEST GIRDER, DUE TO SLIGHT CURVE, ALL SPAN LENGTHS ARE EQUAL TO OR SLIGHTLY LONGER THAN EAST GIRDER.

STLBRIDGE INPUTS :

TITLE : BROADWAY A4646 WEST GIRDER
UNITS : ENGLISH

CONCRETE : $f'_c = 4{,}000$ psi

$$E_c = 33{,}000(1.0)(0.145)^{1.5}\sqrt{4}$$
$$= 3644.92 \text{ ksi}$$

DENSITY = 150 pcf

$$n = \frac{29000}{3644.9} = 8.09$$

$$3n = 24.57$$

LOAD COMBINATIONS : FATIGUE LL+IM : LF = 1.5
(THE GOAL IS TO GET INFINITE LIFE
∴ USE FATIGUE I)

Project:	BROADWAY BRIDGE	Computed:	KG	Date:	12/29/16
Subject:	FATIGUE ANALYSIS	Checked:	MMD	Date:	2/3/16
Task:	STLBRIDGE	Page:	2	of:	STLBRIDGE
Job #:	133-10047358	No:			

NUMBER OF SPANS = 17

∴ STLBRIDGE ONLY ACCOMODATES UP TO 9 SPANS
∴ RUN UNITS SEPERATELY UP TO HINGE LOCATIONS
RUN UNITS 1, 3, AND 4 SEPERATELY

UNITS

UNIT 1: SPAN 1 = 38'-2 3/16" = 38.182'
SPAN 2 = 47'-0 9/16" = 47.047'
SPAN 3 = 47'-0" = 47'
SPAN 4 TO HINGE 1 = 6'-6" = 6.5'

UNIT 4:
HINGE 3 TO SPAN 10 = 10'-0"
SPAN 10 = 81'-9 1/16" = 81.755'
SPAN 11 TO HINGE 4
= 62'-6 15/16" = 62.578'

UNIT 3: HINGE 2 TO SPAN 7 = 6'-6" = 6.5'
SPAN 7 = 47'-0" = 47'
SPAN 8 = 54'-0" = 54'
SPAN 9 TO HINGE 3 = 44'-0 15/16" = 44.078'

DECK: THICKNESS = 7 1/4"

(USE MIN, TAPERS TO 12" FROM TOP OF SLAB TO BELOW TOP FLANGE AT GIRDERS TO INCLUDE HAUNCH)

HAUNCH THICKNESS = 12" - (7 1/4" SLAB)
= 4.75"

INTEGRAL WEARING SURFACE = 2 1/2" ASPHALT CONCRETE WEARING SURFACE
(NOT CONSIDERED EFFECTIVE FOR PROPERTY CALCULATIONS)

Project:	BROADWAY BRIDGE	Computed:	KG	Date:	12/29/16
Subject:	FATIGUE ANALYSIS	Checked:	MMD	Date:	2/3/16
Task:	STLBRIDGE	Page:	3	of:	STLBRIDGE
Job #:	133-10047358	No:			

TYPE OF GIRDER : I-GIRDER
NO OF GIRDERS : 2 GIRDERS (USE 3 IN STLBRIDGE)
EXTERIOR

NO LANES : 24'-0" CURB TO CURB @ SECTION A-A ON PLANS
∴ 24'/12' DESIGN LANE = 2 DESIGN LANES

DIST. CURBLINE TO EXTERIOR GIRDER (F_L) = -0.5' (SEE BELOW)

TYPICAL DISTANCE BETWEEN GIRDERS = 25' (MINIMUM TO PRODUCE GREATEST 1 LANE DF)

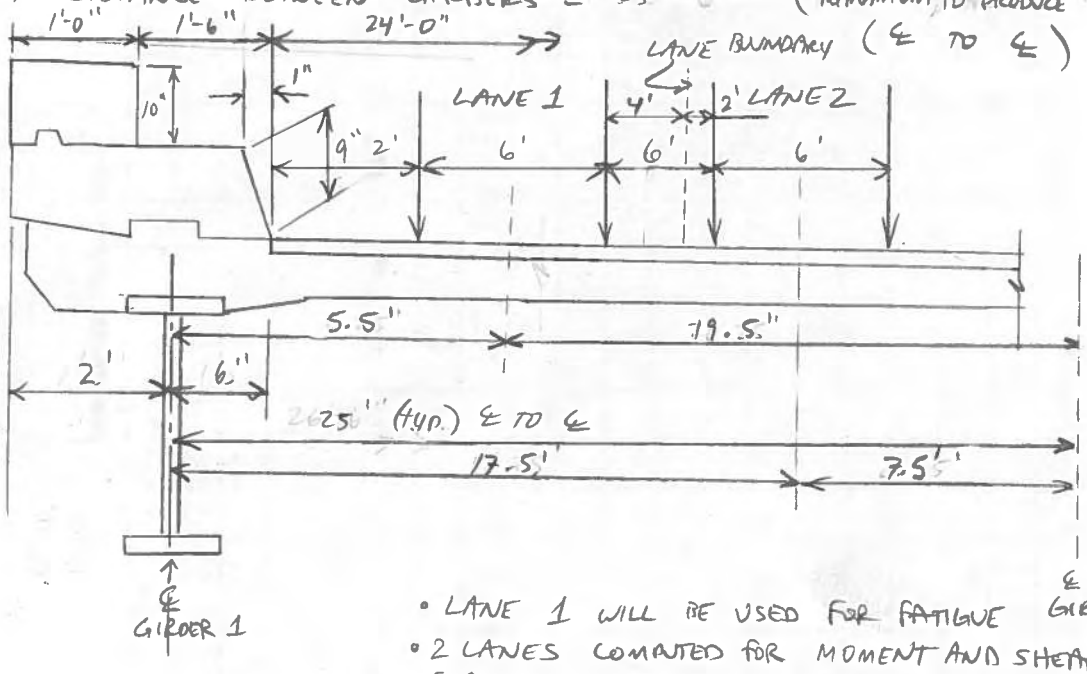

- LANE 1 WILL BE USED FOR FATIGUE
- 2 LANES COMPUTED FOR MOMENT AND SHEAR STRENGTH INPUTS ONLY (WILL NOT BE USED IN FINAL FATIGUE ANALYSIS)

SUPPORT SKEW ANGLE : USE 0°

FIND DISTRIBUTION FACTORS FOR ONE & TWO LANES LOADED : LEVER RULE

ONE LANE : $\Sigma M_2 = 0$: $1(19.5')(1.2\ MPF) - DF_1(25) = 0$
$DF_1 = 0.936$ (INCLUDES MPF) RRF = 2 WHEELS × 0.936 = 1.872

TWO LANES : $\Sigma M_2 = 0$: $1(19.5')(1.0\ MPF) + 1(7.5')(1.0\ MPF) - DF_2(25.5) = 0$
$DF_2 = 1.06$ (INCLUDES MPF) RRF = 2 WHEELS × 1.06 = 2.12

NON-COMPOSITE THROUGHOUT

Project:	BROADWAY BRIDGE	Computed:	KG	Date:	12/29/16
Subject:	FATIGUE ANALYSIS	Checked:	MMD	Date:	2/3/16
Task:	STLBRIDGE	Page:	4	of:	STLBRIDGE
Job #:	133-10047358	No:			

FOR INFO ONLY

AASHTO LIVE LOAD : HL-93 (DEFAULT)
VARIABLE AXLE SPACING INCREMENT : 8 ft (DEFAULT)

CALCULATE ADDITIONAL BARRIER LOAD FOR ONE GIRDER (DC2)

CONCRETE : AREA $\approx (2'\text{-}6'')(11\tfrac{3}{8}'') + (4\tfrac{1}{2}'')(10'') + (11\tfrac{5}{8}'')(12'')$
$\approx 2.37\ ft^2 + 0.3125\ ft^2 + 0.969\ ft^2$
$\approx 3.65\ ft^2$ (CONSERVATIVE SLIGHTLY)

$3.65\ ft^2 \times 0.150\ k/ft^3 = 0.55\ k/ft$

HANDRAIL : ~ 6" O.D PIPE, t = 5/16", USE HSS 6 X 0.312, w = 19 lb/ft
~ 5" O.D PIPE, t = 5/16", USE HSS 5 X 0.312, w = 16 lb/ft

BUMP 30% FOR POSTS

$w_{RAIL} = (19 + 16)\,1.30 = 45.5\ lb/ft = 0.0455\ k/ft$

DC2 = 0.55 + 0.046
= 0.60 k/ft
= 600 lbs/ft

DEFINE AS DC2 IN CASE WE DO COMPOSITE RUNS EVEN THOUGH DEFINED AS NON-COMPOSITE

STEEL DEAD LOAD % INCREASE (DC1) = 10 % ASSUMED

- DEAD LOAD DOES NOT CONTRIBUTE TO FATIGUE.
- COMPUTED FOR INFORMATION ONLY

Project:	BROADWAY BRIDGE	Computed:	KG	Date:	1/6/17
Subject:	FATIGUE ANALYSIS	Checked:	MMD	Date:	2/3/17
Task:	STLBRIDGE	Page:	5A	of:	STLBRIDGE
Job #:	133-10047358	No:			

EFFECTIVE WIDTH

AASHTO STANDARD SPEC 17th ED. 2002 10.38.3

EFFECTIVE WIDTH SHALL NOT EXCEED:

1. 1/4 SPAN LENGTH OF GIRDER
2. ℄ TO ℄ DISTANCE OF GIRDERS
3. 12 X LEAST THICKNESS OF SLAB

USE MINIMUM SPAN

UNIT 1: $(38' - 2\ 3/16'')/4 = 9.546'$

$12 \times (7\ 1/4'') = 87'' = \underline{\underline{7.25'}}$ ← USE

DISTRIBUTION FACTORS

- FOR MOMENT AND SHEAR AND DEFLECTION, USE 2 LANES LOADED, DF = 2.12
- FOR FATIGUE MOMENT AND SHEAR, USE 1 LANE LOADED

FATIGUE DF: (NO MPF INCLUDED)

$\Sigma M_2 = 0$: $1(19.5')(1.0\ MPF) - DF_1(25) = 0$

$DF_1 = 0.78$

$\times$ 2 WHEELS

$= 1.56$ USE 1.56 WHEELS

GIRDER SPACING AND REBAR INPUT

- SINCE DECK IS NON-COMPOSITE OR FULLY COMPOSITE, EXISTING REBAR WILL NOT BE INCLUDED IN CAPACITY CALCULATIONS, THEREFORE, MAY BE LEFT AS 0 in^2

- GIRDER IS EXTERIOR SO DOUBLE GIRDER SPACING TO THE LEFT TO SIMULATE SLIGHT OVERHANG

GIRDER SPACING LEFT = 2' x 2 = 4'-0"

GIRDER SPACING RIGHT = 25'

Project:	BROADWAY BRIDGE	Computed:	KG	Date:	12/30/16
Subject:	FATIGUE ANALYSIS	Checked:	MMD	Date:	2/3/16
Task:	STLBRIDGE	Page:	6	of:	STLBRIDGE
Job #:	133-10047358	No:			

UNIT 1 GIRDER DESIGN $F_y = 36$ ksi (ASSUMED)

SPAN 1: 0 TO 28'-2 3/16" : 36WF160
28'-2 3/16" TO 33'-8 3/16" : 36 WF150
33'-8 3/16" TO 38'-2 3/16" : 36 WF150 + 1 PL 11"x 1/2" TOP & BOT

SPAN 2: 0 TO 4'-6" : 36 WF150 + 1 PL 11"x 1/2" TOP & BOT
4'-6" TO 10'-0" : 36 WF150
10'-0" TO 37'-0 9/16" : 36 WF150
37'-0 9/16" TO 42'-6 9/16" : 36 WF194
42'-6 9/16" TO 47'-0 9/16" : 36 WF194 + 1 PL 11"x 1/2" TOP & BOT

SPAN 3: 0 TO 4'-6" : 36 WF194 + 1 PL 11"x 1/2" TOP & BOT
4'-6" TO 47'-0" : 36 WF194
"SPAN" 4: 0 TO 6'-6" : 36 WF194

36 WF150 (CHECK AS PLATE GIRDER)

36 WF150 : $S_{xx} = 504 \text{ in}^3$ FROM SPREADSHEET : $S_{xx} = 497.91 \text{ in}^3$

$$\frac{504 \text{ in}^3}{497.91 \text{ in}^3} = 1.012 \approx 1.2\% \text{ CONSERVATIVE}$$

∴ INPUT WF AS PLATE GIRDERS, ALLOWS INPUT OF COVER PLATES

36WF150 + 1 PL 11x 1/2" TOP & BOTTOM

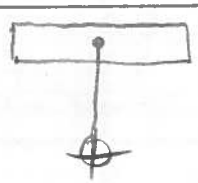

$A = (11)(1/2) = 5.5 \text{ in}^2$

$d = (1/2)/2 + (35.875)/2$
$= 18.19"$

$I = 1/12(11)(1/2)^3 = 0.115 \text{ in}^4$

ADDITIONAL $I + Ad^2$
$= 2[0.115 + (5.5)(18.19)^2]$
$= 3639.87 \text{ in}^4$

TOTAL $I = 9040 + 3639.87 \text{ in}^4$
$= 12679.87 \text{ in}^4$

$S_{xx} = 12679.87/(18.19 + 1/4") = \underline{687.63 \text{ in}^3}$

Project:	BROADWAY BRIDGE	Computed:	KG	Date:	12/30/16
Subject:	FATIGUE ANALYSIS	Checked:	MMD	Date:	2/3/16
Task:	STLBRIDGE	Page:	7	of:	STLBRIDGE
Job #:	133-10047358	No:			

∴ FOR 36WF150 + 1 PL 11" x 1/2" TOP & BOT, USE EQ PLATE GIRDER TO MATCH S_{xx} AS CLOSE AS POSSIBLE. (MANIPLATE FLANGES ONLY)

EQ:

WEB: 33.995
0.625

FLANGES: 12" x 1.418" ≈ 0.02 % CONSERVATIVE SAY OK

ITERATIVE W/ SPREADSHEET

36WF194 + 1 PL 11" x 1/2" TOP & BOT

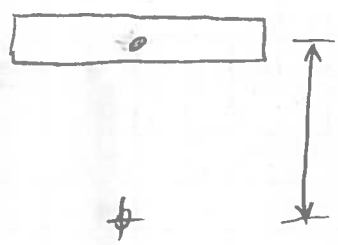

$A = 5.5 \text{ in}^2$

$d = (1/2)/2 + 36.5/2$
$= 18.5"$

$I = 1/12(11)(1/2)^2 = 0.115 \text{ in}^4$

ADDITIONAL $I + Ad^2$

$= 2\left[0.115 + 5.5(18.5)^2\right]$

$= 3764.98 \text{ in}^4$

TOTAL $I = 12100 \text{ in}^4 + 3764.98 \text{ in}^4$
$= 15864.98 \text{ in}^4$

$S_{xx} = 15864.98 \text{ in}^4 / (36.5/2 + 1/2)$
$= 846.13 \text{ in}^3$

EQ: WEB: 36.5 − 2(1.26) = 33.98 x 0.765" (ITERATIVE W/ SPREADSHEET)
FLANGES: 12.1 x 1.725" ≈ 0.12 % CONSERVATIVE, SAY OK

Broadway Bridge A4646 Fatigue Analysis

Top Flange

	Sxx	% Conservative	t_{tf}	b_{tf}	A_{tf}	y_{bar}	Ay_{bar}	I_{tf}
	in^3		in	in	in^2	in	in^3	in^4
36WF150	504.00	1.13	0.940	12.0	11.28	35.43	399.65	0.83
36WF150 + 11" x 1/2" Cover Plate	689.13	0.02	1.412	12.0	16.94	36.14	612.32	2.82
36WF160	542.00	1.50	1.020	12.0	12.24	35.49	434.40	1.06
36WF194	664.00	1.22	1.260	12.1	15.25	35.87	546.87	2.02
36WF194 + 11" x 1/2" Cover Plate	846.13	0.12	1.725	12.1	20.87	36.57	763.26	5.18

Broadway Bridge A4646 Fatigue Analysis

	Web					
	t_{web}	D_{web}	A_{web}	y_{bar}	Ay_{bar}	I_{web}
	in	in	in^2	in	in^3	in^4
36WF150	0.625	34.02	21.263	17.95	381.66	2050.70
36WF150 + 11" x 1/2" Cover Plate	0.625	34.02	21.263	18.42	391.70	2050.70
36WF160	0.650	33.96	22.074	18.00	397.33	2121.46
36WF194	0.765	33.98	25.995	18.25	474.40	2501.21
36WF194 + 11" x 1/2" Cover Plate	0.765	33.98	25.995	18.72	486.49	2501.21

Broadway Bridge A4646 Fatigue Analysis

	Bottom Flange					
	t_{bf}	b_{bf}	A_{bf}	y_{bar}	Ay_{bar}	I_{bf}
	in	in	in^2	in	in^3	in^4
36WF150	0.940	12.0	11.28	0.47	5.30	0.83
36WF150 + 11" x 1/2" Cover Plate	1.412	12.0	16.94	0.71	11.96	2.82
36WF160	1.020	12.0	12.24	0.51	6.24	1.06
36WF194	1.260	12.1	15.25	0.63	9.60	2.02
36WF194 + 11" x 1/2" Cover Plate	1.725	12.1	20.87	0.86	18.00	5.18

Broadway Bridge A4646 Fatigue Analysis

	Total I Section	Top Flange		Web		Bottom Flange	
	$y_{bartotal}$	d_{tf}	$I+Ad^2$	d_{web}	$I+Ad^2$	d_{bf}	$I+Ad^2$
	in	in	in^4	in	in^4	in	in^4
36WF150	17.95	17.48	3447.44	0	2050.70	17.48	3447.44
36WF150 + 11" x 1/2" Cover Plate	18.42	17.72	5320.80	0	2050.70	17.72	5320.80
36WF160	18.00	17.49	3745.28	0	2121.46	17.49	3745.28
36WF194	18.25	17.62	4735.36	0	2501.21	17.62	4735.36
36WF194 + 11" x 1/2" Cover Plate	18.72	17.85	6657.49	0	2501.21	17.85	6657.49

Broadway Bridge A4646 Fatigue Analysis

	A_{EQ}	I_{EQ}	Shear A_{EQ}	$c_{topfiber}$	$c_{bottomfiber}$	S_{xtop}	$S_{xbottom}$	F_y
	in^2	in^4	in^2	in	in	in^3	in^3	ksi
36WF150	43.82	8945.58	21.26	17.95	17.95	498.36	498.36	36
36WF150 + 11" x 1/2" Cover Plate	55.15	12692.30	21.26	18.42	18.42	688.98	688.98	36
36WF160	46.55	9612.02	22.07	18.00	18.00	534.00	534.00	36
36WF194	56.49	11971.93	25.99	18.25	18.25	656.00	656.00	36
36WF194 + 11" x 1/2" Cover Plate	67.74	15816.18	25.99	18.72	18.72	845.11	845.11	36

Broadway A4646 Fatigue Unit 1 Noncomposite.STR

STLBRIDGE LRFD

STEEL BRIDGE DESIGN SOFTWARE

Copyright 2014 BRIDGESOFT, Inc. All Rights Reserved

STRESS OUTPUT

Title: Broadway A4646 West Girder Unit 1
Input Filename: Broadway A4646 Fatigue Unit 1 Noncomposite
Output Filename: Broadway A4646 Fatigue Unit 1
Noncomposite.STR
Time:14:03:29
Date:02-13-2017
AASHTO LRFD Code: 7TH Edition

♀
Broadway A4646 West Girder Unit 1 02-13-2017 14:03:29 STLBRIDGE LRFD Page 1
--- INPUT ECHO ---
"2DBRIDGE I Girder"
"ENGLISH"

Page 1

```
"Broadway A4646 West Girder Unit 1"
"LRFD v61"
0
4,"HL93",8,"0",0,600,0,0,0,0,0,0
4000,150,7.25,4.75,2.5,490,3644,29000,8,24
1,10,0,1.5,1.25,1.5,1.75
0,0,0
1,1,1.3
0,0,1.5
1.25,1.5,1.75
1.25,1.5,1.8,1.33,1,1
1.25,1.5,1.6
1.3,1.3,1
2,2,3,0,0,0,-.5,0
38.182,0,0
2.12,2.12,1.56,1.56,2.12
47.047,0,0
2.12,2.12,1.56,1.56,2.12
47,0,0
2.12,2.12,1.56,1.56,2.12
6.5,0,0
2.12,2.12,1.56,1.56,2.12
16
1,10.391,1.57
1,19.37,1.57
1,28.734,1.57
1,38.182,1.57
2,9.5,1.57
2,19.042,1.57
2,28.224,1.57
2,37.51,1.57
2,47.047,1.57
3,9.417,1.57
3,18.813,1.57
3,28.208,1.57
3,37.604,1.57
3,47,1.57
4,2.188,1.57
4,5.375,1.57
0
0
0
1,28.182,33.96,33.96,0
1,33.682,34.02,34.02,0
1,38.182,34.02,34.02,0
2,28.182,12,1.02,36
2,33.682,12,.94,36
2,38.182,12,1.412,36
```

♀

--- INPUT ECHO ---

```
3,28.182,12,1.02,36
3,33.682,12,.94,36
3,38.182,12,1.412,36
4,38.182,4,25,0
5,38.182,0,0,0
6,38.182,0,0,0
7,28.182,0,.65,36
7,33.682,0,.625,36
7,38.182,99999,.625,36
1,4.5,34.02,34.02,0
1,10,34.02,34.02,0
1,37.0469,34.02,34.02,0
```

```
1,42.5469,33.98,33.98,0
1,47.047,33.98,33.98,0
2,4.5,12,1.412,36
2,10,12,.94,36
2,37.0469,12,.94,36
2,42.5469,12.1,1.26,36
2,47.047,12.1,1.725,36
3,4.5,12,1.412,36
3,10,12,.94,36
3,37.0469,12,.94,36
3,42.5469,12.1,1.26,36
3,47.047,12.1,1.725,36
4,47.047,4,25,0
5,47.047,0,0,0
6,47.047,0,0,0
7,4.5,0,.625,36
7,10,0,.625,36
7,37.0469,0,.625,36
7,42.5469,0,.765,36
7,47.047,99999,.765,36
1,4.5,33.98,33.98,0
1,47,33.98,33.98,0
2,4.5,12.1,1.725,36
2,47,12.1,1.26,36
3,4.5,12.1,1.725,36
3,47,12.1,1.26,36
4,47,4,25,0
5,47,0,0,0
6,47,0,0,0
7,4.5,0,.765,36
7,47,99999,.765,36
1,6.5,33.98,33.98,0
2,6.5,12.1,1.26,36
3,6.5,12.1,1.26,36
4,6.5,4,25,0
5,6.5,0,0,0
6,6.5,0,0,0
7,6.5,99999,.765,36
```

♀

--- INPUT ECHO ---

--- FATIGUE REPORT ---

All Units: ksi

Broadway A4646 Fatigue Unit 1 Noncomposite.STR

SPAN 1 - FATIGUE STRESS RANGE (ksi) -
(EXT - EXTREME FIBER, 4T=4*tw, 6T=6*tw)

LOCA	REBAR RANGE	TOP FLANGE EXT	TOP FLANGE 4T	TOP FLANGE 6T	BOTTOM FLANGE EXT	BOTTOM FLANGE INS	BOTTOM FLANGE 4T	BOTTOM FLANGE 6T
1.0	0.00	0.00	0.00	0.00	0.00	0.00	0.00	0.00
1.1	0.00	-4.11	-3.29	-2.99	4.11	3.88	3.29	2.99
1.2	0.00	-7.11	-5.68	-5.17	7.11	6.71	5.68	5.17
1.3	0.00	-9.10	-7.27	-6.61	9.10	8.59	7.27	6.61
1.4	0.00	-10.08	-8.05	-7.32	10.08	9.51	8.05	7.32
1.5	0.00	10.31	8.24	7.50	10.31	9.73	8.24	7.50
1.6	0.00	10.08	8.05	7.32	10.08	9.51	8.05	7.32
1.7	0.00	9.17	7.32	6.66	9.17	8.65	7.32	6.66
1.738	0.00	8.61	6.88	6.25	8.61	8.12	6.88	6.25
1.738	0.00	9.21	7.45	6.81	9.21	8.73	7.45	6.81
1.8	0.00	8.23	6.66	6.08	8.23	7.80	6.66	6.08
1.882	0.00	7.91	6.39	5.84	-7.91	-7.50	-6.39	-5.84
1.882	0.00	5.72	4.51	4.12	-5.72	-5.28	-4.51	-4.12
1.9	0.00	5.67	4.47	4.08	-5.67	-5.23	-4.47	-4.08
2.0	0.00	7.39	5.82	5.32	-7.39	-6.83	-5.82	-5.32

Note: For locations which do not experience tensile stresses
the fatigue stress range is output as a negative number.

Broadway A4646 West Girder Unit 1 02-13-2017 14:03:30 Page 13

--- FATIGUE REPORT ---

Max stress range, top & bottom flange @ Ext: 10.31 ksi

All Units: ksi

SPAN 2 - FATIGUE STRESS RANGE (ksi) -
(EXT - EXTREME FIBER, 4T=4*tw, 6T=6*tw)

LOCA	REBAR RANGE	TOP FLANGE EXT	TOP FLANGE 4T	TOP FLANGE 6T	BOTTOM FLANGE EXT	BOTTOM FLANGE INS	BOTTOM FLANGE 4T	BOTTOM FLANGE 6T
2.0	0.00	7.39	5.82	5.32	-7.39	-6.83	-5.82	-5.32
2.095	0.00	5.60	4.41	4.03	-5.60	-5.17	-4.41	-4.03
2.096	0.00	7.73	6.25	5.71	-7.73	-7.32	-6.25	-5.71
2.1	0.00	7.62	6.16	5.63	-7.62	-7.22	-6.16	-5.63
2.2	0.00	7.98	6.45	5.90	7.98	7.56	6.45	5.90
2.212	0.00	8.16	6.60	6.03	8.16	7.73	6.60	6.03
2.213	0.00	8.17	6.60	6.03	8.17	7.74	6.60	6.03
2.3	0.00	9.43	7.62	6.96	9.43	8.93	7.62	6.96
2.4	0.00	10.04	8.12	7.42	10.04	9.52	8.12	7.42
2.5	0.00	-9.64	-7.80	-7.12	9.64	9.14	7.80	7.12
2.6	0.00	9.72	7.85	7.18	9.72	9.21	7.85	7.18
2.7	0.00	8.89	7.18	6.56	8.89	8.42	7.18	6.56
2.787	0.00	7.53	6.09	5.56	7.53	7.14	6.09	5.56
2.788	0.00	5.72	4.36	3.88	5.72	5.32	4.36	3.88
2.8	0.00	5.57	4.25	3.78	5.57	5.19	4.25	3.78
2.9	0.00	5.93	4.52	4.03	-5.93	-5.52	-4.52	-4.03
2.904	0.00	6.03	4.61	4.10	-6.03	-5.62	-4.61	-4.10
2.905	0.00	4.69	3.49	3.11	-4.69	-4.26	-3.49	-3.11
3.0	0.00	6.62	4.93	4.39	-6.62	-6.01	-4.93	-4.39

Note: For locations which do not experience tensile stresses
the fatigue stress range is output as a negative number.

Broadway A4646 West Girder Unit 1 02-13-2017 14:03:30 Page 14

Broadway A4646 Fatigue Unit 1 Noncomposite.STR
--- FATIGUE REPORT ---

All Units: ksi

SPAN 3 - FATIGUE STRESS RANGE (ksi) -
(EXT - EXTREME FIBER, 4T=4*tw, 6T=6*tw)

LOCA	REBAR RANGE	-----TOP FLANGE----- EXT	4T	6T	-----BOTTOM FLANGE----- EXT	INS	4T	6T
3.0	0.00	6.62	4.93	4.39	-6.62	-6.01	-4.93	-4.39
3.096	0.00	4.96	3.69	3.28	-4.96	-4.50	-3.69	-3.28
3.096	0.00	6.37	4.87	4.33	-6.37	-5.93	-4.87	-4.33
3.1	0.00	6.28	4.80	4.27	-6.28	-5.85	-4.80	-4.27
3.2	0.00	7.22	5.51	4.90	7.22	6.72	5.51	4.90
3.3	0.00	7.96	6.07	5.41	7.96	7.41	6.07	5.41
3.4	0.00	7.93	6.05	5.39	7.93	7.38	6.05	5.39
3.5	0.00	-7.24	-5.53	-4.92	7.24	6.74	5.53	4.92
3.6	0.00	-5.87	-4.48	-3.99	5.87	5.47	4.48	3.99
3.7	0.00	-3.95	-3.02	-2.68	3.95	3.68	3.02	2.68
3.8	0.00	3.54	2.70	2.41	3.54	3.30	2.70	2.41
3.9	0.00	4.75	3.62	3.23	-4.75	-4.42	-3.62	-3.23
4.0	0.00	8.34	6.37	5.67	-8.34	-7.77	-6.37	-5.67

Note: For locations which do not experience tensile stresses
the fatigue stress range is output as a negative number.

♀

Broadway A4646 West Girder Unit 1 02-13-2017 14:03:30 Page 15

--- FATIGUE REPORT ---

All Units: ksi

SPAN 4 - FATIGUE STRESS RANGE (ksi) -
(EXT - EXTREME FIBER, 4T=4*tw, 6T=6*tw)

LOCA	REBAR RANGE	-----TOP FLANGE----- EXT	4T	6T	-----BOTTOM FLANGE----- EXT	INS	4T	6T
4.0	0.00	8.34	6.37	5.67	-8.34	-7.77	-6.37	-5.67
4.1	0.00	7.52	5.74	5.11	-7.52	-7.00	-5.74	-5.11
4.2	0.00	6.67	5.09	4.53	-6.67	-6.21	-5.09	-4.53
4.3	0.00	5.84	4.46	3.97	-5.84	-5.44	-4.46	-3.97
4.4	0.00	4.99	3.81	3.39	-4.99	-4.65	-3.81	-3.39
4.5	0.00	4.36	3.33	2.96	-4.36	-4.06	-3.33	-2.96
4.6	0.00	3.70	2.83	2.52	-3.70	-3.45	-2.83	-2.52
4.7	0.00	2.94	2.24	1.99	-2.94	-2.73	-2.24	-1.99
4.8	0.00	2.06	1.57	1.40	-2.06	-1.92	-1.57	-1.40
4.9	0.00	1.10	0.84	0.75	-1.10	-1.02	-0.84	-0.75
5.0	0.00	0.00	0.00	0.00	0.00	0.00	0.00	0.00

Note: For locations which do not experience tensile stresses
the fatigue stress range is output as a negative number.

♀

Broadway A4646 Fatigue Unit 1 Fully Composite.STR

STLBRIDGE LRFD

STEEL BRIDGE DESIGN SOFTWARE

Copyright 2014 BRIDGESOFT, Inc. All Rights Reserved

STRESS OUTPUT

Title: Broadway A4646 West Girder Unit 1
Input Filename: Broadway A4646 Fatigue Unit 1 Fully Composite
Output Filename: Broadway A4646 Fatigue Unit 1 Fully
Composite.STR
Time:14:07:52
Date:02-13-2017
AASHTO LRFD Code: 7TH Edition

♀
Broadway A4646 West Girder Unit 1 02-13-2017 14:07:52 STLBRIDGE LRFD Page 1
--- INPUT ECHO ---
"2DBRIDGE I Girder"
"ENGLISH"

Page 1

```
"Broadway A4646 West Girder Unit 1"
"LRFD v61"
0
4,"HL93",8,"0",0,600,0,0,0,0,0,0
4000,150,7.25,4.75,2.5,490,3644,29000,8,24
3,10,0,1.5,1.25,1.5,1.75
0,0,0
1,1,1.3
0,0,1.5
1.25,1.5,1.75
1.25,1.5,1.8,1.33,1,1
1.25,1.5,1.6
1.3,1.3,1
2,2,3,0,0,0,-.5,0
38.182,0,0
2.12,2.12,1.56,1.56,2.12
47.047,0,0
2.12,2.12,1.56,1.56,2.12
47,0,0
2.12,2.12,1.56,1.56,2.12
6.5,0,0
2.12,2.12,1.56,1.56,2.12
16
1,10.391,1.57
1,19.37,1.57
1,28.734,1.57
1,38.182,1.57
2,9.5,1.57
2,19.042,1.57
2,28.224,1.57
2,37.51,1.57
2,47.047,1.57
3,9.417,1.57
3,18.813,1.57
3,28.208,1.57
3,37.604,1.57
3,47,1.57
4,2.188,1.57
4,5.375,1.57
0
0
0
1,28.182,33.96,33.96,0
1,33.682,34.02,34.02,0
1,38.182,34.02,34.02,0
2,28.182,12,1.02,36
2,33.682,12,.94,36
2,38.182,12,1.412,36
```

♀

--- INPUT ECHO ---

```
3,28.182,12,1.02,36
3,33.682,12,.94,36
3,38.182,12,1.412,36
4,38.182,4,25,0
5,38.182,0,0,0
6,38.182,0,0,0
7,28.182,0,.65,36
7,33.682,0,.625,36
7,38.182,99999,.625,36
1,4.5,34.02,34.02,0
1,10,34.02,34.02,0
1,37.0469,34.02,34.02,0
```

```
1,42.5469,33.98,33.98,0
1,47.047,33.98,33.98,0
2,4.5,12,1.412,36
2,10,12,.94,36
2,37.0469,12,.94,36
2,42.5469,12.1,1.26,36
2,47.047,12.1,1.725,36
3,4.5,12,1.412,36
3,10,12,.94,36
3,37.0469,12,.94,36
3,42.5469,12.1,1.26,36
3,47.047,12.1,1.725,36
4,47.047,4,25,0
5,47.047,0,0,0
6,47.047,0,0,0
7,4.5,0,.625,36
7,10,0,.625,36
7,37.0469,0,.625,36
7,42.5469,0,.765,36
7,47.047,99999,.765,36
1,4.5,33.98,33.98,0
1,47,33.98,33.98,0
2,4.5,12.1,1.725,36
2,47,12.1,1.26,36
3,4.5,12.1,1.725,36
3,47,12.1,1.26,36
4,47,4,25,0
5,47,0,0,0
6,47,0,0,0
7,4.5,0,.765,36
7,47,99999,.765,36
1,6.5,33.98,33.98,0
2,6.5,12.1,1.26,36
3,6.5,12.1,1.26,36
4,6.5,4,25,0
5,6.5,0,0,0
6,6.5,0,0,0
7,6.5,99999,.765,36
```

♀

--- INPUT ECHO ---

--- FATIGUE REPORT ---

All Units: ksi

Broadway A4646 Fatigue Unit 1 Fully Composite.STR

SPAN 1 - FATIGUE STRESS RANGE (ksi) -
(EXT - EXTREME FIBER, 4T=4*tw, 6T=6*tw)

LOCA	REBAR RANGE	TOP FLANGE EXT	TOP FLANGE 4T	TOP FLANGE 6T	BOTTOM FLANGE EXT	BOTTOM FLANGE INS	BOTTOM FLANGE 4T	BOTTOM FLANGE 6T
1.0	0.00	0.00	0.00	0.00	0.00	0.00	0.00	0.00
1.1	-1.27	-0.87	-0.48	-0.34	2.97	2.86	2.58	2.44
1.2	-2.32	-1.61	-0.93	-0.69	5.17	4.98	4.49	4.24
1.3	-3.17	-2.25	-1.35	-1.03	6.66	6.41	5.76	5.44
1.4	-3.84	-2.78	-1.75	-1.37	7.50	7.21	6.47	6.09
1.5	-4.37	-3.23	-2.12	-1.72	7.81	7.50	6.70	6.30
1.6	4.81	3.62	2.47	2.06	7.82	7.49	6.67	6.26
1.7	5.11	3.94	2.81	2.40	7.32	7.00	6.19	5.78
1.738	5.18	4.04	2.93	2.53	6.99	6.68	5.88	5.49
1.738	5.51	4.27	3.14	2.74	7.44	7.14	6.32	5.91
1.8	5.66	4.45	3.37	2.97	6.88	6.58	5.80	5.40
1.882	6.96	5.61	4.40	3.96	-7.03	-6.70	-5.82	-5.38
1.882	5.01	4.16	3.17	2.85	-5.18	-4.83	-4.19	-3.87
1.9	5.19	4.33	3.32	3.00	-5.19	-4.83	-4.18	-3.86
2.0	8.61	7.29	5.74	5.25	-7.29	-6.73	-5.74	-5.25

Note: For locations which do not experience tensile stresses
the fatigue stress range is output as a negative number.

Broadway A4646 West Girder Unit 1 02-13-2017 14:07:53 Page 13

--- FATIGUE REPORT ---

Max stress range, top flange
@ Ext: 7.29 ksi

Max stress range, bottom flange
@ Ext: 7.82 ksi

All Units: ksi

SPAN 2 - FATIGUE STRESS RANGE (ksi) -
(EXT - EXTREME FIBER, 4T=4*tw, 6T=6*tw)

LOCA	REBAR RANGE	TOP FLANGE EXT	TOP FLANGE 4T	TOP FLANGE 6T	BOTTOM FLANGE EXT	BOTTOM FLANGE INS	BOTTOM FLANGE 4T	BOTTOM FLANGE 6T
2.0	8.61	7.29	5.74	5.25	-7.29	-6.73	-5.74	-5.25
2.095	4.87	4.05	3.08	2.77	-5.04	-4.69	-4.07	-3.76
2.096	6.75	5.45	4.27	3.84	-6.82	-6.50	-5.64	-5.22
2.1	6.56	5.29	4.14	3.73	-6.69	-6.38	-5.55	-5.13
2.2	4.76	3.68	2.71	2.36	6.47	6.20	5.49	5.14
2.212	4.72	3.64	2.66	2.30	6.57	6.30	5.59	5.24
2.213	4.72	3.63	2.66	2.30	6.57	6.31	5.60	5.24
2.3	4.43	3.31	2.29	1.92	7.31	7.03	6.29	5.92
2.4	-3.96	-2.85	-1.85	-1.49	7.58	7.31	6.58	6.22
2.5	-3.30	-2.30	-1.39	-1.06	7.18	6.93	6.27	5.94
2.6	-3.88	-2.80	-1.82	-1.46	7.43	7.16	6.45	6.09
2.7	4.25	3.17	2.20	1.84	7.00	6.74	6.03	5.67
2.787	4.49	3.46	2.54	2.20	6.22	5.96	5.29	4.95
2.788	3.54	2.81	1.91	1.59	4.82	4.55	3.91	3.59
2.8	3.56	2.84	1.94	1.62	4.73	4.46	3.83	3.51
2.9	5.17	4.26	3.14	2.74	-5.22	-4.89	-4.10	-3.70
2.904	5.31	4.38	3.23	2.83	-5.33	-4.99	-4.18	-3.77
2.905	4.10	3.48	2.50	2.18	-4.20	-3.85	-3.22	-2.91
3.0	7.32	6.30	4.69	4.18	-6.30	-5.72	-4.69	-4.18

Note: For locations which do not experience tensile stresses
the fatigue stress range is output as a negative number.

Broadway A4646 West Girder Unit 1 02-13-2017 14:07:53 Page 14

Broadway A4646 Fatigue Unit 1 Fully Composite.STR
--- FATIGUE REPORT ---

All Units: ksi

SPAN 3 - FATIGUE STRESS RANGE (ksi) -
(EXT - EXTREME FIBER, 4T=4*tw, 6T=6*tw)

LOCA	REBAR RANGE	TOP FLANGE EXT	TOP FLANGE 4T	TOP FLANGE 6T	BOTTOM FLANGE EXT	BOTTOM FLANGE INS	BOTTOM FLANGE 4T	BOTTOM FLANGE 6T
3.0	7.32	6.30	4.69	4.18	-6.30	-5.72	-4.69	-4.18
3.096	4.20	3.56	2.54	2.22	-4.38	-4.01	-3.36	-3.04
3.096	5.42	4.47	3.28	2.86	-5.55	-5.20	-4.36	-3.94
3.1	5.29	4.35	3.19	2.78	-5.45	-5.11	-4.29	-3.88
3.2	4.58	3.67	2.55	2.15	5.82	5.49	4.70	4.30
3.3	4.16	3.25	2.13	1.74	6.20	5.87	5.08	4.68
3.4	-3.59	-2.75	-1.70	-1.34	6.05	5.75	5.01	4.64
3.5	-2.83	-2.11	-1.22	-0.91	5.40	5.14	4.51	4.20
3.6	-1.34	-0.86	-0.27	-0.07	4.11	3.94	3.52	3.31
3.7	-0.91	-0.58	-0.19	-0.04	2.78	2.66	2.38	2.24
3.8	1.95	1.53	1.01	0.83	2.84	2.69	2.32	2.14
3.9	4.32	3.57	2.64	2.31	-4.28	-4.01	-3.35	-3.02
4.0	7.96	6.59	4.91	4.31	-7.66	-7.17	-5.97	-5.38

Note: For locations which do not experience tensile stresses
the fatigue stress range is output as a negative number.

Broadway A4646 West Girder Unit 1 02-13-2017 14:07:53 Page 15

--- FATIGUE REPORT ---

All Units: ksi

SPAN 4 - FATIGUE STRESS RANGE (ksi) -
(EXT - EXTREME FIBER, 4T=4*tw, 6T=6*tw)

LOCA	REBAR RANGE	TOP FLANGE EXT	TOP FLANGE 4T	TOP FLANGE 6T	BOTTOM FLANGE EXT	BOTTOM FLANGE INS	BOTTOM FLANGE 4T	BOTTOM FLANGE 6T
4.0	7.96	6.59	4.91	4.31	-7.66	-7.17	-5.97	-5.38
4.1	7.16	5.94	4.42	3.88	-6.90	-6.45	-5.38	-4.84
4.2	6.37	5.28	3.93	3.45	-6.13	-5.74	-4.78	-4.30
4.3	5.57	4.62	3.44	3.02	-5.36	-5.02	-4.18	-3.76
4.4	4.77	3.96	2.94	2.59	-4.60	-4.30	-3.58	-3.23
4.5	4.04	3.33	2.47	2.16	-4.00	-3.75	-3.14	-2.83
4.6	3.28	2.70	1.98	1.73	-3.35	-3.15	-2.64	-2.38
4.7	2.49	2.05	1.49	1.30	-2.63	-2.47	-2.07	-1.88
4.8	1.69	1.38	1.00	0.87	-1.82	-1.71	-1.44	-1.31
4.9	0.86	0.70	0.50	0.43	-0.96	-0.90	-0.76	-0.69
5.0	0.00	0.00	0.00	0.00	0.00	0.00	0.00	0.00

Note: For locations which do not experience tensile stresses
the fatigue stress range is output as a negative number.

BROADWAY A4646 FATIGUE UNIT 3 NONCOMPOSITE.STR

STLBRIDGE LRFD

STEEL BRIDGE DESIGN SOFTWARE

Copyright 2014 BRIDGESOFT, Inc. All Rights Reserved

STRESS OUTPUT

Title: Unit 3 Noncomposite Broadway Fatigue
Input Filename: BROADWAY A4646 FATIGUE UNIT 3 NONCOMPOSITE
Output Filename: BROADWAY A4646 FATIGUE UNIT 3
NONCOMPOSITE.STR
Time:14:24:18
Date:02-13-2017
AASHTO LRFD Code: 7TH Edition

♀
Unit 3 Noncomposite Broadway Fatigue 02-13-2017 14:24:18 STLBRIDGE LRFD Page
1
--- INPUT ECHO ---
"2DBRIDGE I Girder"
Page 1

```
"ENGLISH"
"Unit 3 Noncomposite Broadway Fatigue"
"LRFD v61"
0
4,"HL93",8,"0",0,600,0,0,0,0,0,0
4000,150,7.25,4.75,2.5,490,3644,29000,8,24
1,10,0,1.5,1.25,1.5,1.75
0,0,0
1,1,1.3
0,0,1.5
1.25,1.5,1.75
1.25,1.5,1.8,1.33,1,1
1.25,1.5,1.6
1.3,1.3,1
2,2,3,0,1.872,2.12,-.5,0
6.5,0,0
2.12,2.12,1.56,1.56,2.12
47,0,0
2.12,2.12,1.56,1.56,2.12
54,0,0
2.12,2.12,1.56,1.56,2.12
44.078,0,0
2.12,2.12,1.56,1.56,2.12
19
1,1.125,1.62
1,4.3125,1.62
1,6.5,1.62
2,9.3958,1.62
2,18.7917,1.62
2,28.1875,1.62
2,37.5833,1.62
2,47,1.62
3,9,1.62
3,18,1.62
3,27,1.62
3,36,1.62
3,45,1.62
3,54,1.62
4,9.5,1.62
4,18.25,1.62
4,26.5,1.62
4,34.75,1.62
4,44.078,1.62
0
0
0
1,2,33.9375,33.9375,0
1,6.5,33.9375,35.1663,0
2,2,12,1.25,36
```

♀

--- INPUT ECHO ---

```
2,6.5,12,1.25,36
3,2,12,1.25,36
3,6.5,12,1.25,36
4,6.5,4,25,0
5,6.5,0,0,0
6,6.5,0,0,0
7,2,0,.4375,36
7,6.5,99999,.4375,36
1,47,35.1663,48,0
2,47,12,1.25,36
```

```
3,47,12,1.25,36
4,47,4,25,0
5,47,0,0,0
6,47,0,0,0
7,47,99999,.4375,36
1,11,48,48,0
1,43,48,48,0
1,54,48,48,0
2,11,12,1.25,36
2,43,12,1,36
2,54,12,1.25,36
3,11,12,1.25,36
3,43,12,1,36
3,54,12,1.25,36
4,54,4,25,0
5,54,0,0,0
6,54,0,0,0
7,11,0,.4375,36
7,43,0,.4375,36
7,54,99999,.4375,36
1,10,48,48,0
1,44.078,48,48,0
2,10,12,1.25,36
2,44.078,12,1,36
3,10,12,1.25,36
3,44.078,12,1,36
4,44.078,4,25,0
5,44.078,0,0,0
6,44.078,0,0,0
7,10,0,.4375,36
7,44.078,99999,.4375,36
```

♀

--- INPUT ECHO ---

--- FATIGUE REPORT ---

All Units: ksi

SPAN 1 - FATIGUE STRESS RANGE (ksi) -
(EXT - EXTREME FIBER, 4T=4*tw, 6T=6*tw)

LOCA	REBAR RANGE	-----TOP FLANGE----- EXT	4T	6T	-----BOTTOM FLANGE----- EXT	INS	4T	6T
1.0	0.00	0.00	0.00	0.00	0.00	0.00	0.00	0.00
1.1	0.00	1.13	0.95	0.89	1.13	1.05	0.95	0.89
1.2	0.00	2.14	1.79	1.69	-2.14	-2.00	-1.79	-1.69
1.3	0.00	3.03	2.53	2.39	-3.03	-2.82	-2.53	-2.39
1.306	0.00	3.08	2.57	2.42	-3.08	-2.87	-2.57	-2.42
1.309	0.00	3.10	2.59	2.44	-3.10	-2.89	-2.59	-2.44
1.4	0.00	3.77	3.16	2.98	-3.77	-3.52	-3.16	-2.98
1.5	0.00	4.42	3.70	3.49	-4.42	-4.12	-3.70	-3.49
1.6	0.00	4.90	4.11	3.87	-4.90	-4.57	-4.11	-3.87
1.7	0.00	5.68	4.76	4.50	-5.68	-5.30	-4.76	-4.50
1.8	0.00	6.48	5.44	5.13	-6.48	-6.05	-5.44	-5.13
1.9	0.00	7.24	6.08	5.74	-7.24	-6.76	-6.08	-5.74
2.0	0.00	7.99	6.72	6.35	-7.99	-7.46	-6.72	-6.35

Note: For locations which do not experience tensile stresses
the fatigue stress range is output as a negative number.

♀

Unit 3 Noncomposite Broadway Fatigue 02-13-2017 14:24:19 Page 13

--- FATIGUE REPORT ---

All Units: ksi

Page 10

BROADWAY A4646 FATIGUE UNIT 3 NONCOMPOSITE.STR

SPAN 2 - FATIGUE STRESS RANGE (ksi) -
(EXT - EXTREME FIBER, 4T=4*tw, 6T=6*tw)

LOCA	REBAR RANGE	-----TOP FLANGE----- EXT	4T	6T	-----BOTTOM FLANGE----- EXT	INS	4T	6T
2.0	0.00	7.99	6.72	6.35	-7.99	-7.46	-6.72	-6.35
2.1	0.00	3.95	3.34	3.16	-3.95	-3.70	-3.34	-3.16
2.2	0.00	3.20	2.72	2.58	3.20	3.00	2.72	2.58
2.3	0.00	-4.30	-3.68	-3.50	4.30	4.04	3.68	3.50
2.4	0.00	-6.00	-5.16	-4.92	6.00	5.65	5.16	4.92
2.5	0.00	-6.93	-5.98	-5.71	6.93	6.53	5.98	5.71
2.6	0.00	7.22	6.27	5.99	7.22	6.82	6.27	5.99
2.7	0.00	6.95	6.06	5.80	6.95	6.58	6.06	5.80
2.8	0.00	6.09	5.33	5.10	6.09	5.77	5.33	5.10
2.9	0.00	4.98	4.38	4.20	-4.98	-4.73	-4.38	-4.20
3.0	0.00	6.58	5.80	5.57	-6.58	-6.26	-5.80	-5.57

Note: For locations which do not experience tensile stresses
the fatigue stress range is output as a negative number.

♀

Unit 3 Noncomposite Broadway Fatigue 02-13-2017 14:24:19 Page 14

--- FATIGUE REPORT ---

All Units: ksi

SPAN 3 - FATIGUE STRESS RANGE (ksi) -
(EXT - EXTREME FIBER, 4T=4*tw, 6T=6*tw)

LOCA	REBAR RANGE	-----TOP FLANGE----- EXT	4T	6T	-----BOTTOM FLANGE----- EXT	INS	4T	6T
3.0	0.00	6.58	5.80	5.57	-6.58	-6.26	-5.80	-5.57
3.1	0.00	4.46	3.93	3.77	-4.46	-4.24	-3.93	-3.77
3.2	0.00	4.95	4.36	4.19	4.95	4.70	4.36	4.19
3.204	0.00	4.99	4.39	4.22	4.99	4.74	4.39	4.22
3.204	0.00	5.96	5.30	5.09	5.96	5.72	5.30	5.09
3.3	0.00	7.20	6.41	6.16	7.20	6.91	6.41	6.16
3.4	0.00	-7.88	-7.02	-6.74	7.88	7.57	7.02	6.74
3.5	0.00	-8.00	-7.12	-6.84	8.00	7.68	7.12	6.84
3.6	0.00	-8.22	-7.32	-7.03	8.22	7.90	7.32	7.03
3.7	0.00	7.66	6.82	6.55	7.66	7.36	6.82	6.55
3.796	0.00	6.54	5.82	5.59	6.54	6.28	5.82	5.59
3.796	0.00	5.47	4.82	4.63	5.47	5.20	4.82	4.63
3.8	0.00	5.44	4.79	4.60	5.44	5.17	4.79	4.60
3.9	0.00	4.64	4.09	3.93	-4.64	-4.41	-4.09	-3.93
4.0	0.00	6.50	5.73	5.50	-6.50	-6.18	-5.73	-5.50

Note: For locations which do not experience tensile stresses
the fatigue stress range is output as a negative number.

♀

Unit 3 Noncomposite Broadway Fatigue 02-13-2017 14:24:19 Page 15

--- FATIGUE REPORT ---

All Units: ksi

SPAN 4 - FATIGUE STRESS RANGE (ksi) -
(EXT - EXTREME FIBER, 4T=4*tw, 6T=6*tw)

BROADWAY A4646 FATIGUE UNIT 3 NONCOMPOSITE.STR

LOCA	REBAR RANGE	-----TOP FLANGE----- EXT	4T	6T	-----BOTTOM FLANGE----- EXT	INS	4T	6T
4.0	0.00	6.50	5.73	5.50	-6.50	-6.18	-5.73	-5.50
4.1	0.00	4.89	4.31	4.14	-4.89	-4.65	-4.31	-4.14
4.2	0.00	5.66	4.99	4.79	5.66	5.38	4.99	4.79
4.227	0.00	5.93	5.23	5.02	5.93	5.64	5.23	5.02
4.227	0.00	7.08	6.30	6.06	7.08	6.80	6.30	6.06
4.3	0.00	7.96	7.08	6.80	7.96	7.64	7.08	6.80
4.4	0.00	8.71	7.75	7.45	8.71	8.36	7.75	7.45
4.5	0.00	8.91	7.93	7.62	8.91	8.55	7.93	7.62
4.6	0.00	-8.64	-7.69	-7.39	8.64	8.29	7.69	7.39
4.7	0.00	-7.78	-6.93	-6.66	7.78	7.47	6.93	6.66
4.8	0.00	-6.10	-5.43	-5.22	6.10	5.86	5.43	5.22
4.9	0.00	-3.59	-3.19	-3.07	3.59	3.44	3.19	3.07
5.0	0.00	0.00	0.00	0.00	0.00	0.00	0.00	0.00

Note: For locations which do not experience tensile stresses
the fatigue stress range is output as a negative number.

Max stress range, top & bottom flange
@ Ext: 8.91 ksi

BROADWAY A4646 FATIGUE UNIT 3 FULLY COMPOSITE.STR

STLBRIDGE LRFD

STEEL BRIDGE DESIGN SOFTWARE

Copyright 2014 BRIDGESOFT, Inc. All Rights Reserved

STRESS OUTPUT

Title: Unit 3 Composite Broadway Fatigue
Input Filename: BROADWAY A4646 FATIGUE UNIT 3 FULLY COMPOSITE
Output Filename: BROADWAY A4646 FATIGUE UNIT 3 FULLY
COMPOSITE.STR
Time:14:26:41
Date:02-13-2017
AASHTO LRFD Code: 7TH Edition

♀

Unit 3 Composite Broadway Fatigue 02-13-2017 14:26:41 STLBRIDGE LRFD Page 1

--- INPUT ECHO ---

"2DBRIDGE I Girder"
"ENGLISH"

Page 1

```
"Unit 3 Composite Broadway Fatigue"
"LRFD v61"
0
4,"HL93",8,"0",0,600,0,0,0,0,0,0
4000,150,7.25,4.75,2.5,490,3644,29000,8,24
3,10,0,1.5,1.25,1.5,1.75
0,0,0
1,1,1.3
0,0,1.5
1.25,1.5,1.75
1.25,1.5,1.8,1.33,1,1
1.25,1.5,1.6
1.3,1.3,1
2,2,3,0,1.872,2.12,-.5,0
6.5,0,0
2.12,2.12,1.56,1.56,2.12
47,0,0
2.12,2.12,1.56,1.56,2.12
54,0,0
2.12,2.12,1.56,1.56,2.12
44.078,0,0
2.12,2.12,1.56,1.56,2.12
19
1,1.125,1.62
1,4.3125,1.62
1,6.5,1.62
2,9.3958,1.62
2,18.7917,1.62
2,28.1875,1.62
2,37.5833,1.62
2,47,1.62
3,9,1.62
3,18,1.62
3,27,1.62
3,36,1.62
3,45,1.62
3,54,1.62
4,9.5,1.62
4,18.25,1.62
4,26.5,1.62
4,34.75,1.62
4,44.078,1.62
0
0
0
1,2,33.9375,33.9375,0
1,6.5,33.9375,35.1663,0
2,2,12,1.25,36
```

♀

--- INPUT ECHO ---

```
2,6.5,12,1.25,36
3,2,12,1.25,36
3,6.5,12,1.25,36
4,6.5,4,25,0
5,6.5,0,0,0
6,6.5,0,0,0
7,2,0,.4375,36
7,6.5,99999,.4375,36
1,47,35.1663,48,0
2,47,12,1.25,36
3,47,12,1.25,36
4,47,4,25,0
```

```
5,47,0,0,0
6,47,0,0,0
7,47,99999,.4375,36
1,11,48,48,0
1,43,48,48,0
1,54,48,48,0
2,11,12,1.25,36
2,43,12,1,36
2,54,12,1.25,36
3,11,12,1.25,36
3,43,12,1,36
3,54,12,1.25,36
4,54,4,25,0
5,54,0,0,0
6,54,0,0,0
7,11,0,.4375,36
7,43,0,.4375,36
7,54,99999,.4375,36
1,10,48,48,0
1,44.078,48,48,0
2,10,12,1.25,36
2,44.078,12,1,36
3,10,12,1.25,36
3,44.078,12,1,36
4,44.078,4,25,0
5,44.078,0,0,0
6,44.078,0,0,0
7,10,0,.4375,36
7,44.078,99999,.4375,36
```

♀

--- INPUT ECHO ---

--- FATIGUE REPORT ---

All Units: ksi

SPAN 1 - FATIGUE STRESS RANGE (ksi) -
(EXT - EXTREME FIBER, 4T=4*tw, 6T=6*tw)

LOCA	REBAR RANGE	-----TOP FLANGE----- EXT	4T	6T	-----BOTTOM FLANGE----- EXT	INS	4T	6T
1.0	0.00	0.00	0.00	0.00	0.00	0.00	0.00	0.00
1.1	0.87	0.70	0.56	0.52	-1.03	-0.97	-0.89	-0.84
1.2	1.67	1.36	1.09	1.01	-1.91	-1.80	-1.64	-1.56
1.3	2.49	2.03	1.64	1.52	-2.76	-2.59	-2.36	-2.25
1.306	2.54	2.07	1.67	1.55	-2.80	-2.64	-2.40	-2.28
1.309	2.56	2.09	1.69	1.57	-2.83	-2.66	-2.42	-2.30
1.4	3.23	2.65	2.15	2.00	-3.47	-3.26	-2.96	-2.82
1.5	3.98	3.27	2.67	2.50	-4.10	-3.85	-3.50	-3.33
1.6	4.68	3.88	3.18	2.98	-4.64	-4.36	-3.95	-3.75
1.7	5.41	4.48	3.68	3.45	-5.37	-5.04	-4.58	-4.34
1.8	6.15	5.10	4.20	3.94	-6.12	-5.74	-5.22	-4.95
1.9	6.89	5.72	4.71	4.42	-6.86	-6.44	-5.85	-5.56
2.0	7.59	6.30	5.20	4.87	-7.56	-7.10	-6.46	-6.14

Note: For locations which do not experience tensile stresses
the fatigue stress range is output as a negative number.

♀

Unit 3 Composite Broadway Fatigue 02-13-2017 14:26:42 Page 13

--- FATIGUE REPORT ---

All Units: ksi

SPAN 2 - FATIGUE STRESS RANGE (ksi) -
(EXT - EXTREME FIBER, 4T=4*tw, 6T=6*tw)

BROADWAY A4646 FATIGUE UNIT 3 FULLY COMPOSITE.STR

LOCA	REBAR RANGE	-----TOP FLANGE----- EXT	4T	6T	-----BOTTOM FLANGE----- EXT	INS	4T	6T
2.0	7.59	6.30	5.20	4.87	-7.56	-7.10	-6.46	-6.14
2.1	3.58	2.98	2.46	2.31	-3.75	-3.53	-3.23	-3.08
2.2	-1.35	-1.04	-0.77	-0.69	2.59	2.48	2.32	2.24
2.3	-0.90	-0.58	-0.31	-0.23	3.19	3.08	2.92	2.84
2.4	-2.05	-1.55	-1.11	-0.98	4.65	4.47	4.22	4.09
2.5	-2.83	-2.22	-1.69	-1.54	5.53	5.31	5.00	4.85
2.6	-3.40	-2.74	-2.17	-2.00	5.87	5.64	5.30	5.14
2.7	3.83	3.16	2.58	2.41	5.81	5.57	5.23	5.06
2.8	4.07	3.43	2.89	2.73	5.27	5.04	4.73	4.57
2.9	4.23	3.64	3.14	3.00	-4.54	-4.33	-4.04	-3.90
3.0	7.36	6.46	5.69	5.47	-6.46	-6.14	-5.69	-5.47

Note: For locations which do not experience tensile stresses
the fatigue stress range is output as a negative number.

Unit 3 Composite Broadway Fatigue 02-13-2017 14:26:42 Page 14

--- FATIGUE REPORT ---

All Units: ksi

SPAN 3 - FATIGUE STRESS RANGE (ksi) -
(EXT - EXTREME FIBER, 4T=4*tw, 6T=6*tw)

LOCA	REBAR RANGE	-----TOP FLANGE----- EXT	4T	6T	-----BOTTOM FLANGE----- EXT	INS	4T	6T
3.0	7.36	6.46	5.69	5.47	-6.46	-6.14	-5.69	-5.47
3.1	3.63	3.13	2.71	2.58	-4.04	-3.86	-3.61	-3.49
3.2	2.86	2.40	2.01	1.89	4.27	4.10	3.87	3.76
3.204	2.86	2.40	2.00	1.88	4.30	4.13	3.90	3.78
3.204	3.33	2.75	2.32	2.18	5.02	4.86	4.59	4.46
3.3	-3.23	-2.59	-2.13	-1.98	5.85	5.68	5.39	5.24
3.4	-2.99	-2.35	-1.87	-1.72	6.23	6.06	5.76	5.61
3.5	-2.80	-2.17	-1.71	-1.56	6.24	6.07	5.78	5.63
3.6	-3.28	-2.60	-2.10	-1.94	6.53	6.34	6.03	5.87
3.7	3.58	2.90	2.40	2.24	6.21	6.03	5.71	5.55
3.796	3.77	3.13	2.65	2.50	5.47	5.30	5.00	4.85
3.796	3.23	2.72	2.28	2.15	4.68	4.49	4.24	4.11
3.8	3.24	2.73	2.29	2.16	4.65	4.47	4.21	4.09
3.9	3.76	3.25	2.81	2.68	-4.19	-4.00	-3.75	-3.62
4.0	7.29	6.40	5.64	5.42	-6.40	-6.08	-5.64	-5.42

Note: For locations which do not experience tensile stresses
the fatigue stress range is output as a negative number.

Unit 3 Composite Broadway Fatigue 02-13-2017 14:26:42 Page 15

--- FATIGUE REPORT ---

All Units: ksi

SPAN 4 - FATIGUE STRESS RANGE (ksi) -
(EXT - EXTREME FIBER, 4T=4*tw, 6T=6*tw)

LOCA	REBAR RANGE	-----TOP FLANGE----- EXT	4T	6T	-----BOTTOM FLANGE----- EXT	INS	4T	6T

BROADWAY A4646 FATIGUE UNIT 3 FULLY COMPOSITE.STR

4.0	7.29	6.40	5.64	5.42	-6.40	-6.08	-5.64	-5.42
4.1	4.27	3.70	3.21	3.07	-4.51	-4.30	-4.02	-3.88
4.2	3.92	3.35	2.85	2.70	5.01	4.80	4.51	4.36
4.227	3.90	3.31	2.80	2.66	5.19	4.98	4.68	4.53
4.227	4.58	3.83	3.29	3.11	6.08	5.89	5.54	5.36
4.3	4.45	3.67	3.11	2.93	6.64	6.43	6.07	5.89
4.4	4.22	3.42	2.84	2.66	7.12	6.91	6.54	6.35
4.5	-3.83	-3.07	-2.51	-2.33	7.11	6.91	6.55	6.37
4.6	-3.36	-2.65	-2.13	-1.97	6.81	6.62	6.29	6.13
4.7	-2.79	-2.17	-1.72	-1.58	6.06	5.89	5.61	5.46
4.8	-2.03	-1.56	-1.22	-1.11	4.69	4.56	4.34	4.23
4.9	-1.14	-0.87	-0.67	-0.60	2.75	2.68	2.55	2.49
5.0	0.00	0.00	0.00	0.00	0.00	0.00	0.00	0.00

Note: For locations which do not experience tensile stresses
the fatigue stress range is output as a negative number.

♀

Max stress range, top flange
@ Ext: 6.46 ksi

Max stress range, bottom flange
@ Ext: 7.12 ksi

BROADWAY A4646 FATIGUE UNIT 4 NONCOMPOSITE.STR

STLBRIDGE LRFD

STEEL BRIDGE DESIGN SOFTWARE

Copyright 2014 BRIDGESOFT, Inc. All Rights Reserved

STRESS OUTPUT

Title: A4646 Broadway Fatigue Unit 4
Input Filename: BROADWAY A4646 FATIGUE UNIT 4 NONCOMPOSITE
Output Filename: BROADWAY A4646 FATIGUE UNIT 4
NONCOMPOSITE.STR
Time:14:16:49
Date:02-13-2017
AASHTO LRFD Code: 7TH Edition

♀

A4646 Broadway Fatigue Unit 4 02-13-2017 14:16:49 STLBRIDGE LRFD Page 1

--- INPUT ECHO ---

"2DBRIDGE I Girder"
"ENGLISH"

Page 1

```
"A4646 Broadway Fatigue Unit 4"
"LRFD v61"
0
3,"HL93",8,"0",0,600,0,0,0,0,0,0
4000,150,7.25,4.75,2.5,490,3644,29000,8,24
1,10,0,1.5,1.25,1.5,1.75
0,0,0
1,1,1.3
0,0,1.5
1.25,1.5,1.75
1.25,1.5,1.8,1.33,1,1
1.25,1.5,1.6
1.3,1.3,1
2,2,3,0,1.872,2.12,-.5,0
10,0,0
2.12,2.12,1.56,1.56,2.12
81.776,0,0
2.12,2.12,1.56,1.56,2.12
62.578,0,0
2.12,2.12,1.56,1.56,2.12
19
1,1.187,1.43
1,8.25,1.43
1,10,1.43
2,9.104,1.43
2,18.063,1.43
2,27.021,1.43
2,35.98,1.43
2,44.938,1.43
2,54.396,1.43
2,63.396,1.43
2,72.219,1.43
2,81.776,1.43
3,8.5,1.43
3,16.521,1.43
3,25.521,1.43
3,34.521,1.43
3,43.521,1.43
3,52.521,1.43
3,62.578,1.43
0
0
0
1,10,48,48,0
2,10,14,1.25,36
3,10,14,1.25,36
4,10,4,25,0
5,10,0,0,0
```

♀

--- INPUT ECHO ---

```
6,10,0,0,0
7,10,99999,.4375,36
1,10,48,48,0
1,63.75,48,48,0
1,81.776,48,48,0
2,10,14,1.25,36
2,63.75,18,1.75,36
2,81.776,18,2.25,36
3,10,14,1.25,36
3,63.75,18,1.75,36
3,81.776,18,2.25,36
4,81.776,4,25,0
```

```
5,81.776,0,0,0
6,81.776,0,0,0
7,10,0,.4375,36
7,63.75,0,.4375,36
7,81.776,99999,.4375,36
1,16.021,48,48,0
1,59.828,48,48,0
1,62.578,48,48,0
2,16.021,18,2.25,36
2,59.828,18,1.125,36
2,62.578,18,1.125,36
3,16.021,18,2.25,36
3,59.828,18,1.125,36
3,62.578,18,1.125,36
4,62.578,4,25,0
5,62.578,0,0,0
6,62.578,0,0,0
7,16.021,0,.4375,36
7,59.828,0,.4375,36
7,62.578,99999,.875,36
```

♀

--- INPUT ECHO ---

--- FATIGUE REPORT ---

All Units: ksi

SPAN 1 - FATIGUE STRESS RANGE (ksi) -
(EXT - EXTREME FIBER, 4T=4*tw, 6T=6*tw)

LOCA	REBAR RANGE	-----TOP FLANGE----- EXT	4T	6T	-----BOTTOM FLANGE----- EXT	INS	4T	6T
1.0	0.00	0.00	0.00	0.00	0.00	0.00	0.00	0.00
1.1	0.00	1.37	1.20	1.16	-1.37	-1.30	-1.20	-1.16
1.2	0.00	2.61	2.30	2.21	-2.61	-2.48	-2.30	-2.21
1.3	0.00	3.74	3.30	3.17	-3.74	-3.56	-3.30	-3.17
1.4	0.00	4.79	4.22	4.05	-4.79	-4.55	-4.22	-4.05
1.5	0.00	5.70	5.03	4.83	-5.70	-5.42	-5.03	-4.83

Page 8

1.6	0.00	6.71	5.91	5.68	-6.71	-6.38	-5.91	-5.68
1.7	0.00	7.84	6.91	6.64	-7.84	-7.46	-6.91	-6.64
1.8	0.00	8.94	7.88	7.57	-8.94	-8.50	-7.88	-7.57
1.9	0.00	10.06	8.86	8.51	-10.06	-9.56	-8.86	-8.51
2.0	0.00	11.17	9.85	9.46	-11.17	-10.62	-9.85	-9.46

Note: For locations which do not experience tensile stresses
the fatigue stress range is output as a negative number.

A4646 Broadway Fatigue Unit 4 02-13-2017 14:16:49 Page 11

--- FATIGUE REPORT ---

All Units: ksi

SPAN 2 - FATIGUE STRESS RANGE (ksi) -
(EXT - EXTREME FIBER, 4T=4*tw, 6T=6*tw)

LOCA	REBAR RANGE	TOP FLANGE EXT	TOP FLANGE 4T	TOP FLANGE 6T	BOTTOM FLANGE EXT	BOTTOM FLANGE INS	BOTTOM FLANGE 4T	BOTTOM FLANGE 6T
2.0	0.00	11.17	9.85	9.46	-11.17	-10.62	-9.85	-9.46
2.1	0.00	5.13	4.52	4.34	-5.13	-4.87	-4.52	-4.34
2.122	0.00	4.87	4.29	4.12	-4.87	-4.63	-4.29	-4.12
2.122	0.00	2.91	2.52	2.42	-2.91	-2.72	-2.52	-2.42
2.2	0.00	-2.37	-2.05	-1.97	2.37	2.21	2.05	1.97
2.3	0.00	-3.89	-3.36	-3.23	3.89	3.62	3.36	3.23
2.4	0.00	-5.60	-4.84	-4.65	5.60	5.22	4.84	4.65
2.5	0.00	-6.44	-5.57	-5.35	6.44	6.00	5.57	5.35
2.6	0.00	-6.92	-5.98	-5.74	6.92	6.45	5.98	5.74
2.7	0.00	6.69	5.78	5.55	6.69	6.23	5.78	5.55
2.779	0.00	5.84	5.05	4.85	5.84	5.44	5.05	4.85
2.780	0.00	4.64	3.93	3.78	4.64	4.24	3.93	3.78
2.8	0.00	4.47	3.79	3.64	4.47	4.09	3.79	3.64
2.9	0.00	3.65	3.09	2.97	-3.65	-3.33	-3.09	-2.97
3.0	0.00	3.22	2.73	2.62	-3.22	-2.94	-2.73	-2.62

Note: For locations which do not experience tensile stresses
the fatigue stress range is output as a negative number.

A4646 Broadway Fatigue Unit 4 02-13-2017 14:16:49 Page 12

--- FATIGUE REPORT ---

Max stress range, top flange
@ Ext: 11.17 ksi

Max stress range, bottom flange
@ Ext: 8.94 ksi

All Units: ksi

SPAN 3 - FATIGUE STRESS RANGE (ksi) -
(EXT - EXTREME FIBER, 4T=4*tw, 6T=6*tw)

LOCA	REBAR RANGE	TOP FLANGE EXT	TOP FLANGE 4T	TOP FLANGE 6T	BOTTOM FLANGE EXT	BOTTOM FLANGE INS	BOTTOM FLANGE 4T	BOTTOM FLANGE 6T
3.0	0.00	3.22	2.73	2.62	-3.22	-2.94	-2.73	-2.62
3.1	0.00	3.24	2.75	2.64	-3.24	-2.97	-2.75	-2.64
3.2	0.00	3.71	3.14	3.02	-3.71	-3.39	-3.14	-3.02
3.256	0.00	4.05	3.43	3.30	4.05	3.70	3.43	3.30
3.256	0.00	7.52	6.66	6.40	7.52	7.18	6.66	6.40
3.3	0.00	8.02	7.10	6.82	8.02	7.66	7.10	6.82
3.4	0.00	8.91	7.89	7.58	8.91	8.51	7.89	7.58
3.5	0.00	8.77	7.77	7.46	8.77	8.38	7.77	7.46
3.6	0.00	-8.94	-7.92	-7.61	8.94	8.54	7.92	7.61

3.7	0.00	-8.18	-7.24	-6.96	8.18	7.81	7.24	6.96
3.8	0.00	-6.48	-5.74	-5.51	6.48	6.19	5.74	5.51
3.9	0.00	-3.91	-3.46	-3.32	3.91	3.73	3.46	3.32
3.956	0.00	0.00	0.00	0.00	0.00	0.00	0.00	0.00
3.956	0.00	0.00	0.00	0.00	0.00	0.00	0.00	0.00
4.0	0.00	0.00	0.00	0.00	0.00	0.00	0.00	0.00

Note: For locations which do not experience tensile stresses
the fatigue stress range is output as a negative number.

BROADWAY A4646 FATIGUE UNIT 4 FULLY COMPOSITE.STR

STLBRIDGE LRFD

STEEL BRIDGE DESIGN SOFTWARE

Copyright 2014 BRIDGESOFT, Inc. All Rights Reserved

STRESS OUTPUT

Title: A4646 Broadway Fatigue Unit 4
Input Filename: BROADWAY A4646 FATIGUE UNIT 4 FULLY COMPOSITE
Output Filename: BROADWAY A4646 FATIGUE UNIT 4 FULLY
COMPOSITE.STR
Time:14:18:25
Date:02-13-2017
AASHTO LRFD Code: 7TH Edition

♀

A4646 Broadway Fatigue Unit 4 02-13-2017 14:18:25 STLBRIDGE LRFD Page 1

--- INPUT ECHO ---

"2DBRIDGE I Girder"
"ENGLISH"

Page 1

```
"A4646 Broadway Fatigue Unit 4"
"LRFD v61"
0
3,"HL93",8,"0",0,600,0,0,0,0,0,0
4000,150,7.25,4.75,2.5,490,3644,29000,8,24
3,10,0,1.5,1.25,1.5,1.75
0,0,0
1,1,1.3
0,0,1.5
1.25,1.5,1.75
1.25,1.5,1.8,1.33,1,1
1.25,1.5,1.6
1.3,1.3,1
2,2,3,0,1.872,2.12,-.5,0
10,0,0
2.12,2.12,1.56,1.56,2.12
81.776,0,0
2.12,2.12,1.56,1.56,2.12
62.578,0,0
2.12,2.12,1.56,1.56,2.12
19
1,1.187,1.43
1,8.25,1.43
1,10,1.43
2,9.104,1.43
2,18.063,1.43
2,27.021,1.43
2,35.98,1.43
2,44.938,1.43
2,54.396,1.43
2,63.396,1.43
2,72.219,1.43
2,81.776,1.43
3,8.5,1.43
3,16.521,1.43
3,25.521,1.43
3,34.521,1.43
3,43.521,1.43
3,52.521,1.43
3,62.578,1.43
0
0
0
1,10,48,48,0
2,10,14,1.25,36
3,10,14,1.25,36
4,10,4,25,0
5,10,0,0,0
```


--- INPUT ECHO ---

```
6,10,0,0,0
7,10,99999,.4375,36
1,10,48,48,0
1,63.75,48,48,0
1,81.776,48,48,0
2,10,14,1.25,36
2,63.75,18,1.75,36
2,81.776,18,2.25,36
3,10,14,1.25,36
3,63.75,18,1.75,36
3,81.776,18,2.25,36
4,81.776,4,25,0
```

```
5,81.776,0,0,0
6,81.776,0,0,0
7,10,0,.4375,36
7,63.75,0,.4375,36
7,81.776,99999,.4375,36
1,16.021,48,48,0
1,59.828,48,48,0
1,62.578,48,48,0
2,16.021,18,2.25,36
2,59.828,18,1.125,36
2,62.578,18,1.125,36
3,16.021,18,2.25,36
3,59.828,18,1.125,36
3,62.578,18,1.125,36
4,62.578,4,25,0
5,62.578,0,0,0
6,62.578,0,0,0
7,16.021,0,.4375,36
7,59.828,0,.4375,36
7,62.578,99999,.875,36
```

♀

--- INPUT ECHO ---

--- FATIGUE REPORT ---

All Units: ksi

SPAN 1 - FATIGUE STRESS RANGE (ksi) -
(EXT - EXTREME FIBER, 4T=4*tw, 6T=6*tw)

LOCA	REBAR RANGE	-----TOP FLANGE----- EXT	4T	6T	-----BOTTOM FLANGE----- EXT	INS	4T	6T
1.0	0.00	0.00	0.00	0.00	0.00	0.00	0.00	0.00
1.1	1.20	1.04	0.90	0.86	-1.32	-1.26	-1.18	-1.14
1.2	2.40	2.08	1.80	1.72	-2.56	-2.44	-2.28	-2.20
1.3	3.54	3.07	2.67	2.55	-3.69	-3.53	-3.29	-3.18
1.4	4.66	4.05	3.53	3.38	-4.76	-4.54	-4.24	-4.08
1.5	5.76	5.01	4.37	4.19	-5.74	-5.48	-5.10	-4.92

Page 8

1.6	6.89	6.00	5.24	5.02	-6.78	-6.47	-6.03	-5.80
1.7	8.03	6.99	6.11	5.85	-7.91	-7.54	-7.02	-6.76
1.8	9.17	7.99	6.98	6.68	-9.03	-8.61	-8.02	-7.72
1.9	10.33	9.00	7.86	7.53	-10.18	-9.71	-9.04	-8.71
2.0	11.47	10.00	8.73	8.36	-11.31	-10.78	-10.04	-9.67

Note: For locations which do not experience tensile stresses
the fatigue stress range is output as a negative number.

A4646 Broadway Fatigue Unit 4 02-13-2017 14:18:25 Page 11

--- FATIGUE REPORT ---

All Units: ksi

SPAN 2 - FATIGUE STRESS RANGE (ksi) -
(EXT - EXTREME FIBER, 4T=4*tw, 6T=6*tw)

	REBAR	-----TOP FLANGE-----			-----BOTTOM FLANGE-----			
LOCA	RANGE	EXT	4T	6T	EXT	INS	4T	6T
2.0	11.47	10.00	8.73	8.36	-11.31	-10.78	-10.04	-9.67
2.1	5.25	4.56	3.97	3.79	-5.38	-5.14	-4.79	-4.62
2.122	4.46	3.85	3.33	3.18	-4.91	-4.69	-4.39	-4.24
2.122	2.73	2.41	2.04	1.95	-3.00	-2.82	-2.64	-2.54
2.2	-1.20	-1.02	-0.81	-0.76	2.06	1.96	1.85	1.80
2.3	-1.27	-1.04	-0.76	-0.69	3.02	2.88	2.74	2.67
2.4	-1.89	-1.54	-1.13	-1.03	4.48	4.27	4.07	3.97
2.5	-3.02	-2.56	-2.02	-1.88	5.39	5.12	4.85	4.72
2.6	-3.55	-3.03	-2.43	-2.28	5.86	5.55	5.25	5.10
2.7	-3.83	-3.30	-2.69	-2.53	5.74	5.43	5.12	4.97
2.779	3.81	3.32	2.75	2.61	5.07	4.79	4.50	4.36
2.780	3.12	2.80	2.27	2.16	4.09	3.79	3.56	3.45
2.8	3.10	2.78	2.27	2.16	3.95	3.66	3.43	3.32
2.9	3.03	2.74	2.28	2.18	-3.28	-3.02	-2.82	-2.72
3.0	3.38	3.08	2.61	2.51	-3.08	-2.82	-2.61	-2.51

Note: For locations which do not experience tensile stresses
the fatigue stress range is output as a negative number.

A4646 Broadway Fatigue Unit 4 02-13-2017 14:18:25 Page 12

--- FATIGUE REPORT ---

Max stress range, top flange
@ Ext: 10.00 ksi

Max stress range, bottom flange
@ Ext: 7.92 ksi

All Units: ksi

SPAN 3 - FATIGUE STRESS RANGE (ksi) -
(EXT - EXTREME FIBER, 4T=4*tw, 6T=6*tw)

	REBAR	-----TOP FLANGE-----			-----BOTTOM FLANGE-----			
LOCA	RANGE	EXT	4T	6T	EXT	INS	4T	6T
3.0	3.38	3.08	2.61	2.51	-3.08	-2.82	-2.61	-2.51
3.1	3.04	2.76	2.31	2.21	-3.15	-2.89	-2.70	-2.60
3.2	3.07	2.77	2.29	2.18	-3.57	-3.30	-3.09	-2.98
3.256	3.13	2.81	2.30	2.19	3.89	3.60	3.38	3.27
3.256	5.44	4.61	3.95	3.75	6.94	6.69	6.28	6.08
3.3	5.40	4.54	3.86	3.66	7.35	7.08	6.67	6.46
3.4	5.17	4.29	3.59	3.38	7.92	7.64	7.22	7.01
3.5	-4.67	-3.84	-3.19	-2.99	7.65	7.39	6.99	6.79
3.6	-4.28	-3.47	-2.83	-2.64	7.69	7.44	7.05	6.85

3.7	-3.60	-2.89	-2.33	-2.16	6.93	6.71	6.37	6.20
3.8	-2.68	-2.13	-1.70	-1.57	5.44	5.27	5.00	4.87
3.9	-1.52	-1.19	-0.94	-0.86	3.25	3.15	3.00	2.92
3.956	0.00	0.00	0.00	0.00	0.00	0.00	0.00	0.00
3.956	0.00	0.00	0.00	0.00	0.00	0.00	0.00	0.00
4.0	0.00	0.00	0.00	0.00	0.00	0.00	0.00	0.00

Note: For locations which do not experience tensile stresses
the fatigue stress range is output as a negative number.