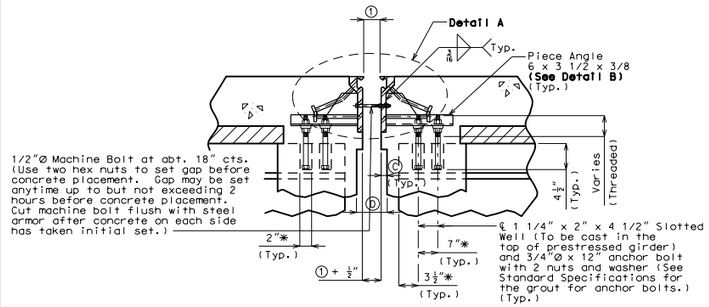

SECTION A-A

Note: Strip seal gland not shown for clarity.
✱ Dimension along ℄ Girder

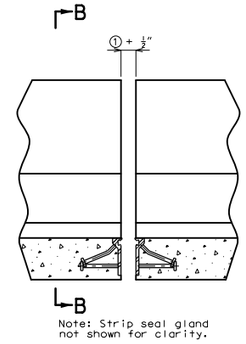

PART ELEVATION OF BARRIER CURB

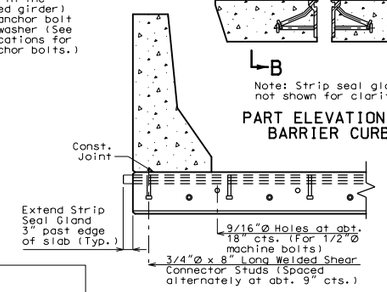

PART SECTION B-B

GENERAL NOTES:

Expansion joint system shall be fabricated in one section, except for staged construction and when the length is over 50 feet. A complete joint penetration groove welded splice shall be required. Welds shall be ground flush to provide a smooth surface. The expansion joint system shall be fabricated and installed to the crown and grade of the roadway.

The strip seal gland shall be installed in joints in one continuous piece without field splices. Factory splicing will be permitted for joints in excess of 53 feet.

Structural steel for the expansion joint system shall be ASTM A709 Grade 36 except the steel armor may be ASTM A709 Grade 50W. Anchors for the expansion joint system shall be in accordance with Sec 1037. Strip seal expansion joint system shall be in accordance with Sec 717.

Structural steel for the expansion joint system shall be coated with a minimum of two coats of inorganic zinc primer (5 mils minimum) or galvanized in accordance with ASTM A123. Anchors need not be protected from overspray.

Longitudinal reinforcing steel shall be placed so that ends shall be 1" from the vertical leg of the steel armor at the expansion joint system.

Concrete shall be forced under and around steel armor and anchors. Proper consolidation of the concrete shall be achieved by localized internal vibration.

② The installation temperature shall be taken as the actual air temperature averaged over the 24-hour period immediately preceding installation.

③ MoDOT Construction personnel will indicate the strip seal expansion joint system installed.

Steel armor may also be referred to as extrusion or rail.

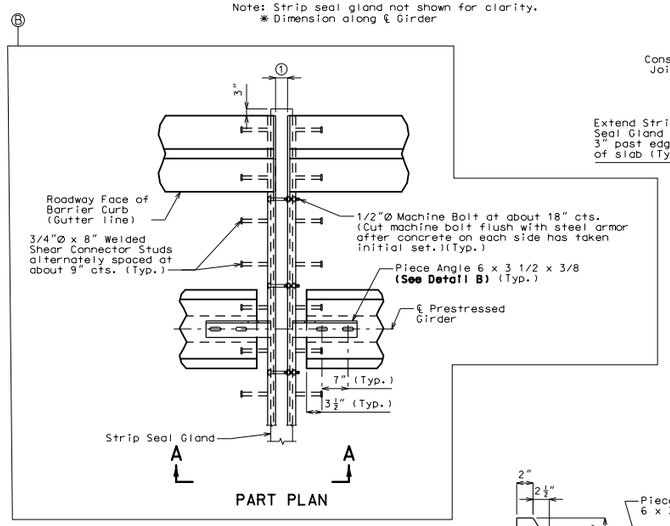

PART PLAN

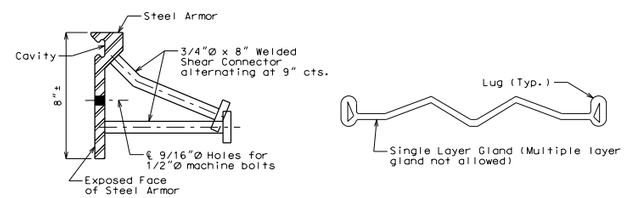

DETAIL OF JOINT ARMOR

DETAIL OF GLAND

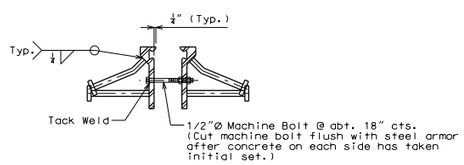

DETAIL A

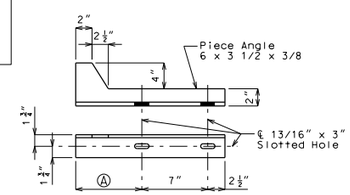

DETAIL B

Table of Allowed Transverse Strip Seal Expansion Joint System

Manufacturer	Strip Seal System (Designated Name)	Movement Parallel to RDWY	① Allowed Installation Gap Normal to Joint at RDWY Surface @ Air/Surface Temperature ②						③
			@ 40°F	@ 50°F	@ 60°F	@ 70°F	@ 80°F	@ 90°F	
D S Brown	Strip seal L2-400	XXX	XXX	XXX	XXX	XXX	XXX	XXX	□
D S Brown	Strip seal L2-500	XXX	XXX	XXX	XXX	XXX	XXX	XXX	□
Watson Bowman Acme (Wabo)	Strip seal SE-300	XXX	XXX	XXX	XXX	XXX	XXX	XXX	□
Watson Bowman Acme (Wabo)	Strip seal SE-400	XXX	XXX	XXX	XXX	XXX	XXX	XXX	□
Watson Bowman Acme (Wabo)	Strip seal SE-500	XXX	XXX	XXX	XXX	XXX	XXX	XXX	□

DETAILS OF STRIP SEAL EXPANSION JOINT SYSTEM AT INTERMEDIATE BENT NO.

Detailed
Checked

Note: This drawing is not to scale. Follow dimensions.

Sheet No. of

"THIS MEDIA SHOULD NOT BE CONSIDERED A CERTIFIED DOCUMENT."

DATE PREPARED	
1/25/2019	
ROUTE ✱	STATE MO
DISTRICT BR	SHEET NO. ✱
COUNTY ✱	
JOB NO. ✱	
CONTRACT ID.	
PROJECT NO.	
BRIDGE NO. STSEJS06	

DESCRIPTION	DATE

MISSOURI HIGHWAYS AND TRANSPORTATION COMMISSION
105 WEST CAPITOL
JEFFERSON CITY, MO 65102
1-888-ASK-MODOT (1-888-275-6636)

IF A SEAL IS PRESENT ON THIS SHEET IT HAS BEEN ELECTRONICALLY SEALED AND DATED.

STSEJS_std.dgn 1:46:19 PM 1/25/2019

Standard Drawing Guidance (do not show on plans):

Modify drawing as necessary.

Remove non-applicable rows in table.

Ⓐ Piece angle length to center of first slotted hole.

Ⓑ Use squared, left advanced or right advanced Part Plan as needed.

Ⓒ = 3/4" (Min.) @ 60° Verify only.

Ⓓ = ① @ 60° + 1/2" upper lips + 2 x 3/4" (Min.) Verify only.

Left Advanced

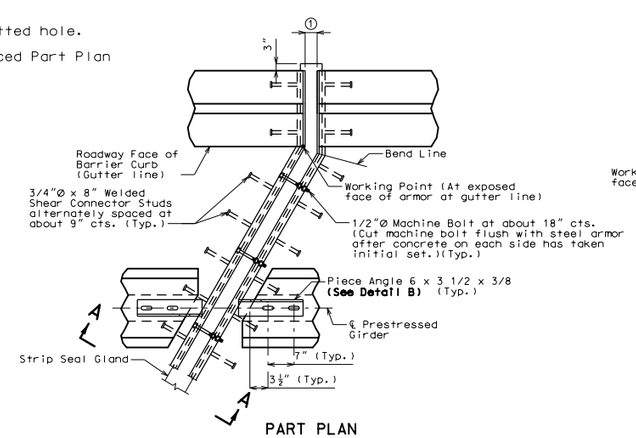

PART PLAN

Right Advanced

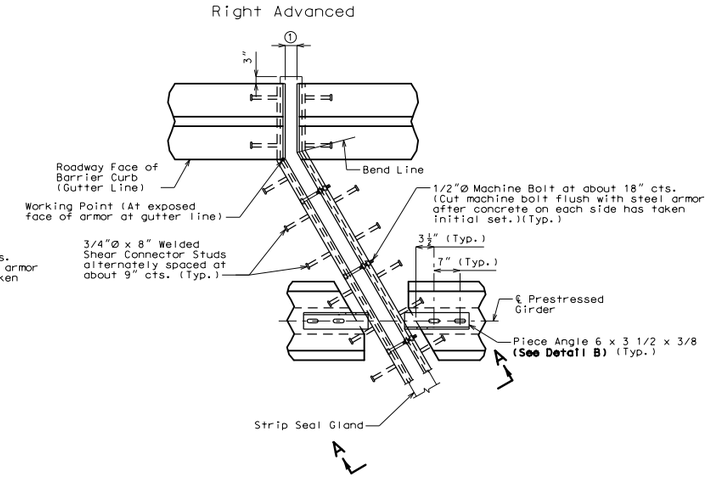

PART PLAN