MISSOURI HIGHWAYS AND TRANSPORTATION COMMISSION
PLANS FOR PROPOSED
STATE ROUTE 96

JASPER COUNTY

NOT TO SCALE

DESIGN DESIGNATION

A.D.T. - 2015 = 4812
A.D.T. - 2035 = 6481
D.H.V. = 8%
T = 18%
V = 35 M.P.H.

FUNCTIONAL CLASSIFICATION - MINOR ARTERIAL

PARTIAL CONTROLLED ACCESS HIGHWAY

THIS SHALL BE A PARTIAL CONTROLLED ACCESS HIGHWAY, EXCEPT AT LOCATIONS AND AS OTHERWISE SPECIFICALLY SHOWN ON THESE PLANS. NO ABUTTER'S RIGHTS IN OR OF DIRECT ACCESS TO, FROM, OR ACROSS THE HIGHWAY OR ITS RIGHT-OF-WAY SHALL ATTACH OR BELONG TO ANY PROPERTY ABUTTING ON SAID SECTION OF HIGHWAY, OR TO ANY PERSON MERELY BECAUSE OF OWNERSHIP OF SUCH ABUTTING PROPERTY WHERE THE SYMBOL SHOWN BELOW IS SHOWN ON THE RIGHT-OF-WAY LINE.

BEGINNING AND ENDING OF CONTROLLED ACCESS

NO RIGHT OF ACCESS OR CROSSING OF LINES BEARING THIS SYMBOL WILL BE PERMITTED UNDER ANY CIRCUMSTANCES.

CONVENTIONAL SYMBOLS
(USED IN PLANS)

	EXISTING	NEW
BUILDINGS AND STRUCTURES		
GUARD RAIL		
CONCRETE RIGHT-OF-WAY MARKER		
STEEL RIGHT-OF-WAY MARKER		
LOCATION SURVEY MARKER		
UTILITIES		
FIBER OPTICS	—FO—	—FO—
OVERHEAD TELEPHONE	—○—	—●—
UNDERGROUND TELEPHONE	—T—	—T—
OVERHEAD POWER	—□—	—■—
UNDERGROUND POWER	—P—	—P—
GAS	—G—	—G—
WATER	—W—	—W—
MANHOLE	SAN	
FIRE HYDRANT	HYD	
WATER VALVE	WV	
WATER METER	WM	
DROP INLET	DI	
DITCH BLOCK		
GROUND MOUNTED SIGN	SIGN	
LIGHT POLE		
H-FRAME POWER POLE		
TELEPHONE PEDESTAL	PED	
FENCE		
CHAIN LINK	—V—	
WOVEN WIRE	—X—	
GATE POST		
BENCHMARK	BM	

NOTE: DASHED OR OPEN SYMBOLS INDICATE EXISTING FEATURES

Detailed September 2016
Checked October 2016

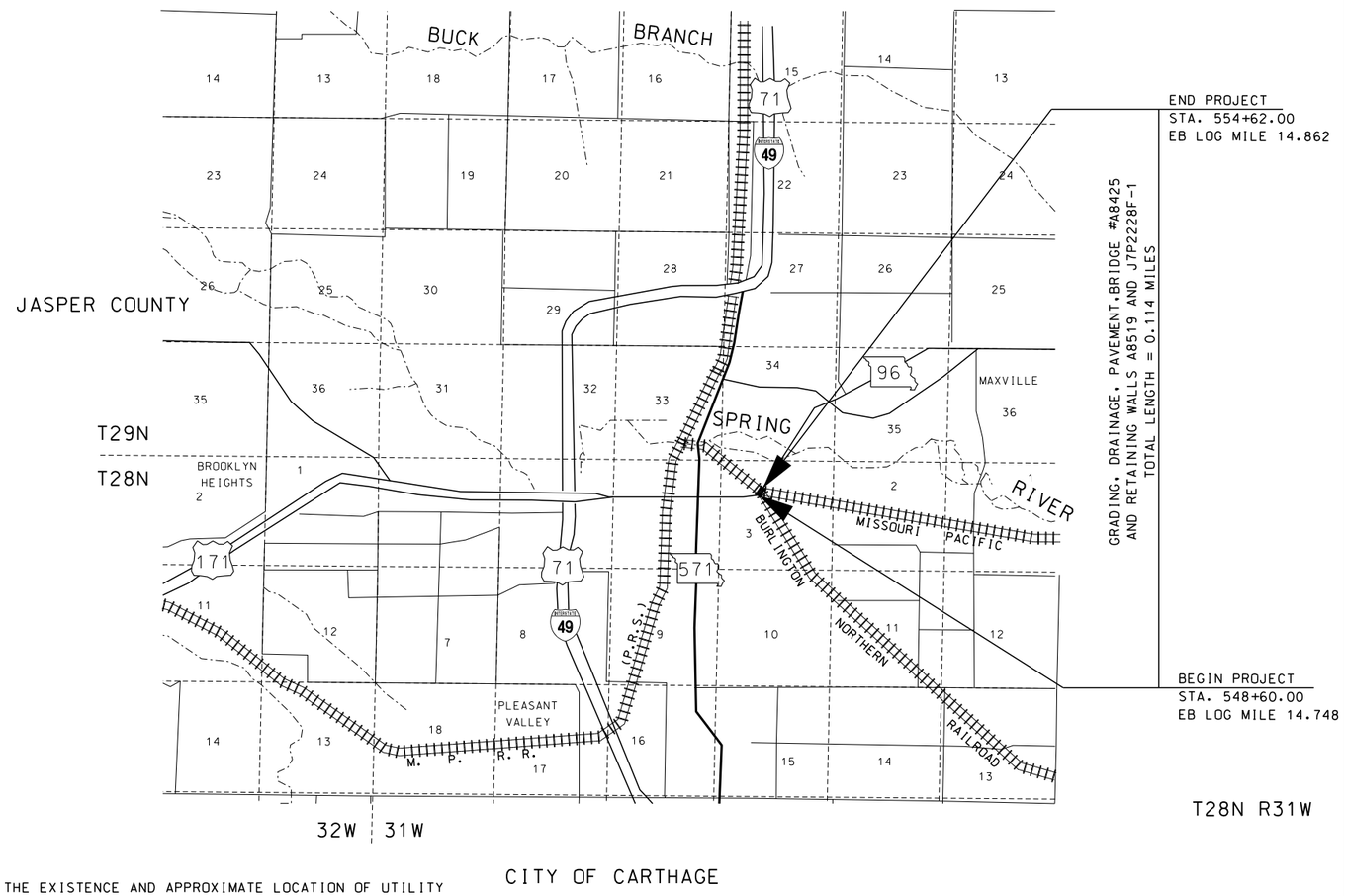

THE EXISTENCE AND APPROXIMATE LOCATION OF UTILITY FACILITIES KNOWN TO EXIST, AS SHOWN ON THE PLANS, ARE BASED ON THE BEST INFORMATION AVAILABLE TO THE COMMISSION AT THIS TIME. THIS INFORMATION IS PROVIDED BY THE COMMISSION "AS-IS" AND THE COMMISSION EXPRESSLY DISCLAIMS ANY REPRESENTATION OR WARRANTY AS TO THE COMPLETENESS, ACCURACY, OR SUITABILITY OF THE INFORMATION FOR ANY USE. RELIANCE UPON THIS INFORMATION IS DONE AT THE RISK AND PERIL OF THE USER, AND THE COMMISSION SHALL NOT BE LIABLE FOR ANY DAMAGES THAT MAY ARISE FROM ANY ERROR IN THE INFORMATION. IT IS, THEREFORE, THE RESPONSIBILITY OF THE CONTRACTOR TO VERIFY THE EXISTENCE, LOCATION AND STATUS OF ANY FACILITY. SUCH VERIFICATION INCLUDES DIRECT CONTACT WITH THE LISTED UTILITIES.

ENGINEER'S AUTHENTICATION
THE RESPONSIBILITY FOR PROFESSIONAL ENGINEERING LIABILITY ON THIS PROJECT IS HEREBY LIMITED TO THIS SET OF PLANS AUTHENTICATED BY THE SEAL, SIGNATURE, AND DATE HEREUNDER ATTACHED. RESPONSIBILITY IS DISCLAIMED FOR ALL OTHER ENGINEERING PLANS INVOLVED IN THIS PROJECT AND SPECIFICALLY EXCLUDES REVISIONS AFTER THIS DATE UNLESS REAUTHENTICATED.
HDR ENGINEERING, INC.

INDEX OF SHEETS

DESCRIPTION	SHEET NUMBER
TITLE SHEET	1
TYPICAL SECTIONS (TS) (3 SHEETS)	2
QUANTITIES (QU) (4 SHEETS)	3
PLAN-PROFILE (PP)	4-5
REFERENCE POINTS (RP)	6
COORDINATE POINTS (CP)	7
SPECIAL SHEETS (SS)	8-13
TRAFFIC CONTROL SHEETS (TC)	*
EROSION CONTROL SHEETS (EC)	14
LIGHTING (LT)	15-16
SIGNING (SN)	17
PAVEMENT MARKING (PM)	17
CULVERT SECTIONS (CS)	18
BRIDGE DRAWINGS (B)	
A8425	1-53
WALL A8519	1-2
CROSS SECTIONS (XS)	1-7

* FOR TRAFFIC CONTROL INFORMATION SEE PROJECT J7P2228G

LENGTH OF PROJECT

BEGINNING OF PROJECT	STA. 548+60.00
END OF PROJECT	STA. 554+62.00
APPARENT LENGTH	602.00 FEET
EQUATIONS AND EXCEPTIONS:	NONE
TOTAL CORRECTIONS	0.00 FEET
NET LENGTH OF PROJECT	602.00 FEET
STATE LENGTH	0.114 MILES

STATE OF MISSOURI
DAVID GRAHAM BARRETT
NUMBER PE-2006002787
PROFESSIONAL ENGINEER

THIS SHEET HAS BEEN SIGNED, SEALED AND DATED ELECTRONICALLY

DATE PREPARED 11/7/2016

ROUTE	STATE
96	MO
DISTRICT	SHEET NO.
SW	1

COUNTY JASPER
JOB NO. J7P2228F
CONTRACT ID.
PROJECT NO.
BRIDGE NO. A8425

DESCRIPTION	DATE

IF A SEAL IS PRESENT ON THIS SHEET IT HAS BEEN ELECTRONICALLY SEALED AND DATED.

MISSOURI HIGHWAYS AND TRANSPORTATION COMMISSION
105 WEST CAPITOL
JEFFERSON CITY, MO 65102
1-888-ASK-MODOT (1-888-275-6636)

HDR Engineering, Inc.
4435 Main Street
Suite 1000
Kansas City, MO 64111-1856
816-360-2700
Certificate of Authority: 000856

c:\pwworking\oma\d2087525\001_TITLE_J7P2228F_I1.dgn 8:01:54 PM 11/7/2016

OPTIONAL PAVEMENT
1.75" SP125C W/PG 70-22 3.00" SP250C W/PG 70-22 5.75" SP250C W/ PG 64-22 TACK MUST BE APPLIED BETWEEN ALL LIFTS OF ASPHALT AT RATES INDICATED IN THE SPECIFICATIONS OR 8.5" PCCP W/15' JOINT SPACING AND 1.25" DOWELS NORTH OF BRIDGE A8425 9.0" PCCP W/12' JOINT SPACING AND 1.25" DOWELS SOUTH OF BRIDGE A8425

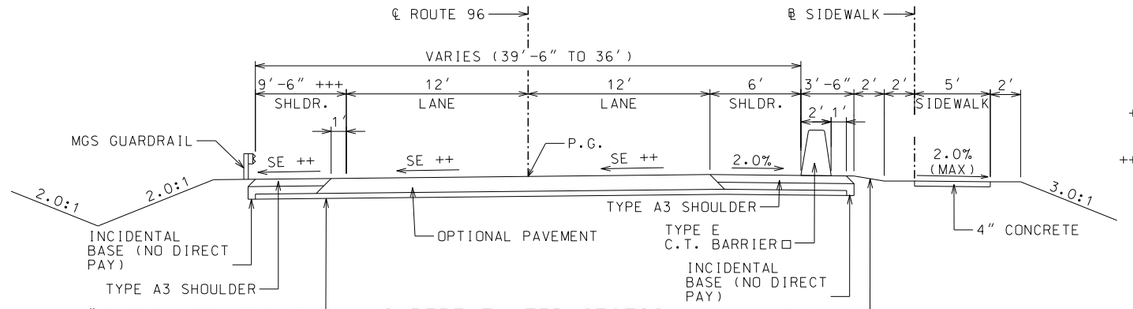

SUPERELEVATED SECTION
STA. 548+60.00 TO STA. 549+11.27

++ SEE SPECIAL SHEET FOR SUPERELEVATION TRANSITION.

+++ WIDTH VARIES FROM 9'-6" TO 6' BETWEEN STA. 548+88.45 AND STA. 549+55.00

□ BARRIER HEIGHT TRANSITION BETWEEN STA. 548+60.00 AND STA. 548+85.00 SEE SPECIAL SHEET. CONSTRUCT END ANCHORAGE AT BOTH ENDS PER STD. PLAN WHERE FULL HEIGHT BARRIERS IS CONSTRUCTED.

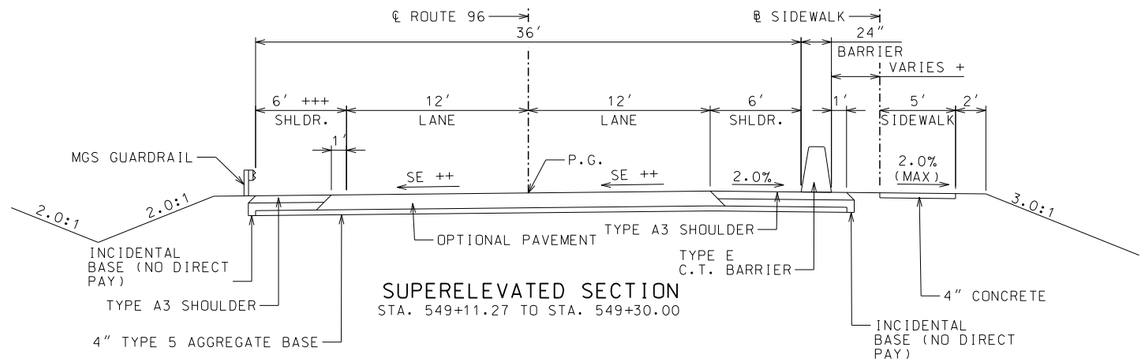

SUPERELEVATED SECTION
STA. 549+11.27 TO STA. 549+30.00

+ WIDTH VARIES FROM 5'-6" TO 0' BETWEEN STA. 549+11.27 AND STA. 549+30.00.

++ SEE SPECIAL SHEET FOR SUPERELEVATION TRANSITION.

+++ WIDTH VARIES FROM 9'-6" TO 6' BETWEEN STA. 548+88.45 AND STA. 549+55.00.

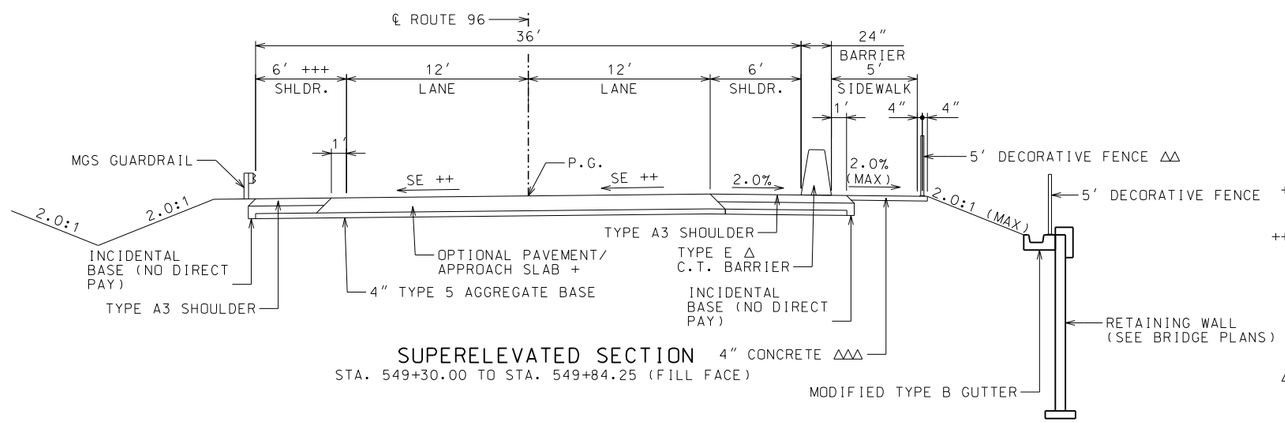

SUPERELEVATED SECTION
STA. 549+30.00 TO STA. 549+84.25 (FILL FACE)

+ SEE BRIDGE PLANS FOR APPROACH SLAB DETAILS.

++ SEE SPECIAL SHEET FOR SUPERELEVATION TRANSITION.

+++ WIDTH VARIES FROM 9'-6" TO 6' BETWEEN STA. 584+88.45 AND STA. 549+64.75.

△ TYPE E BARRIER ENDS AT STA. 549+64.75. CONSTRUCT BARRIER END ANCHORAGE AT BOTH ENDS PER STD PLANS.

△△ INSTALL 5' DECORATIVE FENCE BETWEEN STA. 549+30.32 AND STA. 549+64.32. SEE SPECIAL SHEET FOR DETAILS.

△△△ INCREASE SIDEWALK THICKNESS TO 8" BETWEEN STA. 549+29.75 AND STA. 549+64.75.

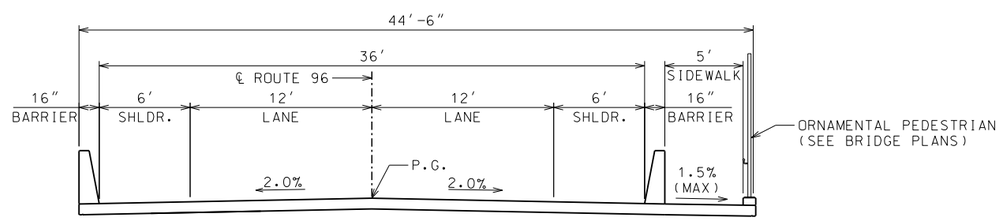

TYPICAL SECTION BRIDGE A8425
STA. 549+84.25 (FILL FACE) TO STA. 552+90.75 (FILL FACE)

TYPICAL SECTIONS
ROUTE 96
SHEET 1 OF 3

STATE OF MISSOURI
DAVID GRAHAM BARRETT
NUMBER PE-2006002787
PROFESSIONAL ENGINEER

THIS SHEET HAS BEEN SIGNED, SEALED AND DATED ELECTRONICALLY

DATE PREPARED	
11/2/2016	
ROUTE 96	STATE MO
DISTRICT SW	SHEET NO. 2
COUNTY JASPER	
JOB NO. J7P2228F	
CONTRACT ID. .	
PROJECT NO. .	
BRIDGE NO. A8425	

DESCRIPTION	DATE
.	.
.	.
.	.
.	.
.	.
.	.
.	.

IF A SEAL IS PRESENT ON THIS SHEET IT HAS BEEN ELECTRONICALLY SEALED AND DATED.

MISSOURI HIGHWAYS AND TRANSPORTATION COMMISSION
105 WEST CAPITOL
JEFFERSON CITY, MO 65102
1-888-ASK-MODOT (1-888-275-6636)

HDR Engineering, Inc.
4435 Main Street
Suite 1000
Kansas City, MO 64111-1856
816-360-2700
Certificate of Authority: 000856

c:\pwworking\oma\d2087525\002_TS_J7P2228F_I5.DGN 6:16:19 PM 11/2/2016

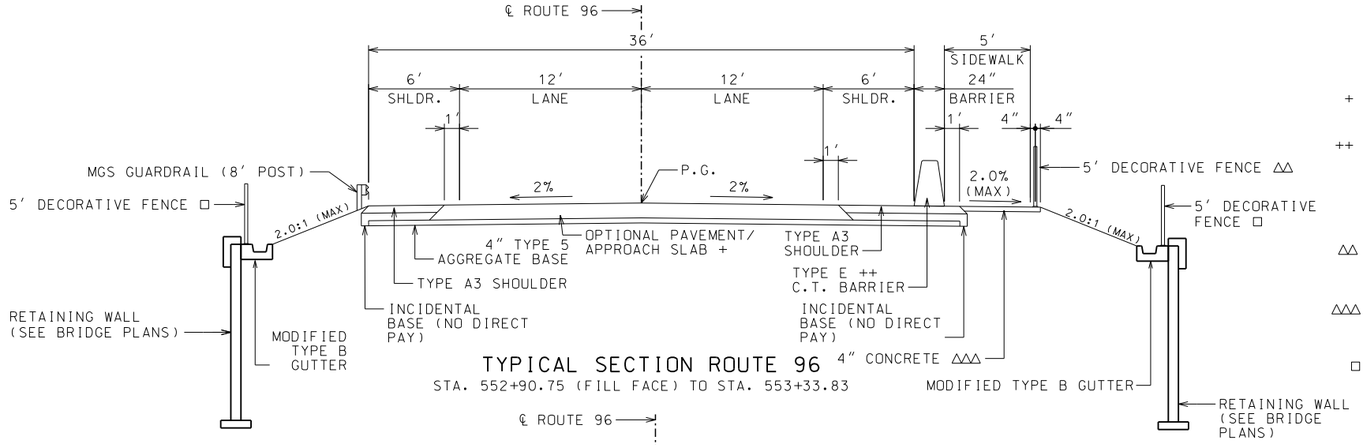

TYPICAL SECTION ROUTE 96
STA. 552+90.75 (FILL FACE) TO STA. 553+33.83

+ SEE BRIDGE PLANS FOR APPROACH SLAB DETAILS.

++ TYPE E BARRIER BEGINS AT STA. 553+10.25. CONSTRUCT BARRIER END ANCHORAGE AT BOTH ENDS PER STD. PLAN WHERE FULL HEIGHT BARRIER IS CONSTRUCTED.

△△ INSTALL 5′ DECORATIVE FENCE BETWEEN STA. 553+10.61 AND STA. 553+34.61. SEE SPECIAL SHEET FOR DETAILS.

△△△ INCREASE SIDEWALK THICKNESS TO 8″ BETWEEN STA. 553+10.28 AND STA. 553+35.28.

□ SEE WALL SHEETS FOR LIMITS OF DECORATIVE FENCING

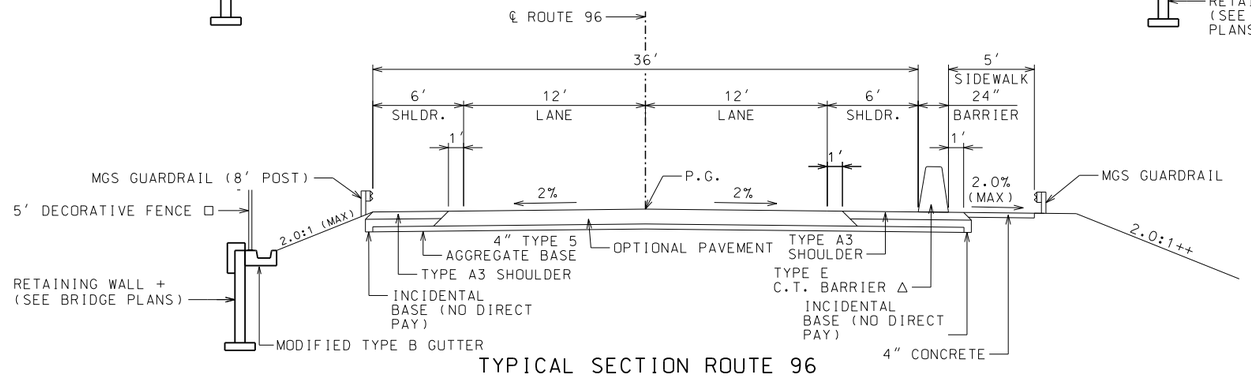

TYPICAL SECTION ROUTE 96
STA. 553+33.83 TO STA. 553+65.00

△ BARRIER HEIGHT TRANSITION BETWEEN STA. 553+40.00 AND STA. 553+65.00. SEE SPECIAL SHEET

+ RETAINING WALL ENDS AT STA. 553+43.00.

++ SIDE SLOPE TRANSITIONS FROM 2:1 TO 2.5:1 BETWEEN STA. 553+50 AND STA. 554+00.

□ SEE WALL SHEETS FOR LIMITS OF DECORATIVE FENCING

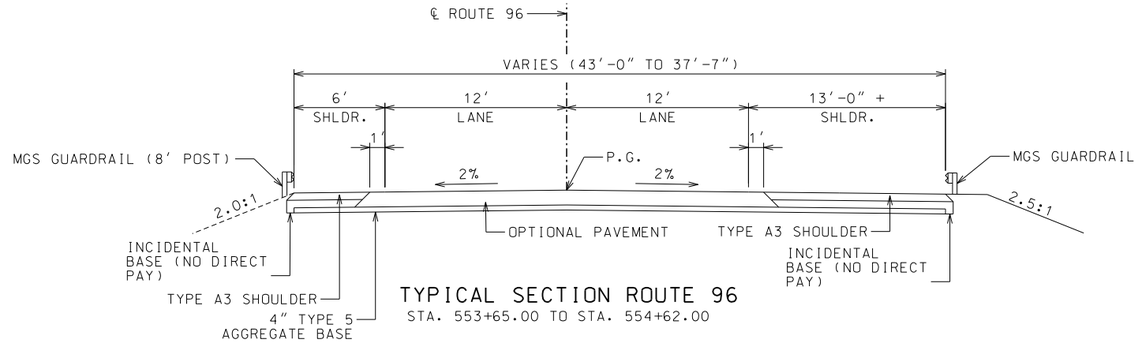

TYPICAL SECTION ROUTE 96
STA. 553+65.00 TO STA. 554+62.00

+ WIDTH TRANSITIONS FROM 13′-0″ TO 7′-7″ FROM STA. 553+71.33 TO STA. 554+62.00

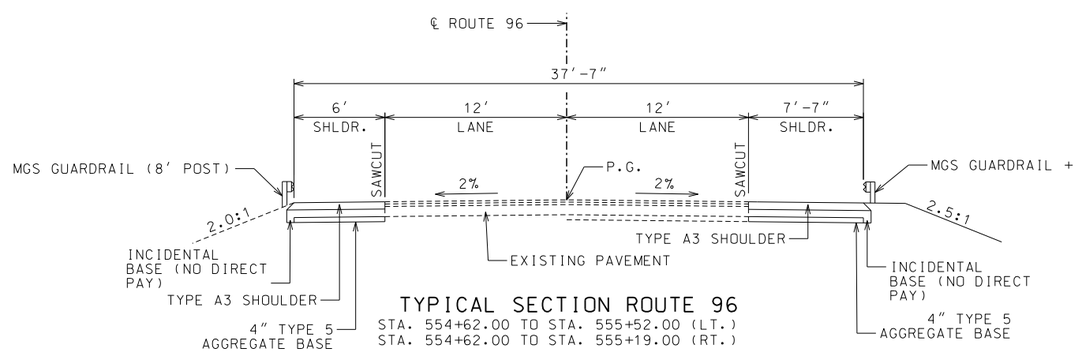

TYPICAL SECTION ROUTE 96
STA. 554+62.00 TO STA. 555+52.00 (LT.)
STA. 554+62.00 TO STA. 555+19.00 (RT.)

+ MGS GUARDRAIL ENDS AT STA. 554+85.19.

TYPICAL SECTIONS
ROUTE 96
SHEET 2 OF 3

STATE OF MISSOURI
DAVID GRAHAM BARRETT
NUMBER PE-2006002787
PROFESSIONAL ENGINEER

THIS SHEET HAS BEEN SIGNED, SEALED AND DATED ELECTRONICALLY

DATE PREPARED	
11/2/2016	
ROUTE 96	STATE MO
DISTRICT SW	SHEET NO. 2
COUNTY JASPER	
JOB NO. J7P2228F	
CONTRACT ID. .	
PROJECT NO. .	
BRIDGE NO. A8425	

DESCRIPTION	DATE
.	.
.	.
.	.
.	.
.	.
.	.

IF A SEAL IS PRESENT ON THIS SHEET IT HAS BEEN ELECTRONICALLY SEALED AND DATED.

MISSOURI HIGHWAYS AND TRANSPORTATION COMMISSION
105 WEST CAPITOL
JEFFERSON CITY, MO 65102
1-888-ASK-MODOT (1-888-275-6636)

HDR Engineering, Inc.
4435 Main Street
Suite 1000
Kansas City, MO 64111-1856
816-360-2700
Certificate of Authority: 000856

GUARDRAIL ENDS AT 556+28.22 (LT) +

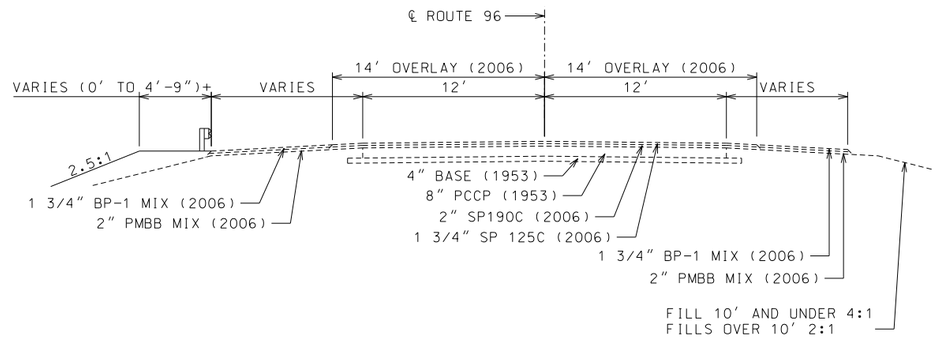

TYPICAL SECTION ROUTE 96

STA. 555+76.75 AND STA. 556+39.82

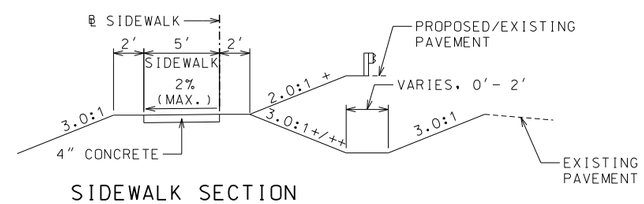

SIDEWALK SECTION

STA. 0+00.00 TO STA. 1+80.00

\+ SIDE SLOPE TRANSITION FROM
2.0:1 TO 3.0:1 BETWEEN
STA. 0+90.00 & STA. 1+04.00

++ SIDE SLOPE TRANSITION FROM
2.0:1 TO 3.0:1 BETWEEN
STA. 1+25.00 AND STA. 1+45.00

TYPICAL SECTIONS
ROUTE 96
SHEET 3 OF 3

STATE OF MISSOURI
DAVID GRAHAM BARRETT
NUMBER PE-2006002787
PROFESSIONAL ENGINEER

THIS SHEET HAS BEEN SIGNED, SEALED AND DATED ELECTRONICALLY

DATE PREPARED	
11/2/2016	
ROUTE 96	STATE MO
DISTRICT SW	SHEET NO. 2
COUNTY JASPER	
JOB NO. J7P2228F	
CONTRACT ID. .	
PROJECT NO. .	
BRIDGE NO. A8425	

DESCRIPTION	DATE
.	.
.	.
.	.
.	.
.	.
.	.
.	.

IF A SEAL IS PRESENT ON THIS SHEET IT HAS BEEN ELECTRONICALLY SEALED AND DATED.

MISSOURI HIGHWAYS AND TRANSPORTATION COMMISSION
105 WEST CAPITOL
JEFFERSON CITY, MO 65102
1-888-ASK-MODOT (1-888-275-6636)

HDR Engineering, Inc.
4435 Main Street
Suite 1000
Kansas City, MO 64111-1856
816-360-2700
Certificate of Authority: 000856

MISSOURI HIGHWAYS AND TRANSPORTATION COMMISSION
SUMMARY OF QUANTITIES

REMOVAL OF IMPROVEMENTS

SHEET NO.	FROM STATION	TO STATION	LOCATION	DESCRIPTION	AMOUNT	REMARKS
4	548+60.00	549+84.25	ROUTE 96 LT./RT.	EXISTING PAVEMENT & SHOULDER	620 SY	
4	552+90.75	554+62.00	ROUTE 96 LT./RT.	EXISTING PAVEMENT & SHOULDER	725 SY	
4	554+62.00	555+19.00	ROUTE 96 LT.	EXISTING SHOULDER	22 SY	
4	548+69.26	549+84.25	ROUTE 96 LT.	EXISTING GUARDRAIL	115 LF	
4	548+68.32	549+84.25	ROUTE 96 RT.	EXISTING GUARDRAIL	116 LF	
4	552+90.75	555+52.53	ROUTE 96 LT.	EXISTING GUARDRAIL	262 LF	
4	552+90.75	555+75.75	ROUTE 96 RT.	EXISTING GUARDRAIL	285 LF	
4	548+60.00	-	ROUTE 96 LT./RT	SAW CUT PAVEMENT	33 LF	
4	554+62.00	550+52.00	ROUTE 96 LT./RT	SAW CUT PAVEMENT	185 LF	
17	548+40.00	550+00.00	ROUTE 96 LT.	OBJECT MARKERS	3	
17	548+40.00	550+00.00	ROUTE 96 RT.	OBJECT MARKERS	3	
17	553+00.00	554+62.00	ROUTE 96 LT.	OBJECT MARKERS	3	
17	553+00.00	554+62.00	ROUTE 96 RT.	OBJECT MARKERS	3	
17	548+53.50	-	ROUTE 96 RT.	REMOVE & RELOCATE EX SIGN	1	
17	555+32.50	-	ROUTE 96 LT.	REMOVE & RELOCATE EX SIGN	1	
17	555+12.50	-	ROUTE 96 RT.	REMOVE & RELOCATE EX SIGN	1	
4	549+05.38	-	ROUTE 96 RT.	Utility Pole	1	
4	549+91.57	-	ROUTE 96 RT.	Utility Pole	1	
			TOTAL	LUMP SUM = 1		

EARTHWORK

SHEET NO.	STATION	STATION	ROADWAY	CLASS A EXCAVATION (CY)	COMPACTING EMBANKMENT (CY)	EMBANKMENT IN PLACE (CY)	REMARKS
4	548+60.00	550+22.60	ROUTE 96	811.2	1276.1	-	ADJUST FOR WALL EXCAVATION AND BACKFILL FOR RETAINING WALL
4	00+72.17	1+79.80	SIDEWALK	1.1	145.5	-	
4	552+53.10	556+39.97	ROUTE 96	4297.6	3421.1	-	ADJUST FOR WALL EXCAVATION AND BACKFILL FOR RETAINING WALL
			TOTAL	5109.9	4842.7	0	
			PAY TOTAL	5110	4843	0	

EARTHWORK QUANTITIES ARE UNADJUSTED VOLUMES.

EARTHWORK IS BASED ON ASPHALT OPTION. INCLUDING BASE.
THE CONTRACTOR SHALL ADJUST EARTHWORK AS NEEDED ACCORDING
TO THE PREFERRED PAVEMENT OPTION AT THEIR OWN EXPENSE.

PAVEMENT

SHEET NO.	FROM STATION	TO STATION	ROADWAY	LOC	OPTIONAL PAVEMENT (SY)	TYPE A3 FOR BASE SHOULDER (SY)	4" TYPE 5 AGGREGATED BASE (SY)
4	548+60.00	549+64.75	ROUTE 96	CL	291.0	182.0	473
4	553+10.25	554+62.00	ROUTE 96	CL	438.4	228.3	667
4	554+62.00	555+52.00	ROUTE 96	LT	0.0	53.9	54
4	554+62.00	555+19.00	ROUTE 96	RT	0.0	48.0	48
			TOTAL		729.4	512.2	1241
			PAY TOTAL		729.4	512.2	1241

GUARDRAIL

SHEET NO.	FROM STATION	TO STATION	LOCATION	ROADWAY	MGS GUARDRAIL 6' POSTS (LF)	MGS GUARDRAIL 8' POSTS (LF)	MGS BRIDGE APPROACH TRANSITION (EA)	MGS END ANCHOR (EA)	TYPE A CRASHWORTHY END TERMINAL (MASH) (EA)
4	548+58.02	549+73.25	LT	ROUTE 96	25		1		1
4	548+42.62	549+11.27	RT	ROUTE 96					
4	553+01.75	556+28.22	LT	ROUTE 96		237.5	1		1
4	553+33.84	554+85.19	RT	ROUTE 96	100			1	1
				TOTAL	125.0	237.5	2	1	3
				PAY TOTAL	125	238	2	1	3

SIDEWALK

SHEET NO.	FROM STATION	TO STATION	ROADWAY	LOC	4" SIDEWALK (SY)	8" SIDEWALK (SY)	4" GRAVEL A (SY)
4	549+29.75	549+64.75	ROUTE 96	RT		18.0	
4	553+10.28	553+35.28	ROUTE 96	RT		12.6	
4	553+35.00	553+65.00	SIDEWALK	RT	13.3		
11	0+00.00	1+79.80	SIDEWALK	BL	100.0		
11	1+79.80		SIDEWALK	BL			8.2
				TOTAL	113.3	30.6	8

CONCRETE TRAFFIC BARRIER

SHEET NO.	FROM STATION	TO STATION	ROADWAY	LOC	TYPE 'E' (LF)	REMARKS
4	548+60.00	549+64.75	ROUTE 96	RT	104.8	INCLUDES HEIGHT TRANSITION
4	553+10.25	553+65.00	ROUTE 96	RT	64.7	INCLUDES HEIGHT TRANSITION
				TOTAL	169.5	
				PAY TOTAL	170	

FENCE

SHEET NO.	STATION	STATION	ROADWAY	LOC	5' DECORATIVE FENCE (LF)
4	549+30.32	549+64.32	ROUTE 96	SIDEWALK	34
4	549+35.42	549+93.90	ROUTE 96	RT RET WALL	62
4	553+10.61	553+34.61	ROUTE 96	SIDEWALK	24
4	552+84.00	553+33.30	ROUTE 96	RT RET WALL	74
4	552+84.00	553+42.49	ROUTE 96	LT RET WALL	87
				TOTAL	281

GUTTER

SHEET NO.	STATION	STATION	ROADWAY	LOC	TYPE B MODIFIED (LF)
4	549+35.42	549+93.90	ROUTE 96	RT RET WALL	62
4	552+84.00	553+33.30	ROUTE 96	RT RET WALL	99
4	552+84.00	553+42.49	ROUTE 96	LT RET WALL	107
				TOTAL	268

SUMMARY SHEET
SHEET 1 OF 4

STATE OF MISSOURI
DAVID GRAHAM BARRETT
NUMBER PE-2006002787
PROFESSIONAL ENGINEER

THIS SHEET HAS BEEN SIGNED, SEALED AND DATED ELECTRONICALLY

DATE PREPARED 11/2/2016

ROUTE	STATE
96	MO
DISTRICT	SHEET NO.
SW	3

COUNTY JASPER

JOB NO. J7P2228F

CONTRACT ID. .

PROJECT NO. .

BRIDGE NO. A8425

DATE	DESCRIPTION
.	.

IF A SEAL IS PRESENT ON THIS SHEET IT HAS BEEN ELECTRONICALLY SEALED AND DATED.

MISSOURI HIGHWAYS AND TRANSPORTATION COMMISSION
105 WEST CAPITOL
JEFFERSON CITY, MO 65102
1-888-ASK-MODOT (1-888-275-6636)

HDR Engineering, Inc.
4435 Main Street
Suite 1000
Kansas City, MO 64111-1856
816-360-2700
Certificate of Authority: 000856

DRAIN BASIN/CULVERTS											
SHEET NO.	STATION	ROADWAY	LOC	4X2 DROP INLET (LF)✳	4X2 CURVED VANE GRATE (EA)✳	12" GROUP C PIPE (LF)✳	12" FLARED END SECTION (EA)✳	DRAIN BASIN (EA)	15" GROUP C PIPE (LF)	15" GROUP C FES (LF)	CLASS 3 EXCAVATION (CY)
18	553+64.00	ROUTE 96	RT	3.0	1	58	1	1			
18	548+60.97	ROUTE 96	RT	3.5	1	32	1	1			
18	1+16.51	SIDEWALK	LT/RT						24.6	2	2
							TOTAL	2	24.6	2	2
							PAY TOTAL	2	25	2	2

✳ FOR INFORMATION ONLY. PAY FOR UNDER DRAIN BASIN BID ITEM.

MOBILIZATION
LUMP SUM = 1

CONTRACTOR FURNISHED SURVEYING
LUMP SUM = 1

EROSION CONTROL												
SHEET NO.	FROM STA	TO STA	ROADWAY	LOC	SILT FENCE (LF)	SEDIMENT REMOVAL (CY)	CURB INLET CHECKS (EA)	ROCK DITCH CHECK (LF)	ALTERNATE DITCH CHECK (LF)	FURNISHING TYPE 2 ROCK BLANKET (CY)	PLACING TYPE 2 ROCK BLANKET (CY)	PERMANENT EROSION CONTROL GEOTEXTILE (SY)
14	548+60.00	550+30.00	ROUTE 96	LT/RT	482	7	1	20	12	549	549	824
14	552+45.00	556+50.00	ROUTE 96	LT/RT	857	9	1	10		584	584	876
				TOTAL	1339	16	2	30	12	1133	1133	1700

SEEDING					
SHEET NO.	FROM STA	TO STA	TO ROADWAY	TO LOC	SEEDING COOL SEASON MIXTURE ACRE
14	548+60.00	549+84.25	ROUTE 96	LT/RT	0.03
14	0.00	1+79.80	ROUTE 96	LT/RT	0.10
14	552+45.00	555.19	ROUTE 96	LT/RT	0.46
				TOTAL	0.59
				PAY TOTAL	0.60

ROCK LINING (CULVERT OUTLETS)					
SHEET NO.	STATION	ROADWAY	LOC	ROCK LINING (CY)	REMARKS
14	1+16.51	SIDEWALK	LT	2	1'X 12 X 4'
14	548+60.97	ROUTE 96	RT	2	1'X 12 X 4'
14	553+64.00	ROUTE 96	RT	2	1'X 12 X 4'
			TOTAL	6	

MECHANICALLY STABILIZED EARTH WALL SYSTEMS						
SHEET NO.	STATION	ROADWAY	LOC	MSE WALL SYSTEM (SF)	CONCRETE MASONRY PROTECTION SYSTEM (LS)	SACRIFICIAL GRAFFITI PROTECTION SYSTEM (LS)
12	549+35.42 to 549+93.90	ROUTE 96	RT	715	1	1
			TOTAL	715	1	1

SUMMARY SHEET

SHEET 2 OF 4

STATE OF MISSOURI
DAVID GRAHAM BARRETT
NUMBER PE-2006002787
PROFESSIONAL ENGINEER

THIS SHEET HAS BEEN SIGNED, SEALED AND DATED ELECTRONICALLY

DATE PREPARED 11/2/2016

ROUTE 96 | STATE MO

DISTRICT SW | SHEET NO. 3

COUNTY JASPER

JOB NO. J7P2228F

CONTRACT ID. .

PROJECT NO. .

BRIDGE NO. A8425

DESCRIPTION	DATE
.	.
.	.
.	.
.	.
.	.
.	.
.	.

IF A SEAL IS PRESENT ON THIS SHEET IT HAS BEEN ELECTRONICALLY SEALED AND DATED.

MISSOURI HIGHWAYS AND TRANSPORTATION COMMISSION

105 WEST CAPITOL
JEFFERSON CITY, MO 65102
1-888-ASK-MODOT (1-888-275-6636)

HDR Engineering, Inc.
4435 Main Street
Suite 1000
Kansas City, MO 64111-1856
816-360-2700
Certificate of Authority: 000856

MISSOURI HIGHWAY AND TRANSPORTATION COMMISSION

SUMMARY OF QUANTITIES

RIGID CONDUIT

	SHEET NO.	STATION	OFFSET	LOCATION	CIR	TRENCHED (in*) 2"	3"	4"	5"	PUSHED (in*)		3"	4"	FROM	TO	EXTERNAL ON STRUCTURE 2"	3"	4"	5"			
**	16	1+72	6' LEFT	E. CENTRAL AVE.	A1	50								P.S.	⋈							
		1+68	6' LEFT	E. CENTRAL AVE.	A1	7								⋈	EPB101							
		549+74.56	19.33' RIGHT	ROUTE 96	A1	10								EPB102	JB1							
*		549+92.50	19.58' RIGHT	ROUTE 96	A1	19								JB1	POLE A4							
*		550+65.00	19.58' RIGHT	ROUTE 96	A1	73								POLE A4	POLE A5							
*		551+37.50	19.58' RIGHT	ROUTE 96	A1	73								POLE A5	POLE A6							
*		552+10.00	19.58' RIGHT	ROUTE 96	A1	73								POLE A6	POLE A7							
*		552+82.50	19.58' RIGHT	ROUTE 96	A1	73								POLE A7	POLE A8							
*		553+00.50	19.33' RIGHT	ROUTE 96	A1	18								POLE A8	JB2							
		553+10	28' RIGHT	ROUTE 96	A1	14								JB2	CAPPED							
				SUBTOTAL:		31																
				TOTALS (FEET):		40								--------								

* CONDUIT QUANTITY INCLUDED IN BRIDGE QUANTITIES

** CONSIDERED INCIDENTAL TO COST OF COMBINED POWER SUPPLY/CONTROL STATION

PULL BOXES

SHEET NO.	STATION	OFFSET	LOCATION	P.B. NO.	PREFORM CL 1	PREFORM CL 2	DRAIN TYPE ✓ A	B	C	CIRCUIT
16	1+68	6.0' LEFT	E. CENTRAL AVE.	EPB101	1		✓			A1
	549+71	27' RIGHT	ROUTE 96	EPB102	1		✓			A1
			TOTALS:		2		EACH			

1 IN. CABLE-CONDUIT 3 COND. & 1 B.N., #8 AWG

SHEET NO.	CONT. STA.	CIRCUIT	FROM	TO	FEET	TRENCHING TYPE *	**	***
16		A1	⋈	EPB101	19		4	
		A1	EPB101	A1	31		24	
		A1	A1	A2	79		71	
		A1	A2	A3	61		53	
		A1	A3	EPB102	63		53	
		A1	EPB102	JB1	17			
		A1	JB1	A4	25			
		A1	A4	A5	79			
		A1	A5	A6	79			
		A1	A6	A7	79			
		A1	A7	A8	79			
				SUBTOTAL:	611			
				TOTAL:	620		205	

PRICE BID FOR POWER SUPPLY ASSEMBLY SHALL INCLUDE CABLE-CONDUIT, CONDUIT AND TRENCHING BETWEEN ASSEMBLY AND UTILITY CO. FACILITIES.

SECONDARY SERVICE POWER SUPPLY ASSEMBLIES

SHEET NO.	STATION	OFFSET	LOCATION	TYPE 2 (PED) ✓ P.S. ☐ LT ONLY 240 120V	LT+ SIG 240 120V	LT ONLY 480V	LT+ SIG 480 120V	DIRECTN TO FACE METER	BRKR AMPS LITE	SIGS	CIR
16	1+72	6' LEFT	E. CENTRAL AVE.	1				EAST	100		
			TOTALS:	1				EACH			

CONTROL STATIONS ⋈

SHEET NO.	STATION	OFFSET	LOCATION	CONTROL LETTER	BREAKERS (AMPS) MAIN	CIRCUIT 1	2	3	4	BASE MOUNT ✓ 4 CIR. 120/240V	4 CIR. 480V
16	1+72	6' LEFT	E. CENTRAL AVE.	A1	100	15	20			1	
				TOTALS. EACH:						1	---

LIGHTING

POLES. ARMS AND LUMINAIRES (REFER TO JSPs FOR PROJECT SPECIFIC EQUIPMENT)

SHEET NO.	LUMIN. POLE NO.	STATION	OFFSET	LOCATION	15 FT. POLES *REFER TO JSP EMBED	BOLT-ON	L.E.D. LUMINAIRES (I.E.S. PATTERNS) 250W I	4WY	II	4WY	III	IV	V	** 75W I	II	III	IV	V	150W UNDRPS	* ☐ FOUNDATIONS EMBED	BOLT-ON	CABLE #10 AWG1 COND. POLE & BRKT. FEET	CIRCUIT
16	A101	1+44	6' LEFT	E. CENTRAL AVE.	1												1			1		69	A1
	A102	0+65	6' LEFT	E. CENTRAL AVE.	1												1			1		69	A1
	A103	0+14	6' LEFT	E. CENTRAL AVE.	1												1			1		69	A1
	A104	549+92.50	19.58' RT.	ROUTE 96		1										1					1	69	A1
	A105	550+65.00	19.58' RT.	ROUTE 96		1										1					1	69	A1
	A106	551+37.50	19.58' RT.	ROUTE 96		1										1					1	69	A1
	A107	552+10.00	19.58' RT.	ROUTE 96		1										1					1	69	A1
	A108	552+82.50	19.58' RT.	ROUTE 96		1										1					1	69	A1
	A101																					46	01
	A102																					46	01
	A103																					46	01
	A104																					46	01
	A105																					46	01
	A106																					46	01
	A107																					46	01
	A108																					46	01
																						920	SUBTOTAL
				TOTALS EACH:	3	5										5	3			3	5	930	-----
				PAY TOTALS:	8		--			--						8**				NO DIRECT PAY		930	

* - PAID FOR AS STRESS CRETE - KWC 15 LIGHT POLE, PER EACH - (901.99.02)

** - PAID FOR AS KING LUMINAIRE LIGHT FIXTURE, PER EACH - (901.99.02{1})

PRICE BID FOR POWER SUPPLY ASSEMBLY SHALL INCLUDE CABLE-CONDUIT, CONDUIT AND TRENCHING BETWEEN ASSEMBLY AND UTILITY CO. FACILITIES.

1 IN. CABLE-CONDUIT 2 COND. & 1 B.N., #8 AWG

SHEET NO.	CONT. STA.	CIRCUIT	FROM	TO	FEET	TRENCHING TYPE *	**	***
16		01	⋈	EPB101	19			
		01	EPB101	A1	31			
		01	A1	A2	79			
		01	A2	A3	61			
		01	A3	EPB102	63			
		01	EPB102	JB1	17			
		01	JB1	A4	25			
		01	A4	A5	79			
		01	A5	A6	79			
		01	A6	A7	79			
		01	A7	A8	79			
				SUBTOTAL:	611		205	
				TOTAL:	620			

POWER SUPPLY 1-CONDUCTOR, #2 AWG

SHEET NO.	CONT. STA.	CIRCUIT	FROM	TO	FEET
16	1+71.4	POWER	P.S.	⋈	50
				SUBTOTAL (X3):	150
				TOTAL:	150

LIGHTING

TRENCHING TOTALS (FEET):	*	**	***
	–	205	

SUMMARY SHEET

SHEET 3 OF 4

STATE OF MISSOURI — DAVID GRAHAM BARRETT — NUMBER PE-2006002787 — PROFESSIONAL ENGINEER

THIS SHEET HAS BEEN SIGNED, SEALED AND DATED ELECTRONICALLY

DATE PREPARED 11/2/2016

ROUTE 96 | STATE MO

DISTRICT SW | SHEET NO. 3

COUNTY JASPER

JOB NO. J7P2228F

CONTRACT ID. .

PROJECT NO. .

BRIDGE NO. A8425

DATE	DESCRIPTION
.	.

IF A SEAL IS PRESENT ON THIS SHEET IT HAS BEEN ELECTRONICALLY SEALED AND DATED.

MISSOURI HIGHWAYS AND TRANSPORTATION COMMISSION

105 WEST CAPITOL
JEFFERSON CITY, MO 65102
1-888-ASK-MODOT (1-888-275-6636)

HDR Engineering, Inc.
4435 Main Street
Suite 1000
Kansas City, MO 64111-1856
816-360-2700
Certificate of Authority: 000856

c:\pwworking\oma\d2087525\008_QU_J7P2228F_I1.dgn 6:17:06 PM 11/2/2016

PAVEMENT MARKINGS					
SHEET	STA.	STA.	4" YELLOW WATERBORNE PVMT MARKING PAINT, TYPE P BEADS (LF)	4" WHITE WATERBORNE PVMT MARKING PAINT, TYPE P BEADS (LF)	REMARKS
15	548+40	553+59.60	1039.2	1039.2	INCLUDES SOLID DOUBLE YELLOW CENTERLINE AND WHITE EDGE LINE
15	553+59.60	554+62	102.4	204.8	INCLUDES SOLID SINGLE YELLOW CENTERLINE AND WHITE EDGE LINE
15	553+59.60	554+62	25.6		INCLUDES INTERMITTENT SINGLE YELLOW CENTERLINE
	TOTALS		1167	1244	

SUMMARY SHEET
SHEET 4 OF 4

Detailed September 2016
Checked October 2016

STATE OF MISSOURI
WILLIAM AINSWORTH
NUMBER PE-2005000202
PROFESSIONAL ENGINEER
11/1/16

DATE PREPARED 11/1/16
ROUTE 96 | STATE MO
DISTRICT SW | SHEET NO. 3
COUNTY JASPER
JOB NO. J7P2228F
CONTRACT ID.
PROJECT NO.
BRIDGE NO. A8425

DESCRIPTION | DATE

MISSOURI HIGHWAYS AND TRANSPORTATION COMMISSION
105 WEST CAPITOL
JEFFERSON CITY, MO 65102
1-888-ASK-MODOT (1-888-275-6636)

SEA
230 SW Main Street
Suite 213
Lee's Summit, MO 64063
816-272-5545
Certificate of Authority: E-2013039922

IF A SEAL IS PRESENT ON THIS SHEET IT HAS BEEN ELECTRONICALLY SEALED AND DATED.

REV.

$FILE$ $TIME$ $DATE$

ANY WORK INDICATED ON THE PLANS THAT EXTENDS BEYOND THE PROJECT LIMITS IS CONSIDERED INCIDENTAL TO AND A PART OF THE CONSTRUCTION OF THIS PROJECT.

EXISTING AND CONSTRUCTED ENTRANCES MAY BE WIDENED TO A MAXIMUM OF 60 FT. BY PERMIT, UNLESS OTHERWISE NOTED

RIGHT-OF-WAY LIMITS FOR THIS PROJECT EXTENDS INTERMITTENTLY FROM STATION 549+20.00 TO STATION 554+40.00. A DISTANCE OF 0.106 MILES.

THE EXISTENCE AND APPROXIMATE LOCATION OF UTILITY FACILITIES KNOWN TO EXIST, AS SHOWN ON THE PLANS, ARE BASED ON THE BEST INFORMATION AVAILABLE TO THE COMMISSION AT THIS TIME. THIS INFORMATION IS PROVIDED BY THE COMMISSION "AS-IS" AND THE COMMISSION EXPRESSLY DISCLAIMS ANY REPRESENTATION OR WARRANTYAS TO THE COMPLETENESS, ACCURACY, OR SUITABILITY OF THE INFORMATION FOR ANY USE. RELIANCE UPON THIS INFORMATION IS DONE AT THE RISK AND PERIL OF THE USER, AND THE COMMISSION SHALL NOT BE LIABLE FOR ANY DAMAGES THAT MAY ARISE FROM ANY ERROR IN THE INFORMATION.

ALL BEARINGS ARE BASED ON MODIFIED STATE PLANE, WESTERN ZONE

PROJECT LOCATED WITHIN SECTION 3, T28N, R31W

- PAVEMENT REMOVAL

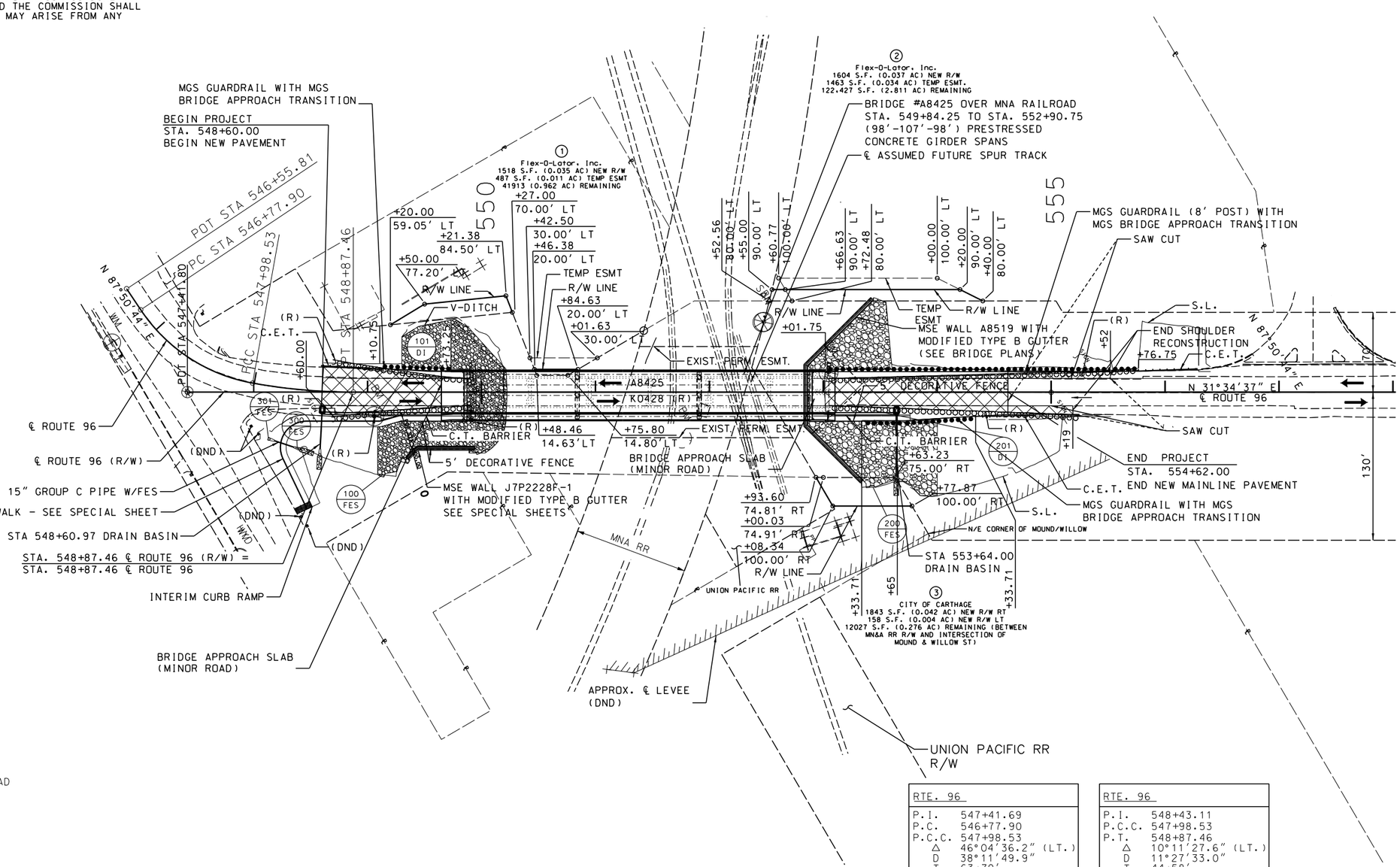

B.M. #3
STA. 549+05.90, 21.18' RT.
ELEV. 972.98
SET RR SPIKE IN PP
X: 2846183.064, Y: 368580.282

B.M. #4
STA. 549+90.40, 17.11' RT.
ELEV. 975.59
SET 80D NAIL SE WING K0428
X: 2846223.840, Y: 368654.403

B.M. #5
STA. 551+75.97, 40.71' RT.
ELEV. 951.11
TOP OF BOLT SE CORNER CONCRETE PAD
X: 2846341.116, Y: 368800.137

B.M. #6
STA. 552+47.85, 61.60' LT.
ELEV. 947.37
X IN N SIDE MANHOLE RIM
X: 2846291.595, Y: 368914.944

B.M. #7
STA. 553+04.65, 17.54' LT.
ELEV. 975.72
SQUARE NW WINGWALL
X: 2846358.876, Y: 368940.259

NOTE: EXISTING R/W ESTABLISHED USING ℄ RTE. 96 (R/W) ALIGNMENT.

RTE. 96	
P.I.	547+41.69
P.C.	546+77.90
P.C.C.	547+98.53
Δ	46°04'36.2" (LT.)
D	38°11'49.9"
T	63.79'
L	120.63'
R	150.00'
SE	4.3% (EXIST.)

RTE. 96	
P.I.	548+43.11
P.C.C.	547+98.53
P.T.	548+87.46
Δ	10°11'27.6" (LT.)
D	11°27'33.0"
T	44.58'
L	88.93'
R	500.00'
SE	4.3% (EXIST.)

SCALE
0 50 100 150

STATE OF MISSOURI
DAVID GRAHAM BARRETT
NUMBER PE-2006002787
PROFESSIONAL ENGINEER

THIS SHEET HAS BEEN SIGNED, SEALED AND DATED ELECTRONICALLY

DATE PREPARED 11/2/2016

ROUTE	STATE
96	MO
DISTRICT	SHEET NO.
SW	4

COUNTY JASPER
JOB NO. J7P2228F
CONTRACT ID.
PROJECT NO.
BRIDGE NO. A8425

DATE	DESCRIPTION

IF A SEAL IS PRESENT ON THIS SHEET IT HAS BEEN ELECTRONICALLY SEALED AND DATED.

MISSOURI HIGHWAYS AND TRANSPORTATION COMMISSION
105 WEST CAPITOL
JEFFERSON CITY, MO 65102
1-888-ASK-MODOT (1-888-275-6636)

HDR Engineering, Inc.
4435 Main Street
Suite 1000
Kansas City, MO 64111-1856
816-360-2700
Certificate of Authority: 000856

c:\pwworking\oma\d2087525\009_PL_J7P2228F_I50.dgn 8:00:21 PM 11/2/2016

CLASS A EXC. = 5110 C.Y.
COMPACTING EMB. = 4843 C.Y.
EMBANKMENT IN PLACE = 0 C.Y.

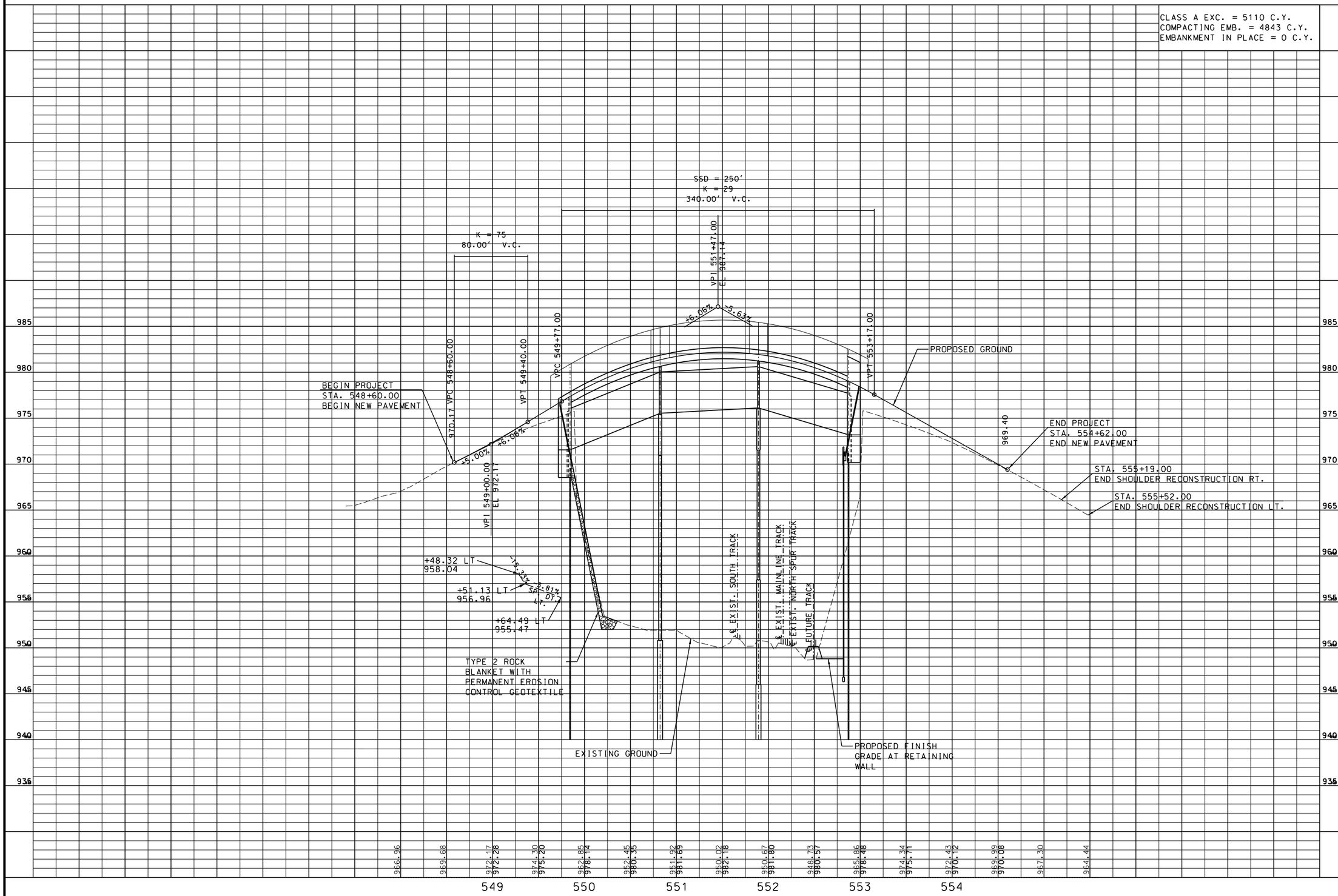

STATE OF MISSOURI
DAVID GRAHAM BARRETT
NUMBER PE-2006002787
PROFESSIONAL ENGINEER

THIS SHEET HAS BEEN SIGNED, SEALED AND DATED ELECTRONICALLY

DATE PREPARED	
11/2/2016	
ROUTE	STATE
96	MO
DISTRICT	SHEET NO.
SW	5

COUNTY: JASPER

JOB NO.: J7P2228F

CONTRACT ID.: .

PROJECT NO.: .

BRIDGE NO.: A8425

DATE	DESCRIPTION
.	.
.	.
.	.
.	.
.	.
.	.

IF A SEAL IS PRESENT ON THIS SHEET IT HAS BEEN ELECTRONICALLY SEALED AND DATED.

MISSOURI HIGHWAYS AND TRANSPORTATION COMMISSION
105 WEST CAPITOL
JEFFERSON CITY, MO 65102
1-888-ASK-MODOT (1-888-275-6636)

HDR Engineering, Inc.
4435 Main Street
Suite 1000
Kansas City, MO 64111-1856
816-360-2700
Certificate of Authority: 000856

c:\pwworking\oma\d2087525\010_PR_J7P2228F_I50.dgn 6:17:34 PM 11/2/2016

C.P. #3

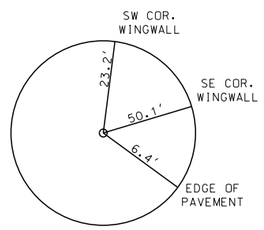

STA. 549+68.84
OFFSET: 18.76' LT
GROUND COORDINATES:
X: 2846181.993
Y: 368654.819
ELEV: 974.040'

C.P. #4

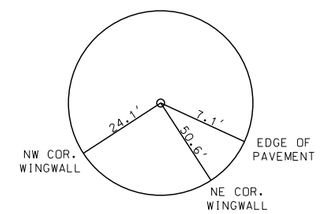

STA. 553+27.05
OFFSET: 18.71' LT
GROUND COORDINATES:
X: 2846369.611
Y: 368959.960
ELEV: 973.790'

REFERENCE POINTS
ROUTE 96
SHEET 1 OF 1

STATE OF MISSOURI
DAVID GRAHAM BARRETT
NUMBER PE-2006002787
PROFESSIONAL ENGINEER

THIS SHEET HAS BEEN SIGNED, SEALED AND DATED ELECTRONICALLY

DATE PREPARED	
11/2/2016	
ROUTE 96	STATE MO
DISTRICT SW	SHEET NO. 6
COUNTY JASPER	
JOB NO. J7P2228F	
CONTRACT ID. .	
PROJECT NO. .	
BRIDGE NO. A8425	

DATE	DESCRIPTION
.	.
.	.
.	.
.	.
.	.
.	.
.	.

IF A SEAL IS PRESENT ON THIS SHEET IT HAS BEEN ELECTRONICALLY SEALED AND DATED.

MISSOURI HIGHWAYS AND TRANSPORTATION COMMISSION
105 WEST CAPITOL
JEFFERSON CITY, MO 65102
1-888-ASK-MODOT (1-888-275-6636)

HDR Engineering, Inc.
4435 Main Street
Suite 1000
Kansas City, MO 64111-1856
816-360-2700
Certificate of Authority: 000856

Coordinate Point Listing
Missouri Coordinate System of 1983

Reciprocal Average Grid Factor : 1.00009610924

SHEET NO.	STATION[1]	LOCATION	OFFSET[1]	NORTHING	EASTING	DESCRIPTION	DESIGN PT. ID
4	546+55.81 CL ROUTE 96	CL	0.00′	368418.21	2845700.50	POT	
4	546+77.90 CL ROUTE 96	CL	0.00′	368419.04	2845722.58	PC	
4	548+38.22 CL ROUTE 96	RT	13.00′	368421.44	2845786.32	PI	
4	547+98.53 CL ROUTE 96	CL	0.00′	368469.01	2845828.81	PCC	
4	548+43.00 CL ROUTE 96	RT	1.98′	368469.01	2845858.50	PI	
4	548+87.46 CL ROUTE 96	CL	0.00′	368540.24	2845881.85	PT	
4	560+00.00 CL ROUTE 96	CL	0.00′	369487.96	2846464.36	POT	
4	548+60 CL ROUTE 96	CL	0.00′	369029.67	2846182.67	BEGIN PROJECT	
4	554+62 CL ROUTE 96	CL	0.00′	368517.25	2846196.80	END PROJECT	
4	547+41.80 CL ROUTE 96 R/W	CL	0.00′	368416.16	2845805.58	POT	
4	588+98.00 CL ROUTE 96 R/W	CL		371956.64	2847981.74	POT	
11	0+00.00 BL SIDEWALK	CL	0.00′	368566.01	2845921.15	POT	
11	0+19.80 BL SIDEWALK	CL	0.00′	368546.92	2845915.88	PI	
11	0+84.80 BL SIDEWALK	CL	0.00′	368491.55	2845881.84	PC	
11	1+07.54 BL SIDEWALK	RT	20.13′	368460.67	2845863.70	PI	
11	1+30.80 BL SIDEWALK	CL	0.00′	368457.02	2845899.33	PT	
11	1+79.80 BL SIDEWALK	CL	0.00′	368451.87	2845948.06	POT	
4	549+05.90 CL ROUTE 96	RT	21.18′	368544.86	2845909.55	BM3	
4	549+90.40 CL ROUTE 96	RT	17.11′	368618.98	2845950.32	BM4	
4	551+75.97 CL ROUTE 96	RT	40.71′	368764.70	2846067.58	BM5	
4	552+47.85 CL ROUTE 96	LT	61.60′	368879.49	2846018.07	BM6	
4	553+04.65 CL ROUTE 96	LT	17.54′	368904.80	2846085.34	BM7	
4	549+68.84 CL ROUTE 96	LT	18.76′	368619.39	2845908.47	CP3	
4	553+27.05 CL ROUTE 96	LT	18.71′	368924.50	2846096.07	CP4	
12	0+00.00 BL WALL J7P2228F-1	BL	0.00′	368550.47	2845956.78	POT	
12	0+12.00 BL WALL J7P2228F-1	BL	0.00′	368562.14	2845953.99	PI	
12	0+62.00 BL WALL J7P2228F-1	BL	0.00′	368604.73	2845980.17	POT	

1 - GROUND DISTANCE

NOTE: THE RECIPROCAL OF THE AVERAGE GRID FACTOR IS USED AS A MULTIPLIER FROM STATE PLANE DISTANCE TO GROUND DISTANCE.

COORDINATE POINTS
ROUTE 96
SHEET 1 OF 1

STATE OF MISSOURI
DAVID GRAHAM BARRETT
NUMBER PE-2006002787
PROFESSIONAL ENGINEER

THIS SHEET HAS BEEN SIGNED, SEALED AND DATED ELECTRONICALLY

DATE PREPARED 11/2/2016

ROUTE	STATE
96	MO
DISTRICT	SHEET NO.
SW	7

COUNTY JASPER

JOB NO. J7P2228F

CONTRACT ID. .

PROJECT NO. .

BRIDGE NO. A8425

DESCRIPTION	DATE
.	.
.	.
.	.
.	.
.	.
.	.

IF A SEAL IS PRESENT ON THIS SHEET IT HAS BEEN ELECTRONICALLY SEALED AND DATED.

MISSOURI HIGHWAYS AND TRANSPORTATION COMMISSION
105 WEST CAPITOL
JEFFERSON CITY, MO 65102
1-888-ASK-MODOT (1-888-275-6636)

HDR Engineering, Inc.
4435 Main Street
Suite 1000
Kansas City, MO 64111-1856
816-360-2700
Certificate of Authority: 000856

c:\pwworking\oma\d2087525\014_RP_J7P2228F_I1.dgn 6:17:54 PM 11/2/2016

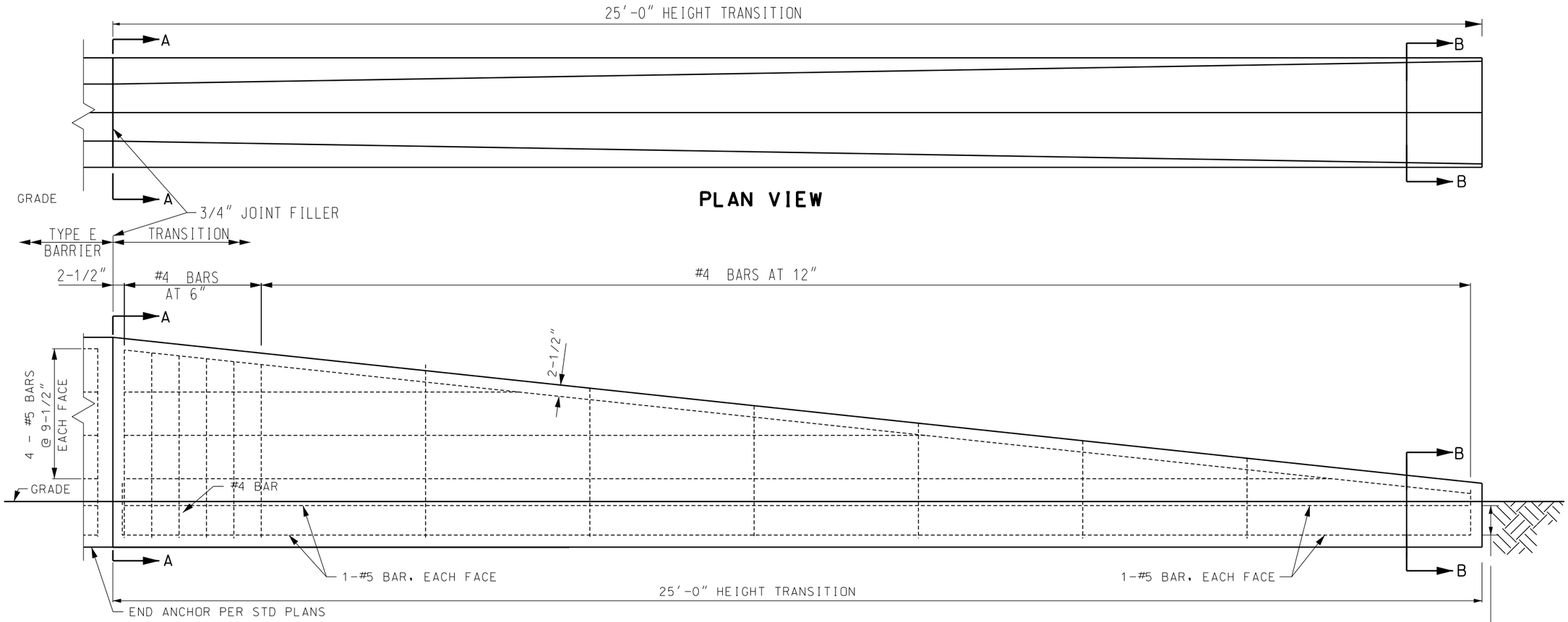

PLAN VIEW

ELEVATION VIEW

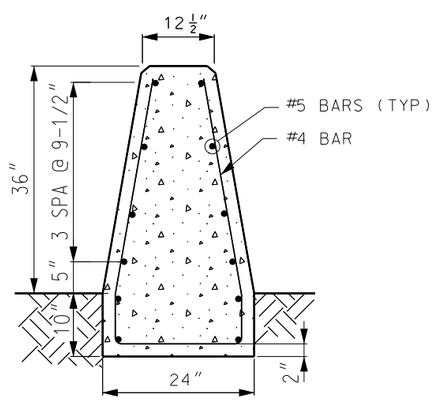

SECTION A-A

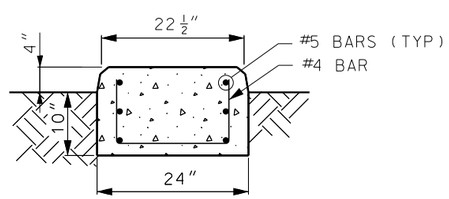

SECTION B-B

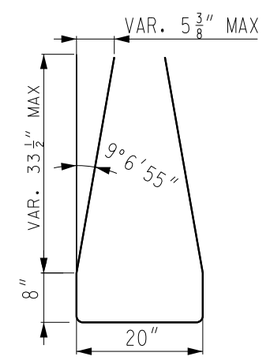

#4 BARS

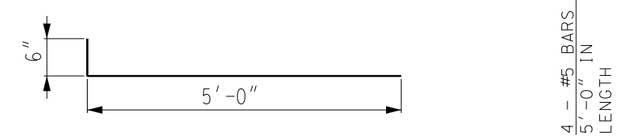

#5 BARS

GENERAL NOTES:

MINIMUM CLEARANCE TO REINFORCING STEEL SHALL BE $1\frac{1}{2}$", UNLESS OTHERWISE SHOWN.

FOR CONCRETE TRAFFIC BARRIER DELINEATION DETAILS SEE STD PLANS.

BAR SPLICES SHALL BE A MINIMUM OF 24 TIMES THE NOMINAL DIAMETER OF THE BAR.

CONCRETE BARRIER END ANCHORAGE TRANSITION ON GRADE

BARRIER TRANSITION DETAILS

STATE OF MISSOURI
DAVID GRAHAM BARRETT
NUMBER PE-2006002787
PROFESSIONAL ENGINEER

THIS SHEET HAS BEEN SIGNED, SEALED AND DATED ELECTRONICALLY

DATE PREPARED 11/2/2016	
ROUTE 96	STATE MO
DISTRICT SW	SHEET NO. 8
COUNTY JASPER	
JOB NO. J7P2228F	
CONTRACT ID. .	
PROJECT NO. .	
BRIDGE NO. A8425	

DATE	DESCRIPTION
.	.
.	.
.	.
.	.
.	.
.	.

IF A SEAL IS PRESENT ON THIS SHEET IT HAS BEEN ELECTRONICALLY SEALED AND DATED.

MISSOURI HIGHWAYS AND TRANSPORTATION COMMISSION
105 WEST CAPITOL
JEFFERSON CITY, MO 65102
1-888-ASK-MODOT (1-888-275-6636)

HDR Engineering, Inc.
4435 Main Street
Suite 1000
Kansas City, MO 64111-1856
816-360-2700
Certificate of Authority: 000856

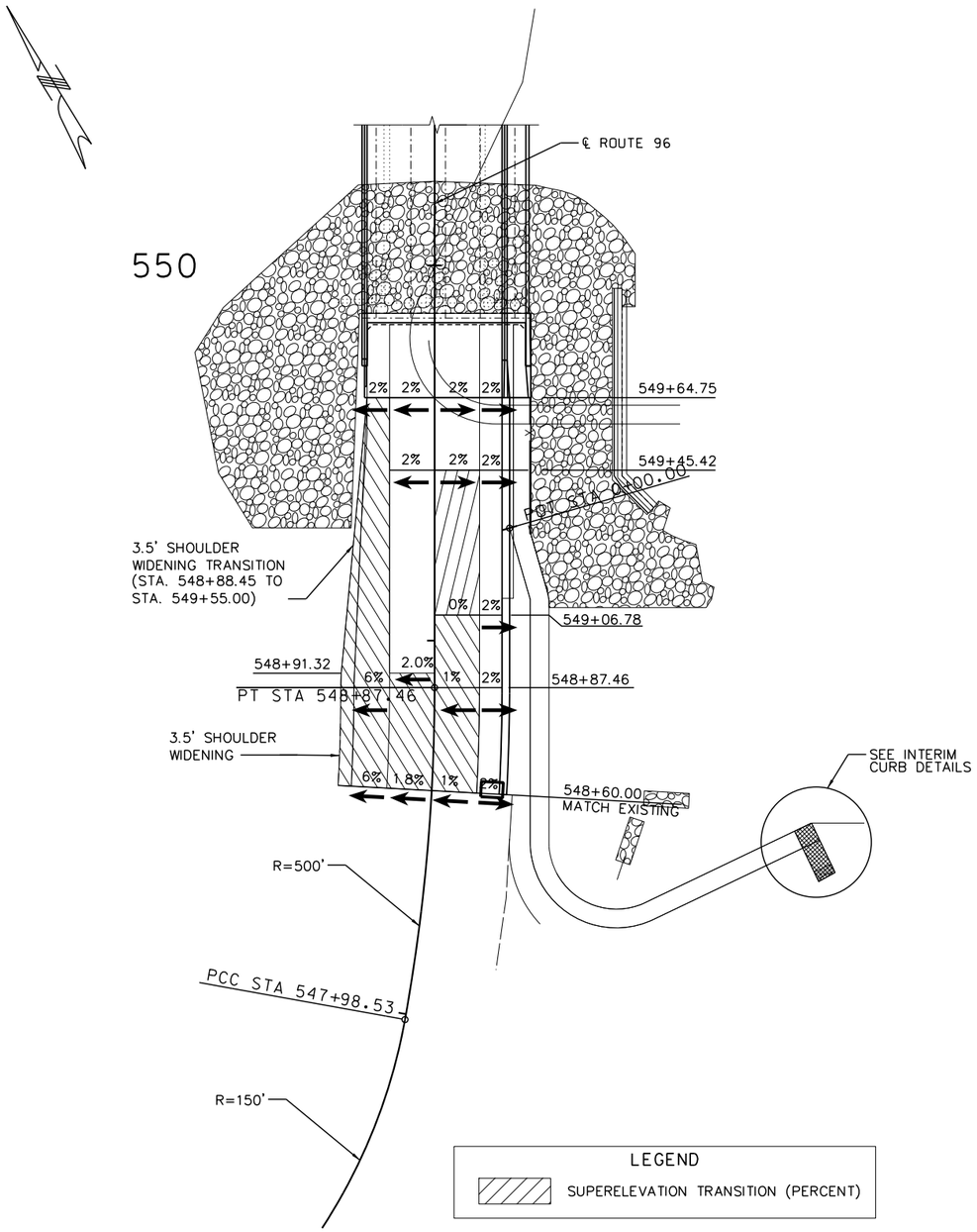

SUPERELEVATION TRANSITION

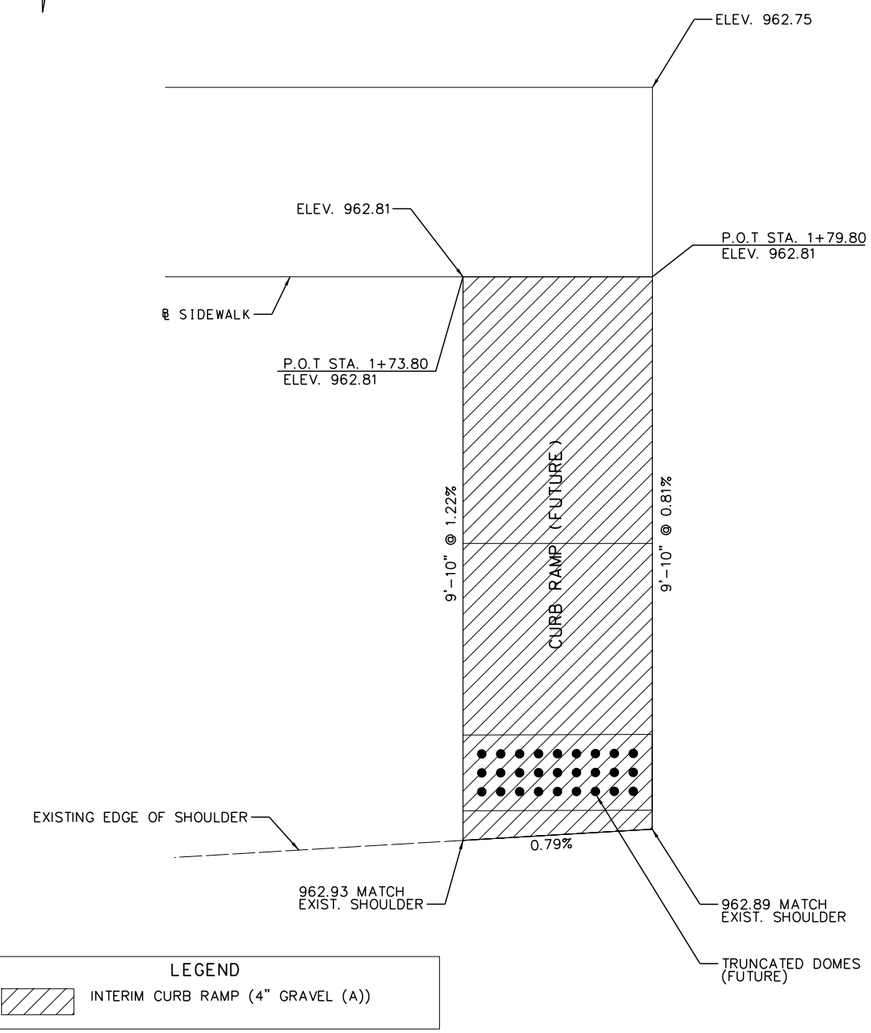

NOTE: INTERIM CURB RAMP TO BE SURFACED WITH 4" GRAVEL. FINAL CONCRETE CURB RAMP AND TRUNCATED DOMES TO BE CONSTRUCTED IN THE FUTURE BY OTHERS.

SUPERELEVATION
TRANSITION
ROUTE 96

INTERIM
CURB RAMP
DETAILS

STATE OF MISSOURI
DAVID GRAHAM BARRETT
NUMBER PE-2006002787
PROFESSIONAL ENGINEER

THIS SHEET HAS BEEN SIGNED, SEALED AND DATED ELECTRONICALLY

DATE PREPARED	
11/2/2016	
ROUTE 96	STATE MO
DISTRICT SW	SHEET NO. 9
COUNTY JASPER	
JOB NO. J7P2228F	
CONTRACT ID. .	
PROJECT NO. .	
BRIDGE NO. A8425	

DESCRIPTION	DATE
.	.
.	.
.	.
.	.
.	.
.	.
.	.

IF A SEAL IS PRESENT ON THIS SHEET IT HAS BEEN ELECTRONICALLY SEALED AND DATED.

MISSOURI HIGHWAYS AND TRANSPORTATION COMMISSION
105 WEST CAPITOL
JEFFERSON CITY, MO 65102
1-888-ASK-MODOT (1-888-275-6636)

HDR Engineering, Inc.
4435 Main Street
Suite 1000
Kansas City, MO 64111-1856
816-360-2700
Certificate of Authority: 000856

c:\pwworking\oma\d2087525\015_SS_J7P2228F_I20.dgn 6:18:28 PM 11/2/2016

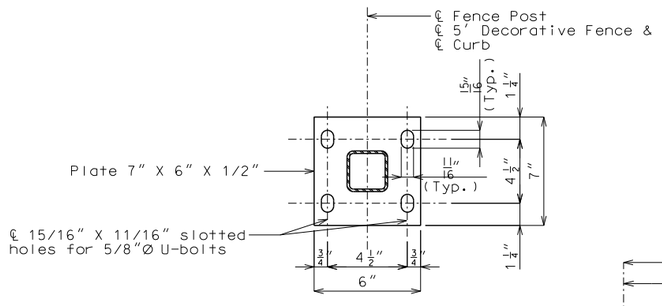

PLAN OF BASE PLATE

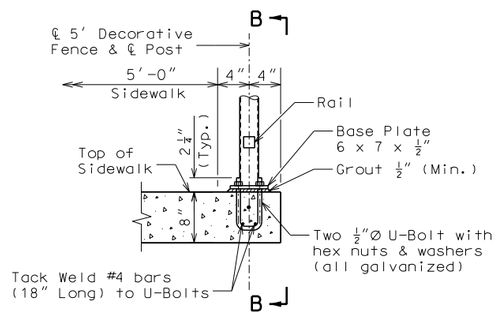

SECTION A-A AT FENCE SUPPORT

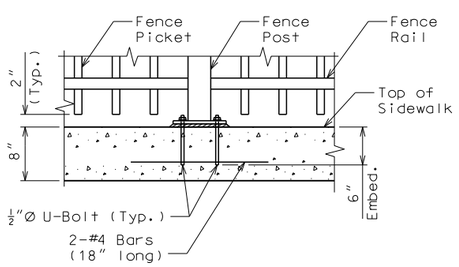

SECTION B-B AT SUPPORT

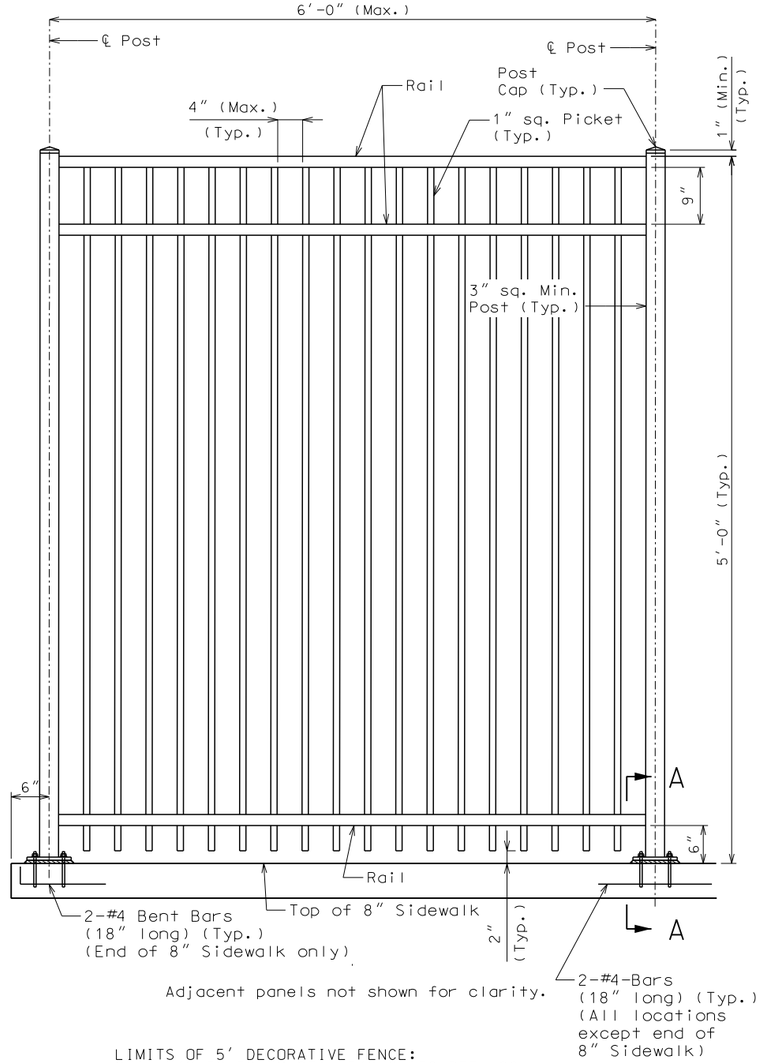

LIMITS OF 5′ DECORATIVE FENCE:
STA. 549+30.32 TO STA. 549+64.32 RTE. 96
STA. 553+10.61 TO STA. 553+34.61 RTE. 96
STA. 0+00.00 TO STA. 0+62.00 WALL J7P2228F-1
STA. 0+00.50 TO STA. 0+87.50 WALL A8519
STA. 1+32.50 TO STA. 2+06.50 WALL A8519

5′ DECORATIVE FENCE DETAILS

Notes:
5′ decorative fencing shall be installed to the top of sidewalk or modified Type B gutter where fence is called out. Details shown on this sheet are for installation on sidewalk. detail for installation on gutter similar.

5′ decorative fencing shall be in accordance with 2010 AASHTO LRFD Bridge Design Specifications and 2010 Interim Revisions. 50 lb/ft and 200 lb loading shall not be applied simultaneously.

Fence shall have a gloss black finish (Federal Standard #17038) System "G" in accordance with Sec 1081.

Base plate shall be ASTM A709, Grade 36.

Dimensions of 5′ decorative fence are measured horizontally.

Measurement of 5′ decorative fence will be made to the nearest linear foot along centerline fence.

Payment for furnishing and erecting the fence complete in place with U-Bolts, washers and reinforcing bars will be considered completely covered by the contract unit price for 5′ Decorative Fence.

All fence posts shall be vertical.

Mortar shall be placed under the post base plates in accordance with Sec 1066.

Expansion joints shall be placed in the horizontal pieces at not more than 30 feet centers and at all joint filler locations in the sidewalk with a minimum gap of 1/4″ @ 60 degree F.

Contractor shall submit complete detailed shop drawings in accordance with Sec 1080.

The contractor shall have the 5′ decorative fencing manufacturer submit structural design computations signed and sealed by a registered professional engineer in the State of Missouri.

All materials used in fabrication and construction of the 5′ decorative fencing shall be in accordance with the manufacturer's specifications, except as modified in the contract documents.

5′ decorative fencing system shall be supplid by only one of the manufacturers. Fencing system shall include all components except the anchor bolts and #4 bars welded to the anchor bolts. The assembly of the pickets to the rails and the rails to the posts shall be the same as the style mentioned for the manufacturer.

Ameristar Fence Products, Inc.
1555 N. Mingo
Tulsa, OK. 74116
(800) 321-8724
www.ameristarfence.com

Style: AEGIS II Majestic

Iron Eagle Industries, Inc.
1256 Cardiff Blvd.
Mississauga, Ontario Canada L5S1R1
(905) 670-2558
www.ironeagleind.com

Style: Silver Eagle II

Betafence USA
3309 S.W. Interstate 45
Ennis, TX. 75119
(888) 650-4766
www.betafenceusa.com

Style: UpGrade-I Landmark

Merchants Metals
6575 Romiss Court
St. Louis, MO 63134
(800) 293-3363
www.merchantsmetals.com

Style: Guardsman Monroe

5′ DECORATIVE FENCE DETAILS

STATE OF MISSOURI
DAVID GRAHAM BARRETT
NUMBER PE-2006002787
PROFESSIONAL ENGINEER

THIS SHEET HAS BEEN SIGNED, SEALED AND DATED ELECTRONICALLY

DATE PREPARED	
11/2/2016	
ROUTE 96	STATE MO
DISTRICT SW	SHEET NO. 1.0
COUNTY JASPER	
JOB NO. J7P2228F	
CONTRACT ID. .	
PROJECT NO. .	
BRIDGE NO. A8425	

DESCRIPTION	DATE
.	.
.	.
.	.
.	.
.	.
.	.

MISSOURI HIGHWAYS AND TRANSPORTATION COMMISSION
105 WEST CAPITOL
JEFFERSON CITY, MO 65102
1-888-ASK-MODOT (1-888-275-6636)

HDR Engineering, Inc.
4435 Main Street
Suite 1000
Kansas City, MO 64111-1856
816-360-2700
Certificate of Authority: 000856

IF A SEAL IS PRESENT ON THIS SHEET IT HAS BEEN ELECTRONICALLY SEALED AND DATED.

c:\pwworking\oma\d2087525\015A_SS_J7P2228F_I5.DGN 6:18:44 PM 11/2/2016

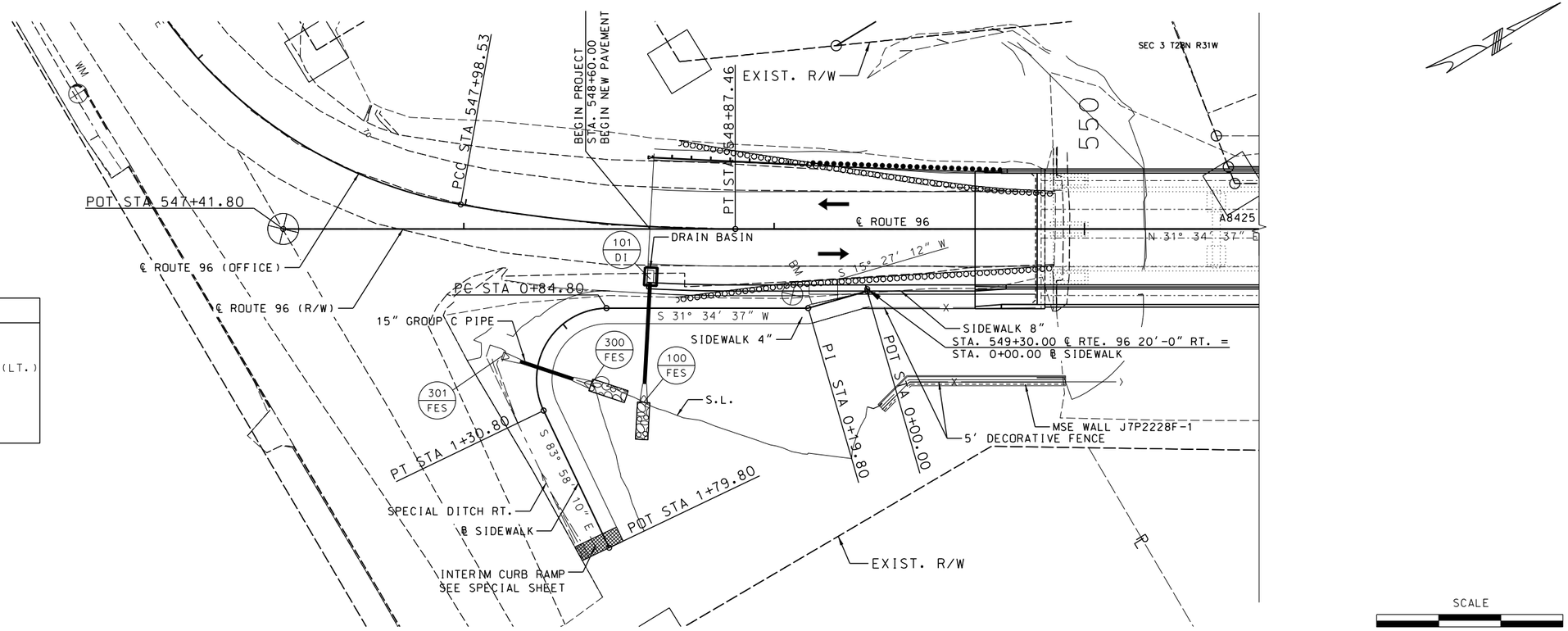

SIDEWALK	
P.I.	1+20.82
P.C.	0+84.80
P.T.	1+30.80
Δ	114°35'29.6" (LT.)
D	249°06'43.5"
T	35.82'
L	46.00'
R	23.00'

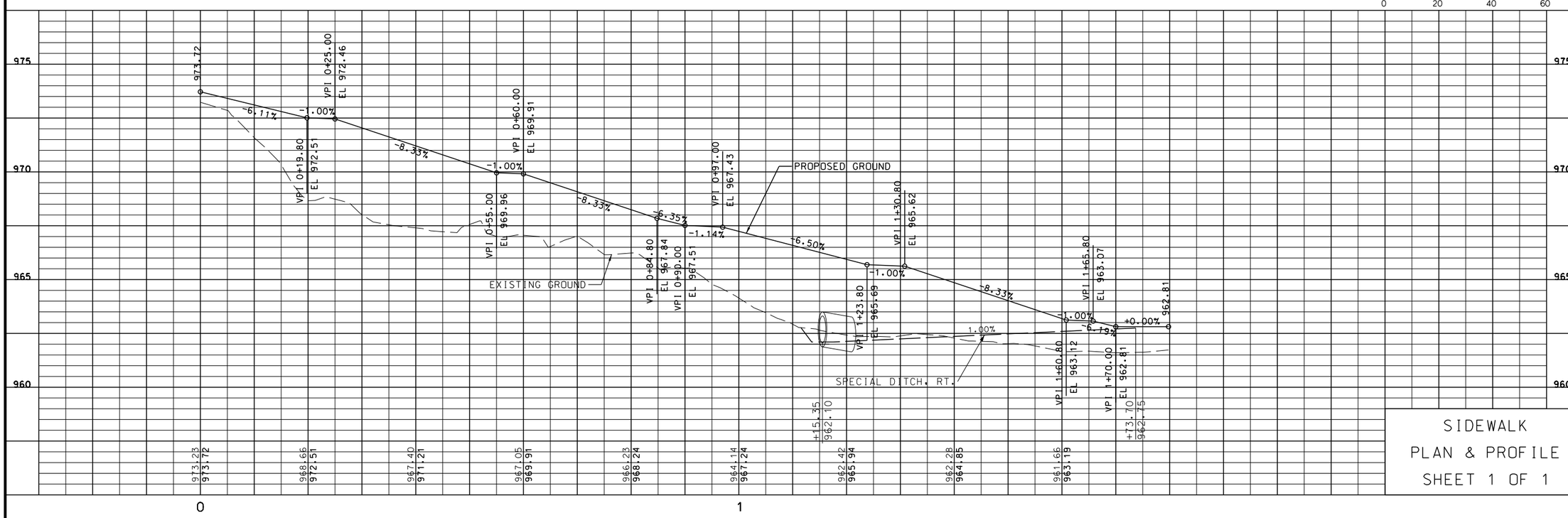

SIDEWALK

PLAN & PROFILE

SHEET 1 OF 1

STATE OF MISSOURI
DAVID GRAHAM BARRETT
NUMBER PE-2006002787
PROFESSIONAL ENGINEER

THIS SHEET HAS BEEN SIGNED, SEALED AND DATED ELECTRONICALLY

DATE PREPARED	
11/2/2016	
ROUTE 96	STATE MO
DISTRICT SW	SHEET NO. 1.1
COUNTY JASPER	
JOB NO. J7P2228F	
CONTRACT ID. .	
PROJECT NO. .	
BRIDGE NO. A8425	

DATE	DESCRIPTION
.	.
.	.
.	.
.	.
.	.
.	.

IF A SEAL IS PRESENT ON THIS SHEET IT HAS BEEN ELECTRONICALLY SEALED AND DATED.

MISSOURI HIGHWAYS AND TRANSPORTATION COMMISSION

105 WEST CAPITOL
JEFFERSON CITY, MO 65102
1-888-ASK-MODOT (1-888-275-6636)

HDR Engineering, Inc.
4435 Main Street
Suite 1000
Kansas City, MO 64111-1856
816-360-2700
Certificate of Authority: 000856

c:\pwworking\oma\d2087525\016_SS_J7P2228F_I20.dgn 6:18:53 PM 11/2/2016

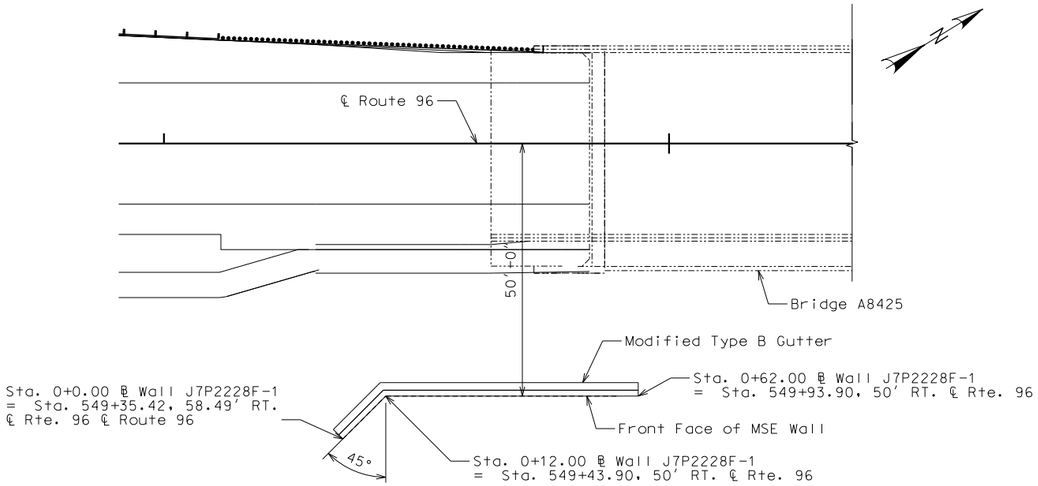

PLAN

Leveling Pad & Coping not shown for clarity.
Note: ₿ Wall and offsets located at Front Face of MSE Wall.

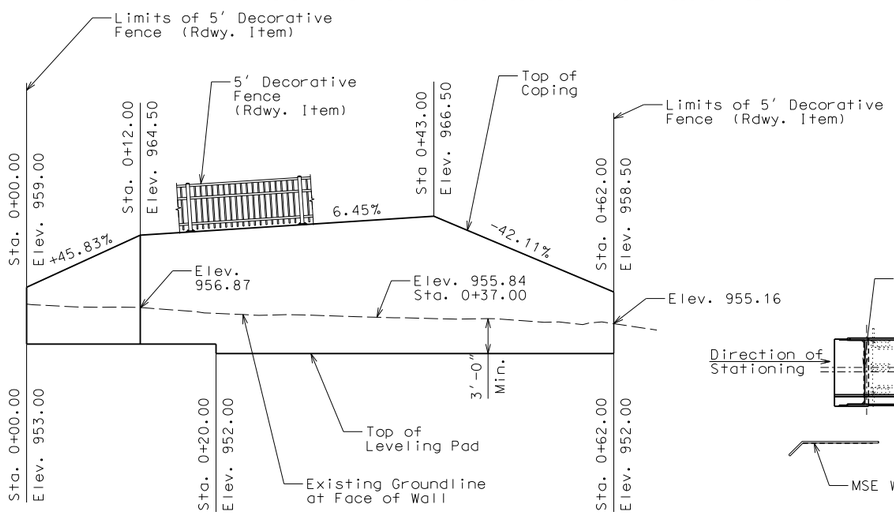

DEVELOPED ELEVATION

Leveling Pad & Coping not show for clarity. ✳

✳ Wall contractor shall show the following items on the design drawings and/or on the fabricator shop drawings.

1. Leveling pad horizontal.
2. Leveling pad length and step elevations shall be based on wall manufacturer's recommendation. Top of leveling pad elevations shall not be higher than theoretical top of leveling pad elevations shown on these plans.

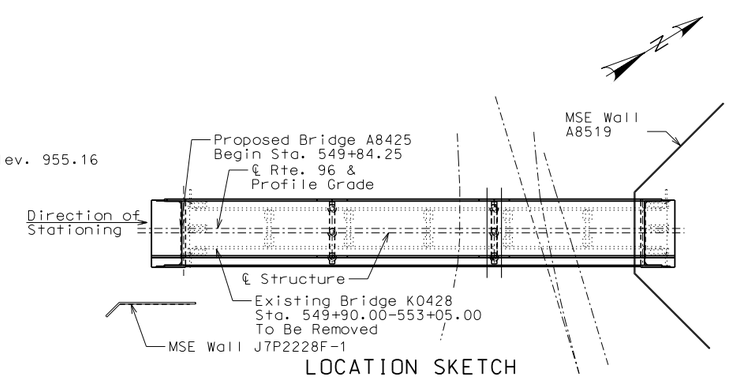

LOCATION SKETCH

MSE Wall Systems Data Table					
Proprietary Wall Systems		Combination Wall Systems			
Manufacturer	System	Facing Unit Manufacturer	Facing Unit	Geogrid Manufacturer	Geogrid

MSE Wall Systems Data Table is to be completed by MoDOT construction personnel to record the manufacturer of the proprietary wall system or the manufacturers of the combination wall system that was used for constructing the MSE wall.

GENERAL NOTES:
Design Specifications:
2002 - AASHTO 17th Edition, Section 5
ASD Design

All concrete for leveling pad and coping shall be Class B or B-1 with f'c = 4000 psi.

The MSE wall system shall be built vertical.

The MSE wall system shall be built in accordance with Sec 720.

The MSE wall system shall be a large block wall system.

Factor of safety shall be 2.0 for overturning and 1.5 for sliding.

The allowable bearing pressure for unimproved ground 4.5 ksf.

For seismic design the factor of safety shall be 1.5 for overturning and 1.1 for sliding.

Wall reinforcement shall extend a minimum of 1.0 times the wall height to satisfy global stability. See the Job Special Provisions.

ϕ_b = 26° and Unit weight, γ_b=120 pcf for retained backfill material to be retained by the mechanically stabilized earth wall system.

ϕ_f = 26° for unimproved foundation ground where wall is to rest.

Actual ϕ_r ≥ 34° for the select granular backfill (reinforced backfill and wedge area backfill) for structural systems.

Design ϕ_r = 34° for the select granular backfill (reinforced backfill) only for structural systems.

Panel reinforcement shall be epoxy coated.

Anchorage reinforcement shall be spaced to avoid roadway drop inlet behind wall.

A filter cloth meeting the requirements for a Separation Geotextile material shall be placed between the select granular backfill for structural systems and the backfill being retained by the mechanically stabilized earth wall system.

Coping shall be required on this structure. Bond breaker (roofing felt or other approved alternate) between wall panel and coping required if coping is cast in place.

The contractor shall be solely responsible to coordinate construction of the wall with bridge and roadway construction and ensure that the bridge and roadway construction, resulting or existing obstructions, shall not impact the construction or performance of the wall. Soil reinforcement shall be designed and placed to avoid damage by pile driving, guardrail post installation, utility and sign foundations. (See Roadway and Bridge plans.)

All steel reinforcment shall be separated from other metallic elements by at least 3 inches.

The splay angle should be less than 15° and tensile capacity of splayed reinforcement shall be reduced by the cosine of the splay angle.

No reinforcement shall be left unconnected to the wall face or arbitrarily cut/bent in the field to avoid the obstruction.

Where interference between the vertical obstruction and the soil reinforcement is unavoidable, the design of the wall near the obstruction may be modified using one of the alternatives in FHWA-NHI-10-24, Section 5.4.2. Show detail layout on the drawings. For wall designs with horizontal obstructions in reinforced soil mass, see FHWA-NHI-10-024, Section 5.4.3.

STD. 611.00

MSE RETAINING
WALL J7P2228F-1
SHEET 1 OF 2

STATE OF MISSOURI
DAVID GRAHAM BARRETT
NUMBER PE-2006002787
PROFESSIONAL ENGINEER

THIS SHEET HAS BEEN SIGNED, SEALED AND DATED ELECTRONICALLY

DATE PREPARED	
11/2/2016	
ROUTE 96	STATE MO
DISTRICT SW	SHEET NO. 1-2
COUNTY JASPER	
JOB NO. J7P2228F	
CONTRACT ID. .	
PROJECT NO. .	
BRIDGE NO. J7P2228F-1	

DESCRIPTION	DATE
.	.
.	.
.	.
.	.
.	.
.	.

IF A SEAL IS PRESENT ON THIS SHEET IT HAS BEEN ELECTRONICALLY SEALED AND DATED.

MISSOURI HIGHWAYS AND TRANSPORTATION COMMISSION
105 WEST CAPITOL
JEFFERSON CITY, MO 65102
1-888-ASK-MODOT (1-888-275-6636)

HDR Engineering, Inc.
4435 Main Street
Suite 1000
Kansas City, MO 64111-1856
816-360-2700
Certificate of Authority: 000856

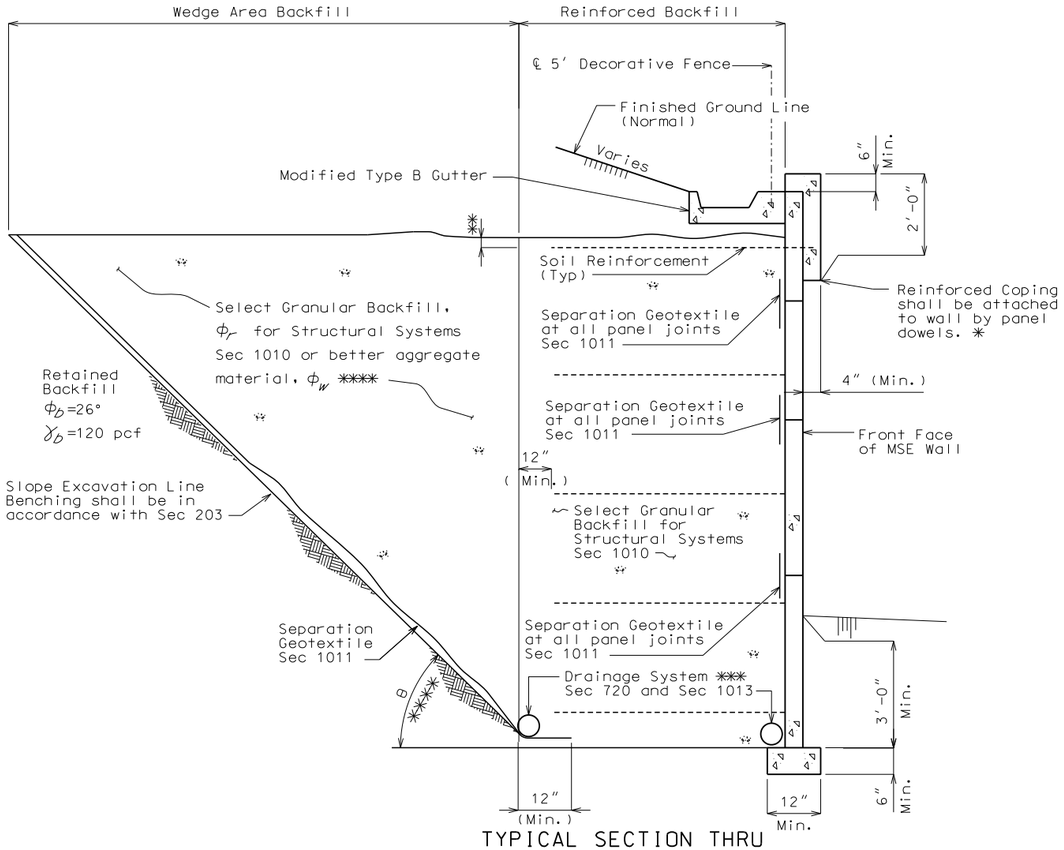

TYPICAL SECTION THRU
LARGE BLOCK WALL SHOWING FILTER CLOTH

✳✳✳✳ Select granular backfill shall extend a minimum of 12″ beyond the end of all soil reinforcement. Where the angle, θ, between the retained backfill excavation/fill line and the horizontal is less than 90°, the wedge area backfill between θ and 90° shall be filled with select granular backfill for structural systems meeting the requirements of Section 1010.

- For $(45° + \phi_D/2) < \theta \leq 90°$, properties for retained backfill shall be used for active force computations.

- For $\theta \leq (45° + \phi_D/2)$, contractor shall have the option to use properties for select granular backfill, ϕ_r, or better aggregate material, ϕ_w for active force computations in the wedge area backfill. For active force computations, the angle of internal friction for wedge area backfill material, ϕ_r or ϕ_w, shall be limited to 34° unless determined otherwise in accordance with Section 1010. If ϕ_r or ϕ_w > 34° is desired for wedge area backfill then test report shall be submitted with manufacturer's design plans. ϕ_r or ϕ_w shall not be greater than 40°. Final configuration of this option shall be sent to Geotechnical Section for a new overall global stability analysis. Design ϕ_w shall be shown on manufacturer's plans if used.

The slope excavation line shall be benched and separation geotextile shall be placed between the retained backfill and either select granular backfill or better aggregate material, and between the select granular backfill and better aggregate material.

✳ Inverted U-shape reinforced capstone may be used in lieu of coping. Panel dowels for capstone shall be required and as provided by manufacturer.

✳✳ Topmost layer of reinforcement shall be fully covered with select granular backfill for structural systems, as approved by the wall manufacturer, before placement of the Separation Geotextile.

✳✳✳ Minimum 6″ diameter perforated PVC or PE pipe, unless larger size pipes are required by design by wall manufacturer.

Adjustment in the vertical alignment of the drainage pipes from that depicted in the plans may be necessary to ensure positive flow out of the drainage system.

Outlet ends of pipes shall be located to avoid clogging or flow into the drainage system.

MSE WALL DETAILS

MSE RETAINING
WALL J7P2228F-1
SHEET 2 OF 2

STATE OF MISSOURI
DAVID GRAHAM BARRETT
NUMBER PE-2006002787
PROFESSIONAL ENGINEER

THIS SHEET HAS BEEN SIGNED, SEALED AND DATED ELECTRONICALLY

DATE PREPARED	
11/2/2016	
ROUTE 96	STATE MO
DISTRICT SW	SHEET NO. 1·3
COUNTY JASPER	
JOB NO. J7P2228F	
CONTRACT ID. .	
PROJECT NO. .	
BRIDGE NO. J7P2228F-1	

DESCRIPTION	DATE
.	.
.	.
.	.
.	.
.	.
.	.

IF A SEAL IS PRESENT ON THIS SHEET IT HAS BEEN ELECTRONICALLY SEALED AND DATED.

MISSOURI HIGHWAYS AND TRANSPORTATION COMMISSION
105 WEST CAPITOL
JEFFERSON CITY, MO 65102
1-888-ASK-MODOT (1-888-275-6636)

HDR Engineering, Inc.
4435 Main Street
Suite 1000
Kansas City, MO 64111-1856
816-360-2700
Certificate of Authority: 000856

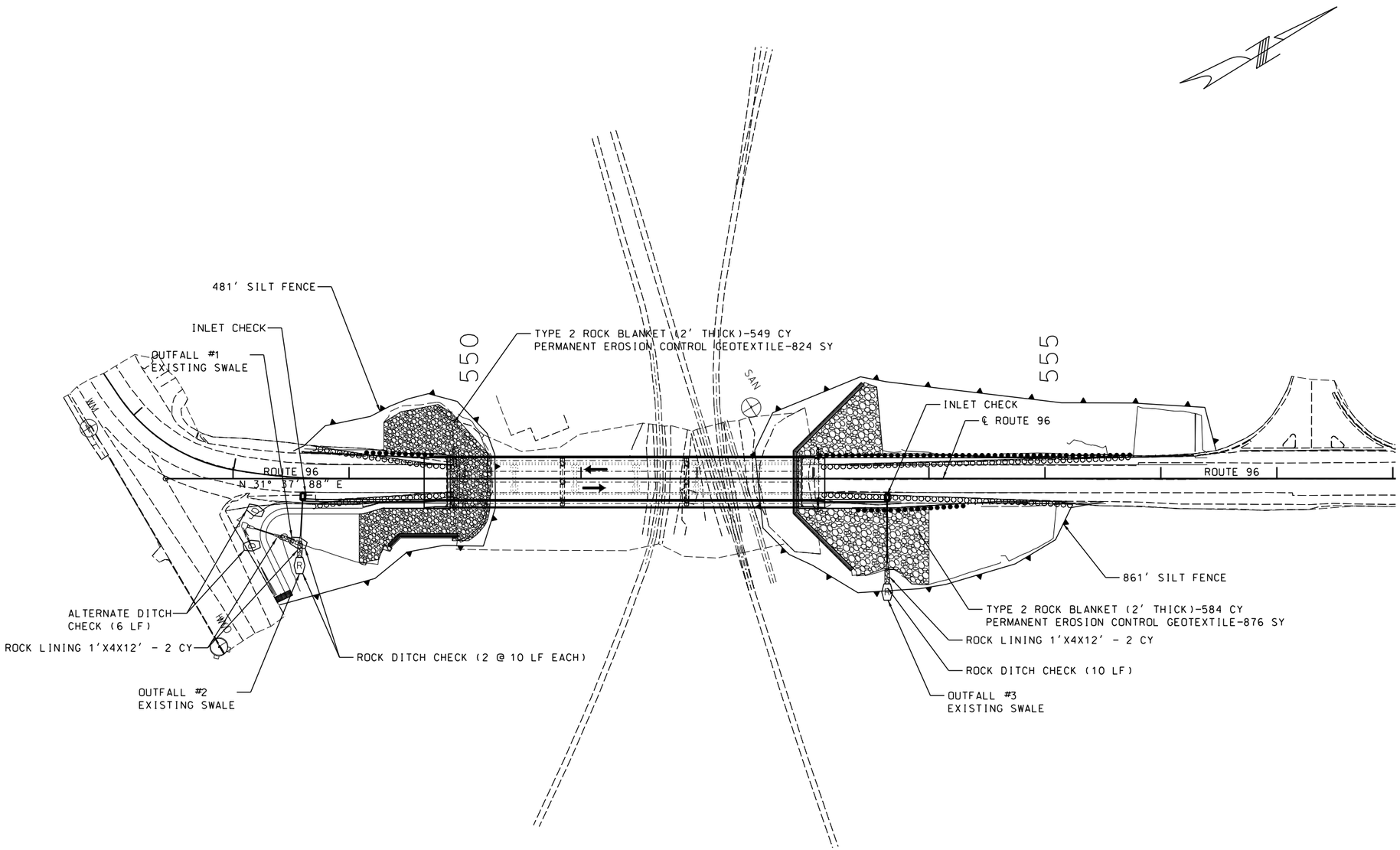

TEMPORARY EROSION CONTROL LEGEND

- (D) ALTERNATE DITCH CHECK
- (R) ROCK DITCH CHECK
- SILT FENCE

SCALE

0 50 100 150

EROSION CONTROL
SHEET 1 OF 1

STATE OF MISSOURI
DAVID GRAHAM BARRETT
NUMBER PE-2006002787
PROFESSIONAL ENGINEER

THIS SHEET HAS BEEN SIGNED, SEALED AND DATED ELECTRONICALLY

DATE PREPARED	
11/2/2016	
ROUTE 96	STATE MO
DISTRICT SW	SHEET NO. 1·4
COUNTY JASPER	
JOB NO. J7P2228F	
CONTRACT ID. .	
PROJECT NO. .	
BRIDGE NO. A8425	

DATE	DESCRIPTION
.	.

IF A SEAL IS PRESENT ON THIS SHEET IT HAS BEEN ELECTRONICALLY SEALED AND DATED.

MISSOURI HIGHWAYS AND TRANSPORTATION COMMISSION
105 WEST CAPITOL
JEFFERSON CITY, MO 65102
1-888-ASK-MODOT (1-888-275-6636)

HDR Engineering, Inc.
4435 Main Street
Suite 1000
Kansas City, MO 64111-1856
816-360-2700
Certificate of Authority: 000856

c:\pwworking\oma\d2087525\017_EC_J7P2228F_I50.dgn 6:19:11 PM 11/2/2016

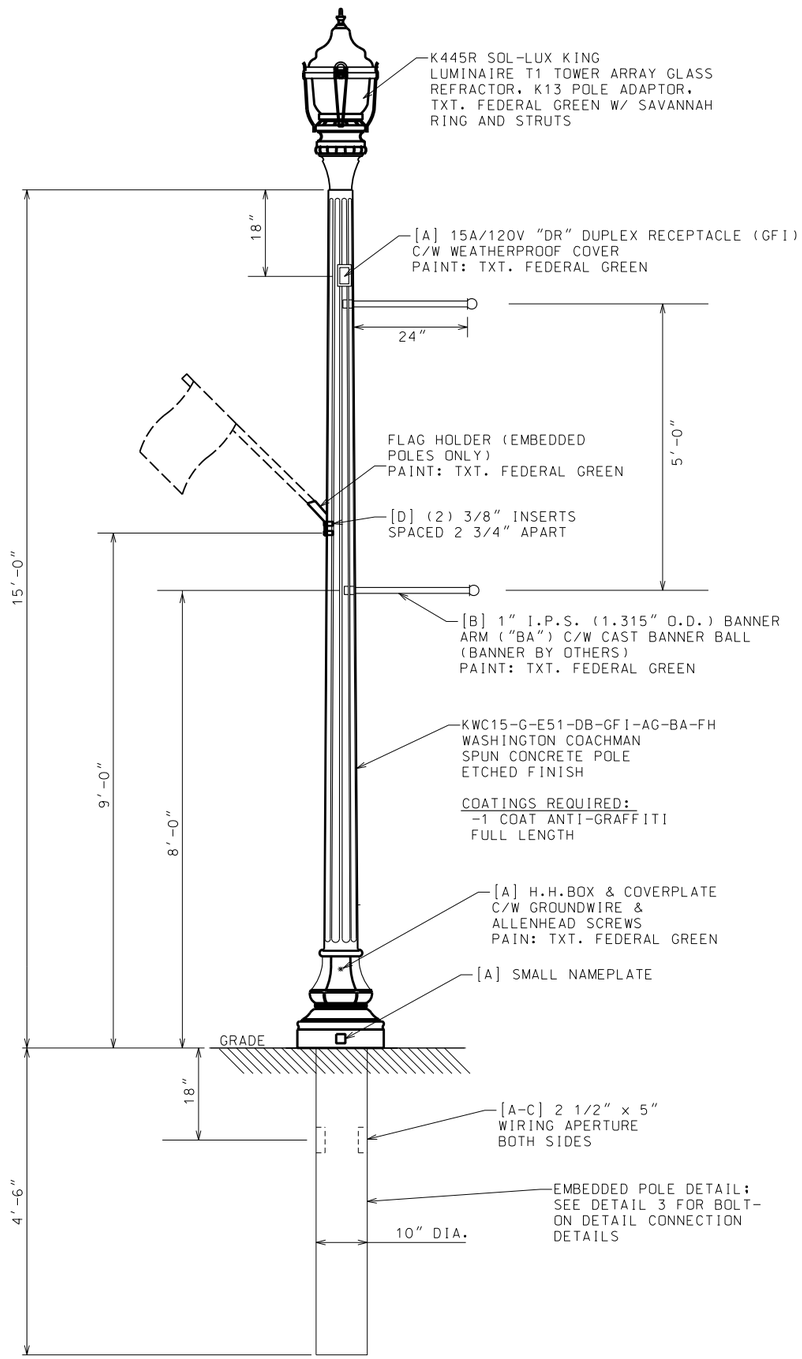

1 — SINGLE LIGHT DETAIL
NOT TO SCALE

SPECIFICATION TABLE

LUMINAIRE SPECIFICATIONS	
CATALOGUE NO.:	K445R-T1GR-III/IV-75(SSL) -4004-120V-K13-SRS-TB
QUANTITY:	(SEE 2B SHEETS)
GLOBE MAT'L:	GLASS
IES CLASSIFIC.:	TYPE III OR TYPE IV
WATTAGE:	75W
LIGHT SOURCE:	LED SOLID STATE LIGHTING
LINE VOLTAGE:	120V
POLE ADAPTOR:	TENON MOUNT
LAMPS:	TO BE INCLUDED
* OR APPROVED EQUAL	
POLE SPECIFICATIONS	
EMBEDDED	
CATALOGUE NO.:	KWC15-G-E51-DB-AG-BA-GFI -C/W 140-35/35 & FH
QUANTITY:	(SEE 2B SHEETS)
SECTION:	FLUTED ROUND
COLOR:	AZTEC JADE
FINISH:	ETCHED
POLE TOP:	5 "
POLE BUTT DIAMETER:	10 "
POLE LENGTH:	19'-6"
EMBED DEPTH:	4'-6"
APPROX. WEIGHT:	1,100 lbs.
* OR APPROVED EQUAL	
BOLT ON	
CATALOGUE NO.:	KWC15-G-E51-FBP-AG-BA-GFI -C/W 140-35/35
QUANTITY:	(SEE 2B SHEETS)
SECTION:	FLUTED ROUND
COLOR:	AZTEC JADE
FINISH:	ETCHED
POLE TOP:	5 "
BOLT CIRCLE:	23-3/8"
POLE LENGTH:	19'-6"
APPROX. WEIGHT:	895 lbs.
* OR APPROVED EQUAL	

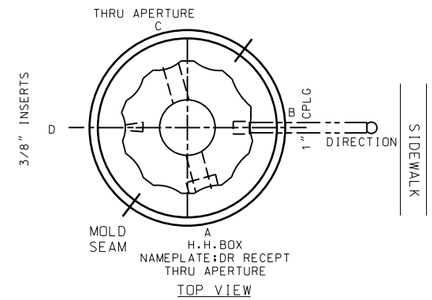

NOTE: POLE SHOULD BE EMBEDDED SO THAT BANNER COUPLINGS & FLAG HOLDER (FACE B-D) ALIGN PERP TO ROADWAY OR IN DESIRED ORIENTATION

2 — POLE ORIENTATION DETAIL
NOT TO SCALE

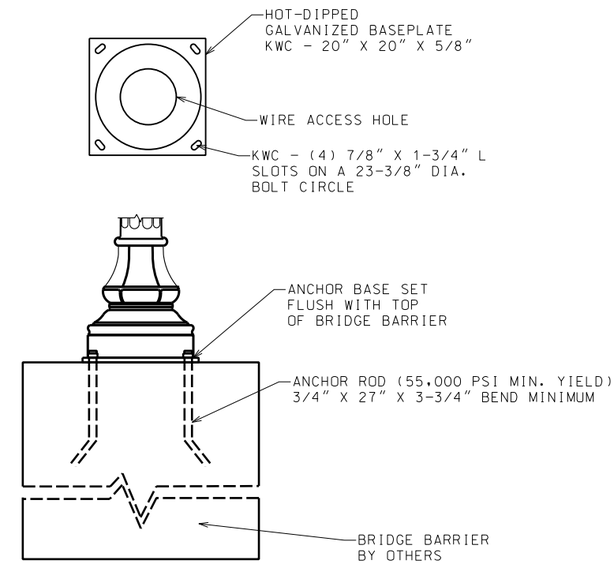

3 — BOLT-ON POLE DETAILS
NOT TO SCALE

LUMINAIRE NOTES:

1. INSTALL NEW WASHINGTON COACHMAN STANDARD, LUMINAIRES, CONDUITS AND CONDUCTORS PER DETAILS SHOWN HEREON AND PER MANUFACTURER'S RECOMMENDATIONS.

2. INSTALL NEW (2") HIGH DENSITY POLYETHYLENE (HDPE) OR RIGID GALVANIZED STEEL (RGS) CONDUIT AS INDICATED ON THE PROJECT DRAWINGS. INSTALL 3#8 & 1#8 GRD. THHN/THWN CU CONDUCTORS -600 VAC MIN. FOR A LIGHTING BRANCH CIRCUIT FEED. INSTALL 2#8 & 1#8 GRD. THHN/THWN CU CONDUCTORS -600 VAC MIN. FOR A RECEPTACLE BRANCH CIRCUIT FEED.

3. ALL MATERIALS SHALL BE U.L. LISTED AND PER NEMA STANDARDS. INSTALLED WORK SHALL BE PER THE LATEST ADOPTED EDITION OF THE N.E.C. AND ACCEPTED INDUSTRY STANDARDS.

4. ALL MATERIALS USED SHALL BE NEW AND UNUSED.

LIGHTING PLAN
SHEET 1 OF 2

STATE OF MISSOURI
DAVID GRAHAM BARRETT
NUMBER PE-2006002787
PROFESSIONAL ENGINEER

THIS SHEET HAS BEEN SIGNED, SEALED AND DATED ELECTRONICALLY

DATE PREPARED	
11/2/2016	
ROUTE: 96	STATE: MO
DISTRICT: SW	SHEET NO.: 15
COUNTY: JASPER	
JOB NO.: J7P2228F	
CONTRACT ID.: .	
PROJECT NO.: .	
BRIDGE NO.: A8425	

DESCRIPTION	DATE
.	.
.	.
.	.
.	.
.	.
.	.
.	.

IF A SEAL IS PRESENT ON THIS SHEET IT HAS BEEN ELECTRONICALLY SEALED AND DATED.

MISSOURI HIGHWAYS AND TRANSPORTATION COMMISSION
105 WEST CAPITOL
JEFFERSON CITY, MO 65102
1-888-ASK-MODOT (1-888-275-6636)

HDR Engineering, Inc.
4435 Main Street
Suite 1000
Kansas City, MO 64111-1856
816-360-2700
Certificate of Authority: 000856

c:\pwworking\oma\d2087525\018_LT_J7P2228F_I5.DGN 6:19:41 PM 11/2/2016

RTE. 96
PI 547+41.69
PC 546+77.90
PCC 547+98.53
Δ 46° 04′ 36.2″ (LT)
D 38° 11′ 49.9″
L 120.63′
T 63.79′
R 150.00′

RTE. 96
PI 548+43.11
PCC 547+98.53
PT 548+87.46
Δ 10° 11′ 27.6″ (LT)
D 11° 27′ 33.0″
L 88.93′
T 44.58′
R 500.00′

SIDEWALK
PI 1+20.62
PC 0+84.80
PT 1+30.80
Δ 114° 35′ 29.6″ (LT)
D 249° 06′ 43.5″
L 46.00′
T 35.82′
R 23.00′

550

✳ SEE BRIDGE PLANS FOR CONNECTION DETAILS.

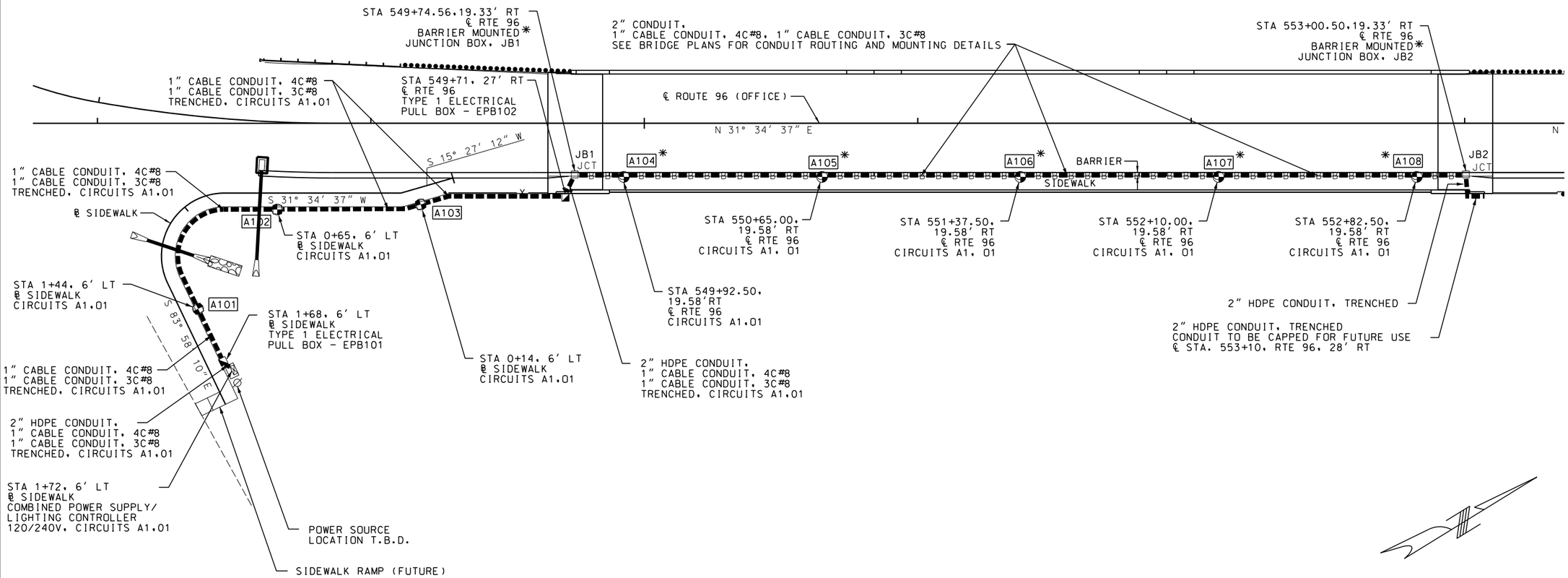

LIGHTING LEGEND

COMBINED POWER SUPPLY/ LIGHTING CONTROLLER	PREFORMED PULL BOX TYPE 1		CONDUIT PUSHED
CONTROLLER (EXISTING)	PREFORMED PULL BOX TYPE 2		CONDUIT BRIDGE
JCT JUNCTION BOX	PULL BOX TYPE 1		CONDUIT EXISTING
POWER SOURCE	GROUND MOUNTED LUMINAIRE / POST		CONDUIT TRENCHED
P.S. POWER SUPPLY	BARRIER MOUNTED LUMINAIRE / POST		

SCALE
0 20 40 60

LIGHTING PLAN
SHEET 2 OF 2

STATE OF MISSOURI
DAVID GRAHAM BARRETT
NUMBER PE-2006002787
PROFESSIONAL ENGINEER

THIS SHEET HAS BEEN SIGNED, SEALED AND DATED ELECTRONICALLY

DATE PREPARED 11/2/2016

ROUTE	STATE
96	MO
DISTRICT	SHEET NO.
SW	16

COUNTY JASPER
JOB NO. J7P2228F
CONTRACT ID.
PROJECT NO.
BRIDGE NO. A8425

DATE	DESCRIPTION

IF A SEAL IS PRESENT ON THIS SHEET IT HAS BEEN ELECTRONICALLY SEALED AND DATED.

MISSOURI HIGHWAYS AND TRANSPORTATION COMMISSION
105 WEST CAPITOL
JEFFERSON CITY, MO 65102
1-888-ASK-MODOT (1-888-275-6636)

HDR Engineering, Inc.
4435 Main Street
Suite 1000
Kansas City, MO 64111-1856
816-360-2700
Certificate of Authority: 000856

c:\pwworking\oma\d2087525\019_LT_J7P2228F_I20.dgn 6:19:59 PM 11/2/2016

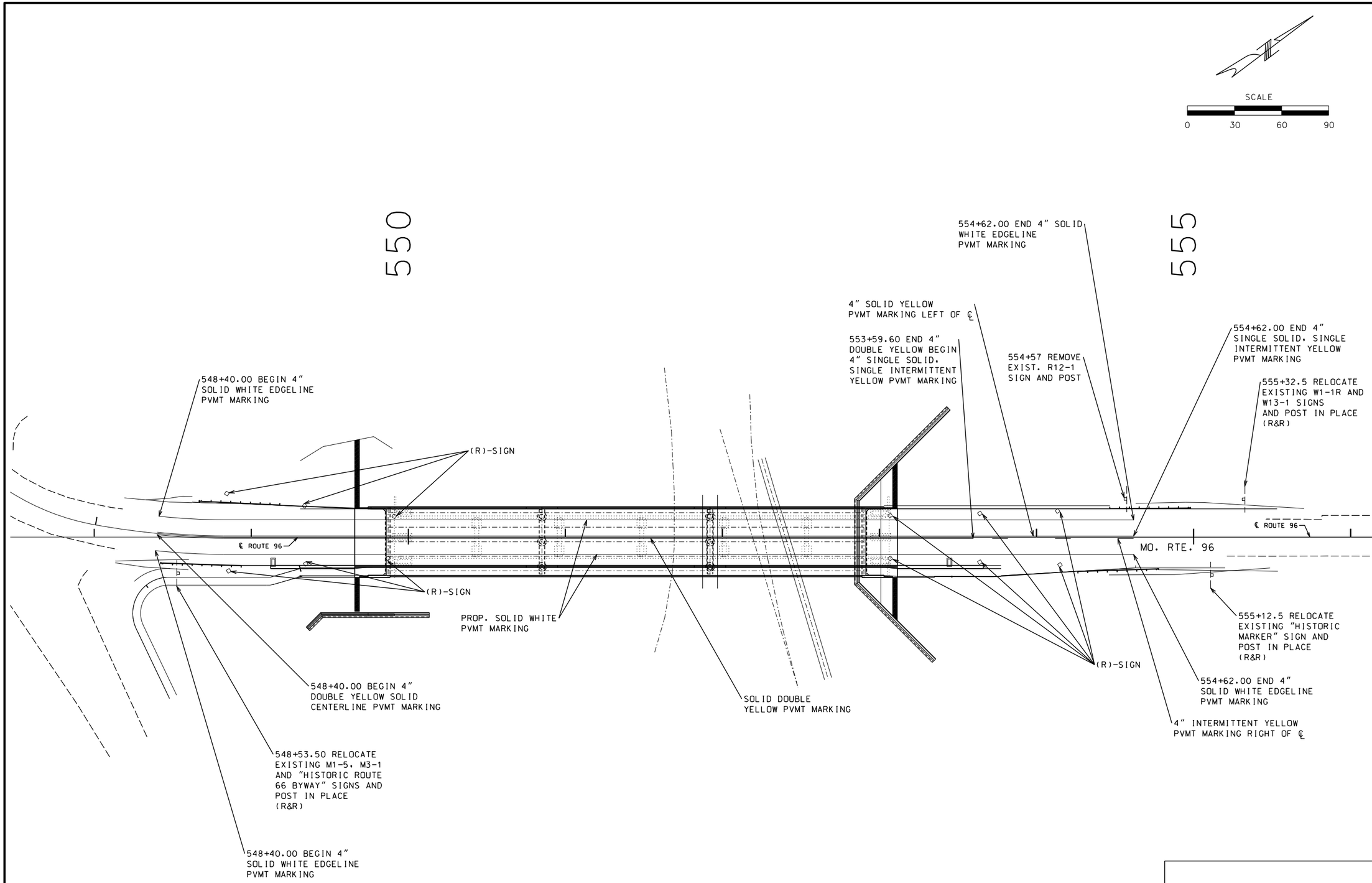

NOTES:

1. SEE STANDARD DRAWING 903.03 FOR SIGN AND SIGN MOUNTING REQUIREMENTS.

Detailed September 2016
Checked October 2016

SIGNING AND PAVEMENT MARKING
SHEET 1 OF 1

STATE OF MISSOURI
WILLIAM AINSWORTH
NUMBER PE-2005000202
PROFESSIONAL ENGINEER
11/1/16

DATE PREPARED	11/1/16
ROUTE	96
STATE	MO
DISTRICT	SW
SHEET NO.	17
COUNTY	JASPER
JOB NO.	J7P2228F
CONTRACT ID.	
PROJECT NO.	
BRIDGE NO.	A8425

DATE	DESCRIPTION

MISSOURI HIGHWAYS AND TRANSPORTATION COMMISSION
105 WEST CAPITOL
JEFFERSON CITY, MO 65102
1-888-ASK-MODOT (1-888-275-6636)

SEA
230 SW Main Street
Suite 213
Lee's Summit, MO 64063
816-272-5545
Certificate of Authority: E-2013039922

IF A SEAL IS PRESENT ON THIS SHEET IT HAS BEEN ELECTRONICALLY SEALED AND DATED.

REV.

$FILE$ $TIME$ $DATE$

PAYMENT FOR DROP INLET, GRATE, GROUP C PIPE, FLARED END SECTION, MATERIAL AND INSTALLATION WILL BE PAID FOR THE CONTRACT UNIT PRICE FOR DRAIN BASIN PER EACH.

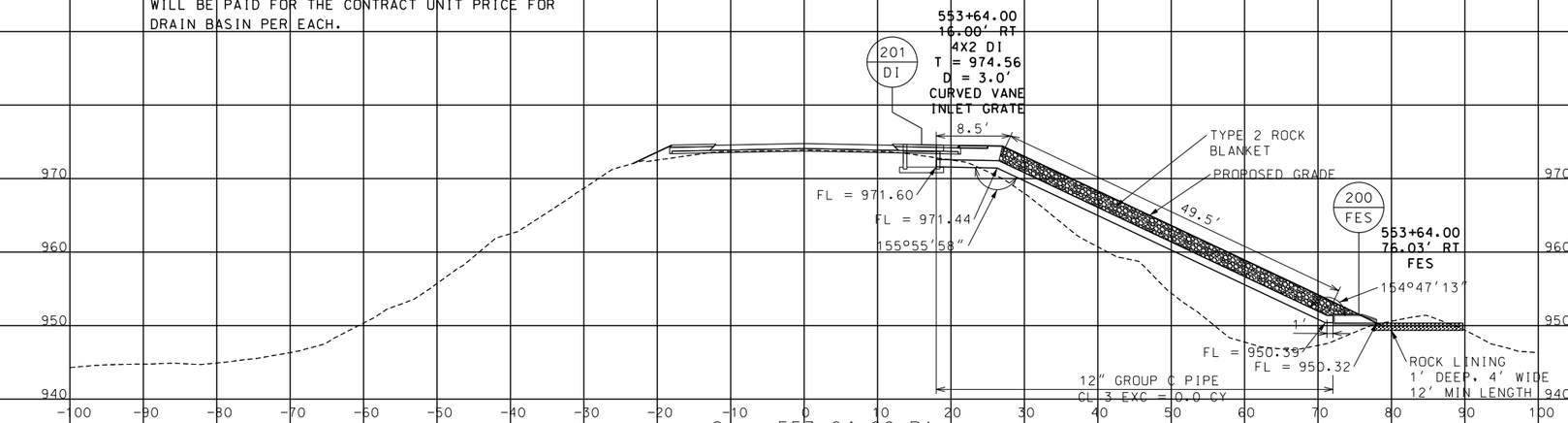

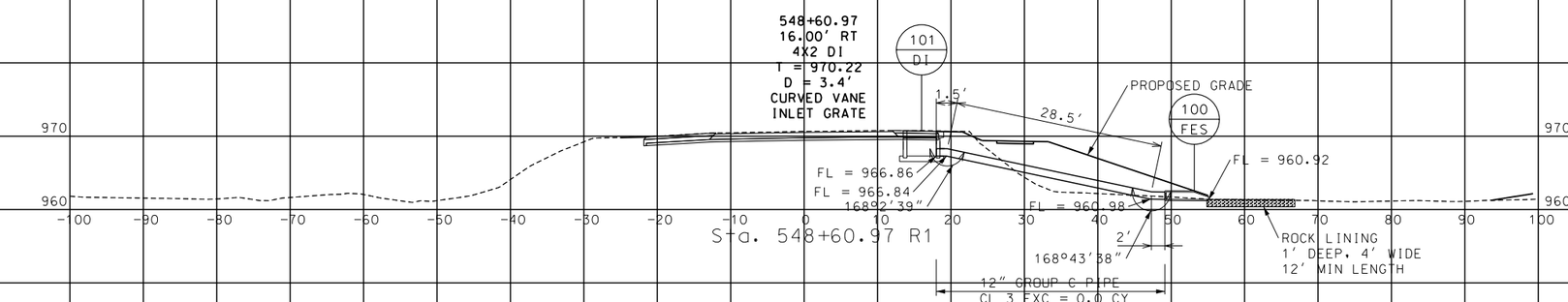

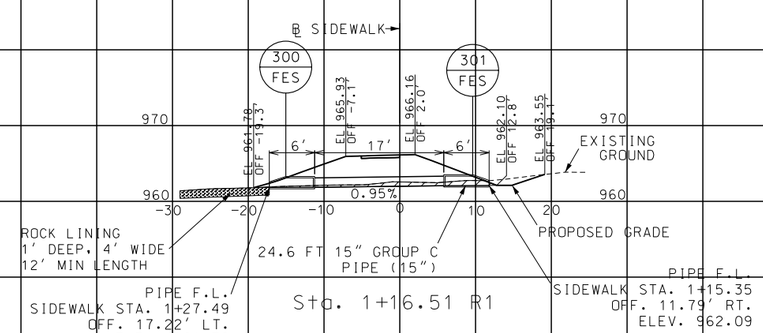

SIDEWALK
STA. 1+16.51

SKEW 08°27'22" L.A.
15" x 25' GROUP C
WITH END SECTIONS
CLASS 3 EXC. = 2 C.Y.

D.A. = 0.15 ACRES
Q_{50} = 1 CFS
DHW = 962.60'

10'

CULVERT
SECTIONS
SHEET 1 OF 1

STATE OF MISSOURI
DAVID GRAHAM BARRETT
NUMBER PE-2006002787
PROFESSIONAL ENGINEER

THIS SHEET HAS BEEN SIGNED, SEALED AND DATED ELECTRONICALLY

DATE PREPARED	
11/2/2016	
ROUTE 96	STATE MO
DISTRICT SW	SHEET NO. 18
COUNTY JASPER	
JOB NO. J7P2228F	
CONTRACT ID. .	
PROJECT NO. .	
BRIDGE NO. A8425	

DATE	DESCRIPTION
.	.

IF A SEAL IS PRESENT ON THIS SHEET IT HAS BEEN ELECTRONICALLY SEALED AND DATED.

MISSOURI HIGHWAYS AND TRANSPORTATION COMMISSION
105 WEST CAPITOL
JEFFERSON CITY, MO 65102
1-888-ASK-MODOT (1-888-275-6636)

HDR Engineering, Inc.
4435 Main Street
Suite 1000
Kansas City, MO 64111-1856
816-360-2700
Certificate of Authority: 000856

c:\pwworking\oma\d2087525\021_CS_J7P2228F_I10.dgn 6:20:36 PM 11/2/2016

SEC/SUR 3 TWP T28N RGE R31W

MISSOURI HIGHWAYS AND TRANSPORTATION COMMISSION

(98′ - 107′ - 98′) PRESTRESSED CONCRETE I-GIRDER SPANS

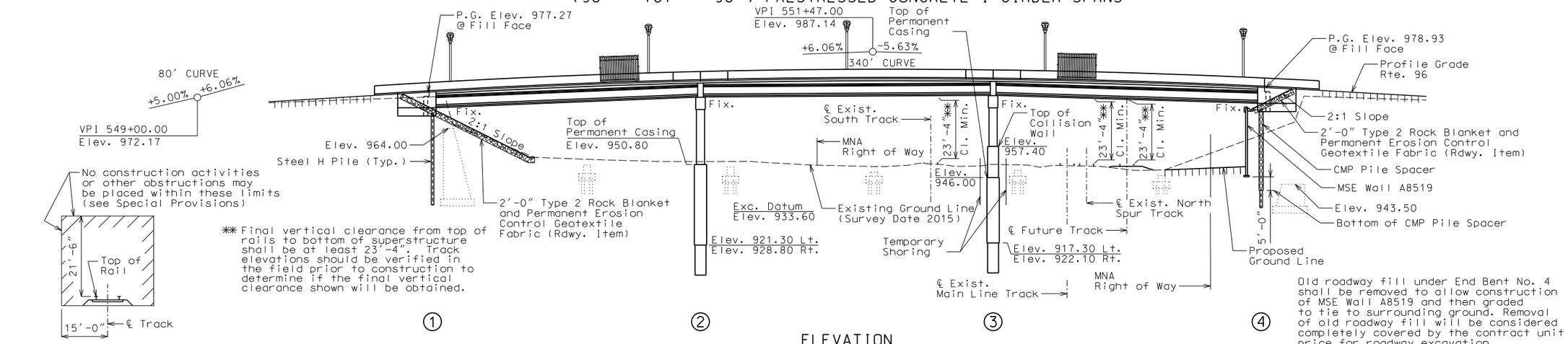

ELEVATION

MINIMUM CONSTRUCTION CLEARANCES
(Normal to Railroad)
(Not to scale)

B.M. #3
STA. 549+05.90, 21.18′ RT.
ELEV. 972.98
SET RR SPIKE IN PP
X: 2846183.064, Y: 368580.282

B.M. #4
STA. 549+90.40, 17.11′ RT.
ELEV. 975.59
SET 80D NAIL SE WING K0428
X: 2846223.840, Y: 698654.403

B.M. #5
STA. 551+75.97, 40.71′ RT.
ELEV. 951.11
TOP OF BOLT SE CORNER CONCRETE PAD
X: 2846341.116, Y: 368800.137

B.M. #6
STA. 552+47.85, 61.60′ LT.
ELEV. 947.37
X IN N SIDE MANHOLE RIM
X: 2846291.595, Y: 368914.944

B.M. #7
STA. 553+04.65, 17.54′ LT.
ELEV. 975.72
SQUARE NW WINGWALL
X: 2846358.876, Y: 368940.259

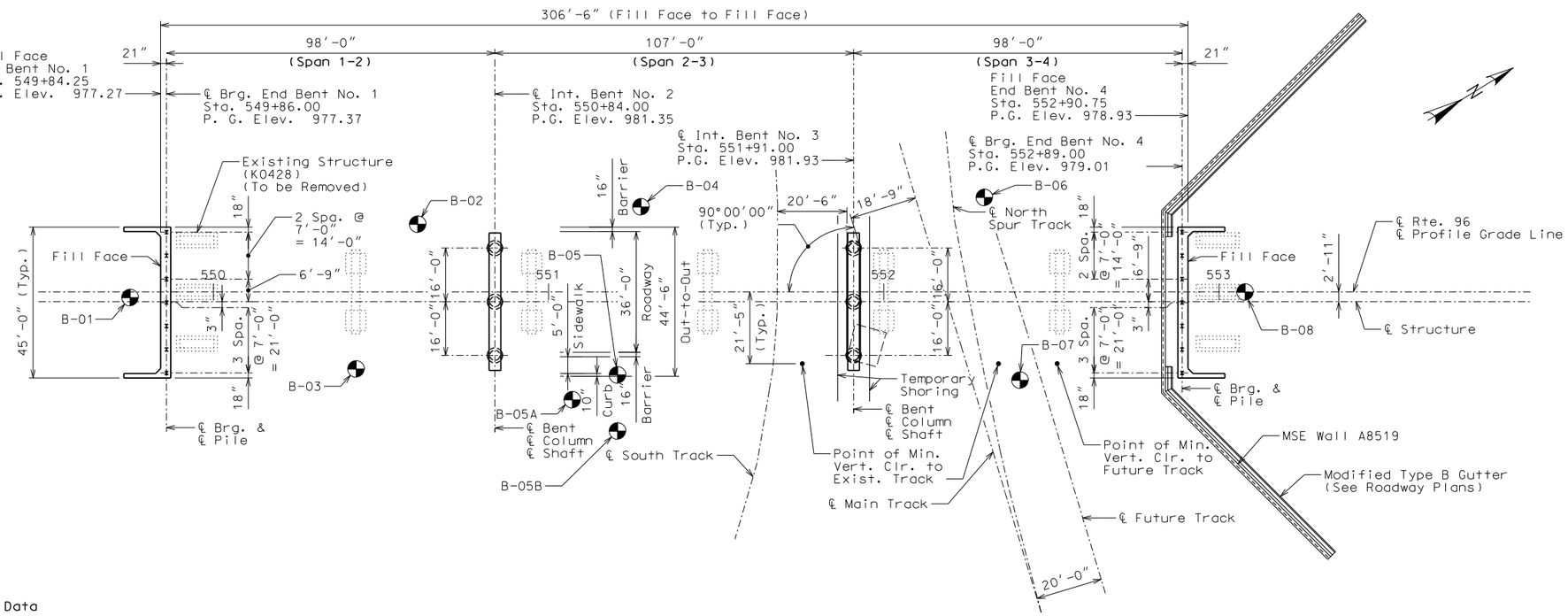

PLAN

"⊕" Indicates location of borings.

All dimensions are horizontal.
All bents are parallel.

Notice and Disclaimer Regarding Boring Log Data

The locations of all subsurface borings for this structure are shown on the plan sheet for this structure. The boring data for all locations indicated, as well as any other boring logs or other factual records of subsurface data and investigations performed by the department for the design of the project, are shown on Sheets No. 35 thru 49 or will be available from the Project Contact upon written request. No greater significance or weight should be given to the boring data depicted on the plan sheets than is given to the subsurface data available from the district or elsewhere.

The Commission does not represent or warrant that any such boring data accurately depicts the conditions to be encountered in constructing this project. A contractor assumes all risks it may encounter in basing its bid prices, time or schedule of performance on the boring data depicted here or those available from the district, or on any other documentation not expressly warranted, which the contractor may obtain from the Commission.

BRIDGE: ROUTE 96 OVER MNA RAILROAD

ROUTE 96 FROM I-49 TO RTE. 37
ABOUT 1.7 MILES EAST OF I-49
STA. 549+84.25

GENERAL ELEVATION AND PLAN

Detailed September 2016
Checked October 2016

Note: This drawing is not to scale. Follow dimensions.

Sheet No. 1 of 49

STD. 609.00
STD. 617.10
STD. 706.35

STATE OF MISSOURI
DAVID GRAHAM BARRETT
NUMBER PE-2006002787
PROFESSIONAL ENGINEER

THIS SHEET HAS BEEN SIGNED, SEALED AND DATED ELECTRONICALLY

DATE PREPARED 11/1/2016	
ROUTE 96	STATE MO
DISTRICT BR	SHEET NO. 1
COUNTY JASPER	
JOB NO. J7P2228F	
CONTRACT ID.	
PROJECT NO.	
BRIDGE NO. A8425	

DESCRIPTION	DATE

MISSOURI HIGHWAYS AND TRANSPORTATION COMMISSION
105 WEST CAPITOL
JEFFERSON CITY, MO 65102
1-888-ASK-MODOT (1-888-275-6636)

HDR Engineering, Inc.
4435 Main Street
Suite 1000
Kansas City, MO 64111-1856
816-360-2700
Certificate of Authority: 000856

c:\pwworking\oma\d2236001\B_A8425_001_J7P2228F.dgn 8:05:44 PM 11/1/2016

ESTIMATED QUANTITIES

	Item	Unit	Substr.	Superstr.	Total
	Class 1 Excavation	Cu. Yd.	65		65
	Temporary Shoring	Lump Sum	1		1
	Removal of Bridges (K0428)	Lump Sum			1
	Bridge Approach Slab (Minor Road)	Sq. Yd.		192	192
	Ornamental Pedestrian Fence (9'-4")	Lin. Ft.		346	346
	Drilled Shafts (4 ft. 6 in. Dia.)	Lin. Ft.	156.1		156.1
	Rock Sockets (4 ft. 0 in. Dia)	Lin. Ft.	60.0		60.0
	Supplementary Television Camera Inspection	Each	6		6
	Foundation Inspection Holes	Lin. Ft.	120		120
	Sonic Logging Testing	Each	6		6
	Galvanized Structural Steel Piles (12 in.)	Lin. Ft.	497		497
	Pile Wave Analysis	Each	2		2
	Pile Point Reinforcement	Each	14		14
	Class B Concrete (Substructure)	Cu. Yd.	177.5		177.5
	Slab on Concrete I-Girder	Sq. Yd.		1511	1511
(*)	Barrier Curb (Type D)	Lin. Ft.		674	674
	Type 6 (54 in.), Prestressed Concrete I-Girder	Lin. Ft.		1515	1515
	Reinforcing Steel (Bridges)	Lbs.	44,440		44,440
	Conduit System on Structure	Lump Sum		1	1
	Steel Intermediate Diaphragms for P/S Concrete Girders	Each		24	24
	Vertical Drain at End Bents	Each			2
	Laminated Neoprene Bearing Pad	Each		10	10
	Laminated Neoprene Bearing Pad (Tapered)	Each		20	20
	Corrugated Metal Pipe Pile Spacers	Each	7		7

* Barrier Curb (Type D) shall be cast-in-place or slip-form option.

DRIVEN PILES:
Manfactured pile point reinforcment shall be used on all piles in this structure at Bents No. 1 and 4.

DRILLED SHAFTS:
Thickness of permanent steel casing shall be in accordance with Sec 701.

GENERAL NOTES:

DESIGN SPECIFICATIONS:
2012-AASHTO LRFD Bridge Design Specifications (6th Ed.) and 2013 Interims
Seismic Design Category = A

DESIGN LOADING:
Vehicular = HL-93
35lb/sf. Future Wearing Surface
Earth 120lb/cf, Equivalent Fluid Pressure 45lb/cf
Superstructure: Simply-supported, non-composite for dead load.
Continuous composite for live load.

DESIGN UNIT STRESSES:

Class B Concrete (Substructure Except Drilled Shafts and Rock Sockets)	f'c = 3,000 psi
Class B-2 Concrete (Drilled Shafts & Rock Sockets)	f'c = 4,000 psi
Class B-2 Concrete (Superstructure Except Prestressed Girders and Barrier Curb (Type D)	f'c = 4,000 psi
Class B-1 Concrete (Barrier Curb (Type D)	f'c = 4,000 psi
Reinforcing Steel (Grade 60)	fy = 60,000 psi
Structural Carbon Steel	fy = 36,000 psi
Steel Pile (ASTM A709 Grade 50)	fy = 50,000 psi

For Precast Prestressed Panel Stresses, see Sheet No. 21.
For Prestressed Girder Stresses, see Sheet No. 14 and 15.

NEOPRENE BEARING PADS:
Laminated Neoprene Bearing Pads and Laminated Neoprene Bearing Pads (Tapered) shall be 60 Durometer and shall be in accordance with Sec 716.

JOINT FILLER:
All joint filler shall be in accordance with Sec 1057 for preformed sponge rubber expansion and partition joint filler, except as noted.

REINFORCING STEEL:
Minimum clearance to reinforcing steel shall be 1-1/2", unless otherwise shown.

TRAFFIC HANDLING:
Structure to be closed during construction.

MoDOT Construction personnel shall indicate the type of joint filler option used under precast panels for this structure.
☐ Constant Joint filler
Variable Joint Filler

The table of Estimated Quantities for Slab on Concrete I-girder represents the quantities used by the State in preparing the cost estimate for concrete slabs. The area of the concrete slab will be measured to the nearest square yard longitudinally from end of slab to end of slab and transversely from out to out of bridge slab (or with the horizontal dimensions as shown on the plan of slab.) Payment for prestressed panels, conventional forms, all concrete and coated and uncoated reinforcing steel will be considered completely covered by the contract unit price for the slab. Variations may be encountered in these estimated quantities but these variations cannot be used for an adjustment in the contract unit price.

Method of forming the slab shall be as shown on the plans and in accordance with Sec 703. All hardware for forming the slab to be left in place as a permanent part of the structure shall be coated in accordance with ASTM A123 or ASTM B633 with a thickness Class SC4 and a finish Type I, II or III.

Class B-2 Concrete quantity is based on minimum top flange thickness and minimum joint material thickness.

The Prestressed Panel quantities are not included in the Table of Estimated Quantities for Slab on Concrete I-Girder.

DRILLED SHAFTS (CONTINUED):
Sonic logging testing shall be performed on all drilled shafts and rock sockets.

The cost of any required excavation to the top of the drilled shafts will be considered completely covered by the contract unit price for other items.

ESTIMATED QUANTITIES:

All concrete above the construction joint in the end bents is included in the Estimated Quantities for Slab on Concrete I-Girder.

All reinforcement in the end bents is included in the Estimated Quantities for Slab on Concrete I-Girder.

All reinforcement in the intermediate bent concrete diaphragms except reinforcement embedded in the beam cap is included in the Estimated Quantities for Slab on Concrete I-Girder.

All concrete above the intermediate bent cap is included in the Estimated Quantities for Slab on Concrete I-Girder.

ESTIMATED QUANTITIES FOR SLAB ON CONCRETE I-GIRDER

Item		Total
Class B-2 Concrete	Cu. Yd.	413.7
Reinforcing Steel	Lbs.	10,340
Reinforcing Steel (Epoxy Coated)	Lbs.	96,850

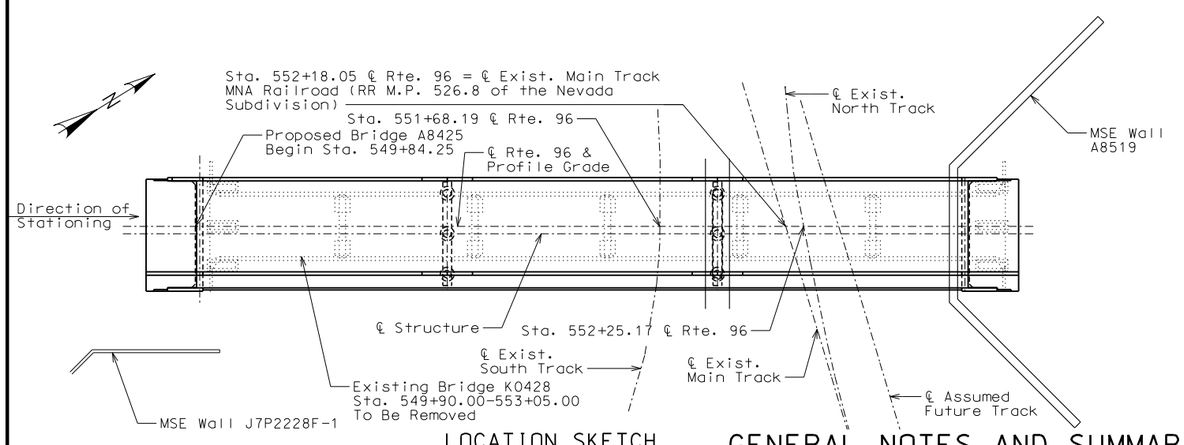

LOCATION SKETCH

FOUNDATION DATA

Type	Design Data		Bent Number 1	2	3	4
Load Bearing Pile	Pile Type and Size		HP12x53	-	-	HP12x53
	Number	ea	7	-	-	7
	Approximate Length per Each	ft	34	-	-	37
	Pile Driving Verification Method		WEAP	-	-	WEAP
	Minimum Nominal Axial Compressive Resistance	kip	548	-	-	548
	Minimum Tip Penetration (Elev.)	ft	-	-	-	-
	Criteria for Minimum Tip Penetration		-	-	-	-
	Hammer Energy Required	ft-lb	17,600	-	-	17,600
Rock Socket	Number	ea	-	3	3	-
	Layer 1: Foundation Material		-	Rock	Rock	-
	Layer 1: Elevation Range	ft	-	928.80-911.30	922.10-907.30	-
	Layer 1: Minimum Nominal Axial Compressive Resistance (Side Resistance)	ksf	-	27.7	27.7	-

WEAP = Wave Equation Analysis of Piles
Load Bearing Pile:
Minimum Nominal Axial Compressive Resistance = Maximum Factored Loads/Resistance Factor
Rock Socket (Drilled Shaft):
Minimum Nominal Axial Compressive Resistance (Side Resistance) = Maximum Factored Loads/Resistance Factor

GENERAL NOTES AND SUMMARY OF ESTIMATED QUANTITIES

Detailed September 2016
Checked October 2016

Note: This drawing is not to scale. Follow dimensions.

STATE OF MISSOURI — DAVID GRAHAM BARRETT — NUMBER PE-2006002787 — PROFESSIONAL ENGINEER

THIS SHEET HAS BEEN SIGNED, SEALED AND DATED ELECTRONICALLY

DATE PREPARED	11/1/2016
ROUTE	96
STATE	MO
DISTRICT	BR
SHEET NO.	2
COUNTY	JASPER
JOB NO.	J7P2228F
CONTRACT ID.	
PROJECT NO.	
BRIDGE NO.	A8425

DESCRIPTION | DATE

MISSOURI HIGHWAYS AND TRANSPORTATION COMMISSION
105 WEST CAPITOL
JEFFERSON CITY, MO 65102
1-888-ASK-MODOT (1-888-275-6636)

HDR Engineering, Inc.
4435 Main Street
Suite 1000
Kansas City, MO 64111-1856
816-360-2700
Certificate of Authority: 000856

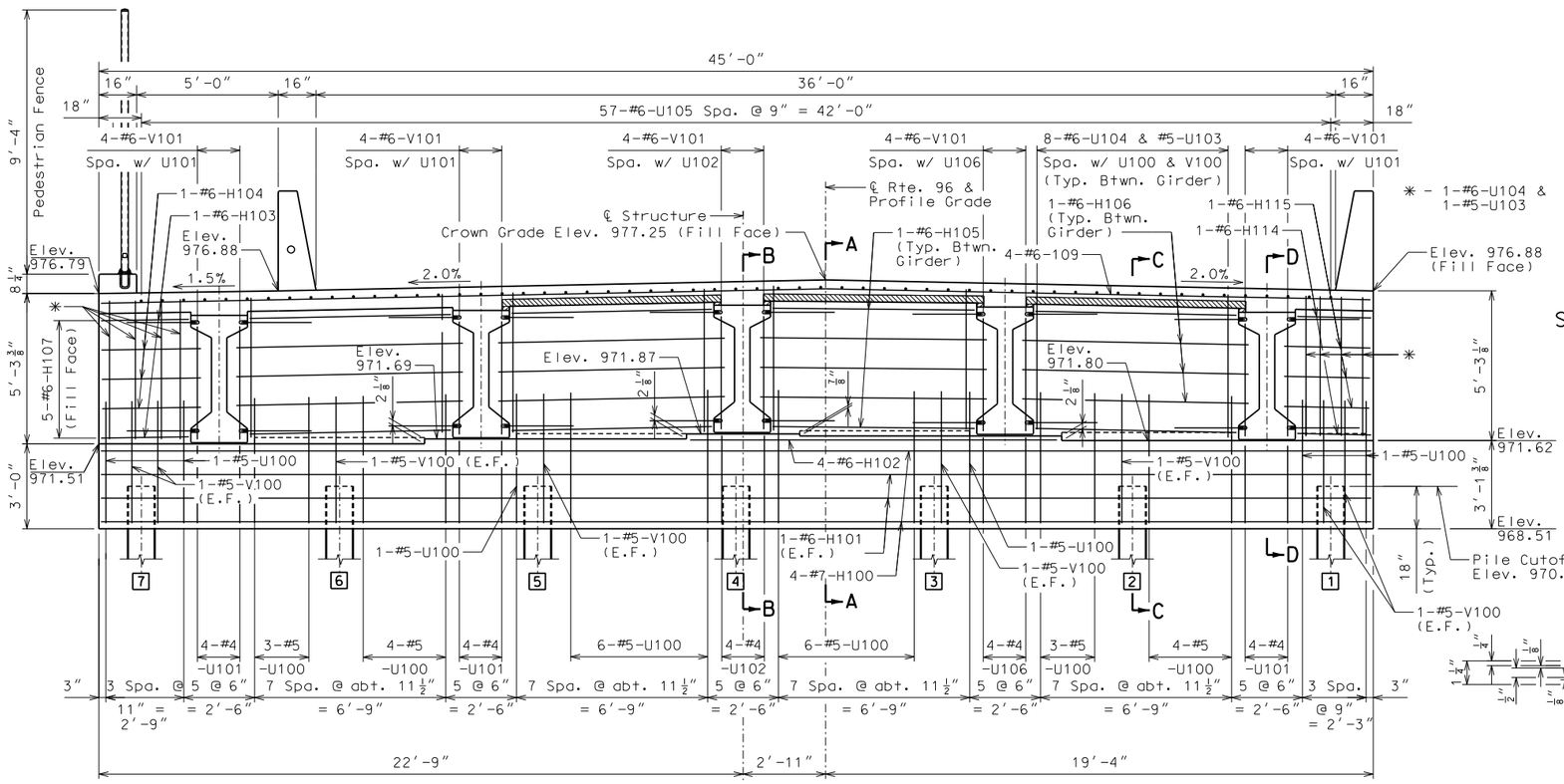

ELEVATION
(Looking Back Station)

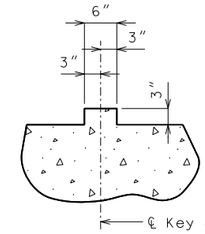

SECTION THRU KEY

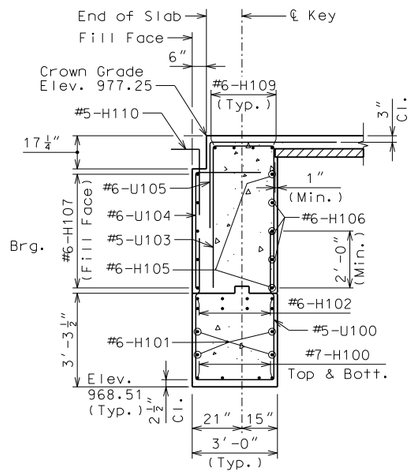

SECTION A-A

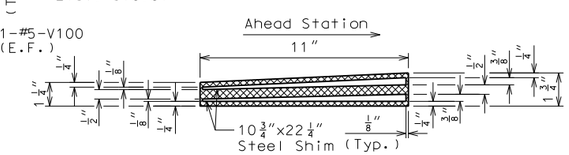

LAMINATED NEOPRENE BEARING PAD (TAPERED)

Galvanization material shall be omitted or removed for a minimum of 2" around weld locations. The method used to omit or remove galvanizing material shall be as approved by the engineer.

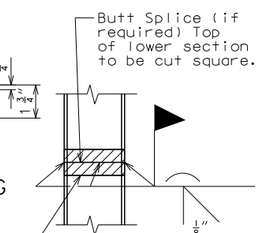

DETAIL OF STEEL PILE SPLICE

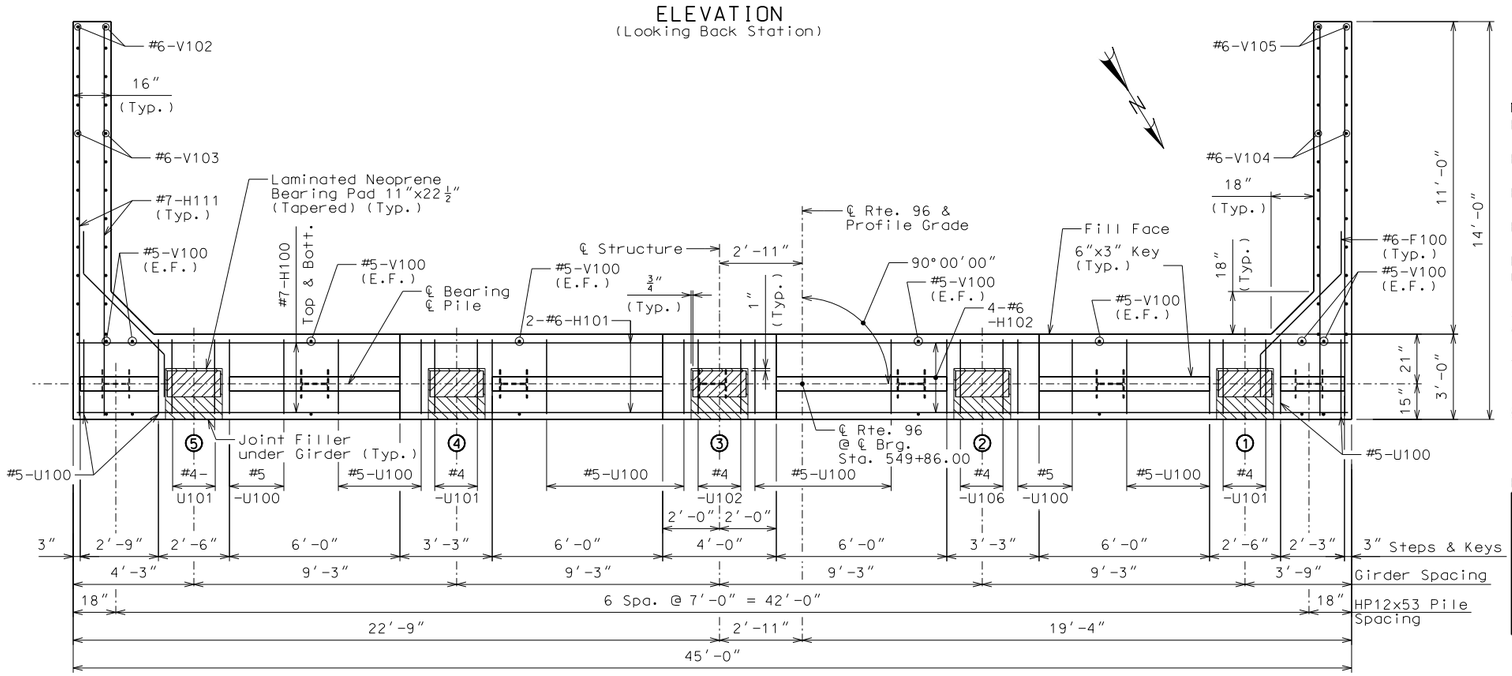

PLAN OF BEAM

END BENT NO. 1 DETAILS

Notes:
For Sections B-B, C-C & D-D, see Sheet No. 4.

For Girder Details, see Sheet No. 14 .

Bend F100 bars in field to clear girders.

Bend H111 bars in field to clear pile.

Reinforcing shall be shifted to clear piles. U-bars shall clear piles by at least 1 1/2".

All concrete in the end bent above top of beam and below top of slab shall be Class B-2.

Strands at end of girder shall be field bent or, if necessary, cut in field to maintain 1 1/2" minimum clearance to fill face of end bent.

(1) - Denotes girder number.

[1] - Denotes pile number.

E.F. Denotes Each Face.

SUBSTRUCTURE QUANTITY TABLE FOR END BENT NO. 1

ITEM		QUANTITY
Class 1 Excavation	Cu. Yd.	65
Galvanized Structural Steel Pile (12 in.)	Lin. Ft.	238
Pile Wave Analysis	Each	1
Pile Point Reinforcement	Each	7
Class B Concrete (Substructure)	Cu. Yd.	19.5

Notes:
These quantities are included in the Estimated Quantities on Sheet 2.

All reinforcing quantities are included in the Estimated Quantities for Slab on Concrete I-Girder, see Sheet No. 2.

Detailed September 2016
Checked October 2016

Note: This drawing is not to scale. Follow dimensions.

STATE OF MISSOURI
DAVID GRAHAM BARRETT
NUMBER PE-2006002787
PROFESSIONAL ENGINEER

THIS SHEET HAS BEEN SIGNED, SEALED AND DATED ELECTRONICALLY

DATE PREPARED	
11/1/2016	
ROUTE 96	STATE MO
DISTRICT BR	SHEET NO. 3
COUNTY JASPER	
JOB NO. J7P2228F	
CONTRACT ID.	
PROJECT NO.	
BRIDGE NO. A8425	

DATE	DESCRIPTION

MISSOURI HIGHWAYS AND TRANSPORTATION COMMISSION
105 WEST CAPITOL
JEFFERSON CITY, MO 65102
1-888-ASK-MODOT (1-888-275-6636)

HDR Engineering, Inc.
4435 Main Street
Suite 1000
Kansas City, MO 64111-1856
816-360-2700
Certificate of Authority: 000856

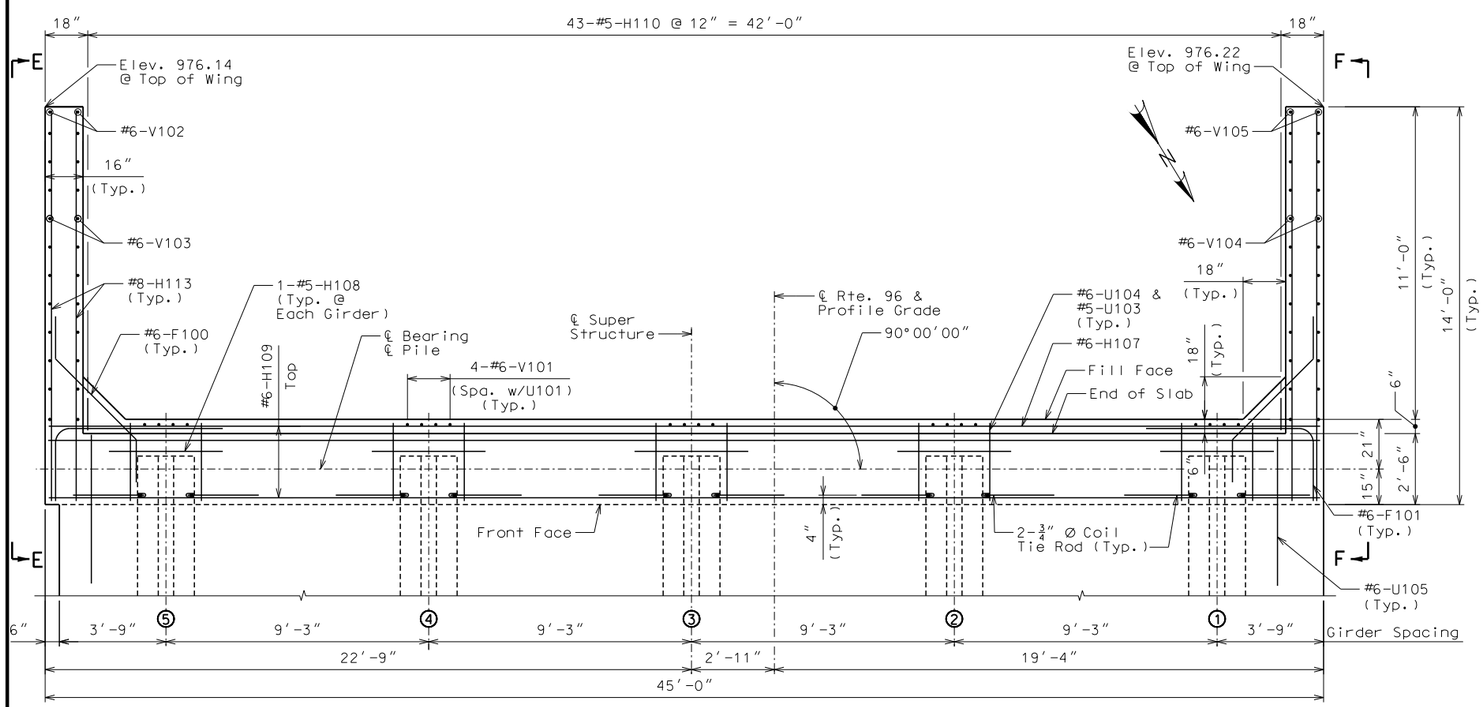

PLAN

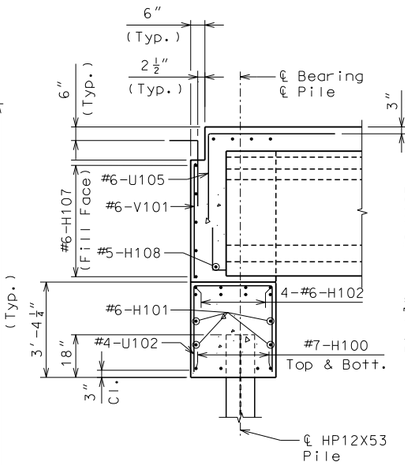

SECTION B-B

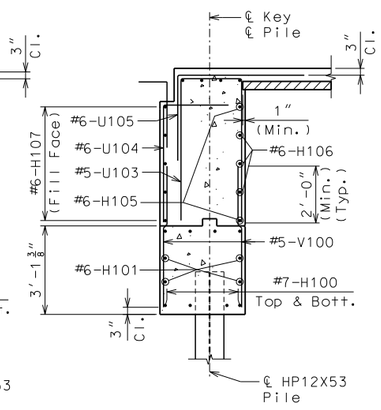

SECTION C-C

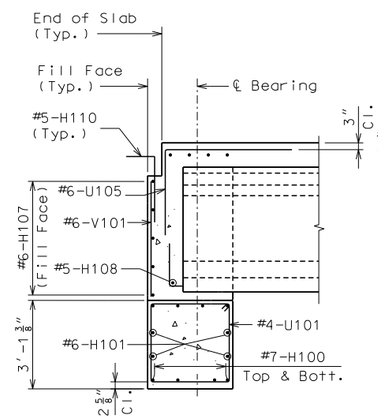

SECTION D-D

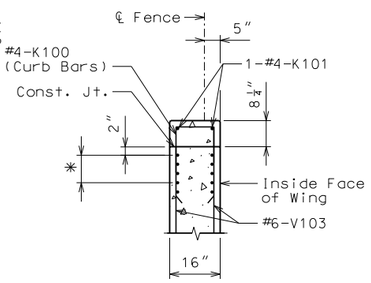

SECTION J-J

* #8-H Bars at 3" cts.
(Each face)(Place with grade)

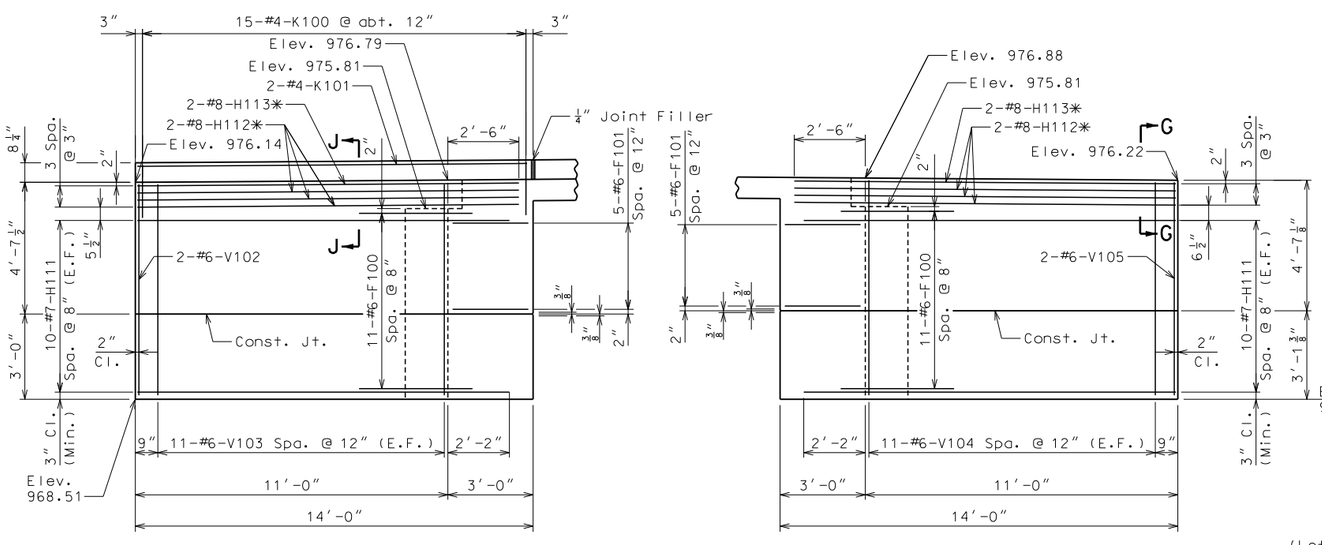

ELEVATION E-E

* - Place with grade.

ELEVATION F-F

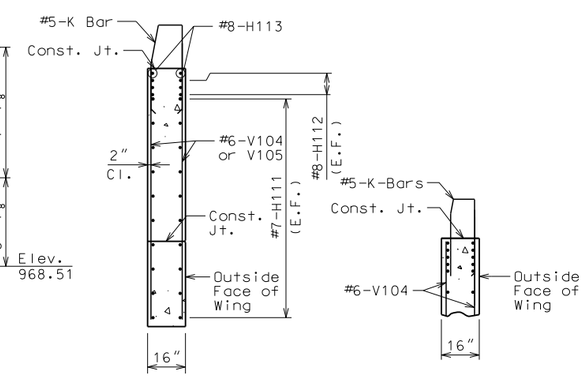

SECTION THRU WING
(Left Wing shown, right wing similar)

SECTION G-G

END BENT NO. 1 DETAILS

Notes:
For location of Sections B-B, C-C & D-D, see Sheet No. 3.

For Key Details, see Sheet No. 3.

For Girder Details, see Sheet No. 14.

For reinforcement of the Safety Barrier, see Sheet No. 23 thru 26.

For Details of 10"x8" curb on slab, see Sheet No. 20.

For Details of curb on approach slab, see Sheet No. 29.

① - denotes Girder Number.

E.F. denotes Each Face.

STATE OF MISSOURI
DAVID GRAHAM BARRETT
NUMBER PE-2006002787
PROFESSIONAL ENGINEER

THIS SHEET HAS BEEN SIGNED, SEALED AND DATED ELECTRONICALLY

DATE PREPARED	
11/1/2016	
ROUTE 96	STATE MO
DISTRICT BR	SHEET NO. 4
COUNTY JASPER	
JOB NO. J7P2228F	
CONTRACT ID.	
PROJECT NO.	
BRIDGE NO. A8425	

DESCRIPTION	DATE

MISSOURI HIGHWAYS AND TRANSPORTATION COMMISSION
105 WEST CAPITOL
JEFFERSON CITY, MO 65102
1-888-ASK-MODOT (1-888-275-6636)

HDR Engineering, Inc.
4435 Main Street
Suite 1000
Kansas City, MO 64111-1856
816-360-2700
Certificate of Authority: 000856

Detailed September 2016
Checked October 2016

Note: This drawing is not to scale. Follow dimensions.

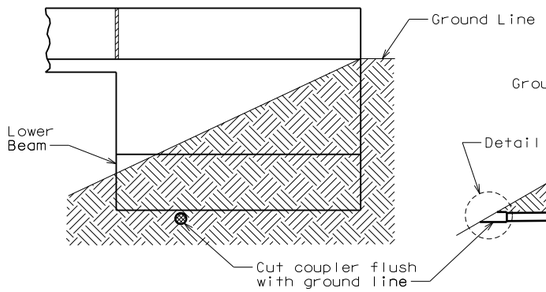

ELEVATION OF WING

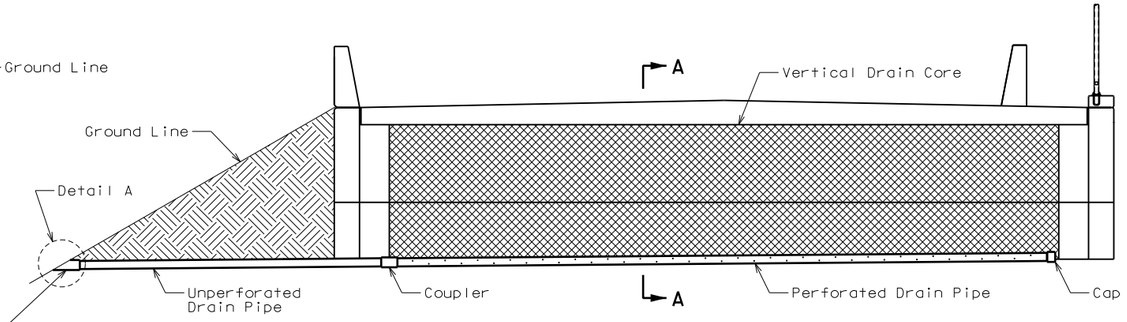

ELEVATION AT END BENT NO. 1
(Looking Ahead Station)

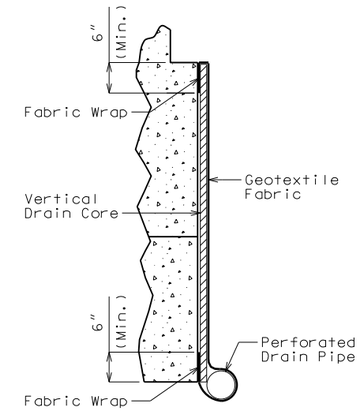

PART SECTION A-A

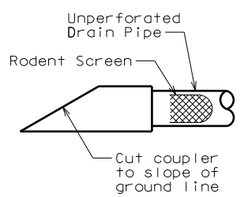

DETAIL A

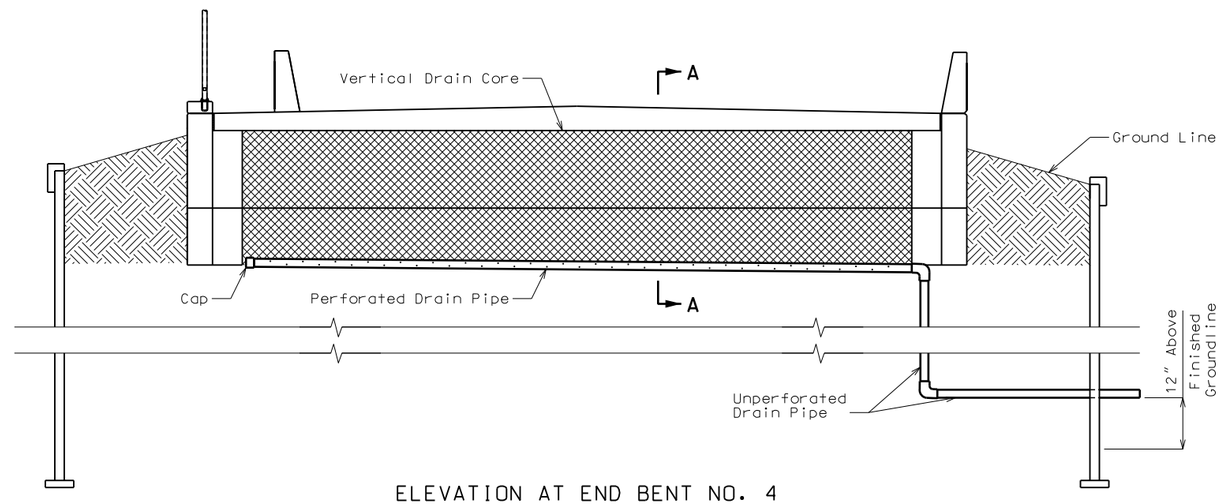

ELEVATION AT END BENT NO. 4
(Looking Back Station)
(Separate Drain Option shown)

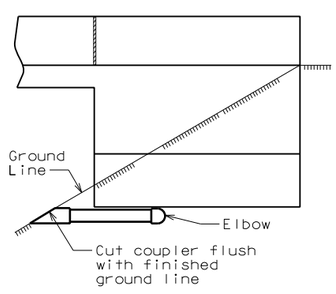

ELEVATION OF WING

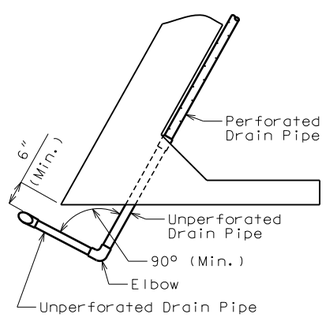

PART PLAN

OPTIONAL TURNED DRAIN
(Only if rock is encountered at outside of wing)

Note:

Drain pipe may be either 6-inch diameter corrugated metallic-coated steel pipe underdrain, 4-inch diameter corrugated polyvinyl chloride (PVC) drain pipe, or 4-inch diameter corrugated polyethylene (PE) drain pipe.

Place drain pipe at fill face of end bent and slope to lowest grade of ground line, also missing the lower beam of end bent by 1 1/2 inches. (See Elevation at End Bent.)

Perforated pipe shall be placed at fill face side at the bottom of end bent and plain pipe shall be used where the vertical drain ends to the exit at ground line.

At the Contractors option, the Vertical Drain Outlet maybe combined with the MSE Wall drainage outlet and directed away from the structure. No payment will be made for additional labor or materials for this option.

VERTICAL DRAIN AT END BENTS

Detailed September 2016
Checked October 2016

Note: This drawing is not to scale. Follow dimensions.

STATE OF MISSOURI
DAVID GRAHAM BARRETT
NUMBER PE-2006002787
PROFESSIONAL ENGINEER

THIS SHEET HAS BEEN SIGNED, SEALED AND DATED ELECTRONICALLY

DATE PREPARED	
11/1/2016	
ROUTE 96	STATE MO
DISTRICT BR	SHEET NO. 5
COUNTY JASPER	
JOB NO. J7P2228F	
CONTRACT ID.	
PROJECT NO.	
BRIDGE NO. A8425	

DESCRIPTION	DATE

MISSOURI HIGHWAYS AND TRANSPORTATION COMMISSION
105 WEST CAPITOL AVE
JEFFERSON CITY, MO 65102
1-888-ASK-MODOT (1-888-275-6636)

HDR Engineering, Inc.
4435 Main Street
Suite 1000
Kansas City, MO 64111-1856
816-360-2700
Certificate of Authority: 000856

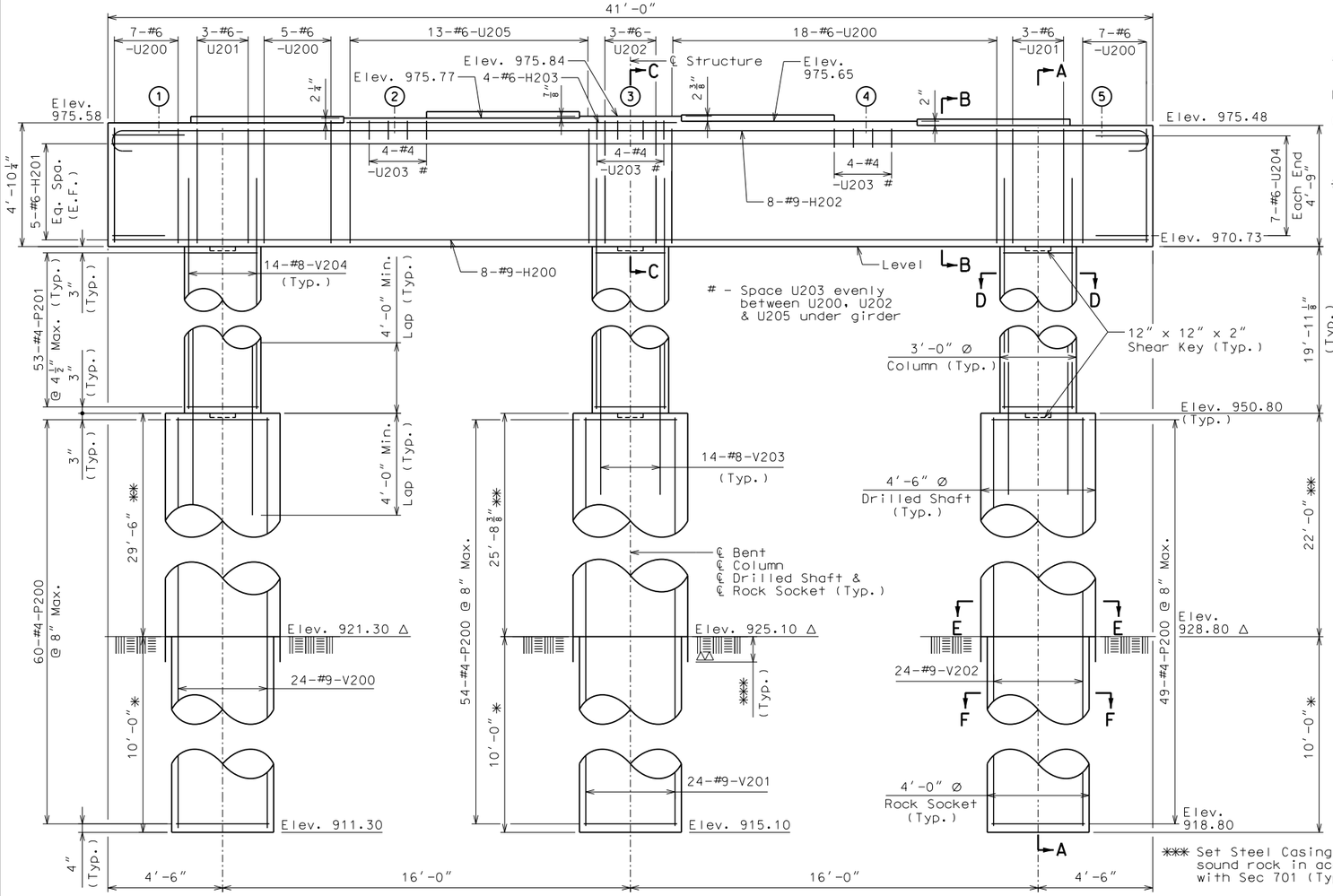

ELEVATION

△ - Anticipated Top of Sound Rock Elev.

△△ - Anticipated Tip of Casing Elev.

E.F. denotes Each Face

① - denotes Girder Number

* - Pay Items Rock Socket 4'-0" diameter.

** - Pay Items Drilled Shaft 4'-6" diameter.

*** Set Steel Casing 12" into sound rock in accordance with Sec 701 (Typ.)

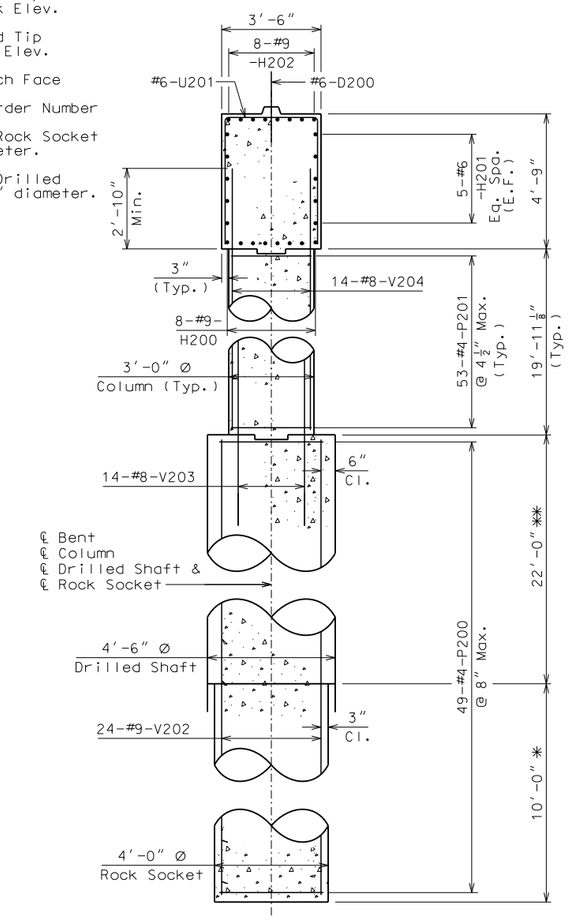

SECTION A-A

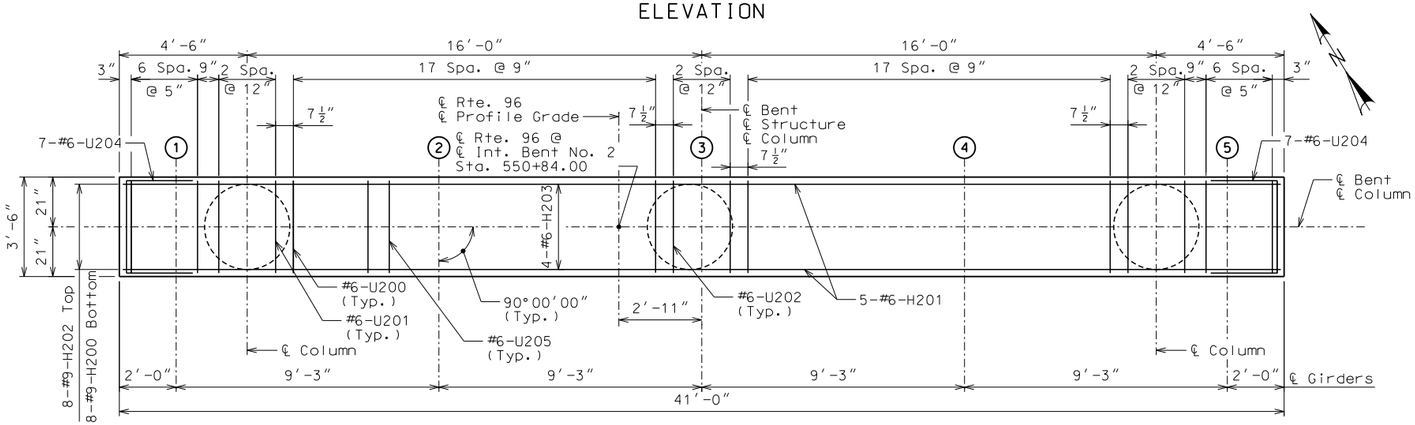

PLAN OF BEAM REINFORCEMENT
(Keys and Steps not shown for clarity.)

SUBSTRUCTURE QUANTITY TABLE FOR INTERMEDIATE BENT NO. 2

ITEM		QUANTITY
Drilled Shafts (4 ft. 6 in. diameter)	Lin. Ft.	77.2
Rock Sockets (4 ft. 0 in. diameter)	Lin. Ft.	30.0
Supplimentary Television Camera Inspection	Each	3
Foundation Inspection Holes	Lin. Ft.	60
Sonic Logging Testing	Each	3
Class B Concrete (Substructure)	Cu. Yd.	41.9
Reinforcing Steel (Bridges)	Lbs.	20,500

Notes:
These quantities are included in the Estimated Quantities table on Sheet No. 2.
The reinforcing steel for drilled shafts & rock sockets are included in the substructure quantities.

An additional 4 feet has been added to V200, V201 and V202 lengths and an additional 18-#4-P200 have been added in the quantities, if required, for possible change in drilled shaft or rock socket length. the additional V-bar length shall be cut off or included in the reinforcement lap if not required. The additional P-bars shall be spaced similarly to that shown in elevation, if required, or to a lesser spacing if not required, but not less than 5" cts.

Sonic logging testing shall be performed on all drilled shafts and rock sockets.

For Sections B-B, C-C, D-D, E-E and F-F, see Sheet No. 7.

INTERMEDIATE BENT NO. 2 DETAILS

Detailed September 2016
Checked October 2016

Note: This drawing is not to scale. Follow dimensions.

Sheet No. 6 of 49

STATE OF MISSOURI
DAVID GRAHAM BARRETT
NUMBER PE-2006002787
PROFESSIONAL ENGINEER

THIS SHEET HAS BEEN SIGNED, SEALED AND DATED ELECTRONICALLY

DATE PREPARED	
11/1/2016	
ROUTE 96	STATE MO
DISTRICT BR	SHEET NO. 6
COUNTY JASPER	
JOB NO. J7P2228F	
CONTRACT ID.	
PROJECT NO.	
BRIDGE NO. A8425	

DATE	DESCRIPTION

MISSOURI HIGHWAYS AND TRANSPORTATION COMMISSION
105 WEST CAPITOL
JEFFERSON CITY, MO 65102
1-888-ASK-MODOT (1-888-275-6636)

HDR Engineering, Inc.
4435 Main Street
Suite 1000
Kansas City, MO 64111-1856
816-360-2700
Certificate of Authority: 000856

c:\pwworking\oma\d2236001\B_A8425_006_J7P2228F.dgn 8:06:37 PM 11/1/2016

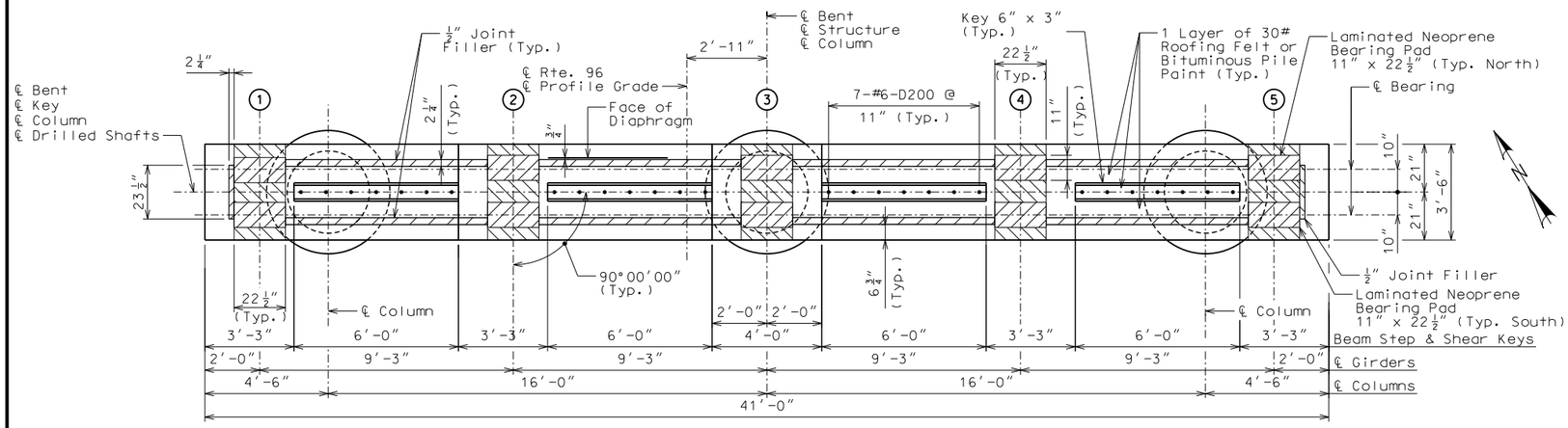

PLAN OF BEAM

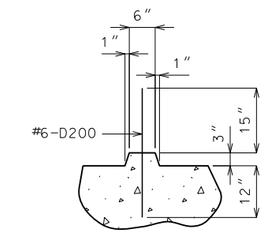

SECTION THRU KEY

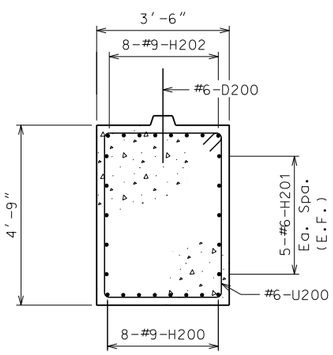

SECTION B-B

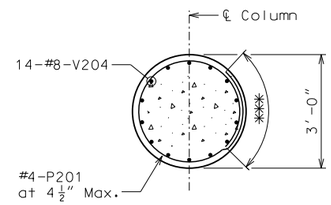

SECTION D-D

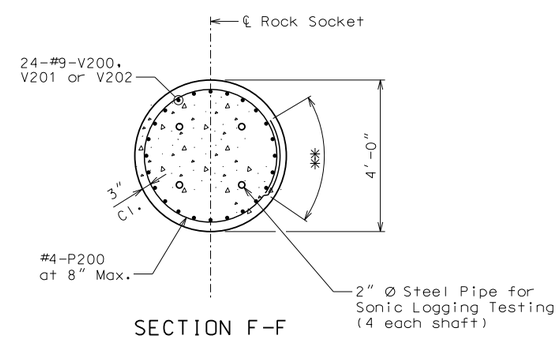

SECTION F-F

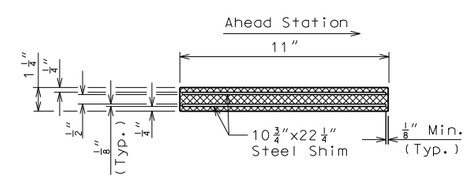

LAMINATED NEOPRENE BEARING PAD
(All North Bearings)

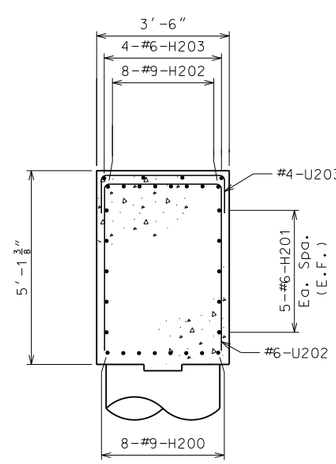

SECTION C-C

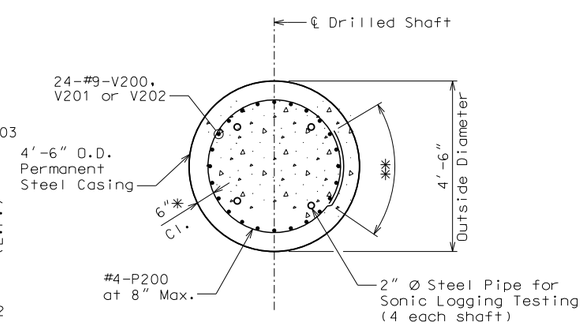

SECTION E-E
✱ To outside of casing.

✱✱ - Min. Lap = 2'-1" (Stagger adjacent bar splices)

✱✱✱ - Min. Lap = 2'-5" (Stagger adjacent bar spilces)

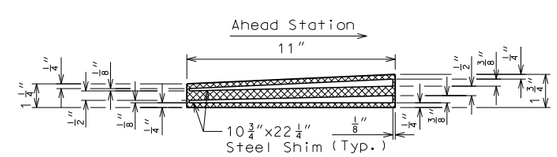

LAMINATED NEOPRENE BEARING PAD
(TAPERED)
(All South Bearings)

Notes:
For Diaphragm Details, see Sheet No. 18.

For steps 2" or more, use 2 1/4" x 1/2" Joint Filler up Vertical Face.

For location of Sections B-B, C-C, D-D, E-E & F-F, see Sheet No. 6.

E.F. Denotes Each Face

INTERMEDIATE BENT NO. 2 DETAILS

Detailed September 2016
Checked October 2016

Note: This drawing is not to scale. Follow dimensions.

STATE OF MISSOURI
DAVID GRAHAM BARRETT
NUMBER PE-2006002787
PROFESSIONAL ENGINEER

THIS SHEET HAS BEEN SIGNED, SEALED AND DATED ELECTRONICALLY

DATE PREPARED	
11/1/2016	
ROUTE 96	STATE MO
DISTRICT BR	SHEET NO. 7
COUNTY JASPER	
JOB NO. J7P2228F	
CONTRACT ID.	
PROJECT NO.	
BRIDGE NO. A8425	

DESCRIPTION	DATE

MISSOURI HIGHWAYS AND TRANSPORTATION COMMISSION
105 WEST CAPITOL
JEFFERSON CITY, MO 65102
1-888-ASK-MODOT (1-888-275-6636)

HDR Engineering, Inc.
4435 Main Street
Suite 1000
Kansas City, MO 64111-1856
816-360-2700
Certificate of Authority: 000856

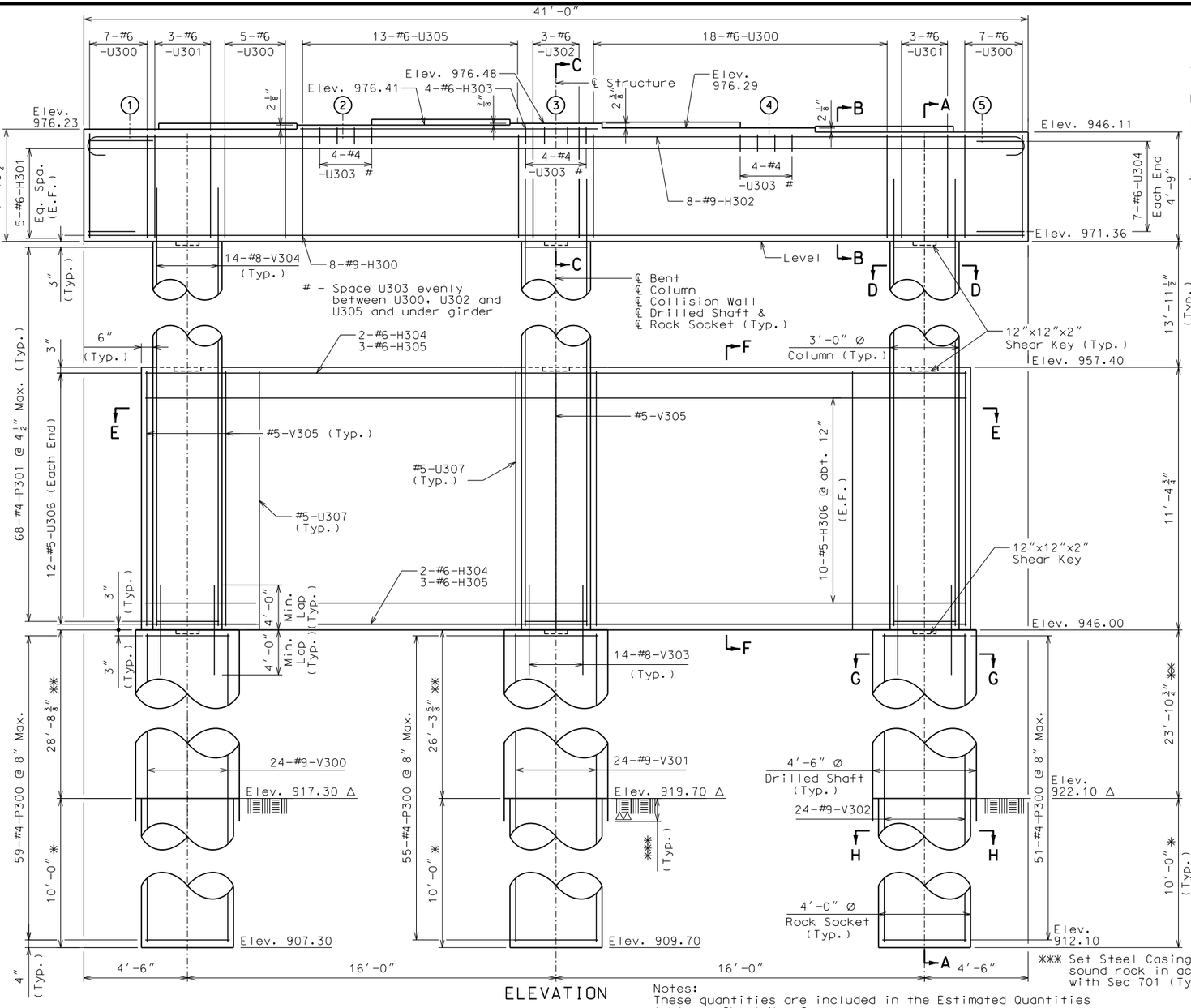

ELEVATION

△ - Anticipated Top of Sound Rock Elev.

△△ - Anticipated Tip of Casing Elev.

E.F. denotes Each Face

① - denotes Girder Number

✱ - Pay Items Rock Socket 4'-0" diameter.

✱✱ - Pay Items Drilled Shaft 4'-6" diameter.

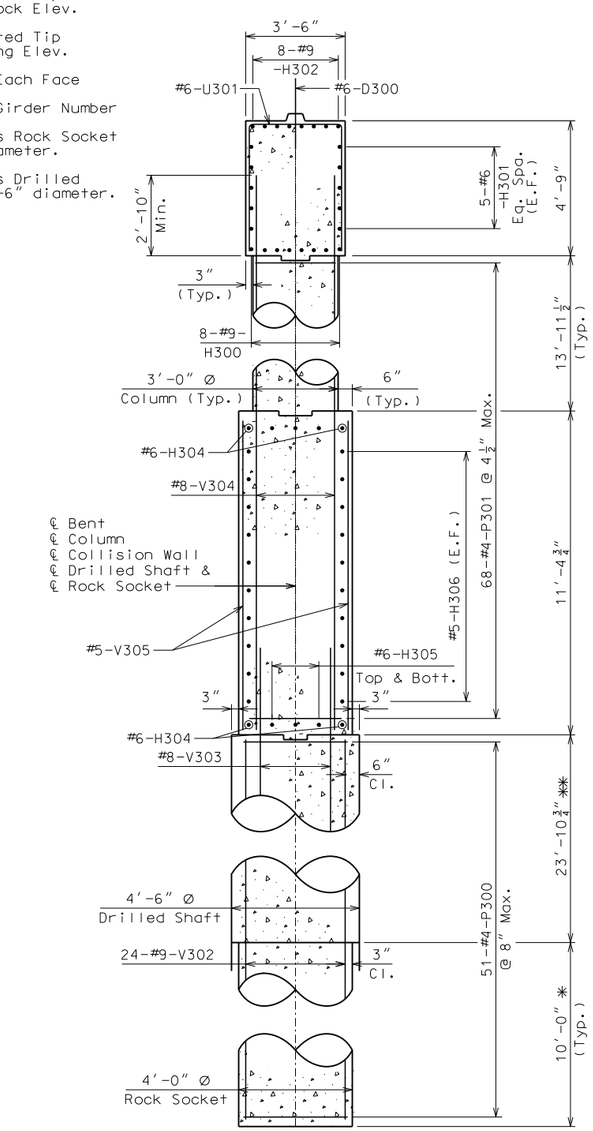

SECTION A-A

Notes:
These quantities are included in the Estimated Quantities table on Sheet No. 2.
The reinforcing steel for drilled shafts & rock sockets are included in the substructure quantities.

An additional 4 feet has been added to V300, V301 & V302 lengths and an additional 18-#4-P300 have been added in the quantities, if required, for possible change in drilled shaft or rock socket length. the additional V-bar length shall be cut off or included in the reinforcement lap if not required. The additional P300 shall be spaced similarly to that shown in elevation, if required, or to a lesser spacing if not required, but not less than 5" cts.

Sonic logging testing shall be performed on all drilled shafts and rock sockets.
For Section E-E, see Sheet No. 9.
For Sections B-B, C-C, D-D, F-F, G-G and H-H, see Sheet No. 10.

SUBSTRUCTURE QUANTITY TABLE FOR INTERMEDIATE BENT NO. 3

ITEM		QUANTITY
Drilled Shafts (4 ft. 6 in. diameter)	Lin. Ft.	78.9
Rock Sockets (4 ft. 0 in. diameter)	Lin. Ft.	30.0
Supplementary Television Camera Inspection	Each	3
Foundation Inspection Holes	Lin. Ft.	60
Sonic Logging Testing	Each	3
Class B Concrete (Substructure)	Cu. Yd.	96.6
Reinforcing Steel (Bridges)	Lbs.	23,940

INTERMEDIATE BENT NO. 3 DETAILS

Detailed September 2016
Checked October 2016

Note: This drawing is not to scale. Follow dimensions.

STATE OF MISSOURI
DAVID GRAHAM BARRETT
NUMBER PE-2006002787
PROFESSIONAL ENGINEER

THIS SHEET HAS BEEN SIGNED, SEALED AND DATED ELECTRONICALLY

DATE PREPARED	
11/1/2016	
ROUTE 96	STATE MO
DISTRICT BR	SHEET NO. 8
COUNTY JASPER	
JOB NO. J7P2228F	
CONTRACT ID.	
PROJECT NO.	
BRIDGE NO. A8425	

DESCRIPTION

DATE

MISSOURI HIGHWAYS AND TRANSPORTATION COMMISSION
105 WEST CAPITOL
JEFFERSON CITY, MO 65102
1-888-ASK-MODOT (1-888-275-6636)

HDR Engineering, Inc.
4435 Main Street
Suite 1000
Kansas City, MO 64111-1856
816-360-2700
Certificate of Authority: 000856

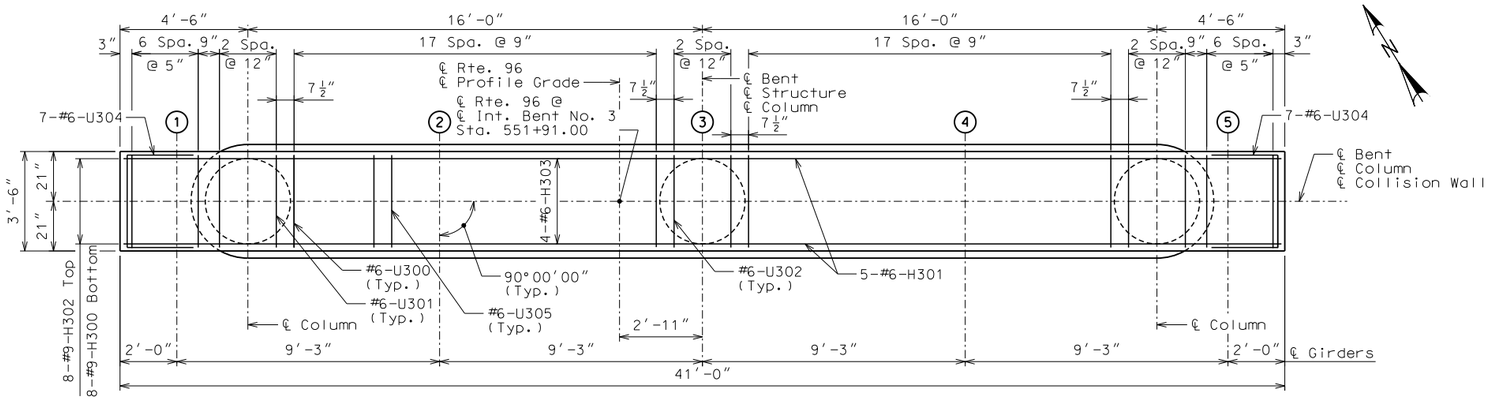

PLAN OF BEAM REINFORCEMENT
(Keys and Steps not shown for clarity.)

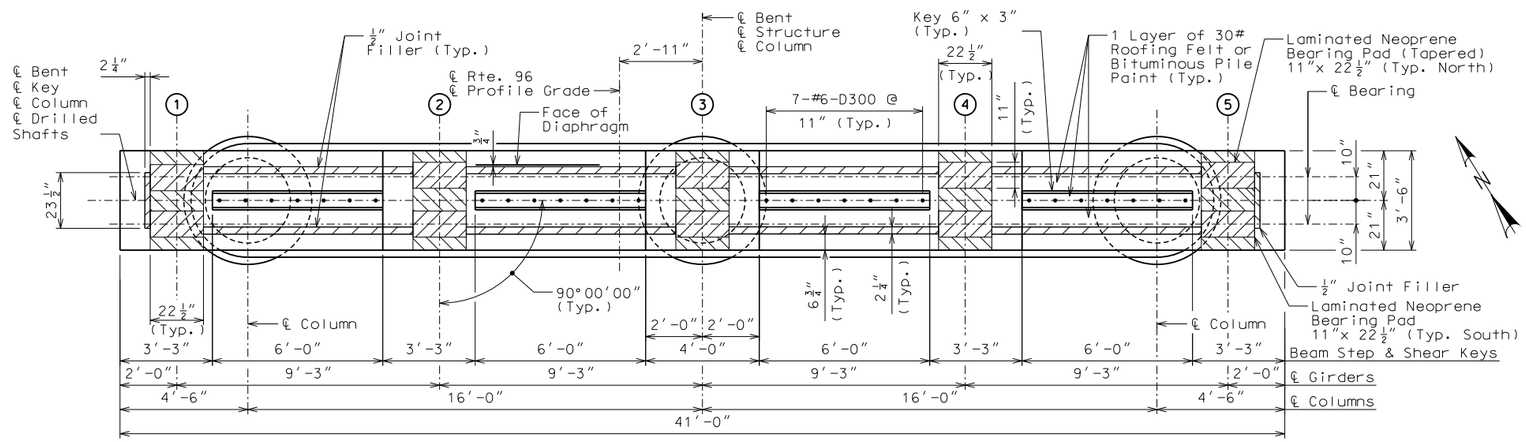

PLAN OF BEAM

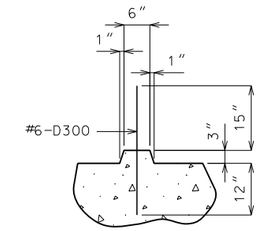

SECTION THRU KEY

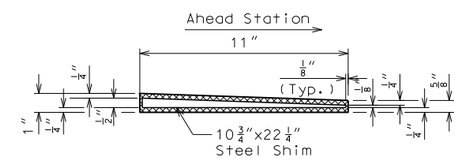

LAMINATED NEOPRENE BEARING PAD (TAPERED)
(All North Bearings)

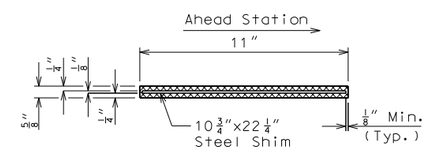

LAMINATED NEOPRENE BEARING PAD
(All South Bearings)

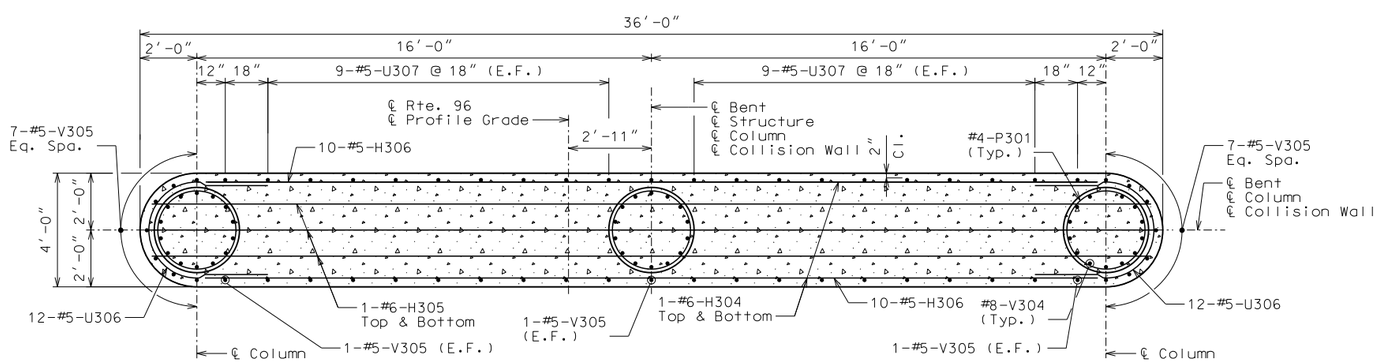

SECTION E-E

Notes:
For Diaphragm Details, see Sheet No. 18.

For steps 2" or more, use 2 1/4" x 1/2" Joint Filler up Vertical Face.

For location of Section E-E, see Sheet No. 8.

E.F. Denotes Each Face

INTERMEDIATE BENT NO. 3 DETAILS

Detailed September 2016
Checked October 2016

Note: This drawing is not to scale. Follow dimensions.

STATE OF MISSOURI
DAVID GRAHAM BARRETT
NUMBER PE-2006002787
PROFESSIONAL ENGINEER

THIS SHEET HAS BEEN SIGNED, SEALED AND DATED ELECTRONICALLY

DATE PREPARED	
11/1/2016	
ROUTE 96	STATE MO
DISTRICT BR	SHEET NO. 9
COUNTY JASPER	
JOB NO. J7P2228F	
CONTRACT ID.	
PROJECT NO.	
BRIDGE NO. A8425	

DATE	DESCRIPTION

MISSOURI HIGHWAYS AND TRANSPORTATION COMMISSION
105 WEST CAPITOL
JEFFERSON CITY, MO 65102
1-888-ASK-MODOT (1-888-275-6636)

HDR Engineering, Inc.
4435 Main Street
Suite 1000
Kansas City, MO 64111-1856
816-360-2700
Certificate of Authority: 000856

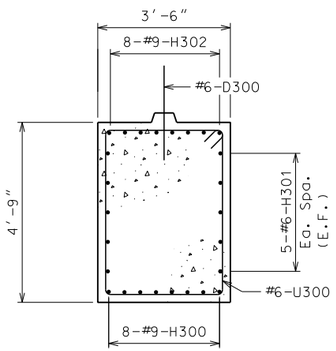

SECTION B-B

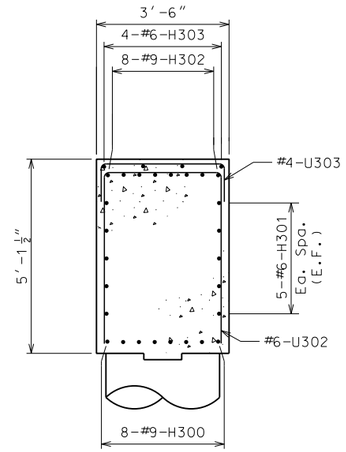

SECTION C-C

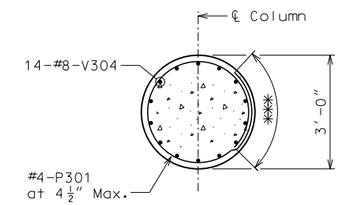

SECTION D-D

** - Min. Lap = 2'-1"
(Stagger adjacent
bar splices)

*** - Min. Lap = 2'-5"
(Stagger adjacent
bar splices)

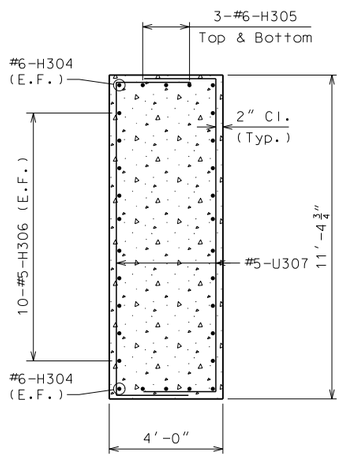

SECTION F-F

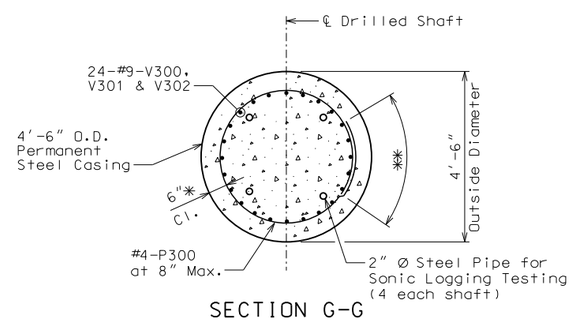

SECTION G-G

* To outside of casing.

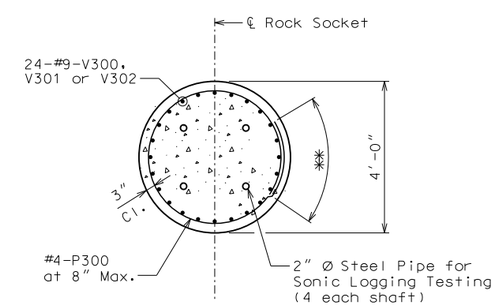

SECTION H-H

Notes:
For Diaphragm Details, see Sheet No. 18.

For location of Sections B-B, C-C, D-D, F-F, G-G & H-H, see Sheet No. 8.

E.F. Denotes Each Face

INTERMEDIATE BENT NO. 3 DETAILS

Detailed September 2016
Checked October 2016

Note: This drawing is not to scale. Follow dimensions.

STATE OF MISSOURI
DAVID GRAHAM BARRETT
NUMBER PE-2006002787
PROFESSIONAL ENGINEER

THIS SHEET HAS BEEN SIGNED, SEALED AND DATED ELECTRONICALLY

DATE PREPARED	
11/1/2016	
ROUTE 96	STATE MO
DISTRICT BR	SHEET NO. 10
COUNTY JASPER	
JOB NO. J7P2228F	
CONTRACT ID.	
PROJECT NO.	
BRIDGE NO. A8425	

DATE	DESCRIPTION

MISSOURI HIGHWAYS AND TRANSPORTATION COMMISSION
105 WEST CAPITOL
JEFFERSON CITY, MO 65102
1-888-ASK-MODOT (1-888-275-6636)

HDR Engineering, Inc.
4435 Main Street
Suite 1000
Kansas City, MO 64111-1856
816-360-2700
Certificate of Authority: 000856

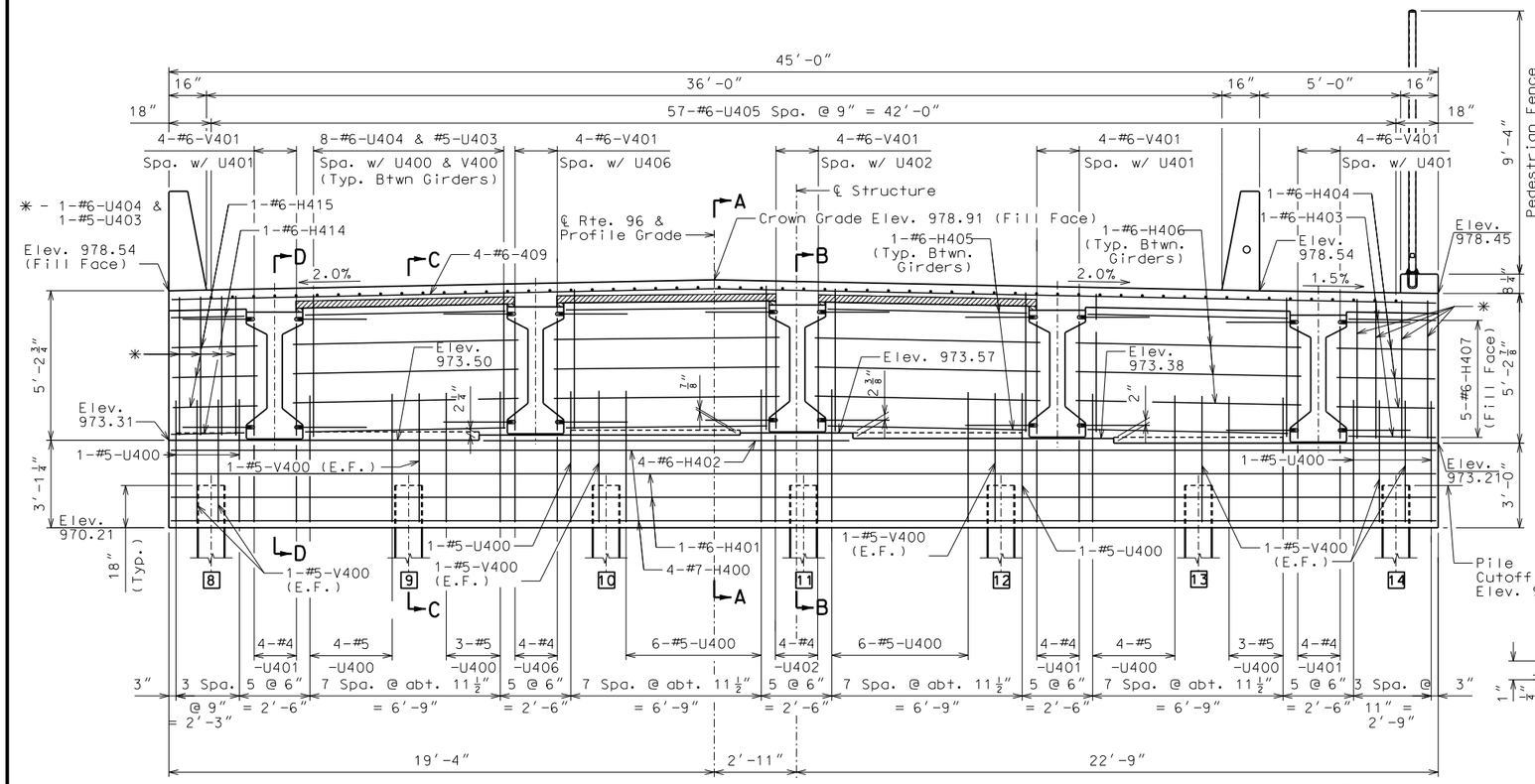

ELEVATION
(Looking Ahead Station)

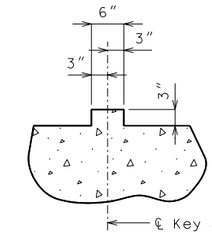

SECTION THRU KEY

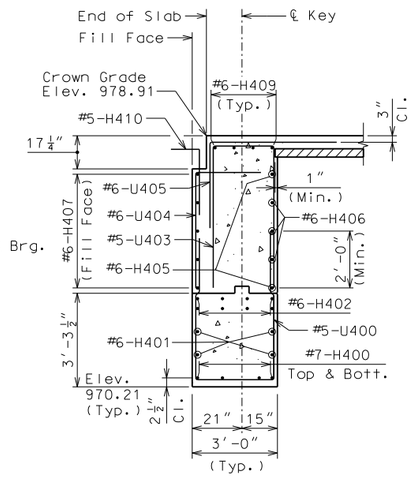

SECTION A-A

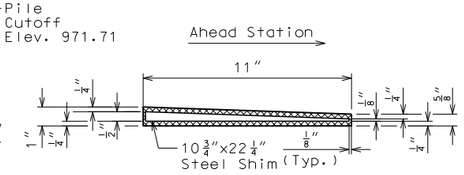

LAMINATED NEOPRENE BEARING PAD (TAPERED)

Galvanization material shall be omitted or removed for a minimum of 2" around weld locations. The method used to omit or remove galvanizing material shall be as approved by the engineer.

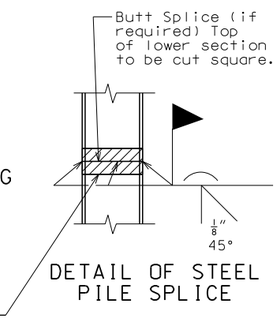

DETAIL OF STEEL PILE SPLICE

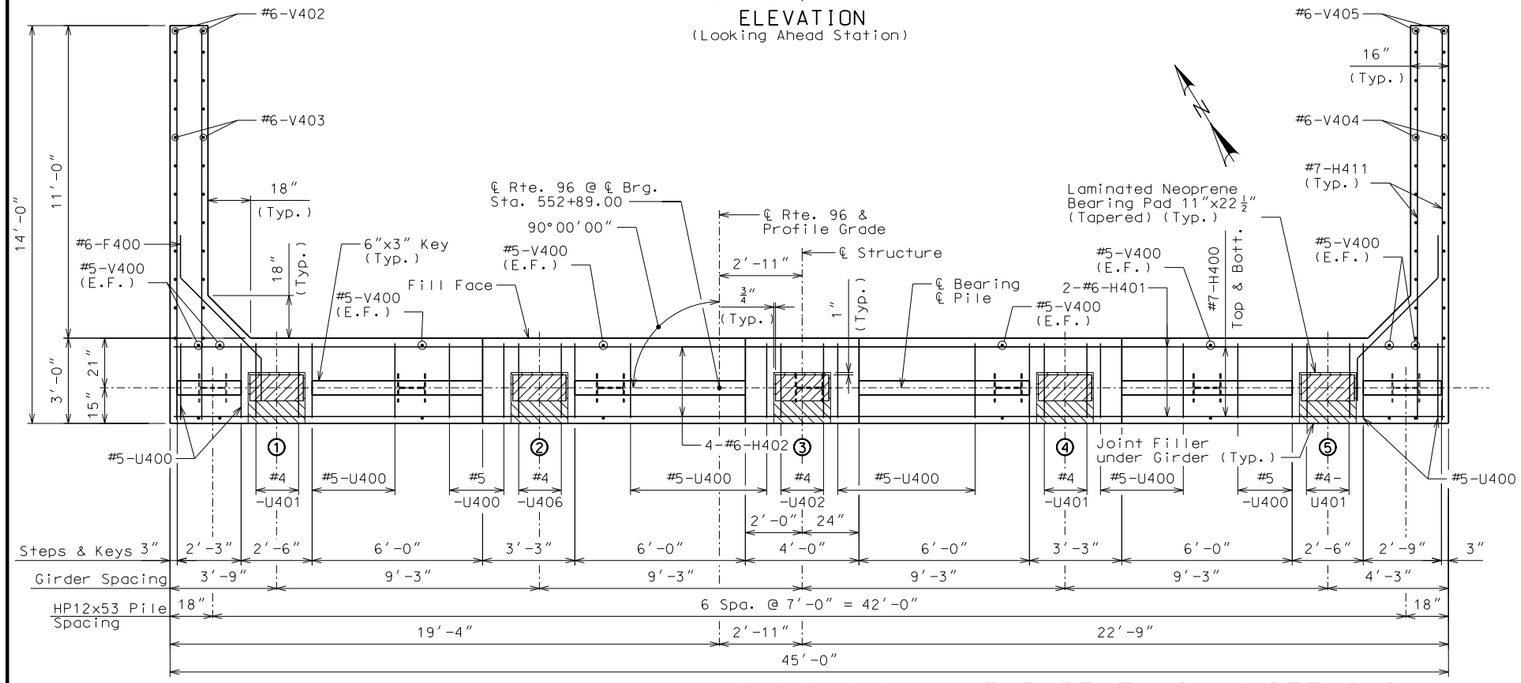

PLAN OF BEAM

END BENT NO. 4 DETAILS

Notes:
For Sections B-B, C-C & D-D, see Sheet No. 12.

For Girder Details, see Sheet No. 16.

Bend F400 bars in field to clear girders.

Bend H411 bars in field to clear pile.

Reinforcing shall be shifted to clear piles.
U-bars shall clear piles by at least 1 1/2".

All concrete in the end bent above top of beam and below top of slab shall be Class B-2.

Strands at end of girder shall be field bent or, if necessary, cut in field to maintain 1 1/2" minimum clearance to fill face of end bent.

① - Denotes girder number.

8 - Denotes pile number.

E.F. Denotes Each Face.

SUBSTRUCTURE QUANTITY TABLE FOR END BENT NO. 4		
ITEM		QUANTITY
Galvanized Structural Steel Pile (12 in.)	Lin. Ft.	259
Pile Point Reinforcement	Each	7
Pile Wave Analysis	Each	1
Class B Concrete (Substructure)	Cu. Yd.	19.5
Corrugated Metal Pipe Pile Spacers	Each	7

Notes:
These quantities are included in the Estimated Quantities on Sheet 2.

All reinforcing quantities are included in the Estimated Quantities for Slab on Concrete I-Girder, see Sheet No. 2.

Detailed September 2016
Checked October 2016

Note: This drawing is not to scale. Follow dimensions.

STATE OF MISSOURI
DAVID GRAHAM BARRETT
NUMBER PE-2006002787
PROFESSIONAL ENGINEER

THIS SHEET HAS BEEN SIGNED, SEALED AND DATED ELECTRONICALLY

DATE PREPARED	
11/1/2016	
ROUTE 96	STATE MO
DISTRICT BR	SHEET NO. 11
COUNTY JASPER	
JOB NO. J7P2228F	
CONTRACT ID.	
PROJECT NO.	
BRIDGE NO. A8425	

DESCRIPTION

DATE

MISSOURI HIGHWAYS AND TRANSPORTATION COMMISSION
105 WEST CAPITOL
JEFFERSON CITY, MO 65102
1-888-ASK-MODOT (1-888-275-6636)

HDR Engineering, Inc.
4435 Main Street
Suite 1000
Kansas City, MO 64111-1856
816-360-2700
Certificate of Authority: 000856

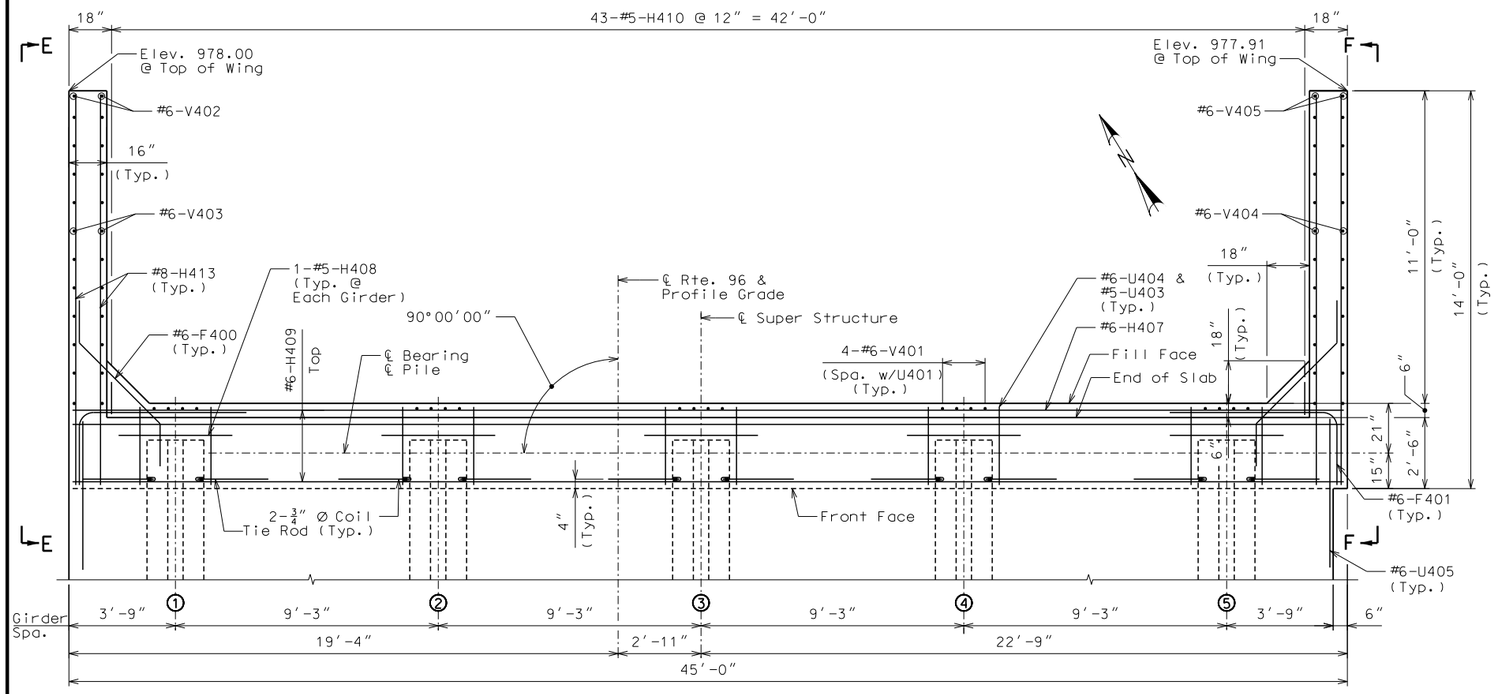

PLAN

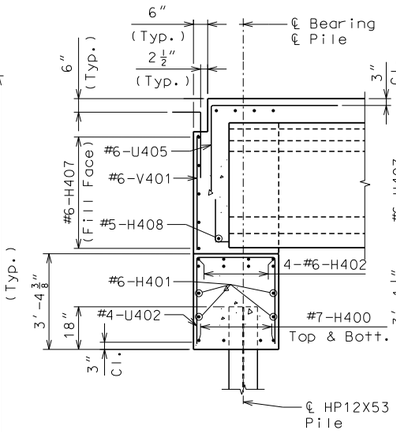

SECTION B-B

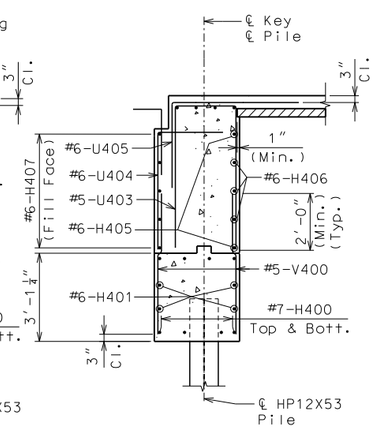

SECTION C-C

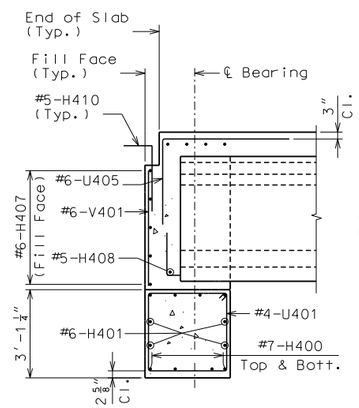

SECTION D-D

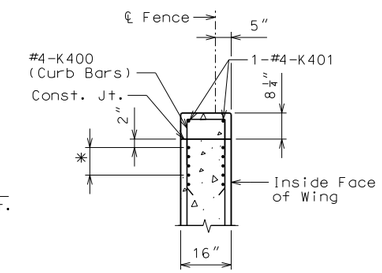

SECTION J-J

✱ #8-H Bars at 3" cts.
(Each face)(Place with grade)

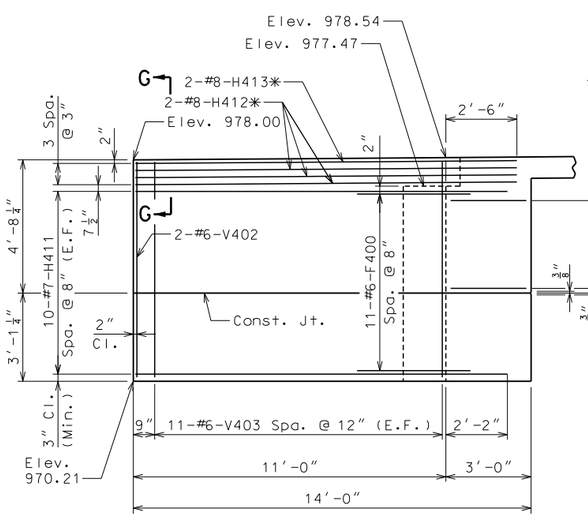

ELEVATION E-E

✱ - Place with grade.

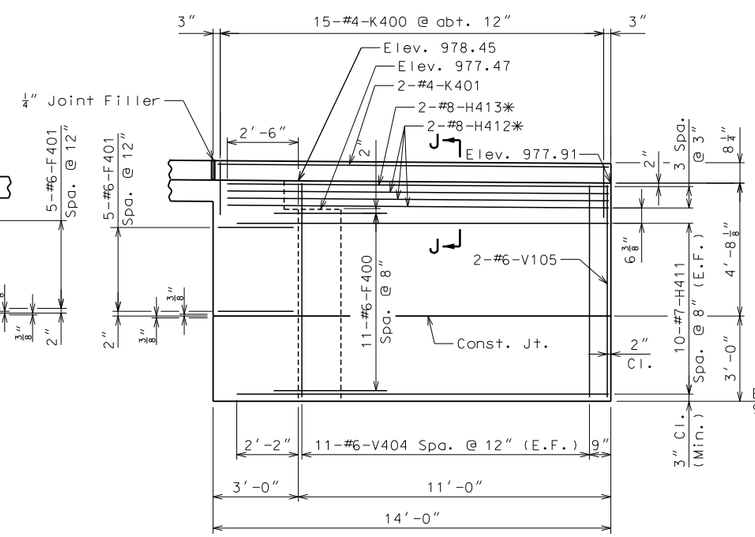

ELEVATION F-F

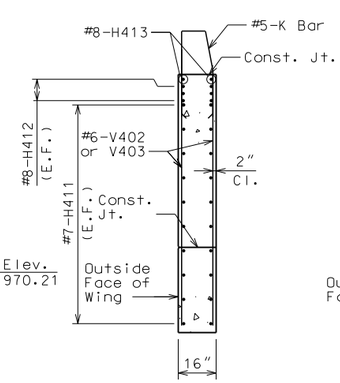

SECTION THRU WING
(Left Wing shown, right wing similar)

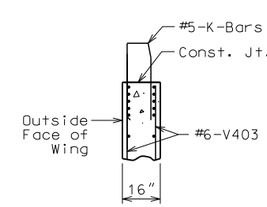

SECTION G-G

Notes:
For location of Sections B-B, C-C & D-D, see Sheet No. 11.

For Key Details, see Sheet No. 11.

For Girder Details, see Sheet No. 16.

For reinforcement of the Safety Barrier, see Sheet No. 23 thru 26.

For Details of 10"x8" curb on slab, see Sheet No. 20.

For details of curb on approach slab, see Sheet No. 29.

① - denotes Girder Number.

E.F. denotes Each Face.

END BENT NO. 4 DETAILS

Detailed September 2016
Checked October 2016

Note: This drawing is not to scale. Follow dimensions.

STATE OF MISSOURI
DAVID GRAHAM BARRETT
NUMBER PE-2006002787
PROFESSIONAL ENGINEER

THIS SHEET HAS BEEN SIGNED, SEALED AND DATED ELECTRONICALLY

DATE PREPARED	
11/1/2016	
ROUTE 96	STATE MO
DISTRICT BR	SHEET NO. 12
COUNTY JASPER	
JOB NO. J7P2228F	
CONTRACT ID.	
PROJECT NO.	
BRIDGE NO. A8425	

DATE	DESCRIPTION

MISSOURI HIGHWAYS AND TRANSPORTATION COMMISSION
105 WEST CAPITOL
JEFFERSON CITY, MO 65102
1-888-ASK-MODOT (1-888-275-6636)

HDR Engineering, Inc.
4435 Main Street
Suite 1000
Kansas City, MO 64111-1856
816-360-2700
Certificate of Authority: 000856

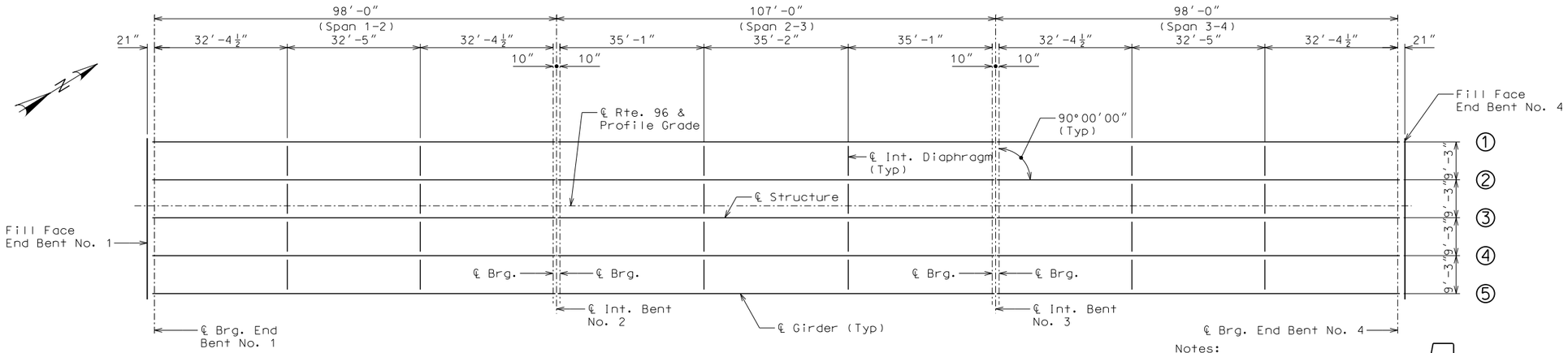

Notes:
All Girders are Parallel.
① - Indicates Girder Number.

PLAN SHOWING LOCATION OF STEEL INTERMEDIATE DIAPHRAGMS

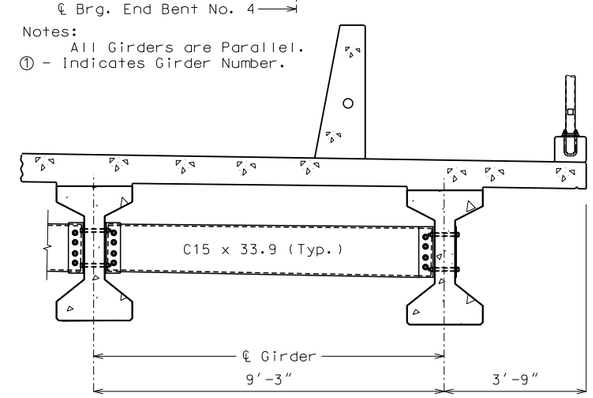

PART SECTION SHOWING
INTERMEDIATE DIAPHRAGMS

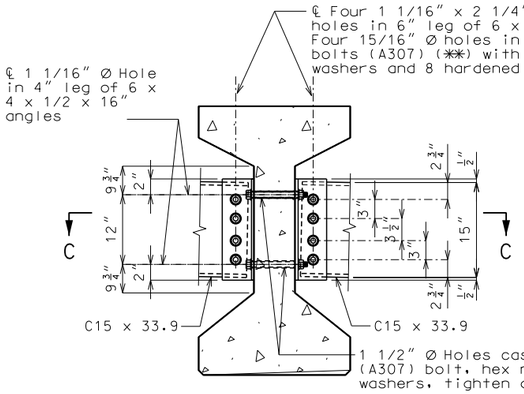

SECTION THRU INT. GIRDER
AT DIAPHRAGM

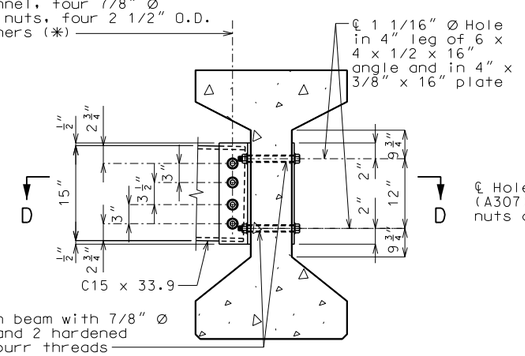

SECTION THRU EXT. GIRDER
AT DIAPHRAGM

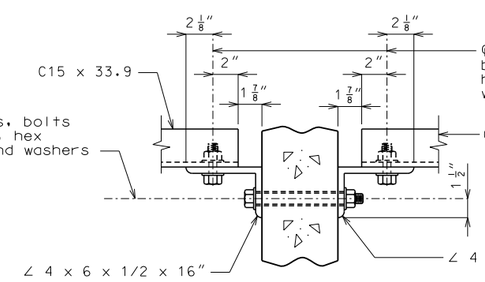

SECTION C-C

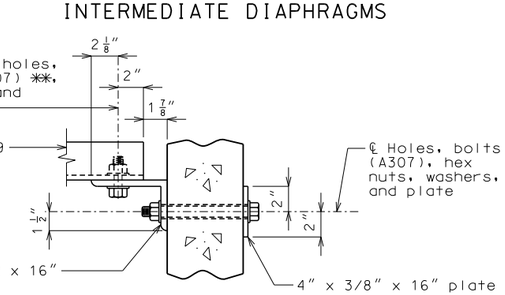

SECTION D-D

STEEL DIAPHRAGM NOTES:

(✱) In lieu of 2 1/2" outside diameter washers, contractor may substitute a 3/16" (Min. thickness) plate with four 15/16" Ø holes and one hardened washer per bolt.

(✱✱) Bolts shall be tightened to provide a tension of one-half that specified in Sec 712 for high strength bolt installation. A325 bolts may be substituted for and installed in accordance with the requirements for the specified A307 bolts.

All diaphragm materials including bolts, nuts, and washers shall be galvanized.

Fabricated structural steel shall be ASTM A709 Grade 36 except as noted.

Payment for furnishing and installing steel intermediate diaphragms will be considered completely covered by the contract unit price for Steel Intermediate Diaphragm for P/S Concrete Girders.

Shop drawings will not be required for steel intermediate diaphragms and angle connections.

STEEL INTERMEDIATE DIAPHRAGM DETAILS

Detailed September 2016
Checked October 2016

Note: This drawing is not to scale. Follow dimensions.

STATE OF MISSOURI
DAVID GRAHAM BARRETT
NUMBER PE-2006002787
PROFESSIONAL ENGINEER

THIS SHEET HAS BEEN SIGNED, SEALED AND DATED ELECTRONICALLY

DATE PREPARED	
11/1/2016	
ROUTE 96	STATE MO
DISTRICT BR	SHEET NO. 13
COUNTY JASPER	
JOB NO. J7P2228F	
CONTRACT ID.	
PROJECT NO.	
BRIDGE NO. A8425	

DESCRIPTION	DATE

MISSOURI HIGHWAYS AND TRANSPORTATION COMMISSION
105 WEST CAPITOL
JEFFERSON CITY, MO 65102
1-888-ASK-MODOT (1-888-275-6636)

HDR Engineering, Inc.
4435 Main Street
Suite 1000
Kansas City, MO 64111-1856
816-360-2700
Certificate of Authority: 000856

Concrete for prestressed girders shall be Class A-1 with f'c = 8000 psi and f'ci = 6500 psi.

(+) indicates prestressing strand.

Use 28 strands with an initial prestress force of 1230 kips.

Prestressing tendons shall be uncoated, seven-wire, low-relaxation strands, 0.6 inch diameter in accordance with AASHTO M 203, Grade 270. Pretensioned members shall be in accordance with Sec 1029.

✳ At contractor's option a 1 1/2" to 1 3/4" smooth finish strip is permitted to facilitate placement of preformed fiber expansion joint material or expanded or extruded polystyrene bedding material for the prestressed panels.

✳✳ At the contractor's option the location for bent-up strands may be varied from that shown for fully bonded strands only. The total number of bent-up strands shall not be changed. One strand tie bar is required for each layer of bent-up strands except at end bents which require one bar on the bottom layer of strands only. No additional payment will be made if additional strand tie bars are required.

Fabricators shall be responsible for location and design of lifting devices.

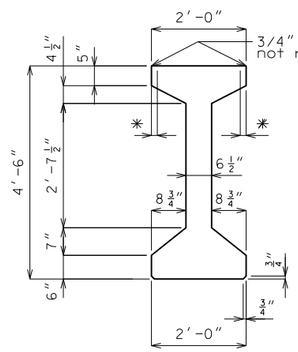

GIRDER DIMENSIONS

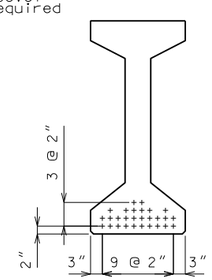

℄ GIRDER

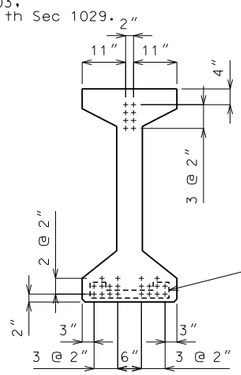

END OF GIRDER

STRAND ARRANGEMENTS

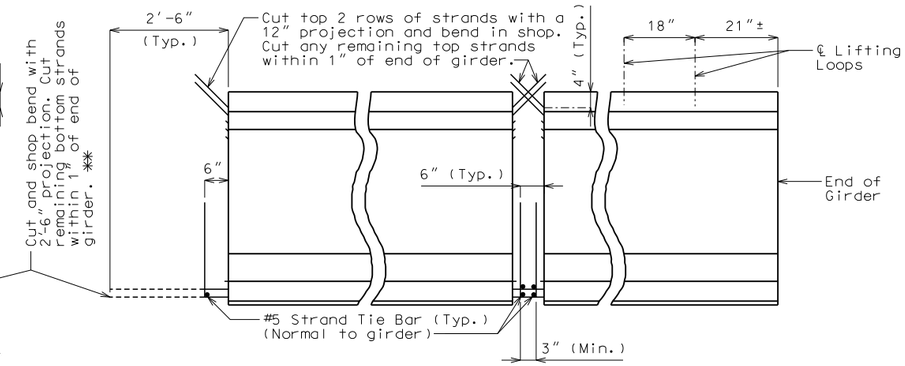

END BENT

INTERMEDIATE BENT

STRAND DETAILS AT GIRDER ENDS

LOCATION OF LIFTING LOOPS

BILL OF REINFORCING STEEL - EACH GIRDER			
NO.	SIZE & MARK	ACTUAL LENGTH	SHAPE
4	6 A1	50'-3"	20
164	5 B1	5'-11"	11
16	6 B2	5'-3"	11
90	4 C1	2'-2"	10
180	4 D1	3'-0"	9

BENDING DIAGRAM

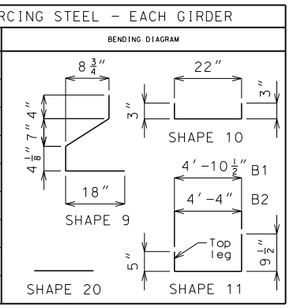

All dimensions are out to out.

Hooks and bends shall be in accordance with the CRSI Manual of Standard Practice for Detailing Reinforced Concrete Structures, Stirrup and Tie Dimensions.

Actual lengths are measured along centerline of bar to the nearest inch.

Minimum clearance to reinforcing shall be 1".

All reinforcement shall be Grade 60.

The two D1 bars may be furnished as one bar at the fabricator's option.

All B1 bars shall be epoxy coated.

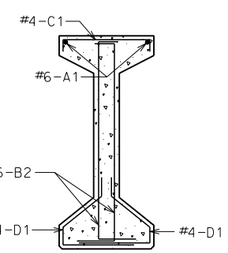

SECTION A-A

Strands not shown for clarity.

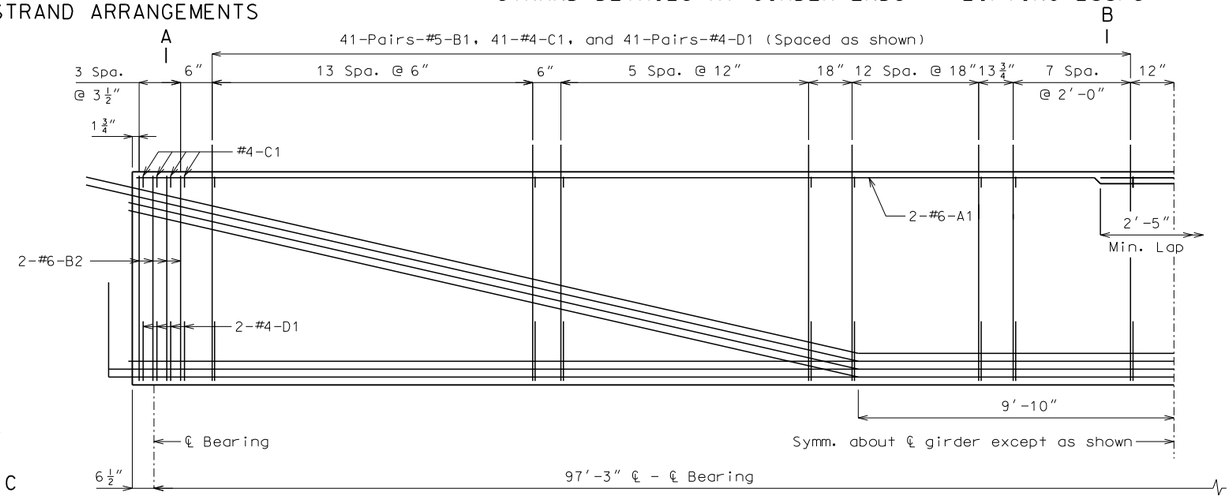

HALF ELEVATION OF GIRDER SPAN (1-2)

Exterior and interior girders are the same, except for coil ties and holes for steel intermediate diaphragms.

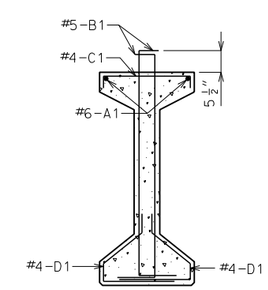

SECTION B-B

Strands not shown for clarity.

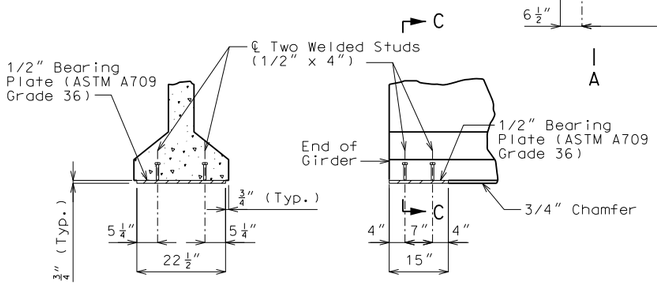

SECTION C-C

PART ELEVATION AT END OF GIRDER

BEARING PLATE DETAILS

Galvanize the 1/2" bearing plate (ASTM A709 Grade 36) in accordance with ASTM A123.

Cost of furnishing, galvanizing, and installing the 1/2" bearing plate (ASTM A709 Grade 36) and welded studs in the prestressed girder will be considered completely covered by the contract unit price for Prestressed Concrete I-Girder.

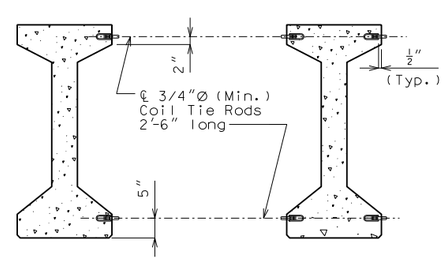

EXTERIOR GIRDERS AT INT. BENTS

EXTERIOR GIRDERS AT END BENTS INTERIOR GIRDERS AT ALL BENTS

DETAILS OF COIL TIES

Cost of 3/4"Ø coil tie rods placed in diaphragms will be considered completely covered by the contract unit price for Prestressed Concrete I-Girder.

Coil ties shall be held in place in the forms by slotted wire-setting-studs projecting through forms. Studs are to be left in place or replaced with temporary plugs until girders are erected, then replaced by coil tie rods.

For location of coil ties, see Sheets No. 18.

The 1 1/2"Ø holes shall be cast in the web for steel intermediate diaphragms. Drilling is not allowed.

For details of diaphragms, see Sheet No. 18.

For Girder Camber Diagram, see Sheet No. 17.

GIRDER DETAILS - SPAN (1-2)

Detailed September 2016
Checked October 2016

Note: This drawing is not to scale. Follow dimensions.

STATE OF MISSOURI — DAVID GRAHAM BARRETT — NUMBER PE-2006002787 — PROFESSIONAL ENGINEER

THIS SHEET HAS BEEN SIGNED, SEALED AND DATED ELECTRONICALLY

DATE PREPARED	
11/1/2016	
ROUTE 96	STATE MO
DISTRICT BR	SHEET NO. 14
COUNTY JASPER	
JOB NO. J7P2228F	
CONTRACT ID.	
PROJECT NO.	
BRIDGE NO. A8425	

DESCRIPTION | DATE

MISSOURI HIGHWAYS AND TRANSPORTATION COMMISSION
105 WEST CAPITOL
JEFFERSON CITY, MO 65102
1-888-ASK-MODOT (1-888-275-6636)

HDR Engineering, Inc.
4435 Main Street
Suite 1000
Kansas City, MO 64111-1856
816-360-2700
Certificate of Authority: 000856

Concrete for prestressed girders shall be Class A-1 with f'c = 8000 psi and f'ci = 6500 psi.

(+) indicates prestressing strand.

Use 32 strands with an initial prestress force of 1406 kips.

Prestressing tendons shall be uncoated, seven-wire, low-relaxation strands, 0.6 inch diameter in accordance with AASHTO M 203, Grade 270. Pretensioned members shall be in accordance with Sec 1029.

✳ At contractor's option a 1 1/2" to 1 3/4" smooth finish strip is permitted to facilitate placement of preformed fiber expansion joint material or expanded or extruded polystyrene bedding material for the prestressed panels.

✳✳ At the contractor's option the location for bent-up strands may be varied from that shown for fully bonded strands only. The total number of bent-up strands shall not be changed. One strand tie bar is required for each layer of bent-up strands except at end bents which require one bar on the bottom layer of strands only. No additional payment will be made if additional strand tie bars are required.

Fabricators shall be responsible for location and design of lifting devices.

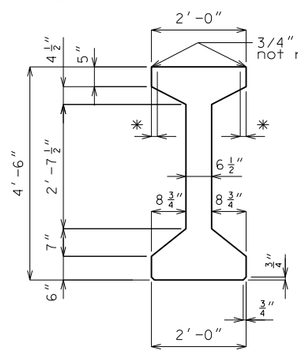

GIRDER DIMENSIONS

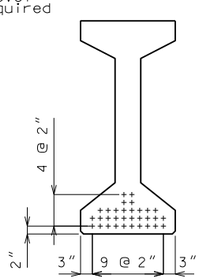

℄ GIRDER

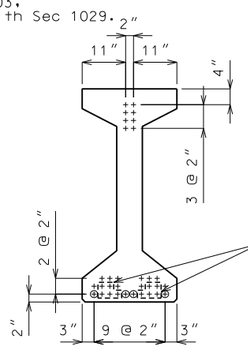

END OF GIRDER

STRAND ARRANGEMENTS

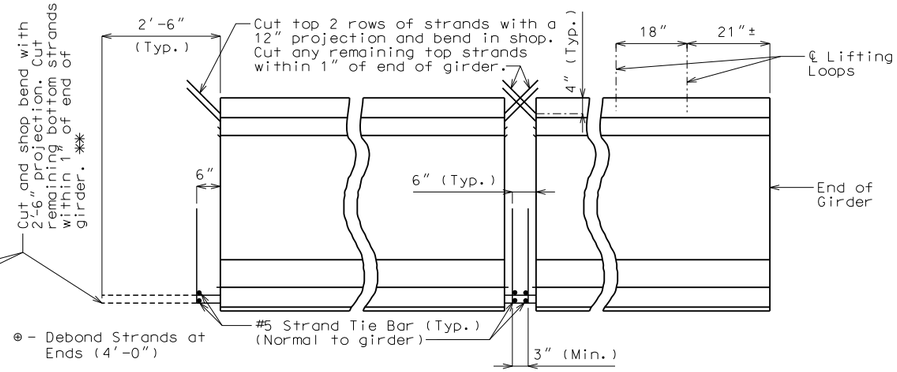

INTERMEDIATE BENT

STRAND DETAILS AT GIRDER ENDS

LOCATION OF LIFTING LOOPS

BILL OF REINFORCING STEEL - EACH GIRDER				
NO.	SIZE & MARK	ACTUAL LENGTH	SHAPE	BENDING DIAGRAM
4	6 A1	54'-4"	20	
180	5 B1	5'-11"	11	
16	6 B2	5'-3"	11	
98	4 C1	2'-2"	10	
196	4 D1	3'-0"	9	

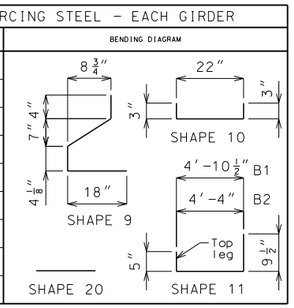

All dimensions are out to out.

Hooks and bends shall be in accordance with the CRSI Manual of Standard Practice for Detailing Reinforced Concrete Structures, Stirrup and Tie Dimensions.

Actual lengths are measured along centerline of bar to the nearest inch.

Minimum clearance to reinforcing shall be 1".

All reinforcement shall be Grade 60.

The two D1 bars may be furnished as one bar at the fabricator's option.

All B1 bars shall be epoxy coated.

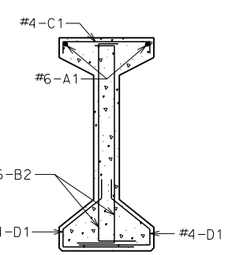

SECTION A-A

Strands not shown for clarity.

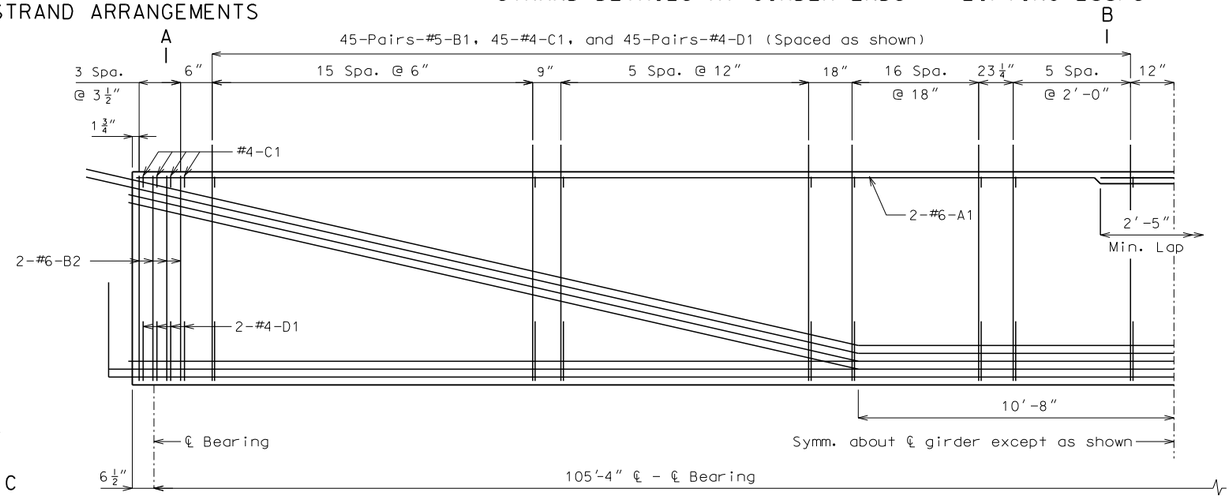

HALF ELEVATION OF GIRDER SPAN (2-3)

Exterior and interior girders are the same, except for coil ties and holes for steel intermediate diaphragms.

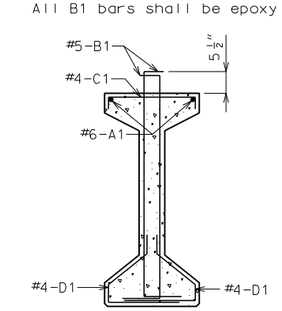

SECTION B-B

Strands not shown for clarity.

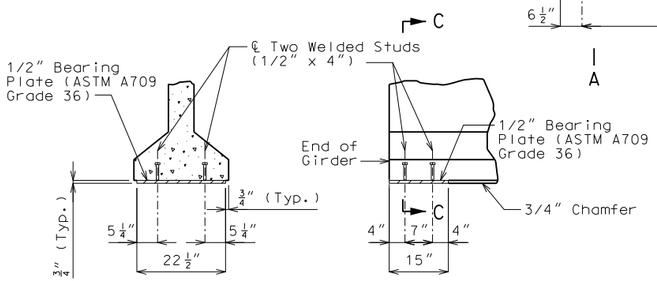

SECTION C-C

PART ELEVATION AT END OF GIRDER

BEARING PLATE DETAILS

Galvanize the 1/2" bearing plate (ASTM A709 Grade 36) in accordance with ASTM A123.

Cost of furnishing, galvanizing, and installing the 1/2" bearing plate (ASTM A709 Grade 36) and welded studs in the prestressed girder will be considered completely covered by the contract unit price for Prestressed Concrete I-Girder.

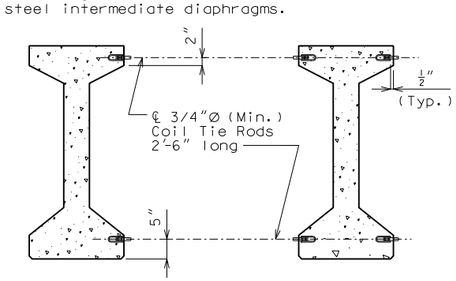

EXTERIOR GIRDERS AT INT. BENTS

INTERIOR GIRDERS AT ALL BENTS

DETAILS OF COIL TIES

Cost of 3/4"Ø coil tie rods placed in diaphragms will be considered completely covered by the contract unit price for Prestressed Concrete I-Girder.

Coil ties shall be held in place in the forms by slotted wire-setting-studs projecting through forms. Studs are to be left in place or replaced with temporary plugs until girders are erected, then replaced by coil tie rods.

For location of coil ties, see Sheets No. 18.

The 1 1/2"Ø holes shall be cast in the web for steel intermediate diaphragms. Drilling is not allowed.

For details of diaphragms, see Sheet No. 18.

For Girder Camber Diagram, see Sheet No. 17.

GIRDER DETAILS - SPAN (2-3)

Detailed September 2016
Checked October 2016

Note: This drawing is not to scale. Follow dimensions.

STATE OF MISSOURI — DAVID GRAHAM BARRETT — NUMBER PE-2006002787 — PROFESSIONAL ENGINEER

THIS SHEET HAS BEEN SIGNED, SEALED AND DATED ELECTRONICALLY

DATE PREPARED	
11/1/2016	
ROUTE 96	STATE MO
DISTRICT BR	SHEET NO. 15
COUNTY JASPER	
JOB NO. J7P2228F	
CONTRACT ID.	
PROJECT NO.	
BRIDGE NO. A8425	

DESCRIPTION | DATE

MISSOURI HIGHWAYS AND TRANSPORTATION COMMISSION
105 WEST CAPITOL
JEFFERSON CITY, MO 65102
1-888-ASK-MODOT (1-888-275-6636)

HDR Engineering, Inc.
4435 Main Street
Suite 1000
Kansas City, MO 64111-1856
816-360-2700
Certificate of Authority: 000856

Concrete for prestressed girders shall be Class A-1 with f'c = 8000 psi and f'ci = 6500 psi.

(+) indicates prestressing strand.

Use 28 strands with an initial prestress force of 1230 kips.

Prestressing tendons shall be uncoated, seven-wire, low-relaxation strands, 0.6 inch diameter in accordance with AASHTO M 203, Grade 270. Pretensioned members shall be in accordance with Sec 1029.

✳ At contractor's option a 1 1/2" to 1 3/4" smooth finish strip is permitted to facilitate placement of preformed fiber expansion joint material or expanded or extruded polystyrene bedding material for the prestressed panels.

✳✳ At the contractor's option the location for bent-up strands may be varied from that shown for fully bonded strands only. The total number of bent-up strands shall not be changed. One strand tie bar is required for each layer of bent-up strands except at end bents which require one bar on the bottom layer of strands only. No additional payment will be made if additional strand tie bars are required.

Fabricators shall be responsible for location and design of lifting devices.

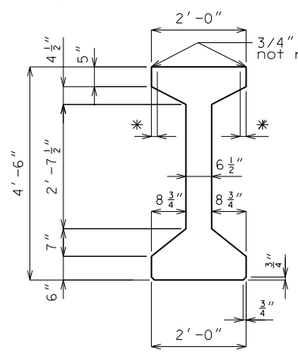

GIRDER DIMENSIONS

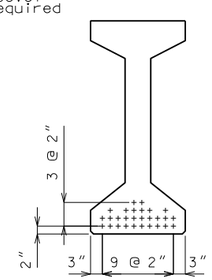

℄ GIRDER

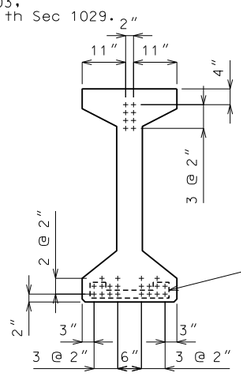

END OF GIRDER

STRAND ARRANGEMENTS

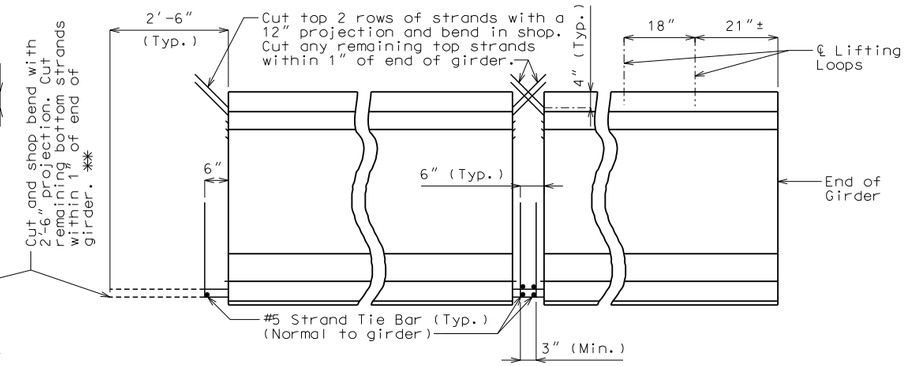

END BENT

INTERMEDIATE BENT

STRAND DETAILS AT GIRDER ENDS

LOCATION OF LIFTING LOOPS

BILL OF REINFORCING STEEL - EACH GIRDER			
NO.	SIZE & MARK	ACTUAL LENGTH	SHAPE
4	6 A1	50'-3"	20
164	5 B1	5'-11"	11
16	6 B2	5'-3"	11
90	4 C1	2'-2"	10
180	4 D1	3'-0"	9

BENDING DIAGRAM

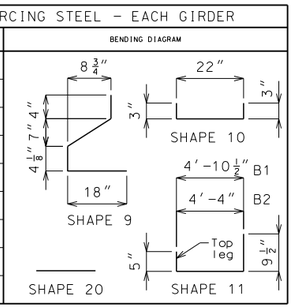

All dimensions are out to out.

Hooks and bends shall be in accordance with the CRSI Manual of Standard Practice for Detailing Reinforced Concrete Structures, Stirrup and Tie Dimensions.

Actual lengths are measured along centerline of bar to the nearest inch.

Minimum clearance to reinforcing shall be 1".

All reinforcement shall be Grade 60.

The two D1 bars may be furnished as one bar at the fabricator's option.

All B1 bars shall be epoxy coated.

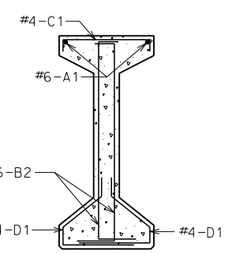

SECTION A-A

Strands not shown for clarity.

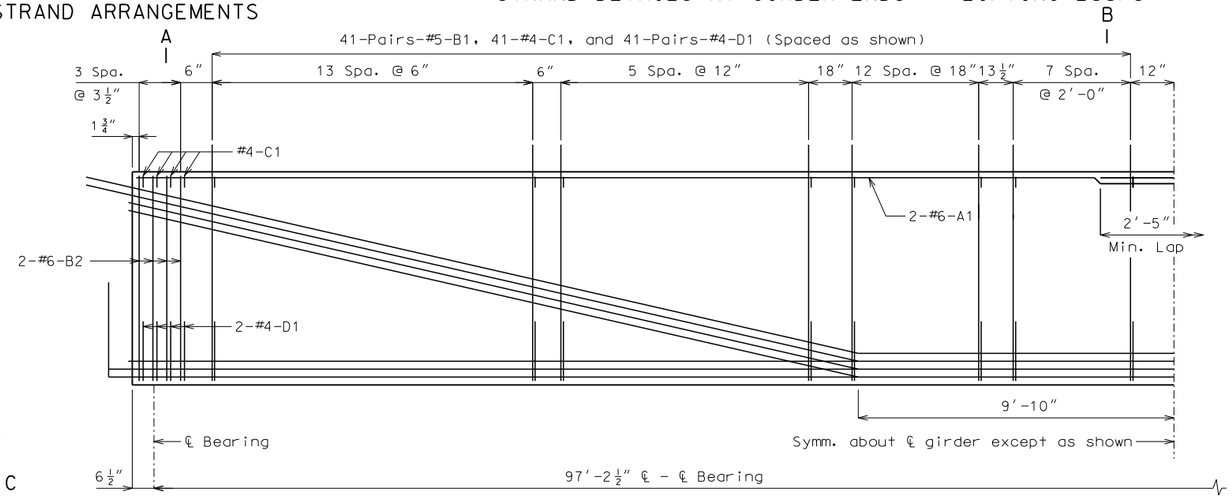

HALF ELEVATION OF GIRDER SPAN (3-4)

Exterior and interior girders are the same, except for coil ties and holes for steel intermediate diaphragms.

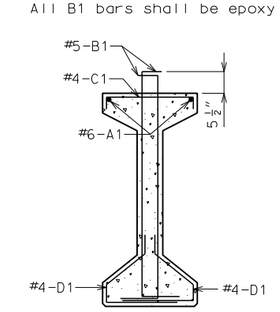

SECTION B-B

Strands not shown for clarity.

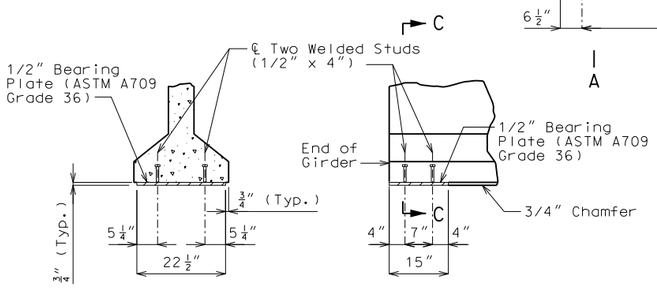

SECTION C-C

PART ELEVATION AT END OF GIRDER

BEARING PLATE DETAILS

Galvanize the 1/2" bearing plate (ASTM A709 Grade 36) in accordance with ASTM A123.

Cost of furnishing, galvanizing, and installing the 1/2" bearing plate (ASTM A709 Grade 36) and welded studs in the prestressed girder will be considered completely covered by the contract unit price for Prestressed Concrete I-Girder.

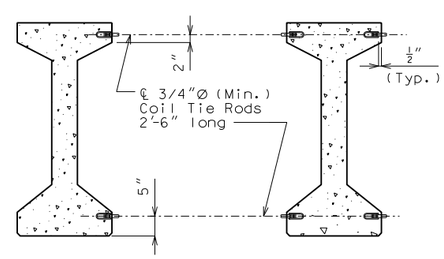

EXTERIOR GIRDERS AT INT. BENTS

EXTERIOR GIRDERS AT END BENTS INTERIOR GIRDERS AT ALL BENTS

DETAILS OF COIL TIES

Cost of 3/4"Ø coil tie rods placed in diaphragms will be considered completely covered by the contract unit price for Prestressed Concrete I-Girder.

Coil ties shall be held in place in the forms by slotted wire-setting-studs projecting through forms. Studs are to be left in place or replaced with temporary plugs until girders are erected, then replaced by coil tie rods.

For location of coil ties, see Sheets No. 18.

The 1 1/2"Ø holes shall be cast in the web for steel intermediate diaphragms. Drilling is not allowed.

For details of diaphragms, see Sheet No. 18.

For Girder Camber Diagram, see Sheet No. 17.

GIRDER DETAILS - SPAN (3-4)

Detailed September 2016
Checked October 2016

Note: This drawing is not to scale. Follow dimensions.

STATE OF MISSOURI — DAVID GRAHAM BARRETT — NUMBER PE-2006002787 — PROFESSIONAL ENGINEER

THIS SHEET HAS BEEN SIGNED, SEALED AND DATED ELECTRONICALLY

DATE PREPARED	
11/1/2016	
ROUTE 96	STATE MO
DISTRICT BR	SHEET NO. 16
COUNTY JASPER	
JOB NO. J7P2228F	
CONTRACT ID.	
PROJECT NO.	
BRIDGE NO. A8425	

DESCRIPTION

DATE

MISSOURI HIGHWAYS AND TRANSPORTATION COMMISSION

105 WEST CAPITOL
JEFFERSON CITY, MO 65102
1-888-ASK-MODOT (1-888-275-6636)

HDR Engineering, Inc.
4435 Main Street
Suite 1000
Kansas City, MO 64111-1856
816-360-2700
Certificate of Authority: 000856

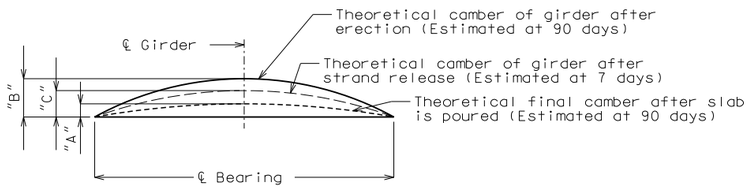

	Span (1-2)			Span (2-3)			Span (3-4)		
	"A"	"B"	"C"	"A"	"B"	"C"	"A"	"B"	"C"
Ext. girder	2 3/8"	3 7/8"	2 3/8"	3"	5"	3"	2 3/8"	3 7/8"	2 3/8"
Int. girder	2 1/8"			2 3/4"			2 1/8"		

GIRDER CAMBER DIAGRAM

Conversion Factors for Girder Camber:
0.1 pt. = 0.314 x 0.5 pt.
0.2 pt. = 0.593 x 0.5 pt.
0.3 pt. = 0.813 x 0.5 pt.
0.4 pt. = 0.952 x 0.5 pt.

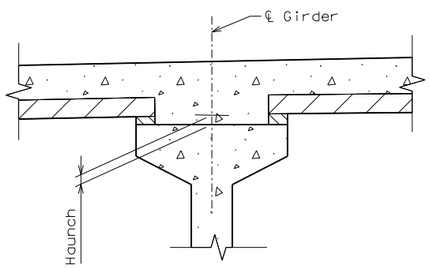

SLAB HAUNCHING DETAIL

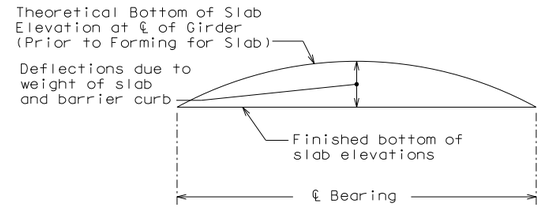

TYPICAL SLAB ELEVATIONS DIAGRAM

THEORETICAL BOTTOM OF SLAB ELEVATIONS AT ℄ OF GIRDER (PRIOR TO FORMING FOR SLAB) ✱✱

	Span (1-2) (97'-2" ℄ brg - ℄ brg.)										
	℄ brg.	.10	.20	.30	.40	.50	.60	.70	.80	.90	℄ brg.
Girder No. 1	976.35	976.93	977.48	977.98	978.44	978.86	979.24	979.57	979.85	980.10	980.31
Girder No. 2	976.53	977.12	977.67	978.18	978.64	979.06	979.43	979.76	980.05	980.29	980.50
Girder No. 3	976.60	977.19	977.74	978.25	978.71	979.13	979.50	979.83	980.12	980.36	980.57
Girder No. 4	976.42	977.00	977.55	978.06	978.52	978.94	979.32	979.65	979.93	980.17	980.38
Girder No. 5	976.24	976.82	977.37	977.88	978.34	978.76	979.13	979.46	979.75	980.00	980.21
	Span (2-3) (105'-4" ℄ brg - ℄ brg.)										
	℄ brg.	.10	.20	.30	.40	.50	.60	.70	.80	.90	℄ brg.
Girder No. 1	980.35	980.63	980.87	981.06	981.20	981.28	981.31	981.29	981.21	981.09	980.92
Girder No. 2	980.54	980.82	981.07	981.26	981.40	981.48	981.51	981.49	981.41	981.28	981.11
Girder No. 3	980.61	980.89	981.14	981.33	981.47	981.55	981.58	981.56	981.48	981.35	981.18
Girder No. 4	980.42	980.71	980.95	981.14	981.28	981.37	981.40	981.37	981.29	981.16	980.99
Girder No. 5	980.25	980.53	980.77	980.95	981.09	981.18	981.21	981.18	981.11	980.98	980.82
	Span (3-4) (97'-2" ℄ brg - ℄ brg.)										
	℄ brg.	.10	.20	.30	.40	.50	.60	.70	.80	.90	℄ brg.
Girder No. 1	980.90	980.79	980.65	980.47	980.24	979.98	979.66	979.31	978.91	978.47	977.99
Girder No. 2	981.09	980.98	980.85	980.67	980.44	980.17	979.86	979.50	979.10	978.66	978.18
Girder No. 3	981.16	981.05	980.91	980.73	980.51	980.24	979.93	979.57	979.17	978.72	978.24
Girder No. 4	980.97	980.87	980.73	980.55	980.32	980.06	979.74	979.39	978.98	978.54	978.06
Girder No. 5	980.80	980.69	980.55	980.36	980.14	979.87	979.56	979.20	978.80	978.36	977.88

✱✱ Elevations are based on a constant slab thickness of 8 1/2" and include allowance for theoretical dead load deflections due to weight of slab (including precast panel) and barrier curb.

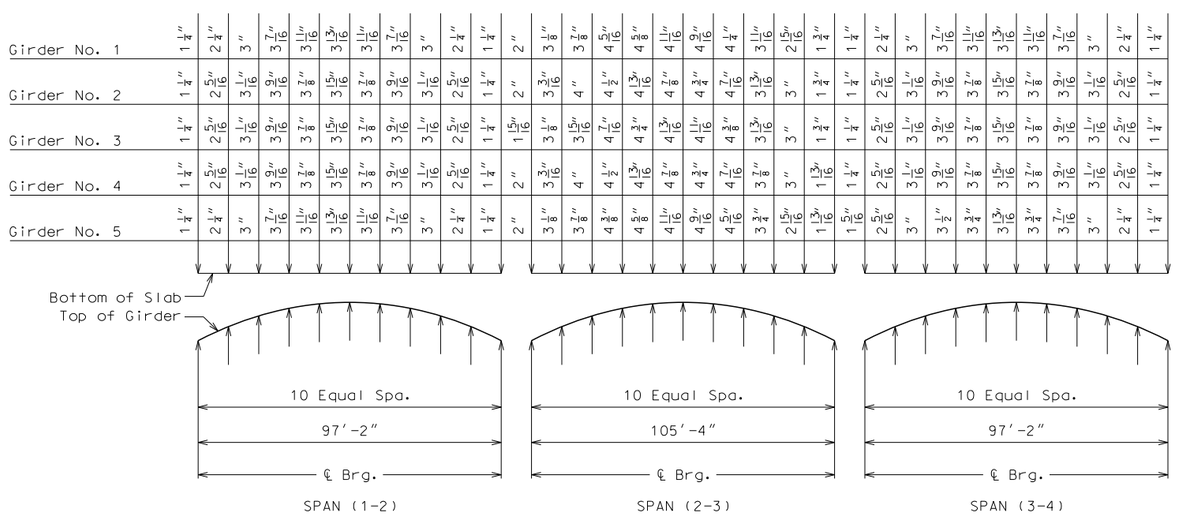

THEORETICAL SLAB HAUNCHING DIAGRAM

Notes:
If girder camber is different from that shown in the camber diagram, in order to maintain minimum slab thickness, adjustment of the slab haunches, an increase in the slab thickness or a raise in grade uniformly throughout the structure shall be necessary. No paymnet will be made for additional labor or materials required for variation in haunching, slab thickness or grade adjustment.

Concrete in slab haunches is included in the Estimated Quantities for Slab on Concrete I-Girders.

DEAD LOAD DEFLECTION, SLAB ELEVATIONS & HAUNCHING

Detailed September 2016
Checked October 2016

Note: This drawing is not to scale. Follow dimensions.

STATE OF MISSOURI
DAVID GRAHAM BARRETT
NUMBER PE-2006002787
PROFESSIONAL ENGINEER

THIS SHEET HAS BEEN SIGNED, SEALED AND DATED ELECTRONICALLY

DATE PREPARED 11/1/2016
ROUTE 96 | STATE MO
DISTRICT BR | SHEET NO. 17
COUNTY JASPER
JOB NO. J7P2228F
CONTRACT ID.
PROJECT NO.
BRIDGE NO. A8425

DESCRIPTION | DATE

MISSOURI HIGHWAYS AND TRANSPORTATION COMMISSION
105 WEST CAPITOL
JEFFERSON CITY, MO 65102
1-888-ASK-MODOT (1-888-275-6636)

HDR Engineering, Inc.
4435 Main Street
Suite 1000
Kansas City, MO 64111-1856
816-360-2700
Certificate of Authority: 000856

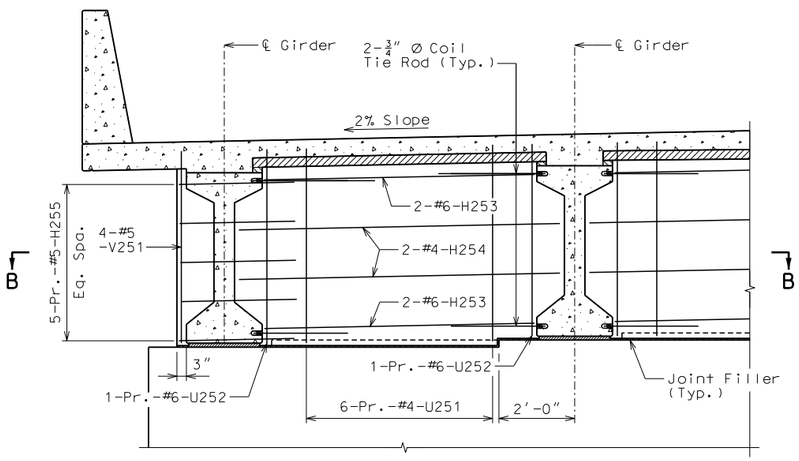

PART SECTION NEAR INT. BENT NO. 2
(Int. Bent No. 3 Similar)

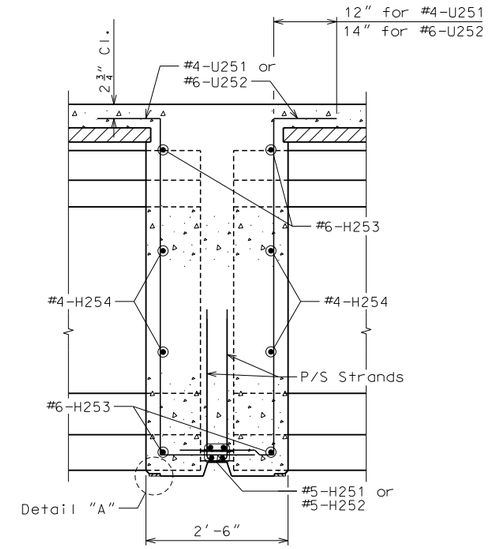

SECTION A-A

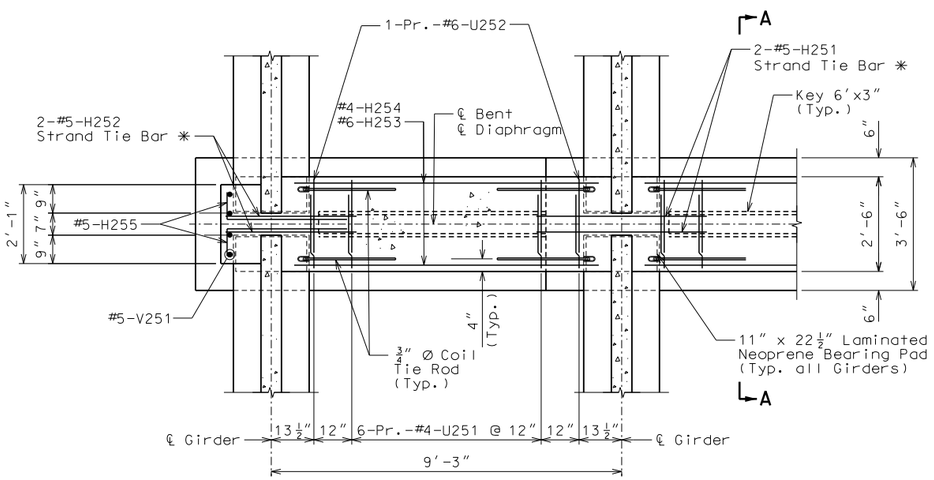

SECTION B-B
✳ - 1 Strand Tie Bar to be placed at each layer of bent up strands in P/S Girder. Not Shown in Elevation for Clarity.

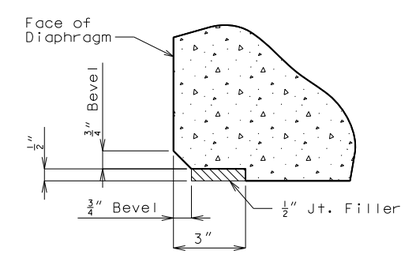

DETAIL A

Notes:

Diaphragms at Intermediate Bents shall be built vertical.

The concrete diaphragm at the Intermediate Bents shall be poured a minimum of 30 minutes and a maximum of 2 hours before the slab poured.

For steps and shear keys of 2" or more, use 1/2" Joint Filler up Vertical Face.

Use 200 Series bars at Intermediate Bent No. 2. as shown.

Use 300 Series bars at Intermediate Bent No. 3.

For location of strand tie bars, see Sheets No. 14 thru 16.

For location and details of Coil Tie Rods, see Sheet No. 14 thru 16.

DIAPHRAGM DETAILS AT INTERMEDIATE BENTS NO. 2 & 3

Detailed September 2016
Checked October 2016

Note: This drawing is not to scale. Follow dimensions.

STATE OF MISSOURI
DAVID GRAHAM BARRETT
NUMBER PE-2006002787
PROFESSIONAL ENGINEER

THIS SHEET HAS BEEN SIGNED, SEALED AND DATED ELECTRONICALLY

DATE PREPARED	
11/1/2016	
ROUTE 96	STATE MO
DISTRICT BR	SHEET NO. 18
COUNTY JASPER	
JOB NO. J7P2228F	
CONTRACT ID.	
PROJECT NO.	
BRIDGE NO. A8425	

DESCRIPTION	DATE

MISSOURI HIGHWAYS AND TRANSPORTATION COMMISSION
105 WEST CAPITOL
JEFFERSON CITY, MO 65102
1-888-ASK-MODOT (1-888-275-6636)

HDR Engineering, Inc.
4435 Main Street
Suite 1000
Kansas City, MO 64111-1856
816-360-2700
Certificate of Authority: 000856

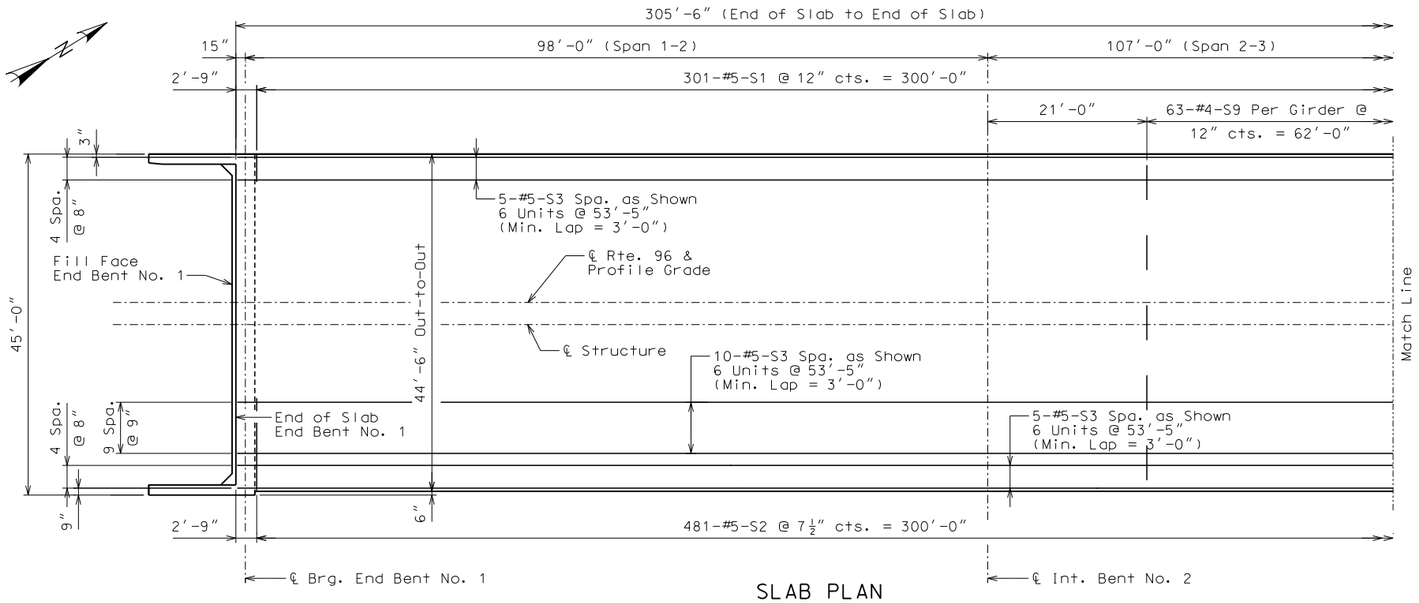

SLAB PLAN

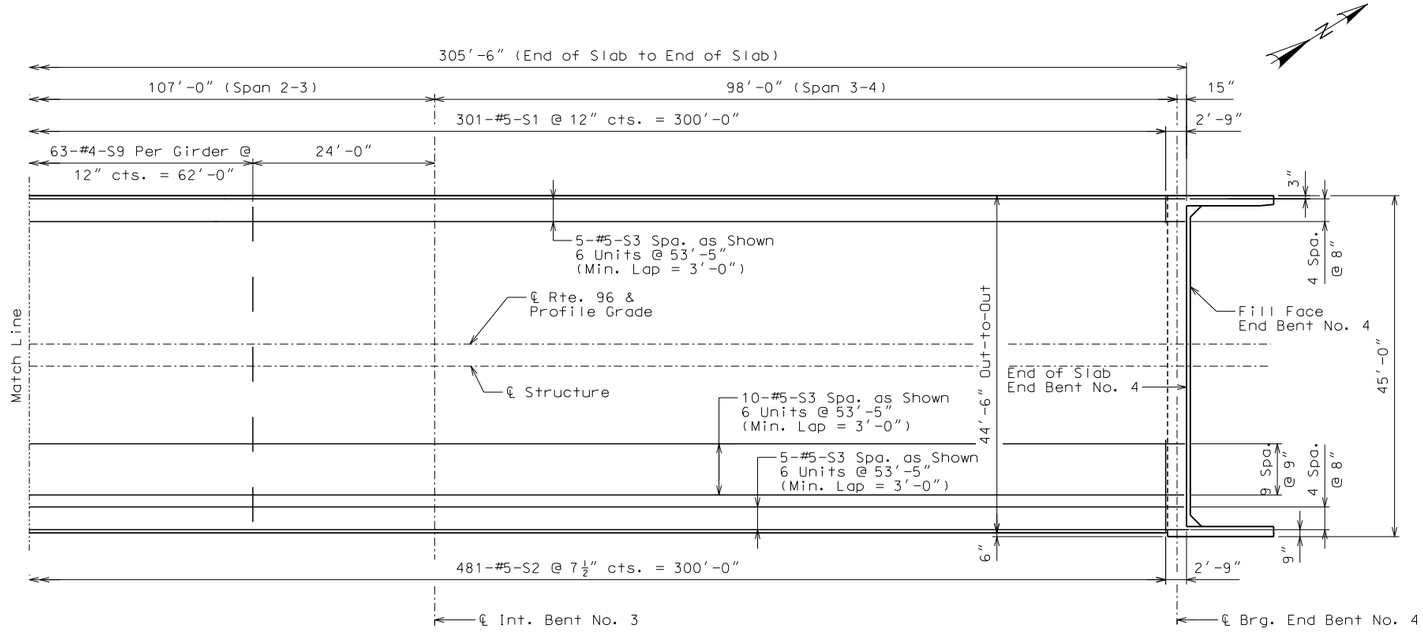

SLAB PLAN

PLAN OF SLAB REINFORCING - BOTTOM

Notes:
Longitudinal slab dimensions shown are measured horizontal.

For Details and Reinforcement of Safety Barrier Curb not shown, see Sheets No. 23, 24, 25 & 26.

For Plan of Slab Reinforcement - Top, see Sheet No. 20.

For Typical Slab Section and Details, see Sheet No. 21.

For details of Precast Prestressed Panels, see Sheet No. 22.

Detailed September 2016
Checked October 2016

Note: This drawing is not to scale. Follow dimensions.

STATE OF MISSOURI
DAVID GRAHAM BARRETT
NUMBER PE-2006002787
PROFESSIONAL ENGINEER

THIS SHEET HAS BEEN SIGNED, SEALED AND DATED ELECTRONICALLY

DATE PREPARED	
11/1/2016	
ROUTE 96	STATE MO
DISTRICT BR	SHEET NO. 19
COUNTY JASPER	
JOB NO. J7P2228F	
CONTRACT ID.	
PROJECT NO.	
BRIDGE NO. A8425	

DESCRIPTION	DATE
.	.
.	.
.	.
.	.
.	.
.	.

MISSOURI HIGHWAYS AND TRANSPORTATION COMMISSION
105 WEST CAPITOL
JEFFERSON CITY, MO 65102
1-888-ASK-MODOT (1-888-275-6636)

HDR Engineering, Inc.
4435 Main Street
Suite 1000
Kansas City, MO 64111-1856
816-360-2700
Certificate of Authority: 000856

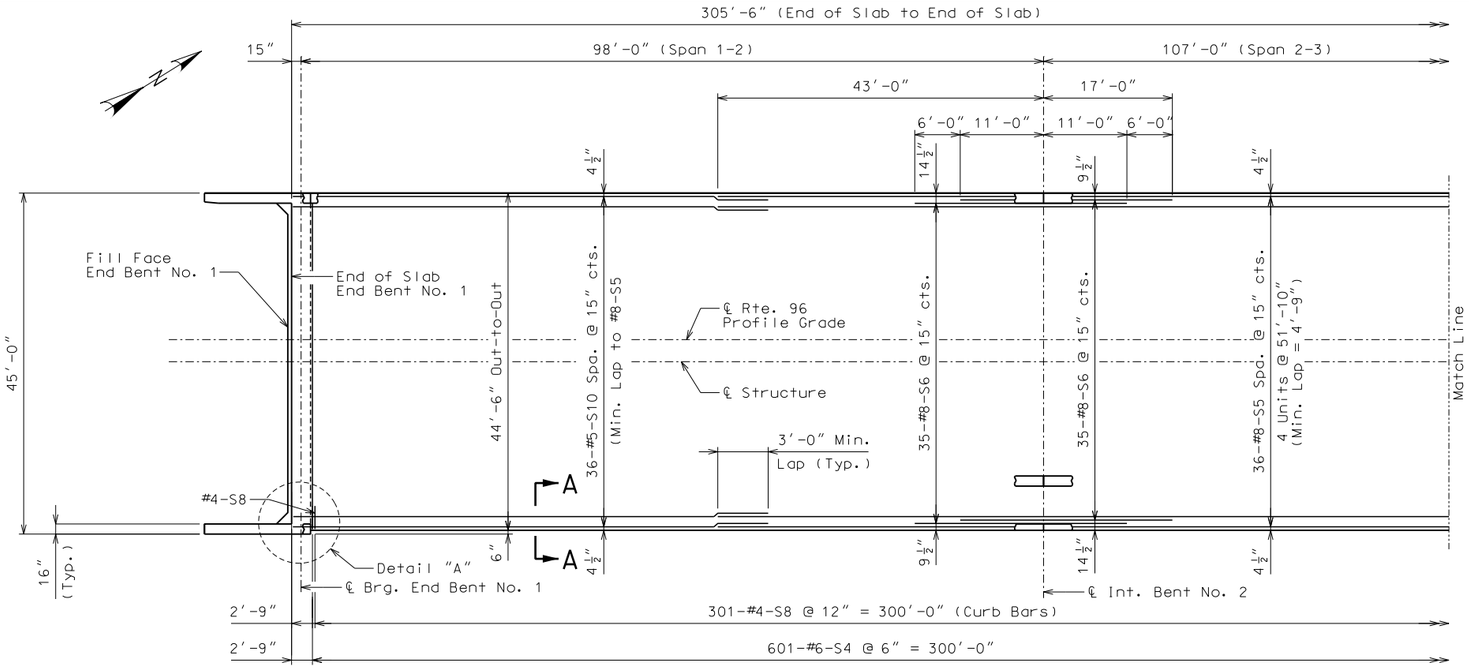

SLAB PLAN

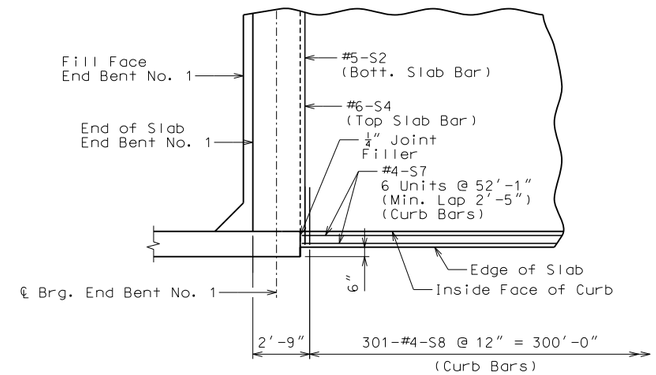

DETAIL "A"

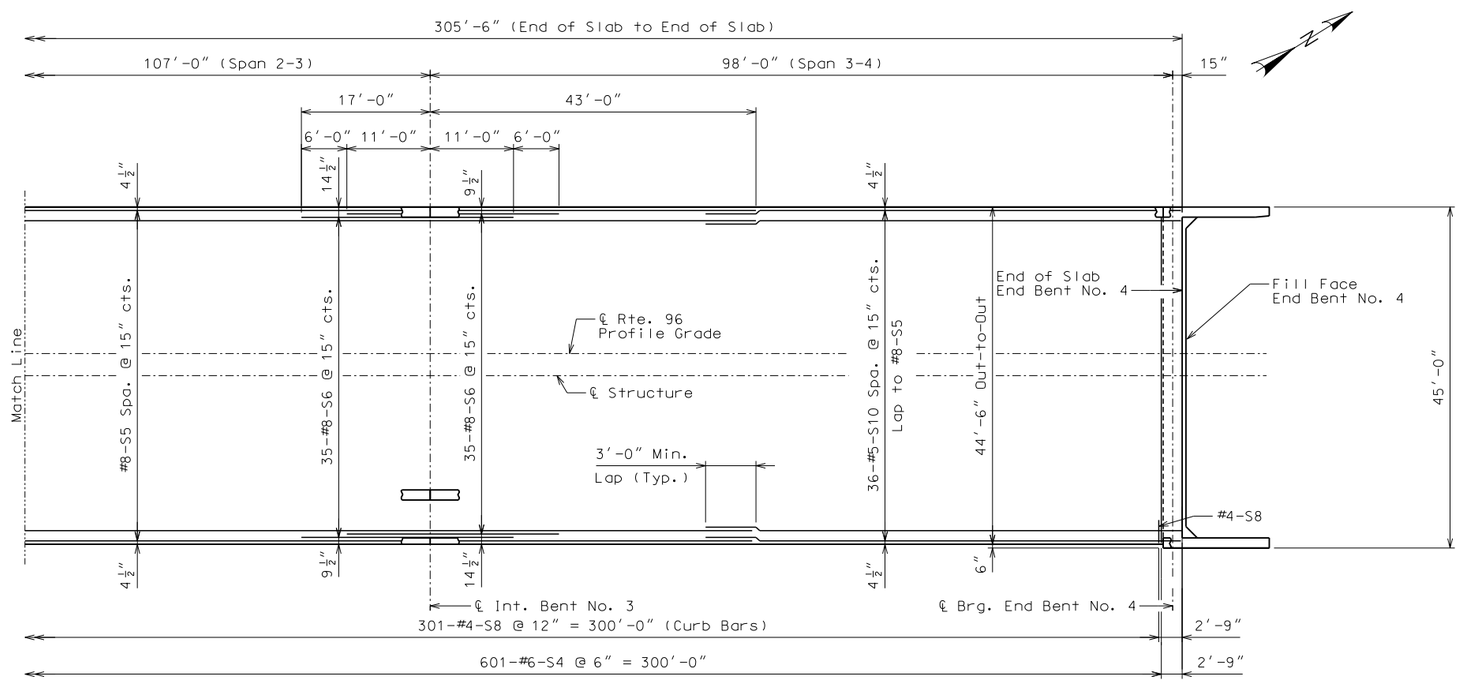

SLAB PLAN

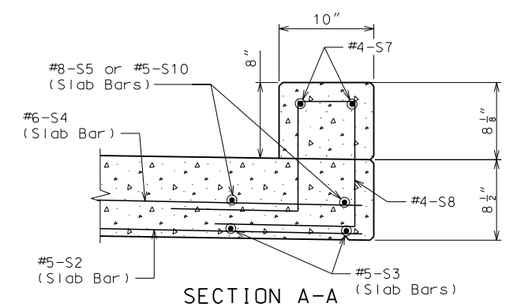

SECTION A-A

Notes:
Longitudinal slab dimensions show are measured horizontal.

End Bent reinforcement not shown for clarity.

Place 1/4" Joint Filler in concrete curb at same location as on Left Barrier Curb (Type D), see Sheet No. 23.

For Details and Reinforcement of Safety Barrier Curb not shown, see Sheets No. 23,24, 25 & 26.

For Plan of Slab Reinforcement - Bottom, see Sheet No. 19.

For Typical Slab Section and Details, see Sheet No. 21.

For details of Precast Prestressed Panels, see Sheet No. 22.

For details of the curb on the End Bent Wings, see Sheets No.4 & 12.

The cost of all materials, labor and equipment to construct the 10"x8" curb will be considered completely covered by the contract unit price for Slab on Concrete I-Girder.

PLAN OF SLAB REINFORCING - TOP

Detailed September 2016
Checked October 2016

Note: This drawing is not to scale. Follow dimensions.

STATE OF MISSOURI
DAVID GRAHAM BARRETT
NUMBER PE-2006002787
PROFESSIONAL ENGINEER

THIS SHEET HAS BEEN SIGNED, SEALED AND DATED ELECTRONICALLY

DATE PREPARED	
11/1/2016	
ROUTE 96	STATE MO
DISTRICT BR	SHEET NO. 20
COUNTY JASPER	
JOB NO. J7P2228F	
CONTRACT ID.	
PROJECT NO.	
BRIDGE NO. A8425	

DATE	DESCRIPTION
. . . . .	. . . . .

MISSOURI HIGHWAYS AND TRANSPORTATION COMMISSION
105 WEST CAPITOL
JEFFERSON CITY, MO 65102
1-888-ASK-MODOT (1-888-275-6636)

HDR Engineering, Inc.
4435 Main Street
Suite 1000
Kansas City, MO 64111-1856
816-360-2700
Certificate of Authority: 000856

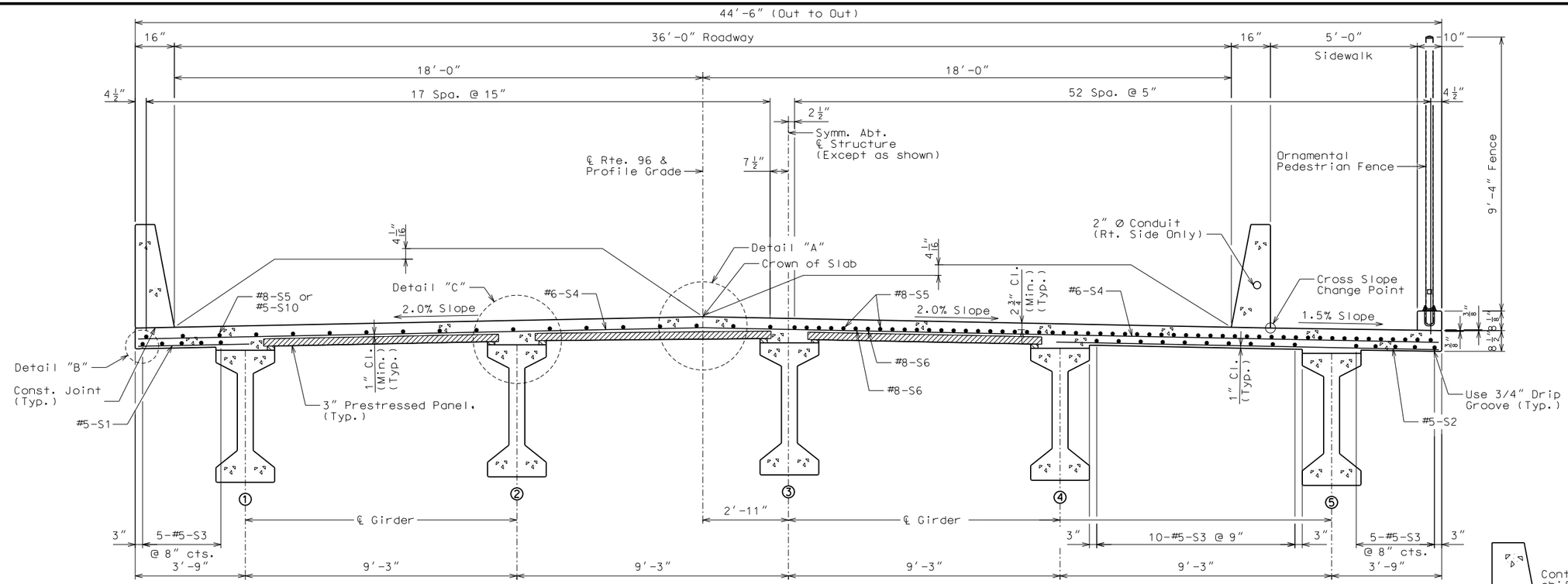

HALF SECTION NEAR ℄ SPAN

HALF SECTION NEAR INTERMEDIATE BENT

SECTION THRU SLAB

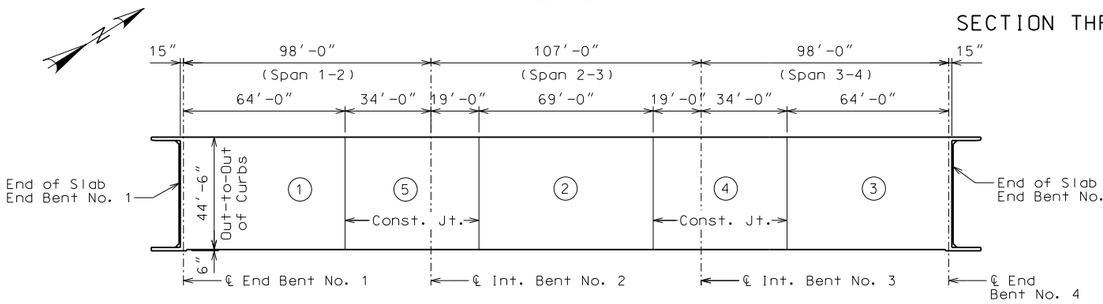

POUR SEQUENCE

	Sequence of Pours					Min. Rate of Pour Cu. Yds./Hr.
	Direction					With Retarder
Basic Sequence	1	2	3	4	5	25
	Either Direction					
Alternate pours to the basic skip sequence are subject to the approval of the engineer in accordance with Sec 703.						
Alternate A Pours	1	5 + 2		4 + 3		31
	End to 5	1 to 4		2 to End		
Alternate B Pours	1 + 5 + 2		4 + 3			31
	End to 4		2 to End			
Alternate C Pours	1 + 5 + 2 + 4 + 3					31
	End to End					

The contractor shall furnish an approved retarder to retard the set of concrete to 2.5 hours and shall pour and satisfactorily finish the slab pours at the rate given.

The concrete diaphragm at the intermediate bents and integral end bents shall be poured a minimum of 30 minutes and a maximum of 2 hours before the slab is poured.

SLAB POURING SEQUENCE

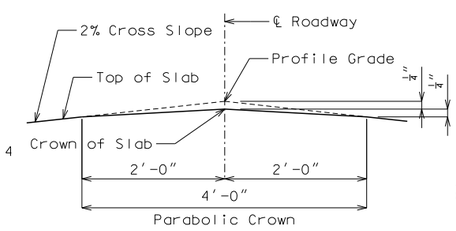

DETAIL A

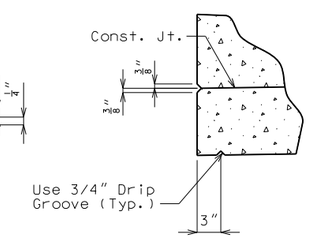

DETAIL B

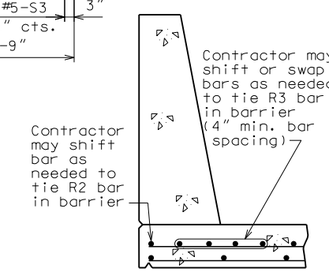

OPTIONAL SHIFTING TOP BARS AT BARRIER

(Left barrier shown, right barrier similar)

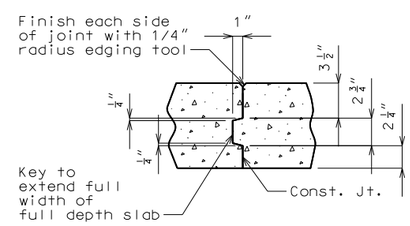

FULL DEPTH SLAB

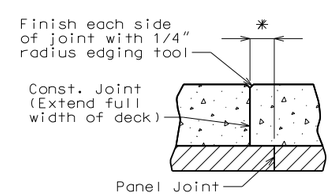

* Adjust the construction joint to a clearance of 6 inches minimum from the panel joint.

SLAB ON PANELS

SLAB CONSTRUCTION JOINT

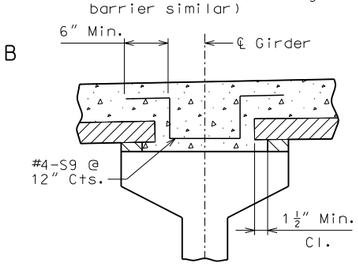

DETAIL C

General Notes:

For details and reinforcement of Safety Barrier Curb, see Sheet No. 23 thru 26.

For Plan of Slab showing Reinforcement, see Sheet No. 19 & 20.

For Theoretical Slab Haunching Diagram and Theoretical Bottom of Slab Elevations, see Sheet No. 17.

For Details of Precast Panels, see Sheet No. 22.

TYPICAL SLAB SECTION AND DETAILS

Detailed September 2016
Checked October 2016

Note: This drawing is not to scale. Follow dimensions.

STATE OF MISSOURI
DAVID GRAHAM BARRETT
NUMBER PE-2006002787
PROFESSIONAL ENGINEER

THIS SHEET HAS BEEN SIGNED, SEALED AND DATED ELECTRONICALLY

DATE PREPARED	
11/1/2016	
ROUTE 96	STATE MO
DISTRICT BR	SHEET NO. 21
COUNTY JASPER	
JOB NO. J7P2228F	
CONTRACT ID.	
PROJECT NO.	
BRIDGE NO. A8425	

DESCRIPTION	DATE

MISSOURI HIGHWAYS AND TRANSPORTATION COMMISSION
105 WEST CAPITOL
JEFFERSON CITY, MO 65102
1-888-ASK-MODOT (1-888-275-6636)

HDR Engineering, Inc.
4435 Main Street
Suite 1000
Kansas City, MO 64111-1856
816-360-2700
Certificate of Authority: 000856

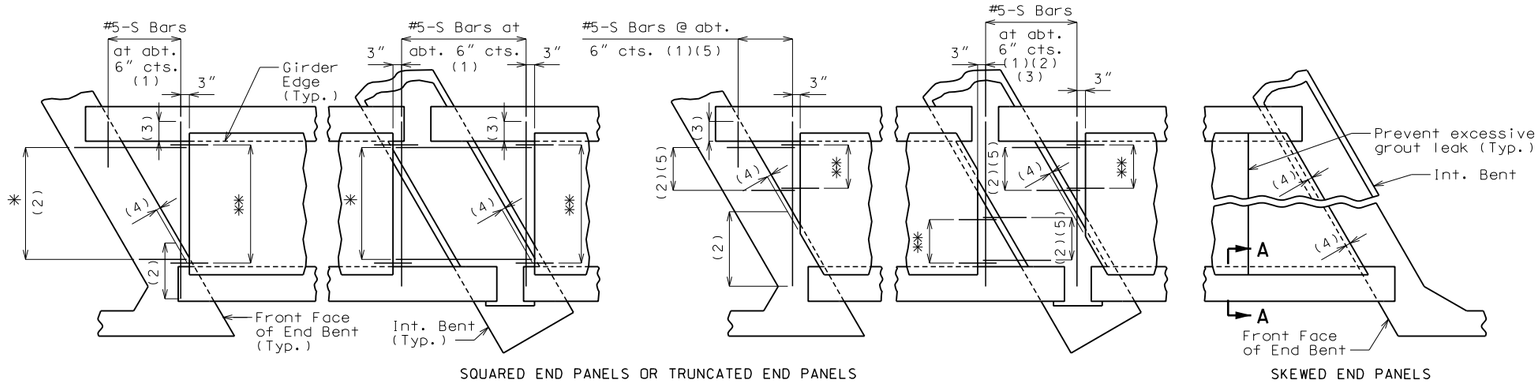

SQUARED END PANELS OR TRUNCATED END PANELS

SKEWED END PANELS

PLAN SHOWING PANELS PLACEMENT

✱ #5-S Bars at abt. 9" cts. (1)
✱✱ #3-P1 at 12" cts. (End panels only)

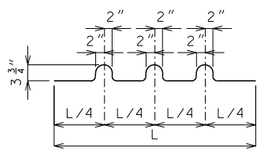

BENDING DIAGRAM FOR U1 BAR

U1 Bars may be oriented at right angles to location and spacing shown. U1 Bars shall be placed between P1 bars.

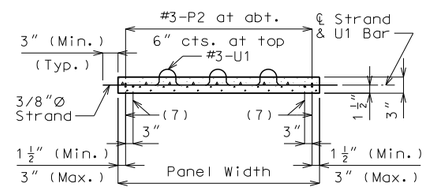

SECTION B-B

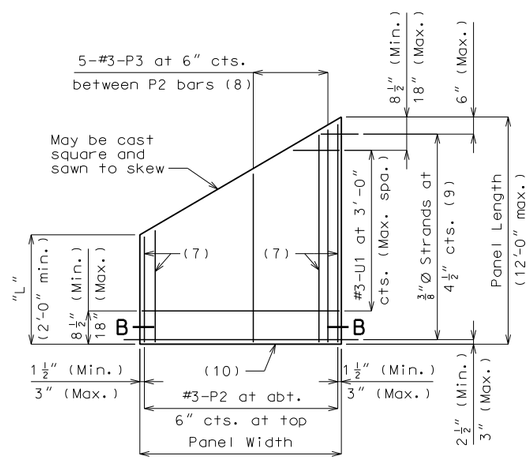

PLAN OF OPTIONAL SKEWED END PANEL

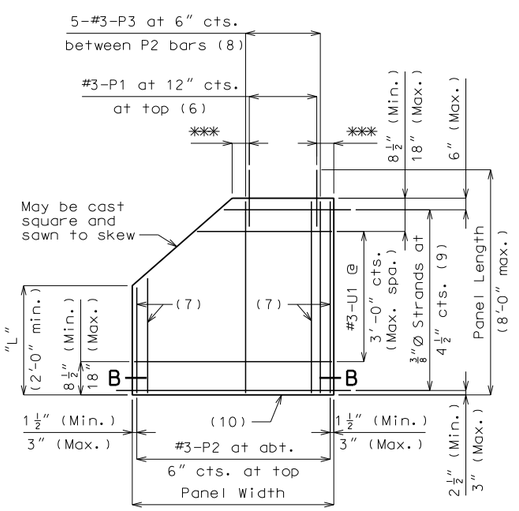

PLAN OF OPTIONAL TRUNCATED END PANEL

✱✱✱ 3" (Min.), 6" (Max.)

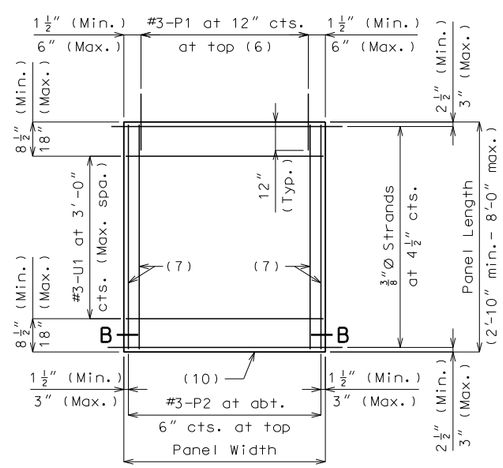

PLAN OF SQUARED PANEL

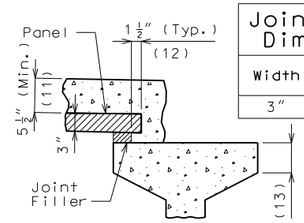

Joint Filler Dimensions		
Width	Height	
	Min.	Max.
3"	1"	4"

SECTION A-A

Reference Notes:

Plan of Panels Placement:

(1) S-bars shown are bottom steel in slab between panels and used with squared and truncated end panels only.

(2) Extend S-bars 18 inches beyond the front face of end bents and int. bents for squared and truncated end panels only.

(3) Extend S-bars 9 inches beyond edge of girder (Typ.).

(4) End panels shall be dimensioned 1/2" min. to 1 1/2" max. from the inside face of diaphragm.

(5) For truncated end panels, use a min. of #5-S bars at 6" crossings in openings, or min. 4x4-W7xW7.

Plans of Panels:

(6) For end panels only, P1 bars shall be 2'-0" in length and embedded 12". P1 bars will not be required for panels at squared integral end bents.

(7) #3-P2 bars near edge of panel at bottom (under strands).

(8) Use #3-P3 bars if panel is skewed 45° or greater.

(9) Any strand 2'-0" or shorter shall have a #4 reinforcing bar on each side of it, centered between strands. Strands 2'-0" or shorter may then be debonded at the fabricator's option.

(10) Optional 1/2" x 45° Chamfer one or both sides at bottom.

Section A-A:

(11) Slab thickness over prestressed panels varies due to girder camber. In order to maintain minimum slab thickness, it may be necessary to raise the grade uniformly throughout the structure. No payment will be made for additional labor or materials required for necessary grade adjustment.

(12) Contractor shall ensure proper consolidation under and between panels.

(13) At the contractor's option, the variation in slab thickness over prestressed panels may be eliminated or reduced by increasing and varying the girder top flange thickness. Dimensions shall be shown on the shop drawings.

DETAILS OF PRESTRESSED PANELS

General Notes:

Prestressed Panels:

Concrete for prestressed panels shall be Class A-1 with f'c = 6,000 psi, f'ci = 4,000 psi.

The top surface of all panels shall receive a scored finish with a depth of scoring of 1/8" perpendicular to the prestressing strands in the panels.

Prestressing tendons shall be high-tensile strength, uncoated, seven-wire, low-relaxation strands for prestressed concrete in accordance with AASHTO M 203 Grade 270, with nominal diameter of strand = 3/8" and nominal area = 0.085 sq.in. and minimum ultimate strength = 22.95 kips (270 ksi). Larger strands may be used with the same spacing and initial tension.

Initial prestressing force = 17.2 kips/strand.

The method and sequence of releasing the strands shall be shown on the shop drawings.

Suitable anchorage devices for lifting panels may be cast in panels, provided the devices are shown on the shop drawings and approved by the engineer. Panel lengths shall be determined by the contractor and shown on the shop drawings.

When squared end panels are used at skewed bents, the skewed portion shall be cast full depth. No separate payment will be made for additional concrete and reinforcing required.

Support from diaphragm forms is required under the optional skewed end until cast-in-place concrete has reached 3,000 psi compressive strength.

Prestressed panels shall be brought to saturated surface-dry (SSD) condition just prior to the deck pour. There shall be no free standing water on the panels or in the area to be cast.

The prestressed panel quantities are not included in the table of estimated quantities for the slab.

Reinforcing Steel:

All dimensions are out to out.

Hooks and bends shall be in accordance with the CRSI Manual of Standard Practice for Detailing Reinforced Concrete Structures, Stirrup and Tie Dimensions.

Minimum clearance to reinforcing steel shall be 1 1/2", unless otherwise shown.

If U1 bars interfere with placement of slab steel, U1 loops may be bent over, as necessary, to clear slab steel.

Deformed welded wire reinforcement (WWR) providing a minimum area of reinforcing perpendicular to strands of 0.22 sq in./ft, with spacing parallel to strands sufficient to ensure proper handling, may be used in lieu of the #3-P2 bars shown. Wire diameter shall not be larger than 0.375 inch. The above alternative reinforcement criteria may be used in lieu of the #3-P3 bars, when required, and placed over a width not less than 2 feet.

The following reinforcing steel shall be tied securely to the strands with the following maximum spacing in each direction:
#3-P2 bars at 16 inches.
WWR at 24 inches.

The #3-U1 bars shall be tied securely to #3-P2 bars, to WWR or to strands (when placed between P1 bars) at about 3-foot centers.

Minimum reinforcement steel length shall be 2'-0".

All reinforcement other than prestressing strands shall be epoxy coated.

Precast panels may be in contact with stirrup reinforcing in diaphragms.

S-bars are not listed in the bill of reinforcing.

Cost of S-bars will be considered completely covered by the contract unit price for the slab.

Joint Filler:

Joint filler shall be preformed fiber expansion joint material in accordance with Sec 1057 or expanded or extruded polystyrene bedding material in accordance with Sec 1073.

Use Slab Haunching Diagram on Sheet No. 17 for determining thickness of joint filler within the limits noted in the table of Joint Filler Dimensions.

Thicker material may be used on one or both sides of the girder to reduce cast-in-place concrete thickness to within tolerances.

The same thickness of preformed fiber expansion joint material shall be used under any one edge of any panel except at locations where top flange thickness may be stepped. The maximum change in thickness between adjacent panels shall be 1/4 inch. The polystyrene bedding material may be cut with a transition to match haunch height above top of flange.

Joint filler shall be glued to the girder. When thickness exceeds 1 1/2 inches, the joint filler shall be glued top and bottom. The glue used shall be the type recommended by the joint filler manufacturer.

Edges of panels shall be uniformly seated on the joint filler before slab reinforcement is placed.

STATE OF MISSOURI
DAVID GRAHAM BARRETT
NUMBER PE-2006002787
PROFESSIONAL ENGINEER

THIS SHEET HAS BEEN SIGNED, SEALED AND DATED ELECTRONICALLY

DATE PREPARED	
11/1/2016	
ROUTE 96	STATE MO
DISTRICT BR	SHEET NO. 22
COUNTY JASPER	
JOB NO. J7P2228F	
CONTRACT ID.	
PROJECT NO.	
BRIDGE NO. A8425	

DATE	DESCRIPTION

MISSOURI HIGHWAYS AND TRANSPORTATION COMMISSION
105 WEST CAPITOL
JEFFERSON CITY, MO 65102
1-888-ASK-MODOT (1-888-275-6636)

HDR Engineering, Inc.
4435 Main Street
Suite 1000
Kansas City, MO 64111-1856
816-360-2700
Certificate of Authority: 000856

Detailed September 2016
Checked October 2016

Note: This drawing is not to scale. Follow dimensions.

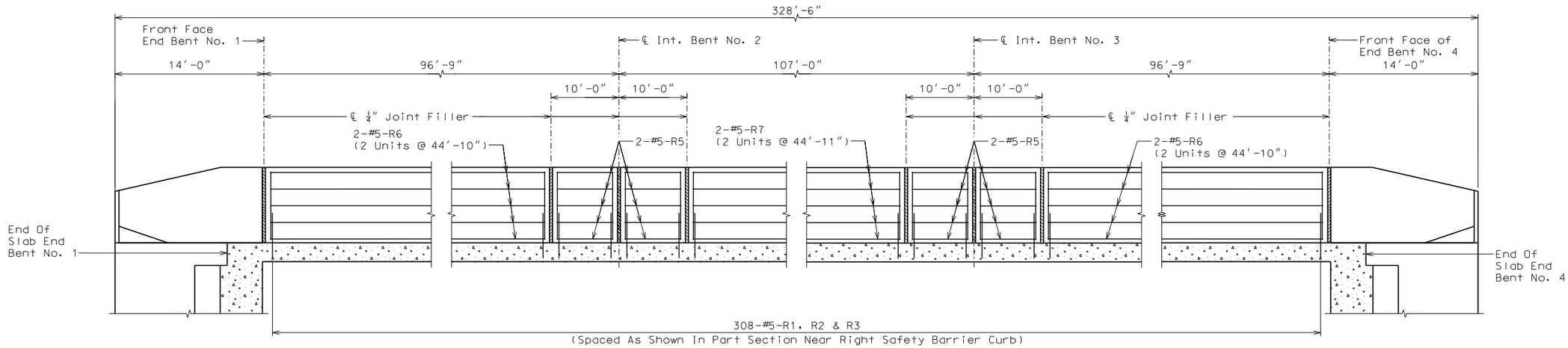

ELEVATION OF LEFT BARRIER CURB (TYPE D)

Longitudinal dimensions are horizontal.

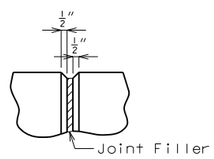

FILLED JOINT DETAIL

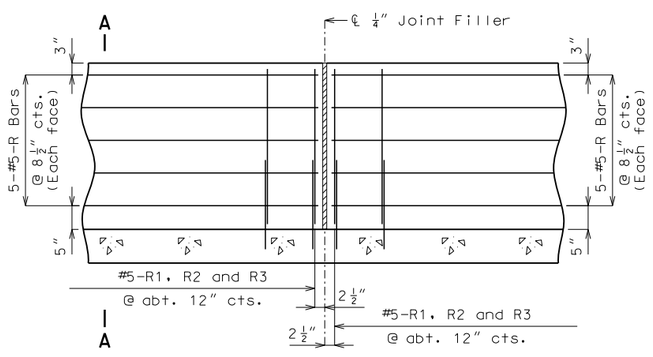

PART ELEVATION OF BARRIER CURB (TYPE D) (CAST-IN-PLACE CONVENTIONAL FORMING)

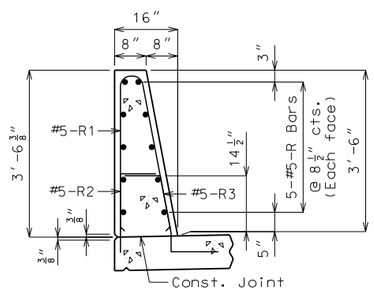

SECTION A-A

Use a minimum lap of 3'-1" for #5 horizontal barrier curb (Type D) bars.

The cross-sectional area above the slab = 3.52 sq. ft.

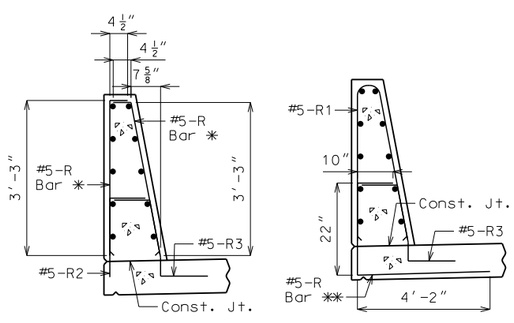

R-BAR PERMISSIBLE ALTERNATE SHAPE

✱ The R1 bar may be separated into two bars as shown, at the contractor's option, only when slip forming is not used. (All dimensions are out to out.)

✱✱ The R2 bar and #5 bottom transverse slab bar in cantilever (P/S panels only) combination may be furnished as one bar as shown, at the contractor's option.

General Notes

Top of barrier curb (Type D) shall be built parallel to grade with barrier curb joints (except at end bents) normal to grade.

All exposed edges of barrier curb (Type D) shall have either a 1/2-inch radius or a 3/8-inch bevel, unless otherwise noted.

Payment for all concrete and reinforcement, complete in place, will be considered completely covered by the contract unit price for Barrier Curb (Type D) per linear foot.

Concrete in the barrier curb (Type D) shall be Class B-1.

Measurement of barrier curb (Type D) is to the nearest linear foot for each structure, measured along the outside top of slab from end of wing to end of wing.

Concrete traffic barrier delineators shall be placed on top of the barrier curb (Type D) as shown on Missouri Standard Plans 617.10 and in accordance with Sec 617. Delineators on bridges with two-lane, two-way traffic shall have retroreflective sheeting on both sides. Concrete traffic barrier delineators will be considered completely covered by the contract unit price for Barrier Curb (Type D).

DETAILS OF LEFT BARRIER CURB (TYPE D)

Detailed September 2016
Checked October 2016

Note: This drawing is not to scale. Follow dimensions.

STATE OF MISSOURI
DAVID GRAHAM BARRETT
NUMBER PE-2006002787
PROFESSIONAL ENGINEER

THIS SHEET HAS BEEN SIGNED, SEALED AND DATED ELECTRONICALLY

DATE PREPARED	
11/1/2016	
ROUTE 96	STATE MO
DISTRICT BR	SHEET NO. 23
COUNTY JASPER	
JOB NO. J7P2228F	
CONTRACT ID.	
PROJECT NO.	
BRIDGE NO. A8425	

DESCRIPTION	DATE

MISSOURI HIGHWAYS AND TRANSPORTATION COMMISSION
105 WEST CAPITOL
JEFFERSON CITY, MO 65102
1-888-ASK-MODOT (1-888-275-6636)

HDR Engineering, Inc.
4435 Main Street
Suite 1000
Kansas City, MO 64111-1856
816-360-2700
Certificate of Authority: 000856

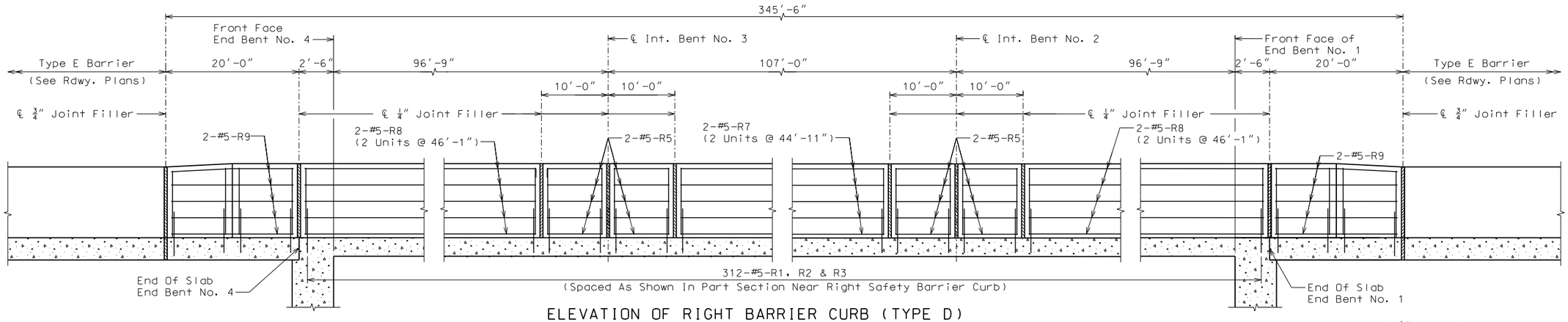

ELEVATION OF RIGHT BARRIER CURB (TYPE D)

Longitudinal dimensions are horizontal.

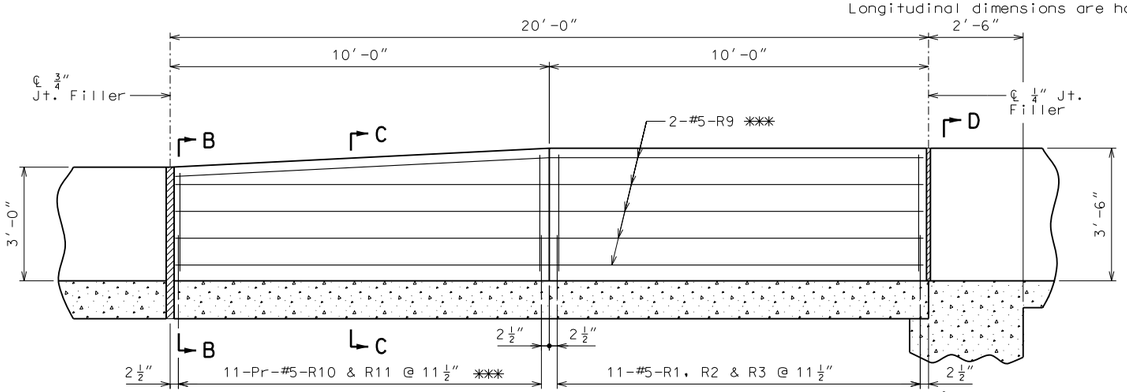

ELEVATION OF TRANSITION ON APPROACH SLAB

*** - Field bend #5-R9, R10 & R11 to follow the Face of the barrier transition.

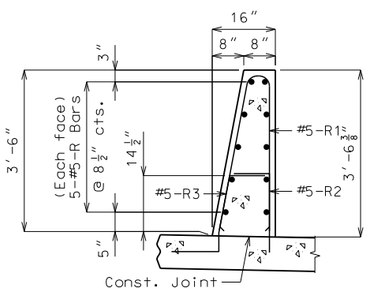

SECTION A-A

Use a minimum lap of 3'-1" for #5 horizontal barrier curb (Type D) bars.

The cross-sectional area above the slab = 3.52 sq. ft.

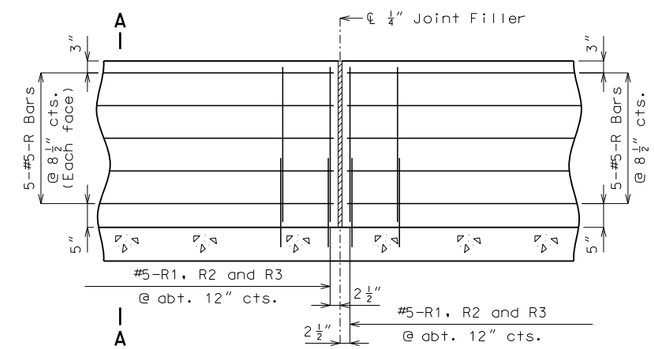

PART ELEVATION OF BARRIER CURB (TYPE D)
(CAST-IN-PLACE CONVENTIONAL FORMING)

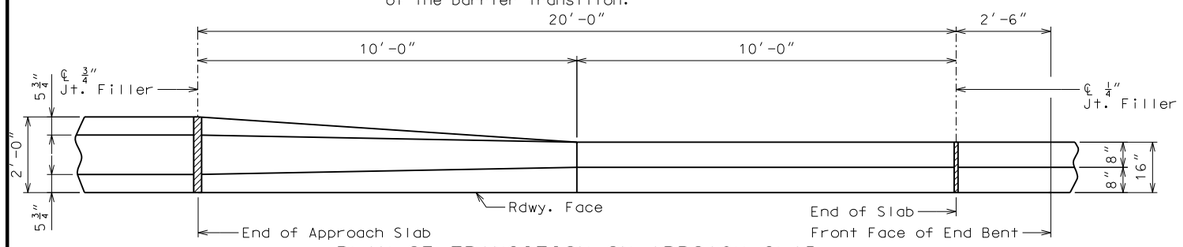

PLAN OF TRANSITION ON APROACH SLAB

(End Bent No. 4 shown, End Bent No. 1 similar)

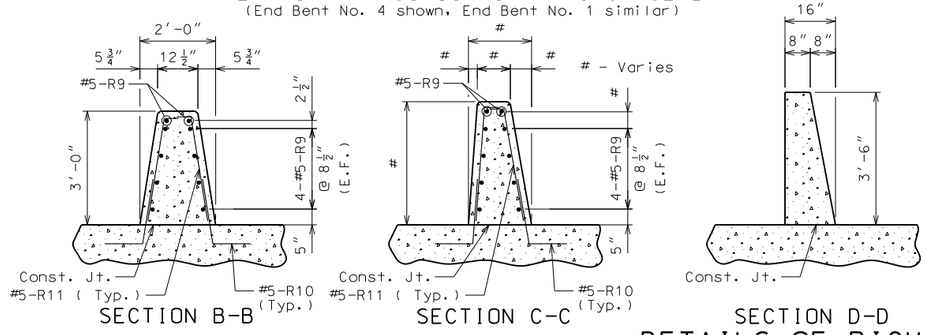

SECTION B-B SECTION C-C SECTION D-D

DETAILS OF RIGHT BARRIER CURB (TYPE D)

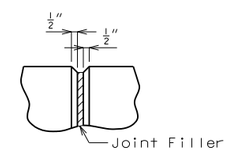

FILLED JOINT DETAIL

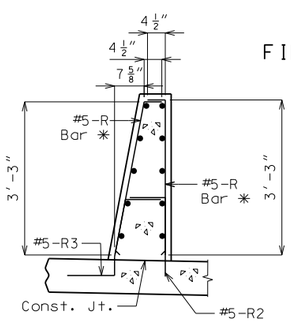

R-BAR PERMISSIBLE ALTERNATE SHAPE

* The R1 bar may be separated into two bars as shown, at the contractor's option, only when slip forming is not used. (All dimensions are out to

General Notes

Top of barrier curb (Type D) shall be built parallel to grade with barrier curb joints (except at end bents) normal to grade.

All exposed edges of barrier curb (Type D) shall have either a 1/2-inch radius or a 3/8-inch bevel, unless otherwise noted.

Payment for all concrete and reinforcement, complete in place, will be considered completely covered by the contract unit price for Barrier Curb (Type D) per linear foot.

Concrete in the barrier curb (Type D) shall be Class B-1.

Measurement of barrier curb (Type D) is to the nearest linear foot for each structure, measured along the outside top of slab from end of approach slab to end of approach slab.

Concrete traffic barrier delineators shall be placed on top of the barrier curb (Type D) as shown on Missouri Standard Plans 617.10 and in accordance with Sec 617. Delineators on bridges with two-lane, two-way traffic shall have retroreflective sheeting on both sides. Concrete traffic barrier delineators will be considered completely covered by the contract unit price for Barrier Curb (Type D).

STATE OF MISSOURI
DAVID GRAHAM BARRETT
NUMBER PE-2006002787
PROFESSIONAL ENGINEER

THIS SHEET HAS BEEN SIGNED, SEALED AND DATED ELECTRONICALLY

DATE PREPARED	
11/1/2016	
ROUTE 96	STATE MO
DISTRICT BR	SHEET NO. 24
COUNTY JASPER	
JOB NO. J7P2228F	
CONTRACT ID.	
PROJECT NO.	
BRIDGE NO. A8425	

DATE	DESCRIPTION
. . .	. . .

MISSOURI HIGHWAYS AND TRANSPORTATION COMMISSION
105 WEST CAPITOL
JEFFERSON CITY, MO 65102
1-888-ASK-MODOT (1-888-275-6636)

HDR Engineering, Inc.
4435 Main Street
Suite 1000
Kansas City, MO 64111-1856
816-360-2700
Certificate of Authority: 000856

Detailed September 2016
Checked October 2016

Note: This drawing is not to scale. Follow dimensions.

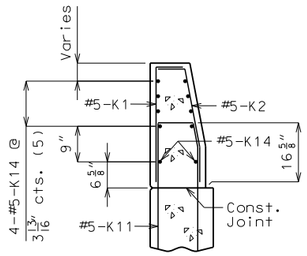

SECTION A-A

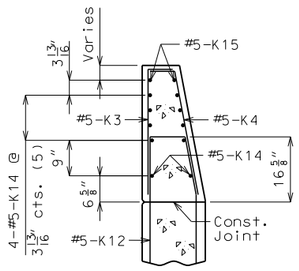

SECTION B-B

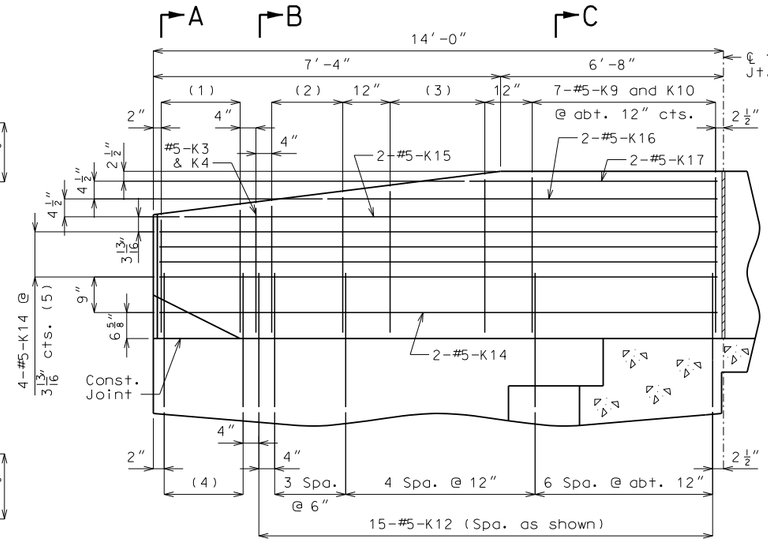

ELEVATION AT END BENT NO. 1

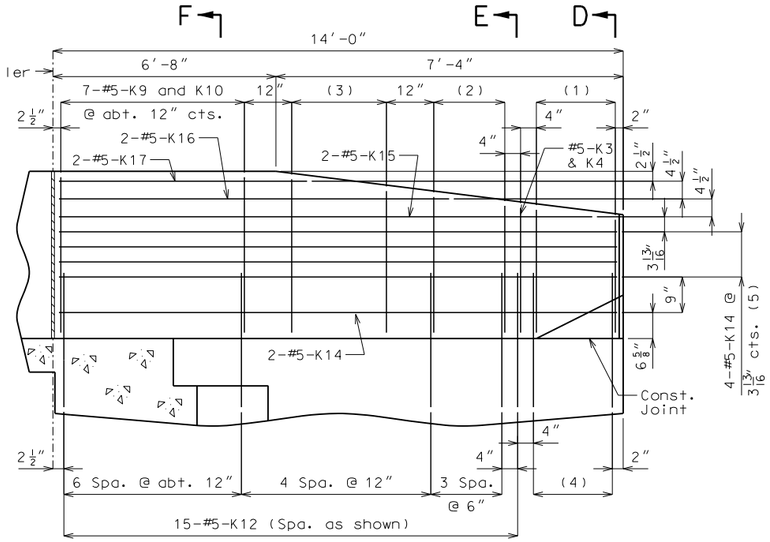

ELEVATION AT END BENT NO. 4

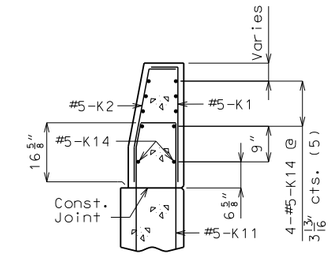

SECTION D-D

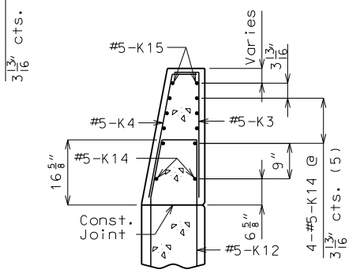

SECTION E-E

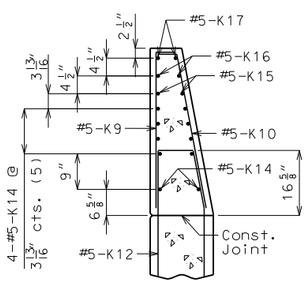

SECTION C-C

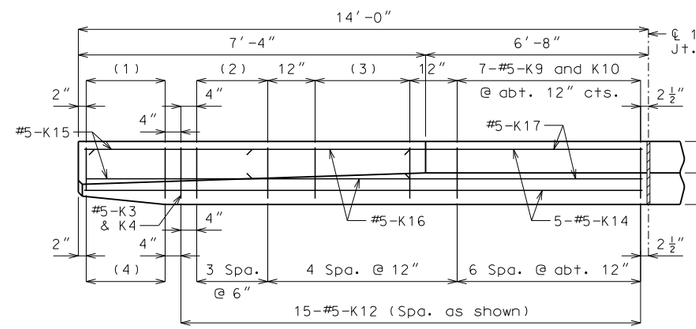

PLAN

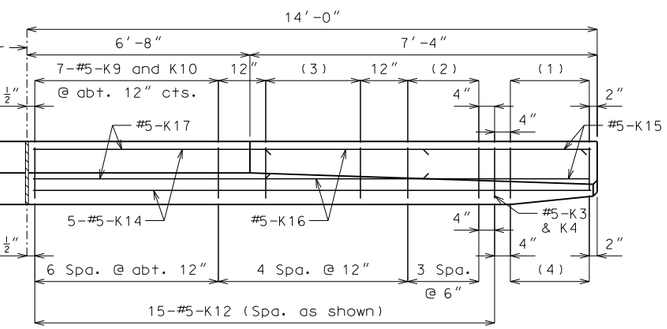

PLAN

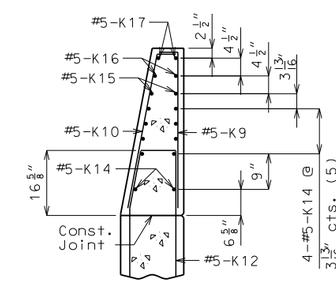

SECTION F-F

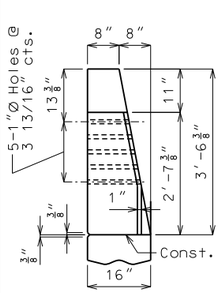

ELEVATION G-G

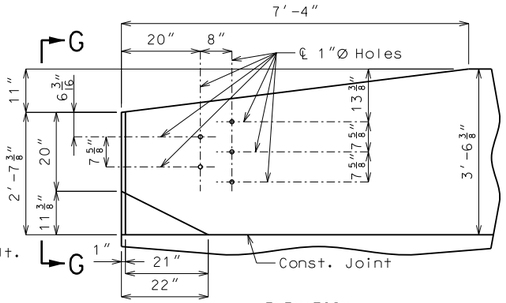

ELEVATION

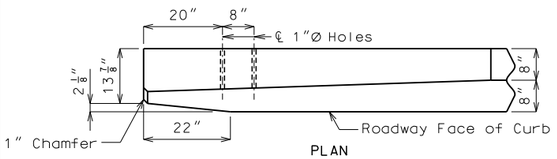

PLAN

DETAILS OF GUARD RAIL ATTACHMENT

(1) 6-#5-K1 and 6-#5-K2 @ 4" cts.

(2) 4-#5-K5 and 4-#5-K6 @ 6" cts.

(3) 3-#5-K7 and 3-#5-K8 @ 12" cts.

(4) 6-#5-K11 @ 4" cts.

(5) (Each face)

Note: Concrete traffic barrier delineators shall be placed on top of the barrier curb (Type D) as shown on Missouri Standard Plans 617.10 and in accordance with Sec 617. Delineators on bridges with two-lane, two-way traffic shall have retroreflective sheeting on both sides. Concrete traffic barrier delineators will be considered completely covered by the contract unit price for Barrier Curb (Type D).

DETAILS OF LEFT BARRIER CURB (TYPE D) AT END BENTS

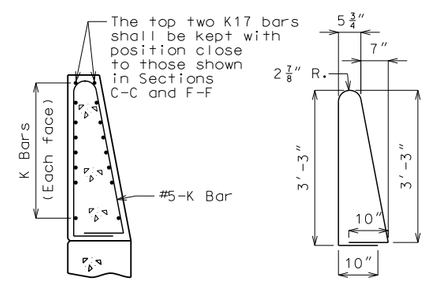

K9-K10 BAR PERMISSABLE ALTERNATE SHAPE

(Other K bars not shown for clarity)

The K9 and K10 bar combination may be furnished as one bar as shown, at the contractor's option.

Detailed September 2016
Checked October 2016

Note: This drawing is not to scale. Follow dimensions.

STATE OF MISSOURI — DAVID GRAHAM BARRETT — NUMBER PE-2006002787 — PROFESSIONAL ENGINEER

THIS SHEET HAS BEEN SIGNED, SEALED AND DATED ELECTRONICALLY

DATE PREPARED	
11/1/2016	
ROUTE	STATE
96	MO
DISTRICT	SHEET NO.
BR	25
COUNTY	
JASPER	
JOB NO.	
J7P2228F	
CONTRACT ID.	
PROJECT NO.	
BRIDGE NO.	
A8425	

DATE	DESCRIPTION
.	.
.	.
.	.
.	.
.	.
.	.

MISSOURI HIGHWAYS AND TRANSPORTATION COMMISSION
105 WEST CAPITOL
JEFFERSON CITY, MO 65102
1-888-ASK-MODOT (1-888-275-6636)

HDR Engineering, Inc.
4435 Main Street
Suite 1000
Kansas City, MO 64111-1856
816-360-2700
Certificate of Authority: 000856

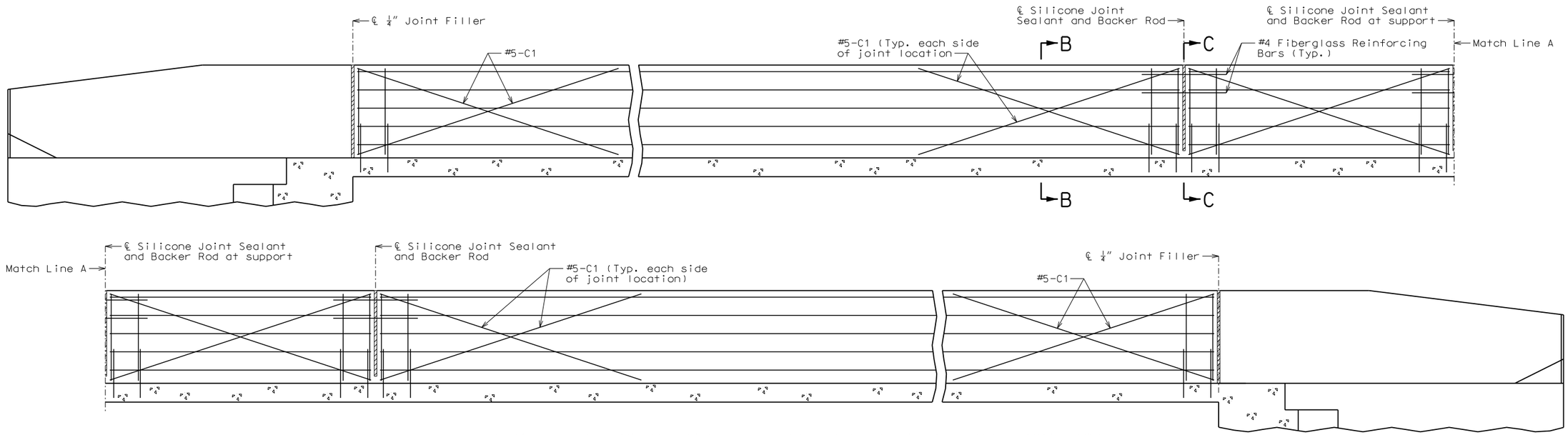

TYPICAL ELEVATION OF BARRIER CURB (TYPE D) AT SUPPORT LOCATIONS
(Left barrier curb shown, right barrier curb similar except at end bents)

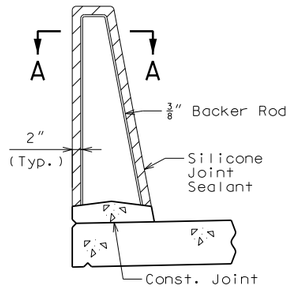

SECTION THRU JOINT

Note:
Slip form option must stop at Front Face of End Bent.

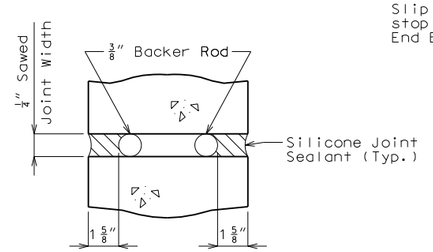

SECTION A-A

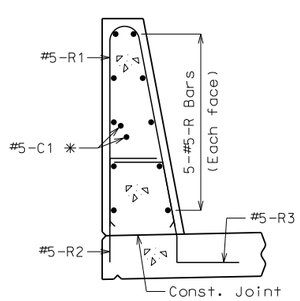

SECTION B-B
✳ Each side of joint location.

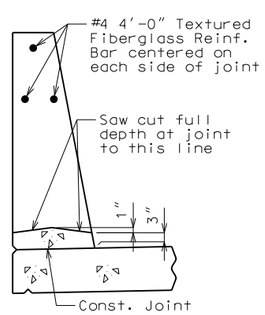

SECTION C-C

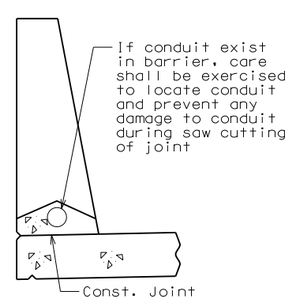

SECTION C-C
(Use when conduit required)

General Notes:

Top of barrier curb (Type D) shall be built parallel to grade with barrier curb joints (except at end bents) normal to grade.

All exposed edges of barrier curb (Type D) shall have either a 1/2-inch radius or a 3/8-inch bevel, unless otherwise noted.

Payment for all concrete and reinforcement, complete in place, will be considered completely covered by the contract unit price for Barrier Curb (Type D) per linear foot.

Concrete in the barrier curb (Type D) shall be Class B-1.

Measurement of barrier curb (Type D) is to the nearest linear foot for each structure, measured along the outside top of slab from end of wing to end of wing for the left barrier and end of approach slab to end of approach slab for the right barrier.

Concrete traffic barrier delineators shall be placed on top of the safety barrier curb as shown on Missouri Standard Plans 617.10 and in accordance with Sec 617. Delineators on bridges with two-lane, two-way traffic shall have retroreflective sheeting on both sides. Concrete traffic barrier delineators will be considered completely covered by the contract unit price for Barrier Curb (Type D).

Joint sealant and backer rods shall be used on all slip-form barrier curbs instead of joint filler and shall be in accordance with Sec 717 for silicone joint sealant for saw cut and formed joints.

For slip-form option, all sides of the safety barrier curb shall have a vertically broomed finish and the curb top shall have a transversely broomed finish.

C bars (slip-form option only) shall be used in addition to cast-in-place conventional forming reinforcement for bridge barrier curb (Type D).

Cost of silicone joint sealant and backer rod, complete in place, will be considered completely covered by the contract unit price for Barrier Curb (Type D).

OPTIONAL SLIP-FORM BARRIER CURB (TYPE D)

Detailed September 2016
Checked October 2016

Note: This drawing is not to scale. Follow dimensions.

STATE OF MISSOURI
DAVID GRAHAM BARRETT
NUMBER PE-2006002787
PROFESSIONAL ENGINEER

THIS SHEET HAS BEEN SIGNED, SEALED AND DATED ELECTRONICALLY

DATE PREPARED	
11/1/2016	
ROUTE 96	STATE MO
DISTRICT BR	SHEET NO. 26
COUNTY JASPER	
JOB NO. J7P2228F	
CONTRACT ID.	
PROJECT NO.	
BRIDGE NO. A8425	

DESCRIPTION	DATE

MISSOURI HIGHWAYS AND TRANSPORTATION COMMISSION
105 WEST CAPITOL
JEFFERSON CITY, MO 65102
1-888-ASK-MODOT (1-888-275-6636)

HDR Engineering, Inc.
4435 Main Street
Suite 1000
Kansas City, MO 64111-1856
816-360-2700
Certificate of Authority: 000856

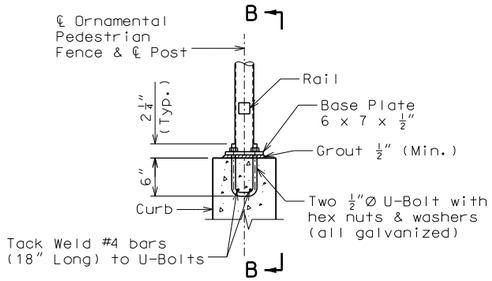

SECTION A-A AT FENCE SUPPORT

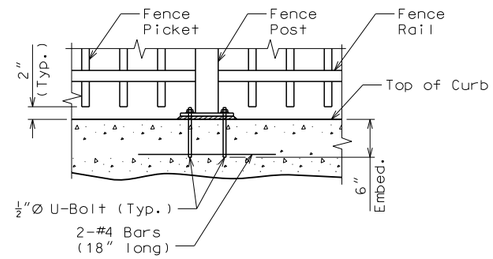

SECTION B-B AT SUPPORT

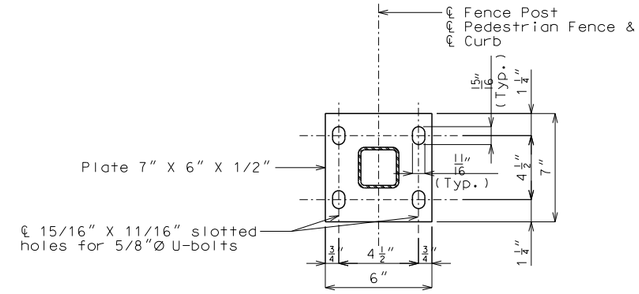

PLAN OF BASE PLATE

✳ - Selected Mesh may vary from that shown with approval of the Engineer.

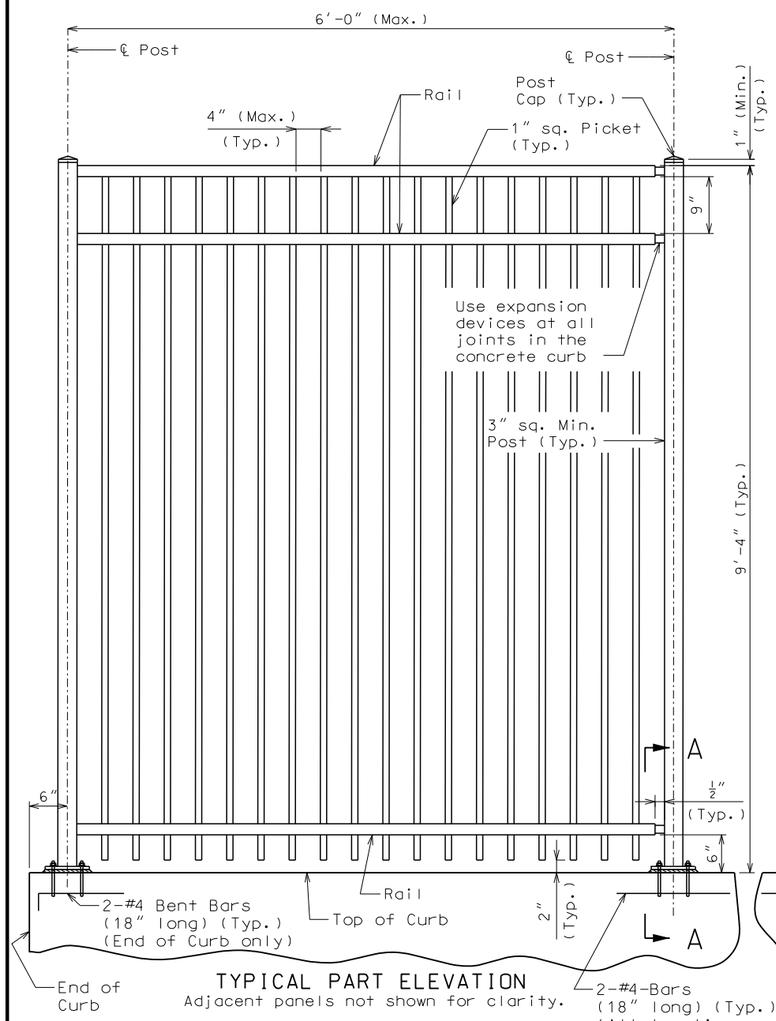

TYPICAL PART ELEVATION
Adjacent panels not shown for clarity.

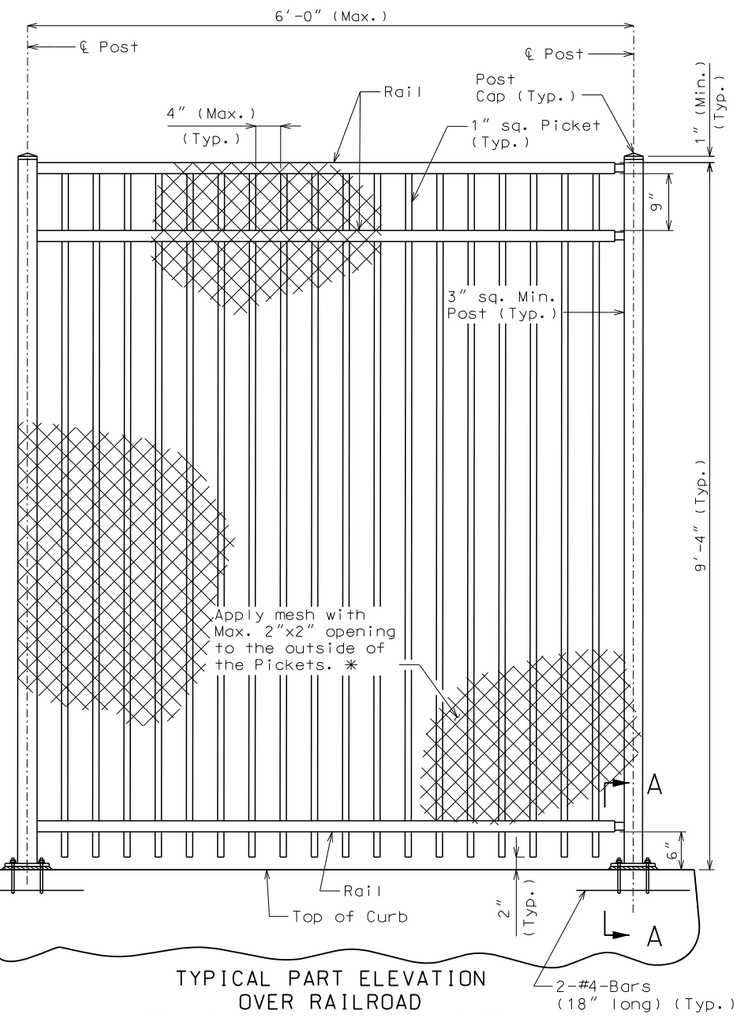

TYPICAL PART ELEVATION
OVER RAILROAD
Adjacent panels not shown for clarity.
Limits of railroad panels from Sta. 551+18.00 to Sta. 552+65.00

Notes:
Ornamental pedestrian fencing shall be installed to the top of the Curb at right edge of sidewalk for the full length of the bridge from end of approach slab to end of approach slab.

Ornamental pedestrian fencing shall be in accordance with 2010 AASHTO LRFD Bridge Design Specifications and 2010 Interim Revisions. 50 lb/ft and 200 lb loading shall not be applied simultaneously.

Fence shall have a gloss black finish (Federal Standard #17038) System "G" in accordance with Sec 1081.

Base plate shall be ASTM A709, Grade 36.

Dimensions of pedestrian fence are measured horizontally.

Measurement of pedestrian fence will be made to the nearest linear foot along centerline fence.

Payment for furnishing and erecting the fence complete in place with U-Bolts, washers and reinforcing bars will be considered completely covered by the contract unit price for Ornamental Pedestrian Fence.

All fence posts shall be vertical.

Mortar shall be placed under the post base plates in accordance with Sec 1066.

Expansion joints shall be placed in the horizontal pieces at not more than 30 feet centers and at all joint filler locations in the curb with a minimum gap of ¼" @ 60 degree F.

Contractor shall submit complete detailed shop drawings in accordance with Sec 1080.

The contractor shall have the ornamental pedestrian fencing manufacturer submit structural design computations signed and sealed by a registered professional engineer in the State of Missouri.

All materials used in fabrication and construction of the ornamental pedestrian fencing shall be in accordance with the manufacturer's specifications, except as modified in the contract documents.

Ornamental pedestrian fencing system shall be supplied by only one of the manufacturers. Fencing system shall include all components except the anchor bolts and #4 bars welded to the anchor bolts. The assembly of the pickets to the rails and the rails to the posts shall be the same as the style mentioned for the manufacturer.

Ameristar Fence Products, Inc.
1555 N. Mingo
Tulsa, OK. 74116
(800) 321-8724
www.ameristarfence.com

Style: AEGIS II Majestic

Iron Eagle Industries, Inc.
1256 Cardiff Blvd.
Mississauga, Ontario Canada L5S1R1
(905) 670-2558
www.ironeagleind.com

Style: Silver Eagle II

Betafence USA
3309 S.W. Interstate 45
Ennis, TX. 75119
(888) 650-4766
www.betafenceusa.com

Style: UpGrade-I Landmark

Merchants Metals
6575 Romiss Court
St. Louis, MO 63134
(800) 293-3363
www.merchantsmetals.com

Style: Guardsman Monroe

For Curb Details, see Sheets No. 4, 12, 20 & 29.

ORNAMENTAL PEDESTRIAN FENCE DETAILS

Detailed September 2016
Checked October 2016

Note: This drawing is not to scale. Follow dimensions.

STATE OF MISSOURI
DAVID GRAHAM BARRETT
NUMBER PE-2006002787
PROFESSIONAL ENGINEER

THIS SHEET HAS BEEN SIGNED, SEALED AND DATED ELECTRONICALLY

DATE PREPARED	
11/1/2016	
ROUTE 96	STATE MO
DISTRICT BR	SHEET NO. 27
COUNTY JASPER	
JOB NO. J7P2228F	
CONTRACT ID.	
PROJECT NO.	
BRIDGE NO. A8425	

DATE	DESCRIPTION

MISSOURI HIGHWAYS AND TRANSPORTATION COMMISSION
105 WEST CAPITOL
JEFFERSON CITY, MO 65102
1-888-ASK-MODOT (1-888-275-6636)

HDR Engineering, Inc.
4435 Main Street
Suite 1000
Kansas City, MO 64111-1856
816-360-2700
Certificate of Authority: 000856

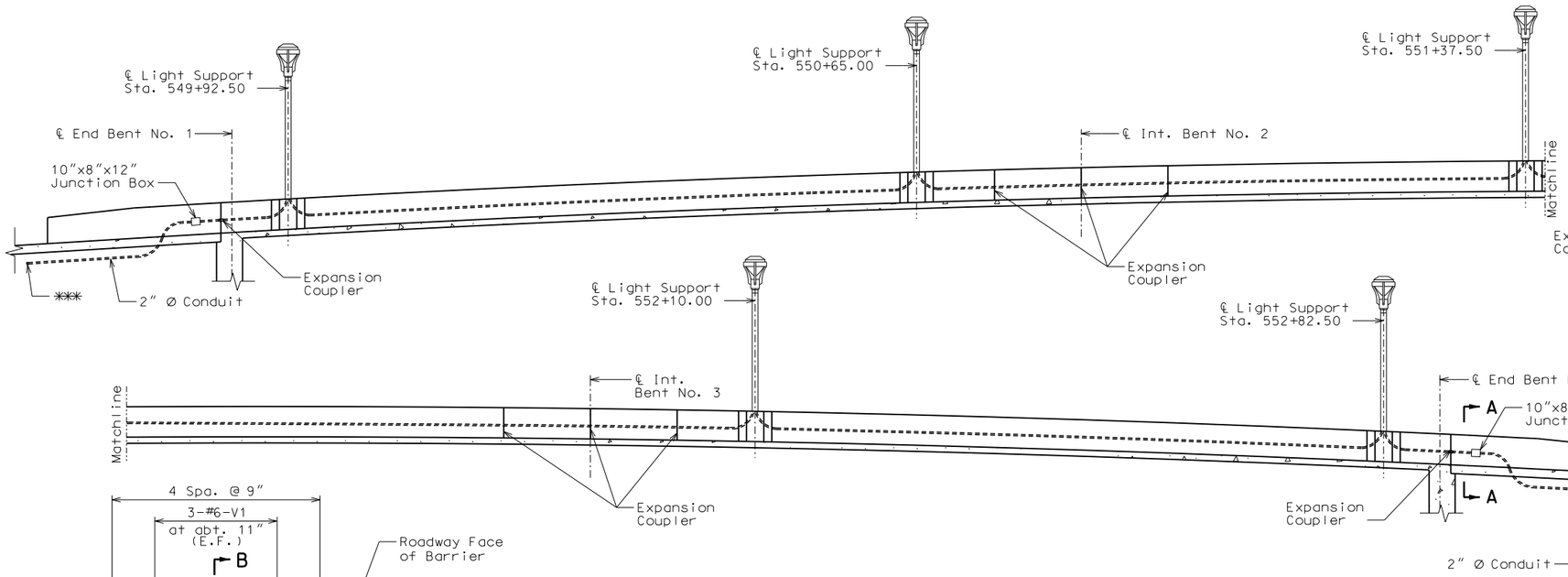

ELEVATION OF
CONDUIT IN RIGHT BARRIER

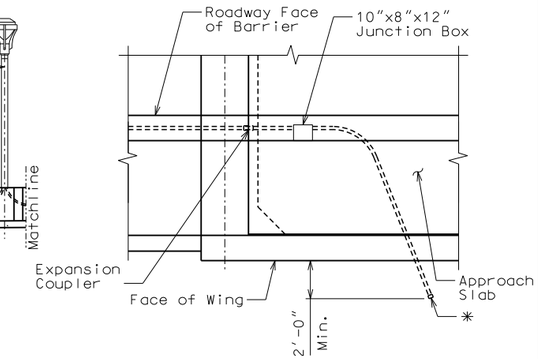

PART PLAN AT END BENT NO. 4
(End Bent No. 1 similar)

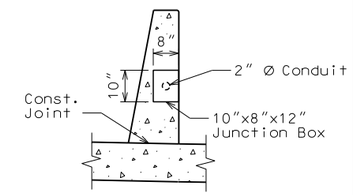

SECTION A-A

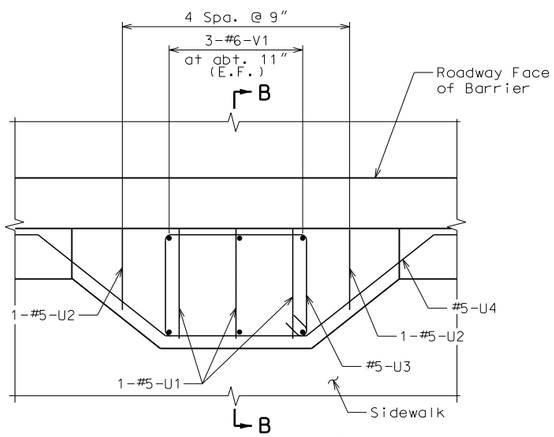

PLAN OF LIGHT POLE SUPPORT
SHOWING REINFORCING

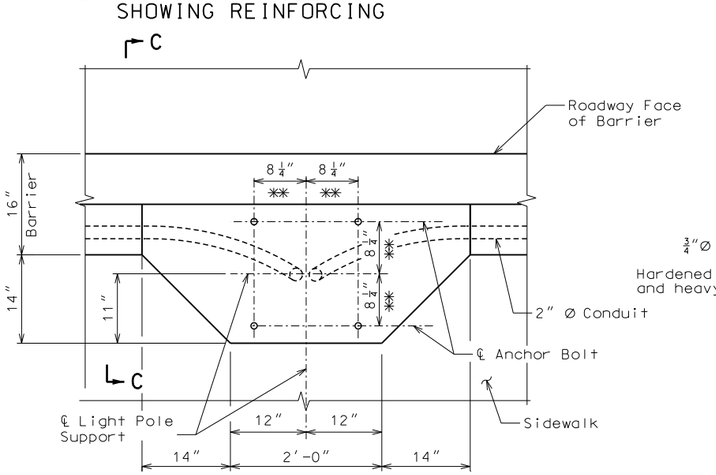

PLAN OF LIGHT POLE SUPPORT
SHOWING ANCHOR BOLTS

✱ - Capped end to be placed 2' min. below ground outside of sidewalk.

✱✱ - Values for anchor bolts shown are for a StressCrete KWC-15 light pole, adjust if alternate pole is used.

✱✱✱ - See Roadway Plans for continuation

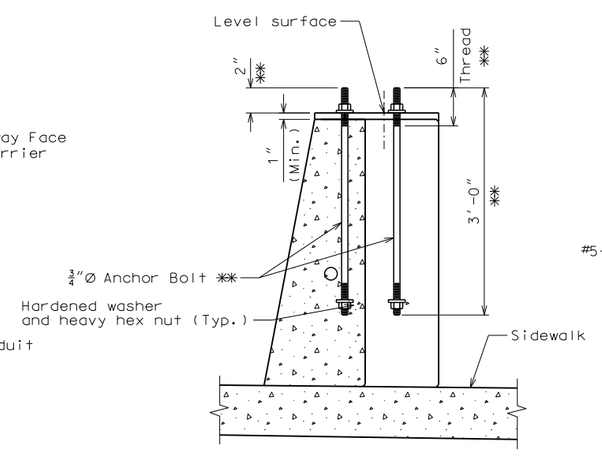

SECTION C-C

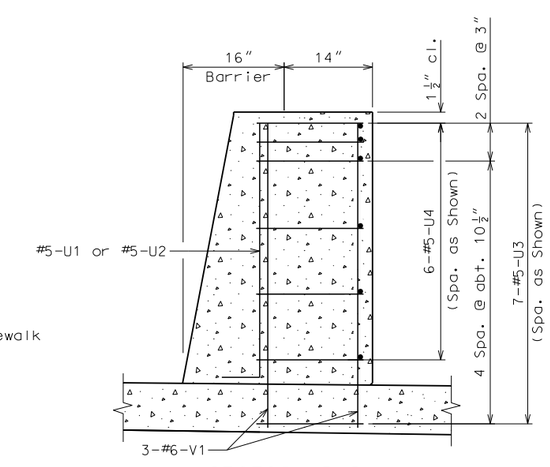

SECTION B-B

Notes:
Cost of furnishing and placing anchor bolts for light standard will be considered completely covered by the contract unit price for other items

All conduits rigid nonmetalic schdule 40 heavy wall polyvinal chloride (PVC) with 3" minimum cover in concrete. Each section of conduit shall bear the Underwriters Laboratories (UL) label.

Anchor bolts and nuts shall be ASTM F1554 Grade 55. Anchor bolts, nuts and washers shall be fully glavanized.

Shift reinforcing steel in field where necessary to clear conduit and junction boxes.

Top of the light standards supports shall be made horizontal; anchor bolts shall be placed vertically.

For details of light supports and fixtures, see Roadway Job Special Provisions.

Wiring and connection of light fixtures shall be completed by others

Expansion fittings shall be placed as shown and set in accordance with the manufacturer's requirements based on the air temperature at the time of setting given an estimated movement of 2 3/4 inches at open joints and 1/2 inches at filled joints using a maximum temperature range of 150°F and a maximum temperature of 120°F.

All junction boxes shall be PVC molded in accordance with Sec 1062 and designed for flush mounting. The conduit terminations shall be permanent or separable. The terminations and covers shall be watertight construction and shall meet requirements for NEMA 4 enclosure.

Drainage shall be provided at low points or other critical locations of all conduits and all junction boxes in accordance with Sec 707.

All conduits shall be sloped to drain where possible.

Payment for furnishing and installing Conduit System, complete in place, will be considered completeley covered by the contract lump sum price for Conduit System on Structure.

CONDUIT AND LIGHT SUPPORT DETAILS

Detailed September 2016
Checked October 2016

Note: This drawing is not to scale. Follow dimensions.

STATE OF MISSOURI
DAVID GRAHAM BARRETT
NUMBER PE-2006002787
PROFESSIONAL ENGINEER

THIS SHEET HAS BEEN SIGNED, SEALED AND DATED ELECTRONICALLY

DATE PREPARED	
11/1/2016	
ROUTE 96	STATE MO
DISTRICT BR	SHEET NO. 28
COUNTY JASPER	
JOB NO. J7P2228F	
CONTRACT ID.	
PROJECT NO.	
BRIDGE NO. A8425	

DESCRIPTION	DATE

MISSOURI HIGHWAYS AND TRANSPORTATION COMMISSION
105 WEST CAPITOL
JEFFERSON CITY, MO 65102
1-888-ASK-MODOT (1-888-275-6636)

HDR Engineering, Inc.
4435 Main Street
Suite 1000
Kansas City, MO 64111-1856
816-360-2700
Certificate of Authority: 000856

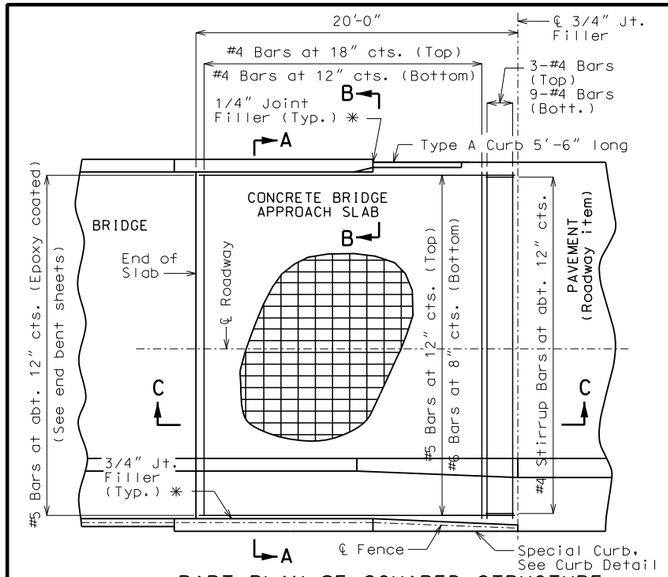

PART PLAN OF SQUARED STRUCTURE

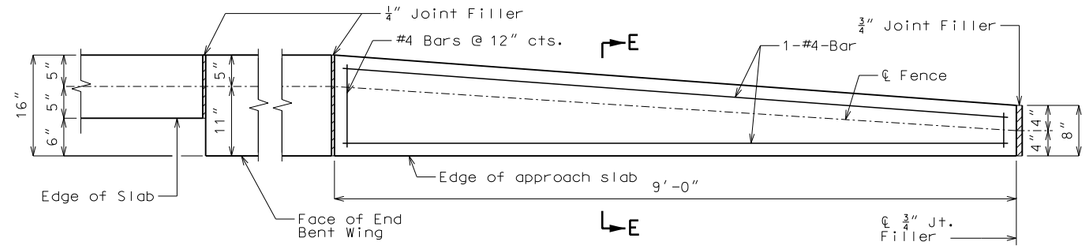

SPECIAL CURB DETAIL
(End Bent No. 4 shown, End Bent No. 1 similar)

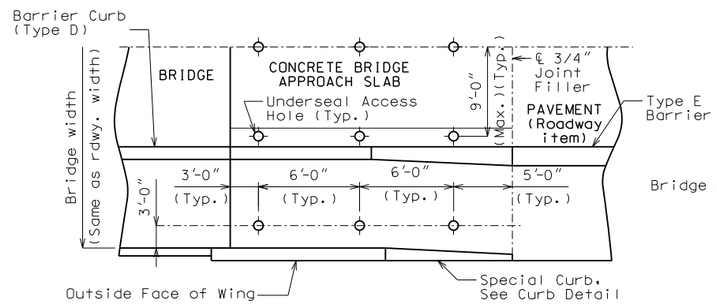

PART PLAN SHOWING UNDERSEAL ACCESS HOLES

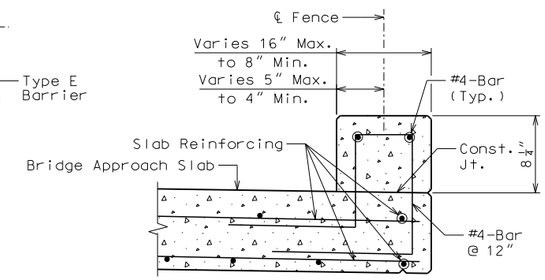

SECTION E-E

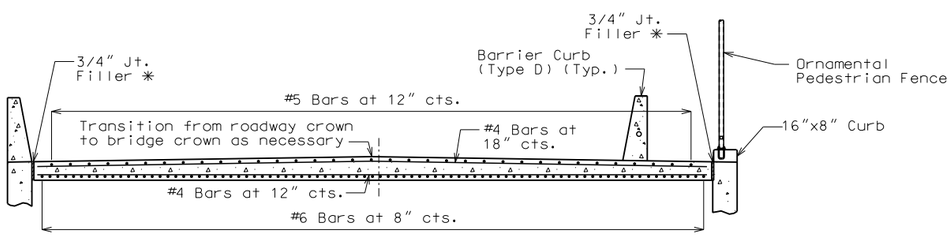

SECTION A-A

With the approval of the engineer, the contractor may crown the bottom of the approach slab to match the crown of the roadway surface.

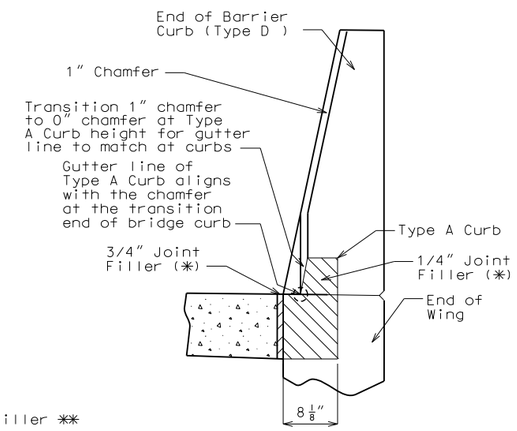

SECTION B-B

TYPICAL UNDERSEAL ACCESS HOLE DETAIL

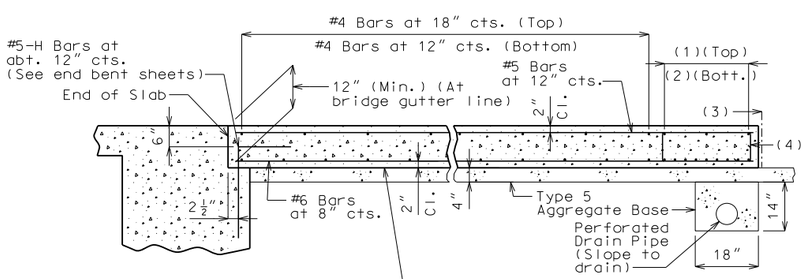

SECTION C-C
(Integral end bent)

(1) 3-#4 Bars

(2) 9-#4 Bars

(3) ℄ 3/4" Jt. Filler ✱✱

(4) #4 Stirrup Bars at abt. 12" cts.; 2'-0"x 8" (Min.) out to out; Actual length = 5'-10" (Min.); 90° stirrup hook at bottom; Stirrup height (8") and actual length vary due to crown.

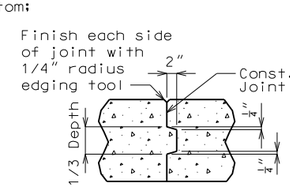

CONCRETE CONST. JOINT DETAIL
(If required)

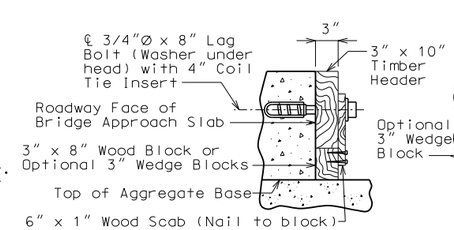

DETAILS OF TIMBER HEADER
Remove timber header when concrete pavement is placed.

Notes:

The contractor shall pour and satisfactorily finish the bridge slab before placing the bridge approach slab.

Drain pipe maybe either 6" diameter corrugated metallic-coated pipe underdrain, 4" diameter corrugated polyvinyle chloride (PVC) drain pipe, or 4" diameter corrugated polyethylene (PE) drain pipe.

All concrete for the bridge approach slab shall be in accordance with Sec 503 (f'c = 4,000 psi).

The reinforcing steel in the bridge approach slab shall be epoxy coated Grade 60 with fy = 60,000 psi.

Longitudinal construction joints in bridge approach slab shall be aligned with longitudinal construction joints in bridge slab.

Minimum clearance to reinforcing steel shall be 1 1/2", unless otherwise shown.

The reinforcing steel in the bridge approach slab shall be continuous. The transverse reinforcing steel may be made continuous by lap splicing the #4 bars 23".

All joint filler shall be in accordance with Sec 1057 for preformed fiber expansion joint filler except as noted.

Payment for furnishing all materials, labor and excavation necessary to construct the concrete bridge approach slab, including the timber header, underdrain, Type 5 aggregate base, joint filler, and all other appurtenances and incidental work as shown on this sheet, complete in place, will be considered completely covered by the contract unit price for Bridge Approach Slab (Minor Road) per square yard.

See Missouri Standard Plans Drawing 609.00 for details of Type A Curb.

✱ Seal joint between vertical face of bridge approach slab and wing with "Silicone Joint Sealant for Saw Cut and Formed Joints" in accordance with Sec 717.

For details of Curb on End Bent Wing, see Sheet No. 4 & 12.

For details of Barrier Curb (Type D) mounted to approach slab, see Sheet No. 24.

For details of Ornamental Pedestrian Fence, see Sheet No. 27.

STATE OF MISSOURI
DAVID GRAHAM BARRETT
NUMBER PE-2006002787
PROFESSIONAL ENGINEER

THIS SHEET HAS BEEN SIGNED, SEALED AND DATED ELECTRONICALLY

DATE PREPARED	
11/1/2016	
ROUTE 96	STATE MO
DISTRICT BR	SHEET NO. 29
COUNTY JASPER	
JOB NO. J7P2228F	
CONTRACT ID.	
PROJECT NO.	
BRIDGE NO. A8425	

DATE	DESCRIPTION

MISSOURI HIGHWAYS AND TRANSPORTATION COMMISSION
105 WEST CAPITOL
JEFFERSON CITY, MO 65102
1-888-ASK-MODOT (1-888-275-6636)

HDR Engineering, Inc.
4435 Main Street
Suite 1000
Kansas City, MO 64111-1856
816-360-2700
Certificate of Authority: 000856

DETAIL OF BRIDGE APPROACH SLAB (MINOR ROAD)

Detailed September 2016
Checked October 2016

Note: This drawing is not to scale. Follow dimensions.

BILL OF REINFORCING STEEL

NO. REQ'D.	MARK NO. SIZE	MARK NO. MARK	LOCATION	EPOXY (E)	SHAPE NO.	STIRRUP (S)	SUBSTR. (X)	VARIES (V)	NO. EACH	B FT. IN.	C FT. IN.	D FT. IN.	E FT. IN.	F FT. IN.	H FT. IN.	K FT. IN.	NOMINAL LENGTH FT. IN.	ACTUAL LENGTH FT. IN.	WEIGHT LBS.
			SUBSTRUCTURE																
			INT BENT NO. 2																
28	6	D200	KEY		20		X			2 6.000							2 6	2 6	105
8	9	H200	BEAM		20		X			40 9.000							40 9	40 9	1108
10	6	H201	BEAM		20		X			40 9.000							40 9	40 9	612
8	9	H202	BEAM		18		X			40 9.000							43 3	43 3	1176
4	6	H203	BEAM		20		X			13 0.000							13 0	13 0	78
181	4	P200	SHAFT		16		X			3 6.000							13 1	12 11	1562
159	4	P201	COLUMN		16		X			2 9.000							11 1	10 11	1159
37	6	U200	BEAM		13	S	X			3 3.000	4 6.000	3 3.000	4 6.000				16 10	16 4	908
6	6	U201	BEAM		10	S	X				4 6.000	3 3.000					12 3	11 11	107
3	6	U202	BEAM		10	S	X				4 9.500	3 3.000					12 10	12 6	56
12	4	U203	BEAM		10	S	X				12.000	3 3.000					5 3	5 1	41
14	6	U204	BEAM		10	S	X				22.000	3 1.500					6 10	6 6	137
13	6	U205	BEAM		13	S	X			3 3.000	4 9.500	3 3.000	4 9.500				17 5	16 11	330
24	9	V200	SHAFT		20		X			43 4.000							43 4	43 4	3536
24	9	V201	SHAFT		20		X			39 6.000							39 6	39 6	3223
24	9	V202	SHAFT		20		X			35 10.000							35 10	35 10	2924
42	8	V203	COLUMN		20		X			8 0.000							8 0	8 0	897
42	8	V204	COLUMN		20		X			22 8.000							22 8	22 8	2542
			INT BENT NO. 3																
28	6	D300	KEY		20		X			2 6.000							2 6	2 6	105
8	9	H300	BEAM		20		X			40 9.000							40 9	40 9	1108
10	6	H301	BEAM		20		X			40 9.000							40 9	40 9	612
8	9	H302	BEAM		18		X			40 9.000							43 3	43 3	1176
4	6	H303	BEAM		20		X			13 0.000							13 0	13 0	78
4	6	H304	WALL		20		X			31 8.000							31 8	31 8	190
6	6	H305	WALL		20		X			35 3.000							35 3	35 3	318
20	5	H306	WALL		20		X			31 8.000							31 8	31 8	661
183	4	P300	SHAFT		16		X			3 6.000							13 1	12 11	1579
204	4	P301	COLUMN		16		X			2 9.000							11 1	10 11	1488
37	6	U300	BEAM		13	S	X			3 3.000	4 6.000	3 3.000	4 6.000				16 10	16 4	908
6	6	U301	BEAM		10	S	X				4 6.000	3 3.000					12 3	11 11	107
3	6	U302	BEAM		10	S	X				4 9.625	3 3.000					12 10	12 6	56
12	4	U303	BEAM		10	S	X				12.000	3 3.000					5 3	5 1	41
14	6	U304	BEAM		10	S	X				22.000	3 1.500					6 10	6 6	137
13	6	U305	BEAM		13	S	X			3 3.000	4 9.625	3 3.000	4 9.625				17 5	16 11	330
24	5	U306	WALL		7		X			4 11.375	3 6.750						11 11	11 10	296
36	5	U307	WALL		10		X				3 4.000	11 0.750					17 9	17 6	657
24	9	V300	SHAFT		20		X			42 6.000							42 6	42 6	3468
24	9	V301	SHAFT		20		X			40 2.000							40 2	40 2	3278
24	9	V302	SHAFT		20		X			37 9.000							37 9	37 9	3080
42	8	V303	COLUMN		20		X			8 0.000							8 0	8 0	897
42	8	V304	COLUMN		20		X			28 0.000							28 0	28 0	3140
20	5	V305	WALL		20		X			11 1.000							11 1	11 1	231

BILL OF REINFORCING STEEL

NO. REQ'D.	MARK NO. SIZE	MARK NO. MARK	LOCATION	EPOXY (E)	SHAPE NO.	STIRRUP (S)	SUBSTR. (X)	VARIES (V)	NO. EACH	B FT. IN.	C FT. IN.	D FT. IN.	E FT. IN.	F FT. IN.	H FT. IN.	K FT. IN.	NOMINAL LENGTH FT. IN.	ACTUAL LENGTH FT. IN.	WEIGHT LBS.
			SUPERSTRUCTURE																
			INT. BENT NO. 2 DIAPHRAGM																
12	5	H251	DIAPHRAGM		20				4 6.000								4 6	4 6	56
8	5	H252	DIAPHRAGM		20				3 5.000								3 5	3 5	29
16	6	H253	DIAPHRAGM		20				7 0.000								7 0	7 0	168
16	4	H254	DIAPHRAGM		20				8 5.000								8 5	8 5	90
20	5	H255	DIAPHRAGM		6	S			3 2.000	9.000							3 11	3 10	80
48	4	U251	DIAPHRAGM	E	28	S				2 1.000	4 9.125	12.000					7 10	7 8	246
16	6	U252	DIAPHRAGM	E	28	S				2 3.000	4 9.750	14.000					8 3	7 11	190
8	5	V251	DIAPHRAGM	E	20				5 0.000								5 0	5 0	42
			INT. BENT NO. 3 DIAPHRAGM																
12	5	H351	DIAPHRAGM		20				4 6.000								4 6	4 6	56
8	5	H352	DIAPHRAGM		20				3 5.000								3 5	3 5	29
16	6	H353	DIAPHRAGM		20				7 0.000								7 0	7 0	168
16	4	H354	DIAPHRAGM		20				8 5.000								8 5	8 5	90
20	5	H355	DIAPHRAGM		6	S			3 2.000	9.000							3 11	3 10	80
48	4	U351	DIAPHRAGM	E	28	S				2 1.000	4 8.500	12.000					7 10	7 8	246
16	6	U352	DIAPHRAGM	E	28	S				2 3.000	4 8.875	14.000					8 2	7 10	188
8	5	V351	DIAPHRAGM	E	20				5 0.000								5 0	5 0	42

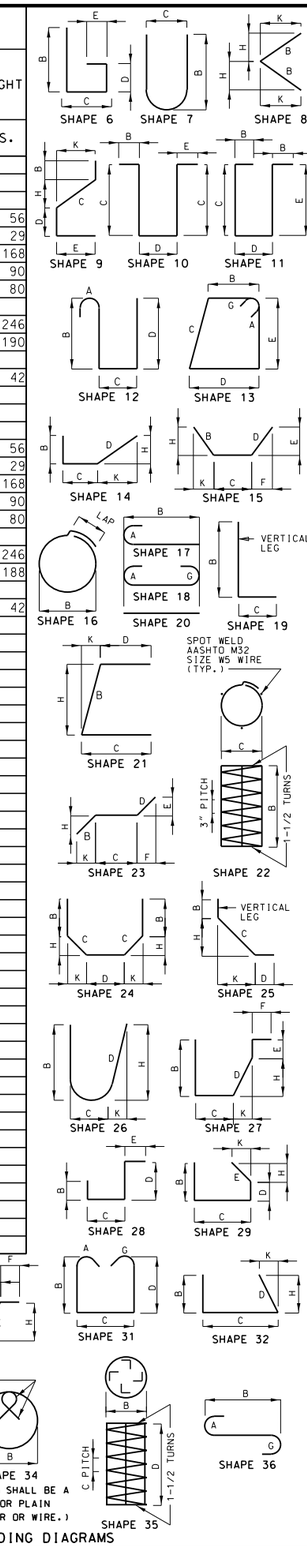

BENDING DIAGRAMS

STATE OF MISSOURI
DAVID GRAHAM BARRETT
NUMBER PE-2006002787
PROFESSIONAL ENGINEER

THIS SHEET HAS BEEN SIGNED, SEALED AND DATED ELECTRONICALLY

DATE PREPARED 11/1/2016

ROUTE	STATE
96	MO
DISTRICT	SHEET NO.
BR	30

COUNTY: JASPER

JOB NO.: J7P2228F

CONTRACT ID.

PROJECT NO.

BRIDGE NO.: A8425

DESCRIPTION

DATE

MISSOURI HIGHWAYS AND TRANSPORTATION COMMISSION
105 WEST CAPITOL
JEFFERSON CITY, MO 65102
1-888-ASK-MODOT (1-888-275-6636)

HDR Engineering, Inc.
4435 Main Street
Suite 1000
Kansas City, MO 64111-1856
816-360-2700
Certificate of Authority: 000856

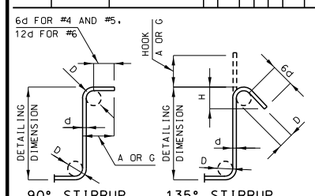

STIRRUP HOOK DIMENSIONS				
GRADES 40 - 50 - 60 KSI				
BAR SIZE	D (IN.)	90° HOOK	135° HOOK	
		HOOK A OR G	HOOK A OR G	APPROX. H
#4	2"	4 1/2"	4 1/2"	3"
#5	2 1/2"	6"	5 1/2"	3 3/4"
#6	4 1/2"	12"	8"	4 1/2"

NOTE: UNLESS OTHERWISE NOTED, DIAMETER "D" IS THE SAME FOR ALL BENDS AND HOOKS ON A BAR.

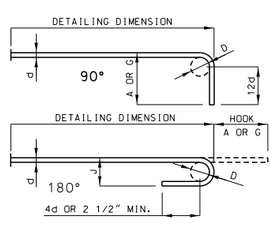

END HOOK DIMENSIONS				
BAR SIZE	D (IN.)	ALL GRADES		
		180° HOOKS		90° HOOKS
		A OR G	J	A OR G
#3	2 1/4"	5"	3"	6"
#4	3"	6"	4"	8"
#5	3 3/4"	7"	5"	10"
#6	4 1/2"	8"	6"	12"
#7	5 1/4"	10"	7"	14"
#8	6"	11"	8"	16"
#9	9 1/2"	15"	11 3/4"	19"
#10	10 3/4"	17"	13 1/4"	22"
#11	12"	19"	14 3/4"	2'-0"
#14	18 1/4"	2'-3"	21 3/4"	2'-7"

NOTE:
ALL STANDARD HOOKS AND BENDS OTHER THAN 180 DEGREE ARE TO BE BENT WITH SAME PROCEDURE AS FOR 90 DEGREE STANDARD HOOKS.
HOOKS AND BENDS SHALL BE IN ACCORDANCE WITH THE PROCEDURES AS SHOWN ON THIS SHEET.
E = EPOXY COATED REINFORCEMENT.
S = STIRRUP.
X = BAR IS INCLUDED IN SUBSTRUCTURE QUANTITIES.
V = BAR DIMENSIONS VARY IN EQUAL INCREMENTS BETWEEN DIMENSIONS SHOWN ON THIS LINE AND THE FOLLOWING LINE.
NO. EA. = NUMBER OF BARS OF EACH LENGTH.
NOMINAL LENGTHS ARE BASED ON OUT TO OUT DIMENSIONS SHOWN IN BENDING DIAGRAMS AND ARE LISTED FOR FABRICATORS USE. (NEAREST INCH)
ACTUAL LENGTHS ARE MEASURED ALONG CENTERLINE BAR TO THE NEAREST INCH.
PAYWEIGHTS ARE BASED ON ACTUAL LENGTHS.
FOUR ANGLE OR CHANNEL SPACERS ARE REQUIRED FOR EACH COLUMN SPIRAL. SPACERS ARE TO BE PLACED ON INSIDE OF SPIRALS. LENGTH AND WEIGHT OF COLUMN SPIRALS DO NOT INCLUDE SPLICES OR SPACERS.
REINFORCING STEEL (GRADE 60) FY = 60,000 PSI.

Detailed September 2016
Checked October 2016

Note: This drawing is not to scale. Follow dimensions.

BILL OF REINFORCING STEEL

NO. REQ'D.	MARK NO. SIZE	MARK NO. MARK	LOCATION	EPOXY (E)	SHAPE NO.	STIRRUP (S)	SUBSTR. (X)	VARIES (V)	NO. EACH	B FT. IN.	C FT. IN.	D FT. IN.	E FT. IN.	F FT. IN.	H FT. IN.	K FT. IN.	NOMINAL LENGTH FT. IN.	ACTUAL LENGTH FT. IN.	WEIGHT LBS.
SUPERSTRUCTURE (CONTINUED)																			
			END BENT NO. 1																
8	7	H100	BEAM		20				44	8.000							44 8	44 8	730
4	6	H101	BEAM		20				44	8.000							44 8	44 8	268
4	6	H102	BEAM		20				13	0.000							13 0	13 0	78
2	6	H103	DIAPHRAGM		20				2	11.000							2 11	2 11	9
3	6	H104	DIAPHRAGM		20				3	7.000							3 7	3 7	16
8	6	H105	DIAPHRAGM		20				7	0.000							7 0	7 0	84
12	6	H106	DIAPHRAGM		20				8	5.000							8 5	8 5	152
5	6	H107	DIAPHRAGM		20				44	8.000							44 8	44 8	335
5	5	H108	DIAPHRAGM		20				4	6.000							4 6	4 6	23
4	6	H109	DIAPHRAGM	E	20				44	8.000							44 8	44 8	268
43	5	H110	DIAPHRAGM	E	19	S			2	0.000	15.000						3 3	3 2	142
40	7	H111	WING		20				13	0.000							13 0	13 0	1063
12	8	H112	WING		20				13	4.000							13 4	13 4	427
4	8	H113	WING	E	20				13	4.000							13 4	13 4	142
2	6	H114	DIAPHRAGM		20				2	5.000							2 5	2 5	7
3	6	H115	DIAPHRAGM		20				3	1.000							3 1	3 1	14
22	6	F100	WING BRACE		23				14.000	4 5.000	14.000	9.875	9.875	9.875	9.875		6 9	6 8	220
10	6	F101	DIAPHRAGM		19	S			5	11.000	2 2.000						8 1	7 11	119
32	5	U100	BEAM		10	S					5 9.000	2 8.000					14 2	14 0	467
12	4	U101	BEAM		13	S			2	8.000	2 7.375	2 8.000	2 7.375				11 4	11 1	89
4	4	U102	BEAM		10	S					2 11.250	2 8.000					8 7	8 5	22
40	5	U103	DIAPHRAGM	E	10	S					4 11.375	2 2.000					12 1	11 11	497
40	6	U104	DIAPHRAGM		19	S			3	10.250	2 8.000						6 6	6 4	381
57	6	U105	DIAPHRAGM	E	19	S			3	5.000	4 6.000						7 11	7 9	664
4	4	U106	BEAM		13	S			2	8.000	2 10.875	2 8.000	2 10.875				11 11	11 8	31
16	5	V100	BEAM		20				5	9.000							5 9	5 9	96
20	6	V101	DIAPHRAGM		20				3	10.000							3 10	3 10	115
2	6	V102	WING	E	20				7	4.000							7 4	7 4	22
22	6	V103	WING	E	20			V	2	7 4.500							7 5	7 5	
										8 0.000							8 0	8 0	254
22	6	V104	WING	E	20			V	2	7 5.500							7 6	7 6	
										8 1.000							8 1	8 1	257
2	6	V105	WING	E	20					7 5.000							7 5	7 5	22
15	4	K100	CURB	E	10	S					2 0.000	12.000					5 0	4 10	48
2	4	K101	CURB	E	20				13	8.000							13 8	13 8	18

BILL OF REINFORCING STEEL

NO. REQ'D.	MARK NO. SIZE	MARK NO. MARK	LOCATION	EPOXY (E)	SHAPE NO.	STIRRUP (S)	SUBSTR. (X)	VARIES (V)	NO. EACH	B FT. IN.	C FT. IN.	D FT. IN.	E FT. IN.	F FT. IN.	H FT. IN.	K FT. IN.	NOMINAL LENGTH FT. IN.	ACTUAL LENGTH FT. IN.	WEIGHT LBS.
SUPERSTRUCTURE (CONTINUED)																			
			END BENT NO. 4																
8	7	H400	BEAM		20				44	8.000							44 8	44 8	730
4	6	H401	BEAM		20				44	8.000							44 8	44 8	268
4	6	H402	BEAM		20				13	0.000							13 0	13 0	78
2	6	H403	DIAPHRAGM		20				2	11.000							2 11	2 11	9
3	6	H404	DIAPHRAGM		20				3	7.000							3 7	3 7	16
8	6	H405	DIAPHRAGM		20				7	0.000							7 0	7 0	84
12	6	H406	DIAPHRAGM		20				8	5.000							8 5	8 5	152
5	6	H407	DIAPHRAGM		20				44	8.000							44 8	44 8	335
5	5	H408	DIAPHRAGM		20				4	6.000							4 6	4 6	23
4	6	H409	DIAPHRAGM	E	20				44	8.000							44 8	44 8	268
43	5	H410	DIAPHRAGM	E	19	S			2	0.000	15.000						3 3	3 2	142
40	7	H411	WING		20				13	0.000							13 0	13 0	1063
12	8	H412	WING		20				13	4.000							13 4	13 4	427
4	8	H413	WING	E	20				13	4.000							13 4	13 4	142
2	6	H414	DIAPHRAGM		20				2	5.000							2 5	2 5	7
3	6	H415	DIAPHRAGM		20				3	1.000							3 1	3 1	14
22	6	F400	WING BRACE		23				14.000	4 5.000	14.000	9.875	9.875	9.875	9.875		6 9	6 8	220
10	6	F401	DIAPHRAGM		19	S			5	11.000	2 2.000						8 1	7 11	119
32	5	U400	BEAM		10	S					5 10.000	2 8.000					14 4	14 2	473
12	4	U401	BEAM		13	S			2	8.000	2 7.375	2 8.000	2 7.375				11 4	11 1	89
4	4	U402	BEAM		10	S					2 11.375	2 8.000					8 7	8 5	22
40	5	U403	DIAPHRAGM	E	10	S					4 11.000	2 2.000					12 0	11 10	494
40	6	U404	DIAPHRAGM		19	S			3	9.785	2 8.000						6 6	6 4	381
57	6	U405	DIAPHRAGM	E	19	S			3	5.000	4 6.000						7 11	7 9	664
4	4	U406	BEAM		13	S			2	8.000	2 10.875	2 8.000	2 10.875				11 11	11 8	31
16	5	V400	BEAM		20				5	9.000							5 9	5 9	96
20	6	V401	DIAPHRAGM		20				3	9.000							3 9	3 9	113
2	6	V402	WING	E	20				7	6.000							7 6	7 6	23
22	6	V403	WING	E	20			V	2	7 6.750							7 7	7 7	
										8 1.000							8 1	8 1	259
22	6	V404	WING	E	20			V	2	7 5.750							7 6	7 6	
										8 0.000							8 0	8 0	256
2	6	V405	WING	E	20					7 5.375							7 5	7 5	22
15	4	K400	CURB	E	10	S					2 0.000	12.000					5 0	4 10	48
2	4	K401	CURB	E	20				13	8.000							13 8	13 8	18
			SLAB																
301	5	S1	SLAB	E	20				4	0.000							4 0	4 0	1256
481	5	S2	SLAB	E	20				13	3.000							13 3	13 3	6647
120	5	S3	SLAB	E	20				53	5.000							53 5	53 5	6686
601	6	S4	SLAB	E	20				44	3.000							44 3	44 3	39945
144	8	S5	SLAB	E	20				51	10.000							51 10	51 10	19929
140	8	S6	SLAB	E	20				28	0.000							28 0	28 0	10466
12	4	S7	CURB	E	20				52	1.000							52 1	52 1	418
301	4	S8	CURB	E	11	S				12.000	12.000	7.000	11.000				4 6	4 2	838
315	4	S9	HAUNCH	E	10	S				6.000	7.000	12.000	6.000				3 2	2 10	596
72	5	S10	SLAB	E	20				59	3.000							59 3	59 3	4449

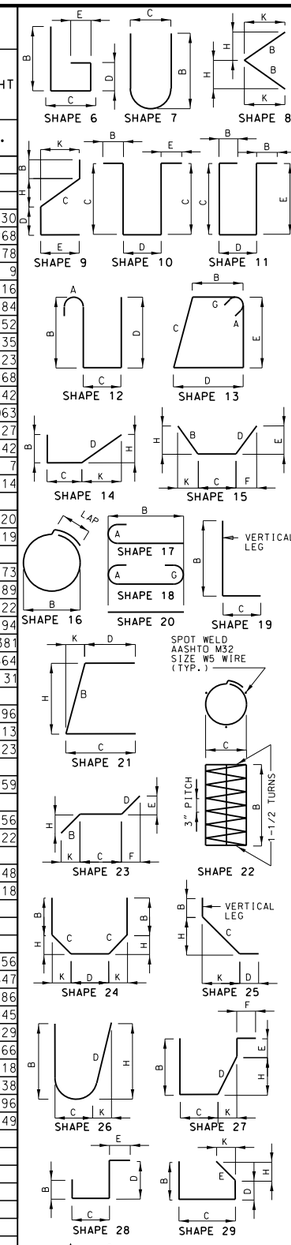

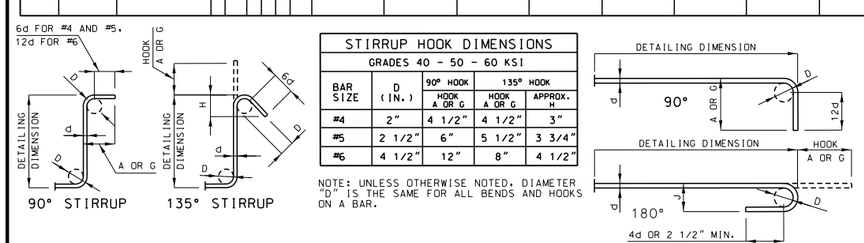

STIRRUP HOOK DIMENSIONS				
GRADES 40 - 50 - 60 KSI				
BAR SIZE	D (IN.)	90° HOOK	135° HOOK	
		HOOK A OR G	HOOK A OR G	APPROX. H
#4	2"	4 1/2"	4 1/2"	3"
#5	2 1/2"	6"	5 1/2"	3 3/4"
#6	4 1/2"	12"	8"	4 1/2"

NOTE: UNLESS OTHERWISE NOTED, DIAMETER "D" IS THE SAME FOR ALL BENDS AND HOOKS ON A BAR.

END HOOK DIMENSIONS				
BAR SIZE	D (IN.)	ALL GRADES		
		180° HOOKS		90° HOOKS
		A OR G	J	A OR G
#3	2 1/4"	5"	3"	6"
#4	3"	6"	4"	8"
#5	3 3/4"	7"	5"	10"
#6	4 1/2"	8"	6"	12"
#7	5 1/4"	10"	7"	14"
#8	6"	11"	8"	16"
#9	9 1/2"	15"	11 3/4"	19"
#10	10 3/4"	17"	13 1/4"	22"
#11	12"	19"	14 3/4"	2'-0"
#14	18 1/4"	2'-3"	21 3/4"	2'-7"

NOTE:
ALL STANDARD HOOKS AND BENDS OTHER THAN 180 DEGREE ARE TO BE BENT WITH SAME PROCEDURE AS FOR 90 DEGREE STANDARD HOOKS.
HOOKS AND BENDS SHALL BE IN ACCORDANCE WITH THE PROCEDURES AS SHOWN ON THIS SHEET.
E = EPOXY COATED REINFORCEMENT.
S = STIRRUP.
X = BAR IS INCLUDED IN SUBSTRUCTURE QUANTITIES.
V = BAR DIMENSIONS VARY IN EQUAL INCREMENTS BETWEEN DIMENSIONS SHOWN ON THIS LINE AND THE FOLLOWING LINE.
NO. EA. = NUMBER OF BARS OF EACH LENGTH.
NOMINAL LENGTHS ARE BASED ON OUT TO OUT DIMENSIONS SHOWN IN BENDING DIAGRAMS AND ARE LISTED FOR FABRICATORS USE. (NEAREST INCH)
ACTUAL LENGTHS ARE MEASURED ALONG CENTERLINE BAR TO THE NEAREST INCH.
PAYWEIGHTS ARE BASED ON ACTUAL LENGTHS.
FOUR ANGLE OR CHANNEL SPACERS ARE REQUIRED FOR EACH COLUMN SPIRAL. SPACERS ARE TO BE PLACED ON INSIDE OF SPIRALS. LENGTH AND WEIGHT OF COLUMN SPIRALS DO NOT INCLUDE SPLICES OR SPACERS.
REINFORCING STEEL (GRADE 60) FY = 60,000 PSI.

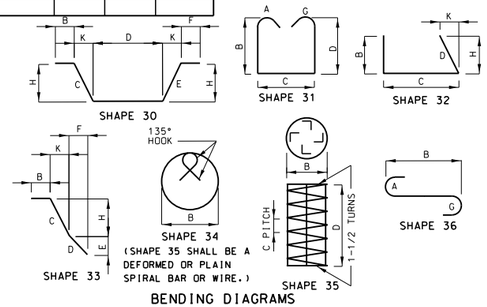

BENDING DIAGRAMS

STATE OF MISSOURI
DAVID GRAHAM BARRETT
NUMBER PE-2006002787
PROFESSIONAL ENGINEER

THIS SHEET HAS BEEN SIGNED, SEALED AND DATED ELECTRONICALLY

DATE PREPARED 11/1/2016

ROUTE	STATE
96	MO
DISTRICT	SHEET NO.
BR	31

COUNTY: JASPER
JOB NO.: J7P2228F
CONTRACT ID.:
PROJECT NO.:
BRIDGE NO.: A8425

DESCRIPTION	DATE

MISSOURI HIGHWAYS AND TRANSPORTATION COMMISSION
105 WEST CAPITOL
JEFFERSON CITY, MO 65102
1-888-ASK-MODOT (1-888-275-6636)

HDR Engineering, Inc.
4435 Main Street
Suite 1000
Kansas City, MO 64111-1856
816-360-2700
Certificate of Authority: 000856

Detailed September 2016
Checked October 2016

Note: This drawing is not to scale. Follow dimensions.

BILL OF REINFORCING STEEL

NO. REQ'D.	MARK NO. SIZE	MARK NO. MARK	LOCATION	EPOXY (E)	SHAPE NO.	STIRRUP (S)	SUBSTR. (X)	VARIES (V)	NO. EACH	B FT. IN.	C FT. IN.	D FT. IN.	E FT. IN.	F FT. IN.	H FT. IN.	K FT. IN.	NOMINAL LENGTH FT. IN.	ACTUAL LENGTH FT. IN.	WEIGHT LBS.
			BARRIER CURB																
40	5	C1	SLIP FORM	E	20					10 3.000							10 3	10 3	428
642	5	R1	BARRIER CURB	E	26					3 3.000	5.750	3 3.625			3 3.000	6.875	6 10	6 10	4576
642	5	R2	BARRIER CURB	E	19	S				20.000	10.000						2 6	2 5	1618
642	5	R3	BARRIER CURB	E	27	S					10.000	15.250	6.000	12.000	15.000	3.000	3 7	3 5	2288
80	5	R5	BARRIER CURB	E	20					9 9.000							9 9	9 9	814
40	5	R6	BARRIER CURB	E	20					44 10.000							44 10	44 10	1870
40	5	R7	BARRIER CURB	E	20					44 11.000							44 11	44 11	1874
40	5	R8	BARRIER CURB	E	20					46 1.000							46 1	46 1	1923
20	5	R9	BARRIER CURB	E	20					19 8.000							19 8	19 8	410
44	5	R10	BARRIER CURB	E	9	S				12.000	2 6.000				2.875	2 5.875	3 6	3 5	157
44	5	R11	BARRIER CURB	E	9	S				5.000	2 9.000				2.625	2 8.875	3 2	3 1	142
12	5	K1	BARRIER CURB	E	19	S		V	2	2 4.250	7.250						3 0	2 11	
										2 6.750	6.875						3 2	3 1	37
12	5	K2	BARRIER CURB	E	15	S		V	2	7.250	20.125	8.500	1.625	8.375	7.125	1.375	3 0	2 11	
										6.875	2 7.250	0.000	0.000	0.000	6.750	1.250	3 2	3 1	38
2	5	K3	BARRIER CURB	E	19	S				2 7.250	6.750						3 2	3 1	6
2	5	K4	BARRIER CURB	E	15	S				6.750	2 7.750				6.625	1.250	3 3	3 2	7
8	5	K5	BARRIER CURB	E	19	S		V	2	2 7.750	6.625						3 2	3 1	
										2 10.000	6.250						3 4	3 3	26
8	5	K6	BARRIER CURB	E	15	S		V	2	6.625	2 8.375				6.500	1.250	3 3	3 2	
										6.250	2 10.625				6.125	1.125	3 5	3 4	27
6	5	K7	BARRIER CURB	E	19	S		V	2	2 11.500	5.875						3 5	3 4	
										3 2.500	5.375						3 8	3 7	22
6	5	K8	BARRIER CURB	E	15	S		V	2	6.000	3 0.125				5.875	1.125	3 6	3 5	
										5.375	3 3.250				5.250	1.000	3 9	3 8	22
14	5	K9	BARRIER CURB	E	19	S				3 3.000	5.250						3 8	3 7	52
14	5	K10	BARRIER CURB	E	15	S				5.250	3 3.750				5.125	1.000	3 9	3 8	54
12	5	K11	BARRIER CURB	E	27	S		V	2	3 4.125	9.750	6.750	2 9.500		6.625	1.250	7 6	7 4	
										3 4.125	9.750	17.000	23.375		16.750	3.250	7 6	7 4	92
30	5	K12	BARRIER CURB	E	27	S				3 4.125	9.750	17.000	23.375		16.750	3.250	7 6	7 4	229
20	5	K14	BARRIER CURB	E	20					13 9.000							13 9	13 9	287
4	5	K15	BARRIER CURB	E	20					13 2.000							13 2	13 2	55
4	5	K16	BARRIER CURB	E	20					10 2.000							10 2	10 2	42
4	5	K17	BARRIER CURB	E	20					7 2.000							7 2	7 2	30
			LIGHT BLISTER																
15	5	U1	BLISTER	E	10	S				6.000	3 3.500	18.500					8 8	8 4	130
10	5	U2	BLISTER	E	10	S				6.000	3 3.500	11.250					8 0	7 8	80
35	5	U3	BLISTER	E	13	S				22.500	19.000	22.500	19.000				7 10	7 6	274
30	5	U4	BLISTER	E	30	S				18.000	26.125	22.500	26.125	18.000	18.500	18.500	9 3	9 2	287
30	6	V1	BLISTER	E	20					4 0.000							4 0	4 0	180

BILL OF REINFORCING STEEL

NO. REQ'D.	MARK NO. SIZE	MARK NO. MARK	LOCATION	EPOXY (E)	SHAPE NO.	STIRRUP (S)	SUBSTR. (X)	VARIES (V)	NO. EACH	B FT. IN.	C FT. IN.	D FT. IN.	E FT. IN.	F FT. IN.	H FT. IN.	K FT. IN.	NOMINAL LENGTH FT. IN.	ACTUAL LENGTH FT. IN.	WEIGHT LBS.
			BAR SIZE SUMMARY																
			TOTALS																
	4																		6334
	4			E															2476
	5																		3351
	5			E															38294
	6																		9106
	6			E															43482
	7																		3586
	8																		8330
	8			E															30679
	9																		24077
			SLAB ON CONCRETE I-GIRDER																
	4																		464
	4			E															2476
	5																		1506
	5			E															20397
	6																		3930
	6			E															43302
	7																		3586
	8																		854
	8			E															30679
			REINFORCING STEEL (BRIDGES)																
	4																		5870
	5																		1845
	6																		5176
	8																		7476
	9																		24077
			BARRIER CURB																
	5			E															17469
	6			E															180
			SLIP FORM OPTION																
	5			E															428

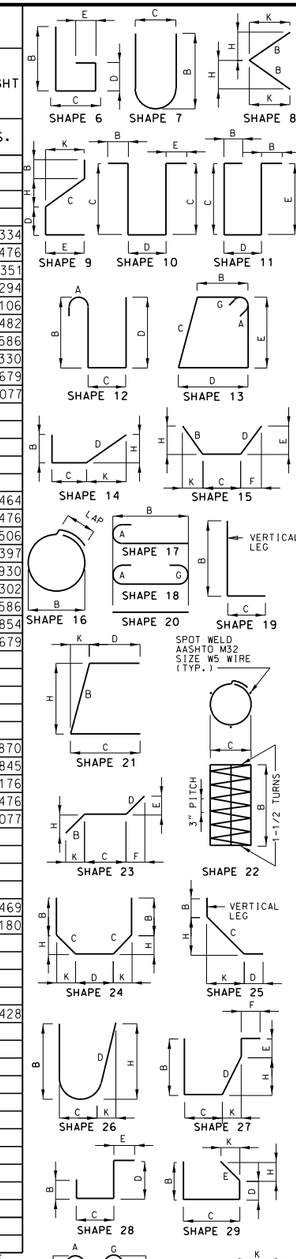

BENDING DIAGRAMS

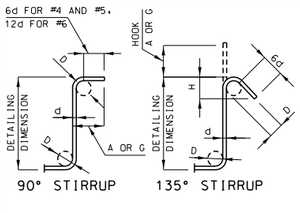

STIRRUP HOOK DIMENSIONS				
GRADES 40 - 50 - 60 KSI				
BAR SIZE	D (IN.)	90° HOOK	135° HOOK	
		HOOK A OR G	HOOK A OR G	APPROX. H
#4	2"	4 1/2"	4 1/2"	3"
#5	2 1/2"	6"	5 1/2"	3 3/4"
#6	4 1/2"	12"	8"	4 1/2"

NOTE: UNLESS OTHERWISE NOTED, DIAMETER "D" IS THE SAME FOR ALL BENDS AND HOOKS ON A BAR.

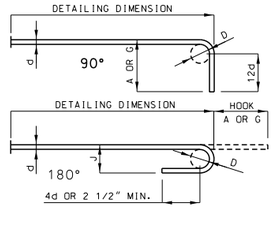

END HOOK DIMENSIONS				
BAR SIZE	D (IN.)	ALL GRADES		
		180° HOOKS		90° HOOKS
		A OR G	J	A OR G
#3	2 1/4"	5"	3"	6"
#4	3"	6"	4"	8"
#5	3 3/4"	7"	5"	10"
#6	4 1/2"	8"	6"	12"
#7	5 1/4"	10"	7"	14"
#8	6"	11"	8"	16"
#9	9 1/2"	15"	11 3/4"	19"
#10	10 3/4"	17"	13 1/4"	22"
#11	12"	19"	14 3/4"	2'-0"
#14	18 1/4"	2'-3"	21 3/4"	2'-7"

NOTE:
ALL STANDARD HOOKS AND BENDS OTHER THAN 180 DEGREE ARE TO BE BENT WITH SAME PROCEDURE AS FOR 90 DEGREE STANDARD HOOKS.
HOOKS AND BENDS SHALL BE IN ACCORDANCE WITH THE PROCEDURES AS SHOWN ON THIS SHEET.
E = EPOXY COATED REINFORCEMENT.
S = STIRRUP.
X = BAR IS INCLUDED IN SUBSTRUCTURE QUANTITIES.
V = BAR DIMENSIONS VARY IN EQUAL INCREMENTS BETWEEN DIMENSIONS SHOWN ON THIS LINE AND THE FOLLOWING LINE.
NO. EA. = NUMBER OF BARS OF EACH LENGTH.
NOMINAL LENGTHS ARE BASED ON OUT TO OUT DIMENSIONS SHOWN IN BENDING DIAGRAMS AND ARE LISTED FOR FABRICATORS USE. (NEAREST INCH)
ACTUAL LENGTHS ARE MEASURED ALONG CENTERLINE BAR TO THE NEAREST INCH.
PAYWEIGHTS ARE BASED ON ACTUAL LENGTHS.
FOUR ANGLE OR CHANNEL SPACERS ARE REQUIRED FOR EACH COLUMN SPIRAL. SPACERS ARE TO BE PLACED ON INSIDE OF SPIRALS. LENGTH AND WEIGHT OF COLUMN SPIRALS DO NOT INCLUDE SPLICES OR SPACERS.
REINFORCING STEEL (GRADE 60) FY = 60,000 PSI.

STATE OF MISSOURI
DAVID GRAHAM BARRETT
NUMBER PE-2006002787
PROFESSIONAL ENGINEER

THIS SHEET HAS BEEN SIGNED, SEALED AND DATED ELECTRONICALLY

DATE PREPARED 11/1/2016
ROUTE 96 | STATE MO
DISTRICT BR | SHEET NO. 32
COUNTY JASPER
JOB NO. J7P2228F
CONTRACT ID.
PROJECT NO.
BRIDGE NO. A8425

DATE	DESCRIPTION

MISSOURI HIGHWAYS AND TRANSPORTATION COMMISSION
105 WEST CAPITOL
JEFFERSON CITY, MO 65102
1-888-ASK-MODOT (1-888-275-6636)

HDR Engineering, Inc.
4435 Main Street
Suite 1000
Kansas City, MO 64111-1856
816-360-2700
Certificate of Authority: 000856

Detailed September 2016
Checked October 2016

Note: This drawing is not to scale. Follow dimensions.

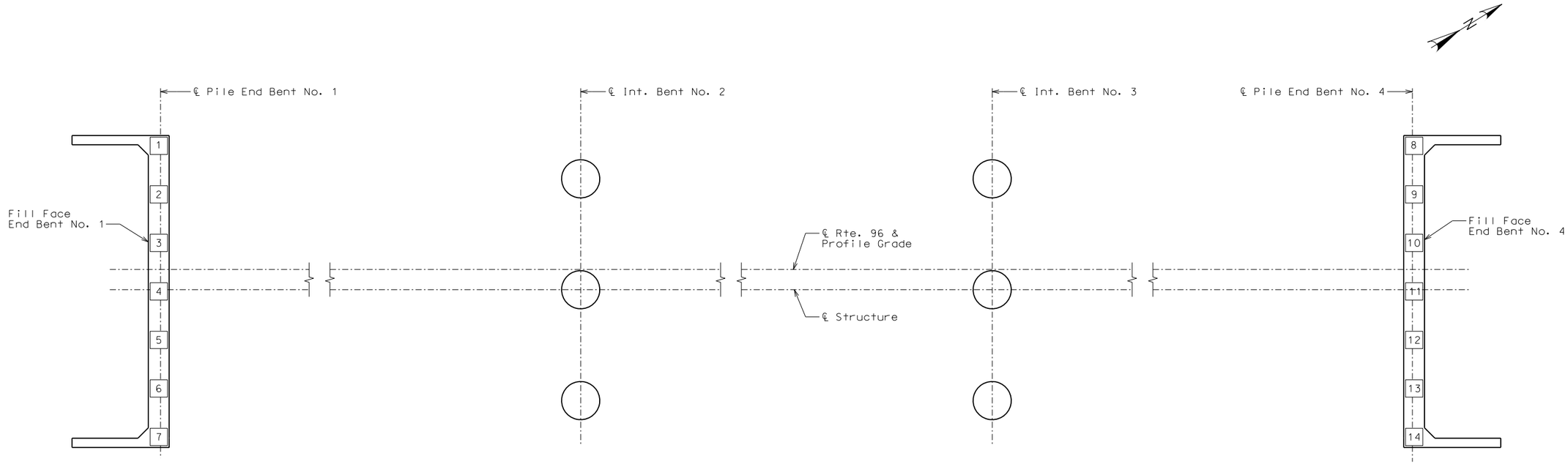

PART PLAN SHOWING PILE NUMBERING FOR RECORDING
AS-BUILT PILE DATA

AS-BUILT PILE DATA			
Pile No.	Length In Place (Ft.)	Computed Nominal Pile Axial Compression Resistance (Kips)	Remarks
			End Bent No. 1
1			
2			
3			
4			
5			
6			
7			

AS-BUILT PILE DATA			
Pile No.	Length In Place (Ft.)	Computed Nominal Pile Axial Compression Resistance (Kips)	Remarks
			End Bent No. 4
8			
9			
10			
11			
12			
13			
14			

Note:
Indicate in remarks column:
A. Pile type and grade
B. Batter
C. Driven to practical refusal

This sheet to be completed by MoDOT construction personnel.

AS-BUILT PILE DATA

Detailed September 2016
Checked October 2016

Note: This drawing is not to scale. Follow dimensions.

STATE OF MISSOURI
DAVID GRAHAM BARRETT
NUMBER PE-2006002787
PROFESSIONAL ENGINEER

THIS SHEET HAS BEEN SIGNED, SEALED AND DATED ELECTRONICALLY

DATE PREPARED	
11/1/2016	
ROUTE 96	STATE MO
DISTRICT BR	SHEET NO. 33
COUNTY JASPER	
JOB NO. J7P2228F	
CONTRACT ID.	
PROJECT NO.	
BRIDGE NO. A8425	

DESCRIPTION	DATE

MISSOURI HIGHWAYS AND TRANSPORTATION COMMISSION
105 WEST CAPITOL
JEFFERSON CITY, MO 65102
1-888-ASK-MODOT (1-888-275-6636)

HDR Engineering, Inc.
4435 Main Street
Suite 1000
Kansas City, MO 64111-1856
816-360-2700
Certificate of Authority: 000856

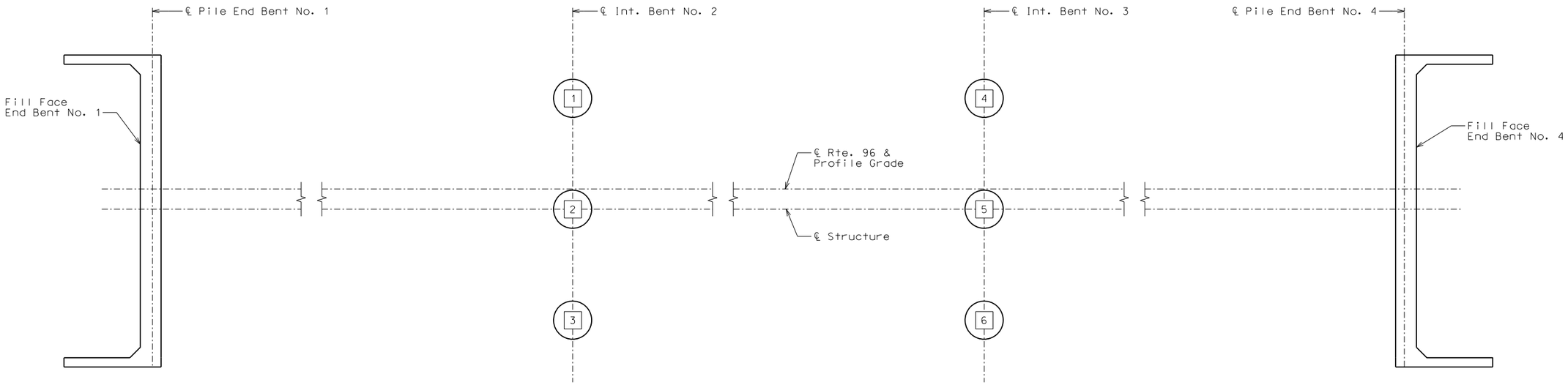

PART PLAN SHOWING DRILLED SHAFT NUMBERING FOR RECORDING AS-BUILT DRILLED SHAFT DATA

AS-BUILT DRILLED SHAFT DATA				
Shaft No.	Top of Sound Rock (Elev.)	Tip of Casing (Elev.)	Bottom of Rock Socket (Elev.)	Remarks
				Int. Bent No. 2
1				
2				
3				

AS-BUILT DRILLED SHAFT DATA				
Shaft No.	Top of Sound Rock (Elev.)	Tip of Casing (Elev.)	Bottom of Rock Socket (Elev.)	Remarks
				Int. Bent No. 3
4				
5				
6				

Note:
Indicate remarks in the remarks column.
This sheet to be completed by MoDOT construction personnel.

AS-BUILT DRILLED SHAFT DATA

Detailed September 2016
Checked October 2016

Note: This drawing is not to scale. Follow dimensions.

STATE OF MISSOURI
DAVID GRAHAM BARRETT
NUMBER PE-2006002787
PROFESSIONAL ENGINEER

THIS SHEET HAS BEEN SIGNED, SEALED AND DATED ELECTRONICALLY

DATE PREPARED	11/1/2016
ROUTE	96
STATE	MO
DISTRICT	BR
SHEET NO.	34
COUNTY	JASPER
JOB NO.	J7P2228F
CONTRACT ID.	
PROJECT NO.	
BRIDGE NO.	A8425

DESCRIPTION	DATE

MISSOURI HIGHWAYS AND TRANSPORTATION COMMISSION
105 WEST CAPITOL
JEFFERSON CITY, MO 65102
1-888-ASK-MODOT (1-888-275-6636)

HDR Engineering, Inc.
4435 Main Street
Suite 1000
Kansas City, MO 64111-1856
816-360-2700
Certificate of Authority: 000856

LOG OF BORING NO. B-01

Project Description: **Jasper County Bridge A8425**
Jasper County, MO

TSi Geotechnical
8248 NW 101st Terrace, #5
Kansas City, MO 64153
(816) 599-7965 (816) 599-7967 FAX

Surface El.: **975.5**
Location: **See Site and Boring Location Plan**

Depth, feet	Samples	Sample #	Graphic Log	MATERIAL DESCRIPTION	Recovery %	RQD	Penetration Blows Per 6 inches	Hand Penetrometer TSF	Undrained Shear Strength, TSF	Unit Dry Weight, lb/cu ft	Water Content, %	Liquid Limit	Plastic Limit	Plasticity Index
				Asphaltic concrete (7.5")										
				Portland cement concrete (8.5")										
				Brown, lean CLAY (FILL)										
5		SS-1			11		4 3 3				13			
10		ST-2			42									
				- gray below 12.2 ft.										
15		SS-3			94		1 4 6				29	30	16	14
20		SS-4			17		2 3 5				29			
				Gray, lean CLAY (CL) with gravel										
25		SS-5			22		4 4 6				26			

Completion Depth: 46.70
Date Boring Started: 6/21/16
Date Boring Completed: 6/21/16
Engineer/Geologist: TW
Project No.: 20162004

Remarks: Boring drilled with CME-550 using HSA and auto SPT. Began rotary wash at 10.5 feet. Auger refusal at 36.7 feet.

The stratification lines represent approximate strata boundaries. In situations, the transition may be gradual.

Continued Next Page

KC LOG WITH LAB JASPER COUNTY BRIDGE A8425.GPJ 9/7/16

LOG OF BORING NO. B-01

Project Description: **Jasper County Bridge A8425**
Jasper County, MO

TSi Geotechnical
8248 NW 101st Terrace, #5
Kansas City, MO 64153
(816) 599-7965 (816) 599-7967 FAX

Surface El.: **975.5**
Location: **See Site and Boring Location Plan**

Depth, feet	Samples	Sample #	Graphic Log	MATERIAL DESCRIPTION	Recovery %	RQD	Penetration Blows Per 6 inches	Hand Penetrometer TSF	Undrained Shear Strength, TSF	Unit Dry Weight, lb/cu ft	Water Content, %	Liquid Limit	Plastic Limit	Plasticity Index
				Gray, lean CLAY (CL) with gravel*(continued)*										
		SS-6		Gray and black, clayey SAND (SC), with gravel (23% passing No. 200 sieve)	72		11 15 6				38			
30														
		SS-7			94		6 14 8				47			
35														
				LIMESTONE, gray, moderately hard, highly weathered with chert nodules										
		RUN1		LIMESTONE, gray, hard, moderately weathered, thick bedded, finely crystalline, with chert nodules	98	88								
40														
45		RUN2			95	72								
				Boring terminated at 46.7 ft.										
50														

Completion Depth: 46.70
Date Boring Started: 6/21/16
Date Boring Completed: 6/21/16
Engineer/Geologist: TW
Project No.: 20162004

Remarks: Boring drilled with CME-550 using HSA and auto SPT. Began rotary wash at 10.5 feet. Auger refusal at 36.7 feet.

The stratification lines represent approximate strata boundaries. In situations, the transition may be gradual.

KC LOG WITH LAB JASPER COUNTY BRIDGE A8425.GPJ 9/7/16

Note:
For locations of borings, see Sheet No. 1.

BORING DATA

Detailed September 2016
Checked October 2016

Note: This drawing is not to scale. Follow dimensions.

STATE OF MISSOURI
DAVID GRAHAM BARRETT
NUMBER PE-2006002787
PROFESSIONAL ENGINEER

THIS SHEET HAS BEEN SIGNED, SEALED AND DATED ELECTRONICALLY

DATE PREPARED	
11/1/2016	
ROUTE 96	STATE MO
DISTRICT BR	SHEET NO. 35
COUNTY JASPER	
JOB NO. J7P2228F	
CONTRACT ID.	
PROJECT NO.	
BRIDGE NO. A8425	

DESCRIPTION | DATE

MISSOURI HIGHWAYS AND TRANSPORTATION COMMISSION
105 WEST CAPITOL
JEFFERSON CITY, MO 65102
1-888-ASK-MODOT (1-888-275-6636)

HDR Engineering, Inc.
4435 Main Street
Suite 1000
Kansas City, MO 64111-1856
816-360-2700
Certificate of Authority: 000856

LOG OF BORING NO. B-02

Project Description: **Jasper County Bridge A8425**
Jasper County, MO

TSi Geotechnical
8248 NW 101st Terrace, #5
Kansas City, MO 64153
(816) 599-7965 (816) 599-7967 FAX

Surface El.: **952.4**
Location: **See Site and Boring Location Plan**

Depth, feet	Samples	Sample #	Graphic Log	MATERIAL DESCRIPTION	Recovery %	RQD	Penetration Blows Per 6 inches	Hand Penetrometer TSF	Undrained Shear Strength, TSF	Unit Dry Weight, lb/cu ft	Water Content, %	Liquid Limit	Plastic Limit	Plasticity Index
				Brown, fat CLAY (CH), with roots										
				Brown, lean CLAY (CL), trace organics and sand.										
		SS-1			56		2 2 2				21			
		ST-2			67			0.75			19	33	20	13
5		SS-3		- with gravel below 4.0 ft.	56		4 7 9				18			
		SS-4		- with limestone cobbles below 6.0 ft.	94		7 15 4				24			
		SS-5			94		3 7 5				66			
10		SS-6			50		50/6"				3			
		SS-7		Light brown, clayey SAND (SC), with gravel	100		6 3 3				56			
15		SS-8		(19% passing No. 200 sieve)	72		6 9 10							
20		SS-9			0		1 4 2							
25		SS-10			100		4 2 2				84			

Completion Depth:	57.85
Date Boring Started:	6/7/16
Date Boring Completed:	6/8/16
Engineer/Geologist:	TW
Project No.:	20162004

Remarks: Boring drilled with CME-550 using HSA and auto SPT. Groundwater encountered at 13.5 feet during drilling. Auger refusal at 27.6 feet.

The stratification lines represent approximate strata boundaries. In situations, the transition may be gradual.

Continued Next Page

KCLOG WITH LAB JASPER COUNTY BRIDGE A8425.GPJ 9/7/16

LOG OF BORING NO. B-02

Project Description: **Jasper County Bridge A8425**
Jasper County, MO

TSi Geotechnical
8248 NW 101st Terrace, #5
Kansas City, MO 64153
(816) 599-7965 (816) 599-7967 FAX

Surface El.: **952.4**
Location: **See Site and Boring Location Plan**

Depth, feet	Samples	Sample #	Graphic Log	MATERIAL DESCRIPTION	Recovery %	RQD	Penetration Blows Per 6 inches	Hand Penetrometer TSF	Undrained Shear Strength, TSF	Unit Dry Weight, lb/cu ft	Water Content, %	Liquid Limit	Plastic Limit	Plasticity Index
				Light brown, clayey SAND (SC), with gravel*(continued)*										
		RUN1		LIMESTONE, light gray, very hard, moderately weathered, finely crystalline, thick bedded with chert nodules	83	50								
30														
		RUN2			100	95								
35														
		RUN3			100	93								
40				- slightly weathered below 31.6 ft.										
		RUN4			100	93								
45														
		RUN5			100	100								
50														

Completion Depth:	57.85
Date Boring Started:	6/7/16
Date Boring Completed:	6/8/16
Engineer/Geologist:	TW
Project No.:	20162004

Remarks: Boring drilled with CME-550 using HSA and auto SPT. Groundwater encountered at 13.5 feet during drilling. Auger refusal at 27.6 feet.

The stratification lines represent approximate strata boundaries. In situations, the transition may be gradual.

Continued Next Page

KCLOG WITH LAB JASPER COUNTY BRIDGE A8425.GPJ 9/7/16

Note:
For locations of borings, see Sheet No. 1.

BORING DATA

STATE OF MISSOURI
DAVID GRAHAM BARRETT
NUMBER PE-2006002787
PROFESSIONAL ENGINEER

THIS SHEET HAS BEEN SIGNED, SEALED AND DATED ELECTRONICALLY

DATE PREPARED	11/1/2016
ROUTE 96	STATE MO
DISTRICT BR	SHEET NO. 36
COUNTY	JASPER
JOB NO.	J7P2228F
CONTRACT ID.	
PROJECT NO.	
BRIDGE NO.	A8425

DESCRIPTION	DATE

MISSOURI HIGHWAYS AND TRANSPORTATION COMMISSION
105 WEST CAPITOL
JEFFERSON CITY, MO 65102
1-888-ASK-MODOT (1-888-275-6636)

HDR Engineering, Inc.
4435 Main Street
Suite 1000
Kansas City, MO 64111-1856
816-360-2700
Certificate of Authority: 000856

Detailed September 2016
Checked October 2016

Note: This drawing is not to scale. Follow dimensions.

c:\pwworking\oma\d2236001\B_A8425_036_J7P2228F.dgn 8:10:33 PM 11/1/2016

LOG OF BORING NO. B-02

Project Description: **Jasper County Bridge A8425**
Jasper County, MO

TSi Geotechnical
8248 NW 101st Terrace, #5
Kansas City, MO 64153
(816) 599-7965 (816) 599-7967 FAX

Surface El.: **952.4**
Location: **See Site and Boring Location Plan**

Depth, feet	Samples	Sample #	Graphic Log	MATERIAL DESCRIPTION	Recovery %	RQD	Penetration Blows Per 6 inches	Hand Penetrometer TSF	Undrained Shear Strength, TSF	Unit Dry Weight, lb/cu ft	Water Content, %	Liquid Limit	Plastic Limit	Plasticity Index
		RUN6		LIMESTONE, light gray, very hard, moderately weathered, finely crystalline, thick bedded with chert nodules*(continued)*	98	92								
55		RUN7			100	100								
				Boring terminated at 57.9 ft.										
60														
65														
70														
75														

Completion Depth: 57.85
Date Boring Started: 6/7/16
Date Boring Completed: 6/8/16
Engineer/Geologist: TW
Project No.: 20162004

Remarks: Boring drilled with CME-550 using HSA and auto SPT. Groundwater encountered at 13.5 feet during drilling. Auger refusal at 27.6 feet.

The stratification lines represent approximate strata boundaries. In situations, the transition may be gradual.

KCLOG WITH LAB JASPER COUNTY BRIDGE A8425.GPJ 9/7/16

LOG OF BORING NO. B-03

Project Description: **Jasper County Bridge A8425**
Jasper County, MO

TSi Geotechnical
8248 NW 101st Terrace, #5
Kansas City, MO 64153
(816) 599-7965 (816) 599-7967 FAX

Surface El.: **952.7**
Location: **See Site and Boring Location Plan**

Depth, feet	Samples	Sample #	Graphic Log	MATERIAL DESCRIPTION	Recovery %	RQD	Penetration Blows Per 6 inches	Hand Penetrometer TSF	Undrained Shear Strength, TSF	Unit Dry Weight, lb/cu ft	Water Content, %	Liquid Limit	Plastic Limit	Plasticity Index
				Brown, fat CLAY (CH), with roots and organics										
		SS-1		Dark brown, fat CLAY (CH), trace sand	78		2 3 3	2.25			22			
5		SS-2		Brown, clayey SAND (SC) (35% passing the No. 200 sieve) - light brown, trace gravel below 4.2 ft.	89		3 5 10	1.25						
		ST-3			83									
		SS-4		(17% passing the No. 200 sieve)	78		18 20 25							
10		SS-5			78		9 11 9				23			
		SS-6			67		9 11 6				23			
15		SS-7		- trace gravel below 13.5 ft.	58		6 7 11				30			
		SS-8			11		5 9 11				24			
20		SS-9			100		4 5 7				59			
25		SS-10		Dark brown with red, fat CLAY (CH)	100		5 3 1				88			

Completion Depth: 56.90
Date Boring Started: 6/8/16
Date Boring Completed: 6/9/16
Engineer/Geologist: TW
Project No.: 20162004

Remarks: Boring drilled with CME-550 using HSA and auto SPT. Groundwater encountered at 16.0 feet during drilling. Auger refusal at 26.5 feet.

The stratification lines represent approximate strata boundaries. In situations, the transition may be gradual.

Continued Next Page

KCLOG WITH LAB JASPER COUNTY BRIDGE A8425.GPJ 9/7/16

Note:
For locations of borings, see Sheet No. 1.

BORING DATA

STATE OF MISSOURI
DAVID GRAHAM BARRETT
NUMBER PE-2006002787
PROFESSIONAL ENGINEER

THIS SHEET HAS BEEN SIGNED, SEALED AND DATED ELECTRONICALLY

DATE PREPARED 11/1/2016
ROUTE 96 | STATE MO
DISTRICT BR | SHEET NO. 37
COUNTY JASPER
JOB NO. J7P2228F
CONTRACT ID.
PROJECT NO.
BRIDGE NO. A8425

DESCRIPTION	DATE
.	.
.	.
.	.
.	.
.	.
.	.

MISSOURI HIGHWAYS AND TRANSPORTATION COMMISSION
105 WEST CAPITOL
JEFFERSON CITY, MO 65102
1-888-ASK-MODOT (1-888-275-6636)

HDR Engineering, Inc.
4435 Main Street
Suite 1000
Kansas City, MO 64111-1856
816-360-2700
Certificate of Authority: 000856

Detailed September 2016
Checked October 2016

Note: This drawing is not to scale. Follow dimensions.

c:\pwworking\oma\d2236001\B_A8425_037_J7P2228F.dgn 8:10:43 PM 11/1/2016

LOG OF BORING NO. B-03

Project Description: **Jasper County Bridge A8425**
Jasper County, MO

TSi Geotechnical
8248 NW 101st Terrace, #5
Kansas City, MO 64153
(816) 599-7965 (816) 599-7967 FAX

Surface El.: **952.7**
Location: **See Site and Boring Location Plan**

Depth, feet	Samples	Sample #	Graphic Log	MATERIAL DESCRIPTION	Recovery %	RQD	Penetration Blows Per 6 inches	Hand Penetrometer TSF	Undrained Shear Strength, TSF	Unit Dry Weight, lb/cu ft	Water Content, %	Liquid Limit	Plastic Limit	Plasticity Index
				LIMESTONE, light gray, hard, slightly weathered, thick bedded, finely crystalline										
		RUN1			100	100								
30														
				- with chert nodules below 31.6 ft.										
		RUN2			100	100								
35														
		RUN3			100	100								
40														
		RUN4			100	100								
45														
		RUN5			98	93								
50														

Completion Depth: 56.90
Date Boring Started: 6/8/16
Date Boring Completed: 6/9/16
Engineer/Geologist: TW
Project No.: 20162004

Remarks: Boring drilled with CME-550 using HSA and auto SPT. Groundwater encountered at 16.0 feet during drilling. Auger refusal at 26.5 feet.

The stratification lines represent approximate strata boundaries. In situations, the transition may be gradual.

Continued Next Page

KC LOG WITH LAB JASPER COUNTY BRIDGE A8425.GPJ 97/16

LOG OF BORING NO. B-03

Project Description: **Jasper County Bridge A8425**
Jasper County, MO

TSi Geotechnical
8248 NW 101st Terrace, #5
Kansas City, MO 64153
(816) 599-7965 (816) 599-7967 FAX

Surface El.: **952.7**
Location: **See Site and Boring Location Plan**

Depth, feet	Samples	Sample #	Graphic Log	MATERIAL DESCRIPTION	Recovery %	RQD	Penetration Blows Per 6 inches	Hand Penetrometer TSF	Undrained Shear Strength, TSF	Unit Dry Weight, lb/cu ft	Water Content, %	Liquid Limit	Plastic Limit	Plasticity Index
				LIMESTONE, light gray, hard, slightly weathered, thick bedded, finely crystalline*(continued)*										
		RUN6			100	100								
55														
		RUN7			100	100								
				Boring terminated at 56.9 ft.										
60														
65														
70														
75														

Completion Depth: 56.90
Date Boring Started: 6/8/16
Date Boring Completed: 6/9/16
Engineer/Geologist: TW
Project No.: 20162004

Remarks: Boring drilled with CME-550 using HSA and auto SPT. Groundwater encountered at 16.0 feet during drilling. Auger refusal at 26.5 feet.

The stratification lines represent approximate strata boundaries. In situations, the transition may be gradual.

KC LOG WITH LAB JASPER COUNTY BRIDGE A8425.GPJ 97/16

Note:
For locations of borings, see Sheet No. 1.

BORING DATA

Detailed September 2016
Checked October 2016

Note: This drawing is not to scale. Follow dimensions.

STATE OF MISSOURI
DAVID GRAHAM BARRETT
NUMBER PE-2006002787
PROFESSIONAL ENGINEER

THIS SHEET HAS BEEN SIGNED, SEALED AND DATED ELECTRONICALLY

DATE PREPARED	
11/1/2016	
ROUTE 96	STATE MO
DISTRICT BR	SHEET NO. 38
COUNTY JASPER	
JOB NO. J7P2228F	
CONTRACT ID.	
PROJECT NO.	
BRIDGE NO. A8425	

DESCRIPTION	DATE

MISSOURI HIGHWAYS AND TRANSPORTATION COMMISSION
105 WEST CAPITOL
JEFFERSON CITY, MO 65102
1-888-ASK-MODOT (1-888-275-6636)

HDR Engineering, Inc.
4435 Main Street
Suite 1000
Kansas City, MO 64111-1856
816-360-2700
Certificate of Authority: 000856

LOG OF BORING NO. B-04

Project Description: **Jasper County Bridge A8425**
Jasper County, MO

TSi Geotechnical
8248 NW 101st Terrace, #5
Kansas City, MO 64153
(816) 599-7965 (816) 599-7967 FAX

Surface El.: **950.1**
Location: **See Site and Boring Location Plan**

Depth, feet	Samples	Sample #	Graphic Log	MATERIAL DESCRIPTION	Recovery %	RQD	Penetration Blows Per 6 inches	Hand Penetrometer TSF	Undrained Shear Strength, TSF	Unit Dry Weight, lb/cu ft	Water Content, %	Liquid Limit	Plastic Limit	Plasticity Index
				Brown, fat CLAY (CH), with roots and organics										
				Brown trace black, fat CLAY (CH)										
		ST-1			89			1.50	0.26	97	24			
5														
		ST-2		- with coarse gravel below 8.5 ft.	97						23			
		SS-3		(63% passing No. 200 sieve)	100		3 4 4	1.75						
10														
		SS-4			83		6 10 11				17			
15														
		SS-5			89		6 5 8							
20														
		SS-6		- gray below 22.5 ft.	78		6 9 12					51	25	26
25														

Completion Depth:	62.80
Date Boring Started:	6/3/16
Date Boring Completed:	6/3/16
Engineer/Geologist:	TW
Project No.:	20162004

Remarks: Boring drilled with CME-550 using HSA and auto SPT. Groundwater encountered at 14.0 feet during drilling. Auger refusal at 32.8 feet. Shelby tube sample refusal at 9.1 feet.

The stratification lines represent approximate strata boundaries. In situations, the transition may be gradual.

Continued Next Page

KC LOG WITH LAB JASPER COUNTY BRIDGE A8425.GPJ 9/7/16

LOG OF BORING NO. B-04

Project Description: **Jasper County Bridge A8425**
Jasper County, MO

TSi Geotechnical
8248 NW 101st Terrace, #5
Kansas City, MO 64153
(816) 599-7965 (816) 599-7967 FAX

Surface El.: **950.1**
Location: **See Site and Boring Location Plan**

Depth, feet	Samples	Sample #	Graphic Log	MATERIAL DESCRIPTION	Recovery %	RQD	Penetration Blows Per 6 inches	Hand Penetrometer TSF	Undrained Shear Strength, TSF	Unit Dry Weight, lb/cu ft	Water Content, %	Liquid Limit	Plastic Limit	Plasticity Index
				Brown trace black, fat CLAY (CH)*(continued)*										
		SS-7		- with coarse sand below 28.4 ft.	67		11 7 8				27			
30														
		SS-8			42		34 50/5"							
				LIMESTONE, light gray, moderately hard, moderately weathered										
35		RUN1		LIMESTONE, light gray, hard, slightly weathered, massive, finely crystalline - 18" void from 34.8 ft. to 36.3 ft. - with chert nodules below 36.4 ft.	73	45								
40		RUN2			98	98								
45		RUN3			100	98								
50														

Completion Depth:	62.80
Date Boring Started:	6/3/16
Date Boring Completed:	6/3/16
Engineer/Geologist:	TW
Project No.:	20162004

Remarks: Boring drilled with CME-550 using HSA and auto SPT. Groundwater encountered at 14.0 feet during drilling. Auger refusal at 32.8 feet. Shelby tube sample refusal at 9.1 feet.

The stratification lines represent approximate strata boundaries. In situations, the transition may be gradual.

Continued Next Page

KC LOG WITH LAB JASPER COUNTY BRIDGE A8425.GPJ 9/7/16

Note:
For locations of borings, see Sheet No. 1.

BORING DATA

Detailed September 2016
Checked October 2016

Note: This drawing is not to scale. Follow dimensions.

STATE OF MISSOURI
DAVID GRAHAM BARRETT
NUMBER PE-2006002787
PROFESSIONAL ENGINEER

THIS SHEET HAS BEEN SIGNED, SEALED AND DATED ELECTRONICALLY

DATE PREPARED	11/1/2016
ROUTE	96
STATE	MO
DISTRICT	BR
SHEET NO.	39
COUNTY	JASPER
JOB NO.	J7P2228F
CONTRACT ID.	
PROJECT NO.	
BRIDGE NO.	A8425

DESCRIPTION | DATE

MISSOURI HIGHWAYS AND TRANSPORTATION COMMISSION
105 WEST CAPITOL
JEFFERSON CITY, MO 65102
1-888-ASK-MODOT (1-888-275-6636)

HDR Engineering, Inc.
4435 Main Street
Suite 1000
Kansas City, MO 64111-1856
816-360-2700
Certificate of Authority: 000856

LOG OF BORING NO. B-04

Project Description: **Jasper County Bridge A8425**
Jasper County, MO

TSi Geotechnical
8248 NW 101st Terrace, #5
Kansas City, MO 64153
(816) 599-7965 (816) 599-7967 FAX

Surface El.: **950.1**
Location: **See Site and Boring Location Plan**

Depth, feet	Samples	Sample #	Graphic Log	MATERIAL DESCRIPTION	Recovery %	RQD	Penetration Blows Per 6 inches	Hand Penetrometer TSF	Undrained Shear Strength, TSF	Unit Dry Weight, lb/cu ft	Water Content, %	Liquid Limit	Plastic Limit	Plasticity Index
		RUN4		LIMESTONE, light gray, hard, slightly weathered, massive, finely crystalline*(continued)*	100	100								
55		RUN5			100	100								
60		RUN6			100	93								
				Boring terminated at 62.8 ft.										
65														
70														
75														

Completion Depth: 62.80
Date Boring Started: 6/3/16
Date Boring Completed: 6/3/16
Engineer/Geologist: TW
Project No.: 20162004

Remarks: Boring drilled with CME-550 using HSA and auto SPT. Groundwater encountered at 14.0 feet during drilling. Auger refusal at 32.8 feet. Shelby tube sample refusal at 9.1 feet.

The stratification lines represent approximate strata boundaries. In situations, the transition may be gradual.

KC LOG WITH LAB JASPER COUNTY BRIDGE A8425.GPJ 9/7/16

LOG OF BORING NO. B-05

Project Description: **Jasper County Bridge A8425**
Jasper County, MO

TSi Geotechnical
8248 NW 101st Terrace, #5
Kansas City, MO 64153
(816) 599-7965 (816) 599-7967 FAX

Surface El.: **950.8**
Location: **See Site and Boring Location Plan**

Depth, feet	Samples	Sample #	Graphic Log	MATERIAL DESCRIPTION	Recovery %	RQD	Penetration Blows Per 6 inches	Hand Penetrometer TSF	Undrained Shear Strength, TSF	Unit Dry Weight, lb/cu ft	Water Content, %	Liquid Limit	Plastic Limit	Plasticity Index
				Brown, fat CLAY (CH), with roots and organics										
				Brown, fat CLAY (CH)										
5		SS-1			100		2 2 2				24			
10		SS-2		- with coarse gravel below 9.0 ft. (51% passing No. 200 sieve)	78		5 6 8							
15		SS-3		- 2.5 ft. boulder from 16.0 ft. to 18.5 ft.	11		3 3 5				30			
20		SS-4		Brown, clayey SAND (SC) (22% passing No. 200 sieve)	72		11 10 6							
25		SS-5			100		18 50/6"				18			

Completion Depth: 45.30
Date Boring Started: 5/26/16
Date Boring Completed: 5/30/16
Engineer/Geologist: TW
Project No.: 20162004

Remarks: Boring drilled with CME-550 using HSA and auto SPT. Groundwater encountered at 14.2 feet during drilling. Auger refusal at 29.0 feet.

The stratification lines represent approximate strata boundaries. In situations, the transition may be gradual.

Continued Next Page

KC LOG WITH LAB JASPER COUNTY BRIDGE A8425.GPJ 9/7/16

Note:
For locations of borings, see Sheet No. 1.

BORING DATA

Detailed September 2016
Checked October 2016

Note: This drawing is not to scale. Follow dimensions.

STATE OF MISSOURI
DAVID GRAHAM BARRETT
NUMBER PE-2006002787
PROFESSIONAL ENGINEER

THIS SHEET HAS BEEN SIGNED, SEALED AND DATED ELECTRONICALLY

DATE PREPARED 11/1/2016
ROUTE 96 | STATE MO
DISTRICT BR | SHEET NO. 40
COUNTY JASPER
JOB NO. J7P2228F
CONTRACT ID.
PROJECT NO.
BRIDGE NO. A8425

DESCRIPTION | DATE

MISSOURI HIGHWAYS AND TRANSPORTATION COMMISSION
105 WEST CAPITOL
JEFFERSON CITY, MO 65102
1-888-ASK-MODOT (1-888-275-6636)

HDR Engineering, Inc.
4435 Main Street
Suite 1000
Kansas City, MO 64111-1856
816-360-2700
Certificate of Authority: 000856

LOG OF BORING NO. B-05

Project Description: **Jasper County Bridge A8425**
Jasper County, MO

TSi Geotechnical
8248 NW 101st Terrace, #5
Kansas City, MO 64153
(816) 599-7965 (816) 599-7967 FAX

Surface El.: **950.8**
Location: **See Site and Boring Location Plan**

Depth, feet	Samples	Sample #	Graphic Log	MATERIAL DESCRIPTION	Recovery %	RQD	Penetration Blows Per 6 inches	Hand Penetrometer TSF	Undrained Shear Strength, TSF	Unit Dry Weight, lb/cu ft	Water Content, %	Liquid Limit	Plastic Limit	Plasticity Index
				LIMESTONE, gray, moderately weathered										
30		RUN1		LIMESTONE, gray, hard, slightly weathered, thick bedded, finely crystalline	96	90								
		RUN2			104	100								
				- 2.9 ft. void from 32.0 ft. to 34.9 ft.										
35				- gray brown, moderately weathered below 35.3 ft.										
		RUN3			13	0								
40														
		RUN4			8	0								
45														
				Boring terminated at 45.3 ft.										
50														

Completion Depth: 45.30
Date Boring Started: 5/26/16
Date Boring Completed: 5/30/16
Engineer/Geologist: TW
Project No.: 20162004

Remarks: Boring drilled with CME-550 using HSA and auto SPT. Groundwater encountered at 14.2 feet during drilling. Auger refusal at 29.0 feet.

The stratification lines represent approximate strata boundaries. In situations, the transition may be gradual.

KC LOG WITH LAB JASPER COUNTY BRIDGE A8425.GPJ 9/7/16

LOG OF BORING NO. B-05A

Project Description: **Jasper County Bridge A8425**
Jasper County, MO

TSi Geotechnical
8248 NW 101st Terrace, #5
Kansas City, MO 64153
(816) 599-7965 (816) 599-7967 FAX

Surface El.: **950.8**
Location: **See Site and Boring Location Plan**

Depth, feet	Samples	Sample #	Graphic Log	MATERIAL DESCRIPTION	Recovery %	RQD	Penetration Blows Per 6 inches	Hand Penetrometer TSF	Undrained Shear Strength, TSF	Unit Dry Weight, lb/cu ft	Water Content, %	Liquid Limit	Plastic Limit	Plasticity Index
				Brown, fat CLAY (CH), with roots										
				Brown, fat CLAY (CH)										
5														
10				Gray, GRAVEL (GP)										
15														
		RUN1		LIMESTONE, light gray with dark blue and brown, hard, moderately weathered, finely crystalline with chert and vertical fractures	96	0								
20				- pitted below 20.0 ft.										
		RUN2			70	37								
25														

Completion Depth: 55.00
Date Boring Started: 5/31/16
Date Boring Completed: 6/2/16
Engineer/Geologist: TW
Project No.: 20162004

Remarks: Boring drilled with CME-550 using HSA and auto SPT. Groundwater encountered at 14.0 feet during drilling.

The stratification lines represent approximate strata boundaries. In situations, the transition may be gradual.

Continued Next Page

KC LOG WITH LAB JASPER COUNTY BRIDGE A8425.GPJ 9/7/16

Note:
For locations of borings, see Sheet No. 1.

BORING DATA

Detailed September 2016
Checked October 2016

Note: This drawing is not to scale. Follow dimensions.

STATE OF MISSOURI
DAVID GRAHAM BARRETT
NUMBER PE-2006002787
PROFESSIONAL ENGINEER

THIS SHEET HAS BEEN SIGNED, SEALED AND DATED ELECTRONICALLY

DATE PREPARED 11/1/2016
ROUTE 96 | STATE MO
DISTRICT BR | SHEET NO. 41
COUNTY JASPER
JOB NO. J7P2228F
CONTRACT ID.
PROJECT NO.
BRIDGE NO. A8425

DESCRIPTION	DATE

MISSOURI HIGHWAYS AND TRANSPORTATION COMMISSION
105 WEST CAPITOL
JEFFERSON CITY, MO 65102
1-888-ASK-MODOT (1-888-275-6636)

HDR Engineering, Inc.
4435 Main Street
Suite 1000
Kansas City, MO 64111-1856
816-360-2700
Certificate of Authority: 000856

LOG OF BORING NO. B-05A

Project Description: **Jasper County Bridge A8425**
Jasper County, MO

TSi Geotechnical
8248 NW 101st Terrace, #5
Kansas City, MO 64153
(816) 599-7965 (816) 599-7967 FAX

Surface El.: **950.8**
Location: **See Site and Boring Location Plan**

Depth, feet	Samples	Sample #	Graphic Log	MATERIAL DESCRIPTION	Recovery %	RQD	Penetration Blows Per 6 inches	Hand Penetrometer TSF	Undrained Shear Strength, TSF	Unit Dry Weight, lb/cu ft	Water Content, %	Liquid Limit	Plastic Limit	Plasticity Index
		RUN3		LIMESTONE, light gray with dark blue and brown, hard, moderately weathered, finely crystalline with chert and vertical fractures*(continued)* - 6" void from 25.5 ft to 26.0 ft. - 3.2 ft. void from 26.3 ft. to 29.5 ft.	23	18								
30		SS-1		Brown, clayey SAND (SC)			5 6				36			
		SS-2		Brown, fat CLAY (CH), with coarse gravel and fine sand			7 7 9 15				34			
35														
		SS-3					7 10 7							
40														
		SS-4					9 12 18				48			
45		RUN4		LIMESTONE, light gray and brown, hard, moderately weathered, highly fractured, finely crystalline	8	0								
50														

Completion Depth:	55.00	Remarks:	Boring drilled with CME-550 using HSA and auto SPT. Groundwater encountered at 14.0 feet during drilling.
Date Boring Started:	5/31/16		
Date Boring Completed:	6/2/16		
Engineer/Geologist:	TW		
Project No.:	20162004		

The stratification lines represent approximate strata boundaries.
In situations, the transition may be gradual.

Continued Next Page

KC LOG WITH LAB JASPER COUNTY BRIDGE A8425.GPJ 97/16

LOG OF BORING NO. B-05A

Project Description: **Jasper County Bridge A8425**
Jasper County, MO

TSi Geotechnical
8248 NW 101st Terrace, #5
Kansas City, MO 64153
(816) 599-7965 (816) 599-7967 FAX

Surface El.: **950.8**
Location: **See Site and Boring Location Plan**

Depth, feet	Samples	Sample #	Graphic Log	MATERIAL DESCRIPTION	Recovery %	RQD	Penetration Blows Per 6 inches	Hand Penetrometer TSF	Undrained Shear Strength, TSF	Unit Dry Weight, lb/cu ft	Water Content, %	Liquid Limit	Plastic Limit	Plasticity Index
		RUN5		LIMESTONE, light gray and brown, hard, moderately weathered, highly fractured, finely crystalline*(continued)*	25	0								
55														
		RUN6			0	0								
60														
		RUN7			0	0								
65				Boring terminated at 65.0 ft.										
70														
75														

Completion Depth:	55.00	Remarks:	Boring drilled with CME-550 using HSA and auto SPT. Groundwater encountered at 14.0 feet during drilling.
Date Boring Started:	5/31/16		
Date Boring Completed:	6/2/16		
Engineer/Geologist:	TW		
Project No.:	20162004		

The stratification lines represent approximate strata boundaries.
In situations, the transition may be gradual.

KC LOG WITH LAB JASPER COUNTY BRIDGE A8425.GPJ 97/16

Note:
For locations of borings, see Sheet No. 1.

BORING DATA

Detailed September 2016
Checked October 2016

Note: This drawing is not to scale. Follow dimensions.

STATE OF MISSOURI
DAVID GRAHAM BARRETT
NUMBER PE-2006002787
PROFESSIONAL ENGINEER

THIS SHEET HAS BEEN SIGNED, SEALED AND DATED ELECTRONICALLY

DATE PREPARED	
11/1/2016	
ROUTE 96	STATE MO
DISTRICT BR	SHEET NO. 42
COUNTY JASPER	
JOB NO. J7P2228F	
CONTRACT ID.	
PROJECT NO.	
BRIDGE NO. A8425	

DATE	DESCRIPTION

MISSOURI HIGHWAYS AND TRANSPORTATION COMMISSION
105 WEST CAPITOL
JEFFERSON CITY, MO 65102
1-888-ASK-MODOT (1-888-275-6636)

HDR Engineering, Inc.
4435 Main Street
Suite 1000
Kansas City, MO 64111-1856
816-360-2700
Certificate of Authority: 000856

LOG OF BORING NO. B-05B

Project Description: **Jasper County Bridge A8425**
Jasper County, MO

TSi Geotechnical
8248 NW 101st Terrace, #5
Kansas City, MO 64153
(816) 599-7965 (816) 599-7967 FAX

Surface El.: **950.8**
Location: **See Site and Boring Location Plan**

Depth, feet	Samples	Sample #	Graphic Log	MATERIAL DESCRIPTION	Recovery %	RQD	Penetration Blows Per 6 inches	Hand Penetrometer TSF	Undrained Shear Strength, TSF	Unit Dry Weight, lb/cu ft	Water Content, %	Liquid Limit	Plastic Limit	Plasticity Index
				Brown, lean CLAY, with roots										
				Brown, fat CLAY (CH)										
5														
10														
15														
20														
				LIMESTONE, gray, moderately hard, moderately weathered										
25		RUN1			100	56								

Completion Depth: 85.20
Date Boring Started: 6/16/16
Date Boring Completed: 6/16/16
Engineer/Geologist: TW
Project No.: 20162004

Remarks: Boring drilled with CME-550 using HSA and auto SPT. Groundwater encountered at 7.0 feet during drilling. Auger refusal at 24.0 feet.

The stratification lines represent approximate strata boundaries. In situations, the transition may be gradual.

Continued Next Page

KC LOG WITH LAB JASPER COUNTY BRIDGE A8425.GPJ 9/7/16

LOG OF BORING NO. B-05B

Project Description: **Jasper County Bridge A8425**
Jasper County, MO

TSi Geotechnical
8248 NW 101st Terrace, #5
Kansas City, MO 64153
(816) 599-7965 (816) 599-7967 FAX

Surface El.: **950.8**
Location: **See Site and Boring Location Plan**

Depth, feet	Samples	Sample #	Graphic Log	MATERIAL DESCRIPTION	Recovery %	RQD	Penetration Blows Per 6 inches	Hand Penetrometer TSF	Undrained Shear Strength, TSF	Unit Dry Weight, lb/cu ft	Water Content, %	Liquid Limit	Plastic Limit	Plasticity Index
				LIMESTONE, gray, hard, moderately weathered, massive, finely crystalline pitted*(continued)*										
				Brown, fat CLAY (CL), with gravel										
		RUN2			20	0								
30														
		RUN3			38	8								
35				- limestone seam from 34.8 ft. to 35.2 ft.										
		RUN4			17	0								
				- gravel below 39.4 ft.										
40				LIMESTONE, light gray, very hard, moderately weathered, thin bedded, finely crystalline, with chert										
				Brown, fat CLAY (CH), with gravel										
		RUN5			27	0								
45				- limestone gravel from 45.2 ft. to 45.7 ft.										
		RUN6			12	0								
50														

Completion Depth: 85.20
Date Boring Started: 6/16/16
Date Boring Completed: 6/16/16
Engineer/Geologist: TW
Project No.: 20162004

Remarks: Boring drilled with CME-550 using HSA and auto SPT. Groundwater encountered at 7.0 feet during drilling. Auger refusal at 24.0 feet.

The stratification lines represent approximate strata boundaries. In situations, the transition may be gradual.

Continued Next Page

KC LOG WITH LAB JASPER COUNTY BRIDGE A8425.GPJ 9/7/16

Note:
For locations of borings, see Sheet No. 1.

BORING DATA

Detailed September 2016
Checked October 2016

Note: This drawing is not to scale. Follow dimensions.

STATE OF MISSOURI
DAVID GRAHAM BARRETT
NUMBER PE-2006002787
PROFESSIONAL ENGINEER

THIS SHEET HAS BEEN SIGNED, SEALED AND DATED ELECTRONICALLY

DATE PREPARED	
11/1/2016	
ROUTE 96	STATE MO
DISTRICT BR	SHEET NO. 43
COUNTY JASPER	
JOB NO. J7P2228F	
CONTRACT ID.	
PROJECT NO.	
BRIDGE NO. A8425	

DATE	DESCRIPTION

MISSOURI HIGHWAYS AND TRANSPORTATION COMMISSION
105 WEST CAPITOL
JEFFERSON CITY, MO 65102
1-888-ASK-MODOT (1-888-275-6636)

HDR Engineering, Inc.
4435 Main Street
Suite 1000
Kansas City, MO 64111-1856
816-360-2700
Certificate of Authority: 000856

LOG OF BORING NO. B-05B

Project Description: **Jasper County Bridge A8425**
Jasper County, MO

TSi Geotechnical
8248 NW 101st Terrace, #5
Kansas City, MO 64153
(816) 599-7965 (816) 599-7967 FAX

Surface El.: **950.8**
Location: **See Site and Boring Location Plan**

Depth, feet	Samples	Sample #	Graphic Log	MATERIAL DESCRIPTION	Recovery %	RQD	Penetration Blows Per 6 inches	Hand Penetrometer TSF	Undrained Shear Strength, TSF	Unit Dry Weight, lb/cu ft	Water Content, %	Liquid Limit	Plastic Limit	Plasticity Index
		RUN7		Brown, fat CLAY (CH), with gravel*(continued)*	10	0								
55				LIMESTONE, light gray, moderately weathered, finely crystalline with chert nodules										
		RUN8		Brown, fat CLAY (CH) with gravel	12	0								
60				- limetone seam from 59.8 ft. to 60.2 ft.										
		RUN9			12	0								
				- 3" gravel seam at 63.8 ft.										
65				LIMESTONE, light gray, hard, slightly weathered, thin bedded, finely crystalline, with chert nodules - 2" clay filled void at 65.2 ft.										
		RUN10		Brown, fat CLAY (CH)	63	32								
70				LIMESTONE, hard, slightly weathered, thin bedded, finely crystalline, pitted										
		RUN11			93	25								
75														

Completion Depth:	85.20	Remarks:	Boring drilled with CME-550 using HSA and auto SPT. Groundwater encountered at 7.0 feet during drilling. Auger refusal at 24.0 feet.
Date Boring Started:	6/16/16		
Date Boring Completed:	6/16/16		
Engineer/Geologist:	TW		
Project No.:	20162004		

The stratification lines represent approximate strata boundaries.
In situations, the transition may be gradual.

Continued Next Page

KC LOG WITH LAB JASPER COUNTY BRIDGE A8425.GPJ 97/16

LOG OF BORING NO. B-05B

Project Description: **Jasper County Bridge A8425**
Jasper County, MO

TSi Geotechnical
8248 NW 101st Terrace, #5
Kansas City, MO 64153
(816) 599-7965 (816) 599-7967 FAX

Surface El.: **950.8**
Location: **See Site and Boring Location Plan**

Depth, feet	Samples	Sample #	Graphic Log	MATERIAL DESCRIPTION	Recovery %	RQD	Penetration Blows Per 6 inches	Hand Penetrometer TSF	Undrained Shear Strength, TSF	Unit Dry Weight, lb/cu ft	Water Content, %	Liquid Limit	Plastic Limit	Plasticity Index
		RUN12		LIMESTONE, hard, slightly weathered, thin bedded, finely crystalline, pitted*(continued)* - with chert nodules below 76.8 ft.	100	87								
80				Brown, fat CLAY (CH)										
		RUN13		LIMESTONE, gray, hard, moderately weathered, finely crystalline, thin bedded with chert nodules	63	40								
85				Boring terminated at 85.2 ft.										
90														
95														
100														

Completion Depth:	85.20	Remarks:	Boring drilled with CME-550 using HSA and auto SPT. Groundwater encountered at 7.0 feet during drilling. Auger refusal at 24.0 feet.
Date Boring Started:	6/16/16		
Date Boring Completed:	6/16/16		
Engineer/Geologist:	TW		
Project No.:	20162004		

The stratification lines represent approximate strata boundaries.
In situations, the transition may be gradual.

KC LOG WITH LAB JASPER COUNTY BRIDGE A8425.GPJ 97/16

STATE OF MISSOURI
DAVID GRAHAM BARRETT
NUMBER PE-2006002787
PROFESSIONAL ENGINEER

THIS SHEET HAS BEEN SIGNED, SEALED AND DATED ELECTRONICALLY

DATE PREPARED 11/1/2016
ROUTE 96 | STATE MO
DISTRICT BR | SHEET NO. 44
COUNTY JASPER
JOB NO. J7P2228F
CONTRACT ID.
PROJECT NO.
BRIDGE NO. A8425

DESCRIPTION	DATE

MISSOURI HIGHWAYS AND TRANSPORTATION COMMISSION
105 WEST CAPITOL
JEFFERSON CITY, MO 65102
1-888-ASK-MODOT (1-888-275-6636)

HDR Engineering, Inc.
4435 Main Street
Suite 1000
Kansas City, MO 64111-1856
816-360-2700
Certificate of Authority: 000856

Note:
For locations of borings, see Sheet No. 1.

BORING DATA

Detailed September 2016
Checked October 2016

Note: This drawing is not to scale. Follow dimensions.

LOG OF BORING NO. B-06

Project Description: **Jasper County Bridge A8425**
Jasper County, MO

TSi Geotechnical
8248 NW 101st Terrace, #5
Kansas City, MO 64153
(816) 599-7965 (816) 599-7967 FAX

Surface El.: **949.1**
Location: **See Site and Boring Location Plan**

Depth, feet	Samples	Sample #	Graphic Log	MATERIAL DESCRIPTION	Recovery %	RQD	Penetration Blows Per 6 inches	Hand Penetrometer TSF	Undrained Shear Strength, TSF	Unit Dry Weight, lb/cu ft	Water Content, %	Liquid Limit	Plastic Limit	Plasticity Index
				Brown, lean CLAY, with roots										
				Brown, lean CLAY (CL), trace brick fragments (FILL)										
		SS-1			100		2 2 2				22			
		SS-2		Dark brown, lean CLAY (CL)	89		2 2 3				22	28	17	11
5														
				- with gravel below 6.0 ft.										
		SS-3			89		5 6 8				21			
		SS-4			56		3 6 8				17			
10														
		SS-5			39		4 5 11				22			
15														
				- 20" limestone boulder from 16.6 ft. to 18.2 ft.										
		SS-6			67		4 6 8				59			
20														
				- with sand and gravel below 24.0 ft. (60% passing No. 200 sieve)										
25		SS-7			72		2 6							

Completion Depth:	89.00
Date Boring Started:	5/18/16
Date Boring Completed:	5/26/16
Engineer/Geologist:	TW
Project No.:	20162004

Remarks: Boring drilled with CME-550 using HSA and auto SPT. Groundwater encountered at 7.5 feet during drilling. Auger refusal at 34.0 feet.

The stratification lines represent approximate strata boundaries. In situations, the transition may be gradual.

Continued Next Page

KC LOG WITH LAB JASPER COUNTY BRIDGE A8425.GPJ 9/7/16

LOG OF BORING NO. B-06

Project Description: **Jasper County Bridge A8425**
Jasper County, MO

TSi Geotechnical
8248 NW 101st Terrace, #5
Kansas City, MO 64153
(816) 599-7965 (816) 599-7967 FAX

Surface El.: **949.1**
Location: **See Site and Boring Location Plan**

Depth, feet	Samples	Sample #	Graphic Log	MATERIAL DESCRIPTION	Recovery %	RQD	Penetration Blows Per 6 inches	Hand Penetrometer TSF	Undrained Shear Strength, TSF	Unit Dry Weight, lb/cu ft	Water Content, %	Liquid Limit	Plastic Limit	Plasticity Index
				Dark brown, lean CLAY (CL)*(continued)*			8							
30		SS-8			61		23 25 17				27			
		SS-9		LIMESTONE, gray, moderately hard, moderately weathered	42		50/.5"							
35		RUN1		LIMESTONE, gray, hard, slightly weathered, massive bedded, finely crystalline, with chert seams	100	92					19			
		RUN2			100	92								
40		RUN3			100	69								
		RUN4			100	75								
45		RUN5			100	93								
50														

Completion Depth:	89.00
Date Boring Started:	5/18/16
Date Boring Completed:	5/26/16
Engineer/Geologist:	TW
Project No.:	20162004

Remarks: Boring drilled with CME-550 using HSA and auto SPT. Groundwater encountered at 7.5 feet during drilling. Auger refusal at 34.0 feet.

The stratification lines represent approximate strata boundaries. In situations, the transition may be gradual.

Continued Next Page

KC LOG WITH LAB JASPER COUNTY BRIDGE A8425.GPJ 9/7/16

Note:
For locations of borings, see Sheet No. 1.

BORING DATA

Detailed September 2016
Checked October 2016

Note: This drawing is not to scale. Follow dimensions.

STATE OF MISSOURI
DAVID GRAHAM BARRETT
NUMBER PE-2006002787
PROFESSIONAL ENGINEER

THIS SHEET HAS BEEN SIGNED, SEALED AND DATED ELECTRONICALLY

DATE PREPARED	11/1/2016
ROUTE 96	STATE MO
DISTRICT BR	SHEET NO. 45
COUNTY	JASPER
JOB NO.	J7P2228F
CONTRACT ID.	
PROJECT NO.	
BRIDGE NO.	A8425

DESCRIPTION	DATE

MISSOURI HIGHWAYS AND TRANSPORTATION COMMISSION
105 WEST CAPITOL
JEFFERSON CITY, MO 65102
1-888-ASK-MODOT (1-888-275-6636)

HDR Engineering, Inc.
4435 Main Street
Suite 1000
Kansas City, MO 64111-1856
816-360-2700
Certificate of Authority: 000856

LOG OF BORING NO. B-06

Project Description: **Jasper County Bridge A8425**
Jasper County, MO

TSi Geotechnical
8248 NW 101st Terrace, #5
Kansas City, MO 64153
(816) 599-7965 (816) 599-7967 FAX

Surface El.: **949.1**
Location: **See Site and Boring Location Plan**

Depth, feet	Samples	Sample #	Graphic Log	MATERIAL DESCRIPTION	Recovery %	RQD	Penetration Blows Per 6 inches	Hand Penetrometer TSF	Undrained Shear Strength, TSF	Unit Dry Weight, lb/cu ft	Water Content, %	Liquid Limit	Plastic Limit	Plasticity Index
		RUN6		LIMESTONE, gray, hard, slightly weathered, massive bedded, finely crystalline, with chert seams*(continued)*	100	97								
55		RUN7			100	95								
60		RUN8		- 12" void from 62.0 ft. to 63.0 ft. - moderately weathered, fractured from 62.3 ft. to 63.3 ft.	82	45								
65		RUN9		- 18" void from 67.5 ft to 69.0 ft.	70	58								
70		RUN10		- fractured from 69.5 ft. to 71.5 ft.	12	0								
75														

Completion Depth:	89.00	Remarks:	Boring drilled with CME-550 using HSA and auto SPT. Groundwater encountered at 7.5 feet during drilling. Auger refusal at 34.0 feet.
Date Boring Started:	5/18/16		
Date Boring Completed:	5/26/16		
Engineer/Geologist:	TW		
Project No.:	20162004		

The stratification lines represent approximate strata boundaries.
In situations, the transition may be gradual.

Continued Next Page

KC LOG WITH LAB JASPER COUNTY BRIDGE A8425.GPJ 9/7/16

LOG OF BORING NO. B-06

Project Description: **Jasper County Bridge A8425**
Jasper County, MO

TSi Geotechnical
8248 NW 101st Terrace, #5
Kansas City, MO 64153
(816) 599-7965 (816) 599-7967 FAX

Surface El.: **949.1**
Location: **See Site and Boring Location Plan**

Depth, feet	Samples	Sample #	Graphic Log	MATERIAL DESCRIPTION	Recovery %	RQD	Penetration Blows Per 6 inches	Hand Penetrometer TSF	Undrained Shear Strength, TSF	Unit Dry Weight, lb/cu ft	Water Content, %	Liquid Limit	Plastic Limit	Plasticity Index
		RUN11		LIMESTONE, gray, hard, slightly weathered, massive bedded, finely crystalline, with chert seams*(continued)*	5	0								
80		RUN12		- 7" void from 79.0 ft. to 79.6 ft. - 24" void from 79.8 ft. to 81.8 ft.	7	0								
				Red, fat CLAY (CH)										
85		RUN13		LIMESTONE, gray, moderately hard, moderately weathered, finely crystalline pitted - 26" void from 84.6 ft. to 86.8 ft. - slightly weathered below 86.8 ft.	55	37								
90				Boring terminated at 89.0 ft.										
95														
100														

Completion Depth:	89.00	Remarks:	Boring drilled with CME-550 using HSA and auto SPT. Groundwater encountered at 7.5 feet during drilling. Auger refusal at 34.0 feet.
Date Boring Started:	5/18/16		
Date Boring Completed:	5/26/16		
Engineer/Geologist:	TW		
Project No.:	20162004		

The stratification lines represent approximate strata boundaries.
In situations, the transition may be gradual.

KC LOG WITH LAB JASPER COUNTY BRIDGE A8425.GPJ 9/7/16

Note:
For locations of borings, see Sheet No. 1.

BORING DATA

Detailed September 2016
Checked October 2016

Note: This drawing is not to scale. Follow dimensions.

STATE OF MISSOURI
DAVID GRAHAM BARRETT
NUMBER PE-2006002787
PROFESSIONAL ENGINEER

THIS SHEET HAS BEEN SIGNED, SEALED AND DATED ELECTRONICALLY

DATE PREPARED	11/1/2016
ROUTE	96
STATE	MO
DISTRICT	BR
SHEET NO.	46
COUNTY	JASPER
JOB NO.	J7P2228F
CONTRACT ID.	
PROJECT NO.	
BRIDGE NO.	A8425

DESCRIPTION
DATE

MISSOURI HIGHWAYS AND TRANSPORTATION COMMISSION
105 WEST CAPITOL
JEFFERSON CITY, MO 65102
1-888-ASK-MODOT (1-888-275-6636)

HDR Engineering, Inc.
4435 Main Street
Suite 1000
Kansas City, MO 64111-1856
816-360-2700
Certificate of Authority: 000856

LOG OF BORING NO. B-07

Project Description: **Jasper County Bridge A8425**
Jasper County, MO

TSi Geotechnical
8248 NW 101st Terrace, #5
Kansas City, MO 64153
(816) 599-7965 (816) 599-7967 FAX

Surface El.: **948.9**
Location: **See Site and Boring Location Plan**

Depth, feet	Samples	Sample #	Graphic Log	MATERIAL DESCRIPTION	Recovery %	RQD	Penetration Blows Per 6 inches	Hand Penetrometer TSF	Undrained Shear Strength, TSF	Unit Dry Weight, lb/cu ft	Water Content, %	Liquid Limit	Plastic Limit	Plasticity Index
				Brown, fat CLAY, with roots										
		SS-1		Brown, clayey gravel (GC)	67		1 2 1				26			
5		SS-2			100		1 2 5				23			
		SS-3		- with sand below 6.0 ft. (23% passing No. 200 sieve)	56		7 8 8							
10		SS-4			56		4 7 14				18			
				- trace cobbles below 11 ft.										
15		SS-5			11		2 4 6				37			
				Brown, clayey SAND (SC)										
20		SS-6		(12% passing No. 200 sieve)	72		7 4 2							
25		SS-7			72		4 WH WH				45			

Completion Depth: 65.60
Date Boring Started: 5/17/16
Date Boring Completed: 5/17/16
Engineer/Geologist: TW
Project No.: 20162004

Remarks: Boring drilled with CME-550 using HSA and auto SPT. Groundwater encountered at 7.0 feet during drilling. Auger refusal encountered at 34.7 feet.

The stratification lines represent approximate strata boundaries. In situations, the transition may be gradual.

Continued Next Page

KCLOG WITH LAB JASPER COUNTY BRIDGE A8425.GPJ 9/7/16

LOG OF BORING NO. B-07

Project Description: **Jasper County Bridge A8425**
Jasper County, MO

TSi Geotechnical
8248 NW 101st Terrace, #5
Kansas City, MO 64153
(816) 599-7965 (816) 599-7967 FAX

Surface El.: **948.9**
Location: **See Site and Boring Location Plan**

Depth, feet	Samples	Sample #	Graphic Log	MATERIAL DESCRIPTION	Recovery %	RQD	Penetration Blows Per 6 inches	Hand Penetrometer TSF	Undrained Shear Strength, TSF	Unit Dry Weight, lb/cu ft	Water Content, %	Liquid Limit	Plastic Limit	Plasticity Index
				Brown, clayey SAND (SC)*(continued)*										
30		SS-8			72		7 11 14				51			
				LIMESTONE, gray trace black and brown, moderately hard, moderately weathered, finely crystalline										
		SS-9					50/0"							
35		RUN1		LIMESTONE, gray trace black and brown, very hard, slightly weathered, massive bedded, finely crystalline	100	83								
		RUN2		- pitted below 37.5 ft.	100	93								
40														
		RUN3			100	70								
45														
		RUN4			100	93								
50														

Completion Depth: 65.60
Date Boring Started: 5/17/16
Date Boring Completed: 5/17/16
Engineer/Geologist: TW
Project No.: 20162004

Remarks: Boring drilled with CME-550 using HSA and auto SPT. Groundwater encountered at 7.0 feet during drilling. Auger refusal encountered at 34.7 feet.

The stratification lines represent approximate strata boundaries. In situations, the transition may be gradual.

Continued Next Page

KCLOG WITH LAB JASPER COUNTY BRIDGE A8425.GPJ 9/7/16

Note:
For locations of borings, see Sheet No. 1.

BORING DATA

Detailed September 2016
Checked October 2016

Note: This drawing is not to scale. Follow dimensions.

STATE OF MISSOURI
DAVID GRAHAM BARRETT
NUMBER PE-2006002787
PROFESSIONAL ENGINEER

THIS SHEET HAS BEEN SIGNED, SEALED AND DATED ELECTRONICALLY

DATE PREPARED 11/1/2016
ROUTE 96 | STATE MO
DISTRICT BR | SHEET NO. 47
COUNTY JASPER
JOB NO. J7P2228F
CONTRACT ID.
PROJECT NO.
BRIDGE NO. A8425

DATE	DESCRIPTION

MISSOURI HIGHWAYS AND TRANSPORTATION COMMISSION
105 WEST CAPITOL
JEFFERSON CITY, MO 65102
1-888-ASK-MODOT (1-888-275-6636)

HDR Engineering, Inc.
4435 Main Street
Suite 1000
Kansas City, MO 64111-1856
816-360-2700
Certificate of Authority: 000856

LOG OF BORING NO. B-07

Project Description: **Jasper County Bridge A8425**
Jasper County, MO

TSi Geotechnical
8248 NW 101st Terrace, #5
Kansas City, MO 64153
(816) 599-7965 (816) 599-7967 FAX

Surface El.: **948.9**
Location: **See Site and Boring Location Plan**

Depth, feet	Samples	Sample #	Graphic Log	MATERIAL DESCRIPTION	Recovery %	RQD	Penetration Blows Per 6 Inches	Hand Penetrometer TSF	Undrained Shear Strength, TSF	Unit Dry Weight, lb/cu ft	Water Content, %	Liquid Limit	Plastic Limit	Plasticity Index
				LIMESTONE, gray trace black and brown, very hard, slightly weathered, massive bedded, finely crystalline*(continued)*										
		RUN5			100	93								
55														
		RUN6			100	100								
60														
		RUN7			100	95								
65														
				Boring terminated at 65.6 ft.										
70														
75														

Completion Depth:	65.60
Date Boring Started:	5/17/16
Date Boring Completed:	5/17/16
Engineer/Geologist:	TW
Project No.:	20162004

Remarks: Boring drilled with CME-550 using HSA and auto SPT. Groundwater encountered at 7.0 feet during drilling. Auger refusal encountered at 34.7 feet.

The stratification lines represent approximate strata boundaries.
In situations, the transition may be gradual.

KC LOG WITH LAB JASPER COUNTY BRIDGE A8425.GPJ 97/16

LOG OF BORING NO. B-08

Project Description: **Jasper County Bridge A8425**
Jasper County, MO

TSi Geotechnical
8248 NW 101st Terrace, #5
Kansas City, MO 64153
(816) 599-7965 (816) 599-7967 FAX

Surface El.: **975.3**
Location: **See Site and Boring Location Plan**

Depth, feet	Samples	Sample #	Graphic Log	MATERIAL DESCRIPTION	Recovery %	RQD	Penetration Blows Per 6 Inches	Hand Penetrometer TSF	Undrained Shear Strength, TSF	Unit Dry Weight, lb/cu ft	Water Content, %	Liquid Limit	Plastic Limit	Plasticity Index
				Asphaltic concrete (12.0")										
				Portland cement concrete (7.0")										
				Gray brown, lean CLAY (FILL)										
		SS-1			83		2 1 3				19	30	17	13
5														
		ST-2		Brown, fat CLAY (FILL), with gravel and sand	46									
10														
		SS-3			33		2 6 3				31			
15														
		SS-4			61		6 3 3				20			
20														
		SS-5			11		2 3 3				21			
25														

Completion Depth:	50.50
Date Boring Started:	6/22/16
Date Boring Completed:	6/22/16
Engineer/Geologist:	TW
Project No.:	20162004

Remarks: Boring drilled with CME-550 using HSA and auto SPT. Began rotary at 9.0 feet during drilling.

The stratification lines represent approximate strata boundaries.
In situations, the transition may be gradual.

Continued Next Page

KC LOG WITH LAB JASPER COUNTY BRIDGE A8425.GPJ 97/16

STATE OF MISSOURI
DAVID GRAHAM BARRETT
NUMBER PE-2006002787
PROFESSIONAL ENGINEER

THIS SHEET HAS BEEN SIGNED, SEALED AND DATED ELECTRONICALLY

DATE PREPARED	11/1/2016
ROUTE	96
STATE	MO
DISTRICT	BR
SHEET NO.	48
COUNTY	JASPER
JOB NO.	J7P2228F
CONTRACT ID.	
PROJECT NO.	
BRIDGE NO.	A8425

DESCRIPTION
DATE

MISSOURI HIGHWAYS AND TRANSPORTATION COMMISSION
105 WEST CAPITOL
JEFFERSON CITY, MO 65102
1-888-ASK-MODOT (1-888-275-6636)

HDR Engineering, Inc.
4435 Main Street
Suite 1000
Kansas City, MO 64111-1856
816-360-2700
Certificate of Authority: 000856

Note:
For locations of borings, see Sheet No. 1.

BORING DATA

Detailed September 2016
Checked October 2016

Note: This drawing is not to scale. Follow dimensions.

LOG OF BORING NO. B-08

Project Description: **Jasper County Bridge A8425**
Jasper County, MO

TSi Geotechnical
8248 NW 101st Terrace, #5
Kansas City, MO 64153
(816) 599-7965 (816) 599-7967 FAX

Surface El.: **975.3**
Location: **See Site and Boring Location Plan**

Depth, feet	Samples	Sample #	Graphic Log	MATERIAL DESCRIPTION	Recovery %	RQD	Penetration Blows Per 6 Inches	Hand Penetrometer TSF	Undrained Shear Strength, TSF	Unit Dry Weight, lb/cu ft	Water Content, %	Liquid Limit	Plastic Limit	Plasticity Index
				Brown, fat CLAY (FILL), with gravel and sand*(continued)*										
		SS-6		- 2.0" sand seam at 27.0 ft.	33		9 8 2				21			
30														
		SS-7		Brown, lean CLAY (CL), with gravel and sand (89% passing No. 200 sieve)	100		3 3 4				26	29	17	12
35														
		SS-8			100		14 20 13				32			
40				LIMESTONE, gray, moderately hard, moderately weathered										
		RUN		LIMESTONE, gray, hard, moderately weathered, medium bedded to massive, finely crystalline with chert nodules	100	84								
				- 2" highly weathered seam at 43.6 ft.										
45														
		RUN			100	74								
				- 0.25" clay seam at 48.4 ft.										
50														

Completion Depth:	50.50	Remarks:	Boring drilled with CME-550 using HSA and auto SPT. Began rotary at 9.0 feet during drilling.
Date Boring Started:	6/22/16		
Date Boring Completed:	6/22/16		
Engineer/Geologist:	TW		
Project No.:	20162004		

The stratification lines represent approximate strata boundaries.
In situations, the transition may be gradual.

Continued Next Page

KC LOG WITH LAB JASPER COUNTY BRIDGE A8425.GPJ 9/7/16

LOG OF BORING NO. B-08

Project Description: **Jasper County Bridge A8425**
Jasper County, MO

TSi Geotechnical
8248 NW 101st Terrace, #5
Kansas City, MO 64153
(816) 599-7965 (816) 599-7967 FAX

Surface El.: **975.3**
Location: **See Site and Boring Location Plan**

Depth, feet	Samples	Sample #	Graphic Log	MATERIAL DESCRIPTION	Recovery %	RQD	Penetration Blows Per 6 Inches	Hand Penetrometer TSF	Undrained Shear Strength, TSF	Unit Dry Weight, lb/cu ft	Water Content, %	Liquid Limit	Plastic Limit	Plasticity Index
				Boring terminated at 50.5 ft.										
55														
60														
65														
70														
75														

Completion Depth:	50.50	Remarks:	Boring drilled with CME-550 using HSA and auto SPT. Began rotary at 9.0 feet during drilling.
Date Boring Started:	6/22/16		
Date Boring Completed:	6/22/16		
Engineer/Geologist:	TW		
Project No.:	20162004		

The stratification lines represent approximate strata boundaries.
In situations, the transition may be gradual.

KC LOG WITH LAB JASPER COUNTY BRIDGE A8425.GPJ 9/7/16

Note:
For locations of borings, see Sheet No. 1.

BORING DATA

Detailed September 2016
Checked October 2016

Note: This drawing is not to scale. Follow dimensions.

STATE OF MISSOURI
DAVID GRAHAM BARRETT
NUMBER PE-2006002787
PROFESSIONAL ENGINEER

THIS SHEET HAS BEEN SIGNED, SEALED AND DATED ELECTRONICALLY

DATE PREPARED	11/1/2016
ROUTE	96
STATE	MO
DISTRICT	BR
SHEET NO.	49
COUNTY	JASPER
JOB NO.	J7P2228F
CONTRACT ID.	
PROJECT NO.	
BRIDGE NO.	A8425

DATE	DESCRIPTION

MISSOURI HIGHWAYS AND TRANSPORTATION COMMISSION
105 WEST CAPITOL
JEFFERSON CITY, MO 65102
1-888-ASK-MODOT (1-888-275-6636)

HDR Engineering, Inc.
4435 Main Street
Suite 1000
Kansas City, MO 64111-1856
816-360-2700
Certificate of Authority: 000856

MISSOURI STATE HIGHWAY DEPARTMENT

FED. ROAD DIST. NO.	STATE	FED. AID PROJ. NO.	FISC. YEAR	SHEET NO.	TOTAL SHEETS
5	MO.	NRM 84B (U.S. 66)	19		

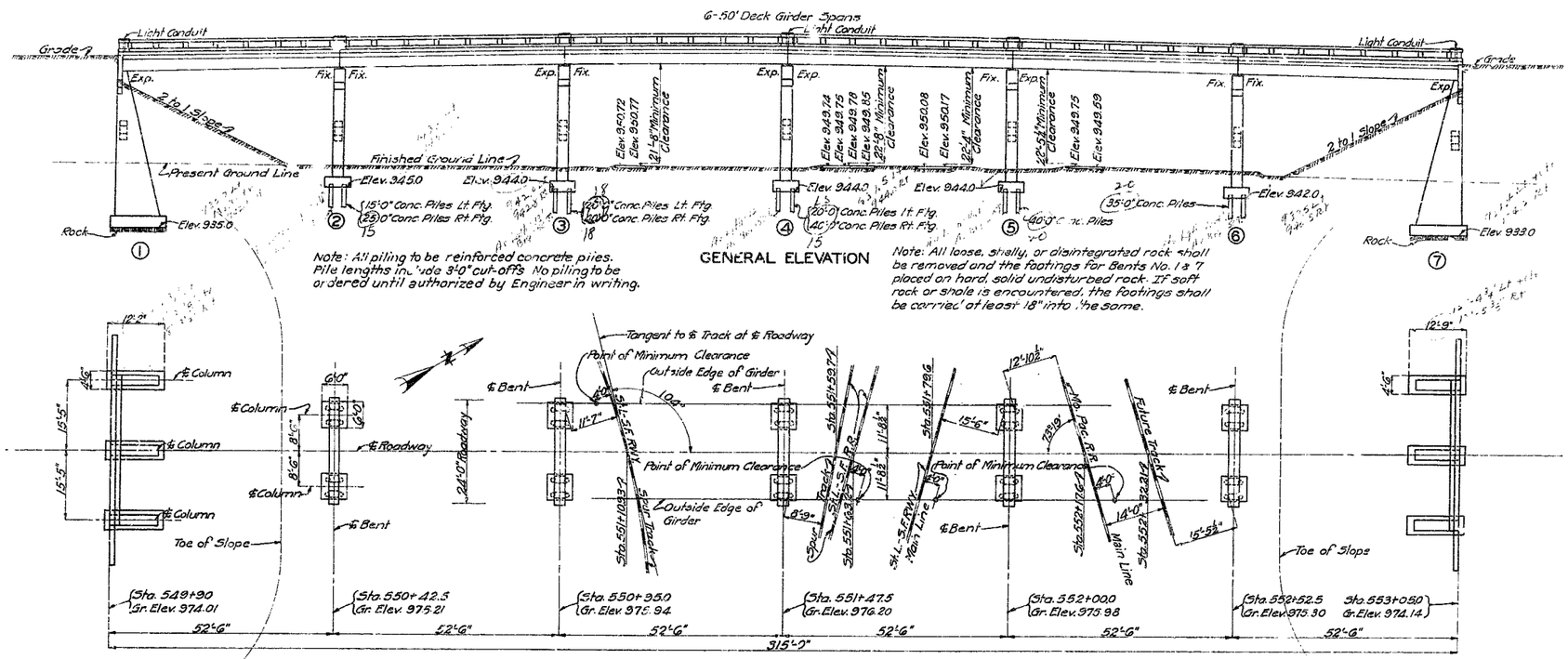

COMPLETE BILL OF REINFORCING STEEL

No.	Size	Length	Mark	Location
End Bents No. 1 & 7				
36	¾"ϕ	6'-3"	D1	Footing
24	¾"ϕ	9'-0"	F1	Haunch
48	1"ϕ	9'-6"	F4	"
12	¾"ϕ	16'-3"	H1	Wing
6	¾"ϕ	27'-9"	H2	"
10	1"ϕ	33'-0"	H3	Beam
4	¾"ϕ	33'-0"	H4	"
8	⅝"ϕ	33'-0"	H5	"
1	¾"ϕ	8'-0"	H6	"
12	1"ϕ	10'-6"	H7	"
20	¾"ϕ	8'-6"	H9	Wing
12	1"ϕ	35'-0"	H10	Tie Beam
52	½"ϕ	8'-0"	P7	" "
8	⅝"ϕ	15'-3"	T1	Wing
8	⅝"ϕ	17'-6"	T2	"
6	⅝"ϕ	33'-0"	T3	Beam
10	½"ϕ	8'-6"	V1	Wing
4	½"ϕ	7'-3"	V2	"
58	½"ϕ	10'-6"	V3	Backwall
18	⅝"ϕ	23'-6"	V4	Column
18	⅝"ϕ	25'-6"	V5	"
36	⅝"ϕ	12'-0"	V6	"
Int. Bents No. 2, 3, 4, 5 & 6				
40	¾"ϕ	5'-9"	D2	Footing
40	¾"ϕ	9'-0"	F1	Haunch
40	¾"ϕ	9'-0"	F2	"
60	1"ϕ	9'-6"	F4	Tie Beam
80	1"ϕ	26'-9"	G1	Beam
10	¾"ϕ	24'-6"	G2	"
8	¾"ϕ	23'-9"	P1	Column
152	½"ϕ	10'-0"	P2	"
160	½"ϕ	11'-3"	P3	Beam
24	¾"ϕ	25'-6"	P4	Column
8	¾"ϕ	26'-9"	P5	"
30	1"ϕ	21'-3"	P6	Tie Beam
70	½"ϕ	8'-0"	P7	" "
Superstructure				
1464	⅝"ϕ	8'-9"	B1	Girder
96	½"ϕ	27'-0"	B2	"
120	1½"ϕ	54'-6"	B3	"
72	1½"ϕ	88'-0"	B4	"
48	1½"ϕ	55'-9"	B5	"
72	1½"ϕ	45'-0"	B6	"
24	1½"ϕ	59'-0"	B7	"
270	⅝"ϕ	28'-3"	S1	Slab
270	⅝"ϕ	26'-9"	S2	"
264	⅝"ϕ	29'-3"	S3	"
36	½"ϕ	29'-6"	S4	"
36	½"ϕ	7'-0"	S5	"
84	½"ϕ	6'-6"	S6	"
96	½"ϕ	27'-0"	S7	"
40	½"ϕ	7'-0"	S8	"
8	½"ϕ	6'-0"	S9	"
32	½"ϕ	24'-6"	W1	Web
4	½"ϕ	34'-6"	W2	"
8	½"ϕ	6'-6"	W3	"
564	½"ϕ	4'-9"	R1	Rail
420	½"ϕ	18"	R2	"

Bending Sketches & Cutting Diagrams

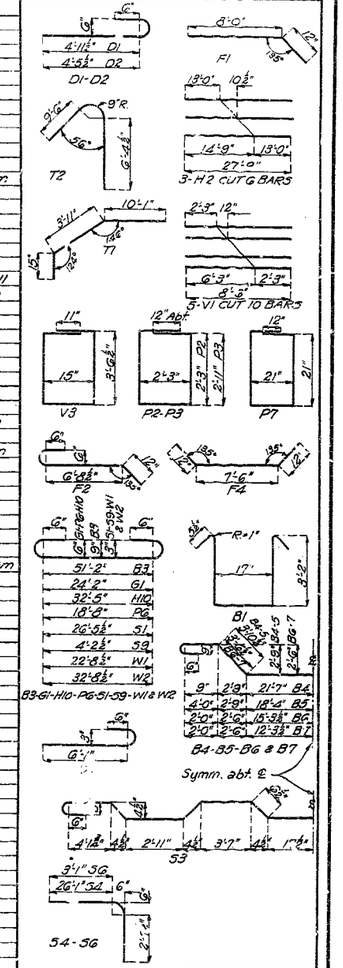

Note: Reinforcing bars ½" or over in diameter, which are bent to an angle greater than 90°, shall be of structural grade.

Note:-Dimensions are given along ℄ of bars and are for computed lengths.

B.M. Elev. 947.64. N.E. Corner Lower Concrete Step of Signal Tower.

GENERAL NOTES:—

~~Concrete in handrail to be 1:2:3 mix, Class "A".~~ Concrete in slabs, curbs, and girders to be 1:2:3½ mix, Class "X". All other concrete to be 1:2:4 mix, Class "B".

Exposed edges to be beveled ¾" where no other bevel is noted.

Deck girder spans to be constructed full width and length at one operation. No construction joints permitted.

Where rubber compound is specified on plans for use in partition and expansion joints, the premoulded joint shall be securely stitched to one face of concrete with copper wire.

Two name plates type "A" as shown on Std. S918R to be furnished and placed by contractor. Cost of name plates to be included in price bid for other items.

Only sufficient camber to be used in construction to insure against settlement below lines given as finished grade.

Falsework for spans over existing railroad tracks shall be constructed with a minimum vertical clearance of 20'-0" and a minimum lateral clearance from centerline of tracks of 8'-6" for Mo. Pac. R.R. and 7'-6" for St. L.-S.F. R.R.

Bar supports and spacers will be required for reinforcing steel in Superstructure. See Std. C110R and Special Provisions.

Bridge excavation in accordance with Section I of Standard Specifications issued April 1, 1930.

Piling to be driven to sustain a load of at least 33 ton per pile and to a penetration of at least 12 feet below bottom of footings.

All concrete shall be proportioned by the weight proportioning method. See Special Provisions.

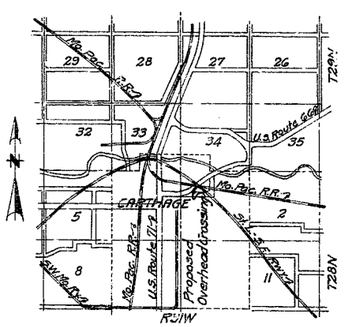

LOCATION SKETCH
Scale 1" = 1 Mile

ESTIMATED QUANTITIES

Item		Superstr.	Substr.	Total
Bridge Excavation Class 1	Cu. Yds.		490	490
Concrete 1:2:4 mix, Class "B"	Cu. Yds.		314.4	314.4
Concrete 1:2:3½ mix, Class "X"	Cu. Yds.	492.0		492.0
Phosphor Bronze Bearing	24-Sets @ 3-Pts. each (10"×20") (Flanged)			
Reinforcing Steel	Lbs.	126,040	25,290	165,530
Concrete 1:2:3 mix, Class "A"	Cu. Yds.	30.6		30.6
Concrete Piles	Lin. Ft.		1120	1120
Concrete Pile Cut-offs	Lin. Ft.		120	120
Fiber Conduit 2½"	Lin. Ft.	630		630
Fiber Conduit 1½"	Lin. Ft.	24		24

Note: All bridge excavation to be paid for as Class 1 Bridge Excavation.

BRIDGE OVER ST. L.-S.F. R.R. & MO. PAC. R.R.

STATE ROAD THRU CARTHAGE

ABOUT 1.0 MILE EAST OF CARTHAGE

PROJECT NO. NRM 84B (U.S. 66) STA. 549+90

JASPER COUNTY

SUBMITTED BY W. M. Baker BRIDGE ENGINEER DATE 5/1/34

APPROVED BY T. H. Cutler CHIEF ENGINEER DATE 5/1/34

STD. S918R
STD. C110R
K-428

Drawn Jan. 1934 by L.K.S.
Traced Feb. 1934 by C.A.F.
Checked Feb. 1934 by H. D. & R.A.B.

Note:-This drawing is not to scale. Follow dimensions.

Sheet No. 1 of 4.

F.A.

86

GALLUP'S-K.C. MO

MISSOURI STATE HIGHWAY DEPARTMENT

FED. ROAD DIST. NO.	STATE	FED. AID PROJ. NO.	FISCAL YEAR	SHEET NO.	TOTAL SHEETS
5	MO.	NRM 84B (U.S. 66)	19		

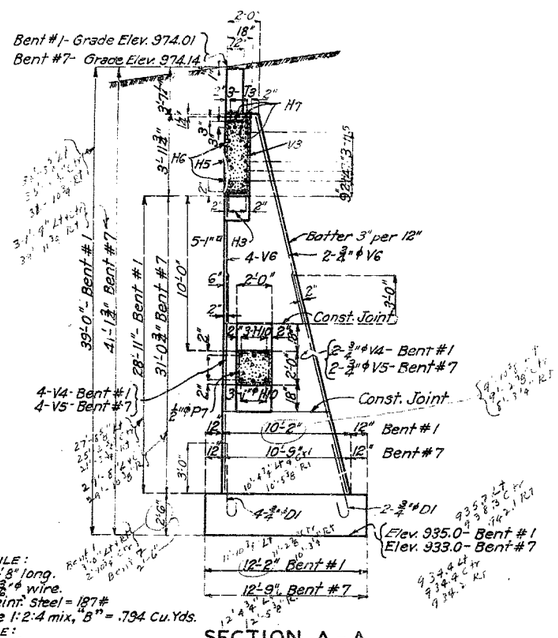

SECTION A-A

REQ'D. 1-15' PILE:
8-$\frac{3}{4}$"ϕ bars 14'-8" long.
125 Lin. Ft. of $\frac{3}{16}$"ϕ wire.
Total wt. of reinf. steel = 187#
Total concrete 1:2:4 mix, "B" = .794 Cu. Yds.
REQ'D. 1-20' PILE:
8-$\frac{3}{4}$"ϕ bars 19'-8" long.
145 Lin. Ft. of $\frac{3}{16}$"ϕ wire.
Total wt. of reinf. steel = 249#
Total concrete 1:2:4 mix, "B" = 1.067 Cu. Yds.
REQ'D. 1-25' PILE:
8-$\frac{3}{4}$"ϕ bars 24'-8" long.
165 Lin. Ft. of $\frac{3}{16}$"ϕ wire.
Total wt. of reinf. steel = 310#
Total concrete 1:2:4 mix, "B" = 1.339 Cu. Yds.
REQ'D. 1-35' PILE:
8-$\frac{3}{4}$"ϕ bars 34'-8" long.
205 Lin. Ft. of $\frac{3}{16}$"ϕ wire.
Total wt. of reinf. steel = 433#
Total concrete 1:2:4 mix, "B" = 1.883 Cu. Yds.
REQ'D. 1-40' PILE:
8-$\frac{3}{4}$"ϕ bars 39'-8" long.
225 Lin. Ft. of $\frac{3}{16}$"ϕ wire.
Total wt. of reinforcing steel = 495#
Total concrete 1:2:4 mix, "B" = 2.155 Cu. Yds.

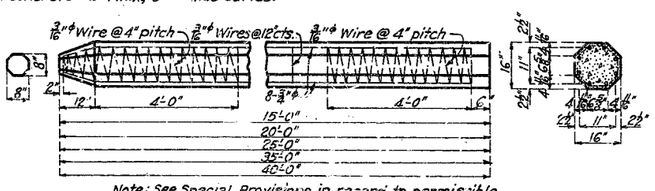

Note: See Special Provisions in regard to permissible substitutions of other approved types of concrete piles.

REINFORCED CONCRETE PILE

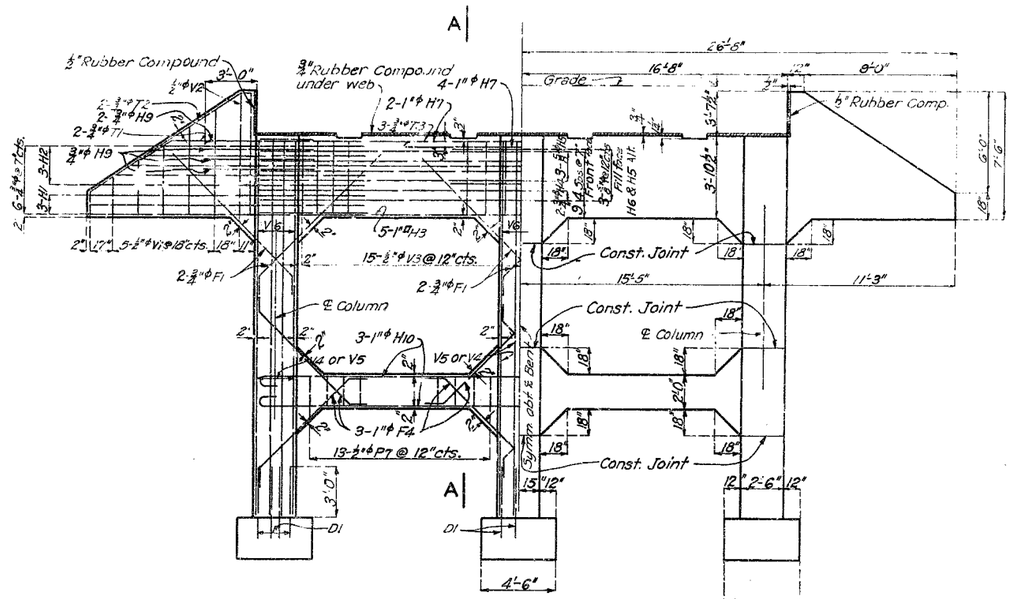

Note: Center bars H6 and H7 about ℄ Bent.

ELEVATION

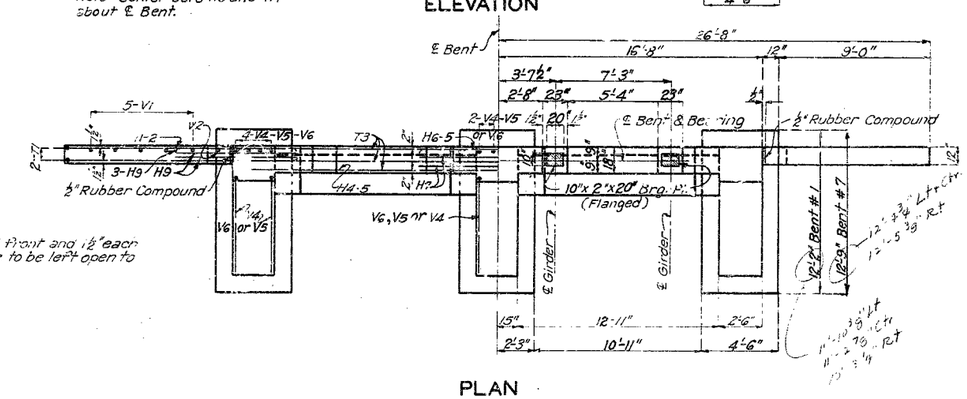

Note: Space back and front and 1½" each side of bearing plate to be left open to depth of plate.

PLAN

DETAILS OF BENTS NO. 1 & NO. 7

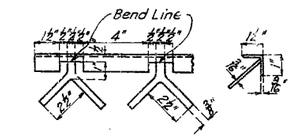

Note: Cost of metallic edge moulding will be included in unit bid price for concrete.

METALLIC EDGE MOULDING

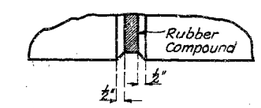

Note: Use bevel as shown for exposed faces of all joints consisting of rubber compound except at top surface of roadway slab. Use metallic edge moulding at top surface of roadway each side of rubber compound joint.

DETAIL OF BEVEL FOR RUBBER COMPOUND JOINTS

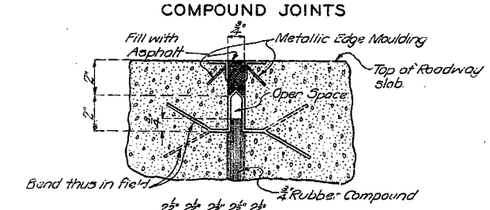

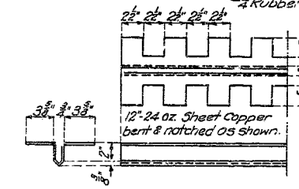

Note: Cost of copper waterstop to be included in price bid for Class "X" concrete. Copper waterstop to extend thru entire length of joint.

DETAILS OF COPPER WATERSTOP OVER INTERIOR BENTS

BRIDGE OVER ST. L. & S.F. R.R. & MO. PAC. R.R.

STATE ROAD THRU CARTHAGE

ABOUT 1.0 MILE EAST OF CARTHAGE

PROJECT NO. NRM84B (U.S.66) STA. 549+90

JASPER COUNTY

Drawn May 1932 by A.O.V.
Traced May 1932 by G.W. Assembled Mar. 1934 By H.D.-R.J.G.
Checked 1932 by Checked April 1934 By

Note: This drawing is not to scale. Follow dimensions.

Sheet No. 2 of 4.

F.A.

K-428

9-7-32

MISSOURI STATE HIGHWAY DEPARTMENT

FED ROAD DIST. NO.	STATE	FED. AID PROJ. NO.	FISCAL YEAR	SHEET NO.	TOTAL SHEETS
5	MO	NRM84B (U.S.66)	19		

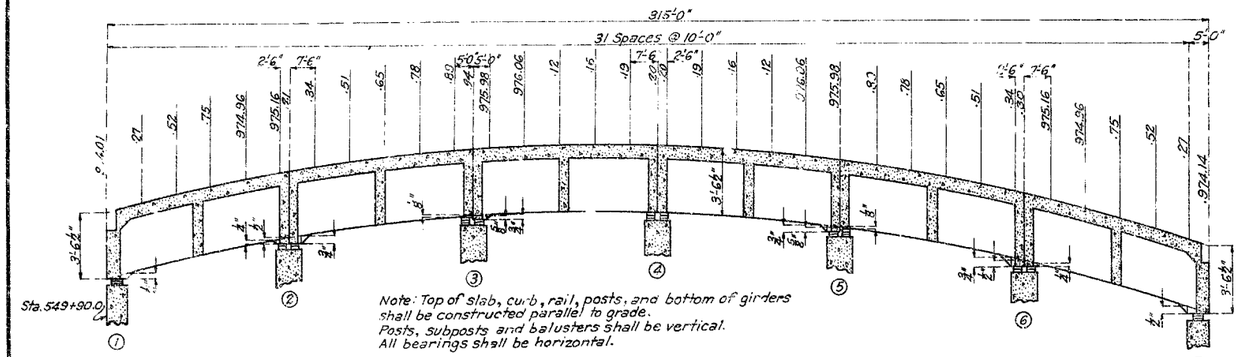

LONGITUDINAL SECTION AT ℄ ROADWAY SHOWING GRADE ELEVATIONS AND GIRDER HAUNCHES

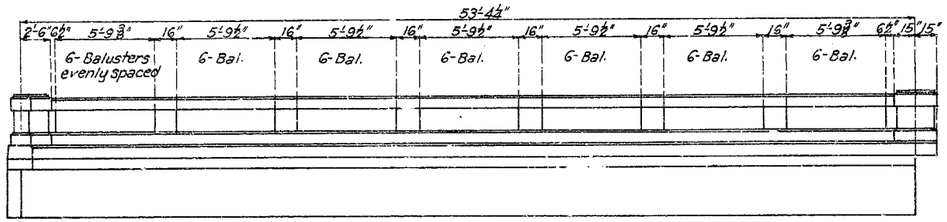

SPAN (1-2)

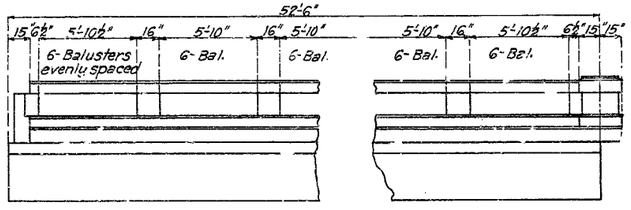

SPANS (2-3), (3-4), (4-5) & (5-6)

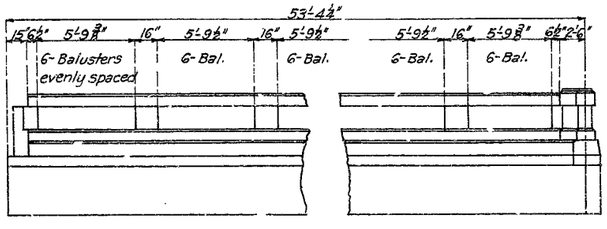

SPAN (6-7)

ELEVATIONS SHOWING HANDRAIL DIMENSIONS ALONG ℄ RAIL

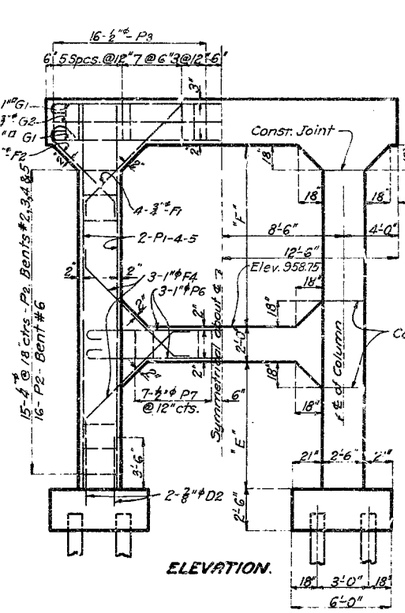

ELEVATION.

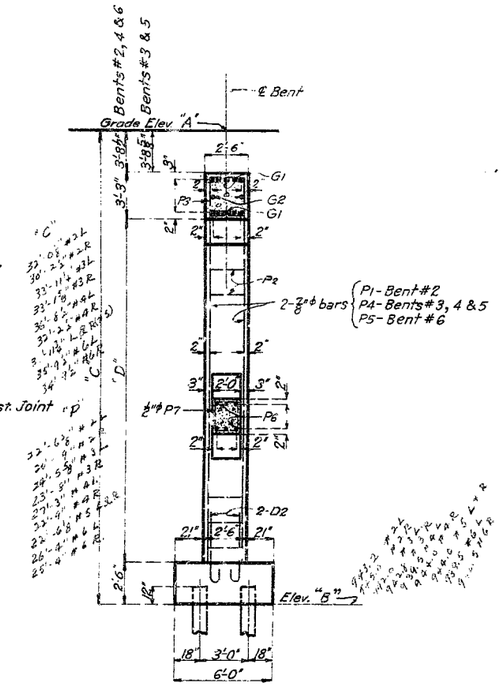

SECTION AT ℄.

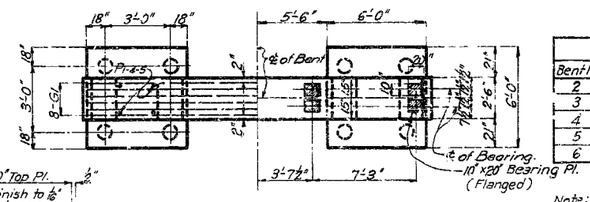

PLAN.
DETAILS OF BENTS NO. 2, 3, 4, 5, & 6.

DATA FOR INT. BENTS						
Bent No.	Elev. "A"	Elev. "B"	"C"	"D"	"E"	"F"
2	975.21	945.01	30'-2½"	20'-9"	9'-3"	9'-6"
3	975.94	944.0	31'-11¼"	22'-5⅝"	10'-9"	10'-2⅝"
4	976.20	944.0	32'-2½"	22'-9"	10'-3"	10'-6"
5	975.98	944.0	31'-11¾"	22'-6⅝"	10'-3"	10'-3⅛"
6	975.30	942.0	33'-3½"	23'-10"	12'-3"	9'-7"

Note: Space back and front of bearing plates and space between top of bents and bottom of girder webs to be left open to depth of plates.

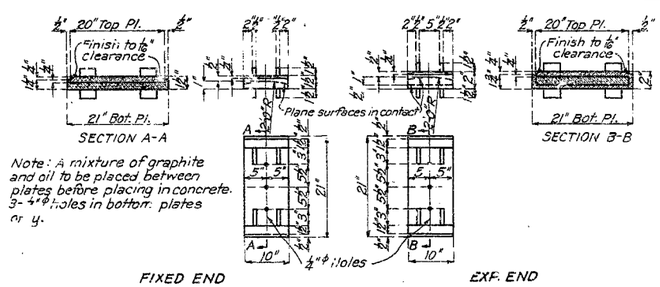

Note: A mixture of graphite and oil to be placed between plates before placing in concrete. 3-¼"φ holes in bottom plates only.

Note: 24 Sets of 5 Pls. each reqd. Each set consisting of 1 top plate and 1 bottom plate for fixed end and 1 top plate, 1 floater plate and 1 bottom plate for expansion end.

PHOSPHOR BRONZE BEARING PLATES

Note: This drawing is not to scale. Follow dimensions.

BRIDGE OVER ST. L. & S.F. R.R. & MO. PAC. R.R.

STATE ROAD THRU CARTHAGE

ABOUT 1.0 MILE EAST OF CARTHAGE

PROJECT NO. NRM84B (U.S. 66) STA. 549+90

JASPER COUNTY

Assembled Feb. 1934 By H.D.-R.J.B.
Checked April 1934 By RJB
Drawn Feb. 1925 By J.T.
Checked Feb. 1925 By B.E.O.

Sheet #3 of 4.

F.A.

K-428

I-Beams - Steel Spans - Bents. S 8902.

MISSOURI STATE HIGHWAY DEPARTMENT

FED ROAD DIST NO.	STATE	FED AID PROJ. NO.	FISCAL YEAR	SHEET NO.	TOTAL SHEETS
5	MO.	NRM84B (U.S.66)	19		

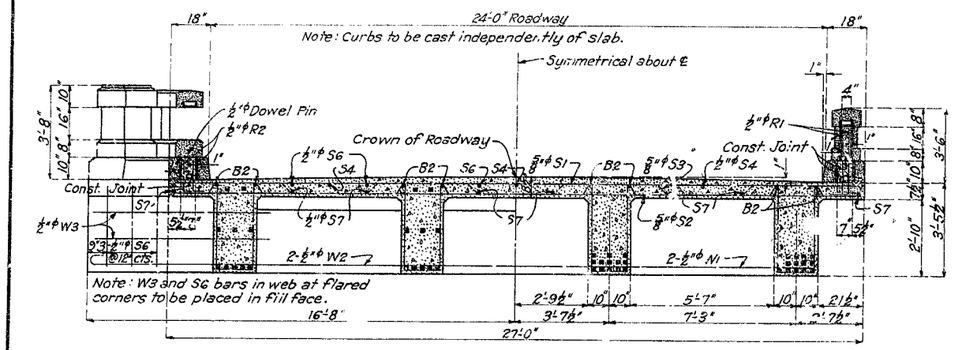

HALF SECTION AT END BENT

HALF SECTION THRU SPAN

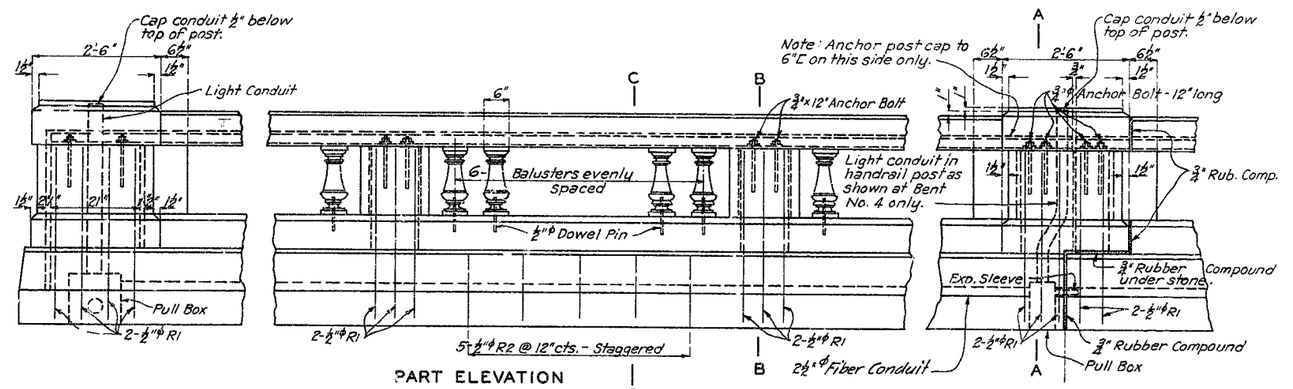

PART ELEVATION

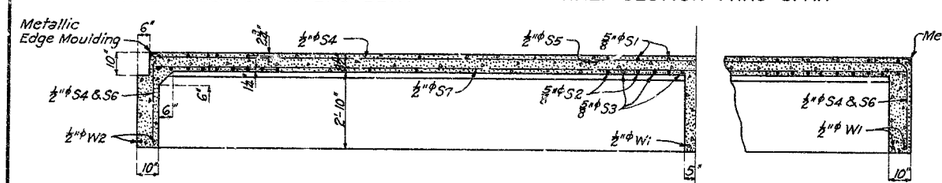

LONGITUDINAL SECTION ON ℄ ROADWAY

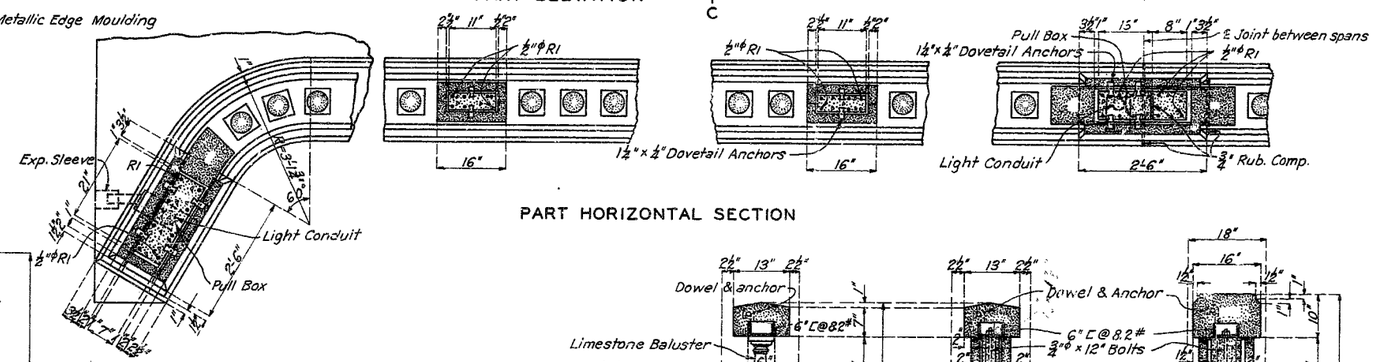

PART HORIZONTAL SECTION

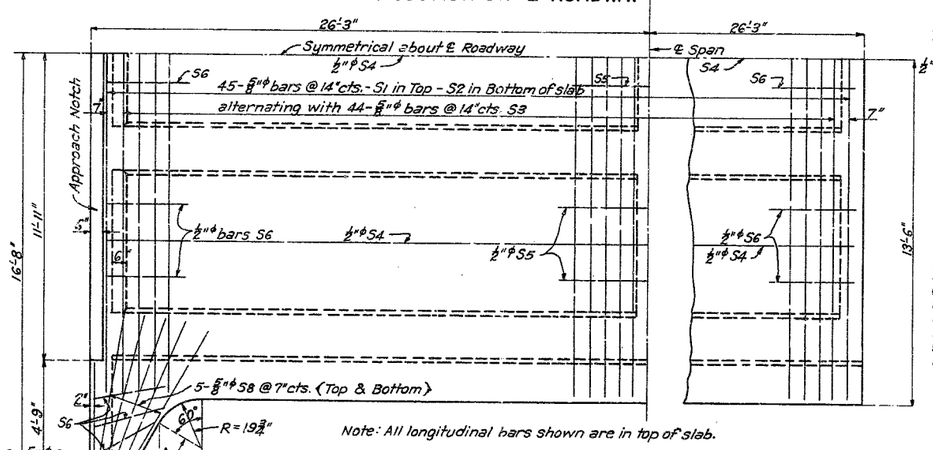

Note: All longitudinal bars shown are in top of slab.

PART PLAN OF SUPERSTRUCTURE (CURB AND RAIL NOT SHOWN)

Note: Light standards to be located at end bents and at Bent No. 4 on both sides of roadway. Light standards and fixtures to be furnished and placed by City of Carthage.
Conduits to have fiber expansion sleeves and metal pull boxes located in slab and made accessible from bottom of slab at end handrail posts, at handrail posts over Bent No. 4, and at such other bents as is deemed necessary for the proper installation of the light wires.
Conduits, sleeve expansion joints, pull boxes, and pull wire shall be furnished and placed by contractor. See Special Provisions.
Conduits in handrail post to light standards and in slab at ends of bridge to be 1½"φ. All conduits to be of fibrous composition meeting with the approval of the Engineer.
Leave one No. 9 A.W.G. galvanized wire in each conduit for pull wire.

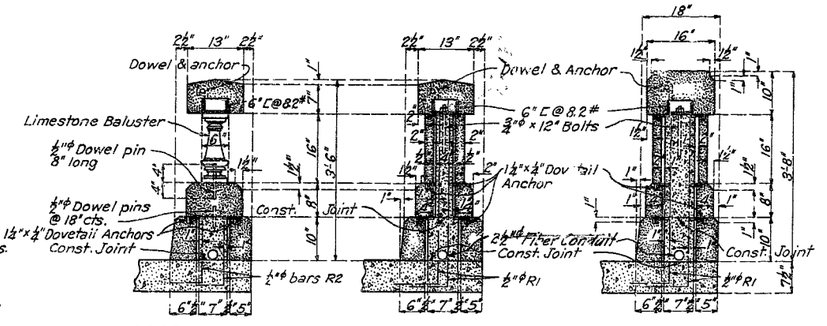

SECTION C-C

SECTION B-B

SECTION A-A

DETAILS OF HANDRAIL

Note: See Sheet No. 3 for additional handrail details.

Note:
Handrail channels, dowels, and bolts shall be udylited. Dovetail anchors, metal groove supports, and other metal parts shall be galvanized. See Special Provisions.

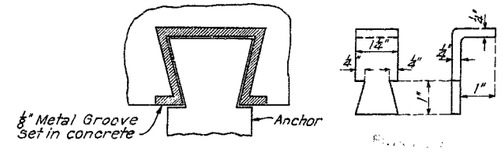

DETAIL OF METAL GROOVE FOR ANCHOR

DETAIL OF DOVETAIL ANCHOR

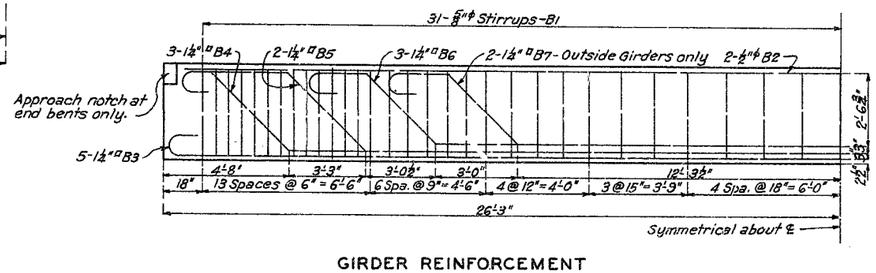

GIRDER REINFORCEMENT

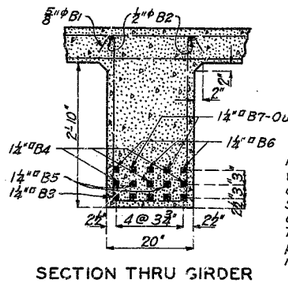

SECTION THRU GIRDER

Notes: Posts, subposts and balusters shall be vertical. Top of slab, curbs, rails, posts, and bottom of girders shall be constructed parallel to grade. See Sheet No. 3 for grade elevations on vertical curve over length of bridge.
Top and bottom rails, balusters, and facings for posts, subposts, and curbs to be cut limestone material. See Special Provisions.

BRIDGE OVER ST. L. & S.F. R.R. & MO. PAC. R.R.

STATE ROAD THRU CARTHAGE

ABOUT 1.0 MILE EAST OF CARTHAGE

PROJECT NO. NRM84B (U.S.66) STA. 549 + 90

JASPER COUNTY

Drawn Mar. 1934 By H.D.
Traced Mar. 1934 By R.J.G.
Checked April 1934 By PAS.

Note: This drawing is not to scale. Follow dimensions.

Sheet No. 4 of 4.

K-428

F.A.

98

MISSOURI HIGHWAYS AND TRANSPORTATION COMMISSION

SEC/SUR 3 TWP T28N RGE R31W

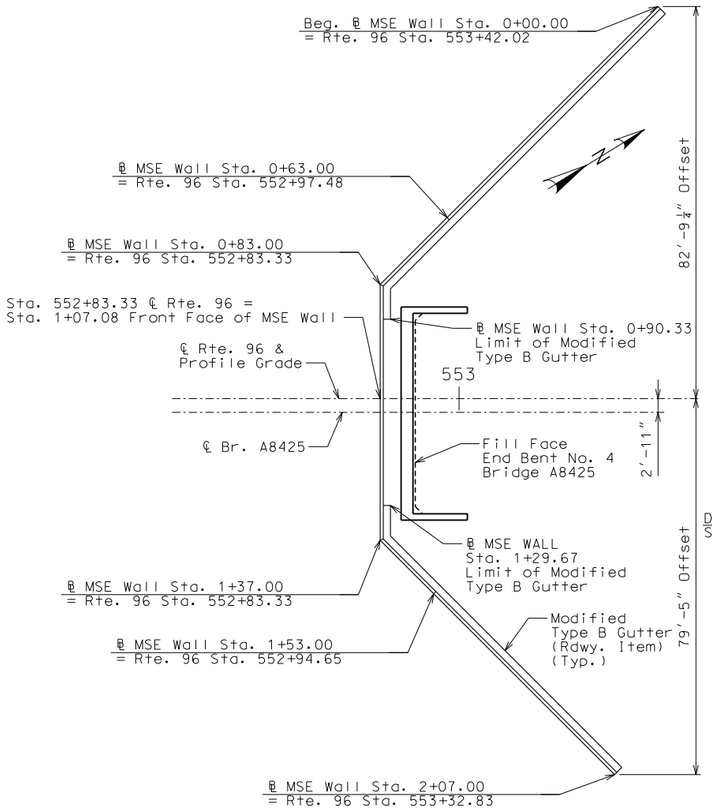

PLAN

Leveling Pad & Coping not shown for clarity.
Note: ℄ Wall and offsets located at Front Face of MSE Wall.

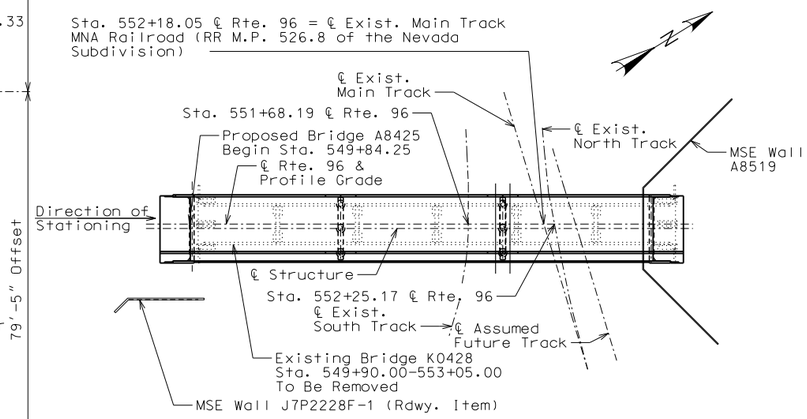

LOCATION SKETCH

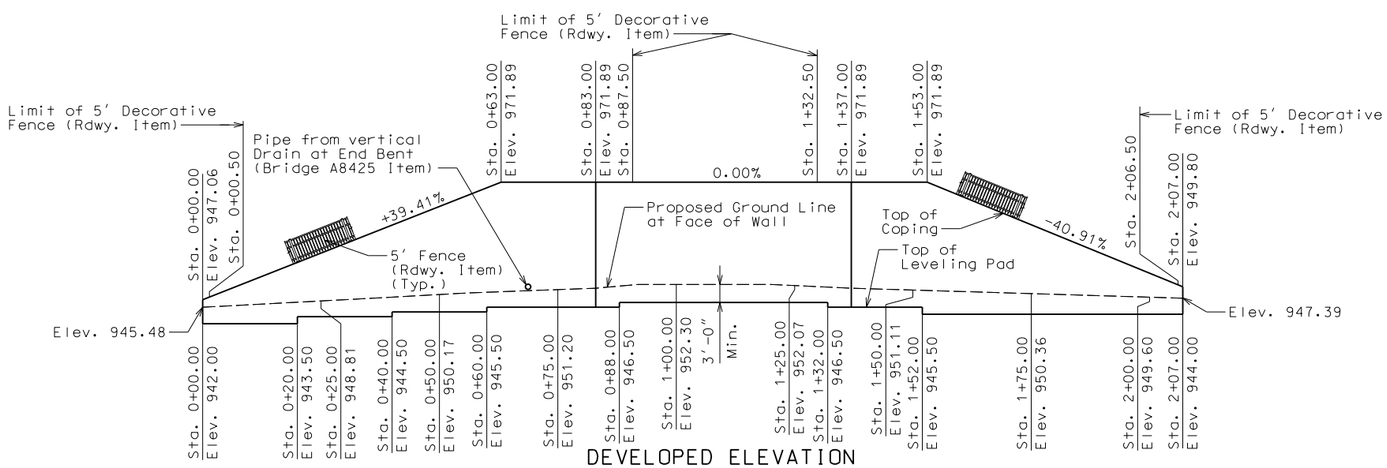

DEVELOPED ELEVATION

Leveling Pad & Coping not show for clarity. *
Note: Stations along ℄ Wall.

* Wall contractor shall show the following items on the design drawings and/or on the fabricator shop drawings.

1. Leveling pad horizontal.
2. Leveling pad length and step elevations shall be based on wall manufacturer's recommendation. Top of leveling pad elevations shall not be higher than theoretical top of leveling pad elevations shown on these plans.

Estimated Quantities for MSE Wall		
Item		Total
Mechanically Stabilized Earth Wall Systems	sq. foot	4253
Concrete Masonry Protection System	lump sum	1
Sacrificial Graffiti Protection System	lump sum	1

GENERAL NOTES:
Design Specifications:
2002 - AASHTO 17th Edition, Section 5
ASD Design

All concrete for leveling pad and coping shall be Class B or B-1 with f'c = 4000 psi.

The MSE wall system shall be built vertical.

The MSE wall system shall be built in accordance with Sec 720.

The MSE wall system shall be a large block wall system.

Factor of safety shall be 2.0 for overturning and 1.5 for sliding.

The allowable bearing pressure for unimproved ground 4.5 ksf.

For seismic design the factor of safety shall be 1.5 for overturning and 1.1 for sliding.

Wall reinforcement shall extend a minimum of 1.0 times the wall height to satisfy global stability. See the Job Special Provisions.

ϕ_b = 26° and Unit weight, γ_b=120 pcf for retained backfill material to be retained by the mechanically stabilized earth wall system.

ϕ_f = 26° for unimproved foundation ground where wall is to rest.

Actual ϕ_r ≥ 34° for the select granular backfill (reinforced backfill and wedge area backfill) for structural systems.

Design ϕ_r = 34° for the select granular backfill (reinforced backfill) only for structural systems.

Panel reinforcement shall be epoxy coated.

Anchorage reinforcement shall be spaced to avoid roadway drop inlet behind wall.

A filter cloth meeting the requirements for a Separation Geotextile material shall be placed between the select granular backfill for structural systems and the backfill being retained by the mechanically stabilized earth wall system.

Coping shall be required on this structure. Bond breaker (roofing felt or other approved alternate) between wall panel and coping required if coping is cast in place.

The contractor shall be solely responsible to coordinate construction of the wall with bridge and roadway construction and ensure that the bridge and roadway construction, resulting or existing obstructions, shall not impact the construction or performance of the wall. Soil reinforcement shall be designed and placed to avoid damage by pile driving, guardrail post installation, utility and sign foundations. (See Roadway and Bridge plans.)

All steel reinforcment shall be separated from other metallic elements by at least 3 inches.

The splay angle should be less than 15° and tensile capacity of splayed reinforcement shall be reduced by the cosine of the splay angle.

No reinforcement shall be left unconnected to the wall face or arbitrarily cut/bent in the field to avoid the obstruction.

Where interference between the vertical obstruction and the soil reinforcement is unavoidable, the design of the wall near the obstruction may be modified using one of the alternatives in FHWA-NHI-10-24, Section 5.4.2. Show detail layout on the drawings. For wall designs with horizontal obstructions in reinforced soil mass, see FHWA-NHI-10-024, Section 5.4.3.

MSE Wall Systems Data Table					
Proprietary Wall Systems		Combination Wall Systems			
Manufacturer	System	Facing Unit Manufacturer	Facing Unit	Geogrid Manufacturer	Geogrid

MSE Wall Systems Data Table is to be completed by MoDOT construction personnel to record the manufacturer of the proprietary wall system or the manufacturers of the combination wall system that was used for constructing the MSE wall.

B.M. #6
STA. 552+47.85, 61.60' LT.
ELEV. 947.37
X IN N SIDE MANHOLE RIM
X: 2846291.595, Y: 368914.944

B.M. #7
STA. 553+04.65, 17.54' LT.
ELEV. 975.72
SQUARE NW WINGWALL
X: 2846358.876, Y: 368940.259

MSE RETAINING WALL NEAR END BENT NO. 4 OF BRIDGE A8425

ROUTE 96 FROM 1-49 TO RTE. 37

ABOUT 1.7 MILES EAST OF I-49

STA. 552+83.33

STD. 611.00

STATE OF MISSOURI
DAVID GRAHAM BARRETT
NUMBER PE-2006002787
PROFESSIONAL ENGINEER

THIS SHEET HAS BEEN SIGNED, SEALED AND DATED ELECTRONICALLY

DATE PREPARED	
11/1/2016	
ROUTE 96	STATE MO
DISTRICT BR	SHEET NO. 1
COUNTY JASPER	
JOB NO. J7P2228F	
CONTRACT ID.	
PROJECT NO.	
BRIDGE NO. A8519	

DESCRIPTION	DATE

MISSOURI HIGHWAYS AND TRANSPORTATION COMMISSION
105 WEST CAPITOL
JEFFERSON CITY, MO 65102
1-888-ASK-MODOT (1-888-275-6636)

HDR Engineering, Inc.
4435 Main Street
Suite 1000
Kansas City, MO 64111-1856
816-360-2700
Certificate of Authority: 000856

Detailed September 2016
Checked October 2016

Note: This drawing is not to scale. Follow dimensions.

Sheet No. 1 of 2

c:\pwworking\oma\d2252744\B_A8519_001_J7P2228F.dgn 9:00:15 PM 11/1/2016

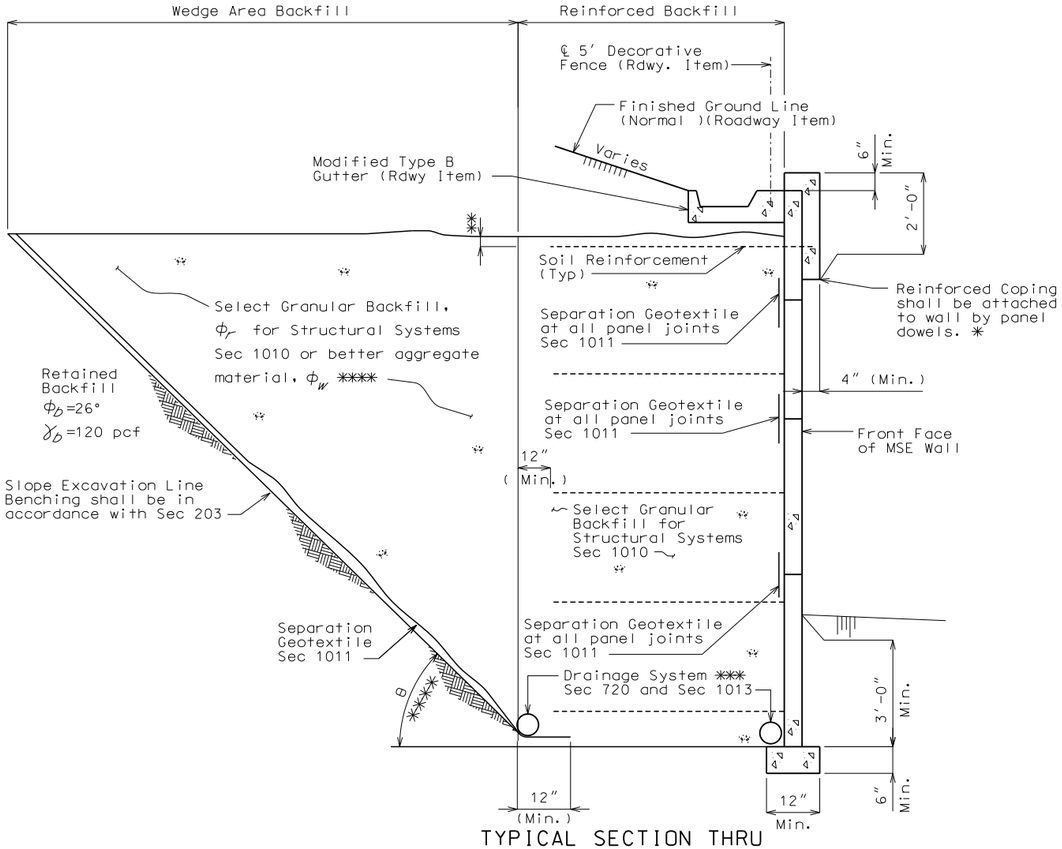

TYPICAL SECTION THRU
LARGE BLOCK WALL SHOWING FILTER CLOTH

✳✳✳✳ Select granular backfill shall extend a minimum of 12" beyond the end of all soil reinforcement. Where the angle, θ, between the retained backfill excavation/fill line and the horizontal is less than 90°, the wedge area backfill between θ and 90° shall be filled with select granular backfill for structural systems meeting the requirements of Section 1010.

- For $(45° + \phi_D/2) < \theta \leq 90°$, properties for retained backfill shall be used for active force computations.

- For $\theta \leq (45° + \phi_D/2)$, contractor shall have the option to use properties for select granular backfill, ϕ_r, or better aggregate material, ϕ_w for active force computations in the wedge area backfill. For active force computations, the angle of internal friction for wedge area backfill material, ϕ_r or ϕ_w, shall be limited to 34° unless determined otherwise in accordance with Section 1010. If ϕ_r or ϕ_w > 34° is desired for wedge area backfill then test report shall be submitted with manufacturer's design plans. ϕ_r or ϕ_w shall not be greater than 40°. Final configuration of this option shall be sent to Geotechnical Section for a new overall global stability analysis. Design ϕ_w shall be shown on manufacturer's plans if used.

The slope excavation line shall be benched and separation geotextile shall be placed between the retained backfill and either select granular backfill or better aggregate material, and between the select granular backfill and better aggregate material.

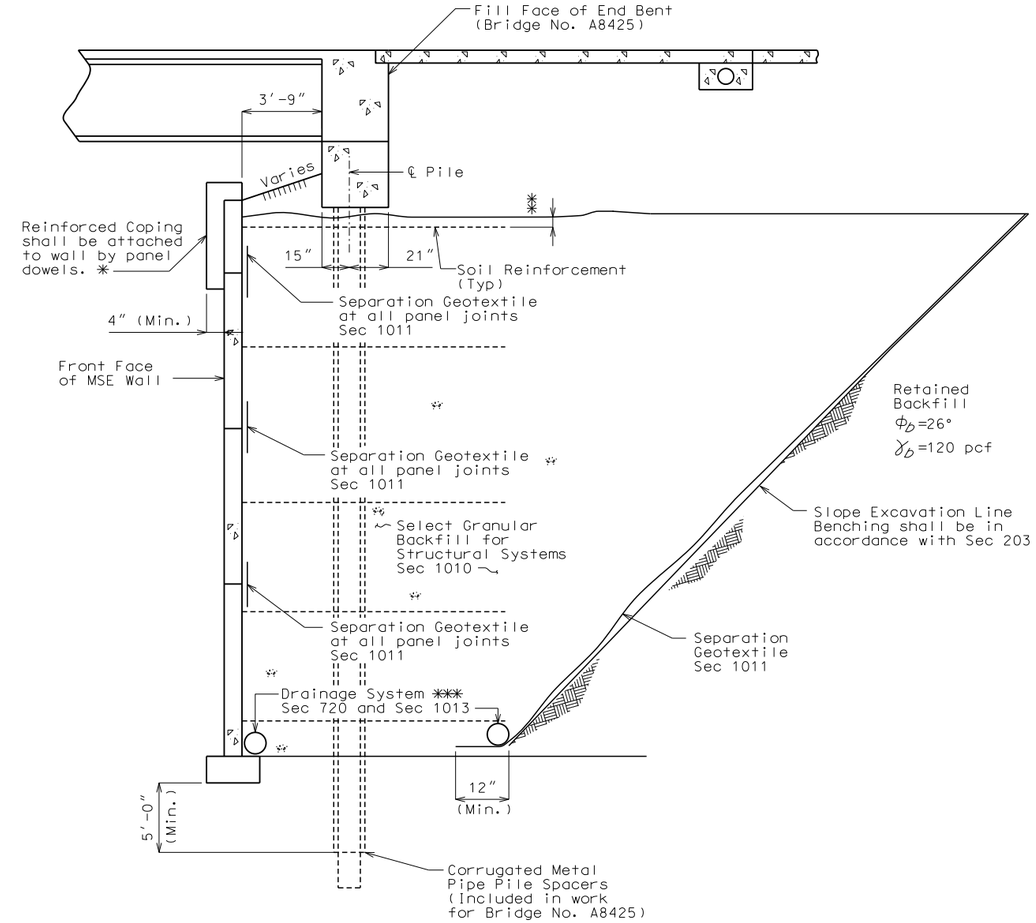

TYPICAL SECTION THRU
LARGE BLOCK WALL UNDER BRIDGE

✳ Inverted U-shape reinforced capstone may be used in lieu of coping. Panel dowels for capstone shall be required and as provided by manufacturer.

✳✳ Topmost layer of reinforcement shall be fully covered with select granular backfill for structural systems, as approved by the wall manufacturer, before placement of the Separation Geotextile.

✳✳✳ Minimum 6" diameter perforated PVC or PE pipe, unless larger size pipes are required by design by wall manufacturer.

Adjustment in the vertical alignment of the drainage pipes from that depicted in the plans may be necessary to ensure positive flow out of the drainage system.

Outlet ends of pipes shall be located to avoid clogging or flow into the drainage system.

MSE WALL DETAILS

Detailed September 2016
Checked October 2016

Note: This drawing is not to scale. Follow dimensions.

STATE OF MISSOURI
DAVID GRAHAM BARRETT
NUMBER PE-2006002787
PROFESSIONAL ENGINEER

THIS SHEET HAS BEEN SIGNED, SEALED AND DATED ELECTRONICALLY

DATE PREPARED	
11/1/2016	
ROUTE 96	STATE MO
DISTRICT BR	SHEET NO. 2
COUNTY JASPER	
JOB NO. J7P2228F	
CONTRACT ID.	
PROJECT NO.	
BRIDGE NO. A8519	

DESCRIPTION	DATE

MISSOURI HIGHWAYS AND TRANSPORTATION COMMISSION
105 WEST CAPITOL
JEFFERSON CITY, MO 65102
1-888-ASK-MODOT (1-888-275-6636)

HDR Engineering, Inc.
4435 Main Street
Suite 1000
Kansas City, MO 64111-1856
816-360-2700
Certificate of Authority: 000856

MISSOURI HIGHWAYS AND TRANSPORTATION COMMISSION
PLANS FOR PROPOSED
STATE ROUTE 96

JASPER COUNTY

NOT TO SCALE

T29N R31W

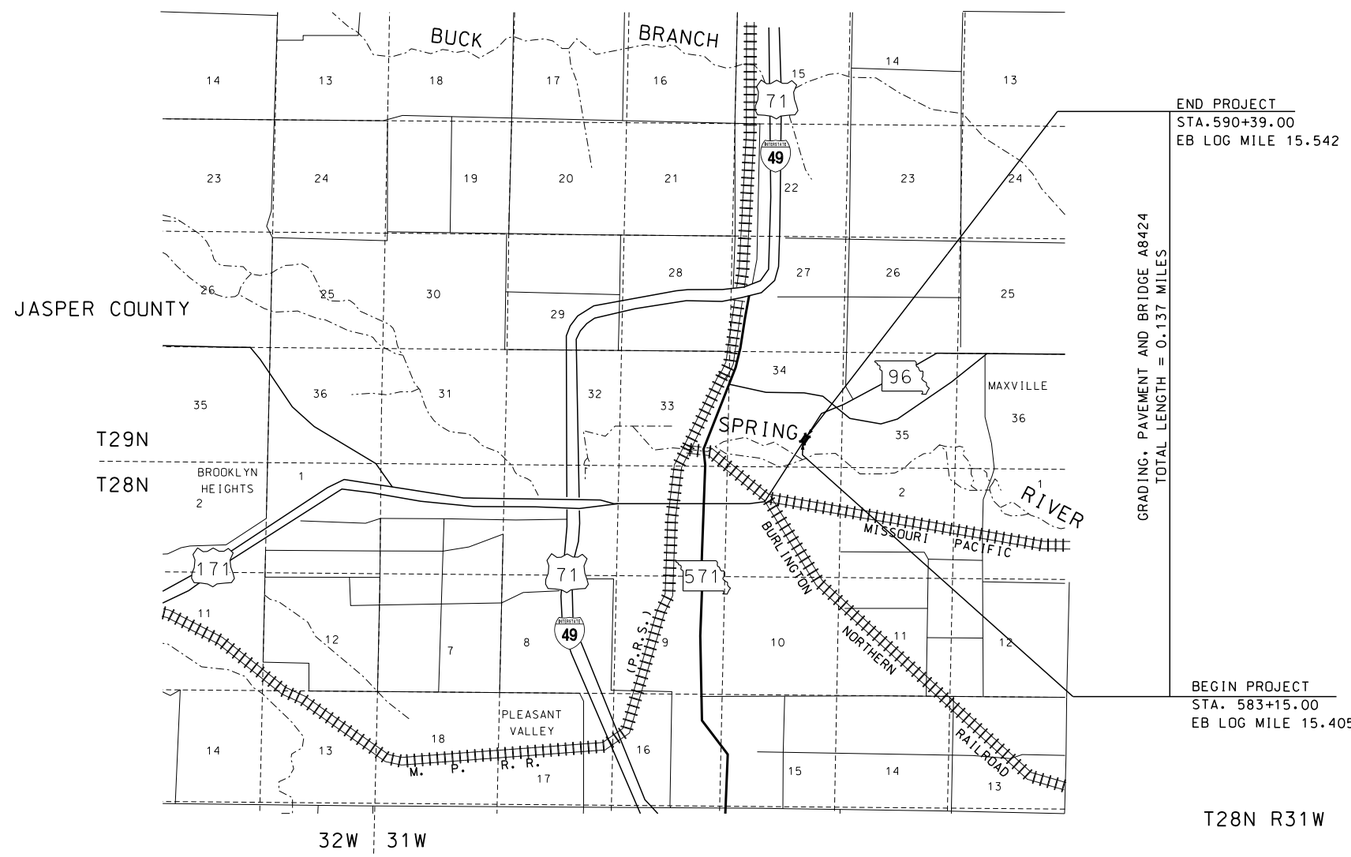

THE EXISTENCE AND APPROXIMATE LOCATION OF UTILITY FACILITIES KNOWN TO EXIST, AS SHOWN ON THE PLANS, ARE BASED ON THE BEST INFORMATION AVAILABLE TO THE COMMISSION AT THIS TIME. THIS INFORMATION IS PROVIDED BY THE COMMISSION "AS-IS" AND THE COMMISSION EXPRESSLY DISCLAIMS ANY REPRESENTATION OR WARRANTY AS TO THE COMPLETENESS, ACCURACY, OR SUITABILITY OF THE INFORMATION FOR ANY USE. RELIANCE UPON THIS INFORMATION IS DONE AT THE RISK AND PERIL OF THE USER, AND THE COMMISSION SHALL NOT BE LIABLE FOR ANY DAMAGES THAT MAY ARISE FROM ANY ERROR IN THE INFORMATION. IT IS, THEREFORE, THE RESPONSIBILITY OF THE CONTRACTOR TO VERIFY THE EXISTENCE, LOCATION AND STATUS OF ANY FACILITY. SUCH VERIFICATION INCLUDES DIRECT CONTACT WITH THE LISTED UTILITIES.

ENGINEER'S AUTHENTICATION
THE RESPONSIBILITY FOR PROFESSIONAL ENGINEERING LIABILITY ON THIS PROJECT IS HEREBY LIMITED TO THIS SET OF PLANS AUTHENTICATED BY THE SEAL, SIGNATURE, AND DATE HEREUNDER ATTACHED. RESPONSIBILITY IS DISCLAIMED FOR ALL OTHER ENGINEERING PLANS INVOLVED IN THIS PROJECT AND SPECIFICALLY EXCLUDES REVISIONS AFTER THIS DATE UNLESS REAUTHENTICATED.
HDR ENGINEERING, INC.

DESIGN DESIGNATION

A.D.T. - 2015 = 5,033
A.D.T. - 2035 = 6,779
D.H.V. = 8%
T = 18%
V = 45 M.P.H.

FUNCTIONAL CLASSIFICATION - MINOR ARTERIAL

NO NEW RIGHT OF WAY REQUIRED

CONVENTIONAL SYMBOLS
(USED IN PLANS)

	EXISTING	NEW
BUILDINGS AND STRUCTURES		
GUARD RAIL		
CONCRETE RIGHT-OF-WAY MARKER		
STEEL RIGHT-OF-WAY MARKER		
LOCATION SURVEY MARKER		
UTILITIES		
FIBER OPTICS	—FO—	—FO—
OVERHEAD TELEPHONE		
UNDERGROUND TELEPHONE	—T—	—T—
OVERHEAD POWER		
UNDERGROUND POWER	—P—	—P—
GAS	—G—	—G—
WATER	—W—	—W—
MANHOLE	SAN	
FIRE HYDRANT	HYD	
WATER VALVE	WV	
WATER METER	WM	
DROP INLET	D	
DITCH BLOCK		
GROUND MOUNTED SIGN	SIGN	
LIGHT POLE		
H-FRAME POWER POLE		
TELEPHONE PEDESTAL	PED	
FENCE		
CHAIN LINK	—V—	
WOVEN WIRE	—X—	
GATE POST		
BENCHMARK	BM	

NOTE: DASHED OR OPEN SYMBOLS INDICATE EXISTING FEATURES

Detailed September 2016
Checked October 2016

INDEX OF SHEETS

DESCRIPTION	SHEET NUMBER
TITLE SHEET	1
TYPICAL SECTIONS (TS) (1 SHEET)	2
QUANTITIES (QU) (3 SHEETS)	3
PLAN-PROFILE (PP)	4
REFERENCE POINTS (RP)	5
COORDINATE POINTS (CP)	6
TRAFFIC CONTROL SHEETS (TC)	7-9
EROSION CONTROL SHEETS (EC)	10
SIGNING (SN)	11
PAVEMENT MARKING (PM)	11
BRIDGE DRAWINGS (B)	
A8424	1-41
CROSS SECTIONS (XS)	1-7

LENGTH OF PROJECT

BEGINNING OF PROJECT	STA.	583+15.00
END OF PROJECT	STA.	590+39.00
APPARENT LENGTH		724.00 FEET
EQUATIONS AND EXCEPTIONS:		NONE
TOTAL CORRECTIONS		0.00 FEET
NET LENGTH OF PROJECT		724.00 FEET
STATE LENGTH		0.137 MILES

STATE OF MISSOURI
DAVID GRAHAM BARRETT
NUMBER PE-2006002787
PROFESSIONAL ENGINEER

THIS SHEET HAS BEEN SIGNED, SEALED AND DATED ELECTRONICALLY

DATE PREPARED 11/7/2016

ROUTE	STATE
96	MO
DISTRICT	SHEET NO.
SW	1

COUNTY: JASPER
JOB NO.: J7P2228G
CONTRACT ID.:
PROJECT NO.:
BRIDGE NO.: A8424

DATE	DESCRIPTION

IF A SEAL IS PRESENT ON THIS SHEET IT HAS BEEN ELECTRONICALLY SEALED AND DATED.

MISSOURI HIGHWAYS AND TRANSPORTATION COMMISSION
105 WEST CAPITOL
JEFFERSON CITY, MO 65102
1-888-ASK-MODOT (1-888-275-6636)

HDR Engineering, Inc.
4435 Main Street
Suite 1000
Kansas City, MO 64111-1856
816-360-2700
Certificate of Authority: 000856

SUPERELEVATION TRANSITION					
	LEFT		RIGHT		
STATION	SHOULDER	LANE	SHOULDER	LANE	REMARKS
587+68.82	-2.0%	-2.0%	-2.0%	-2.0%	A-A
588+16.67	0.00%	0.00%	-2.00%	-2.0%	B-B
588+29.25	0.54%	0.54%	-2.00%	-2.00%	FILL FACE
588+64.51	2.0%	2.0%	-2.0%	-2.0%	C-C
589+38.67	5.0%	5.0%	-5.0%	-5.0%	D-D
589+64.00	5.0%	5.0%	-5.0%	-5.0%	BEGIN LT SHOULDER ROTATION
590+39.00	1.85%	5.0%	-5.0%	-5.0%	LT SHOULDER TO MATCH EXISTING

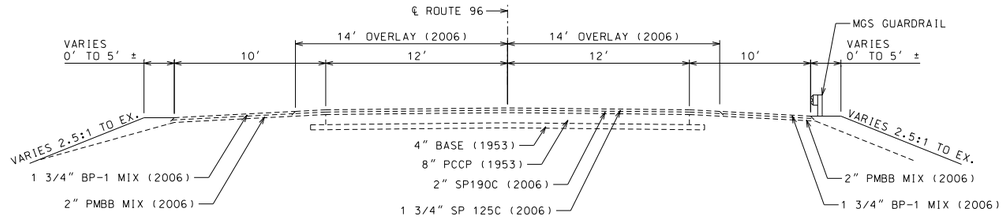

EXISTING TYPICAL SECTION ROUTE 96
STA. 582+18.00 TO STA. 583+15.00 (RT)
STA. 582+94.00 TO STA. 583+15.00 (LT)
STA. 590+39.00 TO STA. 590+50.00 (LT)

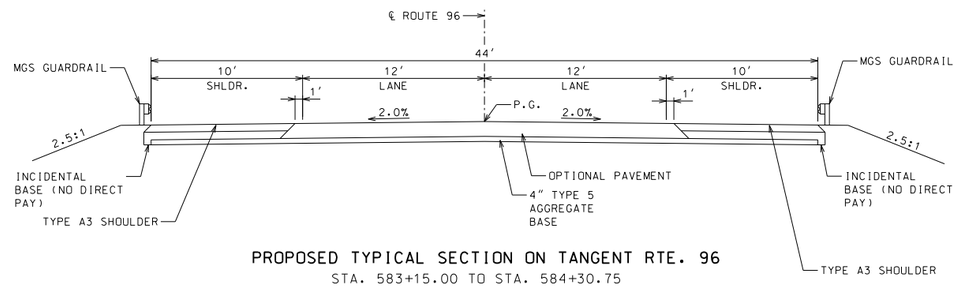

PROPOSED TYPICAL SECTION ON TANGENT RTE. 96
STA. 583+15.00 TO STA. 584+30.75

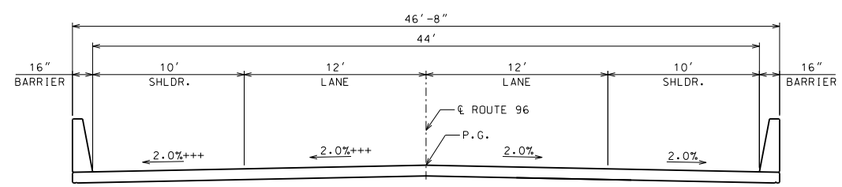

TYPICAL SECTION BRIDGE A8424
STA. 584+30.75 (FILL FACE) TO STA. 588+29.25 (FILL FACE)

OPTIONAL PAVEMENT

1.75" SP125C W/PG70-22
OVER 3" SP250C W/PG70-22
OVER 5.75" SP250C W/PG64-22
TACK MUST BE APPLIED
BETWEEN ALL LIFTS OF ASPHALT
AT RATES INDICATED IN THE
SPECIFICATIONS

OR

8.5" PCCP 15' JOINT SPACING
AND 1.25" DOWELS

+++ TRANSITION FROM -2% TO +0.54% BETWEEN STA. 587+68.82 AND STA. 588+29.25

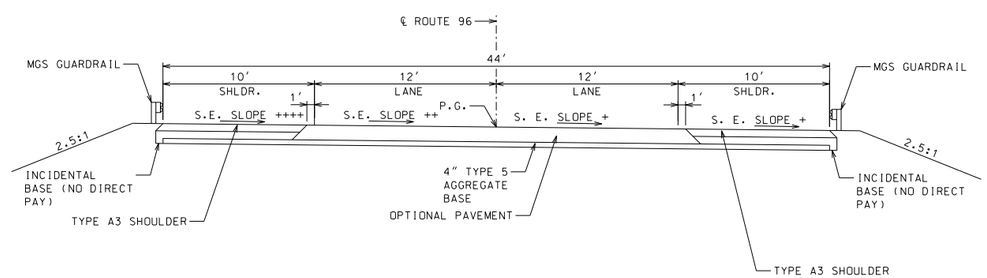

PROPOSED TYPICAL SECTION ON SUPERELEVATED CURVE RTE. 96
STA. 588+29.25 TO STA. 590+39.00

+ TRANSITION FROM -2.00% TO -5.00% BETWEEN STA. 588+64.51 AND STA. 589+38.67

++ TRANSITION FROM +0.54% TO +5.00% BETWEEN STA. 588+29.25 AND STA. 589+38.67

++++ TRANSITION FROM +0.54% TO +5.00% BETWEEN STA. 588+29.25 AND STA. 589+38.67 AND FROM +5% TO MATCH EXISTING BETWEEN STA. 589+64.00 AND STA. 590+39.00

TYPICAL SECTIONS
ROUTE 96
SHEET 1 OF 1

STATE OF MISSOURI
DAVID GRAHAM BARRETT
NUMBER PE-2006002787
PROFESSIONAL ENGINEER

THIS SHEET HAS BEEN SIGNED, SEALED AND DATED ELECTRONICALLY

DATE PREPARED 11/7/2016

ROUTE	STATE
96	MO
DISTRICT	SHEET NO.
SW	2

COUNTY JASPER
JOB NO. J7P2228G
CONTRACT ID. .
PROJECT NO. .
BRIDGE NO. A8424

DATE	DESCRIPTION

MISSOURI HIGHWAYS AND TRANSPORTATION COMMISSION
105 WEST CAPITOL
JEFFERSON CITY, MO 65102
1-888-ASK-MODOT (1-888-275-6636)

HDR Engineering, Inc.
4435 Main Street
Suite 1000
Kansas City, MO 64111-1856
816-360-2700
Certificate of Authority: 000856

IF A SEAL IS PRESENT ON THIS SHEET IT HAS BEEN ELECTRONICALLY SEALED AND DATED.

MISSOURI HIGHWAYS AND TRANSPORTATION COMMISSION
SUMMARY OF QUANTITIES

REMOVAL OF IMPROVEMENTS					
SHEET NO.	FROM STATION	TO STATION	LOCATION	DESCRIPTION	REMARKS
4	583+15.00	-	ROUTE 96	SAW CUT	41 LF
4	590+39.00	-	ROUTE 96	SAW CUT	44 LF
4	583+15.00	584+39.00	ROUTE 96	EXISTING PAVEMENT	517 SY EXIST PAVEMENT
4	588+21.50	590+39.00	ROUTE 96	EXISTING PAVEMENT	980 SY EXIST PAVEMENT
4	583+11.65	584+64.45	ROUTE 96 - RT	GUARDRAIL	153 LF GUARDRAIL
4	583+11.41	584+64.44	ROUTE 96 - LT	GUARDRAIL	153 LF GUARDRAIL
4	587+96.41	589+49.73	ROUTE 96 - RT	GUARDRAIL	154 LF GUARDRAIL
4	587+96.52	589+48.87	ROUTE 96 - LT	GUARDRAIL	153 LF GUARDRAIL
11	584+39.00	-	ROUTE 96 - LT	OBJECT MARKER	
11	584+39.00	-	ROUTE 96 - RT	OBJECT MARKER	
11	588+23.00	-	ROUTE 96 - LT	OBJECT MARKER	
11	588+23.00	-	ROUTE 96 - RT	OBJECT MARKER	
				TOTAL LUMP SUM = 1	

MOBILIZATION
LUMP SUM = 1

CONTRACTOR FURNISHED SURVEYING
LUMP SUM = 1

SEEDING				
FROM STA	TO STA	ROADWAY	LOC	SEEDING COOL SEASON MIXTURE ACRE
582+94.00	584+24.00	ROUTE 96	LT	0.12
582+18.00	584+24.00	ROUTE 96	RT	0.18
588+36.00	590+39.00	ROUTE 96	LT	0.20
588+36.00	589+71.20	ROUTE 96	RT	0.12
			TOTAL	0.62
			PAY TOTAL	0.6

EARTHWORK							
SHEET NO.	STATION	STATION	ROADWAY	CLASS A EXCAVATION (CY)	COMPACTING EMBANKMENT (CY)	EMBANKMENT IN PLACE (CY)	REMARKS
4	583+15.00	584+23.75	ROUTE 96	196	415		
4	584+23.75	584+55.75	ROUTE 96	293	27		SPILL SLOPE
4	588+06.29	588+36.25	ROUTE 96	244	31		SPILL SLOPE
4	588+36.25	590+39.00	ROUTE 96	324	566		
			TOTAL	1057	1039	0	

EARTHWORK QUANTITIES ARE UNADJUSTED VOLUMES.

EARTHWORK IS BASED ON ASPHALT OPTION, INCLUDING BASE. THE CONTRACTOR SHALL ADJUST EARTHWORK AS NEEDED ACCORDING TO THE PREFERRED PAVEMENT OPTION AT THEIR OWN EXPENSE.

EROSION CONTROL												
SHEET NO.	FROM STATION	TO STATION	ROADWAY	LOC	SILT FENCE LF	SEDIMENT REMOVAL CY	INLET CHECKS EA	ROCK DITCH CHECK LF	TYPE C BERM LF	FURNISHING TYPE 2 ROCK BLANKET CY	PLACING TYPE 2 ROCK BLANKET CY	PERMANENT EROSION CONTROL GEOTEXTILE SY
10	583+15.00	584+11.25	ROUTE 96	LT/RT	592	5.9	-	-	139	264	264	397
10	588+48.75	590+39.00	ROUTE 96	LT/RT	659	6.6	-	-	133	234	234	350
				TOTAL	1251	13	-	-	272	498	498	747

PAVEMENT							
SHEET NO.	FROM STATION	TO STATION	ROADWAY	OPTIONAL PAVEMENT (SY)	TYPE A3 SHOULDERS (SY)	4" TYPE 5 AGGREGATE FOR BASE (SY)	REMARKS
4	583+15.00	584+11.25	ROUTE 96	278.1	192.5	470.6	
4	588+48.75	590+39.00	ROUTE 96	549.6	380.5	930.2	
			TOTAL	827.7	573.0	1400.7	
			PAY TOTAL	827.7	573.0	1401.0	

FULL DEPTH PAVEMENT REPAIR +						
LOCATION	FURNISHING & REPLACING CONCRETE MATERIAL FOR FULL DEPTH PAVEMENT REPAIR (SY)	FULL DEPTH PAVEMENT REPAIR SAW CUT (LF)	FURNISHING AND INSTALLING DOWELS (EACH)	SUBGRADE COMPACTION (SY)	4" TYPE 5 AGG. BASE (SY)	COMMENTS
GARRISON ST	66.7	120	40	66.7	66.7	QUANTITY BASED ON ASSUMED AREA OF 50' X 12'
TOTAL	66.7	120	40	66.7	66.7	
PAY TOTAL	66.7	120	40	67	67	

GUARDRAIL							
SHEET NO.	FROM STATION	TO STATION	LOCATION	ROADWAY	MGS GUARDRAIL 6' POST	MGS BRIDGE APPROACH TRANSITION (EA)	TYPE A CRASHWORTHY END TERMINAL (MASH) (EA)
4	583+25.50	584+20.75	LT	ROUTE 96	12.5	1	1
4	582+37.75	584+20.75	RT	ROUTE 96	100.0	1	1
4	588+39.25	590+21.78	LT	ROUTE 96	100.0	1	1
4	588+39.25	589+34.84	RT	ROUTE 96	12.5	1	1
				TOTAL	225.0	4	4
				PAY TOTAL	225	4	4

CLASS B PARTIAL DEPTH PAVEMENT REPAIR +			
LOCATION	FURNISHING AND PLACING BITUMINOUS MATERIAL FOR CLASS B PARTIAL DEPTH PAVEMENT REPAIR (TONS)	REMOVAL FOR CLASS B PARTIAL DEPTH PAVEMENT REPAIR (SY)	COMMENTS
GARRISON ST	14.5	66.7	QUANTITY BASED ON ASSUMED AREA OF 50' X 12' 4" THICK
TOTAL	14.5	66.7	
PAY TOTAL	14.5	66.7	

POTHOLE PATCHING +			
LOCATION	FURNISHING AND PLACING BITUMINOUS MATERIAL FOR CLASS B PARTIAL DEPTH PAVEMENT REPAIR (TONS)	TACK COAT (GAL)	COMMENTS
GARRISON ST	1.7	1.6	QUANTITY BASED ON ASSUMED AREA OF 12' X 12', 2" THICK
TOTAL	1.7	1.6	
PAY TOTAL	1.7	10	

+ FULL DEPTH AND PARTIAL DEPTH PAVEMENT REPAIR, AND POTHOLE PATCHING TO BE REPAIRED ON AN AS NEEDED BASIS AS DELINEATED BY THE ENGINEER.

SUMMARY SHEET
SHEET 1 OF 3

Detailed September 2016
Checked October 2016

STATE OF MISSOURI
DAVID GRAHAM BARRETT
NUMBER PE-2006002787
PROFESSIONAL ENGINEER

THIS SHEET HAS BEEN SIGNED, SEALED AND DATED ELECTRONICALLY

DATE PREPARED 11/2/2016

ROUTE	STATE
96	MO
DISTRICT	SHEET NO.
SW	3

COUNTY: JASPER
JOB NO.: J7P2228G
CONTRACT ID.:
PROJECT NO.:
BRIDGE NO.: A8424

DATE	DESCRIPTION

IF A SEAL IS PRESENT ON THIS SHEET IT HAS BEEN ELECTRONICALLY SEALED AND DATED.

MISSOURI HIGHWAYS AND TRANSPORTATION COMMISSION
105 WEST CAPITOL
JEFFERSON CITY, MO 65102
1-888-ASK-MODOT (1-888-275-6636)

HDR Engineering, Inc.
4435 Main Street
Suite 1000
Kansas City, MO 64111-1856
816-360-2700
Certificate of Authority: 000856

PAVEMENT MARKINGS					
SHEET	STA.	STA.	4" YELLOW WATERBORNE PVMT MARKING PAINT, TYPE P BEADS (LF)	4" WHITE WATERBORNE PVMT MARKING PAINT, TYPE P BEADS (LF)	REMARKS
11	583+15.00	590+39.00	724	1448	INCLUDES SOLID SINGLE YELLOW CENTERLINE AND WHITE EDGE LINE
11	583+15.00	590+39.00	181		INCLUDES INTERMITTENT SINGLE YELLOW CENTERLINE
	TOTALS		905	1448	

PERMANENT PROJECT SIGNING							
					SHR2L-1 SIGNS	U-CHANNEL POST, 3 LB.	REMARKS
SHEET	STA.	OFFSET	SIGN	SIZE	(SQ. FT.)	(LF)	
11	584+08	28.0' RT.	SPRING RIVER	25.5"X18"	3.19	13.0	
11	588+54	28.0' LT.	SPRING RIVER	25.5"X18"	3.19	13.0	
TOTAL					6.38	26.0	

SUMMARY SHEET
SHEET 2 OF 3

Detailed September 2016
Checked October 2016

STATE OF MISSOURI
WILLIAM AINSWORTH
NUMBER PE-2005000002
PROFESSIONAL ENGINEER
11/1/16

DATE PREPARED 11/1/16
ROUTE 96 | STATE MO
DISTRICT SW | SHEET NO. 3
COUNTY JASPER
JOB NO. J7P2228G
CONTRACT ID.
PROJECT NO.
BRIDGE NO. A8424

DESCRIPTION | DATE

MISSOURI HIGHWAYS AND TRANSPORTATION COMMISSION
105 WEST CAPITOL
JEFFERSON CITY, MO 65102
1-888-ASK-MODOT (1-888-275-6636)

SEA
230 SW Main Street
Suite 213
Lee's Summit, MO 64063
816-272-5545
Certificate of Authority: E-2013039922

IF A SEAL IS PRESENT ON THIS SHEET IT HAS BEEN ELECTRONICALLY SEALED AND DATED.

REV.

$FILE$ $TIME$ $DATE$

EFFECTIVE: 08-01-2012

SIGN	SIZE (IN.)	AREA (SQ. FT.)	QTY	TOTAL AREA	QTY RELOC	TOTAL RELOC AREA	DESCRIPTION
WARNING SIGNS							
W01-1L	48X48	16.00					TURN (SYMBOL LEFT ARROW)
W01-1R	48X48	16.00					TURN (SYMBOL RIGHT ARROW)
W01-2L	48X48	16.00					CURVE (SYMBOL LEFT ARROW)
W01-2R	48X48	16.00					CURVE (SYMBOL RIGHT ARROW)
W01-3L	48X48	16.00					REVERSE TURN (SYMBOL LEFT ARROW)
W01-3R	48X48	16.00					REVERSE TURN (SYMBOL RIGHT ARROW)
W01-4L	48X48	16.00					REVERSE CURVE (SYMBOL LEFT ARROW)
W01-4R	48X48	16.00					REVERSE CURVE (SYMBOL RIGHT ARROW)
W01-4bL	48X48	16.00					DOUBLE ARROW REVERSE CURVE (SYMBOL LEFT ARROWS)
W01-4bR	48X48	16.00					DOUBLE ARROW REVERSE CURVE (SYMBOL RIGHT ARROWS)
W01-4cL	48X48	16.00					TRIPLE ARROW REVERSE CURVE (SYMBOL LEFT ARROWS)
W01-4cR	48X48	16.00					TRIPLE ARROW REVERSE CURVE (SYMBOL RIGHT ARROWS)
W01-6	60X30	12.50					HORIZONTAL ARROW (SYMBOL)
W01-6a	72X36	18.00					HORIZONTAL ARROW (SYMBOL ON PERMANENT BARRICADE)
W01-7	60X30	12.50					DOUBLE HEAD HORIZONTAL ARROW (SYMBOL)
W01-7a	72X36	18.00					DOUBLE HEAD HORIZONTAL ARROW (SYMBOL ON PERMANENT BARRICADE)
W01-8	18X24	3.00					CHEVRON (SYMBOL)
W01-8a	30X36	7.50					CHEVRON (SYMBOL FOR DIVIDED HIGHWAYS)
W03-1	48X48	16.00					STOP AHEAD (SYMBOL)
W03-2	48X48	16.00					YIELD AHEAD (SYMBOL)
W03-3	48X48	16.00					SIGNAL AHEAD (SYMBOL)
W03-4	48X48	16.00					BE PREPARED TO STOP
W03-5	48X48	16.00					SPEED LIMIT AHEAD
W04-1L	48X48	16.00					MERGE (SYMBOL FROM LEFT)
W04-1R	48X48	16.00					MERGE (SYMBOL FROM RIGHT)
W05-1	48X48	16.00					ROAD/BRIDGE/RAMP NARROWS
W05-3	48X48	16.00					ONE LANE BRIDGE
W05-5	48X48	16.00					NARROW LANES
W06-1	48X48	16.00					DIVIDED HIGHWAY (SYMBOL)
W06-2	48X48	16.00					DIVIDED HIGHWAY END (SYMBOL)
W06-3	48X48	16.00					TWO WAY TRAFFIC (SYMBOL)
W07-3a	30X24	5.00					NEXT XX MILES (PLAQUE)
W08-1	48X48	16.00					BUMP
W08-2	48X48	16.00					DIP
W08-3	48X48	16.00					PAVEMENT ENDS
W08-4	48X48	16.00					SOFT SHOULDER
W08-5	48X48	16.00					SLIPPERY WHEN WET (SYMBOL)
W08-6	48X48	16.00					TRUCK CROSSING WITH FLAGS
W08-6c	48X48	16.00					TRUCK ENTRANCE
W08-7	36X36	9.00					LOOSE GRAVEL
W08-9	48X48	16.00					LOW SHOULDER
W08-11	48X48	16.00					UNEVEN LANES
W08-12	48X48	16.00					NO CENTER LINE
W10-1	42 RND.	9.62					RAILROAD CROSSING
W012-1	24X24	4.00					DOUBLE DOWN ARROW (SYMBOL)
W012-2	48X48	16.00					LOW CLEARANCE (SYMBOL)
W012-2x	24X18	3.00					LOW CLEARANCE (PLAQUE)
W012-2a	84X24	14.00					OVERHEAD LOW CLEARANCE (FEET AND INCHES)
W08-15	48X48	16.00					GROOVED PAVEMENT
W08-15p	30X24	5.00					MOTORCYCLE (PLAQUE)
W08-17	48X48	16.00					SHOULDER DROP-OFF (SYMBOL)
W08-17p	30X24	5.00					SHOULDER DROP-OFF (PLAQUE)
SPECIAL	120X60	50.00					LOW CLEARANCE XX FT XX IN XX MILES AHEAD
SPECIAL	120X60	50.00					WIDTH RESTRICTION XX FT XX IN XX MILES AHEAD
W013-1	30X30	6.25					ADVISORY SPEED (PLAQUE)
W016-2	30X24	5.00	4	20			XXX FEET (PLAQUE)
W016-3	30X24	5.00					X MILE (PLAQUE)
W020-1	48X48	16.00					ROAD/BRIDGE/RAMP WORK AHEAD
W020-2	48X48	16.00	6	96			DETOUR AHEAD
W020-3	48X48	16.00	20	320			ROAD CLOSED AHEAD
W020-4	48X48	16.00					ONE LANE ROAD AHEAD
W020-5	48X48	16.00					RIGHT/CENTER/LEFT LANE CLOSED AHEAD
W020-5a	48X48	16.00					2 RIGHT/CENTER/LEFT LANES CLOSED AHEAD
W020-6a	48X48	16.00					RIGHT/CENTER/LEFT LANE CLOSED
W020-7a	48X48	16.00					FLAGGER (SYMBOL) WITH FLAGS
W021-2	36X36	9.00					FRESH OIL
W021-5b	48X48	16.00					SHOULDER WORK AHEAD
W022-1	48X48	16.00					BLASTING ZONE AHEAD
W022-2	42X36	10.50					TURN OFF 2-WAY RADIO AND PHONE
W022-3	42X36	10.50					END BLASTING ZONE
W022-6e	21X15	2.19					WET PAINT (ARROW PIVOTS)
GUIDE SIGNS							
SPECIAL	36X36	9.00					FRESH OIL/LOOSE GRAVEL
E05-1	36X48	12.00					GORE EXIT
E05-2	48X36	12.00					EXIT OPEN
E05-2a	48X36	12.00					EXIT CLOSED
G020-1	60X24	10.00					ROAD WORK NEXT XX MILES
G020-2	48X24	8.00					END ROAD WORK
G020-4	36X18	4.50					PILOT CAR FOLLOW ME
SPECIAL	42X30	8.75					PLEASE WAIT FOR PILOT CAR
G020-5aP	36X24	6.00					WORK ZONE (PLAQUE)
M04-8a	24X18	3.00	2	6			END DETOUR
M04-9L	48X36	12.00	3	36			DETOUR (LEFT ARROW)
M04-9R	48X36	12.00	4	48			DETOUR (RIGHT ARROW)
M04-10L	48X18	6.00					DETOUR (ARROW LEFT)
M04-10R	48X18	6.00					DETOUR (ARROW RIGHT)
REGULATORY SIGNS							
R1-1	48X48	13.25					STOP
R1-2	48 TRI.	6.93					YIELD
R1-2a	36X36	9.00					TO ONCOMING TRAFFIC (PLAQUE)
R1-3	20X9	1.25					X-WAY (PLAQUE)
R2-1	36X48	12.00					SPEED LIMIT XX
R3-1	48X48	16.00					NO RIGHT TURN (SYMBOL)
R3-2	48X48	16.00					NO LEFT TURN (SYMBOL)
R3-3	36X36	9.00					NO TURNS
R3-4	48X48	16.00					NO U-TURN (SYMBOL)
R3-7L	30X30	6.25					LEFT LANE MUST TURN LEFT
R3-7R	30X30	6.25					RIGHT LANE MUST TURN RIGHT
R4-1	36X48	12.00					DO NOT PASS
R4-2	36X48	12.00					PASS WITH CARE
R4-7aL	36X48	12.00					KEEP LEFT (HORIZONTAL ARROW)
R4-7a	36X48	12.00					KEEP RIGHT (HORIZONTAL ARROW)
R5-1	30X30	6.25					DO NOT ENTER
R5-1a	36X24	6.00					WRONG WAY
R6-1L	48X18	6.00					ONE WAY ARROW (LEFT)
R6-1R	48X18	6.00					ONE WAY ARROW (RIGHT)
R6-2L	24X30	5.00					ONE WAY (LEFT)
R6-2R	24X30	5.00					ONE WAY (RIGHT)
R10-6	24X36	6.00					STOP HERE ON RED (45° ARROW)
R11-2	48X30	10.00	4	40			ROAD CLOSED
R11-3a	60X30	12.50	1	12.5			ROAD CLOSED XX MILES AHEAD LOCAL TRAFFIC ONLY
R11-4	60X30	12.50					ROAD CLOSED TO THRU TRAFFIC
S4-4	36X15	3.75					WHEN FLASHING
CONST-3A	60X48	20.00					FINE SIGN
CONST-3X	56X12	4.67					SPEEDING/PASSING (PLATE)
MISCELLANEOUS SIGNS							
SPECIAL	36X84	21.00	61	1281			TRUCK DETOUR ASSEMBLY
SPECIAL	36X78	19.50	20	390			LOCAL DETOUR ASSEMBLY
SPECIAL	96X30	20.00	3	60			96 CLOSED AHEAD
SPECIAL	114X54	42.75	3	128.25			TRUCKS OVER 9 TONS USE TRUCK DETOUR

616-10.05
CONSTRUCTION SIGNS TOTAL 2438

616-10.10
RELOCATED SIGNS TOTAL

ITEM NUMBER	TOTAL QTY	DESCRIPTION
6122008		IMPACT ATTENUATOR (8 SAND BARRELS)
6122009		IMPACT ATTENUATOR (9 SAND BARRELS)
6122010		IMPACT ATTENUATOR (10 SAND BARRELS)
6122012		IMPACT ATTENUATOR (12 SAND BARRELS)
6122014		IMPACT ATTENUATOR (14 SAND BARRELS)
6122017		IMPACT ATTENUATOR (17 SAND BARRELS)
6122019		IMPACT ATTENUATOR (19 SAND BARRELS)
6122020		REPLACEMENT SAND BARREL
6122030		IMPACT ATTENUATOR ARRAY (RELOCATION)
6123000A		TRUCK OR TRAILER MOUNTED ATTENUATOR (TMA)
6161007		SPEED LIMIT AND STROBE LIGHT ASSEMBLY
6161008		ADVANCED WARNING RAIL SYSTEM
6161009	20	FLAG ASSEMBLY
6161020		CHANNELIZER (DRUM-LIKE)
6161022		CHANNELIZER (CONES)
6161024		CHANNELIZER (TRIM LINE) WITH LIGHT
6161025		CHANNELIZER (TRIM LINE)
6161026		CHANNELIZER (VERTICAL PANEL)
6161027		CHANNELIZER (VERTICAL PANEL) WITH LIGHT
6161028		CHANNELIZER
6161030		TYPE III MOVEABLE BARRICADE
6161031	28	TYPE III MOVEABLE BARRICADE WITH LIGHT
6161033		DIRECTION INDICATOR BARRICADE
6161034		DIRECTION INDICATOR BARRICADE, WITH LIGHT
6161040		FLASHING ARROW PANEL
6161047		TYPE III OBJECT MARKER
6161051		WARNING LIGHT, TYPE A
6161052		WARNING LIGHT, TYPE B
6161053		WARNING LIGHT, TYPE C
6161055		SEQUENTIAL FLASHING WARNING LIGHT
6161070		TUBULAR MARKER
6161095		RADAR SPEED ADVISORY SYSTEM
6161096		CHANGEABLE MESSAGE SIGN, COMMISSION FURNISHED/RETAINED
6161098	7	CHANGEABLE MESSAGE SIGN, CONTRACTOR FURNISHED/RETAINED
6161100		CHANGEABLE MESSAGE SIGN, CONTRACTOR FURNISHED/COMMISSION RETAINED
6173600D		CONTRACTOR FURNISHED/RETAINED TEMPORARY TRAFFIC BARRIER
6173602B		CONTRACTOR FURNISHED/COMMISSION RETAINED TEMPORARY TRAFFIC BARRIER
6174000A		TEMPORARY TRAFFIC BARRIER HEIGHT TRANSITION
6175010A		RELOCATING TEMPORARY TRAFFIC BARRIER
6176000B		COMMISSION FURNISHED/RETAINED TEMPORARY TRAFFIC BARRIER
6177000B		COMMISSION FURNISHED/RETAINED TEMPORARY TRAFFIC BARRIER HEIGHT TRANSITION
9019400		TEMPORARY LIGHTING
9029400		TEMPORARY TRAFFIC SIGNALS
9029401		TEMPORARY TRAFFIC SIGNALS AND LIGHTING

NOTES:

1. ALL TRAFFIC CONTROL ITEMS REFLECT BOTH PROJECTS J7P2228F AND J7P2228G.

SUMMARY SHEET
SHEET 3 OF 3

Detailed September 2016
Checked October 2016

STATE OF MISSOURI
WILLIAM AINSWORTH
NUMBER PE-2005000002
PROFESSIONAL ENGINEER
11/1/16

DATE PREPARED	11/1/16
ROUTE	96
STATE	MO
DISTRICT	SW
SHEET NO.	3
COUNTY	JASPER
JOB NO.	J7P2228G
CONTRACT ID.	
PROJECT NO.	
BRIDGE NO.	A8424

DESCRIPTION | DATE

IF A SEAL IS PRESENT ON THIS SHEET IT HAS BEEN ELECTRONICALLY SEALED AND DATED.

MISSOURI HIGHWAYS AND TRANSPORTATION COMMISSION
105 WEST CAPITOL
JEFFERSON CITY, MO 65102
1-888-ASK-MODOT (1-888-275-6636)

SEA
230 SW Main Street
Suite 213
Lee's Summit, MO 64063
816-272-5545
Certificate of Authority: E-2013039922

REV.

$FILE$ $TIME$ $DATE$

ANY WORK INDICATED ON THE PLANS THAT EXTENDS BEYOND THE PROJECT LIMITS IS CONSIDERED INCIDENTAL TO AND A PART OF THE CONSTRUCTION OF THIS PROJECT.

EXISTING AND CONSTRUCTED ENTRANCES MAY BE WIDENED TO A MAXIMUM OF 60 FT. BY PERMIT, UNLESS OTHERWISE NOTED

- PAVEMENT REMOVALS

ALL BEARINGS ARE BASED ON MODIFIED STATE PLANE, WESTERN ZONE PROJECT LOCATED WITHIN SECTION 34, T29N, R31W

HYDROLOGIC DATA
DRAINAG AREA = 425 SQ. MI.
D.H.W. ELEV. (50 YR) = 944.40 FT.
D.H.W. ELEV. (100 YR) = 945.10 FT.
Q (50 YR) = 29,700 C.F.S.
Q (100 YR) = 34,900 C.F.S.

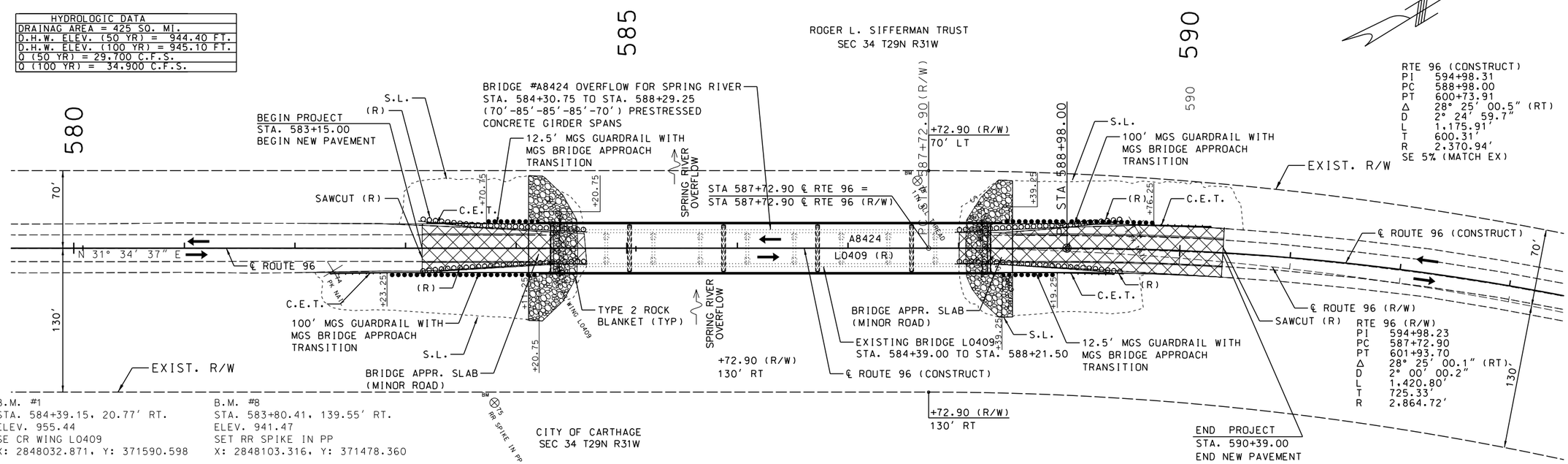

B.M. #1
STA. 584+39.15, 20.77' RT.
ELEV. 955.44
SE CR WING L0409
X: 2848032.871, Y: 371590.598

B.M. #2
STA. 588+21.28, 20.75' LT.
ELEV. 955.43
NW CR WING L0409
X: 2848197.601 Y: 371937.891

B.M. #8
STA. 583+80.41, 139.55' RT.
ELEV. 941.47
SET RR SPIKE IN PP
X: 2848103.316, Y: 371478.360

B.M. #9
STA. 587+62.75, 60.87' LT.
ELEV. 938.69
SET 1IN ALL THREAD
X: 2848132.778, Y: 371909.034

NOTE : EXISTING R/W WAS ESTABLISHED USING ℄ ROUTE 96 (R/W) ALIGNMENT

THE EXISTENCE AND APPROXIMATE LOCATION OF UTILITY FACILITIES KNOWN TO EXIST, AS SHOWN ON THE PLANS, ARE BASED ON THE BEST INFORMATION AVAILABLE TO THE COMMISSION AT THIS TIME. THIS INFORMATION IS PROVIDED BY THE COMMISSION "AS-IS" AND THE COMMISSION EXPRESSLY DISCLAIMS ANY REPRESENTATION OR WARRANTY AS TO THE COMPLETENESS, ACCURACY, OR SUITABILITY OF THE INFORMATION FOR ANY USE. RELIANCE UPON THIS INFORMATION IS DONE AT THE RISK AND PERIL OF THE USER, AND THE COMMISSION SHALL NOT BE LIABLE FOR ANY DAMAGES THAT MAY ARISE FROM ANY ERROR IN THE INFORMATION.

CLASS A EXC. = 1057 C.Y.
COMPACTING EMBANKMENT = 1039 C.Y.
EMBANKMENT IN PLACE = 0 C.Y.

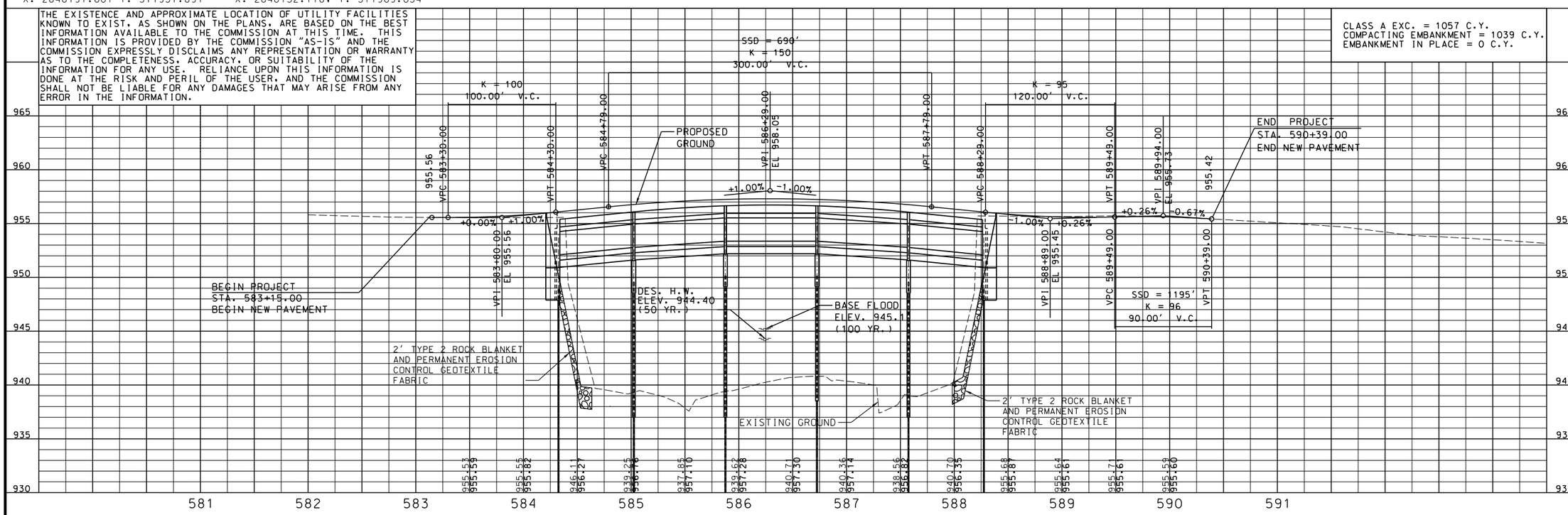

THIS SHEET HAS BEEN SIGNED, SEALED AND DATED ELECTRONICALLY

DATE PREPARED	
11/2/2016	
ROUTE 96	STATE MO
DISTRICT SW	SHEET NO. 4
COUNTY JASPER	
JOB NO. J7P2228G	
CONTRACT ID.	
PROJECT NO.	
BRIDGE NO. A8424	

DATE	DESCRIPTION

IF A SEAL IS PRESENT ON THIS SHEET IT HAS BEEN ELECTRONICALLY SEALED AND DATED.

MISSOURI HIGHWAYS AND TRANSPORTATION COMMISSION
105 WEST CAPITOL
JEFFERSON CITY, MO 65102
1-888-ASK-MODOT (1-888-275-6636)

HDR Engineering, Inc.
4435 Main Street
Suite 1000
Kansas City, MO 64111-1856
816-360-2700
Certificate of Authority: 000856

c:\pwworking\oma\d2086973\006_PP_J7P2228G_I50.dgn 11:20:11 AM 11/2/2016

C.P. #1

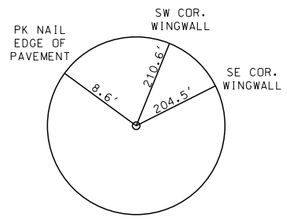

STA. 582+34.53
OFFSET: 20.52' RT
GROUND COORDINATES:
X: 2847925.510
Y: 371416.406
ELEV: 955.290'

C.P. #2

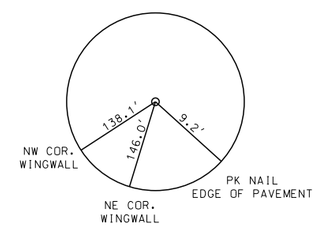

STA. 589+58.66
OFFSET: 20.73' LT
GROUND COORDINATES:
X: 2848270.498
Y: 372054.950
ELEV: 956.080'

REFERENCE POINTS
ROUTE 96
SHEET 1 OF 1

STATE OF MISSOURI
DAVID GRAHAM BARRETT
NUMBER PE-2006002787
PROFESSIONAL ENGINEER

THIS SHEET HAS BEEN SIGNED, SEALED AND DATED ELECTRONICALLY

DATE PREPARED	
11/2/2016	
ROUTE	STATE
96	MO
DISTRICT	SHEET NO.
SW	5
COUNTY	
JASPER	
JOB NO.	
J7P2228G	
CONTRACT ID.	
PROJECT NO.	
BRIDGE NO.	
A8424	

DATE	DESCRIPTION

IF A SEAL IS PRESENT ON THIS SHEET IT HAS BEEN ELECTRONICALLY SEALED AND DATED.

MISSOURI HIGHWAYS AND TRANSPORTATION COMMISSION
105 WEST CAPITOL
JEFFERSON CITY, MO 65102
1-888-ASK-MODOT (1-888-275-6636)

HDR Engineering, Inc.
4435 Main Street
Suite 1000
Kansas City, MO 64111-1856
816-360-2700
Certificate of Authority: 000856

Coordinate Point Listing
Missouri Coordinate System of 1983

Reciprocal Average Grid Factor : 1.00009610924

SHEET NO.	STATION[1]	LOCATION	OFFSET[1]	NORTHING	EASTING	DESCRIPTION	DESIGN PT. ID
4	547+41.80 CL ROUTE 96	CL	0.00′	368416.16	2845805.58	P.O.B.	
4	588+98.00 CL ROUTE 96	CL	0.00′	371956.64	2847981.74	P.C.	
4	594+85.95 CL ROUTE 96	LT	74.82′	372468.02	2848296.06	P.I.	
4	600+73.91 CL ROUTE 96	CL	0.00′	372768.20	2848815.86	P.T.	
4	583+15.00 CL ROUTE 96	CL	0.00′	371460.01	2847676.48	BEGIN PROJECT	
4	590+39.00 CL ROUTE 96	CL	0.00′	372074.49	2848059.09	END PROJECT	
4	547+41.80 CL ROUTE 96 (R/W)	CL	0.00′	368416.16	2845805.58	P.O.B.	
4	587+72.90 CL ROUTE 96 (R/W)	CL	0.00′	371850.07	2847916.24	P.C.	
4	594+83.30 CL ROUTE 96 (R/W)	LT	90.40′	372467.95	2848296.02	P.I.	
4	601+93.70 CL ROUTE 96 (R/W)	CL	0.00′	372830.65	2848924.07	P.T.	
4	584+39.15 CL ROUTE 96	RT	20.77′	371554.89	2847759.18	BM #1	
4	588+21.28 CL ROUTE 96	LT	20.75′	371902.15	2847923.89	BM #2	
4	583+80.41 CL ROUTE 96	RT	139.55′	371442.66	2847829.62	BM #8	
4	587+62.75 CL ROUTE 96	LT	60.87′	371873.29	2847859.07	BM #9	
4	582+34.53 CL ROUTE 96	RT	20.52′	371380.71	2847651.82	CP #1	
4	589+58.66 CL ROUTE 96	LT	20.73′	372019.20	2847996.78	CP #2	

1 - GROUND DISTANCE

NOTE: THE RECIPROCAL OF THE AVERAGE GRID FACTOR IS USED AS A MULTIPLIER FROM STATE PLANE DISTANCE TO GROUND DISTANCE.

COORDINATE POINTS
ROUTE 96
SHEET 1 OF 1

Detailed September 2016
Checked October 2016

STATE OF MISSOURI
DAVID GRAHAM BARRETT
NUMBER PE-2006002787
PROFESSIONAL ENGINEER

THIS SHEET HAS BEEN SIGNED, SEALED AND DATED ELECTRONICALLY

DATE PREPARED 11/2/2016

ROUTE	STATE
96	MO
DISTRICT	SHEET NO.
SW	6

COUNTY JASPER
JOB NO. J7P2228G
CONTRACT ID.
PROJECT NO.
BRIDGE NO. A8424

DATE	DESCRIPTION

MISSOURI HIGHWAYS AND TRANSPORTATION COMMISSION
105 WEST CAPITOL
JEFFERSON CITY, MO 65102
1-888-ASK-MODOT (1-888-275-6636)

HDR Engineering, Inc.
4435 Main Street
Suite 1000
Kansas City, MO 64111-1856
816-360-2700
Certificate of Authority: 000856

IF A SEAL IS PRESENT ON THIS SHEET IT HAS BEEN ELECTRONICALLY SEALED AND DATED.

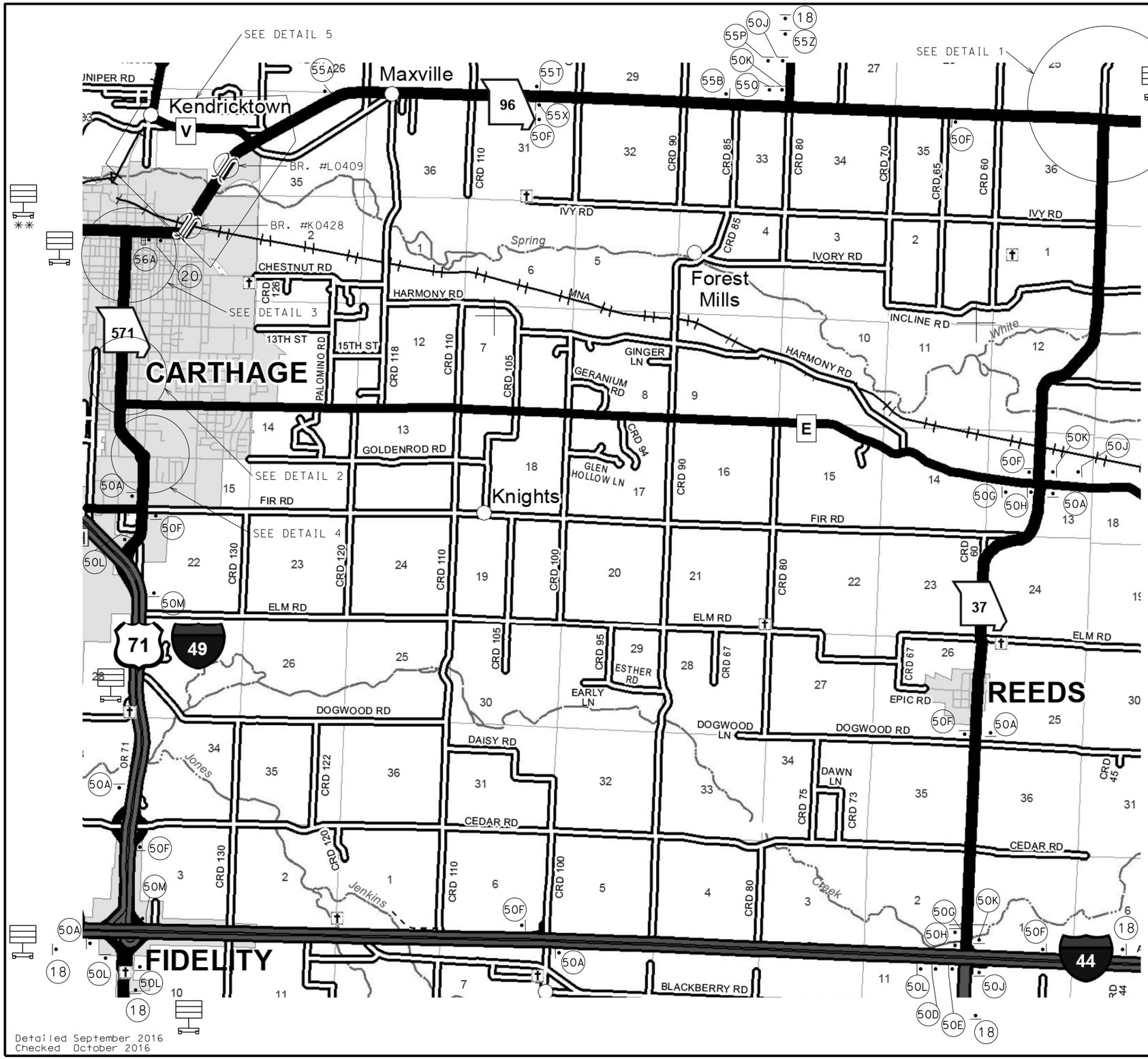

Detailed September 2016
Checked October 2016

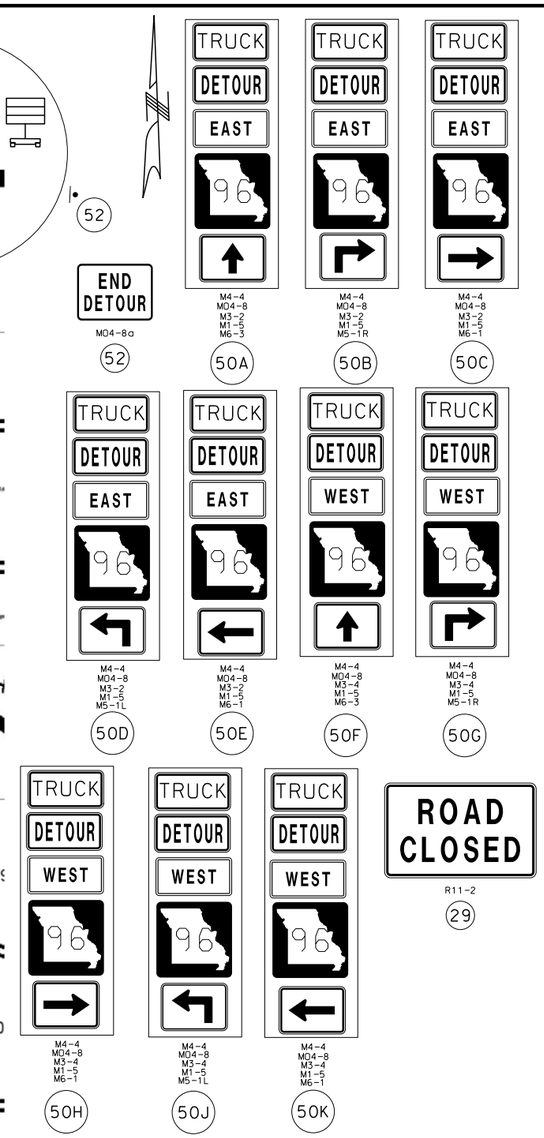

NOTES:

SIGN CONST-7-72 (61) IS PLACED 500 FEET BEFORE THE BEGINNING OF PROJECT LIMITS OR THE ROAD WORK AHEAD SIGN OR ROAD WORK NEXT X MILES SIGN, IF USED. WHEN THESE SIGNS ARE LOCATED OUTSIDE THE PROJECT LIMITS.

CONST-5-96 SIGN (1) IS PLACED IN A VISIBLE AREA WITHIN THE PROJECT LIMITS PROVIDED ITS PLACEMENT DOES NOT DISRUPT A SEQUENCE OF SIGNS. IF A VISIBLE LOCATION WITHIN THE PROJECT IS NOT AVAILABLE, THE SIGN MAY BE PLACED 500 FEET BEFORE SIGN CONST-7-72.

** PLACE CMS BOARD ON I-49 SOUTHBOUND BEFORE ROUTE 96 EXIT

TRAFFIC CONTROL DETOUR ROUTE SHEET 1 OF 3

STATE OF MISSOURI
WILLIAM AINSWORTH
NUMBER PE-2005000002
PROFESSIONAL ENGINEER
11/1/16

DATE PREPARED	11/1/16
ROUTE	96
STATE	MO
DISTRICT	SW
SHEET NO.	7
COUNTY	JASPER
JOB NO.	J7P2228G
CONTRACT ID.	
PROJECT NO.	
BRIDGE NO.	A8424

DATE	DESCRIPTION

IF A SEAL IS PRESENT ON THIS SHEET IT HAS BEEN ELECTRONICALLY SEALED AND DATED.

MISSOURI HIGHWAYS AND TRANSPORTATION COMMISSION
105 WEST CAPITOL
JEFFERSON CITY, MO 65102
1-888-ASK-MODOT (1-888-275-6636)

SEA
230 SW Main Street
Suite 213
Lee's Summit, MO 64063
816-272-5545
Certificate of Authority: E-2013039922

REV.
$FILES$ $TIME$ $DATE$

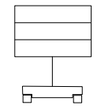

CHANGEABLE MESSAGE BOARD

GENERAL NOTES:
1.) SIGN LOCATIONS TO BE APPROVED BY ENGINEER.
2.) DISTANCE MAY BE ADJUSTED ACCORDING TO FIELD CONDITIONS WITH PERMISSION OF THE ENGINEER.
3.) NO DIRECT PAY WILL BE MADE FOR RELOCATION OF TCP SIGNS AND DEVICES.
4.) ANY EXISTING SIGNS THAT CONFLICT WITH TEMPORARY TRAFFIC CONTROL SHALL BE COVERED OR REMOVED.
5.) ALL TRAFFIC CONTROL ITEMS WHICH ARE NOT INCLUDED IN THE PAY ITEM ARE TO BE CONSIDERED INCIDENTAL.
6.) MAINTAIN ACCESS TO ALL ENTRANCES AT ALL TIMES.
7.) ALL SIGNS SHALL BE PORTABLE UNLESS OTHERWISE NOTED.
8.) WHERE BACKUPS ARE EXPECTED BEYOND THE ADVANCE WARNING AREA, ADDITIONAL SIGNS MAY BE NEEDED.
9.) SIGNS CONST-5-96 AND CONST-7-72 ARE CONSIDERED PERMANENT FOR THE DURATION OF THE PROJECT.
10.) SEE STANDARD PLANS FOR ADDITIONAL DETAILS.

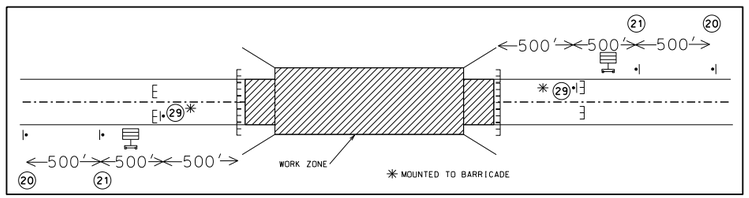

= MOVEABLE BARRICADE WITH 2 WARNING LIGHTS

R11-3a
55B

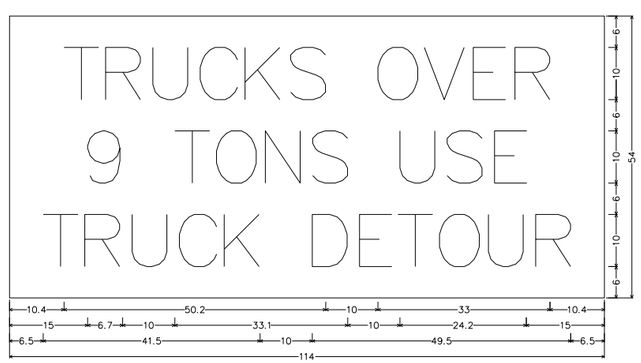

No border, White on Orange;
[TRUCKS OVER] Black D; [9 TONS USE] Black D; [TRUCK DETOUR] Black D;
Table of letter and object lefts.

T	R	U	C	K	S	S	O	V	E	R	
10.4	18.4	27.5	36.5	45.1	53.9	70.6	79.5	88.9	96.8		
9	T	O	N	S	U	S	E				
15.0	31.7	39.7	49.0	58.1	74.8	83.9	92.9				
T	R	U	C	K	D	E	T	O	U	R	
6.5	14.4	23.5	32.5	41.1	58.0	67.1	74.4	82.4	91.8	100.8	

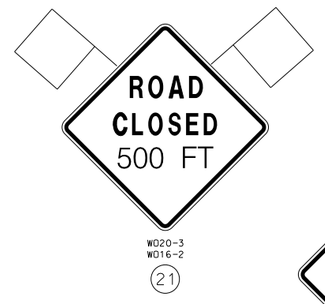

W020-3
W016-2
21

SPECIAL
56A

W020-2
18

W020-3
20

TRUCKS OVER
9 TONS USE
TRUCK DETOUR

SPECIAL
55Z

M4-4
M04-8
M3-2
M1-5
M5-2R
50L

M4-4
M04-8
M3-4
M1-5
M5-2R
50M

M04-8
M3-4
M17-8A
M5-1R
55P

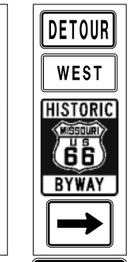

M04-8
M3-4
M17-8A
M6-1
M04-9aR
55Q

M04-8
M3-4
M17-8A
M5-1L
55R

M04-8
M3-4
M17-8A
M6-1
M04-9aR
55S

M04-8
M3-4
M17-8A
M6-3
55T

M04-8
M3-4
M17-8A
M5-1R
55U

M04-8
M3-4
M17-8A
M6-3
55X

M04-8
M3-4
M17-8A
M5-1L
55Y

M04-8
M3-4
M17-8A
M6-1
M04-9aR
55V

M04-8
M3-4
M17-8A
M6-1
M04-9aR
55W

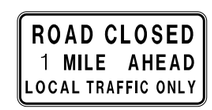

R11-3a
55A

TRAFFIC CONTROL
DETOUR ROUTE
SHEET 2 OF 3

STATE OF MISSOURI
WILLIAM AINSWORTH
NUMBER PE-2005000002
PROFESSIONAL ENGINEER
11/1/16

DATE PREPARED	11/1/16
ROUTE	96
STATE	MO
DISTRICT	SW
SHEET NO.	8
COUNTY	JASPER
JOB NO.	J7P2228G
CONTRACT ID.	
PROJECT NO.	
BRIDGE NO.	A8424

DESCRIPTION

DATE

IF A SEAL IS PRESENT ON THIS SHEET IT HAS BEEN ELECTRONICALLY SEALED AND DATED.

MISSOURI HIGHWAYS AND TRANSPORTATION COMMISSION
105 WEST CAPITOL
JEFFERSON CITY, MO 65102
1-888-ASK-MODOT (1-888-275-6636)

SEA
230 SW Main Street
Suite 213
Lee's Summit, MO 64063
816-272-5545
Certificate of Authority: E-2013039922

Detailed September 2016
Checked October 2016

REV.

$FILE$ $TIME$ $DATE$

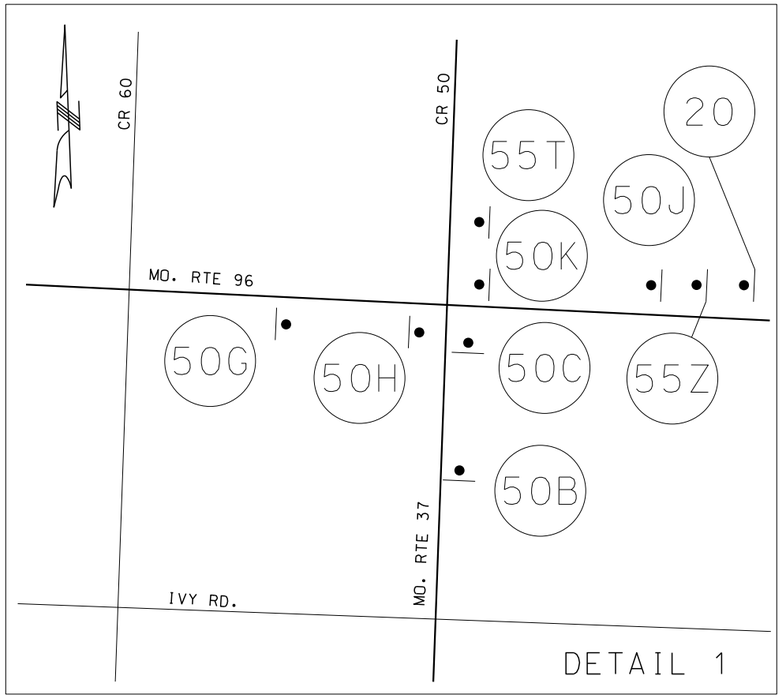

DETAIL 1

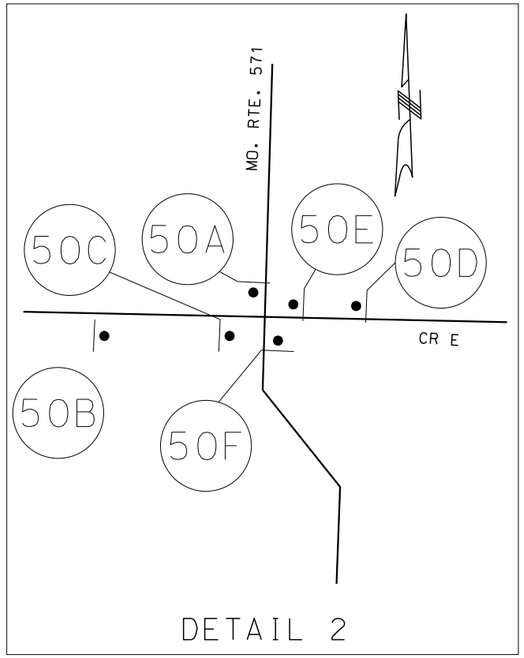

DETAIL 2

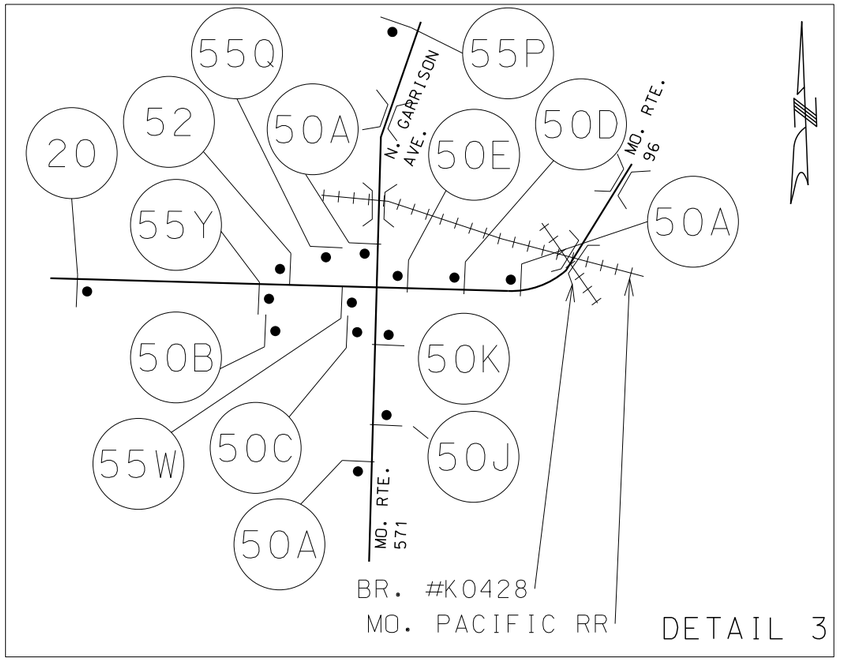

DETAIL 3

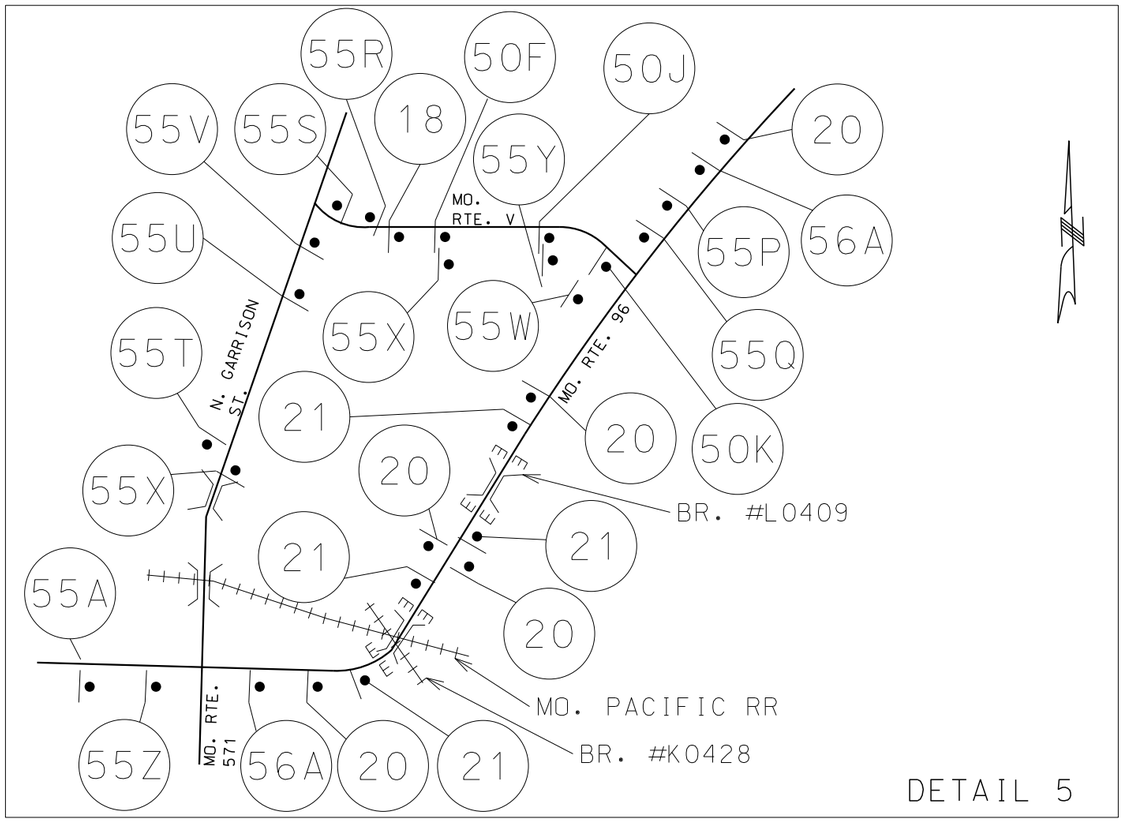

DETAIL 5

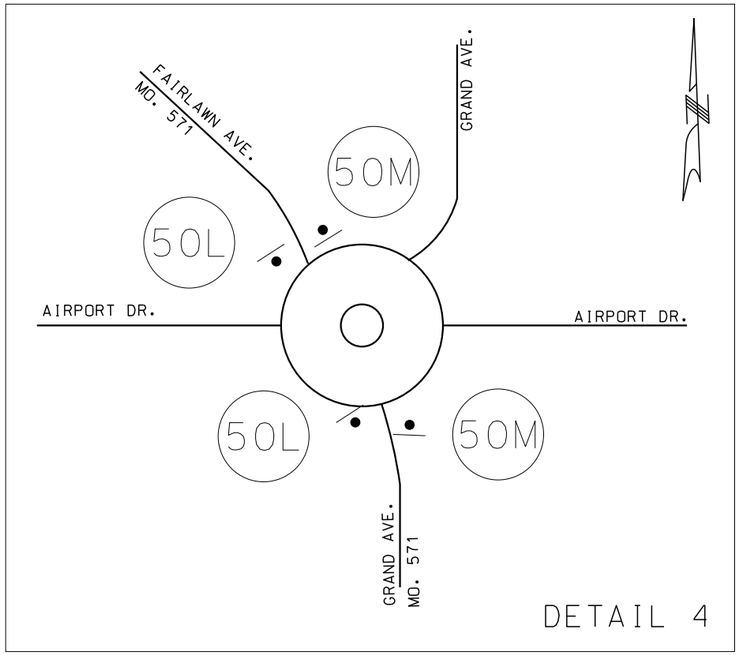

DETAIL 4

TRAFFIC CONTROL
DETOUR ROUTE
SHEET 3 OF 3

Detailed September 2016
Checked October 2016

STATE OF MISSOURI
WILLIAM AINSWORTH
NUMBER PE-2005000202
PROFESSIONAL ENGINEER
11/1/16

DATE PREPARED	11/1/16
ROUTE	96
STATE	MO
DISTRICT	SW
SHEET NO.	9
COUNTY	JASPER
JOB NO.	J7P2228G
CONTRACT ID.	
PROJECT NO.	
BRIDGE NO.	A8424

DATE	DESCRIPTION

MISSOURI HIGHWAYS AND TRANSPORTATION COMMISSION
105 WEST CAPITOL
JEFFERSON CITY, MO 65102
1-888-ASK-MODOT (1-888-275-6636)

SEA
230 SW Main Street
Suite 213
Lee's Summit, MO 64063
816-272-5545
Certificate of Authority: E-2013039922

IF A SEAL IS PRESENT ON THIS SHEET IT HAS BEEN ELECTRONICALLY SEALED AND DATED.

REV.

$FILE$ $TIME$ $DATE$

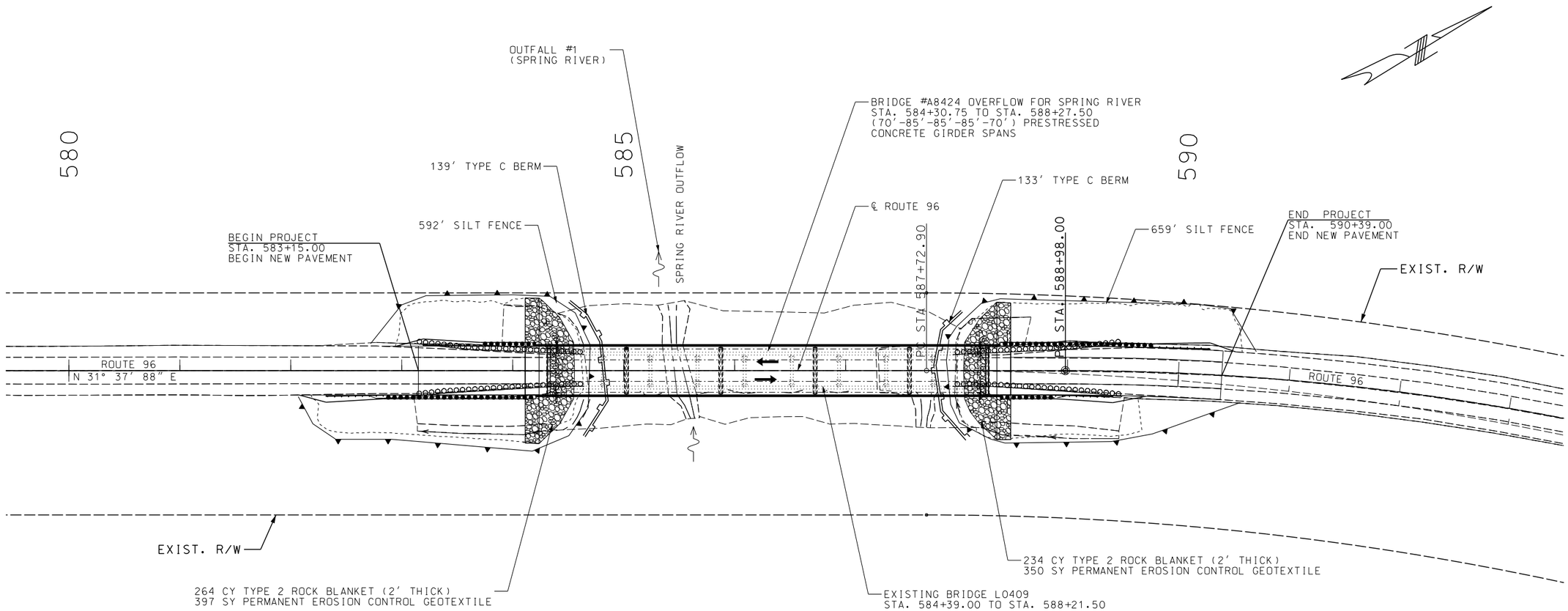

TEMPORARY EROSION CONTROL LEGEND

TEMPORARY BERM

SILT FENCE

SCALE

0 50 100 150

EROSION CONTROL
SHEET 1 OF 1

STATE OF MISSOURI
DAVID GRAHAM BARRETT
NUMBER PE-2006002787
PROFESSIONAL ENGINEER

THIS SHEET HAS BEEN SIGNED, SEALED AND DATED ELECTRONICALLY

DATE PREPARED	
11/2/2016	
ROUTE 96	STATE MO
DISTRICT SW	SHEET NO. 10
COUNTY JASPER	
JOB NO. J7P2228G	
CONTRACT ID.	
PROJECT NO.	
BRIDGE NO. A8424	

DATE	DESCRIPTION

IF A SEAL IS PRESENT ON THIS SHEET IT HAS BEEN ELECTRONICALLY SEALED AND DATED.

MISSOURI HIGHWAYS AND TRANSPORTATION COMMISSION
105 WEST CAPITOL
JEFFERSON CITY, MO 65102
1-888-ASK-MODOT (1-888-275-6636)

HDR Engineering, Inc.
4435 Main Street
Suite 1000
Kansas City, MO 64111-1856
816-360-2700
Certificate of Authority: 000856

11:20:23 AM 11/2/2016

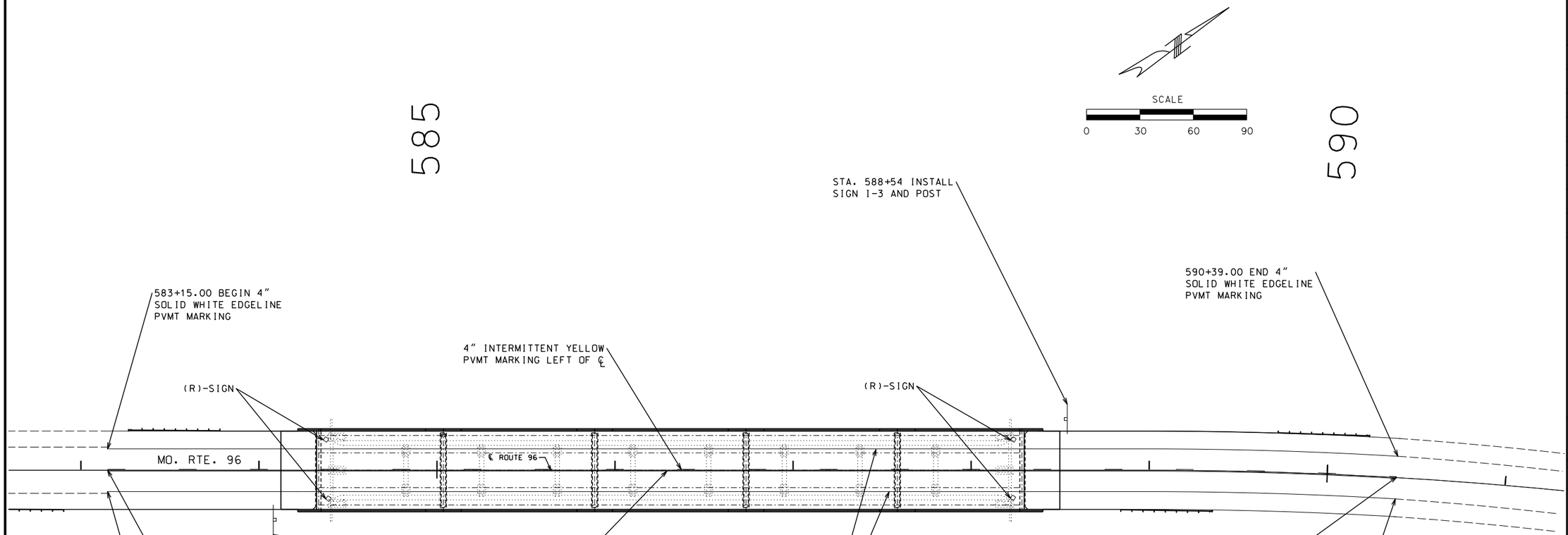

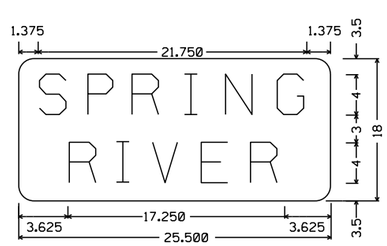

I-3 SHR2L1; 1.500" Radius, 0.500" border, White;
[SPRING RIVER] White Arial;
Table of letter and object lefts.

S	P	R	I	N	G
3.682	3.962	4.082	1.92	4.362	3.642

R	I	V	E	R
3.522	1.920	4.002	3.802	3.802

NOTES:

1. SEE STANDARD PLANS FOR SIGN AND SIGN MOUNTING REQUIREMENTS.

SIGNING AND PAVEMENT MARKING
SHEET 1 OF 1

Detailed September 2016
Checked October 2016

STATE OF MISSOURI
WILLIAM AINSWORTH
NUMBER PE-2005000002
PROFESSIONAL ENGINEER
11/1/16

DATE PREPARED	
11/1/16	
ROUTE 96	STATE MO
DISTRICT SW	SHEET NO. 11
COUNTY JASPER	
JOB NO. J7P2228G	
CONTRACT ID.	
PROJECT NO.	
BRIDGE NO. A8424	

DESCRIPTION	DATE

IF A SEAL IS PRESENT ON THIS SHEET IT HAS BEEN ELECTRONICALLY SEALED AND DATED.

MISSOURI HIGHWAYS AND TRANSPORTATION COMMISSION
105 WEST CAPITOL
JEFFERSON CITY, MO 65102
1-888-ASK-MODOT (1-888-275-6636)

SEA
230 SW Main Street
Suite 213
Lee's Summit, MO 64063
816-272-5545
Certificate of Authority: E-2013039922

$FILE$ $TIME$ $DATE$

MISSOURI HIGHWAYS AND TRANSPORTATION COMMISSION

(70′ - 85′ - 85′ - 85′ - 70′) PRESTRESSED CONCRETE I-GIRDER SPANS

SEC/SUR 34 TWP T29N RGE R31W

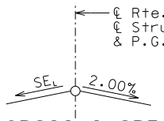

CROSS SLOPE ON BRIDGE

CROSS SLOPE ON BRIDGE	
STATION	SEL
584+20.75	-2.00%
587+68.82	-2.00%
588+39.25	+0.90%

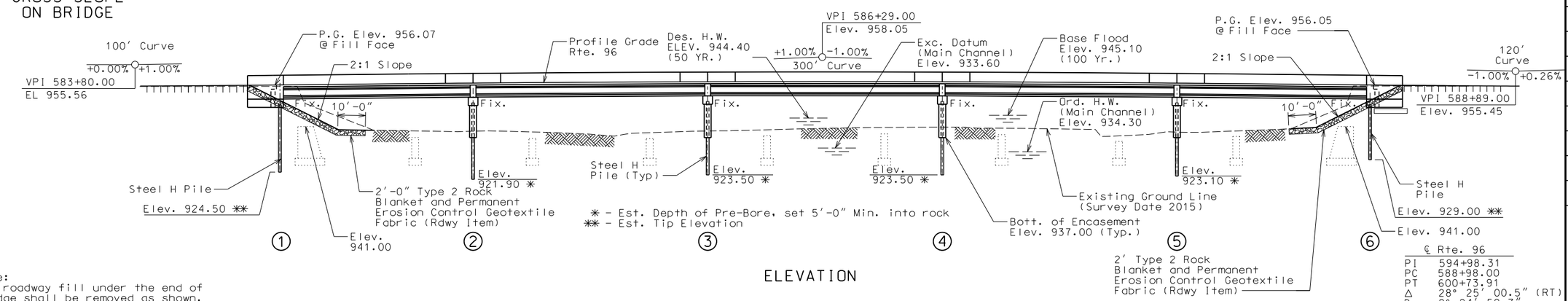

℄ Rte. 96

PI	594+98.31
PC	588+98.00
PT	600+73.91
Δ	28° 25′ 00.5″ (RT)
D	2° 24′ 59.7″
L	1,175.91′
T	600.31′
R	2,370.94′

ELEVATION

Note:
Old roadway fill under the end of bridge shall be removed as shown. Removal of old roadway fill will be considered completely covered by the contract unit price for roadway excavation.

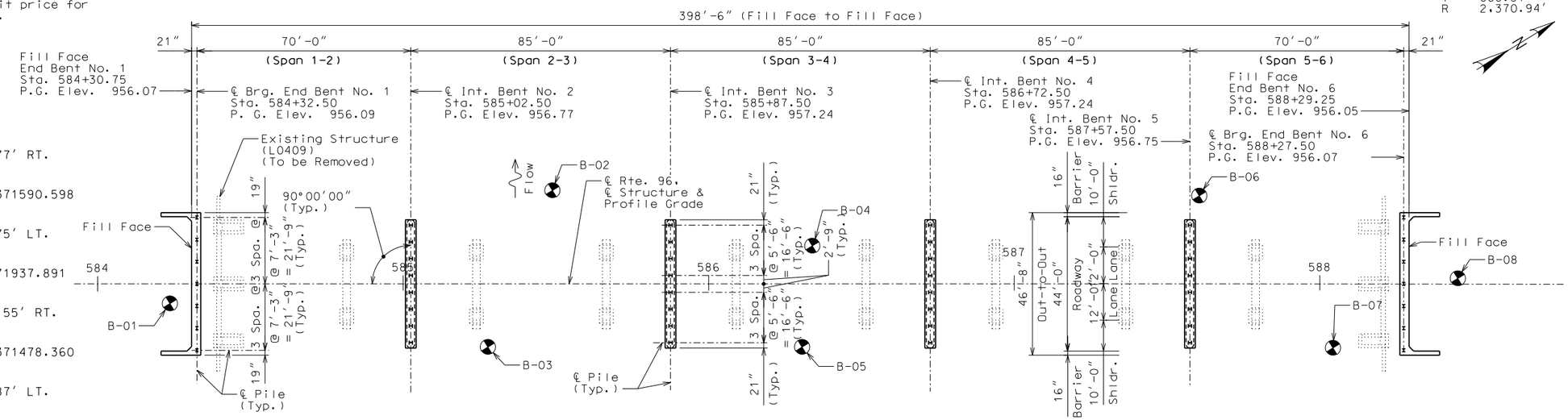

B.M. #1
STA. 584+39.15, 20.77′ RT.
ELEV. 955.44
SE CR WING L0409
X: 2848032.871, Y: 371590.598

B.M. #2
STA. 588+21.28, 20.75′ LT.
ELEV. 955.43
NW CR WING L0409
X: 2848197.601 Y: 371937.891

B.M. #8
STA. 583+80.41, 139.55′ RT.
ELEV. 941.47
SET RR SPIKE IN PP
X: 2848103.316, Y: 371478.360

B.M. #9
STA. 587+62.75, 60.87′ LT.
ELEV. 938.69
SET 1IN ALL THREAD
X: 2848132.778, Y: 371909.034

"⊕" Indicates location of borings.

All dimensions are horizontal.
All bents are parallel.

Notice and Disclaimer Regarding Boring Log Data

The locations of all subsurface borings for this structure are shown on the plan sheet for this structure. The boring data for all locations indicated, as well as any other boring logs or other factual records of subsurface data and investigations performed by the department for the design of the project, are shown on Sheets No. 30 thru 36 or will be available from the Project Contact upon written request. No greater significance or weight should be given to the boring data depicted on the plan sheets than is given to the subsurface data available from the district or elsewhere.

The Commission does not represent or warrant that any such boring data accurately depicts the conditions to be encountered in constructing this project. A contractor assumes all risks it may encounter in basing its bid prices, time or schedule of performance on the boring data depicted here or those available from the district, or on any other documentation not expressly warranted, which the contractor may obtain from the Commission.

PLAN

HYDROLOGIC DATA		
Drainage Area	=	425 sq. miles
Design Discharge	=	29,700 cu. ft./sec. (50 years)
Design H.W. Elev.	=	944.40 feet (50 years)
Estimated Backwater	=	0.80 feet
BASIC FLOOD DATA		
Discharge	=	34,900 cu. ft./sec. (100 years)
H.W. Elevation	=	945.1 feet
Estimated Backwater	=	0.90 feet
OVERTOPPING FLOOD DATA		
Greater Than 500 Years		

BRIDGE: ROUTE 96 OVER SPRING RIVER OVERFLOW

ROUTE 96 FROM I-49 TO RTE. 37

ABOUT 2.3 MILES EAST OF I-49

STA. 584+30.75

GENERAL ELEVATION AND PLAN

Detailed September 2016
Checked October 2016

Note: This drawing is not to scale. Follow dimensions.

Sheet No. 1 of 36

STD. 609.00
STD. 617.10
STD. 706.35

STATE OF MISSOURI — DAVID GRAHAM BARRETT — NUMBER PE-2006002787 — PROFESSIONAL ENGINEER

THIS SHEET HAS BEEN SIGNED, SEALED AND DATED ELECTRONICALLY

DATE PREPARED	
11/2/2016	
ROUTE 96	STATE MO
DISTRICT BR	SHEET NO. 1
COUNTY JASPER	
JOB NO. J7P2228G	
CONTRACT ID.	
PROJECT NO.	
BRIDGE NO. A8424	

DESCRIPTION | DATE

MISSOURI HIGHWAYS AND TRANSPORTATION COMMISSION
105 WEST CAPITOL
JEFFERSON CITY, MO 65102
1-888-ASK-MODOT (1-888-275-6636)

HDR Engineering, Inc.
4435 Main Street
Suite 1000
Kansas City, MO 64111-1856
816-360-2700
Certificate of Authority: 000856

c:\pwworking\oma\d2236000\B_A8424_001_J7P2228G.dgn 8:08:32 AM 11/2/2016

ESTIMATED QUANTITIES

	Item	Unit	Substr.	Superstr.	Total
	Class 1 Excavation	Cu. Yd.	220		220
	Removal of Bridges (L0409)	Lump Sum			1
	Bridge Approach Slab (Minor Road)	Sq. Yd.		198	198
	Galvanized Structural Steel Piles (12 in.)	Lin. Ft.	322		322
	Galvanized Structural Steel Piles (14 in.)	Lin. Ft.	872		872
	Pre-Bore for Piling	Lin. Ft.	464		464
	Pile Point Reinforcement	Each	14		14
	Class B Concrete (Substructure)	Cu. Yd.	259.8		259.8
	Slab on Concrete I-Girder	Sq. Yd.		2061	2061
(*)	Barrier Curb (Type D)	Lin. Ft.		837	837
	Type 4 (45 in.), Prestressed Concrete I-Girder	Lin. Ft.		1969	1969
	Reinforcing Steel (Bridges)	Lbs.	12,680		12,680
	Steel Intermediate Diaphragms for P/S Concrete Girders	Each		20	20
	Slab Drain	Each		10	10
	Vertical Drain at End Bents	Each			2
	Laminated Neoprene Bearing Pad	Each		13	13
	Laminated Neoprene Bearing Pad (Tapered)	Each		37	37

* Barrier Curb (Type D) shall be cast-in-place or slip-form option.

DRIVEN PILES:
Pre-bore for piles at Int. Bent No. 2 to Elev. 921.90, Int. Bents No. 3 & 4 to Elev. 923.50 and Int. Bent No. 5 to Elev. 923.10 or 5' into rock whichever is lower. Fill lower 5' of hole with grout to top of rock and remainder of hole with sand. Cost of grout will be considered completely covered by the cost of other items.

Manufactured pile point reinforcement shall be used on all piles in this structure at End Bents No. 1 and 6.

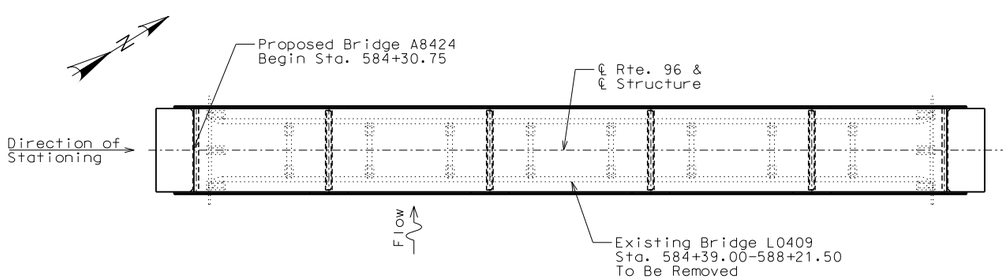

LOCATION SKETCH

GENERAL NOTES:

DESIGN SPECIFICATIONS:
2012-AASHTO LRFD Bridge Design Specifications (6th Ed.) and 2013 Interims
Seismic Design Category = A

DESIGN LOADING:
Vehicular = HL-93
35lb/sf. Future Wearing Surface
Earth 120lb/cf, Equivalent Fluid Pressure 45lb/cf
Superstructure: Simply-supported, non-composite for dead load.
Continuous composite for live load.

DESIGN UNIT STRESSES:

Class B Concrete (Substructure)	f'c = 3,000 psi
Class B-2 Concrete (Superstructure Except Prestressed Girders and Barrier Curb (Type D)	f'c = 4,000 psi
Class B-1 Concrete (Barrier Curb (Type D)	f'c = 4,000 psi
Reinforcing Steel (Grade 60)	fy = 60,000 psi
Structural Carbon Steel	fy = 36,000 psi
Steel Pile (ASTM A709 Grade 50)	fy = 50,000 psi

For Precast Prestressed Panel Stresses, see Sheet No. 20.
For Prestressed Girder Stresses, see Sheet No. 13 thru 15.

NEOPRENE BEARING PADS:
Laminated Neoprene Bearing Pads and Laminated Neoprene Bearing Pads (Tapered) shall be 60 durometer and shall be in accordance with Sec 716.

JOINT FILLER:
All joint filler shall be in accordance with Sec 1057 for preformed sponge rubber expansion and partition joint filler, except as noted.

REINFORCING STEEL:
Minimum clearance to reinforcing steel shall be 1-1/2", unless otherwise shown.

TRAFFIC HANDLING:
Structure to be closed during construction.

MoDOT Construction personnel shall indicate the type of joint filler option used under precast panels for this structure.
☐ Constant Joint filler
☐ Variable Joint Filler

The table of Estimated Quantities for Slab on Concrete I-girder represents the quantities used by the State in preparing the cost estimate for concrete slabs. The area of the concrete slab will be measured to the nearest square yard longitudinally from end of slab to end of slab and transversely from out to out of bridge slab (or with the horizontal dimensions as shown on the plan of slab.) Payment for prestressed panels, conventional forms, all concrete and coated and uncoated reinforcing steel will be considered completely covered by the contract unit price for the slab. Variations may be encountered in these estimated quantities but these variations cannot be used for an adjustment in the contract unit price.

Method of forming the slab shall be as shown on the plans and in accordance with Sec 703. All hardware for forming the slab to be left in place as a permanent part of the structure shall be coated in accordance with ASTM A123 or ASTM B633 with a thickness Class SC4 and a finish Type I, II or III.

Class B-2 Concrete quantity is based on minimum top flange thickness and minimum joint material thickness.

The Prestressed Panel quantities are not included in the Table of Estimated Quantities for Slab on Concrete I-Girder.

ESTIMATED QUANTITIES:

All concrete above the construction joint in the end bents is included in the Estimated Quantities for Slab on Concrete I-Girder.

All reinforcement in the end bents is included in the Estimated Quantities for Slab on Concrete I-Girder.

All reinforcement in the intermediate bent concrete diaphragms except reinforcement embedded in the beam cap is included in the Estimated Quantities for Slab on Concrete I-Girder.

All concrete above the intermediate bent cap is included in the Estimated Quantities for Slab on Concrete I-Girder.

ESTIMATED QUANTITIES FOR SLAB ON CONCRETE I-GIRDER

Item		Total
Class B-2 Concrete	Cu. Yds.	475.5
Reinforcing Steel	Lbs.	10,580
Reinforcing Steel (Epoxy Coated)	Lbs.	135,310

FOUNDATION DATA

Type	Design Data		Bent Number 1	2	3	4	5	6
Load Bearing Pile	Pile Type and Size		HP 12x53	HP 14x73	HP 14x73	HP 14x73	HP 14x73	HP 12x53
	Number	ea	7	8	8	8	8	7
	Approximate Length per Each	ft	25	28	27	27	27	21
	Pile Driving Verification Method		DF	#	#	#	#	DF
	Minimum Nominal Axial Compressive Resistance	kip	558	778	778	778	778	558
	Minimum Tip Penetration (Elev.)	ft	-	-	-	-	-	-
	Criteria for Minimum Tip Penetration		-	-	-	-	-	-
	Hammer Energy Required	ft-lb	26,700	24,900	24,900	24,900	24,900	26,700

DF = FHWA-modified Gates Dynamic Formula
# - Place pile in Pre-Bored hole and drive to set pile only. Minimum Nominal Axial Compressive Resistance shown includes Ø of 0.50. Hammer Energy Required is the minimum energy needed to set the piles. The criteria of Sec 702 for Pile Driving to Hark Rock shall be use.

Load Bearing Pile:
Minimum Nominal Axial Compressive Resistance = Maximum Factored Loads/Resistance Factor

GENERAL NOTES AND SUMMARY OF ESTIMATED QUANTITIES

Detailed September 2016
Checked October 2016

Note: This drawing is not to scale. Follow dimensions.

STATE OF MISSOURI
DAVID GRAHAM BARRETT
NUMBER PE-2006002787
PROFESSIONAL ENGINEER

THIS SHEET HAS BEEN SIGNED, SEALED AND DATED ELECTRONICALLY

DATE PREPARED 11/1/2016
ROUTE 96 | STATE MO
DISTRICT BR | SHEET NO. 2
COUNTY JASPER
JOB NO. J7P2228G
CONTRACT ID.
PROJECT NO.
BRIDGE NO. A8424

DATE	DESCRIPTION

MISSOURI HIGHWAYS AND TRANSPORTATION COMMISSION
105 WEST CAPITOL
JEFFERSON CITY, MO 65102
1-888-ASK-MODOT (1-888-275-6636)

HDR Engineering, Inc.
4435 Main Street
Suite 1000
Kansas City, MO 64111-1856
816-360-2700
Certificate of Authority: 000856

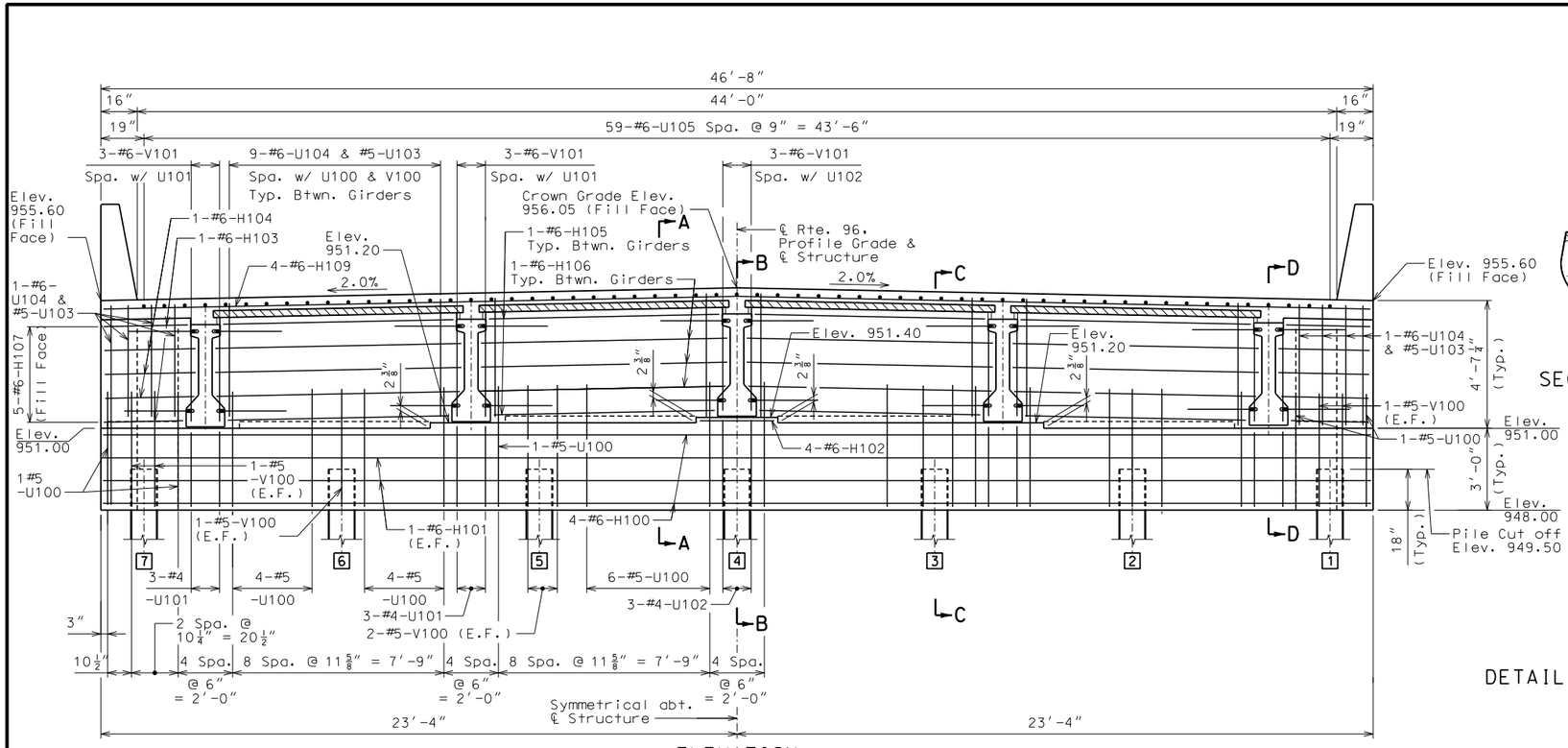

ELEVATION
(Looking Back Station)

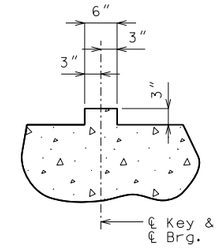

SECTION THRU KEY

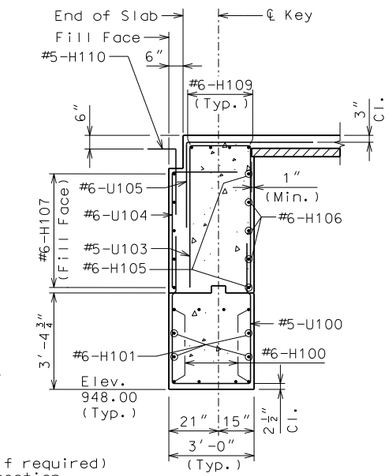

SECTION A-A

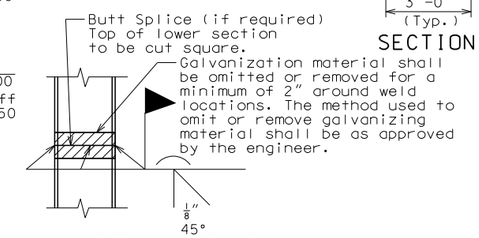

DETAIL OF STEEL PILE SPLICE

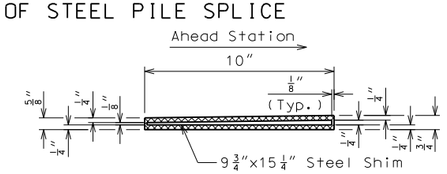

LAMINATED NEOPRENE BEARING PAD (TAPERED)

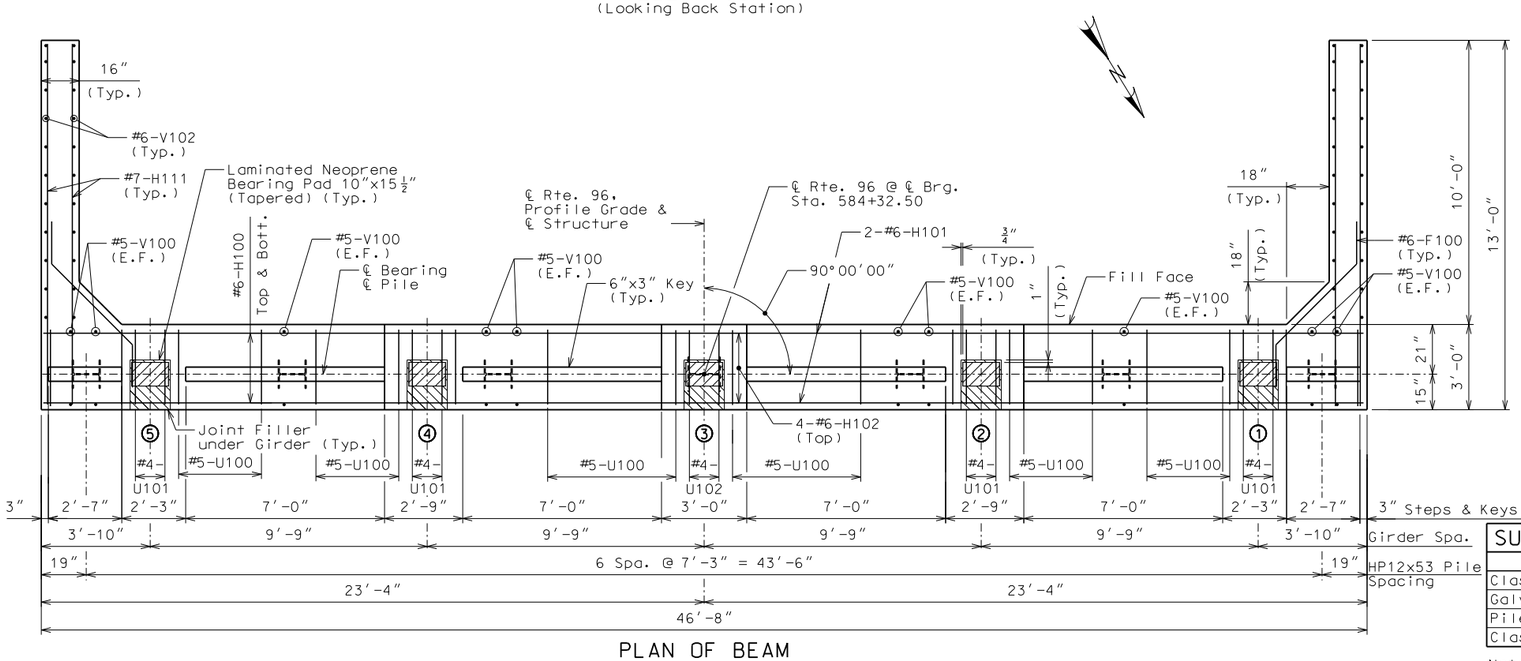

PLAN OF BEAM

Notes:
For Sections B-B, C-C & D-D, see Sheet No. 4.

For Girder Details, see Sheet No. 13.

Bend F100 bars in field to clear girders.

Bend H111 bars in field to clear pile.

Reinforcing steel shall be shifted to clear piles. U-Bars shall clear piles by at least 1 1/2".

All concrete in the end bent above top of beam and below top of slab shall be Class B-2.

Strands at end of girder shall be field bent or, if necessary, cut in field to maintain 1 1/2" minimum clearance to fill face of end bent.

(1) - Denotes girder number.

[1] - Denotes pile number.

E.F. Denotes Each Face.

SUBSTRUCTURE QUANTITY TABLE FOR END BENT NO. 1

Item		Quantity
Class 1 Excavation	Cu. Yd.	65
Galvanized Structural Steel Pile (12 in.)	Lin. Ft.	175
Pile Point Reinforcement	Each	7
Class B Concrete (Substructure)	Cu. Yd.	19.5

Notes:
These quantities are included in the Estimated Quantities on Sheet 2.

All reinforcing quantities are included in the Estimated Quantities for Slab on Concrete I-Girder, see Sheet No. 2.

END BENT NO. 1 DETAILS

Detailed September 2016
Checked October 2016

Note: This drawing is not to scale. Follow dimensions.

STATE OF MISSOURI
DAVID GRAHAM BARRETT
NUMBER PE-2006002787
PROFESSIONAL ENGINEER

THIS SHEET HAS BEEN SIGNED, SEALED AND DATED ELECTRONICALLY

DATE PREPARED	
11/1/2016	
ROUTE 96	STATE MO
DISTRICT BR	SHEET NO. 3
COUNTY JASPER	
JOB NO. J7P2228G	
CONTRACT ID.	
PROJECT NO.	
BRIDGE NO. A8424	

DESCRIPTION

DATE

MISSOURI HIGHWAYS AND TRANSPORTATION COMMISSION
105 WEST CAPITOL
JEFFERSON CITY, MO 65102
1-888-ASK-MODOT (1-888-275-6636)

HDR Engineering, Inc.
4435 Main Street
Suite 1000
Kansas City, MO 64111-1856
816-360-2700
Certificate of Authority: 000856

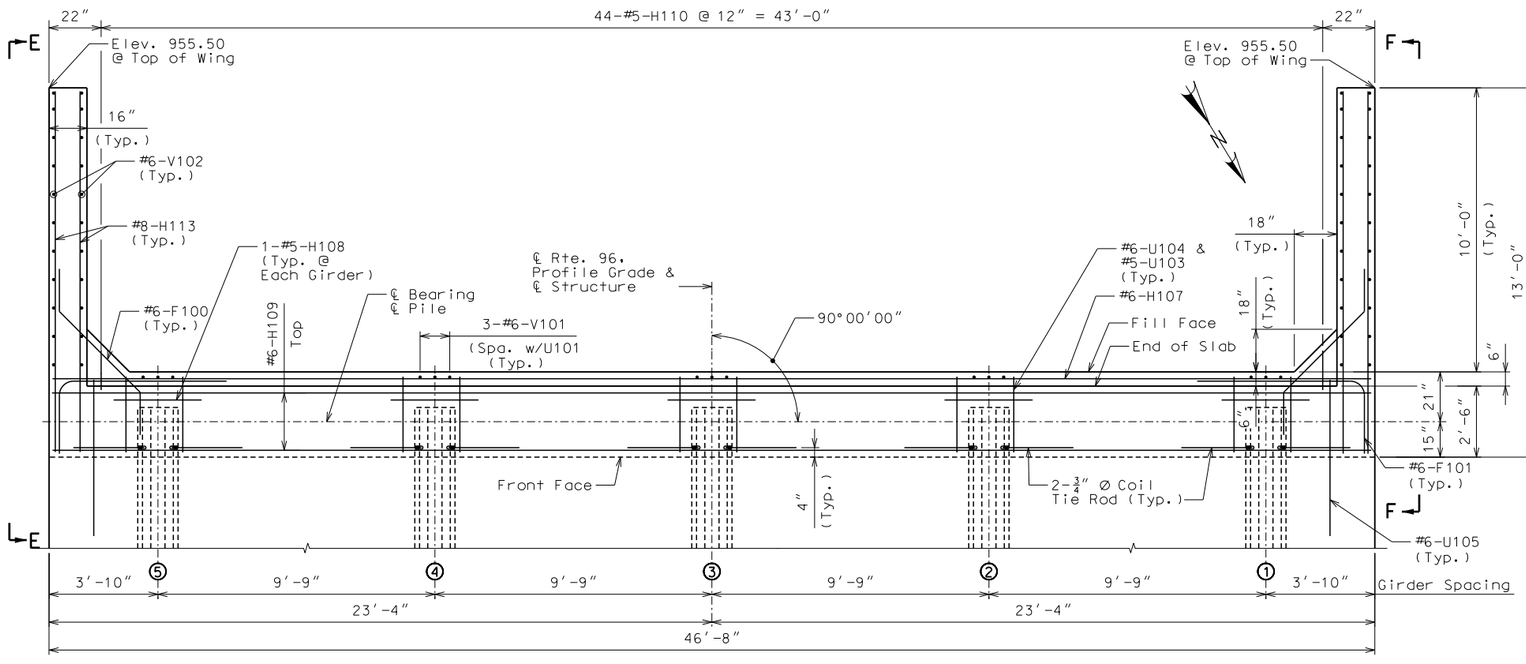

PLAN

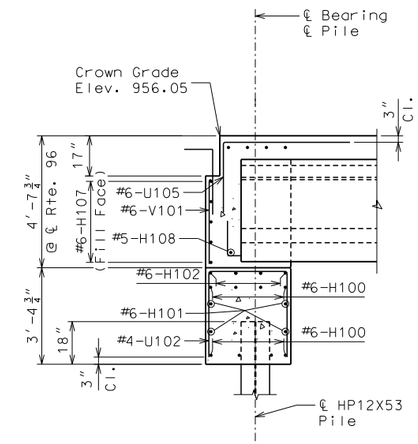

SECTION B-B

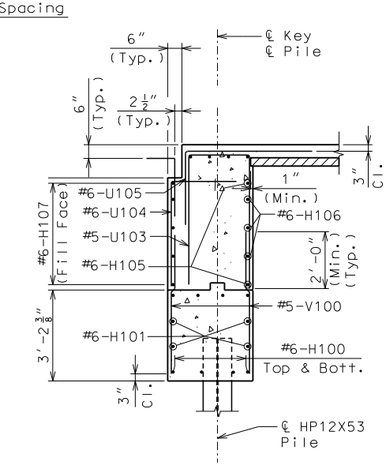

SECTION C-C

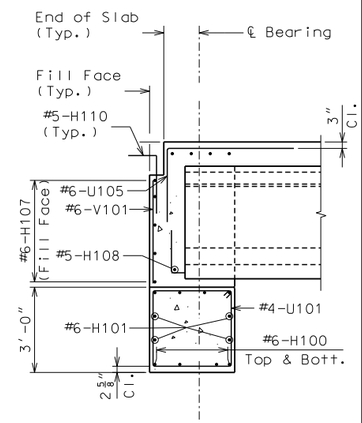

SECTION D-D

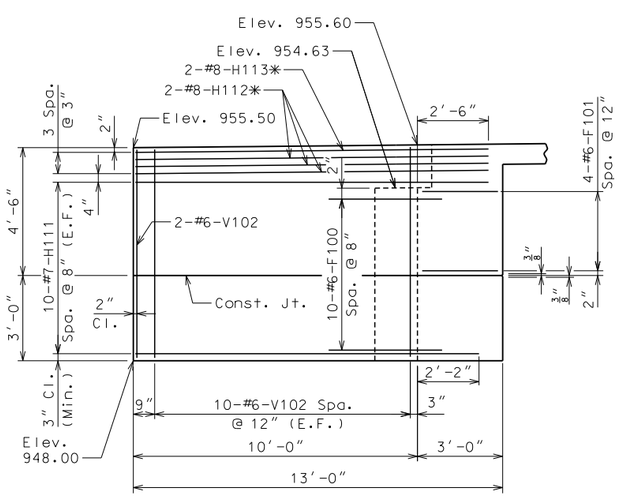

ELEVATION E-E

✱ - Place with grade.

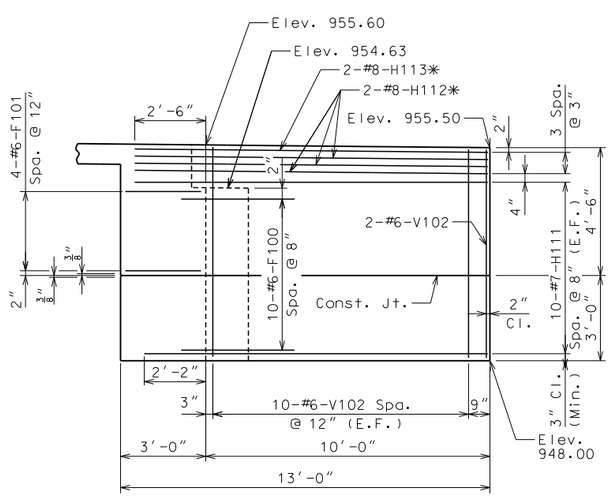

ELEVATION F-F

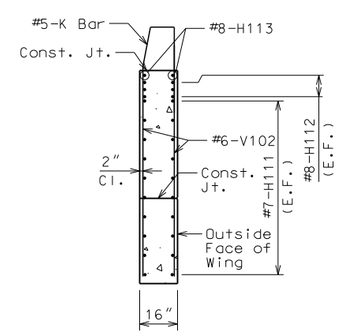

PART SECTION
THRU WING

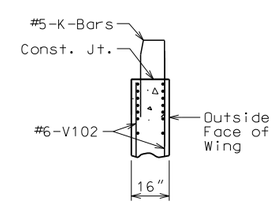

PART SECTION
THRU END
OF WING

Notes:
For location of Sections B-B, C-C & D-D, see Sheet No. 3.

For Key Details, see Sheet No. 3.

For Girder Details, see Sheet No. 13.

For reinforcement of the Barrier Curb (Type D), see Sheet No. 22 thru 24.

① - denotes Girder Number.

E.F. denotes Each Face.

END BENT NO. 1 DETAILS

Detailed September 2016
Checked October 2016

Note: This drawing is not to scale. Follow dimensions.

STATE OF MISSOURI
DAVID GRAHAM BARRETT
NUMBER PE-2006002787
PROFESSIONAL ENGINEER

THIS SHEET HAS BEEN SIGNED, SEALED AND DATED ELECTRONICALLY

DATE PREPARED	
11/1/2016	
ROUTE 96	STATE MO
DISTRICT BR	SHEET NO. 4
COUNTY JASPER	
JOB NO. J7P2228G	
CONTRACT ID.	
PROJECT NO.	
BRIDGE NO. A8424	

DATE	DESCRIPTION

MISSOURI HIGHWAYS AND TRANSPORTATION COMMISSION
105 WEST CAPITOL
JEFFERSON CITY, MO 65102
1-888-ASK-MODOT (1-888-275-6636)

HDR Engineering, Inc.
4435 Main Street
Suite 1000
Kansas City, MO 64111-1856
816-360-2700
Certificate of Authority: 000856

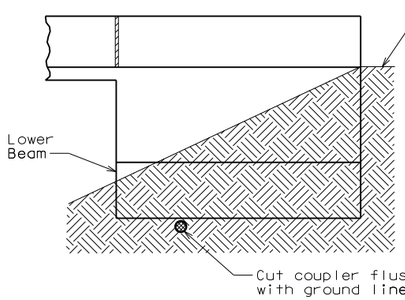

ELEVATION OF WING

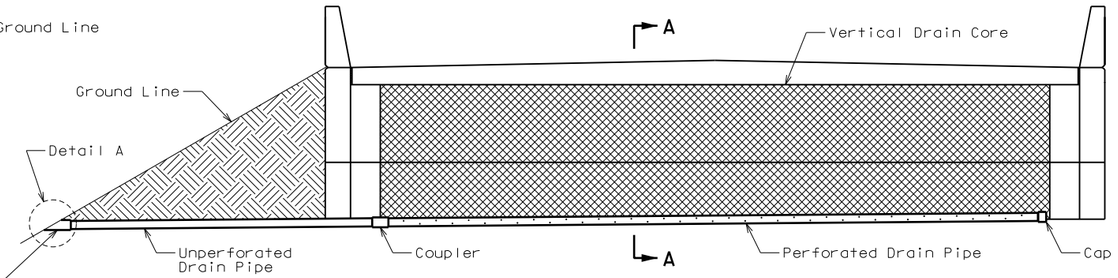

ELEVATION AT END BENT

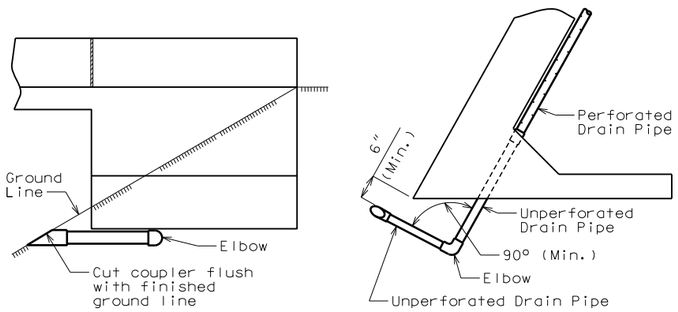

ELEVATION OF WING PART PLAN

OPTIONAL TURNED DRAIN

(Only if rock is encountered at outside of wing)

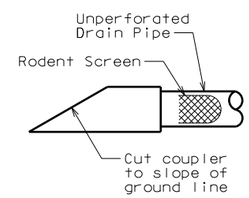

DETAIL A

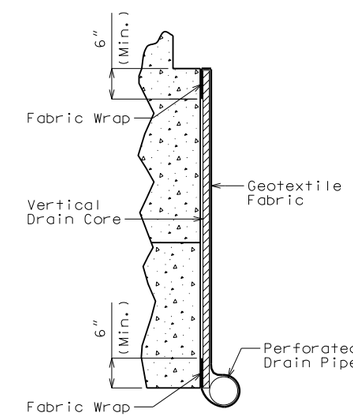

PART SECTION A-A

Note:

Drain pipe may be either 6-inch diameter corrugated metallic-coated steel pipe underdrain, 4-inch diameter corrugated polyvinyl chloride (PVC) drain pipe, or 4-inch diameter corrugated polyethylene (PE) drain pipe.

Place drain pipe at fill face of end bent and slope to lowest grade of ground line, also missing the lower beam of end bent by 1 1/2 inches. (See Elevation at End Bent.)

Perforated pipe shall be placed at fill face side at the bottom of end bent and plain pipe shall be used where the vertical drain ends to the exit at ground line.

VERTICAL DRAIN AT END BENTS

Detailed September 2016
Checked October 2016

Note: This drawing is not to scale. Follow dimensions.

STATE OF MISSOURI
DAVID GRAHAM BARRETT
NUMBER PE-2006002787
PROFESSIONAL ENGINEER

THIS SHEET HAS BEEN SIGNED, SEALED AND DATED ELECTRONICALLY

DATE PREPARED	11/1/2016
ROUTE	96
STATE	MO
DISTRICT	BR
SHEET NO.	5
COUNTY	JASPER
JOB NO.	J7P2228G
CONTRACT ID.	
PROJECT NO.	
BRIDGE NO.	A8424

DATE	DESCRIPTION

MISSOURI HIGHWAYS AND TRANSPORTATION COMMISSION
105 WEST CAPITOL
JEFFERSON CITY, MO 65102
1-888-ASK-MODOT (1-888-275-6636)

HDR Engineering, Inc.
4435 Main Street
Suite 1000
Kansas City, MO 64111-1856
816-360-2700
Certificate of Authority: 000856

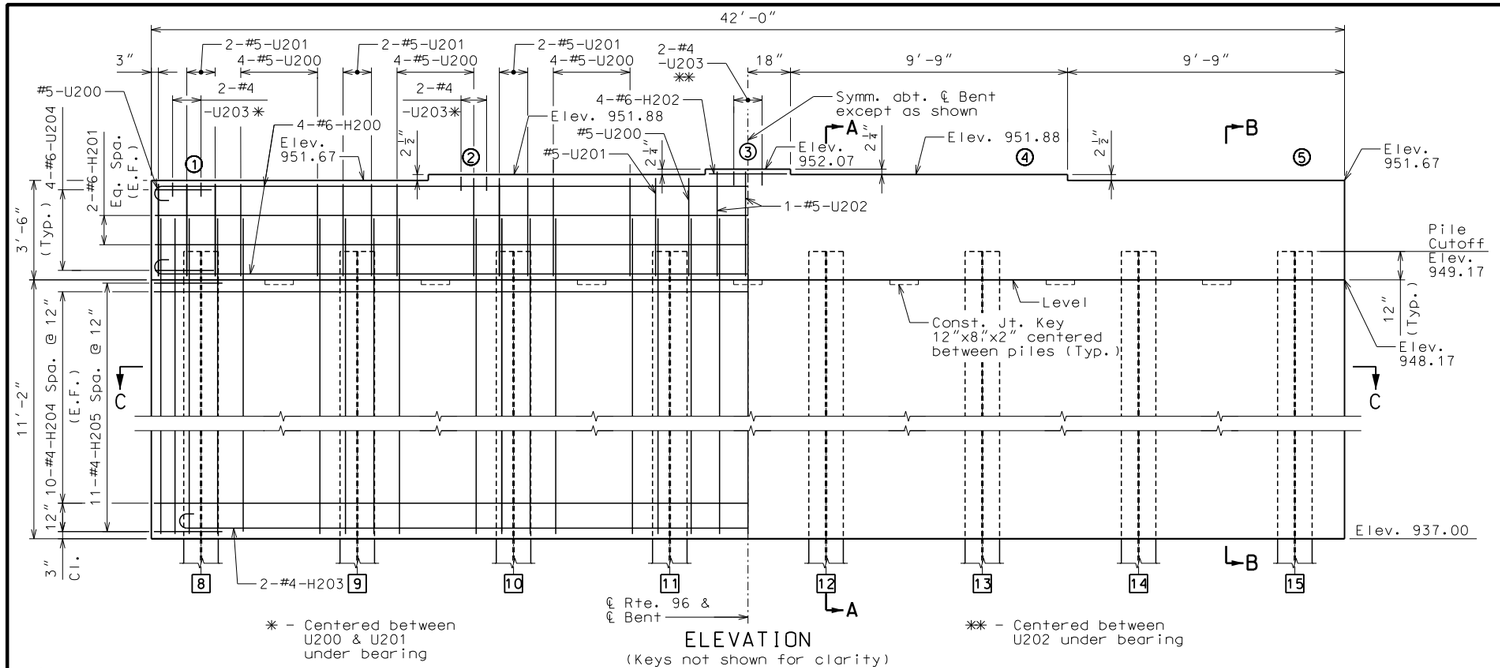

ELEVATION

(Keys not shown for clarity)

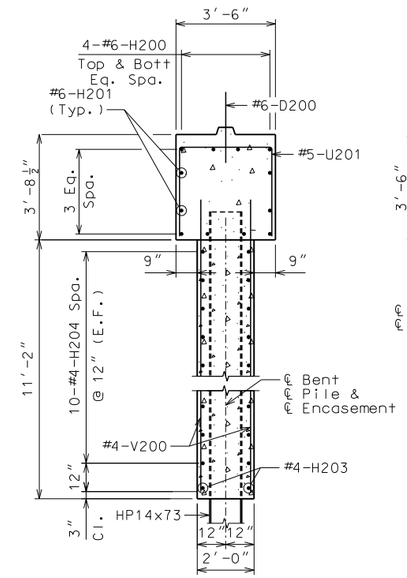

SECTION A-A

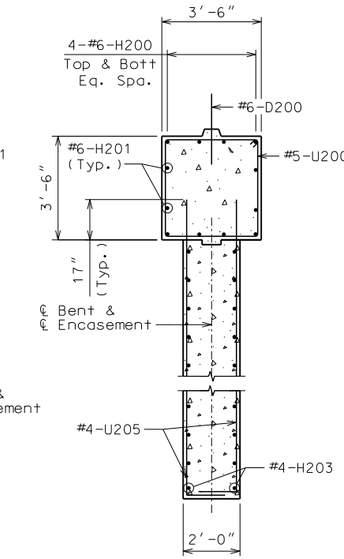

SECTION B-B

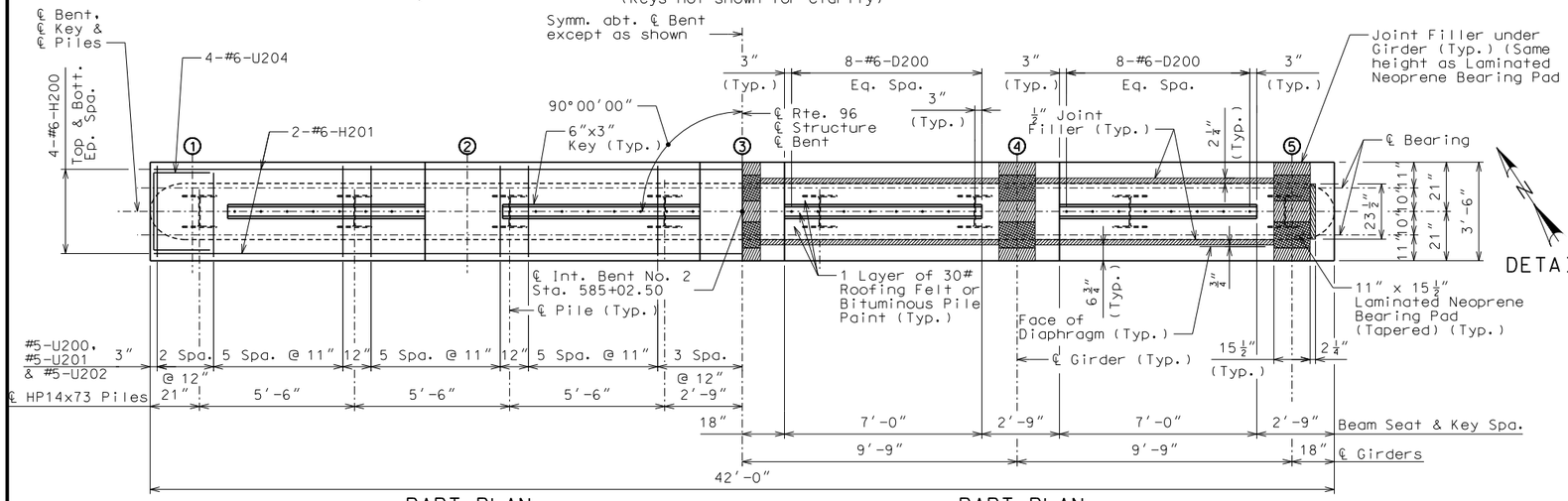

PART PLAN

PART PLAN

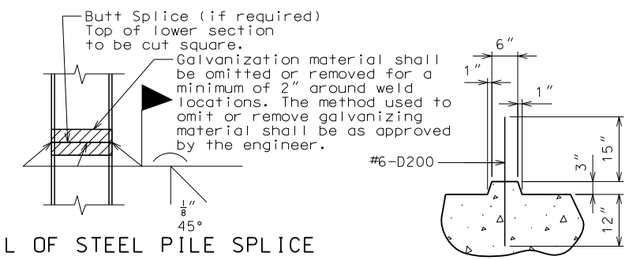

DETAIL OF STEEL PILE SPLICE

SECTION THRU KEY

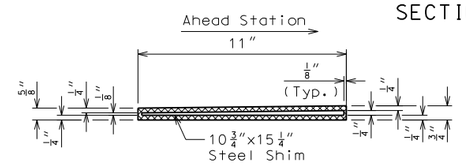

LAMINATED NEOPRENE BEARING PAD (TAPERED)

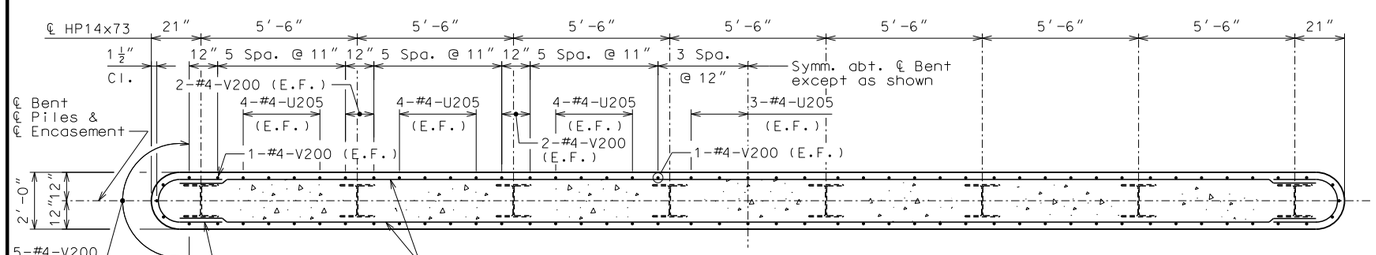

SECTION C-C

SUBSTRUCTURE QUANTITY TABLE FOR INTERMEDIATE BENT NO. 2		
ITEM		QUANTITY
Class 1 Excavation	Cu. Yd.	20
Galvanized Structural Steel Piles (14 in.)	Lin. Ft.	224
Pre-Bore For Piling	Lin. Ft.	128
Class B Concrete (Substructure)	Cu. Yd.	54.3
Reinforcement Steel (Bridges)	Lbs.	3120

Notes:
These quantities are included in the Estimated Quantities table on Sheet No. 2.

1 -Denotes girder number.

8 -Denotes pile number.

INTERMEDIATE BENT NO. 2 DETAILS

Detailed September 2016
Checked October 2016

Note: This drawing is not to scale. Follow dimensions.

STATE OF MISSOURI — DAVID GRAHAM BARRETT — NUMBER PE-2006002787 — PROFESSIONAL ENGINEER

THIS SHEET HAS BEEN SIGNED, SEALED AND DATED ELECTRONICALLY

DATE PREPARED	
11/1/2016	
ROUTE 96	STATE MO
DISTRICT BR	SHEET NO. 6
COUNTY JASPER	
JOB NO. J7P2228G	
CONTRACT ID.	
PROJECT NO.	
BRIDGE NO. A8424	

DESCRIPTION

DATE

MISSOURI HIGHWAYS AND TRANSPORTATION COMMISSION

105 WEST CAPITOL
JEFFERSON CITY, MO 65102
1-888-ASK-MODOT (1-888-275-6636)

HDR Engineering, Inc.
4435 Main Street
Suite 1000
Kansas City, MO 64111-1856
816-360-2700
Certificate of Authority: 000856

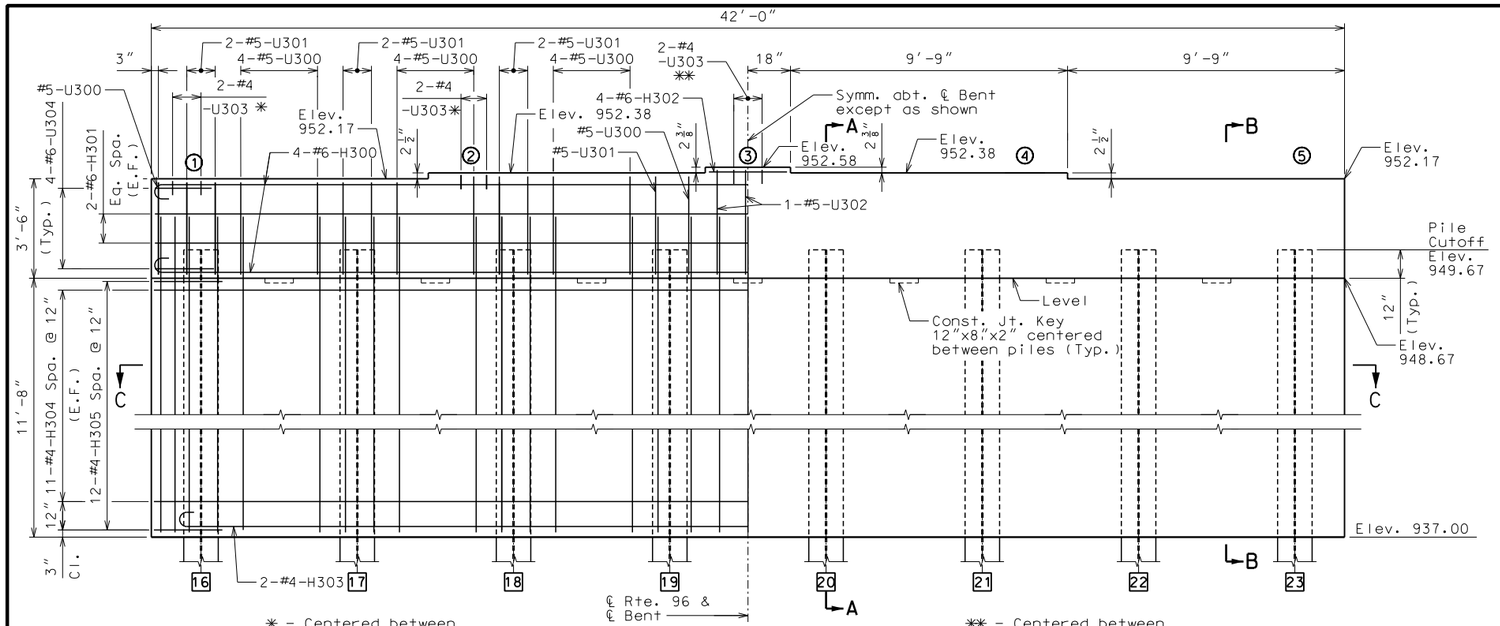

ELEVATION
(Keys not shown for clarity)

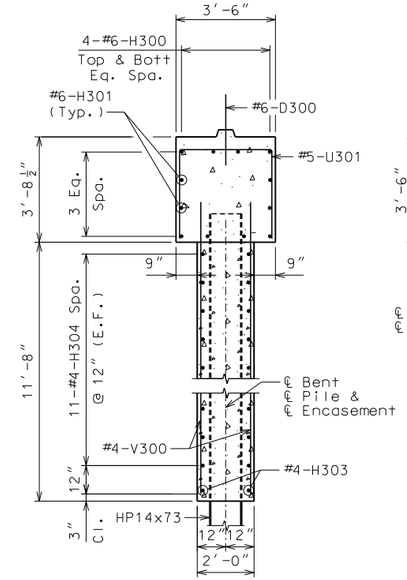

SECTION A-A

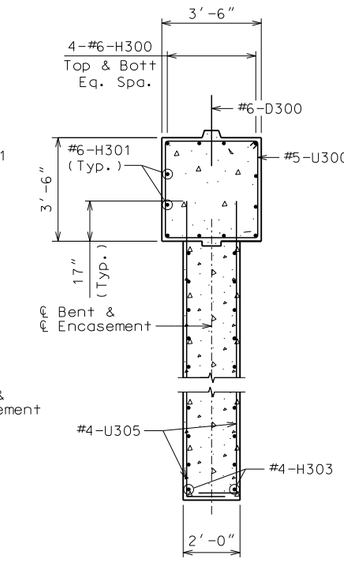

SECTION B-B

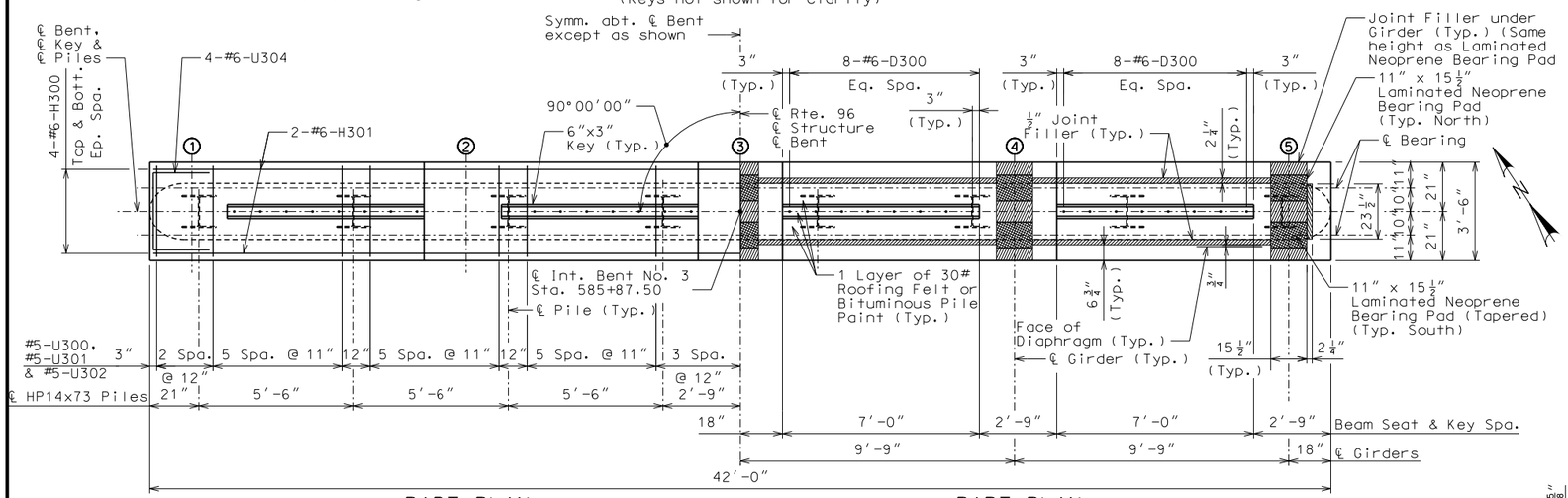

PART PLAN

PART PLAN

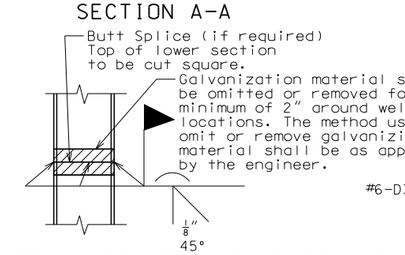

DETAIL OF STEEL PILE SPLICE

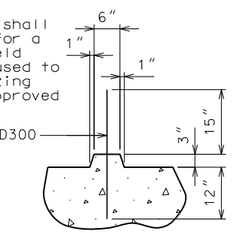

SECTION THRU KEY

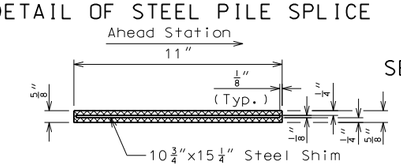

LAMINATED NEOPRENE BEARING PAD
(All North Bearings)

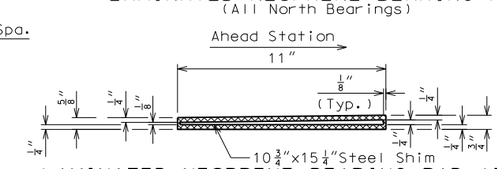

LAMINATED NEOPRENE BEARING PAD (TAPERED)
(All South Bearings)

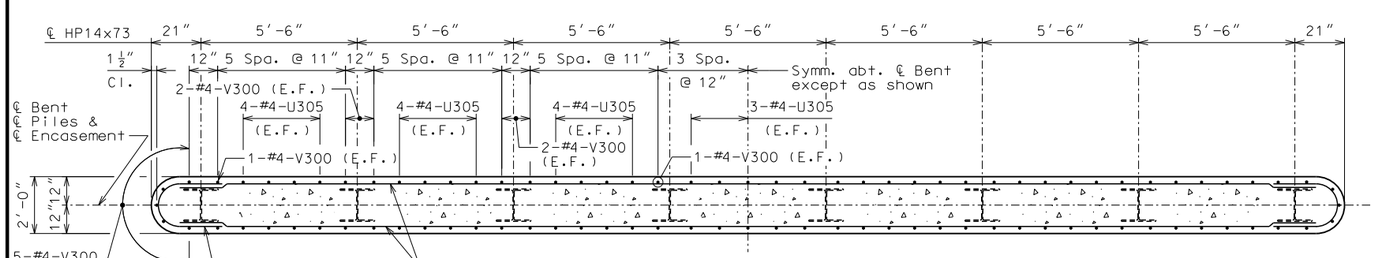

SECTION C-C

SUBSTRUCTURE QUANTITY TABLE FOR INTERMEDIATE BENT NO. 3

ITEM		QUANTITY
Class 1 Excavation	Cu. Yd.	20
Galvanized Structural Steel Piles (14 in.)	Lin. Ft.	216
Pre-Bore For Piling	Lin. Ft.	112
Class B Concrete (Substructure)	Cu. Yd.	55.8
Reinforcement Steel (Bridges)	Lbs.	3220

Notes:
These quantities are included in the Estimated Quantities table on Sheet No. 2.
1 -Denotes girder number.
16 -Denotes pile number.

INTERMEDIATE BENT NO. 3 DETAILS

Detailed September 2016
Checked October 2016

Note: This drawing is not to scale. Follow dimensions.

STATE OF MISSOURI
DAVID GRAHAM BARRETT
NUMBER PE-2006002787
PROFESSIONAL ENGINEER

THIS SHEET HAS BEEN SIGNED, SEALED AND DATED ELECTRONICALLY

DATE PREPARED	
11/1/2016	
ROUTE 96	STATE MO
DISTRICT BR	SHEET NO. 7
COUNTY JASPER	
JOB NO. J7P2228G	
CONTRACT ID.	
PROJECT NO.	
BRIDGE NO. A8424	

DATE	DESCRIPTION

MISSOURI HIGHWAYS AND TRANSPORTATION COMMISSION
105 WEST CAPITOL
JEFFERSON CITY, MO 65102
1-888-ASK-MODOT (1-888-275-6636)

HDR Engineering, Inc.
4435 Main Street
Suite 1000
Kansas City, MO 64111-1856
816-360-2700
Certificate of Authority: 000856

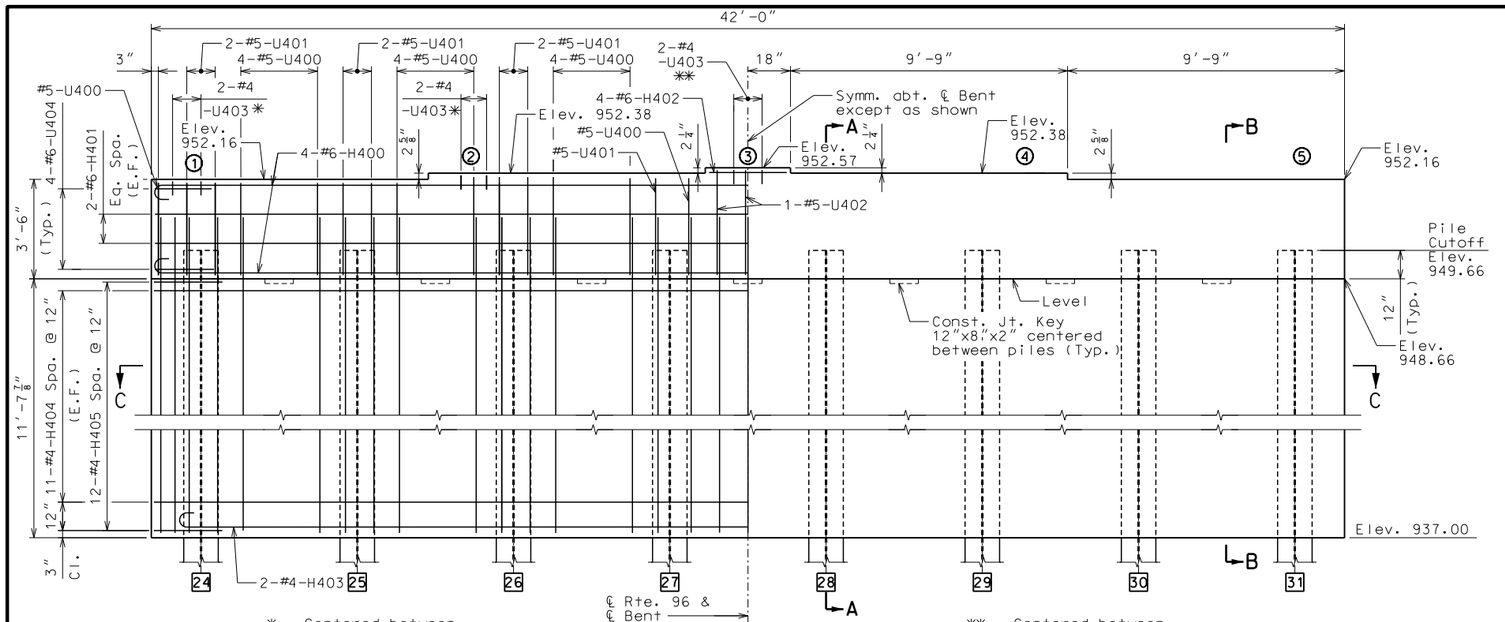

ELEVATION

(Keys not shown for clarity)

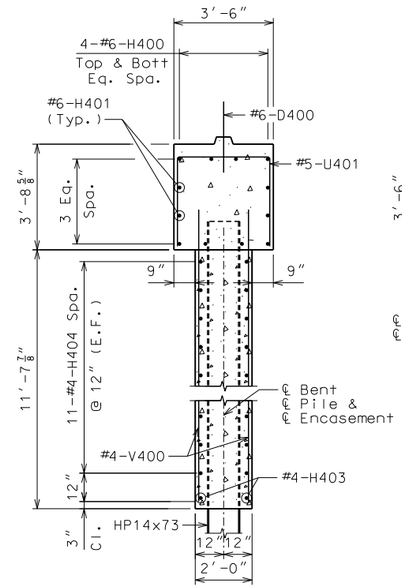

SECTION A-A

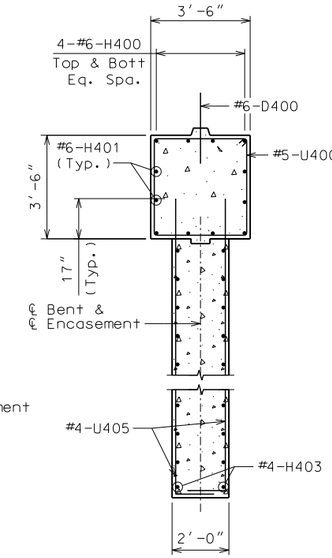

SECTION B-B

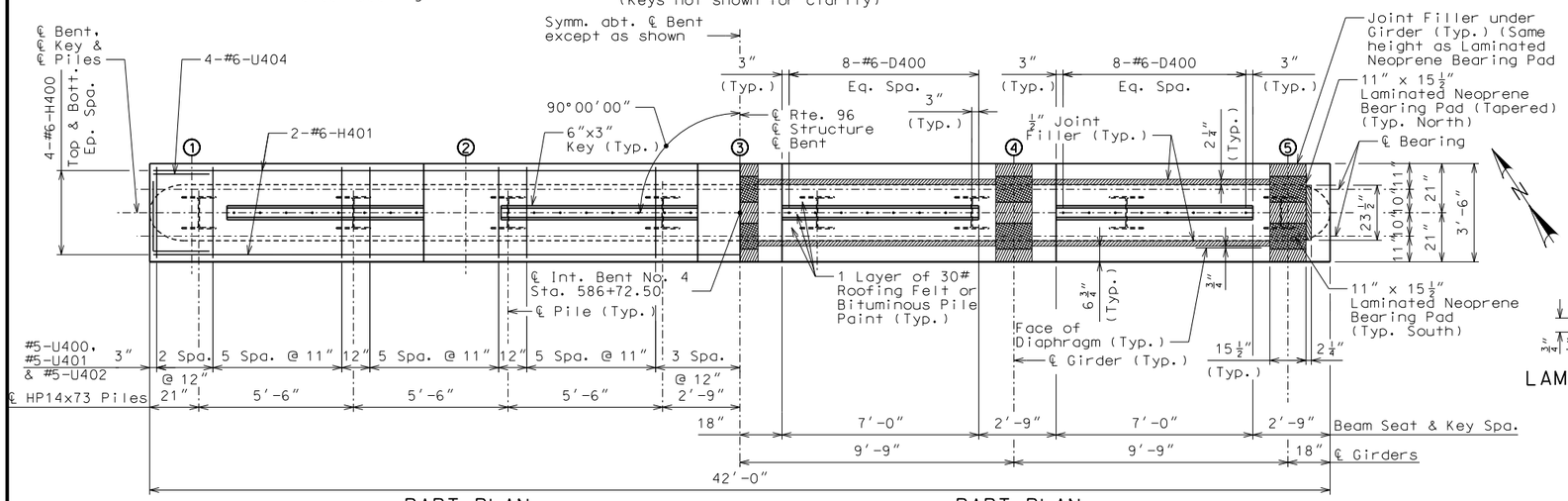

PART PLAN

PART PLAN

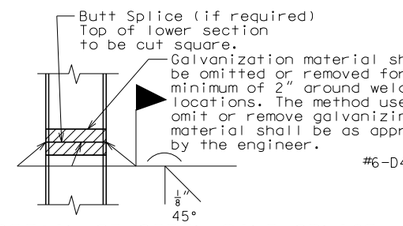

DETAIL OF STEEL PILE SPLICE

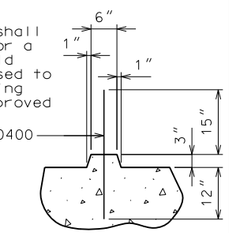

SECTION THRU KEY

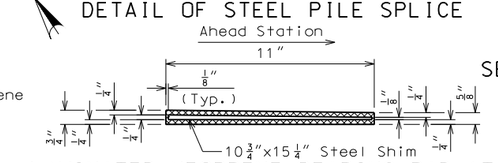

LAMINATED NEOPRENE BEARING PAD (TAPERED)

(All North Bearings)

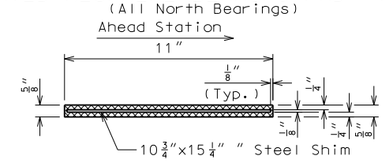

LAMINATED NEOPRENE BEARING PAD

(All South Bearings)

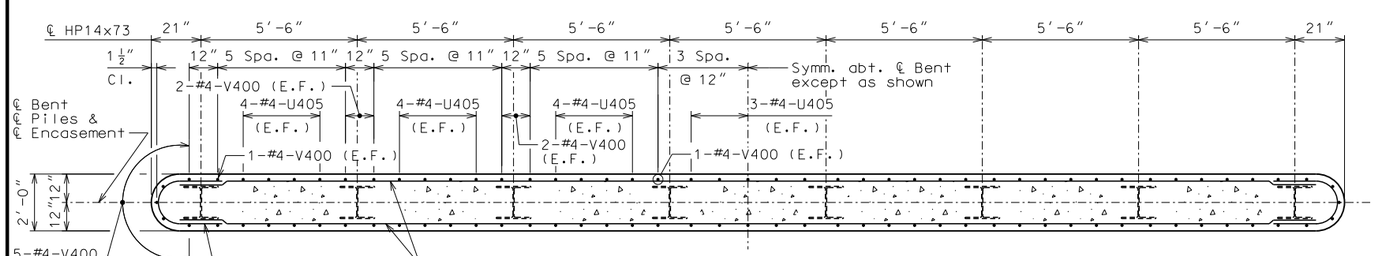

SECTION C-C

SUBSTRUCTURE QUANTITY TABLE FOR INTERMEDIATE BENT NO. 4		
ITEM		QUANTITY
Class 1 Excavation	Cu. Yd.	30
Galvanized Structural Steel Piles (14 in.)	Lin. Ft.	216
Pre-Bore For Piling	Lin. Ft.	112
Class B Concrete (Substructure)	Cu. Yd.	55.8
Reinforcement Steel (Bridges)	Lbs.	3220

Notes:
These quantities are included in the Estimated Quantities table on Sheet No. 2.

1 -Denotes girder number.

24 -Denotes pile number.

INTERMEDIATE BENT NO. 4 DETAILS

Detailed September 2016
Checked October 2016

Note: This drawing is not to scale. Follow dimensions.

STATE OF MISSOURI — DAVID GRAHAM BARRETT — NUMBER PE-2006002787 — PROFESSIONAL ENGINEER

THIS SHEET HAS BEEN SIGNED, SEALED AND DATED ELECTRONICALLY

DATE PREPARED	
11/1/2016	
ROUTE 96	STATE MO
DISTRICT BR	SHEET NO. 8
COUNTY JASPER	
JOB NO. J7P2228G	
CONTRACT ID.	
PROJECT NO.	
BRIDGE NO. A8424	

DESCRIPTION

DATE

MISSOURI HIGHWAYS AND TRANSPORTATION COMMISSION
105 WEST CAPITOL
JEFFERSON CITY, MO 65102
1-888-ASK-MODOT (1-888-275-6636)

HDR Engineering, Inc.
4435 Main Street
Suite 1000
Kansas City, MO 64111-1856
816-360-2700
Certificate of Authority: 000856

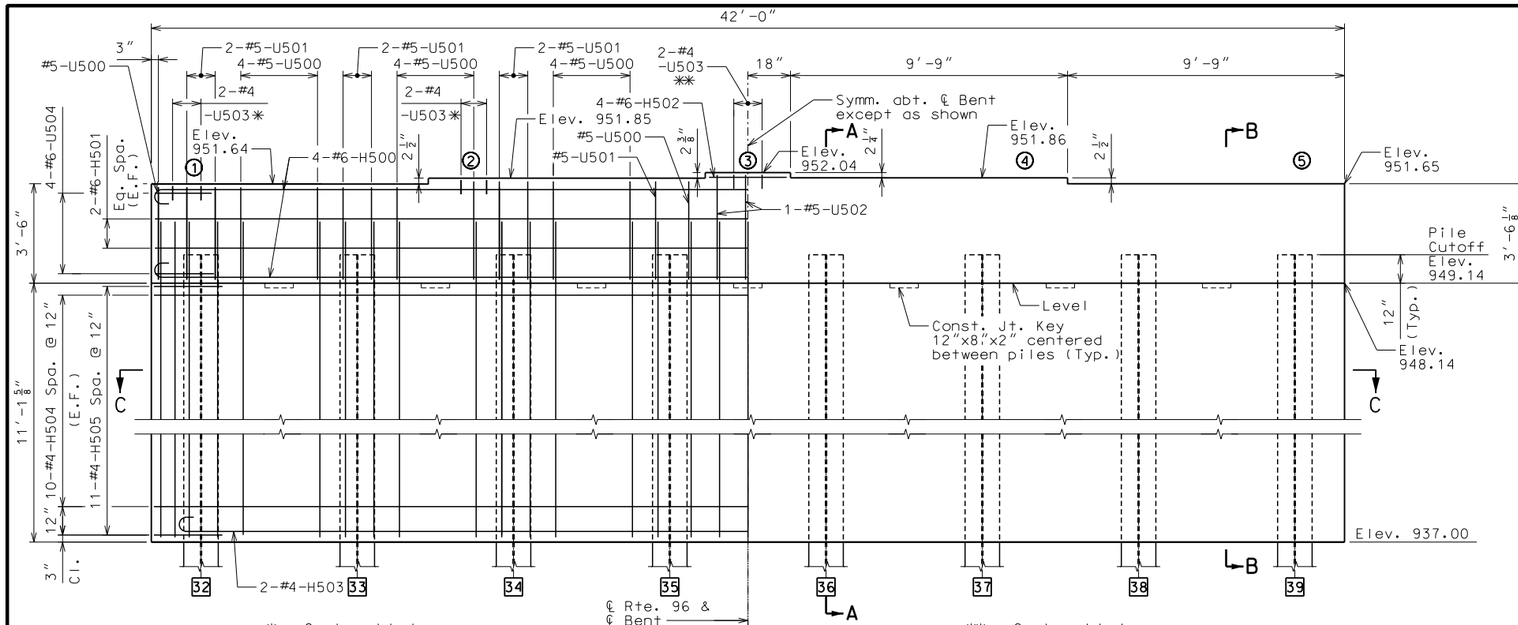

ELEVATION
(Keys not shown for clarity)

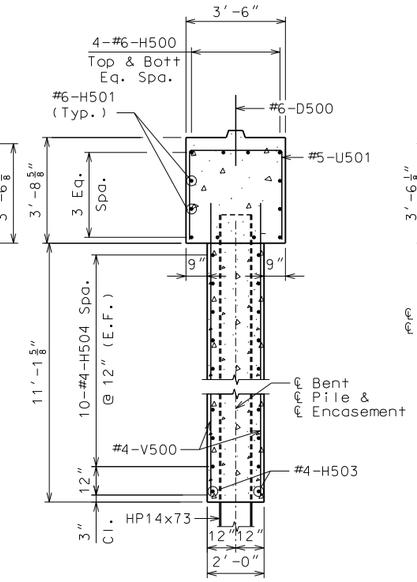

SECTION A-A

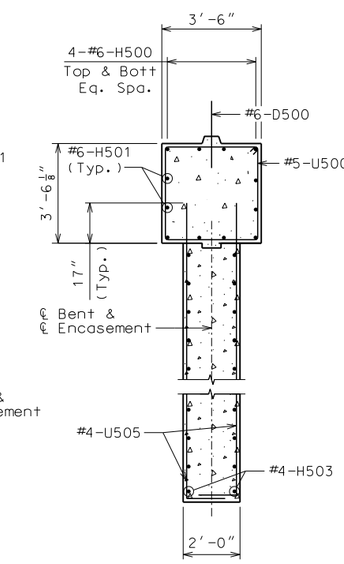

SECTION B-B

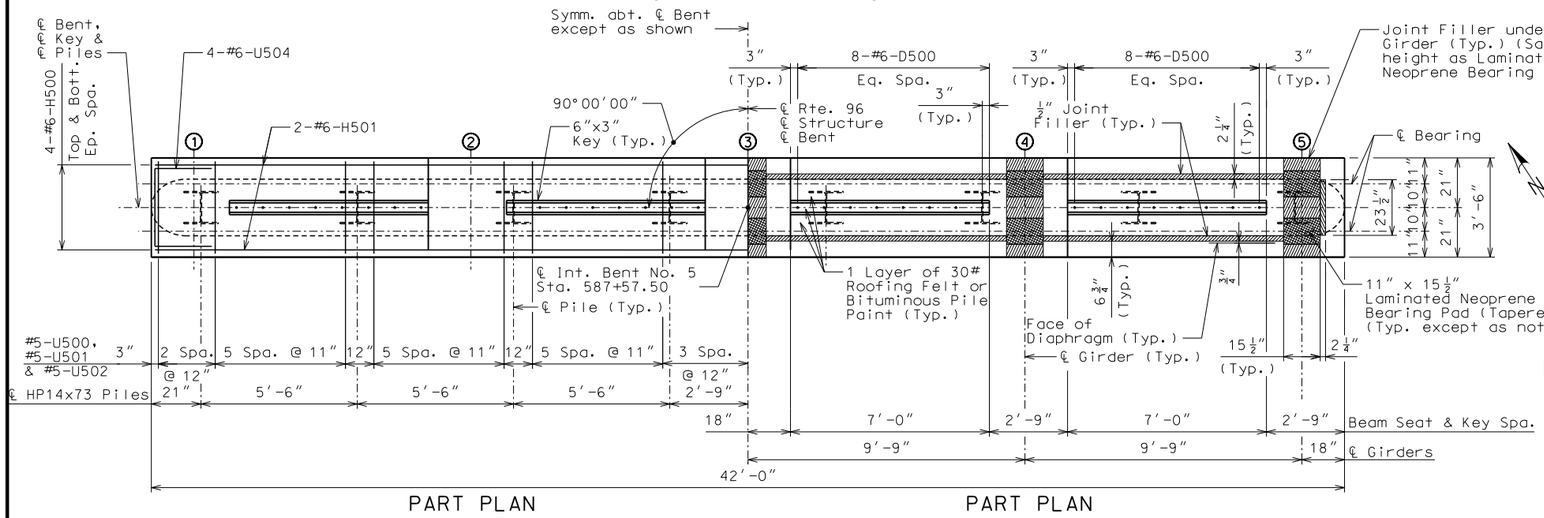

PART PLAN

PART PLAN

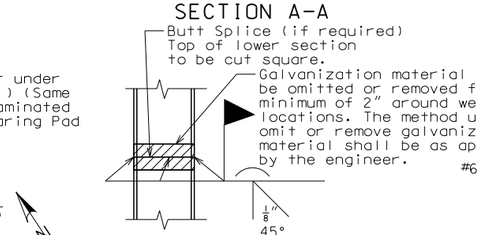

DETAIL OF STEEL PILE SPLICE

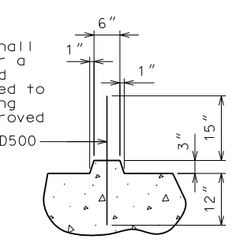

SECTION THRU KEY

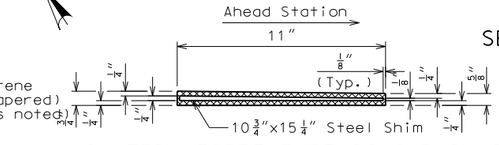

LAMINATED NEOPRENE BEARING PAD (TAPERED)
(All South Bearings, North Bearings Girders 2, 3, 4, & 5)

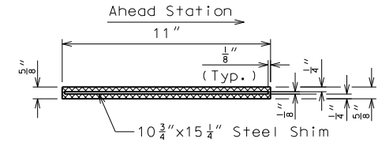

LAMINATED NEOPRENE BEARING PAD
(North Bearing Girder 1)

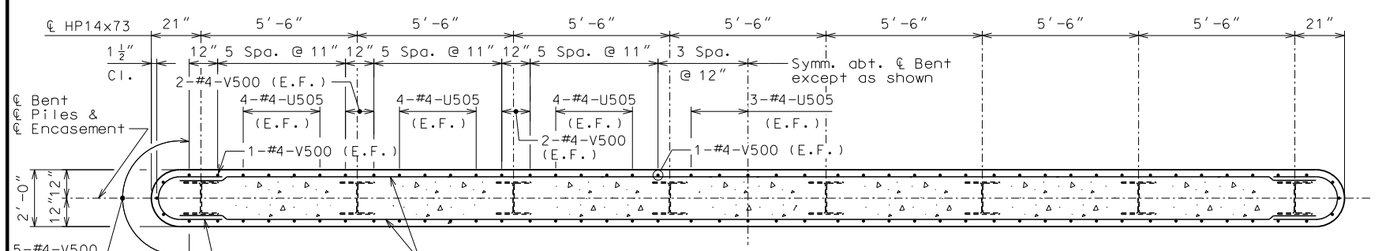

SECTION C-C

SUBSTRUCTURE QUANTITY TABLE FOR INTERMEDIATE BENT NO. 5

ITEM		QUANTITY
Class 1 Excavation	Cu. Yd.	20
Galvanized Structural Steel Piles (14 in.)	Lin. Ft.	216
Pre-Bore For Piling	Lin. Ft.	112
Class B Concrete (Substructure)	Cu. Yd.	54.2
Reinforcement Steel (Bridges)	Lbs.	3120

Notes:
These quantities are included in the Estimated Quantities table on Sheet No. 2.

1 -Denotes girder number.
32 -Denotes pile number.

INTERMEDIATE BENT NO. 5 DETAILS

Detailed September 2016
Checked October 2016

Note: This drawing is not to scale. Follow dimensions.

STATE OF MISSOURI
DAVID GRAHAM BARRETT
NUMBER PE-2006002787
PROFESSIONAL ENGINEER

THIS SHEET HAS BEEN SIGNED, SEALED AND DATED ELECTRONICALLY

DATE PREPARED	
11/1/2016	
ROUTE 96	STATE MO
DISTRICT BR	SHEET NO. 9
COUNTY JASPER	
JOB NO. J7P2228G	
CONTRACT ID.	
PROJECT NO.	
BRIDGE NO. A8424	

DESCRIPTION

DATE

MISSOURI HIGHWAYS AND TRANSPORTATION COMMISSION
105 WEST CAPITOL
JEFFERSON CITY, MO 65102
1-888-ASK-MODOT (1-888-275-6636)

HDR Engineering, Inc.
4435 Main Street
Suite 1000
Kansas City, MO 64111-1856
816-360-2700
Certificate of Authority: 000856

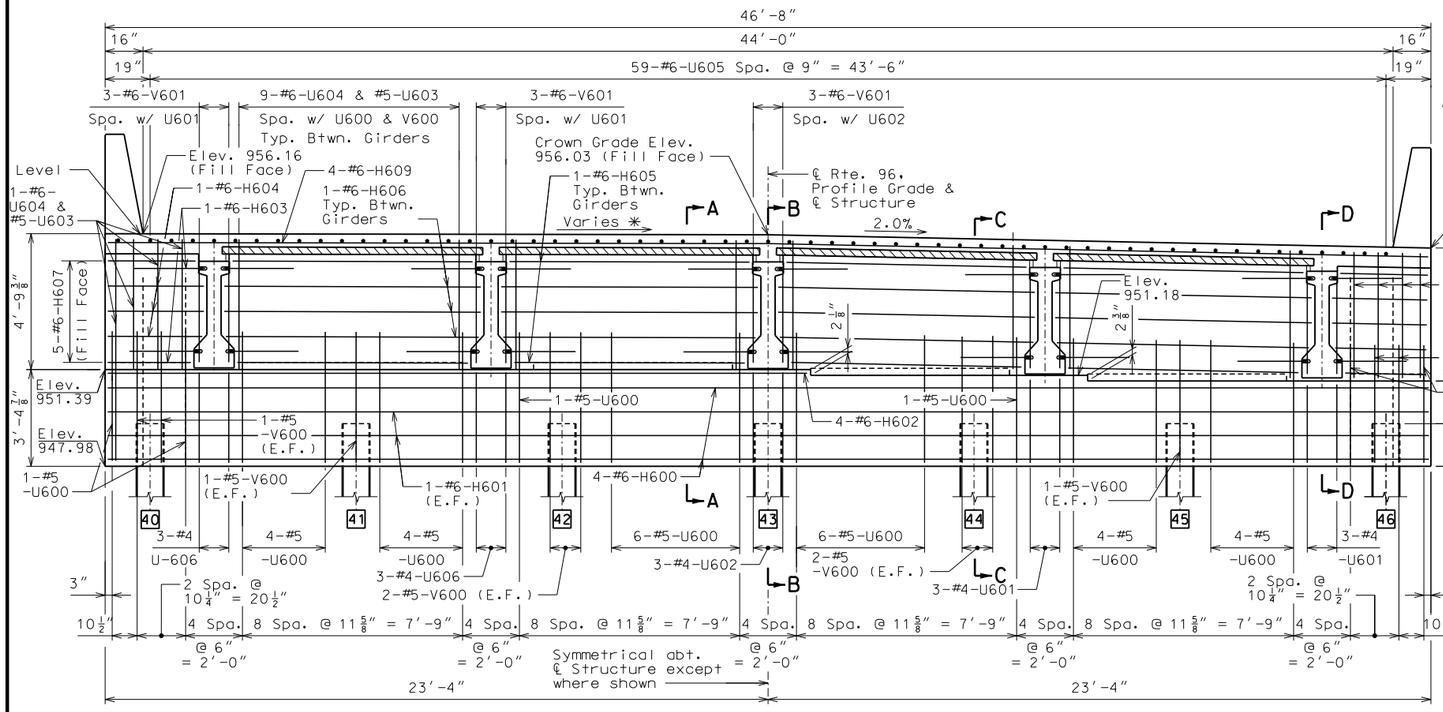

ELEVATION
(Looking Ahead Station)

✳ - Varies from +0.36% at Sta. 588+26.25 (Front Face to +0.90% at Sta. 588+39.25 (Wing Tip)

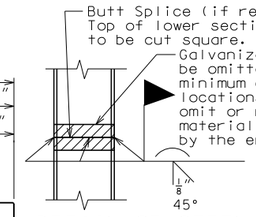

DETAIL OF STEEL PILE SPLICE

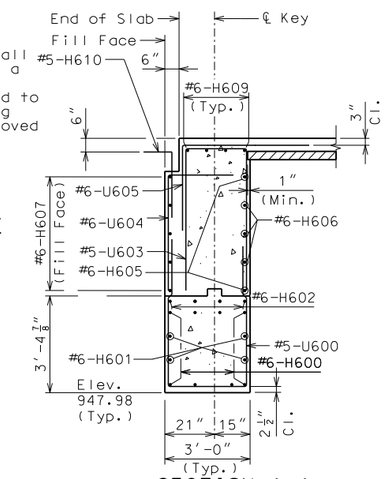

SECTION A-A

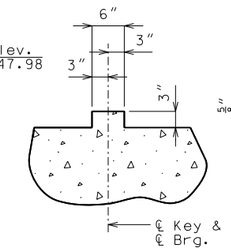

SECTION THRU KEY

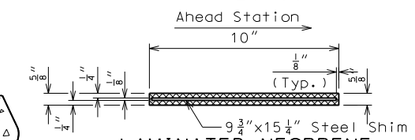

LAMINATED NEOPRENE BEARING PAD
(Girders 1 & 2)

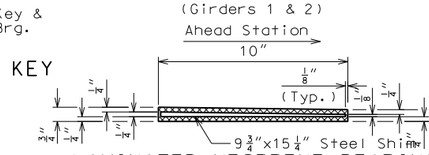

LAMINATED NEOPRENE BEARING PAD (TAPERED)
(Girders 3, 4 & 5)

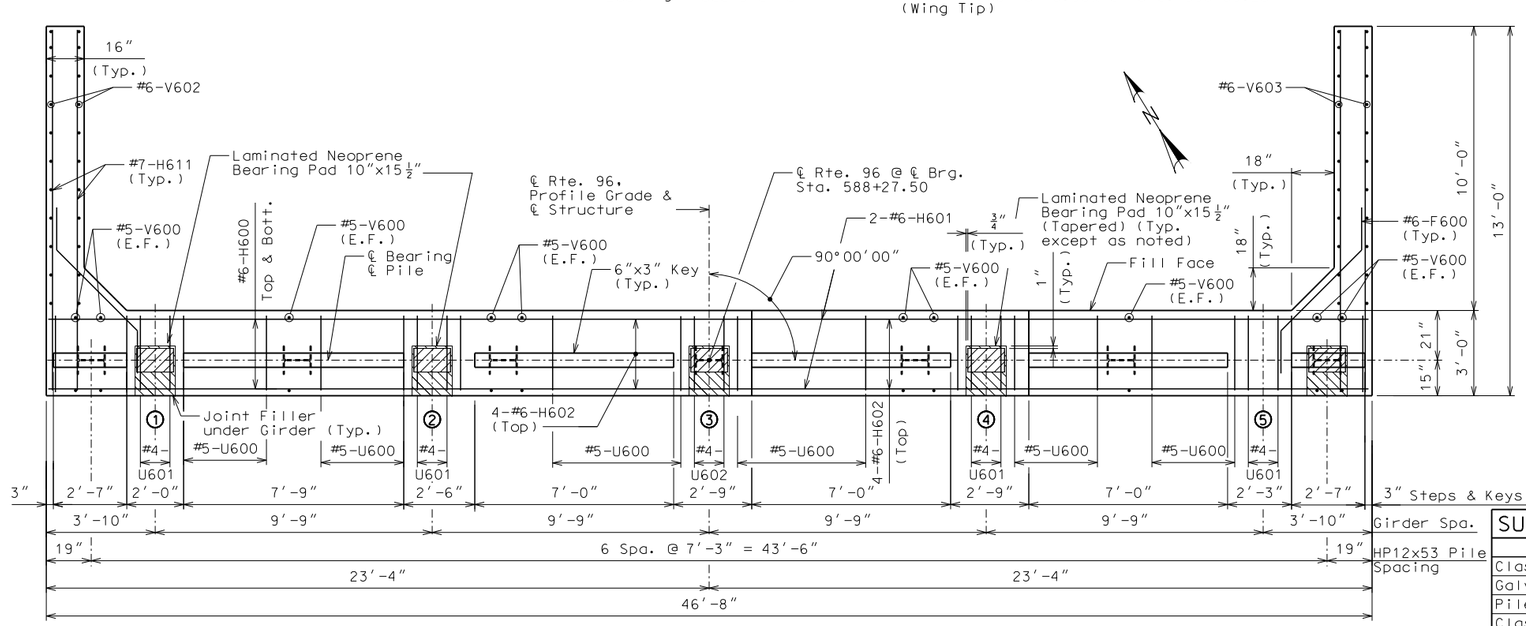

PLAN OF BEAM

Notes:
For Sections B-B, C-C & D-D, see Sheet No. 11

For Girder Details, see Sheet No. 13 & 14.

Bend F600 bars in field to clear girders.

Bend H611 bars in field to clear pile.

Reinforcing steel shall be shifted to clear piles. U-bars shall clear piles by at least 1 1/2"

All concrete in the end bent above top of beam and below top of slab shall be Class B-2.

Strands at end of girder shall be field bent or, if necessary, cut in field to maintain 1 1/2" minimum clearance to fill face of end bent.

① - Denotes girder number.

40 - Denotes pile number.

E.F. Denotes Each Face.

SUBSTRUCTURE QUANTITY TABLE FOR END BENT NO. 6

Item		Quantity
Class 1 Excavation	Cu. Yd.	65
Galvanized Structural Steel Pile (12 in.)	Lin. Ft.	147
Pile Point Reinforcement	Each	7
Class B Concrete (Substructure)	Cu. Yd.	20.2

Notes:
These quantities are included in the Estimated Quantities on Sheet 2.

All reinforcing quantities are included in the Estimated Quantities for Slab on Concrete I-Girder, see Sheet No. 2.

END BENT NO. 6 DETAILS

Detailed September 2016
Checked October 2016

Note: This drawing is not to scale. Follow dimensions.

STATE OF MISSOURI
DAVID GRAHAM BARRETT
NUMBER PE-2006002787
PROFESSIONAL ENGINEER

THIS SHEET HAS BEEN SIGNED, SEALED AND DATED ELECTRONICALLY

DATE PREPARED	
11/1/2016	
ROUTE 96	STATE MO
DISTRICT BR	SHEET NO. 10
COUNTY JASPER	
JOB NO. J7P2228G	
CONTRACT ID.	
PROJECT NO.	
BRIDGE NO. A8424	

DESCRIPTION

DATE

MISSOURI HIGHWAYS AND TRANSPORTATION COMMISSION
105 WEST CAPITOL
JEFFERSON CITY, MO 65102
1-888-ASK-MODOT (1-888-275-6636)

HDR Engineering, Inc.
4435 Main Street
Suite 1000
Kansas City, MO 64111-1856
816-360-2700
Certificate of Authority: 000856

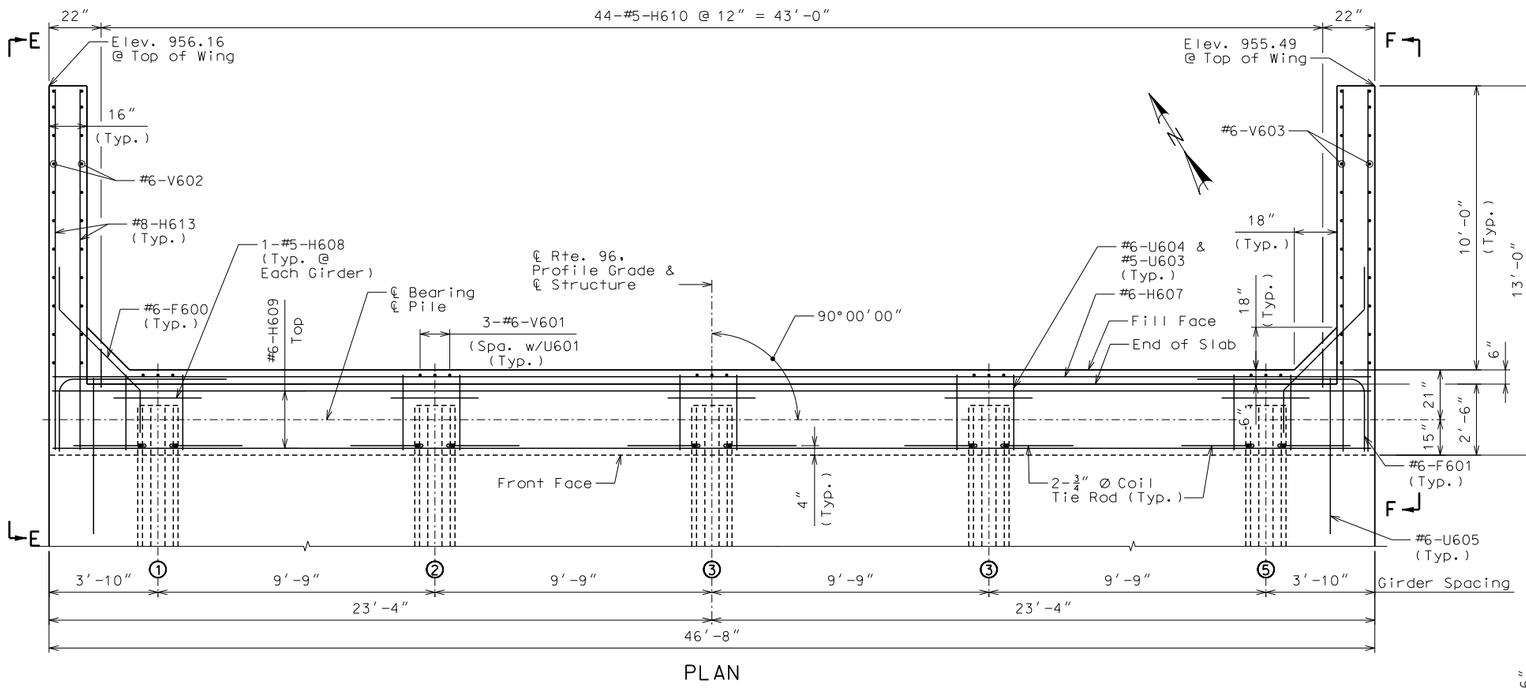

PLAN

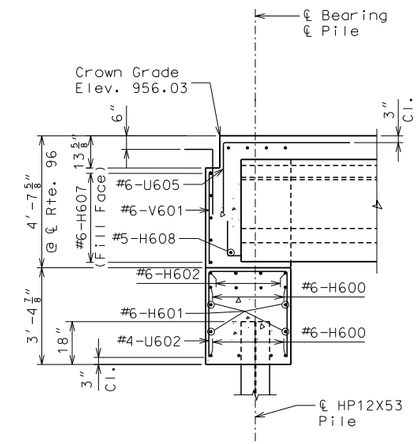

SECTION B-B

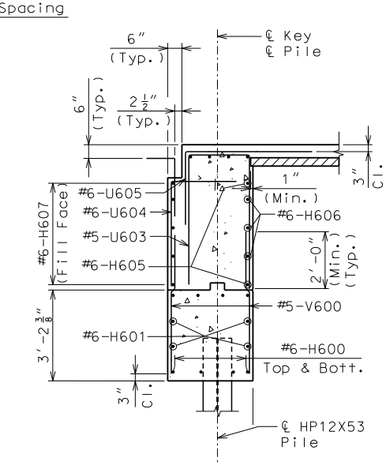

SECTION C-C

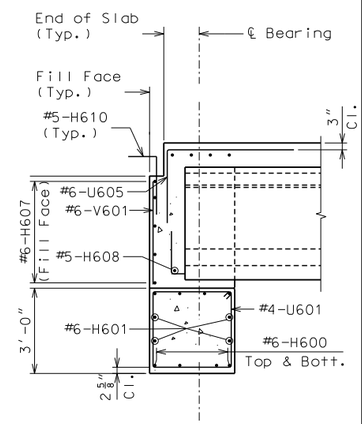

SECTION D-D

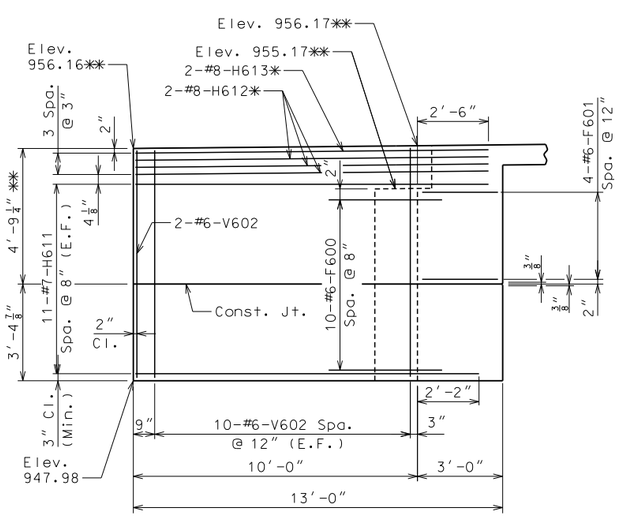

ELEVATION E-E

✱✱ Elevations and Dimensions are Measured at Gutterline.

✱ - Place with grade.

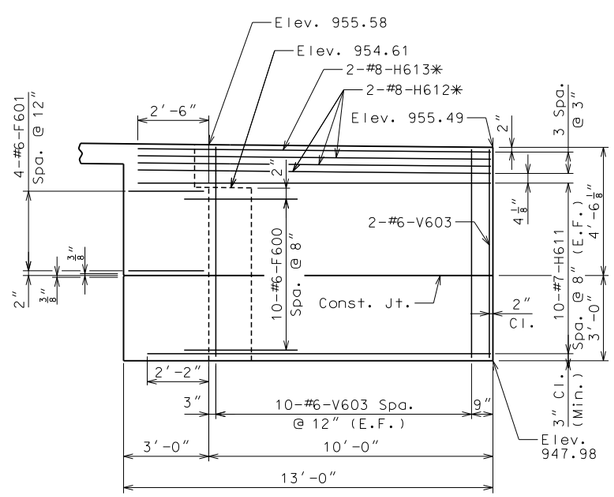

ELEVATION F-F

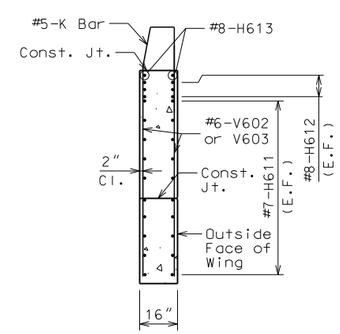

PART SECTION THRU WING

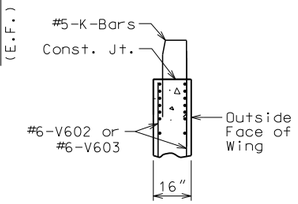

PART SECTION THRU END OF WING

Notes:
For location of Sections B-B, C-C & D-D, see Sheet No. 10.

For Key Details, see Sheet No. 10.

For Girder Details, see Sheet No. 13 & 14.

For reinforcement of the Barrier Curb (Type D), see Sheet No. 22 thru 24.

① - denotes Girder Number.

E.F. denotes Each Face.

END BENT NO. 6 DETAILS

Detailed September 2016
Checked October 2016

Note: This drawing is not to scale. Follow dimensions.

STATE OF MISSOURI
DAVID GRAHAM BARRETT
NUMBER PE-2006002787
PROFESSIONAL ENGINEER

THIS SHEET HAS BEEN SIGNED, SEALED AND DATED ELECTRONICALLY

DATE PREPARED	
11/1/2016	
ROUTE 96	STATE MO
DISTRICT BR	SHEET NO. 11
COUNTY JASPER	
JOB NO. J7P2228G	
CONTRACT ID.	
PROJECT NO.	
BRIDGE NO. A8424	

DATE	DESCRIPTION

MISSOURI HIGHWAYS AND TRANSPORTATION COMMISSION
105 WEST CAPITOL
JEFFERSON CITY, MO 65102
1-888-ASK-MODOT (1-888-275-6636)

HDR Engineering, Inc.
4435 Main Street
Suite 1000
Kansas City, MO 64111-1856
816-360-2700
Certificate of Authority: 000856

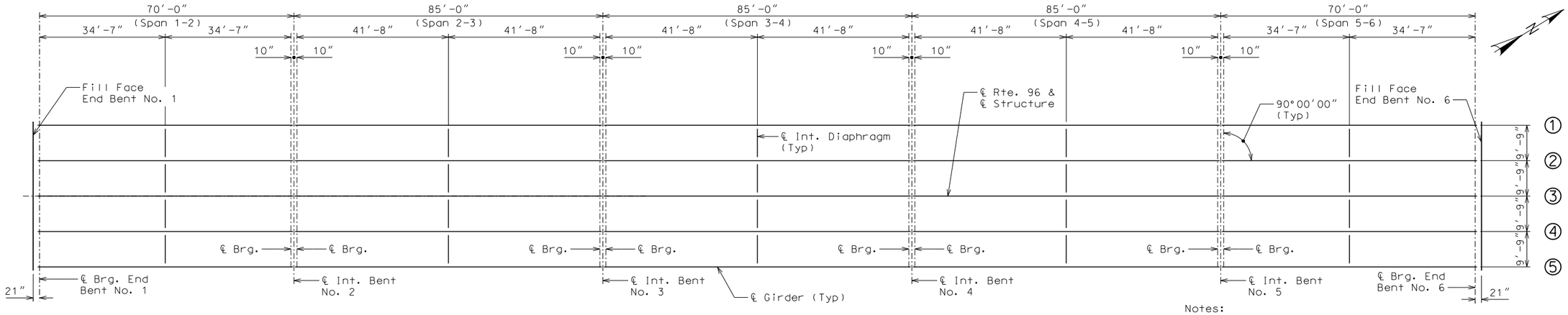

PLAN SHOWING LOCATION OF STEEL INTERMEDIATE DIAPHRAGMS

Notes:
All Girders are Parallel.
① - Indicates Girder Number.

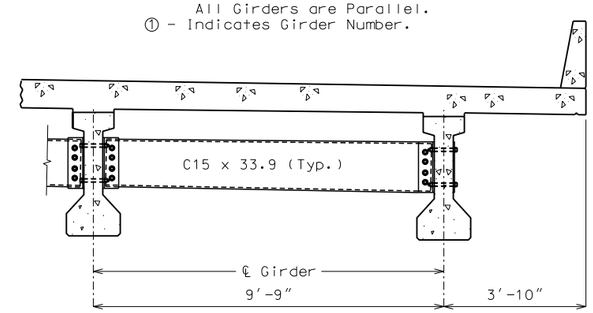

PART SECTION SHOWING INTERMEDIATE DIAPHRAGMS

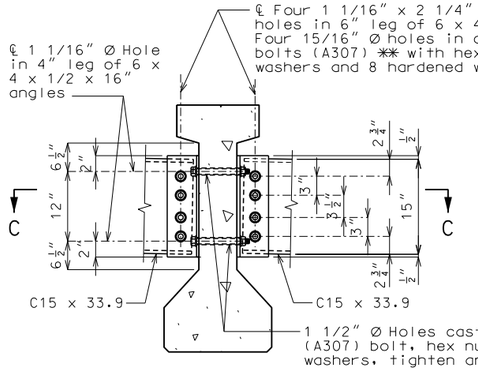

SECTION THRU INT. GIRDER AT DIAPHRAGM

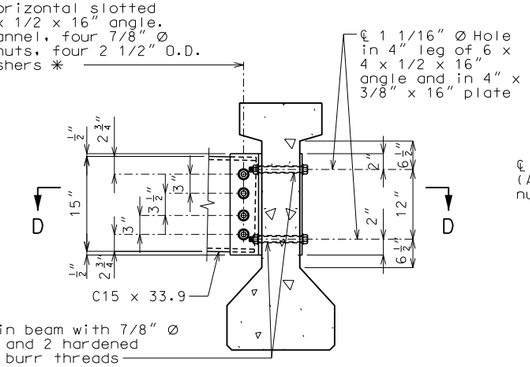

SECTION THRU EXT. GIRDER AT DIAPHRAGM

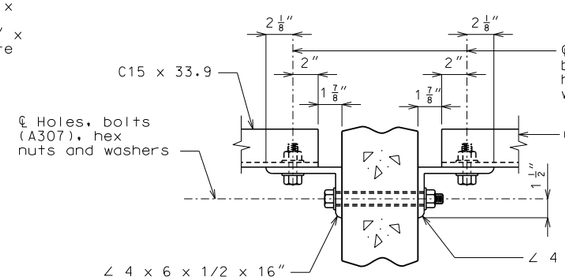

SECTION C-C

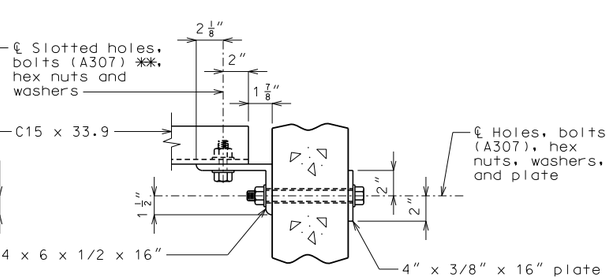

SECTION D-D

STEEL DIAPHRAGM NOTES:

✱ In lieu of 2 1/2" outside diameter washers, contractor may substitute a 3/16" (Min. thickness) plate with four 15/16" Ø holes and one hardened washer per bolt.

✱✱ Bolts shall be tightened to provide a tension of one-half that specified in Sec 712 for high strength bolt installation. A325 bolts may be substituted for and installed in accordance with the requirements for the specified A307 bolts.

All diaphragm materials including bolts, nuts, and washers shall be galvanized.

Fabricated structural steel shall be ASTM A709 Grade 36 except as noted.

Payment for furnishing and installing steel intermediate diaphragms will be considered completely covered by the contract unit price for Steel Intermediate Diaphragm for P/S Concrete Girders.

Shop drawings will not be required for steel intermediate diaphragms and angle connections.

STEEL INTERMEDIATE DIAPHRAGM DETAILS

Detailed September 2016
Checked October 2016

Note: This drawing is not to scale. Follow dimensions.

STATE OF MISSOURI
DAVID GRAHAM BARRETT
NUMBER PE-2006002787
PROFESSIONAL ENGINEER

THIS SHEET HAS BEEN SIGNED, SEALED AND DATED ELECTRONICALLY

DATE PREPARED	11/1/2016
ROUTE	96
STATE	MO
DISTRICT	BR
SHEET NO.	12
COUNTY	JASPER
JOB NO.	J7P2228G
CONTRACT ID.	
PROJECT NO.	
BRIDGE NO.	A8424

DESCRIPTION	DATE

MISSOURI HIGHWAYS AND TRANSPORTATION COMMISSION
105 WEST CAPITOL
JEFFERSON CITY, MO 65102
1-888-ASK-MODOT (1-888-275-6636)

HDR Engineering, Inc.
4435 Main Street
Suite 1000
Kansas City, MO 64111-1856
816-360-2700
Certificate of Authority: 000856

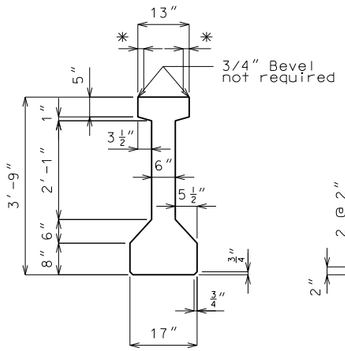

GIRDER DIMENSIONS

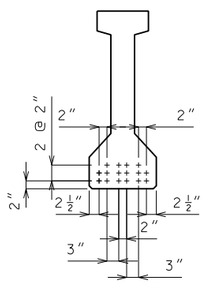

℄ GIRDER

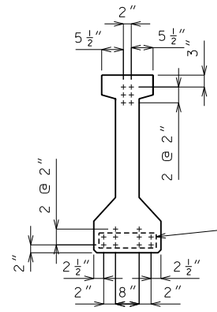

END OF GIRDER

STRAND ARRANGEMENTS

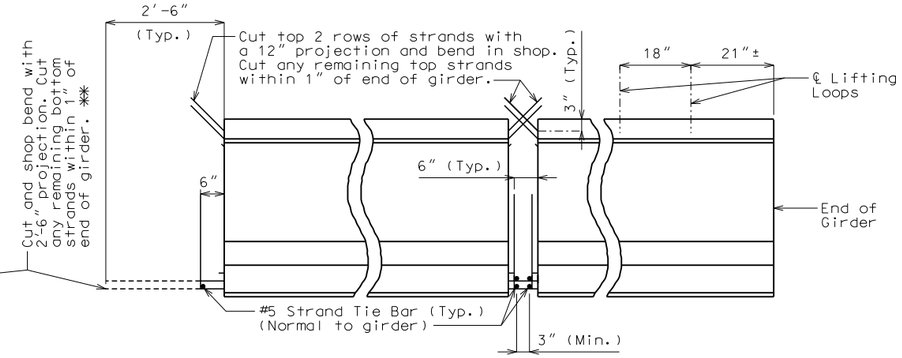

END BENT

STRAND DETAILS AT GIRDER ENDS

INTERMEDIATE BENT

LOCATION OF LIFTING LOOPS

Fabricator shall be responsible for location and design of lifting devices.

BILL OF REINFORCING STEEL - EACH GIRDER				
NO.	SIZE & MARK	ACTUAL LENGTH	SHAPE	BENDING DIAGRAM
4	5 A1	36'-2"	20	
172	5 B1	5'-2"	11	
16	6 B2	4'-6"	11	
94	4 C1	13"	10	
188	4 D1	2'-6"	9	

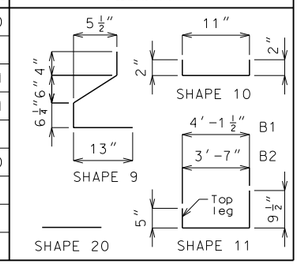

Concrete for prestressed girders shall be Class A-1 with f'c = 8000 psi and f'ci = 6500 psi.

(+) indicates prestressing strand.

Use 16 strands with an initial prestress force of 703 kips.

Prestressing tendons shall be uncoated, seven-wire, low-relaxation strands, 0.60 inch diameter in accordance with AASHTO M 203, Grade 270. Pretensioned members shall be in accordance with Sec 1029.

* At contractor's option a 1 1/2" to 1 3/4" smooth finish strip is permitted to facilitate placement of preformed fiber expansion joint material or expanded or extruded polystyrene bedding material for the prestressed panels.

** At the contractor's option the location for bent-up strands may be varied from that shown for fully bonded strands only. The total number of bent-up strands shall not be changed. One strand tie bar is required for each layer of bent-up strands except at end bents which require one bar on the bottom layer of strands only. No additional payment will be made if additional strand tie bars are required.

All dimensions are out to out.

Hooks and bends shall be in accordance with the CRSI Manual of Standard Practice for Detailing Reinforced Concrete Structures, Stirrup and Tie Dimensions.

Actual lengths are measured along centerline of bar to the nearest inch.

Minimum clearance to reinforcing shall be 1".

All reinforcement shall be Grade 60.

The two D1 bars may be furnished as one bar at the fabricator's option.

All B1 bars shall be epoxy coated.

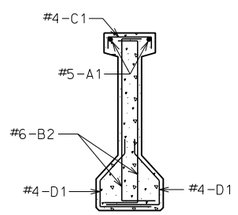

SECTION A-A

Strands not shown for clarity.

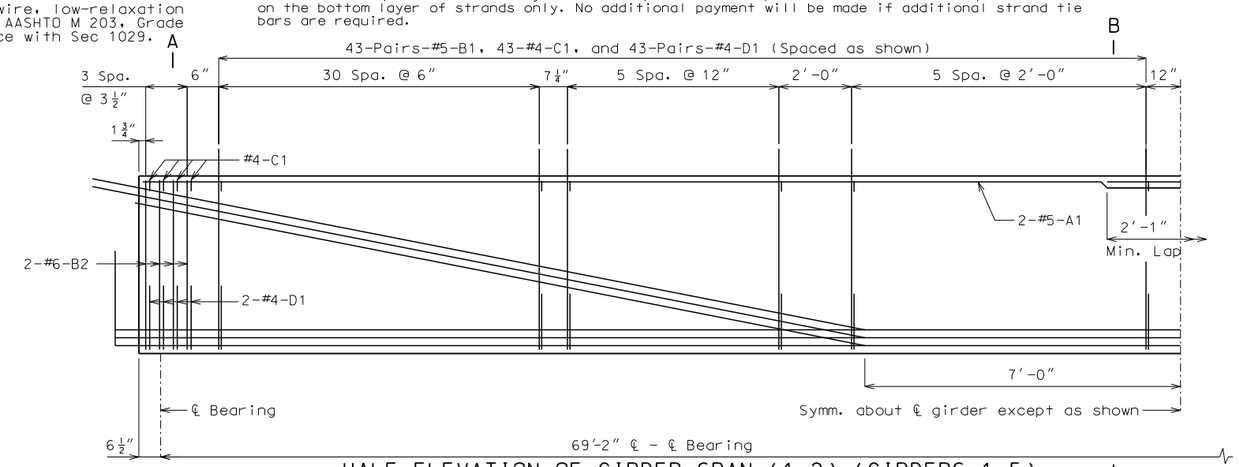

HALF ELEVATION OF GIRDER SPAN (1-2) (GIRDERS 1-5) & SPAN (5-6) (GIRDERS 2-5)

Exterior and interior girders are the same, except for coil ties, and holes for steel intermediate diaphragms.

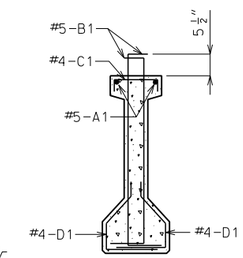

SECTION B-B

Strands not shown for clarity.

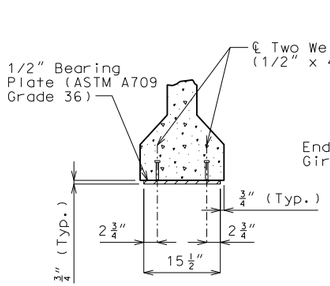

SECTION C-C

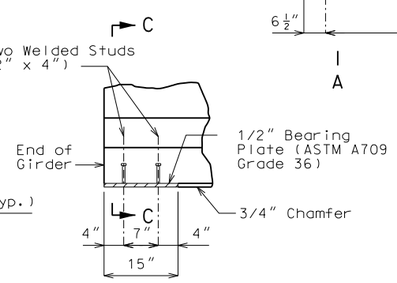

PART ELEVATION AT END OF GIRDER

BEARING PLATE DETAILS

Galvanize the 1/2" bearing plate (ASTM A709 Grade 36) in accordance with ASTM A123.

Cost of furnishing, galvanizing, and installing the 1/2" bearing plate (ASTM A709 Grade 36) and welded studs in the prestressed girder will be considered completely covered by the contract unit price for Prestressed Concrete I-Girder.

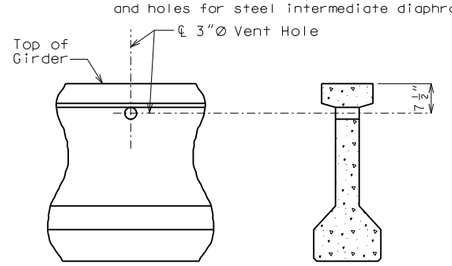

PART ELEVATION OF GIRDER

PART SECTION NEAR VENT HOLE

DETAILS OF VENT HOLE

Place vent holes at or near upgrade 1/3 point of girders and clear reinforcing steel or strands by 1 1/2" minimum and steel intermediate diaphragm bolt connections by 6" minimum.

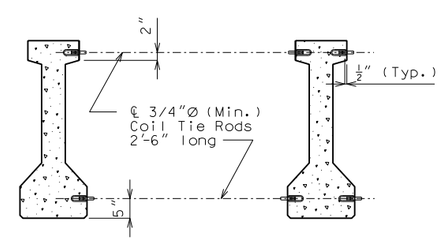

EXTERIOR GIRDERS AT INT. BENTS

EXTERIOR GIRDERS AT END BENTS INTERIOR GIRDERS AT ALL BENTS

DETAILS OF COIL TIES

Cost of 3/4"Ø coil tie rods placed in diaphragms will be considered completely covered by the contract unit price for Prestressed Concrete I-Girder.

Coil ties shall be held in place in the forms by slotted wire-setting-studs projecting through forms. Studs are to be left in place or replaced with temporary plugs until girders are erected, then replaced by coil tie rods.

For location of coil ties, see Sheets No. 4, 11 & 17.

The 1 1/2"Ø holes shall be cast in the web for steel intermediate diaphragms. Drilling is not allowed.

For details of diaphragms, see Sheet No. 12.

For Girder Camber Diagram, see Sheet No. 16.

GIRDER DETAILS FOR SPAN (1-2) (GIRDERS 1-5) & SPAN (5-6) (GIRDERS 2-5)

Detailed September 2016
Checked October 2016

Note: This drawing is not to scale. Follow dimensions.

STATE OF MISSOURI
DAVID GRAHAM BARRETT
NUMBER PE-2006002787
PROFESSIONAL ENGINEER

THIS SHEET HAS BEEN SIGNED, SEALED AND DATED ELECTRONICALLY

DATE PREPARED	
11/1/2016	
ROUTE 96	STATE MO
DISTRICT BR	SHEET NO. 13
COUNTY JASPER	
JOB NO. J7P2228G	
CONTRACT ID.	
PROJECT NO.	
BRIDGE NO. A8424	

DATE	DESCRIPTION

MISSOURI HIGHWAYS AND TRANSPORTATION COMMISSION
105 WEST CAPITOL
JEFFERSON CITY, MO 65102
1-888-ASK-MODOT (1-888-275-6636)

HDR Engineering, Inc.
4435 Main Street
Suite 1000
Kansas City, MO 64111-1856
816-360-2700
Certificate of Authority: 000856

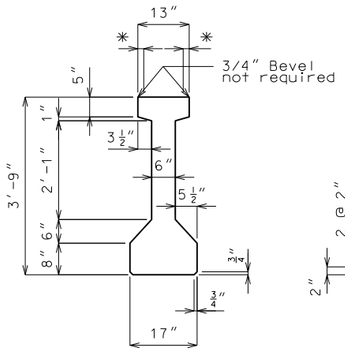

GIRDER DIMENSIONS

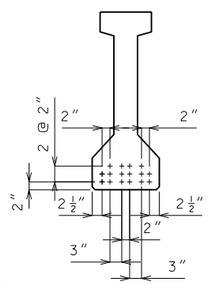

℄ GIRDER

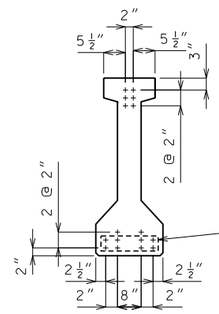

END OF GIRDER

STRAND ARRANGEMENTS

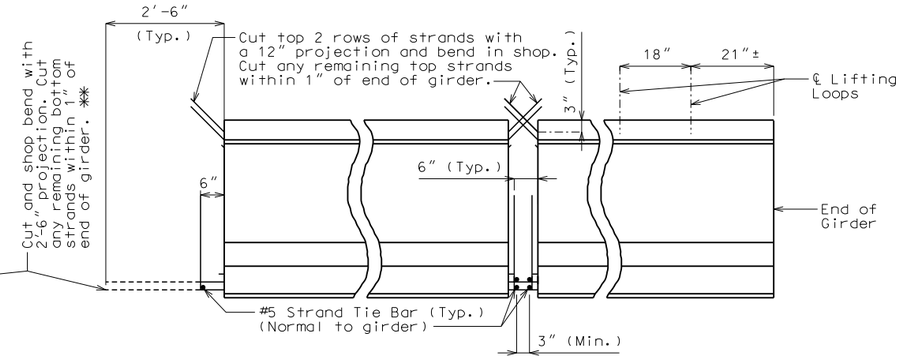

END BENT

STRAND DETAILS AT GIRDER ENDS

INTERMEDIATE BENT

LIFTING LOOPS

Concrete for prestressed girders shall be Class A-1 with f'c = 8000 psi and f'ci = 6500 psi.

(+) indicates prestressing strand.

Use 16 strands with an initial prestress force of 703 kips.

Prestressing tendons shall be uncoated, seven-wire, low-relaxation strands, 0.60 inch diameter in accordance with AASHTO M 203, Grade 270. Pretensioned members shall be in accordance with Sec 1029.

* At contractor's option a 1 1/2" to 1 3/4" smooth finish strip is permitted to facilitate placement of preformed fiber expansion joint material or expanded or extruded polystyrene bedding material for the prestressed panels.

** At the contractor's option the location for bent-up strands may be varied from that shown for fully bonded strands only. The total number of bent-up strands shall not be changed. One strand tie bar is required for each layer of bent-up strands except at end bents which require one bar on the bottom layer of strands only. No additional payment will be made if additional strand tie bars are required.

Fabricator shall be responsible for location and design of lifting devices.

BILL OF REINFORCING STEEL - EACH GIRDER

NO.	SIZE & MARK	ACTUAL LENGTH	SHAPE	BENDING DIAGRAM
4	5 A1	36'-2"	20	
72	5 B1	5'-2"	11	
16	6 B2	4'-7"	11	
100	5 B3	5'-3"	11	
94	4 C1	13"	10	
188	4 D1	2'-6"	9	

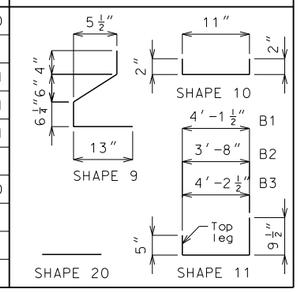

All dimensions are out to out.

Hooks and bends shall be in accordance with the CRSI Manual of Standard Practice for Detailing Reinforced Concrete Structures, Stirrup and Tie Dimensions.

Actual lengths are measured along centerline of bar to the nearest inch.

Minimum clearance to reinforcing shall be 1".

All reinforcement shall be Grade 60.

The two D1 bars may be furnished as one bar at the fabricator's option.

All B1 and B3 bars shall be epoxy coated.

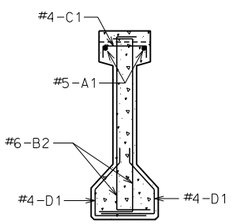

SECTION A-A

Strands not shown for clarity.

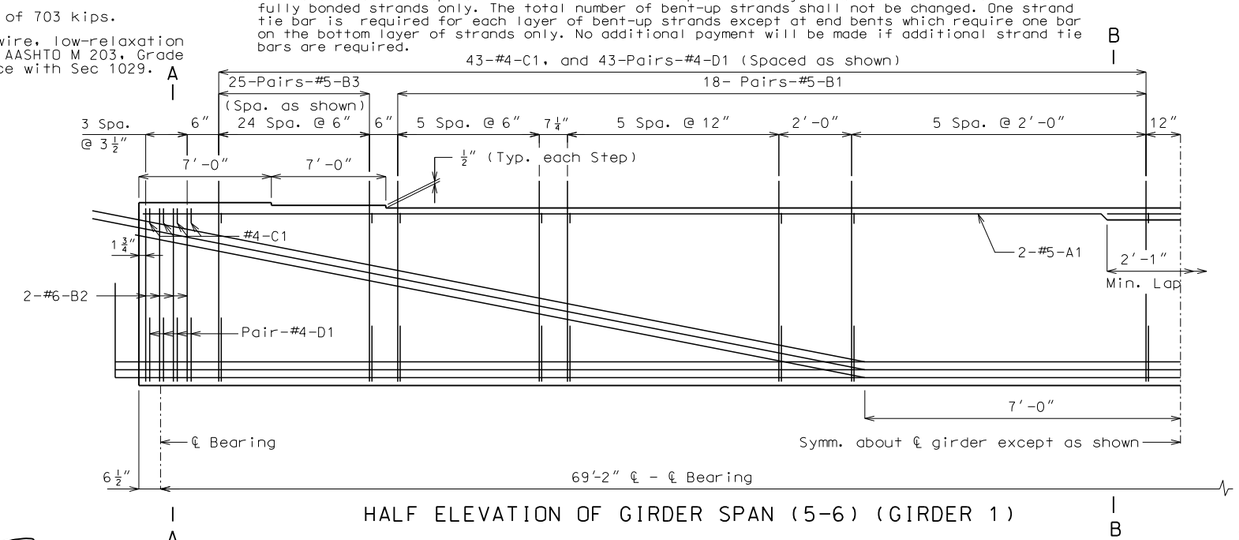

HALF ELEVATION OF GIRDER SPAN (5-6) (GIRDER 1)

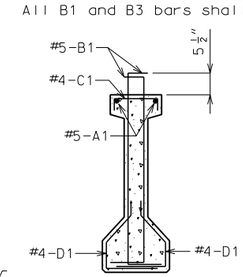

SECTION B-B

Strands not shown for clarity.

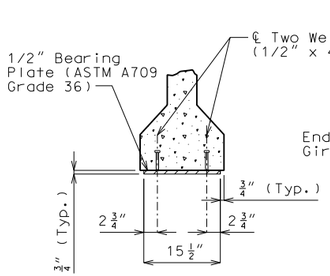

SECTION C-C

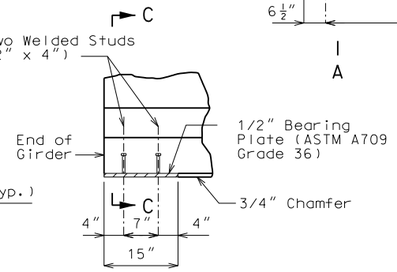

PART ELEVATION AT END OF GIRDER

BEARING PLATE DETAILS

Galvanize the 1/2" bearing plate (ASTM A709 Grade 36) in accordance with ASTM A123.

Cost of furnishing, galvanizing, and installing the 1/2" bearing plate (ASTM A709 Grade 36) and welded studs in the prestressed girder will be considered completely covered by the contract unit price for Prestressed Concrete I-Girder.

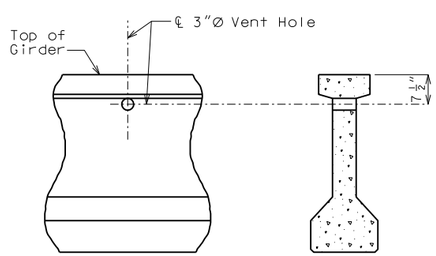

PART ELEVATION OF GIRDER

PART SECTION NEAR VENT HOLE

DETAILS OF VENT HOLE

Place vent holes at or near upgrade 1/3 point of girders and clear reinforcing steel or strands by 1 1/2" minimum and steel intermediate diaphragm bolt connections by 6" minimum.

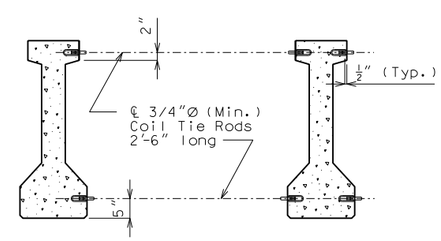

EXTERIOR GIRDERS AT INT. BENTS

EXTERIOR GIRDERS AT END BENTS

DETAILS OF COIL TIES

Cost of 3/4"Ø coil tie rods placed in diaphragms will be considered completely covered by the contract unit price for Prestressed Concrete I-Girder.

Coil ties shall be held in place in the forms by slotted wire-setting-studs projecting through forms. Studs are to be left in place or replaced with temporary plugs until girders are erected, then replaced by coil tie rods.

For location of coil inserts at slab drains, see Sheet No. 21.

For location of coil ties, see Sheets No. 11 & 17.

The 1 1/2"Ø holes shall be cast in the web for steel intermediate diaphragms. Drilling is not allowed.

For details of diaphragms, see Sheet No. 12.

For Girder Camber Diagram, see Sheet No. 16.

GIRDER DETAILS FOR SPAN (5-6) (GIRDER 1)

Detailed September 2016
Checked October 2016

Note: This drawing is not to scale. Follow dimensions.

STATE OF MISSOURI
DAVID GRAHAM BARRETT
NUMBER PE-2006002787
PROFESSIONAL ENGINEER

THIS SHEET HAS BEEN SIGNED, SEALED AND DATED ELECTRONICALLY

DATE PREPARED	
11/1/2016	
ROUTE 96	STATE MO
DISTRICT BR	SHEET NO. 14
COUNTY JASPER	
JOB NO. J7P2228G	
CONTRACT ID.	
PROJECT NO.	
BRIDGE NO. A8424	

DESCRIPTION	DATE

MISSOURI HIGHWAYS AND TRANSPORTATION COMMISSION
105 WEST CAPITOL
JEFFERSON CITY, MO 65102
1-888-ASK-MODOT (1-888-275-6636)

HDR Engineering, Inc.
4435 Main Street
Suite 1000
Kansas City, MO 64111-1856
816-360-2700
Certificate of Authority: 000856

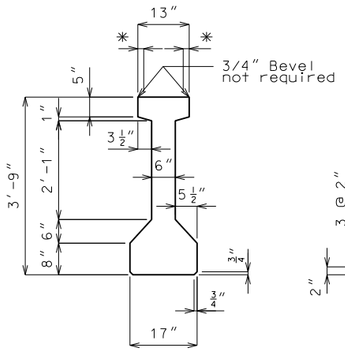

GIRDER DIMENSIONS

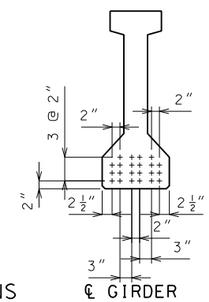

℄ GIRDER

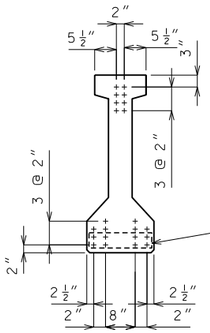

END OF GIRDER

STRAND ARRANGEMENTS

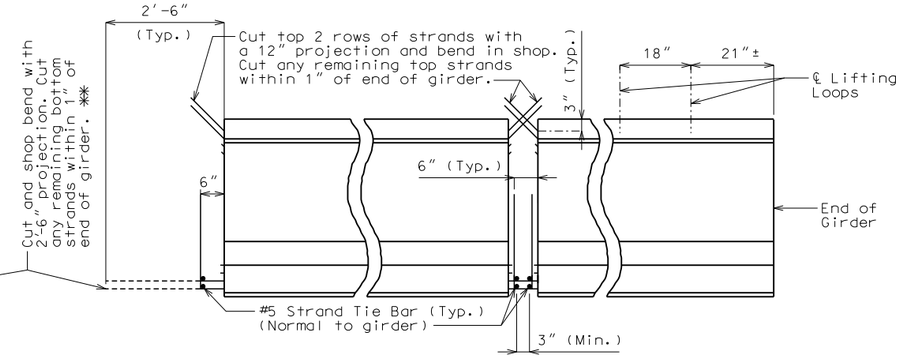

INTERMEDIATE BENT LOCATION OF LIFTING LOOPS

STRAND DETAILS AT GIRDER ENDS

Concrete for prestressed girders shall be Class A-1 with f'c = 8000 psi and f'ci = 6500 psi.

(+) indicates prestressing strand.

Use 22 strands with an initial prestress force of 967 kips.

Prestressing tendons shall be uncoated, seven-wire, low-relaxation strands, 0.60 inch diameter in accordance with AASHTO M 203, Grade 270. Pretensioned members shall be in accordance with Sec 1029.

* At contractor's option a 1 1/2" to 1 3/4" smooth finish strip is permitted to facilitate placement of preformed fiber expansion joint material or expanded or extruded polystyrene bedding material for the prestressed panels.

** At the contractor's option the location for bent-up strands may be varied from that shown for fully bonded strands only. The total number of bent-up strands shall not be changed. One strand tie bar is required for each layer of bent-up strands. No additional payment will be made if additional strand tie bars are required.

Fabricator shall be responsible for location and design of lifting devices.

BILL OF REINFORCING STEEL - EACH GIRDER				
NO.	SIZE & MARK	ACTUAL LENGTH	SHAPE	BENDING DIAGRAM
4	5 A1	43'-2"	20	
184	5 B1	5'-2"	11	
16	6 B2	4'-6"	11	
100	4 C1	13"	10	
200	4 D1	2'-6"	9	

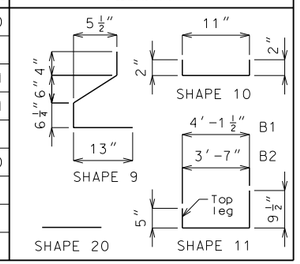

All dimensions are out to out.

Hooks and bends shall be in accordance with the CRSI Manual of Standard Practice for Detailing Reinforced Concrete Structures, Stirrup and Tie Dimensions.

Actual lengths are measured along centerline of bar to the nearest inch.

Minimum clearance to reinforcing shall be 1".

All reinforcement shall be Grade 60.

The two D1 bars may be furnished as one bar at the fabricator's option.

All B1 bars shall be epoxy coated.

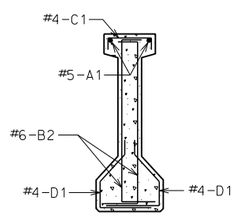

SECTION A-A

Strands not shown for clarity.

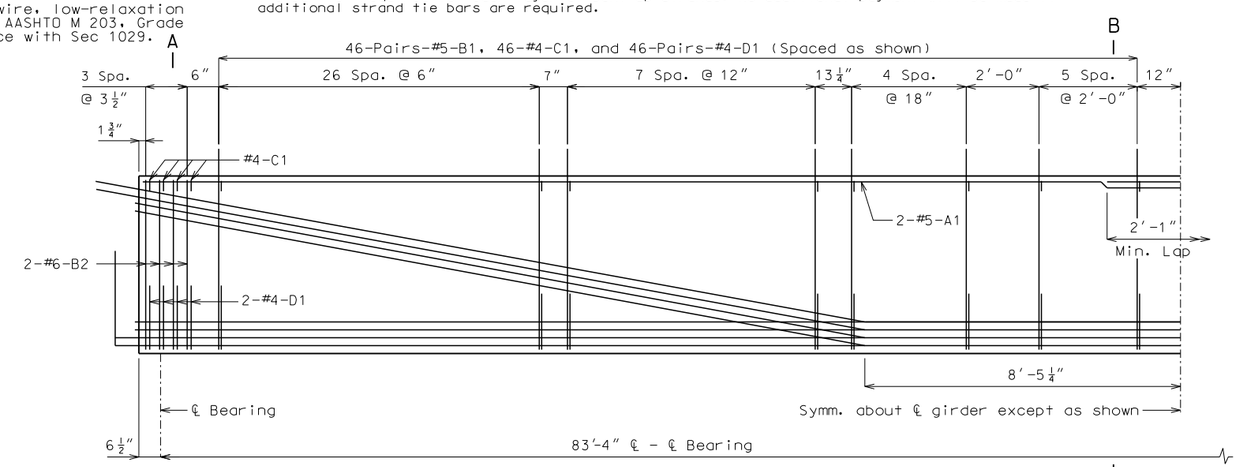

HALF ELEVATION OF GIRDER SPAN (2-3) (3-4) & (4-5)

Exterior and interior girders are the same, except for coil ties, and coil inserts for slab drains and holes for steel intermediate diaphragms.

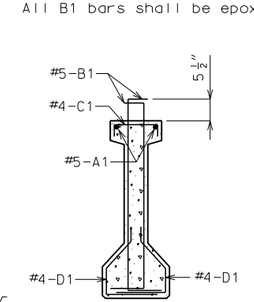

SECTION B-B

Strands not shown for clarity.

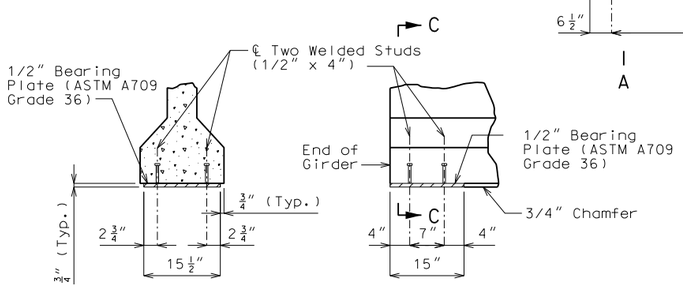

SECTION C-C

PART ELEVATION AT END OF GIRDER

BEARING PLATE DETAILS

Galvanize the 1/2" bearing plate (ASTM A709 Grade 36) in accordance with ASTM A123.

Cost of furnishing, galvanizing, and installing the 1/2" bearing plate (ASTM A709 Grade 36) and welded studs in the prestressed girder will be considered completely covered by the contract unit price for Prestressed Concrete I-Girder.

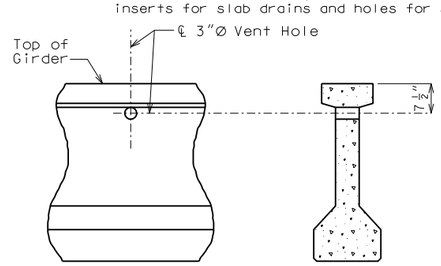

PART ELEVATION OF GIRDER

PART SECTION NEAR VENT HOLE

DETAILS OF VENT HOLE

Place vent holes at or near upgrade 1/3 point of girders and clear reinforcing steel or strands by 1 1/2" minimum and steel intermediate diaphragm bolt connections by 6" minimum.

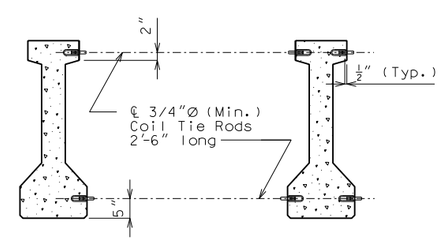

EXTERIOR GIRDERS AT INT. BENTS

INTERIOR GIRDERS AT ALL BENTS

DETAILS OF COIL TIES

Cost of 3/4"Ø coil tie rods placed in diaphragms will be considered completely covered by the contract unit price for Prestressed Concrete I-Girder.

Coil ties shall be held in place in the forms by slotted wire-setting-studs projecting through forms. Studs are to be left in place or replaced with temporary plugs until girders are erected, then replaced by coil tie rods.

For location of coil inserts at slab drains, see Sheet No. 21.

For location of coil ties, see Sheets No. 17.

The 1 1/2"Ø holes shall be cast in the web for steel intermediate diaphragms. Drilling is not allowed.

For details of diaphragms, see Sheet No. 12.

For Girder Camber Diagram, see Sheet No. 16.

GIRDER DETAILS FOR SPANS (2-3) (3-4) & (4-5)

Detailed September 2016
Checked October 2016

Note: This drawing is not to scale. Follow dimensions.

STATE OF MISSOURI
DAVID GRAHAM BARRETT
NUMBER PE-2006002787
PROFESSIONAL ENGINEER

THIS SHEET HAS BEEN SIGNED, SEALED AND DATED ELECTRONICALLY

DATE PREPARED	
11/1/2016	
ROUTE 96	STATE MO
DISTRICT BR	SHEET NO. 15
COUNTY JASPER	
JOB NO. J7P2228G	
CONTRACT ID.	
PROJECT NO.	
BRIDGE NO. A8424	

DATE	DESCRIPTION

MISSOURI HIGHWAYS AND TRANSPORTATION COMMISSION
105 WEST CAPITOL
JEFFERSON CITY, MO 65102
1-888-ASK-MODOT (1-888-275-6636)

HDR Engineering, Inc.
4435 Main Street
Suite 1000
Kansas City, MO 64111-1856
816-360-2700
Certificate of Authority: 000856

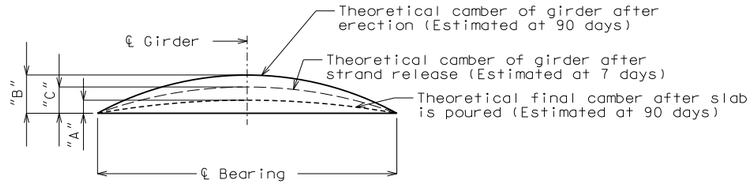

	Span (1-2)			Span (2-3)			Span (3-4)		
	"A"	"B"	"C"	"A"	"B"	"C"	"A"	"B"	"C"
Ext. girder	1 1/16"	2 1/16"	1 3/8"	1 1/2"	3 1/2"	2 1/8"	1 1/2"	3 1/2"	2 1/8"
Int. girder	15/16"			1 1/4"			1 1/4"		

	Span (4-5)			Span (5-6)		
	"A"	"B"	"C"	"A"	"B"	"C"
Ext. girder	1 1/2"	3 1/2"	2 1/8"	1 1/16"	2 1/16"	1 3/8"
Int. girder	1 1/4"			15/16"		

GIRDER CAMBER DIAGRAM

Conversion Factors for Girder Camber:
0.1 pt. = 0.314 x 0.5 pt.
0.2 pt. = 0.593 x 0.5 pt.
0.3 pt. = 0.813 x 0.5 pt.
0.4 pt. = 0.952 x 0.5 pt.

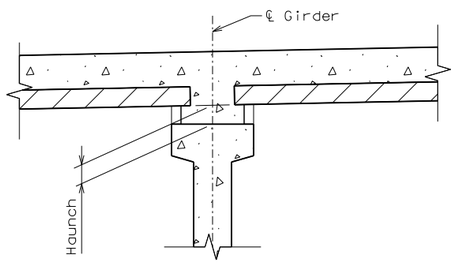

SLAB HAUNCHING DETAIL

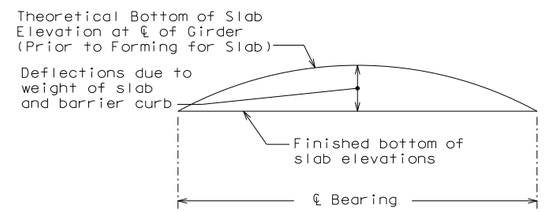

TYPICAL SLAB ELEVATIONS DIAGRAM

THEORETICAL BOTTOM OF SLAB ELEVATIONS AT ℄ OF GIRDER (PRIOR TO FORMING FOR SLAB) ✱✱

	Span (1-2) (69'-2" ℄ brg - ℄ brg.)										
	℄ brg.	.10	.20	.30	.40	.50	.60	.70	.80	.90	℄ brg.
Girder No. 1	954.99	955.08	955.17	955.26	955.34	955.41	955.48	955.54	955.59	955.63	955.66
Girder No. 2	955.18	955.28	955.37	955.46	955.54	955.62	955.68	955.74	955.79	955.82	955.86
Girder No. 3	955.38	955.47	955.57	955.66	955.74	955.81	955.88	955.93	955.98	956.02	956.05
Girder No. 4	955.18	955.28	955.37	955.46	955.54	955.62	955.68	955.74	955.79	955.82	955.86
Girder No. 5	954.99	955.08	955.17	955.26	955.34	955.41	955.48	955.54	955.59	955.63	955.66
	Span (2-3) (83'-4" ℄ brg - ℄ brg.)										
	℄ brg.	.10	.20	.30	.40	.50	.60	.70	.80	.90	℄ brg.
Girder No. 1	955.68	955.79	955.91	956.00	956.08	956.13	956.17	956.19	956.19	956.17	956.14
Girder No. 2	955.87	956.00	956.11	956.21	956.29	956.35	956.38	956.40	956.39	956.37	956.34
Girder No. 3	956.07	956.19	956.31	956.41	956.48	956.54	956.58	956.59	956.59	956.56	956.53
Girder No. 4	955.87	956.00	956.11	956.21	956.29	956.35	956.38	956.40	956.39	956.37	956.34
Girder No. 5	955.68	955.79	955.91	956.00	956.08	956.13	956.17	956.19	956.19	956.17	956.14
	Span (3-4) (83'-4" ℄ brg - ℄ brg.)										
	℄ brg.	.10	.20	.30	.40	.50	.60	.70	.80	.90	℄ brg.
Girder No. 1	956.15	956.22	956.28	956.33	956.36	956.37	956.36	956.33	956.28	956.21	956.14
Girder No. 2	956.34	956.42	956.49	956.54	956.57	956.58	956.57	956.54	956.49	956.42	956.34
Girder No. 3	956.54	956.61	956.68	956.74	956.77	956.78	956.77	956.73	956.68	956.61	956.53
Girder No. 4	956.34	956.42	956.49	956.54	956.57	956.58	956.57	956.54	956.49	956.42	956.34
Girder No. 5	956.15	956.22	956.28	956.33	956.36	956.37	956.36	956.33	956.28	956.21	956.14
	Span (4-5) (83'-4" ℄ brg - ℄ brg.)										
	℄ brg.	.10	.20	.30	.40	.50	.60	.70	.80	.90	℄ brg.
Girder No. 1	956.14	956.16	956.18	956.18	956.16	956.12	956.06	955.99	955.89	955.78	955.66
Girder No. 2	956.33	956.36	956.38	956.39	956.37	956.34	956.28	956.20	956.10	955.98	955.85
Girder No. 3	956.53	956.56	956.58	956.58	956.57	956.53	956.47	956.39	956.29	956.17	956.05
Girder No. 4	956.33	956.36	956.38	956.39	956.37	956.34	956.28	956.20	956.10	955.98	955.85
Girder No. 5	956.14	956.16	956.18	956.18	956.16	956.12	956.06	955.99	955.89	955.78	955.66
	Span (5-6) (69'-2" ℄ brg - ℄ brg.)										
	℄ brg.	.10	.20	.30	.40	.50	.60	.70	.80	.90	℄ brg.
Girder No. 1	955.64	955.61	955.59	955.60	955.60	955.59	955.57	955.55	955.52	955.48	955.45
Girder No. 2	955.84	955.80	955.78	955.76	955.73	955.70	955.65	955.60	955.54	955.47	955.40
Girder No. 3	956.03	956.00	955.96	955.91	955.86	955.79	955.72	955.64	955.55	955.45	955.36
Girder No. 4	955.84	955.80	955.77	955.72	955.66	955.60	955.52	955.44	955.35	955.26	955.16
Girder No. 5	955.64	955.61	955.57	955.52	955.46	955.39	955.32	955.24	955.15	955.06	954.97

✱✱ Elevations are based on a constant slab thickness of 8 1/2" and include allowance for theoretical dead load deflections due to weight of slab (including precast panel) and barrier curb.

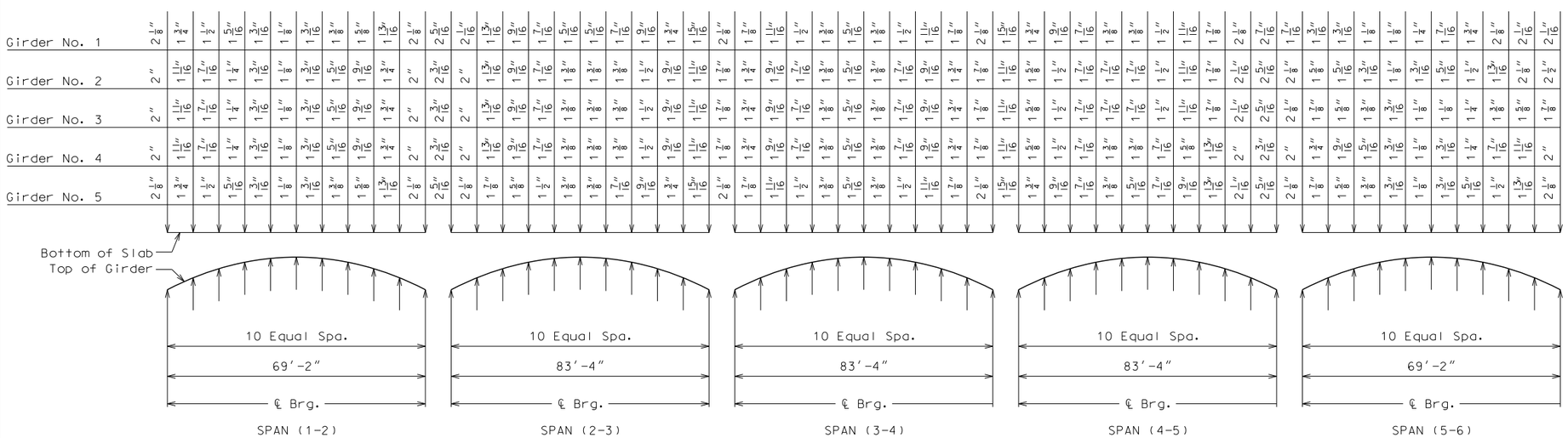

THEORETICAL SLAB HAUNCHING DIAGRAM

Notes:
If girder camber is different from that shown in the camber diagram, in order to maintain minimum slab thickness, adjustment of the slab haunches, an increase in the slab thickness or a raise in grade uniformly throughout the structure shall be necessary. No paymnet will be made for additional labor or materials required for variation in haunching, slab thickness or grade adjustment.

Concrete in slab haunches is included in the Estimated Quantities for Slab on Concrete I-Girders.

DEAD LOAD DEFLECTION, SLAB ELEVATIONS & HAUNCHING

Detailed September 2016
Checked October 2016

Note: This drawing is not to scale. Follow dimensions.

STATE OF MISSOURI
DAVID GRAHAM BARRETT
NUMBER PE-2006002787
PROFESSIONAL ENGINEER

THIS SHEET HAS BEEN SIGNED, SEALED AND DATED ELECTRONICALLY

DATE PREPARED 11/1/2016
ROUTE 96 | STATE MO
DISTRICT BR | SHEET NO. 16
COUNTY JASPER
JOB NO. J7P2228G
CONTRACT ID.
PROJECT NO.
BRIDGE NO. A8424

DESCRIPTION	DATE

MISSOURI HIGHWAYS AND TRANSPORTATION COMMISSION
105 WEST CAPITOL
JEFFERSON CITY, MO 65102
1-888-ASK-MODOT (1-888-275-6636)

HDR Engineering, Inc.
4435 Main Street
Suite 1000
Kansas City, MO 64111-1856
816-360-2700
Certificate of Authority: 000856

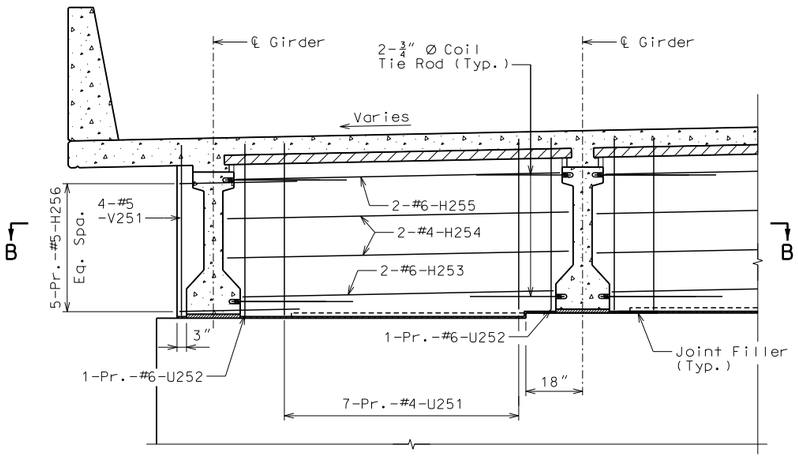

PART SECTION NEAR INT. BENT NO. 2
(Int. Bent No. 3, 4, & 5 Similar)

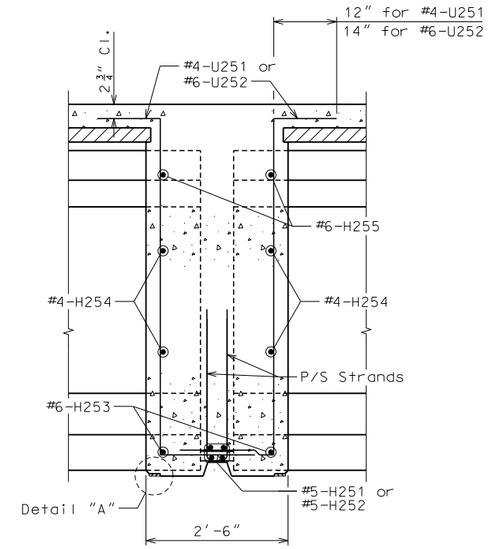

SECTION A-A

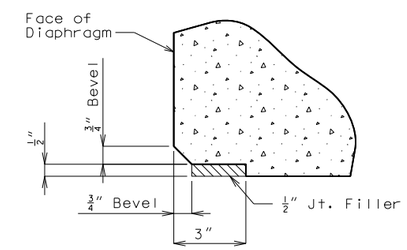

DETAIL A

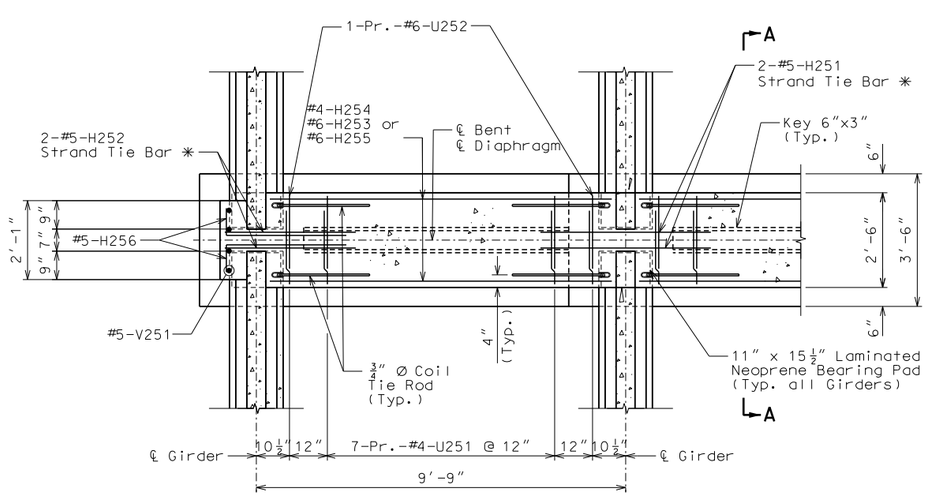

SECTION B-B
✳ - 1 Strand Tie Bar to be placed at each layer of bent up strands in P/S Girder. Not Shown in Elevation for Clarity.

Notes:
Diaphragms at Intermediate Bents shall be built vertical.

The concrete diaphragm at the Intermediate Bents shall be poured a minimum of 30 minutes and a maximum of 2 hours before the slab poured.

For steps and shear keys of 2" or more, use 1/2" Joint Filler up Vertical Face.

Use 200 Series bars at Intermediate Bent No. 2. as shown

Use 300 Series bars at Intermediate Bent No. 3.

Use 400 Series bars at Intermediate Bent No. 4.

Use 500 Series bars at Intermediate Bent No. 5.

For location of strand tie bars, see Sheet No. 13, 14 & 15.

For location and Details of Coil Tie Rods, see Sheet No. 13, 14 & 15.

For roadway cross slope, see Sheet No. 19.

All U-Bars in Diaphragms are to be placed parallel to ℄ Roadway.

DIAPHRAGM DETAILS AT INTERMEDIATE BENTS NO. 2, 3, 4, & 5

Detailed September 2016
Checked October 2016

Note: This drawing is not to scale. Follow dimensions.

STATE OF MISSOURI
DAVID GRAHAM BARRETT
NUMBER PE-2006002787
PROFESSIONAL ENGINEER

THIS SHEET HAS BEEN SIGNED, SEALED AND DATED ELECTRONICALLY

DATE PREPARED	
11/1/2016	
ROUTE 96	STATE MO
DISTRICT BR	SHEET NO. 17
COUNTY JASPER	
JOB NO. J7P2228G	
CONTRACT ID.	
PROJECT NO.	
BRIDGE NO. A8424	

DATE	DESCRIPTION

MISSOURI HIGHWAYS AND TRANSPORTATION COMMISSION
105 WEST CAPITOL
JEFFERSON CITY, MO 65102
1-888-ASK-MODOT (1-888-275-6636)

HDR Engineering, Inc.
4435 Main Street
Suite 1000
Kansas City, MO 64111-1856
816-360-2700
Certificate of Authority: 000856

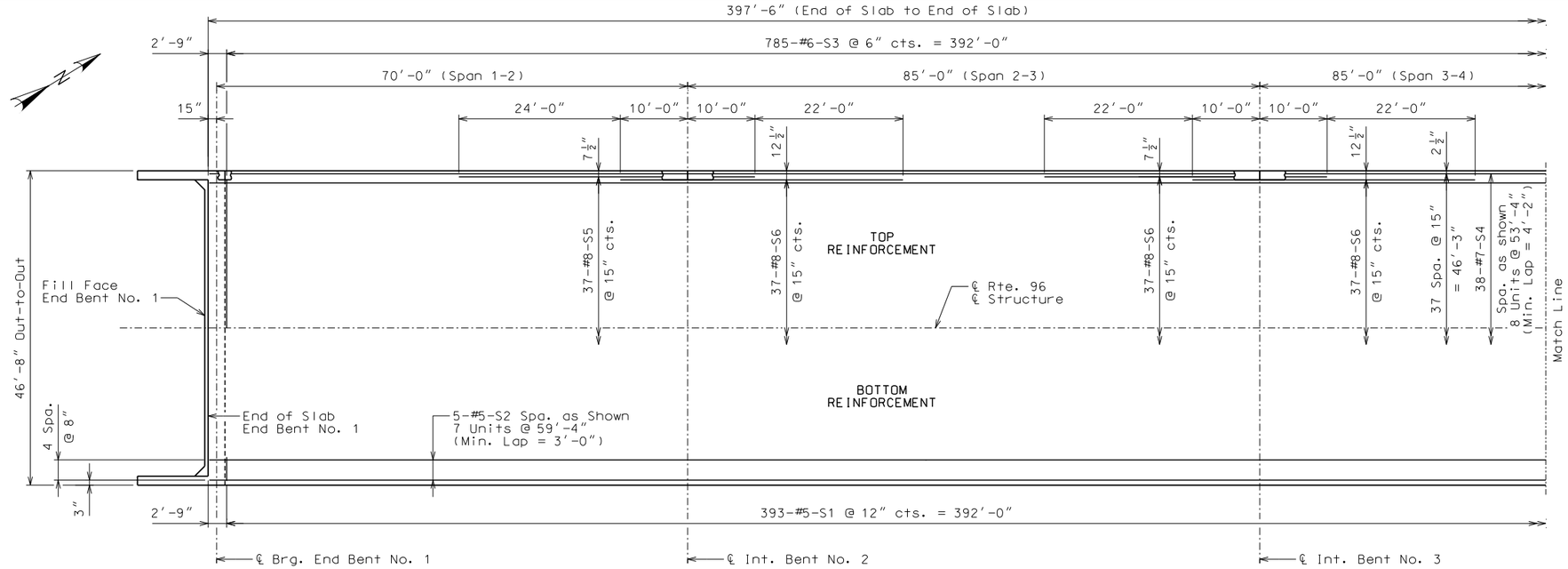

SLAB PLAN

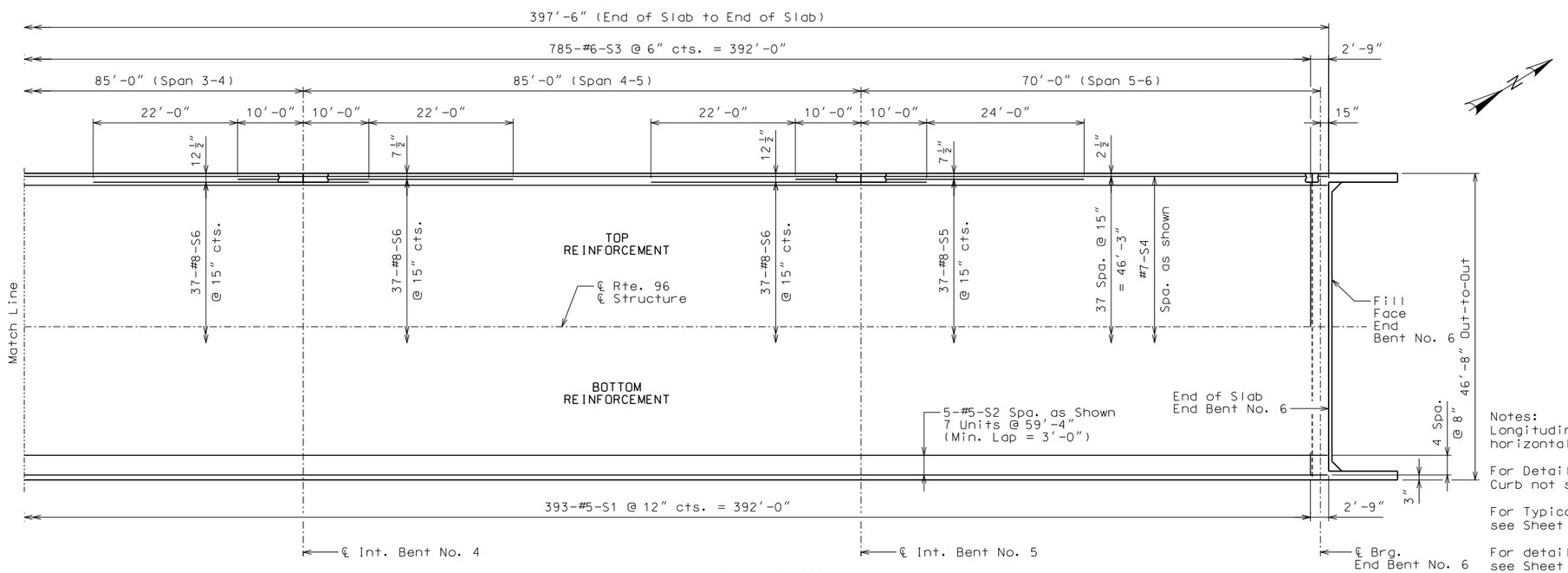

SLAB PLAN

PLAN OF SLAB REINFORCING

Notes:
Longitudinal slab dimensions shown are measured horizontal.

For Details and Reinforcement of Safety Barrier Curb not shown, see Sheet No. 22, 23 & 24.

For Typical Slab Section and Details, see Sheet No. 19.

For details of Precast Prestressed Panels, see Sheet No. 20.

For details and locations of Slab Drains, see Sheet No. 21.

End Bent reinforcement not shown for clarity.

Detailed September 2016
Checked October 2016

Note: This drawing is not to scale. Follow dimensions.

STATE OF MISSOURI
DAVID GRAHAM BARRETT
NUMBER PE-2006002787
PROFESSIONAL ENGINEER

THIS SHEET HAS BEEN SIGNED, SEALED AND DATED ELECTRONICALLY

DATE PREPARED	
11/1/2016	
ROUTE 96	STATE MO
DISTRICT BR	SHEET NO. 18
COUNTY JASPER	
JOB NO. J7P2228G	
CONTRACT ID.	
PROJECT NO.	
BRIDGE NO. A8424	

DATE	DESCRIPTION
. . . . .	. . . . .

MISSOURI HIGHWAYS AND TRANSPORTATION COMMISSION
105 WEST CAPITOL
JEFFERSON CITY, MO 65102
1-888-ASK-MODOT (1-888-275-6636)

HDR Engineering, Inc.
4435 Main Street
Suite 1000
Kansas City, MO 64111-1856
816-360-2700
Certificate of Authority: 000856

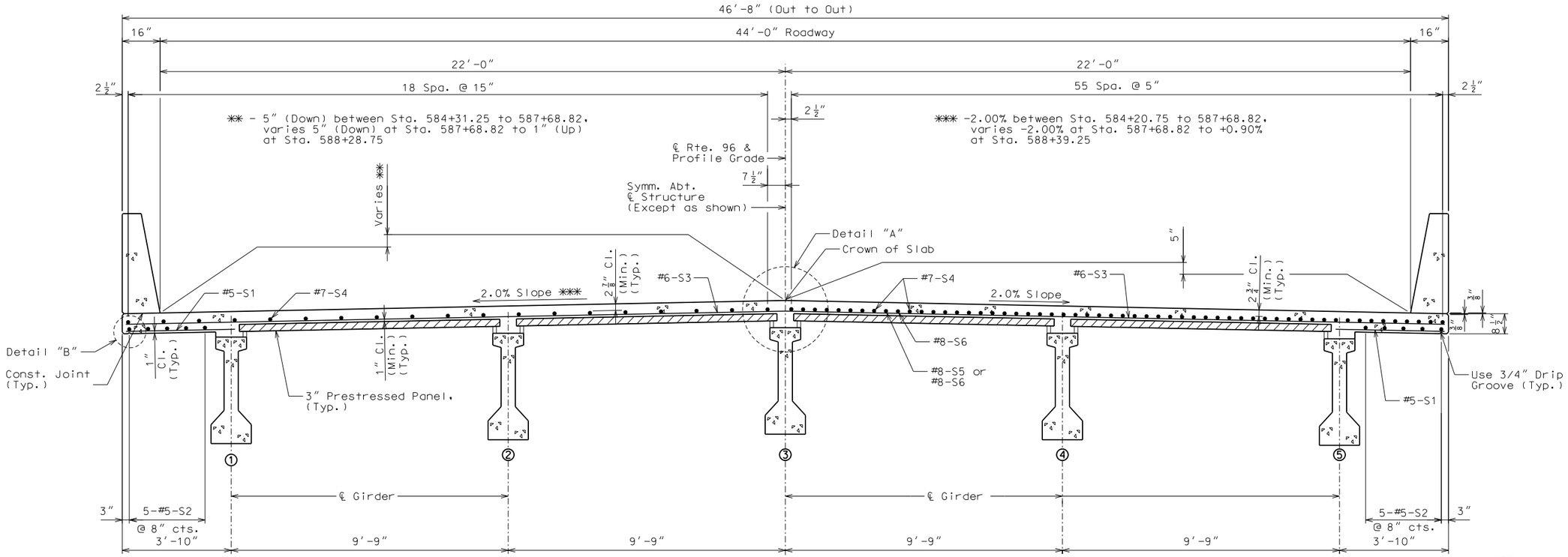

HALF SECTION NEAR ℄ SPAN

HALF SECTION NEAR INTERMEDIATE BENT

SECTION THRU SLAB

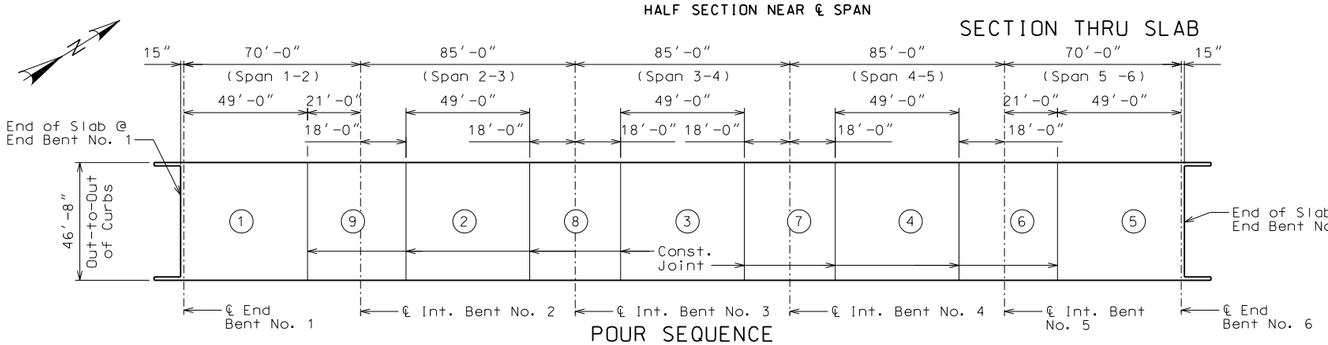

POUR SEQUENCE

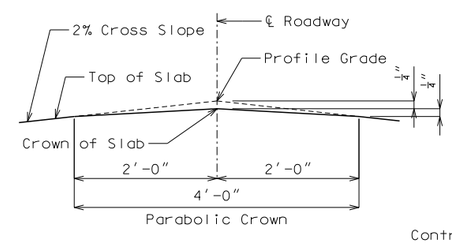

DETAIL A

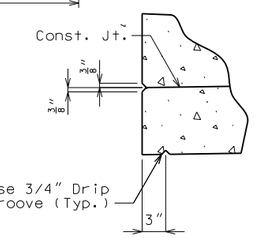

DETAIL B

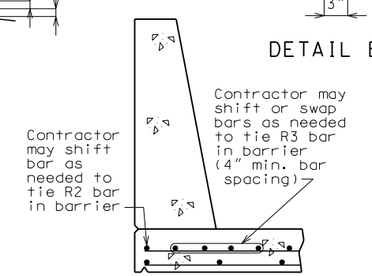

OPTIONAL SHIFTING TOP BARS AT BARRIER

(Left barrier shown, right barrier similar)

	Sequence of Pours									Min. Rate of Pour Cu. Yds./Hr.
	Direction									With Retarder
Basic Sequence	1	2	3	4	5	6	7	8	9	25
	Either Direction									
Alternate pours to the basic skip sequence are subject to the approval of the engineer in accordance with Sec 703.										
Alternate A Pours	1	9 + 2	8 + 3	7 + 4	6 + 5					25
	End to 9	1 to 8	2 to 7	3 to 6	4 to End					
Alternate B Pours	1 + 9 + 2	8 + 3	7 + 4 + 6 + 5							25
	End to 8	2 to 7	3 to End							
Alternate C Pours	1 + 9 + 2 + 8 + 3	7 + 4 + 6 + 5								25
	End to 7	3 to End								
Alternate D Pours	1 + 9 + 2 + 8 + 3 + 7 + 4 + 6 + 5									25
	End to End									

The contractor shall furnish an approved retarder to retard the set of concrete to 2.5 hours and shall pour and satisfactorily finish the slab pours at the rate given.

The concrete diaphragm at the intermediate bents and integral end bents shall be poured a minimum of 30 minutes and a maximum of 2 hours before the slab is poured.

SLAB POURING SEQUENCE

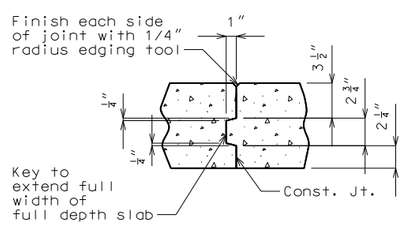

FULL DEPTH SLAB

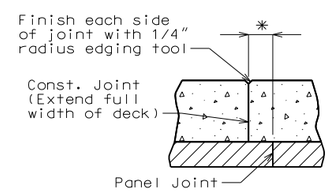

* Adjust the construction joint to a clearance of 6 inches minimum from the panel joint.

SLAB ON PANELS

SLAB CONSTRUCTION JOINT

General Notes:

For details and reinforcement of Safety Barrier Curb, see Sheet No. 22 thru 24.

For Plan of Slab showing Reinforcement, see Sheet No. 18 .

For Theoretical Slab Haunching Diagram and Theoretical Bottom of Slab Elevations, see Sheet No. 16.

For Details of Precast Panels, see Sheet No. 20.

TYPICAL SLAB SECTION AND DETAILS

Detailed September 2016
Checked October 2016

Note: This drawing is not to scale. Follow dimensions.

STATE OF MISSOURI
DAVID GRAHAM BARRETT
NUMBER PE-2006002787
PROFESSIONAL ENGINEER

THIS SHEET HAS BEEN SIGNED, SEALED AND DATED ELECTRONICALLY

DATE PREPARED	
11/1/2016	
ROUTE 96	STATE MO
DISTRICT BR	SHEET NO. 19
COUNTY JASPER	
JOB NO. J7P2228G	
CONTRACT ID.	
PROJECT NO.	
BRIDGE NO. A8424	

DATE	DESCRIPTION

MISSOURI HIGHWAYS AND TRANSPORTATION COMMISSION
105 WEST CAPITOL
JEFFERSON CITY, MO 65102
1-888-ASK-MODOT (1-888-275-6636)

HDR Engineering, Inc.
4435 Main Street
Suite 1000
Kansas City, MO 64111-1856
816-360-2700
Certificate of Authority: 000856

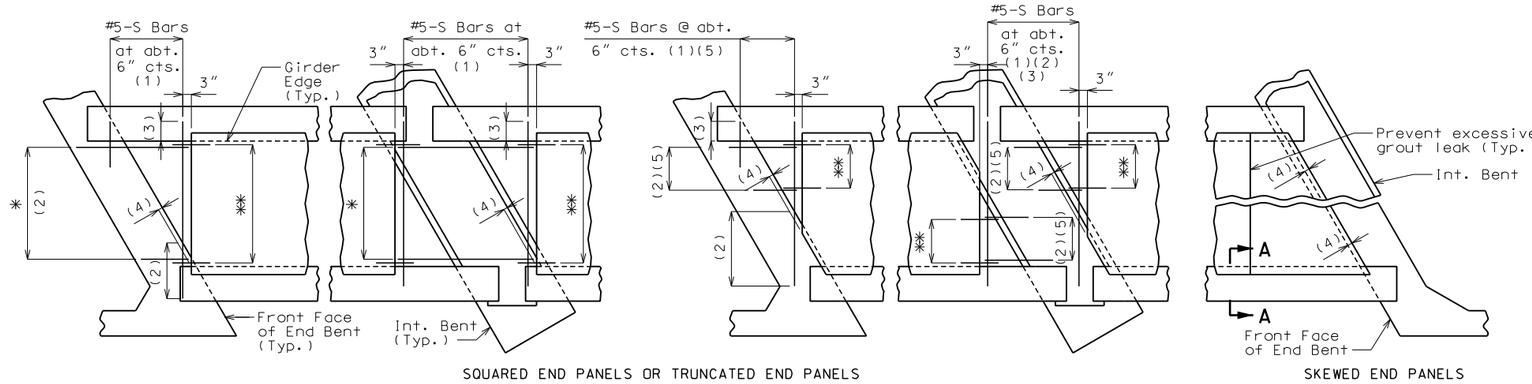

SQUARED END PANELS OR TRUNCATED END PANELS

SKEWED END PANELS

PLAN SHOWING PANELS PLACEMENT

✱ #5-S Bars at abt. 9" cts. (1)
✱✱ #3-P1 at 12" cts. (End panels only)

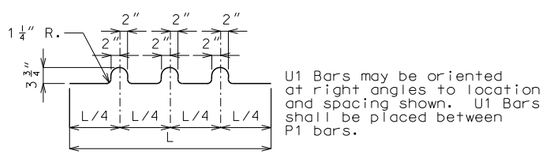

U1 Bars may be oriented at right angles to location and spacing shown. U1 Bars shall be placed between P1 bars.

BENDING DIAGRAM FOR U1 BAR

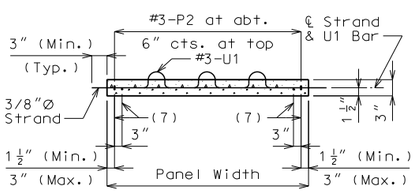

SECTION B-B

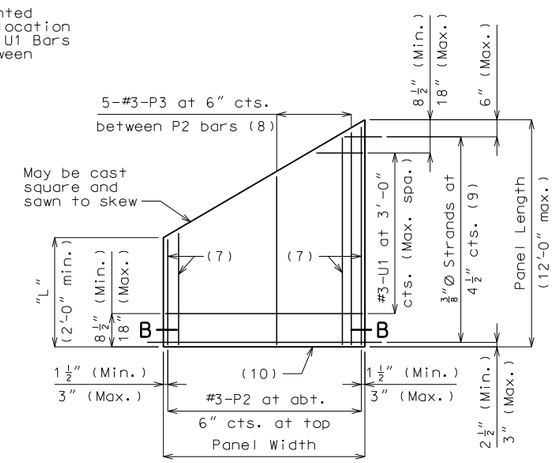

PLAN OF OPTIONAL SKEWED END PANEL

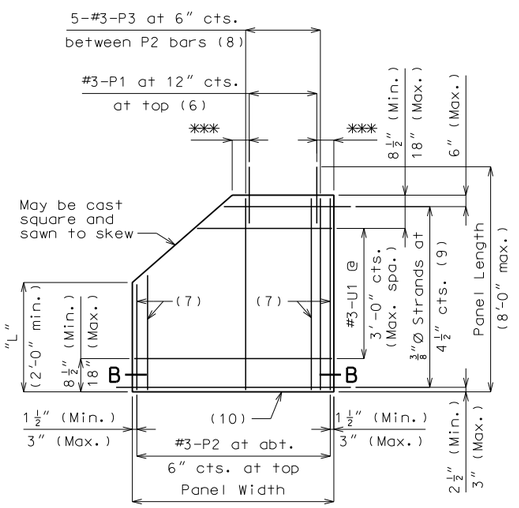

PLAN OF OPTIONAL TRUNCATED END PANEL

✱✱✱ 3" (Min.), 6" (Max.)

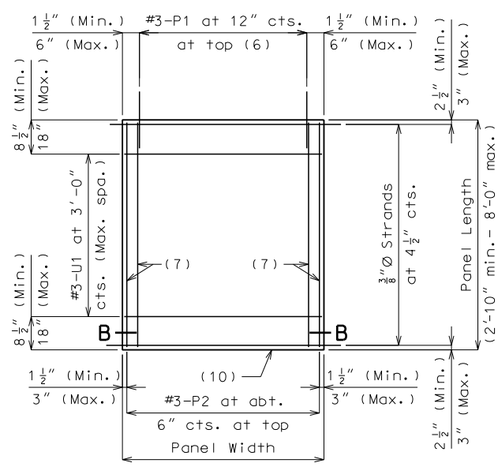

PLAN OF SQUARED PANEL

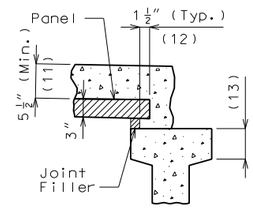

SECTION A-A

Joint Filler Dimensions		
Width	Height	
	Min.	Max.
1 1/2"	1"	2"

Reference Notes:

Plan of Panels Placement:

(1) S-bars shown are bottom steel in slab between panels and used with squared and truncated end panels only.

(2) Extend S-bars 18 inches beyond the front face of end bents and int. bents for squared and truncated end panels only.

(3) Extend S-bars 9 inches beyond edge of girder (Typ.).

(4) End panels shall be dimensioned 1/2" min. to 1 1/2" max. from the inside face of diaphragm.

(5) For truncated end panels, use a min. of #5-S bars at 6" crossings in openings, or min. 4x4-W7xW7.

Plans of Panels:

(6) For end panels only, P1 bars shall be 2'-0" in length and embedded 12". P1 bars will not be required for panels at squared integral end bents.

(7) #3-P2 bars near edge of panel at bottom (under strands).

(8) Use #3-P3 bars if panel is skewed 45° or greater.

(9) Any strand 2'-0" or shorter shall have a #4 reinforcing bar on each side of it, centered between strands. Strands 2'-0" or shorter may then be debonded at the fabricator's option.

(10) Optional 1/2" x 45° Chamfer one or both sides at bottom.

Section A-A:

(11) Slab thickness over prestressed panels varies due to girder camber. In order to maintain minimum slab thickness, it may be necessary to raise the grade uniformly throughout the structure. No payment will be made for additional labor or materials required for necessary grade adjustment.

(12) Contractor shall ensure proper consolidation under and between panels.

(13) At the contractor's option, the variation in slab thickness over prestressed panels may be eliminated or reduced by increasing and varying the girder top flange thickness. Dimensions shall be shown on the shop drawings.

DETAILS OF PRESTRESSED PANELS

General Notes:

Prestressed Panels:

Concrete for prestressed panels shall be Class A-1 with f'c = 6,000 psi, f'ci = 4,000 psi.

The top surface of all panels shall receive a scored finish with a depth of scoring of 1/8" perpendicular to the prestressing strands in the panels.

Prestressing tendons shall be high-tensile strength, uncoated, seven-wire, low-relaxation strands for prestressed concrete in accordance with AASHTO M 203 Grade 270, with nominal diameter of strand = 3/8" and nominal area = 0.085 sq.in. and minimum ultimate strength = 22.95 kips (270 ksi). Larger strands may be used with the same spacing and initial tension.

Initial prestressing force = 17.2 kips/strand.

The method and sequence of releasing the strands shall be shown on the shop drawings.

Suitable anchorage devices for lifting panels may be cast in panels, provided the devices are shown on the shop drawings and approved by the engineer. Panel lengths shall be determined by the contractor and shown on the shop drawings.

When squared end panels are used at skewed bents, the skewed portion shall be cast full depth. No separate payment will be made for additional concrete and reinforcing required.

Support from diaphragm forms is required under the optional skewed end until cast-in-place concrete has reached 3,000 psi compressive strength.

Prestressed panels shall be brought to saturated surface-dry (SSD) condition just prior to the deck pour. There shall be no free standing water on the panels or in the area to be cast.

The prestressed panel quantities are not included in the table of estimated quantities for the slab.

Reinforcing Steel:

All dimensions are out to out.

Hooks and bends shall be in accordance with the CRSI Manual of Standard Practice for Detailing Reinforced Concrete Structures, Stirrup and Tie Dimensions.

Minimum clearance to reinforcing steel shall be 1 1/2", unless otherwise shown.

If U1 bars interfere with placement of slab steel, U1 loops may be bent over, as necessary, to clear slab steel.

Deformed welded wire reinforcement (WWR) providing a minimum area of reinforcing perpendicular to strands of 0.22 sq in./ft, with spacing parallel to strands sufficient to ensure proper handling, may be used in lieu of the #3-P2 bars shown. Wire diameter shall not be larger than 0.375 inch. The above alternative reinforcement criteria may be used in lieu of the #3-P3 bars, when required, and placed over a width not less than 2 feet.

The following reinforcing steel shall be tied securely to the strands with the following maximum spacing in each direction:
#3-P2 bars at 16 inches.
WWR at 24 inches.

The #3-U1 bars shall be tied securely to #3-P2 bars, to WWR or to strands (when placed between P1 bars) at about 3-foot centers.

Minimum reinforcement steel length shall be 2'-0".

All reinforcement other than prestressing strands shall be epoxy coated.

Precast panels may be in contact with stirrup reinforcing in diaphragms.

S-bars are not listed in the bill of reinforcing.

Cost of S-bars will be considered completely covered by the contract unit price for the slab.

Joint Filler:

Joint filler shall be preformed fiber expansion joint material in accordance with Sec 1057 or expanded or extruded polystyrene bedding material in accordance with Sec 1073.

Use Slab Haunching Diagram on Sheet No. 16 for determining thickness of joint filler within the limits noted in the table of Joint Filler Dimensions.

Thicker material may be used on one or both sides of the girder to reduce cast-in-place concrete thickness to within tolerances.

The same thickness of preformed fiber expansion joint material shall be used under any one edge of any panel except at locations where top flange thickness may be stepped. The maximum change in thickness between adjacent panels shall be 1/4 inch. The polystyrene bedding material may be cut with a transition to match haunch height above top of flange.

Joint filler shall be glued to the girder. When thickness exceeds 1 1/2 inches, the joint filler shall be glued top and bottom. The glue used shall be the type recommended by the joint filler manufacturer.

Edges of panels shall be uniformly seated on the joint filler before slab reinforcement is placed.

STATE OF MISSOURI
DAVID GRAHAM BARRETT
NUMBER PE-2006002787
PROFESSIONAL ENGINEER

THIS SHEET HAS BEEN SIGNED, SEALED AND DATED ELECTRONICALLY

DATE PREPARED	
11/1/2016	
ROUTE 96	STATE MO
DISTRICT BR	SHEET NO. 20
COUNTY JASPER	
JOB NO. J7P2228G	
CONTRACT ID.	
PROJECT NO.	
BRIDGE NO. A8424	

DATE	DESCRIPTION
. . . . .	. . . . .

MISSOURI HIGHWAYS AND TRANSPORTATION COMMISSION
105 WEST CAPITOL
JEFFERSON CITY, MO 65102
1-888-ASK-MODOT (1-888-275-6636)

HDR Engineering, Inc.
4435 Main Street
Suite 1000
Kansas City, MO 64111-1856
816-360-2700
Certificate of Authority: 000856

Detailed September 2016
Checked October 2016

Note: This drawing is not to scale. Follow dimensions.

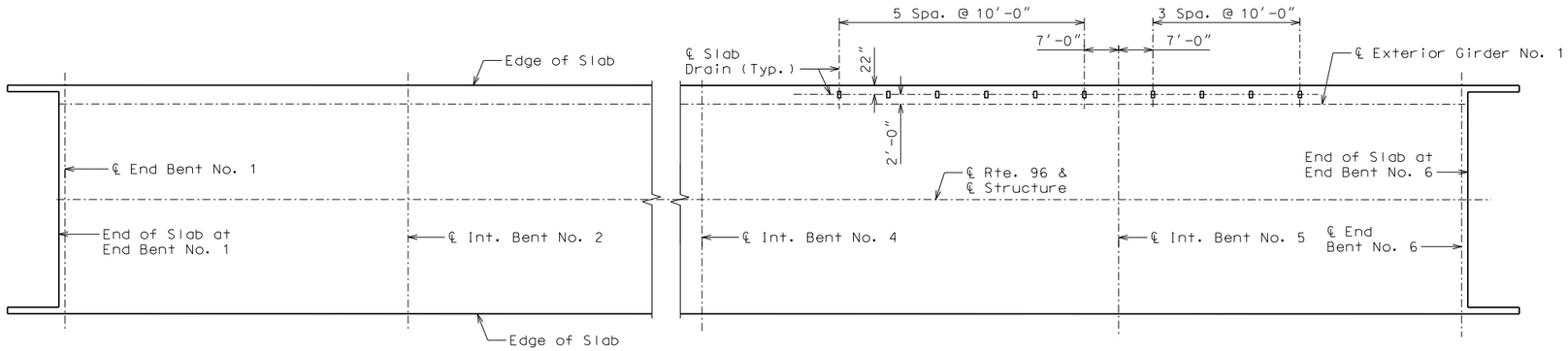

PLAN OF SLAB SHOWING SLAB DRAIN LOCATIONS

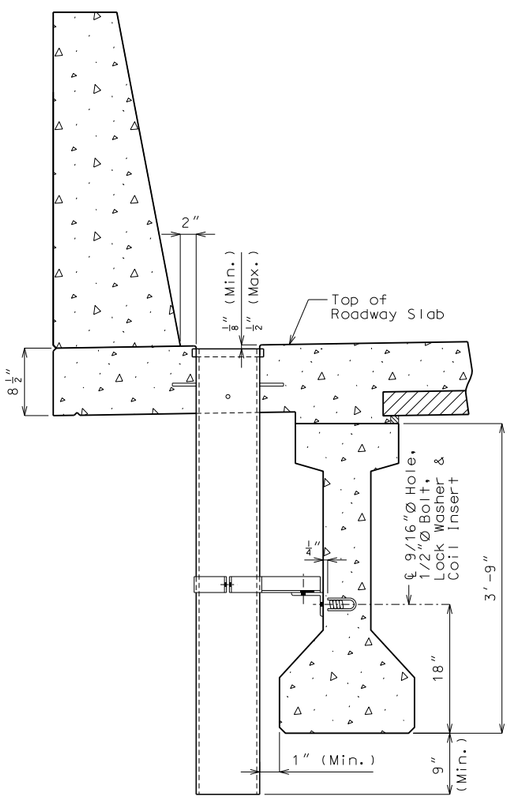

PART SECTION NEAR DRAIN

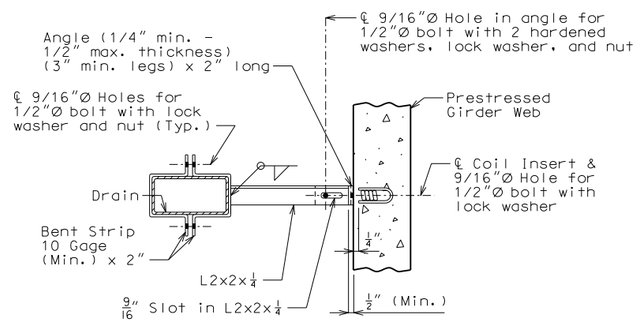

PART SECTION SHOWING BRACKET ASSEMBLY

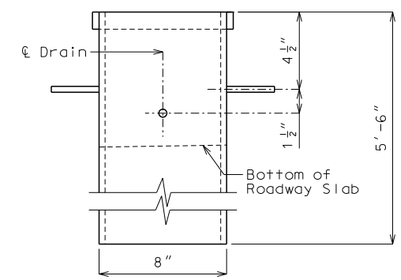

ELEVATION OF DRAIN

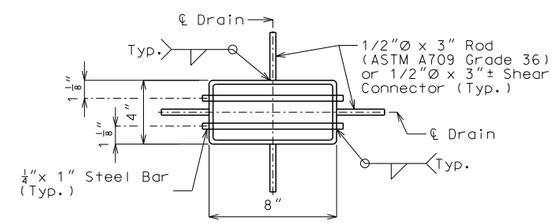

PLAN OF STEEL DRAIN

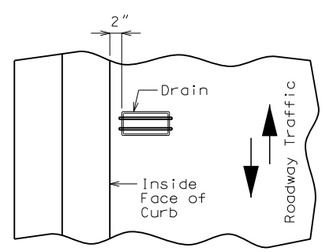

PART PLAN OF SLAB AT DRAIN

SLAB DRAIN DETAILS

General Notes:

Contractor shall have the option to construct either steel or FRP slab drains. All drains shall be of same type.

Slab drain bracket assembly shall be ASTM A709 Grade 36 steel.

Locate drains in slab by dimensions shown in Part Section Near Drain.

Reinforcing steel shall be shifted to clear drains.

The coil inserts and bracket assembly shall be galvanized in accordance with ASTM A123.

All bolts, hardened washers, lock washers and nuts shall be galvanized in accordance with ASTM A153.

Shop drawings will not be required for the slab drains and the bracket assembly.

The coil insert required for the bracket assembly attachment shall be located on the prestressed girder shop drawings.

Coil inserts shall have a concrete pull-out strength (ultimate load) of at least 2,500 pounds in 5,000 psi concrete.

The bolt required to attach the slab drain bracket assembly to the prestressed girder web shall be supplied by the prestressed girder fabricator.

Notes for Steel Drain:

Slab drains may be fabricated of either 1/4" welded sheets of ASTM A709 Grade 36 steel or from 1/4" structural steel tubing ASTM A500 or A501.

Outside dimensions of drains are 8" x 4".

The drains shall be galvanized in accordance with ASTM A123.

STATE OF MISSOURI
DAVID GRAHAM BARRETT
NUMBER PE-2006002787
PROFESSIONAL ENGINEER

THIS SHEET HAS BEEN SIGNED, SEALED AND DATED ELECTRONICALLY

DATE PREPARED	
11/1/2016	
ROUTE 96	STATE MO
DISTRICT BR	SHEET NO. 21
COUNTY JASPER	
JOB NO. J7P2228G	
CONTRACT ID.	
PROJECT NO.	
BRIDGE NO. A8424	

DESCRIPTION	DATE

MISSOURI HIGHWAYS AND TRANSPORTATION COMMISSION
105 WEST CAPITOL
JEFFERSON CITY, MO 65102
1-888-ASK-MODOT (1-888-275-6636)

HDR Engineering, Inc.
4435 Main Street
Suite 1000
Kansas City, MO 64111-1856
816-360-2700
Certificate of Authority: 000856

Detailed September 2016
Checked October 2016

Note: This drawing is not to scale. Follow dimensions.

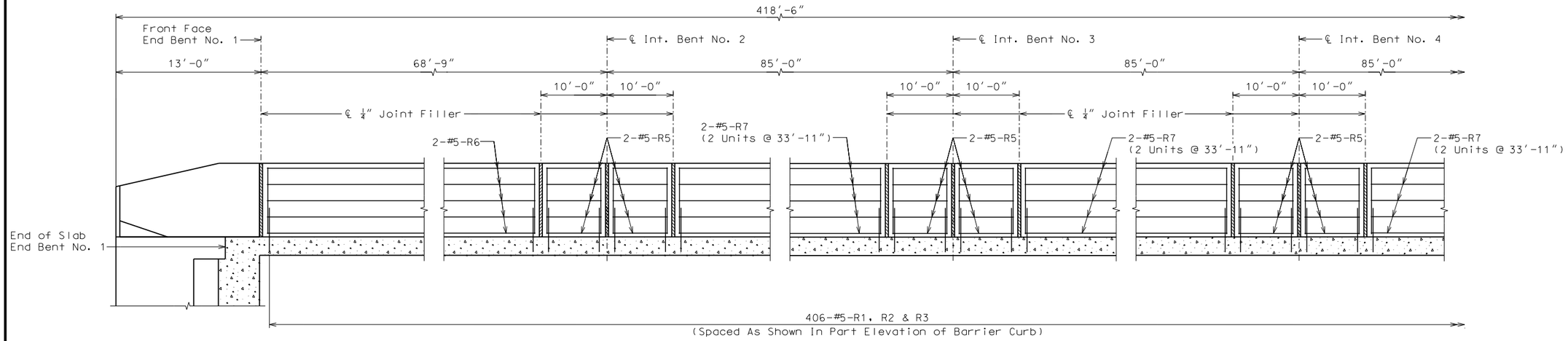

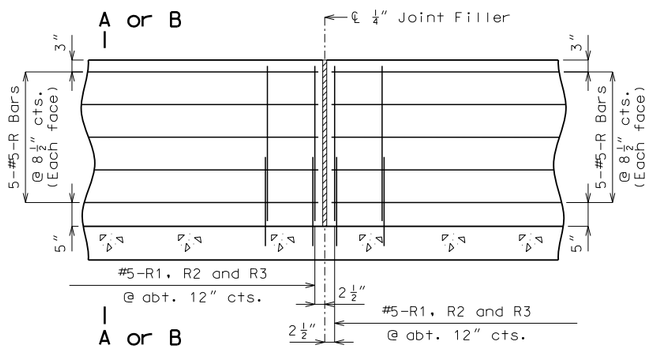

PART ELEVATION OF BARRIER CURB (TYPE D)
(CAST-IN-PLACE CONVENTIONAL FORMING)

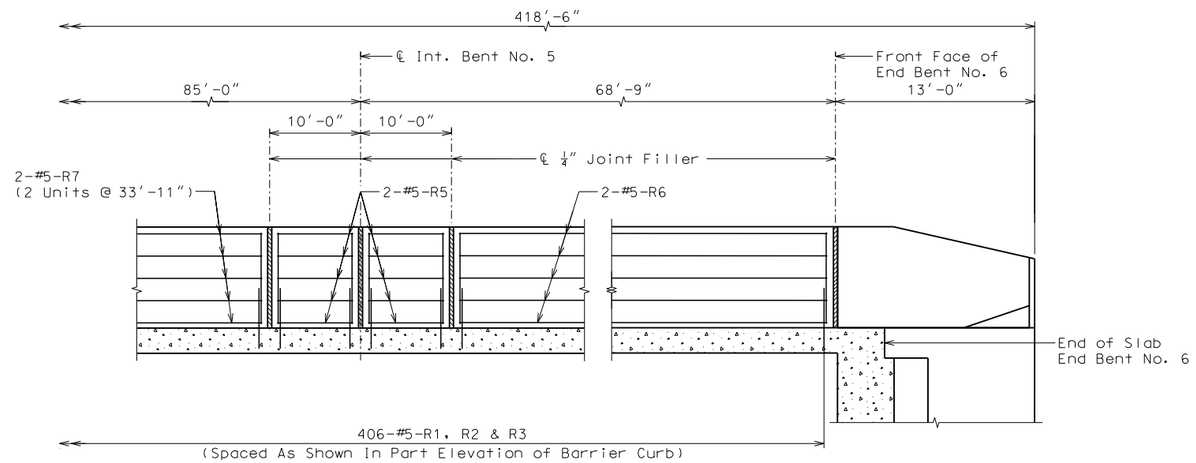

ELEVATION OF LEFT BARRIER CURB (TYPE D)

(Left barrier curb shown, right barrier curb similar)

Longitudinal dimensions are horizontal.

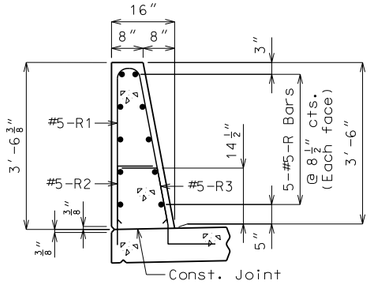

SECTION A-A

Use a minimum lap of 3'-1" for #5 horizontal barrier curb (Type D) bars.

The cross-sectional area above the slab = 3.52 sq. ft.

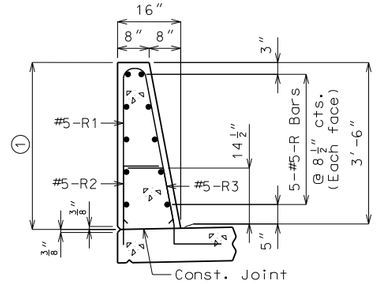

SECTION B-B

Applicable at Left Barrier between Sta. 587+68.82 to Sta. 588+26.25.

Use a minimum lap of 3'-1" for #5 horizontal barrier curb (Type D) bars.

The cross-sectional area above the slab = 3.52 sq. ft. at Sta. 587+68.82 to 3.49 sq. ft. at St.a 588+26.25

1 Varies from 3'-6 3/8" at Sta. 587+68.82 to 3'-5 7/8" at Sta. 588+26.25.

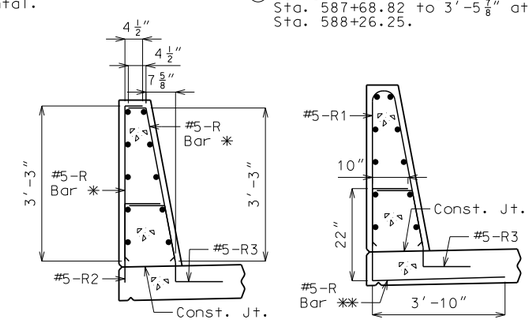

R-BAR PERMISSIBLE ALTERNATE SHAPE

✱ The R1 bar may be separated into two bars as shown, at the contractor's option, only when slip forming is not used. (All dimensions are out to out.)

✱✱ The R2 bar and #5 bottom transverse slab bar in cantilever (P/S panels only) combination may be furnished as one bar as shown, at the contractor's option.

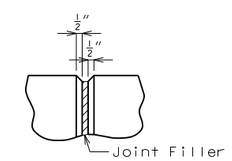

FILLED JOINT DETAIL

General Notes

Top of barrier curb (Type D) shall be built parallel to grade with barrier curb joints (except at end bents) normal to grade.

All exposed edges of barrier curb (Type D) shall have either a 1/2-inch radius or a 3/8-inch bevel, unless otherwise noted.

Payment for all concrete and reinforcement, complete in place, will be considered completely covered by the contract unit price for Barrier Curb (Type D) per linear foot.

Concrete in the barrier curb (Type D) shall be Class B-1.

Measurement of barrier curb (Type D) is to the nearest linear foot for each structure, measured along the outside top of slab from end of wing to end of wing.

Concrete traffic barrier delineators shall be placed on top of the barrier curb (Type D) as shown on Missouri Standard Plans 617.10 and in accordance with Sec 617. Delineators on bridges with two-lane, two-way traffic shall have retroreflective sheeting on both sides. Concrete traffic barrier delineators will be considered completely covered by the contract unit price for Barrier Curb (Type D).

DETAILS OF BARRIER CURB (TYPE D)

Detailed September 2016
Checked October 2016

Note: This drawing is not to scale. Follow dimensions.

STATE OF MISSOURI
DAVID GRAHAM BARRETT
NUMBER PE-2006002787
PROFESSIONAL ENGINEER

THIS SHEET HAS BEEN SIGNED, SEALED AND DATED ELECTRONICALLY

DATE PREPARED	
11/1/2016	
ROUTE 96	STATE MO
DISTRICT BR	SHEET NO. 22
COUNTY JASPER	
JOB NO. J7P2228G	
CONTRACT ID.	
PROJECT NO.	
BRIDGE NO. A8424	

DESCRIPTION	DATE

MISSOURI HIGHWAYS AND TRANSPORTATION COMMISSION
105 WEST CAPITOL
JEFFERSON CITY, MO 65102
1-888-ASK-MODOT (1-888-275-6636)

HDR Engineering, Inc.
4435 Main Street
Suite 1000
Kansas City, MO 64111-1856
816-360-2700
Certificate of Authority: 000856

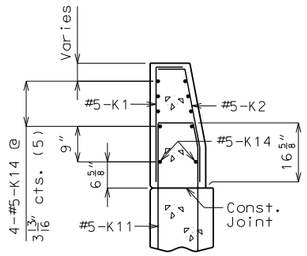

SECTION A-A

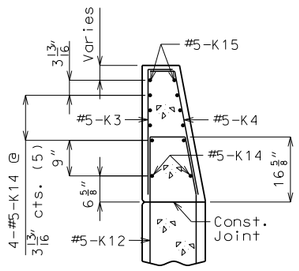

SECTION B-B

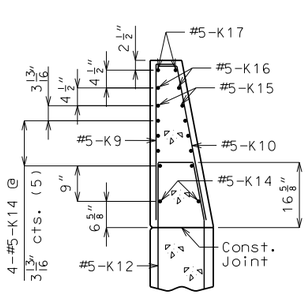

SECTION C-C

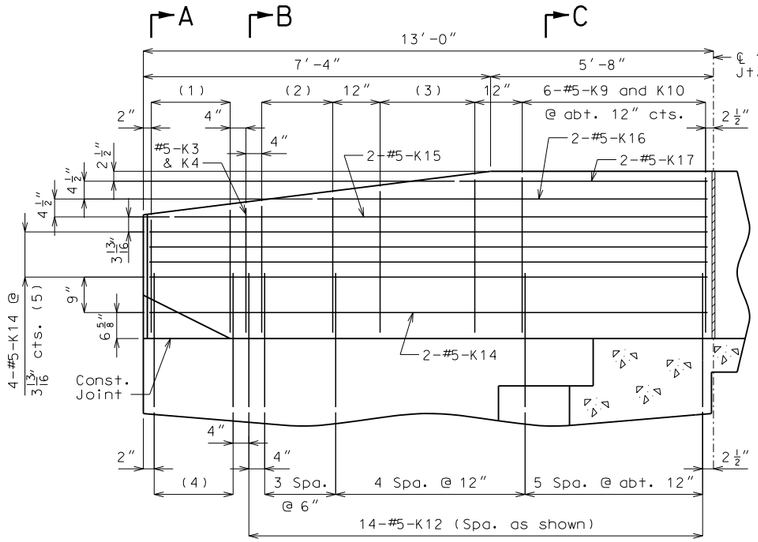

ELEVATION

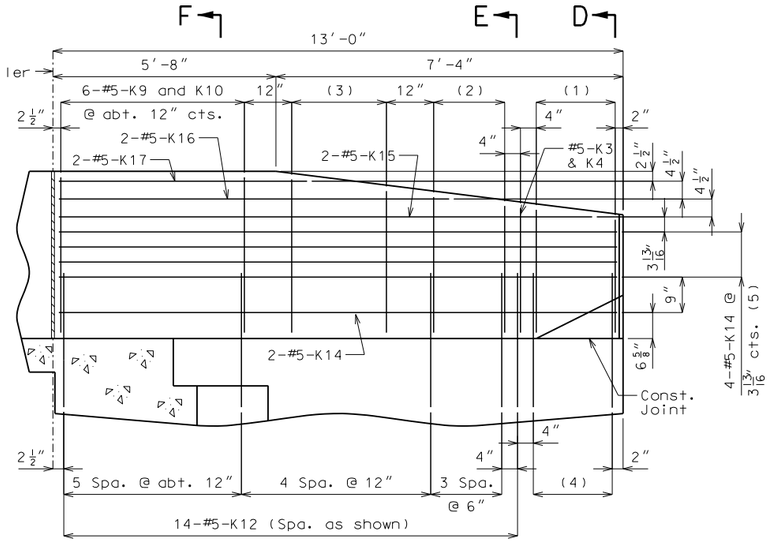

ELEVATION

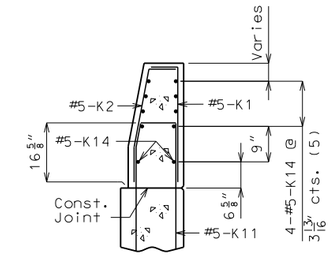

SECTION D-D

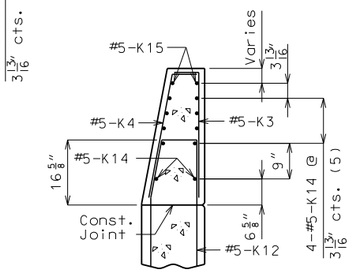

SECTION E-E

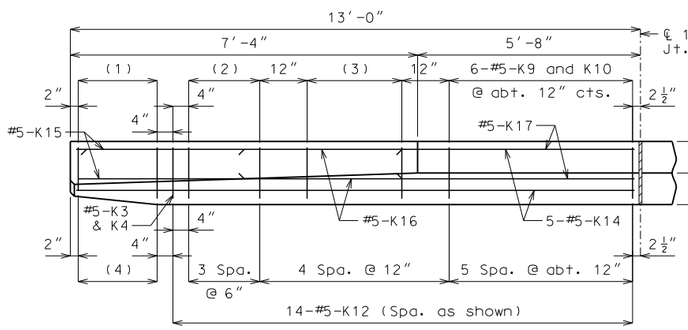

PLAN

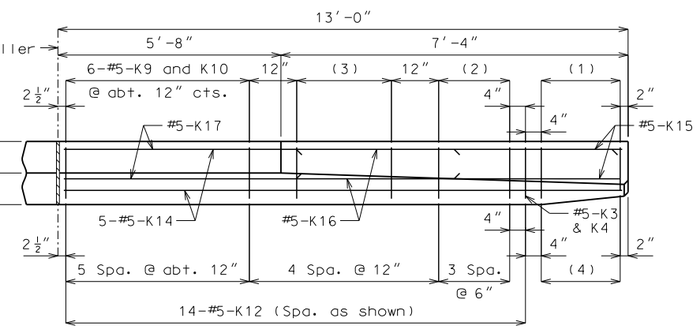

PLAN

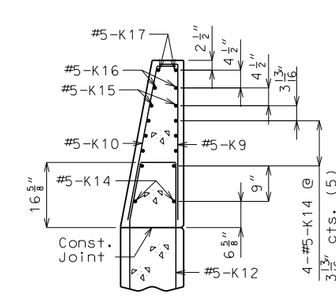

SECTION F-F

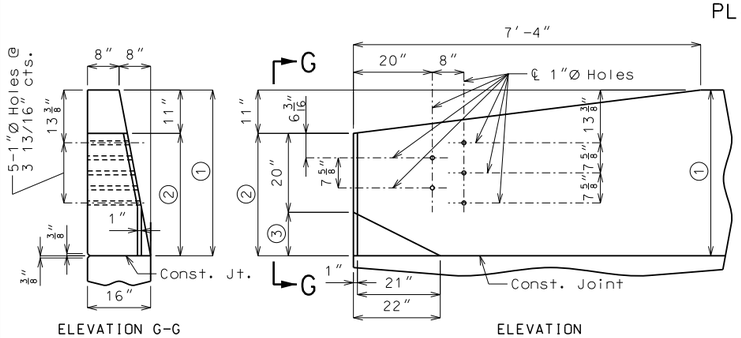

ELEVATION G-G

ELEVATION

(1) 6-#5-K1 and 6-#5-K2 @ 4" cts.

(2) 4-#5-K5 and 4-#5-K6 @ 6" cts.

(3) 3-#5-K7 and 3-#5-K8 @ 12" cts.

(4) 6-#5-K11 @ 4" cts.

(5) (Each face)

NO.	LOCATION	VALUE
1	Left Barrier/Wing at End Bent No. 6	3'-6"
	All other Wing/Barrier Location	3'-6 3/8"
2	Left Barrier/Wing at End Bent No. 6	2'-7"
	All other Wing/Barrier Location	2'-7 3/8"
3	Left Barrier/Wing at End Bent No. 6	11"
	All other Wing/Barrier Location	11 3/8"

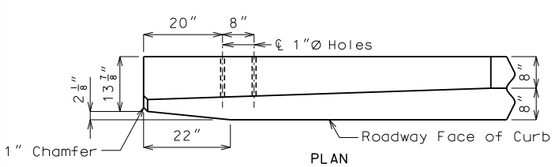

PLAN

DETAILS OF GUARD RAIL ATTACHMENT

Note: Concrete traffic barrier delineators shall be placed on top of the barrier curb (Type D) as shown on Missouri Standard Plans 617.10 and in accordance with Sec 617. Delineators on bridges with two-lane, two-way traffic shall have retroreflective sheeting on both sides. Concrete traffic barrier delineators will be considered completely covered by the contract unit price for Barrier Curb (Type D).

DETAILS OF BARRIER CURB (TYPE D) AT END BENTS

(Left barrier curb shown, right barrier curb similar except as noted.)

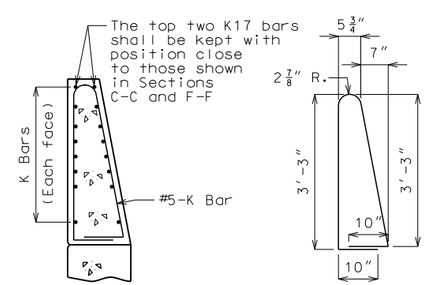

K9-K10 BAR PERMISSABLE ALTERNATE SHAPE

(Other K bars not shown for clarity)

The K9 and K10 bar combination may be furnished as one bar as shown, at the contractor's option.

Detailed September 2016
Checked October 2016

Note: This drawing is not to scale. Follow dimensions.

Sheet No. 23 of 36

STATE OF MISSOURI — DAVID GRAHAM BARRETT — NUMBER PE-2006002787 — PROFESSIONAL ENGINEER

THIS SHEET HAS BEEN SIGNED, SEALED AND DATED ELECTRONICALLY

DATE PREPARED	
11/1/2016	
ROUTE 96	STATE MO
DISTRICT BR	SHEET NO. 23
COUNTY JASPER	
JOB NO. J7P2228G	
CONTRACT ID.	
PROJECT NO.	
BRIDGE NO. A8424	

DATE	DESCRIPTION

MISSOURI HIGHWAYS AND TRANSPORTATION COMMISSION
105 WEST CAPITOL
JEFFERSON CITY, MO 65102
1-888-ASK-MODOT (1-888-275-6636)

HDR Engineering, Inc.
4435 Main Street
Suite 1000
Kansas City, MO 64111-1856
816-360-2700
Certificate of Authority: 000856

c:\pwworking\oma\d2236000\B_A8424_023_J7P2228G.dgn 8:24:03 PM 11/1/2016

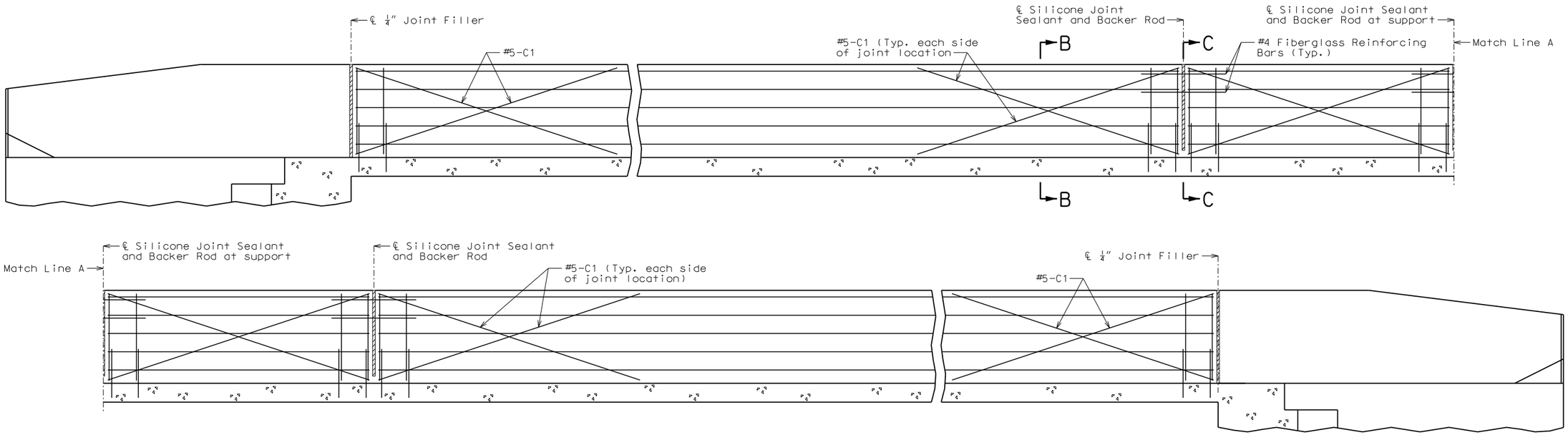

TYPICAL ELEVATION OF BARRIER CURB (TYPE D) AT SUPPORT LOCATIONS

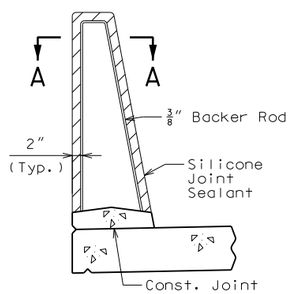

SECTION THRU JOINT

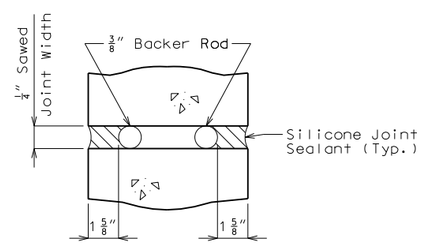

SECTION A-A

Note:
Slip Form Option must Stop at Front Face of End Bent.

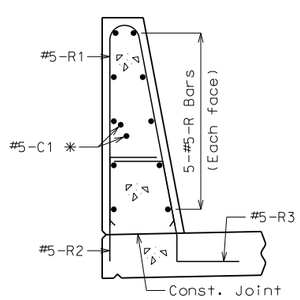

SECTION B-B

✳ Each side of joint location.

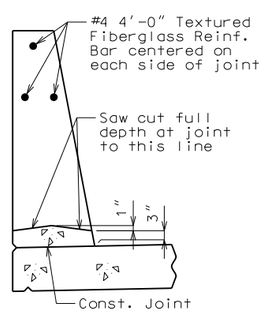

SECTION C-C

General Notes:

Top of barrier curb (Type D) shall be built parallel to grade with barrier curb joints (except at end bents) normal to grade.

All exposed edges of barrier curb (Type D) shall have either a 1/2-inch radius or a 3/8-inch bevel, unless otherwise noted.

Payment for all concrete and reinforcement, complete in place, will be considered completely covered by the contract unit price for Barrier Curb (Type D) per linear foot.

Concrete in the barrier curb (Type D) shall be Class B-1.

Measurement of barrier curb (Type D) is to the nearest linear foot for each structure, measured along the outside top of slab from end of wing to end of wing.

Concrete traffic barrier delineators shall be placed on top of the safety barrier curb as shown on Missouri Standard Plans 617.10 and in accordance with Sec 617. Delineators on bridges with two-lane, two-way traffic shall have retroreflective sheeting on both sides. Concrete traffic barrier delineators will be considered completely covered by the contract unit price for Barrier Curb (Type D).

Joint sealant and backer rods shall be used on all slip-form barrier curbs instead of joint filler and shall be in accordance with Sec 717 for silicone joint sealant for saw cut and formed joints.

For slip-form option, all sides of the safety barrier curb shall have a vertically broomed finish and the curb top shall have a transversely broomed finish.

C bars (slip-form option only) shall be used in addition to cast-in-place conventional forming reinforcement for bridge barrier curb (Type D).

Cost of silicone joint sealant and backer rod, complete in place, will be considered completely covered by the contract unit price for Barrier Curb (Type D).

OPTIONAL SLIP-FORM BARRIER CURB (TYPE D)

Detailed September 2016
Checked October 2016

Note: This drawing is not to scale. Follow dimensions.

STATE OF MISSOURI
DAVID GRAHAM BARRETT
NUMBER PE-2006002787
PROFESSIONAL ENGINEER

THIS SHEET HAS BEEN SIGNED, SEALED AND DATED ELECTRONICALLY

DATE PREPARED	
11/1/2016	
ROUTE 96	STATE MO
DISTRICT BR	SHEET NO. 24
COUNTY JASPER	
JOB NO. J7P2228G	
CONTRACT ID.	
PROJECT NO.	
BRIDGE NO. A8424	

DATE	DESCRIPTION

MISSOURI HIGHWAYS AND TRANSPORTATION COMMISSION
105 WEST CAPITOL
JEFFERSON CITY, MO 65102
1-888-ASK-MODOT (1-888-275-6636)

HDR Engineering, Inc.
4435 Main Street
Suite 1000
Kansas City, MO 64111-1856
816-360-2700
Certificate of Authority: 000856

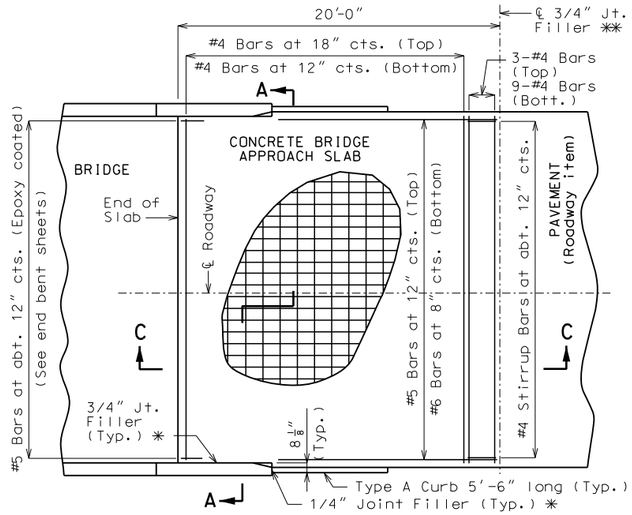

PART PLAN OF SQUARED STRUCTURE

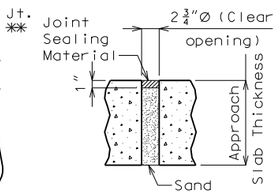

TYPICAL UNDERSEAL ACCESS HOLE DETAIL

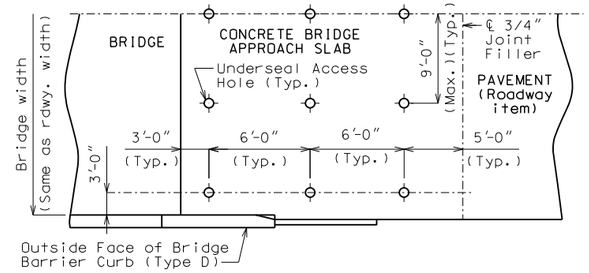

PART PLAN SHOWING UNDERSEAL ACCESS HOLES

(Squared structure shown)

✱✱ Except not allowed with asphalt pavement.

Notes For Concrete Slab Only:

All concrete for the bridge approach slab shall be in accordance with Sec 503 (f'c = 4,000 psi).

The reinforcing steel in the bridge approach slab shall be epoxy coated Grade 60 with fy = 60,000 psi.

Longitudinal construction joints in bridge approach slab shall be aligned with longitudinal construction joints in bridge slab.

Minimum clearance to reinforcing steel shall be 1 1/2", unless otherwise shown.

The reinforcing steel in the bridge approach slab shall be continuous. The transverse reinforcing steel may be made continuous by lap splicing the #4 bars 23".

Mechanical bar splices shall be in accordance with Sec 710.

All joint filler shall be in accordance with Sec 1057 for preformed fiber expansion joint filler except as noted.

Payment for furnishing all materials, labor and excavation necessary to construct the concrete bridge approach slab, including the timber header, underdrain, Type 5 aggregate base, joint filler, and all other appurtenances and incidental work as shown on this sheet, complete in place, will be considered completely covered by the contract unit price for Bridge Approach Slab (Minor Road) per square yard.

See Missouri Standard Plans Drawing 609.00 for details of Type A Curb.

✱ Seal joint between vertical face of bridge approach slab and wing with "Silicone Joint Sealant for Saw Cut and Formed Joints" in accordance with Sec 717.

General Notes:

Contractor shall have the option to construct either slab except as noted.

The contractor shall pour and satisfactorily finish the bridge slab before placing the bridge approach slab.

Drain pipe may be either 6" diameter corrugated metallic-coated pipe underdrain, 4" diameter corrugated polyvinyl chloride (PVC) drain pipe, or 4" diameter corrugated polyethylene (PE) drain pipe.

MoDOT Construction personnel will indicate the bridge approach slab used for this structure:

☐ Concrete Bridge Approach Slab

☐ Asphalt Bridge Approach Slab

Notes For Asphalt Slab Only:

Payment for furnishing all materials, curb, labor and excavation necessary to construct the asphalt bridge approach slab, including curb, underdrain and Type 5 aggregate base within the pay limits shown, complete in place, will be considered completely covered by the contract unit price for Bridge Approach Slab (Minor Road) per square yard.

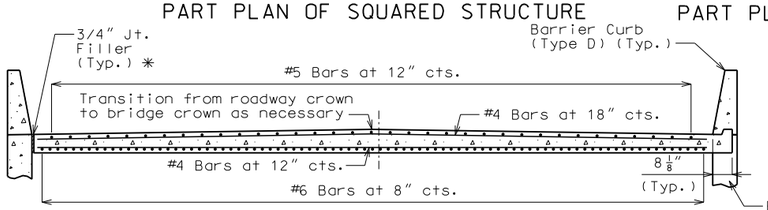

SECTION A-A

With the approval of the engineer, the contractor may crown the bottom of the approach slab to match the crown of the roadway surface.

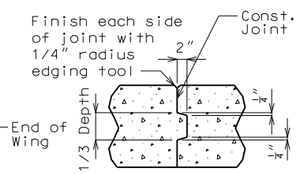

CONCRETE CONST. JOINT DETAIL

(If required)

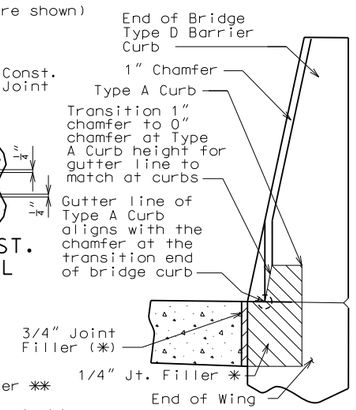

4" TYPE A CURB

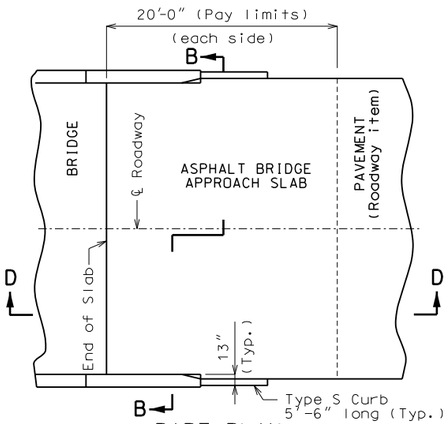

PART PLAN

(Squared structure shown, skewed structure similar)

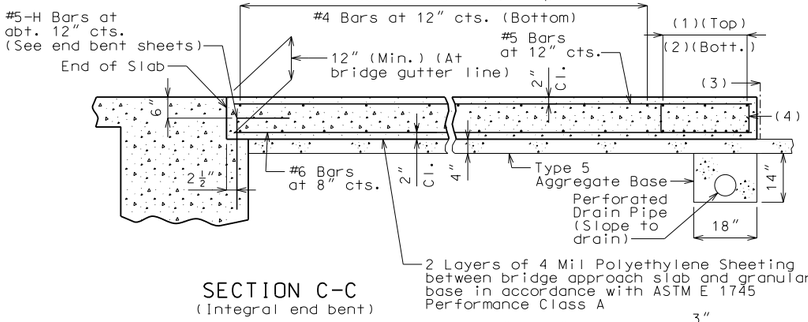

(1) 3-#4 Bars

(2) 9-#4 Bars

(3) ℄ 3/4" Jt. Filler ✱✱

(4) #4 Stirrup Bars at abt. 12" cts.; 2'-0"x 8" (Min.) out to out; Actual length = 5'-10" (Min.); 90° stirrup hook at bottom; Stirrup height (8") and actual length vary due to crown.

SECTION C-C

(Integral end bent)

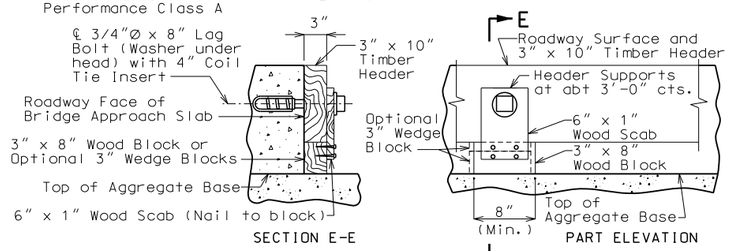

DETAILS OF TIMBER HEADER

Remove timber header when concrete pavement is placed.

OPTIONAL CONCRETE SLAB

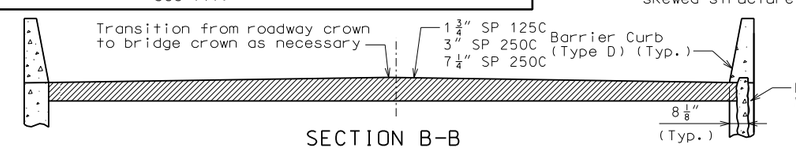

SECTION B-B

With the approval of the engineer, the contractor may crown the bottom of the approach slab to match the crown of the roadway surface.

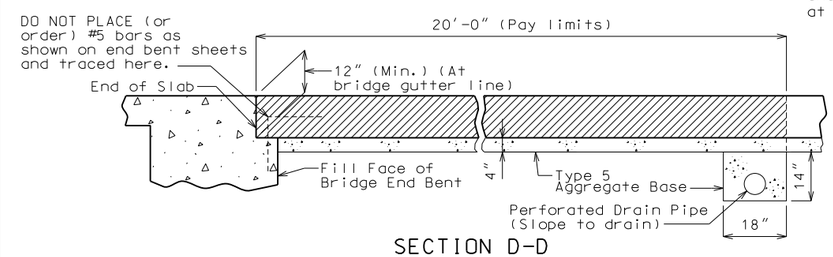

SECTION D-D

(Integral end bent shown, non-integral end bent similar)

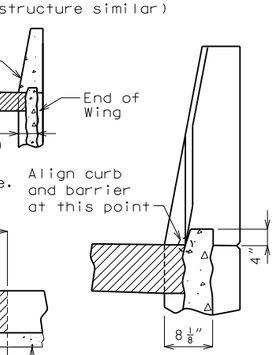

4" TYPE S CURB

See Missouri Standard Plans Drawing 609.00 for details of Type S Curb.

OPTIONAL ASPHALT SLAB (EXCEPT NOT ALLOWED WITH CONCRETE PAVEMENT)

DETAILS OF BRIDGE APPROACH SLAB (MINOR ROAD)

Detailed September 2016
Checked October 2016

Note: This drawing is not to scale. Follow dimensions.

Sheet No. 25 of 36

STATE OF MISSOURI — DAVID GRAHAM BARRETT — NUMBER PE-2006002787 — PROFESSIONAL ENGINEER

THIS SHEET HAS BEEN SIGNED, SEALED AND DATED ELECTRONICALLY

DATE PREPARED	
11/1/2016	
ROUTE 96	STATE MO
DISTRICT BR	SHEET NO. 25
COUNTY JASPER	
JOB NO. J7P2228G	
CONTRACT ID.	
PROJECT NO.	
BRIDGE NO. A8424	

DATE	DESCRIPTION

MISSOURI HIGHWAYS AND TRANSPORTATION COMMISSION

105 WEST CAPITOL
JEFFERSON CITY, MO 65102
1-888-ASK-MODOT (1-888-275-6636)

HDR Engineering, Inc.
4435 Main Street
Suite 1000
Kansas City, MO 64111-1856
816-360-2700
Certificate of Authority: 000856

c:\pwworking\oma\d2236000\B_A8424_025_J7P2228G.dgn 8:24:18 PM 11/1/2016

BILL OF REINFORCING STEEL

NO. REQ'D.	MARK NO. SIZE	MARK NO. MARK	LOCATION	EPOXY (E)	SHAPE NO.	STIRRUP (S)	SUBSTR. (X)	VARIES (V)	NO. EACH	B FT. IN.	C FT. IN.	D FT. IN.	E FT. IN.	F FT. IN.	H FT. IN.	K FT. IN.	NOMINAL LENGTH FT. IN.	ACTUAL LENGTH FT. IN.	WEIGHT LBS.
			SUBSTRUCTURE																
			INT. BENT NO. 2																
32	6	D200	SHEAR KEY		20		X			2 6.000							2 6	2 6	120
8	6	H200	BEAM		18		X			41 9.000							43 1	43 1	518
4	6	H201	BEAM		20		X			41 9.000							41 9	41 9	251
4	6	H202	BEAM		20		X			2 9.000							2 9	2 9	17
2	4	H203	WALL		18		X			40 0.000							41 0	41 0	55
20	4	H204	WALL		20		X			40 0.000							40 0	40 0	534
22	4	H205	WALL		7		X			3 3.000	20.000						7 5	7 5	109
28	5	U200	BEAM		13	S	X			3 3.000	3 3.000	3 3.000	3 3.000				13 11	13 7	397
14	5	U201	BEAM		10	S	X				3 3.000	3 3.000					9 9	9 7	140
3	5	U202	BEAM		13	S	X			3 3.000	3 7.750	3 3.000	3 7.750				14 9	14 5	45
10	4	U203	BEAM		10	S	X				12.000	3 3.000					5 3	5 1	34
8	6	U204	BEAM		10	S	X				22.000	3 1.500					6 10	6 6	78
58	4	U205	WALL		19	S	X			12 4.000	21.000						14 1	14 0	542
34	4	V200	WALL		20		X			12 4.000							12 4	12 4	280
			INT. BENT NO. 3																
32	6	D300	SHEAR KEY		20		X			2 6.000							2 6	2 6	120
8	6	H300	BEAM		18		X			41 9.000							43 1	43 1	518
4	6	H301	BEAM		20		X			41 9.000							41 9	41 9	251
4	6	H302	BEAM		20		X			2 9.000							2 9	2 9	17
2	4	H303	WALL		18		X			40 0.000							41 0	41 0	55
22	4	H304	WALL		20		X			40 0.000							40 0	40 0	588
24	4	H305	WALL		7		X			3 3.000	20.000						7 5	7 5	119
28	5	U300	BEAM		13	S	X			3 3.000	3 3.000	3 3.000	3 3.000				13 11	13 7	397
14	5	U301	BEAM		10	S	X				3 3.000	3 3.000					9 9	9 7	140
3	5	U302	BEAM		13	S	X			3 3.000	3 7.875	3 3.000	3 7.875				14 9	14 5	45
10	4	U303	BEAM		10	S	X				12.000	3 3.000					5 3	5 1	34
8	6	U304	BEAM		10	S	X				22.000	3 1.500					6 10	6 6	78
58	4	U305	WALL		19	S	X			12 10.000	21.000						14 7	14 6	562
34	4	V300	WALL		20		X			12 10.000							12 10	12 10	291
			INT. BENT NO. 4																
32	6	D400	SHEAR KEY		20		X			2 6.000							2 6	2 6	120
8	6	H400	BEAM		18		X			41 9.000							43 1	43 1	518
4	6	H401	BEAM		20		X			41 9.000							41 9	41 9	251
4	6	H402	BEAM		20		X			2 9.000							2 9	2 9	17
2	4	H403	WALL		18		X			40 0.000							41 0	41 0	55
22	4	H404	WALL		20		X			40 0.000							40 0	40 0	588
24	4	H405	WALL		7		X			3 3.000	20.000						7 5	7 5	119
28	5	U400	BEAM		13	S	X			3 3.000	3 3.000	3 3.000	3 3.000				13 11	13 7	397
14	5	U401	BEAM		10	S	X				3 3.000	3 3.000					9 9	9 7	140
3	5	U402	BEAM		13	S	X			3 3.000	3 7.875	3 3.000	3 7.875				14 9	14 5	45
10	4	U403	BEAM		10	S	X				12.000	3 3.000					5 3	5 1	34
8	6	U404	BEAM		10	S	X				22.000	3 1.500					6 10	6 6	78
58	4	U405	WALL		19	S	X			12 10.000	21.000						14 7	14 6	562
34	4	V400	WALL		20		X			12 10.000							12 10	12 10	291

BILL OF REINFORCING STEEL

NO. REQ'D.	MARK NO. SIZE	MARK NO. MARK	LOCATION	EPOXY (E)	SHAPE NO.	STIRRUP (S)	SUBSTR. (X)	VARIES (V)	NO. EACH	B FT. IN.	C FT. IN.	D FT. IN.	E FT. IN.	F FT. IN.	H FT. IN.	K FT. IN.	NOMINAL LENGTH FT. IN.	ACTUAL LENGTH FT. IN.	WEIGHT LBS.
			SUBSTRUCTURE (CONTINUED)																
			INT. BENT NO. 5																
32	6	D500	SHEAR KEY		20		X			2 6.000							2 6	2 6	120
8	6	H500	BEAM		18		X			41 9.000							43 1	43 1	518
4	6	H501	BEAM		20		X			41 9.000							41 9	41 9	251
4	6	H502	BEAM		20		X			2 9.000							2 9	2 9	17
2	4	H503	WALL		18		X			40 0.000							41 0	41 0	55
20	4	H504	WALL		20		X			40 0.000							40 0	40 0	534
22	4	H505	WALL		7		X			3 3.000	20.000						7 5	7 5	109
28	5	U500	BEAM		13	S	X			3 3.000	3 3.000	3 3.000	3 3.000				13 11	13 7	397
14	5	U501	BEAM		10	S	X				3 3.000	3 3.000					9 9	9 7	140
3	5	U502	BEAM		13	S	X			3 3.000	3 7.750	3 3.000	3 7.750				14 9	14 5	45
10	4	U503	BEAM		10	S	X				12.000	3 3.000					5 3	5 1	34
8	6	U504	BEAM		10	S	X				22.000	3 1.500					6 10	6 6	78
58	4	U505	WALL		19	S	X			12 4.000	21.000						14 1	14 0	542
34	4	V500	WALL		20		X			12 4.000							12 4	12 4	280
			SUPERSTRUCTURE																
			INT. BENT NO. 2 DIAPHRAGM																
12	5	H251	DIAPHRAGM		20					3 11.000							3 11	3 11	49
6	5	H252	DIAPHRAGM		20					2 10.000							2 10	2 10	18
8	6	H253	DIAPHRAGM		20					8 1.000							8 1	8 1	97
16	4	H254	DIAPHRAGM		20					9 0.000							9 0	9 0	96
8	6	H255	DIAPHRAGM		20					8 5.000							8 5	8 5	101
20	5	H256	DIAPHRAGM		6	S				2 6.500	9.500						3 4	3 3	68
56	4	U251	DIAPHRAGM	E	28	S					2 2.000	4 1.000	12.000				7 3	7 1	265
16	6	U252	DIAPHRAGM	E	28	S					2 3.000	4 4.000	14.000				7 9	7 5	178
8	5	V251	DIAPHRAGM	E	20					4 3.000							4 3	4 3	35
			INT. BENT NO. 3 DIAPHRAGM																
12	5	H351	DIAPHRAGM		20					3 11.000							3 11	3 11	49
6	5	H352	DIAPHRAGM		20					2 10.000							2 10	2 10	18
8	6	H353	DIAPHRAGM		20					8 1.000							8 1	8 1	97
16	4	H354	DIAPHRAGM		20					9 0.000							9 0	9 0	96
8	6	H355	DIAPHRAGM		20					8 5.000							8 5	8 5	101
20	5	H356	DIAPHRAGM		6	S				2 6.500	9.500						3 4	3 3	68
56	4	U351	DIAPHRAGM	E	28	S					2 2.000	4 1.000	12.000				7 3	7 1	265
16	6	U352	DIAPHRAGM	E	28	S					2 3.000	4 4.000	14.000				7 9	7 5	178
8	5	V351	DIAPHRAGM	E	20					4 3.000							4 3	4 3	35

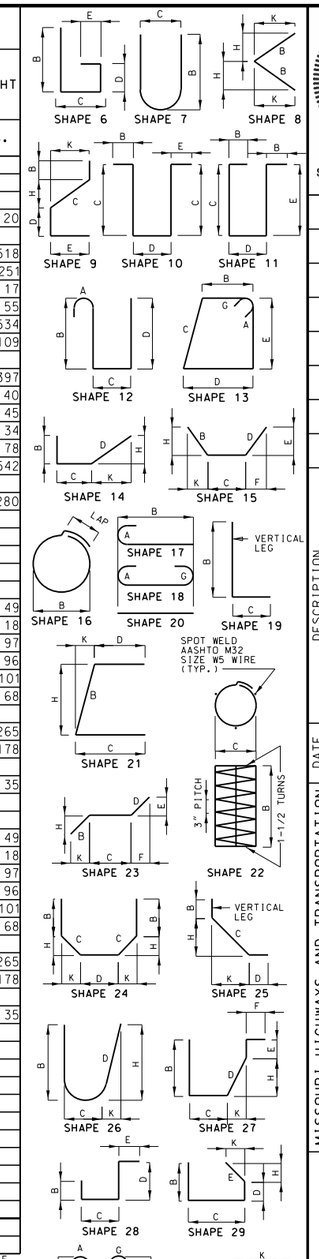

BENDING DIAGRAMS

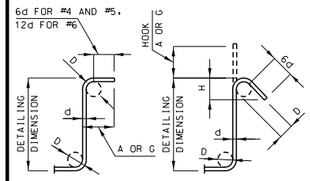

STIRRUP HOOK DIMENSIONS				
GRADES 40 - 50 - 60 KSI				
BAR SIZE	D (IN.)	90° HOOK	135° HOOK	
		HOOK A OR G	HOOK A OR G	APPROX. H
#4	2"	4 1/2"	4 1/2"	3"
#5	2 1/2"	6"	5 1/2"	3 3/4"
#6	4 1/2"	12"	8"	4 1/2"

NOTE: UNLESS OTHERWISE NOTED, DIAMETER "D" IS THE SAME FOR ALL BENDS AND HOOKS ON A BAR.

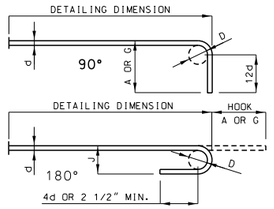

END HOOK DIMENSIONS				
BAR SIZE	D (IN.)	ALL GRADES		
		180° HOOKS		90° HOOKS
		A OR G	J	A OR G
#3	2 1/4"	5"	3"	6"
#4	3"	6"	4"	8"
#5	3 3/4"	7"	5"	10"
#6	4 1/2"	8"	6"	12"
#7	5 1/4"	10"	7"	14"
#8	6"	11"	8"	16"
#9	9 1/2"	15"	11 3/4"	19"
#10	10 3/4"	17"	13 1/4"	22"
#11	12"	19"	14 3/4"	2'-0"
#14	18 1/4"	2'-3"	21 3/4"	2'-7"

NOTE:
ALL STANDARD HOOKS AND BENDS OTHER THAN 180 DEGREE ARE TO BE BENT WITH SAME PROCEDURE AS FOR 90 DEGREE STANDARD HOOKS.
HOOKS AND BENDS SHALL BE IN ACCORDANCE WITH THE PROCEDURES AS SHOWN ON THIS SHEET.
E = EPOXY COATED REINFORCEMENT.
S = STIRRUP.
X = BAR IS INCLUDED IN SUBSTRUCTURE QUANTITIES.
V = BAR DIMENSIONS VARY IN EQUAL INCREMENTS BETWEEN DIMENSIONS SHOWN ON THIS LINE AND THE FOLLOWING LINE.
NO. EA. = NUMBER OF BARS OF EACH LENGTH.
NOMINAL LENGTHS ARE BASED ON OUT TO OUT DIMENSIONS SHOWN IN BENDING DIAGRAMS AND ARE LISTED FOR FABRICATORS USE. (NEAREST INCH)
ACTUAL LENGTHS ARE MEASURED ALONG CENTERLINE BAR TO THE NEAREST INCH.
PAYWEIGHTS ARE BASED ON ACTUAL LENGTHS.
FOUR ANGLE OR CHANNEL SPACERS ARE REQUIRED FOR EACH COLUMN SPIRAL. SPACERS ARE TO BE PLACED ON INSIDE OF SPIRALS. LENGTH AND WEIGHT OF COLUMN SPIRALS DO NOT INCLUDE SPLICES OR SPACERS.
REINFORCING STEEL (GRADE 60) FY = 60,000 PSI.

STATE OF MISSOURI
DAVID GRAHAM BARRETT
NUMBER PE-2006002787
PROFESSIONAL ENGINEER

THIS SHEET HAS BEEN SIGNED, SEALED AND DATED ELECTRONICALLY

DATE PREPARED 11/1/2016
ROUTE 96 | STATE MO
DISTRICT BR | SHEET NO. 26
COUNTY JASPER
JOB NO. J7P2228G
CONTRACT ID.
PROJECT NO.
BRIDGE NO. A8424

DESCRIPTION
DATE

MISSOURI HIGHWAYS AND TRANSPORTATION COMMISSION
105 WEST CAPITOL
JEFFERSON CITY, MO 65102
1-888-ASK-MODOT (1-888-275-6636)

HDR Engineering, Inc.
4435 Main Street
Suite 1000
Kansas City, MO 64111-1856
816-360-2700
Certificate of Authority: 000856

Detailed September 2016
Checked October 2016

Note: This drawing is not to scale. Follow dimensions.

BILL OF REINFORCING STEEL

NO. REQ'D.	MARK NO. SIZE	MARK NO. MARK	LOCATION	EPOXY (E)	SHAPE NO.	STIRRUP (S)	SUBSTR. (X)	VARIES (V)	NO. EACH	B FT. IN.	C FT. IN.	D FT. IN.	E FT. IN.	F FT. IN.	H FT. IN.	K FT. IN.	NOMINAL LENGTH FT. IN.	ACTUAL LENGTH FT. IN.	WEIGHT LBS.
			SUPERSTRUCTURE (CONTINUED)																
			INT. BENT NO. 4 DIAPHRAGM																
12	5	H451	DIAPHRAGM		20				3	11.000							3 11	3 11	49
6	5	H452	DIAPHRAGM		20				2	10.000							2 10	2 10	18
8	6	H453	DIAPHRAGM		20				8	1.000							8 1	8 1	97
16	4	H454	DIAPHRAGM		20				9	0.000							9 0	9 0	96
8	6	H455	DIAPHRAGM		20				8	5.000							8 5	8 5	101
20	5	H456	DIAPHRAGM		6	S			2	6.500	9.500						3 4	3 3	68
56	4	U451	DIAPHRAGM	E	28	S					2 2.000	4 1.000	12.000				7 3	7 1	265
16	6	U452	DIAPHRAGM	E	28	S					2 3.000	4 3.750	14.000				7 9	7 5	178
8	5	V451	DIAPHRAGM	E	20				4	3.000							4 3	4 3	35
			INT. BENT NO. 5 DIAPHRAGM																
12	5	H551	DIAPHRAGM		20				3	11.000							3 11	3 11	49
6	5	H552	DIAPHRAGM		20				2	10.000							2 10	2 10	18
8	6	H553	DIAPHRAGM		20				8	1.000							8 1	8 1	97
16	4	H554	DIAPHRAGM		20				9	0.000							9 0	9 0	96
8	6	H555	DIAPHRAGM		20				8	5.000							8 5	8 5	101
20	5	H556	DIAPHRAGM		6	S			2	6.500	9.500						3 4	3 3	68
56	4	U551	DIAPHRAGM	E	28	S					2 2.000	4 1.000	12.000				7 3	7 1	265
16	6	U552	DIAPHRAGM	E	28	S					2 3.000	4 4.000	14.000				7 9	7 5	178
8	5	V551	DIAPHRAGM	E	20				4	3.000							4 3	4 3	35
			END BENT NO. 1																
20	6	F100	WING BRACE		23					14.000	4 6.000	14.000	9.875	9.875	9.875	9.875	6 10	6 9	203
8	6	F101	DIAPHRAGM		6	S			5	5.000	2 2.000						7 7	7 5	89
8	6	H100	BEAM		20				46	4.000							46 4	46 4	557
4	6	H101	BEAM		20				46	4.000							46 4	46 4	278
4	6	H102	BEAM		20				2	9.000							2 9	2 9	17
4	6	H103	DIAPHRAGM		20				2	9.000							2 9	2 9	17
6	6	H104	DIAPHRAGM		20				3	3.000							3 3	3 3	29
8	6	H105	DIAPHRAGM		20				8	0.000							8 0	8 0	96
12	6	H106	DIAPHRAGM		20				8	11.000							8 11	8 11	161
5	6	H107	DIAPHRAGM		20				46	4.000							46 4	46 4	348
5	5	H108	DIAPHRAGM		20				3	11.000							3 11	3 11	20
4	6	H109	DIAPHRAGM	E	20				46	4.000							46 4	46 4	278
44	5	H110	DIAPHRAGM	E	19	S			2	0.000	15.000						3 3	3 2	145
40	7	H111	WING		20				12	0.000							12 0	12 0	981
12	8	H112	WING		20				12	4.000							12 4	12 4	395
4	8	H113	WING	E	20				12	4.000							12 4	12 4	132
34	5	U100	BEAM		10	S					5 9.000	2 8.000					14 2	14 0	496
12	4	U101	BEAM		13	S			2	8.000	2 7.375	2 8.000	2 7.375				11 4	11 1	89
3	4	U102	BEAM		10	S					2 11.750	2 8.000					8 8	8 6	17
44	5	U103	DIAPHRAGM	E	10	S					4 3.875	2 2.000					10 10	10 8	490
44	6	U104	DIAPHRAGM		19	S			2	11.000	2 8.000						5 7	5 5	358
59	6	U105	DIAPHRAGM	E	19	S			3	5.000	4 6.000						7 11	7 9	687
20	5	V100	BEAM		20				5	9.000							5 9	5 9	120
15	6	V101	DIAPHRAGM		20				2	11.000							2 11	2 11	66
44	6	V102	WING	E	20				7	3.000							7 3	7 3	479

BILL OF REINFORCING STEEL

NO. REQ'D.	MARK NO. SIZE	MARK NO. MARK	LOCATION	EPOXY (E)	SHAPE NO.	STIRRUP (S)	SUBSTR. (X)	VARIES (V)	NO. EACH	B FT. IN.	C FT. IN.	D FT. IN.	E FT. IN.	F FT. IN.	H FT. IN.	K FT. IN.	NOMINAL LENGTH FT. IN.	ACTUAL LENGTH FT. IN.	WEIGHT LBS.
			SUPERSTRUCTURE (CONTINUED)																
			END BENT NO. 6																
20	6	F600	WING BRACE		23					14.000	4 6.000	14.000	9.875	9.875	9.875	9.875	6 10	6 9	203
8	6	F601	DIAPHRAGM		6	S			5	5.000	2 2.000						7 7	7 5	89
8	6	H600	BEAM		20				46	4.000							46 4	46 4	557
4	6	H601	BEAM		20				46	4.000							46 4	46 4	278
4	6	H602	BEAM		20				24	6.000							24 6	24 6	147
4	6	H603	DIAPHRAGM		20				2	9.000							2 9	2 9	17
6	6	H604	DIAPHRAGM		20				3	3.000							3 3	3 3	29
8	6	H605	DIAPHRAGM		20				8	0.000							8 0	8 0	96
12	6	H606	DIAPHRAGM		20				8	11.000							8 11	8 11	161
5	6	H607	DIAPHRAGM		20				46	4.000							46 4	46 4	348
5	5	H608	DIAPHRAGM		20				3	11.000							3 11	3 11	20
4	6	H609	DIAPHRAGM	E	20				46	4.000							46 4	46 4	278
44	5	H610	DIAPHRAGM	E	19	S			2	0.000	15.000						3 3	3 2	145
42	7	H611	WING		20				12	0.000							12 0	12 0	1030
12	8	H612	WING		20				12	4.000							12 4	12 4	395
4	8	H613	WING	E	20				12	4.000							12 4	12 4	132
34	5	U600	BEAM		10	S					5 10.000	2 8.000					14 4	14 2	502
6	4	U601	BEAM		13	S			2	8.000	2 7.375	2 8.000	2 7.375				11 4	11 1	44
3	4	U602	BEAM		10	S					2 11.500	2 8.000					8 7	8 5	17
44	5	U603	DIAPHRAGM	E	10	S					4 4.000	2 2.000					10 10	10 8	490
44	6	U604	DIAPHRAGM		19	S			2	11.000	2 8.000						5 7	5 5	358
59	6	U605	DIAPHRAGM	E	19	S			3	7.000	4 6.000						8 1	7 11	702
6	4	U606	BEAM		13	S			2	11.875	2 8.000	2 11.875	2 8.000				12 1	11 10	47
20	5	V600	BEAM		20				5	10.000							5 10	5 10	122
15	6	V601	DIAPHRAGM		20				2	11.000							2 11	2 11	66
22	6	V602	WING	E	20				7	11.000							7 11	7 11	262
22	6	V603	WING	E	20				7	3.000							7 3	7 3	240
			SLAB																
786	5	S1	SLAB	E	20				3	10.000							3 10	3 10	3143
70	5	S2	SLAB	E	20				59	4.000							59 4	59 4	4332
785	6	S3	SLAB	E	20				46	5.000							46 5	46 5	54728
304	7	S4	SLAB	E	20				53	4.000							53 4	53 4	33140
74	8	S5	SLAB	E	20				44	0.000							44 0	44 0	8694
222	8	S6	SLAB	E	20				42	0.000							42 0	42 0	24895

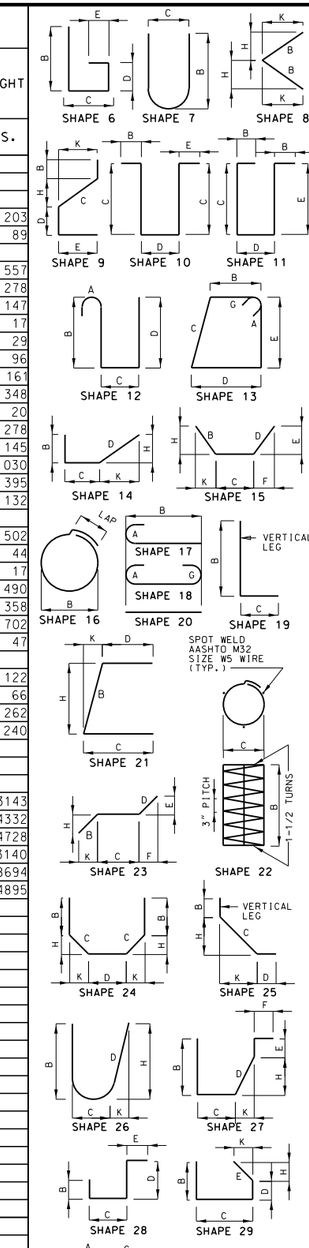

BENDING DIAGRAMS

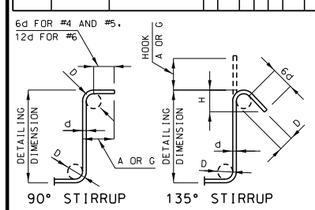

STIRRUP HOOK DIMENSIONS				
GRADES 40 - 50 - 60 KSI				
BAR SIZE	D (IN.)	90° HOOK	135° HOOK	
		HOOK A OR G	HOOK A OR G	APPROX. H
#4	2"	4 1/2"	4 1/2"	3"
#5	2 1/2"	6"	5 1/2"	3 3/4"
#6	4 1/2"	12"	8"	4 1/2"

NOTE: UNLESS OTHERWISE NOTED, DIAMETER "D" IS THE SAME FOR ALL BENDS AND HOOKS ON A BAR.

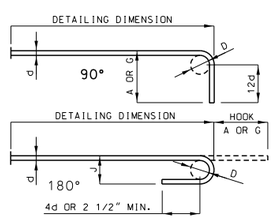

END HOOK DIMENSIONS				
BAR SIZE	D (IN.)	ALL GRADES		
		180° HOOKS		90° HOOKS
		A OR G	J	A OR G
#3	2 1/4"	5"	3"	6"
#4	3"	6"	4"	8"
#5	3 3/4"	7"	5"	10"
#6	4 1/2"	8"	6"	12"
#7	5 1/4"	10"	7"	14"
#8	6"	11"	8"	16"
#9	9 1/2"	15"	11 3/4"	19"
#10	10 3/4"	17"	13 1/4"	22"
#11	12"	19"	14 3/4"	2'-0"
#14	18 1/4"	2'-3"	21 3/4"	2'-7"

NOTE:
ALL STANDARD HOOKS AND BENDS OTHER THAN 180 DEGREE ARE TO BE BENT WITH SAME PROCEDURE AS FOR 90 DEGREE STANDARD HOOKS.
HOOKS AND BENDS SHALL BE IN ACCORDANCE WITH THE PROCEDURES AS SHOWN ON THIS SHEET.
E = EPOXY COATED REINFORCEMENT.
S = STIRRUP.
X = BAR IS INCLUDED IN SUBSTRUCTURE QUANTITIES.
V = BAR DIMENSIONS VARY IN EQUAL INCREMENTS BETWEEN DIMENSIONS SHOWN ON THIS LINE AND THE FOLLOWING LINE.
NO. EA. = NUMBER OF BARS OF EACH LENGTH.
NOMINAL LENGTHS ARE BASED ON OUT TO OUT DIMENSIONS SHOWN IN BENDING DIAGRAMS AND ARE LISTED FOR FABRICATORS USE. (NEAREST INCH)
ACTUAL LENGTHS ARE MEASURED ALONG CENTERLINE BAR TO THE NEAREST INCH.
PAYWEIGHTS ARE BASED ON ACTUAL LENGTHS.
FOUR ANGLE OR CHANNEL SPACERS ARE REQUIRED FOR EACH COLUMN SPIRAL. SPACERS ARE TO BE PLACED ON INSIDE OF SPIRALS. LENGTH AND WEIGHT OF COLUMN SPIRALS DO NOT INCLUDE SPLICES OR SPACERS.
REINFORCING STEEL (GRADE 60) FY = 60,000 PSI.

STATE OF MISSOURI
DAVID GRAHAM BARRETT
NUMBER PE-2006002787
PROFESSIONAL ENGINEER

THIS SHEET HAS BEEN SIGNED, SEALED AND DATED ELECTRONICALLY

DATE PREPARED 11/1/2016
ROUTE 96 | STATE MO
DISTRICT BR | SHEET NO. 27
COUNTY JASPER
JOB NO. J7P2228G
CONTRACT ID.
PROJECT NO.
BRIDGE NO. A8424

DESCRIPTION
DATE

MISSOURI HIGHWAYS AND TRANSPORTATION COMMISSION
105 WEST CAPITOL
JEFFERSON CITY, MO 65102
1-888-ASK-MODOT (1-888-275-6636)

HDR Engineering, Inc.
4435 Main Street
Suite 1000
Kansas City, MO 64111-1856
816-360-2700
Certificate of Authority: 000856

Detailed September 2016
Checked October 2016

Note: This drawing is not to scale. Follow dimensions.

BILL OF REINFORCING STEEL

NO. REQ'D.	MARK NO. SIZE	MARK NO. MARK	LOCATION	EPOXY (E)	SHAPE NO.	STIRRUP (S)	SUBSTR. (X)	VARIES (V)	NO. EACH	B FT. IN.	C FT. IN.	D FT. IN.	E FT. IN.	F FT. IN.	H FT. IN.	K FT. IN.	NOMINAL LENGTH FT. IN.	ACTUAL LENGTH FT. IN.	WEIGHT LBS.
			BARRIER CURB																
72	5	C1	SLIP FORM	E	20					10 3.000							10 3	10 3	770
812	5	R1	BARRIER CURB	E	26					3 3.000	5.750	3 3.625			3 3.000	6.875	6 10	6 10	5787
812	5	R2	BARRIER CURB	E	19	S				20.000	10.000						2 6	2 5	2047
812	5	R3	BARRIER CURB	E	27	S					10.000	15.250	6.000	12.000	15.000	3.000	3 7	3 5	2894
160	5	R5	BARRIER CURB	E	20					9 9.000							9 9	9 9	1627
40	5	R6	BARRIER CURB	E	20					58 6.000							58 6	58 6	2441
120	5	R7	BARRIER CURB	E	20					33 11.000							33 11	33 11	4245
24	5	K1	BARRIER CURB	E	19	S		V	4	2 4.250	7.250						3 0	2 11	
										2 6.750	6.875						3 2	3 1	74
24	5	K2	BARRIER CURB	E	15	S		V	4	7.250	20.125	8.500	1.625	8.375	7.125	1.375	3 0	2 11	
										6.875	2 7.250	0.000	0.000	0.000	6.750	1.250	3 2	3 1	75
4	5	K3	BARRIER CURB	E	19	S				2 7.250	6.750						3 2	3 1	13
4	5	K4	BARRIER CURB	E	15	S				6.750	2 7.750				6.625	1.250	3 3	3 2	13
16	5	K5	BARRIER CURB	E	19	S		V	4	2 7.750	6.625						3 2	3 1	
										2 10.000	6.250						3 4	3 3	53
16	5	K6	BARRIER CURB	E	15	S		V	4	6.625	2 8.375				6.500	1.250	3 3	3 2	
										6.250	2 10.625				6.125	1.125	3 5	3 4	54
12	5	K7	BARRIER CURB	E	19	S		V	4	2 11.500	5.875						3 5	3 4	
										3 2.500	5.375						3 8	3 7	43
12	5	K8	BARRIER CURB	E	15	S		V	4	6.000	3 0.125				5.875	1.125	3 6	3 5	
										5.375	3 3.250				5.250	1.000	3 9	3 8	44
24	5	K9	BARRIER CURB	E	19	S				3 3.000	5.250						3 8	3 7	90
24	5	K10	BARRIER CURB	E	15	S				5.250	3 3.750				5.125	1.000	3 9	3 8	92
24	5	K11	BARRIER CURB	E	27	S		V	4	3 4.125	9.750	6.750	2 9.500		6.625	1.250	7 6	7 4	
										3 4.125	9.750	17.000	23.375		16.750	3.250	7 6	7 4	183
56	5	K12	BARRIER CURB	E	27	S				3 4.125	9.750	17.000	23.375		16.750	3.250	7 6	7 4	428
40	5	K14	BARRIER CURB	E	20					12 9.000							12 9	12 9	532
8	5	K15	BARRIER CURB	E	20					12 2.000							12 2	12 2	102
8	5	K16	BARRIER CURB	E	20					9 2.000							9 2	9 2	76
8	5	K17	BARRIER CURB	E	20					6 2.000							6 2	6 2	51

BILL OF REINFORCING STEEL

NO. REQ'D.	MARK NO. SIZE	MARK NO. MARK	LOCATION	EPOXY (E)	SHAPE NO.	STIRRUP (S)	SUBSTR. (X)	VARIES (V)	NO. EACH	B FT. IN.	C FT. IN.	D FT. IN.	E FT. IN.	F FT. IN.	H FT. IN.	K FT. IN.	NOMINAL LENGTH FT. IN.	ACTUAL LENGTH FT. IN.	WEIGHT LBS.
			BAR SIZE SUMMARY																
			TOTALS																
4																			7004
4				E															1060
5																			4148
5				E															30619
6																			9296
6				E															58366
7																			2011
7				E															33140
8																			790
8				E															33853
			SLAB ON CONCRETE I-GIRDER																
4																			598
4				E															1060
5																			1820
5				E															8885
6																			5360
6				E															58366
7																			2011
7				E															33140
8																			790
8				E															33853
			REINFORCING STEEL (BRIDGES)																
4																			6406
5																			2328
6																			3936
			BARRIER CURB																
5				E															20964
			SLIP FORM OPTION																
5				E															770

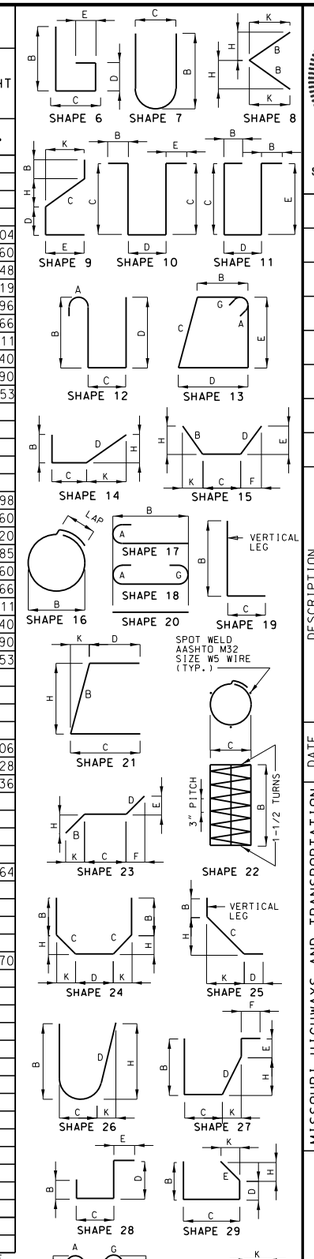

BENDING DIAGRAMS

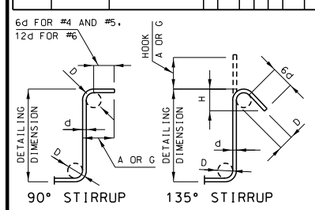

STIRRUP HOOK DIMENSIONS				
GRADES 40 - 50 - 60 KSI				
BAR SIZE	D (IN.)	90° HOOK	135° HOOK	
		HOOK A OR G	HOOK A OR G	APPROX. H
#4	2"	4 1/2"	4 1/2"	3"
#5	2 1/2"	6"	5 1/2"	3 3/4"
#6	4 1/2"	12"	8"	4 1/2"

NOTE: UNLESS OTHERWISE NOTED, DIAMETER "D" IS THE SAME FOR ALL BENDS AND HOOKS ON A BAR.

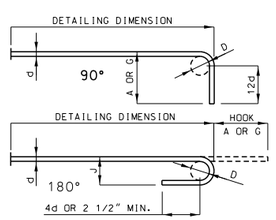

END HOOK DIMENSIONS				
BAR SIZE	D (IN.)	ALL GRADES		
		180° HOOKS		90° HOOKS
		A OR G	J	A OR G
#3	2 1/4"	5"	3"	6"
#4	3"	6"	4"	8"
#5	3 3/4"	7"	5"	10"
#6	4 1/2"	8"	6"	12"
#7	5 1/4"	10"	7"	14"
#8	6"	11"	8"	16"
#9	9 1/2"	15"	11 3/4"	19"
#10	10 3/4"	17"	13 1/4"	22"
#11	12"	19"	14 3/4"	2'-0"
#14	18 1/4"	2'-3"	21 3/4"	2'-7"

NOTE:
ALL STANDARD HOOKS AND BENDS OTHER THAN 180 DEGREE ARE TO BE BENT WITH SAME PROCEDURE AS FOR 90 DEGREE STANDARD HOOKS.
HOOKS AND BENDS SHALL BE IN ACCORDANCE WITH THE PROCEDURES AS SHOWN ON THIS SHEET.
E = EPOXY COATED REINFORCEMENT.
S = STIRRUP.
X = BAR IS INCLUDED IN SUBSTRUCTURE QUANTITIES.
V = BAR DIMENSIONS VARY IN EQUAL INCREMENTS BETWEEN DIMENSIONS SHOWN ON THIS LINE AND THE FOLLOWING LINE.
NO. EA. = NUMBER OF BARS OF EACH LENGTH.
NOMINAL LENGTHS ARE BASED ON OUT TO OUT DIMENSIONS SHOWN IN BENDING DIAGRAMS AND ARE LISTED FOR FABRICATORS USE. (NEAREST INCH)
ACTUAL LENGTHS ARE MEASURED ALONG CENTERLINE BAR TO THE NEAREST INCH.
PAYWEIGHTS ARE BASED ON ACTUAL LENGTHS.
FOUR ANGLE OR CHANNEL SPACERS ARE REQUIRED FOR EACH COLUMN SPIRAL. SPACERS ARE TO BE PLACED ON INSIDE OF SPIRALS. LENGTH AND WEIGHT OF COLUMN SPIRALS DO NOT INCLUDE SPLICES OR SPACERS.
REINFORCING STEEL (GRADE 60) FY = 60,000 PSI.

STATE OF MISSOURI
DAVID GRAHAM BARRETT
NUMBER PE-2006002787
PROFESSIONAL ENGINEER

THIS SHEET HAS BEEN SIGNED, SEALED AND DATED ELECTRONICALLY

DATE PREPARED 11/1/2016

ROUTE	STATE
96	MO
DISTRICT	SHEET NO.
BR	28

COUNTY: JASPER
JOB NO.: J7P2228G
CONTRACT ID.:
PROJECT NO.:
BRIDGE NO.: A8424

DATE	DESCRIPTION

MISSOURI HIGHWAYS AND TRANSPORTATION COMMISSION
105 WEST CAPITOL
JEFFERSON CITY, MO 65102
1-888-ASK-MODOT (1-888-275-6636)

HDR Engineering, Inc.
4435 Main Street
Suite 1000
Kansas City, MO 64111-1856
816-360-2700
Certificate of Authority: 000856

Detailed September 2016
Checked October 2016

Note: This drawing is not to scale. Follow dimensions.

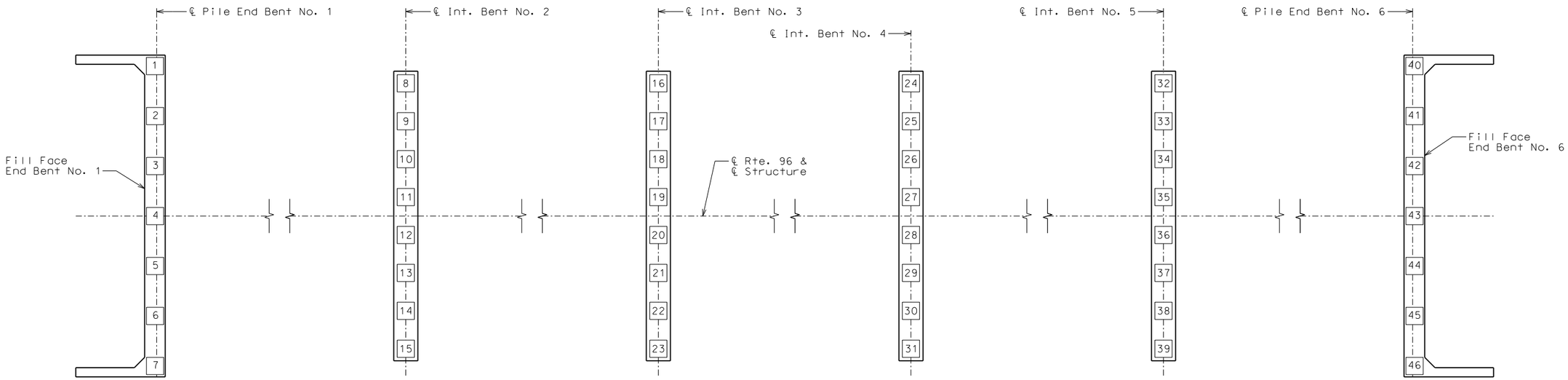

PART PLAN SHOWING PILE NUMBERING FOR RECORDING AS-BUILT PILE DATE

AS-BUILT PILE DATA

Pile No.	Length In Place (Ft.)	Computed Nominal Pile Axial Compression Resistance (Kips)	Remarks
			End Bent No. 1
1			
2			
3			
4			
5			
6			
7			

AS-BUILT PILE DATA

Pile No.	Length In Place (Ft.)	Computed Nominal Pile Axial Compression Resistance (Kips)	Remarks
			Intermediate Bent No. 2
8			
9			
10			
11			
12			
13			
14			
15			

AS-BUILT PILE DATA

Pile No.	Length In Place (Ft.)	Computed Nominal Pile Axial Compression Resistance (Kips)	Remarks
			Intermediate Bent No. 3
16			
17			
18			
19			
20			
21			
22			
23			

AS-BUILT PILE DATA

Pile No.	Length In Place (Ft.)	Computed Nominal Pile Axial Compression Resistance (Kips)	Remarks
			Intermediate Bent No. 4
24			
25			
26			
27			
28			
29			
30			
31			

AS-BUILT PILE DATA

Pile No.	Length In Place (Ft.)	Computed Nominal Pile Axial Compression Resistance (Kips)	Remarks
			Intermediate Bent No. 5
32			
33			
34			
35			
36			
37			
38			
39			

AS-BUILT PILE DATA

Pile No.	Length In Place (Ft.)	Computed Nominal Pile Axial Compression Resistance (Kips)	Remarks
			End Bent No. 6
40			
41			
42			
43			
44			
45			
46			

Note:
Indicate in remarks column:
A. Pile type and grade
B. Batter
C. Driven to practical refusal

This sheet to be completed by MoDOT construction personnel.

AS-BUILT PILE DATA

Detailed September 2016
Checked October 2016

Note: This drawing is not to scale. Follow dimensions.

STATE OF MISSOURI
DAVID GRAHAM BARRETT
NUMBER PE-2006002787
PROFESSIONAL ENGINEER

THIS SHEET HAS BEEN SIGNED, SEALED AND DATED ELECTRONICALLY

DATE PREPARED	11/1/2016
ROUTE	96
STATE	MO
DISTRICT	BR
SHEET NO.	29
COUNTY	JASPER
JOB NO.	J7P2228G
CONTRACT ID.	
PROJECT NO.	
BRIDGE NO.	A8424

DATE	DESCRIPTION

MISSOURI HIGHWAYS AND TRANSPORTATION COMMISSION
105 WEST CAPITOL
JEFFERSON CITY, MO 65102
1-888-ASK-MODOT (1-888-275-6636)

HDR Engineering, Inc.
4435 Main Street
Suite 1000
Kansas City, MO 64111-1856
816-360-2700
Certificate of Authority: 000856

LOG OF BORING NO. B-01

Project Description: **Jasper County Bridge A8424**
Jasper County, MO

TSi Geotechnical
8248 NW 101st Terrace, #5
Kansas City, MO 64153
(816) 599-7965 (816) 599-7967 FAX

Surface El.: **Approx. 953**
Location: **See Site and Boring Location Plan**

Depth, feet	Samples	Sample #	Graphic Log	MATERIAL DESCRIPTION	Recovery %	RQD	Penetration Blows Per 6 inches	Hand Penetrometer TSF	Undrained Shear Strength, TSF	Unit Dry Weight, lb/cu ft	Water Content, %	Liquid Limit	Plastic Limit	Plasticity Index
				Asphaltic concrete (3.0")										
				Portland cement concrete (14.0")										
				Dark gray and brown, lean CLAY (FILL)										
5		SS-1			100		1 1 2				23			
10		ST-2			71			1.50						
				Dark gray, lean CLAY (CL)										
15		SS-3			100		1 2 3				26			
20		SS-4			100		2 3 2				25			
				Dark gray, clayey GRAVEL (GC) (18% passing No. 200 sieve)										
25		SS-5			61		4 7 14				15			

Completion Depth: 39.00
Date Boring Started: 6/20/16
Date Boring Completed: 6/20/16
Engineer/Geologist: TW
Project No.: 20162004

Remarks: Boring drilled with CME-550 using FA and auto SPT. Groundwater encountered at 23.5 feet during drilling. Auger refusal encounterd at 29.0 feet.

The stratification lines represent approximate strata boundaries. In situations, the transition may be gradual.

Continued Next Page

KC LOG WITH LAB JASPER COUNTY BRIDGE A8424.GPJ 9/31/16

LOG OF BORING NO. B-01

Project Description: **Jasper County Bridge A8424**
Jasper County, MO

TSi Geotechnical
8248 NW 101st Terrace, #5
Kansas City, MO 64153
(816) 599-7965 (816) 599-7967 FAX

Surface El.: **Approx. 953**
Location: **See Site and Boring Location Plan**

Depth, feet	Samples	Sample #	Graphic Log	MATERIAL DESCRIPTION	Recovery %	RQD	Penetration Blows Per 6 inches	Hand Penetrometer TSF	Undrained Shear Strength, TSF	Unit Dry Weight, lb/cu ft	Water Content, %	Liquid Limit	Plastic Limit	Plasticity Index
				Dark gray, clayey GRAVEL (GC)*(continued)*										
		SS-6			83		50/1"				23			
				LIMESTONE, gray, moderately hard, moderately weathered										
30		RUN1		LIMESTONE, gray, hard, moderately weathered, thin bedded, finely crystalline, with chert nodules	100	68								
35		RUN2			100	80								
				Boring terminated at 39.0 ft.										
40														
45														
50														

Completion Depth: 39.00
Date Boring Started: 6/20/16
Date Boring Completed: 6/20/16
Engineer/Geologist: TW
Project No.: 20162004

Remarks: Boring drilled with CME-550 using FA and auto SPT. Groundwater encountered at 23.5 feet during drilling. Auger refusal encounterd at 29.0 feet.

The stratification lines represent approximate strata boundaries. In situations, the transition may be gradual.

KC LOG WITH LAB JASPER COUNTY BRIDGE A8424.GPJ 9/31/16

Note:
For locations of borings, see Sheet No. 1.

BORING DATA

Detailed September 2016
Checked October 2016

Note: This drawing is not to scale. Follow dimensions.

STATE OF MISSOURI
DAVID GRAHAM BARRETT
NUMBER PE-2006002787
PROFESSIONAL ENGINEER

THIS SHEET HAS BEEN SIGNED, SEALED AND DATED ELECTRONICALLY

DATE PREPARED	
11/1/2016	
ROUTE 96	STATE MO
DISTRICT BR	SHEET NO. 30
COUNTY JASPER	
JOB NO. J7P2228G	
CONTRACT ID.	
PROJECT NO.	
BRIDGE NO. A8424	

DESCRIPTION	DATE

MISSOURI HIGHWAYS AND TRANSPORTATION COMMISSION
105 WEST CAPITOL
JEFFERSON CITY, MO 65102
1-888-ASK-MODOT (1-888-275-6636)

HDR Engineering, Inc.
4435 Main Street
Suite 1000
Kansas City, MO 64111-1856
816-360-2700
Certificate of Authority: 000856

LOG OF BORING NO. B-02

Project Description: **Jasper County Bridge A8424**
Jasper County, MO

TSi Geotechnical
8248 NW 101st Terrace, #5
Kansas City, MO 64153
(816) 599-7965 (816) 599-7967 FAX

Surface El.: **Approx. 939**
Location: **See Site and Boring Location Plan**

Depth, feet	Samples	Sample #	Graphic Log	MATERIAL DESCRIPTION	Recovery %	RQD	Penetration Blows Per 6 inches	Hand Penetrometer TSF	Undrained Shear Strength, TSF	Unit Dry Weight, lb/cu ft	Water Content, %	Liquid Limit	Plastic Limit	Plasticity Index
				Brown, CLAY, with roots										
5		ST-1		Gray with brown, lean CLAY (CL), trace fine sand	63			2.50	1.10	105	23	41	16	25
10		SS-2		Black, clayey SAND (SC), with gravel	39		3 6 6				22			
				LIMESTONE, gray, hard Boring terminated at 11.4 ft.										
15														
20														
25														

Completion Depth: 11.40
Date Boring Started: 6/10/16
Date Boring Completed: 6/10/16
Engineer/Geologist: TW
Project No.: 20162004

Remarks: Boring drilled with CME-550 using FA and auto SPT. Groundwater encountered at 5.5 feet during drilling. Auger refusal encountered at 11.4 feet.

The stratification lines represent approximate strata boundaries.
In situations, the transition may be gradual.

KCLOG WITH LAB JASPER COUNTY BRIDGE A8424.GPJ 8/31/16

LOG OF BORING NO. B-03

Project Description: **Jasper County Bridge A8424**
Jasper County, MO

TSi Geotechnical
8248 NW 101st Terrace, #5
Kansas City, MO 64153
(816) 599-7965 (816) 599-7967 FAX

Surface El.: **938.7**
Location: **See Site and Boring Location Plan**

Depth, feet	Samples	Sample #	Graphic Log	MATERIAL DESCRIPTION	Recovery %	RQD	Penetration Blows Per 6 inches	Hand Penetrometer TSF	Undrained Shear Strength, TSF	Unit Dry Weight, lb/cu ft	Water Content, %	Liquid Limit	Plastic Limit	Plasticity Index
				Brown, fat CLAY, with roots and organics										
				Gray with brown, fat CLAY (CH)										
5		SS-1			100		3 3 5							
10		SS-2		Brown, clayey GRAVEL (GC) with sand	56		6 7 6							
		RUN1		LIMESTONE, gray, hard, moderately weathered, thin bedded, finely crystalline with chert nodules	100	35								
15		RUN2			100	60								
20		RUN3			100	82								
25														

Completion Depth: 41.16
Date Boring Started: 6/15/16
Date Boring Completed: 6/16/16
Engineer/Geologist: TW
Project No.: 20162004

Remarks: Boring drilled with CME-550 using FA and auto SPT. Groundwater encountered at 8.5 feet during drilling. Auger refusal encountered at 10.2 feet.

The stratification lines represent approximate strata boundaries.
In situations, the transition may be gradual.

Continued Next Page

KCLOG WITH LAB JASPER COUNTY BRIDGE A8424.GPJ 8/31/16

Note:
For locations of borings, see Sheet No. 1.

BORING DATA

Detailed September 2016
Checked October 2016

Note: This drawing is not to scale. Follow dimensions.

STATE OF MISSOURI
DAVID GRAHAM BARRETT
NUMBER PE-2006002787
PROFESSIONAL ENGINEER

THIS SHEET HAS BEEN SIGNED, SEALED AND DATED ELECTRONICALLY

DATE PREPARED	
11/1/2016	
ROUTE 96	STATE MO
DISTRICT BR	SHEET NO. 31
COUNTY JASPER	
JOB NO. J7P2228G	
CONTRACT ID.	
PROJECT NO.	
BRIDGE NO. A8424	

DESCRIPTION	DATE

MISSOURI HIGHWAYS AND TRANSPORTATION COMMISSION
105 WEST CAPITOL
JEFFERSON CITY, MO 65102
1-888-ASK-MODOT (1-888-275-6636)

HDR Engineering, Inc.
4435 Main Street
Suite 1000
Kansas City, MO 64111-1856
816-360-2700
Certificate of Authority: 000856

LOG OF BORING NO. B-03

Project Description: **Jasper County Bridge A8424**
Jasper County, MO

TSi Geotechnical
8248 NW 101st Terrace, #5
Kansas City, MO 64153
(816) 599-7965 (816) 599-7967 FAX

Surface El.: **938.7**
Location: **See Site and Boring Location Plan**

Depth, feet	Samples	Sample #	Graphic Log	MATERIAL DESCRIPTION	Recovery %	RQD	Penetration Blows Per 6 inches	Hand Penetrometer TSF	Undrained Shear Strength, TSF	Unit Dry Weight, lb/cu ft	Water Content, %	Liquid Limit	Plastic Limit	Plasticity Index
		RUN4		LIMESTONE, gray, hard, moderately weathered, thin bedded, finely crystalline with chert nodules*(continued)*	100	92								
30		RUN5			100	93								
35		RUN6			100	100								
40		RUN7			100	71								
				Boring terminated at 41.2 ft.										
45														
50														

Completion Depth: 41.16
Date Boring Started: 6/15/16
Date Boring Completed: 6/16/16
Engineer/Geologist: TW
Project No.: 20162004

Remarks: Boring drilled with CME-550 using FA and auto SPT. Groundwater encountered at 8.5 feet during drilling. Auger refusal encountered at 10.2 feet.

The stratification lines represent approximate strata boundaries.
In situations, the transition may be gradual.

KC LOG WITH LAB JASPER COUNTY BRIDGE A8424.GPJ 8/31/16

LOG OF BORING NO. B-04

Project Description: **Jasper County Bridge A8424**
Jasper County, MO

TSi Geotechnical
8248 NW 101st Terrace, #5
Kansas City, MO 64153
(816) 599-7965 (816) 599-7967 FAX

Surface El.: **Approx. 942**
Location: **See Site and Boring Location Plan**

Depth, feet	Samples	Sample #	Graphic Log	MATERIAL DESCRIPTION	Recovery %	RQD	Penetration Blows Per 6 inches	Hand Penetrometer TSF	Undrained Shear Strength, TSF	Unit Dry Weight, lb/cu ft	Water Content, %	Liquid Limit	Plastic Limit	Plasticity Index
				Brown, fat CLAY, with roots and organics										
				Brown gray, fat CLAY (CH)										
5		ST-1			58			3.00						
10		SS-2		Brown, clayey SAND (SC) with gravel	67		5 6 6							
15		RUN1		LIMESTONE, gray, hard, moderately weathered, thin bedded, finely crystalline, pitted, with chert nodules	100	83								
20		RUN2		- slightly weathered below 17.9 ft.	97	68								
		RUN3			99	89								
25														

Completion Depth: 44.30
Date Boring Started: 6/14/16
Date Boring Completed: 6/14/16
Engineer/Geologist: TW
Project No.: 20162004

Remarks: Boring drilled with CME-550 using FA and auto SPT. Groundwater encountered at 6.0 feet during drilling. Auger refusal encountered at 12.5 feet.

The stratification lines represent approximate strata boundaries.
In situations, the transition may be gradual.

Continued Next Page

KC LOG WITH LAB JASPER COUNTY BRIDGE A8424.GPJ 8/31/16

STATE OF MISSOURI
DAVID GRAHAM BARRETT
NUMBER PE-2006002787
PROFESSIONAL ENGINEER

THIS SHEET HAS BEEN SIGNED, SEALED AND DATED ELECTRONICALLY

DATE PREPARED	
11/1/2016	
ROUTE 96	STATE MO
DISTRICT BR	SHEET NO. 32
COUNTY JASPER	
JOB NO. J7P2228G	
CONTRACT ID.	
PROJECT NO.	
BRIDGE NO. A8424	

DESCRIPTION	DATE
.	.
.	.
.	.
.	.
.	.
.	.

MISSOURI HIGHWAYS AND TRANSPORTATION COMMISSION
105 WEST CAPITOL
JEFFERSON CITY, MO 65102
1-888-ASK-MODOT (1-888-275-6636)

HDR Engineering, Inc.
4435 Main Street
Suite 1000
Kansas City, MO 64111-1856
816-360-2700
Certificate of Authority: 000856

Note:
For locations of borings, see Sheet No. 1.

BORING DATA

Detailed September 2016
Checked October 2016

Note: This drawing is not to scale. Follow dimensions.

LOG OF BORING NO. B-04

Project Description: **Jasper County Bridge A8424**
Jasper County, MO

TSi Geotechnical
8248 NW 101st Terrace, #5
Kansas City, MO 64153
(816) 599-7965 (816) 599-7967 FAX

Surface El.: **Approx. 942**
Location: **See Site and Boring Location Plan**

Depth, feet	Samples	Sample #	Graphic Log	MATERIAL DESCRIPTION	Recovery %	RQD	Penetration Blows Per 6 inches	Hand Penetrometer TSF	Undrained Shear Strength, TSF	Unit Dry Weight, lb/cu ft	Water Content, %	Liquid Limit	Plastic Limit	Plasticity Index
		RUN4		LIMESTONE, gray, hard, moderately weathered, thin bedded, finely crystalline, pitted, with chert nodules *(continued)* - slightly weathered below 25.6 ft.	23	23								
		RUN5		- fractured from 27.5 ft. to 29.6 ft.	83	0								
30		RUN6			100	60								
35		RUN7			100	97								
40		RUN8			100	100								
45				Boring terminated at 44.3 ft.										
50														

Completion Depth:	44.30	Remarks: Boring drilled with CME-550 using FA and auto SPT. Groundwater encountered at 6.0 feet during drilling. Auger refusal encountered at 12.5 feet.
Date Boring Started:	6/14/16	
Date Boring Completed:	6/14/16	
Engineer/Geologist:	TW	
Project No.:	20162004	

The stratification lines represent approximate strata boundaries.
In situations, the transition may be gradual.

KC LOG WITH LAB JASPER COUNTY BRIDGE A8424.GPJ 8/31/16

LOG OF BORING NO. B-05

Project Description: **Jasper County Bridge A8424**
Jasper County, MO

TSi Geotechnical
8248 NW 101st Terrace, #5
Kansas City, MO 64153
(816) 599-7965 (816) 599-7967 FAX

Surface El.: **940.2**
Location: **See Site and Boring Location Plan**

Depth, feet	Samples	Sample #	Graphic Log	MATERIAL DESCRIPTION	Recovery %	RQD	Penetration Blows Per 6 inches	Hand Penetrometer TSF	Undrained Shear Strength, TSF	Unit Dry Weight, lb/cu ft	Water Content, %	Liquid Limit	Plastic Limit	Plasticity Index
				Brown, CLAY, with roots										
				Gray with brown, lean CLAY (CL), trace fine sand										
5		ST-1			75			2.00	0.96	101	24	41	17	24
10		SS-2		- black, trace fine gravel below 8.5 ft.	44		3 8 6				21			
				LIMESTONE, gray, hard										
				Boring terminated at 12.0 ft.										
15														
20														
25														

Completion Depth:	12.00	Remarks: Boring drilled with CME-550 using FA and auto SPT. Groundwater encountered at 3.6 feet during drilling. Auger refusal encountered at 12.0 feet.
Date Boring Started:	6/10/16	
Date Boring Completed:	6/10/16	
Engineer/Geologist:	TW	
Project No.:	20162004	

The stratification lines represent approximate strata boundaries.
In situations, the transition may be gradual.

KC LOG WITH LAB JASPER COUNTY BRIDGE A8424.GPJ 8/31/16

Note:
For locations of borings, see Sheet No. 1.

BORING DATA

Detailed September 2016
Checked October 2016

Note: This drawing is not to scale. Follow dimensions.

STATE OF MISSOURI
DAVID GRAHAM BARRETT
NUMBER PE-2006002787
PROFESSIONAL ENGINEER

THIS SHEET HAS BEEN SIGNED, SEALED AND DATED ELECTRONICALLY

DATE PREPARED	
11/1/2016	
ROUTE 96	STATE MO
DISTRICT BR	SHEET NO. 33
COUNTY JASPER	
JOB NO. J7P2228G	
CONTRACT ID.	
PROJECT NO.	
BRIDGE NO. A8424	

DATE	DESCRIPTION

MISSOURI HIGHWAYS AND TRANSPORTATION COMMISSION
105 WEST CAPITOL
JEFFERSON CITY, MO 65102
1-888-ASK-MODOT (1-888-275-6636)

HDR Engineering, Inc.
4435 Main Street
Suite 1000
Kansas City, MO 64111-1856
816-360-2700
Certificate of Authority: 000856

LOG OF BORING NO. B-06

Project Description: **Jasper County Bridge A8424**
Jasper County, MO

TSi Geotechnical
8248 NW 101st Terrace, #5
Kansas City, MO 64153
(816) 599-7965 (816) 599-7967 FAX

Surface El.: **Approx. 939**
Location: **See Site and Boring Location Plan**

Depth, feet	Samples	Sample #	Graphic Log	MATERIAL DESCRIPTION	Recovery %	RQD	Penetration Blows Per 6 Inches	Hand Penetrometer TSF	Undrained Shear Strength, TSF	Unit Dry Weight, lb/cu ft.	Water Content, %	Liquid Limit	Plastic Limit	Plasticity Index
				Brown, CLAY, with roots										
5		ST-1		Gray with brown, fat CLAY (CH), with fine to coarse sand	67			2.50	1.33	105	23			
10		SS-2		Gray, well-graded GRAVEL (GW), with sand (0% passing No. 200 sieve)	72		3 4 5							
				LIMESTONE, gray, weathered										
				Boring terminated at 12.0 ft.										
15														
20														
25														

Completion Depth: 12.00
Date Boring Started: 6/10/16
Date Boring Completed: 6/10/16
Engineer/Geologist: TW
Project No.: 20162004

Remarks: Boring drilled with CME-550 using FA and auto SPT. Groundwater encountered at 5.0 feet during drilling. Auger refusal encountered at 12.0 feet.

The stratification lines represent approximate strata boundaries. In situations, the transition may be gradual.

KC LOG WITH LAB JASPER COUNTY BRIDGE A8424.GPJ 9/31/16

LOG OF BORING NO. B-07

Project Description: **Jasper County Bridge A8424**
Jasper County, MO

TSi Geotechnical
8248 NW 101st Terrace, #5
Kansas City, MO 64153
(816) 599-7965 (816) 599-7967 FAX

Surface El.: **939.9**
Location: **See Site and Boring Location Plan**

Depth, feet	Samples	Sample #	Graphic Log	MATERIAL DESCRIPTION	Recovery %	RQD	Penetration Blows Per 6 Inches	Hand Penetrometer TSF	Undrained Shear Strength, TSF	Unit Dry Weight, lb/cu ft.	Water Content, %	Liquid Limit	Plastic Limit	Plasticity Index
				Brown, CLAY, with roots										
5		ST-1		Dark gray, lean CLAY (CL), with gravel	75				0.94	102	25	40	16	24
10		ST-2		Brown, well-graded GRAVEL (SW) with sand (0% passing No. 200 sieve)	46						16			
				LIMESTONE, gray, weathered										
15		RUN1		LIMESTONE, gray, hard, finely crystalline, thin bedded, slightly weathered - trace chert below 12.4 ft. - possible 2" void at 13.9 ft. - moderately weathered below 14.1 ft. - light gray belfow 14.8 ft.	97	32								
20		RUN2			100	100								
		RUN3			100	100								
25		RUN4			100	92								

Completion Depth: 42.20
Date Boring Started: 6/9/16
Date Boring Completed: 6/9/16
Engineer/Geologist: TW
Project No.: 20162004

Remarks: Boring drilled with CME-550 using FA and auto SPT. Groundwater encountered at 8.2 feet during drilling. Auger refusal encountered at 12.2 feet.

The stratification lines represent approximate strata boundaries. In situations, the transition may be gradual.

Continued Next Page

KC LOG WITH LAB JASPER COUNTY BRIDGE A8424.GPJ 8/31/16

Note:
For locations of borings, see Sheet No. 1.

BORING DATA

STATE OF MISSOURI
DAVID GRAHAM BARRETT
NUMBER PE-2006002787
PROFESSIONAL ENGINEER

THIS SHEET HAS BEEN SIGNED, SEALED AND DATED ELECTRONICALLY

DATE PREPARED	11/1/2016
ROUTE	96
STATE	MO
DISTRICT	BR
SHEET NO.	34
COUNTY	JASPER
JOB NO.	J7P2228G
CONTRACT ID.	
PROJECT NO.	
BRIDGE NO.	A8424

DESCRIPTION
DATE

MISSOURI HIGHWAYS AND TRANSPORTATION COMMISSION
105 WEST CAPITOL
JEFFERSON CITY, MO 65102
1-888-ASK-MODOT (1-888-275-6636)

HDR Engineering, Inc.
4435 Main Street
Suite 1000
Kansas City, MO 64111-1856
816-360-2700
Certificate of Authority: 000856

Detailed September 2016
Checked October 2016

Note: This drawing is not to scale. Follow dimensions.

LOG OF BORING NO. B-07

Project Description: **Jasper County Bridge A8424**
Jasper County, MO

TSi Geotechnical
8248 NW 101st Terrace, #5
Kansas City, MO 64153
(816) 599-7965 (816) 599-7967 FAX

Surface El.: **939.9**
Location: **See Site and Boring Location Plan**

Depth, feet	Samples	Sample #	Graphic Log	MATERIAL DESCRIPTION	Recovery %	RQD	Penetration Blows Per 6 inches	Hand Penetrometer TSF	Undrained Shear Strength, TSF	Unit Dry Weight, lb/cu ft	Water Content, %	Liquid Limit	Plastic Limit	Plasticity Index
				LIMESTONE, gray, hard, finely crystalline, thin bedded, slightly weathered*(continued)*										
30		RUN5			100	97								
				- slightly weathered below 32.2 ft. - shale seam at 32.6 ft.										
35		RUN6			100	97								
40		RUN7			100	100								
				Boring terminated at 42.2 ft.										
45														
50														

Completion Depth: 42.20
Date Boring Started: 6/9/16
Date Boring Completed: 6/9/16
Engineer/Geologist: TW
Project No.: 20162004

Remarks: Boring drilled with CME-550 using FA and auto SPT. Groundwater encountered at 8.2 feet during drilling. Auger refusal encountered at 12.2 feet.

The stratification lines represent approximate strata boundaries. In situations, the transition may be gradual.

KC LOG WITH LAB JASPER COUNTY BRIDGE A8424.GPJ 8/31/16

LOG OF BORING NO. B-08

Project Description: **Jasper County Bridge A8424**
Jasper County, MO

TSi Geotechnical
8248 NW 101st Terrace, #5
Kansas City, MO 64153
(816) 599-7965 (816) 599-7967 FAX

Surface El.: **Approx. 956**
Location: **See Site and Boring Location Plan**

Depth, feet	Samples	Sample #	Graphic Log	MATERIAL DESCRIPTION	Recovery %	RQD	Penetration Blows Per 6 inches	Hand Penetrometer TSF	Undrained Shear Strength, TSF	Unit Dry Weight, lb/cu ft	Water Content, %	Liquid Limit	Plastic Limit	Plasticity Index
				Asphaltic concrete (2.0")										
				Portland cement concrete (12")										
				Brown and gray, lean CLAY (FILL)										
5		SS-1			33		1 1 1				25			
10		ST-2			88									
				Brown, lean CLAY (CL) with sand										
15		SS-3			83		1 2 3				23			
				(85% passing No. 200 sieve)										
20		SS-4			17		1 2 2				23			
				Brown, gravely, clayey SAND (SC)										
25		SS-5			61		5 6 7				22			

Completion Depth: 38.60
Date Boring Started: 6/23/16
Date Boring Completed: 6/23/16
Engineer/Geologist: TW
Project No.: 20162004

Remarks: Boring drilled with CME-550 using FA and auto SPT. Groundwater encountered at 18.0 feet during drilling. Auger refusal encountered at 28.5 feet.

The stratification lines represent approximate strata boundaries. In situations, the transition may be gradual.

Continued Next Page

KC LOG WITH LAB JASPER COUNTY BRIDGE A8424.GPJ 8/31/16

Note:
For locations of borings, see Sheet No. 1.

BORING DATA

STATE OF MISSOURI
DAVID GRAHAM BARRETT
NUMBER PE-2006002787
PROFESSIONAL ENGINEER

THIS SHEET HAS BEEN SIGNED, SEALED AND DATED ELECTRONICALLY

DATE PREPARED	
11/1/2016	
ROUTE 96	STATE MO
DISTRICT BR	SHEET NO. 35
COUNTY JASPER	
JOB NO. J7P2228G	
CONTRACT ID.	
PROJECT NO.	
BRIDGE NO. A8424	

DESCRIPTION	DATE

MISSOURI HIGHWAYS AND TRANSPORTATION COMMISSION
105 WEST CAPITOL
JEFFERSON CITY, MO 65102
1-888-ASK-MODOT (1-888-275-6636)

HDR Engineering, Inc.
4435 Main Street
Suite 1000
Kansas City, MO 64111-1856
816-360-2700
Certificate of Authority: 000856

Detailed September 2016
Checked October 2016

Note: This drawing is not to scale. Follow dimensions.

c:\pwworking\oma\d2236000\B_A8424_035_J7P2228G.dgn 8:25:42 PM 11/1/2016

LOG OF BORING NO. B-08

Project Description: **Jasper County Bridge A8424**
Jasper County, MO

TSi Geotechnical
8248 NW 101st Terrace, #5
Kansas City, MO 64153
(816) 599-7965 (816) 599-7967 FAX

Surface El.: **Approx. 956**
Location: **See Site and Boring Location Plan**

Depth, feet	Samples	Sample #	Graphic Log	MATERIAL DESCRIPTION	Recovery %	RQD	Penetration Blows Per 6 Inches	Hand Penetrometer TSF	Undrained Shear Strength, TSF	Unit Dry Weight, lb/cu ft.	Water Content, %	Liquid Limit	Plastic Limit	Plasticity Index
				Brown, gravely, clayey SAND (SC)*(continued)*										
				LIMESTONE, gray, weathered										
30		RUN1		LIMESTONE, gray, hard, slightly weathered, finely crystalline, thin bedded with chert nodules - vertical fracture from 29.6 ft. to 30.5 ft.	100	50								
		RUN2			97	97								
35		RUN3			100	108								
				Boring terminated at 38.6 ft.										
40														
45														
50														

Completion Depth: 38.60
Date Boring Started: 6/23/16
Date Boring Completed: 6/23/16
Engineer/Geologist: TW
Project No.: 20162004

Remarks: Boring drilled with CME-550 using FA and auto SPT. Groundwater encountered at 18.0 feet during drilling. Auger refusal encountered at 28.5 feet.

The stratification lines represent approximate strata boundaries. In situations, the transition may be gradual.

KC LOG WITH LAB JASPER COUNTY BRIDGE A8424.GPJ 8/31/16

Note:
For locations of borings, see Sheet No. 1.

BORING DATA

Detailed September 2016
Checked October 2016

Note: This drawing is not to scale. Follow dimensions.

STATE OF MISSOURI
DAVID GRAHAM BARRETT
NUMBER PE-2006002787
PROFESSIONAL ENGINEER

THIS SHEET HAS BEEN SIGNED, SEALED AND DATED ELECTRONICALLY

DATE PREPARED 11/1/2016
ROUTE 96 | STATE MO
DISTRICT BR | SHEET NO. 36
COUNTY JASPER
JOB NO. J7P2228G
CONTRACT ID.
PROJECT NO.
BRIDGE NO. A8424

DATE	DESCRIPTION

MISSOURI HIGHWAYS AND TRANSPORTATION COMMISSION
105 WEST CAPITOL
JEFFERSON CITY, MO 65102
1-888-ASK-MODOT (1-888-275-6636)

HDR Engineering, Inc.
4435 Main Street
Suite 1000
Kansas City, MO 64111-1856
816-360-2700
Certificate of Authority: 000856

MISSOURI STATE HIGHWAY DEPARTMENT

FED. ROAD DIST. NO.	STATE	FED. AID PROJ. NO.	FISCAL YEAR	SHEET NO.	TOTAL SHEETS
5	MO.	F-84(9) 56-68	19		

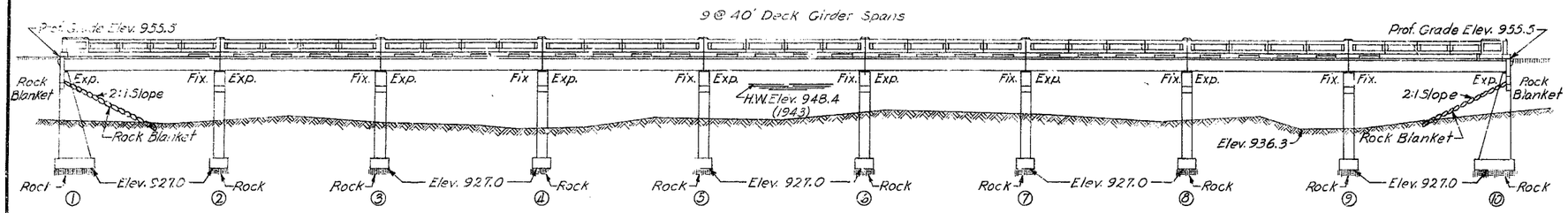

GENERAL ELEVATION

Note: All loose, shelly or disintegrated rock shall be removed and the footings placed on hard, solid, undisturbed rock. If soft rock or shale is encountered, the footings shall be carried at least 18" into and cast against vertical faces of same.

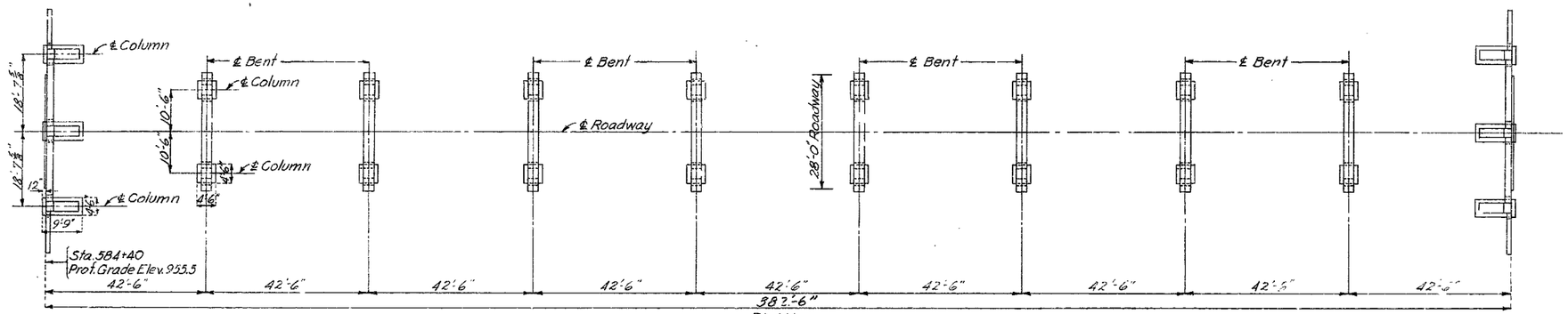

PLAN

BILL OF REINFORCING STEEL-SUBSTRUCTURE

No.	Size	Length	Mark	Location
End Bents No. 1 & 10				
60	#7	6'-3"	D1	Footing
24	#6	8'-6"	F1	Haunch
4	#8	41'-9"	H1	Beam
10	#5	25'-0"	H2	"
8	#11	10'-6"	H3	"
8	#10	41'-9"	H4	"
16	#6	15'-0"	H5	Wing
4	#5	27'-9"	H6	"
4	#6	39'-6"	H7	Beam
6	#5	39'-6"	H8	"
12	#6	17'-3"	T1	Wing
8	#6	16'-6"	T2	
94	#5	10'-0"	U3	Beam
12	#4	2'-3"	U4	"
14	#4	9'-3"	V2	Wing
102	#3	17'-0"	V3	Column
24	#7	22'-6"	V4	"
36	#7	22'-0"	V5	"
24	#4	18'-6"	V6	"
12	#6	10'-0"	F3	Haunch
Int. Bents No. 2 to 9 inc.				
128	#7	6'-3"	D1	Footing
64	#6	8'-6"	F1	Haunch
64	#6	8'-9"	F2	"
40	#10	31'-3"	G1	Beam
16	#6	28'-9"	G2	"
288	#3	3'-9"	P1	Column
272	#5	12'-0"	U1	Beam
32	#5	3'-3"	U2	"
128	#7	21'-9"	V1	Column
48	#11	31'-3"	G3	Beam

Bending Sketches & Cutting Diagrams

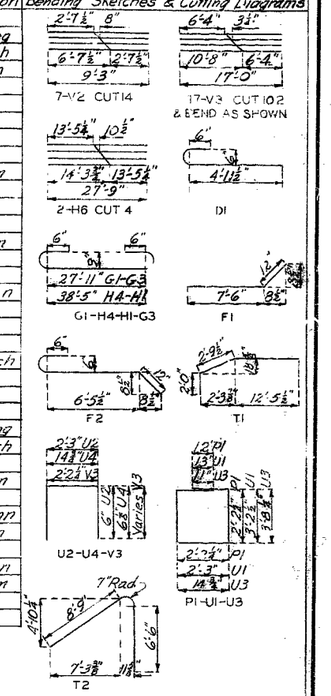

Note: See Sheet No. 3 for Bill of Reinforcement for Superstructure.

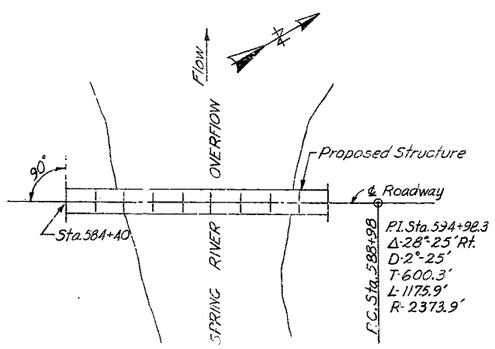

LOCATION SKETCH

GENERAL NOTES:

Design Specifications A.A.S.H.O.-1949
Loading H20-44
Reinforcing Steel Stress 18,000#/□"
Class "B" Concrete Stress 1,000#/□"
All Concrete shall be Class "B" (Air Entrained)
Where joint filler is specified on plans it shall conform with the requirements for Gray Rubber Compound as given in Section 38-19B(2) of the Standard Specifications.
A rubbed surface finish will be required on all exposed surfaces of handrail and curbs and on outside faces of roadway slab.

ESTIMATED QUANTITIES

Items		Substr.	Superstr.	Total
Class 1 Excavation for Structures	Cu. Yds.	20		20
Class 2 Excavation for Structures	Cu. Yds.	708		708
Class "B" Concrete (Handrail)	Cu. Yds.		44.2	44.2
Class "B" Concrete (Except Handrail)	Cu. Yds.	284.6	576.2	860.8
Reinforcing Steel	Lbs.	37,740	183,750	221490
Gray Iron Alloy Castings	Lbs.		7060	7060

Note: Excavation for bridge made above Elev. 940.0 will be paid for as Class 1 Excavation for Structures.
Excavation for bridge made below Elev. 940.0 will be paid for as Class 2 Excavation for Structure.

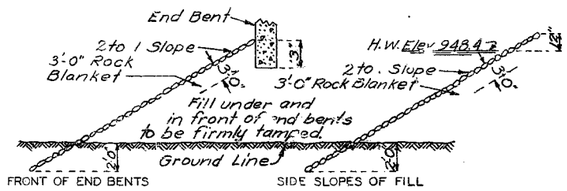

Note: 3'-0" Rock Blanket shall be placed on fills at ends of bridge as shown in sketches. See Road Plans for Quantities

ROCK BLANKET SKETCHES

B.M. #5 Elev. 937.16 Spike & Two Nuts inside 40" Elm 43' Lt. Sta. 576+42 (U.S.G.S. Datum)

BRIDGE OVER SPRING RIVER OVERFLOW

STATE ROAD FROM CARTHAGE EAST

ABOUT 1.7 MILES EAST OF CARTHAGE

PROJECT NO. F-84(9) (R.T.66) **STA.** 584+40

JASPER **COUNTY** **FINISHED**

SUBMITTED BY J. A. Williams BRIDGE ENGINEER DATE 1/13/1953

APPROVED BY Geo. M. Wilson CHIEF ENGINEER DATE 1/13/1953

Std-C410R3
Std-C-6510
L-409

Drawn Oct. 1952 by O.H.P.
Checked Dec. 1952 by C.S.A.

Note: This drawing is not to scale. Follow dimensions.

Sheet No. 1 of 3.

SEE FINAL PLANS BROWN-LINES

260

MISSOURI STATE HIGHWAY DEPARTMENT

FED. ROAD DIST. NO.	STATE	FED. AID PROJ. NO.	FISCAL YEAR	SHEET NO.	TOTAL SHEETS
5	MO.	F-84(8) 57-66	19		

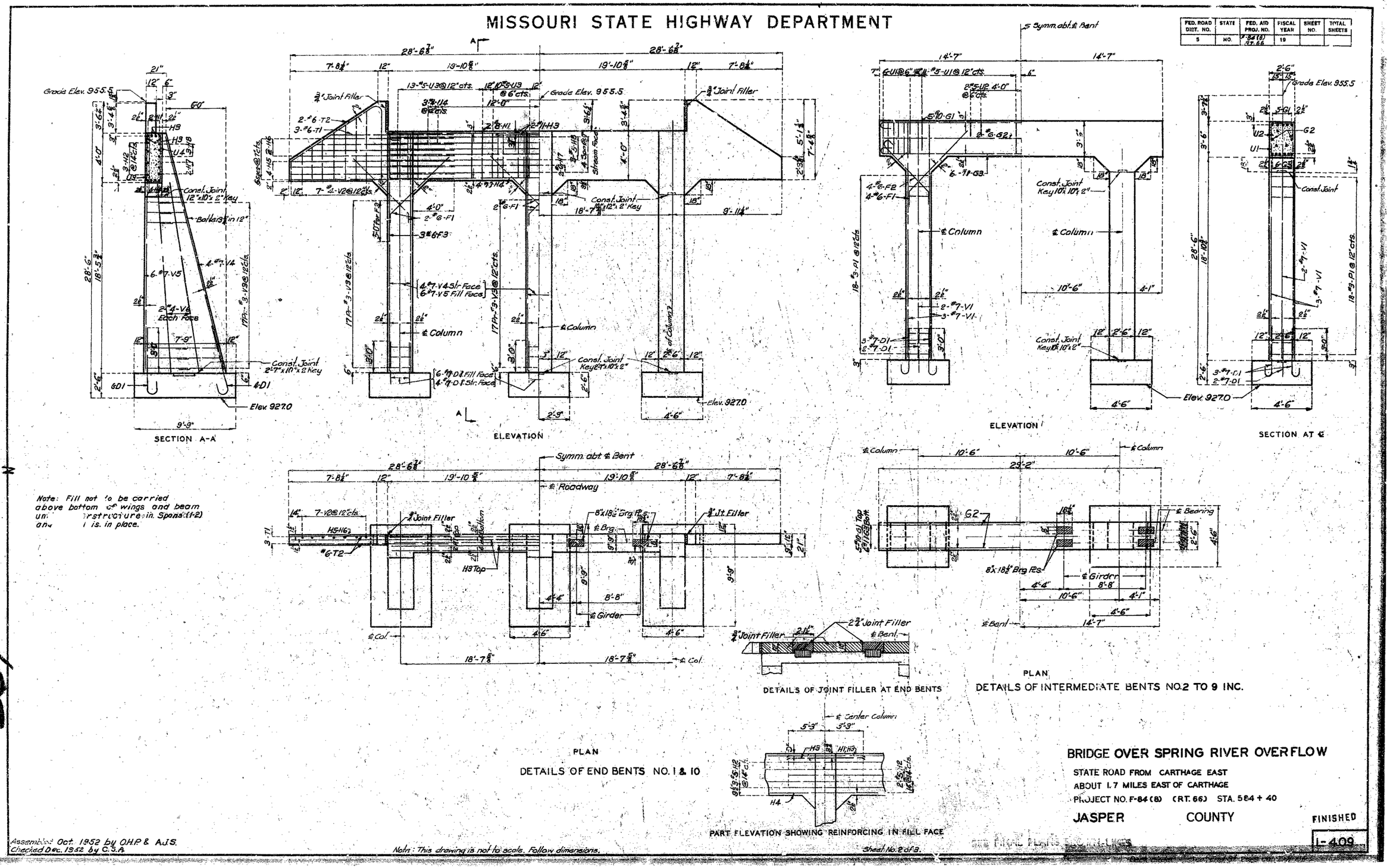

BRIDGE OVER SPRING RIVER OVERFLOW

STATE ROAD FROM CARTHAGE EAST
ABOUT 1.7 MILES EAST OF CARTHAGE
PROJECT NO. F-84 (8) (RT. 66) STA. 584 + 40

JASPER COUNTY

FINISHED

L-409

Assembled Oct. 1952 by O.H.P. & A.J.S.
Checked Dec. 1952 by C.S.A.

Note: This drawing is not to scale. Follow dimensions.

261

MISSOURI STATE HIGHWAY DEPARTMENT

FED ROAD DIST. NO.	STATE	FED. AID PROJ. NO.	FISCAL YEAR	SHEET NO.	TOTAL SHEETS
5	MO	F-84-(8) Rt. 66	19		

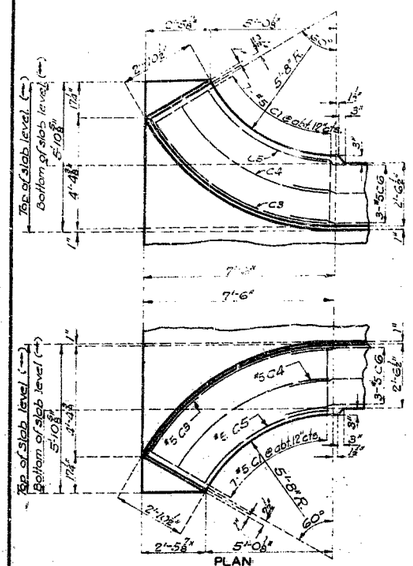

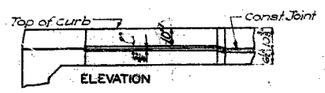

DETAIL OF FLARE CURB

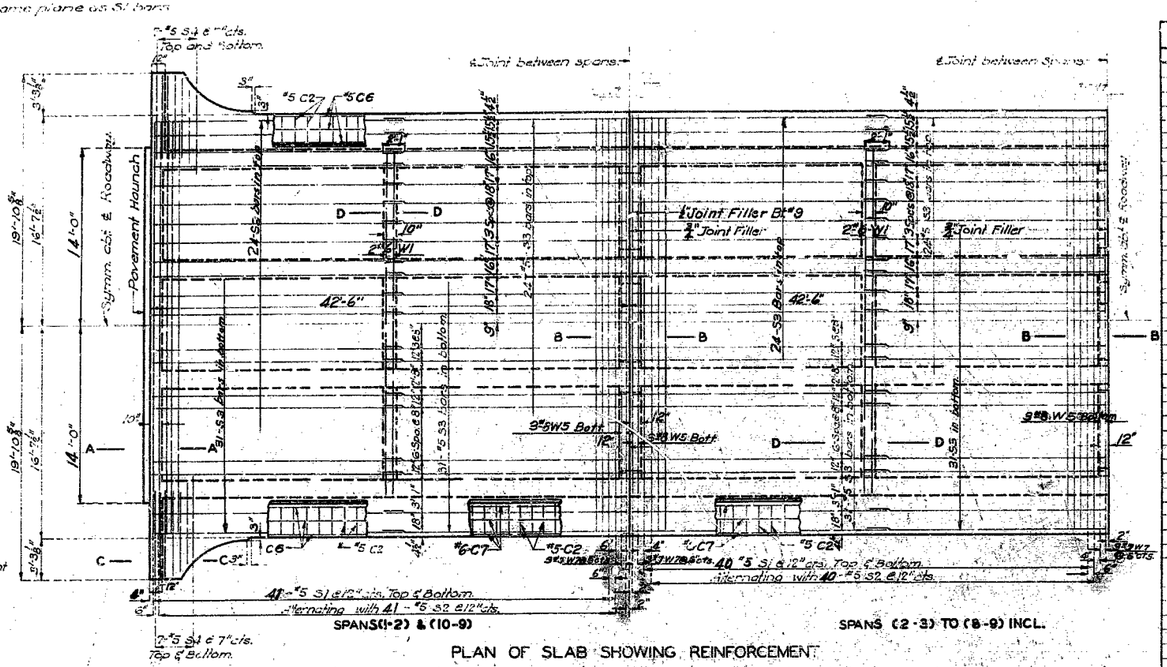

PLAN OF SLAB SHOWING REINFORCEMENT

Note: See Std. C-6610 for handrail, curb and details of bevel for filled joints.

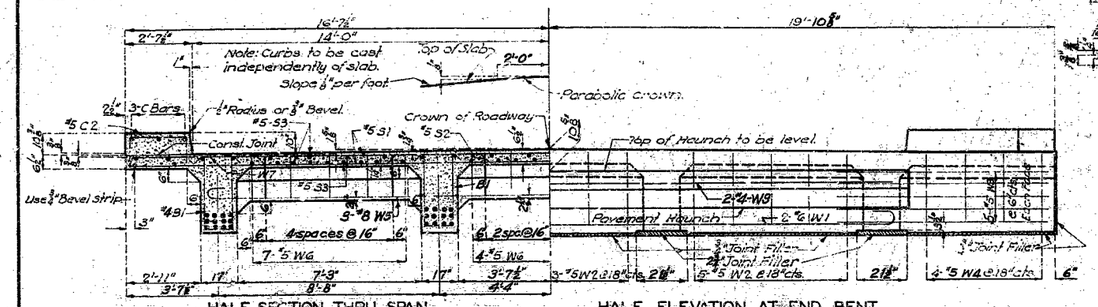

HALF SECTION THRU SPAN
(Near Intermediate Bent)

HALF ELEVATION AT END BENT

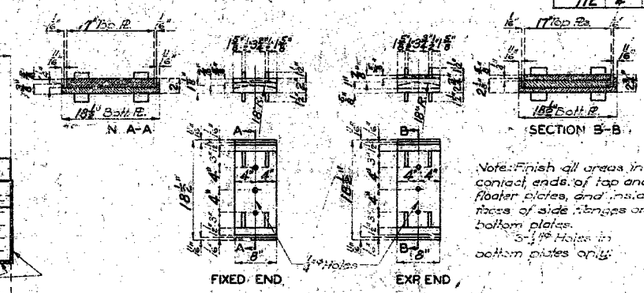

Note: Finish all areas in contact, ends of top and floater plates, and inside faces of side flanges on bottom plates.
3-1" ϕ Holes in bottom plates only.

GRAY IRON ALLOY BEARING PLATES

Note: Bearing plates to be furnished in sets. Each set consisting of 1 top plate and 1 bottom plate for fixed end and 1 top plate, 1 floater plate and 1 bottom plate for expansion end.
Required 36 - Sets of 8" x 18½" plates.

BILL OF REINFORCING STEEL — SUPERSTRUCTURE

No.	Size	Length	Mark	Location
28	#5	4'-9"	C1	Parapet
484	#5	4'-6"	C2	Curb
4	#5	8'-6"	C3	Flare Curb
4	#5	7'-3"	C4	"
4	#5	6'-0"	C5	"
12	#5	16'-9"	C6	Curb
96	#6	22'-6"	C7	"
724	#5	33'-0"	S1	Slab
362	#5	13'-3"	S2	"
990	#5	22'-3"	S3	"
56	#5	6'-6"	S4	Flare Slab
22	#6	28'-9"	W1	Webs
30	#5	8'-3"	W2	End Web
40	#5	8'-3"	W3	"
16	#5	8'-9"	W4	"
48	#8	28'-9"	W5	" "
336	#5	6'-9"	W6	" "
48	#7	33'-0"	W7	" "
135	#4	9'-9"	W8	Int. Web
22	#4	26'-9"	W9	Webs
1260	#4	7'-6"	B1	Girder
144	#11	44'-6"	B2	"
72	#11	45'-9"	B3	"
72	#11	41'-6"	B4	"
72	#11	36'-6"	B5	"
34	#11	32'-3"	B6	"
36	#10	32'-3"	B7	"
112	#4	3'-9"	R11	Rail
72	#4	6'-0"	R1	End Post
344	#4	9'	R2	Curb
252	#4	7'-6"	R3	Sub Rail
184	#6	3'-9"	R4	Post
2752	#6Ga.	2'-4"	R5	Balusters
12	#4	6'-9"	R6	End Post
16	#4	10'-3"	R6	Rail
32	#4	8'-3"	R7	"
16	#4	3'-3"	R8	"
112	#4	10'-9"	R10	"

Bending Sketches

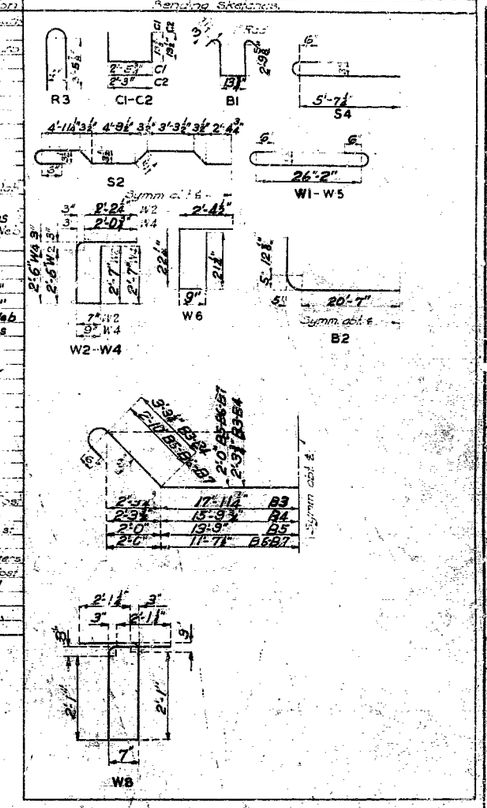

Note: Bars in the above unit to be filled and figured separately.

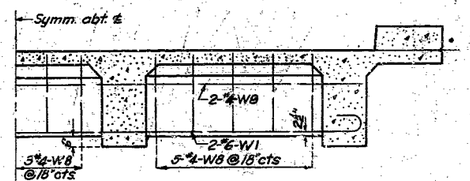

HALF SECTION THRU SPAN
(Near Intermediate Web)

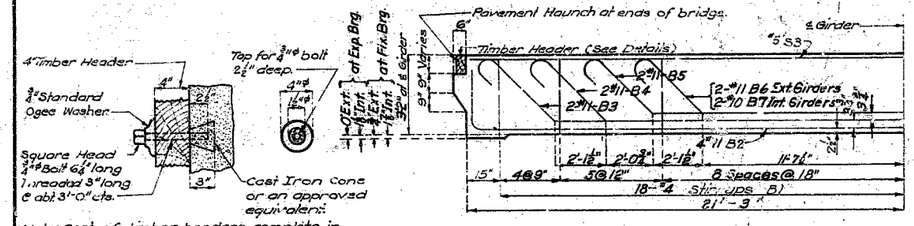

Note: Cost of timber headers complete in place to be included in price bid for concrete.

DETAILS OF TIMBER HEADER

GIRDER REINFORCEMENT

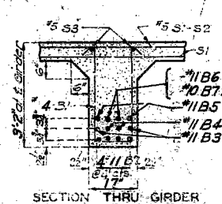

SECTION THRU GIRDER

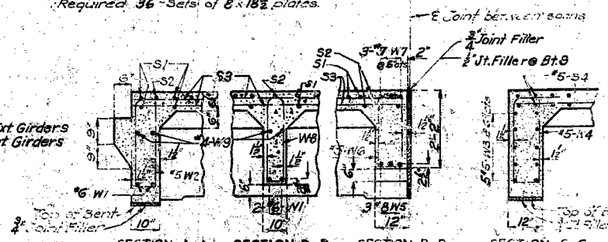

BRIDGE OVER SPRING RIVER OVERFLOW

STATE ROAD FROM CARTHAGE EAST
ABOUT 1.7 MILES EAST OF CARTHAGE
PROJECT NO. F-84 (8) (RT. 66) STA. 584+40

JASPER COUNTY

FINISHED

FINISHED L-409

Assembled Oct. 1952 by D.H.P. & A.J.S.
Checked Dec. 1952 by C.S.A.

Note: This drawing is not to scale. Follow dimensions.

Sheet No. 3 of 3

262

MISSOURI STATE HIGHWAY DEPARTMENT

FED. ROAD DIST. NO.	STATE	FED. AID PROJ. NO.	FISCAL YEAR	SHEET NO.	TOTAL SHEETS
5	MO.	F-84(8) Rt.66	19		

FINAL PLANS

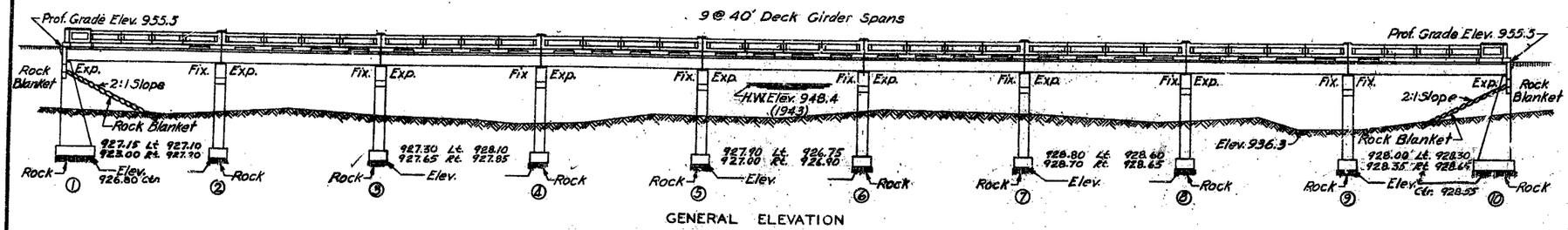

Note: All loose, shelly or disintegrated rock shall be removed and the footings placed on hard, solid, undisturbed rock. If soft rock or shale is encountered, the footings shall be carried at least 18" into and cast against vertical faces of same.

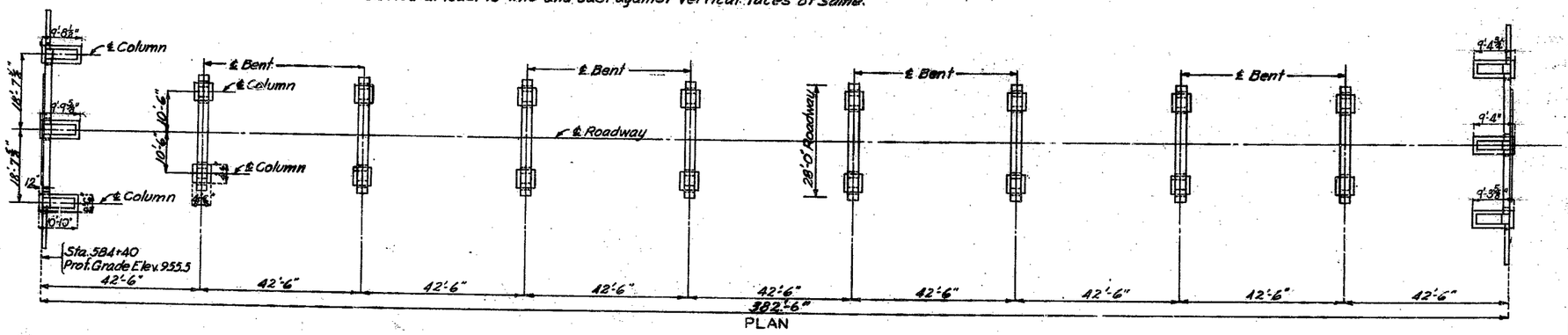

BILL OF REINFORCING STEEL - SUBSTRUCTURE

No.	Size	Length	Mark	Location
End Bents No. 1 & 10				
60	#7	6'-3"	D1	Footing
24	#6	8'-6"	F1	Haunch
4	#8	41'-9"	H1	Beam
10	#7	25'-0"	H2	"
8	#11	10'-6"	H3	"
8	#10	41'-9"	H4	"
16	#6	15'-0"	H5	Wing
4	#5	27'-9"	H6	"
4	#8	39'-6"	H7	Beam
6	#5	39'-6"	H8	"
12	#6	17'-9"	T1	Wing
8	#6	16'-6"	T2	
94	#5	10'-9"	U3	Beam
12	#4	2'-3"	U4	"
14	#4	9'-9"	V2	Wing
102	#3	17'-0"	V3	Column
24	#7	22'-6"	V4	"
36	#7	22'-0"	V5	"
24	#4	18'-6"	V6	"
12	#6	10'-0"	F3	Haunch
Int. Bents No. 2 to 9 Inc.				
128	#7	6'-3"	D1	Footing
64	#6	8'-6"	F1	Haunch
64	#6	8'-9"	F2	"
40	#10	31'-3"	G1	Beam
16	#6	28'-9"	G2	"
288	#3	9'-9"	P1	Column
272	#5	12'-0"	U1	Beam
32	#5	3'-3"	U2	"
128	#7	21'-9"	V1	Column
48	#11	31'-3"	G3	Beam
Extra Reinforcing Steel				
4	#7	7'-0"	W4	Pier Col. Bot.
6	#7	7'-0"	W5	" " "
4	#4	7'-0"	W6	" " "
2	#3	23'-6"	W32	" " "
2	#3	22'-6"	W33	" " "

Bending Sketches & Cutting Diagrams

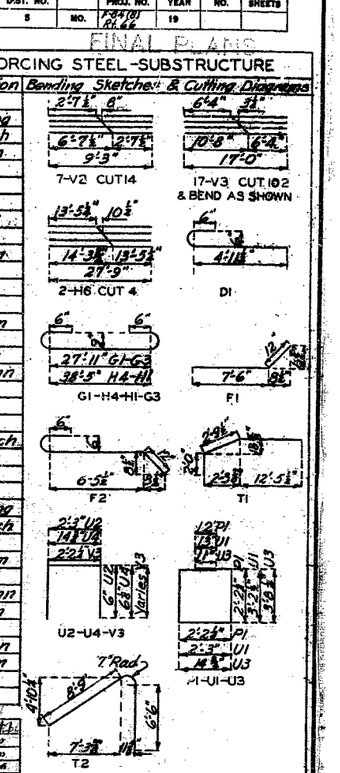

Note: See Sheet No. 3 for Bill of Reinforcement for Superstructure.

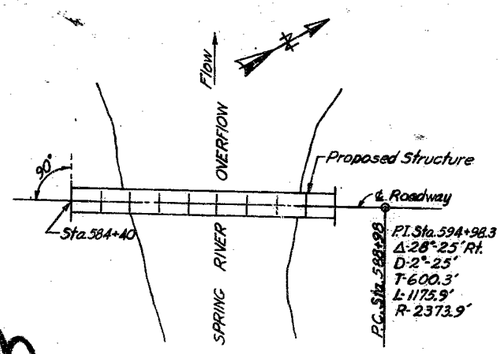

LOCATION SKETCH

GENERAL NOTES:

Design Specifications A.A.S.H.O.-1949
Loading H20-44
Reinforcing Steel Stress 18,000#/□"
Class "B" Concrete Stress 1000#/□"
All Concrete shall be Class "B" (Air Entrained)
Where joint filler is specified on plans, it shall conform with the requirements for Gray Rubber Compound as given in Section 38-19.8(2) of the Standard Specifications.
A rubbed surface finish will be required on all exposed surfaces of handrail and curbs and on outside faces of roadway slab.

FINAL QUANTITIES

Items		Substr.	Superstr.	Total
Class 1 Excavation for Structures	Cu. Yds.	20.5		20.5
Class 2 Excavation for Structures	Cu. Yds.	610.0		610.0
Class "B" Concrete (Handrail)	Cu. Yds.		44.2	44.2
Class "B" Concrete (Except Handrail)	Cu. Yds.	281.5	576.2	857.7
Reinforcing Steel	Lbs.	31940	188150	220090
Gray Iron Alloy Castings	Lbs.		7060	7060
Class 2 Excavation below Plan	Cu. Yds.	17.0		17.0
Drilling Foundation Test Holes	Lin. Ft.	116		116

Note: Excavation for bridge made above Elev. 940.0 will be paid for as Class 1 Excavation for Structures.
Excavation for bridge made below Elev. 940.0 will be paid for as Class 2 Excavation for Structure.

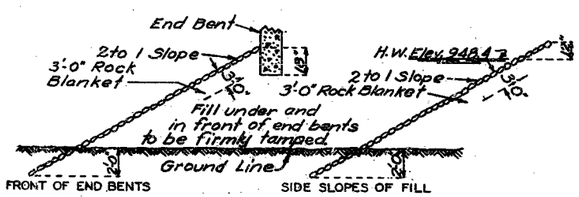

Note: 3'-0" Rock Blanket shall be placed on fills at ends of bridge as shown in sketches. See Road Plans for Quantities

ROCK BLANKET SKETCHES

B.M. Ctr. of Wing 29' Lt. Sta. 584+40
Elevation 955.36

B.M. #5 Elev. 937.16 Spike & Two Nuts in side 40" Elm 43' Lt. Sta. 576+42 (U.S.G.S. Datum)

BRIDGE OVER SPRING RIVER OVERFLOW

STATE ROAD FROM CARTHAGE EAST
ABOUT 1.7 MILES EAST OF CARTHAGE
PROJECT NO. F-84 (8) (R.T.66) **STA.** 584+40

JASPER **COUNTY**

SUBMITTED BY J. A. Lieberman DATE 1/13/1953
APPROVED BY Rex M. Whitton DATE 1/13/1953

FINISHED

Drawn Oct. 1952 by O.H.P.
Checked Dec. 1952 by C.S.A.

Note: This drawing is not to scale. Follow dimensions.

Sheet No. 1A of 2

FINISHED

Std-C-110R3
Std-C-6510
L-409

263

MISSOURI STATE HIGHWAY DEPARTMENT

FED. ROAD DIST. NO.	STATE	FED. AID PROJ. NO	FISCAL YEAR	SHEET NO	TOTAL SHEETS
5	MO	F-84(8) B7.66	19		

FINAL PLANS

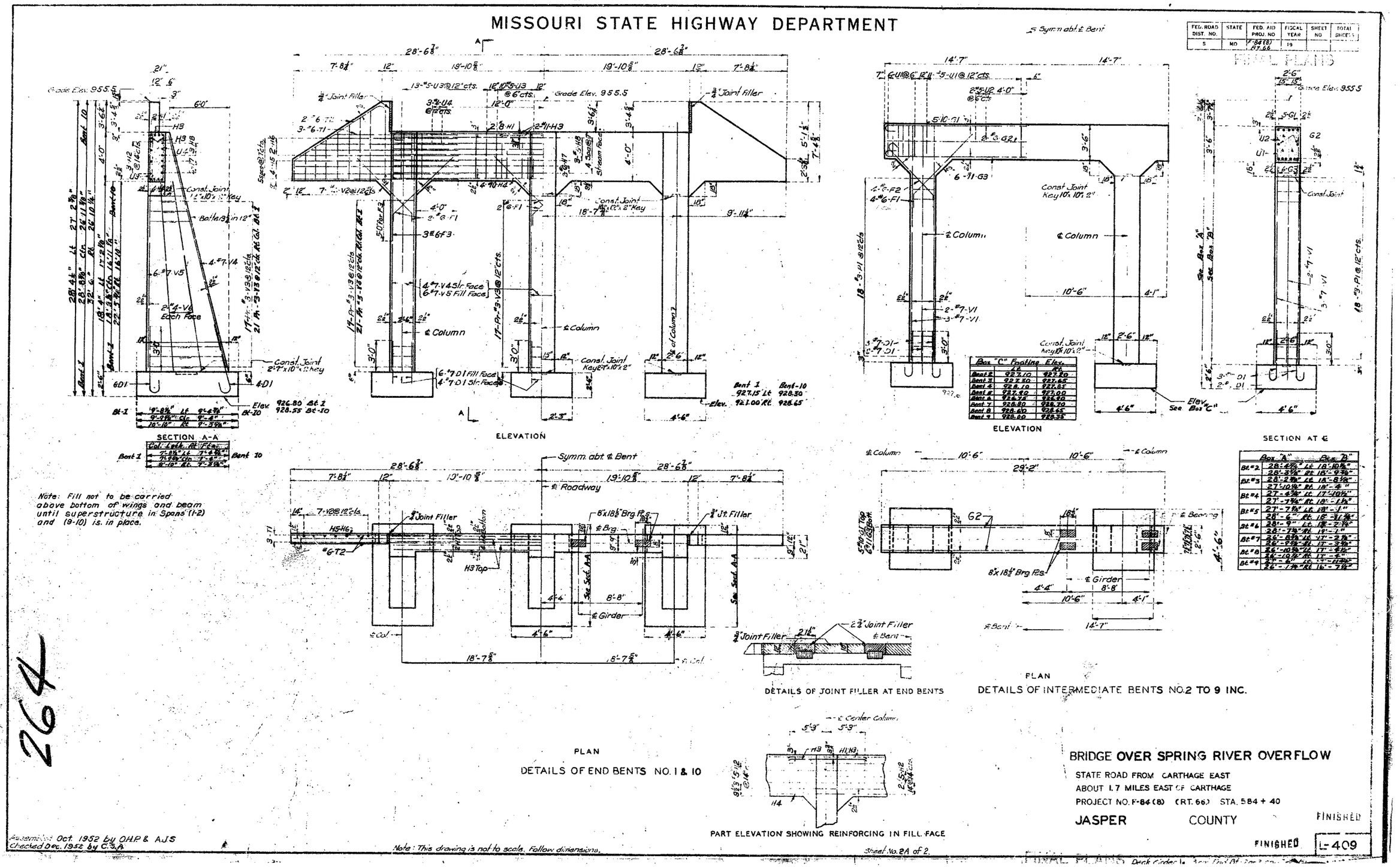

264

BRIDGE OVER SPRING RIVER OVERFLOW

STATE ROAD FROM CARTHAGE EAST

ABOUT 1.7 MILES EAST OF CARTHAGE

PROJECT NO. F-84 (8) (RT. 66) STA. 584 + 40

JASPER COUNTY

FINISHED

FINISHED L-409

Assembled Oct. 1952 by O.H.P. & A.J.S.
Checked Dec. 1952 by C.S.A.

Note: This drawing is not to scale. Follow dimensions.

Sheet No. 2A of 2.