MISSOURI HIGHWAYS AND TRANSPORTATION COMMISSION
PLANS FOR PROPOSED
STATE HIGHWAY

GASCONADE COUNTY

DESIGN DESIGNATION (HWY 19)

A.A.D.T. - 2016 = 2170
A.A.D.T. - 2036 = 2400
D.H.V. = 9%
T = 12%
V = 60 M.P.H.

FUNCTIONAL CLASSIFICATION- MINOR ARTERIAL

DESIGN DESIGNATION (HWY EE)

A.A.D.T. - 2016 = 1120
A.A.D.T. - 2036 = 1150
T = 11%
V = 60 M.P.H.

FUNCTIONAL CLASSIFICATION- MAJOR COLLECTOR

TEMPORARY EASEMENT FOR CONSTRUCTION REQUIRED FOR ROUTE EE ONLY.

NO NEW RIGHT OF WAY TO BE ACQUIRED.

CONVENTIONAL SYMBOLS
(USED IN PLANS)

	EXISTING	NEW
BUILDINGS AND STRUCTURES		
GUARD RAIL		
CONCRETE RIGHT-OF-WAY MARKER		
STEEL RIGHT-OF-WAY MARKER		
LOCATION SURVEY MARKER		
UTILITIES		
FIBER OPTICS	-FO-	FO
OVERHEAD TELEPHONE		
UNDERGROUND TELEPHONE	-T-	T
OVERHEAD POWER		
UNDERGROUND POWER	-P-	P
GAS	-G-	G
WATER	-W-	W
MANHOLE	SAN	
FIRE HYDRANT	HYD	
WATER VALVE	WV	
WATER METER	WM	
DROP INLET	DI	
DITCH BLOCK		
GROUND MOUNTED SIGN	SIGN	
LIGHT POLE		
H-FRAME POWER POLE		
TELEPHONE PEDESTAL	PED	
FENCE		
CHAIN LINK	-V-	
WOVEN WIRE	-X-	
GATE POST		
BENCHMARK	BM	

NOTE: DASHED OR OPEN SYMBOLS INDICATE EXISTING FEATURES

T. 43 N.
T. 42 N.

BRIDGE #A8439
BRIDGE REPLACEMENT
ROUTE 19
OVER SECOND CREEK

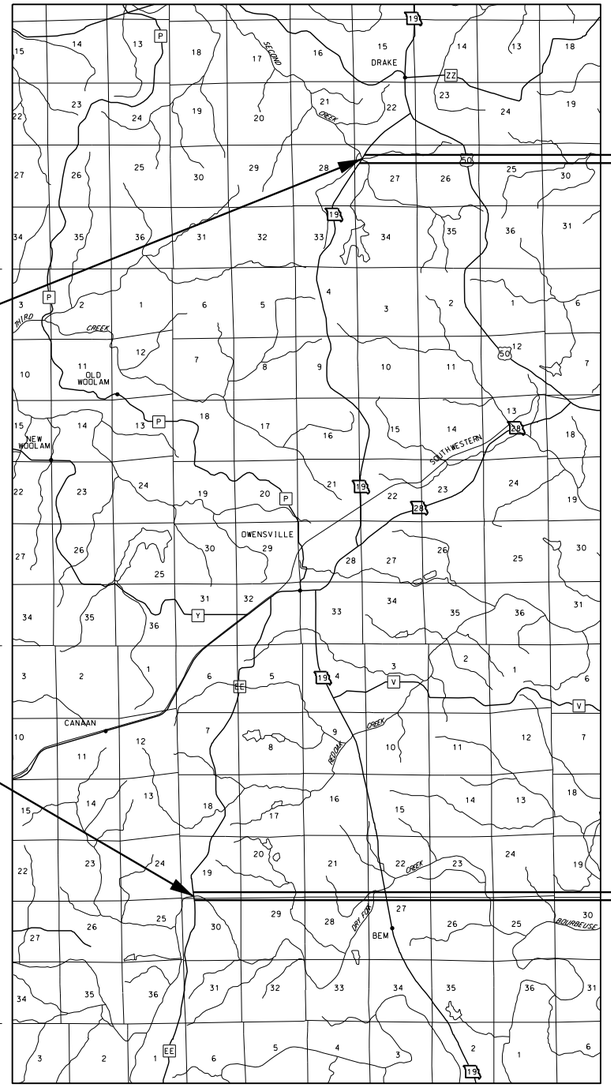

T. 42 N.
T. 41 N.

BRIDGE #A8440
BRIDGE REPLACEMENT
ROUTE EE
OVER DRY FORK CREEK

T. 41 N.
T. 40 N.

R. 6 W. | R. 5 W. | R. 4 W.

NOT TO SCALE

BEGIN PROJECT
STA: 55+75.00

END PROJECT
STA: 63+30.00

BEGIN PROJECT
STA: 288+45.00

END PROJECT
STA: 297+90.00

DISCLAIMER
THE PROFESSIONAL WHOSE SIGNATURE AND PERSONAL SEAL APPEAR HEREON ASSUMES RESPONSIBILITY ONLY FOR WHAT APPEARS ON THIS PAGE, AND DISCLAIMS (PURSUANT TO SECTION 327.411 RSMO) SPECIFICATION, ESTIMATES, REPORTS, OR OTHER DOCUMENTS OR INSTRUMENTS NOT SEALED BY THE UNDERSIGNED PROFESSIONAL RELATING TO OR INTENDED TO BE USED FOR ANY PART OR PARTS OF THE PROJECT TO WHICH THIS PAGE REFERS.

INDEX OF SHEETS

DESCRIPTION	SHEET NUMBER
TITLE SHEET	1
TYPICAL SECTIONS (TS) (2 SHEETS)	2
QUANTITIES (QU) (3 SHEETS)	3
PLAN-PROFILE (PP)	4-5
REFERENCE POINTS (RF)	6
COORDINATE POINTS (CP)	6
TRAFFIC CONTROL SHEETS (TC)	7-8
EROSION CONTROL SHEETS (EC)	9-10
SIGNING/STRIPING (SP)	11-12
BRIDGE DRAWINGS (B)	
A8439	1-33
A8440	1-49
CROSS SECTIONS (XS)	1-7

LENGTH OF PROJECT (HWY 19)

BEGINNING OF PROJECT	STA. 55+75.00	
END OF PROJECT	STA. 63+30.00	
APPARENT LENGTH	755.00	FEET
EQUATIONS AND EXCEPTIONS:	NONE	
TOTAL CORRECTIONS	755.00	FEET
NET LENGTH OF PROJECT	755.00	FEET
STATE LENGTH	0.143	MILES

LENGTH OF PROJECT (HWY EE)

BEGINNING OF PROJECT	STA. 288+45.00	
END OF PROJECT	STA. 297+90.00	
APPARENT LENGTH	945.00	FEET
EQUATIONS AND EXCEPTIONS:	NONE	
TOTAL CORRECTIONS	945.00	FEET
NET LENGTH OF PROJECT	945.00	FEET
STATE LENGTH	0.179	MILES

KORI R. NEELY
NUMBER PE-2016017659
PROFESSIONAL ENGINEER
STATE OF MISSOURI

THIS SHEET HAS BEEN SIGNED, SEALED AND DATED ELECTRONICALLY.

DATE PREPARED: 10/25/2016
ROUTE: 19/EE | STATE: MO
DISTRICT: CD | SHEET NO.: 1
COUNTY: GASCONADE
JOB NO.: J5S3140
CONTRACT ID.:
PROJECT NO.:
BRIDGE NO.: A8439/A8440

DESCRIPTION	DATE

MISSOURI HIGHWAYS AND TRANSPORTATION COMMISSION
105 WEST CAPITOL
JEFFERSON CITY, MO 65102
1-888-ASK-MODOT (1-888-275-6636)

HR GREEN, INC.
16020 SWINGLEY RIDGE ROAD, SUITE 205
ST. LOUIS, MISSOURI 63017
PHONE: (636) 519.0990
CORPORATE LICENSE #2002006608

IF A SEAL IS PRESENT ON THIS SHEET IT HAS BEEN ELECTRONICALLY SEALED AND DATED.

REV.

OPTIONAL PAVEMENT DESIGN	
CONCRETE OPTION	ASPHALT OPTION
8" PCCP	1 ¾ BP-1 (PG PG64-22)
4" TYPE 1 AGGREGATE BASE	8 ¼ PMBB (PG PG64-22)
	4" TYPE 1 AGGREGATE BASE

NOTE: IN LIEU OF THE ASPHALT PAVEMENT SECTION, 8" NON-REINFORCED PCCP (15' JOINT SPACING) IS ALLOWED.

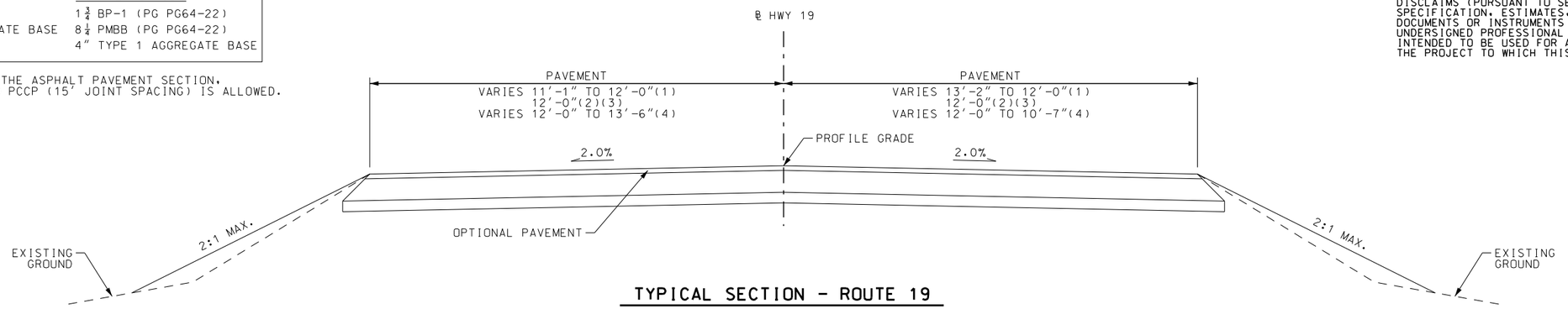

TYPICAL SECTION - ROUTE 19

LEFT	RIGHT
STA. 55+75.00 TO STA. 56+35.00 (1)	STA. 55+75.00 TO STA. 56+35.00 (1)
STA. 56+35.00 TO STA. 57+79.23 (2)	STA. 56+35.00 TO STA. 57+70.00 (2)
STA. 62+02.81 TO STA. 62+55.00 (3)	STA. 62+02.26 TO STA. 62+55.00 (3)
STA. 62+55.00 TO STA. 63+30.00 (4)	STA. 62+55.00 TO STA. 63+30.00 (4)

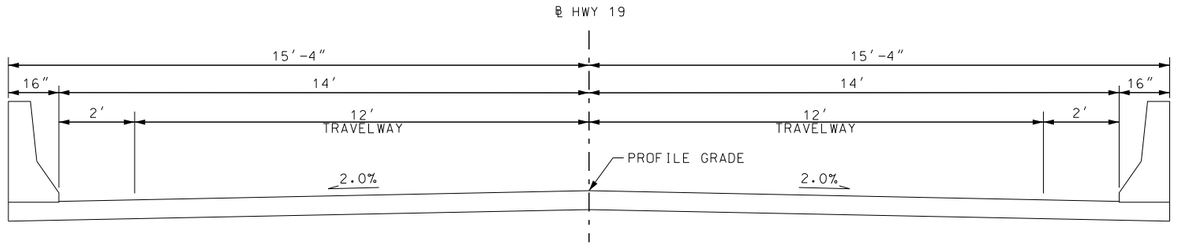

TYPICAL SECTION - ROUTE 19

STA. 59+30.12 TO STA. 60+32.13 - SECOND CREEK

BRIDGE APPROACH SLABS (MINOR ROAD) ROUTE 19

STA. 59+10.12 TO STA. 59+30.12
STA. 60+32.13 TO STA. 60+52.13

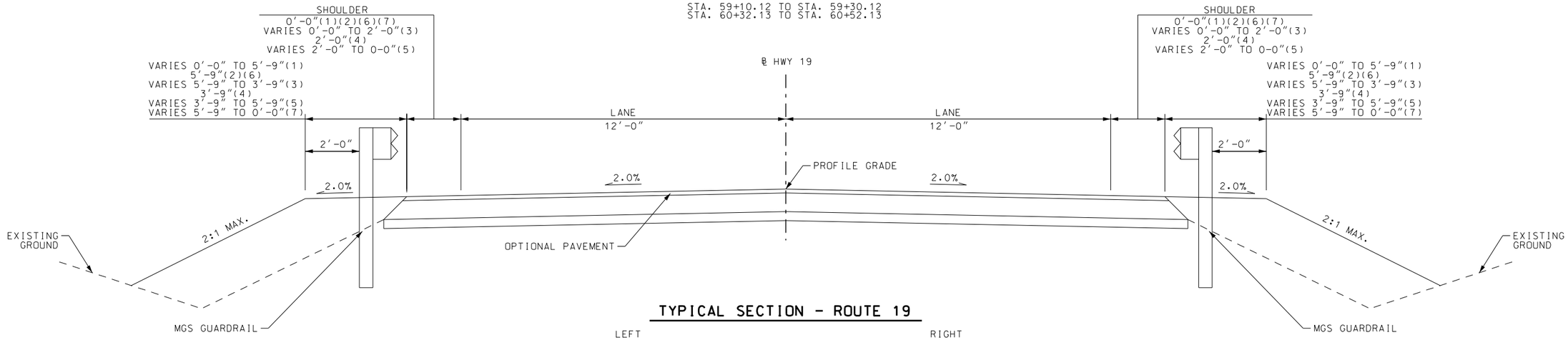

TYPICAL SECTION - ROUTE 19

LEFT	RIGHT
STA. 57+79.23 TO STA. 57+93.95 (1)	STA. 57+70.00 TO STA. 57+80.89 (1)
STA. 57+93.95 TO STA. 58+63.59 (2)	STA. 57+80.89 TO STA. 58+63.59 (2)
STA. 58+63.59 TO STA. 59+03.59 (3)	STA. 58+63.59 TO STA. 59+03.59 (3)
STA. 59+03.59 TO STA. 59+10.12 (4)	STA. 59+03.59 TO STA. 59+10.12 (4)
STA. 60+52.13 TO STA. 60+58.66 (4)	STA. 60+52.13 TO STA. 60+58.66 (4)
STA. 60+58.66 TO STA. 60+98.66 (5)	STA. 60+58.66 TO STA. 60+98.66 (5)
STA. 60+98.66 TO STA. 61+81.35 (6)	STA. 60+98.66 TO STA. 61+80.80 (6)
STA. 61+81.35 TO STA. 62+02.81 (7)	STA. 61+80.80 TO STA. 62+02.26 (7)

DISCLAIMER
THE PROFESSIONAL WHOSE SIGNATURE AND PERSONAL SEAL APPEAR HEREON ASSUMES RESPONSIBILITY ONLY FOR WHAT APPEARS ON THIS PAGE, AND DISCLAIMS (PURSUANT TO SECTION 327.411 RSMO) SPECIFICATION, ESTIMATES, REPORTS, OR OTHER DOCUMENTS OR INSTRUMENTS NOT SEALED BY THE UNDERSIGNED PROFESSIONAL RELATING TO OR INTENDED TO BE USED FOR ANY PART OR PARTS OF THE PROJECT TO WHICH THIS PAGE REFERS.

TYPICAL SECTION
SHEET 1 OF 2

STATE OF MISSOURI
KORI R. NEELY
NUMBER PE-2016017659
PROFESSIONAL ENGINEER
THIS SHEET HAS BEEN SIGNED, SEALED AND DATED ELECTRONICALLY.

DATE PREPARED
10/3/2016

ROUTE	STATE
19	MO
DISTRICT	SHEET NO.
CD	2

COUNTY
GASCONADE

JOB NO.
J5S3140

CONTRACT ID.

PROJECT NO.

BRIDGE NO.
A8439

DESCRIPTION	DATE

IF A SEAL IS PRESENT ON THIS SHEET IT HAS BEEN ELECTRONICALLY SEALED AND DATED.

MISSOURI HIGHWAYS AND TRANSPORTATION COMMISSION
105 WEST CAPITOL
JEFFERSON CITY, MO 65102
1-888-ASK-MODOT (1-888-275-6636)
MoDOT
HR GREEN, INC.
16020 SWINGLEY RIDGE ROAD, SUITE 205
ST. LOUIS, MISSOURI 63017
PHONE: (636) 519.0990
CORPORATE LICENSE #2002006608
HRGreen

REV.

OPTIONAL PAVEMENT DESIGN	
CONCRETE OPTION	ASPHALT OPTION
8" PCCP	1 3/4 BP-1 (PG PG64-22)
4" TYPE 1 AGGREGATE BASE	8 1/4 PMBB (PG PG64-22)
	4" TYPE 1 AGGREGATE BASE

NOTE: IN LIEU OF THE ASPHALT PAVEMENT SECTION, 8" NON-REINFORCED PCCP (15' JOINT SPACING) IS ALLOWED.

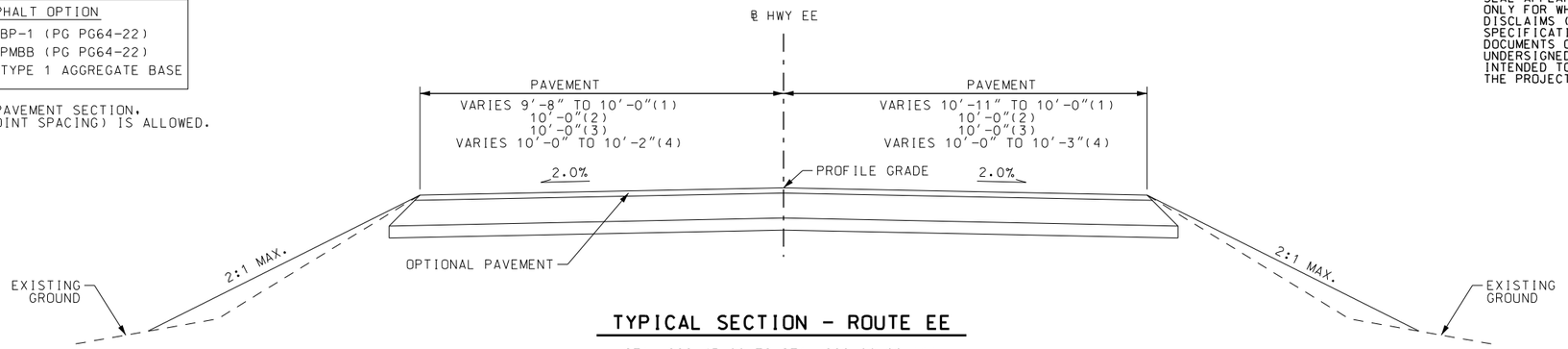

TYPICAL SECTION - ROUTE EE

STA. 288+45.00 TO STA. 289+00.00 (1)
STA. 289+00.00 TO STA. 290+55.66 (2)
STA. 296+44.34 TO STA. 297+50.00 (3)
STA. 297+50.00 TO STA. 297+90.00 (4)

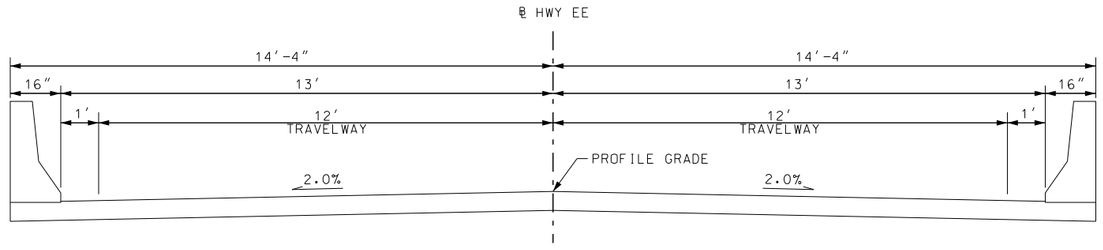

TYPICAL SECTION - ROUTE EE

STA. 291+97.50 TO STA. 295+02.50 - DRY FORK CREEK

BRIDGE APPROACH SLABS (MINOR ROAD) ROUTE EE

STA. 291+77.50 TO STA. 291+97.50
STA. 295+02.50 TO STA. 295+22.50

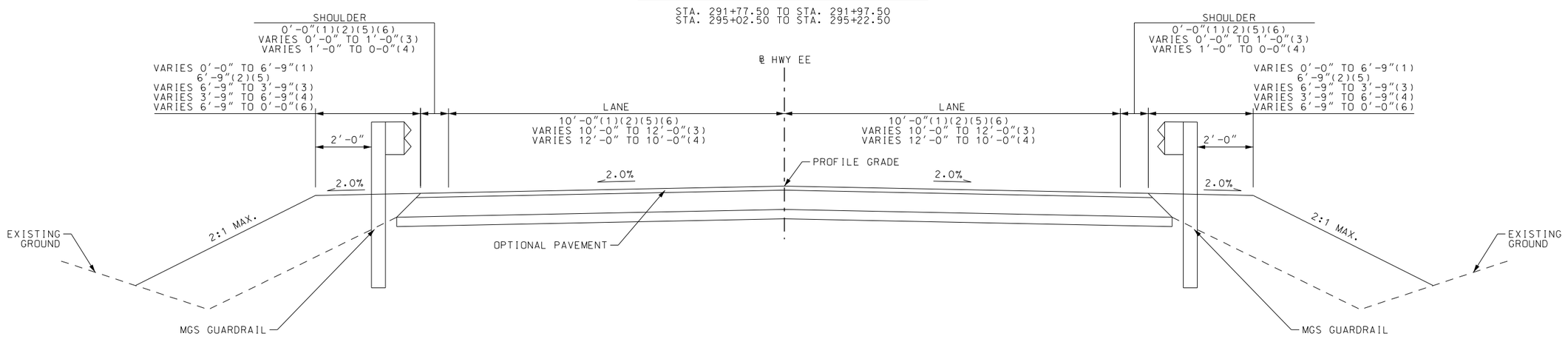

TYPICAL SECTION - ROUTE EE

STA. 290+55.66 TO STA. 290+80.85 (1)
STA. 290+80.85 TO STA. 291+17.00 (2)
STA. 291+17.00 TO STA. 291+77.50 (3)
STA. 295+22.50 TO STA. 295+83.00 (4)
STA. 295+83.00 TO STA. 296+19.15 (5)
STA. 296+19.15 TO STA. 296+44.34 (6)

DISCLAIMER
THE PROFESSIONAL WHOSE SIGNATURE AND PERSONAL SEAL APPEAR HEREON ASSUMES RESPONSIBILITY ONLY FOR WHAT APPEARS ON THIS PAGE, AND DISCLAIMS (PURSUANT TO SECTION 327.411 RSMO) SPECIFICATION, ESTIMATES, REPORTS, OR OTHER DOCUMENTS OR INSTRUMENTS NOT SEALED BY THE UNDERSIGNED PROFESSIONAL RELATING TO OR INTENDED TO BE USED FOR ANY PART OR PARTS OF THE PROJECT TO WHICH THIS PAGE REFERS.

STATE OF MISSOURI
KORI R. NEELY
NUMBER PE-2016017659
PROFESSIONAL ENGINEER

THIS SHEET HAS BEEN SIGNED, SEALED AND DATED ELECTRONICALLY.

DATE PREPARED: 10/3/2016
ROUTE: EE | STATE: MO
DISTRICT: CD | SHEET NO.: 2
COUNTY: GASCONADE
JOB NO.: J5S3140
CONTRACT ID.:
PROJECT NO.:
BRIDGE NO.: A8440

DESCRIPTION | DATE | REV.

IF A SEAL IS PRESENT ON THIS SHEET IT HAS BEEN ELECTRONICALLY SEALED AND DATED.

MISSOURI HIGHWAYS AND TRANSPORTATION COMMISSION
105 WEST CAPITOL
JEFFERSON CITY, MO 65102
1-888-ASK-MODOT (1-888-275-6636)

HR GREEN, INC.
16020 SWINGLEY RIDGE ROAD, SUITE 205
ST. LOUIS, MISSOURI 63017
PHONE: (636) 519.0990
CORPORATE LICENSE #2002006608
HRGreen

TYPICAL SECTION
SHEET 2 OF 2

\\hrgwdfs004\Data\75160010\CAD\Data\Roadway_Plans\002_TS_02_J5S3140_I2.dgn 3:18:05 PM 10/3/2016

REMOVAL OF IMPROVEMENTS						
ALIGNMENT	STATION	STATION	LOCATION	QTY (EACH)	QTY (LF)	REMARKS
HWY19	55+75.00		LT/RT		25	FULL-DEPTH SAW CUT
HWY19	57+30.00	57+53.00	LT		24	FULL-DEPTH SAW CUT
HWY19	57+42.00	57+62.00	RT		20	FULL-DEPTH SAW CUT
HWY19	57+97.00	59+30.00	LT		133	GUARDRAIL
HWY19	57+98.00	59+31.00	RT		133	GUARDRAIL
HWY19	58+43.00		RT	1		TYPE 3 OBJECT MARKER AND U-CHANNEL POST*
HWY19	58+43.00		LT	1		TYPE 3 OBJECT MARKER AND U-CHANNEL POST*
HWY19	59+00.00		RT	1		TYPE 3 OBJECT MARKER AND U-CHANNEL POST*
HWY19	59+00.00		LT	1		TYPE 3 OBJECT MARKER AND U-CHANNEL POST*
HWY19	59+19.00		RT	1		SECOND CREEK SIGN AND U-CHANNEL POST*
HWY19	59+30.00		RT	1		TYPE 3 OBJECT MARKER AND U-CHANNEL POST*
HWY19	59+30.00		LT	1		TYPE 3 OBJECT MARKER AND U-CHANNEL POST*
HWY19	59+79.63		LT/RT	1		BRIDGE K0636
HWY19	60+25.00		LT	1		SECOND CREEK SIGN AND U-CHANNEL POST*
HWY19	60+27.00		LT	1		TYPE 3 OBJECT MARKER AND U-CHANNEL POST*
HWY19	60+27.00		RT	1		TYPE 3 OBJECT MARKER AND U-CHANNEL POST*
HWY19	60+28.00	61+60.00	RT		133	GUARDRAIL
HWY19	60+29.00	61+60.00	LT		133	GUARDRAIL
HWY19	60+63.00		RT	1		TYPE 3 OBJECT MARKER AND U-CHANNEL POST*
HWY19	60+63.00		LT	1		TYPE 3 OBJECT MARKER AND U-CHANNEL POST*
HWY19	60+93.00		RT	1		TYPE 3 OBJECT MARKER AND U-CHANNEL POST*
HWY19	60+93.00		LT	1		TYPE 3 OBJECT MARKER AND U-CHANNEL POST*
HWY19	63+30.00		LT/RT		24	FULL-DEPTH SAW CUT
HWYEE	288+45.00		LT/RT		21	FULL-DEPTH SAW CUT
HWYEE	292+04.00		RT	1		TYPE 3 OBJECT MARKER AND U-CHANNEL POST*
HWYEE	292+04.00		LT	1		TYPE 3 OBJECT MARKER AND U-CHANNEL POST*
HWYEE	293+50.00		LT/RT	1		BRIDGE R0292
HWYEE	294+96.00		RT	1		TYPE 3 OBJECT MARKER AND U-CHANNEL POST*
HWYEE	294+96.00		LT	1		TYPE 3 OBJECT MARKER AND U-CHANNEL POST*
HWYEE	294+96.00		LT	1		DRY FORK CREEK SIGN AND U-CHANNEL POST*
HWYEE	297+90.00		LT/RT		21	FULL-DEPTH SAW CUT
			TOTAL	1 LUMP SUM		

*TO BE SALVAGED. SEE JSP M.

EARTHWORK				
ALIGNMENT	STATION	STATION	CLASS A EXCAVATION (CY)	EMBANKMENT IN PLACE (CY)
HWY19	55+75.00	59+29.57	292	502
HWY19	59+29.57	60+32.68	200	0
HWY19	60+32.68	63+30.00	234	299
HWYEE	288+45.00	291+97.00	352	690
HWYEE	291+97.00	295+03.00	329	0
HWYEE	295+03.00	297+90.00	269	767
		TOTAL	1676	2258

ROCK BLANKET					
ALIGNMENT	STATION	STATION	FURNISHING TYPE 2 ROCK BLANKET (CY)	PLACING TYPE 2 ROCK BLANKET (CY)	PERMANENT EROSION CONTROL GEOTEXTILE (SY)
HWY19	59+03.32	59+69.49	204	204	229
HWY19	59+92.88	60+58.93	215	215	322
HWYEE	291+77.50	292+27.73	229	229	344
HWYEE	294+76.79	295+22.50	199	199	299
		TOTAL	847	847	1194

PAVEMENT						
ALIGNMENT	STATION	STATION	LOCATION	TYPE 1 AGGREGATE FOR BASE (4 IN. THICK) (SY)	OPTIONAL PAVEMENT (SY)	REMARKS
HWY19	55+75.00	59+10.12	LT/RT	981.0	906.5	MAIN
HWY19	57+46.37	-	LT	107.4	107.2	SIDE ROAD
HWY19	57+48.70	-	RT	60.7	61.0	DRIVEWAY
HWY19	60+52.13	63+30.00	LT/RT	814.8	753.1	MAIN
HWYEE	288+45.00	291+77.50	LT/RT	834.7	760.8	MAIN
HWYEE	295+22.50	297+90.00	LT/RT	674.9	615.4	MAIN
			TOTAL	3473.5	3204.0	
			PAY TOTAL	3474	3204.0	

GUARDRAIL						
ALIGNMENT	STATION	STATION	LOCATION	MGS GUARDRAIL (LF)	MGS BRIDGE APPROACH TRANSITION SECTION (MINOR ROUTE) (EACH)	TYPE A CRASH WORTHY END TERMINAL (MASH) (EACH)
HWY19	57+90.89	59+13.64	RT	37.5	1	1
HWY19	58+03.95	59+26.70	LT	37.5	1	1
HWY19	60+35.55	61+70.80	RT	50.0	1	1
HWY19	60+49.21	61+71.36	LT	37.5	1	1
HWYEE	290+90.85	291+88.60	LT	12.5	1	1
HWYEE	290+90.85	291+88.60	RT	12.5	1	1
HWYEE	295+11.40	296+09.15	LT	12.5	1	1
HWYEE	295+11.40	296+09.15	RT	12.5	1	1
			TOTAL	213	8	8

CONTRACTOR FURNISHED SURVEYING AND STAKING
1 LUMP SUM

MOBILIZATION
1 LUMP SUM

WATER POLLUTION CONTROL MANAGER
58 WEEKS
SEE JSP FOR DETAILS

DISCLAIMER
THE PROFESSIONAL WHOSE SIGNATURE AND PERSONAL SEAL APPEAR HEREON ASSUMES RESPONSIBILITY ONLY FOR WHAT APPEARS ON THIS PAGE, AND DISCLAIMS (PURSUANT TO SECTION 327.411 RSMO) SPECIFICATION, ESTIMATES, REPORTS, OR OTHER DOCUMENTS OR INSTRUMENTS NOT SEALED BY THE UNDERSIGNED PROFESSIONAL RELATING TO OR INTENDED TO BE USED FOR ANY PART OR PARTS OF THE PROJECT TO WHICH THIS PAGE REFERS.

QUANTITY SHEET
SHEET 1 OF 3

STATE OF MISSOURI
KORI R. NEELY
NUMBER PE-2016017659
PROFESSIONAL ENGINEER

THIS SHEET HAS BEEN SIGNED, SEALED AND DATED ELECTRONICALLY.

DATE PREPARED 10/3/2016
ROUTE 19/EE | STATE MO
DISTRICT CD | SHEET NO. 3
COUNTY GASCONADE
JOB NO. J5S3140
CONTRACT ID.
PROJECT NO.
BRIDGE NO. A8439/A8440

DESCRIPTION | DATE | REV.

IF A SEAL IS PRESENT ON THIS SHEET IT HAS BEEN ELECTRONICALLY SEALED AND DATED.

MISSOURI HIGHWAYS AND TRANSPORTATION COMMISSION
105 WEST CAPITOL
JEFFERSON CITY, MO 65102
1-888-ASK-MODOT (1-888-275-6636)

HR GREEN, INC.
16020 SWINGLEY RIDGE ROAD, SUITE 205
ST. LOUIS, MISSOURI 63017
PHONE: (636) 519.0990
CORPORATE LICENSE #2002006608

PERMANENT PAVEMENT MARKING						
ALIGNMENT	STATION	STATION	LOCATION	4 IN. WHITE WATERBORNE PAVEMENT MARKING PAINT, TYPE P BEADS	4 IN. YELLOW WATERBORNE PAVEMENT MARKING PAINT, TYPE P BEADS	REMARKS
				(LF)	(LF)	
HWY19	55+75.00	63+30.00	LT	755		WHITE EDGELINE
HWY19	55+75.00	63+30.00	CENTER		189	INTERMITTENT YELLOW CENTERLINE
HWY19	55+75.00	63+30.00	RT	755		WHITE EDGELINE
HWYEE	288+45.00	297+90.00	LT	945		WHITE EDGELINE
HWYEE	288+45.00	297+90.00	CENTER		236	INTERMITTENT YELLOW CENTERLINE
HWYEE	288+45.00	297+90.00	RT	945		WHITE EDGELINE
HWYEE	291+17.00	297+90.00	CENTER		673	SOLID YELLOW CENTERLINE
			TOTAL	3400	1098	

EROSION CONTROL									
ALIGNMENT	STATION	STATION	LOCATION	SEDIMENT TRAP EXCAVATION	SEDIMENT TRAP ROCK	ROCK DITCH CHECK	SEDIMENT REMOVAL	SILT FENCE	TYPE C BERM
				(CY)	(CY)	(LF)	(CY)	(LF)	(LF)
HWY19	55+70.00	57+29.51	LT				2	164	
HWY19	55+70.00	57+42.43	RT				2	176	
HWY19	57+53.00	59+40.03	LT				2	198	
HWY19	57+61.76	59+25.73	RT				2	177	
HWY19	59+15.08	59+63.13	LT/RT						82
HWY19	59+97.65	60+47.23	LT/RT						86
HWY19	60+22.22	63+35.00	RT				3	319	
HWY19	60+36.52	63+35.00	LT				3	306	
HWY19	60+32.68	61+00.00	RT	2.0	2.0	7	2		
HWY19	60+50.00	61+40.00	LT	2.0	2.0	20	4		
HWYEE	288+40.00	292+00.00	LT				4	364	
HWYEE	288+40.00	292+00.00	RT				4	384	
HWYEE	290+90.00	291+50.00	LT	2.0	2.0	33	3		
HWYEE	292+00.00	292+12.00	LT/RT						75
HWYEE	294+88.00	295+00.00	LT/RT						74
HWYEE	295+00.00	297+95.00	LT				3	324	
HWYEE	295+00.00	297+95.00	RT				3	311	
			TOTAL	6.0	6.0	60	37	2723	317

SEEDING				
ALIGNMENT	STATION	STATION	LOCATION	SEEDING - COOL SEASON MIXTURES
				(ACRE)
HWY19	55+75.00	57+29.75	LT	0.01
HWY19	55+75.00	57+42.17	RT	0.01
HWY19	57+53.83	59+24.72	LT	0.08
HWY19	57+61.83	59+11.21	RT	0.07
HWY19	60+37.22	63+30.00	RT	0.08
HWY19	60+50.67	63+30.00	LT	0.08
HWYEE	288+45.00	291+77.50	LT	0.12
HWYEE	288+45.00	291+77.50	RT	0.08
HWYEE	295+22.50	297+90.00	LT	0.09
HWYEE	295+22.50	297+90.00	RT	0.07
			TOTAL	0.69
			PAY TOTAL	1.0

DISCLAIMER
THE PROFESSIONAL WHOSE SIGNATURE AND PERSONAL SEAL APPEAR HEREON ASSUMES RESPONSIBILITY ONLY FOR WHAT APPEARS ON THIS PAGE, AND DISCLAIMS (PURSUANT TO SECTION 327.411 RSMO) SPECIFICATION, ESTIMATES, REPORTS, OR OTHER DOCUMENTS OR INSTRUMENTS NOT SEALED BY THE UNDERSIGNED PROFESSIONAL RELATING TO OR INTENDED TO BE USED FOR ANY PART OR PARTS OF THE PROJECT TO WHICH THIS PAGE REFERS.

QUANTITY SHEET
SHEET 2 OF 3

STATE OF MISSOURI
KORI R. NEELY
NUMBER PE-2016017659
PROFESSIONAL ENGINEER

THIS SHEET HAS BEEN SIGNED, SEALED AND DATED ELECTRONICALLY.

DATE PREPARED
10/3/2016

ROUTE	STATE
19/EE	MO
DISTRICT	SHEET NO.
CD	3

COUNTY
GASCONADE

JOB NO.
J5S3140

CONTRACT ID.

PROJECT NO.

BRIDGE NO.
A8439/A8440

DATE	DESCRIPTION	REV.

IF A SEAL IS PRESENT ON THIS SHEET IT HAS BEEN ELECTRONICALLY SEALED AND DATED.

MISSOURI HIGHWAYS AND TRANSPORTATION COMMISSION
105 WEST CAPITOL
JEFFERSON CITY, MO 65102
1-888-ASK-MODOT (1-888-275-6636)

HR GREEN, INC.
16020 SWINGLEY RIDGE ROAD, SUITE 205
ST. LOUIS, MISSOURI 63017
PHONE: (636) 519.0990
CORPORATE LICENSE #2002006608

EFFECTIVE: 08-01-2012

SIGN	SIZE (IN.)	AREA (SQ. FT.)	QTY	TOTAL AREA	QTY RELOC	TOTAL RELOC AREA	DESCRIPTION
WARNING SIGNS							
W01-1L	48X48	16.00					TURN (SYMBOL LEFT ARROW)
W01-1R	48X48	16.00					TURN (SYMBOL RIGHT ARROW)
W01-2L	48X48	16.00					CURVE (SYMBOL LEFT ARROW)
W01-2R	48X48	16.00					CURVE (SYMBOL RIGHT ARROW)
W01-3L	48X48	16.00					REVERSE TURN (SYMBOL LEFT ARROW)
W01-3R	48X48	16.00					REVERSE TURN (SYMBOL RIGHT ARROW)
W01-4L	48X48	16.00					REVERSE CURVE (SYMBOL LEFT ARROW)
W01-4R	48X48	16.00					REVERSE CURVE (SYMBOL RIGHT ARROW)
W01-4bL	48X48	16.00					DOUBLE ARROW REVERSE CURVE (SYMBOL LEFT ARROWS)
W01-4bR	48X48	16.00					DOUBLE ARROW REVERSE CURVE (SYMBOL RIGHT ARROWS)
W01-4cL	48X48	16.00					TRIPLE ARROW REVERSE CURVE (SYMBOL LEFT ARROWS)
W01-4cR	48X48	16.00					TRIPLE ARROW REVERSE CURVE (SYMBOL RIGHT ARROWS)
W01-6	36X18	4.50					HORIZONTAL ARROW (SYMBOL)
W01-6a	72X36	18.00					HORIZONTAL ARROW (SYMBOL ON PERMANENT BARRICADE)
W01-7	60X30	12.50					DOUBLE HEAD HORIZONTAL ARROW (SYMBOL)
W01-7a	72X36	18.00					DOUBLE HEAD HORIZONTAL ARROW (SYMBOL ON PERMANENT BARRICADE)
W01-8	18X24	3.00					CHEVRON (SYMBOL)
W01-8a	30X36	7.50					CHEVRON (SYMBOL FOR DIVIDED HIGHWAYS)
W03-1	48X48	16.00					STOP AHEAD (SYMBOL)
W03-2	48X48	16.00					YIELD AHEAD (SYMBOL)
W03-3	48X48	16.00					SIGNAL AHEAD (SYMBOL)
W03-4	48X48	16.00					BE PREPARED TO STOP
W03-5	48X48	16.00					SPEED LIMIT AHEAD
W04-1L	48X48	16.00					MERGE (SYMBOL FROM LEFT)
W04-1R	48X48	16.00					MERGE (SYMBOL FROM RIGHT)
W05-1	48X48	16.00					ROAD/BRIDGE/RAMP NARROWS
W05-3	48X48	16.00					ONE LANE BRIDGE
W05-5	48X48	16.00					NARROW LANES
W06-1	48X48	16.00					DIVIDED HIGHWAY (SYMBOL)
W06-2	48X48	16.00					DIVIDED HIGHWAY END (SYMBOL)
W06-3	48X48	16.00					TWO WAY TRAFFIC (SYMBOL)
W07-3a	30X24	5.00					NEXT XX MILES (PLAQUE)
W08-1	48X48	16.00					BUMP
W08-2	48X48	16.00					DIP
W08-3	48X48	16.00					PAVEMENT ENDS
W08-4	48X48	16.00					SOFT SHOULDER
W08-5	48X48	16.00					SLIPPERY WHEN WET (SYMBOL)
W08-6	48X48	16.00					TRUCK CROSSING WITH FLAGS
W08-6c	48X48	16.00					TRUCK ENTRANCE
W08-7	36X36	9.00					LOOSE GRAVEL
W08-9	48X48	16.00					LOW SHOULDER
W08-11	48X48	16.00					UNEVEN LANES
W08-12	48X48	16.00					NO CENTER LINE
W10-1	42 RND.	9.62					RAILROAD CROSSING
W012-1	24X24	4.00					DOUBLE DOWN ARROW (SYMBOL)
W012-2	48X48	16.00					LOW CLEARANCE (SYMBOL)
W012-2x	24X18	3.00					LOW CLEARANCE (PLAQUE)
W012-2a	84X24	14.00					OVERHEAD LOW CLEARANCE (FEET AND INCHES)
W08-15	48X48	16.00					GROOVED PAVEMENT
W08-15p	30X24	5.00					MOTORCYCLE (PLAQUE)
W08-17	48X48	16.00					SHOULDER DROP-OFF (SYMBOL)
W08-17p	30X24	5.00					SHOULDER DROP-OFF (PLAQUE)
SPECIAL	120X60	50.00					LOW CLEARANCE XX FT XX IN XX MILES AHEAD
SPECIAL	120X60	50.00					WIDTH RESTRICTION XX FT XX IN XX MILES AHEAD
W013-1	30X30	6.25					ADVISORY SPEED (PLAQUE)
W016-2	30X24	5.00					XXX FEET (PLAQUE)
W016-3	30X24	5.00					X MILE (PLAQUE)
W020-1	48X48	16.00					ROAD/BRIDGE/RAMP WORK AHEAD
W020-2	48X48	16.00	8	128			DETOUR AHEAD
W020-3	48X48	16.00	4	64			ROAD CLOSED AHEAD
W020-4	48X48	16.00					ONE LANE ROAD AHEAD
W020-5	48X48	16.00					RIGHT/CENTER/LEFT LANE CLOSED AHEAD
W020-5a	48X48	16.00					2 RIGHT/CENTER/LEFT LANES CLOSED AHEAD
W020-6a	48X48	16.00					RIGHT/CENTER/LEFT LANE CLOSED
W020-7a	48X48	16.00					FLAGGER (SYMBOL) WITH FLAGS
W021-2	36X36	9.00					FRESH OIL
W021-5b	48X48	16.00					SHOULDER WORK AHEAD
W022-1	48X48	16.00					BLASTING ZONE AHEAD
W022-2	42X36	10.50					TURN OFF 2-WAY RADIO AND PHONE
W022-3	42X36	10.50					END BLASTING ZONE
W022-6e	21X15	2.19					WET PAINT (ARROW PIVOTS)
GUIDE SIGNS							
SPECIAL	36X36	9.00					FRESH OIL/LOOSE GRAVEL
E05-1	36X48	12.00					GORE EXIT
E05-2	48X36	12.00					EXIT OPEN
E05-2a	48X36	12.00					EXIT CLOSED
G020-1	60X24	10.00					ROAD WORK NEXT XX MILES
G020-2	48X24	8.00					END ROAD WORK
G020-4	36X18	4.50					PILOT CAR FOLLOW ME
SPECIAL	42X30	8.75					PLEASE WAIT FOR PILOT CAR
G020-5aP	36X24	6.00					WORK ZONE (PLAQUE)
M04-8a	48X24	8.00	4	32			END DETOUR
M04-9L	48X36	12.00					DETOUR (LEFT ARROW)
M04-9R	48X36	12.00					DETOUR (RIGHT ARROW)
M04-10L	48X18	6.00					DETOUR (ARROW LEFT)
M04-10R	48X18	6.00					DETOUR (ARROW RIGHT)
REGULATORY SIGNS							
R1-1	30X30	6.25					STOP
R1-2	36 TRI.	4.00					YIELD
R1-2a	36X36	9.00					TO ONCOMING TRAFFIC (PLAQUE)
R1-3	20X9	1.25					X-WAY (PLAQUE)
R2-1	24X30	5.00					SPEED LIMIT 35 MPH
R3-1	48X48	16.00					NO RIGHT TURN (SYMBOL)
R3-2	48X48	16.00					NO LEFT TURN (SYMBOL)
R3-3	36X36	9.00					NO TURNS
R3-4	48X48	16.00					NO U-TURN (SYMBOL)
R3-7L	30X30	6.25					LEFT LANE MUST TURN LEFT
R3-7R	30X30	6.25					RIGHT LANE MUST TURN RIGHT
R4-1	36X48	12.00					DO NOT PASS
R4-2	36X48	12.00					PASS WITH CARE
R4-7aL	36X48	12.00					KEEP LEFT (HORIZONTAL ARROW)
R4-7a	36X48	12.00					KEEP RIGHT (HORIZONTAL ARROW)
R5-1	30X30	6.25					DO NOT ENTER
R5-1a	36X24	6.00					WRONG WAY
R6-1L	48X18	6.00					ONE WAY ARROW (LEFT)
R6-1R	48X18	6.00					ONE WAY ARROW (RIGHT)
R6-2L	24X30	5.00					ONE WAY (LEFT)
R6-2R	24X30	5.00					ONE WAY (RIGHT)
R10-6	24X36	6.00					STOP HERE ON RED (45° ARROW)
R11-2	48X30	10.00	5	50			ROAD CLOSED
R11-3a	60X30	12.50	4	50			ROAD CLOSED XX MILES AHEAD LOCAL TRAFFIC ONLY (1, 7, 5.5, 8.5)
R11-4	60X30	12.50					ROAD CLOSED TO THRU TRAFFIC
S4-4	36X15	3.75					WHEN FLASHING
CONST-3A	60X48	20.00					FINE SIGN
CONST-3X	56X12	4.67					SPEEDING/PASSING (PLATE)
MISCELLANEOUS SIGNS							
W020-3a	48X48	16.00	4	64			ROAD CLOSED 500 FT
SPECIAL	78X36	19.50	30	585			DETOUR SIGNS MISC (70-75, 80-85)
CONST-7-72	72X36	18.00	8	144			RATE OUR WORK ZONE
CONST-5-96	96X48	32.00	4	128			POINT OF PRESENCE (BRIDGE IMPROVEMENTS)
616-10.05 CONSTRUCTION SIGNS TOTAL				1245			
616-10.10 RELOCATED SIGNS TOTAL							

ITEM NUMBER	TOTAL QTY	DESCRIPTION
6122008		IMPACT ATTENUATOR (8 SAND BARRELS)
6122009		IMPACT ATTENUATOR (9 SAND BARRELS)
6122010		IMPACT ATTENUATOR (10 SAND BARRELS)
6122012		IMPACT ATTENUATOR (12 SAND BARRELS)
6122014		IMPACT ATTENUATOR (14 SAND BARRELS)
6122017		IMPACT ATTENUATOR (17 SAND BARRELS)
6122019		IMPACT ATTENUATOR (19 SAND BARRELS)
6122020		REPLACEMENT SAND BARREL
6122030		IMPACT ATTENUATOR ARRAY (RELOCATION)
6123000A		TRUCK OR TRAILER MOUNTED ATTENUATOR (TMA)
6161007		SPEED LIMIT AND STROBE LIGHT ASSEMBLY
6161008	4	ADVANCED WARNING RAIL SYSTEM
6161009	8	FLAG ASSEMBLY
6161020		CHANNELIZER (DRUM-LIKE)
6161022		CHANNELIZER (CONES)
6161024		CHANNELIZER (TRIM LINE) WITH LIGHT
6161025		CHANNELIZER (TRIM LINE)
6161026		CHANNELIZER (VERTICAL PANEL)
6161027		CHANNELIZER (VERTICAL PANEL) WITH LIGHT
6161028		CHANNELIZER
6161030		TYPE III MOVEABLE BARRICADE
6161031	15	TYPE III MOVEABLE BARRICADE WITH LIGHT
6161033		DIRECTION INDICATOR BARRICADE
6161034		DIRECTION INDICATOR BARRICADE, WITH LIGHT
6161040		FLASHING ARROW PANEL
6161047		TYPE III OBJECT MARKER
6161051		WARNING LIGHT, TYPE A
6161052		WARNING LIGHT, TYPE B
6161053		WARNING LIGHT, TYPE C
6161055		SEQUENTIAL FLASHING WARNING LIGHT
6161070		TUBULAR MARKER
6161095		RADAR SPEED ADVISORY SYSTEM
6161096		CHANGEABLE MESSAGE SIGN, COMMISSION FURNISHED/RETAINED
6161098A	8	CHANGEABLE MESSAGE SIGN, WITHOUT COMMUNICATION INTERFACE, CONTRACTOR FURNISHED/RETAINED
6161100		CHANGEABLE MESSAGE SIGN, CONTRACTOR FURNISHED/COMMISSION RETAINED
6173600D		CONTRACTOR FURNISHED/RETAINED TEMPORARY TRAFFIC BARRIER
6173602B		CONTRACTOR FURNISHED/COMMISSION RETAINED TEMPORARY TRAFFIC BARRIER
6174000A		TEMPORARY TRAFFIC BARRIER HEIGHT TRANSITION
6175010A		RELOCATING TEMPORARY TRAFFIC BARRIER
6176000B		COMMISSION FURNISHED/RETAINED TEMPORARY TRAFFIC BARRIER
6177000B		COMMISSION FURNISHED/RETAINED TEMPORARY TRAFFIC BARRIER HEIGHT TRANSITION
9019400		TEMPORARY LIGHTING
9029400		TEMPORARY TRAFFIC SIGNALS
9029401		TEMPORARY TRAFFIC SIGNALS AND LIGHTING

DISCLAIMER
THE PROFESSIONAL WHOSE SIGNATURE AND PERSONAL SEAL APPEAR HEREON ASSUMES RESPONSIBILITY ONLY FOR WHAT APPEARS ON THIS PAGE, AND DISCLAIMS (PURSUANT TO SECTION 327.411 RSMO) SPECIFICATION, ESTIMATES, REPORTS, OR OTHER DOCUMENTS OR INSTRUMENTS NOT SEALED BY THE UNDERSIGNED PROFESSIONAL RELATING TO OR INTENDED TO BE USED FOR ANY PART OR PARTS OF THE PROJECT TO WHICH THIS PAGE REFERS.

QUANTITY SHEET
SHEET 3 OF 3

STATE OF MISSOURI
KORI R. NEELY
NUMBER PE-2016017659
PROFESSIONAL ENGINEER

THIS SHEET HAS BEEN SIGNED, SEALED AND DATED ELECTRONICALLY.

DATE PREPARED: 10/25/2016
ROUTE: 19/EE | STATE: MO
DISTRICT: CD | SHEET NO.: 3
COUNTY: GASCONADE
JOB NO.: J5S3140
CONTRACT ID.:
PROJECT NO.:
BRIDGE NO.: A8439/A8440

REV.	DESCRIPTION	DATE

IF A SEAL IS PRESENT ON THIS SHEET IT HAS BEEN ELECTRONICALLY SEALED AND DATED.

MISSOURI HIGHWAYS AND TRANSPORTATION COMMISSION
105 WEST CAPITOL
JEFFERSON CITY, MO 65102
1-888-ASK-MODOT (1-888-275-6636)

HR GREEN, INC.
16020 SWINGLEY RIDGE ROAD, SUITE 205
ST. LOUIS, MISSOURI 63017
PHONE: (636) 519.0990
CORPORATE LICENSE #2002006608
HRGreen

ANY WORK INDICATED ON THE PLANS THAT EXTENDS BEYOND THE PROJECT LIMITS IS CONSIDERED INCIDENTAL TO AND A PART OF THE CONSTRUCTION OF THIS PROJECT.

DISCLAIMER
THE PROFESSIONAL WHOSE SIGNATURE AND PERSONAL SEAL APPEAR HEREON ASSUMES RESPONSIBILITY ONLY FOR WHAT APPEARS ON THIS PAGE, AND DISCLAIMS (PURSUANT TO SECTION 327.411 RSMO) SPECIFICATION, ESTIMATES, REPORTS, OR OTHER DOCUMENTS OR INSTRUMENTS NOT SEALED BY THE UNDERSIGNED PROFESSIONAL RELATING TO OR INTENDED TO BE USED FOR ANY PART OR PARTS OF THE PROJECT TO WHICH THIS PAGE REFERS.

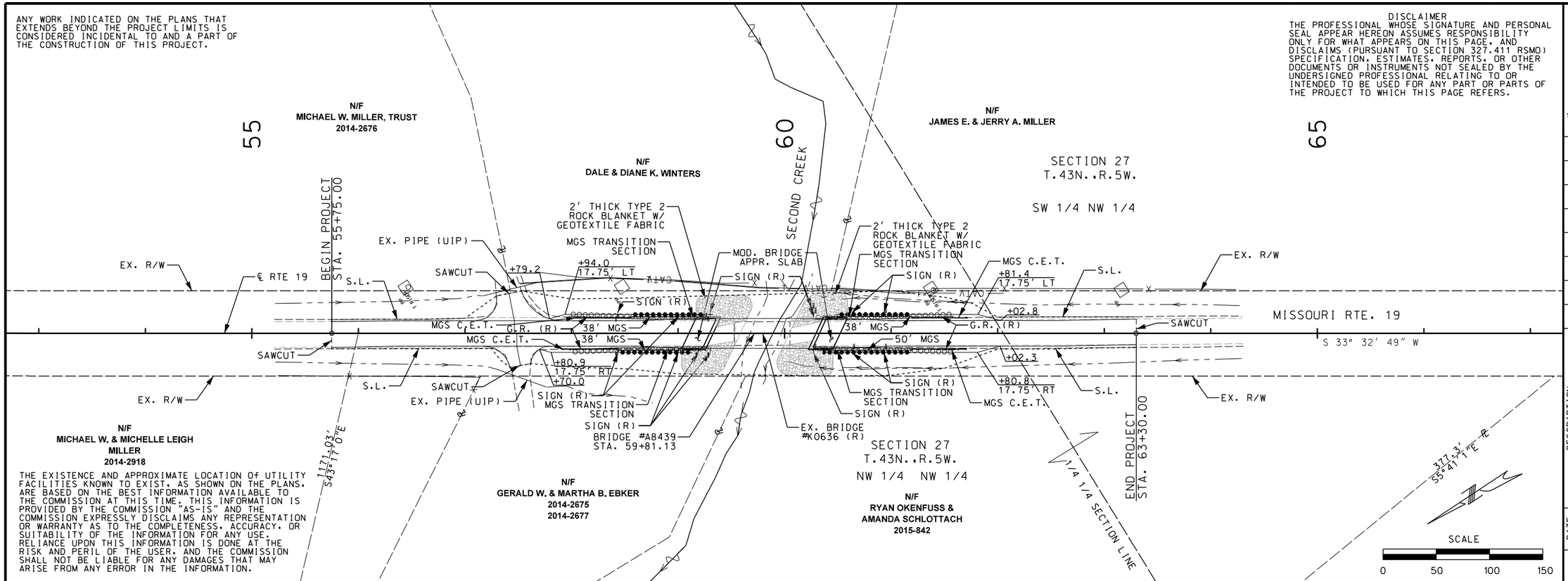

THE EXISTENCE AND APPROXIMATE LOCATION OF UTILITY FACILITIES KNOWN TO EXIST, AS SHOWN ON THE PLANS, ARE BASED ON THE BEST INFORMATION AVAILABLE TO THE COMMISSION AT THIS TIME. THIS INFORMATION IS PROVIDED BY THE COMMISSION "AS-IS" AND THE COMMISSION EXPRESSLY DISCLAIMS ANY REPRESENTATION OR WARRANTY AS TO THE COMPLETENESS, ACCURACY, OR SUITABILITY OF THE INFORMATION FOR ANY USE. RELIANCE UPON THIS INFORMATION IS DONE AT THE RISK AND PERIL OF THE USER, AND THE COMMISSION SHALL NOT BE LIABLE FOR ANY DAMAGES THAT MAY ARISE FROM ANY ERROR IN THE INFORMATION.

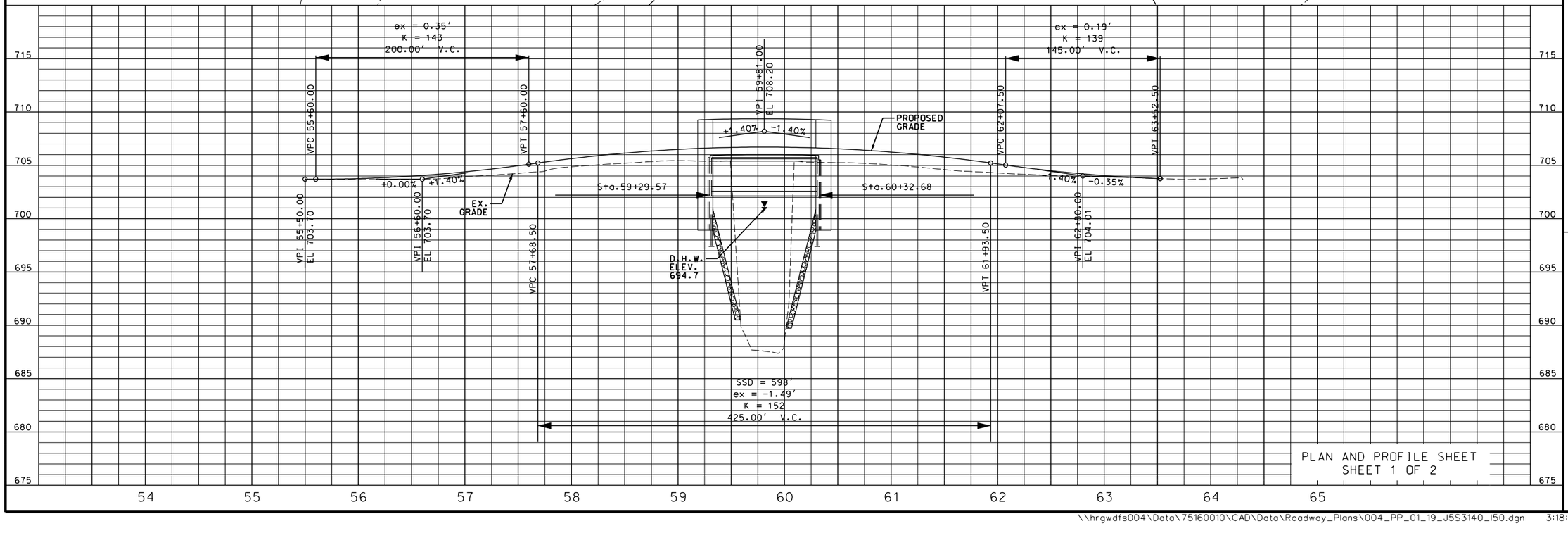

PLAN AND PROFILE SHEET
SHEET 1 OF 2

STATE OF MISSOURI
KORI R. NEELY
NUMBER PE-2016017659
PROFESSIONAL ENGINEER

THIS SHEET HAS BEEN SIGNED, SEALED AND DATED ELECTRONICALLY.

DATE PREPARED	10/3/2016
ROUTE	19
STATE	MO
DISTRICT	CD
SHEET NO.	4
COUNTY	GASCONADE
JOB NO.	J5S3140
CONTRACT ID.	
PROJECT NO.	
BRIDGE NO.	A8439

DESCRIPTION
DATE
REV.

IF A SEAL IS PRESENT ON THIS SHEET IT HAS BEEN ELECTRONICALLY SEALED AND DATED.

MISSOURI HIGHWAYS AND TRANSPORTATION COMMISSION
105 WEST CAPITOL
JEFFERSON CITY, MO 65102
1-888-ASK-MODOT (1-888-275-6636)

HR GREEN, INC.
16020 SWINGLEY RIDGE ROAD, SUITE 205
ST. LOUIS, MISSOURI 63017
PHONE: (636) 519.0990
CORPORATE LICENSE #2002006608
HRGreen

\\hrgwdfs004\Data\75160010\CAD\Data\Roadway_Plans\004_PP_01_19_J5S3140_150.dgn 3:18:10 PM 10/3/2016

ANY WORK INDICATED ON THE PLANS THAT EXTENDS BEYOND THE PROJECT LIMITS IS CONSIDERED INCIDENTAL TO AND A PART OF THE CONSTRUCTION OF THIS PROJECT.

CORNER COMMON TO SECTIONS 19,20,29,30 SANDSTONE W/CROSS IN STONE PILE DOC. # 600-97520 (NOT TO SCALE)

290

N 82° 25' 25" W 4,194.92'

APPROX. 1/4,1/4 SECTION LINE

EXISTING 120'W. PERMANENT CHANNEL CHANGE EASEMENT

SECTION 19
T.41N.,R.5W

DRY FORK CREEK

295

300

DISCLAIMER

THE PROFESSIONAL WHOSE SIGNATURE AND PERSONAL SEAL APPEAR HEREON ASSUMES RESPONSIBILITY ONLY FOR WHAT APPEARS ON THIS PAGE, AND DISCLAIMS (PURSUANT TO SECTION 327.411 RSMO) SPECIFICATION, ESTIMATES, REPORTS, OR OTHER DOCUMENTS OR INSTRUMENTS NOT SEALED BY THE UNDERSIGNED PROFESSIONAL RELATING TO OR INTENDED TO BE USED FOR ANY PART OR PARTS OF THE PROJECT TO WHICH THIS PAGE REFERS.

N/F
7TH RAY RANCH
2011/2913
NO TAKING

N/F
CLYDE HINCH JR.
REVOCABLE LIVING TRUST &
LOUISE E. HINCH
REVOCABLE TRUST
DOC. # 2001/011832
NO TAKING

EX. R/W
℄ RTE EE
SAWCUT
S.L.
S 6° 39' 29" E
BEGIN PROJECT STA. 288+45.00
MGS TRANSITION SECTION
MGS C.E.T. +80.9 16.75' LT.
+55.7 13' MGS
MOD. BRIDGE APPR. SLAB
290+40.00 30.00' RT.
290+40.00 50.00' RT.
+80.9 16.75' RT.
291+00.00 30.00' RT.
TEMP. ESM'T (SLOPE)
291+50.00 50.00' RT.
2' THICK TYPE 2 ROCK BLANKET W/ GEOTEXTILE FABRIC
EX. BRIDGE #R0292 (R)
BRIDGE #A8440 STA. 293+50.00
294+50.00 50.00' RT.
295+00.00 65.00' RT.
WETLAND (DND)
MGS TRANSITION SECTION
+19.2 16.75' LT.
+44.3
ELEV. 766.20
298+00.00 50.00' LT.
298+50.00 35.00' LT.
PC STA 299+54.40
MISSOURI RTE. EE
MGS TRANSITION SECTION
+19.2 16.75' RT.
MGS C.E.T.
EX. PIPE (UIP)
ELEV. 766.52
EX. R/W
298+50.00 35.00' RT.
298+00.00 65.00' RT.
END PROJECT STA. 297+90.00

N/F
STEVEN T. & JULIE M.
POTTER
2008/3301
0.04 AC (1,700 SF)
TEMP. ESM'T (SLOPE)

N/F
TONY E. & SHERRI L.
BUSCHMEYER
2012/76
NO TAKING

SECTION 19
SECTION 30

SECTION 30
T.41N.,R.5W

SCALE
0 50 100 150

THE EXISTENCE AND APPROXIMATE LOCATION OF UTILITY FACILITIES KNOWN TO EXIST, AS SHOWN ON THE PLANS, ARE BASED ON THE BEST INFORMATION AVAILABLE TO THE COMMISSION AT THIS TIME. THIS INFORMATION IS PROVIDED BY THE COMMISSION "AS-IS" AND THE COMMISSION EXPRESSLY DISCLAIMS ANY REPRESENTATION OR WARRANTY AS TO THE COMPLETENESS, ACCURACY, OR SUITABILITY OF THE INFORMATION FOR ANY USE. RELIANCE UPON THIS INFORMATION IS DONE AT THE RISK AND PERIL OF THE USER, AND THE COMMISSION SHALL NOT BE LIABLE FOR ANY DAMAGES THAT MAY ARISE FROM ANY ERROR IN THE INFORMATION.

ex = 0.52'
K = 139
240.00' V.C.
VPC 288+55.00
VPT 290+95.00
VPI 288+45.00 EL 788.46
VPI 289+75.00 EL 786.89
-1.21%
+0.52%
Sta.291+97.00
EX. GRADE
VPI 293+75.00 EL 788.97
+0.52%
-0.74%
PROPOSED GRADE
Sta.295+03.00
D.H.W. ELEV. 694.7
VPC 292+75.00
VPT 294+75.00
SSD = 956'
ex = -0.32'
K = 159
200.00' V.C.
ex = 0.14
K = 151
130.00' V.C.
VPC 296+60.00
VPT 297+90.00
VPI 297+25.00 EL 786.58
-0.74%
+0.12%

795 790 785 780 775 770 765 760 755

288 289 290 291 292 293 294 295 296 297 298 299

PLAN AND PROFILE SHEET
SHEET 2 OF 2

KORI R. NEELY
NUMBER PE-2016017659
PROFESSIONAL ENGINEER
STATE OF MISSOURI

THIS SHEET HAS BEEN SIGNED, SEALED AND DATED ELECTRONICALLY.

DATE PREPARED 10/25/2016
ROUTE EE | STATE MO
DISTRICT CD | SHEET NO. 5
COUNTY GASCONADE
JOB NO. J5S3140
CONTRACT ID.
PROJECT NO.
BRIDGE NO. A8440

IF A SEAL IS PRESENT ON THIS SHEET IT HAS BEEN ELECTRONICALLY SEALED AND DATED.

REV. | DATE | DESCRIPTION

MISSOURI HIGHWAYS AND TRANSPORTATION COMMISSION
105 WEST CAPITOL
JEFFERSON CITY, MO 65102
1-888-ASK-MODOT (1-888-275-6636)

HR GREEN, INC.
16020 SWINGLEY RIDGE ROAD, SUITE 205
ST. LOUIS, MISSOURI 63017
PHONE: (636) 519.0990
CORPORATE LICENSE #2002006608
HRGreen

\\hrgwdfs004\Data\75160010\CAD\Data\Roadway_Plans\005_PP_02_EE_J5S3140_150.dgn 4:58:59 PM 10/25/2016

C.P. 800 (19)

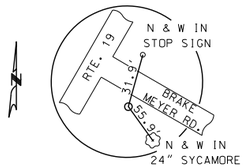

⅝" REBAR W/ALUMINUM CAP BURIED 0.2'
30' E/O EAST E.P. ROUTE 19
3' S/O SOUTH E.P. BRAKEMEYER RD.
150' N/O BRIDGE OVER SECOND CREEK

COORDS.
X = 540127.4891
Y = 953477.9951
Z = 702.3960

C.P. 801 (19)

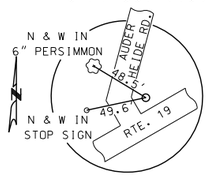

⅝" REBAR W/ALUMINUM CAP BURIED 0.2'
0.1 MI. S/O BRIDGE OVER SECOND CREEK
9' W/O WEST E.P. ROUTE 19
3' N/O NORTH EDGE AUFDER HEIDE RD.

COORDS.
X = 539544.3600
Y = 952721.9400
Z = 706.3210

C.P. 800 (EE)

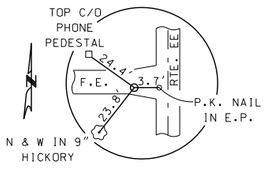

⅝" REBAR W/ALUMINUM CAP
375' +/- NORTH OF BRIDGE R0292

COORDS.
X = 523647.1745
Y = 890318.6557
Z = 788.31

C.P. 801 (EE)

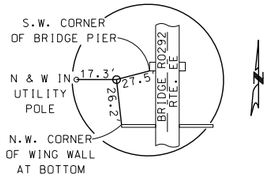

⅝" REBAR W/ALUMINUM CAP
AT THE SW QUADRANT OF BRIDGE R0392

COORDS.
X = 523707.9388
Y = 889667.3217
Z = 775.46

DISCLAIMER
THE PROFESSIONAL WHOSE SIGNATURE AND PERSONAL SEAL APPEAR HEREON ASSUMES RESPONSIBILITY ONLY FOR WHAT APPEARS ON THIS PAGE, AND DISCLAIMS (PURSUANT TO SECTION 327.411 RSMO) SPECIFICATION, ESTIMATES, REPORTS, OR OTHER DOCUMENTS OR INSTRUMENTS NOT SEALED BY THE UNDERSIGNED PROFESSIONAL RELATING TO OR INTENDED TO BE USED FOR ANY PART OR PARTS OF THE PROJECT TO WHICH THIS PAGE REFERS.

Coordinate Point Listing
Missouri Coordinate System of 1983

POINT	STATION	ALIGNMENT	STATE PLANE COORDINATES		MODIFIED (GROUND) COORDINATES		DESCRIPTION
			NORTHING	EASTING	NORTHING	EASTING	
CUR HWY19_3	53+07.70	HWY19	953,874.1408	540,336.1355	953,879.4825	540,339.1614	P.T. ROUTE 19 CURVE HWY19_3/BEGIN ALIGNMENT ROUTE 19
CUR HWY19_6	104+96.50	HWY19	949,549.6219	537,468.7007	949,554.9394	537,471.7105	P.C. ROUTE 19 CURVE HWY19_6/END ALIGNMENT ROUTE 19

ROUTE 19:
MODIFIED (GROUND) COORDINATES = STATE PLANE (GRID) X 1.0000056
STATE PLANE (GRID) COORDINATES = MODIFIED (GROUND) X 0.9999944
STATE PLANE ZONE: MISSOURI EAST

POINT	STATION	ALIGNMENT	STATE PLANE COORDINATES		MODIFIED (GROUND) COORDINATES		DESCRIPTION
			NORTHING	EASTING	NORTHING	EASTING	
STAEQU1	276+79.30	HWYEE	891,450.1699	523,529.7805	891,451.7253	523,530.6940	STA. EQU. 276+74.91 (BK.) = 276+79.30 (AHD.)
							BEGIN ALIGNMENT ROUTE EE
CUR HWYEE_12	299+54.40	HWYEE	889,190.4144	523,793.5638	889,191.9659	523,794.4777	P.C. ROUTE EE CURVE HWYEE_12/END ALIGNMENT ROUTE EE

ROUTE EE:
MODIFIED (GROUND) COORDINATES = STATE PLANE (GRID) X 1.0000017448
STATE PLANE (GRID) COORDINATES = MODIFIED (GROUND) X 0.9999982552
STATE PLANE ZONE: MISSOURI EAST

REFERENCE POINTS &
COORDINATE POINTS
SHEET 1 OF 1

STATE OF MISSOURI
KORI R. NEELY
NUMBER PE-2016017659
PROFESSIONAL ENGINEER

THIS SHEET HAS BEEN SIGNED, SEALED AND DATED ELECTRONICALLY.

DATE PREPARED 10/3/2016
ROUTE 19/EE | STATE MO
DISTRICT CD | SHEET NO. 6
COUNTY GASCONADE
JOB NO. J5S3140
CONTRACT ID.
PROJECT NO.
BRIDGE NO. A8439/A8440

DESCRIPTION | DATE

IF A SEAL IS PRESENT ON THIS SHEET IT HAS BEEN ELECTRONICALLY SEALED AND DATED.

MISSOURI HIGHWAYS AND TRANSPORTATION COMMISSION
105 WEST CAPITOL
JEFFERSON CITY, MO 65102
1-888-ASK-MODOT (1-888-275-6636)

HR GREEN, INC.
16020 SWINGLEY RIDGE ROAD, SUITE 205
ST. LOUIS, MISSOURI 63017
PHONE: (636) 519.0990
CORPORATE LICENSE #2002006608

REV.

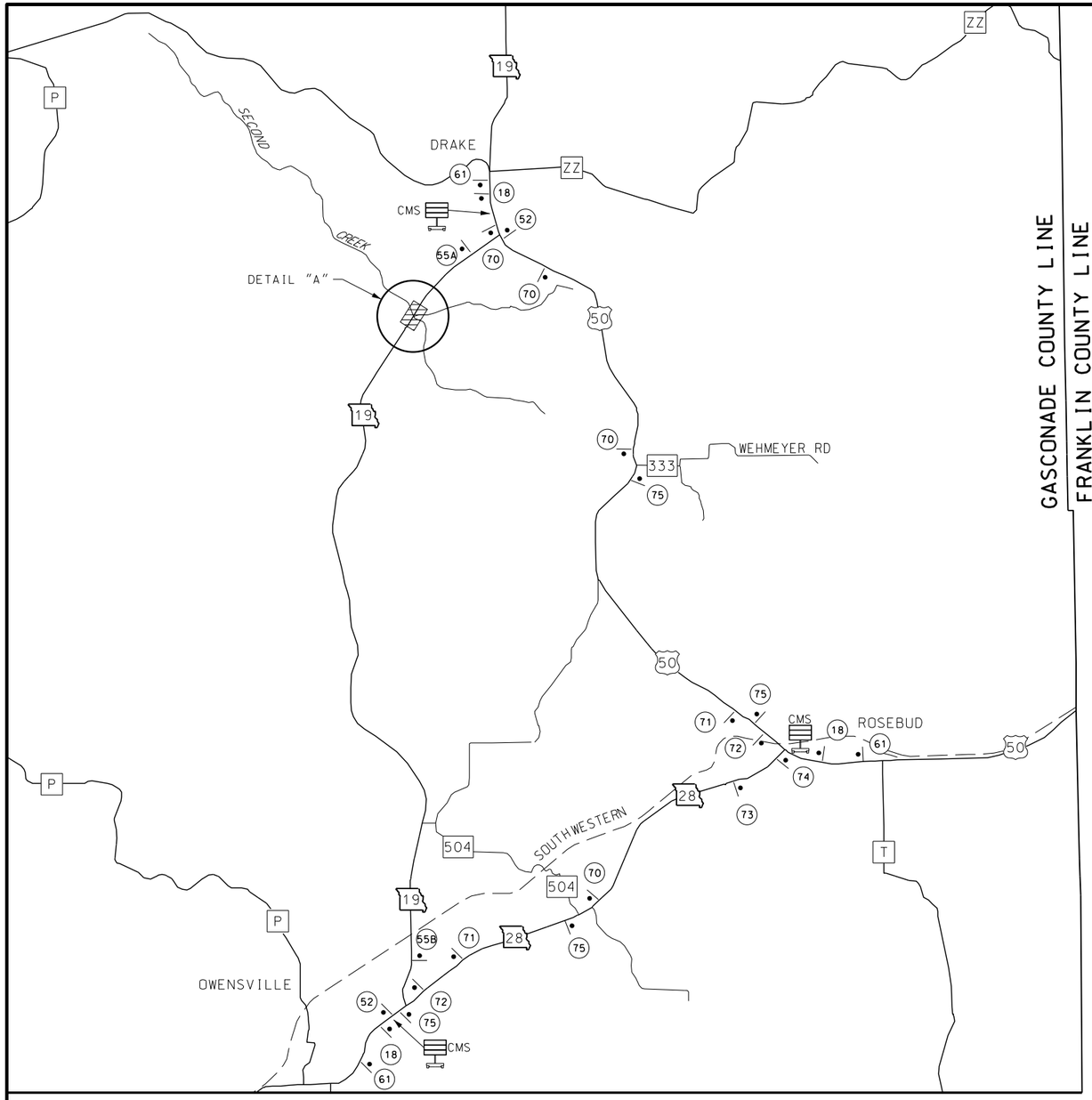

W020-2
(18)

W020-3a
(20a)

(20)
ADVANCED WARNING RAIL SYSTEM

R11-2
(29)

M04-8a
(52)

R11-3a
(55A)

R11-3a
(55B)

96"X48"

CONST-5-96
(56)

72"X36"

CONST-7-72
(61)

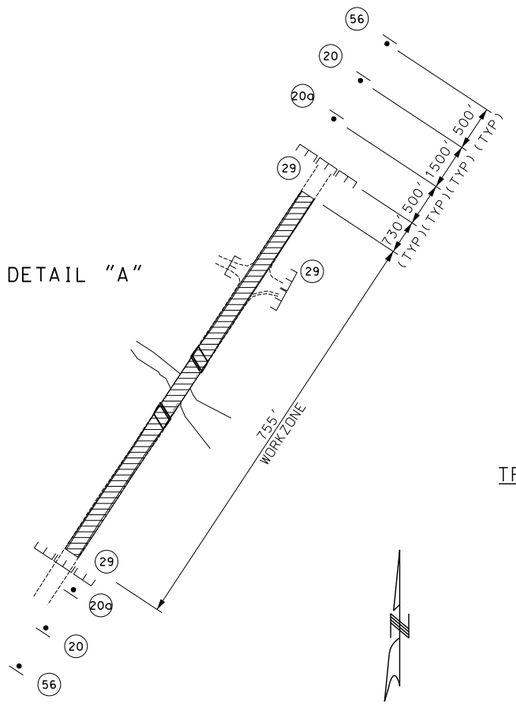

NOT TO SCALE

TRAFFIC CONTROL LEGEND

- SIGN (SINGLE SIDED)
- E — TYPE 3 MOVEABLE BARRICADE WITH LIGHT
- CHANGEABLE MESSAGE SIGN (CMS) CONTRACTOR FURNISHED/ CONTRACTOR RETAINED
- WORK ZONE

78"X36"

(70)

78"X36"

(71)

78"X36"

(72)

78"X36"

(73)

78"X36"

(74)

78"X36"

(75)

NOTES:

ANY EXISTING SIGN THAT CONFLICTS WITH THE TRAFFIC CONTROL SIGNAGE SHALL BE COMPLETELY COVERED OR REMOVED.

PLACEMENT OF TRAFFIC CONTROL SIGNING IS APPROXIMATE AND MAY BE ADJUSTED TO FIT FIELD CONDITIONS AS APPROVED BY THE ENGINEER.

R11-2 SIGN ASSOCIATED WITH TYPE 3 BARRICADE SHALL BE MOUNTED ON POST 7-10 FEET BEHIND BARRICADE.

CMS MESSAGES TO BE APPROVED BY ENGINEER.

ALL SIGNS SHOWN ON THIS SHEET ARE NON-PORTABLE AND SHALL REMAIN IN PLACE FOR THE DURATION OF THE PROJECT.

TRAFFIC CONTROL SHEET
SHEET 1 OF 2

STATE OF MISSOURI
KORI R. NEELY
NUMBER PE-2016017659
PROFESSIONAL ENGINEER

THIS SHEET HAS BEEN SIGNED, SEALED AND DATED ELECTRONICALLY.

DATE PREPARED 10/3/2016

ROUTE	STATE
19	MO
DISTRICT	SHEET NO.
CD	7

COUNTY: GASCONADE
JOB NO.: J5S3140
CONTRACT ID.:
PROJECT NO.:
BRIDGE NO.: A8439

DESCRIPTION	DATE

IF A SEAL IS PRESENT ON THIS SHEET IT HAS BEEN ELECTRONICALLY SEALED AND DATED.

MISSOURI HIGHWAYS AND TRANSPORTATION COMMISSION
105 WEST CAPITOL
JEFFERSON CITY, MO 65102
1-888-ASK-MODOT (1-888-275-6636)

HR GREEN, INC.
16020 SWINGLEY RIDGE ROAD, SUITE 205
ST. LOUIS, MISSOURI 63017
PHONE: (636) 519.0990
CORPORATE LICENSE #2002006608

REV.

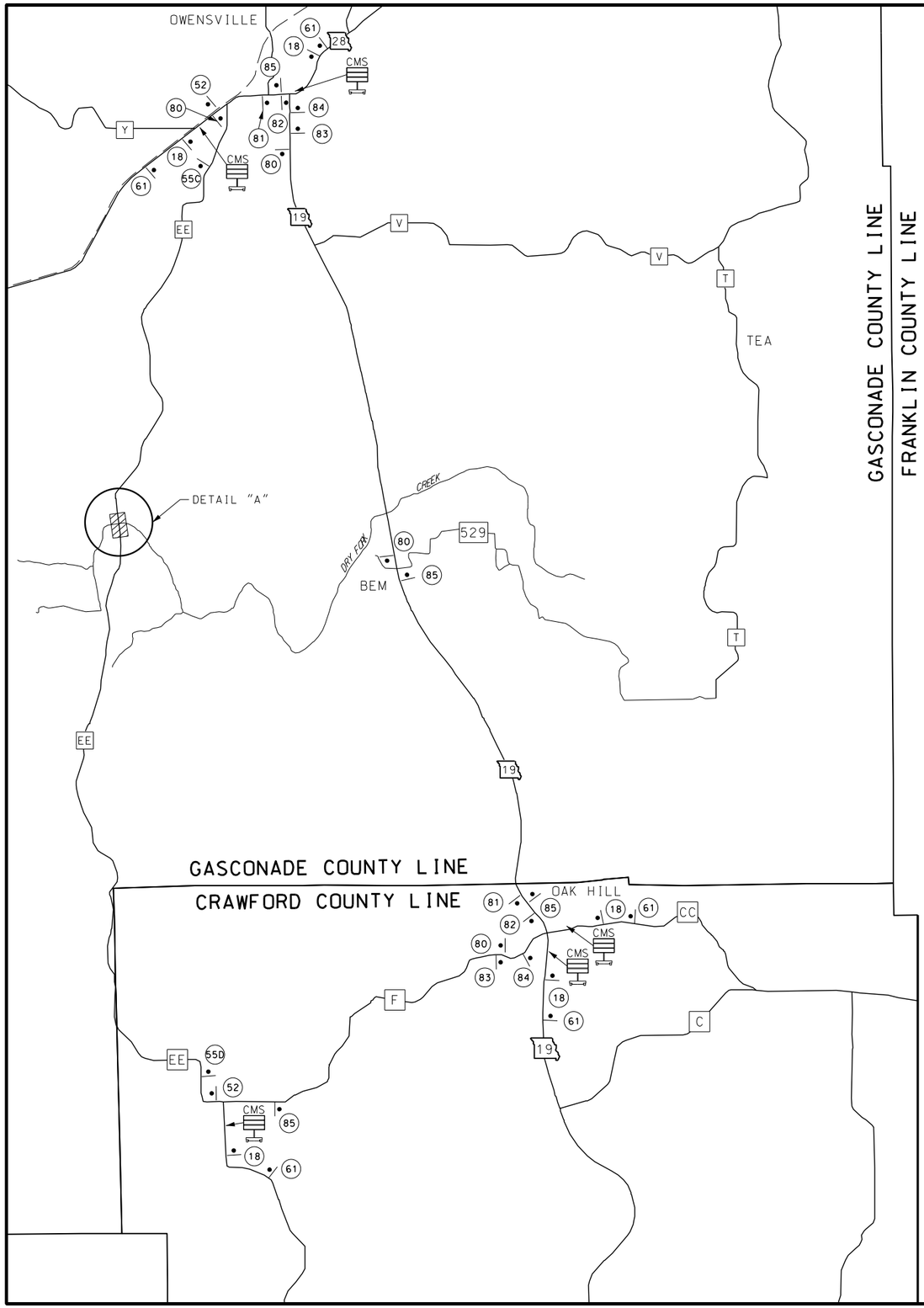

GASCONADE COUNTY LINE

FRANKLIN COUNTY LINE

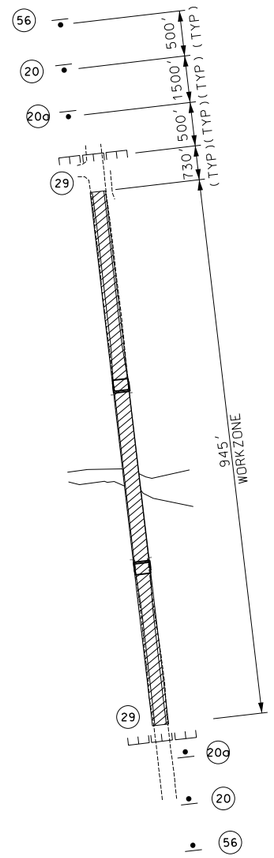

DETAIL "A"

WO20-2

(18)

WO20-3a

(20a)

WO20-3

(20)

ADVANCED WARNING RAIL SYSTEM

R11-2

(29)

M04-8a

(52)

R11-3a

(55C)

R11-3a

(55D)

96"X48"

CONST-5-96

(56)

72"X36"

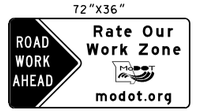

CONST-7-72

(61)

78"X36"

(80)

78"X36"

(81)

78"X36"

(82)

78"X36"

(83)

78"X36"

(84)

78"X36"

(85)

NOTES:

ANY EXISTING SIGN THAT CONFLICTS WITH THE TRAFFIC CONTROL SIGNAGE SHALL BE COMPLETELY COVERED OR REMOVED.

PLACEMENT OF TRAFFIC CONTROL SIGNING IS APPROXIMATE AND MAY BE ADJUSTED TO FIT FIELD CONDITIONS AS APPROVED BY THE ENGINEER.

R11-2 SIGN ASSOCIATED WITH TYPE 3 BARRICADE SHALL BE MOUNTED ON POST 7-10 FEET BEHIND BARRICADE.

CMS MESSAGES TO BE APPROVED BY ENGINEER.

ALL SIGNS SHOWN ON THIS SHEET ARE NON-PORTABLE AND SHALL REMAIN IN PLACE FOR THE DURATION OF THE PROJECT.

TRAFFIC CONTROL LEGEND

- SIGN (SINGLE SIDED)
- E — TYPE 3 MOVEABLE BARRICADE
- CHANGEABLE MESSAGE SIGN (CMS) CONTRACTOR FURNISHED/ CONTRACTOR RETAINED
- WORK ZONE

NOT TO SCALE

TRAFFIC CONTROL SHEET
SHEET 2 OF 2

KORI R. NEELY
NUMBER PE-2016017659
STATE OF MISSOURI
PROFESSIONAL ENGINEER

THIS SHEET HAS BEEN SIGNED, SEALED AND DATED ELECTRONICALLY.

DATE PREPARED 10/3/2016

ROUTE	STATE
EE	MO
DISTRICT	SHEET NO.
CD	8

COUNTY: GASCONADE

JOB NO.: J5S3140

CONTRACT ID.:

PROJECT NO.:

BRIDGE NO.: A8440

DATE	DESCRIPTION

IF A SEAL IS PRESENT ON THIS SHEET IT HAS BEEN ELECTRONICALLY SEALED AND DATED.

MISSOURI HIGHWAYS AND TRANSPORTATION COMMISSION
105 WEST CAPITOL
JEFFERSON CITY, MO 65102
1-888-ASK-MODOT (1-888-275-6636)

HR GREEN, INC.
16020 SWINGLEY RIDGE ROAD, SUITE 205
ST. LOUIS, MISSOURI 63017
PHONE: (636) 519.0990
CORPORATE LICENSE #2002006608

REV.

ANY WORK INDICATED ON THE PLANS THAT EXTENDS BEYOND THE PROJECT LIMITS IS CONSIDERED INCIDENTAL TO AND A PART OF THE CONSTRUCTION OF THIS PROJECT.

TEMPORARY EROSION CONTROL LEGEND

- (R) ROCK DITCH CHECK
- (S) SEDIMENT TRAP
- TYPE C BERM
- SILT FENCE

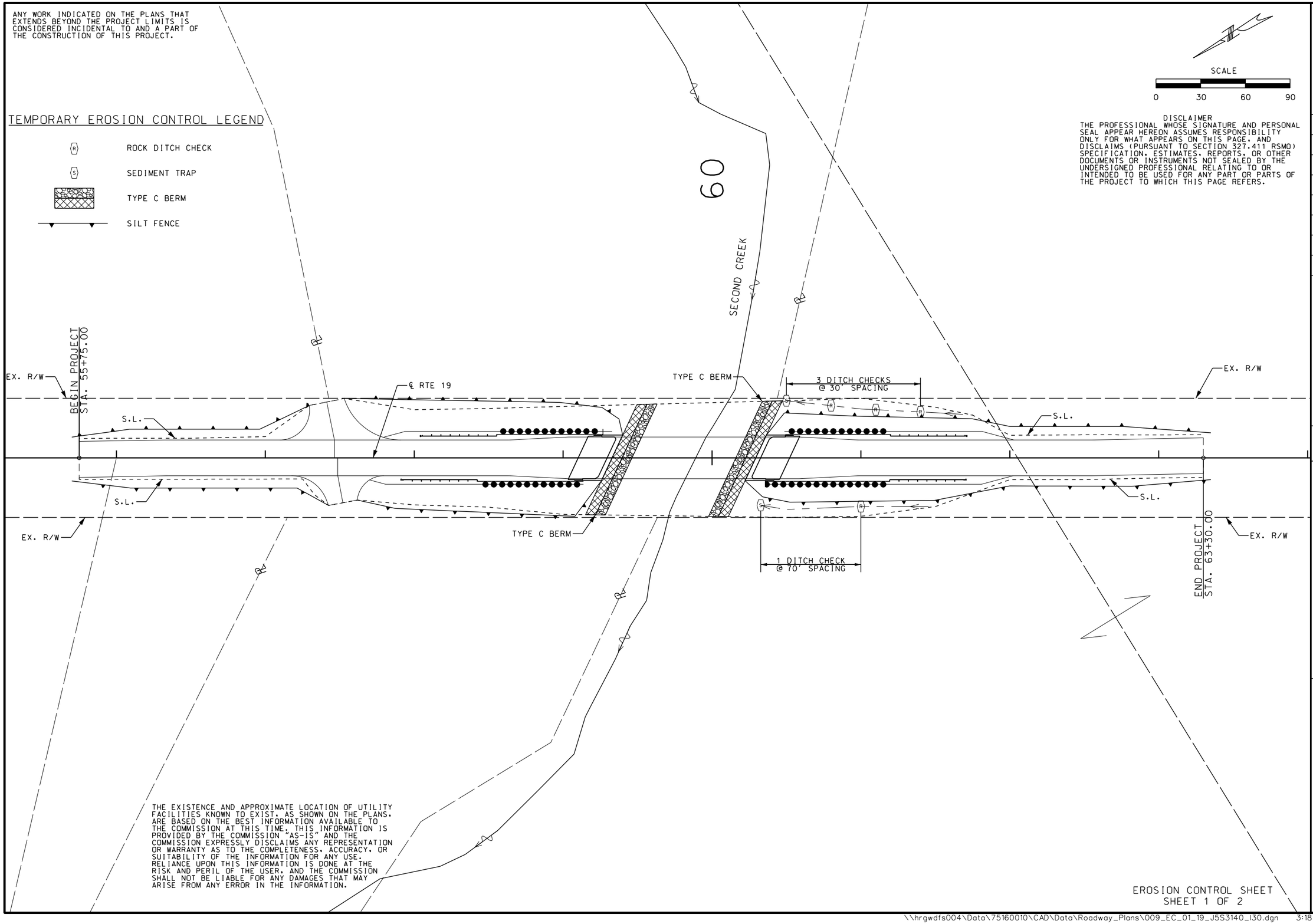

SCALE
0 30 60 90

DISCLAIMER
THE PROFESSIONAL WHOSE SIGNATURE AND PERSONAL SEAL APPEAR HEREON ASSUMES RESPONSIBILITY ONLY FOR WHAT APPEARS ON THIS PAGE, AND DISCLAIMS (PURSUANT TO SECTION 327.411 RSMO) SPECIFICATION, ESTIMATES, REPORTS, OR OTHER DOCUMENTS OR INSTRUMENTS NOT SEALED BY THE UNDERSIGNED PROFESSIONAL RELATING TO OR INTENDED TO BE USED FOR ANY PART OR PARTS OF THE PROJECT TO WHICH THIS PAGE REFERS.

THE EXISTENCE AND APPROXIMATE LOCATION OF UTILITY FACILITIES KNOWN TO EXIST, AS SHOWN ON THE PLANS, ARE BASED ON THE BEST INFORMATION AVAILABLE TO THE COMMISSION AT THIS TIME. THIS INFORMATION IS PROVIDED BY THE COMMISSION "AS-IS" AND THE COMMISSION EXPRESSLY DISCLAIMS ANY REPRESENTATION OR WARRANTY AS TO THE COMPLETENESS, ACCURACY, OR SUITABILITY OF THE INFORMATION FOR ANY USE. RELIANCE UPON THIS INFORMATION IS DONE AT THE RISK AND PERIL OF THE USER, AND THE COMMISSION SHALL NOT BE LIABLE FOR ANY DAMAGES THAT MAY ARISE FROM ANY ERROR IN THE INFORMATION.

EROSION CONTROL SHEET
SHEET 1 OF 2

STATE OF MISSOURI
KORI R. NEELY
NUMBER PE-2016017659
PROFESSIONAL ENGINEER

THIS SHEET HAS BEEN SIGNED, SEALED AND DATED ELECTRONICALLY.

DATE PREPARED 10/3/2016
ROUTE 19 | STATE MO
DISTRICT CD | SHEET NO. 9
COUNTY GASCONADE
JOB NO. J5S3140
CONTRACT ID.
PROJECT NO.
BRIDGE NO. A8439

IF A SEAL IS PRESENT ON THIS SHEET IT HAS BEEN ELECTRONICALLY SEALED AND DATED.

REV.	DESCRIPTION	DATE

MISSOURI HIGHWAYS AND TRANSPORTATION COMMISSION
105 WEST CAPITOL
JEFFERSON CITY, MO 65102
1-888-ASK-MODOT (1-888-275-6636)

HR GREEN, INC.
16020 SWINGLEY RIDGE ROAD, SUITE 205
ST. LOUIS, MISSOURI 63017
PHONE: (636) 519.0990
CORPORATE LICENSE #2002006608
HRGreen

\\hrgwdfs004\Data\75160010\CAD\Data\Roadway_Plans\009_EC_01_19_J5S3140_130.dgn 3:18:13 PM 10/3/2016

THE EXISTENCE AND APPROXIMATE LOCATION OF UTILITY FACILITIES KNOWN TO EXIST, AS SHOWN ON THE PLANS, ARE BASED ON THE BEST INFORMATION AVAILABLE TO THE COMMISSION AT THIS TIME. THIS INFORMATION IS PROVIDED BY THE COMMISSION "AS-IS" AND THE COMMISSION EXPRESSLY DISCLAIMS ANY REPRESENTATION OR WARRANTY AS TO THE COMPLETENESS, ACCURACY, OR SUITABILITY OF THE INFORMATION FOR ANY USE. RELIANCE UPON THIS INFORMATION IS DONE AT THE RISK AND PERIL OF THE USER, AND THE COMMISSION SHALL NOT BE LIABLE FOR ANY DAMAGES THAT MAY ARISE FROM ANY ERROR IN THE INFORMATION.

TEMPORARY EROSION CONTROL LEGEND

- (R) ROCK DITCH CHECK
- (S) SEDIMENT TRAP
- TYPE C BERM
- SILT FENCE

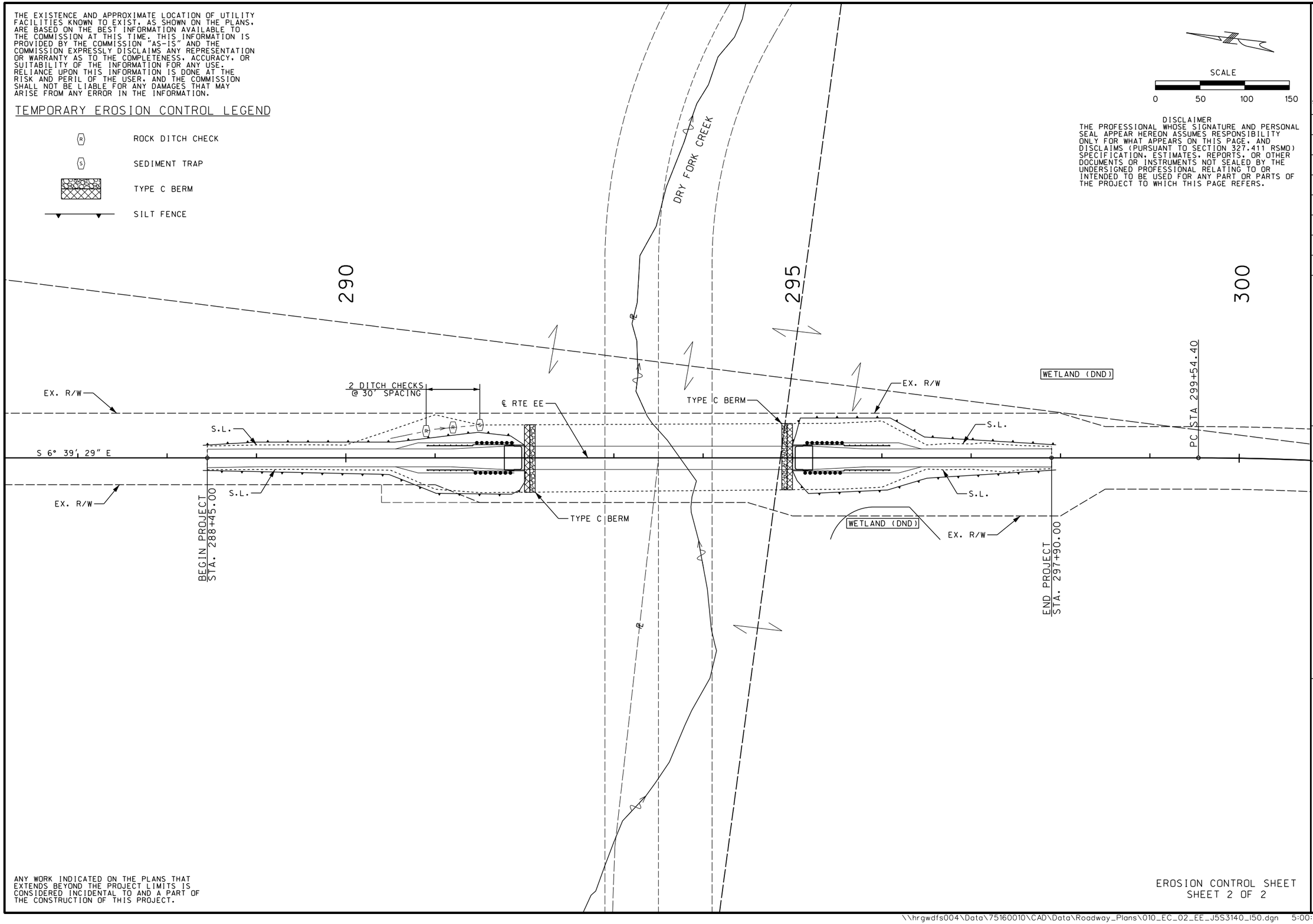

DISCLAIMER
THE PROFESSIONAL WHOSE SIGNATURE AND PERSONAL SEAL APPEAR HEREON ASSUMES RESPONSIBILITY ONLY FOR WHAT APPEARS ON THIS PAGE, AND DISCLAIMS (PURSUANT TO SECTION 327.411 RSMO) SPECIFICATION, ESTIMATES, REPORTS, OR OTHER DOCUMENTS OR INSTRUMENTS NOT SEALED BY THE UNDERSIGNED PROFESSIONAL RELATING TO OR INTENDED TO BE USED FOR ANY PART OR PARTS OF THE PROJECT TO WHICH THIS PAGE REFERS.

ANY WORK INDICATED ON THE PLANS THAT EXTENDS BEYOND THE PROJECT LIMITS IS CONSIDERED INCIDENTAL TO AND A PART OF THE CONSTRUCTION OF THIS PROJECT.

EROSION CONTROL SHEET
SHEET 2 OF 2

STATE OF MISSOURI
KORI R. NEELY
NUMBER PE-2016017659
PROFESSIONAL ENGINEER

THIS SHEET HAS BEEN SIGNED, SEALED AND DATED ELECTRONICALLY.

DATE PREPARED 10/25/2016

ROUTE	STATE
EE	MO
DISTRICT	SHEET NO.
CD	10

COUNTY: GASCONADE
JOB NO.: J5S3140
CONTRACT ID.:
PROJECT NO.:
BRIDGE NO.: A8440

IF A SEAL IS PRESENT ON THIS SHEET IT HAS BEEN ELECTRONICALLY SEALED AND DATED.

DESCRIPTION | DATE | REV.

MISSOURI HIGHWAYS AND TRANSPORTATION COMMISSION
105 WEST CAPITOL
JEFFERSON CITY, MO 65102
1-888-ASK-MODOT (1-888-275-6636)

HR GREEN, INC.
16020 SWINGLEY RIDGE ROAD, SUITE 205
ST. LOUIS, MISSOURI 63017
PHONE: (636) 519.0990
CORPORATE LICENSE #2002006608

\\hrgwdfs004\Data\75160010\CAD\Data\Roadway_Plans\010_EC_02_EE_J5S3140_150.dgn 5:00:52 PM 10/25/2016

ANY WORK INDICATED ON THE PLANS THAT EXTENDS BEYOND THE PROJECT LIMITS IS CONSIDERED INCIDENTAL TO AND A PART OF THE CONSTRUCTION OF THIS PROJECT.

STRIPING LEGEND

I.Y. - 4" INTERMITTENT YELLOW

S.W. - 4" SOLID WHITE

NOTE:

EXISTING SIGNS SHALL BE SALVAGED AND REUSED IF DISTURBED. SEE JSP "SALVAGE OF EXISTING SIGNS."

SCALE

0 30 60 90

DISCLAIMER

THE PROFESSIONAL WHOSE SIGNATURE AND PERSONAL SEAL APPEAR HEREON ASSUMES RESPONSIBILITY ONLY FOR WHAT APPEARS ON THIS PAGE, AND DISCLAIMS (PURSUANT TO SECTION 327.411 RSMO) SPECIFICATION, ESTIMATES, REPORTS, OR OTHER DOCUMENTS OR INSTRUMENTS NOT SEALED BY THE UNDERSIGNED PROFESSIONAL RELATING TO OR INTENDED TO BE USED FOR ANY PART OR PARTS OF THE PROJECT TO WHICH THIS PAGE REFERS.

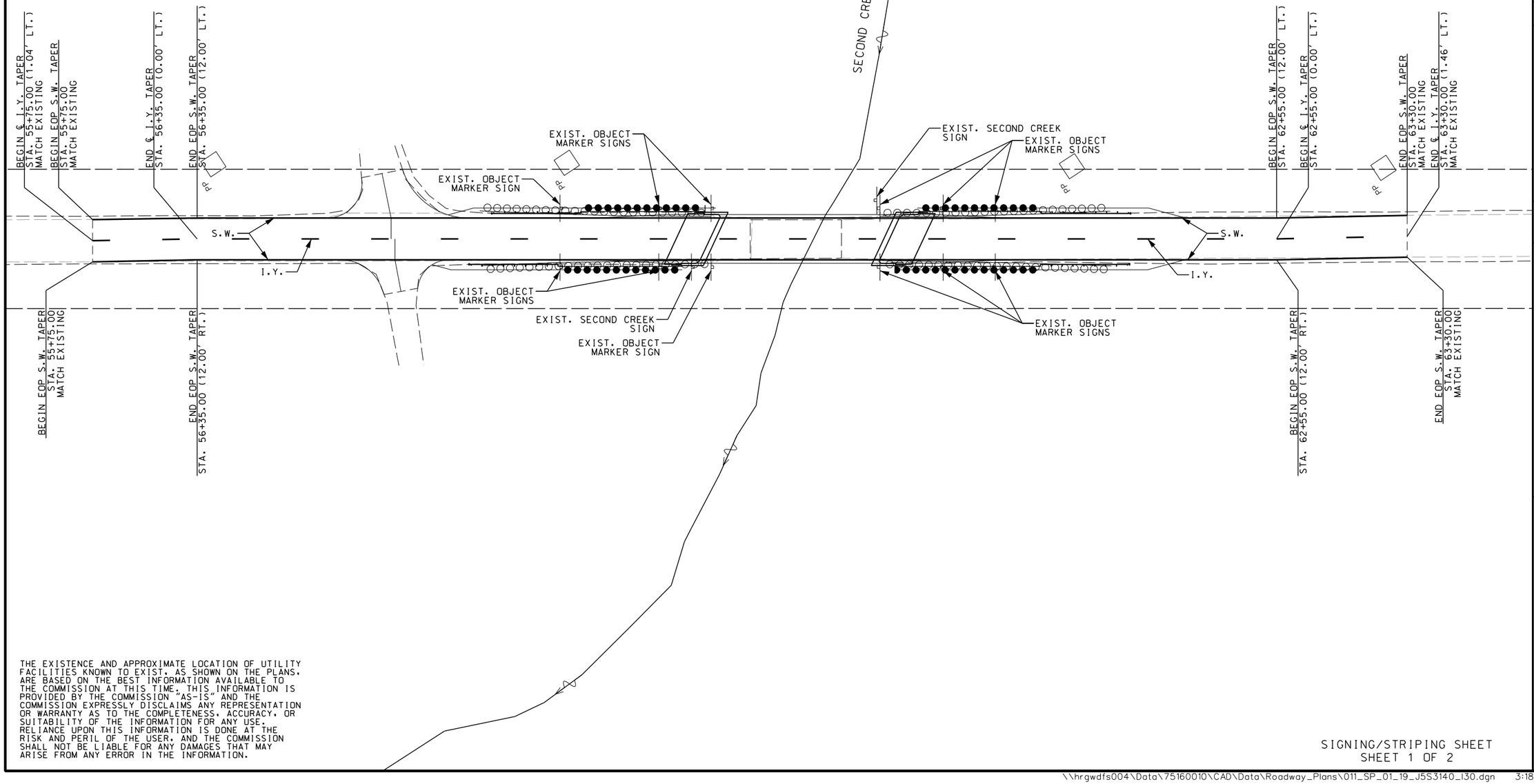

THE EXISTENCE AND APPROXIMATE LOCATION OF UTILITY FACILITIES KNOWN TO EXIST, AS SHOWN ON THE PLANS, ARE BASED ON THE BEST INFORMATION AVAILABLE TO THE COMMISSION AT THIS TIME. THIS INFORMATION IS PROVIDED BY THE COMMISSION "AS-IS" AND THE COMMISSION EXPRESSLY DISCLAIMS ANY REPRESENTATION OR WARRANTY AS TO THE COMPLETENESS, ACCURACY, OR SUITABILITY OF THE INFORMATION FOR ANY USE. RELIANCE UPON THIS INFORMATION IS DONE AT THE RISK AND PERIL OF THE USER, AND THE COMMISSION SHALL NOT BE LIABLE FOR ANY DAMAGES THAT MAY ARISE FROM ANY ERROR IN THE INFORMATION.

SIGNING/STRIPING SHEET
SHEET 1 OF 2

STATE OF MISSOURI
KORI R. NEELY
NUMBER PE-2016017659
PROFESSIONAL ENGINEER

THIS SHEET HAS BEEN SIGNED, SEALED AND DATED ELECTRONICALLY.

DATE PREPARED: 10/3/2016

ROUTE	STATE
19	MO
DISTRICT	SHEET NO.
CD	11

COUNTY: GASCONADE

JOB NO.: J5S3140

CONTRACT ID.:

PROJECT NO.:

BRIDGE NO.: A8439

DESCRIPTION	DATE

IF A SEAL IS PRESENT ON THIS SHEET IT HAS BEEN ELECTRONICALLY SEALED AND DATED.

MISSOURI HIGHWAYS AND TRANSPORTATION COMMISSION

105 WEST CAPITOL
JEFFERSON CITY, MO 65102
1-888-ASK-MODOT (1-888-275-6636)

MoDOT

HR GREEN, INC.
16020 SWINGLEY RIDGE ROAD, SUITE 205
ST. LOUIS, MISSOURI 63017
PHONE: (636) 519.0990
CORPORATE LICENSE #2002006608

HRGreen

REV.

THE EXISTENCE AND APPROXIMATE LOCATION OF UTILITY FACILITIES KNOWN TO EXIST, AS SHOWN ON THE PLANS, ARE BASED ON THE BEST INFORMATION AVAILABLE TO THE COMMISSION AT THIS TIME. THIS INFORMATION IS PROVIDED BY THE COMMISSION "AS-IS" AND THE COMMISSION EXPRESSLY DISCLAIMS ANY REPRESENTATION OR WARRANTY AS TO THE COMPLETENESS, ACCURACY, OR SUITABILITY OF THE INFORMATION FOR ANY USE. RELIANCE UPON THIS INFORMATION IS DONE AT THE RISK AND PERIL OF THE USER, AND THE COMMISSION SHALL NOT BE LIABLE FOR ANY DAMAGES THAT MAY ARISE FROM ANY ERROR IN THE INFORMATION.

STRIPING LEGEND

- I.Y. - 4" INTERMITTENT YELLOW
- S.W. - 4" SOLID WHITE
- S.Y. - 4" SOLID YELLOW

NOTE:

EXISTING SIGNS SHALL BE SALVAGED AND REUSED IF DISTURBED. SEE JSP "SALVAGE OF EXISTING SIGNS."

SCALE

0 50 100 150

DISCLAIMER

THE PROFESSIONAL WHOSE SIGNATURE AND PERSONAL SEAL APPEAR HEREON ASSUMES RESPONSIBILITY ONLY FOR WHAT APPEARS ON THIS PAGE, AND DISCLAIMS (PURSUANT TO SECTION 327.411 RSMO) SPECIFICATION, ESTIMATES, REPORTS, OR OTHER DOCUMENTS OR INSTRUMENTS NOT SEALED BY THE UNDERSIGNED PROFESSIONAL RELATING TO OR INTENDED TO BE USED FOR ANY PART OR PARTS OF THE PROJECT TO WHICH THIS PAGE REFERS.

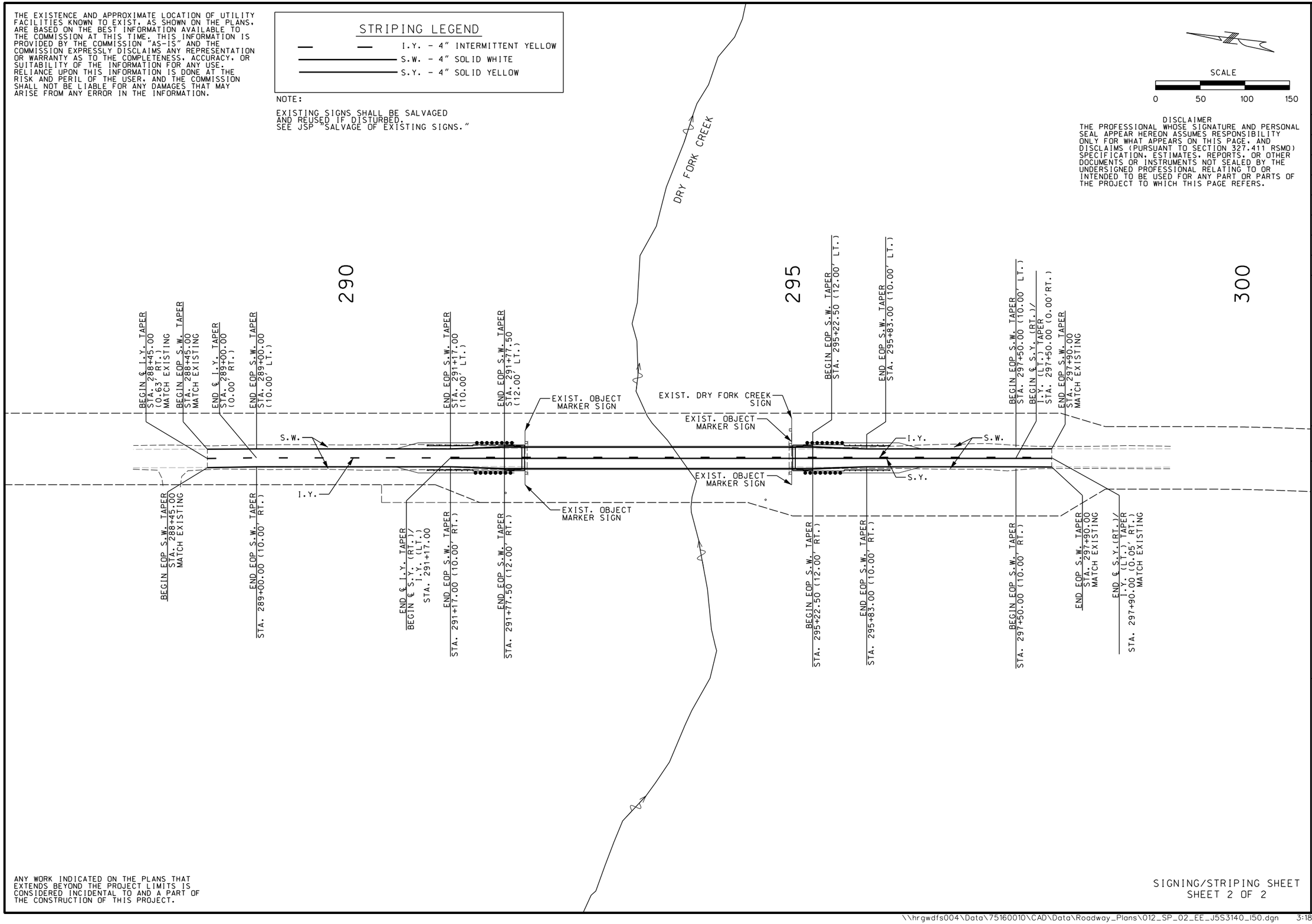

ANY WORK INDICATED ON THE PLANS THAT EXTENDS BEYOND THE PROJECT LIMITS IS CONSIDERED INCIDENTAL TO AND A PART OF THE CONSTRUCTION OF THIS PROJECT.

SIGNING/STRIPING SHEET
SHEET 2 OF 2

STATE OF MISSOURI
KORI R. NEELY
NUMBER PE-2016017659
PROFESSIONAL ENGINEER

THIS SHEET HAS BEEN SIGNED, SEALED AND DATED ELECTRONICALLY.

DATE PREPARED 10/3/2016

ROUTE	STATE
EE	MO
DISTRICT	SHEET NO.
CD	12

COUNTY: GASCONADE
JOB NO.: J5S3140
CONTRACT ID.:
PROJECT NO.:
BRIDGE NO.: A8440

REV.	DESCRIPTION	DATE

IF A SEAL IS PRESENT ON THIS SHEET IT HAS BEEN ELECTRONICALLY SEALED AND DATED.

MISSOURI HIGHWAYS AND TRANSPORTATION COMMISSION
105 WEST CAPITOL
JEFFERSON CITY, MO 65102
1-888-ASK-MODOT (1-888-275-6636)

HR GREEN, INC.
16020 SWINGLEY RIDGE ROAD, SUITE 205
ST. LOUIS, MISSOURI 63017
PHONE: (636) 519.0990
CORPORATE LICENSE #2002006608

\\hrgwdfs004\Data\75160010\CAD\Data\Roadway_Plans\012_SP_02_EE_J5S3140_150.dgn 3:18:15 PM 10/3/2016

SEC/SUR 27 TWP 43N RGE 5W

(99′) PRESTRESSED CONCRETE NU-GIRDER SPAN

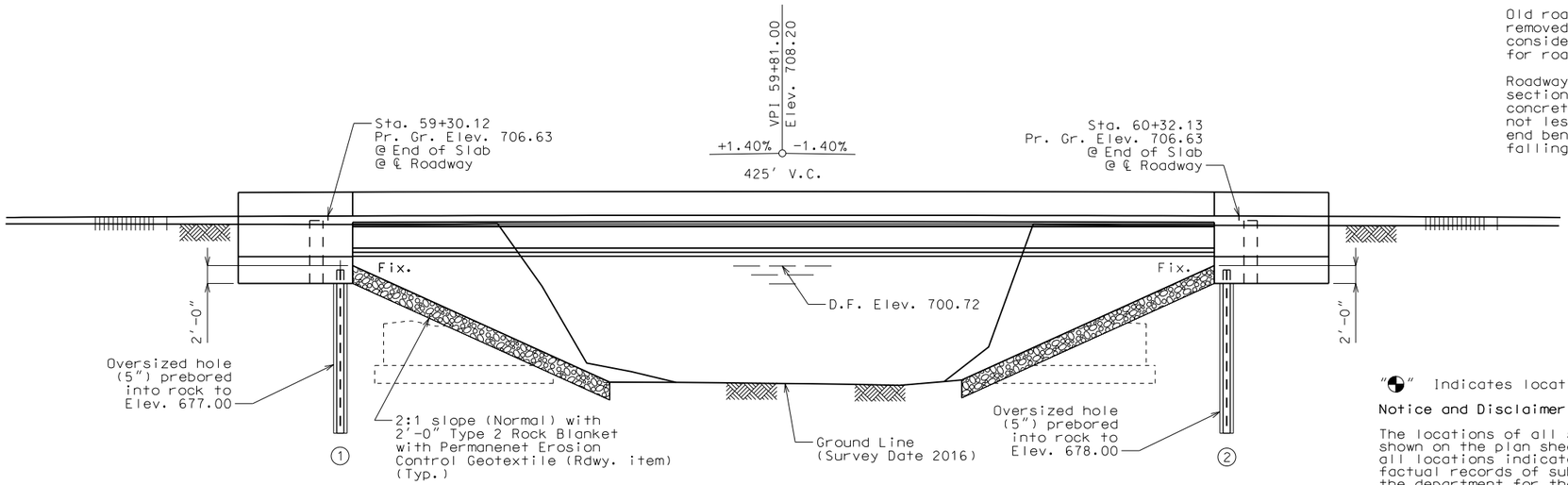

GENERAL ELEVATION

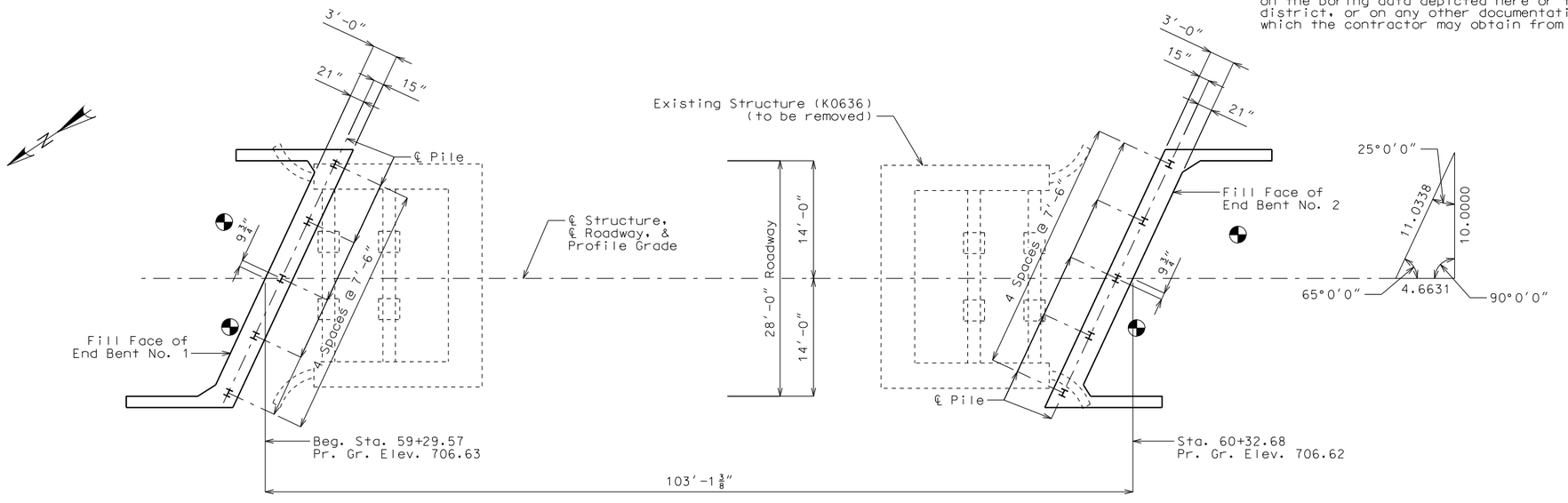

PLAN

For General Notes, Estimated Quantities, Estimated Quantities for Slab on Concrete NU-Girder, Foundation Data, Hydrologic Data, and Location Sketch, see Sheet No. 2.

Old roadway fill under the ends of the bridge shall be removed as shown. Removal of old roadway fill will be considered completely covered by the contract unit price for roadway excavation.

Roadway fill shall be completed to the final roadway section and up to the elevation of the bottom of the concrete beam within the limits of the structure and for not less than 25 feet in back of the fill face of the end bents before any piles are driven for any bents falling within the embankment section.

"⊕" Indicates location of borings.

Notice and Disclaimer Regarding Boring Log Data

The locations of all subsurface borings for this structure are shown on the plan sheet(s) for this structure. The boring data for all locations indicated, as well as any other boring logs or other factual records of subsurface data and investigations performed by the department for the design of the project, are shown on Sheets No. 23 thru 26 or will be available from the Project Contact upon written request. No greater significance or weight should be given to the boring data depicted on the plan sheets than is given to the subsurface data available from the district or elsewhere.

The Commission does not represent or warrant that any such boring data accurately depicts the conditions to be encountered in constructing this project. A contractor assumes all risks it may encounter in basing its bid prices, time or schedule of performance on the boring data depicted here or those available from the district, or on any other documentation not expressly warranted, which the contractor may obtain from the Commission.

B.M. / C.P. 800 = 5/8″ REBAR W/ ALUMINUM CAP BURIED 0.2′, 30′ E/O EAST E.P. ROUTE 19, 3′ S/O SOUTH E.P. BRAKEMEYER RD., 150′ N/O BRIDGE OVER SECOND CREEK. ELEV. = 702.396

BRIDGE: ROUTE 19 OVER SECOND CREEK

ROUTE 19 FROM DRAKE TO OWENSVILLE
ABOUT 2 MILES SOUTHWEST OF DRAKE
STA. 59+29.57

STD. 609.00
STD. 617.10
STD. 706.35

Designed Aug. 2016
Detailed Aug. 2016
Checked Aug. 2016

Note: This drawing is not to scale. Follow dimensions.

\\hrgwdfs004\Data\75160010\CAD\Data\Bridge_Plans\B_A8439_001_J5S3140_FrontSheet.dgn 3:14:49 PM 10/3/2016

STATE OF MISSOURI
CHRISTOPHER T. HERSINGER
NUMBER PE-2012018080
PROFESSIONAL ENGINEER

THIS SHEET HAS BEEN SIGNED, SEALED AND DATED ELECTRONICALLY.

DATE PREPARED 10/3/2016

ROUTE	STATE
19	MO
DISTRICT	SHEET NO.
BR	1

COUNTY: GASCONADE
JOB NO.: J5S3140
CONTRACT ID.:
PROJECT NO.:
BRIDGE NO.: A8439

IF A SEAL IS PRESENT ON THIS SHEET IT HAS BEEN ELECTRONICALLY SEALED AND DATED.

DESCRIPTION	DATE

MISSOURI HIGHWAYS AND TRANSPORTATION COMMISSION
105 WEST CAPITOL
JEFFERSON CITY, MO 65102
1-888-ASK-MODOT (1-888-275-6636)

HR GREEN, INC.
16020 SWINGLEY RIDGE ROAD, SUITE 205
ST. LOUIS, MISSOURI 63017
PHONE: (636) 519.0990
CORPORATE LICENSE #2002006608
HRGreen

Estimated Quantities

	Item		Substr.	Superstr.	Total
	Class 1 Excavation	cu. yard	80		80
	Removal of Bridges (K0636)	lump sum			1
	Bridge Approach Slab (Minor Road)	sq. yard			128
	Galvanized Structural Steel Piles (10 in)	linear foot	245		245
	Pre-Bore for Piling	linear foot	215		215
	Pile Point Reinforcement	each	10		10
	Class B Concrete (Substructure)	cu. yard	29.4		29.4
*	Safety Barrier Curb	linear foot		246	246
	Slab on Concrete NU-Girder	sq. yard		348	348
	NU 43 Prestressed Concrete NU-Girder	linear foot		400	400
	Vertical Drain at End Bents	each			2
	Plain Neoprene Bearing Pad	each		8	8

All concrete above the construction joint in the end bents is included in the Estimated Quantities for Slab on Concrete NU-Girder.

All reinforcement in the end bents is included in the Estimated Quantities for Slab on Concrete NU-Girder.

* Safety barrier curb shall be cast-in-place option or slip-from option.

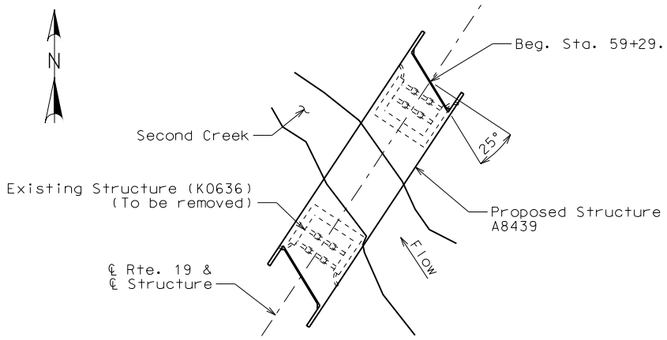

LOCATION SKETCH

Foundation Data

Type	Design Data		Bent Number 1	Bent Number 2
Load Bearing Pile	Pile Type and Size		HP 10x42	HP 10x42
	Number	ea	5	5
	Approximate Length per Each	ft	25	24
	Pile Driving Verification Method		DF	DF
	Minimum Nominal Axial Compressive Resistance	kip	571	571
	Hammer Energy Required	ft-lb	18,300	18,300

DF = FHWA-modified Gates Dynamic Formula

Minimum Nominal Axial Compressive Resistance = $\frac{\text{Maximum Factored Loads}}{\text{Resistance Factor}}$

Prebore 18" holes in rock for piles at End Bents No. 1 & 2 to elevation 682.00.

Manufactured pile point reinforcement shall be used on all piles in this structure at End Bents No. 1 and 2.

General Notes:

Design Specifications:

2012 AASHTO LRFD Bridge Design Specifications (6th Ed.) and
2013 Interim Revisions
Seismic Design Category = A

Design Loading:

Vehicular = HL-93
Future Wearing Surface = 35 lb/sf
Earth = 120 lb/cf
Equivalent Fluid Pressure = 45 lb/cf

Design Unit Stresses:

Class B Concrete (Substructure) f'c = 3,000 psi

Class B-2 Concrete (Superstructure, except Prestressed Girders and Safety Barrier Curb) f'c = 4,000 psi

Class B-1 Concrete (Safety Barrier Curb) f'c = 4,000 psi

Reinforcing Steel (Grade 60) fy = 60,000 psi

Steel Pile (ASTM A709 Grade 50) fy = 50,000 psi

For precast prestressed panel stresses, see Sheet No. 12.

For prestressed girder stresses, see Sheets No. 10 & 11.

Neoprene Pads:

Plain Neoprene Bearing Pads shall be 60 durometer and shall be in accordance with Sec 716.

Joint Filler:

All joint filler shall be in accordance with Sec 1057 for preformed sponge rubber expansion and partition joint filler, except as noted.

Reinforcing Steel:

Minimum clearance to reinforcing steel shall be 1 1/2", unless otherwise shown.

Traffic Handling:

Structure to be closed during construction. See roadway plans for traffic control.

Miscellaneous:

MoDOT Construction personnel will indicate the type of joint filler option used under the precast panels for this structure:

☐ Constant Joint Filler
☐ Variable Joint Filler

Hydrologic Data

Drainage Area = 6.25 mi²
Design Flood Frequency = 50 years
Design Flood Discharge = 4800 cfs
Design Flood (D.F.) Elevation = 700.72
Base Flood (100-year)
Base Flood Elevation = 702.80
Base Flood Discharge = 5700 cfs
Estimated Backwater = 4.77 ft
Average Velocity thru Opening = 6.87 ft/s
Freeboard (50-year)
Freeboard = 1.18 ft
Roadway Overtopping
Overtopping Flood Discharge = >7700 cfs
Overtopping Flood Frequency = >500 years
Design Flood Elevation = 704.12

Estimated Quantities for Slab on Concrete NU-Girder

Item		Total
Class B-2 Concrete	cu. yard	113.8
Reinforcing Steel	pound	7,352
Reinforcing Steel (Epoxy Coated)	pound	15,927

The table of Estimated Quantities for Slab on Concrete NU-Girder represents the quantities used by the State in preparing the cost estimate for concrete slabs. The area of the concrete slab will be measured to the nearest square yard longitudinally from end of slab to end of slab and transversely from out to out of bridge slab (or with the horizontal dimensions as shown on the plan of slab). Payment for prestressed panels, stay-in-place forms, conventional forms, all concrete and coated and uncoated reinforcing steel will be considered completely covered by the contract unit price for the slab. Variations may be encountered in the estimated quantities but the variations cannot be used for an adjustment in the contract unit price.

Method of forming the slab shall be as shown on the plans and in accordance with Sec 703. All hardware for forming the slab to be left in place as a permanent part of the structure shall be coated in accordance with ASTM A123 or ASTM B633 with a thickness class SC 4 and a finish type I, II or III.

The Estimated Quantities for Slab on Concrete NU-Girder are based on skewed precast prestressed end panels.

Class B-2 Concrete quantity is based on minimum top flange thickness and minimum joint material thickness.

The prestressed panel quantities are not included in the table of Estimated Quantities for Slab on Concrete NU-Girder.

PROFESSIONAL ENGINEER
STATE OF MISSOURI
CHRISTOPHER T. HERSINGER
NUMBER PE-2012018080

THIS SHEET HAS BEEN SIGNED, SEALED AND DATED ELECTRONICALLY.

DATE PREPARED
10/3/2016

ROUTE	STATE
19	MO
DISTRICT	SHEET NO.
BR	2

COUNTY
GASCONADE

JOB NO.
J5S3140

CONTRACT ID.

PROJECT NO.

BRIDGE NO.
A8439

DESCRIPTION	DATE

IF A SEAL IS PRESENT ON THIS SHEET IT HAS BEEN ELECTRONICALLY SEALED AND DATED.

MISSOURI HIGHWAYS AND TRANSPORTATION COMMISSION
105 WEST CAPITOL
JEFFERSON CITY, MO 65102
1-888-ASK-MODOT (1-888-275-6636)

HR GREEN, INC.
16020 SWINGLEY RIDGE ROAD, SUITE 205
ST. LOUIS, MISSOURI 63017
PHONE: (636) 519.0990
CORPORATE LICENSE #2002006608

Detailed Aug. 2016
Checked Aug. 2016

GENERAL NOTES AND QUANTITIES

Note: This drawing is not to scale. Follow dimensions.

\\hrgwdfs004\Data\75160010\CAD\Data\Bridge_Plans\B_A8439_002_J5S3140_GeneralNotes.dgn 3:14:49 PM 10/3/2016

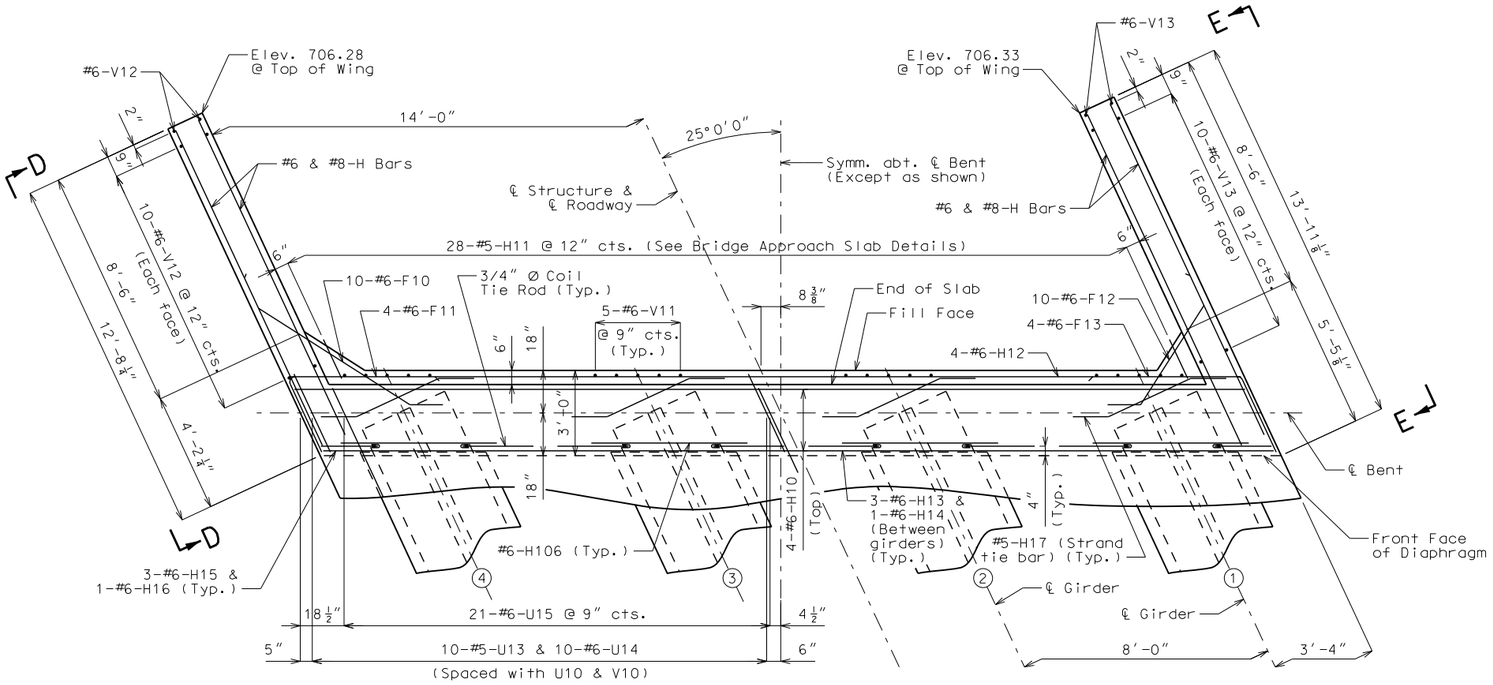

PART PLAN

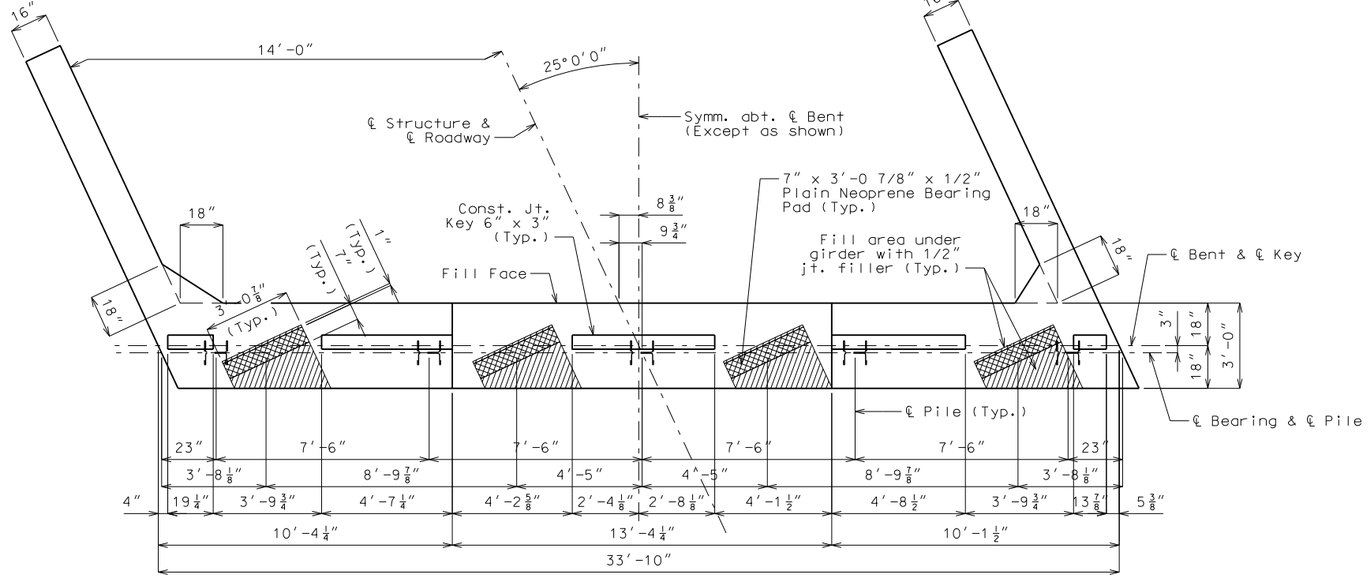

PLAN OF BEAM

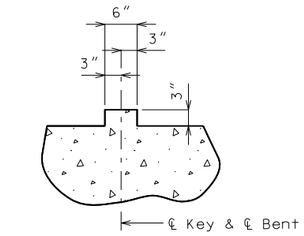

SECTION THRU KEY

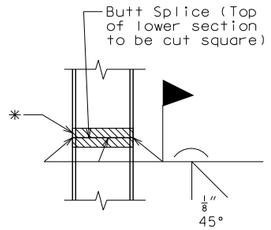

STEEL PILE SPLICE

(If required)

* Galvanization material shall be omitted or removed for a minimum of 2" around weld locations. The method used to omit or remove galvanizing material shall be approved by the engineer.

General Notes:

All concrete in the end bent above top of beam and below top of slab shall be Class B-2.

For details of End Bent No. 1 not shown, see Sheets No. 4 & 5.

The #6-F10 &#6-F12 bars shall be bent in the field to clear girders.

Strands at end of the girders shall be field bent or, if necessary, cut in field to maintain 1 1/2" minimum clearance to fill face of end bent.

Reinforcing steel shall be shifted to clear piles. U bars shall clear piles by at least 1 1/2".

For location of Coil Tie Rods and #5-H17 (Strand Tie Bar), see Sheet No. 10 or 11.

For details of Vertical Drain at End Bents, see Sheet No. 6.

For Elevations D-D & E-E, see Sheet No. 5.

For reinforcement of the Safety Barrier Curb, see Sheets No. 16 thru 18.

For details of Bridge Approach Slab, see Sheet No. 19.

All U-bars shall be placed parallel to ℄ Roadway.

Detailed Aug. 2016
Checked Aug. 2016

Note: This drawing is not to scale. Follow dimensions.

DETAILS OF END BENT NO. 1

Sheet No. 3 of 26

STATE OF MISSOURI
CHRISTOPHER T. HERSINGER
NUMBER PE-2012018080
PROFESSIONAL ENGINEER

THIS SHEET HAS BEEN SIGNED, SEALED AND DATED ELECTRONICALLY.

DATE PREPARED
10/3/2016

ROUTE	STATE
19	MO
DISTRICT	SHEET NO.
BR	3

COUNTY
GASCONADE

JOB NO.
J5S3140

CONTRACT ID.

PROJECT NO.

BRIDGE NO.
A8439

DESCRIPTION	DATE

IF A SEAL IS PRESENT ON THIS SHEET IT HAS BEEN ELECTRONICALLY SEALED AND DATED.

MISSOURI HIGHWAYS AND TRANSPORTATION COMMISSION

105 WEST CAPITOL
JEFFERSON CITY, MO 65102
1-888-ASK-MODOT (1-888-275-6636)

HR GREEN, INC.
16020 SWINGLEY RIDGE ROAD, SUITE 205
ST. LOUIS, MISSOURI 63017
PHONE: (636) 519.0990
CORPORATE LICENSE #2002006608

HRGreen

\\hrgwdfs004\Data\75160010\CAD\Data\Bridge_Plans\B_A8439_003_J5S3140_EndBent1.dgn 3:14:50 PM 10/3/2016

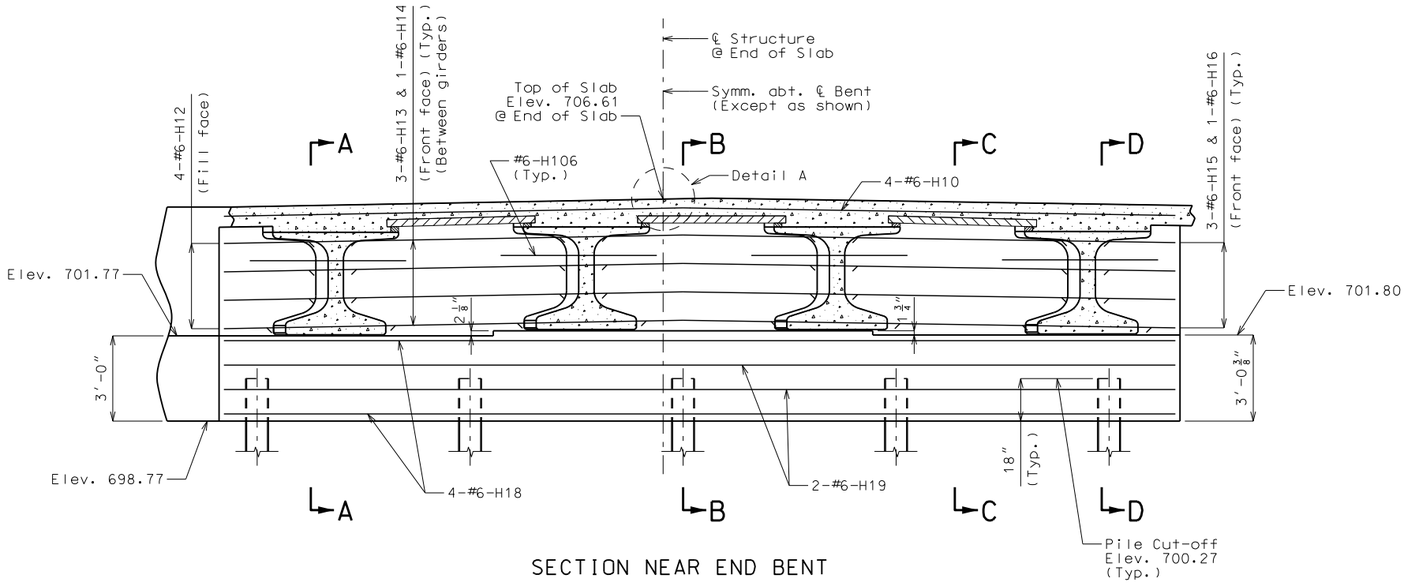

SECTION NEAR END BENT

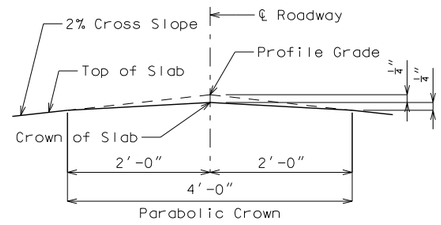

DETAIL A

Substructure Quantity Table for Bent No. 1		
Item		Quantity
Class 1 Excavation	cu. yard	40
Galvanized Structural Steel Piles (10 in.)	linear foot	125
Pre-Bore for Piling	linear foot	110
Pile Point Reinforcement	each	5
Class B Concrete (Substructure)	cu. yard	14.7

These quantities are included in the Estimated Quantities table on Sheet No. 2.

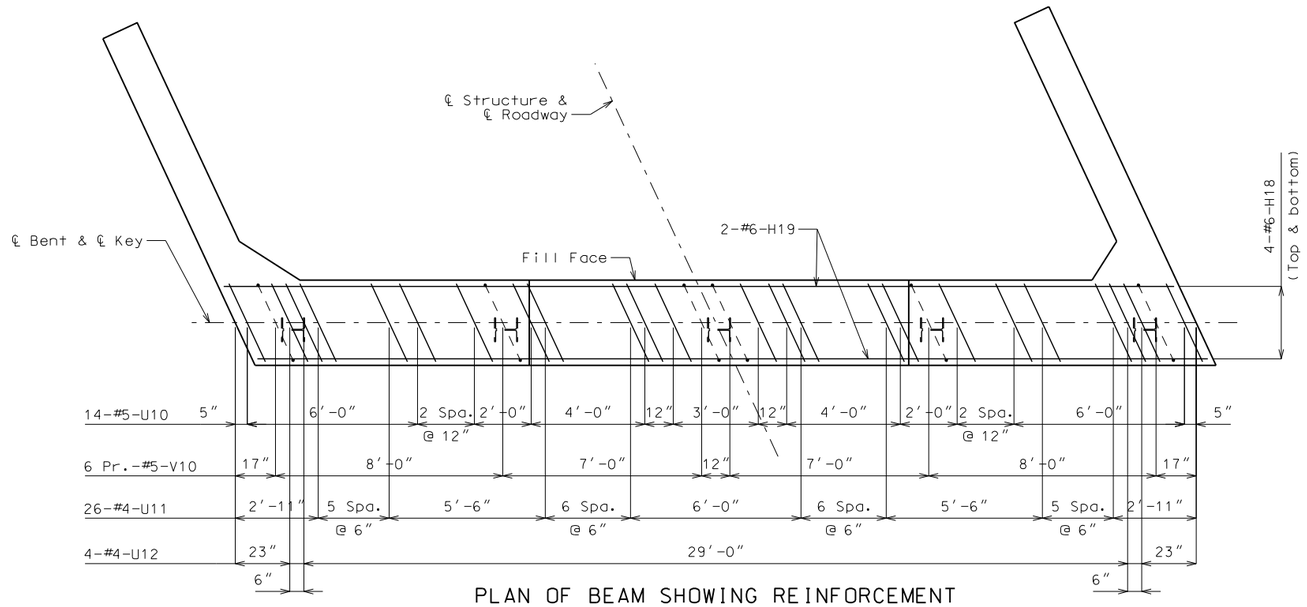

PLAN OF BEAM SHOWING REINFORCEMENT

Keys not shown for clarity.

General Notes:

For details of End Bent No. 1 not shown, see Sheets No. 3 & 5.

All U-bars and Pr. V-bars shall be placed parallel to ℄ Roadway.

For details of Vertical Drain at End Bents, see Sheet No. 6.

For Sections A-A, B-B, C-C, & D-D, see Sheet No. 5.

All vertical reinforcing bars in the substructure beams or caps shall be field adjusted to clear piles by at least 1 1/2".

DETAILS OF END BENT NO. 1

Detailed Aug. 2016
Checked Aug. 2016

Note: This drawing is not to scale. Follow dimensions.

STATE OF MISSOURI
PROFESSIONAL ENGINEER
CHRISTOPHER T. HERSINGER
NUMBER PE-2012018080

THIS SHEET HAS BEEN SIGNED, SEALED AND DATED ELECTRONICALLY.

DATE PREPARED 10/3/2016

ROUTE	STATE
19	MO
DISTRICT	SHEET NO.
BR	4

COUNTY: GASCONADE
JOB NO.: J5S3140
CONTRACT ID.:
PROJECT NO.:
BRIDGE NO.: A8439

IF A SEAL IS PRESENT ON THIS SHEET IT HAS BEEN ELECTRONICALLY SEALED AND DATED.

DESCRIPTION | DATE

MISSOURI HIGHWAYS AND TRANSPORTATION COMMISSION
105 WEST CAPITOL
JEFFERSON CITY, MO 65102
1-888-ASK-MODOT (1-888-275-6636)

HR GREEN, INC.
16020 SWINGLEY RIDGE ROAD, SUITE 205
ST. LOUIS, MISSOURI 63017
PHONE: (636) 519.0990
CORPORATE LICENSE #2002006608

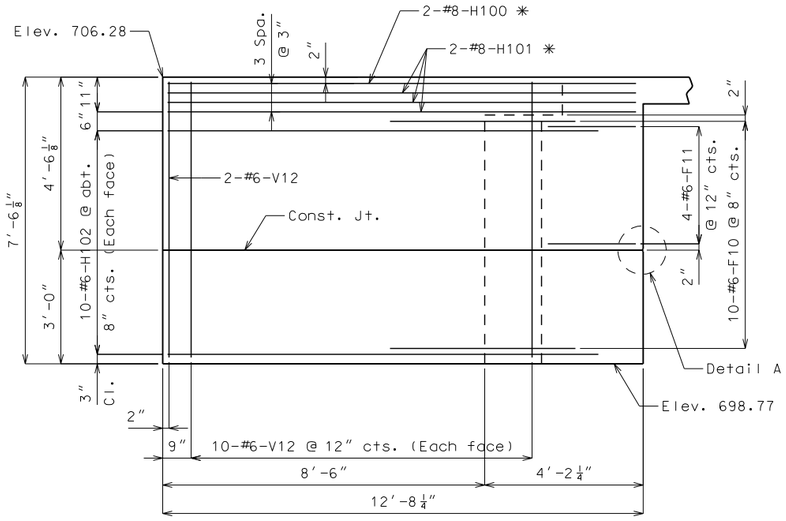

ELEVATION D-D

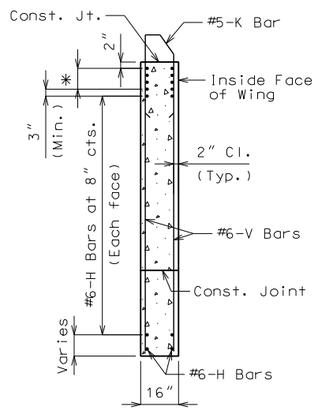

TYPICAL SECTION THRU WING

✱ #8-H Bars at 3" cts. (Each face)(Place with grade)

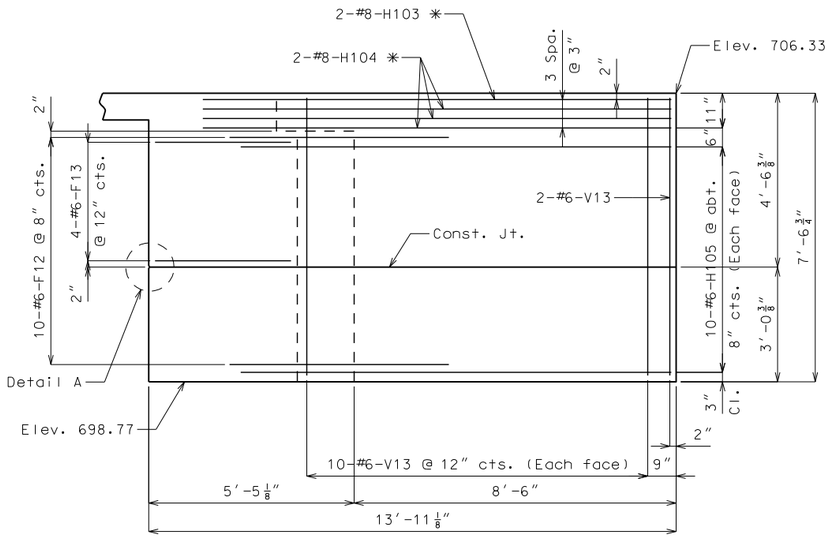

ELEVATION E-E

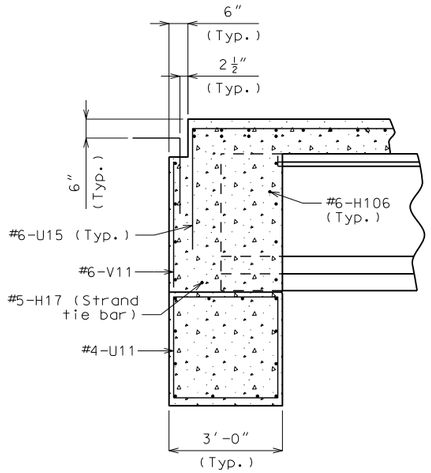

SECTION A-A

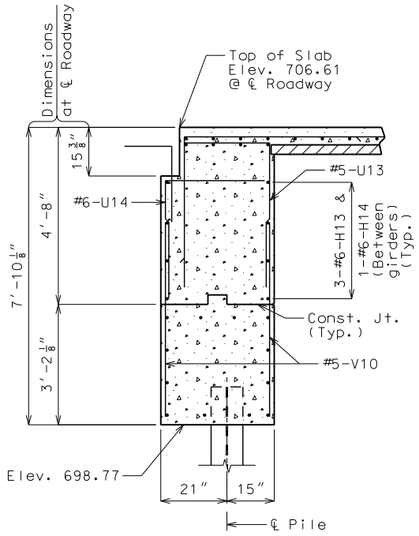

SECTION B-B

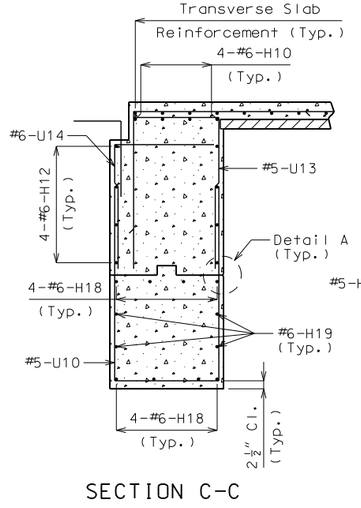

SECTION C-C

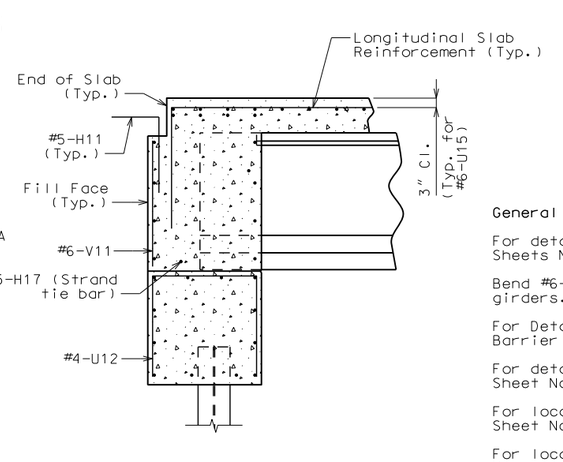

SECTION D-D

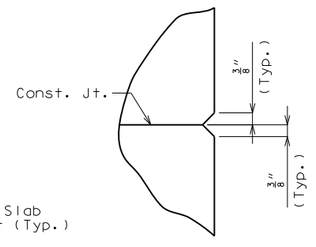

DETAIL A

General Notes:

For details of End Bent No. 1 not shown, see Sheets No. 3 & 4.

Bend #6-F10 & #6-F12 bars in field to clear girders.

For Details and Reinforcement of the Safety Barrier Curb, see Sheets No. 16 thru 18.

For details of Vertical Drain at End Bents, see Sheet No. 6.

For location of #5-H17 (Strand Tie Bar), see Sheet No. 10 or 11.

For location of Elevations D-D & E-E, see Sheet No. 3.

For location of Sections A-A, B-B, C-C, & D-D, see Sheet No. 4.

For details of Bridge Approach Slab, see Sheet No. 19.

DETAILS OF END BENT NO. 1

Sheet No. 5 of 26

Detailed Aug. 2016
Checked Aug. 2016

Note: This drawing is not to scale. Follow dimensions.

STATE OF MISSOURI
PROFESSIONAL ENGINEER
CHRISTOPHER T. HERSINGER
NUMBER PE-2012018080

THIS SHEET HAS BEEN SIGNED, SEALED AND DATED ELECTRONICALLY.

DATE PREPARED 10/3/2016

ROUTE	STATE
19	MO
DISTRICT	SHEET NO.
BR	5

COUNTY: GASCONADE
JOB NO.: J5S3140
CONTRACT ID.:
PROJECT NO.:
BRIDGE NO.: A8439

DESCRIPTION	DATE

IF A SEAL IS PRESENT ON THIS SHEET IT HAS BEEN ELECTRONICALLY SEALED AND DATED.

MISSOURI HIGHWAYS AND TRANSPORTATION COMMISSION
105 WEST CAPITOL
JEFFERSON CITY, MO 65102
1-888-ASK-MODOT (1-888-275-6636)

HR GREEN, INC.
16020 SWINGLEY RIDGE ROAD, SUITE 205
ST. LOUIS, MISSOURI 63017
PHONE: (636) 519.0990
CORPORATE LICENSE #2002006608

\\hrgwdfs004\Data\75160010\CAD\Data\Bridge_Plans\B_A8439_005_J5S3140_EndBent1.dgn 3:14:51 PM 10/3/2016

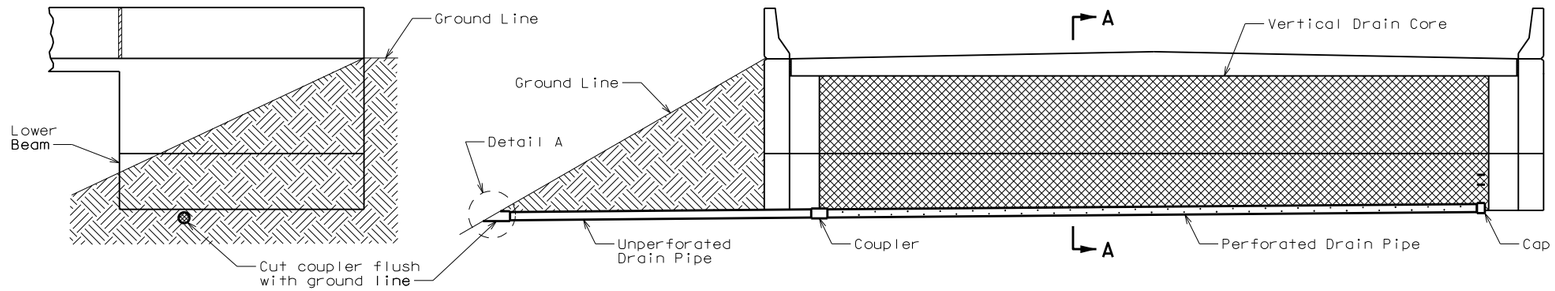

ELEVATION OF WING

ELEVATION AT END BENT

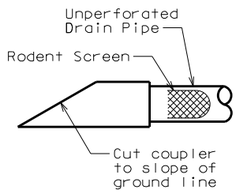

DETAIL A

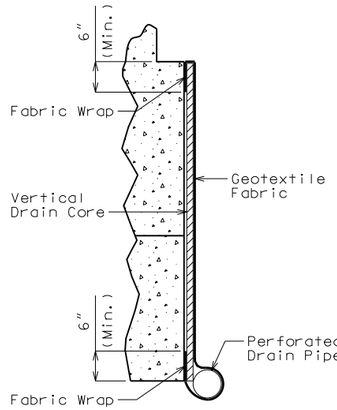

PART SECTION A-A

Note:

Drain pipe may be either 6-inch diameter corrugated metallic-coated steel pipe underdrain, 4-inch diameter corrugated polyvinyl chloride (PVC) drain pipe, or 4-inch diameter corrugated polyethylene (PE) drain pipe.

Place drain pipe at fill face of end bent and slope to lowest grade of ground line, also missing the lower beam of end bent by 1 1/2 inches. (See Elevation at End Bent.)

Perforated pipe shall be placed at fill face side at the bottom of end bent and plain pipe shall be used where the vertical drain ends to the exit at ground line.

VERTICAL DRAIN AT END BENTS

Detailed Aug. 2016
Checked Aug. 2016

Note: This drawing is not to scale. Follow dimensions.

STATE OF MISSOURI
CHRISTOPHER T. HERSINGER
NUMBER PE-2012018080
PROFESSIONAL ENGINEER

THIS SHEET HAS BEEN SIGNED, SEALED AND DATED ELECTRONICALLY.

DATE PREPARED 10/3/2016

ROUTE	STATE
19	MO
DISTRICT	SHEET NO.
BR	6

COUNTY: GASCONADE
JOB NO.: J5S3140
CONTRACT ID.:
PROJECT NO.:
BRIDGE NO.: A8439

DESCRIPTION	DATE

IF A SEAL IS PRESENT ON THIS SHEET IT HAS BEEN ELECTRONICALLY SEALED AND DATED.

MISSOURI HIGHWAYS AND TRANSPORTATION COMMISSION
105 WEST CAPITOL
JEFFERSON CITY, MO 65102
1-888-ASK-MODOT (1-888-275-6636)

HR GREEN, INC.
16020 SWINGLEY RIDGE ROAD, SUITE 205
ST. LOUIS, MISSOURI 63017
PHONE: (636) 519.0990
CORPORATE LICENSE #2002006608

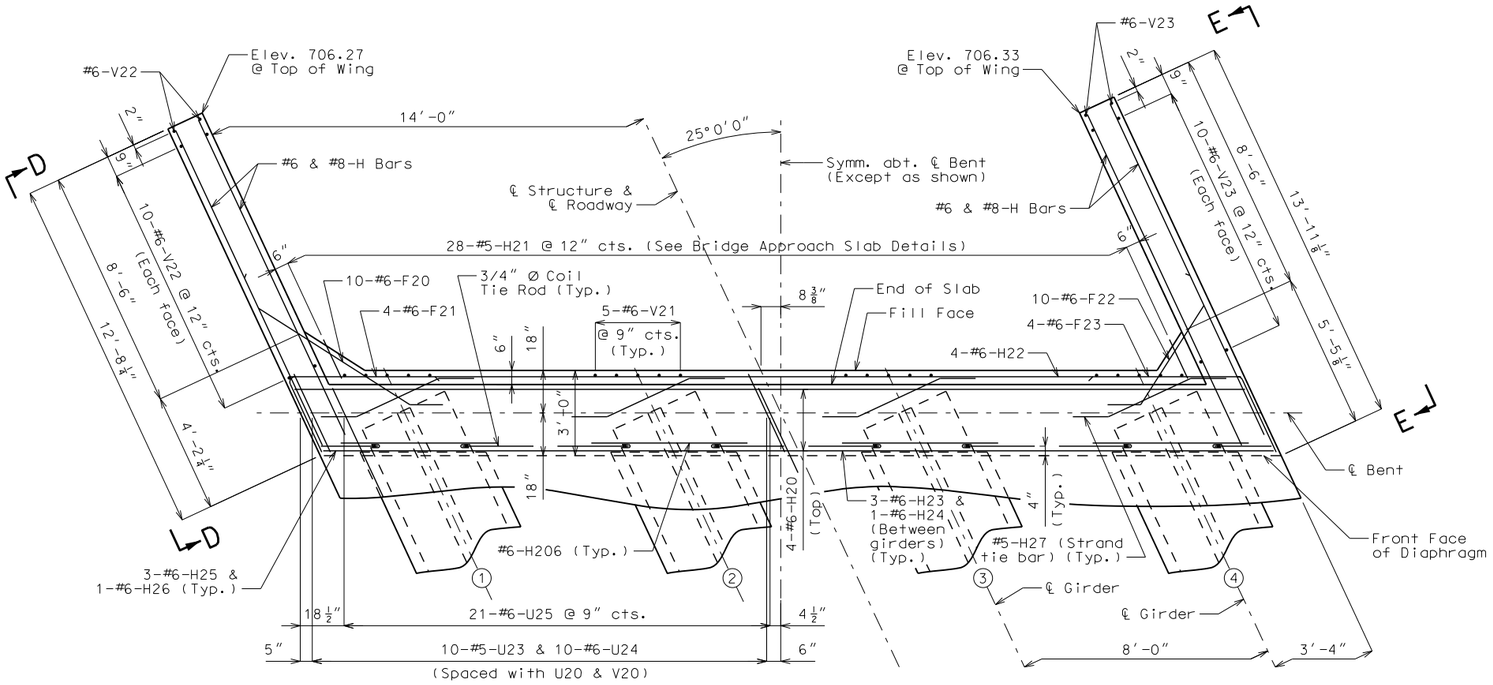

PART PLAN

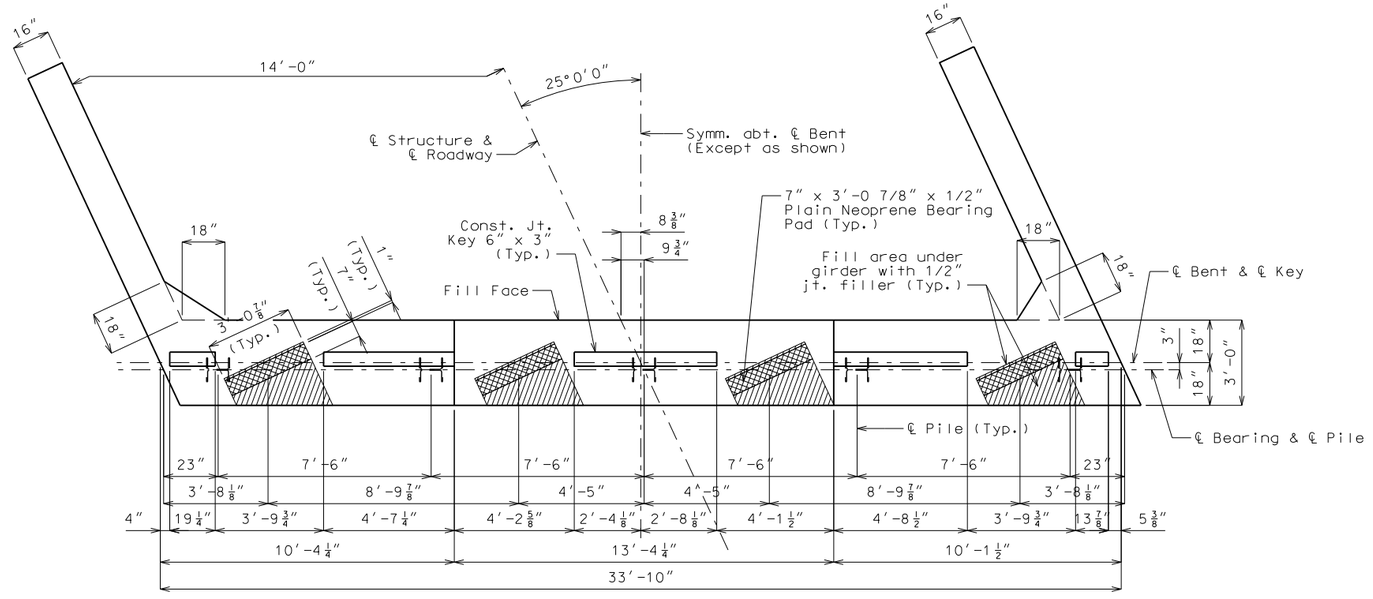

PLAN OF BEAM

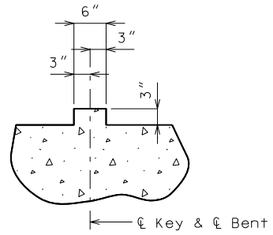

SECTION THRU KEY

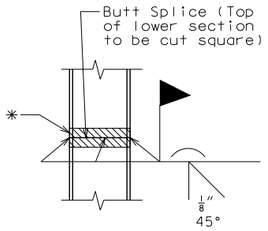

STEEL PILE SPLICE

(If required)

* Galvanization material shall be omitted or removed for a minimum of 2" around weld locations. The method used to omit or remove galvanizing material shall be approved by the engineer.

General Notes:

All concrete in the end bent above top of beam and below top of slab shall be Class B-2.

For details of End Bent No. 2 not shown, see Sheets No. 8 & 9.

The #6-F20 &#6-F22 bars shall be bent in the field to clear girders.

Strands at end of the girders shall be field bent or, if necessary, cut in field to maintain 1 1/2" minimum clearance to fill face of end bent.

Reinforcing steel shall be shifted to clear piles. U bars shall clear piles by at least 1 1/2".

For location of Coil Tie Rods and #5-H27 (Strand Tie Bar), see Sheet No. 10 or 11.

For details of Vertical Drain at End Bents, see Sheet No. 6.

For Elevations D-D & E-E, see Sheet No. 9.

For reinforcement of the Safety Barrier Curb, see Sheets No. 16 thru 18.

For details of Bridge Approach Slab, see Sheet No. 19.

All U-bars shall be placed parallel to ℄ Roadway.

Detailed Aug. 2016
Checked Aug. 2016

Note: This drawing is not to scale. Follow dimensions.

DETAILS OF END BENT NO. 2

Sheet No. 7 of 26

CHRISTOPHER T. HERSINGER
NUMBER PE-2012018080
PROFESSIONAL ENGINEER
STATE OF MISSOURI

THIS SHEET HAS BEEN SIGNED, SEALED AND DATED ELECTRONICALLY.

DATE PREPARED: 10/3/2016

ROUTE	STATE
19	MO
DISTRICT	SHEET NO.
BR	7

COUNTY: GASCONADE

JOB NO.: J5S3140

CONTRACT ID.:

PROJECT NO.:

BRIDGE NO.: A8439

DESCRIPTION	DATE

IF A SEAL IS PRESENT ON THIS SHEET IT HAS BEEN ELECTRONICALLY SEALED AND DATED.

MISSOURI HIGHWAYS AND TRANSPORTATION COMMISSION
105 WEST CAPITOL
JEFFERSON CITY, MO 65102
1-888-ASK-MODOT (1-888-275-6636)

HR GREEN, INC.
16020 SWINGLEY RIDGE ROAD, SUITE 205
ST. LOUIS, MISSOURI 63017
PHONE: (636) 519.0990
CORPORATE LICENSE #2002006608

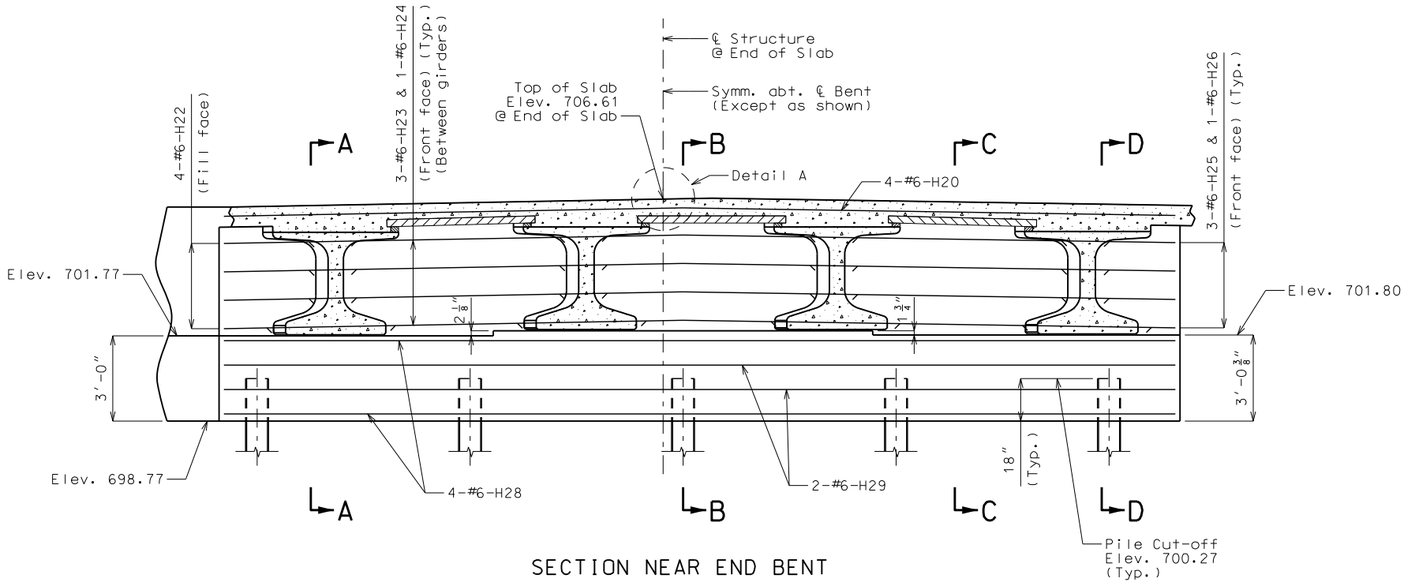

SECTION NEAR END BENT

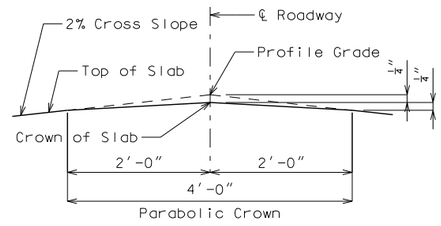

DETAIL A

Substructure Quantity Table for Bent No. 2		
Item		Quantity
Class 1 Excavation	cu. yard	40
Galvanized Structural Steel Piles (10 in.)	linear foot	120
Pre-Bore for Piling	linear foot	105
Pile Point Reinforcement	each	5
Class B Concrete (Substructure)	cu. yard	14.7

These quantities are included in the Estimated Quantities table on Sheet No. 2.

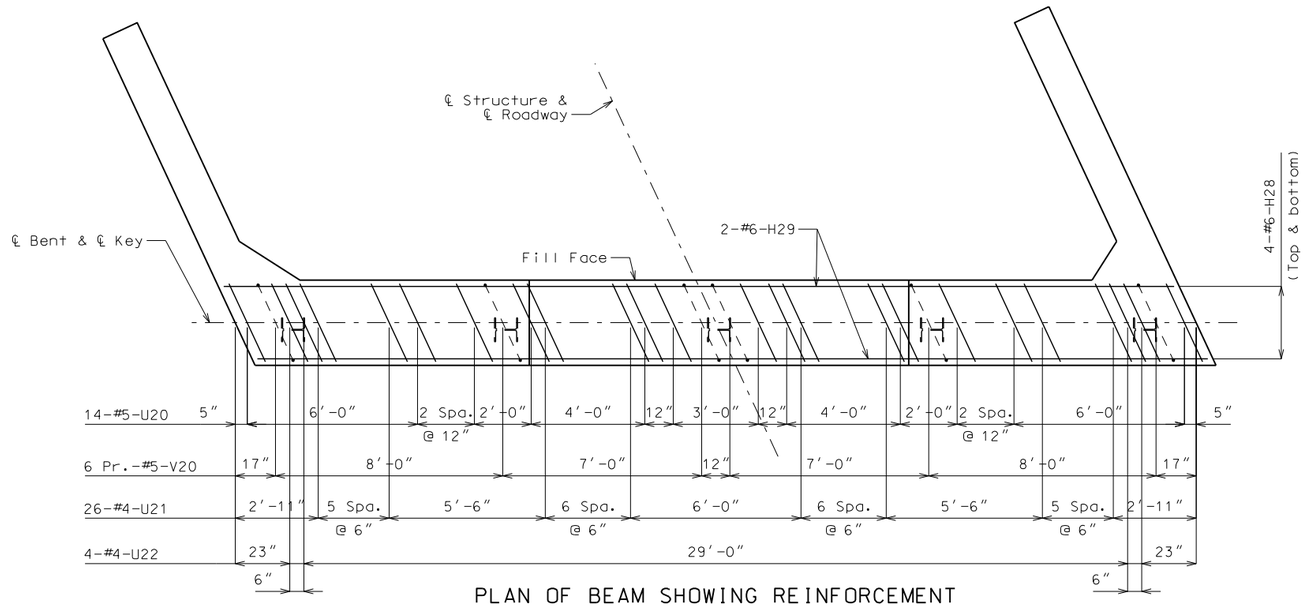

PLAN OF BEAM SHOWING REINFORCEMENT
Keys not shown for clarity.

General Notes:

For details of End Bent No. 2 not shown, see Sheets No. 7 & 9.

All U-bars and Pr. V-bars shall be placed parallel to ℄ Roadway.

For details of Vertical Drain at End Bents, see Sheet No. 6.

For Sections A-A, B-B, C-C, & D-D, see Sheet No. 9.

All vertical reinforcing bars in the substructure beams or caps shall be field adjusted to clear piles by at least 1 1/2".

DETAILS OF END BENT NO. 2

Detailed Aug. 2016
Checked Aug. 2016

Note: This drawing is not to scale. Follow dimensions.

STATE OF MISSOURI
CHRISTOPHER T. HERSINGER
NUMBER PE-2012018080
PROFESSIONAL ENGINEER

THIS SHEET HAS BEEN SIGNED, SEALED AND DATED ELECTRONICALLY.

DATE PREPARED 10/3/2016

ROUTE	STATE
19	MO
DISTRICT	SHEET NO.
BR	8

COUNTY GASCONADE
JOB NO. J5S3140
CONTRACT ID.
PROJECT NO.
BRIDGE NO. A8439

IF A SEAL IS PRESENT ON THIS SHEET IT HAS BEEN ELECTRONICALLY SEALED AND DATED.

DATE	DESCRIPTION

MISSOURI HIGHWAYS AND TRANSPORTATION COMMISSION
105 WEST CAPITOL
JEFFERSON CITY, MO 65102
1-888-ASK-MODOT (1-888-275-6636)
MoDOT
HR GREEN, INC.
16020 SWINGLEY RIDGE ROAD, SUITE 205
ST. LOUIS, MISSOURI 63017
PHONE: (636) 519.0990
CORPORATE LICENSE #2002006608
HRGreen

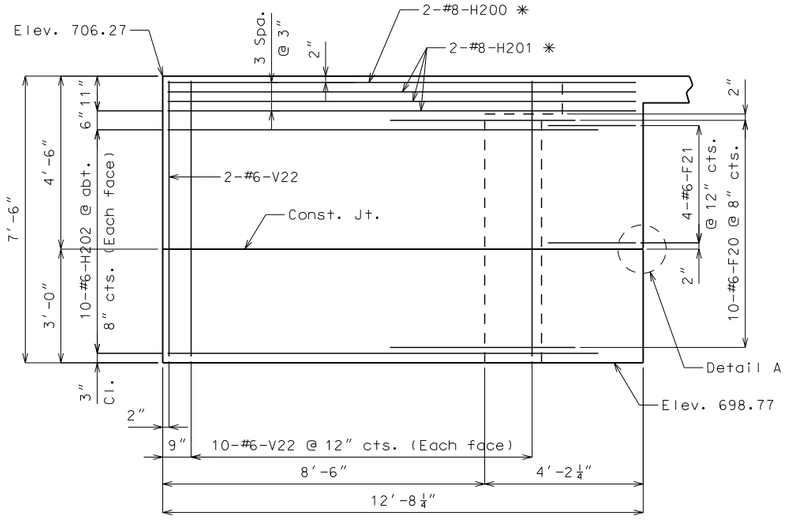

ELEVATION D-D

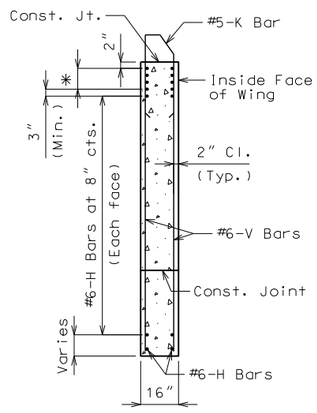

TYPICAL SECTION
THRU WING

* #8-H Bars at 3" cts.
(Each face)(Place with grade)

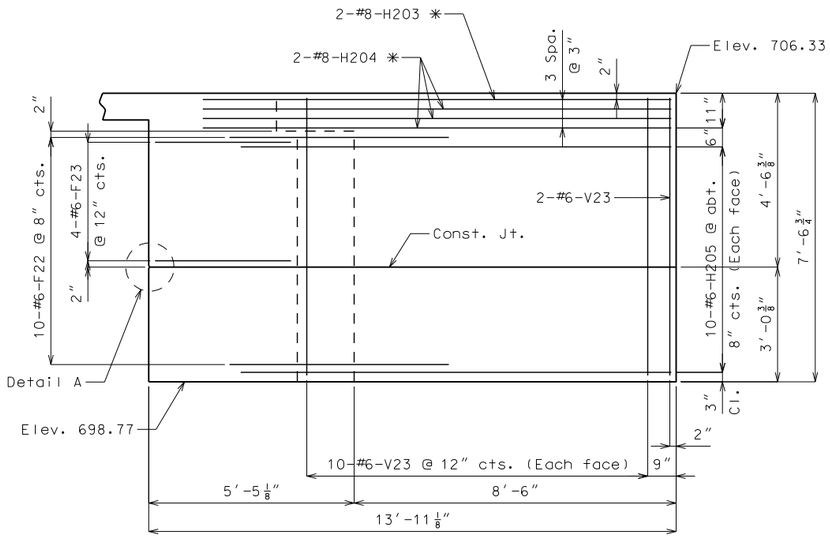

ELEVATION E-E

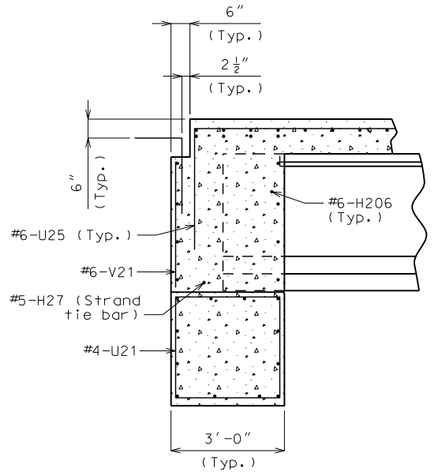

SECTION A-A

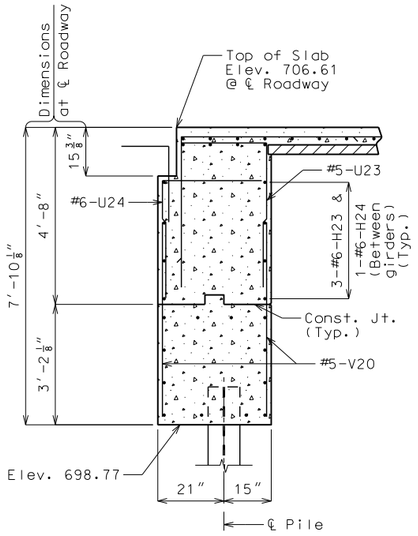

SECTION B-B

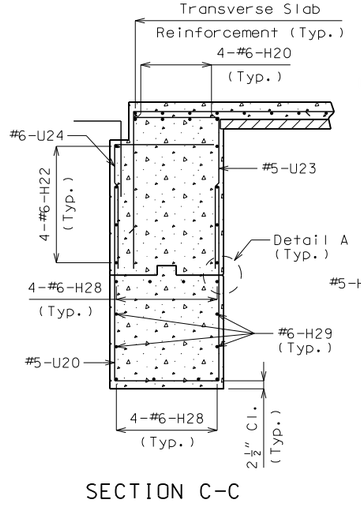

SECTION C-C

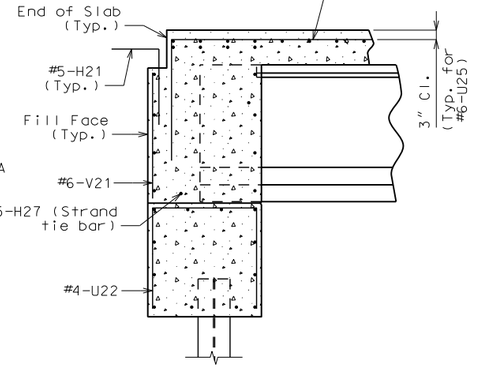

SECTION D-D

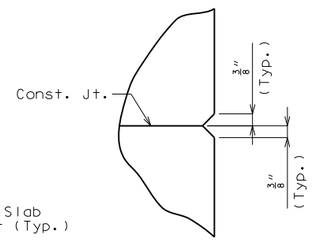

DETAIL A

General Notes:

For details of End Bent No. 2 not shown, see Sheets No. 7 & 8.

Bend #6-F20 & #6-F22 bars in field to clear girders.

For Details and Reinforcement of the Safety Barrier Curb, see Sheets No. 16 thru 18.

For details of Vertical Drain at End Bents, see Sheet No. 6.

For location of #5-H27 (Strand Tie Bar), see Sheet No. 10 or 11.

For location of Elevations D-D & E-E, see Sheet No. 7.

For location of Sections A-A, B-B, C-C, & D-D, see Sheet No. 8.

For details of Bridge Approach Slab, see Sheet No. 19.

DETAILS OF END BENT NO. 2

Sheet No. 9 of 26

Detailed Aug. 2016
Checked Aug. 2016

Note: This drawing is not to scale. Follow dimensions.

STATE OF MISSOURI
CHRISTOPHER T. HERSINGER
NUMBER PE-2012018080
PROFESSIONAL ENGINEER

THIS SHEET HAS BEEN SIGNED, SEALED AND DATED ELECTRONICALLY.

DATE PREPARED 10/3/2016

ROUTE	STATE
19	MO
DISTRICT	SHEET NO.
BR	9

COUNTY: GASCONADE
JOB NO.: J5S3140
CONTRACT ID.:
PROJECT NO.:
BRIDGE NO.: A8439

DESCRIPTION	DATE

IF A SEAL IS PRESENT ON THIS SHEET IT HAS BEEN ELECTRONICALLY SEALED AND DATED.

MISSOURI HIGHWAYS AND TRANSPORTATION COMMISSION
105 WEST CAPITOL
JEFFERSON CITY, MO 65102
1-888-ASK-MODOT (1-888-275-6636)

HR GREEN, INC.
16020 SWINGLEY RIDGE ROAD, SUITE 205
ST. LOUIS, MISSOURI 63017
PHONE: (636) 519.0990
CORPORATE LICENSE #2002006608

Concrete for prestressed girders shall be Class A-1 with f'c = 8000 psi and f'ci = 6500 psi.

(+) indicates prestressing strand.

Use 38 strands with an initial prestress force of 1669.8 kips.

Prestressing tendons shall be uncoated, seven-wire, low-relaxation strands, 0.6 inch diameter in accordance with AASHTO M 203, Grade 270. Pretensioned members shall be in accordance with Sec 1029.

Fabricator shall be responsible for location and design of lifting devices.

✱ Girder top flange shall be steel troweled to a smooth finish for 8" at the edges, as shown. Apply two layers of 30-lb roofing felt as a bond breaker to this region only excluding where joint filler is applied. The center portion shall be rough finished by scarifying the surface transversely with a wire brush, and no laitance shall remain on the surface.

✱✱ At the contractor's option the location for bent-up strands may be varied from that shown for fully bonded strands only. The total number of bent-up strands shall not be changed. One strand tie bar is required for each layer of bent-up strands except at end bents which require one bar on the bottom layer of strands only.

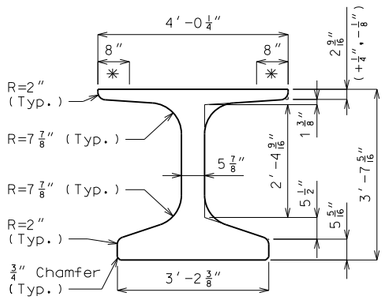

DIMENSIONS

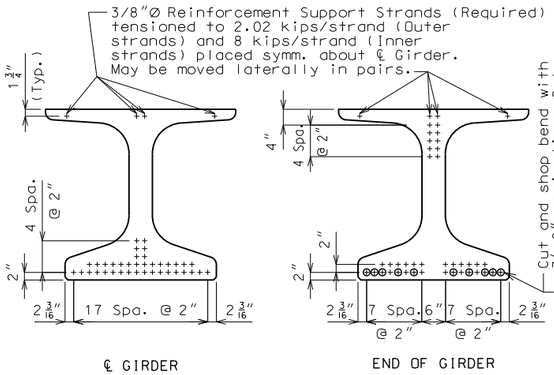

℄ GIRDER END OF GIRDER END BENT

STRAND ARRANGEMENTS

STRAND DETAILS AT GIRDER ENDS

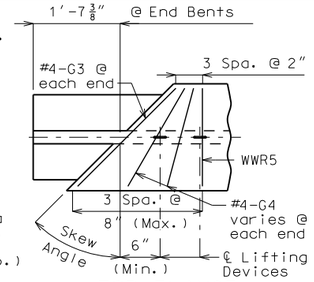

TOP FLANGE BLOCKOUT DETAIL

BILL OF REINFORCING STEEL - EACH GIRDER				
NO.	SIZE & MARK	ACTUAL LENGTH	SHAPE	BENDING DIAGRAM
121	3 G1	2'-10"	8	
16	6 G2	4'-4"	11	
2	4 G3	4'-3"	20	
4	4 G4	Varies	20	

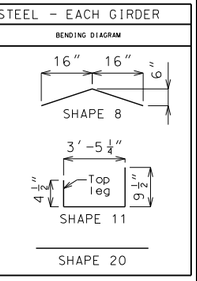

WELDED WIRE REINFORCEMENT

(WWR4 & WWR5 as shown in Welded Wire Bending Diagrams)

	WWR1				WWR2				WWR3		
SPAN NO.	BAR SIZE	S1	L1	J1	BAR SIZE	S2	L2	J2	BAR SIZE	S3	L3
1	31	4¼"	3'-2¼"	6¾"	16	6"	25'-0"	4½"	11	6"	39'-0"

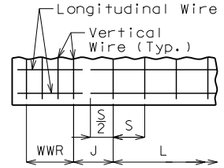

WELDED WIRE PLACEMENT DETAIL

S = Vertical wire spacing
L = Length of WWR mats
J = Distance between WWR mats

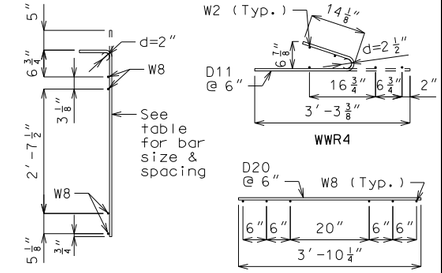

WWR1, WWR2 & WWR3

WELDED WIRE BENDING DIAGRAMS

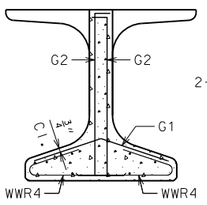

SECTION A-A

Strands not shown for clarity.

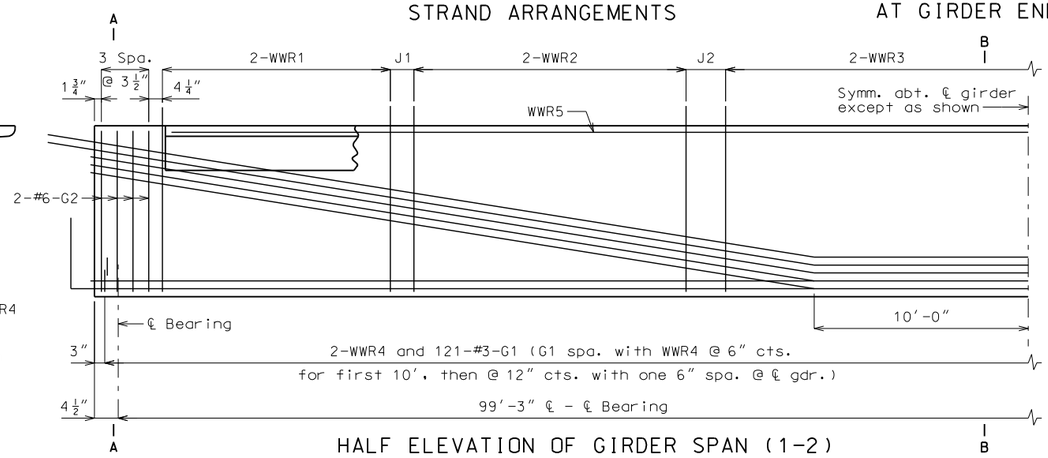

HALF ELEVATION OF GIRDER SPAN (1-2)

Exterior and interior girders are the same, except for coil ties.
Reinforcement support strands not shown for clarity.

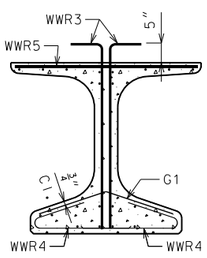

SECTION B-B

Strands not shown for clarity.

General Notes:

Reinforcing Steel:

All dimensions are out to out.

Hooks and bends shall be in accordance with the CRSI Manual of Standard Practice for Detailing Reinforced Concrete Structures, Stirrup and Tie Dimensions.

Actual bar lengths are measured along centerline of bar to the nearest inch.

Minimum clearance to reinforcing shall be 1", unless otherwise shown.

All bar reinforcement shall be Grade 60.

Welded Wire Reinforcement (WWR) shall be in accordance with AASHTO M 221.

WWR shall not be epoxy coated.

Miscellaneous:

Cost of 3/4"Ø coil tie rods placed in diaphragms will be considered completely covered by the contract unit price for Prestressed Concrete NU-Girder.

Coil ties shall be held in place in the forms by slotted wire-setting-studs projecting thru forms. Studs are to be left in place or replaced with temporary plugs until girders are erected, then replaced by coil tie rods.

The contractor shall provide bracing necessary for lateral and torsional stability of the girders during construction of the concrete slab and remove the bracing after the slab has attained 75% design strength. The cost for furnishing, installing, and removing bracing will be considered completely covered by the contract unit price for Prestressed Concrete NU-Girder.

For location of coil ties and #6 bars, see Sheets No. 3 & 7.

For Girder Camber Diagram, see Sheet No. 13.

Alternate bar reinforcing steel details are provided and may be used. The same type of reinforcing steel shall be used for all girders in all spans.

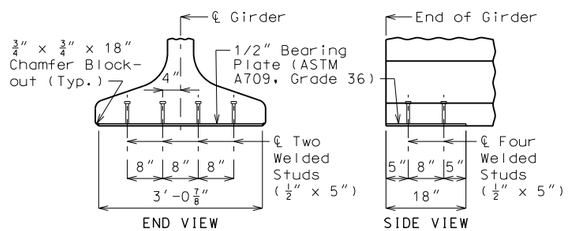

BEARING PLATE DETAILS

Galvanize the 1/2" bearing plate (ASTM A709 Grade 36) in accordance with ASTM A123.

Cost of furnishing, galvanizing, and installing the 1/2" bearing plate (ASTM A709 Grade 36) and welded studs in the prestressed girder will be considered completely covered by the contract unit price for Prestressed Concrete NU-Girder.

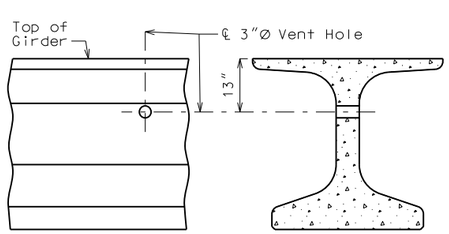

DETAILS OF VENT HOLE

Place vent holes at or near upgrade 1/3 point of girders and clear reinforcing steel or strands by 1 1/2" minimum.

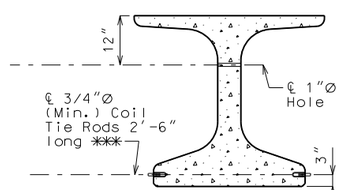

EXTERIOR AN INTERIOR GIRDERS AT END BENTS

DETAILS OF COIL TIES

Cast 1"Ø hole horizontally in girder for #6 bar 5'-6" long and clear reinforcing steel or strands by 1 1/2" minimum.

✱✱✱ Length of coil tie rods at exterior girders at end bents = 1'-10".

Detailed Aug. 2016
Checked Aug. 2016

Note: This drawing is not to scale. Follow dimensions.

PROFESSIONAL ENGINEER
STATE OF MISSOURI
CHRISTOPHER T. HERSINGER
NUMBER PE-2012018080
THIS SHEET HAS BEEN SIGNED, SEALED AND DATED ELECTRONICALLY.

DATE PREPARED 10/3/2016
ROUTE 19 | STATE MO
DISTRICT BR | SHEET NO. 10
COUNTY GASCONADE
JOB NO. J5S3140
CONTRACT ID.
PROJECT NO.
BRIDGE NO. A8439

DESCRIPTION	DATE

IF A SEAL IS PRESENT ON THIS SHEET IT HAS BEEN ELECTRONICALLY SEALED AND DATED.

MISSOURI HIGHWAYS AND TRANSPORTATION COMMISSION
105 WEST CAPITOL
JEFFERSON CITY, MO 65102
1-888-ASK-MODOT (1-888-275-6636)
HR GREEN, INC.
16020 SWINGLEY RIDGE ROAD, SUITE 205
ST. LOUIS, MISSOURI 63017
PHONE: (636) 519.0990
CORPORATE LICENSE #2002006608

Concrete for prestressed girders shall be Class A-1 with f'c = 8000 psi and f'ci = 6500 psi.

(+) indicates prestressing strand.

Use 38 strands with an initial prestress force of 1669.8 kips.

Prestressing tendons shall be uncoated, seven-wire, low-relaxation strands, 0.6 inch diameter in accordance with AASHTO M 203, Grade 270. Pretensioned members shall be in accordance with Sec 1029.

Fabricator shall be responsible for location and design of lifting devices.

✱ Girder top flange shall be steel troweled to a smooth finish for 8" at the edges, as shown. Apply two layers of 30-lb roofing felt as a bond breaker to this region only excluding where joint filler is applied. The center portion shall be rough finished by scarifying the surface transversely with a wire brush, and no laitance shall remain on the surface.

✱✱ At the contractor's option the location for bent-up strands may be varied from that shown for fully bonded strands only. The total number of bent-up strands shall not be changed. One strand tie bar is required for each layer of bent-up strands except at end bents which require one bar on the bottom layer of strands only.

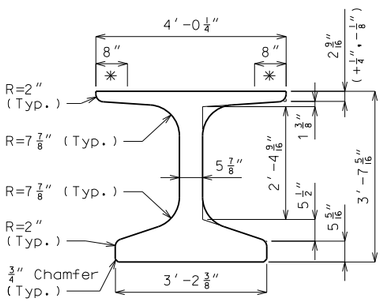

DIMENSIONS

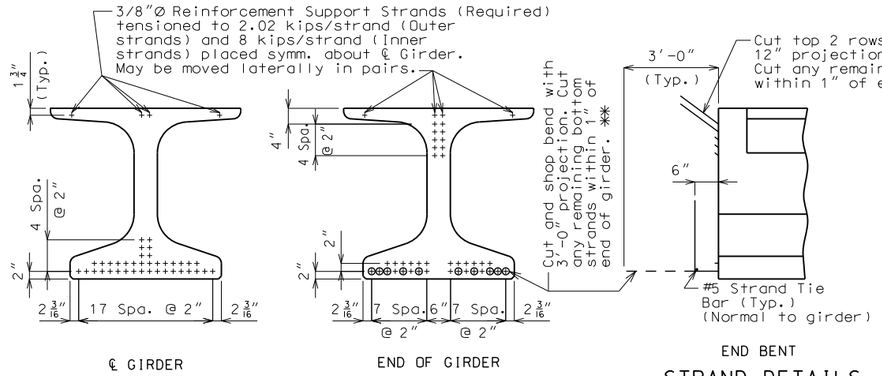

℄ GIRDER END OF GIRDER END BENT

STRAND ARRANGEMENTS

STRAND DETAILS AT GIRDER ENDS

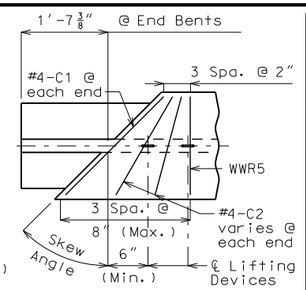

TOP FLANGE BLOCKOUT DETAIL

BILL OF REINFORCING STEEL - EACH GIRDER

NO.	SIZE & MARK	ACTUAL LENGTH	SHAPE	BENDING DIAGRAM
190	5 B1	5'-0"	11	
16	6 B2	4'-4"	11	
2	4 C1	4'-3"	20	
4	4 C2	Varies	20	
206	4 D1	4'-0"	9	

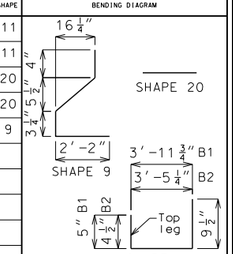

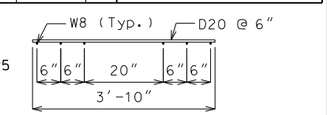

WELDED WIRE BENDING DIAGRAM

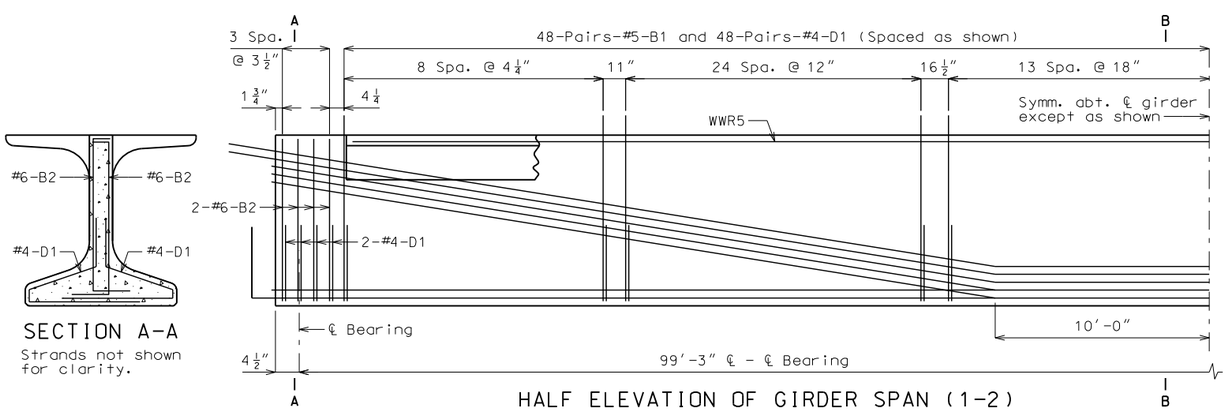

HALF ELEVATION OF GIRDER SPAN (1-2)

Exterior and interior girders are the same, except for coil ties.
Reinforcement support strands not shown for clarity.

SECTION A-A

Strands not shown for clarity.

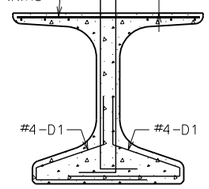

SECTION B-B

Strands not shown for clarity.

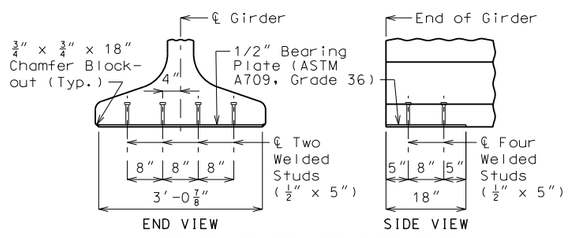

BEARING PLATE DETAILS

Galvanize the 1/2" bearing plate (ASTM A709 Grade 36) in accordance with ASTM A123.

Cost of furnishing, galvanizing, and installing the 1/2" bearing plate (ASTM A709 Grade 36) and welded studs in the prestressed girder will be considered completely covered by the contract unit price for Prestressed Concrete NU-Girder.

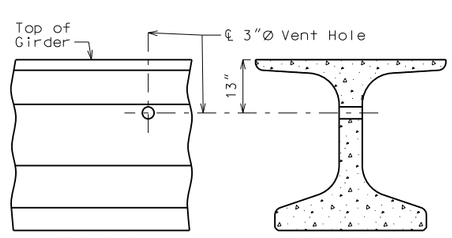

DETAILS OF VENT HOLE

Place vent holes at or near upgrade 1/3 point of girders and clear reinforcing steel or strands by 1 1/2" minimum.

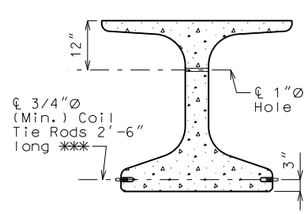

EXTERIOR AND INTERIOR GIRDERS AT END BENTS

DETAILS OF COIL TIES

Cast 1"Ø hole horizontally in girder for #6 bar 5'-6" long and clear reinforcing steel or strands by 1 1/2" minimum.

✱✱✱ Length of coil tie rods at exterior girders at end bents = 1'-10".

General Notes:

Reinforcing Steel:

All dimensions are out to out.

Hooks and bends shall be in accordance with the CRSI Manual of Standard Practice for Detailing Reinforced Concrete Structures, Stirrup and Tie Dimensions.

Actual bar lengths are measured along centerline of bar to the nearest inch.

Minimum clearance to reinforcing shall be 1".

All bar reinforcement shall be Grade 60.

Welded Wire Reinforcement (WWR) shall be in accordance with AASHTO M 221.

The two D1 bars may be furnished as one bar at the fabricator's option.

All B1 bars shall be epoxy coated.

Miscellaneous:

Cost of 3/4"Ø coil tie rods placed in diaphragms will be considered completely covered by the contract unit price for Prestressed Concrete NU-Girder.

Coil ties shall be held in place in the forms by slotted wire-setting-studs projecting thru forms. Studs are to be left in place or replaced with temporary plugs until girders are erected, then replaced by coil tie rods.

The contractor shall provide bracing necessary for lateral and torsional stability of the girders during construction of the concrete slab and remove the bracing after the slab has attained 75% design strength. The cost for furnishing, installing, and removing bracing will be considered completely covered by the contract unit price for Prestressed Concrete NU-Girder.

For location of coil ties and #6 bars, see Sheets No. 3 & 7.

For Girder Camber Diagram, see Sheet No. 13.

Alternate bar reinforcing steel details are provided and may be used. The same type of reinforcing steel shall be used for all girders in all spans.

ALTERNATE BAR REINFORCING STEEL DETAILS

Detailed Aug. 2016
Checked Aug. 2016

Note: This drawing is not to scale. Follow dimensions.

STATE OF MISSOURI
CHRISTOPHER T. HERSINGER
NUMBER PE-2012018080
PROFESSIONAL ENGINEER
THIS SHEET HAS BEEN SIGNED, SEALED AND DATED ELECTRONICALLY.

DATE PREPARED 10/3/2016
ROUTE 19 | STATE MO
DISTRICT BR | SHEET NO. 11
COUNTY GASCONADE
JOB NO. J5S3140
CONTRACT ID.
PROJECT NO.
BRIDGE NO. A8439

DESCRIPTION | DATE

MISSOURI HIGHWAYS AND TRANSPORTATION COMMISSION
105 WEST CAPITOL
JEFFERSON CITY, MO 65102
1-888-ASK-MODOT (1-888-275-6636)
HR GREEN, INC.
16020 SWINGLEY RIDGE ROAD, SUITE 205
ST. LOUIS, MISSOURI 63017
PHONE: (636) 519.0990
CORPORATE LICENSE #2002006608
HRGreen

IF A SEAL IS PRESENT ON THIS SHEET IT HAS BEEN ELECTRONICALLY SEALED AND DATED.

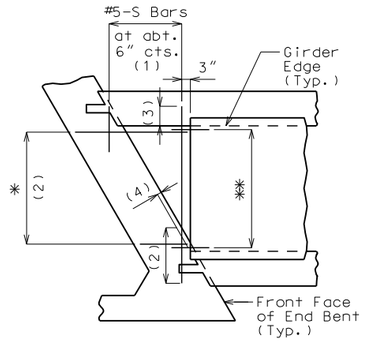

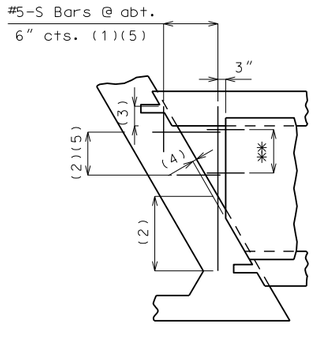

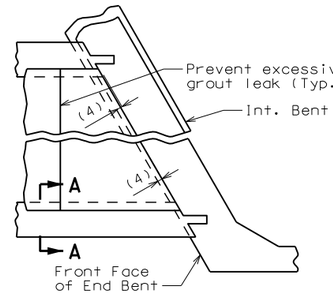

SQUARED END PANELS OR TRUNCATED END PANELS

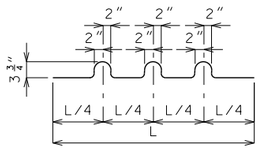

BENDING DIAGRAM FOR U1 BAR

U1 Bars may be oriented at right angles to location and spacing shown. U1 Bars shall be placed between P1 bars.

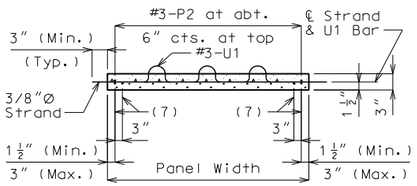

SECTION B-B

PLAN SHOWING PANELS PLACEMENT

✱ #5-S Bars at abt. 9" cts. (1)
✱✱ #3-P1 at 12" cts. (End panels only)

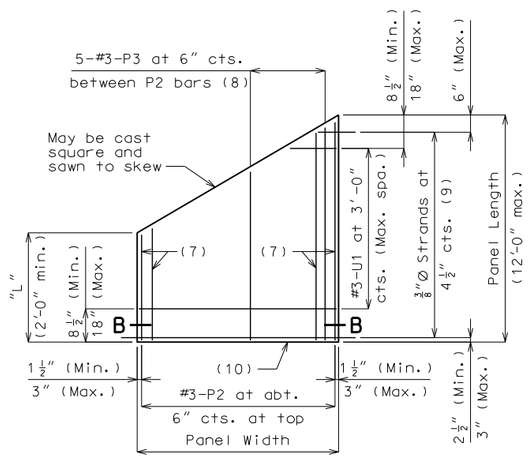

PLAN OF OPTIONAL SKEWED END PANEL

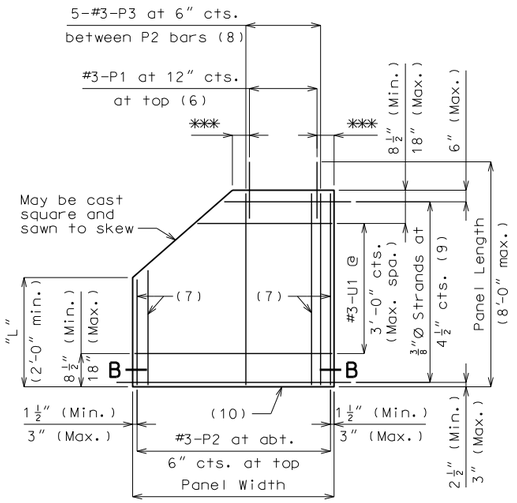

PLAN OF OPTIONAL TRUNCATED END PANEL

✱✱✱ 3" (Min.), 6" (Max.)

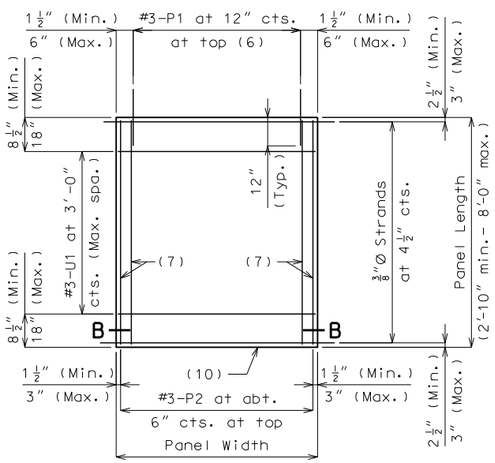

PLAN OF SQUARED PANEL

SKEWED END PANELS

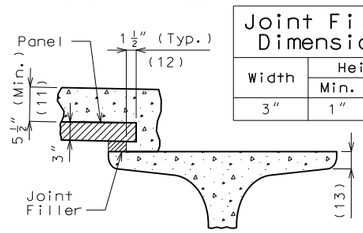

SECTION A-A

Joint Filler Dimensions		
Width	Height	
	Min.	Max.
3"	1"	4"

Reference Notes:

Plan of Panels Placement:

(1) S-bars shown are bottom steel in slab between panels and used with squared and truncated end panels only.

(2) Extend S-bars 18 inches beyond the front face of end bents and int. bents for squared and truncated end panels only.

(3) Extend S-bars 9 inches beyond edge of girder (Typ.).

(4) End panels shall be dimensioned 1/2" min. to 1 1/2" max. from the inside face of diaphragm.

(5) For truncated end panels, use a min. of #5-S bars at 6" crossings in openings, or min. 4x4-W7xW7.

Plans of Panels:

(6) For end panels only, P1 bars shall be 2'-0" in length and embedded 12". P1 bars will not be required for panels at squared integral end bents.

(7) #3-P2 bars near edge of panel at bottom (under strands).

(8) Use #3-P3 bars if panel is skewed 45° or greater.

(9) Any strand 2'-0" or shorter shall have a #4 reinforcing bar on each side of it, centered between strands. Strands 2'-0" or shorter may then be debonded at the fabricator's option.

(10) Optional 1/2" x 45° Chamfer one or both sides at bottom.

Section A-A:

(11) Slab thickness over prestressed panels varies due to girder camber. In order to maintain minimum slab thickness, it may be necessary to raise the grade uniformly throughout the structure. No payment will be made for additional labor or materials required for necessary grade adjustment.

(12) Contractor shall ensure proper consolidation under and between panels.

(13) At the contractor's option, the variation in slab thickness over prestressed panels may be eliminated or reduced by increasing and varying the girder top flange thickness. Dimensions shall be shown on the shop drawings.

General Notes:

Prestressed Panels:

Concrete for prestressed panels shall be Class A-1 with f'c = 6,000 psi, f'ci = 4,000 psi.

The top surface of all panels shall receive a scored finish with a depth of scoring of 1/8" perpendicular to the prestressing strands in the panels.

Prestressing tendons shall be high-tensile strength, uncoated, seven-wire, low-relaxation strands for prestressed concrete in accordance with AASHTO M 203 Grade 270, with nominal diameter of strand = 3/8" and nominal area = 0.085 sq.in. and minimum ultimate strength = 22.95 kips (270 ksi). Larger strands may be used with the same spacing and initial tension.

Initial prestressing force = 17.2 kips/strand.

The method and sequence of releasing the strands shall be shown on the shop drawings.

Suitable anchorage devices for lifting panels may be cast in panels, provided the devices are shown on the shop drawings and approved by the engineer. Panel lengths shall be determined by the contractor and shown on the shop drawings.

When squared end panels are used at skewed bents, the skewed portion shall be cast full depth. No separate payment will be made for additional concrete and reinforcing required.

Support from diaphragm forms is required under the optional skewed end until cast-in-place concrete has reached 3,000 psi compressive strength.

Prestressed panels shall be brought to saturated surface-dry (SSD) condition just prior to the deck pour. There shall be no free standing water on the panels or in the area to be cast.

The prestressed panel quantities are not included in the table of estimated quantities for the slab.

Reinforcing Steel:

All dimensions are out to out.

Hooks and bends shall be in accordance with the CRSI Manual of Standard Practice for Detailing Reinforced Concrete Structures, Stirrup and Tie Dimensions.

Minimum clearance to reinforcing steel shall be 1 1/2", unless otherwise shown.

If U1 bars interfere with placement of slab steel, U1 loops may be bent over, as necessary, to clear slab steel.

Deformed welded wire reinforcement (WWR) providing a minimum area of reinforcing perpendicular to strands of 0.22 sq in./ft, with spacing parallel to strands sufficient to ensure proper handling, may be used in lieu of the #3-P2 bars shown. Wire diameter shall not be larger than 0.375 inch. The above alternative reinforcement criteria may be used in lieu of the #3-P3 bars, when required, and placed over a width not less than 2 feet.

The following reinforcing steel shall be tied securely to the strands with the following maximum spacing in each direction:
#3-P2 bars at 16 inches.
WWR at 24 inches.

The #3-U1 bars shall be tied securely to #3-P2 bars, to WWR or to strands (when placed between P1 bars) at about 3-foot centers.

Minimum reinforcement steel length shall be 2'-0".

All reinforcement other than prestressing strands shall be epoxy coated.

Precast panels may be in contact with stirrup reinforcing in diaphragms.

S-bars are not listed in the bill of reinforcing.

Cost of S-bars will be considered completely covered by the contract unit price for the slab.

Joint Filler:

Joint filler shall be preformed fiber expansion joint material in accordance with Sec 1057 or expanded or extruded polystyrene bedding material in accordance with Sec 1073.

Use Slab Haunching Diagram on Sheet No. 13 for determining thickness of joint filler within the limits noted in the table of Joint Filler Dimensions.

Thicker material may be used on one or both sides of the girder to reduce cast-in-place concrete thickness to within tolerances.

The same thickness of preformed fiber expansion joint material shall be used under any one edge of any panel except at locations where top flange thickness may be stepped. The maximum change in thickness between adjacent panels shall be 1/4 inch. The polystyrene bedding material may be cut with a transition to match haunch height above top of flange.

Joint filler shall be glued to the girder. When thickness exceeds 1 1/2 inches, the joint filler shall be glued top and bottom. The glue used shall be the type recommended by the joint filler manufacturer.

Edges of panels shall be uniformly seated on the joint filler before slab reinforcement is placed.

DETAILS OF PRESTRESSED PANELS

Detailed Aug. 2016
Checked Aug. 2016

Note: This drawing is not to scale. Follow dimensions.

STATE OF MISSOURI
CHRISTOPHER T. HERSINGER
NUMBER PE-2012018080
PROFESSIONAL ENGINEER

THIS SHEET HAS BEEN SIGNED, SEALED AND DATED ELECTRONICALLY.

DATE PREPARED
10/3/2016

ROUTE	STATE
19	MO
DISTRICT	SHEET NO.
BR	12

COUNTY
GASCONADE

JOB NO.
J5S3140

CONTRACT ID.

PROJECT NO.

BRIDGE NO.
A8439

DESCRIPTION	DATE

IF A SEAL IS PRESENT ON THIS SHEET IT HAS BEEN ELECTRONICALLY SEALED AND DATED.

MISSOURI HIGHWAYS AND TRANSPORTATION COMMISSION
105 WEST CAPITOL
JEFFERSON CITY, MO 65102
1-888-ASK-MODOT (1-888-275-6636)

HR GREEN, INC.
16020 SWINGLEY RIDGE ROAD, SUITE 205
ST. LOUIS, MISSOURI 63017
PHONE: (636) 519.0990
CORPORATE LICENSE #2002006608

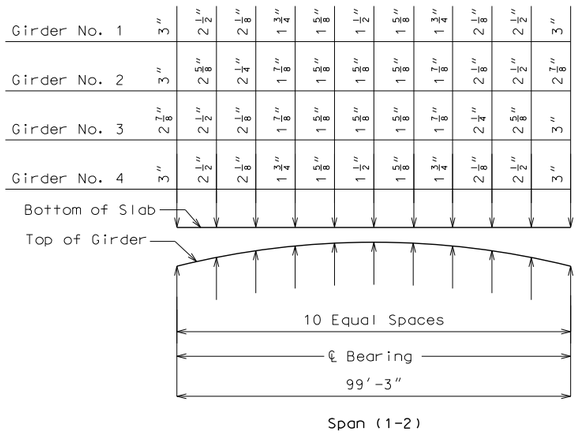

Span (1-2)

THEORETICAL SLAB HAUNCHING DIAGRAM

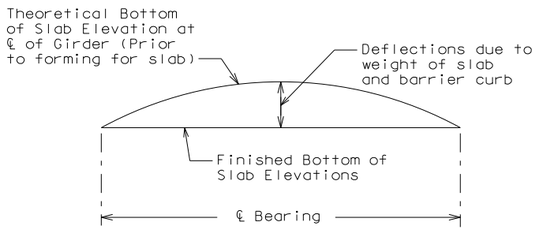

TYPICAL SLAB ELEVATIONS DIAGRAM

Theoretical Bottom of Slab Elevations at Centerline of Girder (Prior to forming for slab) **											
Girder Number	Span (1-2) (99′-3″ ℄ Brg. - ℄ Brg.)										
	℄ Brg.	.10	.20	.30	.40	.50	.60	.70	.80	.90	℄ Brg.
1	705.70	705.86	706.00	706.10	706.17	706.19	706.16	706.09	705.97	705.83	705.66
2	705.85	706.01	706.16	706.27	706.34	706.36	706.33	706.26	706.15	706.00	705.84
3	705.84	706.00	706.15	706.26	706.33	706.36	706.34	706.27	706.16	706.01	705.85
4	705.66	705.83	705.97	706.09	706.16	706.19	706.17	706.10	706.00	705.86	705.70

** Elevations are based on a constant slab thickness of 8 1/2″ and include allowance for theoretical dead load deflections due to weight of slab (including precast panel) and barrier curb.

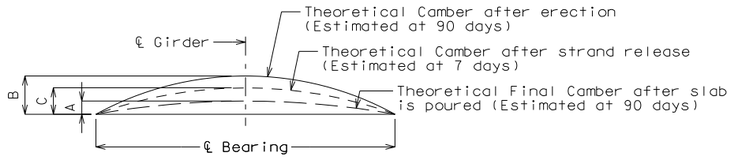

Girder	Span (1-2)		
	A	B	C
Exterior	2 1/2″	4 3/8″	2 1/2″
Interior	2 1/4″		

GIRDER CAMBER DIAGRAM

If girder camber is different from that shown in the camber diagram, in order to maintain minimum slab thickness adjustment of the slab haunches, an increase in slab thickness or a raise in grade uniformly throughout the structure shall be necessary. No payment will be made for additional labor or materials required for variation in haunching, slab thickness or grade adjustment.

Concrete in the slab haunches is included in the Estimated Quantities for Slab on Concrete NU-Girder.

Conversion factors for girder camber (estimated at 90 days)

0.1 pt. = 0.314 x 0.5 pt.
0.2 pt. = 0.593 x 0.5 pt.
0.3 pt. = 0.813 x 0.5 pt.
0.4 pt. = 0.952 x 0.5 pt.

STATE OF MISSOURI
CHRISTOPHER T. HERSINGER
NUMBER PE-2012018080
PROFESSIONAL ENGINEER

THIS SHEET HAS BEEN SIGNED, SEALED AND DATED ELECTRONICALLY.

DATE PREPARED 10/3/2016

ROUTE	STATE
19	MO
DISTRICT	SHEET NO.
BR	13

COUNTY: GASCONADE
JOB NO.: J5S3140
CONTRACT ID.:
PROJECT NO.:
BRIDGE NO.: A8439

DATE	DESCRIPTION

IF A SEAL IS PRESENT ON THIS SHEET IT HAS BEEN ELECTRONICALLY SEALED AND DATED.

MISSOURI HIGHWAYS AND TRANSPORTATION COMMISSION
105 WEST CAPITOL
JEFFERSON CITY, MO 65102
1-888-ASK-MODOT (1-888-275-6636)

HR GREEN, INC.
16020 SWINGLEY RIDGE ROAD, SUITE 205
ST. LOUIS, MISSOURI 63017
PHONE: (636) 519.0990
CORPORATE LICENSE #2002006608

HRGreen

Detailed Aug. 2016
Checked Aug. 2016

Note: This drawing is not to scale. Follow dimensions.

\\hrgwdfs004\Data\75160010\CAD\Data\Bridge_Plans\B_A8439_013_J5S3140_Haunching.dgn 3:14:56 PM 10/3/2016

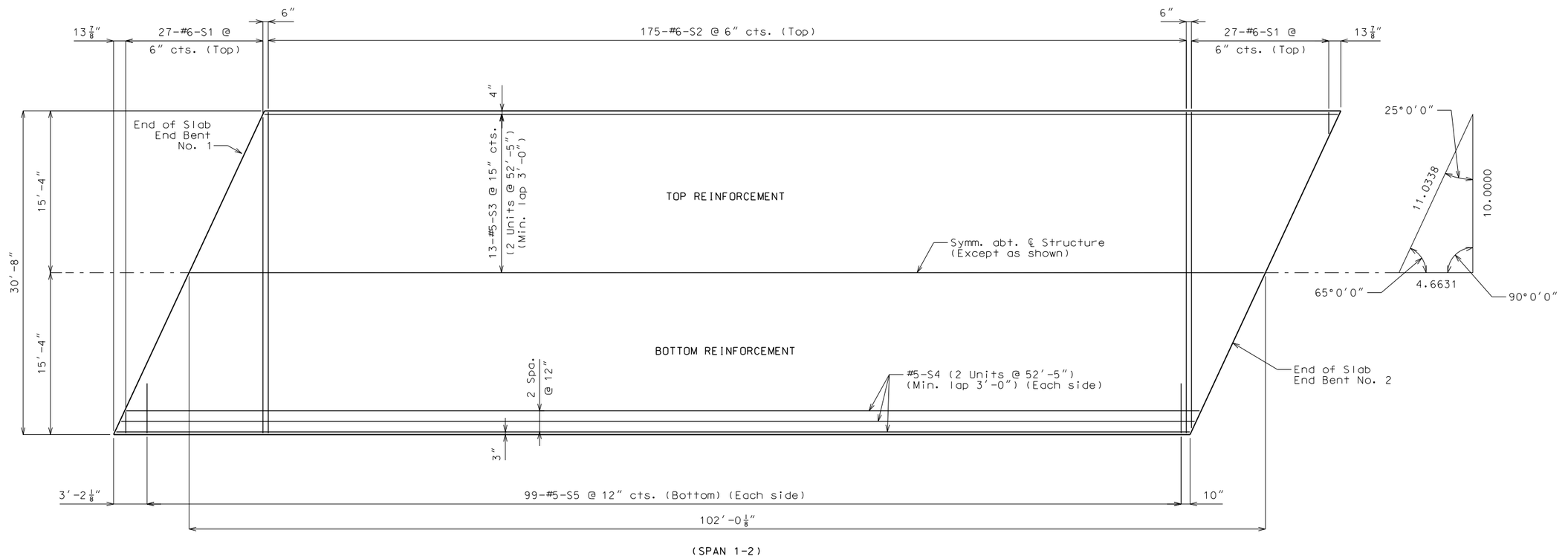

(SPAN 1-2)

PLAN OF SLAB SHOWING REINFORCEMENT

General Notes:

Longitudinal dimensions shown are horizontal.

For Section Thru Slab, see Sheet No. 15.

For Details and Reinforcement of Safety Barrier Curb not shown, see Sheets No. 16, 17, & 18.

For Details of Precast Prestressed Panels, see Sheet No. 12.

For Theoretical Bottom of Slab Elevations, Girder Camber Diagram, and Theoretical Slab Haunching Diagram, see Sheet No. 13.

SLAB DETAILS

Detailed Aug. 2016
Checked Aug. 2016

Note: This drawing is not to scale. Follow dimensions.

STATE OF MISSOURI
CHRISTOPHER T. HERSINGER
NUMBER PE-2012018080
PROFESSIONAL ENGINEER

THIS SHEET HAS BEEN SIGNED, SEALED AND DATED ELECTRONICALLY.

DATE PREPARED 10/3/2016

ROUTE	STATE
19	MO
DISTRICT	SHEET NO.
BR	14

COUNTY: GASCONADE
JOB NO.: J5S3140
CONTRACT ID.:
PROJECT NO.:
BRIDGE NO.: A8439

DESCRIPTION	DATE

IF A SEAL IS PRESENT ON THIS SHEET IT HAS BEEN ELECTRONICALLY SEALED AND DATED.

MISSOURI HIGHWAYS AND TRANSPORTATION COMMISSION
105 WEST CAPITOL
JEFFERSON CITY, MO 65102
1-888-ASK-MODOT (1-888-275-6636)

HR GREEN, INC.
16020 SWINGLEY RIDGE ROAD, SUITE 205
ST. LOUIS, MISSOURI 63017
PHONE: (636) 519.0990
CORPORATE LICENSE #2002006608
HRGreen

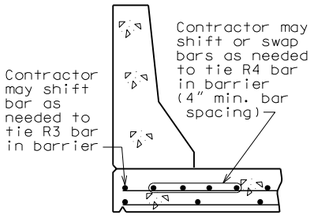

OPTIONAL SHIFTING TOP BARS AT BARRIER

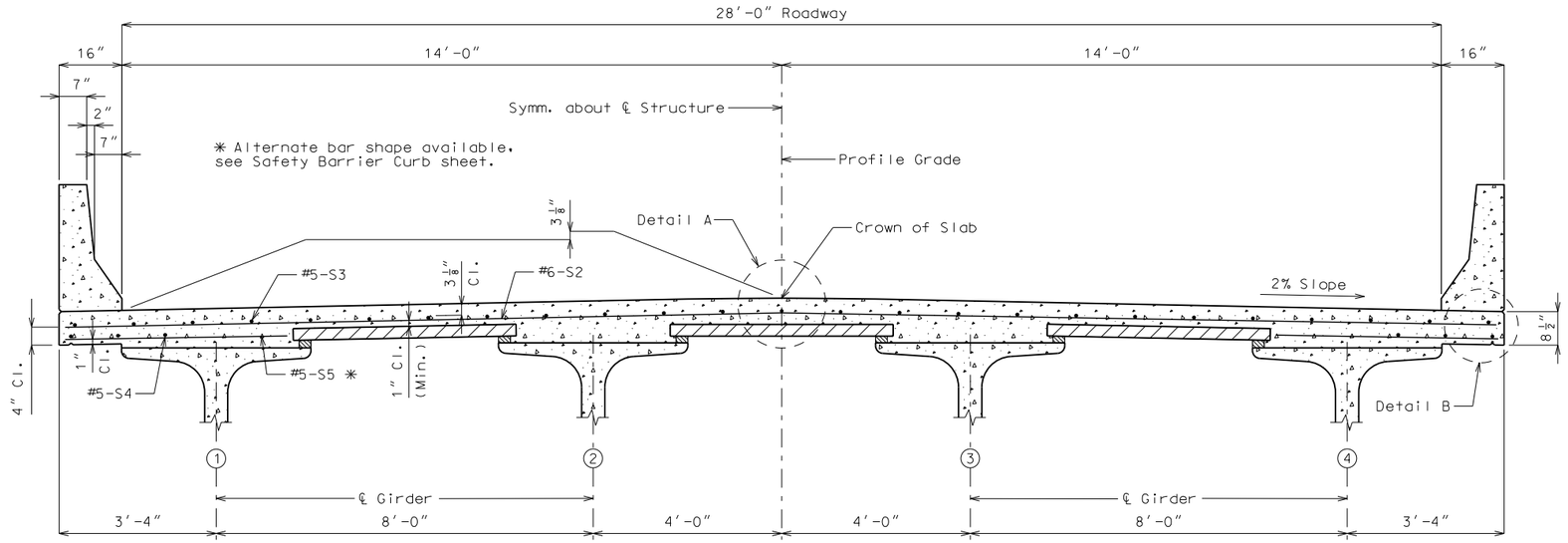

SECTION THRU SLAB

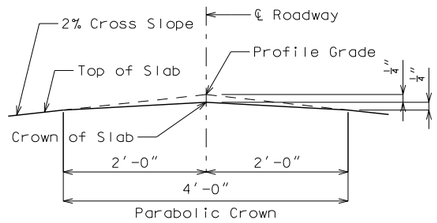

DETAIL A

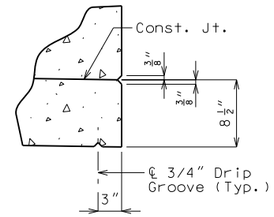

DETAIL B

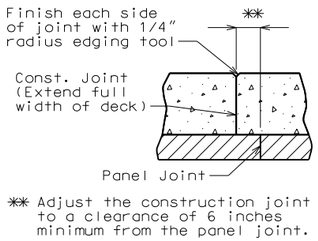

** Adjust the construction joint to a clearance of 6 inches minimum from the panel joint.

SLAB CONSTRUCTION JOINT

Notes:

For details of precast prestressed panels, see Sheet No. 12.

For reinforcement of safety barrier curb not shown, see Sheets No. 16, 17, & 18.

For Theoretical Bottom of Slab Elevations, Girder Camber Diagram and Theoretical Slab Haunching Diagram, see Sheet No. 13.

For Plan of Slab Showing Reinforcement, see Sheet No. 14.

The contractor shall furnish an approved retarder to retard the set of the concrete to 2.5 hours, and shall pour and satisfactorily finish the slab pour at a rate of not less than 25 cubic yards per hour.

The concrete diaphragm at the integral end bents shall be poured a minimum of 30 minutes and a maximum of 2 hours before the slab is poured.

SLAB DETAILS

Detailed Aug. 2016
Checked Aug. 2016

Note: This drawing is not to scale. Follow dimensions.

STATE OF MISSOURI
CHRISTOPHER T. HERSINGER
NUMBER PE-2012018080
PROFESSIONAL ENGINEER

THIS SHEET HAS BEEN SIGNED, SEALED AND DATED ELECTRONICALLY.

DATE PREPARED 10/3/2016

ROUTE	STATE
19	MO
DISTRICT	SHEET NO.
BR	15

COUNTY GASCONADE

JOB NO. J5S3140

CONTRACT ID.

PROJECT NO.

BRIDGE NO. A8439

DESCRIPTION	DATE

IF A SEAL IS PRESENT ON THIS SHEET IT HAS BEEN ELECTRONICALLY SEALED AND DATED.

MISSOURI HIGHWAYS AND TRANSPORTATION COMMISSION
105 WEST CAPITOL
JEFFERSON CITY, MO 65102
1-888-ASK-MODOT (1-888-275-6636)

HR GREEN, INC.
16020 SWINGLEY RIDGE ROAD, SUITE 205
ST. LOUIS, MISSOURI 63017
PHONE: (636) 519.0990
CORPORATE LICENSE #2002006608

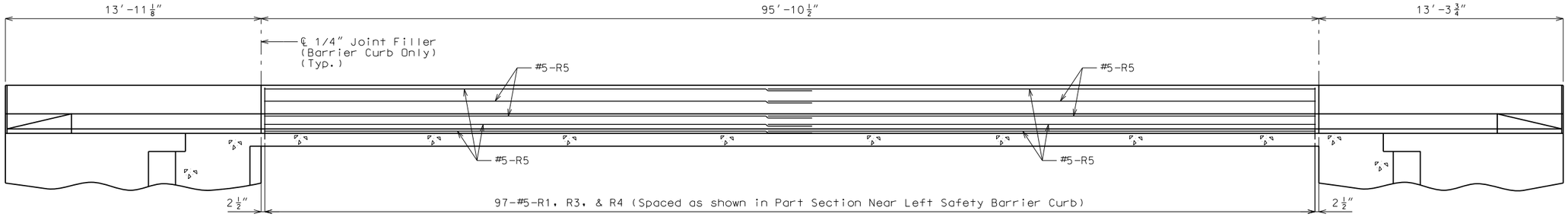

(SPAN 1-2)

ELEVATION OF SAFETY BARRIER CURB

(Left barrier curb shown, right barrier curb similar)

Longitudinal dimensions are horizontal.

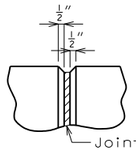

FILLED JOINT DETAIL

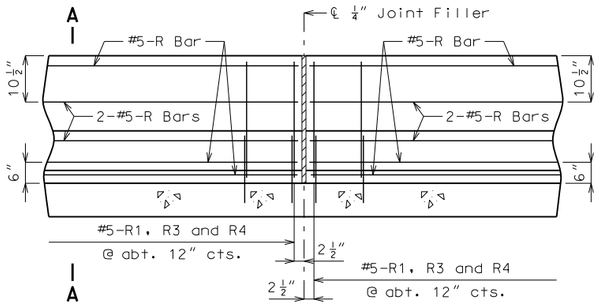

PART ELEVATION OF SAFETY BARRIER CURB
(CAST-IN-PLACE CONVENTIONAL FORMING)

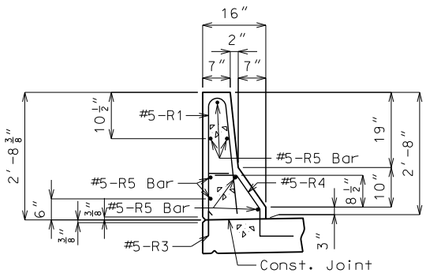

SECTION A-A

Use a minimum lap of 3′-1″ for #5 horizontal safety barrier curb bars.

The cross-sectional area above the slab = 2.27 sq. ft.

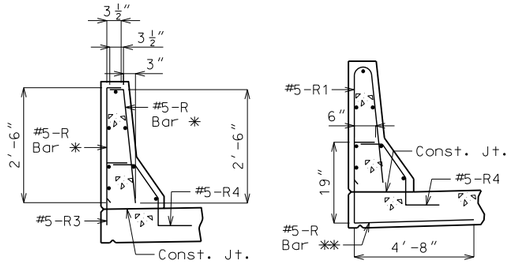

R-BAR PERMISSIBLE ALTERNATE SHAPE

✳ The R1 bar may be separated into two bars as shown, at the contractor's option, only when slip forming is not used. (All dimensions are out to out.)

✳✳ The R3 bar and #5 bottom transverse slab bar in cantilever (P/S panels only) combination may be furnished as one bar as shown, at the contractor's option.

General Notes

Top of safety barrier curb shall be built parallel to grade with barrier curb joints (except at end bents) normal to grade.

All exposed edges of safety barrier curb shall have either a 1/2-inch radius or a 3/8-inch bevel, unless otherwise noted.

Payment for all concrete and reinforcement, complete in place, will be considered completely covered by the contract unit price for Safety Barrier Curb per linear foot.

Concrete in the safety barrier curb shall be Class B-1.

Measurement of safety barrier curb is to the nearest linear foot for each structure, measured along the outside top of slab from end of wing to end of wing.

Concrete traffic barrier delineators shall be placed on top of the safety barrier curb as shown on Missouri Standard Plans 617.10 and in accordance with Sec 617. Delineators on bridges with two-lane, two-way traffic shall have retroreflective sheeting on both sides. Concrete traffic barrier delineators will be considered completely covered by the contract unit price for Safety Barrier Curb.

DETAILS OF SAFETY BARRIER CURB

Detailed Aug. 2016
Checked Aug. 2016

Note: This drawing is not to scale. Follow dimensions.

STATE OF MISSOURI
CHRISTOPHER T. HERSINGER
NUMBER PE-2012018080
PROFESSIONAL ENGINEER

THIS SHEET HAS BEEN SIGNED, SEALED AND DATED ELECTRONICALLY.

IF A SEAL IS PRESENT ON THIS SHEET IT HAS BEEN ELECTRONICALLY SEALED AND DATED.

DATE PREPARED 10/3/2016

ROUTE	STATE
19	MO
DISTRICT	SHEET NO.
BR	16

COUNTY: GASCONADE
JOB NO.: J5S3140
CONTRACT ID.:
PROJECT NO.:
BRIDGE NO.: A8439

DESCRIPTION	DATE

MISSOURI HIGHWAYS AND TRANSPORTATION COMMISSION
105 WEST CAPITOL
JEFFERSON CITY, MO 65102
1-888-ASK-MODOT (1-888-275-6636)

HR GREEN, INC.
16020 SWINGLEY RIDGE ROAD, SUITE 205
ST. LOUIS, MISSOURI 63017
PHONE: (636) 519.0990
CORPORATE LICENSE #2002006608

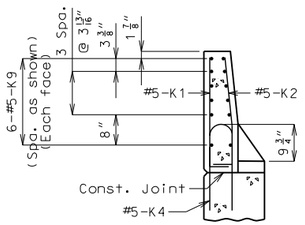

SECTION A-A

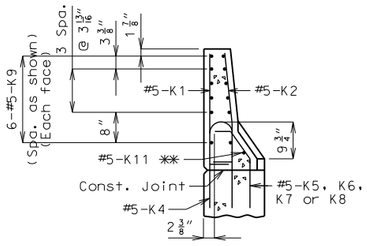

SECTION B-B

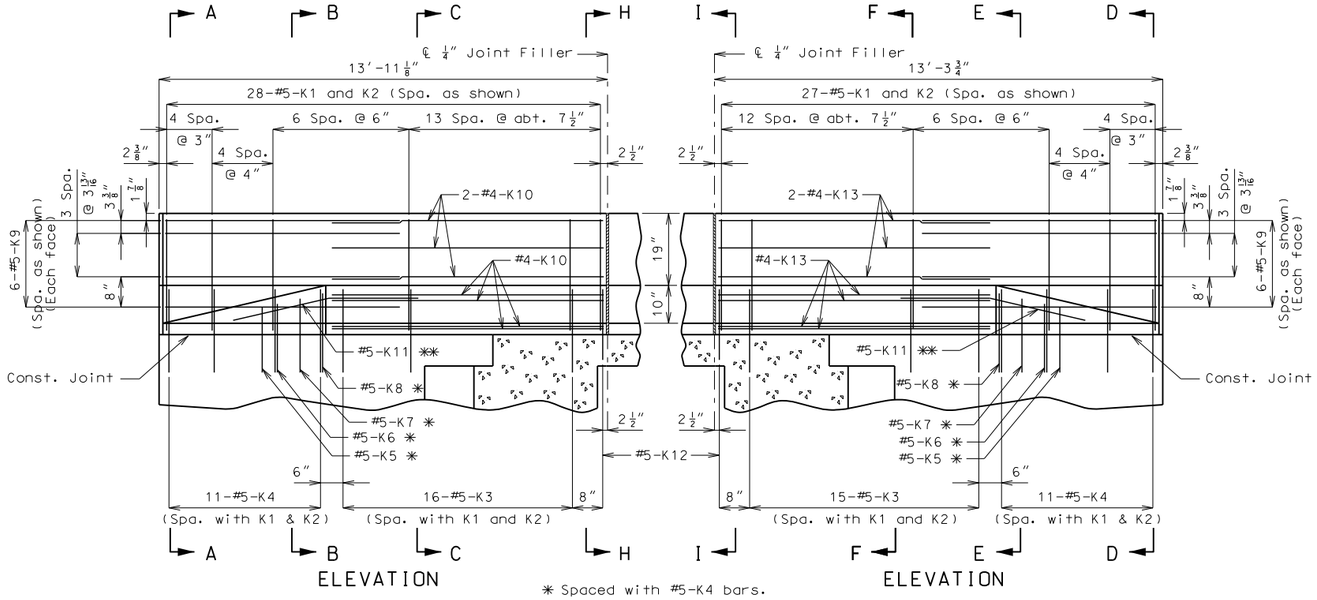

ELEVATION

ELEVATION

* Spaced with #5-K4 bars.

** Fit bar to follow transition face of curb.

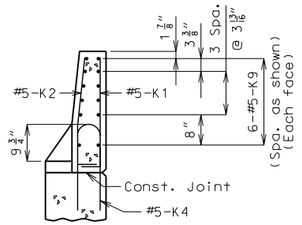

SECTION D-D

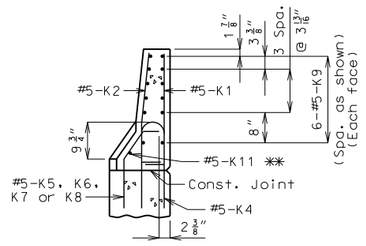

SECTION E-E

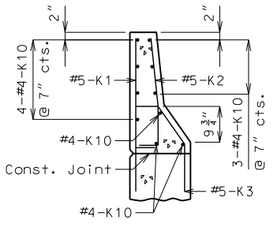

SECTION C-C

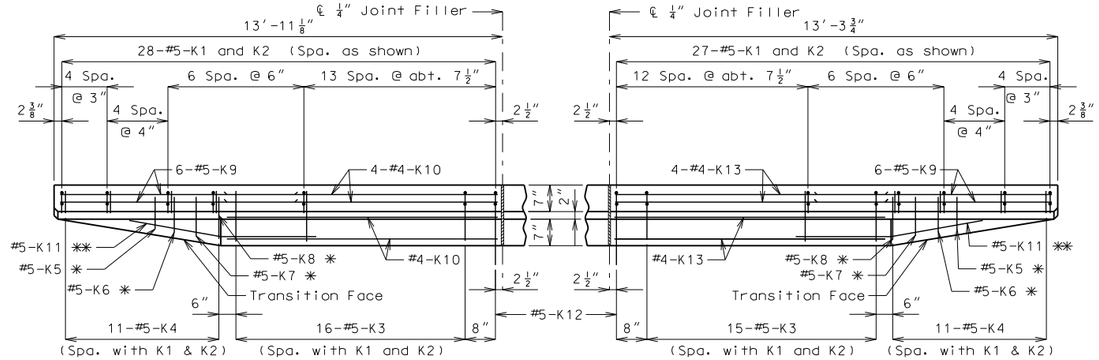

PLAN

PLAN

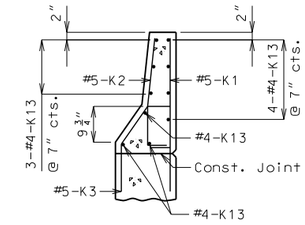

SECTION F-F

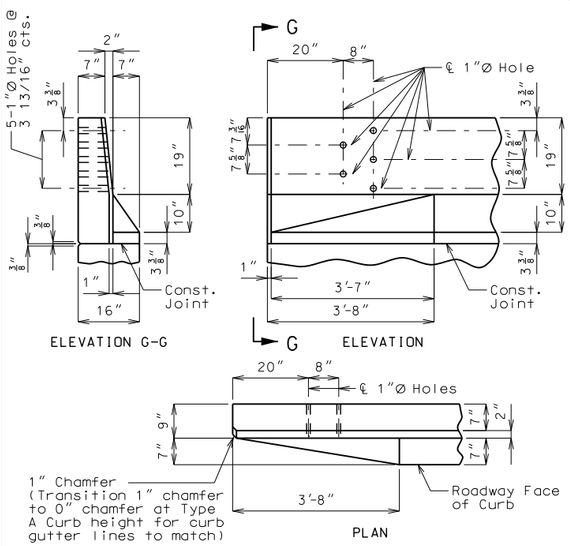

DETAILS OF GUARD RAIL ATTACHMENT

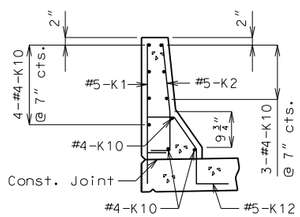

SECTION H-H

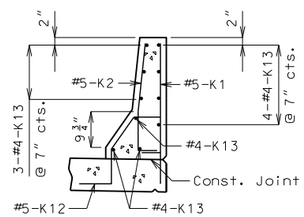

SECTION I-I

Note: Use a minimum lap of 2'-7" between K9 and K10 or K13 bars.

Concrete traffic barrier delineators shall be placed on top of the safety barrier curb as shown on Missouri Standard Plans 617.10 and in accordance with Sec 617. Delineators on bridges with two-lane, two way traffic shall have retroreflective sheeting on both sides. Concrete traffic barrier delineators will be considered completely covered by the contract unit price for Safety Barrier Curb.

DETAILS OF SAFETY BARRIER CURB AT END BENTS

(Left barrier curb shown, right barrier curb similar)

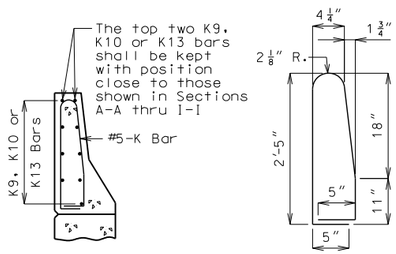

K1-K2 BAR PERMISSIBLE ALTERNATE SHAPE

(K3 or K4 thru K8 bars not shown for clarity)

The K1 and K2 bar combination may be furnished as one bar as shown, at the contractor's option.

Detailed Aug. 2016
Checked Aug. 2016

Note: This drawing is not to scale. Follow dimensions.

STATE OF MISSOURI
CHRISTOPHER T. HERSINGER
NUMBER PE-2012018080
PROFESSIONAL ENGINEER

THIS SHEET HAS BEEN SIGNED, SEALED AND DATED ELECTRONICALLY.

DATE PREPARED 10/3/2016

ROUTE	STATE
19	MO
DISTRICT	SHEET NO.
BR	17

COUNTY GASCONADE

JOB NO. J5S3140

CONTRACT ID.

PROJECT NO.

BRIDGE NO. A8439

DESCRIPTION	DATE

IF A SEAL IS PRESENT ON THIS SHEET IT HAS BEEN ELECTRONICALLY SEALED AND DATED.

MISSOURI HIGHWAYS AND TRANSPORTATION COMMISSION
105 WEST CAPITOL
JEFFERSON CITY, MO 65102
1-888-ASK-MODOT (1-888-275-6636)

HR GREEN, INC.
16020 SWINGLEY RIDGE ROAD, SUITE 205
ST. LOUIS, MISSOURI 63017
PHONE: (636) 519.0990
CORPORATE LICENSE #2002006608
HRGreen

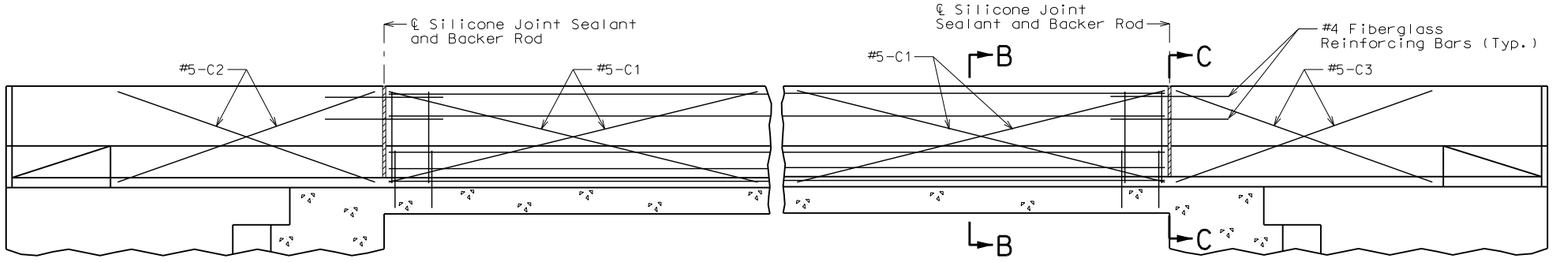

TYPICAL ELEVATION OF SAFETY BARRIER CURB AT SUPPORT LOCATIONS

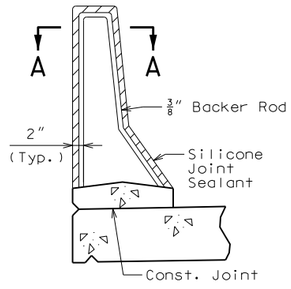

SECTION THRU JOINT

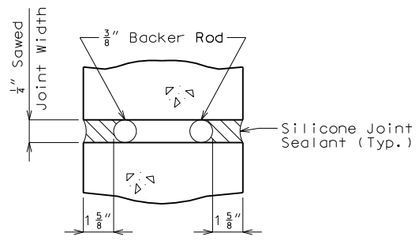

SECTION A-A

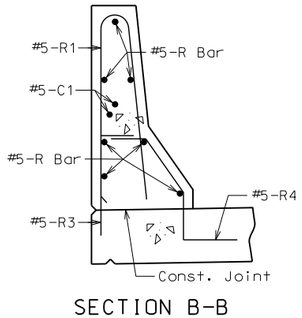

SECTION B-B

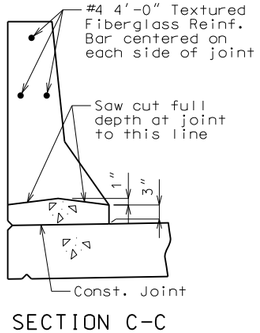

SECTION C-C

General Notes:

Top of safety barrier curb shall be built parallel to grade with barrier curb joints (except at end bents) normal to grade.

All exposed edges of safety barrier curb shall have either a 1/2-inch radius or a 3/8-inch bevel, unless otherwise noted.

Payment for all concrete and reinforcement, complete in place, will be considered completely covered by the contract unit price for Safety Barrier Curb per linear foot.

Concrete in the safety barrier curb shall be Class B-1.

Measurement of safety barrier curb is to the nearest linear foot for each structure, measured along the outside top of slab from end of wing to end of wing.

Concrete traffic barrier delineators shall be placed on top of the safety barrier curb as shown on Missouri Standard Plans 617.10 and in accordance with Sec 617. Delineators on bridges with two-lane, two-way traffic shall have retroreflective sheeting on both sides. Concrete traffic barrier delineators will be considered completely covered by the contract unit price for Safety Barrier Curb.

Joint sealant and backer rods shall be used on all slip-form barrier curbs instead of joint filler and shall be in accordance with Sec 717 for silicone joint sealant for saw cut and formed joints.

For slip-form option, all sides of the safety barrier curb shall have a vertically broomed finish and the curb top shall have a transversely broomed finish.

C bars (slip-form option only) shall be used in addition to cast-in-place conventional forming reinforcement for bridge safety barrier curb.

Cost of silicone joint sealant and backer rod, complete in place, will be considered completely covered by the contract unit price for Safety Barrier Curb.

OPTIONAL SLIP-FORM SAFETY BARRIER CURB

Detailed Aug. 2016
Checked Aug. 2016

Note: This drawing is not to scale. Follow dimensions.

STATE OF MISSOURI
CHRISTOPHER T. HERSINGER
NUMBER PE-2012018080
PROFESSIONAL ENGINEER

THIS SHEET HAS BEEN SIGNED, SEALED AND DATED ELECTRONICALLY.

DATE PREPARED 10/3/2016

ROUTE	STATE
19	MO
DISTRICT	SHEET NO.
BR	18

COUNTY GASCONADE

JOB NO. J5S3140

CONTRACT ID.

PROJECT NO.

BRIDGE NO. A8439

DESCRIPTION	DATE

IF A SEAL IS PRESENT ON THIS SHEET IT HAS BEEN ELECTRONICALLY SEALED AND DATED.

MISSOURI HIGHWAYS AND TRANSPORTATION COMMISSION
105 WEST CAPITOL
JEFFERSON CITY, MO 65102
1-888-ASK-MODOT (1-888-275-6636)

HR GREEN, INC.
16020 SWINGLEY RIDGE ROAD, SUITE 205
ST. LOUIS, MISSOURI 63017
PHONE: (636) 519.0990
CORPORATE LICENSE #2002006608
HRGreen

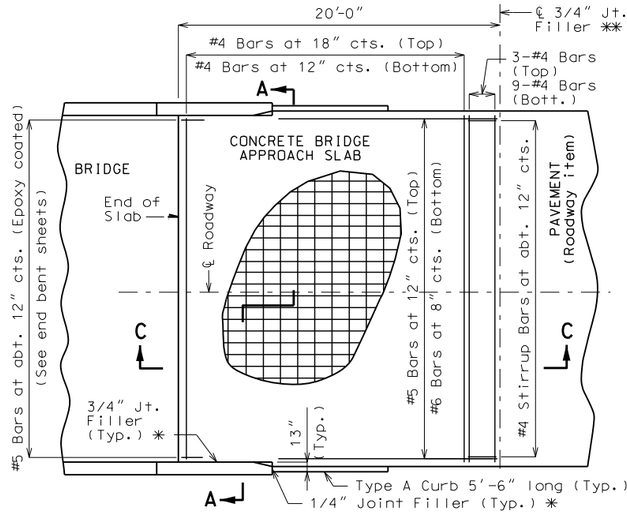

PART PLAN OF SQUARED STRUCTURE

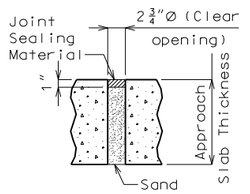

TYPICAL UNDERSEAL ACCESS HOLE DETAIL

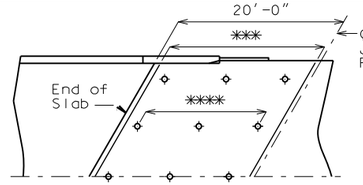

LEFT ADVANCED STRUCTURE SHOWN, RIGHT ADVANCED SIMILAR

PART PLAN OF SKEWED STRUCTURE

** Except not allowed with asphalt pavement.

*** Transverse reinforcing bars shall be placed parallel to end bents.

**** Underseal access holes shall be laid out parallel to end bents.

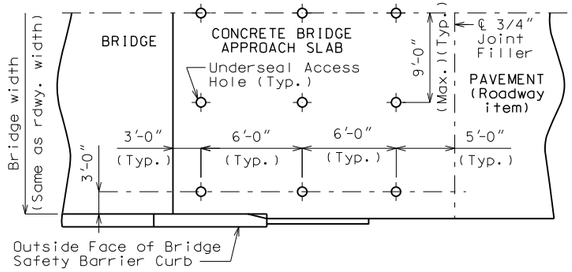

PART PLAN SHOWING UNDERSEAL ACCESS HOLES
(Squared structure shown)

Notes For Concrete Slab Only:

All concrete for the bridge approach slab shall be in accordance with Sec 503 (f'c = 4,000 psi).

The reinforcing steel in the bridge approach slab shall be epoxy coated Grade 60 with fy = 60,000 psi.

Longitudinal construction joints in bridge approach slab shall be aligned with longitudinal construction joints in bridge slab.

Minimum clearance to reinforcing steel shall be 1½", unless otherwise shown.

The reinforcing steel in the bridge approach slab shall be continuous. The transverse reinforcing steel may be made continuous by lap splicing the #4 bars 23".

All joint filler shall be in accordance with Sec 1057 for preformed fiber expansion joint filler except as noted.

Payment for furnishing all materials, labor and excavation necessary to construct the concrete bridge approach slab, including the timber header, underdrain, Type 5 aggregate base, joint filler, and all other appurtenances and incidental work as shown on this sheet, complete in place, will be considered completely covered by the contract unit price for Bridge Approach Slab (Minor Road) per square yard.

See Missouri Standard Plans Drawing 609.00 for details of Type A Curb.

* Seal joint between vertical face of bridge approach slab and wing with "Silicone Joint Sealant for Saw Cut and Formed Joints" in accordance with Sec 717.

General Notes:

Contractor shall have the option to construct either slab except as noted.

The contractor shall pour and satisfactorily finish the bridge slab before placing the bridge approach slab.

Drain pipe may be either 6" diameter corrugated metallic-coated pipe underdrain, 4" diameter corrugated polyvinyl chloride (PVC) drain pipe, or 4" diameter corrugated polyethylene (PE) drain pipe.

MoDOT Construction personnel will indicate the bridge approach slab used for this structure:

☐ Concrete Bridge Approach Slab

☐ Asphalt Bridge Approach Slab

Notes For Asphalt Slab Only:

Payment for furnishing all materials, curb, labor and excavation necessary to construct the asphalt bridge approach slab, including curb, underdrain and Type 5 aggregate base within the pay limits shown, complete in place, will be considered completely covered by the contract unit price for Bridge Approach Slab (Minor Road) per square yard.

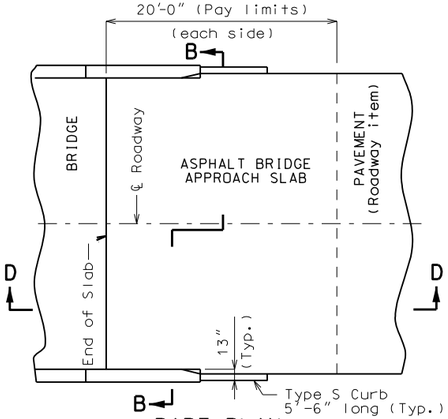

PART PLAN
(Squared structure shown, skewed structure similar)

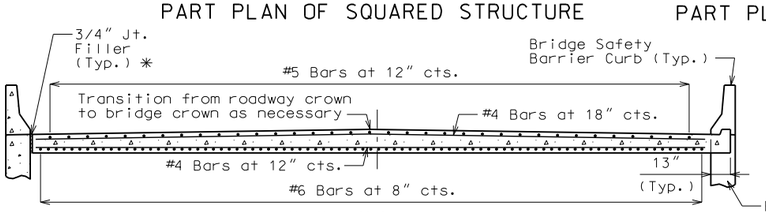

SECTION A-A

With the approval of the engineer, the contractor may crown the bottom of the approach slab to match the crown of the roadway surface.

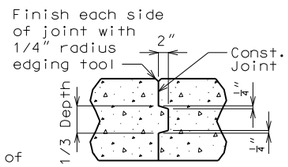

CONCRETE CONST. JOINT DETAIL
(If required)

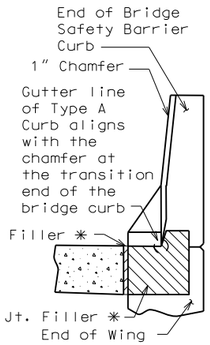

4" TYPE A CURB

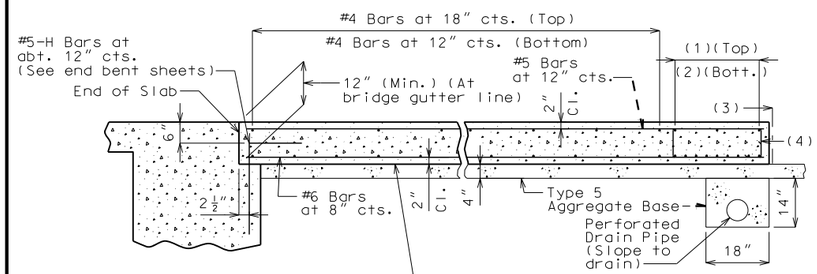

SECTION C-C
(Integral end bent)

(1) 3-#4 Bars

(2) 9-#4 Bars

(3) ℄ 3/4" Jt. Filler **

(4) #4 Stirrup Bars at abt. 12" cts.; 2'-0"x 8" (Min.) out to out; Actual length = 5'-10" (Min.); 90° stirrup hook at bottom; Stirrup height (8") and actual length vary due to crown.

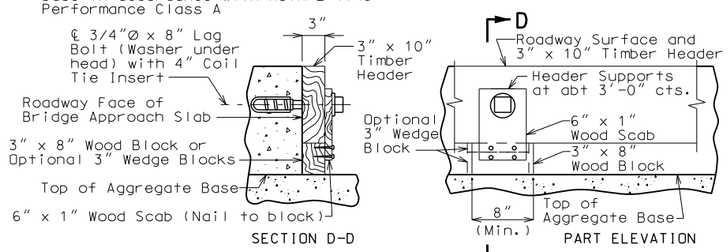

DETAILS OF TIMBER HEADER
Remove timber header when concrete pavement is placed.

OPTIONAL CONCRETE SLAB

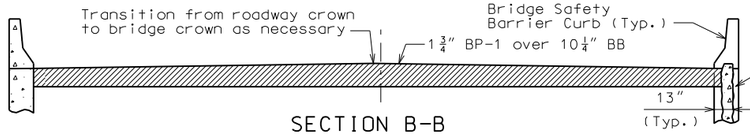

SECTION B-B

With the approval of the engineer, the contractor may crown the bottom of the approach slab to match the crown of the roadway surface.

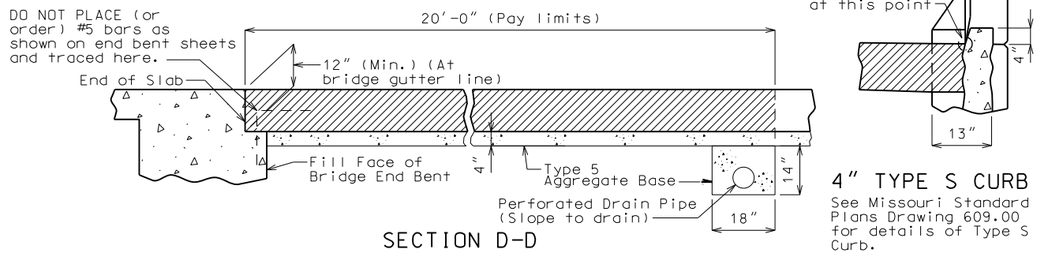

SECTION D-D

4" TYPE S CURB
See Missouri Standard Plans Drawing 609.00 for details of Type S Curb.

OPTIONAL ASPHALT SLAB (EXCEPT NOT ALLOWED WITH CONCRETE PAVEMENT)

DETAILS OF BRIDGE APPROACH SLAB (MINOR ROAD)

Detailed Aug. 2016
Checked Aug. 2016

Note: This drawing is not to scale. Follow dimensions.

STATE OF MISSOURI
CHRISTOPHER T. HERSINGER
NUMBER PE-2012018080
PROFESSIONAL ENGINEER
THIS SHEET HAS BEEN SIGNED, SEALED AND DATED ELECTRONICALLY.

DATE PREPARED 10/3/2016

ROUTE	STATE
19	MO
DISTRICT	SHEET NO.
BR	19

COUNTY: GASCONADE
JOB NO.: J5S3140
CONTRACT ID.:
PROJECT NO.:
BRIDGE NO.: A8439

DESCRIPTION	DATE

IF A SEAL IS PRESENT ON THIS SHEET IT HAS BEEN ELECTRONICALLY SEALED AND DATED.

MISSOURI HIGHWAYS AND TRANSPORTATION COMMISSION
105 WEST CAPITOL
JEFFERSON CITY, MO 65102
1-888-ASK-MODOT (1-888-275-6636)
MoDOT
HR GREEN, INC.
16020 SWINGLEY RIDGE ROAD, SUITE 205
ST. LOUIS, MISSOURI 63017
PHONE: (636) 519.0990
CORPORATE LICENSE #2002006608
HRG HRGreen

BILL OF REINFORCING STEEL

NO. REQ'D.	MARK NO. SIZE	MARK	LOCATION	EPOXY (E)	SHAPE NO.	STIRRUP (S)	SUBSTR. (X)	VARIES (V)	NO. EACH	DIMENSIONS B FT. IN.	C FT. IN.	D FT. IN.	E FT. IN.	F FT. IN.	H FT. IN.	K FT. IN.	NOMINAL LENGTH FT. IN.	ACTUAL LENGTH FT. IN.	WEIGHT LBS.
			SUPERSTR.																
			END BENT 1																
10	6	F10	WING		15	S				14.000	6 3.750	14.000	7.500	11.875	7.500	11.875	8 8	8 6	128
4	6	F11	DIAPHRAGM		21	S				5 3.000	2 10.750				4 9.125	2 2.625	8 2	8 0	48
10	6	F12	WING		15	S				14.000	4 1.750	14.000	11.875	7.500	11.875	7.500	6 6	6 4	95
4	6	F13	DIAPHRAGM		23	S				2 10.750	5 3.000				2 7.500	14.625	8 2	8 0	48
4	6	H10	DIAPHRAGM	E	20					33 6.000							33 6	33 6	201
28	5	H11	DIAPHRAGM	E	19	S				2 0.000	15.000						3 3	3 2	92
4	6	H12	DIAPHRAGM		20					33 6.000							33 6	33 6	201
9	6	H13	DIAPHRAGM		20					8 0.000							8 0	8 0	108
3	6	H14	DIAPHRAGM		20					5 0.000							5 0	5 0	23
6	6	H15	DIAPHRAGM		20					3 1.000							3 1	3 1	28
2	6	H16	DIAPHRAGM		20					19.000							0 19	0 19	5
4	5	H17	STRAND TIE		23	S				15.000	3 2.375	15.000	6.375	13.625	6.375	13.625	5 8	5 7	23
8	6	H18	BEAM		20					33 6.000							33 6	33 6	403
4	6	H19	BEAM		20					33 6.000							33 6	33 6	201
2	8	H100	WING	E	20					12 3.000							12 3	12 3	65
6	8	H101	WING		20					12 3.000							12 3	12 3	196
20	6	H102	WING		20					11 3.000							11 3	11 3	338
2	8	H103	WING	E	20					12 11.000							12 11	12 11	69
6	8	H104	WING		20					12 11.000							12 11	12 11	207
20	6	H105	WING		20					11 11.000							11 11	11 11	358
4	6	H106	DIAPHRAGM		20					5 6.000							5 6	5 6	33
14	5	U10	BEAM		10	S					4 0.000	2 5.750					10 6	10 3	214
20	6	U14	DIAPHRAGM		19	S				3 1.000	3 0.000						6 1	5 11	178
42	6	U15	DIAPHRAGM	E	19	S				3 3.000	4 10.000						8 1	7 11	499
12	5	V10	BEAM		20					5 1.000							5 1	5 1	64
20	6	V11	DIAPHRAGM		20					3 1.000							3 1	3 1	93
22	6	V12	WALL		20					7 3.000							7 3	7 3	240
22	6	V13	WALL		20					7 3.000							7 3	7 3	240
			END BENT 2																
10	6	F20	WING		15	S				14.000	6 3.750	14.000	7.500	11.875	7.500	11.875	8 8	8 6	128
4	6	F21	DIAPHRAGM		21	S				5 3.000	2 10.750				4 9.125	2 2.625	8 2	8 0	48
10	6	F22	WING		15	S				14.000	4 1.750	14.000	11.875	7.500	11.875	7.500	6 6	6 4	95
4	6	F23	DIAPHRAGM		23	S				2 10.750	5 3.000				2 7.500	14.625	8 2	8 0	48
4	6	H20	DIAPHRAGM	E	20					33 6.000							33 6	33 6	201
28	5	H21	DIAPHRAGM	E	19	S				2 0.000	15.000						3 3	3 2	92
4	6	H22	DIAPHRAGM		20					33 6.000							33 6	33 6	201
9	6	H23	DIAPHRAGM		20					8 0.000							8 0	8 0	108
3	6	H24	DIAPHRAGM		20					5 0.000							5 0	5 0	23
6	6	H25	DIAPHRAGM		20					3 1.000							3 1	3 1	28
2	6	H26	DIAPHRAGM		20					19.000							0 19	0 19	5
4	5	H27	STRAND TIE		23	S				15.000	3 2.375	15.000	6.375	13.625	6.375	13.625	5 8	5 7	23
8	6	H28	BEAM		20					33 6.000							33 6	33 6	403
4	6	H29	BEAM		20					33 6.000							33 6	33 6	201
2	8	H200	WING	E	20					12 3.000							12 3	12 3	65
6	8	H201	WING		20					12 3.000							12 3	12 3	196
20	6	H202	WING		20					11 3.000							11 3	11 3	338

BILL OF REINFORCING STEEL

NO. REQ'D.	MARK NO. SIZE	MARK	LOCATION	EPOXY (E)	SHAPE NO.	STIRRUP (S)	SUBSTR. (X)	VARIES (V)	NO. EACH	DIMENSIONS B FT. IN.	C FT. IN.	D FT. IN.	E FT. IN.	F FT. IN.	H FT. IN.	K FT. IN.	NOMINAL LENGTH FT. IN.	ACTUAL LENGTH FT. IN.	WEIGHT LBS.
2	8	H203	WING	E	20					12 11.000							12 11	12 11	69
6	8	H204	WING		20					12 11.000							12 11	12 11	207
20	6	H205	WING		20					11 11.000							11 11	11 11	358
4	6	H206	DIAPHRAGM		20					5 6.000							5 6	5 6	33
14	5	U20	BEAM		10	S					5 1.000	3 0.000					13 2	13 0	190
26	4	U21	BEAM		13	S				3 0.000	2 8.000	3 0.000	2 8.000				12 1	11 10	206
4	4	U22	BEAM		10	S					2 8.000	3 0.000					8 4	8 2	22
20	5	U23	DIAPHRAGM	E	10	S					4 0.000	2 5.750					10 6	10 3	214
20	6	U24	DIAPHRAGM		19	S				3 1.000	3 0.000						6 1	5 11	178
42	6	U25	DIAPHRAGM	E	19	S				3 3.000	4 10.000						8 1	7 11	499
12	5	V20	BEAM		20					5 1.000							5 1	5 1	64
20	6	V21	DIAPHRAGM		20					3 1.000							3 1	3 1	93
22	6	V22	WALL		20					7 3.000							7 3	7 3	240
22	6	V23	WALL		20					7 3.000							7 3	7 3	240
			SLAB																
54	6	S1	SLAB	E	20			V	2	2 0.625							2 1	2 1	1298
			INCREMENT =							29 11.125							29 11	29 11	
			12.91 INCH																
175	6	S2	SLAB	E	20					30 5.000							30 5	30 5	7995
50	5	S3	SLAB	E	20					52 5.000							52 5	52 5	2734
12	5	S4	SLAB	E	20					52 5.000							52 5	52 5	656
198	5	S5	SLAB	E	20					4 8.000							4 8	4 8	964
			BARRIER CURB																
110	5	K1	BARRIER CURB	E	19	S				2 5.000	5.125						2 10	2 9	316
110	5	K2	BARRIER CURB	E	14	S				5.125	11.125	18.000			2.000	17.875	2 10	2 9	316
62	5	K3	BARRIER CURB	E	27	S				3 4.125	5.125	12.000	2 6.125		9.875	6.875	7 3	7 1	458
44	5	K4	BARRIER CURB	E	7					3 4.125	6.000						6 11	6 11	317
4	5	K5	BARRIER CURB	E	25	S				2 10.625	6.750	4.375			5.500	4.000	3 10	3 9	16
4	5	K6	BARRIER CURB	E	25	S				2 9.625	7.875	4.375			6.500	4.500	3 10	3 9	16
4	5	K7	BARRIER CURB	E	25	S				2 8.250	9.625	4.375			7.875	5.500	3 10	3 9	16
4	5	K8	BARRIER CURB	E	25	S				2 6.875	11.250	4.375			9.250	6.500	3 11	3 9	16
48	5	K9	BARRIER CURB	E	20					6 2.000							6 2	6 2	309
20	4	K10	BARRIER CURB	E	20					10 1.000							10 1	10 1	135
4	5	K11	BARRIER CURB	E	8					2 2.125					2 2.000	2.375	4 4	4 4	18
4	5	K12	BARRIER CURB	E	27	S				17.000	5.125	12.000	7.125	12.000	9.875	6.875	4 5	4 2	17
20	4	K13	BARRIER CURB	E	20					9 6.000							9 6	9 6	127
194	5	R1	BARRIER CURB	E	26					2 6.000	4.250	2 6.125			2 6.000	3.000	5 2	5 2	1045
194	5	R3	BARRIER CURB	E	19	S				17.000	6.000						0 23	0 22	371
194	5	R4	BARRIER CURB	E	27	S					6.000	11.250	7.000	12.000	9.250	6.375	3 0	2 10	573
28	5	R5	BARRIER CURB	E	20					49 6.000							49 6	49 6	1446
			SLIP FORM																
			BARRIER CURB																
8	5	C1	SLIP FORM	E	20					12 0.000							12 0	12 0	100
4	5	C2	SLIP FORM	E	20					10 3.000							10 3	10 3	43
4	5	C3	SLIP FORM	E	20					9 8.000							9 8	9 8	40

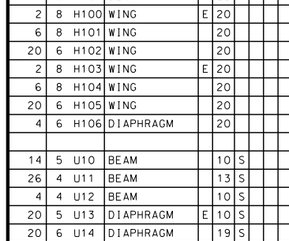

STIRRUP HOOK DIMENSIONS

GRADES 40 - 50 - 60 KSI

BAR SIZE	D (IN.)	90° HOOK HOOK A OR G	135° HOOK HOOK A OR G	135° HOOK APPROX. H
#4	2"	4 1/2"	4 1/2"	3"
#5	2 1/2"	6"	5 1/2"	3 3/4"
#6	4 1/2"	12"	8"	4 1/2"

NOTE: UNLESS OTHERWISE NOTED, DIAMETER "D" IS THE SAME FOR ALL BENDS AND HOOKS ON A BAR.

END HOOK DIMENSIONS

BAR SIZE	D (IN.)	ALL GRADES 180° HOOKS A OR G	180° HOOKS J	90° HOOKS A OR G
#3	2 1/4"	5"	3"	6"
#4	3"	6"	4"	8"
#5	3 3/4"	7"	5"	10"
#6	4 1/2"	8"	6"	12"
#7	5 1/4"	10"	7"	14"
#8	6"	11"	8"	16"
#9	9 1/2"	15"	11 3/4"	19"
#10	10 3/4"	17"	13 1/4"	22"
#11	12"	19"	14 3/4"	2'-0"
#14	18 1/4"	2'-3"	21 3/4"	2'-7"

NOTE:
ALL STANDARD HOOKS AND BENDS OTHER THAN 180 DEGREE ARE TO BE BENT WITH SAME PROCEDURE AS FOR 90 DEGREE STANDARD HOOKS.
HOOKS AND BENDS SHALL BE IN ACCORDANCE WITH THE PROCEDURES AS SHOWN ON THIS SHEET.
E = EPOXY COATED REINFORCEMENT.
S = STIRRUP.
X = BAR IS INCLUDED IN SUBSTRUCTURE QUANTITIES.
V = BAR DIMENSIONS VARY IN EQUAL INCREMENTS BETWEEN DIMENSIONS SHOWN ON THIS LINE AND THE FOLLOWING LINE.
NO. EA. = NUMBER OF BARS OF EACH LENGTH.
NOMINAL LENGTHS ARE BASED ON OUT TO OUT DIMENSIONS SHOWN IN BENDING DIAGRAMS AND ARE LISTED FOR FABRICATORS USE. (NEAREST INCH)
ACTUAL LENGTHS ARE MEASURED ALONG CENTERLINE BAR TO THE NEAREST INCH.
PAYWEIGHTS ARE BASED ON ACTUAL LENGTHS.
FOUR ANGLE OR CHANNEL SPACERS ARE REQUIRED FOR EACH COLUMN SPIRAL. SPACERS ARE TO BE PLACED ON INSIDE OF SPIRALS. LENGTH AND WEIGHT OF COLUMN SPIRALS DO NOT INCLUDE SPLICES OR SPACERS.
REINFORCING STEEL (GRADE 60) FY = 60,000 PSI.

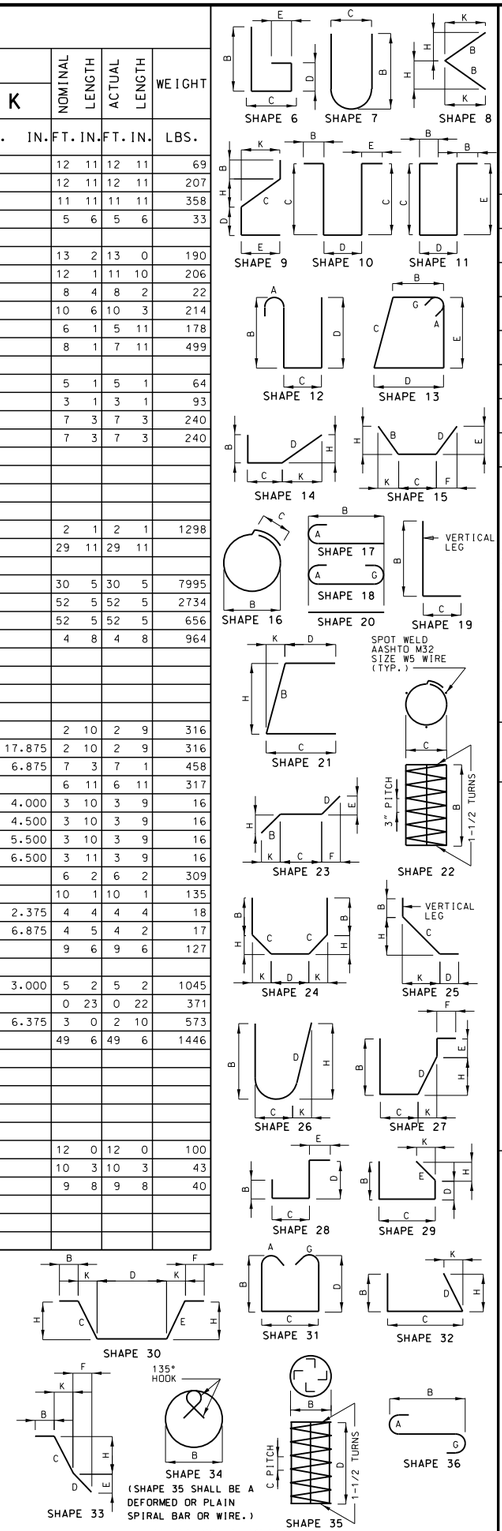

BENDING DIAGRAMS

STATE OF MISSOURI
CHRISTOPHER T. HERSINGER
NUMBER PE-2012018080
PROFESSIONAL ENGINEER
THIS SHEET HAS BEEN SIGNED, SEALED AND DATED ELECTRONICALLY.

DATE PREPARED 10/3/2016

ROUTE	STATE
19	MO
DISTRICT	SHEET NO.
BR	20

COUNTY: GASCONADE
JOB NO.: J5S3140
CONTRACT ID.:
PROJECT NO.:
BRIDGE NO.: A8439

IF A SEAL IS PRESENT ON THIS SHEET IT HAS BEEN ELECTRONICALLY SEALED AND DATED.

DATE	DESCRIPTION

MISSOURI HIGHWAYS AND TRANSPORTATION COMMISSION
105 WEST CAPITOL
JEFFERSON CITY, MO 65102
1-888-ASK-MODOT (1-888-275-6636)

HR GREEN, INC.
16020 SWINGLEY RIDGE ROAD, SUITE 205
ST. LOUIS, MISSOURI 63017
PHONE: (636) 519.0990
CORPORATE LICENSE #2002006608
HRGreen

Detailed Aug. 2016
Checked Aug. 2016

Note: This drawing is not to scale. Follow dimensions.

\\hrgwdfs004\Data\75160010\CAD\Data\Bridge_Plans\B_A8439_020_J5S3140_Barbill.dgn 3:15:01 PM 10/3/2016

BILL OF REINFORCING STEEL

NO. REQ'D.	MARK NO. SIZE	MARK	LOCATION	EPOXY (E)	SHAPE NO.	STIRRUP (S)	SUBSTR. (X)	VARIES (V)	NO. EACH	DIMENSIONS B FT.	B IN.	C FT.	C IN.	D FT.	D IN.	E FT.	E IN.	F FT.	F IN.	H FT.	H IN.	K FT.	K IN.	NOMINAL LENGTH FT.	NOMINAL LENGTH IN.	ACTUAL LENGTH FT.	ACTUAL LENGTH IN.	WEIGHT LBS.
			TOTALS																									
	4																											456
	4			E																								262
	5																											554
	5			E																								10399
	6																											5536
	6			E																								10693
	8																											806
	8			E																								268
			TOTAL																									7352
			TOTAL	E																								21622
			Slab on NU-Girder																									
	4																											456
	5																											554
	5			E																								4966
	6																											5536
	6			E																								10693
	8																											806
	8			E																								268
			TOTAL																									23279
			Safety Barrier Curb																									
	4			E																								262
	5			E																								5250
			TOTAL																									5512
			Slip Form Option																									
	5			E																								183
			TOTAL																									183

BILL OF REINFORCING STEEL

NO. REQ'D.	MARK NO. SIZE	MARK	LOCATION	EPOXY (E)	SHAPE NO.	STIRRUP (S)	SUBSTR. (X)	VARIES (V)	NO. EACH	DIMENSIONS B FT.	B IN.	C FT.	C IN.	D FT.	D IN.	E FT.	E IN.	F FT.	F IN.	H FT.	H IN.	K FT.	K IN.	NOMINAL LENGTH FT.	NOMINAL LENGTH IN.	ACTUAL LENGTH FT.	ACTUAL LENGTH IN.	WEIGHT LBS.

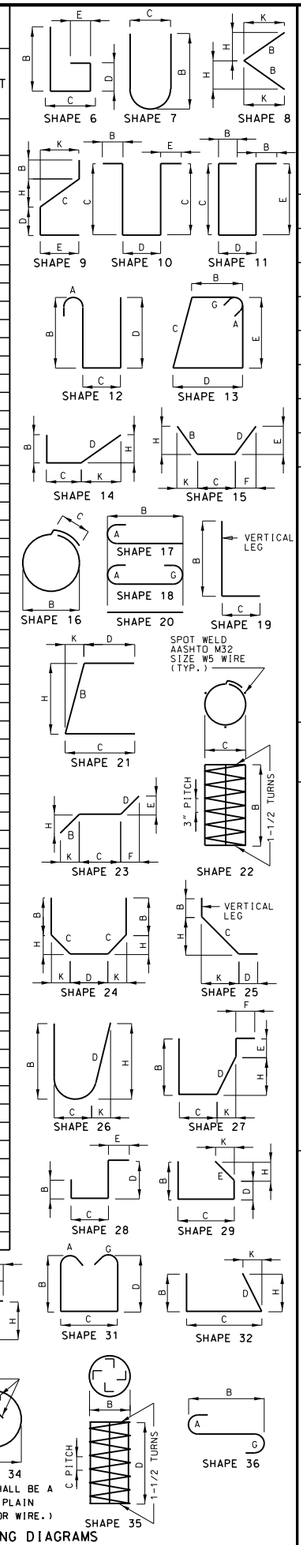

BENDING DIAGRAMS

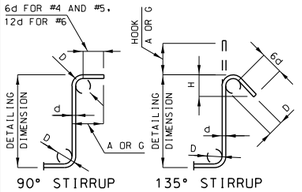

STIRRUP HOOK DIMENSIONS				
GRADES 40 - 50 - 60 KSI				
BAR SIZE	D (IN.)	90° HOOK HOOK A OR G	135° HOOK HOOK A OR G	135° HOOK APPROX. H
#4	2"	4 1/2"	4 1/2"	3"
#5	2 1/2"	6"	5 1/2"	3 3/4"
#6	4 1/2"	12"	8"	4 1/2"

NOTE: UNLESS OTHERWISE NOTED, DIAMETER "D" IS THE SAME FOR ALL BENDS AND HOOKS ON A BAR.

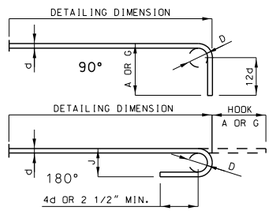

END HOOK DIMENSIONS				
		ALL GRADES		
BAR SIZE	D (IN.)	180° HOOKS A OR G	180° HOOKS J	90° HOOKS A OR G
#3	2 1/4"	5"	3"	6"
#4	3"	6"	4"	8"
#5	3 3/4"	7"	5"	10"
#6	4 1/2"	8"	6"	12"
#7	5 1/4"	10"	7"	14"
#8	6"	11"	8"	16"
#9	9 1/2"	15"	11 3/4"	19"
#10	10 3/4"	17"	13 1/4"	22"
#11	12"	19"	14 3/4"	2'-0"
#14	18 1/4"	2'-3"	21 3/4"	2'-7"

NOTE:
ALL STANDARD HOOKS AND BENDS OTHER THAN 180 DEGREE ARE TO BE BENT WITH SAME PROCEDURE AS FOR 90 DEGREE STANDARD HOOKS.
HOOKS AND BENDS SHALL BE IN ACCORDANCE WITH THE PROCEDURES AS SHOWN ON THIS SHEET.
E = EPOXY COATED REINFORCEMENT.
S = STIRRUP.
X = BAR IS INCLUDED IN SUBSTRUCTURE QUANTITIES.
V = BAR DIMENSIONS VARY IN EQUAL INCREMENTS BETWEEN DIMENSIONS SHOWN ON THIS LINE AND THE FOLLOWING LINE.
NO. EA. = NUMBER OF BARS OF EACH LENGTH.
NOMINAL LENGTHS ARE BASED ON OUT TO OUT DIMENSIONS SHOWN IN BENDING DIAGRAMS AND ARE LISTED FOR FABRICATORS USE. (NEAREST INCH)
ACTUAL LENGTHS ARE MEASURED ALONG CENTERLINE BAR TO THE NEAREST INCH.
PAYWEIGHTS ARE BASED ON ACTUAL LENGTHS.
FOUR ANGLE OR CHANNEL SPACERS ARE REQUIRED FOR EACH COLUMN SPIRAL. SPACERS ARE TO BE PLACED ON INSIDE OF SPIRALS. LENGTH AND WEIGHT OF COLUMN SPIRALS DO NOT INCLUDE SPLICES OR SPACERS.
REINFORCING STEEL (GRADE 60) FY = 60,000 PSI.

Detailed Aug. 2016
Checked Aug. 2016

Note: This drawing is not to scale. Follow dimensions.

STATE OF MISSOURI
PROFESSIONAL ENGINEER
CHRISTOPHER T. HERSINGER
NUMBER PE-2012018080

THIS SHEET HAS BEEN SIGNED, SEALED AND DATED ELECTRONICALLY.

DATE PREPARED 10/3/2016
ROUTE 19 | STATE MO
DISTRICT BR | SHEET NO. 21
COUNTY GASCONADE
JOB NO. J5S3140
CONTRACT ID.
PROJECT NO.
BRIDGE NO. A8439

DESCRIPTION | DATE

MISSOURI HIGHWAYS AND TRANSPORTATION COMMISSION
105 WEST CAPITOL
JEFFERSON CITY, MO 65102
1-888-ASK-MODOT (1-888-275-6636)

HR GREEN, INC.
16020 SWINGLEY RIDGE ROAD, SUITE 205
ST. LOUIS, MISSOURI 63017
PHONE: (636) 519.0990
CORPORATE LICENSE #2002006608

IF A SEAL IS PRESENT ON THIS SHEET IT HAS BEEN ELECTRONICALLY SEALED AND DATED.

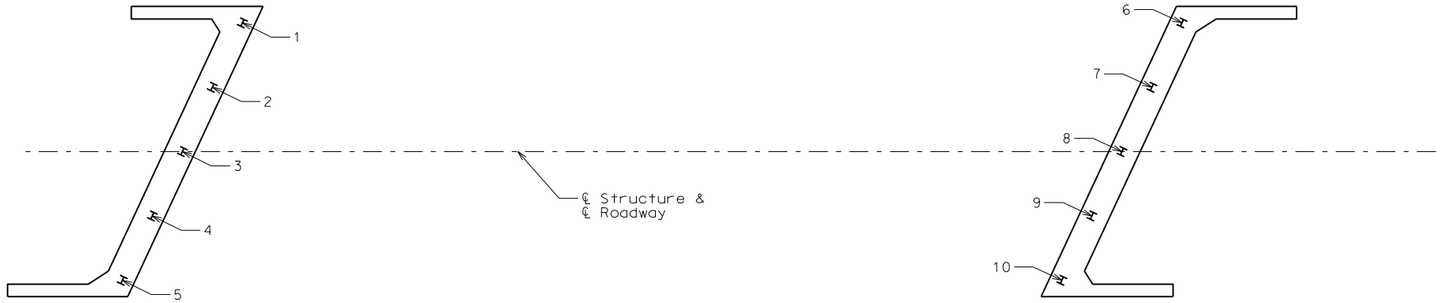

PART PLAN SHOWING PILE NUMBERING FOR RECORDING AS-BUILT PILE DATA

As-Built Pile Data			
Pile No.	Length in Place (ft)	Computed Nominal Axial Compressive Resistance (kips)	Remarks
			End Bent No. 1
1			
2			
3			
4			
5			
			End Bent No. 2
6			
7			
8			
9			
10			

Note:
Indicate in remarks column:
A. Pile type and grade
B. Batter
C. Driven to practical refusal

This sheet to be completed by MoDOT construction personnel.

AS-BUILT PILE DATA

Detailed Aug. 2016
Checked Aug. 2016

Note: This drawing is not to scale. Follow dimensions.

\\hrgwdfs004\Data\75160010\CAD\Data\Bridge_Plans\B_A8439_022_J5S3140_AsBuiltPile.dgn 3:15:02 PM 10/3/2016

STATE OF MISSOURI
CHRISTOPHER T. HERSINGER
NUMBER PE-2012018080
PROFESSIONAL ENGINEER

THIS SHEET HAS BEEN SIGNED, SEALED AND DATED ELECTRONICALLY.

DATE PREPARED 10/3/2016
ROUTE 19 | STATE MO
DISTRICT BR | SHEET NO. 22
COUNTY GASCONADE
JOB NO. J5S3140
CONTRACT ID.
PROJECT NO.
BRIDGE NO. A8439

DESCRIPTION | DATE

IF A SEAL IS PRESENT ON THIS SHEET IT HAS BEEN ELECTRONICALLY SEALED AND DATED.

MISSOURI HIGHWAYS AND TRANSPORTATION COMMISSION
105 WEST CAPITOL
JEFFERSON CITY, MO 65102
1-888-ASK-MODOT (1-888-275-6636)

HR GREEN, INC.
16020 SWINGLEY RIDGE ROAD, SUITE 205
ST. LOUIS, MISSOURI 63017
PHONE: (636) 519.0990
CORPORATE LICENSE #2002006608

BORING LOG

PROJECT Highway 19 Over Second Creek — **BORING NUMBER** B-101
LOCATION Gasconade County, Missouri — **SHEET** 1 **of** 3
DRILLER Midwest Drilling, Inc. — **HAMMER** Auto — **PROJECT NO.** 2016-7015.10
EQUIPMENT CME-75 w/CFA, HSA — **ELEVATION** 705.47 — **DATE DRILLED** 08/05/16
STATION 59+24.70 — **OFFSET** 6.71' Lt. — **NORTHING** 953356.2 — **EASTING** 540000.76

DEPTH (ft)	SAMPLE NUMBER	SAMPLE TYPE	RECOVERY (in/in)	BLOWS (per 6 in)	DESCRIPTION (UNIFIED SOIL CLASSIFICATION)	GRAPHIC	SEE REMARK NO.	LAB: MOISTURE CONTENT (%)	LAB: DRY DENSITY (pcf)	LAB: HAND PENETROMETER (ksf)	LAB: UNCONFINED COMPRESSIVE STRENGTH (ksf)	LAB: LIQUID LIMIT	LAB: PLASTICITY INDEX	ELEVATION (ft)
					7" ASPHALTIC CONCRETE									705
					FILL: Brown, clayey gravel, fine to coarse, with fine to coarse sand, clay is lean									
	1	SS	9/18	15 13 10				6						
3					FILL: Brown, clayey sand, fine to coarse, with fine to coarse gravel, clay is lean									702
	2	SS	7/18	11 5 8				7						
6														
	3	SS	8/18	6 6 10				10						699
					FILL: Brown, fine to coarse sand, with fine to coarse sandstone gravel									
9	4	ST	3/24				1	6						696
12														693
	5	SS	16/16	16 15 50/4"				7						
15					WEATHERED DOLOMITE: With chert									690
18														687
					CHERTY DOLOMITE: Light gray, hard, very finely crystallized, laminated to thinly bedded, highly fractured, moderately weathered, interbedded shale lamination		2							
											498.0			

WATER LEVEL:
- X — NONE OBSERVED WHILE DRILLING
- _____ ft WHILE DRILLING
- _____ ft AT COMPLETION OF DRILLING
- _____ ft ____ HRS AFTER DRILLING

REMARKS:
1) Unable to perform Unconfined Compressive Strength test due to low sample recovery.
2) Auger refusal on dolomite at 18.5 feet. Boring advanced using rock coring methods.

BORING LOG

PROJECT Highway 19 Over Second Creek — **BORING NUMBER** B-101
LOCATION Gasconade County, Missouri — **SHEET** 2 **of** 3
DRILLER Midwest Drilling, Inc. — **HAMMER** Auto — **PROJECT NO.** 2016-7015.10
EQUIPMENT CME-75 w/CFA, HSA — **ELEVATION** 705.47 — **DATE DRILLED** 08/05/16
STATION 59+24.70 — **OFFSET** 6.71' Lt. — **NORTHING** 953356.2 — **EASTING** 540000.76

DEPTH (ft)	SAMPLE NUMBER	SAMPLE TYPE	RECOVERY (in/in)	BLOWS (per 6 in)	DESCRIPTION (UNIFIED SOIL CLASSIFICATION)	GRAPHIC	SEE REMARK NO.	LAB: MOISTURE CONTENT (%)	LAB: DRY DENSITY (pcf)	LAB: HAND PENETROMETER (ksf)	LAB: UNCONFINED COMPRESSIVE STRENGTH (ksf)	LAB: LIQUID LIMIT	LAB: PLASTICITY INDEX	ELEVATION (ft)
					10" Shale bed, becomes slightly fractured, slightly weathered									
21	6	NX	54/60		SANDY DOLOMITE: Gray, hard, finely crystalline, medium bedded, moderately weathered		3							684
					DOLOMITE: Gray, hard, very finely crystalline, medium bedded, slightly weathered									
24					Becomes highly fractured									681
					Becomes slightly fractured, trace shale seam									
	7	NX	60/60		10" Open vertical fracture		4							
27														678
					SANDSTONE: Gray and brown, hard, medium grained, medium bedded, moderately weathered, pitted									
30					SANDY DOLOMITE: Gray, hard, finely crystalline, medium bedded, moderately weathered									675
	8	NX	60/60		DOLOMITE: Gray, hard, very finely crystalline, medium bedded, slightly weathered		5							
33					With chert									672
					8" Shale bed									
					Becomes slighty fractured									
36	9	NX	60/60				6							669
					1" Sandstone seam						1014.4			
39														666

WATER LEVEL:
- X — NONE OBSERVED WHILE DRILLING
- _____ ft WHILE DRILLING
- _____ ft AT COMPLETION OF DRILLING
- _____ ft ____ HRS AFTER DRILLING

REMARKS:
3) RQD = 50%
4) RQD = 52%
5) RQD = 45%
6) RQD = 63%

BORING DATA

Note: For locations of borings, see Sheet No. 1.

Note: This drawing is not to scale. Follow dimensions.

Detailed Aug. 2016
Checked Aug. 2016

STATE OF MISSOURI
CHRISTOPHER T. HERSINGER
NUMBER PE-2012018080
PROFESSIONAL ENGINEER
THIS SHEET HAS BEEN SIGNED, SEALED AND DATED ELECTRONICALLY.
IF A SEAL IS PRESENT ON THIS SHEET IT HAS BEEN ELECTRONICALLY SEALED AND DATED.

DATE PREPARED 10/3/2016
ROUTE 19 — STATE MO
DISTRICT BR — SHEET NO. 23
COUNTY GASCONADE
JOB NO. J5S3140
CONTRACT ID.
PROJECT NO.
BRIDGE NO. A8439

DESCRIPTION — DATE

MISSOURI HIGHWAYS AND TRANSPORTATION COMMISSION
105 WEST CAPITOL
JEFFERSON CITY, MO 65102
1-888-ASK-MODOT (1-888-275-6636)
HR GREEN, INC.
16020 SWINGLEY RIDGE ROAD, SUITE 205
ST. LOUIS, MISSOURI 63017
PHONE: (636) 519.0990
CORPORATE LICENSE #2002006608
HRGreen

BORING LOG

PROJECT Highway 19 Over Second Creek **BORING NUMBER** B-101
LOCATION Gasconade County, Missouri **SHEET** 3 **of** 3
DRILLER Midwest Drilling, Inc. **HAMMER** Auto **PROJECT NO.** 2016-7015.10
EQUIPMENT CME-75 w/CFA, HSA **ELEVATION** 705.47 **DATE DRILLED** 08/05/16
STATION 59+24.70 **OFFSET** 6.71' Lt. **NORTHING** 953356.2 **EASTING** 540000.76

DEPTH (ft)	SAMPLE NUMBER	SAMPLE TYPE	SAMPLE RECOVERY (in/in)	SAMPLE BLOWS (per 6 in)	DESCRIPTION (UNIFIED SOIL CLASSIFICATION)	GRAPHIC	SEE REMARK NO.	LAB: MOISTURE CONTENT (%)	LAB: DRY DENSITY (pcf)	LAB: HAND PENETROMETER (ksf)	LAB: UNCONFINED COMPRESSIVE STRENGTH (ksf)	LAB: LIQUID LIMIT	LAB: PLASTICITY INDEX	ELEVATION (ft)
42	10	NX	57/60		DOLOMITE: Gray, hard, very finely crystalline, medium bedded, slightly weathered *(Continued)*		7							663
45					Boring terminated at 43.5 feet.									660
48														657
51														654
54														651
57														648

WATER LEVEL:
X NONE OBSERVED WHILE DRILLING
_____ ft WHILE DRILLING
_____ ft AT COMPLETION OF DRILLING
_____ ft ____ HRS AFTER DRILLING

REMARKS:
7) RQD = 93%

BORING LOG

PROJECT Highway 19 Over Second Creek **BORING NUMBER** B-102
LOCATION Gasconade County, Missouri **SHEET** 1 **of** 1
DRILLER Midwest Drilling, Inc. **HAMMER** Auto **PROJECT NO.** 2016-7015.10
EQUIPMENT CME-75 w/CFA **ELEVATION** 705.64 **DATE DRILLED** 08/03/16
STATION 59+25.38 **OFFSET** 5.77' Rt **NORTHING** 953362.53 **EASTING** 539989.99

DEPTH (ft)	SAMPLE NUMBER	SAMPLE TYPE	SAMPLE RECOVERY (in/in)	SAMPLE BLOWS (per 6 in)	DESCRIPTION (UNIFIED SOIL CLASSIFICATION)	GRAPHIC	SEE REMARK NO.	LAB: MOISTURE CONTENT (%)	LAB: DRY DENSITY (pcf)	LAB: HAND PENETROMETER (ksf)	LAB: UNCONFINED COMPRESSIVE STRENGTH (ksf)	LAB: LIQUID LIMIT	LAB: PLASTICITY INDEX	ELEVATION (ft)
					6" ASPHALTIC CONCRETE									705
3	1	SS	5/18	13 12 16	FILL: Brown, fine to coarse clayey gravel, clay is lean, with fine to coarse sand			5						
6	2	SS	5/18	5 6 7	FILL: Brown, clayey sand, fine, clay is lean, with fine to coarse gravel			7						702
9	3	SS	5/18	4 5 3				5						699
12	4	SS	6/18	4 4 3	Trace fine to coarse gravel			10						696
15	5	SS	13/18	9 14 18	CLAYEY GRAVEL (GC): Brown, fine to coarse sandstone and chert, clay is lean, with fine to coarse sand			6						693
18	6	SS	9/17	10 20 50/5"	WEATHERED DOLOMITE			8						690
					Auger refusal on dolomite at 19 feet.									687

WATER LEVEL:
_____ NONE OBSERVED WHILE DRILLING
18.5 ft WHILE DRILLING
_____ ft AT COMPLETION OF DRILLING
_____ ft ____ HRS AFTER DRILLING

REMARKS:

BORING DATA

Note: For locations of borings, see Sheet No. 1.

Note: This drawing is not to scale. Follow dimensions.

Detailed Aug. 2016
Checked Aug. 2016

STATE OF MISSOURI
CHRISTOPHER T. HERSINGER
NUMBER PE-2012018080
PROFESSIONAL ENGINEER
THIS SHEET HAS BEEN SIGNED, SEALED AND DATED ELECTRONICALLY.

DATE PREPARED 10/3/2016
ROUTE 19 | STATE MO
DISTRICT BR | SHEET NO. 24
COUNTY GASCONADE
JOB NO. J5S3140
CONTRACT ID.
PROJECT NO.
BRIDGE NO. A8439

DESCRIPTION | DATE

MISSOURI HIGHWAYS AND TRANSPORTATION COMMISSION
105 WEST CAPITOL
JEFFERSON CITY, MO 65102
1-888-ASK-MODOT (1-888-275-6636)
HR GREEN, INC.
16020 SWINGLEY RIDGE ROAD, SUITE 205
ST. LOUIS, MISSOURI 63017
PHONE: (636) 519.0990
CORPORATE LICENSE #2002006608
HRGreen

IF A SEAL IS PRESENT ON THIS SHEET IT HAS BEEN ELECTRONICALLY SEALED AND DATED.

BORING LOG

PROJECT Highway 19 Over Second Creek
LOCATION Gasconade County, Missouri
DRILLER Midwest Drilling, Inc. **HAMMER** Auto
EQUIPMENT CME-75 w/CFA **ELEVATION** 705.49
STATION 60+45.18 **OFFSET** 5.21' Lt **NORTHING** 953256.62 **EASTING** 539932.93

BORING NUMBER B-201
SHEET 1 **of** 1
PROJECT NO. 2016-7015.10
DATE DRILLED 08/03/16

DEPTH (ft)	SAMPLE NUMBER	SAMPLE TYPE	SAMPLE RECOVERY (in/in)	SAMPLE BLOWS (per 6 in)	DESCRIPTION (UNIFIED SOIL CLASSIFICATION)	GRAPHIC	SEE REMARK NO.	LAB: MOISTURE CONTENT (%)	LAB: DRY DENSITY (pcf)	LAB: HAND PENETROMETER (ksf)	LAB: UNCONFINED COMPRESSIVE STRENGTH (ksf)	LAB: LIQUID LIMIT	LAB: PLASTICITY INDEX	ELEVATION (ft)
					5" ASPHALTIC CONCRETE									705
					FILL: Gray, lean clay									
	1	SS	14/18	6 3 3				21		4.0				
3														702
	2	SS	10/18	2 2 2	Becomes brown, with fine to medium sand			17		1.5				
6														
	3	SS	14/18	5 2 3	LEAN CLAY (CL): Brown, with fine to coarse sand			18		0.5				699
					SANDY LEAN CLAY (CL): Brown, sand is fine to coarse									
9	4	SS	12/18	3 3 4	CLAYEY GRAVEL (GC): Brown, fine to coarse sandstone and chert, clay is lean, with fine to coarse sand			9						696
12					CLAYEY GRAVEL (GC): Gray, fine to coarse sandstone and chert, clay is fat, with fine to coarse sand									693
	5	SS	6/18	4 7 10				8						
15														690
18					Auger refusal on dolomite at 17.3 feet.									687

WATER LEVEL:	REMARKS:
___X___ NONE OBSERVED WHILE DRILLING	
_____ ft WHILE DRILLING	
_____ ft AT COMPLETION OF DRILLING	
_____ ft ____ HRS AFTER DRILLING	

BORING LOG

PROJECT Highway 19 Over Second Creek
LOCATION Gasconade County, Missouri
DRILLER Midwest Drilling, Inc. **HAMMER** Auto
EQUIPMENT CME-75 w/CFA, HSA **ELEVATION** 705.48
STATION 60+33.12 **OFFSET** 5.89' Rt **NORTHING** 953272.81 **EASTING** 539930.35

BORING NUMBER B-202
SHEET 1 **of** 3
PROJECT NO. 2016-7015.10
DATE DRILLED 08/04/16

DEPTH (ft)	SAMPLE NUMBER	SAMPLE TYPE	SAMPLE RECOVERY (in/in)	SAMPLE BLOWS (per 6 in)	DESCRIPTION (UNIFIED SOIL CLASSIFICATION)	GRAPHIC	SEE REMARK NO.	LAB: MOISTURE CONTENT (%)	LAB: DRY DENSITY (pcf)	LAB: HAND PENETROMETER (ksf)	LAB: UNCONFINED COMPRESSIVE STRENGTH (ksf)	LAB: LIQUID LIMIT	LAB: PLASTICITY INDEX	ELEVATION (ft)
					6" ASPHALTIC CONCRETE									705
					FILL: Dark brown, lean clay, with fine sand, trace crushed rock									
	1	SS	8/18	6 6 4				18		2.5				
3														702
	2	SS	12/18	4 5 6	SANDY LEAN CLAY (CL): Brown, fine, trace coarse sandstone gravel			16		1.5				
6					CLAYEY SAND (SC): Brown, fine, clay is lean, trace fine to coarse gravel									
	3	ST	10/24		No gravel, trace roots		1	12						699
								14						
9	4	SS	8/18	1 2 2				10						696
12														693
	5	SS	14/18	7 8 10	Becomes fine to coarse, with weathered sandstone			8						
15														690
							2							
18	6	NX	15/18		DOLOMITE: Light gray, soft, very finely crystalline, laminated to banded, slightly weathered, with interbedded blue shale laminations		3							687

WATER LEVEL:	REMARKS:
___X___ NONE OBSERVED WHILE DRILLING	1) Unable to perform Unconfined Compressive Strength test due to non-cohesive sample material.
_____ ft WHILE DRILLING	2) Auger refusal on dolomite at 17 feet. Boring advanced using rock coring methods.
_____ ft AT COMPLETION OF DRILLING	3) RQD = 22%
_____ ft ____ HRS AFTER DRILLING	

BORING DATA

Note: For locations of borings, see Sheet No. 1.

Note: This drawing is not to scale. Follow dimensions.

Sheet No. 25 of 26

Detailed Aug. 2016
Checked Aug. 2016

STATE OF MISSOURI
CHRISTOPHER T. HERSINGER
NUMBER PE-2012018080
PROFESSIONAL ENGINEER

THIS SHEET HAS BEEN SIGNED, SEALED AND DATED ELECTRONICALLY.

DATE PREPARED 10/3/2016
ROUTE 19 | STATE MO
DISTRICT BR | SHEET NO. 25
COUNTY GASCONADE
JOB NO. J5S3140
CONTRACT ID.
PROJECT NO.
BRIDGE NO. A8439

DESCRIPTION | DATE

MISSOURI HIGHWAYS AND TRANSPORTATION COMMISSION
105 WEST CAPITOL
JEFFERSON CITY, MO 65102
1-888-ASK-MODOT (1-888-275-6636)

HR GREEN, INC.
16020 SWINGLEY RIDGE ROAD, SUITE 205
ST. LOUIS, MISSOURI 63017
PHONE: (636) 519.0990
CORPORATE LICENSE #2002006608

IF A SEAL IS PRESENT ON THIS SHEET IT HAS BEEN ELECTRONICALLY SEALED AND DATED.

\\hrgwdfs004\Data\75160010\CAD\Data\Bridge_Plans\B_A8439_025_J5S3140_BoringLogs.dgn 3:15:09 PM 10/3/2016

BORING LOG

PROJECT Highway 19 Over Second Creek **BORING NUMBER** B-202
LOCATION Gasconade County, Missouri **SHEET** 2 **of** 3
DRILLER Midwest Drilling, Inc. **HAMMER** Auto **PROJECT NO.** 2016-7015.10
EQUIPMENT CME-75 w/CFA, HSA **ELEVATION** 705.48 **DATE DRILLED** 08/04/16
STATION 60+33.12 **OFFSET** 5.89' Rt **NORTHING** 953272.81 **EASTING** 539930.35

DEPTH (ft)	SAMPLE NUMBER	SAMPLE TYPE	SAMPLE RECOVERY (in/in)	SAMPLE BLOWS (per 6 in)	DESCRIPTION (UNIFIED SOIL CLASSIFICATION)	GRAPHIC	SEE REMARK NO.	LAB: MOISTURE CONTENT (%)	LAB: DRY DENSITY (pcf)	LAB: HAND PENETROMETER (ksf)	LAB: UNCONFINED COMPRESSIVE STRENGTH (ksf)	LAB: LIQUID LIMIT	LAB: PLASTICITY INDEX	ELEVATION (ft)
											687.5			
21	7	NX	54/60		DOLOMITE: Light gray, soft, very finely crystalline, laminated to banded, slightly weathered, with interbedded blue shale laminations *(Continued)*		4							684
					Becomes highly fractured, moderately weathered									
24					Becomes slightly fractured, cherty, slightly weathered, pitted									681
	8	NX	54/60		SANDY DOLOMITE: Gray, hard, medium crystalline, medium bedded, slightly weathered, pitted		5							
27					DOLOMITE: Light gray, soft, very finely crystalline, laminated to banded, slightly weathered, with interbedded blue shale laminations Becomes fractured, shale decreases Becomes slighty fractured									678
30	9	NX	60/60				6							675
33					DOLOMITIC SANDSTONE: Gray and brown, hard, medium grained, medium bedded, moderately weathered, pitted Becomes fine grained Shale, moderately weathered									672
36	10	NX	60/60		SANDY DOLOMITE: Gray, hard, medium crystalline, medium bedded, pitted Becomes vuggy No vugs		7							669
					With chert						748.9			
39					6.5" dark gray and green shale band									666

WATER LEVEL:	REMARKS:
___X___ NONE OBSERVED WHILE DRILLING _____ ft WHILE DRILLING _____ ft AT COMPLETION OF DRILLING _____ ft ____ HRS AFTER DRILLING	4) RQD = 50% 5) RQD = 48% 6) RQD = 95% 7) RQD = 33%

BORING LOG

PROJECT Highway 19 Over Second Creek **BORING NUMBER** B-202
LOCATION Gasconade County, Missouri **SHEET** 3 **of** 3
DRILLER Midwest Drilling, Inc. **HAMMER** Auto **PROJECT NO.** 2016-7015.10
EQUIPMENT CME-75 w/CFA, HSA **ELEVATION** 705.48 **DATE DRILLED** 08/04/16
STATION 60+33.12 **OFFSET** 5.89' Rt **NORTHING** 953272.81 **EASTING** 539930.35

DEPTH (ft)	SAMPLE NUMBER	SAMPLE TYPE	SAMPLE RECOVERY (in/in)	SAMPLE BLOWS (per 6 in)	DESCRIPTION (UNIFIED SOIL CLASSIFICATION)	GRAPHIC	SEE REMARK NO.	LAB: MOISTURE CONTENT (%)	LAB: DRY DENSITY (pcf)	LAB: HAND PENETROMETER (ksf)	LAB: UNCONFINED COMPRESSIVE STRENGTH (ksf)	LAB: LIQUID LIMIT	LAB: PLASTICITY INDEX	ELEVATION (ft)
	11	NX	42/42		SANDY DOLOMITE: Gray, hard, medium crystalline, medium bedded, pitted *(Continued)* Becomes pitted		8							
42					Boring terminated at 42.0 feet.									663
45														660
48														657
51														654
54														651
57														648

WATER LEVEL:	REMARKS:
___X___ NONE OBSERVED WHILE DRILLING _____ ft WHILE DRILLING _____ ft AT COMPLETION OF DRILLING _____ ft ____ HRS AFTER DRILLING	8) RQD = 55%

BORING DATA

Note: For locations of borings, see Sheet No. 1.

Note: This drawing is not to scale. Follow dimensions.

Sheet No. 26 of 26

Detailed Aug. 2016
Checked Aug. 2016

PROFESSIONAL ENGINEER — STATE OF MISSOURI — CHRISTOPHER T. HERSINGER — NUMBER PE-2012018080

THIS SHEET HAS BEEN SIGNED, SEALED AND DATED ELECTRONICALLY.

DATE PREPARED 10/3/2016
ROUTE 19 | STATE MO
DISTRICT BR | SHEET NO. 26
COUNTY GASCONADE
JOB NO. J5S3140
CONTRACT ID.
PROJECT NO.
BRIDGE NO. A8439

DESCRIPTION | DATE

MISSOURI HIGHWAYS AND TRANSPORTATION COMMISSION
105 WEST CAPITOL
JEFFERSON CITY, MO 65102
1-888-ASK-MODOT (1-888-275-6636)

HR GREEN, INC.
16020 SWINGLEY RIDGE ROAD, SUITE 205
ST. LOUIS, MISSOURI 63017
PHONE: (636) 519.0990
CORPORATE LICENSE #2002006608

IF A SEAL IS PRESENT ON THIS SHEET IT HAS BEEN ELECTRONICALLY SEALED AND DATED.

FOR INFORMATION ONLY

MISSOURI STATE HIGHWAY DEPARTMENT

FED. ROAD DIST. NO.	STATE	FED. AID PROJ. NO.	FISCAL YEAR	SHEET NO.	TOTAL SHEETS
7	MO.	WPSO 663B(SC)	19		

FINAL PLANS

1-Standard Superstructure C-GG50R1

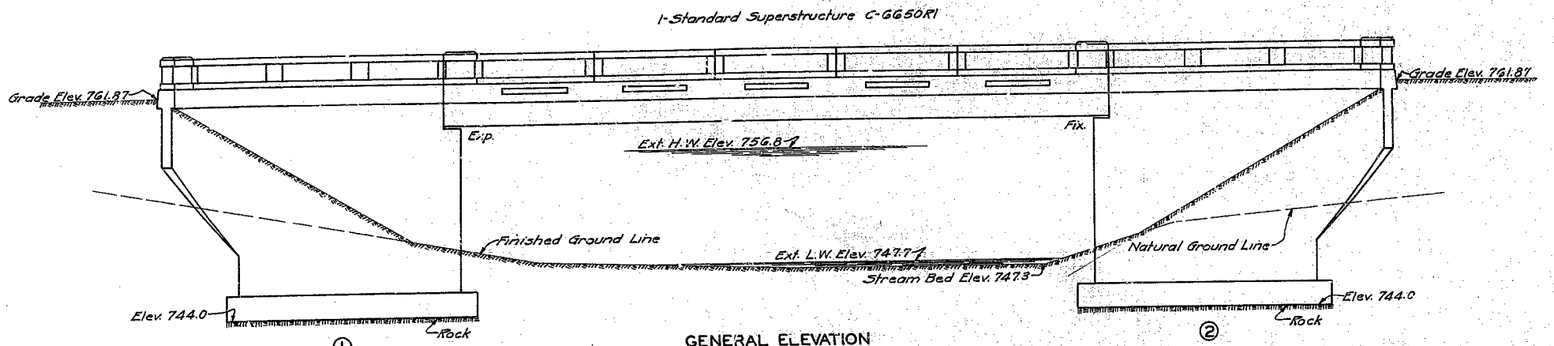

GENERAL ELEVATION

Note:- All loose, shelly, or disintegrated rock shall be removed and the footings placed on hard, solid, undisturbed, rock. If soft rock or shale is encountered the footings shall be carried at least 18" into the same.

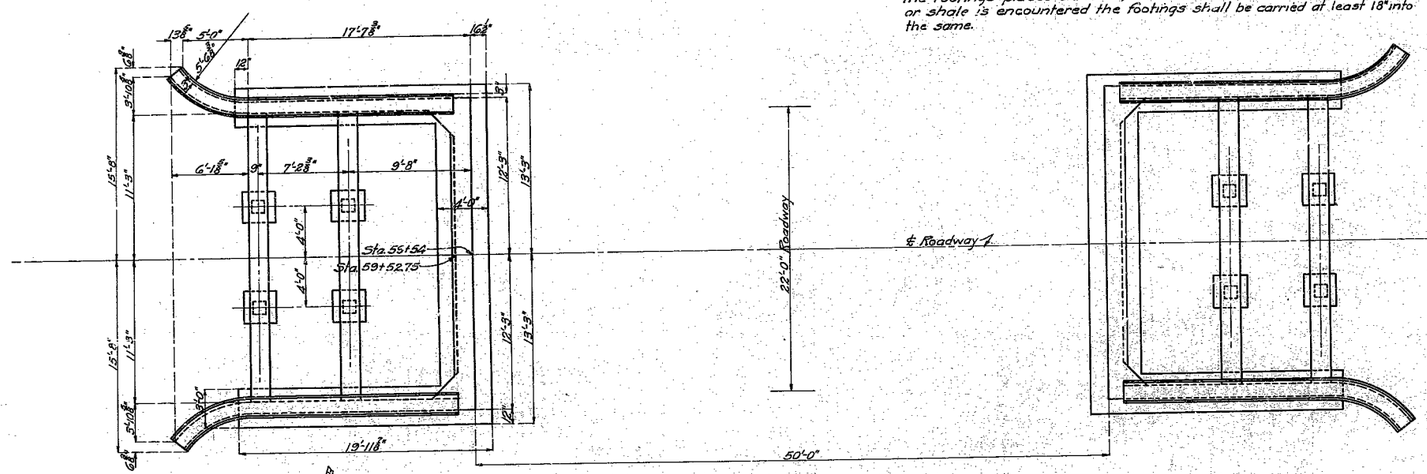

PLAN

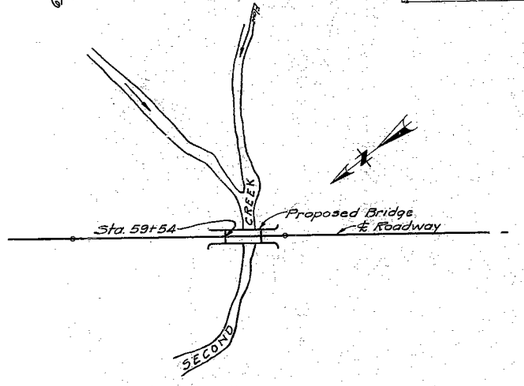

LOCATION SKETCH

BILL OF REINFORCING STEEL FOR ABUTMENTS

No.	Size	Length	Mark	Location
8	⅝" ϕ	23'-0"	C3	Curb
114	⅝" ϕ	5'-3"	D1	Footing
10	½" ϕ	32'-9"	H1	Front Wall
20	½" ϕ	21'-6"	H2	Wing Wall
20	½" ϕ	7'-6"	H3	Haunch
20	½" ϕ	9'-3"	H4	Wing
10	½" ϕ	9'-0"	H5	"
14	⅝" ϕ	34'-9"	K1	Front Wall
28	⅝" ϕ	23'-6"	K2	Wing
28	⅝" ϕ	9'-0"	K3	Haunch
28	⅝" ϕ	17'-6"	K4	Wing
32	⅝" ϕ	8'-3"	P1	Column
52	⅝" ϕ	28'-6"	T1	Tie Beam
26	⅝" ϕ	12'-0"	V1	Front Wall
20	⅝" ϕ	12'-3"	V2	" "
68	⅝" ϕ	12'-0"	V3	Wing
8	½" ϕ	6'-6"	V4	"
88	⅝" ϕ	8'-6"	V5	"
24	½" ϕ	7'-9"	R3	Subpost
16	½" ϕ	4'-0"	R4	Post
384	⅜" ϕ	18"	R5	Baluster
16	½" ϕ	23'-0"	R7	Rail
48	½" ϕ	12"	R9	"

Bending Sketches

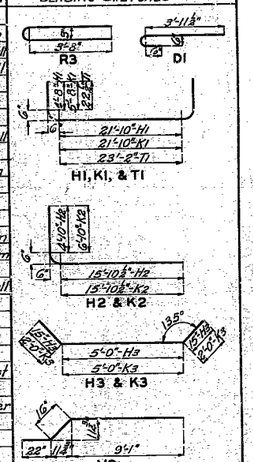

Note:- Dimensions are given along ℄ of bars and are for computed lengths.
For Bill of Reinforcing Steel in Superstructure see Std. C-GG50R1.

GENERAL NOTES:-

Concrete in handrail to be Class "A". Concrete in slab, girder curbs, and girders to be Class "X". All other concrete to be Class "B".
Exposed edges ¾" to be beveled 1" where no other bevel is noted.
Floor slab shall be constructed full length and width at one operation.
No longitudinal or transverse construction joints will be permitted.
Where rubber compound is specified on plans for use in partition and expansion joints, the premoulded joint shall be securely stitched to one face of concrete with copper wire.

Bridge excavation in accordance with Section I of Standard Specifications issued April 1, 1930, except that quantities paid for will be computed from Ext. L.W. Elev. 747.7 where existing ground line is below this elevation.
Only sufficient camber to be used in construction to insure against settlement below lines given as finished grade. No permanent camber required.
Top of concrete in both wings and front wall of abutments to be kept at same level throughout pouring.
All concrete shall be proportioned by the weight proportioning method. See Special Provisions.
Bar supports and spacers will be required for reinforcing steel in superstructure. See Standard C-110R and Special Provisions.
Design Specifications A.A.S.H.O.
Loading H-15 A.A.S.H.O. - One Lane.
Reinforcing Steel Stress 16,000 #/□". } Single Line.
Concrete Class "A" 900 #/□".
Concrete Class "B" 650 #/□".
Concrete Class "X" 750 #/□".

ESTIMATED QUANTITIES

Item		Superstr.	Substr.	Total	Final Quantities
Excavation Class 1	Cu. Yds.		80	80	66.5
Excavation Class 2	Cu. Yds.		162	162	156.5
Concrete Class "A"	Cu. Yds.	5.3	4.9	10.2	10.2
Concrete Class "B"	Cu. Yds.		130.8	130.8	130.8
Concrete Class "X"	Cu. Yds.	77.5		77.5	77.5
Reinforcing Steel	Lbs.	20,580	8620	29,200	29200
Phosphor Bronze Bearing P. (Flanged) 10"×20" 4-Sets 5-Rs. each.					

Note:- Bridge excavation above Elev. 749.0 will be paid for as Class 1 Bridge Excavation.
Bridge excavation below Elev. 749.0 will be paid for as Class 2 Bridge Excavation.

B.M. Elev. 753.86. Nail in root 4" Elm 45' Rt. Sta. 57+40.

BRIDGE OVER SECOND CREEK

STATE ROAD FROM DRAKE TO OWENSVILLE
ABOUT 11.0 MILES N.W. OF ROSEBUD
PROJECT NO. WPSO 663B(SC) STA. 59+52.75
GASCONADE COUNTY

FINISHED

FINISHED

SUBMITTED BY N. R. Sayre BRIDGE ENGINEER DATE 8/27/35
APPROVED BY T. H. Cutler CHIEF ENGINEER DATE 8/27/35

FINAL PLANS

STD. C-110R
STD. C-665OR1
K-636

Drawn Aug. 1935 by R.F.K.
Traced Aug. 1935 by C.A.F.
Checked Aug. 1935 by P.H.S.

5-8-26-35

Note:- This drawing is not to scale. Follow dimensions.

Sheet No. 1 of 2.

F.A.

GALLUP'S-K.C. MO.

MISSOURI STATE HIGHWAY DEPARTMENT

FED. ROAD DIST. NO.	STATE NO.	FED. AID PROJ. NO.	FISCAL YEAR	SHEET NO.	TOTAL SHEETS
5	MO.	WPSO 663B(SC)	19	-	

FINAL PLANS

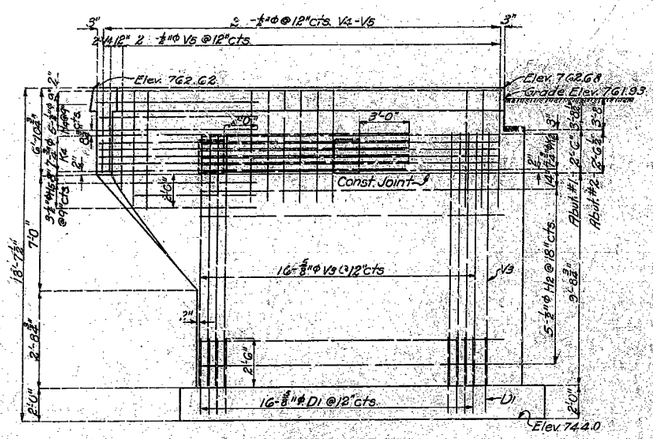

ELEVATION OF WING

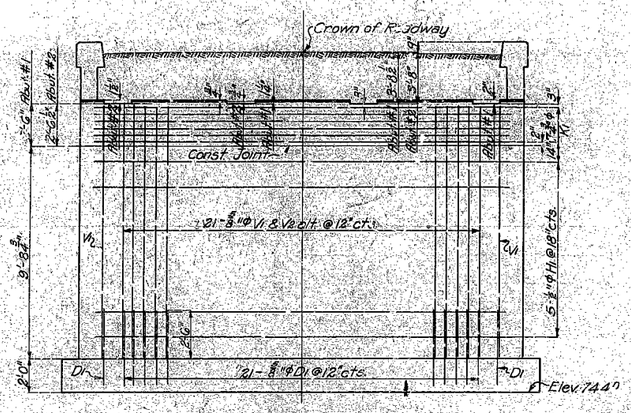

ELEVATION OF FRONT WALL

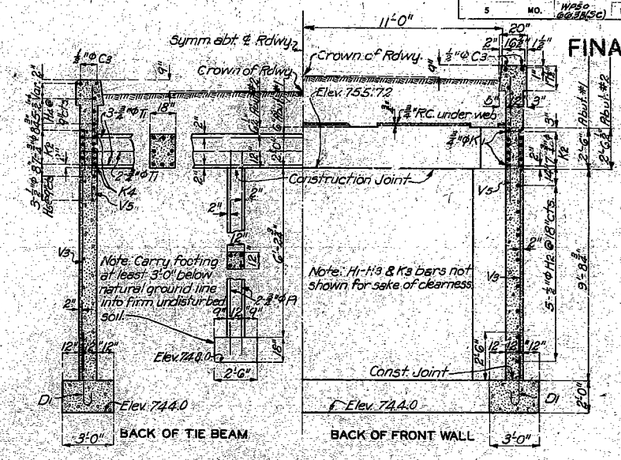

SECTION THRU WING WALL

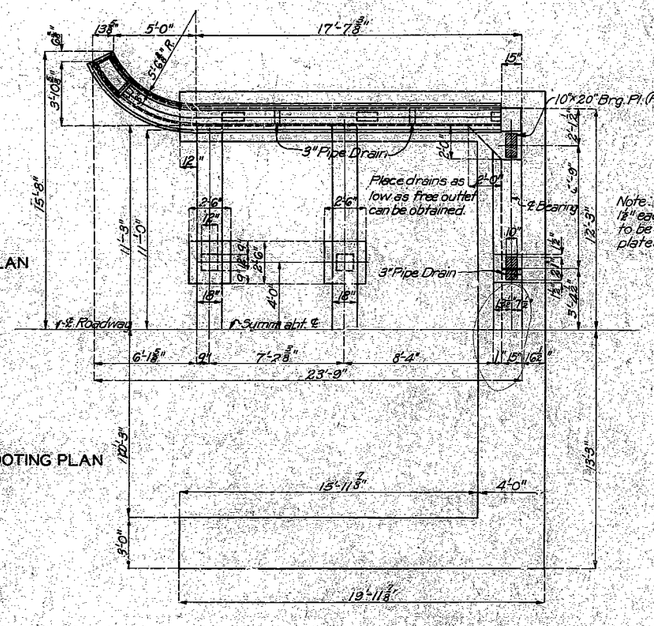

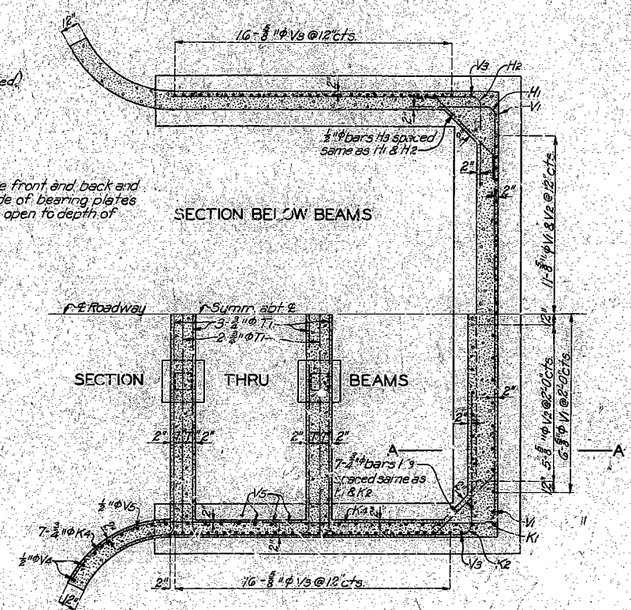

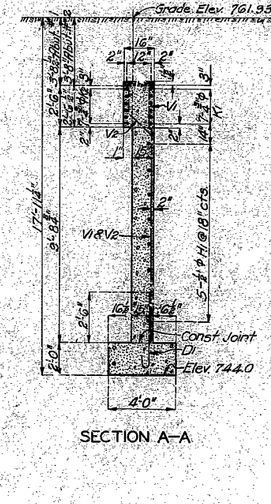

SECTION A–A

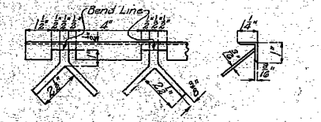

METALLIC EDGE MOULDING

Note:-Cost of metallic edge moulding will be included in unit bid price for concrete.

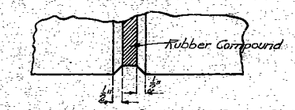

Note:-Use bevel as shown for exposed faces of all joints consisting of rubber compound.

DETAIL OF BEVEL FOR RUBBER COMPOUND JOINTS

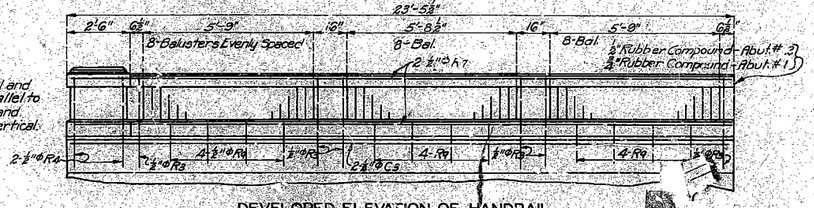

Note: Tops of curbs, Rail and Posts to be built parallel to grade. Post Subbases and Balusters to be built vertical.

DEVELOPED ELEVATION OF HANDRAIL

Note: Details same as Handrail on Superstructure except as noted. Dimensions are given along ℄ of Rail.

DETAILS OF ABUTMENTS

Note: This drawing is not to scale. Follow dimensions.

BRIDGE OVER SECOND CREEK

STATE ROAD FROM DRAKE TO OWENSVILLE

ABOUT 11.0 MILES N.W. OF ROSEBUD

PROJECT NO. WPSO 663B(SC) STA. 59+52.75

GASCONADE COUNTY

FINAL PLANS

FA.

K-636

Drawn Aug. 1935 By R.F.K.
Traced Aug. 1935 By C.A.F.
Checked May 1935 By F.H.S.

MISSOURI HIGHWAY AND TRANSPORTATION COMMISSION

STATE	PROJ NO	SHEET NO
MO		4
SEC / SUR 27	TWP 43N RGE 5W	

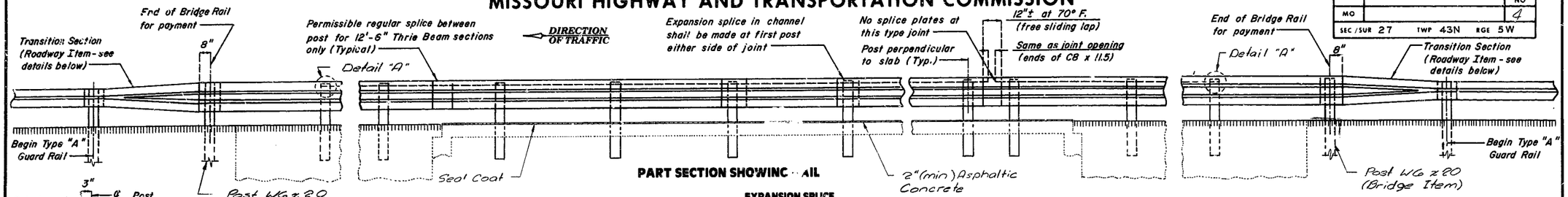

PART SECTION SHOWING RAIL

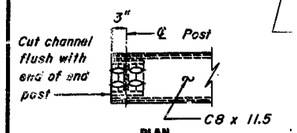

PLAN
DETAIL "A"

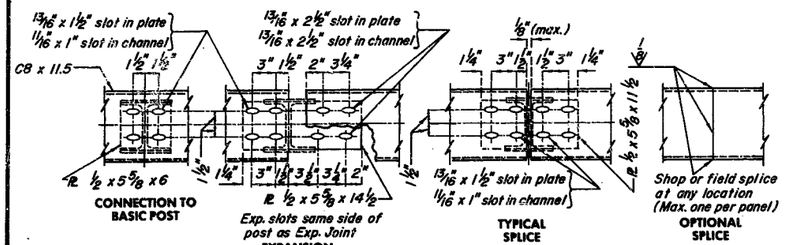

CHANNEL MEMBER DETAILS

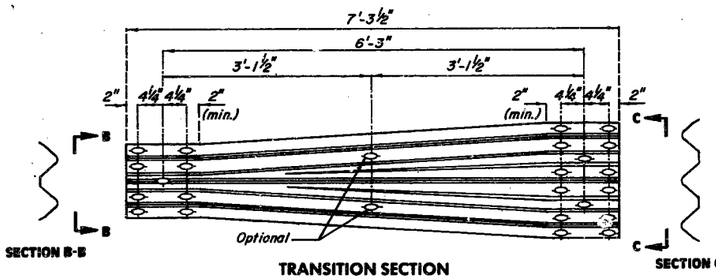

TRANSITION SECTION

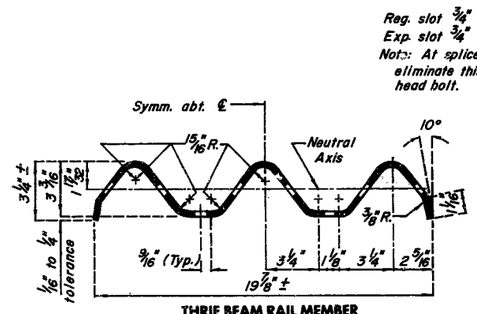

THRIE BEAM RAIL MEMBER

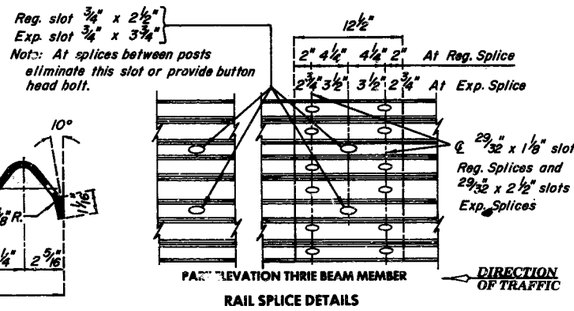

RAIL SPLICE DETAILS

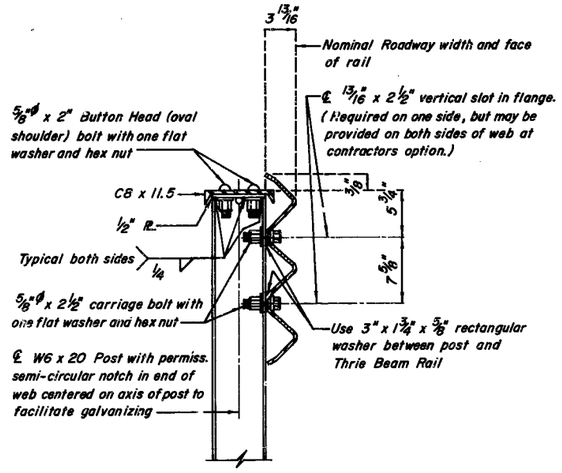

PART SECTION AT RAIL POST

EXPANSION SPLICE

EXPANSION SPLICE IN THRIE BEAM SHALL BE MADE AT EITHER THE FIRST OR SECOND POST EITHER SIDE OF JOINT. WHEN SPLICE IS MADE AT SECOND POST, AN EXPANSON SLOT SHALL BE PROVIDED IN THRIE BEAM FOR CONNECTION TO FIRST POST TO ALLOW FOR MOVEMENT.

EXPANSION JOINTS

IN ADDITION TO EXPANSION PROVISIONS AT THESE EXPANSION JOINTS, EXPANSION SPLICES IN CHANNEL MEMBER ONLY SHALL BE PROVIDED AT OTHER LOCATIONS SO THAT THE MAXIMUM LENGTH OF CHANNEL WITHOUT EXPANSION PROVISIONS DOES NOT EXCEED 200 FT.

Notes: Roadway surfacing adjacent to bridge ends to match 2"± bridge overlay.
Traffic over structure to be maintained during construction. (See Roadway Plans)
Outline of old work is indicated by light dashed lines. Heavy lines indicate new work.

Notes: Polymer Modified Asphalt Emulsion, Grade CRS-2 Modified shall be applied at a rate of .35 gallon per square yard.
Cover Aggregate (See Special Provisions) shall be applied at a rate of .015 tons per square yard.

GENERAL NOTES:

DESIGN AASHTO 1977 SPECIFICATIONS.

PANEL LENGTHS OF CHANNEL MEMBERS SHALL BE ATTACHED CONTINUOUSLY TO A MINIMUM OF FOUR POSTS AND A MAXIMUM OF SIX (EXCEPT AT END BENTS).

ALL BOLTS, NUTS, WASHERS, AND PLATES ARE CONSIDERED AS PARTS OF THE RAIL FOR PAYMENT.

ALL STEEL CONNECTING BOLTS AND FASTENERS FOR POST, RAILING AND ALL ANCHOR BOLTS, NUTS, WASHERS AND BENT PLATES SHALL BE GALVANIZED AFTER FABRICATION. FOR PROTECTIVE COATING AND MATERIAL REQUIREMENT OF STEEL RAILING SEE SECTION 1040 OF THE STANDARD SPECIFICATIONS.

RAIL POSTS SHALL BE SET PERPENDICULAR TO ROADWAY PROFILE GRADE AND VERTICALLY IN CROSS SECTION, AND ALIGNED ACCORDING TO SECTION 713 OF THE STANDARD SPECIFICATIONS, EXCEPT THAT THE RAIL POST SHALL BE ALIGNED BY THE USE OF SHIMS SO THAT IN FINAL ADJUSTMENT NO PART SHALL DEVIATE MORE THAN ONE INCH FROM TRUE HORIZONTAL ALIGNMENT. THE SHIMS SHALL BE 3" x 1-3/4" AND PLACED BETWEEN THE POST AND THRIE BEAM RAIL. THE THICKNESS OF THE SHIMS SHALL BE DETERMINED BY THE CONTRACTOR AND VERIFIED BY THE ENGINEER BEFORE ORDERING MATERIAL FOR THIS WORK.

SHIM PLATES 6" x 6" x 1/16" MAY BE USED BETWEEN TOP OF POST AND CHANNEL MEMBER AS REQUIRED FOR VERTICAL ALIGNMENT.

AT EXPANSION SLOTS IN THRIE BEAM RAILS AND CHANNELS, TIGHTEN BOLTS, BACK OFF ONE-HALF TURN AND BURR THREADS.

5/8" x 1-1/4" BUTTON HEAD OVAL SHOULDER BOLTS WITH HEX. NUTS AT ALL SLOTS. (THICKNESS OF HEX. NUTS = 3/8"). SPECIAL DRILLING OF THRIE BEAM MAY BE REQUIRED AT SPLICES. (ALL DRILLING DETAILS ARE TO BE SHOWN ON SHOP DRAWINGS).

AT THRIE BEAM CONNECTION TO POSTS ON WINGS. TIGHTEN BOLTS, BACK OFF ONE-HALF TURN AND BURR THREADS.

MINIMUM LENGTH OF THRIE BEAM SECTIONS IS EQUAL TO ONE POST SPACE.

THRIE BEAM GUARD RAIL TO BE MADE OF STEEL AND SHALL BE 12 GAGE.

POST, BENT PLATES, CHANNELS AND CHANNEL SPLICE PLATES TO BE FABRICATED FROM A-36 STEEL AND GALVANIZED.

THREADED RODS GRADE A-321 WITH 2 HEX. NUTS AND WASHERS MAY BE SUBSTITUTED FOR THE A-307 ANCHOR BOLTS.

WASHERS SHALL BE USED AT ALL POST BOLTS (BETWEEN BOLT HEAD AND BEAM). THEY SHALL BE RECTANGULAR IN SHAPE (3" x 1-3/4" x 3/16" MIN.) AND FLAT, OR WHEN NECESSARY OF SUCH DESIGN TO FIT THE CONTOUR OF THE BEAM. WASHER SHALL HAVE 13/16" x 1" HOLE.

FABRICATION OF STRUCTURAL STEEL SHALL BE IN ACCORDANCE WITH SECTION 712 OF THE STANDARD SPECIFICATIONS.

CONTRACTOR SHALL VERIFY ALL DIMENSIONS IN FIELD BEFORE ORDERING MATERIALS.

ESTIMATED QUANTITIES

ITEM		TOTAL
Special Work	Lump Sum	1
Slab Edge Repair (See Special Provisions)	Lin. Ft.	40
Bridge Guard Rail (Thrie Beam)	Lin. Ft.	194
Asphalt Removal (Bridges)	Lump Sum	1
Mineral Aggregate (Asphaltic Concrete) Type D Mix	Ton	15
Asphalt Cement (Asphaltic Concrete) AC-10 or AC-20	Ton	.8
Polymer Modified Asphalt (Seal Coat)	Gal.	50
Cover Aggregate (See Special Provisions)	Ton	3
Modified Deck Repair (See Special Provisions)	Sq. Ft.	13

REPAIR TO
BRIDGE OVER SECOND CREEK
STATE ROAD FROM DRAKE TO OWENSVILLE
ABOUT 11.0 MILES N. W. OF ROSEBUD
PROJECT NO. **STA.** 59+52.75
JOB NO. 6-P-19-663 **RTE.** 19
GASCONADE **COUNTY**
DATE 10/23/85

STD.
STD. 606.00
K-636R

REVISED
Rehab. (T-BM)
SEPT. 1985

DESIGNED Sept 1985
DETAILED Sept 1985
CHECKED Sept 1985

Note: This drawing is not to scale. Follow dimensions.

SEE PROJECT PLANS

Sheet No. 1 of 4

MISSOURI HIGHWAY AND TRANSPORTATION COMMISSION

STATE	PROJ NO	SHEET NO
MO		4
SEC / SUR 27	TWP 43N	RGE 5W

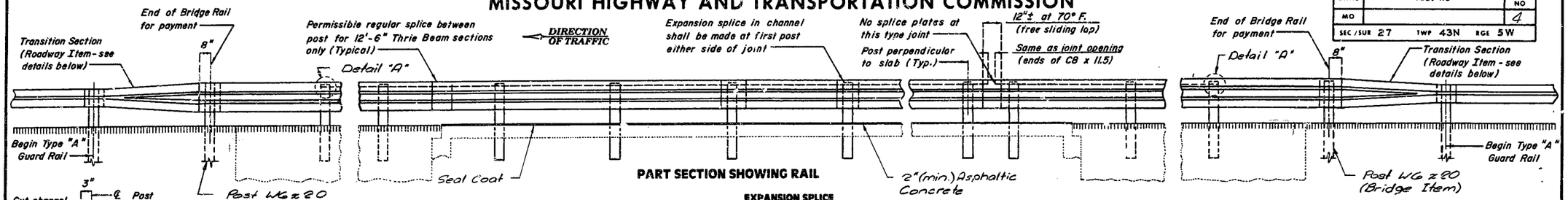

PART SECTION SHOWING RAIL

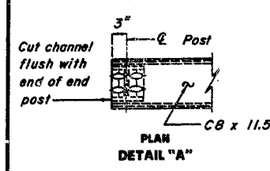

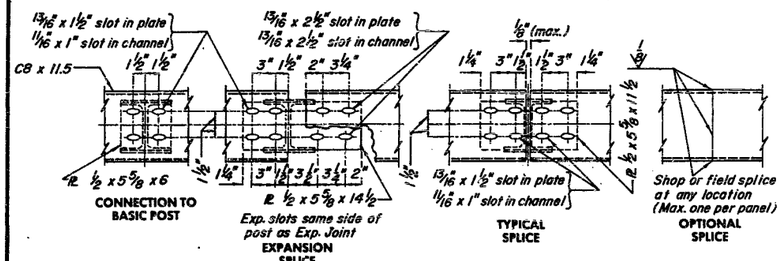

CHANNEL MEMBER DETAILS

EXPANSION SPLICE

EXPANSION SPLICE IN THRIE BEAM SHALL BE MADE AT EITHER THE FIRST OR SECOND POST EITHER SIDE OF JOINT. WHEN SPLICE IS MADE AT SECOND POST, AN EXPANSON SLOT SHALL BE PROVIDED IN THRIE BEAM FOR CONNECTION TO FIRST POST TO ALLOW FOR MOVEMENT.

EXPANSION JOINTS

IN ADDITION TO EXPANSION PROVISIONS AT THESE EXPANSION JOINTS, EXPANSION SPLICES IN CHANNEL MEMBER ONLY SHALL BE PROVIDED AT OTHER LOCATIONS SO THAT THE MAXIMUM LENGTH OF CHANNEL WITHOUT EXPANSION PROVISIONS DOES NOT EXCEED 200 FT.

Notes: Roadway surfacing adjacent to bridge ends to match 2"± bridge overlay.
Traffic over structure to be maintained during construction. (See Roadway Plans)
Outline of old work is indicated by light dashed lines. Heavy lines indicate new work.

Notes: Polymer Modified Asphalt Emulsion, Grade CRS-2 Modified shall be applied at a rate of .35 gallon per square yard.
Cover Aggregate (See Special Provisions) shall be applied at a rate of .015 tons per square yard.

GENERAL NOTES:

DESIGN AASHTO 1977 SPECIFICATIONS.

PANEL LENGTHS OF CHANNEL MEMBERS SHALL BE ATTACHED CONTINUOUSLY TO A MINIMUM OF FOUR POSTS AND A MAXIMUM OF SIX (EXCEPT AT END BENTS).

ALL BOLTS, NUTS, WASHERS, AND PLATES ARE CONSIDERED AS PARTS OF THE RAIL FOR PAYMENT.

ALL STEEL CONNECTING BOLTS AND FASTENERS FOR POST, RAILING AND ALL ANCHOR BOLTS, NUTS, WASHERS AND BENT PLATES SHALL BE GALVANIZED AFTER FABRICATION. FOR PROTECTIVE COATING AND MATERIAL REQUIREMENTS OF STEEL RAILING SEE SECTION 1040 OF THE STANDARD SPECIFICATIONS.

RAIL POSTS SHALL BE SET PERPENDICULAR TO ROADWAY PROFILE GRADE AND VERTICALLY IN CROSS SECTION, AND ALIGNED ACCORDING TO SECTION 713 OF THE STANDARD SPECIFICATIONS, EXCEPT THAT THE RAIL POST SHALL BE ALIGNED BY THE USE OF SHIMS SO THAT IN FINAL ADJUSTMENT NO PART SHALL DEVIATE MORE THAN ONE INCH FROM TRUE HORIZONTAL ALIGNMENT. THE SHIMS SHALL BE 3" x 1-3/4" AND PLACED BETWEEN THE POST AND THRIE BEAM RAIL. THE THICKNESS OF THE SHIMS SHALL BE DETERMINED BY THE CONTRACTOR AND VERIFIED BY THE ENGINEER BEFORE ORDERING MATERIAL FOR THIS WORK.

SHIM PLATES 6" x 6" x 1/16" MAY BE USED BETWEEN TOP OF POST AND CHANNEL MEMBER AS REQUIRED FOR VERTICAL ALIGNMENT.

AT EXPANSION SLOTS IN THRIE BEAM RAILS AND CHANNELS, TIGHTEN BOLTS, BACK OFF ONE-HALF TURN AND BURR THREADS.

5/8" x 1-1/4" BUTTON HEAD OVAL SHOULDER BOLTS WITH HEX. NUTS AT ALL SLOTS. (THICKNESS OF HEX. NUTS = 3/8"). SPECIAL DRILLING OF THRIE BEAM MAY BE REQUIRED AT SPLICES. (ALL DRILLING DETAILS ARE TO BE SHOWN ON SHOP DRAWINGS).

AT THRIE BEAM CONNECTION TO POSTS ON WINGS. TIGHTEN BOLTS, BACK OFF ONE-HALF TURN AND BURR THREADS.

MINIMUM LENGTH OF THRIE BEAM SECTIONS IS EQUAL TO ONE POST SPACE.

THRIE BEAM GUARD RAIL TO BE MADE OF STEEL AND SHALL BE 12 GAGE.

POST, BENT PLATES, CHANNELS AND CHANNEL SPLICE PLATES TO BE FABRICATED FROM A-36 STEEL AND GALVANIZED.

THREADED RODS GRADE A-321 WITH 2 HEX. NUTS AND WASHERS MAY BE SUBSTITUTED FOR THE A-307 ANCHOR BOLTS.

WASHERS SHALL BE USED AT ALL POST BOLTS (BETWEEN BOLT HEAD AND BEAM). THEY SHALL BE RECTANGULAR IN SHAPE (2" x 1-3/4" x 3/16" MIN.) AND FLAT. OR WHEN NECESSARY OF SUCH DESIGN TO FIT THE CONTOUR OF THE BEAM. WASHER SHALL HAVE 11/16" x 1" HOLE.

FABRICATION OF STRUCTURAL STEEL SHALL BE IN ACCORDANCE WITH SECTION 712 OF THE STANDARD SPECIFICATIONS.

CONTRACTOR SHALL VERIFY ALL DIMENSIONS IN FIELD BEFORE ORDERING MATERIALS.

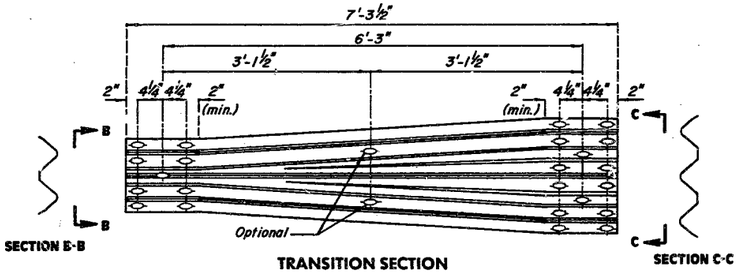

TRANSITION SECTION

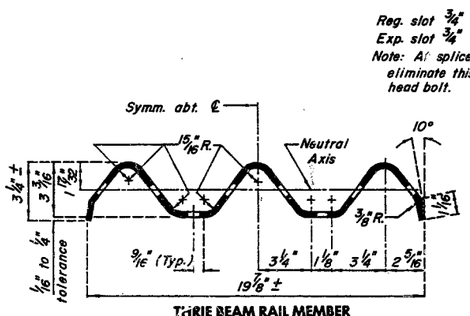

THRIE BEAM RAIL MEMBER

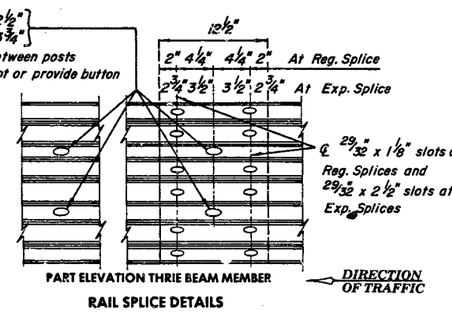

RAIL SPLICE DETAILS

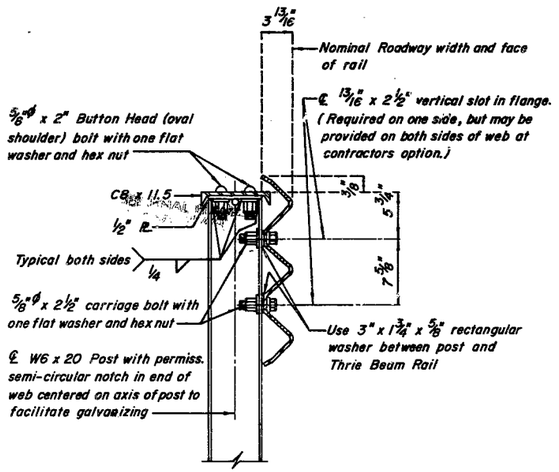

PART SECTION AT RAIL POST

ESTIMATED QUANTITIES

ITEM		TOTAL
Special Work	Lump Sum	1 LS
Slab Edge Repair (See Special Provisions)	Lin. Ft.	192
Bridge Guard Rail (Thrie Beam)	Lin. Ft.	194
Asphalt Removal (Bridges)	Lump Sum	1 LS
Mineral Aggregate (Asphaltic Concrete) Type A Mix	Ton	28
Asphalt Cement (Asphaltic Concrete) AC-20 or AC-20	Ton	1.5
Polymer Modified Asphalt (Seal Coat)	Gal.	80
Cover Aggregate (See Special Provisions)	Tn	3
Modified Deck Repair (See Special Provisions)	Sq. Ft.	151

REPAIR TO
BRIDGE OVER SECOND CREEK
STATE ROAD FROM DRAKE TO OWENSVILLE
ABOUT 11.0 MILES N. W. OF ROSEBUD
PROJECT NO. RS-681(5) STA. 59+52.75
JOB NO. 6-P-19-663 RTE. 19
GASCONADE **COUNTY**
DATE 10/23/85

STD.
STD. 606.00
K-636R

FINAL PLANS

REVISED
Rehab. (T-BM) SEPT. 1985

DESIGNED Sept 1985
DETAILED Sept 1985
CHECKED Sept 1985

Note: This drawing is not to scale. Follow dimensions.

AF 333100

STATE	PROJ. NO.	SHEET NO.
MO.		5

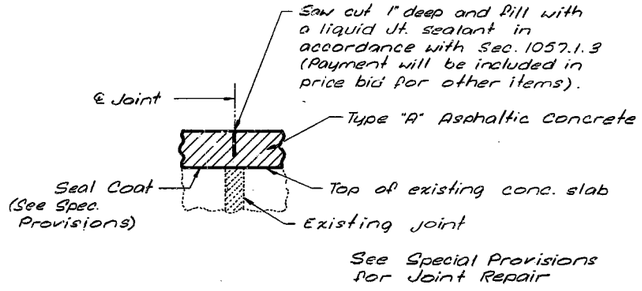

TYPICAL PART SECTION THRU SLAB AT TRANSVERSE JOINTS

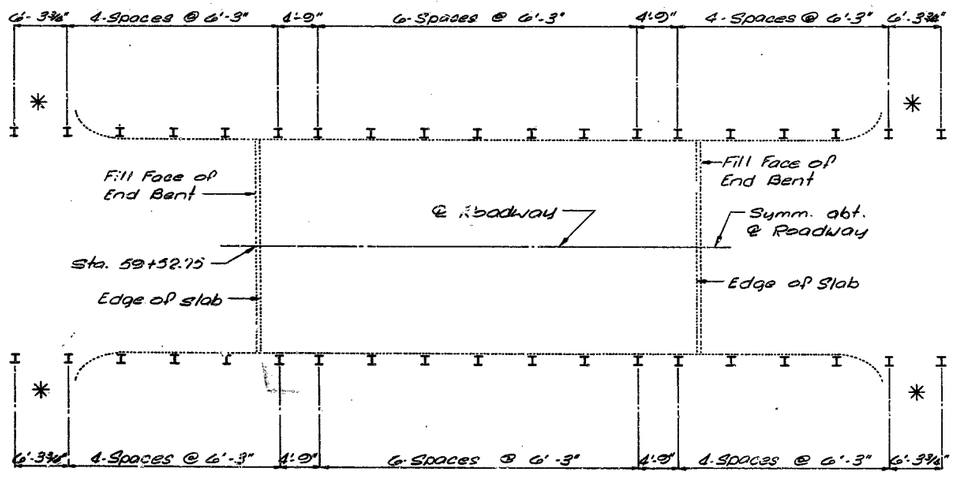

PLAN SHOWING RAIL POST SPACING

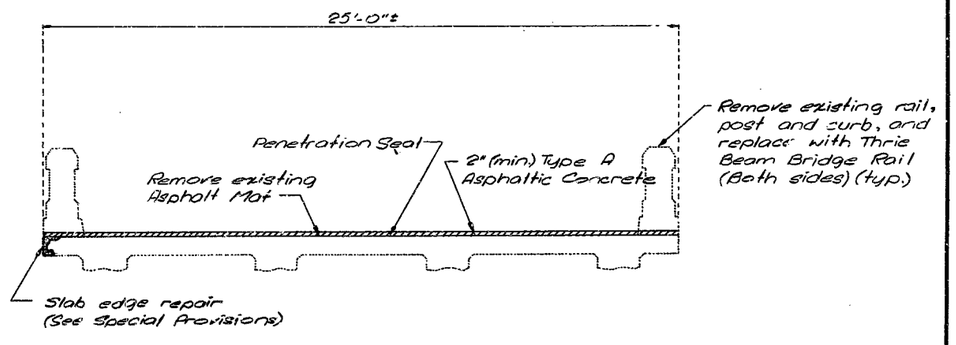

SECTION THRU SLAB

24

Sta. 59+30.50
Sta. 60+27.50

DETAILED Sept 1985
CHECKED Sept 1985

Note: This drawing is not to scale. Follow dimensions.

Sheet No. 2 of 4

GASCONADE COUNTY

K-636R

STATE	PROJ NO	SHEET NO
MO		6

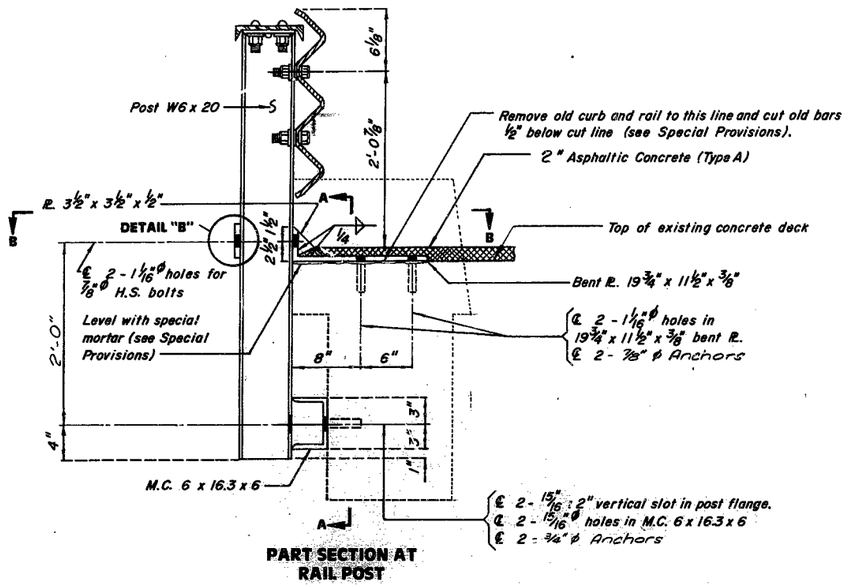

PART SECTION AT RAIL POST

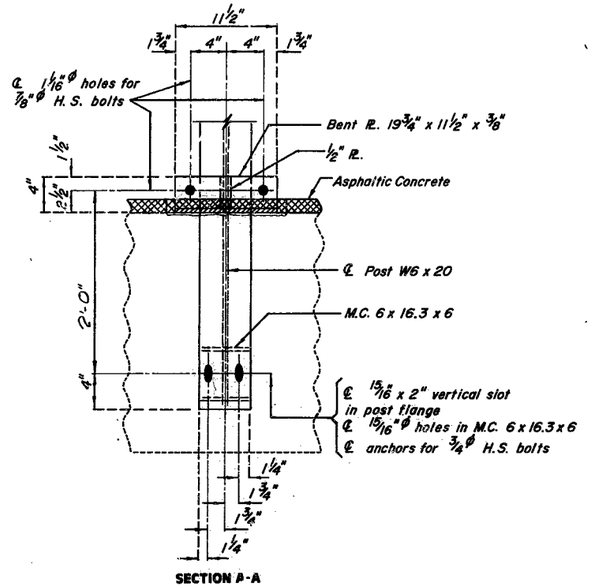

SECTION A-A

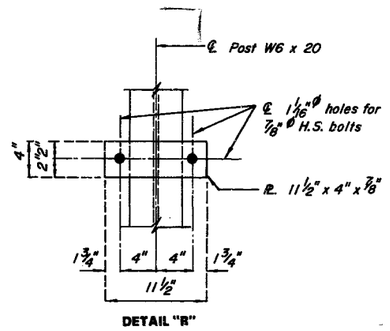

DETAIL "B"

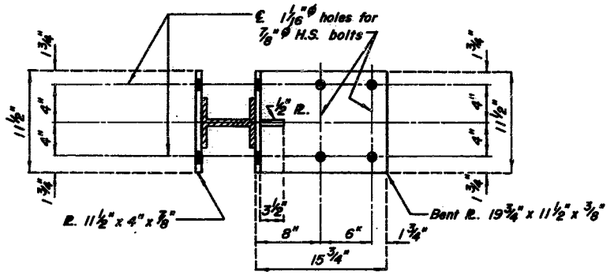

SECTION B-B

Note:
Concrete anchors shall be the cone expansion type for hot-dip galvanized bolts.
Concrete anchors shall have a certified concrete pull out strength (ultimate load) of at least 15,500 pounds in 3,000 psi concrete.

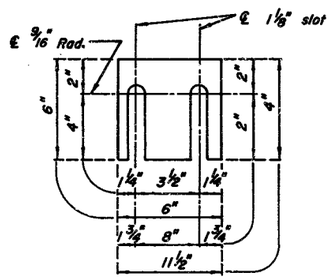

DETAIL OF SHIM PLATES

Note:
Shim plates 6" x 6" x 1/16" may be used between M.C. 6 x 16.3 x 6" and old concrete and shim plates 11½" x 4" x 1/16" may be used between post W6 x 20 and 19¾" x 11½" x ⅜" bent plate as required for horizontal alignment.

Note: At the option of the contractor one of the Anchor Systems listed in the Job Special Provisions may be substituted for the cone expansion type Anchors noted on the plans.
These Anchor Systems shall be installed according to the manufacturer's specification. and if the Kelibond/Keligroutin Resign Bonding Anchor System is used the minimum embedment in old concrete shall be 8".

DETAILS OF RAIL POST ON WINGS

Rehab. (T-8M/DECK 6DR.) REVISED SEPT. 1985

DETAILED Sept 1985
CHECKED Sept 1985

STATE	PROJ NO	SHEET NO
MO.		7

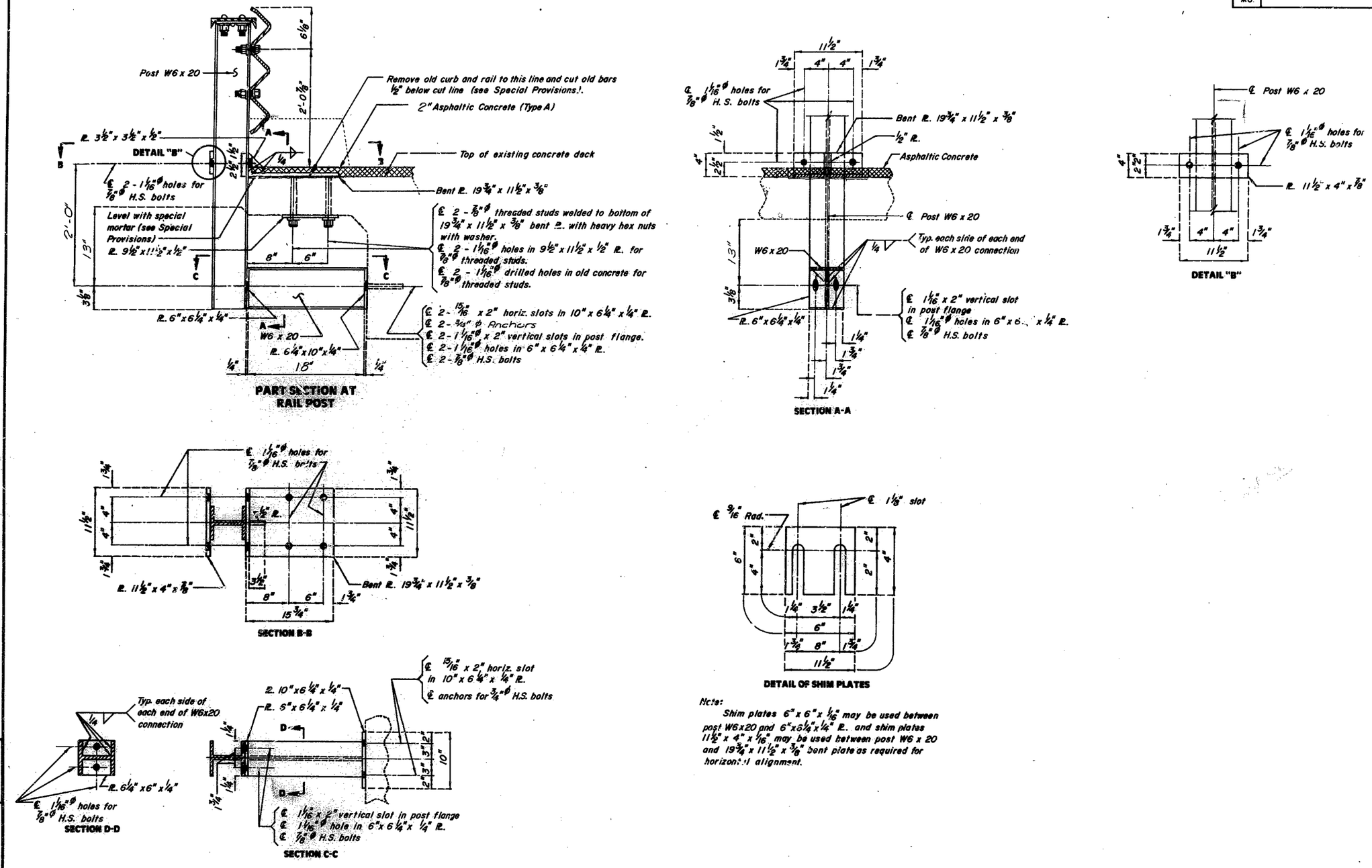

Note:
Shim plates 6" x 6" x 1/16" may be used between post W6x20 and 6"x6¼"x¼" PL. and shim plates 11½" x 4" x 1/16" may be used between post W6 x 20 and 19¾" x 11½" x ⅜" bent plate as required for horizontal alignment.

26

DETAILED Sept. 1985
CHECKED Sept 1985

DETAILS OF RAIL POST ON SLAB

Note: This drawing is not to scale. Follow dimensions.

Sheet No. 4 of 4

GASCONADE COUNTY

K-636R

Rehab. (T-8M/DECK GDR) SEPT. 1985 REVISED

SEC/SUR 19 TWP 41N RGE 5W

(91'-120'-91') PRESTRESSED CONCRETE NU-GIRDER SPANS

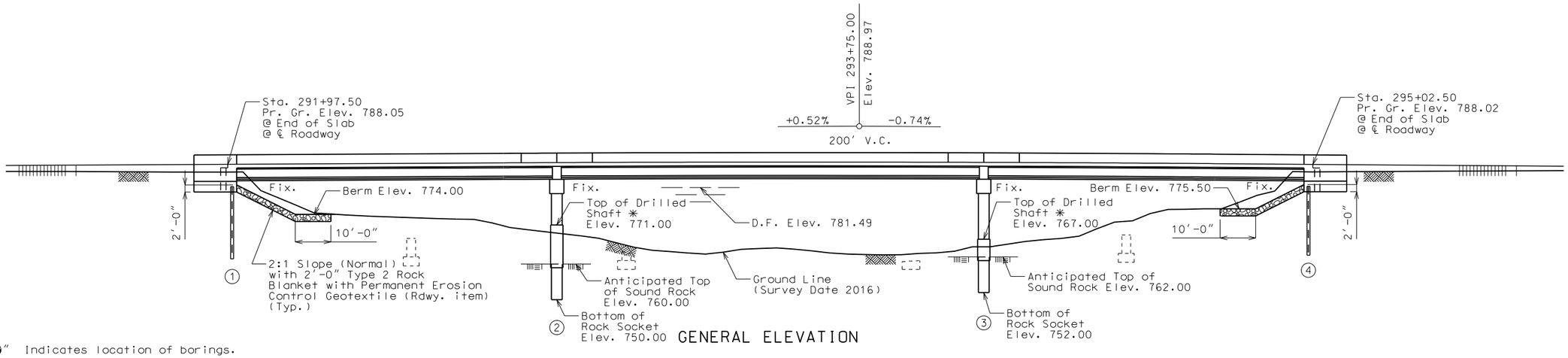

GENERAL ELEVATION

"◓" Indicates location of borings.

Notice and Disclaimer Regarding Boring Log Data

The locations of all subsurface borings for this structure are shown on the plan sheet for this structure. The boring data for all locations indicated, as well as any other boring logs or other factual records of subsurface data and investigations performed by the department for the design of the project, are shown on Sheets No. 31 thru 38 or will be available from the Project Contact upon written request. No greater significance or weight should be given to the boring data depicted on the plan sheets than is given to the subsurface data available from the district or elsewhere.

The Commission does not represent or warrant that any such boring data accurately depicts the conditions to be encountered in constructing this project. A contractor assumes all risks it may encounter in basing its bid prices, time or schedule of performance on the boring data depicted here or those available from the district, or on any other documentation not expressly warranted, which the contractor may obtain from the Commission.

* The contractor, at his option, may extend the 3'-6" diameter drilled shaft and the permanent casing to the bottom of the beam cap. The reinforcing steel indicated on the plans for both the drilled shafts and the column shall be installed per the plans. No additional payment will be made to the contractor for the option of extending the drilled shafts and permanent casings to the bottom of the beam cap.

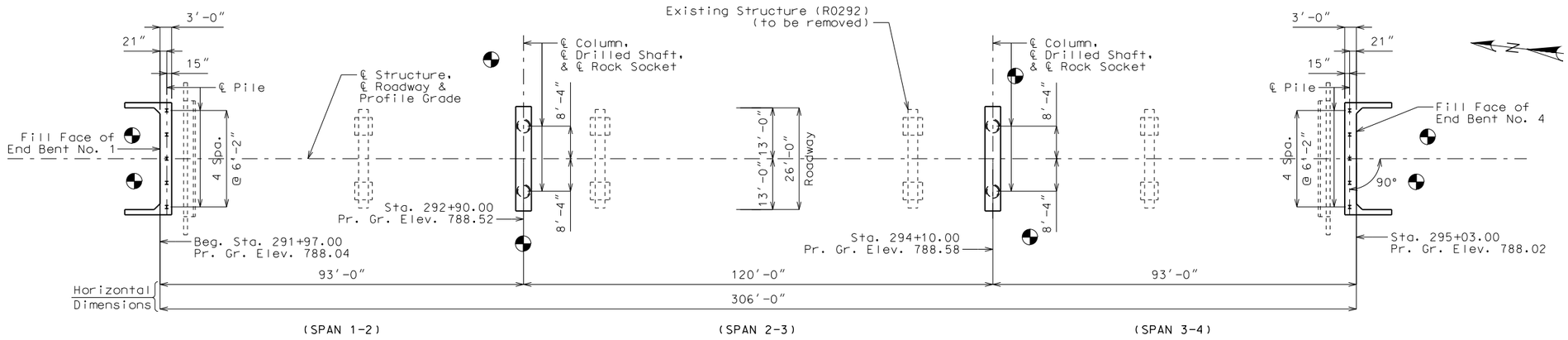

PLAN

For General Notes, Estimated Quantities, Estimated Quantities for Slab on Concrete NU-Girder, Foundation Data, Hydrologic Data, and Location Sketch, see Sheet No. 2.

Old roadway fill under the ends of the bridge shall be removed as shown. Removal of old roadway fill will be considered completely covered by the contract unit price for roadway excavation.

Roadway fill shall be completed to the final roadway section and up to the elevation of the bottom of the concrete beam within the limits of the structure and for not less than 25 feet in back of the fill face of the end bents before any piles are driven for any bents falling within the embankment section.

B.M. / C.P. 801 = 5/8" REBAR WITH ALUMINUM CAP AT THE S.W. QUADRANT OF BRIDGE R0292, ELEV. 775.46'

BRIDGE: ROUTE EE OVER DRY FORK CREEK

ROUTE EE FROM OWENSVILLE TO I-44
ABOUT 6 MILES SOUTHWEST OF OWENSVILLE
STA. 291+97.00

STD. 609.00
STD. 617.10
STD. 706.35

Designed Aug. 2016
Detailed Aug. 2016
Checked Aug. 2016

Note: This drawing is not to scale. Follow dimensions.

STATE OF MISSOURI PROFESSIONAL ENGINEER
CHRISTOPHER T. HERSINGER
NUMBER PE-2012018080

THIS SHEET HAS BEEN SIGNED, SEALED AND DATED ELECTRONICALLY.

DATE PREPARED 10/17/2016

ROUTE	STATE
EE	MO
DISTRICT	SHEET NO.
BR	1

COUNTY GASCONADE
JOB NO. J5S3140
CONTRACT ID.
PROJECT NO.
BRIDGE NO. A8440

DATE	DESCRIPTION

IF A SEAL IS PRESENT ON THIS SHEET IT HAS BEEN ELECTRONICALLY SEALED AND DATED.

MISSOURI HIGHWAYS AND TRANSPORTATION COMMISSION
105 WEST CAPITOL
JEFFERSON CITY, MO 65102
1-888-ASK-MODOT (1-888-275-6636)

HR GREEN, INC.
16020 SWINGLEY RIDGE ROAD, SUITE 205
ST. LOUIS, MISSOURI 63017
PHONE: (636) 519.0990
CORPORATE LICENSE #2002006608
HRGreen

Estimated Quantities

	Item		Substr.	Superstr.	Total
	Class 1 Excavation	cu. yard	80		80
	Removal of Bridges (R0292)	lump sum			1
	Bridge Approach Slab (Minor Road)	sq. yard			120
	Drilled Shafts (3 Ft. 6 In. Dia.)	linear foot	32.0		32.0
	Rock Sockets (3 Ft. 0 In. Dia.)	linear foot	40.0		40.0
	Supplementary Television Camera Inspection	each	4		4
	Foundation Inspection Holes	linear foot	80.0		80.0
	Sonic Logging Testing	each	4		4
	Galvanized Structural Steel Piles (10 in)	linear foot	205		205
	Pile Point Reinforcement	each	10		10
	Class B Concrete (Substructure)	cu. yard	68.9		68.9
*	Safety Barrier Curb	linear foot		648	648
	Slab on Concrete NU-Girder	sq. yard		972	972
	NU 43 Prestressed Concrete NU-Girder	linear foot		1207	1207
	Reinforcing Steel (Bridges)	pound	14,980		14,980
	Slab Drain	each		28	28
	Vertical Drain at End Bents	each			2
	Plain Neoprene Bearing Pad	each		8	8
	Laminated Neoprene Bearing Pad	each		16	16

* Safety barrier curb shall be cast-in-place option or slip-from option.

All concrete above the construction joint in the end bents is included in the Estimated Quantities for Slab on Concrete NU-Girder.

All reinforcement in the end bents is included in the Estimated Quantities for Slab on Concrete NU-Girder.

All reinforcement in the intermediate bent concrete diaphragms except reinforcement embedded in the beam cap is included in the Estimated Quantities for Slab on Concrete NU-Girder.

All concrete above the intermediate beam cap is included in the Estimated Quantities for Slab on Concrete NU-Girder.

Foundation Data

Type	Design Data		Bent Number 1	2	3	4
Load Bearing Pile	Pile Type and Size		HP 10x42	---	---	HP 10x42
	Number	ea	5	---	---	5
	Approximate Length per Each	ft	21	---	---	20
	Pile Driving Verification Method		DF	---	---	DF
	Minimum Nominal Axial Compressive Resistance	kip	495	---	---	495
	Hammer Energy Required	ft-lb	15,800	---	---	15,800
Rock Socket	Number	ea	---	2	2	---
	Foundation Material		---	Rock	Rock	---
	Elevation Range	ft	---	759-750	761-752	---
	Minimum Nominal Axial Compressive Resistance (Side Resistance)	ksf	---	26	26	---
	Minimum Nominal Axial Compressive Resistance (Tip Resistance)	ksf	---	---	---	---

DF = FHWA-modified Gates Dynamic Formula

Load Bearing Pile:

$$\text{Minimum Nominal Axial Compressive Resistance} = \frac{\text{Maximum Factored Loads}}{\text{Resistance Factor}}$$

Rock Socket (Drilled Shafts):

$$\text{Minimum Nominal Axial Compressive Resistance (Side Resistance + Tip Resistance)} = \frac{\text{Maximum Factored Loads}}{\text{Resistance Factors}}$$

Manufactured pile point reinforcement shall be used on all piles in this structure at End Bents No. 1 and 4.

General Notes:

Design Specifications:

2012 AASHTO LRFD Bridge Design Specifications (6th Ed.) and
2013 Interim Revisions
Seismic Design Category = A

Design Loading:

Vehicular = HL-93
Future Wearing Surface = 35 lb/sf
Earth = 120 lb/cf
Equivalent Fluid Pressure = 45 lb/cf

Design Unit Stresses:

Class B Concrete (Substructure, except Drilled Shafts & Rock Sockets) f'c = 3,000 psi

Class B-2 Concrete (Drilled Shafts & Rock Sockets) f'c = 4,000 psi

Class B-2 Concrete (Superstructure, except Prestressed Girders and Safety Barrier Curb) f'c = 4,000 psi

Class B-1 Concrete (Safety Barrier Curb) f'c = 4,000 psi

Reinforcing Steel (Grade 60) fy = 60,000 psi

Steel Pile (ASTM A709 Grade 50) fy = 50,000 psi

For precast prestressed panel stresses, see Sheet No. 19.

For prestressed girder stresses, see Sheets No. 14 thru 17.

Neoprene Pads:

Plain Neoprene and Laminated Bearing Pads shall be 60 durometer and shall be in accordance with Sec 716.

Joint Filler:

All joint filler shall be in accordance with Sec 1057 for preformed sponge rubber expansion and partition joint filler, except as noted.

Reinforcing Steel:

Minimum clearance to reinforcing steel shall be 1 1/2", unless otherwise shown.

Traffic Handling:

Structure to be closed during construction. See roadway plans for traffic control.

Miscellaneous:

MoDOT Construction personnel will indicate the type of joint filler option used under the precast panels for this structure:

☐ Constant Joint Filler
☐ Variable Joint Filler

Estimated Quantities for Slab on Concrete NU-Girder

Item		Total
Class B-2 Concrete	cu. yard	258.9
Reinforcing Steel	pound	7138
Reinforcing Steel (Epoxy Coated)	pound	58,028

The table of Estimated Quantities for Slab on Conrete NU-Girder represents the quantities used by the State in preparing the cost estimate for concrete slabs. The area of the concrete slab will be measured to the nearest square yard longitudinally from end of slab to end of slab and transversely from out to out of bridge slab (or with the horizontal dimensions as shown on the plan of slab). Payment for prestressed panels, conventional forms, all concrete and coated and uncoated reinforcing steel will be considered completely covered by the contract unit price for the slab. Variations may be encountered in the estimated quantities but the variations cannot be used for an adjustment in the contract unit price.

Method of forming the slab shall be as shown on the plans and in accordance with Sec 703. All hardware for forming the slab to be left in place as a permanent part of the structure shall be coated in accordance with ASTM A123 or ASTM B633 with a thickness class SC 4 and a finish type I, II or III.

Class B-2 Concrete quantity is based on minimum top flange thickness and minimum joint material thickness.

The prestressed panel quantities are not included in the table of Estimated Quantities for Slab on Concrete NU-Girder.

Hydrologic Data

Drainage Area = 102 mi²
Design Flood Frequency = 50 years
Design Flood Discharge = 21,000 cfs
Design Flood (D.F.) Elevation = 781.49
Base Flood (100-year)
Base Flood Elevation = 784.74
Base Flood Discharge = 25,000 cfs
Estimated Backwater = 1.96 ft
Average Velocity thru Opening = 6.57 ft/s
Freeboard (50-year)
Freeboard = 1.81 ft
Roadway Overtopping
Overtopping Flood Discharge = 30,600 cfs
Overtopping Flood Frequency = 380 years
Overtopping Flood Elevation = 786.22

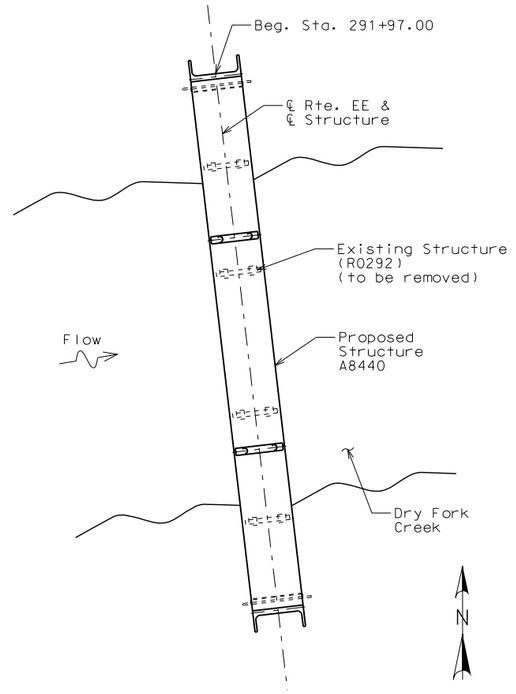

LOCATION SKETCH

STATE OF MISSOURI
CHRISTOPHER T. HERSINGER
NUMBER PE-2012018080
PROFESSIONAL ENGINEER
THIS SHEET HAS BEEN SIGNED, SEALED AND DATED ELECTRONICALLY.

DATE PREPARED 10/17/2016
ROUTE EE | STATE MO
DISTRICT BR | SHEET NO. 2
COUNTY GASCONADE
JOB NO. J5S3140
CONTRACT ID.
PROJECT NO.
BRIDGE NO. A8440

DESCRIPTION | DATE

IF A SEAL IS PRESENT ON THIS SHEET IT HAS BEEN ELECTRONICALLY SEALED AND DATED.

MISSOURI HIGHWAYS AND TRANSPORTATION COMMISSION
105 WEST CAPITOL
JEFFERSON CITY, MO 65102
1-888-ASK-MODOT (1-888-275-6636)

HR GREEN, INC.
16020 SWINGLEY RIDGE ROAD, SUITE 205
ST. LOUIS, MISSOURI 63017
PHONE: (636) 519.0990
CORPORATE LICENSE #2002006608

GENERAL NOTES AND QUANTITIES

Detailed Aug. 2016
Checked Aug. 2016

Note: This drawing is not to scale. Follow dimensions.

\\hrgwdfs004\Data\75160010\CAD\Data\Bridge_Plans\B_A8440_002_J5S3140_GeneralNotes.dgn 12:33:36 PM 10/17/2016

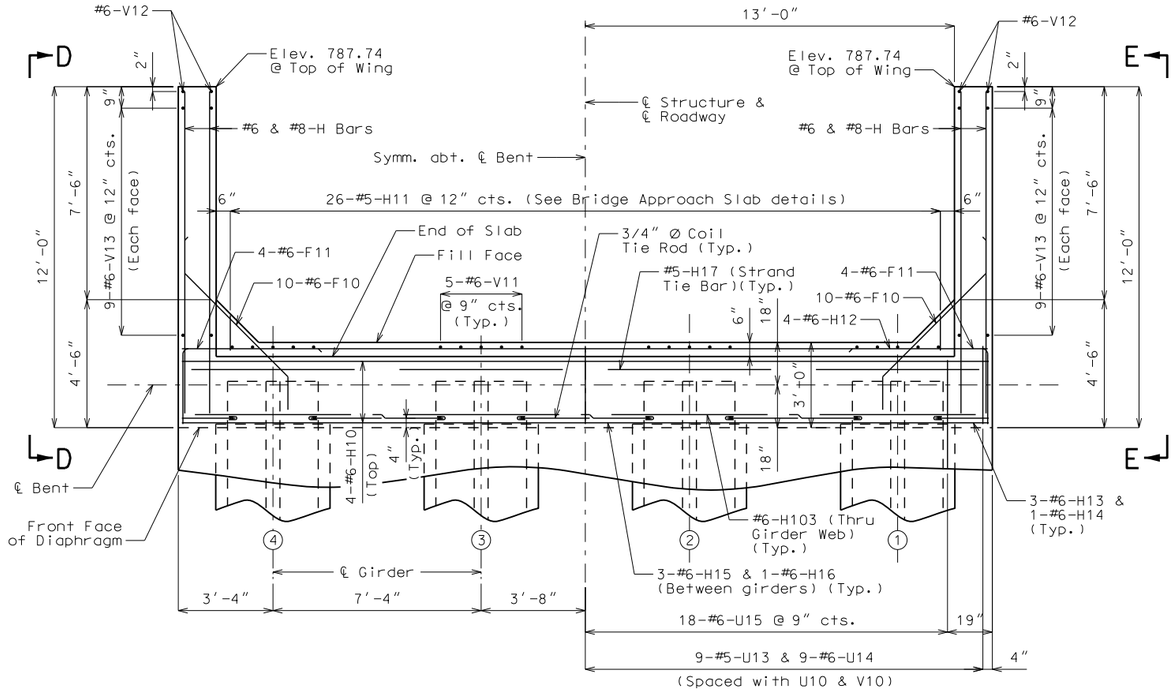

PART PLAN

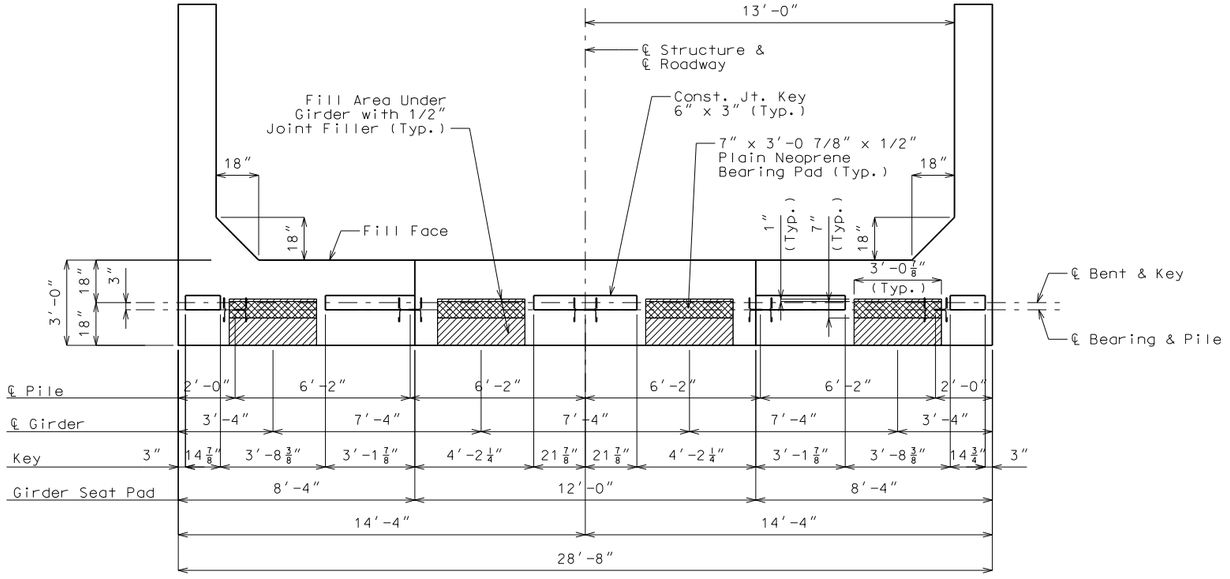

PLAN OF BEAM

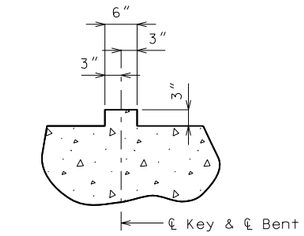

SECTION THRU KEY

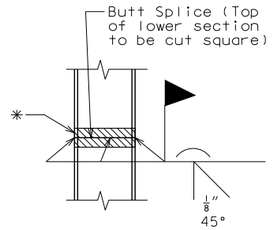

STEEL PILE SPLICE
(If required)

✳ Galvanization material shall be omitted or removed for a minimum of 2" around weld locations. The method used to omit or remove galvanizing material shall be approved by the engineer.

General Notes:

All concrete in the end bent above top of beam and below top of slab shall be Class B-2.

For details of End Bent No. 1 not shown, see Sheets No. 4 & 5.

The #6-F10 bars shall be bent in the field to clear girders.

Strands at end of the girders shall be field bent or, if necessary, cut in field to maintain 1 1/2" minimum clearance to fill face of end bent.

Reinforcing steel shall be shifted to clear piles. U bars shall clear piles by at least 1 1/2".

For location of Coil Tie Rods and #5-H17 (Strand Tie Bar), see Sheet No. 14 or 16.

For details of Vertical Drain at End Bents, see Sheet No. 6.

For Elevations D-D & E-E, see Sheet No. 5.

For reinforcement of the Safety Barrier Curb, see Sheets No. 24 thru 26.

For details of Bridge Approach Slab, see Sheet No. 27.

Detailed Aug. 2016
Checked Aug. 2016

Note: This drawing is not to scale. Follow dimensions.

DETAILS OF END BENT NO. 1

Sheet No. 3 of 38

STATE OF MISSOURI
PROFESSIONAL ENGINEER
CHRISTOPHER T. HERSINGER
NUMBER PE-2012018080

THIS SHEET HAS BEEN SIGNED, SEALED AND DATED ELECTRONICALLY.

DATE PREPARED 10/3/2016

ROUTE	STATE
EE	MO
DISTRICT	SHEET NO.
BR	3

COUNTY: GASCONADE
JOB NO.: J5S3140
CONTRACT ID.:
PROJECT NO.:
BRIDGE NO.: A8440

DATE	DESCRIPTION

IF A SEAL IS PRESENT ON THIS SHEET IT HAS BEEN ELECTRONICALLY SEALED AND DATED.

MISSOURI HIGHWAYS AND TRANSPORTATION COMMISSION
105 WEST CAPITOL
JEFFERSON CITY, MO 65102
1-888-ASK-MODOT (1-888-275-6636)

HR GREEN, INC.
16020 SWINGLEY RIDGE ROAD, SUITE 205
ST. LOUIS, MISSOURI 63017
PHONE: (636) 519.0990
CORPORATE LICENSE #2002006608

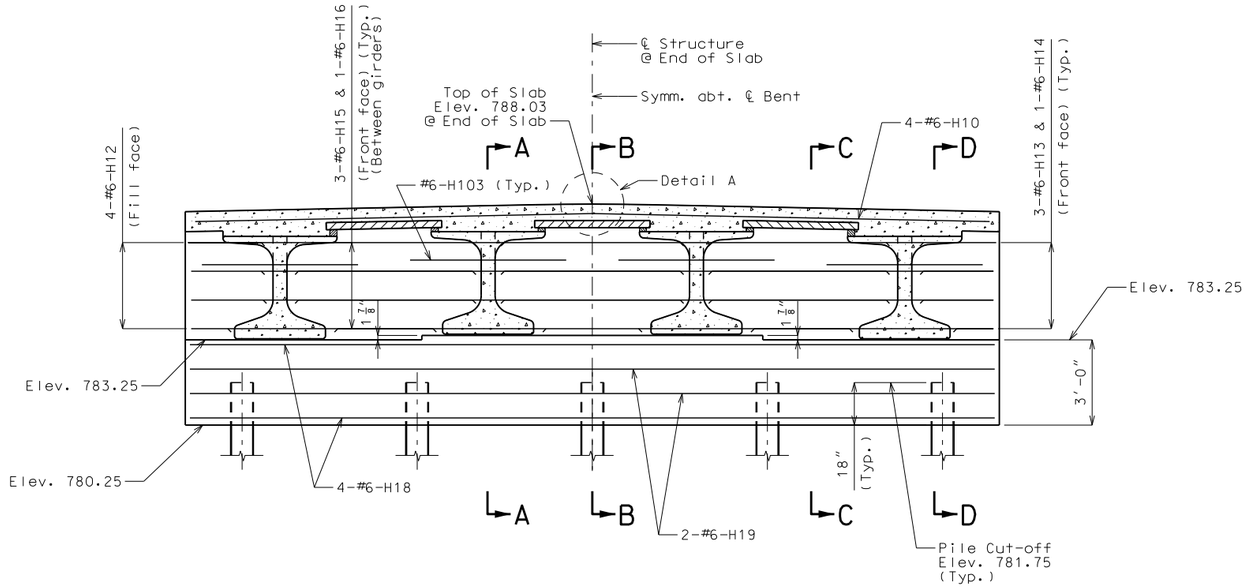

SECTION NEAR END BENT

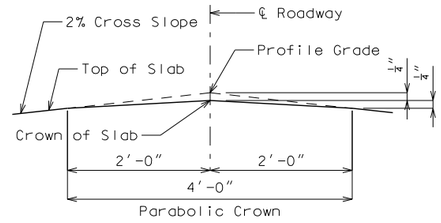

DETAIL A

Substructure Quantity Table for Bent No. 1		
Item		Quantity
Class 1 Excavation	cu. yard	40
Galvanized Structural Steel Piles (10 in.)	linear foot	105
Pile Point Reinforcement	each	5
Class B Concrete (Substructure)	cu. yard	12.7

These quantities are included in the Estimated Quantities table on Sheet No. 2.

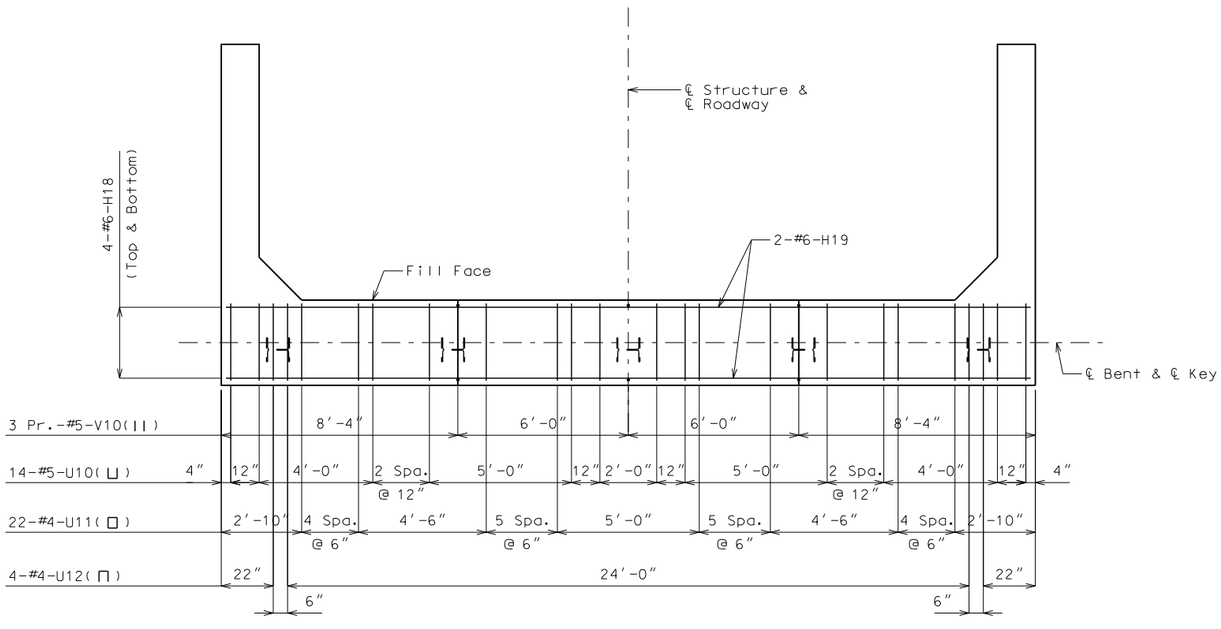

PLAN OF BEAM SHOWING REINFORCEMENT
(Keys not Shown for Clarity)

General Notes:

For details of End Bent No. 1 not shown, see Sheets No. 3 & 5.

For details of Vertical Drain at End Bents, see Sheet No. 6.

For Sections A-A, B-B, C-C, & D-D, see Sheet No. 5.

All vertical reinforcing bars in the substructure beams or caps shall be field adjusted to clear piles by at least 1 1/2".

Detailed Aug. 2016
Checked Aug. 2016

Note: This drawing is not to scale. Follow dimensions.

DETAILS OF END BENT NO. 1

Sheet No. 4 of 38

CHRISTOPHER T. HERSINGER
NUMBER PE-2012018080
STATE OF MISSOURI
PROFESSIONAL ENGINEER

THIS SHEET HAS BEEN SIGNED, SEALED AND DATED ELECTRONICALLY.

DATE PREPARED: 10/17/2016
ROUTE: EE | STATE: MO
DISTRICT: BR | SHEET NO.: 4
COUNTY: GASCONADE
JOB NO.: J5S3140
CONTRACT ID.:
PROJECT NO.:
BRIDGE NO.: A8440

DESCRIPTION | DATE

IF A SEAL IS PRESENT ON THIS SHEET IT HAS BEEN ELECTRONICALLY SEALED AND DATED.

MISSOURI HIGHWAYS AND TRANSPORTATION COMMISSION
105 WEST CAPITOL
JEFFERSON CITY, MO 65102
1-888-ASK-MODOT (1-888-275-6636)

HR GREEN, INC.
16020 SWINGLEY RIDGE ROAD, SUITE 205
ST. LOUIS, MISSOURI 63017
PHONE: (636) 519.0990
CORPORATE LICENSE #2002006608

HRGreen

\\hrgwdfs004\Data\75160010\CAD\Data\Bridge_Plans\B_A8440_004_J5S3140_EndBent1.dgn 12:35:13 PM 10/17/2016

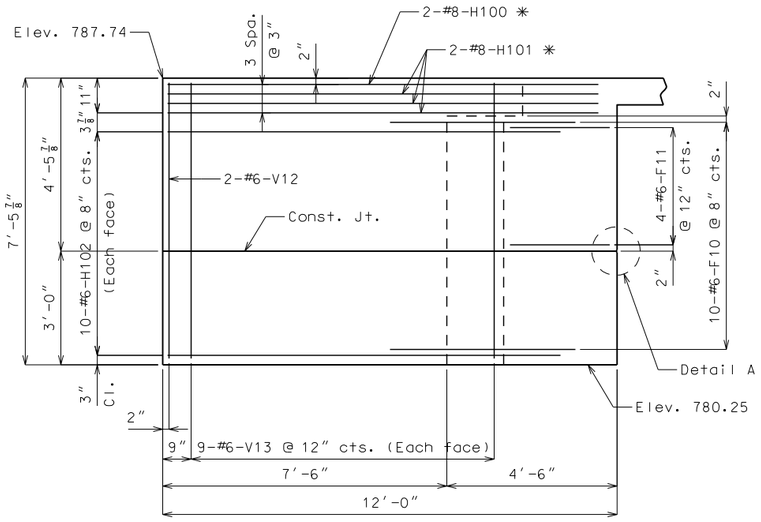

ELEVATION D-D

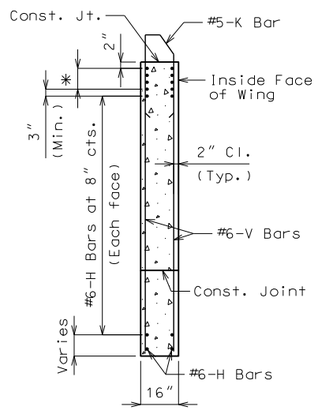

TYPICAL SECTION THRU WING

✱ #8-H Bars at 3″ cts. (Each face)(Place with grade)

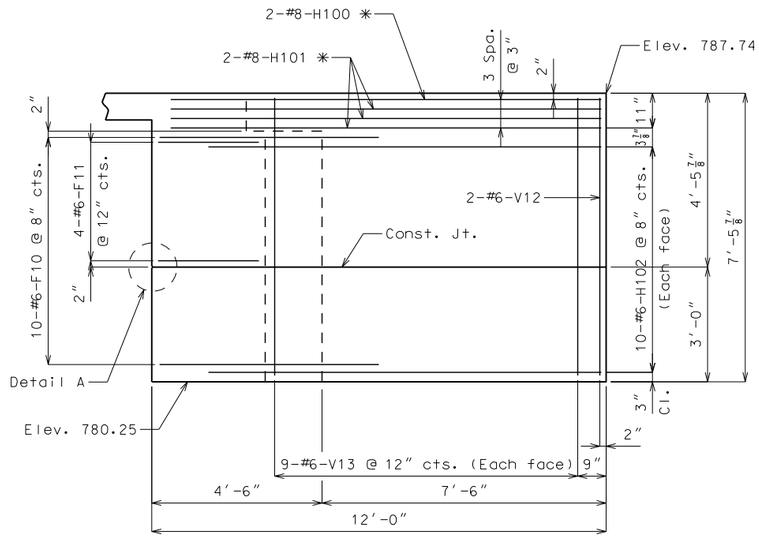

ELEVATION E-E

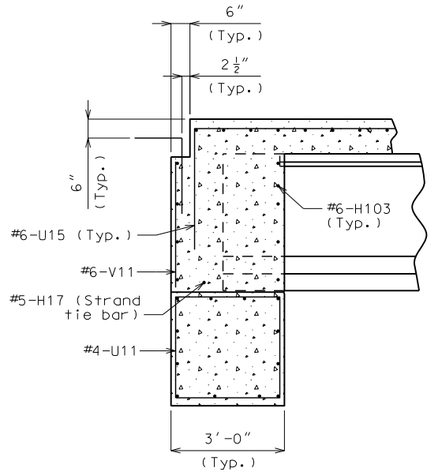

SECTION A-A

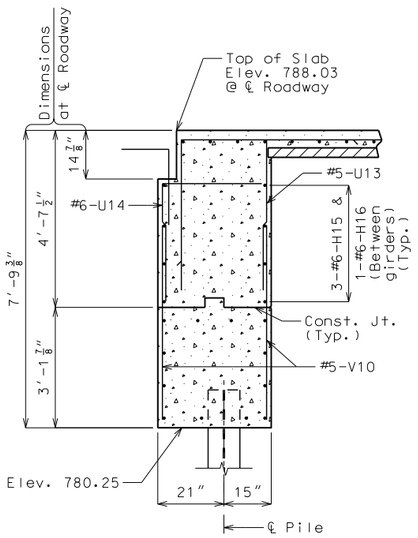

SECTION B-B

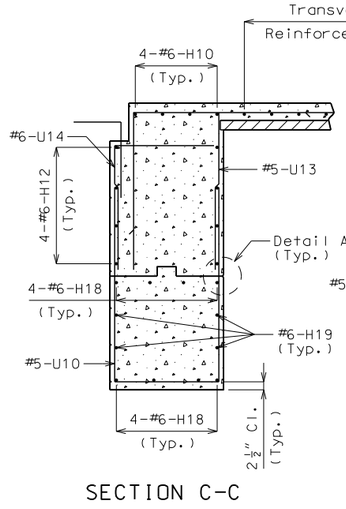

SECTION C-C

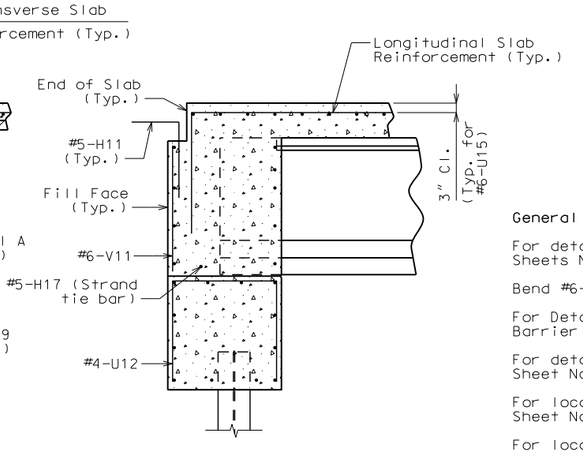

SECTION D-D

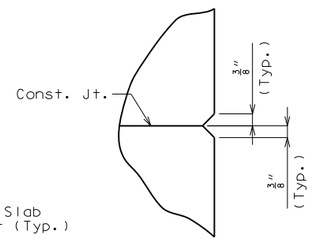

DETAIL A

General Notes:

For details of End Bent No. 1 not shown, see Sheets No. 3 & 4.

Bend #6-F10 bars in field to clear girders.

For Details and Reinforcement of the Safety Barrier Curb, see Sheets No. 24 thru 26.

For details of Vertical Drain at End Bents, see Sheet No. 6.

For location of #5-H17 (Strand Tie Bar), see Sheet No. 14 or 16.

For location of Elevations D-D & E-E, see Sheet No. 3.

For location of Sections A-A, B-B, C-C, & D-D, see Sheet No. 4.

For details of Bridge Approach Slab, see Sheet No. 27.

DETAILS OF END BENT NO. 1

Sheet No. 5 of 38

Detailed Aug. 2016
Checked Aug. 2016

Note: This drawing is not to scale. Follow dimensions.

STATE OF MISSOURI
CHRISTOPHER T. HERSINGER
NUMBER PE-2012018080
PROFESSIONAL ENGINEER

THIS SHEET HAS BEEN SIGNED, SEALED AND DATED ELECTRONICALLY.

DATE PREPARED 10/3/2016

ROUTE	STATE
EE	MO
DISTRICT	SHEET NO.
BR	5

COUNTY: GASCONADE
JOB NO.: J5S3140
CONTRACT ID.:
PROJECT NO.:
BRIDGE NO.: A8440

DESCRIPTION	DATE

MISSOURI HIGHWAYS AND TRANSPORTATION COMMISSION
105 WEST CAPITOL
JEFFERSON CITY, MO 65102
1-888-ASK-MODOT (1-888-275-6636)
HR GREEN, INC.
16020 SWINGLEY RIDGE ROAD, SUITE 205
ST. LOUIS, MISSOURI 63017
PHONE: (636) 519.0990
CORPORATE LICENSE #2002006608

IF A SEAL IS PRESENT ON THIS SHEET IT HAS BEEN ELECTRONICALLY SEALED AND DATED.

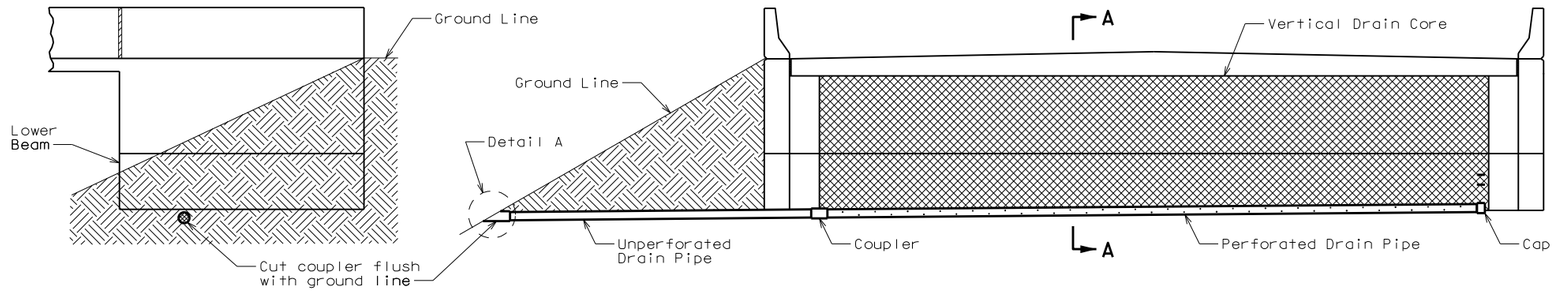

ELEVATION OF WING

ELEVATION AT END BENT

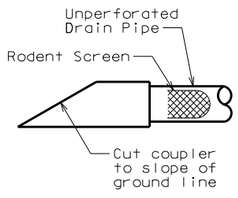

DETAIL A

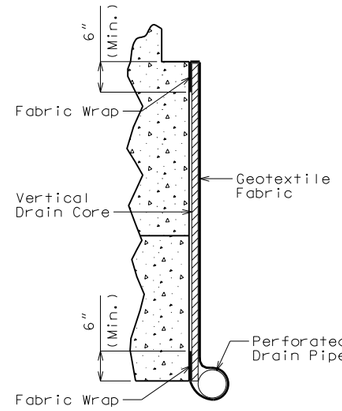

PART SECTION A-A

Note:

Drain pipe may be either 6-inch diameter corrugated metallic-coated steel pipe underdrain, 4-inch diameter corrugated polyvinyl chloride (PVC) drain pipe, or 4-inch diameter corrugated polyethylene (PE) drain pipe.

Place drain pipe at fill face of end bent and slope to lowest grade of ground line, also missing the lower beam of end bent by 1 1/2 inches. (See Elevation at End Bent.)

Perforated pipe shall be placed at fill face side at the bottom of end bent and plain pipe shall be used where the vertical drain ends to the exit at ground line.

VERTICAL DRAIN AT END BENTS

Detailed Aug. 2016
Checked Aug. 2016

Note: This drawing is not to scale. Follow dimensions.

\\hrgwdfs004\Data\75160010\CAD\Data\Bridge_Plans\B_A8440_006_J5S3140_VerticalDrain.dgn 3:16:10 PM 10/3/2016

STATE OF MISSOURI
CHRISTOPHER T. HERSINGER
NUMBER PE-2012018080
PROFESSIONAL ENGINEER

THIS SHEET HAS BEEN SIGNED, SEALED AND DATED ELECTRONICALLY.

DATE PREPARED 10/3/2016
ROUTE EE | STATE MO
DISTRICT BR | SHEET NO. 6
COUNTY GASCONADE
JOB NO. J5S3140
CONTRACT ID.
PROJECT NO.
BRIDGE NO. A8440

DESCRIPTION | DATE

IF A SEAL IS PRESENT ON THIS SHEET IT HAS BEEN ELECTRONICALLY SEALED AND DATED.

MISSOURI HIGHWAYS AND TRANSPORTATION COMMISSION
105 WEST CAPITOL
JEFFERSON CITY, MO 65102
1-888-ASK-MODOT (1-888-275-6636)

HR GREEN, INC.
16020 SWINGLEY RIDGE ROAD, SUITE 205
ST. LOUIS, MISSOURI 63017
PHONE: (636) 519.0990
CORPORATE LICENSE #2002006608
HRGreen

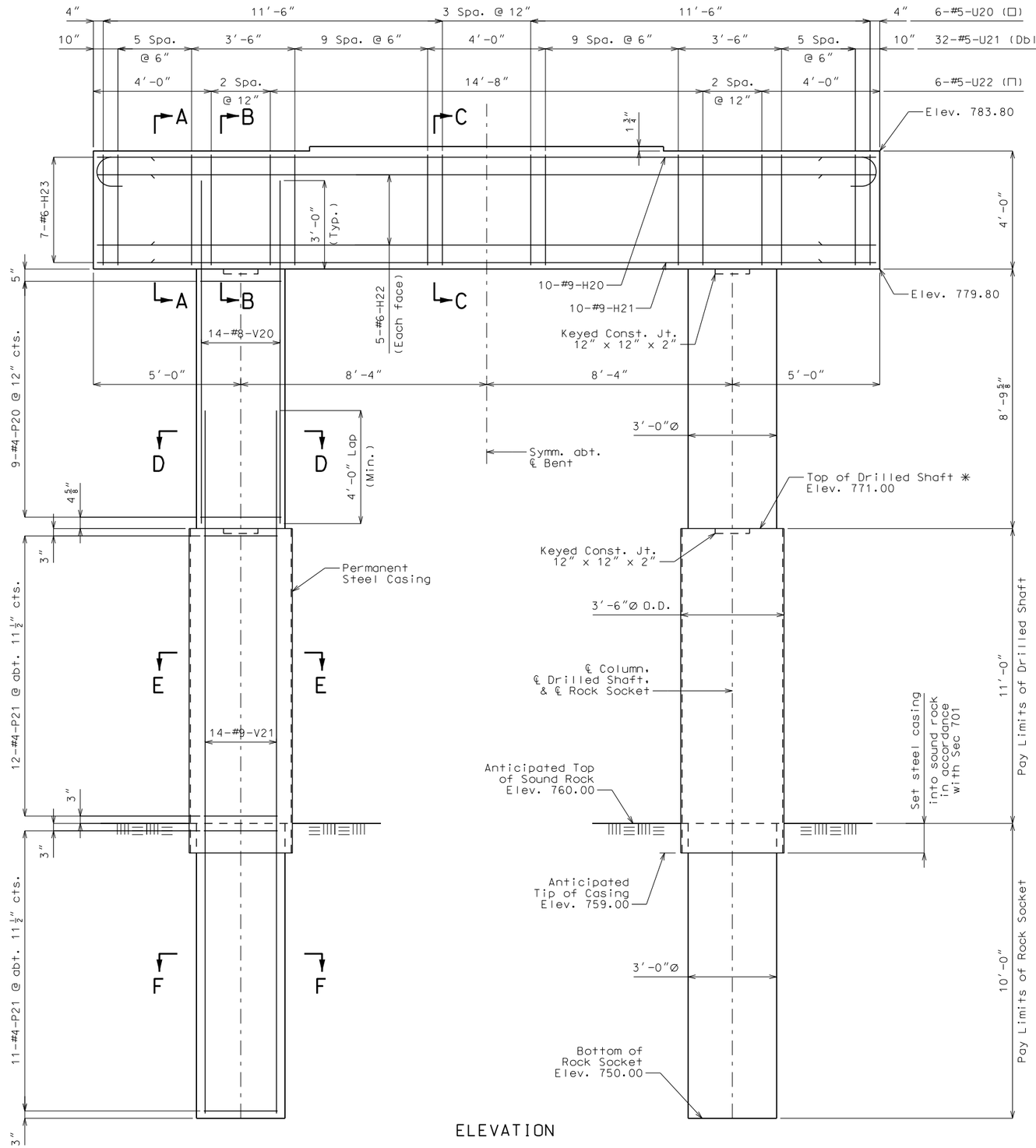

ELEVATION

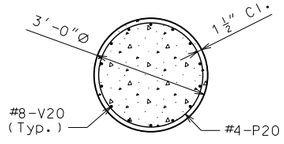

SECTION D-D

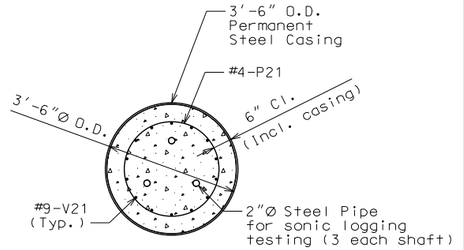

SECTION E-E

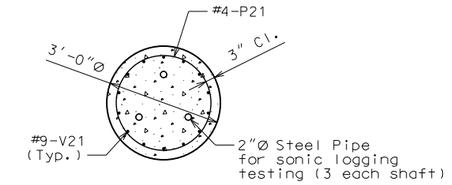

SECTION F-F

Substructure Quantity Table for Bent No. 2

Item		Quantity
Drilled Shafts (3 ft. 6 in. Dia.)	linear foot	22.0
Rock Sockets (3 ft. 0 in. Dia.)	linear foot	20.0
Supplementary Television Camera Inspection	each	2
Foundation Inspection Holes	linear foot	40.0
Sonic Logging Testing	each	2
Class B Concrete (Substructure)	cu. yard	20.7
Reinforcing Steel (Bridges)	pound	7633

These quantities are included in the Estimated Quantities table on Sheet No. 2.

✳ The contractor, at his option, may extend the 3′-6″ diameter drilled shaft and the permanent casing to the bottom of the beam cap. The reinforcing steel indicated on the plans for both the drilled shafts and the column shall be installed per the plans. No additional payment will be made to the contractor for the option of extending the drilled shafts and permanent casings to the bottom of the beam cap.

An additional 4 feet has been added to V21 bar lengths and and additional 8-#4-P21 bars have been added in the quantities, if required, for possible change in drilled shaft or rock socket lengths. The additional V-bar length shall be cut off or included in the reinforcement lap if not required. The additional P-bars shall be spaced similarly to that shown in elevation, if required or to a lesser spacing if not required, but not less than 6″ cts.

Sonic logging testing shall be performed on all drilled shafts and rock sockets.

Permanent steel casing shall be in accordance with Sec 701.

All reinforcement in drilled shafts and rock sockets is included in the Substructure Quantities.

Work this sheet with Sheet No. 8.

DETAILS OF INTERMEDIATE BENT NO. 2

Detailed Aug. 2016
Checked Aug. 2016

Note: This drawing is not to scale. Follow dimensions.

STATE OF MISSOURI
CHRISTOPHER T. HERSINGER
NUMBER PE-2012018080
PROFESSIONAL ENGINEER

THIS SHEET HAS BEEN SIGNED, SEALED AND DATED ELECTRONICALLY.

IF A SEAL IS PRESENT ON THIS SHEET IT HAS BEEN ELECTRONICALLY SEALED AND DATED.

DATE PREPARED 10/17/2016

ROUTE	STATE
EE	MO
DISTRICT	SHEET NO.
BR	7

COUNTY GASCONADE
JOB NO. J5S3140
CONTRACT ID.
PROJECT NO.
BRIDGE NO. A8440

DATE	DESCRIPTION

MISSOURI HIGHWAYS AND TRANSPORTATION COMMISSION
105 WEST CAPITOL
JEFFERSON CITY, MO 65102
1-888-ASK-MODOT (1-888-275-6636)

HR GREEN, INC.
16020 SWINGLEY RIDGE ROAD, SUITE 205
ST. LOUIS, MISSOURI 63017
PHONE: (636) 519.0990
CORPORATE LICENSE #2002006608
HRGreen

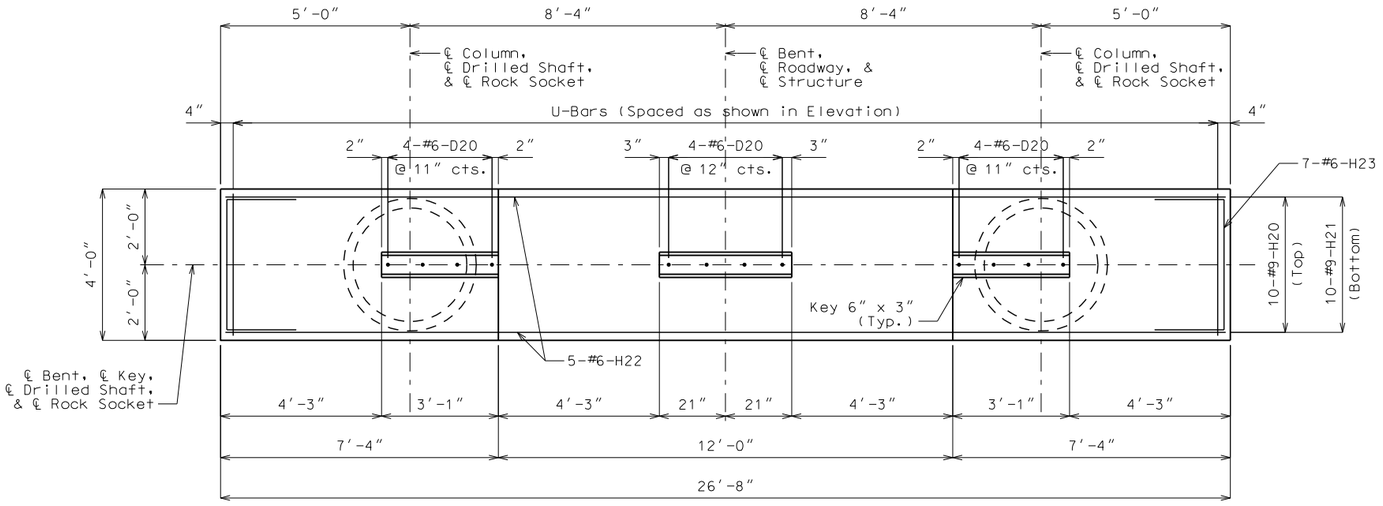

PLAN SHOWING REINFORCEMENT

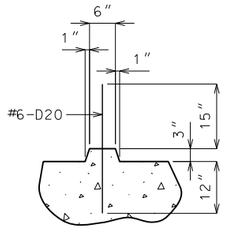

SECTION THRU KEY

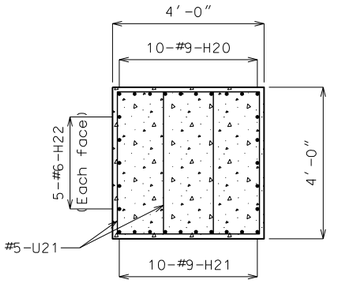

SECTION A-A

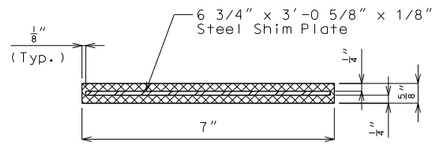

SECTION THRU LAMINATED NEOPRENE BEARING PAD

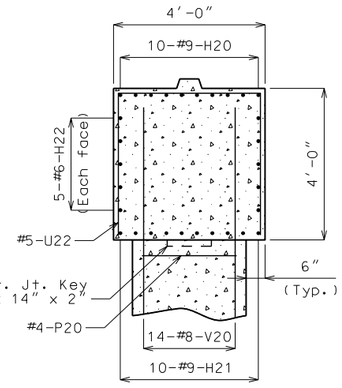

SECTION B-B

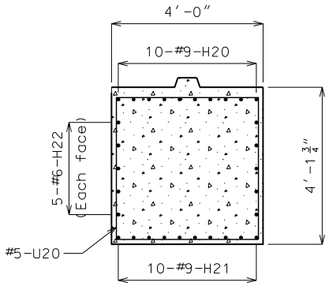

SECTION C-C

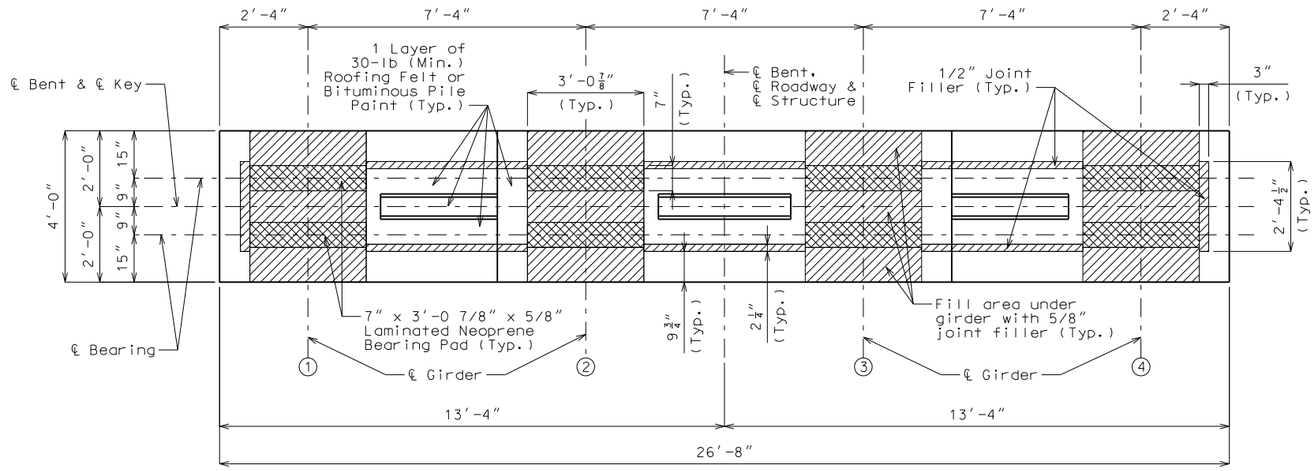

PLAN OF BEAM

General Notes:

Work this sheet with Sheet No. 7.

DETAILS OF INTERMEDIATE BENT NO. 2

Detailed Aug. 2016
Checked Aug. 2016

Note: This drawing is not to scale. Follow dimensions.

STATE OF MISSOURI
CHRISTOPHER T. HERSINGER
NUMBER PE-2012018080
PROFESSIONAL ENGINEER

THIS SHEET HAS BEEN SIGNED, SEALED AND DATED ELECTRONICALLY.

DATE PREPARED 10/3/2016

ROUTE	STATE
EE	MO
DISTRICT	SHEET NO.
BR	8

COUNTY: GASCONADE
JOB NO.: J5S3140
CONTRACT ID.:
PROJECT NO.:
BRIDGE NO.: A8440

IF A SEAL IS PRESENT ON THIS SHEET IT HAS BEEN ELECTRONICALLY SEALED AND DATED.

DESCRIPTION	DATE

MISSOURI HIGHWAYS AND TRANSPORTATION COMMISSION
105 WEST CAPITOL
JEFFERSON CITY, MO 65102
1-888-ASK-MODOT (1-888-275-6636)

HR GREEN, INC.
16020 SWINGLEY RIDGE ROAD, SUITE 205
ST. LOUIS, MISSOURI 63017
PHONE: (636) 519.0990
CORPORATE LICENSE #2002006608

HRGreen

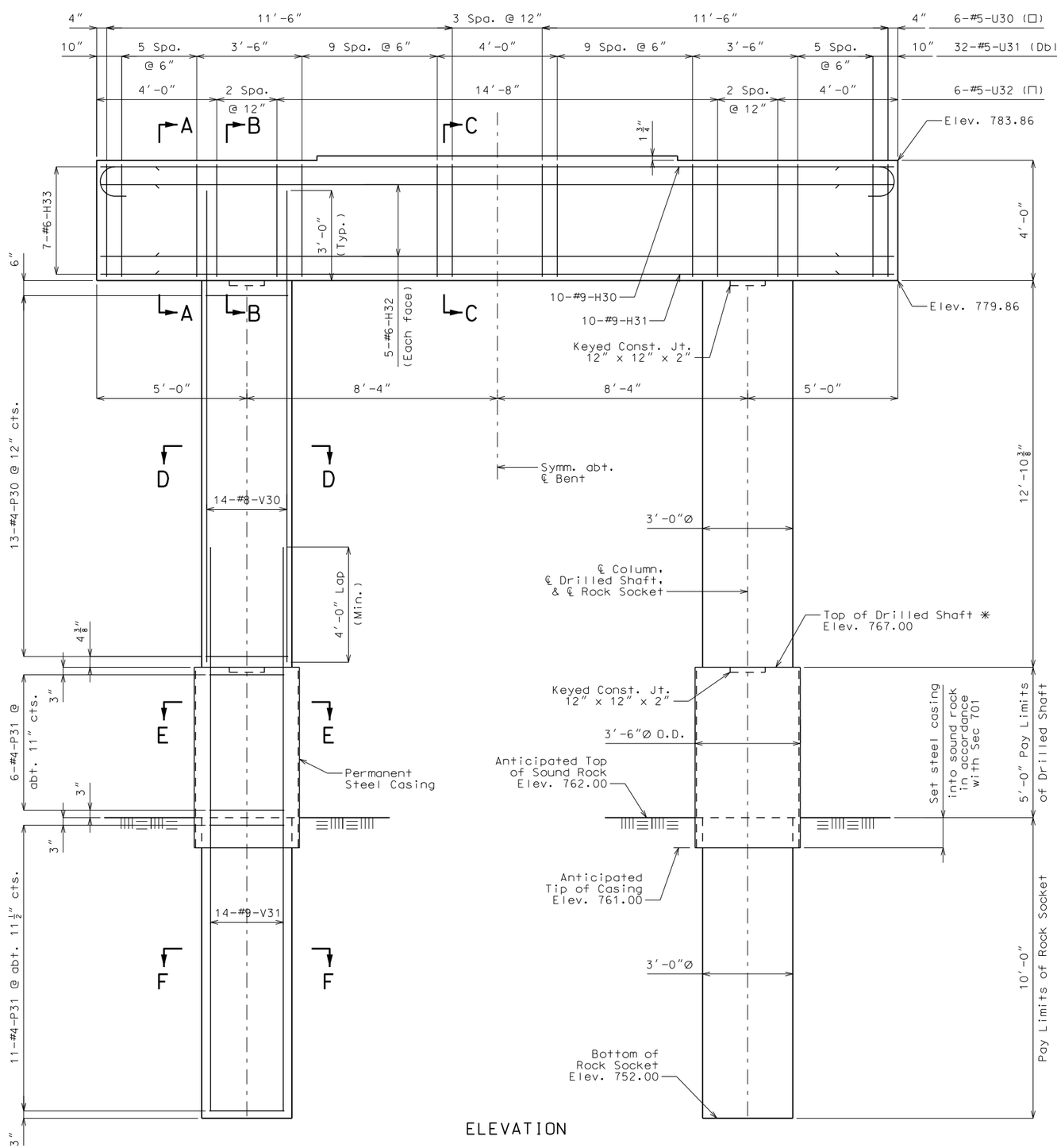

ELEVATION

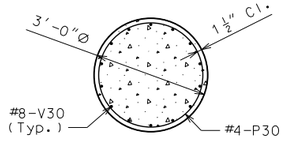

SECTION D-D

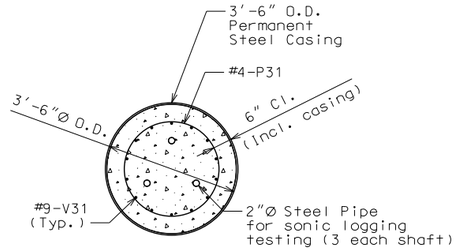

SECTION E-E

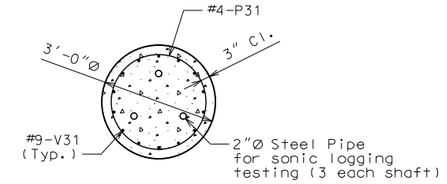

SECTION F-F

Substructure Quantity Table for Bent No. 3		
Item		Quantity
Drilled Shafts (3 ft. 6 in. Dia.)	linear foot	10.0
Rock Sockets (3 ft. 0 in. Dia.)	linear foot	20.0
Supplementary Television Camera Inspection	each	2
Foundation Inspection Holes	linear foot	40.0
Sonic Logging Testing	each	2
Class B Concrete (Substructure)	cu. yard	22.8
Reinforcing Steel (Bridges)	pound	7347

These quantities are included in the Estimated Quantities table on Sheet No. 2.

✳ The contractor, at his option, may extend the 3'-6" diameter drilled shaft and the permanent casing to the bottom of the beam cap. The reinforcing steel indicated on the plans for both the drilled shafts and the column shall be installed per the plans. No additional payment will be made to the contractor for the option of extending the drilled shafts and permanent casings to the bottom of the beam cap.

An additional 4 feet has been added to V31 bar lengths and and additional 8-#4-P31 bars have been added in the quantities, if required, for possible change in drilled shaft or rock socket lengths. The additional V-bar length shall be cut off or included in the reinforcement lap if not required. The additional P-bars shall be spaced similarly to that shown in elevation, if required or to a lesser spacing if not required, but not less than 6" cts.

Sonic logging testing shall be performed on all drilled shafts and rock sockets.

Permanent steel casing shall be in accordance with Sec 701.

All reinforcement in drilled shafts and rock sockets is included in the Substructure Quantities.

Work this sheet with Sheet No. 10.

DETAILS OF INTERMEDIATE BENT NO. 3

Detailed Aug. 2016
Checked Aug. 2016

Note: This drawing is not to scale. Follow dimensions.

STATE OF MISSOURI
CHRISTOPHER T. HERSINGER
NUMBER PE-2012018080
PROFESSIONAL ENGINEER

THIS SHEET HAS BEEN SIGNED, SEALED AND DATED ELECTRONICALLY.

DATE PREPARED 10/17/2016

ROUTE	STATE
EE	MO
DISTRICT	SHEET NO.
BR	9

COUNTY GASCONADE

JOB NO. J5S3140

CONTRACT ID.

PROJECT NO.

BRIDGE NO. A8440

DATE	DESCRIPTION

IF A SEAL IS PRESENT ON THIS SHEET IT HAS BEEN ELECTRONICALLY SEALED AND DATED.

MISSOURI HIGHWAYS AND TRANSPORTATION COMMISSION
105 WEST CAPITOL
JEFFERSON CITY, MO 65102
1-888-ASK-MODOT (1-888-275-6636)

HR GREEN, INC.
16020 SWINGLEY RIDGE ROAD, SUITE 205
ST. LOUIS, MISSOURI 63017
PHONE: (636) 519.0990
CORPORATE LICENSE #2002006608
HRGreen

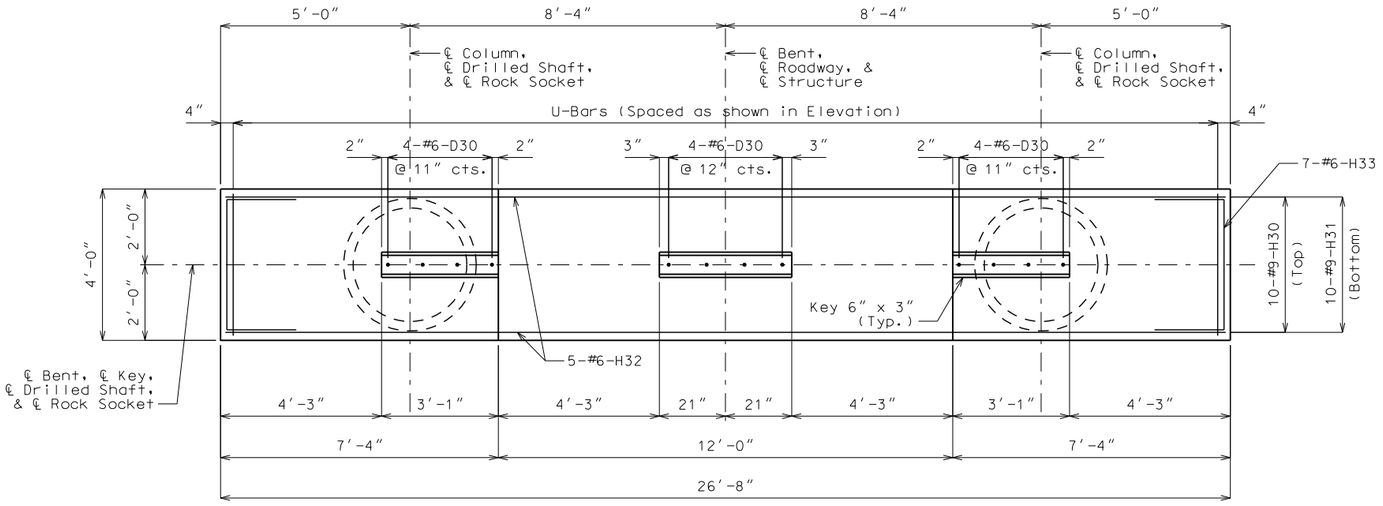

PLAN SHOWING REINFORCEMENT

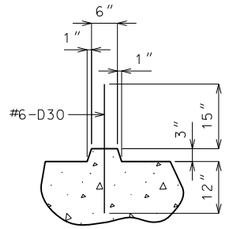

SECTION THRU KEY

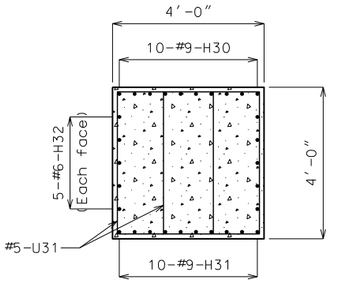

SECTION A-A

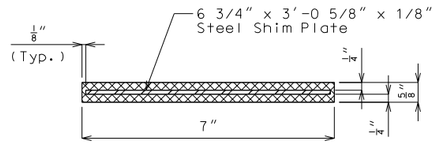

SECTION THRU LAMINATED NEOPRENE BEARING PAD

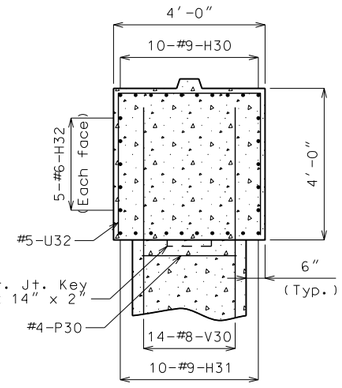

SECTION B-B

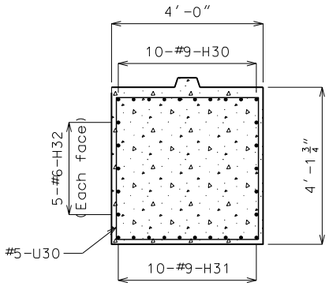

SECTION C-C

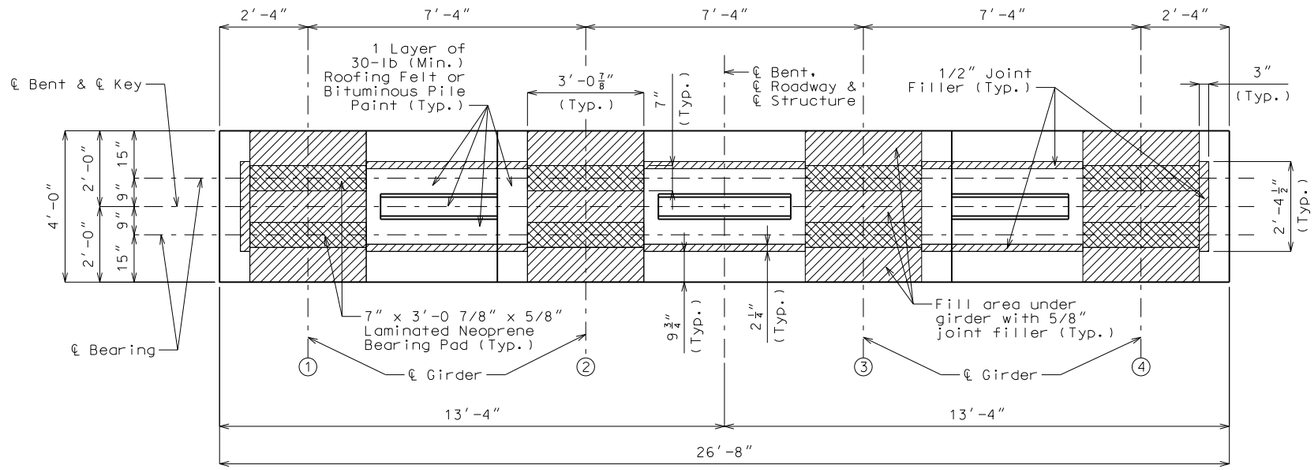

PLAN OF BEAM

General Notes:

Work this sheet with Sheet No. 9.

DETAILS OF INTERMEDIATE BENT NO. 3

Detailed Aug. 2016
Checked Aug. 2016

Note: This drawing is not to scale. Follow dimensions.

\\hrgwdfs004\Data\75160010\CAD\Data\Bridge_Plans\B_A8440_010_J5S3140_IntBent3.dgn 3:16:13 PM 10/3/2016

STATE OF MISSOURI
CHRISTOPHER T. HERSINGER
NUMBER PE-2012018080
PROFESSIONAL ENGINEER

THIS SHEET HAS BEEN SIGNED, SEALED AND DATED ELECTRONICALLY.

DATE PREPARED 10/3/2016

ROUTE	STATE
EE	MO
DISTRICT	SHEET NO.
BR	10

COUNTY GASCONADE

JOB NO. J5S3140

CONTRACT ID.

PROJECT NO.

BRIDGE NO. A8440

DESCRIPTION	DATE

IF A SEAL IS PRESENT ON THIS SHEET IT HAS BEEN ELECTRONICALLY SEALED AND DATED.

MISSOURI HIGHWAYS AND TRANSPORTATION COMMISSION
105 WEST CAPITOL
JEFFERSON CITY, MO 65102
1-888-ASK-MODOT (1-888-275-6636)
MoDOT

HR GREEN, INC.
16020 SWINGLEY RIDGE ROAD, SUITE 205
ST. LOUIS, MISSOURI 63017
PHONE: (636) 519.0990
CORPORATE LICENSE #2002006608
HRGreen

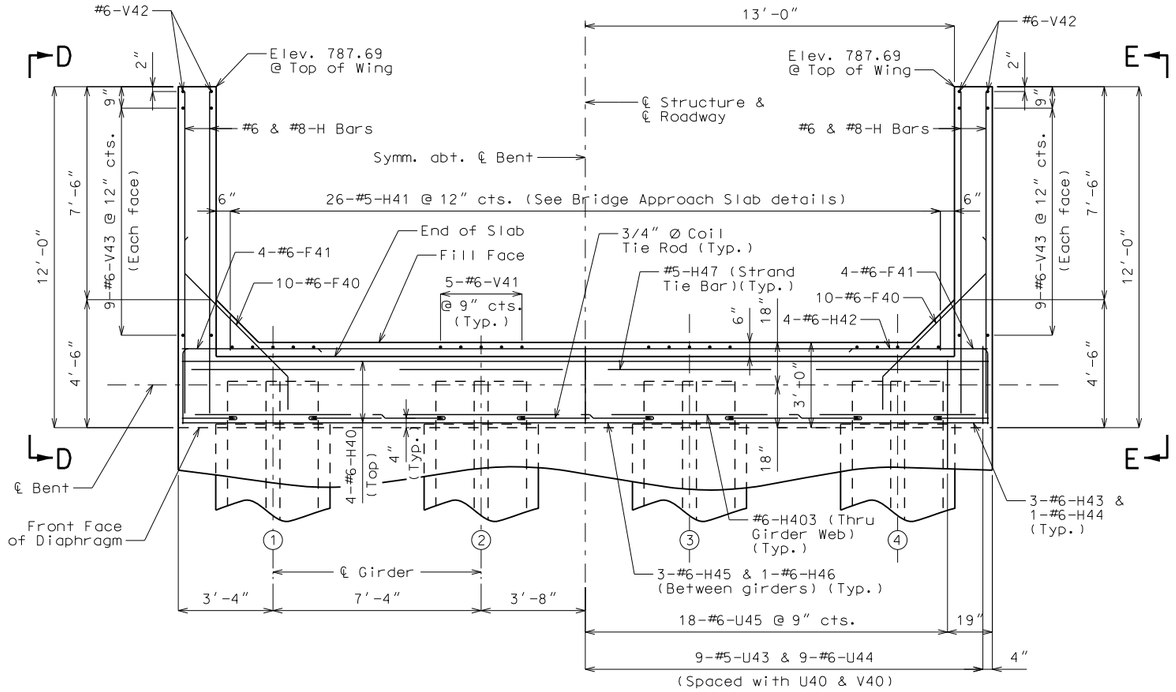

PART PLAN

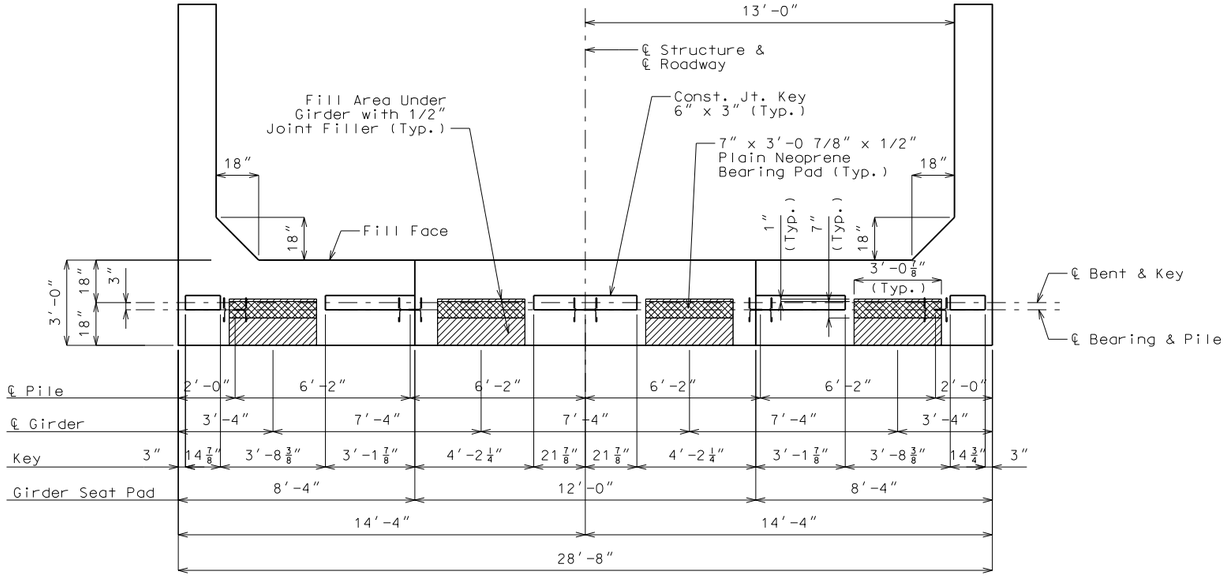

PLAN OF BEAM

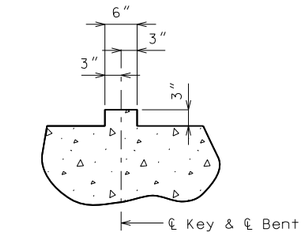

SECTION THRU KEY

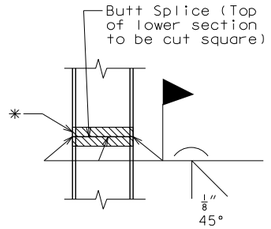

STEEL PILE SPLICE
(If required)

✳ Galvanization material shall be omitted or removed for a minimum of 2″ around weld locations. The method used to omit or remove galvanizing material shall be approved by the engineer.

General Notes:

All concrete in the end bent above top of beam and below top of slab shall be Class B-2.

For details of End Bent No. 4 not shown, see Sheets No. 12 & 13.

The #6-F40 bars shall be bent in the field to clear girders.

Strands at end of the girders shall be field bent or, if necessary, cut in field to maintain 1 1/2″ minimum clearance to fill face of end bent.

Reinforcing steel shall be shifted to clear piles. U bars shall clear piles by at least 1 1/2″.

For location of Coil Tie Rods and #5-H47 (Strand Tie Bar), see Sheet No. 14 or 16.

For details of Vertical Drain at End Bents, see Sheet No. 6.

For Elevations D-D & E-E, see Sheet No. 13.

For reinforcement of the Safety Barrier Curb, see Sheets No. 24 thru 26.

For details of Bridge Approach Slab, see Sheet No. 27.

Detailed Aug. 2016
Checked Aug. 2016

Note: This drawing is not to scale. Follow dimensions.

DETAILS OF END BENT NO. 4

Sheet No. 11 of 38

STATE OF MISSOURI
CHRISTOPHER T. HERSINGER
NUMBER PE-2012018080
PROFESSIONAL ENGINEER

THIS SHEET HAS BEEN SIGNED, SEALED AND DATED ELECTRONICALLY.

DATE PREPARED 10/3/2016

ROUTE	STATE
EE	MO
DISTRICT	SHEET NO.
BR	11

COUNTY: GASCONADE
JOB NO.: J5S3140
CONTRACT ID.:
PROJECT NO.:
BRIDGE NO.: A8440

DESCRIPTION	DATE

IF A SEAL IS PRESENT ON THIS SHEET IT HAS BEEN ELECTRONICALLY SEALED AND DATED.

MISSOURI HIGHWAYS AND TRANSPORTATION COMMISSION
105 WEST CAPITOL
JEFFERSON CITY, MO 65102
1-888-ASK-MODOT (1-888-275-6636)

HR GREEN, INC.
16020 SWINGLEY RIDGE ROAD, SUITE 205
ST. LOUIS, MISSOURI 63017
PHONE: (636) 519.0990
CORPORATE LICENSE #2002006608

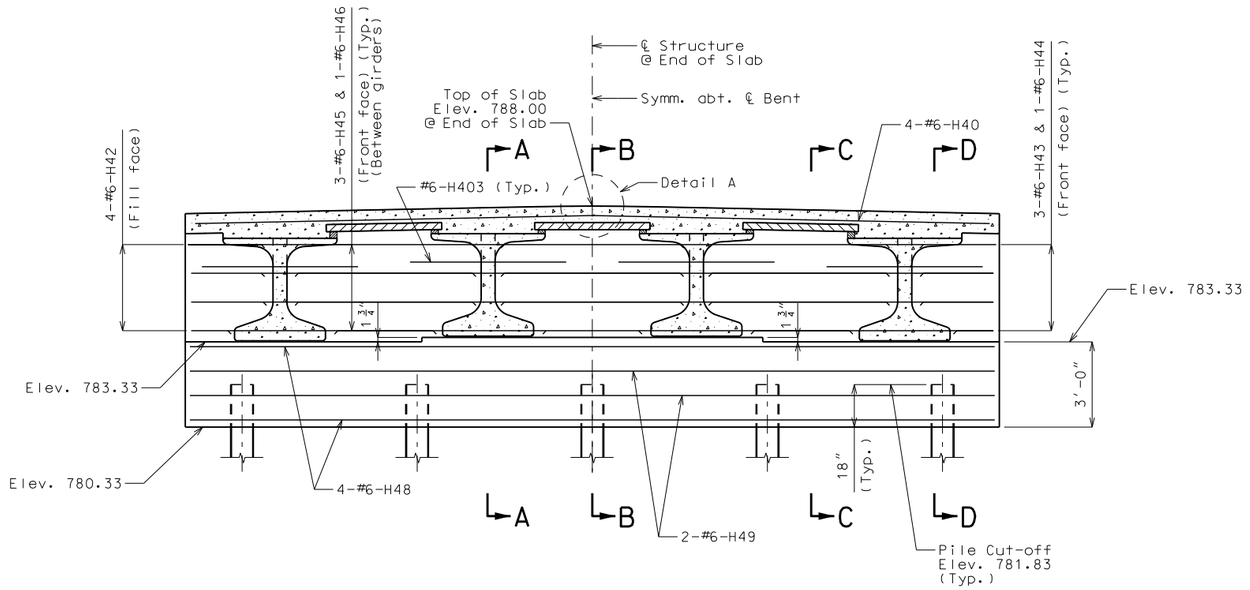

SECTION NEAR END BENT

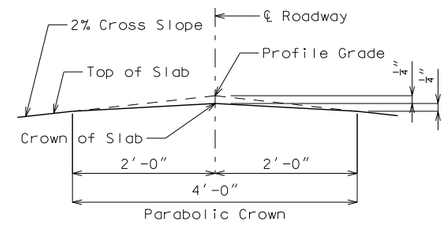

DETAIL A

Substructure Quantity Table for Bent No. 4		
Item		Quantity
Class 1 Excavation	cu. yard	40
Galvanized Structural Steel Piles (10 in.)	linear foot	100
Pile Point Reinforcement	each	5
Class B Concrete (Substructure)	cu. yard	12.7

These quantities are included in the Estimated Quantities table on Sheet No. 2.

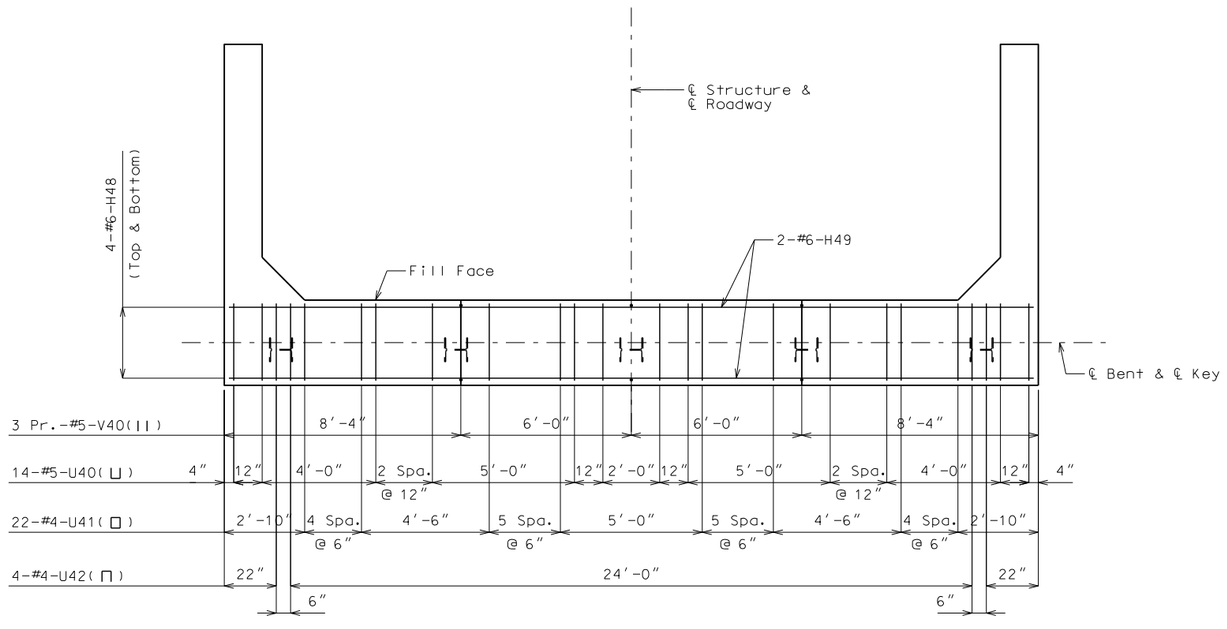

PLAN OF BEAM SHOWING REINFORCEMENT
(Keys not Shown for Clarity)

General Notes:

For details of End Bent No. 4 not shown, see Sheets No. 11 & 13.

For details of Vertical Drain at End Bents, see Sheet No. 6.

For Sections A-A, B-B, C-C, & D-D, see Sheet No. 13.

All vertical reinforcing bars in the substructure beams or caps shall be field adjusted to clear piles by at least 1 1/2".

Detailed Aug. 2016
Checked Aug. 2016

Note: This drawing is not to scale. Follow dimensions.

DETAILS OF END BENT NO. 4

Sheet No. 12 of 38

PROFESSIONAL ENGINEER
STATE OF MISSOURI
CHRISTOPHER T. HERSINGER
NUMBER PE-2012018080

THIS SHEET HAS BEEN SIGNED, SEALED AND DATED ELECTRONICALLY.

DATE PREPARED 10/17/2016

ROUTE	STATE
EE	MO
DISTRICT	SHEET NO.
BR	12

COUNTY: GASCONADE
JOB NO.: J5S3140
CONTRACT ID.:
PROJECT NO.:
BRIDGE NO.: A8440

DESCRIPTION	DATE

IF A SEAL IS PRESENT ON THIS SHEET IT HAS BEEN ELECTRONICALLY SEALED AND DATED.

MISSOURI HIGHWAYS AND TRANSPORTATION COMMISSION
105 WEST CAPITOL
JEFFERSON CITY, MO 65102
1-888-ASK-MODOT (1-888-275-6636)

HR GREEN, INC.
16020 SWINGLEY RIDGE ROAD, SUITE 205
ST. LOUIS, MISSOURI 63017
PHONE: (636) 519.0990
CORPORATE LICENSE #2002006608

HRGreen

\\hrgwdfs004\Data\75160010\CAD\Data\Bridge_Plans\B_A8440_012_J5S3140_EndBent4.dgn 12:38:45 PM 10/17/2016

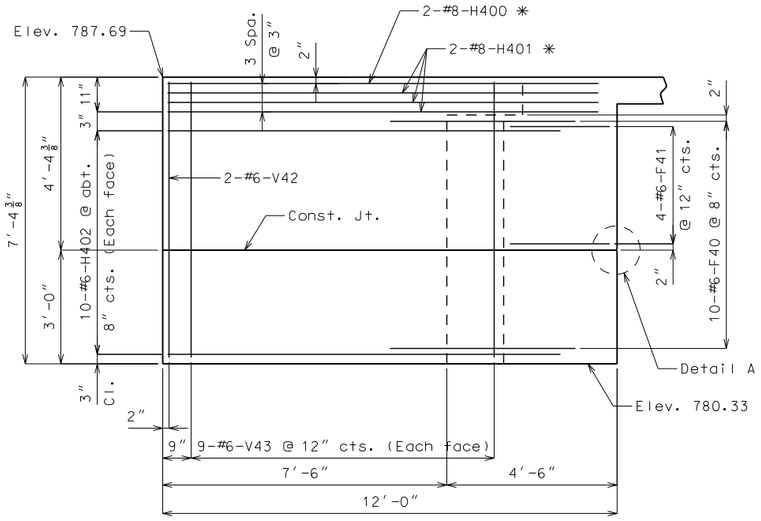

ELEVATION D-D

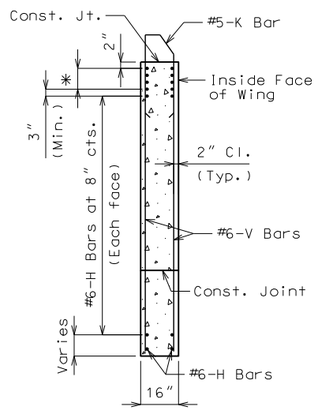

TYPICAL SECTION THRU WING

✳ #8-H Bars at 3″ cts. (Each face)(Place with grade)

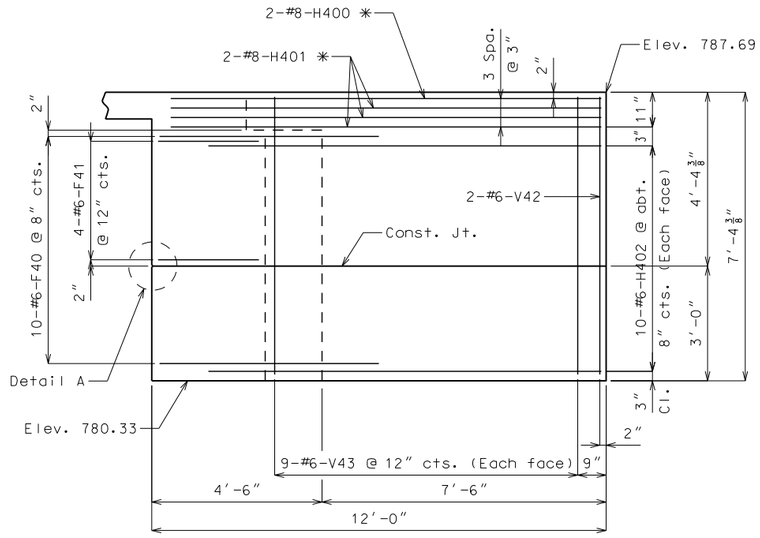

ELEVATION E-E

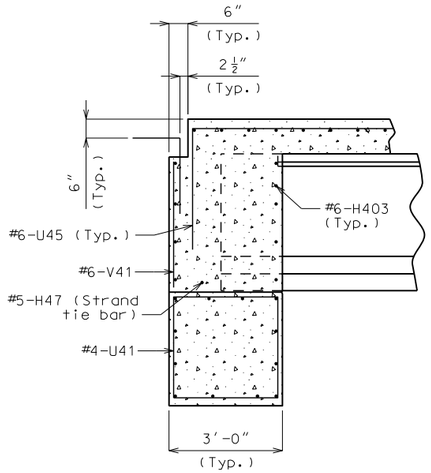

SECTION A-A

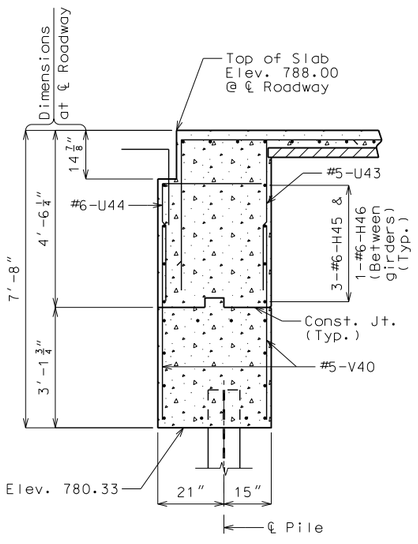

SECTION B-B

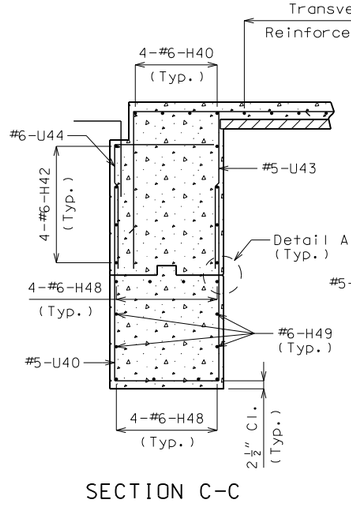

SECTION C-C

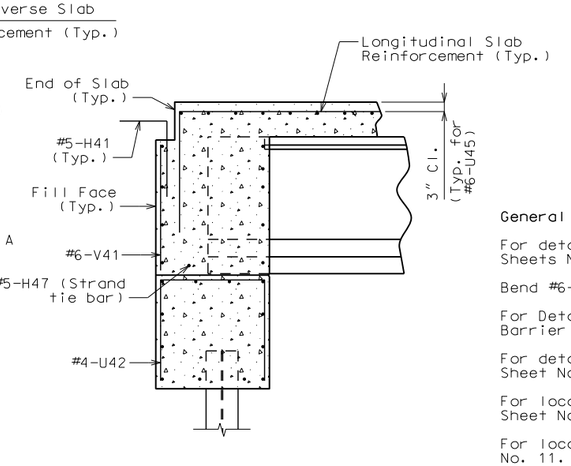

SECTION D-D

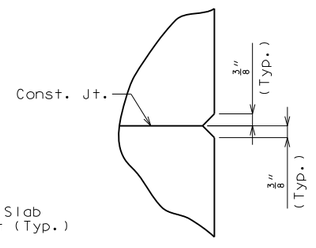

DETAIL A

General Notes:

For details of End Bent No. 4 not shown, see Sheets No. 11 & 12.

Bend #6-F40 bars in field to clear girders.

For Details and Reinforcement of the Safety Barrier Curb, see Sheets No. 24 thru 26.

For details of Vertical Drain at End Bents, see Sheet No. 6.

For location of #5-H47 (Strand Tie Bar), see Sheet No. 14 or 16.

For location of Elevations D-D & E-E, see Sheet No. 11.

For location of Sections A-A, B-B, C-C, & D-D, see Sheet No. 12.

For details of Bridge Approach Slab, see Sheet No. 27.

DETAILS OF END BENT NO. 4

Detailed Aug. 2016
Checked Aug. 2016

Note: This drawing is not to scale. Follow dimensions.

STATE OF MISSOURI
PROFESSIONAL ENGINEER
CHRISTOPHER T. HERSINGER
NUMBER PE-2012018080

THIS SHEET HAS BEEN SIGNED. SEALED AND DATED ELECTRONICALLY.

DATE PREPARED 10/3/2016

ROUTE	STATE
EE	MO
DISTRICT	SHEET NO.
BR	13

COUNTY: GASCONADE
JOB NO.: J5S3140
CONTRACT ID.:
PROJECT NO.:
BRIDGE NO.: A8440

DESCRIPTION	DATE

IF A SEAL IS PRESENT ON THIS SHEET IT HAS BEEN ELECTRONICALLY SEALED AND DATED.

MISSOURI HIGHWAYS AND TRANSPORTATION COMMISSION
105 WEST CAPITOL
JEFFERSON CITY, MO 65102
1-888-ASK-MODOT (1-888-275-6636)
HR GREEN, INC.
16020 SWINGLEY RIDGE ROAD, SUITE 205
ST. LOUIS, MISSOURI 63017
PHONE: (636) 519.0990
CORPORATE LICENSE #2002006608
HRGreen

Concrete for prestressed girders shall be Class A-1 with f'c = 8000 psi and f'ci = 6500 psi.

(+) indicates prestressing strand.

Use 24 strands with an initial prestress force of 1054.6 kips.

Prestressing tendons shall be uncoated, seven-wire, low-relaxation strands, 0.6 inch diameter in accordance with AASHTO M 203, Grade 270. Pretensioned members shall be in accordance with Sec 1029.

Fabricator shall be responsible for location and design of lifting devices.

* Girder top flange shall be steel troweled to a smooth finish for 8" at the edges, as shown. Apply two layers of 30-lb roofing felt as a bond breaker to this region only excluding where joint filler is applied. The center portion shall be rough finished by scarifying the surface transversely with a wire brush, and no laitance shall remain on the surface.

** At the contractor's option the location for bent-up strands may be varied from that shown for fully bonded strands only. The total number of bent-up strands shall not be changed. One strand tie bar is required for each layer of bent-up strands except at end bents which require one bar on the bottom layer of strands only.

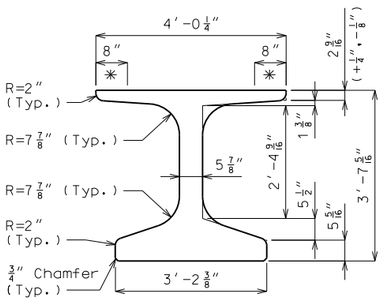

DIMENSIONS

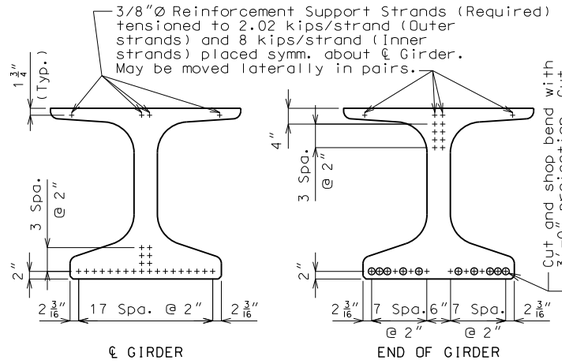

℄ GIRDER END OF GIRDER END BENT INTERMEDIATE BENT

STRAND ARRANGEMENTS

STRAND DETAILS AT GIRDER ENDS

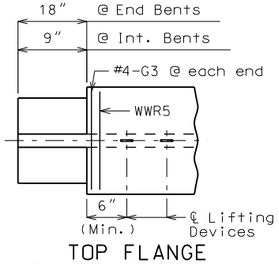

TOP FLANGE BLOCKOUT DETAIL

BILL OF REINFORCING STEEL - EACH GIRDER

NO.	SIZE & MARK	ACTUAL LENGTH	SHAPE	BENDING DIAGRAM
112	3 G1	2'-10"	8	
16	6 G2	4'-4"	11	
2	4 G3	3'-10"	20	

16" 16" 6" SHAPE 8

3'-5¼" 4½" Top leg 9½" SHAPE 11

SHAPE 20

WELDED WIRE REINFORCEMENT

(WWR4 & WWR5 as shown in Welded Wire Bending Diagrams)

SPAN NO.	WWR1 BAR SIZE	WWR1 S1	WWR1 L1	WWR1 J1	WWR2 BAR SIZE	WWR2 S2	WWR2 L2	WWR2 J2	WWR3 BAR SIZE	WWR3 S3	WWR3 L3
1	31	6"	3'-0"	7"	16	6"	14'-0"	7½"	8	6"	52'-0"
3	31	6"	3'-0"	7"	16	6"	14'-0"	7½"	8	6"	52'-0"

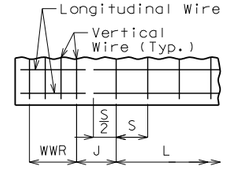

WELDED WIRE PLACEMENT DETAIL

S = Vertical wire spacing
L = Length of WWR mats
J = Distance between WWR mats

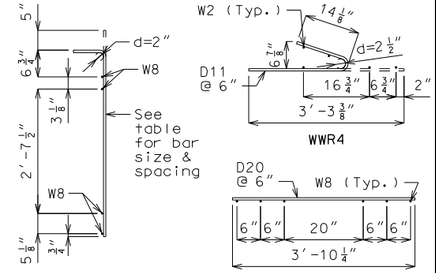

WWR1, WWR2 & WWR3 WWR5

WELDED WIRE BENDING DIAGRAMS

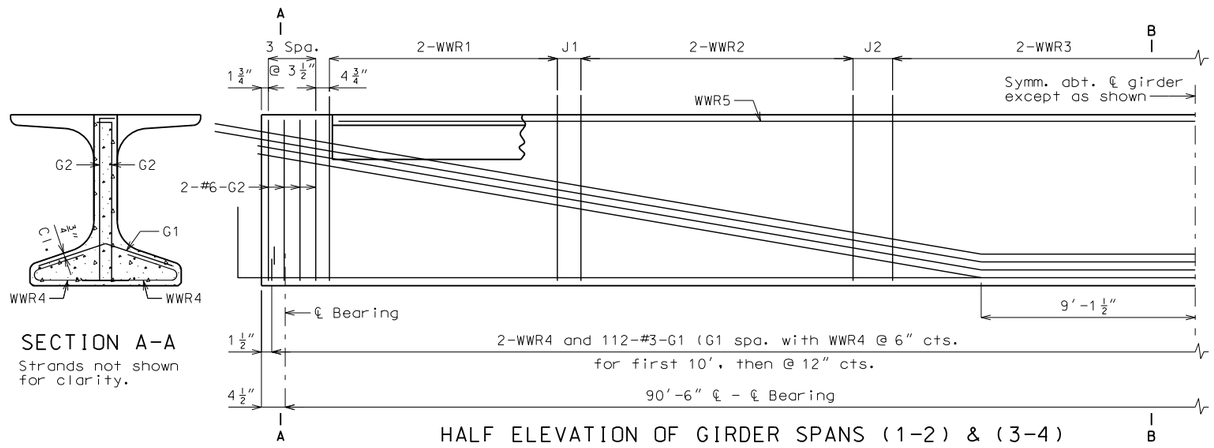

HALF ELEVATION OF GIRDER SPANS (1-2) & (3-4)

Exterior and interior girders are the same, except for coil ties, and coil inserts for slab drains. Reinforcement support strands not shown for clarity.

SECTION A-A

Strands not shown for clarity.

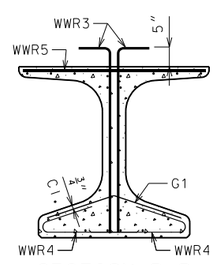

SECTION B-B

Strands not shown for clarity.

General Notes:

Reinforcing Steel:

All dimensions are out to out.

Hooks and bends shall be in accordance with the CRSI Manual of Standard Practice for Detailing Reinforced Concrete Structures, Stirrup and Tie Dimensions.

Actual bar lengths are measured along centerline of bar to the nearest inch.

Minimum clearance to reinforcing shall be 1", unless otherwise shown.

All bar reinforcement shall be Grade 60.

Welded Wire Reinforcement (WWR) shall be in accordance with AASHTO M 221.

WWR shall not be epoxy coated.

Miscellaneous:

Cost of 3/4"Ø coil tie rods placed in diaphragms will be considered completely covered by the contract unit price for Prestressed Concrete NU-Girder.

Coil ties shall be held in place in the forms by slotted wire-setting-studs projecting thru forms. Studs are to be left in place or replaced with temporary plugs until girders are erected, then replaced by coil tie rods.

The contractor shall provide bracing necessary for lateral and torsional stability of the girders during construction of the concrete slab and remove the bracing after the slab has attained 75% design strength. The cost for furnishing, installing, and removing bracing will be considered completely covered by the contract unit price for Prestressed Concrete NU-Girder.

For location of coil inserts at slab drains, see Sheet No. 20.

For location of coil ties and #6 bars, see Sheets No. 3, 11, & 18.

For Girder Camber Diagram, see Sheet No. 21.

Alternate bar reinforcing steel details are provided and may be used. The same type of reinforcing steel shall be used for all girders in all spans.

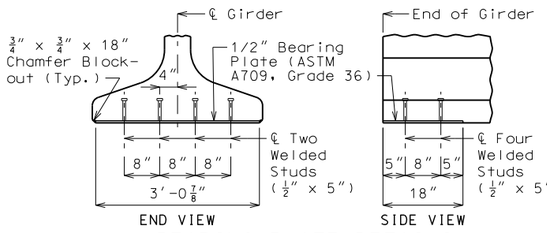

END VIEW SIDE VIEW

BEARING PLATE DETAILS

Galvanize the 1/2" bearing plate (ASTM A709 Grade 36) in accordance with ASTM A123.

Cost of furnishing, galvanizing, and installing the 1/2" bearing plate (ASTM A709 Grade 36) and welded studs in the prestressed girder will be considered completely covered by the contract unit price for Prestressed Concrete NU-Girder.

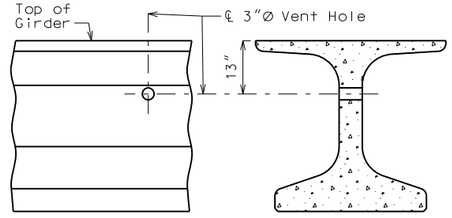

PART ELEVATION OF GIRDER PART SECTION NEAR VENT HOLE

DETAILS OF VENT HOLE

Place vent holes at or near upgrade 1/3 point of girders and clear reinforcing steel or strands by 1 1/2" minimum.

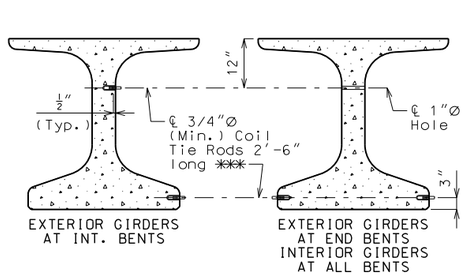

EXTERIOR GIRDERS AT INT. BENTS EXTERIOR GIRDERS AT END BENTS INTERIOR GIRDERS AT ALL BENTS

DETAILS OF COIL TIES

Cast 1"Ø hole horizontally in girder for #6 bar 5'-6" long and clear reinforcing steel or strands by 1 1/2" minimum.

*** Length of coil tie rods at exterior girders at end bents = 1'-7".

THIS SHEET HAS BEEN SIGNED, SEALED AND DATED ELECTRONICALLY.

DATE PREPARED 10/3/2016

ROUTE	STATE
EE	MO
DISTRICT	SHEET NO.
BR	14

COUNTY GASCONADE

JOB NO. J5S3140

CONTRACT ID.

PROJECT NO.

BRIDGE NO. A8440

NO.	DESCRIPTION	DATE

IF A SEAL IS PRESENT ON THIS SHEET IT HAS BEEN ELECTRONICALLY SEALED AND DATED.

MISSOURI HIGHWAYS AND TRANSPORTATION COMMISSION
105 WEST CAPITOL
JEFFERSON CITY, MO 65102
1-888-ASK-MODOT (1-888-275-6636)

HR GREEN, INC.
16020 SWINGLEY RIDGE ROAD, SUITE 205
ST. LOUIS, MISSOURI 63017
PHONE: (636) 519.0990
CORPORATE LICENSE #2002006608

Detailed Aug. 2016
Checked Aug. 2016

Note: This drawing is not to scale. Follow dimensions.

\\hrgwdfs004\Data\75160010\CAD\Data\Bridge_Plans\B_A8440_014_J5S3140_NU(91)_WWR.dgn 3:16:15 PM 10/3/2016

Concrete for prestressed girders shall be Class A-1 with f'c = 8500 psi and f'ci = 6500 psi.

(+) indicates prestressing strand.

Use 42 strands with an initial prestress force of 1845.6 kips.

Prestressing tendons shall be uncoated, seven-wire, low-relaxation strands, 0.6 inch diameter in accordance with AASHTO M 203, Grade 270. Pretensioned members shall be in accordance with Sec 1029.

Fabricator shall be responsible for location and design of lifting devices.

* Girder top flange shall be steel troweled to a smooth finish for 8" at the edges, as shown. Apply two layers of 30-lb roofing felt as a bond breaker to this region only excluding where joint filler is applied. The center portion shall be rough finished by scarifying the surface transversely with a wire brush, and no laitance shall remain on the surface.

** At the contractor's option the location for bent-up strands may be varied from that shown for fully bonded strands only. The total number of bent-up strands shall not be changed. One strand tie bar is required for each layer of bent-up strands except at end bents which require one bar on the bottom layer of strands only. No additional payment will be made if additional strand tie bars are required.

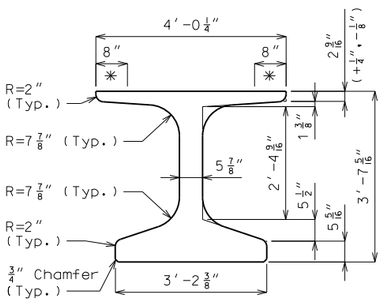

DIMENSIONS

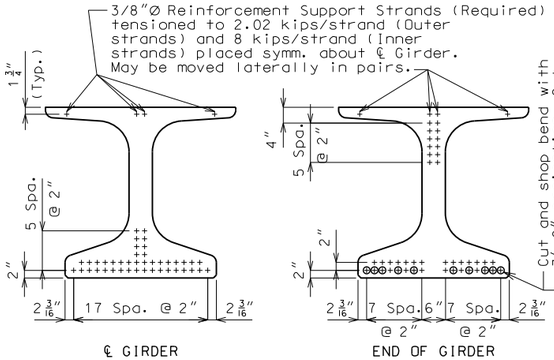

STRAND ARRANGEMENTS

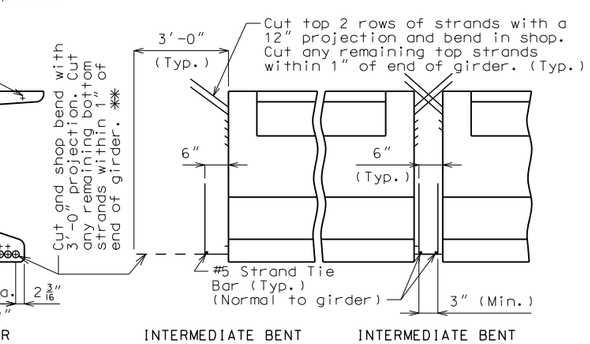

STRAND DETAILS AT GIRDER ENDS

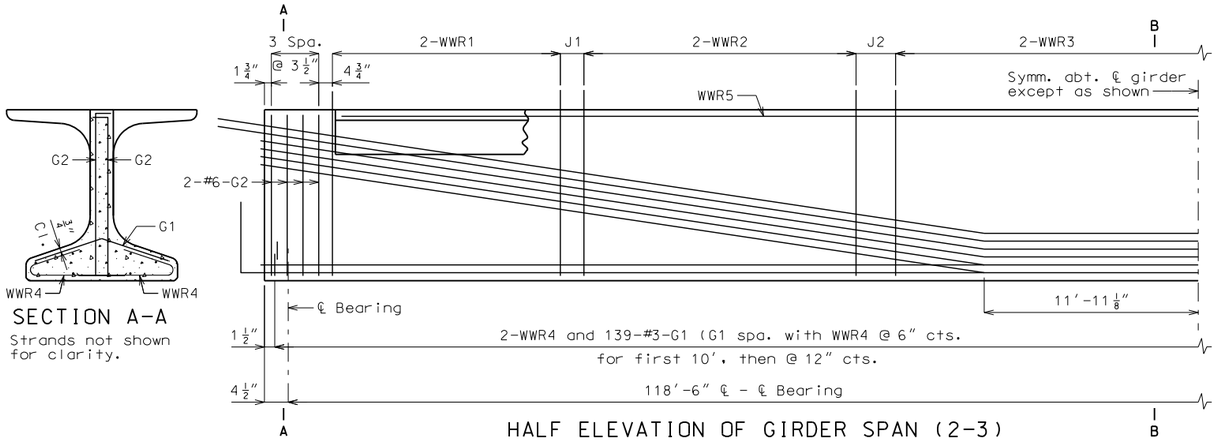

SECTION A-A

Strands not shown for clarity.

HALF ELEVATION OF GIRDER SPAN (2-3)

Exterior and interior girders are the same, except for coil ties, and coil inserts for slab drains. Reinforcement support strands not shown for clarity.

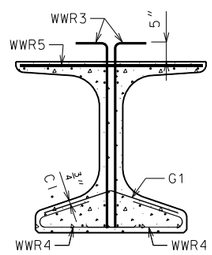

SECTION B-B

Strands not shown for clarity.

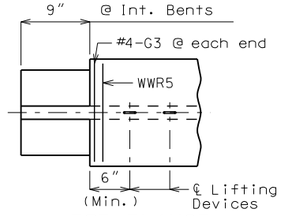

TOP FLANGE BLOCKOUT DETAIL

BILL OF REINFORCING STEEL - EACH GIRDER				
NO.	SIZE & MARK	ACTUAL LENGTH	SHAPE	BENDING DIAGRAM
139	3 G1	2'-10"	8	
16	6 G2	4'-4"	11	
2	4 G3	3'-10"	20	

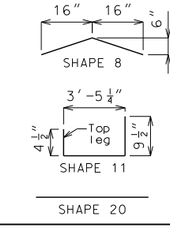

WELDED WIRE REINFORCEMENT

(WWR4 & WWR5 as shown in Welded Wire Bending Diagrams)

	WWR1				WWR2				WWR3		
SPAN NO.	BAR SIZE	S1	L1	J1	BAR SIZE	S2	L2	J2	BAR SIZE	S3	L3
2	31	5"	3'-9"	5 1/2"	16	6"	21'-6"	6"	8	6"	64'-0"

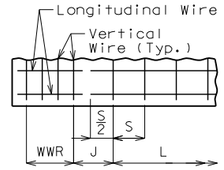

WELDED WIRE PLACEMENT DETAIL

S = Vertical wire spacing
L = Length of WWR mats
J = Distance between WWR mats

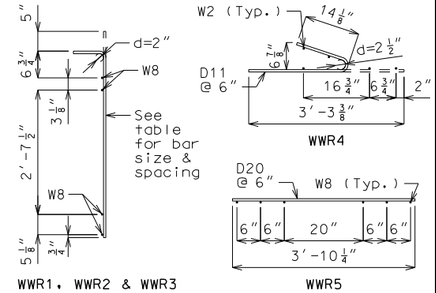

WELDED WIRE BENDING DIAGRAMS

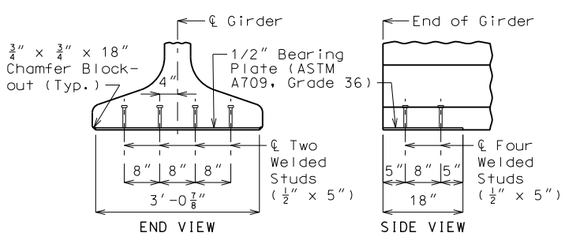

BEARING PLATE DETAILS

Galvanize the 1/2" bearing plate (ASTM A709 Grade 36) in accordance with ASTM A123.

Cost of furnishing, galvanizing, and installing the 1/2" bearing plate (ASTM A709 Grade 36) and welded studs in the prestressed girder will be considered completely covered by the contract unit price for Prestressed Concrete NU-Girder.

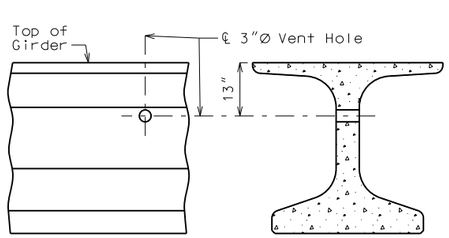

DETAILS OF VENT HOLE

Place vent holes at or near upgrade 1/3 point of girders and clear reinforcing steel or strands by 1 1/2" minimum.

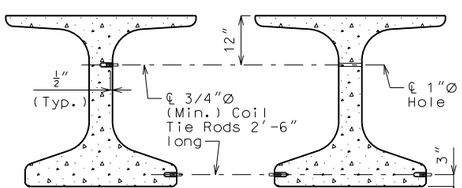

DETAILS OF COIL TIES

Cast 1"Ø hole horizontally in girder for #6 bar 5'-6" long and clear reinforcing steel or strands by 1 1/2" minimum.

General Notes:

Reinforcing Steel:

All dimensions are out to out.

Hooks and bends shall be in accordance with the CRSI Manual of Standard Practice for Detailing Reinforced Concrete Structures, Stirrup and Tie Dimensions.

Actual bar lengths are measured along centerline of bar to the nearest inch.

Minimum clearance to reinforcing shall be 1", unless otherwise shown.

All bar reinforcement shall be Grade 60.

Welded Wire Reinforcement (WWR) shall be in accordance with AASHTO M 221.

WWR shall not be epoxy coated.

Miscellaneous:

Cost of 3/4"Ø coil tie rods placed in diaphragms will be considered completely covered by the contract unit price for Prestressed Concrete NU-Girder.

Coil ties shall be held in place in the forms by slotted wire-setting-studs projecting thru forms. Studs are to be left in place or replaced with temporary plugs until girders are erected, then replaced by coil tie rods.

The contractor shall provide bracing necessary for lateral and torsional stability of the girders during construction of the concrete slab and remove the bracing after the slab has attained 75% design strength. The cost for furnishing, installing, and removing bracing will be considered completely covered by the contract unit price for Prestressed Concrete NU-Girder.

For location of coil inserts at slab drains, see Sheet No. 20.

For location of coil ties and #6 bars, see Sheet No. 18.

For Girder Camber Diagram, see Sheet No. 21.

Alternate bar reinforcing steel details are provided and may be used. The same type of reinforcing steel shall be used for all girders in all spans.

Detailed Aug. 2016
Checked Aug. 2016

Note: This drawing is not to scale. Follow dimensions.

STATE OF MISSOURI
CHRISTOPHER T. HERSINGER
NUMBER PE-2012018080
PROFESSIONAL ENGINEER

THIS SHEET HAS BEEN SIGNED, SEALED AND DATED ELECTRONICALLY.

DATE PREPARED 10/3/2016

ROUTE	STATE
EE	MO
DISTRICT	SHEET NO.
BR	15

COUNTY GASCONADE

JOB NO. J5S3140

CONTRACT ID.

PROJECT NO.

BRIDGE NO. A8440

IF A SEAL IS PRESENT ON THIS SHEET IT HAS BEEN ELECTRONICALLY SEALED AND DATED.

DESCRIPTION | DATE

MISSOURI HIGHWAYS AND TRANSPORTATION COMMISSION
105 WEST CAPITOL
JEFFERSON CITY, MO 65102
1-888-ASK-MODOT (1-888-275-6636)

HR GREEN, INC.
16020 SWINGLEY RIDGE ROAD, SUITE 205
ST. LOUIS, MISSOURI 63017
PHONE: (636) 519.0990
CORPORATE LICENSE #2002006608

Concrete for prestressed girders shall be Class A-1 with f'c = 8000 psi and f'ci = 6500 psi.

(+) indicates prestressing strand.

Use 24 strands with an initial prestress force of 1054.6 kips.

Prestressing tendons shall be uncoated, seven-wire, low-relaxation strands, 0.6 inch diameter in accordance with AASHTO M 203, Grade 270. Pretensioned members shall be in accordance with Sec 1029.

Fabricator shall be responsible for location and design of lifting devices.

✱ Girder top flange shall be steel troweled to a smooth finish for 8" at the edges, as shown. Apply two layers of 30-lb roofing felt as a bond breaker to this region only excluding where joint filler is applied. The center portion shall be rough finished by scarifying the surface transversely with a wire brush, and no laitance shall remain on the surface.

✱✱ At the contractor's option the location for bent-up strands may be varied from that shown for fully bonded strands only. The total number of bent-up strands shall not be changed. One strand tie bar is required for each layer of bent-up strands except at end bents which require one bar on the bottom layer of strands only.

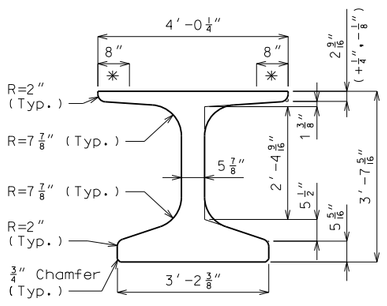

DIMENSIONS

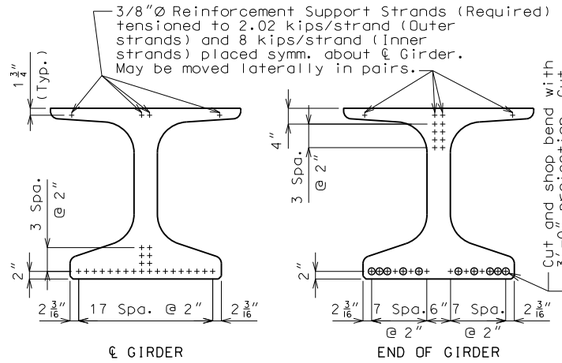

℄ GIRDER END OF GIRDER

STRAND ARRANGEMENTS

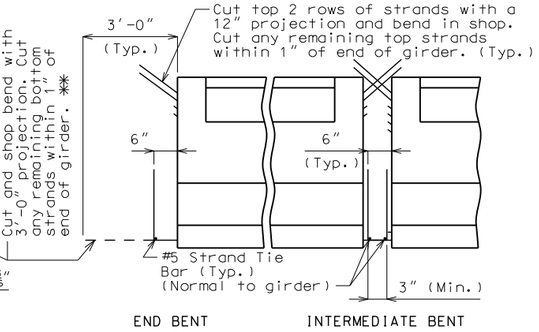

END BENT INTERMEDIATE BENT

STRAND DETAILS AT GIRDER ENDS

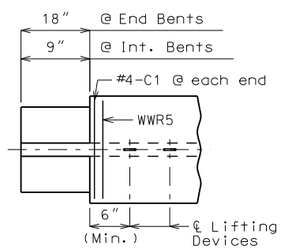

TOP FLANGE BLOCKOUT DETAIL

BILL OF REINFORCING STEEL - EACH GIRDER

NO.	SIZE & MARK	ACTUAL LENGTH	SHAPE	BENDING DIAGRAM
138	5 B1	5'-0"	11	
16	6 B2	4'-4"	11	
2	4 C1	3'-10"	20	
154	4 D1	4'-0"	9	

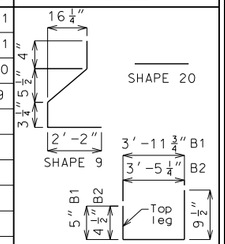

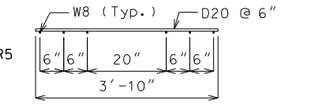

WELDED WIRE BENDING DIAGRAM

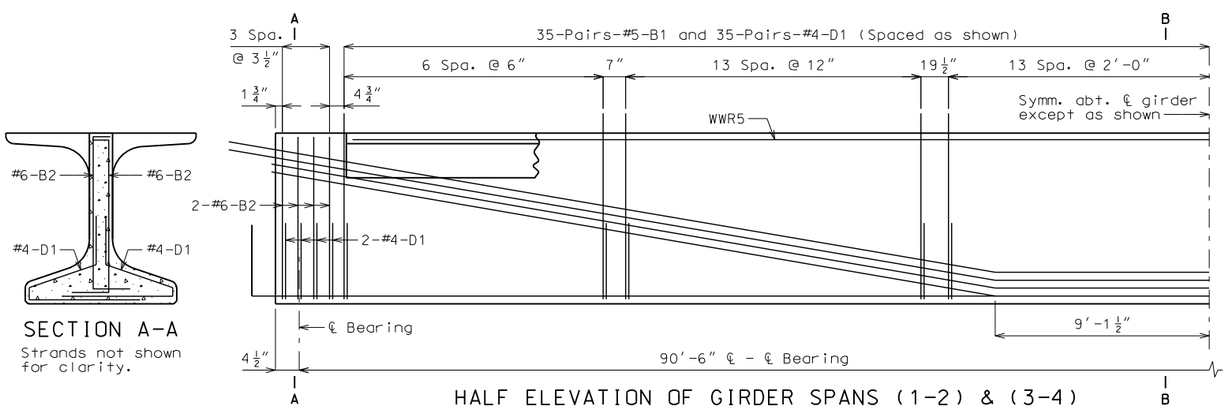

HALF ELEVATION OF GIRDER SPANS (1-2) & (3-4)

Exterior and interior girders are the same, except for coil ties, and coil inserts for slab drains. Reinforcement support strands not shown for clarity.

SECTION A-A

Strands not shown for clarity.

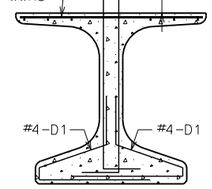

SECTION B-B

Strands not shown for clarity.

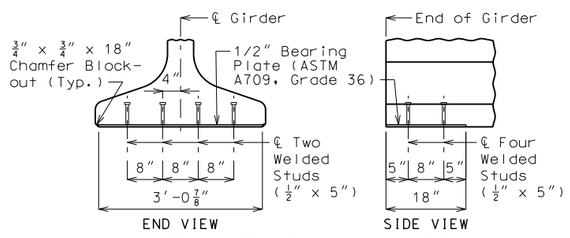

BEARING PLATE DETAILS

Galvanize the 1/2" bearing plate (ASTM A709 Grade 36) in accordance with ASTM A123.

Cost of furnishing, galvanizing, and installing the 1/2" bearing plate (ASTM A709 Grade 36) and welded studs in the prestressed girder will be considered completely covered by the contract unit price for Prestressed Concrete NU-Girder.

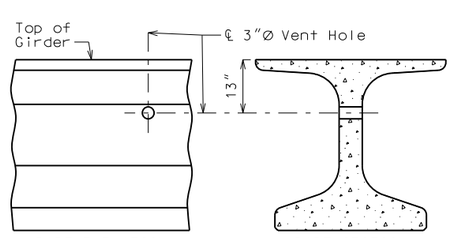

DETAILS OF VENT HOLE

Place vent holes at or near upgrade 1/3 point of girders and clear reinforcing steel or strands by 1 1/2".

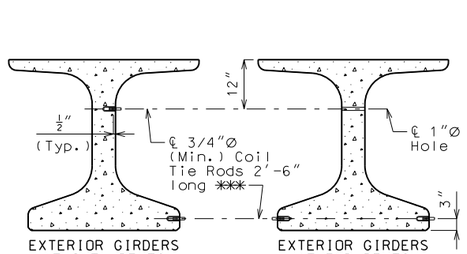

DETAILS OF COIL TIES

Cast 1"Ø hole horizontally in girder for #6 bar 5'-6" long and clear reinforcing steel or strands by 1 1/2" minimum.

✱✱✱ Length of coil tie rods at exterior girders at end bents = 1'-7".

General Notes:

Reinforcing Steel:

All dimensions are out to out.

Hooks and bends shall be in accordance with the CRSI Manual of Standard Practice for Detailing Reinforced Concrete Structures, Stirrup and Tie Dimensions.

Actual bar lengths are measured along centerline of bar to the nearest inch.

Minimum clearance to reinforcing shall be 1".

All bar reinforcement shall be Grade 60.

Welded Wire Reinforcement (WWR) shall be in accordance with AASHTO M 221.

The two D1 bars may be furnished as one bar at the fabricator's option.

All B1 bars shall be epoxy coated.

Miscellaneous:

Cost of 3/4"Ø coil tie rods placed in diaphragms will be considered completely covered by the contract unit price for Prestressed Concrete NU-Girder.

Coil ties shall be held in place in the forms by slotted wire-setting-studs projecting thru forms. Studs are to be left in place or replaced with temporary plugs until girders are erected, then replaced by coil tie rods.

The contractor shall provide bracing necessary for lateral and torsional stability of the girders during construction of the concrete slab and remove the bracing after the slab has attained 75% design strength. The cost for furnishing, installing, and removing bracing will be considered completely covered by the contract unit price for Prestressed Concrete NU-Girder.

For location of coil inserts at slab drains, see Sheet No. 20.

For location of coil ties and #6 bars, see Sheets No. 3, 11, & 18.

For Girder Camber Diagram, see Sheet No. 21.

Alternate bar reinforcing steel details are provided and may be used. The same type of reinforcing steel shall be used for all girders in all spans.

ALTERNATE BAR REINFORCING STEEL DETAILS

Detailed Aug. 2016
Checked Aug. 2016

Note: This drawing is not to scale. Follow dimensions.

STATE OF MISSOURI
CHRISTOPHER T. HERSINGER
NUMBER PE-2012018080
PROFESSIONAL ENGINEER
THIS SHEET HAS BEEN SIGNED, SEALED AND DATED ELECTRONICALLY.

DATE PREPARED 10/3/2016
ROUTE EE
STATE MO
DISTRICT BR
SHEET NO. 16
COUNTY GASCONADE
JOB NO. J5S3140
CONTRACT ID.
PROJECT NO.
BRIDGE NO. A8440

IF A SEAL IS PRESENT ON THIS SHEET IT HAS BEEN ELECTRONICALLY SEALED AND DATED.

DESCRIPTION
DATE

MISSOURI HIGHWAYS AND TRANSPORTATION COMMISSION
105 WEST CAPITOL
JEFFERSON CITY, MO 65102
1-888-ASK-MODOT (1-888-275-6636)
HR GREEN, INC.
16020 SWINGLEY RIDGE ROAD, SUITE 205
ST. LOUIS, MISSOURI 63017
PHONE: (636) 519.0990
CORPORATE LICENSE #2002006608
HRGreen

Concrete for prestressed girders shall be Class A-1 with f'c = 8500 psi and f'ci = 6500 psi.

(+) indicates prestressing strand.

Use 42 strands with an initial prestress force of 1845.6 kips.

Prestressing tendons shall be uncoated, seven-wire, low-relaxation strands, 0.6 inch diameter in accordance with AASHTO M 203, Grade 270. Pretensioned members shall be in accordance with Sec 1029.

Fabricator shall be responsible for location and design of lifting devices.

* Girder top flange shall be steel troweled to a smooth finish for 8" at the edges, as shown. Apply two layers of 30-lb roofing felt as a bond breaker to this region only excluding where joint filler is applied. The center portion shall be rough finished by scarifying the surface transversely with a wire brush, and no laitance shall remain on the surface.

** At the contractor's option the location for bent-up strands may be varied from that shown for fully bonded strands only. The total number of bent-up strands shall not be changed. One strand tie bar is required for each layer of bent-up strands except at end bents which require one bar on the bottom layer of strands only. No additional payment will be made if additional strand tie bars are required.

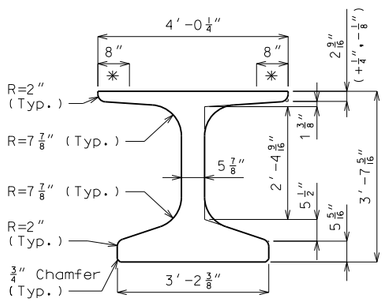

DIMENSIONS

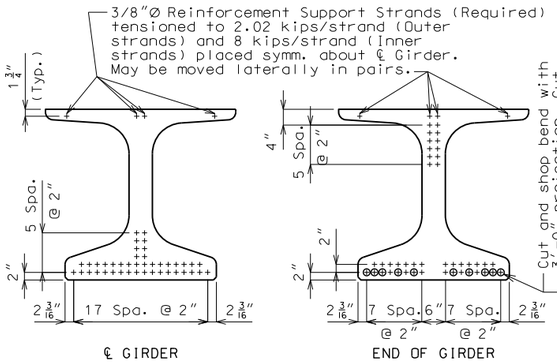

℄ GIRDER END OF GIRDER

STRAND ARRANGEMENTS

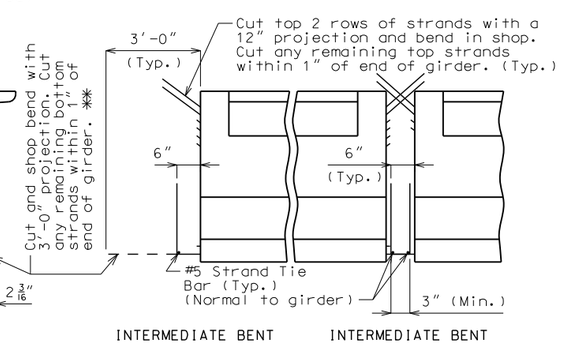

INTERMEDIATE BENT INTERMEDIATE BENT

STRAND DETAILS AT GIRDER ENDS

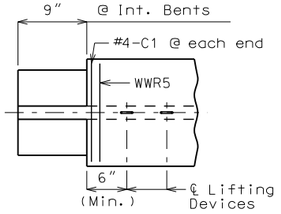

TOP FLANGE BLOCKOUT DETAIL

BILL OF REINFORCING STEEL - EACH GIRDER

NO.	SIZE & MARK	ACTUAL LENGTH	SHAPE	BENDING DIAGRAM
186	5 B1	5'-0"	11	
16	6 B2	4'-4"	11	
2	4 C1	3'-10"	20	
202	4 D1	4'-0"	9	

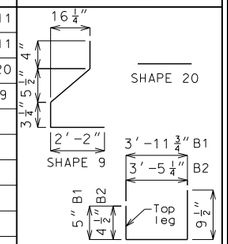

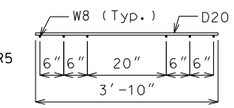

WELDED WIRE BENDING DIAGRAM

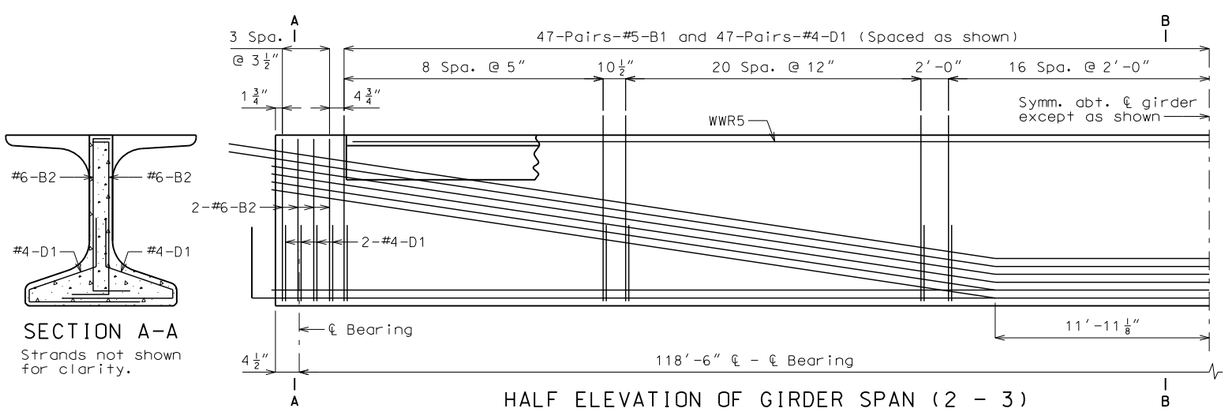

SECTION A-A
Strands not shown for clarity.

HALF ELEVATION OF GIRDER SPAN (2 - 3)

Exterior and interior girders are the same, except for coil ties, and coil inserts for slab drains. Reinforcement support strands not shown for clarity.

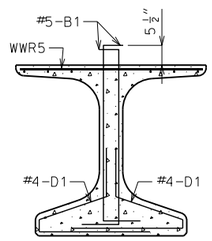

SECTION B-B
Strands not shown for clarity.

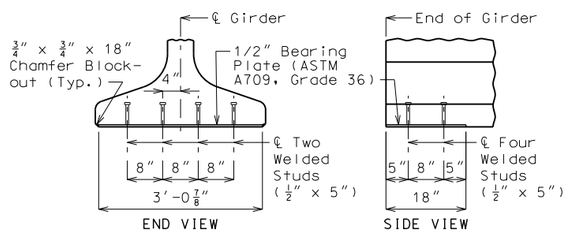

BEARING PLATE DETAILS

Galvanize the 1/2" bearing plate (ASTM A709 Grade 36) in accordance with ASTM A123.

Cost of furnishing, galvanizing, and installing the 1/2" bearing plate (ASTM A709 Grade 36) and welded studs in the prestressed girder will be considered completely covered by the contract unit price for Prestressed Concrete NU-Girder.

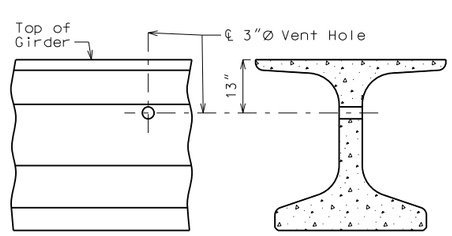

DETAILS OF VENT HOLE

Place vent holes at or near upgrade 1/3 point of girders and clear reinforcing steel or strands by 1 1/2" minimum.

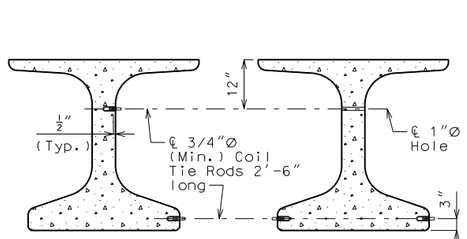

DETAILS OF COIL TIES

Cast 1"Ø hole horizontally in girder for #6 bar 5'-6" long and clear reinforcing steel or strands by 1 1/2" minimum.

General Notes:

Reinforcing Steel:

All dimensions are out to out.

Hooks and bends shall be in accordance with the CRSI Manual of Standard Practice for Detailing Reinforced Concrete Structures, Stirrup and Tie Dimensions.

Actual bar lengths are measured along centerline of bar to the nearest inch.

Minimum clearance to reinforcing shall be 1".

All bar reinforcement shall be Grade 60.

Welded Wire Reinforcement (WWR) shall be in accordance with AASHTO M 221.

The two D1 bars may be furnished as one bar at the fabricator's option.

All B1 bars shall be epoxy coated.

Miscellaneous:

Cost of 3/4"Ø coil tie rods placed in diaphragms will be considered completely covered by the contract unit price for Prestressed Concrete NU-Girder.

Coil ties shall be held in place in the forms by slotted wire-setting-studs projecting thru forms. Studs are to be left in place or replaced with temporary plugs until girders are erected, then replaced by coil tie rods.

The contractor shall provide bracing necessary for lateral and torsional stability of the girders during construction of the concrete slab and remove the bracing after the slab has attained 75% design strength. The cost for furnishing, installing, and removing bracing will be considered completely covered by the contract unit price for Prestressed Concrete NU-Girder.

For location of coil inserts at slab drains, see Sheet No. 20.

For location of coil ties and #6 bars, see Sheets No. 18.

For Girder Camber Diagram, see Sheet No. 21.

Alternate bar reinforcing steel details are provided and may be used. The same type of reinforcing steel shall be used for all girders in all spans.

ALTERNATE BAR REINFORCING STEEL DETAILS

Detailed Aug. 2016
Checked Aug. 2016

Note: This drawing is not to scale. Follow dimensions.

STATE OF MISSOURI
CHRISTOPHER T. HERSINGER
NUMBER PE-2012018080
PROFESSIONAL ENGINEER
THIS SHEET HAS BEEN SIGNED, SEALED AND DATED ELECTRONICALLY.

DATE PREPARED 10/3/2016
ROUTE EE | STATE MO
DISTRICT BR | SHEET NO. 17
COUNTY GASCONADE
JOB NO. J5S3140
CONTRACT ID.
PROJECT NO.
BRIDGE NO. A8440

DESCRIPTION | DATE

MISSOURI HIGHWAYS AND TRANSPORTATION COMMISSION
105 WEST CAPITOL
JEFFERSON CITY, MO 65102
1-888-ASK-MODOT (1-888-275-6636)
HR GREEN, INC.
16020 SWINGLEY RIDGE ROAD, SUITE 205
ST. LOUIS, MISSOURI 63017
PHONE: (636) 519.0990
CORPORATE LICENSE #2002006608
HRGreen

IF A SEAL IS PRESENT ON THIS SHEET IT HAS BEEN ELECTRONICALLY SEALED AND DATED.

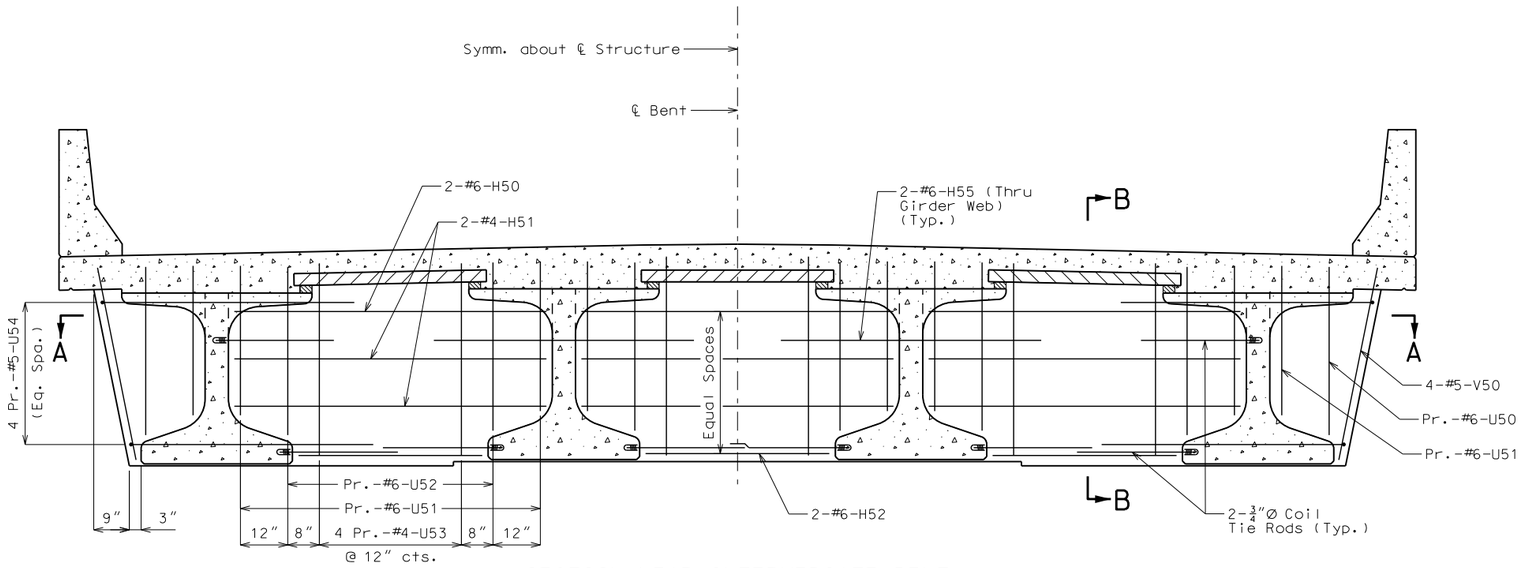

SECTION NEAR INTERMEDIATE BENT

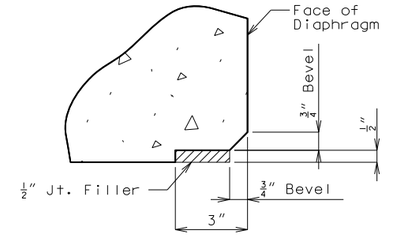

DETAIL A

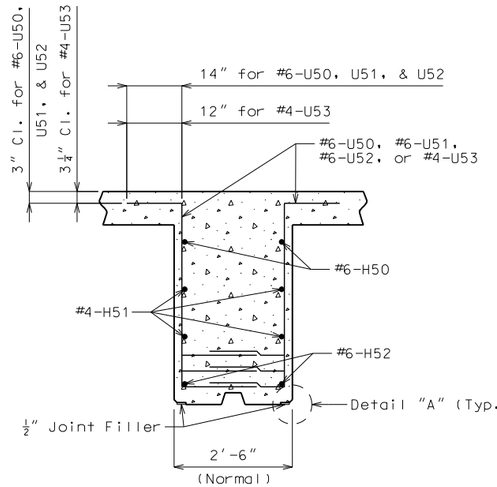

SECTION B-B

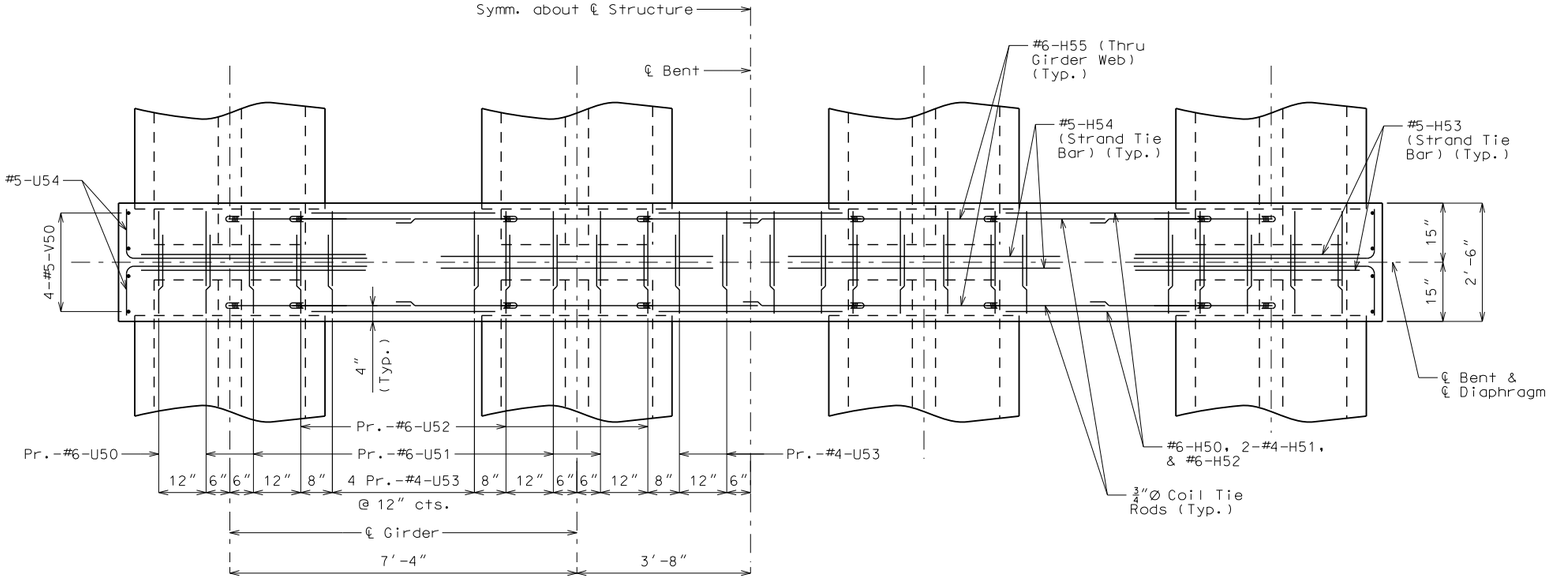

SECTION A-A

Notes:

For location of Coil Tie Rods and #5-H54 (Strand Tie Bar), see Girder Sheets.

Diaphragm at intermediate bent shall be built vertical.

DETAILS OF CONCRETE DIAPHRAGMS AT INT. BENTS NO. 2 & 3

Detailed Aug. 2016
Checked Aug. 2016

Note: This drawing is not to scale. Follow dimensions.

STATE OF MISSOURI
CHRISTOPHER T. HERSINGER
NUMBER PE-2012018080
PROFESSIONAL ENGINEER

THIS SHEET HAS BEEN SIGNED, SEALED AND DATED ELECTRONICALLY.

DATE PREPARED 10/3/2016

ROUTE	STATE
EE	MO
DISTRICT	SHEET NO.
BR	18

COUNTY GASCONADE

JOB NO. J5S3140

CONTRACT ID.

PROJECT NO.

BRIDGE NO. A8440

DESCRIPTION	DATE

MISSOURI HIGHWAYS AND TRANSPORTATION COMMISSION
105 WEST CAPITOL
JEFFERSON CITY, MO 65102
1-888-ASK-MODOT (1-888-275-6636)

HR GREEN, INC.
16020 SWINGLEY RIDGE ROAD, SUITE 205
ST. LOUIS, MISSOURI 63017
PHONE: (636) 519.0990
CORPORATE LICENSE #2002006608
HRGreen

IF A SEAL IS PRESENT ON THIS SHEET IT HAS BEEN ELECTRONICALLY SEALED AND DATED.

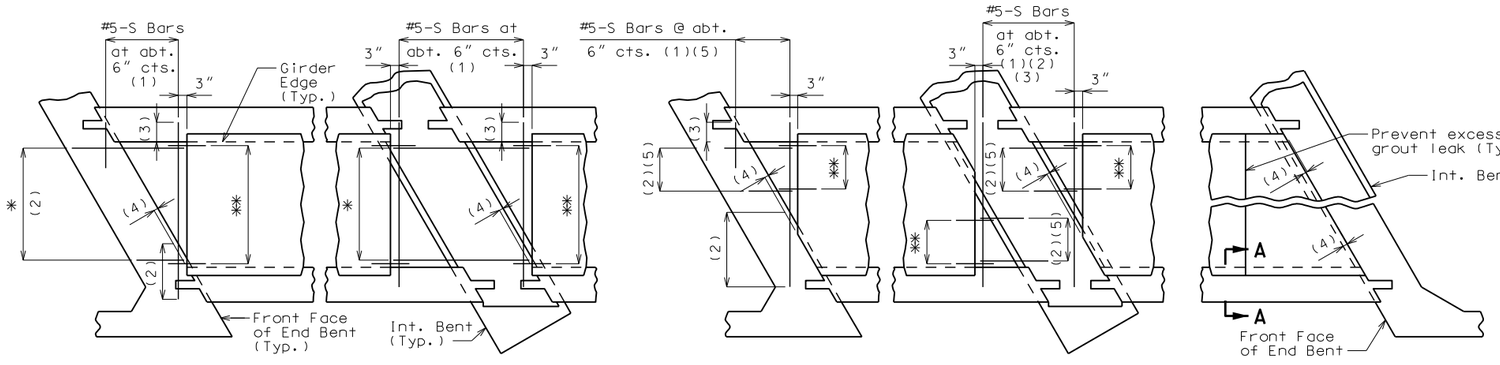

SQUARED END PANELS OR TRUNCATED END PANELS

PLAN SHOWING PANELS PLACEMENT

* #5-S Bars at abt. 9" cts. (1)
** #3-P1 at 12" cts. (End panels only)

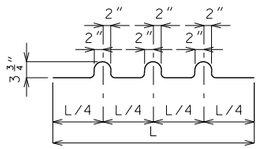

BENDING DIAGRAM FOR U1 BAR

U1 Bars may be oriented at right angles to location and spacing shown. U1 Bars shall be placed between P1 bars.

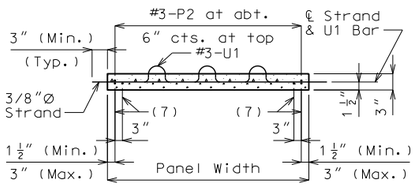

SECTION B-B

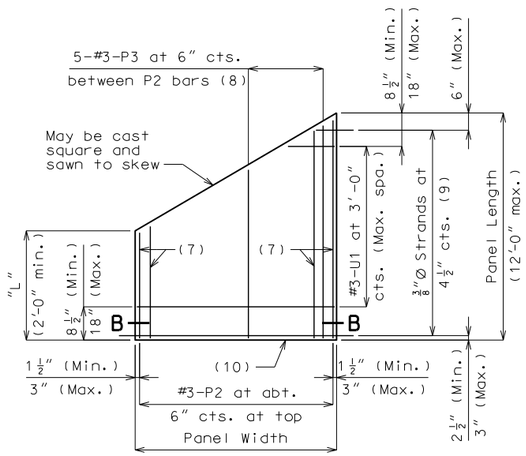

PLAN OF OPTIONAL SKEWED END PANEL

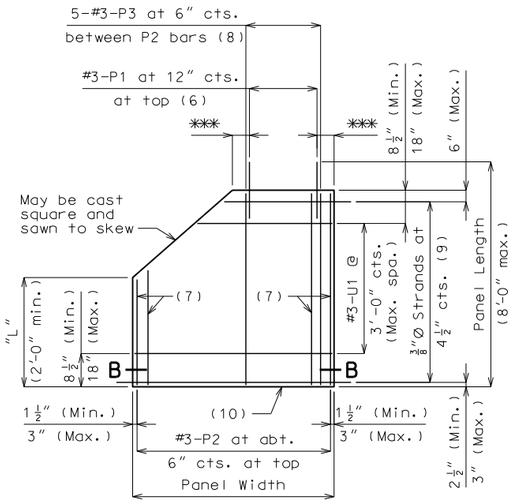

PLAN OF OPTIONAL TRUNCATED END PANEL

*** 3" (Min.), 6" (Max.)

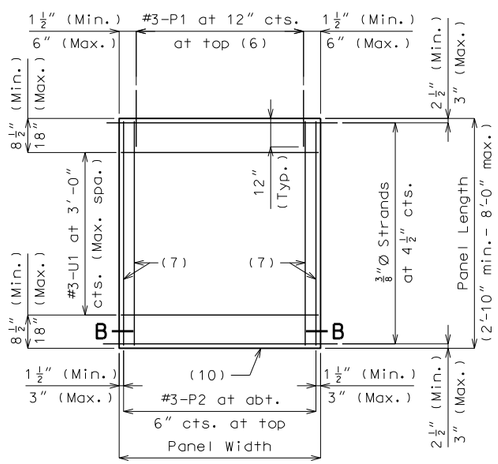

PLAN OF SQUARED PANEL

SKEWED END PANELS

Joint Filler Dimensions		
Width	Height	
	Min.	Max.
3"	1"	4"

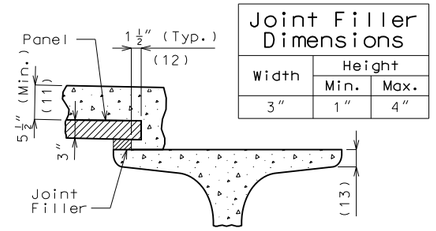

SECTION A-A

Reference Notes:

Plan of Panels Placement:

(1) S-bars shown are bottom steel in slab between panels and used with squared and truncated end panels only.

(2) Extend S-bars 18 inches beyond the front face of end bents and int. bents for squared and truncated end panels only.

(3) Extend S-bars 9 inches beyond edge of girder (Typ.).

(4) End panels shall be dimensioned 1/2" min. to 1 1/2" max. from the inside face of diaphragm.

(5) For truncated end panels, use a min. of #5-S bars at 6" crossings in openings, or min. 4x4-W7xW7.

Plans of Panels:

(6) For end panels only, P1 bars shall be 2'-0" in length and embedded 12". P1 bars will not be required for panels at squared integral end bents.

(7) #3-P2 bars near edge of panel at bottom (under strands).

(8) Use #3-P3 bars if panel is skewed 45° or greater.

(9) Any strand 2'-0" or shorter shall have a #4 reinforcing bar on each side of it, centered between strands. Strands 2'-0" or shorter may then be debonded at the fabricator's option.

(10) Optional 1/2" x 45° Chamfer one or both sides at bottom.

Section A-A:

(11) Slab thickness over prestressed panels varies due to girder camber. In order to maintain minimum slab thickness, it may be necessary to raise the grade uniformly throughout the structure. No payment will be made for additional labor or materials required for necessary grade adjustment.

(12) Contractor shall ensure proper consolidation under and between panels.

(13) At the contractor's option, the variation in slab thickness over prestressed panels may be eliminated or reduced by increasing and varying the girder top flange thickness. Dimensions shall be shown on the shop drawings.

General Notes:

Prestressed Panels:

Concrete for prestressed panels shall be Class A-1 with f'c = 6,000 psi, f'ci = 4,000 psi.

The top surface of all panels shall receive a scored finish with a depth of scoring of 1/8" perpendicular to the prestressing strands in the panels.

Prestressing tendons shall be high-tensile strength, uncoated, seven-wire, low-relaxation strands for prestressed concrete in accordance with AASHTO M 203 Grade 270, with nominal diameter of strand = 3/8" and nominal area = 0.085 sq.in. and minimum ultimate strength = 22.95 kips (270 ksi). Larger strands may be used with the same spacing and initial tension.

Initial prestressing force = 17.2 kips/strand.

The method and sequence of releasing the strands shall be shown on the shop drawings.

Suitable anchorage devices for lifting panels may be cast in panels, provided the devices are shown on the shop drawings and approved by the engineer. Panel lengths shall be determined by the contractor and shown on the shop drawings.

When squared end panels are used at skewed bents, the skewed portion shall be cast full depth. No separate payment will be made for additional concrete and reinforcing required.

Support from diaphragm forms is required under the optional skewed end until cast-in-place concrete has reached 3,000 psi compressive strength.

Prestressed panels shall be brought to saturated surface-dry (SSD) condition just prior to the deck pour. There shall be no free standing water on the panels or in the area to be cast.

The prestressed panel quantities are not included in the table of estimated quantities for the slab.

Reinforcing Steel:

All dimensions are out to out.

Hooks and bends shall be in accordance with the CRSI Manual of Standard Practice for Detailing Reinforced Concrete Structures, Stirrup and Tie Dimensions.

Minimum clearance to reinforcing steel shall be 1 1/2", unless otherwise shown.

If U1 bars interfere with placement of slab steel, U1 loops may be bent over, as necessary, to clear slab steel.

Deformed welded wire reinforcement (WWR) providing a minimum area of reinforcing perpendicular to strands of 0.22 sq in./ft, with spacing parallel to strands sufficient to ensure proper handling, may be used in lieu of the #3-P2 bars shown. Wire diameter shall not be larger than 0.375 inch. The above alternative reinforcement criteria may be used in lieu of the #3-P3 bars, when required, and placed over a width not less than 2 feet.

The following reinforcing steel shall be tied securely to the strands with the following maximum spacing in each direction:
#3-P2 bars at 16 inches.
WWR at 24 inches.

The #3-U1 bars shall be tied securely to #3-P2 bars, to WWR or to strands (when placed between P1 bars) at about 3-foot centers.

Minimum reinforcement steel length shall be 2'-0".

All reinforcement other than prestressing strands shall be epoxy coated.

Precast panels may be in contact with stirrup reinforcing in diaphragms.

S-bars are not listed in the bill of reinforcing.

Cost of S-bars will be considered completely covered by the contract unit price for the slab.

Joint Filler:

Joint filler shall be preformed fiber expansion joint material in accordance with Sec 1057 or expanded or extruded polystyrene bedding material in accordance with Sec 1073.

Use Slab Haunching Diagram on Sheet No. 21 for determining thickness of joint filler within the limits noted in the table of Joint Filler Dimensions.

Thicker material may be used on one or both sides of the girder to reduce cast-in-place concrete thickness to within tolerances.

The same thickness of preformed fiber expansion joint material shall be used under any one edge of any panel except at locations where top flange thickness may be stepped. The maximum change in thickness between adjacent panels shall be 1/4 inch. The polystyrene bedding material may be cut with a transition to match haunch height above top of flange.

Joint filler shall be glued to the girder. When thickness exceeds 1 1/2 inches, the joint filler shall be glued top and bottom. The glue used shall be the type recommended by the joint filler manufacturer.

Edges of panels shall be uniformly seated on the joint filler before slab reinforcement is placed.

DETAILS OF PRESTRESSED PANELS

Detailed Aug. 2016
Checked Aug. 2016

Note: This drawing is not to scale. Follow dimensions.

STATE OF MISSOURI
CHRISTOPHER T. HERSINGER
NUMBER PE-2012018080
PROFESSIONAL ENGINEER

THIS SHEET HAS BEEN SIGNED, SEALED AND DATED ELECTRONICALLY.

DATE PREPARED 10/3/2016

ROUTE	STATE
EE	MO
DISTRICT	SHEET NO.
BR	19

COUNTY GASCONADE
JOB NO. J5S3140
CONTRACT ID.
PROJECT NO.
BRIDGE NO. A8440

DESCRIPTION | DATE

IF A SEAL IS PRESENT ON THIS SHEET IT HAS BEEN ELECTRONICALLY SEALED AND DATED.

MISSOURI HIGHWAYS AND TRANSPORTATION COMMISSION
105 WEST CAPITOL
JEFFERSON CITY, MO 65102
1-888-ASK-MODOT (1-888-275-6636)

HR GREEN, INC.
16020 SWINGLEY RIDGE ROAD, SUITE 205
ST. LOUIS, MISSOURI 63017
PHONE: (636) 519.0990
CORPORATE LICENSE #2002006608
HRGreen

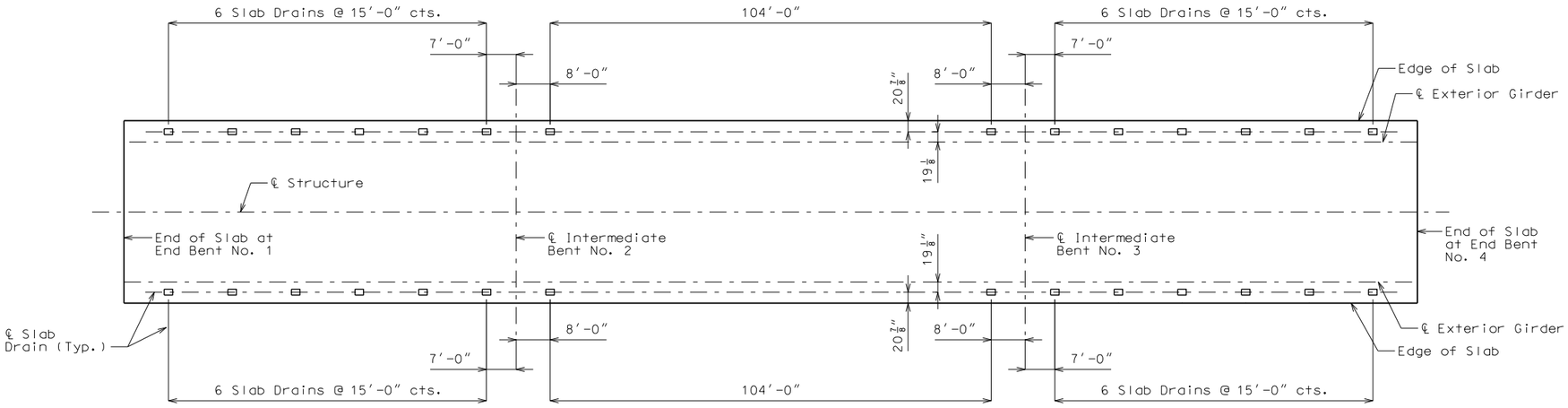

PLAN OF SLAB SHOWING SLAB DRAIN LOCATIONS

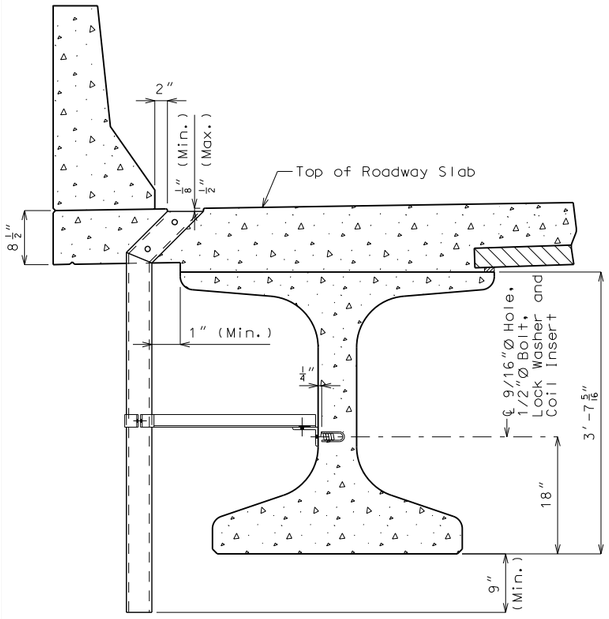

PART SECTION NEAR DRAIN

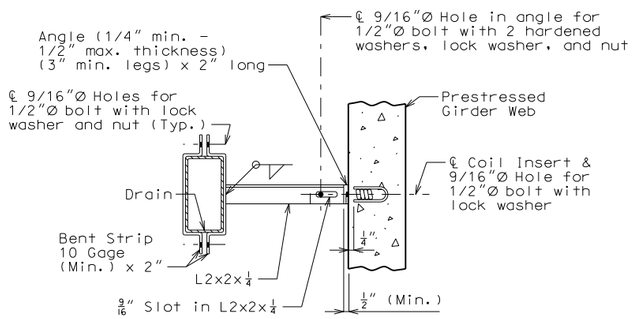

PART SECTION SHOWING BRACKET ASSEMBLY

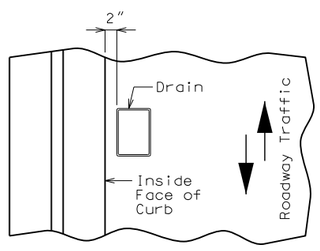

PART PLAN OF SLAB AT DRAIN

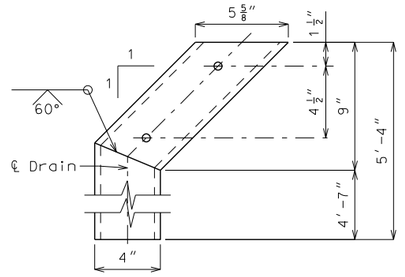

ELEVATION OF DRAIN

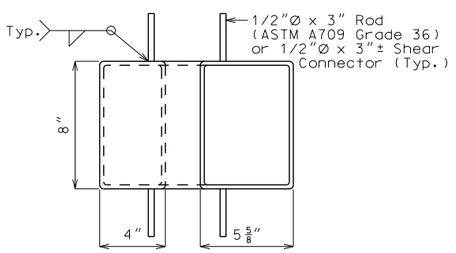

PLAN OF STEEL DRAIN

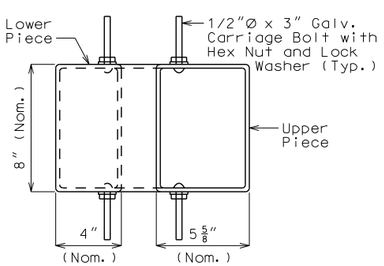

PLAN OF OPTIONAL FRP DRAIN

General Notes:

Contractor shall have the option to construct either steel or FRP slab drains. All drains shall be of same type.

Slab drain bracket assembly shall be ASTM A709 Grade 36 steel.

Locate drains in slab by dimensions shown in Part Section Near Drain.

Reinforcing steel shall be shifted to clear drains.

The coil inserts and bracket assembly shall be galvanized in accordance with ASTM A123.

All bolts, hardened washers, lock washers and nuts shall be galvanized in accordance with ASTM A153.

Shop drawings will not be required for the slab drains and the bracket assembly.

The coil insert required for the bracket assembly attachment shall be located on the prestressed girder shop drawings.

Coil inserts shall have a concrete pull-out strength (ultimate load) of at least 2,500 pounds in 5,000 psi concrete.

The bolt required to attach the slab drain bracket assembly to the prestressed girder web shall be supplied by the prestressed girder fabricator.

Notes for Steel Drain:

Slab drains may be fabricated of either 1/4" welded sheets of ASTM A709 Grade 36 steel or from 1/4" structural steel tubing ASTM A500 or A501.

Outside dimensions of drains are 8" x 4".

The drains shall be galvanized in accordance with ASTM A123.

Notes for FRP Drain:

Drains shall be machine filament-wound thermosetting resin tubing meeting the requirements of ASTM D2996 with the following exceptions:

Shape of drains shall be rectangular with outside nominal dimensions of 8" x 4".

Minimum reinforced wall thickness shall be 1/4 inch.

The resin used shall be ultraviolet (UV) resistant and/or have UV inhibitors mixed throughout. Drains may have an exterior coating for additional UV resistance.

The color of the slab drain shall be Gray (Federal Standard #26373). The color shall be uniform throughout the resin and any coating used.

The combination of materials used in the manufacture of the drains shall be tested for UV resistance in accordance with ASTM D4329 Cycle A. The representative material shall withstand at least 500 hours of testing with only minor discoloration and without any physical deterioration. The contractor shall furnish the results of the required ultraviolet testing prior to acceptance of the slab drains.

At the contractor's option, drains may be field cut. The method of cutting FRP slab drain shall be as recommended by the manufacturer to ensure a smooth, chip free cut.

Both upper and lower drain pieces shall be rigidly connected to each other. Drain flow shall not be obstructed. Approval of the engineer is required.

No additional payment will be made for this substitution.

SLAB DRAIN DETAILS

Detailed Aug. 2016
Checked Aug. 2016

Note: This drawing is not to scale. Follow dimensions.

STATE OF MISSOURI
CHRISTOPHER T. HERSINGER
NUMBER PE-2012018080
PROFESSIONAL ENGINEER

THIS SHEET HAS BEEN SIGNED, SEALED AND DATED ELECTRONICALLY.

DATE PREPARED: 10/3/2016
ROUTE: EE | STATE: MO
DISTRICT: BR | SHEET NO.: 20
COUNTY: GASCONADE
JOB NO.: J5S3140
CONTRACT ID.:
PROJECT NO.:
BRIDGE NO.: A8440

DESCRIPTION | DATE

IF A SEAL IS PRESENT ON THIS SHEET IT HAS BEEN ELECTRONICALLY SEALED AND DATED.

MISSOURI HIGHWAYS AND TRANSPORTATION COMMISSION
105 WEST CAPITOL
JEFFERSON CITY, MO 65102
1-888-ASK-MODOT (1-888-275-6636)

HR GREEN, INC.
16020 SWINGLEY RIDGE ROAD, SUITE 205
ST. LOUIS, MISSOURI 63017
PHONE: (636) 519.0990
CORPORATE LICENSE #2002006608
HRGreen

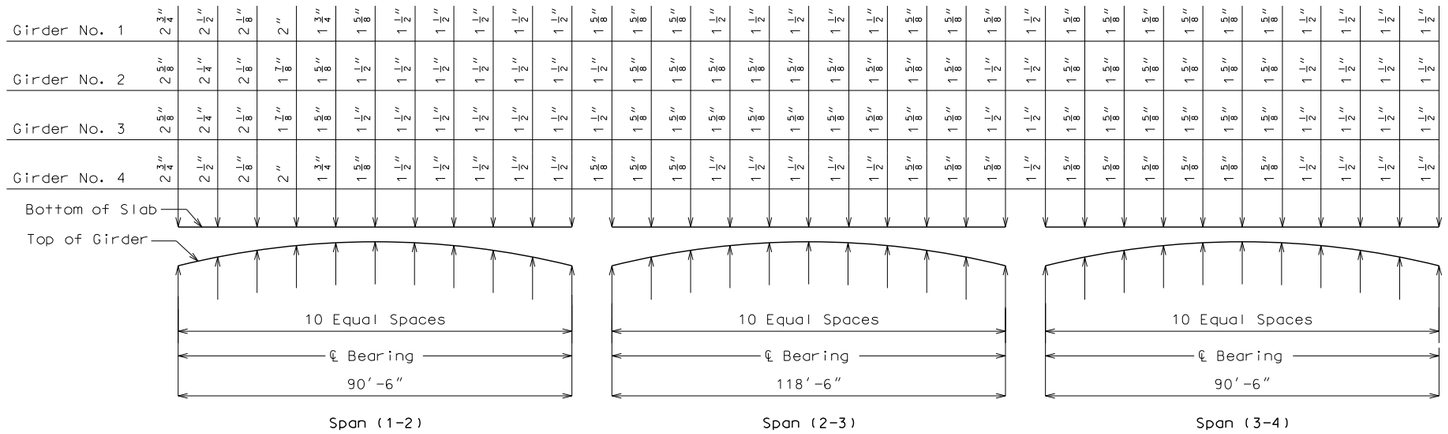

THEORETICAL SLAB HAUNCHING DIAGRAM

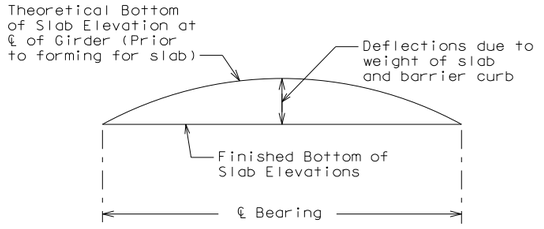

TYPICAL SLAB ELEVATIONS DIAGRAM

Theoretical Bottom of Slab Elevations at Centerline of Girder (Prior to forming for slab) ✻✻											
Girder Number	Span (1-2) (90′-6″ ℄ Brg. - ℄ Brg.)										
	℄ Brg.	.10	.20	.30	.40	.50	.60	.70	.80	.90	℄ Brg.
1	787.13	787.26	787.39	787.50	787.59	787.65	787.68	787.69	787.67	787.64	787.59
2	787.27	787.41	787.54	787.65	787.74	787.80	787.83	787.84	787.82	787.79	787.74
3	787.27	787.41	787.54	787.65	787.74	787.80	787.83	787.84	787.82	787.79	787.74
4	787.13	787.26	787.39	787.50	787.59	787.65	787.68	787.69	787.67	787.64	787.59
Girder Number	Span (2-3) (118′-6″ ℄ Brg. - ℄ Brg.)										
	℄ Brg.	.10	.20	.30	.40	.50	.60	.70	.80	.90	℄ Brg.
1	787.60	787.90	788.16	788.37	788.50	788.55	788.51	788.39	788.20	787.94	787.65
2	787.74	788.05	788.32	788.53	788.66	788.71	788.67	788.55	788.35	788.09	787.80
3	787.74	788.05	788.32	788.53	788.66	788.71	788.67	788.55	788.35	788.09	787.80
4	787.60	787.90	788.16	788.37	788.50	788.55	788.51	788.39	788.20	787.94	787.65
Girder Number	Span (3-4) (90′-6″ ℄ Brg. - ℄ Brg.)										
	℄ Brg.	.10	.20	.30	.40	.50	.60	.70	.80	.90	℄ Brg.
1	787.65	787.70	787.75	787.77	787.76	787.72	787.64	787.54	787.41	787.26	787.11
2	787.79	787.85	787.89	787.92	787.91	787.87	787.80	787.69	787.56	787.41	787.25
3	787.79	787.85	787.89	787.92	787.91	787.87	787.80	787.69	787.56	787.41	787.25
4	787.65	787.70	787.75	787.77	787.76	787.72	787.64	787.54	787.41	787.26	787.11

✻✻ Elevations are based on a constant slab thickness of 8 1/2″ and include allowance for theoretical dead load deflections due to weight of slab (including precast panel) and barrier curb.

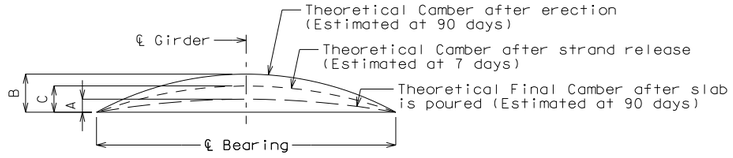

Beam	Span (1-2)			Span (2-3)			Span (3-4)		
	A	B	C	A	B	C	A	B	C
Exterior	5/8″	1 7/8″	1″	1 3/8″	4 7/8″	2 7/8″	5/8″	1 7/8″	1″
Interior	1/2″			1 1/4″			1/2″		

BEAM CAMBER DIAGRAM

If girder camber is different from that shown in the camber diagram, in order to maintain minimum slab thickness adjustment of the slab haunches, an increase in slab thickness or a raise in grade uniformly throughout the structure shall be necessary. No payment will be made for additional labor or materials required for variation in haunching, slab thickness or grade adjustment.

Concrete in the slab haunches is included in the Estimated Quantities for Slab on Concrete NU-Girder.

Conversion factors for girder camber (estimated at 90 days)

0.1 pt. = 0.314 x 0.5 pt.
0.2 pt. = 0.593 x 0.5 pt.
0.3 pt. = 0.813 x 0.5 pt.
0.4 pt. = 0.952 x 0.5 pt.

STATE OF MISSOURI
CHRISTOPHER T. HERSINGER
NUMBER PE-2012018080
PROFESSIONAL ENGINEER

THIS SHEET HAS BEEN SIGNED, SEALED AND DATED ELECTRONICALLY.

DATE PREPARED 10/3/2016

ROUTE	STATE
EE	MO
DISTRICT	SHEET NO.
BR	21

COUNTY GASCONADE

JOB NO. J5S3140

CONTRACT ID.

PROJECT NO.

BRIDGE NO. A8440

DESCRIPTION	DATE

IF A SEAL IS PRESENT ON THIS SHEET IT HAS BEEN ELECTRONICALLY SEALED AND DATED.

MISSOURI HIGHWAYS AND TRANSPORTATION COMMISSION
105 WEST CAPITOL
JEFFERSON CITY, MO 65102
1-888-ASK-MODOT (1-888-275-6636)

HR GREEN, INC.
16020 SWINGLEY RIDGE ROAD, SUITE 205
ST. LOUIS, MISSOURI 63017
PHONE: (636) 519.0990
CORPORATE LICENSE #2002006608

Detailed Aug. 2016
Checked Aug. 2016

Note: This drawing is not to scale. Follow dimensions.

\\hrgwdfs004\Data\75160010\CAD\Data\Bridge_Plans\B_A8440_021_J5S3140_Haunching.dgn 3:16:20 PM 10/3/2016

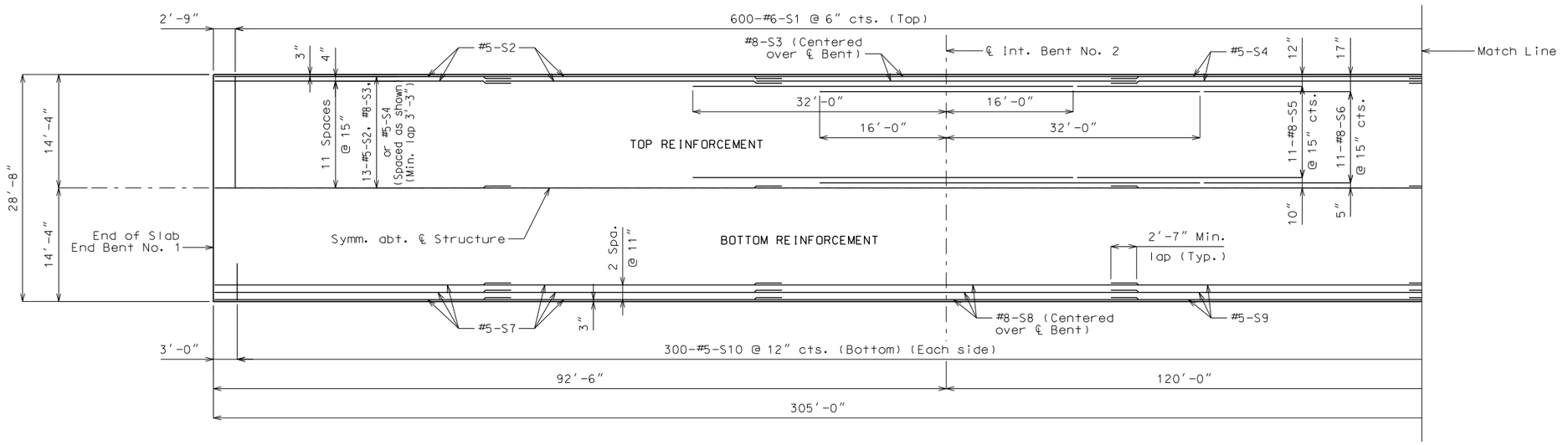

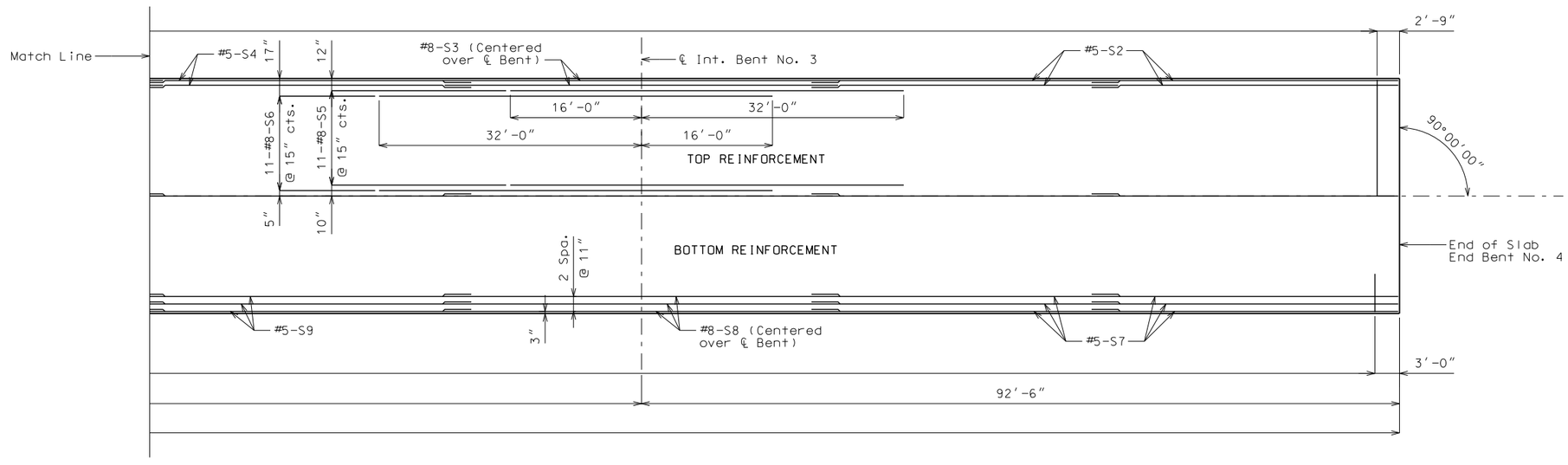

General Notes:

Longitudinal dimensions shown are horizontal.

For Section Thru Slab and Slab Pouring Sequence, see Sheet No. 23.

For Details and Reinforcement of Safety Barrier Curb not shown, see Sheets No. 24 thru 26.

For Theoretical Bottom of Slab Elevations, Girder Camber Diagram, and Theoretical Slab Haunching Diagram, see Sheet No. 21.

For Details of Precast Prestressed Panels, see Sheet No. 19.

PLAN OF SLAB SHOWING REINFORCEMENT

Detailed Aug. 2016
Checked Aug. 2016

Note: This drawing is not to scale. Follow dimensions.

\\hrgwdfs004\Data\75160010\CAD\Data\Bridge_Plans\B_A8440_022_J5S3140_SlabDetails.dgn 3:16:20 PM 10/3/2016

STATE OF MISSOURI
PROFESSIONAL ENGINEER
CHRISTOPHER T. HERSINGER
NUMBER PE-2012018080

THIS SHEET HAS BEEN SIGNED, SEALED AND DATED ELECTRONICALLY.

DATE PREPARED 10/3/2016

ROUTE	STATE
EE	MO
DISTRICT	SHEET NO.
BR	22

COUNTY GASCONADE

JOB NO. J5S3140

CONTRACT ID.

PROJECT NO.

BRIDGE NO. A8440

DESCRIPTION	DATE

IF A SEAL IS PRESENT ON THIS SHEET IT HAS BEEN ELECTRONICALLY SEALED AND DATED.

MISSOURI HIGHWAYS AND TRANSPORTATION COMMISSION
105 WEST CAPITOL
JEFFERSON CITY, MO 65102
1-888-ASK-MODOT (1-888-275-6636)

HR GREEN, INC.
16020 SWINGLEY RIDGE ROAD, SUITE 205
ST. LOUIS, MISSOURI 63017
PHONE: (636) 519.0990
CORPORATE LICENSE #2002006608
HRGreen

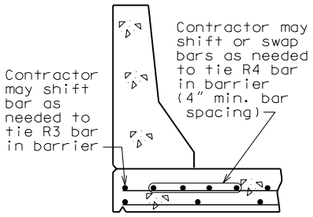

OPTIONAL SHIFTING TOP BARS AT BARRIER

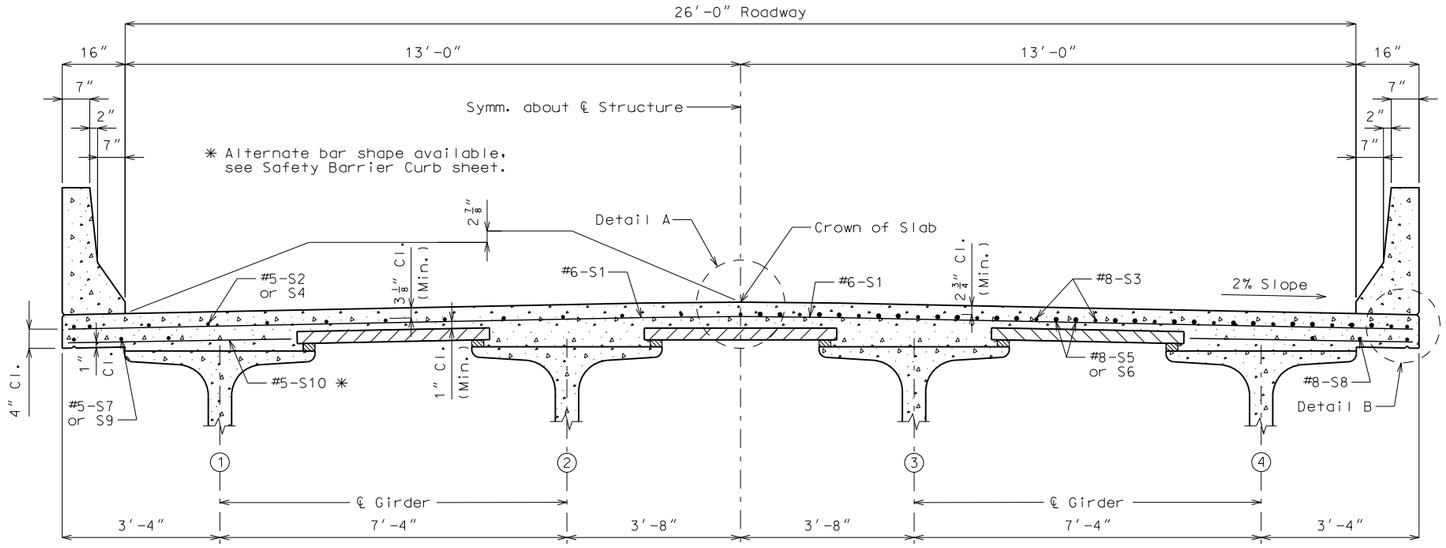

HALF SECTION NEAR MIDSPAN HALF SECTION NEAR INTERMEDIATE BENT

SECTION THRU SLAB

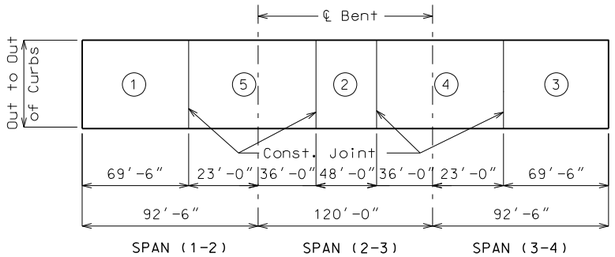

	Sequence of Pours					Min. Rate of Pour Cu. Yds./Hr.
	Direction					With Retarder
Basic Sequence	1	2	3	4	5	25
	Either Direction					
Alternate pours to the basic skip sequence are subject to the approval of the engineer in accordance with Sec 703.						
Alternate A Pours	1	5 + 2		4 + 3		25
	End to 5	1 to 4		2 to End		
Alternate B Pours	1 + 5 + 2			4 + 3		30
	End to 4			2 to End		
Alternate C Pours	1 + 5 + 2 + 4 + 3					52
	End to End					

The contractor shall furnish an approved retarder to retard the set of the concrete to 2.5 hours and shall pour and satisfactorily finish the slab pours at the given rate.

SLAB POURING SEQUENCE

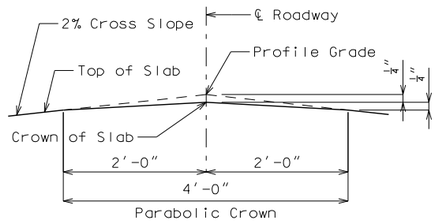

DETAIL A

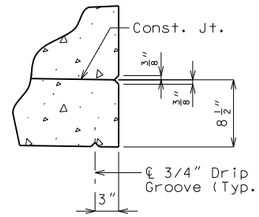

DETAIL B

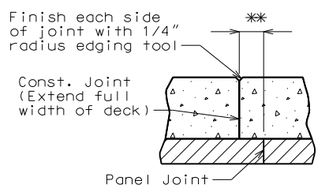

** Adjust the construction joint to a clearance of 6 inches minimum from the panel joint.

SLAB CONSTRUCTION JOINT

Notes:

For details of precast prestressed panels, see Sheet No. 19.

For reinforcement of safety barrier curb not shown, see Sheets No. 24 & 25.

For Theoretical Bottom of Slab Elevations, Girder Camber Diagram and Theoretical Slab Haunching Diagram, see Sheet No. 21.

For Plan of Slab Showing Reinforcement, see Sheet No. 22.

SLAB DETAILS

Detailed Aug. 2016
Checked Aug. 2016

Note: This drawing is not to scale. Follow dimensions.

STATE OF MISSOURI
CHRISTOPHER T. HERSINGER
NUMBER PE-2012018080
PROFESSIONAL ENGINEER
THIS SHEET HAS BEEN SIGNED, SEALED AND DATED ELECTRONICALLY.

DATE PREPARED 10/3/2016
ROUTE EE | STATE MO
DISTRICT BR | SHEET NO. 23
COUNTY GASCONADE
JOB NO. J5S3140
CONTRACT ID.
PROJECT NO.
BRIDGE NO. A8440

DESCRIPTION | DATE

IF A SEAL IS PRESENT ON THIS SHEET IT HAS BEEN ELECTRONICALLY SEALED AND DATED.

MISSOURI HIGHWAYS AND TRANSPORTATION COMMISSION
105 WEST CAPITOL
JEFFERSON CITY, MO 65102
1-888-ASK-MODOT (1-888-275-6636)
HR GREEN, INC.
16020 SWINGLEY RIDGE ROAD, SUITE 205
ST. LOUIS, MISSOURI 63017
PHONE: (636) 519.0990
CORPORATE LICENSE #2002006608
HRGreen

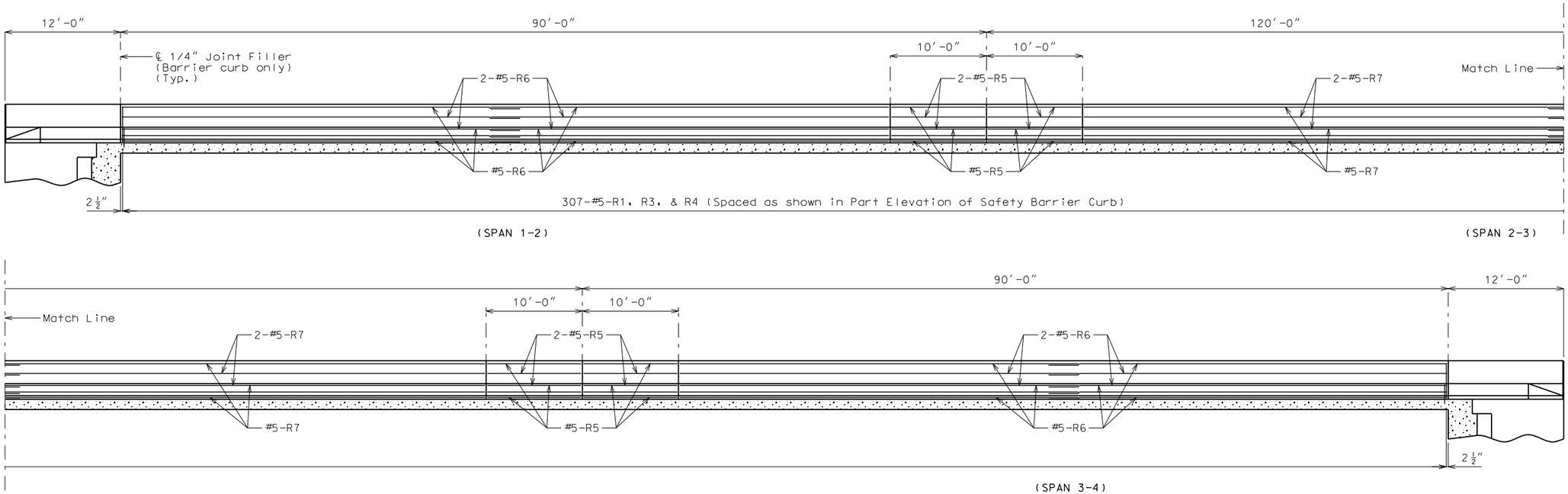

ELEVATION OF SAFETY BARRIER CURB

(Left barrier curb shown, right barrier curb similar)

Longitudinal dimensions are horizontal.

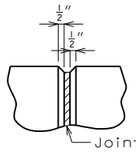

FILLED JOINT DETAIL

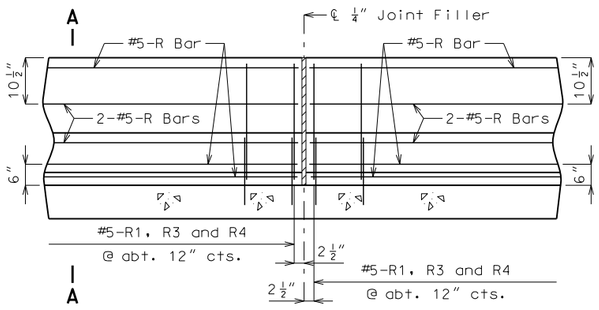

PART ELEVATION OF SAFETY BARRIER CURB
(CAST-IN-PLACE CONVENTIONAL FORMING)

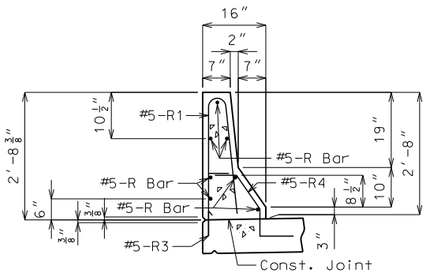

SECTION A-A

Use a minimum lap of 3′-1″ for #5 horizontal safety barrier curb bars.

The cross-sectional area above the slab = 2.27 sq. ft.

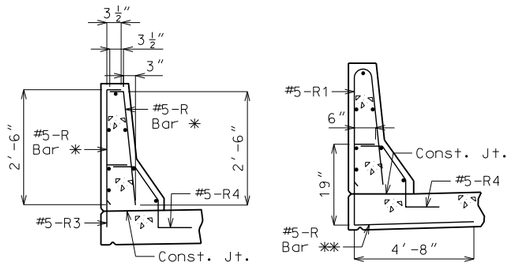

R-BAR PERMISSIBLE ALTERNATE SHAPE

✳ The R1 bar may be separated into two bars as shown, at the contractor's option, only when slip forming is not used. (All dimensions are out to out.)

✳✳ The R3 bar and #5 bottom transverse slab bar in cantilever (P/S panels only) combination may be furnished as one bar as shown, at the contractor's option.

General Notes

Top of safety barrier curb shall be built parallel to grade with barrier curb joints (except at end bents) normal to grade.

All exposed edges of safety barrier curb shall have either a 1/2-inch radius or a 3/8-inch bevel, unless otherwise noted.

Payment for all concrete and reinforcement, complete in place, will be considered completely covered by the contract unit price for Safety Barrier Curb per linear foot.

Concrete in the safety barrier curb shall be Class B-1.

Measurement of safety barrier curb is to the nearest linear foot for each structure, measured along the outside top of slab from end of wing to end of wing.

Concrete traffic barrier delineators shall be placed on top of the safety barrier curb as shown on Missouri Standard Plans 617.10 and in accordance with Sec 617. Delineators on bridges with two-lane, two-way traffic shall have retroreflective sheeting on both sides. Concrete traffic barrier delineators will be considered completely covered by the contract unit price for Safety Barrier Curb.

DETAILS OF SAFETY BARRIER CURB

Detailed Aug. 2016
Checked Aug. 2016

Note: This drawing is not to scale. Follow dimensions.

STATE OF MISSOURI
CHRISTOPHER T. HERSINGER
NUMBER PE-2012018080
PROFESSIONAL ENGINEER

THIS SHEET HAS BEEN SIGNED, SEALED AND DATED ELECTRONICALLY.

DATE PREPARED 10/3/2016

ROUTE	STATE
EE	MO
DISTRICT	SHEET NO.
BR	24

COUNTY: GASCONADE
JOB NO.: J5S3140
CONTRACT ID.:
PROJECT NO.:
BRIDGE NO.: A8440

DESCRIPTION	DATE

IF A SEAL IS PRESENT ON THIS SHEET IT HAS BEEN ELECTRONICALLY SEALED AND DATED.

MISSOURI HIGHWAYS AND TRANSPORTATION COMMISSION
105 WEST CAPITOL
JEFFERSON CITY, MO 65102
1-888-ASK-MODOT (1-888-275-6636)

HR GREEN, INC.
16020 SWINGLEY RIDGE ROAD, SUITE 205
ST. LOUIS, MISSOURI 63017
PHONE: (636) 519.0990
CORPORATE LICENSE #2002006608

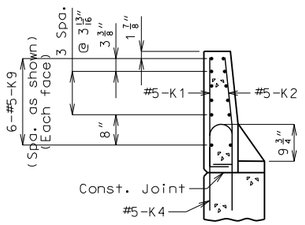

SECTION A-A

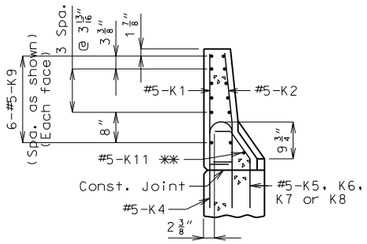

SECTION B-B

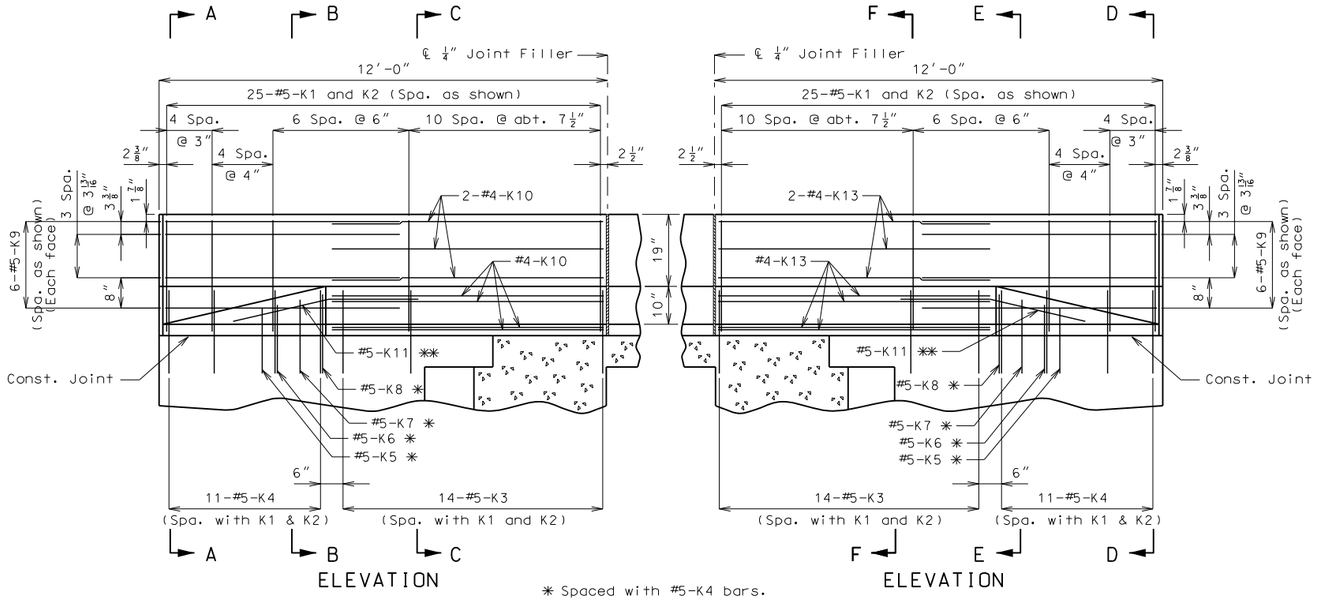

ELEVATION

ELEVATION

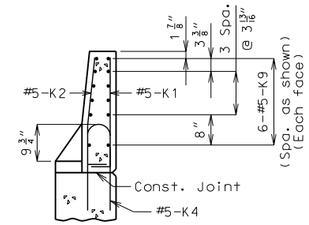

SECTION D-D

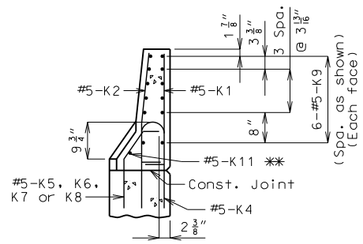

SECTION E-E

* Spaced with #5-K4 bars.

** Fit bar to follow transition face of curb.

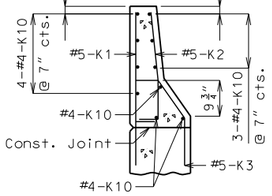

SECTION C-C

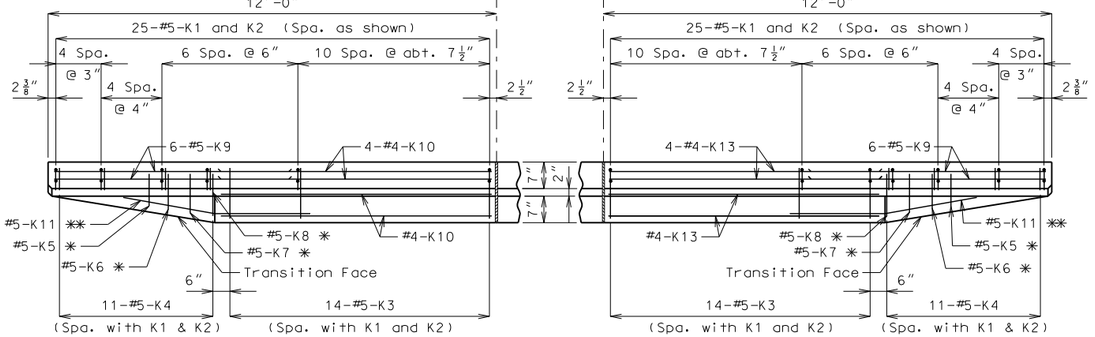

PLAN

PLAN

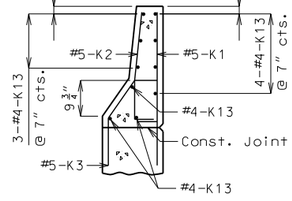

SECTION F-F

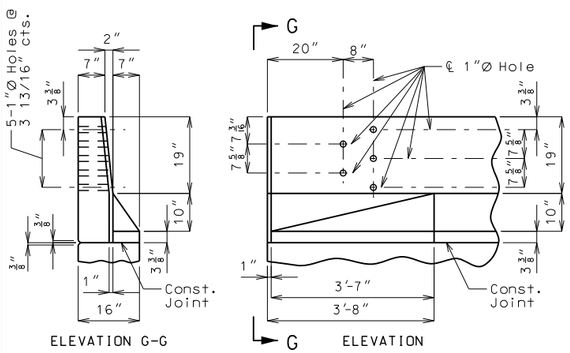

DETAILS OF GUARD RAIL ATTACHMENT

Note: Use a minimum lap of 2'-7" between K9 and K10 or K13 bars.

Concrete traffic barrier delineators shall be placed on top of the safety barrier curb as shown on Missouri Standard Plans 617.10 and in accordance with Sec 617. Delineators on bridges with two-lane, two way traffic shall have retroreflective sheeting on both sides. Concrete traffic barrier delineators will be considered completely covered by the contract unit price for Safety Barrier Curb.

DETAILS OF SAFETY BARRIER CURB AT END BENTS

(Left barrier curb shown, right barrier curb similar)

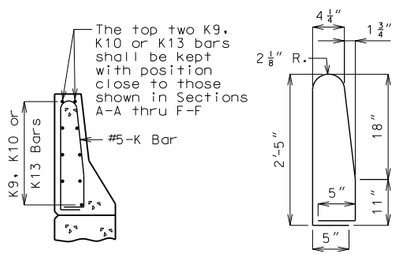

K1-K2 BAR PERMISSIBLE ALTERNATE SHAPE

(K3 or K4 thru K8 bars not shown for clarity)

The K1 and K2 bar combination may be furnished as one bar as shown, at the contractor's option.

Detailed Aug. 2016
Checked Aug. 2016

Note: This drawing is not to scale. Follow dimensions.

STATE OF MISSOURI
CHRISTOPHER T. HERSINGER
NUMBER PE-2012018080
PROFESSIONAL ENGINEER
THIS SHEET HAS BEEN SIGNED, SEALED AND DATED ELECTRONICALLY.

DATE PREPARED 10/3/2016

ROUTE	STATE
EE	MO
DISTRICT	SHEET NO.
BR	25

COUNTY GASCONADE

JOB NO. J5S3140

CONTRACT ID.

PROJECT NO.

BRIDGE NO. A8440

DESCRIPTION | DATE

IF A SEAL IS PRESENT ON THIS SHEET IT HAS BEEN ELECTRONICALLY SEALED AND DATED.

MISSOURI HIGHWAYS AND TRANSPORTATION COMMISSION
105 WEST CAPITOL
JEFFERSON CITY, MO 65102
1-888-ASK-MODOT (1-888-275-6636)

HR GREEN, INC.
16020 SWINGLEY RIDGE ROAD, SUITE 205
ST. LOUIS, MISSOURI 63017
PHONE: (636) 519.0990
CORPORATE LICENSE #2002006608
HRGreen

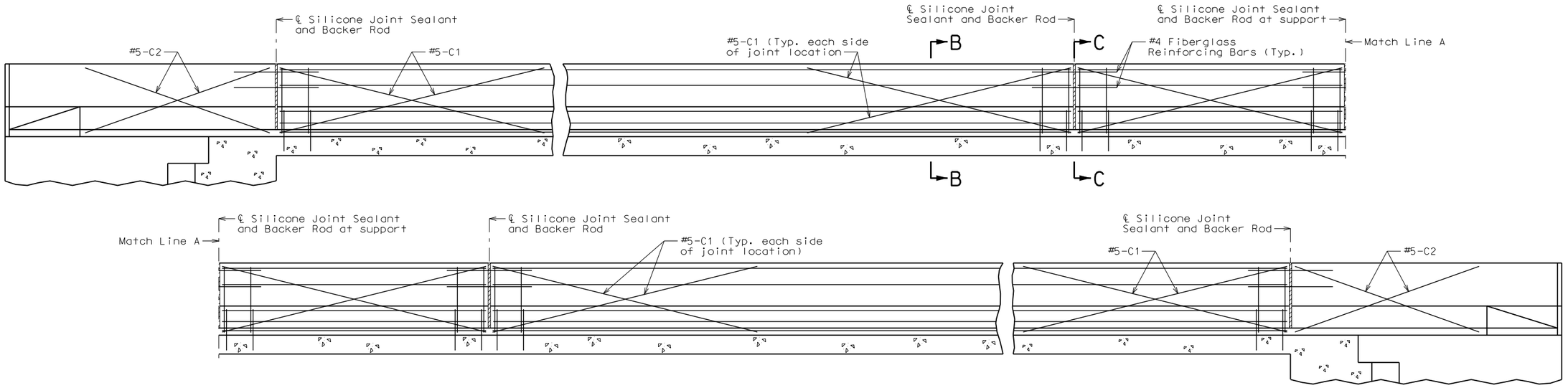

TYPICAL ELEVATION OF SAFETY BARRIER CURB AT SUPPORT LOCATIONS

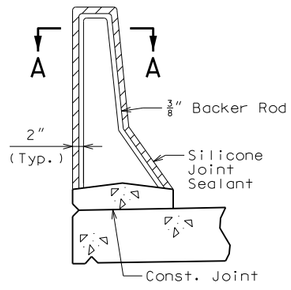

SECTION THRU JOINT

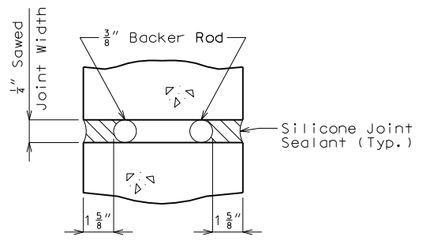

SECTION A-A

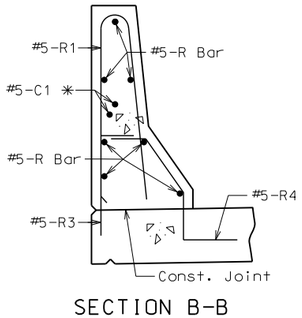

SECTION B-B

✳ Each side of joint location.

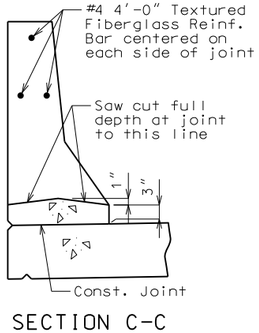

SECTION C-C

General Notes:

Top of safety barrier curb shall be built parallel to grade with barrier curb joints (except at end bents) normal to grade.

All exposed edges of safety barrier curb shall have either a 1/2-inch radius or a 3/8-inch bevel, unless otherwise noted.

Payment for all concrete and reinforcement, complete in place, will be considered completely covered by the contract unit price for Safety Barrier Curb per linear foot.

Concrete in the safety barrier curb shall be Class B-1.

Measurement of safety barrier curb is to the nearest linear foot for each structure, measured along the outside top of slab from end of wing to end of wing.

Concrete traffic barrier delineators shall be placed on top of the safety barrier curb as shown on Missouri Standard Plans 617.10 and in accordance with Sec 617. Delineators on bridges with two-lane, two-way traffic shall have retroreflective sheeting on both sides. Concrete traffic barrier delineators will be considered completely covered by the contract unit price for Safety Barrier Curb.

Joint sealant and backer rods shall be used on all slip-form barrier curbs instead of joint filler and shall be in accordance with Sec 717 for silicone joint sealant for saw cut and formed joints.

For slip-form option, all sides of the safety barrier curb shall have a vertically broomed finish and the curb top shall have a transversely broomed finish.

C bars (slip-form option only) shall be used in addition to cast-in-place conventional forming reinforcement for bridge safety barrier curb.

Cost of silicone joint sealant and backer rod, complete in place, will be considered completely covered by the contract unit price for Safety Barrier Curb.

OPTIONAL SLIP-FORM SAFETY BARRIER CURB

Detailed Aug. 2016
Checked Aug. 2016

Note: This drawing is not to scale. Follow dimensions.

STATE OF MISSOURI
CHRISTOPHER T. HERSINGER
NUMBER PE-2012018080
PROFESSIONAL ENGINEER
THIS SHEET HAS BEEN SIGNED, SEALED AND DATED ELECTRONICALLY.

DATE PREPARED 10/3/2016
ROUTE EE | STATE MO
DISTRICT BR | SHEET NO. 26
COUNTY GASCONADE
JOB NO. J5S3140
CONTRACT ID.
PROJECT NO.
BRIDGE NO. A8440

DESCRIPTION | DATE

IF A SEAL IS PRESENT ON THIS SHEET IT HAS BEEN ELECTRONICALLY SEALED AND DATED.

MISSOURI HIGHWAYS AND TRANSPORTATION COMMISSION
105 WEST CAPITOL
JEFFERSON CITY, MO 65102
1-888-ASK-MODOT (1-888-275-6636)
MoDOT
HR GREEN, INC.
16020 SWINGLEY RIDGE ROAD, SUITE 205
ST. LOUIS, MISSOURI 63017
PHONE: (636) 519.0990
CORPORATE LICENSE #2002006608
HRGreen

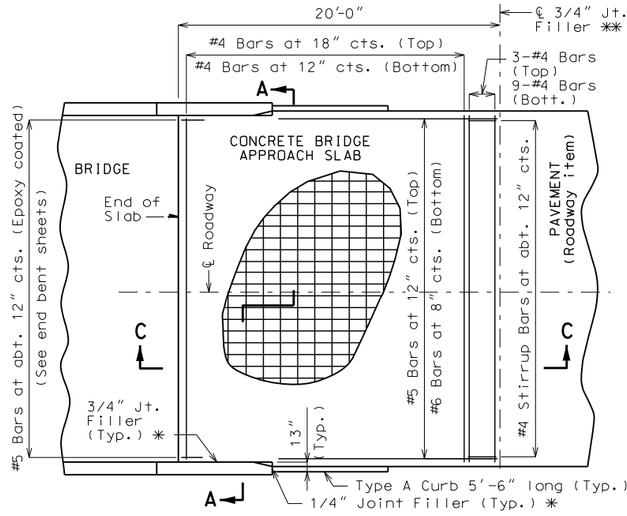

PART PLAN OF SQUARED STRUCTURE

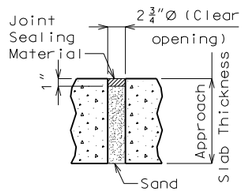

TYPICAL UNDERSEAL ACCESS HOLE DETAIL

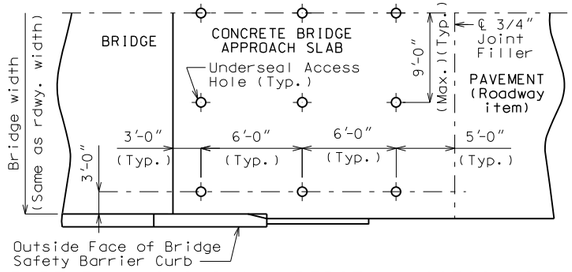

PART PLAN SHOWING UNDERSEAL ACCESS HOLES
(Squared structure shown)

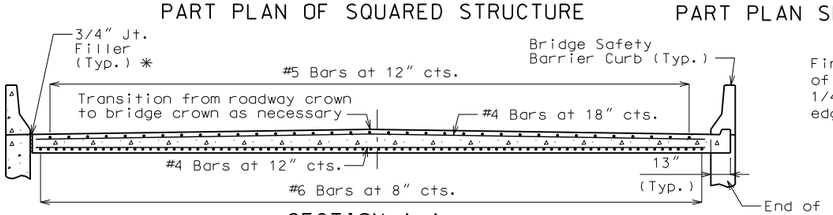

SECTION A-A

With the approval of the engineer, the contractor may crown the bottom of the approach slab to match the crown of the roadway surface.

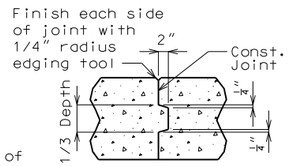

CONCRETE CONST. JOINT DETAIL
(If required)

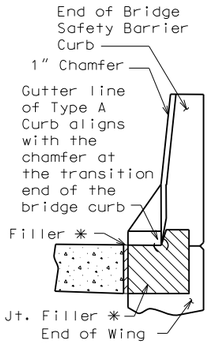

4" TYPE A CURB

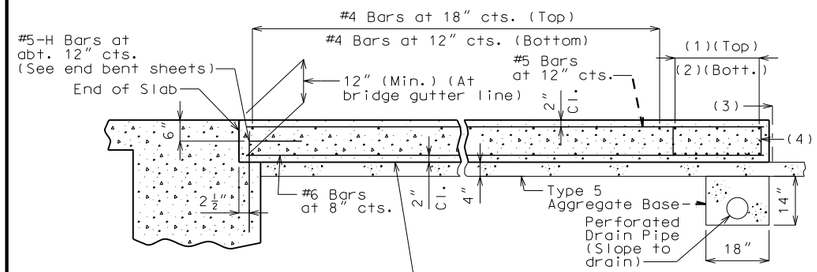

SECTION C-C
(Integral end bent)

(1) 3-#4 Bars
(2) 9-#4 Bars
(3) ℄ 3/4" Jt. Filler **
(4) #4 Stirrup Bars at abt. 12" cts.; 2'-0"x 8" (Min.) out to out; Actual length = 5'-10" (Min.); 90° stirrup hook at bottom: Stirrup height (8") and actual length vary due to crown.

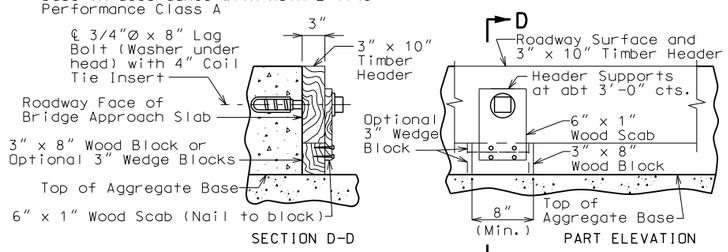

DETAILS OF TIMBER HEADER
Remove timber header when concrete pavement is placed.

OPTIONAL CONCRETE SLAB

Notes For Concrete Slab Only:

All concrete for the bridge approach slab shall be in accordance with Sec 503 (f'c = 4,000 psi).

The reinforcing steel in the bridge approach slab shall be epoxy coated Grade 60 with fy = 60,000 psi.

Longitudinal construction joints in bridge approach slab shall be aligned with longitudinal construction joints in bridge slab.

Minimum clearance to reinforcing steel shall be 1½", unless otherwise shown.

The reinforcing steel in the bridge approach slab shall be continuous. The transverse reinforcing steel may be made continuous by lap splicing the #4 bars 23".

All joint filler shall be in accordance with Sec 1057 for preformed fiber expansion joint filler except as noted.

Payment for furnishing all materials, labor and excavation necessary to construct the concrete bridge approach slab, including the timber header, underdrain, Type 5 aggregate base, joint filler, and all other appurtenances and incidental work as shown on this sheet, complete in place, will be considered completely covered by the contract unit price for Bridge Approach Slab (Minor Road) per square yard.

See Missouri Standard Plans Drawing 609.00 for details of Type A Curb.

* Seal joint between vertical face of bridge approach slab and wing with "Silicone Joint Sealant for Saw Cut and Formed Joints" in accordance with Sec 717.

General Notes:

Contractor shall have the option to construct either slab except as noted.

The contractor shall pour and satisfactorily finish the bridge slab before placing the bridge approach slab.

Drain pipe may be either 6" diameter corrugated metallic-coated pipe underdrain, 4" diameter corrugated polyvinyl chloride (PVC) drain pipe, or 4" diameter corrugated polyethylene (PE) drain pipe.

MoDOT Construction personnel will indicate the bridge approach slab used for this structure:

☐ Concrete Bridge Approach Slab
☐ Asphalt Bridge Approach Slab

Notes For Asphalt Slab Only:

Payment for furnishing all materials, curb, labor and excavation necessary to construct the asphalt bridge approach slab, including curb, underdrain and Type 5 aggregate base within the pay limits shown, complete in place, will be considered completely covered by the contract unit price for Bridge Approach Slab (Minor Road) per square yard.

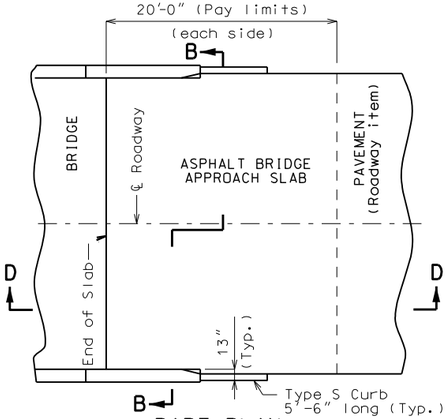

PART PLAN
(Squared structure shown, skewed structure similar)

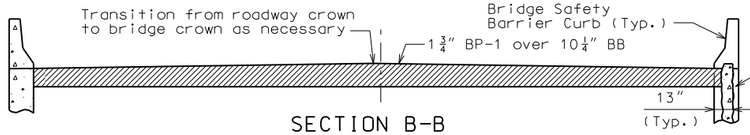

SECTION B-B

With the approval of the engineer, the contractor may crown the bottom of the approach slab to match the crown of the roadway surface.

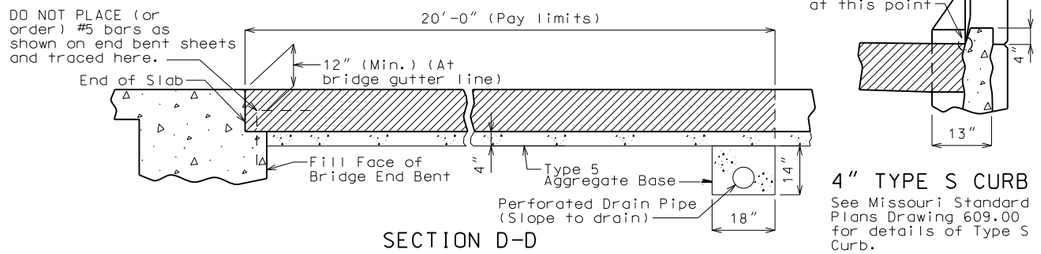

SECTION D-D

4" TYPE S CURB
See Missouri Standard Plans Drawing 609.00 for details of Type S Curb.

OPTIONAL ASPHALT SLAB (EXCEPT NOT ALLOWED WITH CONCRETE PAVEMENT)

DETAILS OF BRIDGE APPROACH SLAB (MINOR ROAD)

Detailed Aug. 2016
Checked Aug. 2016

Note: This drawing is not to scale. Follow dimensions.

STATE OF MISSOURI
CHRISTOPHER T. HERSINGER
NUMBER PE-2012018080
PROFESSIONAL ENGINEER
THIS SHEET HAS BEEN SIGNED, SEALED AND DATED ELECTRONICALLY.

DATE PREPARED 10/3/2016
ROUTE EE | STATE MO
DISTRICT BR | SHEET NO. 27
COUNTY GASCONADE
JOB NO. J5S3140
CONTRACT ID.
PROJECT NO.
BRIDGE NO. A8440

DATE	DESCRIPTION

IF A SEAL IS PRESENT ON THIS SHEET IT HAS BEEN ELECTRONICALLY SEALED AND DATED.

MISSOURI HIGHWAYS AND TRANSPORTATION COMMISSION
105 WEST CAPITOL
JEFFERSON CITY, MO 65102
1-888-ASK-MODOT (1-888-275-6636)

HR GREEN, INC.
16020 SWINGLEY RIDGE ROAD, SUITE 205
ST. LOUIS, MISSOURI 63017
PHONE: (636) 519.0990
CORPORATE LICENSE #2002006608
HRGreen

BILL OF REINFORCING STEEL

NO. REQ'D.	MARK NO. SIZE	MARK NO. MARK	LOCATION	EPOXY (E)	SHAPE NO.	STIRRUP (S)	SUBSTR. (X)	VARIES (V)	NO. EACH	DIMENSIONS B FT.	B IN.	C FT.	C IN.	D FT.	D IN.	E FT.	E IN.	F FT.	F IN.	H FT.	H IN.	K FT.	K IN.	NOMINAL LENGTH FT.	NOMINAL LENGTH IN.	ACTUAL LENGTH FT.	ACTUAL LENGTH IN.	WEIGHT LBS.
			SUBSTRUCTURE																									
			INT. BENT 2																									
12	6	D20	BEAM		20		X			2	6.000													2	6	2	6	45
10	9	H20	BEAM		18		X			26	5.000													28	11	28	11	983
10	9	H21	BEAM		20		X			26	5.000													26	5	26	5	898
10	6	H22	BEAM		20		X			26	5.000													26	5	26	5	397
14	6	H23	BEAM		10	S	X					22.000		3	7.500									7	4	7	0	147
18	4	P20	COLUMN		16		X			2	9.000	18.000												10	0	10	0	120
54	4	P21	SHAFT/SOCKET		16		X			2	6.000	18.000												9	3	9	3	334
6	5	U20	BEAM		13	S	X			3	9.000	3	9.000	3	9.000	3	9.000							15	11	15	7	98
64	5	U21	BEAM		13	S	X			2	8.000	3	9.000	2	8.000	3	9.000							13	9	13	5	896
6	5	U22	BEAM		10	S	X					3	9.000	3	9.000									11	3	11	1	69
28	8	V20	COLUMN		20		X			11	10.000													11	10	11	10	885
28	9	V21	SHAFT/SOCKET		20		X			29	0.000													29	0	29	0	2761
			INT. BENT 3																									
12	6	D30	BEAM		20		X			2	6.000													2	6	2	6	45
10	9	H30	BEAM		18		X			26	5.000													28	11	28	11	983
10	9	H31	BEAM		20		X			26	5.000													26	5	26	5	898
10	6	H32	BEAM		20		X			26	5.000													26	5	26	5	397
14	6	H33	BEAM		10	S	X					22.000		3	7.500									7	4	7	0	147
26	4	P30	COLUMN		16		X			2	9.000	18.000												10	0	10	0	174
42	4	P31	SHAFT/SOCKET		16		X			2	6.000	18.000												9	3	9	3	260
6	5	U30	BEAM		13	S	X			3	9.000	3	9.000	3	9.000	3	9.000							15	11	15	7	98
64	5	U31	BEAM		13	S	X			2	8.000	3	9.000	2	8.000	3	9.000							13	9	13	5	896
6	5	U32	BEAM		10	S	X					3	9.000	3	9.000									11	3	11	1	69
28	8	V30	COLUMN		20		X			15	11.000													15	11	15	11	1190
28	9	V31	SHAFT/SOCKET		20		X			23	0.000													23	0	23	0	2190
			SUPERSTR.																									
			END BENT 1																									
20	6	F10	WING		23	S				14.000		5	1.750	14.000		9.875		9.875		9.875		9.875		7	6	7	5	223
8	6	F11	DIAPHRAGM		19	S				2	8.000	4	11.000											7	7	7	5	89
4	6	H10	DIAPHRAGM	E	20					28	5.000													28	5	28	5	171
26	5	H11	DIAPHRAGM	E	19					2	0.000	15.000												3	3	3	2	86
4	6	H12	DIAPHRAGM		20					28	5.000													28	5	28	5	171
6	6	H13	DIAPHRAGM		20					2	10.000													2	10	2	10	26
2	6	H14	DIAPHRAGM		20						17.000													0	17	0	17	4
9	6	H15	DIAPHRAGM		20					6	7.000													6	7	6	7	89
3	6	H16	DIAPHRAGM		20					3	10.000													3	10	3	10	17
4	5	H17	STRAND TIE		20					5	9.000													5	9	5	9	24
8	6	H18	BEAM		20					28	5.000													28	5	28	5	341
4	6	H19	BEAM		20					28	5.000													28	5	28	5	171
4	8	H100	WING	E	20					11	4.000													11	4	11	4	121

BILL OF REINFORCING STEEL

NO. REQ'D.	MARK NO. SIZE	MARK NO. MARK	LOCATION	EPOXY (E)	SHAPE NO.	STIRRUP (S)	SUBSTR. (X)	VARIES (V)	NO. EACH	DIMENSIONS B FT.	B IN.	C FT.	C IN.	D FT.	D IN.	E FT.	E IN.	F FT.	F IN.	H FT.	H IN.	K FT.	K IN.	NOMINAL LENGTH FT.	NOMINAL LENGTH IN.	ACTUAL LENGTH FT.	ACTUAL LENGTH IN.	WEIGHT LBS.
12	8	H101	WING		20					11	4.000													11	4	11	4	363
40	6	H102	WING		20					10	4.000													10	4	10	4	621
4	6	H103	DIAPHRAGM		20					5	6.000													5	6	5	6	33
14	5	U10	BEAM		10	S						5	2.000	2	9.000									13	1	12	11	189
22	4	U11	BEAM		13	S				2	9.000	2	8.000	2	9.000	2	8.000							11	7	11	4	167
4	4	U12	BEAM		10	S						2	8.000	2	9.000									8	1	7	11	21
17	5	U13	DIAPHRAGM	E	10	S						4	1.000	2	3.000									10	5	10	3	182
17	6	U14	DIAPHRAGM		19	S				3	1.000	2	9.000											5	10	5	8	145
35	6	U15	DIAPHRAGM	E	19	S				3	2.000	4	7.000											7	9	7	7	399
6	5	V10	BEAM		20					5	2.000													5	2	5	2	32
20	6	V11	DIAPHRAGM		20					3	1.000													3	1	3	1	93
4	6	V12	WING		20					7	1.000													7	1	7	1	43
36	6	V13	WING		20					7	1.000													7	1	7	1	383
			END BENT 4																									
20	6	F40	WING		23	S				14.000		5	1.750	14.000		9.875		9.875		9.875		9.875		7	6	7	5	223
8	6	F41	DIAPHRAGM		19	S				2	8.000	4	11.000											7	7	7	5	89
4	6	H40	DIAPHRAGM	E	20					28	5.000													28	5	28	5	171
26	5	H41	DIAPHRAGM	E	19					2	0.000	15.000												3	3	3	2	86
4	6	H42	DIAPHRAGM		20					28	5.000													28	5	28	5	171
6	6	H43	DIAPHRAGM		20					2	10.000													2	10	2	10	26
2	6	H44	DIAPHRAGM		20						17.000													0	17	0	17	4
9	6	H45	DIAPHRAGM		20					6	7.000													6	7	6	7	89
3	6	H46	DIAPHRAGM		20					3	10.000													3	10	3	10	17
4	5	H47	STRAND TIE		20					5	9.000													5	9	5	9	24
8	6	H48	BEAM		20					28	5.000													28	5	28	5	341
4	6	H49	BEAM		20					28	5.000													28	5	28	5	171
4	8	H400	WING	E	20					11	4.000													11	4	11	4	121
12	8	H401	WING		20					11	4.000													11	4	11	4	363
40	6	H402	WING		20					10	4.000													10	4	10	4	621
4	6	H403	DIAPHRAGM		20					5	6.000													5	6	5	6	33
14	5	U40	BEAM		10	S						5	2.000	2	9.000									13	1	12	11	189
22	4	U41	BEAM		13	S				2	9.000	2	8.000	2	9.000	2	8.000							11	7	11	4	167
4	4	U42	BEAM		10	S						2	8.000	2	9.000									8	1	7	11	21
17	5	U43	DIAPHRAGM	E	10	S						4	1.000	2	3.000									10	5	10	3	182
17	6	U44	DIAPHRAGM		19	S				3	1.000	2	9.000											5	10	5	8	145
35	6	U45	DIAPHRAGM	E	19	S				3	2.000	4	7.000											7	9	7	7	399
6	5	V40	BEAM		20					5	2.000													5	2	5	2	32
20	6	V41	DIAPHRAGM		20					3	1.000													3	1	3	1	93
4	6	V42	WING		20					7	1.000													7	1	7	1	43
36	6	V43	WING		20					7	1.000													7	1	7	1	383
			DIAPH. AT																									
			INT. BENTS																									

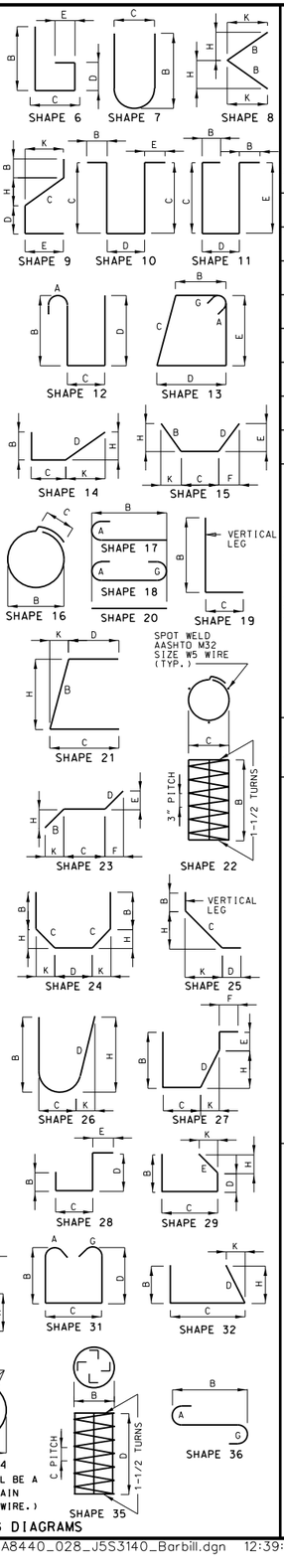

BENDING DIAGRAMS

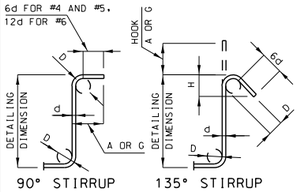

STIRRUP HOOK DIMENSIONS				
GRADES 40 - 50 - 60 KSI				
BAR SIZE	D (IN.)	90° HOOK HOOK A OR G	135° HOOK HOOK A OR G	135° HOOK APPROX. H
#4	2"	4 1/2"	4 1/2"	3"
#5	2 1/2"	6"	5 1/2"	3 3/4"
#6	4 1/2"	12"	8"	4 1/2"

NOTE: UNLESS OTHERWISE NOTED, DIAMETER "D" IS THE SAME FOR ALL BENDS AND HOOKS ON A BAR.

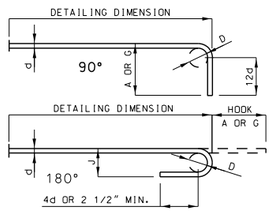

END HOOK DIMENSIONS				
		ALL GRADES		
BAR SIZE	D (IN.)	180° HOOKS A OR G	180° HOOKS J	90° HOOKS A OR G
#3	2 1/4"	5"	3"	6"
#4	3"	6"	4"	8"
#5	3 3/4"	7"	5"	10"
#6	4 1/2"	8"	6"	12"
#7	5 1/4"	10"	7"	14"
#8	6"	11"	8"	16"
#9	9 1/2"	15"	11 3/4"	19"
#10	10 3/4"	17"	13 1/4"	22"
#11	12"	19"	14 3/4"	2'-0"
#14	18 1/4"	2'-3"	21 3/4"	2'-7"

NOTE:
ALL STANDARD HOOKS AND BENDS OTHER THAN 180 DEGREE ARE TO BE BENT WITH SAME PROCEDURE AS FOR 90 DEGREE STANDARD HOOKS.
HOOKS AND BENDS SHALL BE IN ACCORDANCE WITH THE PROCEDURES AS SHOWN ON THIS SHEET.
E = EPOXY COATED REINFORCEMENT.
S = STIRRUP.
X = BAR IS INCLUDED IN SUBSTRUCTURE QUANTITIES.
V = BAR DIMENSIONS VARY IN EQUAL INCREMENTS BETWEEN DIMENSIONS SHOWN ON THIS LINE AND THE FOLLOWING LINE.
NO. EA. = NUMBER OF BARS OF EACH LENGTH.
NOMINAL LENGTHS ARE BASED ON OUT TO OUT DIMENSIONS SHOWN IN BENDING DIAGRAMS AND ARE LISTED FOR FABRICATORS USE. (NEAREST INCH)
ACTUAL LENGTHS ARE MEASURED ALONG CENTERLINE BAR TO THE NEAREST INCH.
PAYWEIGHTS ARE BASED ON ACTUAL LENGTHS.
FOUR ANGLE OR CHANNEL SPACERS ARE REQUIRED FOR EACH COLUMN SPIRAL. SPACERS ARE TO BE PLACED ON INSIDE OF SPIRALS. LENGTH AND WEIGHT OF COLUMN SPIRALS DO NOT INCLUDE SPLICES OR SPACERS.
REINFORCING STEEL (GRADE 60) FY = 60,000 PSI.

Detailed Aug. 2016
Checked Aug. 2016

Note: This drawing is not to scale. Follow dimensions.

STATE OF MISSOURI
CHRISTOPHER T. HERSINGER
NUMBER PE-2012018080
PROFESSIONAL ENGINEER

THIS SHEET HAS BEEN SIGNED, SEALED AND DATED ELECTRONICALLY.

DATE PREPARED 10/17/2016

ROUTE	STATE
EE	MO
DISTRICT	SHEET NO.
BR	28

COUNTY: GASCONADE
JOB NO.: J5S3140
CONTRACT ID.:
PROJECT NO.:
BRIDGE NO.: A8440

DATE	DESCRIPTION

IF A SEAL IS PRESENT ON THIS SHEET IT HAS BEEN ELECTRONICALLY SEALED AND DATED.

MISSOURI HIGHWAYS AND TRANSPORTATION COMMISSION
105 WEST CAPITOL
JEFFERSON CITY, MO 65102
1-888-ASK-MODOT (1-888-275-6636)

HR GREEN, INC.
16020 SWINGLEY RIDGE ROAD, SUITE 205
ST. LOUIS, MISSOURI 63017
PHONE: (636) 519.0990
CORPORATE LICENSE #2002006608
HRGreen

BILL OF REINFORCING STEEL

NO. REQ'D.	MARK NO. SIZE	MARK	LOCATION	EPOXY (E)	SHAPE NO.	STIRRUP (S)	SUBSTR. (X)	VARIES (V)	NO. EACH	DIMENSIONS B FT.	B IN.	C FT.	C IN.	D FT.	D IN.	E FT.	E IN.	F FT.	F IN.	H FT.	H IN.	K FT.	K IN.	NOMINAL LENGTH FT.	NOMINAL LENGTH IN.	ACTUAL LENGTH FT.	ACTUAL LENGTH IN.	WEIGHT LBS.
8	6	U50	DIAPHRAGM	E	28	S						2	1.000	3	6.000	14.000								6	9	6	5	77
32	6	U51	DIAPHRAGM	E	28	S						2	1.000	3	2.000	14.000								6	5	6	1	292
24	6	U52	DIAPHRAGM	E	28	S						2	1.000	3	6.000	14.000								6	9	6	5	231
48	4	U53	DIAPHRAGM	E	28	S						2	1.000	4	0.000	12.000								7	1	6	11	222
32	5	U54	DIAPHRAGM		19	S				12.000		5	1.000											6	1	6	0	200
16	5	V50	DIAPHRAGM	E	20					4	1.000													4	1	4	1	68
			SLAB																									
600	6	S1	SLAB	E	20					28	5.000													28	5	28	5	25609
100	5	S2	SLAB	E	20					37	6.000													37	6	37	6	3911
50	8	S3	SLAB	E	20					48	0.000													48	0	48	0	6408
50	5	S4	SLAB	E	20					40	11.000													40	11	40	11	2134
44	8	S5	SLAB	E	20					48	0.000													48	0	48	0	5639
44	8	S6	SLAB	E	20					48	0.000													48	0	48	0	5639
24	5	S7	SLAB	E	20					36	10.000													36	10	36	10	922
12	8	S8	SLAB	E	20					48	0.000													48	0	48	0	1538
12	5	S9	SLAB	E	20					39	11.000													39	11	39	11	500
600	5	S10	SLAB	E	20					4	8.000													4	8	4	8	2920
			BARRIER CURB																									
100	5	K1	BARRIER CURB	E	19	S				2	5.000	5.125												2	10	2	9	287
100	5	K2	BARRIER CURB	E	14	S					5.125	11.125		18.000						2.000		17.875		2	10	2	9	287
56	5	K3	BARRIER CURB	E	27	S				3	4.125	5.125		12.000		2	6.125			9.875		6.875		7	3	7	1	414
44	5	K4	BARRIER CURB	E	7					3	4.125	6.000												6	6	6	5	294
4	5	K5	BARRIER CURB	E	25	S				2	10.625	6.750		4.375						5.500		4.000		3	10	3	9	16
4	5	K6	BARRIER CURB	E	25	S				2	9.625	7.875		4.375						5.500		4.500		3	10	3	9	16
4	5	K7	BARRIER CURB	E	25	S				2	8.250	9.625		4.375						7.875		5.500		3	10	3	9	16
4	5	K8	BARRIER CURB	E	25	S				2	6.875	11.250		4.375						9.250		6.500		3	11	3	9	16
48	5	K9	BARRIER CURB	E	20					6	2.000													6	2	6	2	309
20	4	K10	BARRIER CURB	E	20					8	2.000													8	2	8	2	109
4	5	K11	BARRIER CURB	E	8					2	2.125									2	2.000	2.375		4	4	4	4	18
20	4	K13	BARRIER CURB	E	20					8	2.000													8	2	8	2	109
614	5	R1	BARRIER CURB	E	26					2	6.000	4.250	2	6.125						2	6.000	3.000		5	2	5	2	3309
614	5	R3	BARRIER CURB	E	19	S					17.000	6.000												0	23	0	22	1174
614	5	R4	BARRIER CURB	E	27	S						6.000		11.250		7.000		12.000		9.250		6.375		3	0	2	10	1814
56	5	R5	BARRIER CURB	E	20					9	9.000													9	9	9	9	569
56	5	R6	BARRIER CURB	E	20					41	5.000													41	5	41	5	2419
28	5	R7	BARRIER CURB	E	20					51	5.000													51	5	51	5	1502
			SLIP FORM																									
			BARRIER CURB																									
40	5	C1	SLIP FORM	E	20					10	0.000													10	0	10	0	417
8	5	C2	SLIP FORM	E	20					8	5.000													8	5	8	5	70
			TOTALS																									
	4																											1370
	4			E																								440
	5																											2904

BILL OF REINFORCING STEEL

NO. REQ'D.	MARK NO. SIZE	MARK	LOCATION	EPOXY (E)	SHAPE NO.	STIRRUP (S)	SUBSTR. (X)	VARIES (V)	NO. EACH	DIMENSIONS B FT.	B IN.	C FT.	C IN.	D FT.	D IN.	E FT.	E IN.	F FT.	F IN.	H FT.	H IN.	K FT.	K IN.	NOMINAL LENGTH FT.	NOMINAL LENGTH IN.	ACTUAL LENGTH FT.	ACTUAL LENGTH IN.	WEIGHT LBS.
	5			E																								23938
	6																											6330
	6			E																								27349
	8																											2801
	8			E																								19466
	9																											8713
			TOTAL																									22118
			TOTAL	E																								71193
			Slab on																									
			Girder																									
	4																											482
	4			E																								222
	5																											778
	5			E																								10991
	6																											5152
	6			E																								27349
	8																											726
	8			E																								19466
			TOTAL																									65166
			Reinforcing																									
			Steel																									
			(Bridges)																									
	4																											888
	5																											2126
	6																											1178
	8																											2075
	9																											8713
			TOTAL																									14980
			Safety																									
			Barrier																									
			Curb																									
	4			E																								218
	5			E																								12460
			TOTAL																									12678
			Slip Form																									
			Option																									
	5			E																								487
			TOTAL																									487

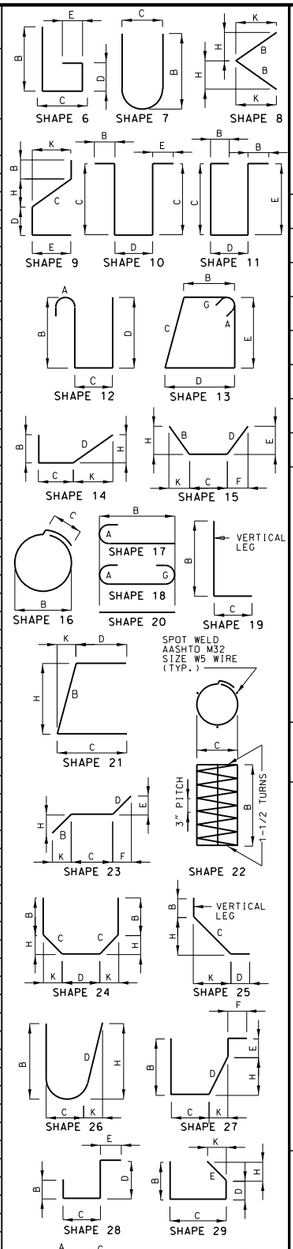

BENDING DIAGRAMS

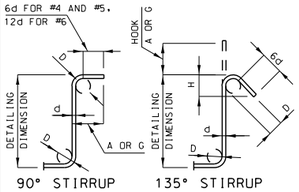

STIRRUP HOOK DIMENSIONS

GRADES 40 - 50 - 60 KSI

BAR SIZE	D (IN.)	90° HOOK HOOK A OR G	135° HOOK HOOK A OR G	135° HOOK APPROX. H
#4	2"	4 1/2"	4 1/2"	3"
#5	2 1/2"	6"	5 1/2"	3 3/4"
#6	4 1/2"	12"	8"	4 1/2"

NOTE: UNLESS OTHERWISE NOTED, DIAMETER "D" IS THE SAME FOR ALL BENDS AND HOOKS ON A BAR.

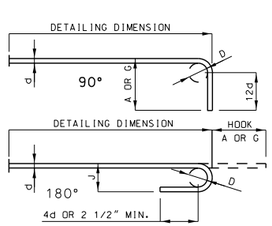

END HOOK DIMENSIONS

BAR SIZE	D (IN.)	ALL GRADES 180° HOOKS A OR G	180° HOOKS J	90° HOOKS A OR G
#3	2 1/4"	5"	3"	6"
#4	3"	6"	4"	8"
#5	3 3/4"	7"	5"	10"
#6	4 1/2"	8"	6"	12"
#7	5 1/4"	10"	7"	14"
#8	6"	11"	8"	16"
#9	9 1/2"	15"	11 3/4"	19"
#10	10 3/4"	17"	13 1/4"	22"
#11	12"	19"	14 3/4"	2'-0"
#14	18 1/4"	2'-3"	21 3/4"	2'-7"

NOTE:
ALL STANDARD HOOKS AND BENDS OTHER THAN 180 DEGREE ARE TO BE BENT WITH SAME PROCEDURE AS FOR 90 DEGREE STANDARD HOOKS.
HOOKS AND BENDS SHALL BE IN ACCORDANCE WITH THE PROCEDURES AS SHOWN ON THIS SHEET.
E = EPOXY COATED REINFORCEMENT.
S = STIRRUP.
X = BAR IS INCLUDED IN SUBSTRUCTURE QUANTITIES.
V = BAR DIMENSIONS VARY IN EQUAL INCREMENTS BETWEEN DIMENSIONS SHOWN ON THIS LINE AND THE FOLLOWING LINE.
NO. EA. = NUMBER OF BARS OF EACH LENGTH.
NOMINAL LENGTHS ARE BASED ON OUT TO OUT DIMENSIONS SHOWN IN BENDING DIAGRAMS AND ARE LISTED FOR FABRICATORS USE. (NEAREST INCH)
ACTUAL LENGTHS ARE MEASURED ALONG CENTERLINE BAR TO THE NEAREST INCH.
PAYWEIGHTS ARE BASED ON ACTUAL LENGTHS.
FOUR ANGLE OR CHANNEL SPACERS ARE REQUIRED FOR EACH COLUMN SPIRAL. SPACERS ARE TO BE PLACED ON INSIDE OF SPIRALS. LENGTH AND WEIGHT OF COLUMN SPIRALS DO NOT INCLUDE SPLICES OR SPACERS.
REINFORCING STEEL (GRADE 60) FY = 60,000 PSI.

Detailed Aug. 2016
Checked Aug. 2016

Note: This drawing is not to scale. Follow dimensions.

STATE OF MISSOURI
PROFESSIONAL ENGINEER
CHRISTOPHER T. HERSINGER
NUMBER PE-2012018080
THIS SHEET HAS BEEN SIGNED, SEALED AND DATED ELECTRONICALLY.

DATE PREPARED 10/17/2016
ROUTE EE | STATE MO
DISTRICT BR | SHEET NO. 29
COUNTY GASCONADE
JOB NO. J5S3140
CONTRACT ID.
PROJECT NO.
BRIDGE NO. A8440

DESCRIPTION | DATE

IF A SEAL IS PRESENT ON THIS SHEET IT HAS BEEN ELECTRONICALLY SEALED AND DATED.

MISSOURI HIGHWAYS AND TRANSPORTATION COMMISSION
105 WEST CAPITOL
JEFFERSON CITY, MO 65102
1-888-ASK-MODOT (1-888-275-6636)
MoDOT
HR GREEN, INC.
16020 SWINGLEY RIDGE ROAD, SUITE 205
ST. LOUIS, MISSOURI 63017
PHONE: (636) 519.0990
CORPORATE LICENSE #2002006608
HRGreen

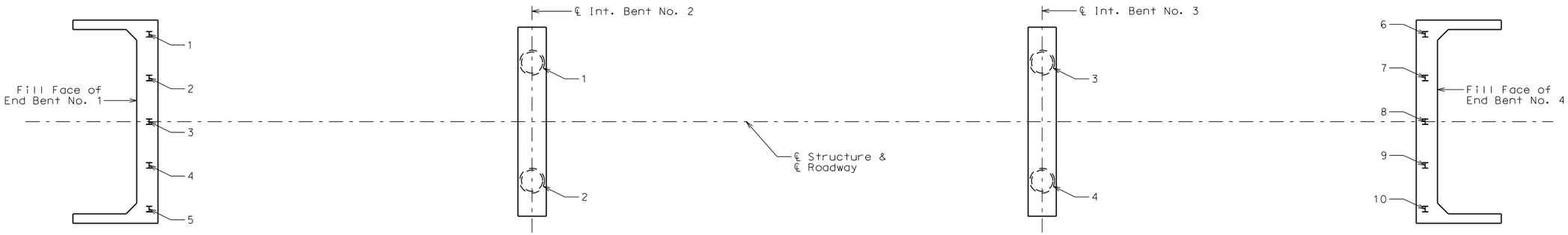

PART PLAN SHOWING PILE & DRILLED SHAFT NUMBERING FOR
RECORDING AS-BUILT PILE DATA & AS-BUILT DRILLED SHAFT DATA

As-Built Pile Data

Pile No.	Length in Place (ft)	Computed Nominal Axial Compressive Resistance (kips)	Remarks
			End Bent No. 1
1			
2			
3			
4			
5			
			End Bent No. 4
6			
7			
8			
9			
10			

As-Built Drilled Shaft Data

Shaft No.	Top of Sound Rock (Elev.)	Tip of Casing (Elev.)	Bottom of Rock Socket (Elev.)	Remarks
				Intermediate Bent No. 2
1				
2				
				Intermediate Bent No. 3
3				
4				

Note:
Indicate in remarks column:
A. Pile type and grade
B. Batter
C. Driven to practical refusal

This sheet to be completed by MoDOT construction personnel.

AS-BUILT PILE DATA

Detailed Aug. 2016
Checked Aug. 2016

Note: This drawing is not to scale. Follow dimensions.

\\hrgwdfs004\Data\75160010\CAD\Data\Bridge_Plans\B_A8440_030_J5S3140_AsBuiltPileandDS.dgn 3:16:25 PM 10/3/2016

STATE OF MISSOURI
CHRISTOPHER T. HERSINGER
NUMBER PE-2012018080
PROFESSIONAL ENGINEER

THIS SHEET HAS BEEN SIGNED. SEALED AND DATED ELECTRONICALLY.

DATE PREPARED
10/3/2016

ROUTE	STATE
EE	MO
DISTRICT	SHEET NO.
BR	30

COUNTY
GASCONADE

JOB NO.
J5S3140

CONTRACT ID.

PROJECT NO.

BRIDGE NO.
A8440

DESCRIPTION	DATE

IF A SEAL IS PRESENT ON THIS SHEET IT HAS BEEN ELECTRONICALLY SEALED AND DATED.

MISSOURI HIGHWAYS AND TRANSPORTATION COMMISSION
105 WEST CAPITOL
JEFFERSON CITY, MO 65102
1-888-ASK-MODOT (1-888-275-6636)

HR GREEN, INC.
16020 SWINGLEY RIDGE ROAD, SUITE 205
ST. LOUIS, MISSOURI 63017
PHONE: (636) 519.0990
CORPORATE LICENSE #2002006608

BORING LOG

PROJECT Highway EE Over Dry Fork Creek **BORING NUMBER** B-101
LOCATION Gasconade County, Missouri **SHEET** 1 **of** 2
DRILLER Midwest Drilling, Inc. **HAMMER** Auto **PROJECT NO.** 2016-7015.10 Task 103
EQUIPMENT CME-75 w/CFA **ELEVATION** 785.83 **DATE DRILLED** 07/28/16
STATION 291+89.92 **OFFSET** 5.92' Lt **NORTHING** 889950.42 **EASTING** 523710.81

DEPTH (ft)	SAMPLE NUMBER	SAMPLE TYPE	SAMPLE RECOVERY (in/in)	SAMPLE BLOWS (per 6 in)	DESCRIPTION (UNIFIED SOIL CLASSIFICATION)	GRAPHIC	SEE REMARK NO.	LAB: MOISTURE CONTENT (%)	LAB: DRY DENSITY (pcf)	LAB: HAND PENETROMETER (ksf)	LAB: UNCONFINED COMPRESSIVE STRENGTH (ksf)	LAB: LIQUID LIMIT	LAB: PLASTICITY INDEX	ELEVATION (ft)
					4" ASPHALTIC CONCRETE									
					4" CRUSHED ROCK									
	1	SS	15/18	3 5 2	FILL: Brown and gray, sandy fat clay, sand is fine to coarse, with fine to coarse gravel, and crushed rock, trace crushed asphalt Becomes brown		1	16		2.5				
3														783
	2	SS	15/18	3 4 4			1	20		–				
6														780
	3	ST	4/24		SANDY LEAN CLAY (CL): Brownish-gray, sand is fine, with fine sand seams and coarse gravel		2	15		7.5				
	4	SS	16/18	3 2 4				15		3.0				777
9														
12					LEAN CLAY (CL): Gray, with fine sand									774
	5	SS	18/18	2 2 3				20		1.5				771
15														
					SANDY FAT CLAY (CH): Brown and gray, sand is fine, trace fine to coarse gravel									768
18														
	6	SS	18/18	3 3 4				23		3.5				

WATER LEVEL:
_____ NONE OBSERVED WHILE DRILLING
18.0 ft WHILE DRILLING
_____ ft AT COMPLETION OF DRILLING
_____ ft ____ HRS AFTER DRILLING

REMARKS:
1) Unable to perform Unconfined Compression test due to low sample recovery.
2) Unable to perform Unconfined Compression test due to low sample recovery.

BORING LOG

PROJECT Highway EE Over Dry Fork Creek **BORING NUMBER** B-101
LOCATION Gasconade County, Missouri **SHEET** 2 **of** 2
DRILLER Midwest Drilling, Inc. **HAMMER** Auto **PROJECT NO.** 2016-7015.10 Task 103
EQUIPMENT CME-75 w/CFA **ELEVATION** 785.83 **DATE DRILLED** 07/28/16
STATION 291+89.92 **OFFSET** 5.92' Lt **NORTHING** 889950.42 **EASTING** 523710.81

DEPTH (ft)	SAMPLE NUMBER	SAMPLE TYPE	SAMPLE RECOVERY (in/in)	SAMPLE BLOWS (per 6 in)	DESCRIPTION (UNIFIED SOIL CLASSIFICATION)	GRAPHIC	SEE REMARK NO.	LAB: MOISTURE CONTENT (%)	LAB: DRY DENSITY (pcf)	LAB: HAND PENETROMETER (ksf)	LAB: UNCONFINED COMPRESSIVE STRENGTH (ksf)	LAB: LIQUID LIMIT	LAB: PLASTICITY INDEX	ELEVATION (ft)
21	7	ST	4/10		SANDY FAT CLAY (CH): Brown and gray, sand is fine, trace fine to coarse gravel *(Continued)*		3	19		–				765
24	8	SS	0/0	50/0"	WEATHERED DOLOMITE									762
					Auger refusal on dolomite at 24 feet.									
27														759
30														756
33														753
36														750
39														747

WATER LEVEL:
_____ NONE OBSERVED WHILE DRILLING
18.0 ft WHILE DRILLING
_____ ft AT COMPLETION OF DRILLING
_____ ft ____ HRS AFTER DRILLING

REMARKS:
3) Unable to perform Unconfined Compression test due to low sample recovery.

BORING DATA

Note: For locations of borings, see Sheet No. 1.

Detailed Aug. 2016
Checked Aug. 2016

Note: This drawing is not to scale. Follow dimensions.

STATE OF MISSOURI
CHRISTOPHER T. HERSINGER
NUMBER PE-2012018080
PROFESSIONAL ENGINEER
THIS SHEET HAS BEEN SIGNED, SEALED AND DATED ELECTRONICALLY.

DATE PREPARED 10/3/2016
ROUTE EE | STATE MO
DISTRICT BR | SHEET NO. 31
COUNTY GASCONADE
JOB NO. J5S3140
CONTRACT ID.
PROJECT NO.
BRIDGE NO. A8440

DESCRIPTION | DATE

MISSOURI HIGHWAYS AND TRANSPORTATION COMMISSION
105 WEST CAPITOL
JEFFERSON CITY, MO 65102
1-888-ASK-MODOT (1-888-275-6636)
HR GREEN, INC.
16020 SWINGLEY RIDGE ROAD, SUITE 205
ST. LOUIS, MISSOURI 63017
PHONE: (636) 519.0990
CORPORATE LICENSE #2002006608
HRGreen

IF A SEAL IS PRESENT ON THIS SHEET IT HAS BEEN ELECTRONICALLY SEALED AND DATED.

BORING LOG

PROJECT Highway EE Over Dry Fork Creek — **BORING NUMBER** B-102
LOCATION Gasconade County, Missouri — **SHEET** 1 **of** 2
DRILLER Midwest Drilling, Inc. — **HAMMER** Auto — **PROJECT NO.** 2016-7015.10 Task 103
EQUIPMENT CME-75 w/HSA — **ELEVATION** 785.9 — **DATE DRILLED** 07/27/16
STATION 291+90.45 — **OFFSET** 5.74' Rt — **NORTHING** 889948.55 — **EASTING** 523699.29

DEPTH (ft)	SAMPLE NUMBER	SAMPLE TYPE	SAMPLE RECOVERY (in/in)	SAMPLE BLOWS (per 6 in)	DESCRIPTION (UNIFIED SOIL CLASSIFICATION)	GRAPHIC	SEE REMARK NO.	LAB: MOISTURE CONTENT (%)	LAB: DRY DENSITY (pcf)	LAB: HAND PENETROMETER (ksf)	LAB: UNCONFINED COMPRESSIVE STRENGTH (ksf)	LAB: LIQUID LIMIT	LAB: PLASTICITY INDEX	ELEVATION (ft)
					4" ASPHALTIC CONCRETE									
					6" CRUSHED ROCK									
	1	SS	10/18	5 5 3	FILL: Brown, sandy lean clay, sand is fine to coarse, with fine to coarse gravel			16		–				
3														783
	2	SS	13/18	4 2 5				21		–				
6														780
	3	SS	18/18	3 5 6	Trace fine sand and organics, no gravel			21		3.0				
					FILL: Gray, lean clay, trace fine sand									
9	4	SS	18/18	3 5 5				19		–				777
12					LEAN CLAY (CL): Gray, trace fine sand									774
	5	SS	18/18	1 2 3				19		1.5				
15														771
18					SANDY FAT CLAY (CH): Gray, sand is fine, with fine to coarse sandstone gravel									768
	6	SS	18/18	7 6 5				12		–				

WATER LEVEL:
- ____ NONE OBSERVED WHILE DRILLING
- 22.0 ft WHILE DRILLING
- ____ ft AT COMPLETION OF DRILLING
- ____ ft ___ HRS AFTER DRILLING

REMARKS:

BORING LOG

PROJECT Highway EE Over Dry Fork Creek — **BORING NUMBER** B-102
LOCATION Gasconade County, Missouri — **SHEET** 2 **of** 2
DRILLER Midwest Drilling, Inc. — **HAMMER** Auto — **PROJECT NO.** 2016-7015.10 Task 103
EQUIPMENT CME-75 w/HSA — **ELEVATION** 785.9 — **DATE DRILLED** 07/27/16
STATION 291+90.45 — **OFFSET** 5.74' Rt — **NORTHING** 889948.55 — **EASTING** 523699.29

DEPTH (ft)	SAMPLE NUMBER	SAMPLE TYPE	SAMPLE RECOVERY (in/in)	SAMPLE BLOWS (per 6 in)	DESCRIPTION (UNIFIED SOIL CLASSIFICATION)	GRAPHIC	SEE REMARK NO.	LAB: MOISTURE CONTENT (%)	LAB: DRY DENSITY (pcf)	LAB: HAND PENETROMETER (ksf)	LAB: UNCONFINED COMPRESSIVE STRENGTH (ksf)	LAB: LIQUID LIMIT	LAB: PLASTICITY INDEX	ELEVATION (ft)
21					SANDY FAT CLAY (CH): Gray, sand is fine, with fine to coarse sandstone gravel *(Continued)*									765
					WEATHERED DOLOMITE									
24	7	SS	3/3											762
					SANDY DOLOMITE: Light gray, hard, finely crystalline, thinly bedded, slightly weathered, moderately fractured Becomes interbedded with fine blue shale laminations		1	10						
27	8	NX	55/60				2							759
30					Becomes moderately weathered, fine to medium crystalline, pitted, with chert									756
	9	NX	58/60		4" Open vertical fracture Becomes highly fractured		3							
33														753
	10	NX	17/30		Becomes slightly weathered, moderately fractured, with pits and vugs, infilled with very coarse massive dolomite crystal up to 1/4"		4							
36														750
39					Boring terminated at 36.5 feet.									747

WATER LEVEL:
- ____ NONE OBSERVED WHILE DRILLING
- 22.0 ft WHILE DRILLING
- ____ ft AT COMPLETION OF DRILLING
- ____ ft ___ HRS AFTER DRILLING

REMARKS:
1) Auger refusal on dolomite at 24 feet. Boring advanced using rock coring methods.
2) RQD = 32%
3) RQD = 41%
4) RQD = 67%

STATE OF MISSOURI — PROFESSIONAL ENGINEER
CHRISTOPHER T. HERSINGER
NUMBER PE-2012018080
THIS SHEET HAS BEEN SIGNED, SEALED AND DATED ELECTRONICALLY.

DATE PREPARED 10/3/2016
ROUTE EE — STATE MO
DISTRICT BR — SHEET NO. 32
COUNTY GASCONADE
JOB NO. J5S3140
CONTRACT ID.
PROJECT NO.
BRIDGE NO. A8440

DESCRIPTION | DATE

IF A SEAL IS PRESENT ON THIS SHEET IT HAS BEEN ELECTRONICALLY SEALED AND DATED.

MISSOURI HIGHWAYS AND TRANSPORTATION COMMISSION
105 WEST CAPITOL
JEFFERSON CITY, MO 65102
1-888-ASK-MODOT (1-888-275-6636)

HR GREEN, INC.
16020 SWINGLEY RIDGE ROAD, SUITE 205
ST. LOUIS, MISSOURI 63017
PHONE: (636) 519.0990
CORPORATE LICENSE #2002006608

BORING DATA

Note: For locations of borings, see Sheet No. 1.

Detailed Aug. 2016
Checked Aug. 2016

Note: This drawing is not to scale. Follow dimensions.

\\hrgwdfs004\Data\75160010\CAD\Data\Bridge_Plans\B_A8440_032_J5S3140_BoringLogs.dgn 3:16:29 PM 10/3/2016

BORING LOG

PROJECT Highway EE Over Dry Fork Creek — **BORING NUMBER** B-201
LOCATION Gasconade County, Missouri — **SHEET** 1 **of** 3
DRILLER Midwest Drilling, Inc. — **HAMMER** Auto — **PROJECT NO.** 2016-7015.10 Task 103
EQUIPMENT CME-550 w/HSA — **ELEVATION** 773.81 — **DATE DRILLED** 7/21,22/2016
STATION 292+81.74 — **OFFSET** 25.31' Lt — **NORTHING** 889861.47 — **EASTING** 523740.71

DEPTH (ft)	SAMPLE NUMBER	SAMPLE TYPE	SAMPLE RECOVERY (in/in)	SAMPLE BLOWS (per 6 in)	DESCRIPTION (UNIFIED SOIL CLASSIFICATION)	GRAPHIC	SEE REMARK NO.	LAB: MOISTURE CONTENT (%)	LAB: DRY DENSITY (pcf)	LAB: HAND PENETROMETER (ksf)	LAB: UNCONFINED COMPRESSIVE STRENGTH (ksf)	LAB: LIQUID LIMIT	LAB: PLASTICITY INDEX	ELEVATION (ft)
					FILL: Brown, sandy lean clay, sand is fine, with fine gravel and fine sand seams		1							
	1	SS	14/18	4 8 8				14		6.0				
					CLAYEY SAND (SC): Brown, fine, clay is lean									771
3	2	ST	16/24		SANDY LEAN CLAY (CL): Brown, sand is fine With fine sand seams		2	18	99		2.4			
6	3	SS	15/18	1 2 3	LEAN CLAY (CL): Gray, with fine sand and fine sand seams			29		2.5				768
					CLAYEY GRAVEL (GC): Tan, fine to coarse chert and dolomite, clay is lean									765
9	4	SS	6/18	7 10 12				9						
12					WEATHERED DOLOMITE		3							762
							4							
15					DOLOMITE: Light gray, moderately hard, finely crystalline, banded to medium bedded, slightly weathered, slightly fractured		5							759
	5	NX	60/60				6							
18											900.0			756
					Becomes laminated to thinly bedded, moderately weathered, fractured, with chert nodules									

WATER LEVEL:
- _____ NONE OBSERVED WHILE DRILLING
- 9.0 ft WHILE DRILLING
- _____ ft AT COMPLETION OF DRILLING
- _____ ft ___ HRS AFTER DRILLING

REMARKS:
1) Skidsteer used to level the ground for drilling equipment.
2) Unconsolidated unconfined triaxial strength test performed.
3) Field observation.
4) No sample collected due to very rough drilling at sample depth.
5) Auger refusal on dolomite at 14.5 feet. Boring advanced using rock coring methods.
6) RQD = 98%

BORING LOG

PROJECT Highway EE Over Dry Fork Creek — **BORING NUMBER** B-201
LOCATION Gasconade County, Missouri — **SHEET** 2 **of** 3
DRILLER Midwest Drilling, Inc. — **HAMMER** Auto — **PROJECT NO.** 2016-7015.10 Task 103
EQUIPMENT CME-550 w/HSA — **ELEVATION** 773.81 — **DATE DRILLED** 7/21,22/2016
STATION 292+81.74 — **OFFSET** 25.31' Lt — **NORTHING** 889861.47 — **EASTING** 523740.71

DEPTH (ft)	SAMPLE NUMBER	SAMPLE TYPE	SAMPLE RECOVERY (in/in)	SAMPLE BLOWS (per 6 in)	DESCRIPTION (UNIFIED SOIL CLASSIFICATION)	GRAPHIC	SEE REMARK NO.	LAB: MOISTURE CONTENT (%)	LAB: DRY DENSITY (pcf)	LAB: HAND PENETROMETER (ksf)	LAB: UNCONFINED COMPRESSIVE STRENGTH (ksf)	LAB: LIQUID LIMIT	LAB: PLASTICITY INDEX	ELEVATION (ft)
21	6	NX	60/60		DOLOMITE: Light gray, moderately hard, finely crystalline, banded to medium bedded, slightly weathered, slightly fractured *(Continued)* Becomes slightly weathered Becomes moderately weathered, moderately fractured, pitted		7							753
24					CHERT: White and gray, hard, moderately weathered, pitted Trace dolomite laminations Becomes fractured to highly fractured CHERTY DOLOMITE: Tan and light gray, moderately hard, finely crystalline, banded to thinly bedded, moderately weathered, moderately fractured		8							750
27	7	NX	57/60		CHERT: White and gray, very hard, with bands of dolomite, slightly weathered, fractured		9							747
30														744
33	8	NX	60/60				10							741
36					Becomes moderately weathered, with 21" open vertical fracture									738
39	9	NX	60/60		Becomes highly weathered, with open vertical fractures, dolomite increases		11							735

WATER LEVEL:
- _____ NONE OBSERVED WHILE DRILLING
- 9.0 ft WHILE DRILLING
- _____ ft AT COMPLETION OF DRILLING
- _____ ft ___ HRS AFTER DRILLING

REMARKS:
7) RQD = 20%
8) Difficult drilling through chert caused clogging in Run 3 and Run 4. Replaced drill bit before starting Run 5.
9) RQD = 20%
10) RQD = 35%
11) RQD = 8%

PROFESSIONAL ENGINEER
STATE OF MISSOURI
CHRISTOPHER T. HERSINGER
NUMBER PE-2012018080
THIS SHEET HAS BEEN SIGNED, SEALED AND DATED ELECTRONICALLY.

DATE PREPARED 10/3/2016
ROUTE EE — STATE MO
DISTRICT BR — SHEET NO. 33
COUNTY GASCONADE
JOB NO. J5S3140
CONTRACT ID.
PROJECT NO.
BRIDGE NO. A8440

DESCRIPTION | DATE

MISSOURI HIGHWAYS AND TRANSPORTATION COMMISSION
105 WEST CAPITOL
JEFFERSON CITY, MO 65102
1-888-ASK-MODOT (1-888-275-6636)

HR GREEN, INC.
16020 SWINGLEY RIDGE ROAD, SUITE 205
ST. LOUIS, MISSOURI 63017
PHONE: (636) 519.0990
CORPORATE LICENSE #2002006608

IF A SEAL IS PRESENT ON THIS SHEET IT HAS BEEN ELECTRONICALLY SEALED AND DATED.

BORING DATA

Note: For locations of borings, see Sheet No. 1.

Detailed Aug. 2016
Checked Aug. 2016

Note: This drawing is not to scale. Follow dimensions.

\\hrgwdfs004\Data\75160010\CAD\Data\Bridge_Plans\B_A8440_033_J5S3140_BoringLogs.dgn 3:16:33 PM 10/3/2016

BORING LOG

PROJECT Highway EE Over Dry Fork Creek
LOCATION Gasconade County, Missouri
DRILLER Midwest Drilling, Inc. **HAMMER** Auto
EQUIPMENT CME-550 w/HSA **ELEVATION** 773.81
STATION 292+81.74 **OFFSET** 25.31' Lt **NORTHING** 889861.47 **EASTING** 523740.71

BORING NUMBER B-201
SHEET 3 **of** 3
PROJECT NO. 2016-7015.10 Task 103
DATE DRILLED 7/21,22/2016

DEPTH (ft)	SAMPLE NUMBER	SAMPLE TYPE	SAMPLE RECOVERY (in/in)	SAMPLE BLOWS (per 6 in)	DESCRIPTION (UNIFIED SOIL CLASSIFICATION)	GRAPHIC	SEE REMARK NO.	LAB: MOISTURE CONTENT (%)	LAB: DRY DENSITY (pcf)	LAB: HAND PENETROMETER (ksf)	LAB: UNCONFINED COMPRESSIVE STRENGTH (ksf)	LAB: LIQUID LIMIT	LAB: PLASTICITY INDEX	ELEVATION (ft)
42	10	NX	60/60		CHERTY DOLOMITE: Gray, moderately hard to hard, finely crystalline, banded to thinly bedded, moderately weathered, pitted *(Continued)* 5" open vertical fracture		12				685.9			732
45					1.5" open vertical fracture Becomes highly weathered, highly fractured, crystals become fine to coarse									729
48	11	NX	35/60				13							726
51					Boring terminated at 49.5 feet.									723
54														720
57														717
														714

WATER LEVEL:
- NONE OBSERVED WHILE DRILLING
- 9.0 ft WHILE DRILLING
- ft AT COMPLETION OF DRILLING
- ft ___ HRS AFTER DRILLING

REMARKS:
12) RQD = 68%
13) RQD = 18%

BORING LOG

PROJECT Highway EE Over Dry Fork Creek
LOCATION Gasconade County, Missouri
DRILLER Midwest Drilling, Inc. **HAMMER** Auto
EQUIPMENT CME-550 w/CFA **ELEVATION** 766.72
STATION 292+89.90 **OFFSET** 21.70' Rt **NORTHING** 889847.92 **EASTING** 523694.97

BORING NUMBER B-202
SHEET 1 **of** 1
PROJECT NO. 2016-7015.10 Task 103
DATE DRILLED 07/21/16

DEPTH (ft)	SAMPLE NUMBER	SAMPLE TYPE	SAMPLE RECOVERY (in/in)	SAMPLE BLOWS (per 6 in)	DESCRIPTION (UNIFIED SOIL CLASSIFICATION)	GRAPHIC	SEE REMARK NO.	LAB: MOISTURE CONTENT (%)	LAB: DRY DENSITY (pcf)	LAB: HAND PENETROMETER (ksf)	LAB: UNCONFINED COMPRESSIVE STRENGTH (ksf)	LAB: LIQUID LIMIT	LAB: PLASTICITY INDEX	ELEVATION (ft)
					CLAYEY GRAVEL (GC): Brown, fine to coarse chert, clay is fat		1							
3	1	SS	10/18	11 14 21	WEATHERED DOLOMITE: Trace fat clay			11						765
6					Auger refusal on dolomite at 3.5 feet.		2							762
9														759
12														756
15														753
18														750
														747

WATER LEVEL:
- NONE OBSERVED WHILE DRILLING
- 2.0 ft WHILE DRILLING
- ft AT COMPLETION OF DRILLING
- ft ___ HRS AFTER DRILLING

REMARKS:
1) Skidsteer used to level ground for drilling.
2) Drilled second hole approximately 1 foot southeast of B-202 for confirmation that refusal was at 3.5 feet.

BORING DATA

Note: For locations of borings, see Sheet No. 1.

Note: This drawing is not to scale. Follow dimensions.

Detailed Aug. 2016
Checked Aug. 2016

CHRISTOPHER T. HERSINGER
NUMBER PE-2012018080
PROFESSIONAL ENGINEER
STATE OF MISSOURI
THIS SHEET HAS BEEN SIGNED, SEALED AND DATED ELECTRONICALLY.
IF A SEAL IS PRESENT ON THIS SHEET IT HAS BEEN ELECTRONICALLY SEALED AND DATED.

DATE PREPARED 10/3/2016
ROUTE EE | STATE MO
DISTRICT BR | SHEET NO. 34
COUNTY GASCONADE
JOB NO. J5S3140
CONTRACT ID.
PROJECT NO.
BRIDGE NO. A8440

DESCRIPTION | DATE

MISSOURI HIGHWAYS AND TRANSPORTATION COMMISSION
105 WEST CAPITOL
JEFFERSON CITY, MO 65102
1-888-ASK-MODOT (1-888-275-6636)

HR GREEN, INC.
16020 SWINGLEY RIDGE ROAD, SUITE 205
ST. LOUIS, MISSOURI 63017
PHONE: (636) 519.0990
CORPORATE LICENSE #2002006608
HRGreen

BORING LOG

PROJECT Highway EE Over Dry Fork Creek
LOCATION Gasconade County, Missouri
DRILLER Midwest Drilling, Inc. **HAMMER** Auto
EQUIPMENT CME-75 w/CFA **ELEVATION** 765.76
STATION 294+15.77 **OFFSET** 21.13' Lt **NORTHING** 889727.86 **EASTING** 523752.1

BORING NUMBER B-301
SHEET 1 **of** 1
PROJECT NO. 2016-7015.10 Task 103
DATE DRILLED 7/22,25/2016

DEPTH (ft)	SAMPLE NUMBER	SAMPLE TYPE	SAMPLE RECOVERY (in/in)	SAMPLE BLOWS (per 6 in)	DESCRIPTION (UNIFIED SOIL CLASSIFICATION)	GRAPHIC	SEE REMARK NO.	LAB: MOISTURE CONTENT (%)	LAB: DRY DENSITY (pcf)	LAB: HAND PENETROMETER (ksf)	LAB: UNCONFINED COMPRESSIVE STRENGTH (ksf)	LAB: LIQUID LIMIT	LAB: PLASTICITY INDEX	ELEVATION (ft)
					SANDY FAT CLAY (CH): Brown, sand is fine to coarse, with fine to coarse chert gravel		1							765
	1	SS	10/18	3 18 13	GRAVEL (GP): Fine to coarse chert, with fine to coarse sand			15		–				
3	2	SS	2/2	50/2"	SANDY FAT CLAY (CH): Brown, sand is fine to coarse, with weathered dolomite			30		–				762
					Auger refusal on dolomite at 3.5 feet.									
6														759
9														756
12														753
15														750
18														747

WATER LEVEL:
X NONE OBSERVED WHILE DRILLING
____ ft WHILE DRILLING
____ ft AT COMPLETION OF DRILLING
____ ft ____ HRS AFTER DRILLING

REMARKS:
1) Skidsteer used to level ground for drilling.

BORING LOG

PROJECT Highway EE Over Dry Fork Creek
LOCATION Gasconade County, Missouri
DRILLER Midwest Drilling, Inc. **HAMMER** Auto
EQUIPMENT CME-550 w/HSA **ELEVATION** 765.19
STATION 294+19.50 **OFFSET** 20.25' Rt **NORTHING** 889719.36 **EASTING** 523711.43

BORING NUMBER B-302
SHEET 1 **of** 2
PROJECT NO. 2016-7015.10 Task 103
DATE DRILLED 07/22/16

DEPTH (ft)	SAMPLE NUMBER	SAMPLE TYPE	SAMPLE RECOVERY (in/in)	SAMPLE BLOWS (per 6 in)	DESCRIPTION (UNIFIED SOIL CLASSIFICATION)	GRAPHIC	SEE REMARK NO.	LAB: MOISTURE CONTENT (%)	LAB: DRY DENSITY (pcf)	LAB: HAND PENETROMETER (ksf)	LAB: UNCONFINED COMPRESSIVE STRENGTH (ksf)	LAB: LIQUID LIMIT	LAB: PLASTICITY INDEX	ELEVATION (ft)
					GRAVEL (GP): Fine to coarse chert, with fine to coarse sand		1							765
	1	SS	6/18	11 23 24	CLAYEY GRAVEL (GC): Fine to coarse chert, clay is fat, with fine to coarse sand			10						
					WEATHERED DOLOMITE		2							
3					SANDY DOLOMITE: Gray and tan, hard, medium to coarsely crystalline, medium to thick bedding, slightly weathered, pitted Trace shale seams		3							762
6	1	NX	57/60		Trace chert nodules		5				685.3			759
9	2	NX	55/60		Becomes vuggy Becomes pitted		6							756
					CONGLOMERATE: Chert, sandstone, shale									
12														753
15	3	NX	52/60		SANDY DOLOMITE: Gray and tan, hard, medium crystalline, thinly bedded, moderately weathered, pitted Becomes white, gray and tan, very fine grained, thinly bedded, highly weathered Becomes gray and tan, slightly weathered, trace glauconite and pyrite		7							750
18					Becomes white, gray and tan, highly weathered									747

WATER LEVEL:
X NONE OBSERVED WHILE DRILLING
____ ft WHILE DRILLING
____ ft AT COMPLETION OF DRILLING
____ ft ____ HRS AFTER DRILLING

REMARKS:
1) Skidsteer used to level ground for drilling.
2) Field observation.
3) Auger refusal on dolomite at 3 feet. Boring advanced using rock coring methods.
5) RQD=63%
6) RQD=57%
7) RQD=28%

BORING DATA

Note: For locations of borings, see Sheet No. 1.

Note: This drawing is not to scale. Follow dimensions.

Detailed Aug. 2016
Checked Aug. 2016

STATE OF MISSOURI
CHRISTOPHER T. HERSINGER
NUMBER PE-2012018080
PROFESSIONAL ENGINEER
THIS SHEET HAS BEEN SIGNED, SEALED AND DATED ELECTRONICALLY.
IF A SEAL IS PRESENT ON THIS SHEET IT HAS BEEN ELECTRONICALLY SEALED AND DATED.

DATE PREPARED 10/3/2016
ROUTE EE | STATE MO
DISTRICT BR | SHEET NO. 35
COUNTY GASCONADE
JOB NO. J5S3140
CONTRACT ID.
PROJECT NO.
BRIDGE NO. A8440

DESCRIPTION | DATE

MISSOURI HIGHWAYS AND TRANSPORTATION COMMISSION
105 WEST CAPITOL
JEFFERSON CITY, MO 65102
1-888-ASK-MODOT (1-888-275-6636)

HR GREEN, INC.
16020 SWINGLEY RIDGE ROAD, SUITE 205
ST. LOUIS, MISSOURI 63017
PHONE: (636) 519.0990
CORPORATE LICENSE #2002006608
HRGreen

BORING LOG

PROJECT Highway EE Over Dry Fork Creek
LOCATION Gasconade County, Missouri
DRILLER Midwest Drilling, Inc. **HAMMER** Auto
EQUIPMENT CME-550 w/HSA **ELEVATION** 765.19
STATION 294+19.50 **OFFSET** 20.25' Rt **NORTHING** 889719.36 **EASTING** 523711.43

BORING NUMBER B-302
SHEET 2 **of** 2
PROJECT NO. 2016-7015.10 Task 103
DATE DRILLED 07/22/16

DEPTH (ft)	SAMPLE NUMBER	SAMPLE TYPE	SAMPLE RECOVERY (in/in)	SAMPLE BLOWS (per 6 in)	DESCRIPTION (UNIFIED SOIL CLASSIFICATION)	GRAPHIC	SEE REMARK NO.	LAB: MOISTURE CONTENT (%)	LAB: DRY DENSITY (pcf)	LAB: HAND PENETROMETER (ksf)	LAB: UNCONFINED COMPRESSIVE STRENGTH (ksf)	LAB: LIQUID LIMIT	LAB: PLASTICITY INDEX	ELEVATION (ft)
21	4	NX	57/60		CHERT: Gray, hard, thinly bedded, moderately weathered									
					SANDY DOLOMITE: Brown, moderately hard, fine crystalline, slightly weathered, pitted		8							744
					CHERT: Gray, hard, medium bedded, slightly weathered, with inner bedded sandstone									
24					SANDY DOLOMITE: Gray and white, moderately hard, fine to medium crystalline, medium to thick bedded, slightly weathered, pitted									741
27	5	NX	60/60				9							738
					Boring terminated at 28 feet.									
30														735
33														732
36														729
39														726

WATER LEVEL:
X NONE OBSERVED WHILE DRILLING
ft WHILE DRILLING
ft AT COMPLETION OF DRILLING
ft ___ HRS AFTER DRILLING

REMARKS:
8) RQD=10%
9) RQD =52%

BORING LOG

PROJECT Highway EE Over Dry Fork Creek
LOCATION Gasconade County, Missouri
DRILLER Midwest Drilling, Inc. **HAMMER** Auto
EQUIPMENT CME-75 w/HSA **ELEVATION** 786.17
STATION 295+21.23 **OFFSET** 5.59' Lt **NORTHING** 889621.31 **EASTING** 523748.89

BORING NUMBER B-401
SHEET 1 **of** 2
PROJECT NO. 2016-7015.10 Task 103
DATE DRILLED 07/29/16

DEPTH (ft)	SAMPLE NUMBER	SAMPLE TYPE	SAMPLE RECOVERY (in/in)	SAMPLE BLOWS (per 6 in)	DESCRIPTION (UNIFIED SOIL CLASSIFICATION)	GRAPHIC	SEE REMARK NO.	LAB: MOISTURE CONTENT (%)	LAB: DRY DENSITY (pcf)	LAB: HAND PENETROMETER (ksf)	LAB: UNCONFINED COMPRESSIVE STRENGTH (ksf)	LAB: LIQUID LIMIT	LAB: PLASTICITY INDEX	ELEVATION (ft)
					4" ASPHALTIC CONCRETE									786
					4" CRUSHED ROCK									
					FILL: Gray, lean clay, trace fine gravel									
3	1	SS	15/18	3 5 6				14		7.0				783
					FILL: Gray, sandy fat clay, sand is fine to coarse, trace fine gravel									
	2	SS	10/18	2 2 4				15		–				
					Becomes brown									
6					FILL: Gray, lean clay, trace organics									780
	3	SS	11/18	3 4 6				16		>9.0				
9	4	SS	16/18	4 8 8				19		>9.0				777
12					SANDY LEAN CLAY (CL): Gray, sand is fine, with fine sand seams									774
	5	ST	23/24					23	98		1.0			
15														771
18														768
	6	SS	15/18	2 1 1				19		0.5				

WATER LEVEL:
NONE OBSERVED WHILE DRILLING
22.0 ft WHILE DRILLING
ft AT COMPLETION OF DRILLING
ft ___ HRS AFTER DRILLING

REMARKS:

BORING DATA

Note: For locations of borings, see Sheet No. 1.

Note: This drawing is not to scale. Follow dimensions.

Sheet No. 36 of 38

Detailed Aug. 2016
Checked Aug. 2016

CHRISTOPHER T. HERSINGER
NUMBER PE-2012018080
PROFESSIONAL ENGINEER
STATE OF MISSOURI

THIS SHEET HAS BEEN SIGNED, SEALED AND DATED ELECTRONICALLY.

DATE PREPARED 10/3/2016
ROUTE EE | STATE MO
DISTRICT BR | SHEET NO. 36
COUNTY GASCONADE
JOB NO. J5S3140
CONTRACT ID.
PROJECT NO.
BRIDGE NO. A8440

DESCRIPTION | DATE

MISSOURI HIGHWAYS AND TRANSPORTATION COMMISSION
105 WEST CAPITOL
JEFFERSON CITY, MO 65102
1-888-ASK-MODOT (1-888-275-6636)

HR GREEN, INC.
16020 SWINGLEY RIDGE ROAD, SUITE 205
ST. LOUIS, MISSOURI 63017
PHONE: (636) 519.0990
CORPORATE LICENSE #2002006608

IF A SEAL IS PRESENT ON THIS SHEET IT HAS BEEN ELECTRONICALLY SEALED AND DATED.

\\hrgwdfs004\Data\75160010\CAD\Data\Bridge_Plans\B_A8440_036_J5S3140_BoringLogs.dgn 3:16:43 PM 10/3/2016

BORING LOG

PROJECT Highway EE Over Dry Fork Creek
LOCATION Gasconade County, Missouri
DRILLER Midwest Drilling, Inc. **HAMMER** Auto
EQUIPMENT CME-75 w/HSA **ELEVATION** 786.17
STATION 295+21.23 **OFFSET** 5.59' Lt **NORTHING** 889621.31 **EASTING** 523748.89

BORING NUMBER B-401
SHEET 2 **of** 2
PROJECT NO. 2016-7015.10 Task 103
DATE DRILLED 07/29/16

DEPTH (ft)	SAMPLE NUMBER	SAMPLE TYPE	SAMPLE RECOVERY (in/in)	SAMPLE BLOWS (per 6 in)	DESCRIPTION (UNIFIED SOIL CLASSIFICATION)	GRAPHIC	SEE REMARK NO.	LAB: MOISTURE CONTENT (%)	LAB: DRY DENSITY (pcf)	LAB: HAND PENETROMETER (ksf)	LAB: UNCONFINED COMPRESSIVE STRENGTH (ksf)	LAB: LIQUID LIMIT	LAB: PLASTICITY INDEX	ELEVATION (ft)
21					SANDY LEAN CLAY (CL): Gray, sand is fine, with fine sand seams *(Continued)* With gravel and rock fragments		1							
														765
					WEATHERED DOLOMITE									
24					DOLOMITE: Light gray, moderatley hard, finely crystalline, parted to banded, slightly weathered, fractured		2							
					SANDY DOLOMITE: Light gray, hard, finely crystalline, parted to banded, trace shale seams, slightly to moderately weathered, moderately fractured									
	7	NX	59/60		Becomes medium bedded		3							762
27					Becomes banded to thinly bedded									759
					CHERTY DOLOMITE: Gray, hard to very hard, finely crystalline, banded to thinly bedded, moderately weathered, slightly fractured, trace pitting infilled with quartz crystals									
30														
	8	NX	60/60		Becomes slightly weathered		4				710.6			756
33														753
					Boring terminated at 33.5 feet.									
36														750
39														747

WATER LEVEL:
_____ NONE OBSERVED WHILE DRILLING
22.0 ft WHILE DRILLING
_____ ft AT COMPLETION OF DRILLING
_____ ft ____ HRS AFTER DRILLING

REMARKS:
1) Field observation.
2) Auger refusal on dolomite at 23.5 feet. Boring advanced using rock coring methods.
3) RQD = 63%
4) RQD = 61%

BORING LOG

PROJECT Highway EE Over Dry Fork Creek
LOCATION Gasconade County, Missouri
DRILLER Midwest Drilling, Inc. **HAMMER** Auto
EQUIPMENT CME-75 w/CFA **ELEVATION** 785.98
STATION 295+18.31 **OFFSET** 5.90' Rt **NORTHING** 889622.87 **EASTING** 523737.14

BORING NUMBER B-402
SHEET 1 **of** 2
PROJECT NO. 2016-7015.10 Task 103
DATE DRILLED 07/28/16

DEPTH (ft)	SAMPLE NUMBER	SAMPLE TYPE	SAMPLE RECOVERY (in/in)	SAMPLE BLOWS (per 6 in)	DESCRIPTION (UNIFIED SOIL CLASSIFICATION)	GRAPHIC	SEE REMARK NO.	LAB: MOISTURE CONTENT (%)	LAB: DRY DENSITY (pcf)	LAB: HAND PENETROMETER (ksf)	LAB: UNCONFINED COMPRESSIVE STRENGTH (ksf)	LAB: LIQUID LIMIT	LAB: PLASTICITY INDEX	ELEVATION (ft)
					4" ASPHALTIC CONCRETE 4" CRUSHED ROCK									
	1	SS	13/18	5 5 5	FILL: Dark brown, sandy fat clay, sand is fine to coarse, with fine to coarse gravel			14		6.0				
3														783
	2	SS	12/18	3 3 4				16		3.0				
6					FILL: Gray, lean clay, with fine sand, trace fine to coarse gravel									780
	3	SS	16/18	3 3 4				17		>9.0				
9	4	ST	19/24		Becomes brownish-gray, trace fine sand, fine gravel, and organics			20	102		4.1			777
12					LEAN CLAY (CL): Gray, trace fine sand									774
	5	SS	18/18	2 1 2	SANDY LEAN CLAY (CL): Brown, sand is fine to coarse, trace fine sandstone gravel			23		1.0				
15														771
18														768
	6	SS	16/18	2 5 5	With fine to coarse sandstone gravel			15		<0.5				

WATER LEVEL:
_____ NONE OBSERVED WHILE DRILLING
18.5 ft WHILE DRILLING
_____ ft AT COMPLETION OF DRILLING
_____ ft ____ HRS AFTER DRILLING

REMARKS:

BORING DATA

Note: For locations of borings, see Sheet No. 1.

Note: This drawing is not to scale. Follow dimensions.

Sheet No. 37 of 38

Detailed Aug. 2016
Checked Aug. 2016

STATE OF MISSOURI
CHRISTOPHER T. HERSINGER
NUMBER PE-2012018080
PROFESSIONAL ENGINEER
THIS SHEET HAS BEEN SIGNED, SEALED AND DATED ELECTRONICALLY.

DATE PREPARED 10/3/2016
ROUTE EE | STATE MO
DISTRICT BR | SHEET NO. 37
COUNTY GASCONADE
JOB NO. J5S3140
CONTRACT ID.
PROJECT NO.
BRIDGE NO. A8440

DESCRIPTION | DATE

IF A SEAL IS PRESENT ON THIS SHEET IT HAS BEEN ELECTRONICALLY SEALED AND DATED.

MISSOURI HIGHWAYS AND TRANSPORTATION COMMISSION
105 WEST CAPITOL
JEFFERSON CITY, MO 65102
1-888-ASK-MODOT (1-888-275-6636)

HR GREEN, INC.
16020 SWINGLEY RIDGE ROAD, SUITE 205
ST. LOUIS, MISSOURI 63017
PHONE: (636) 519.0990
CORPORATE LICENSE #2002006608

BORING LOG

PROJECT Highway EE Over Dry Fork Creek **BORING NUMBER** B-402
LOCATION Gasconade County, Missouri **SHEET** 2 **of** 2
DRILLER Midwest Drilling, Inc. **HAMMER** Auto **PROJECT NO.** 2016-7015.10 Task 103
EQUIPMENT CME-75 w/CFA **ELEVATION** 785.98 **DATE DRILLED** 07/28/16
STATION 295+18.31 **OFFSET** 5.90' Rt **NORTHING** 889622.87 **EASTING** 523737.14

DEPTH (ft)	SAMPLE NUMBER	SAMPLE TYPE	SAMPLE RECOVERY (in/in)	SAMPLE BLOWS (per 6 in)	DESCRIPTION (UNIFIED SOIL CLASSIFICATION)	GRAPHIC	SEE REMARK NO.	LABORATORY TEST RESULTS: MOISTURE CONTENT (%)	DRY DENSITY (pcf)	HAND PENETROMETER (ksf)	UNCONFINED COMPRESSIVE STRENGTH (ksf)	LIQUID LIMIT	PLASTICITY INDEX	ELEVATION (ft)
21					SANDY LEAN CLAY (CL): Brown, sand is fine to coarse, trace fine sandstone gravel *(Continued)*									765
					WEATHERED DOLOMITE									
24					Auger refusal on dolomite at 23 feet.									762
27														759
30														756
33														753
36														750
39														747

WATER LEVEL:	REMARKS:
_____ NONE OBSERVED WHILE DRILLING	
18.5 ft WHILE DRILLING	
_____ ft AT COMPLETION OF DRILLING	
_____ ft ___ HRS AFTER DRILLING	

BORING DATA

Note: For locations of borings, see Sheet No. 1.

Note: This drawing is not to scale. Follow dimensions.

Sheet No. 38 of 38

Detailed Aug. 2016
Checked Aug. 2016

STATE OF MISSOURI
CHRISTOPHER T. HERSINGER
NUMBER PE-2012018080
PROFESSIONAL ENGINEER

THIS SHEET HAS BEEN SIGNED, SEALED AND DATED ELECTRONICALLY.

DATE PREPARED 10/3/2016
ROUTE EE | STATE MO
DISTRICT BR | SHEET NO. 38
COUNTY GASCONADE
JOB NO. J5S3140
CONTRACT ID.
PROJECT NO.
BRIDGE NO. A8440

IF A SEAL IS PRESENT ON THIS SHEET IT HAS BEEN ELECTRONICALLY SEALED AND DATED.

DESCRIPTION | DATE

MISSOURI HIGHWAYS AND TRANSPORTATION COMMISSION
105 WEST CAPITOL
JEFFERSON CITY, MO 65102
1-888-ASK-MODOT (1-888-275-6636)

HR GREEN, INC.
16020 SWINGLEY RIDGE ROAD, SUITE 205
ST. LOUIS, MISSOURI 63017
PHONE: (636) 519.0990
CORPORATE LICENSE #2002006608
HRGreen

MISSOURI STATE HIGHWAY DEPARTMENT

FED. ROAD DIST. NO.	STATE	FED. AID PROJ. NO.	FISCAL YEAR	SHEET NO.	TOTAL SHEETS
5	MO.		19	39	

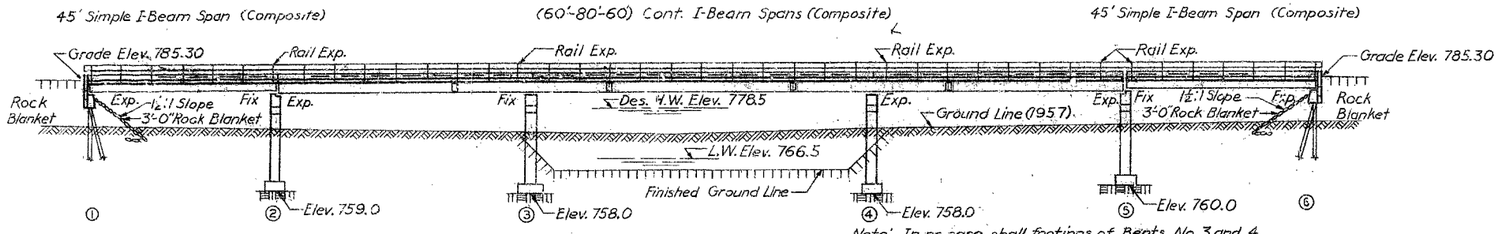

GENERAL ELEVATION

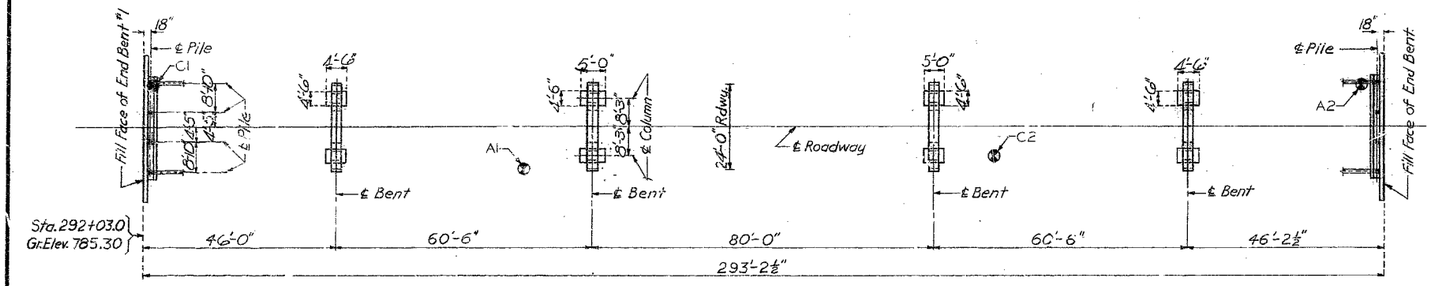

PLAN

FOOTING AND PILE DATA							
Bent No.		1	2	3	4	5	6
SPREAD FOOTING	Foundation Material		Sandstone		Sandstone		
	Design Bearing Tons / Sq. Ft.		4.4	6.0	6.0	4.4	
	See Standard Specifications 50.4.2						
BEARING PILE	Pile Type & Size	10BP42					10BP42
	Number	4					4
	Approximate Length Ft.	20					20
	Plan Bearing Tons	37					37
	Minimum Required Bearing Tons	23					23
	Hammer	Power					Power
	See Standard Specification 52.2.6						

Note: All pile shall be driven to practical refusal on or into solid rock or other point bearing material at not less than the Plan Bearing shown, unless excessive splicing is required to obtain Plan Bearing, in which case the engineer will authorize a lesser bearing, but in no case less than the Minimum Required Bearing.

GENERAL NOTES:

Design Specifications A.A.S.H.O.-1961
Loading H15-44 (1-Lane)
Structural Steel Stress (A.S.T.M. A36-62T) 20,000 psi.
Reinforcing Steel Stress 20,000 psi.
Concrete, Class B Stress 1,200 psi.
Concrete, Class B1 Stress 1,600 psi.
Superstructure concrete shall be Class B1.
Substructure concrete shall be Class B or Class B1 except payment will be on the basis of Class B.
Fabricated Structural Steel shall be A.S.T.M. A36-62T except as noted. Payment will be made as fabricated Structural Carbon Steel.
See Standard Specification 55.3.13 for qualification of welding operators.
Field connections, High Strength Bolts ⅞", holes 1⅛" except as otherwise noted.

Paint: Shop, none; Field, none by contractor except as noted in Standard Specification 55.4.10.2.
Where joint filler is specified on the plans it shall conform to Standard Specification 157.2.5.

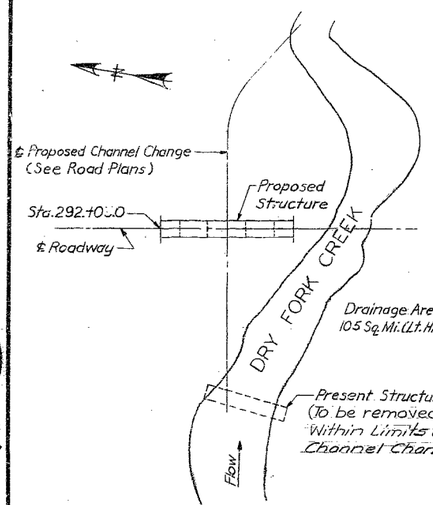

LOCATION SKETCH

ESTIMATED QUANTITIES				
Item		Substr.	Superstr.	Total
Class 1 Excavation for Structures	Cu. Yd.	70		70
Class 2 Excavation for Structures	Cu. Yd.	148		148
Steel Piles-in-Place (10")	Lin. Ft.	136		136
Steel Pile Cut-offs (10")	Lin. Ft.	24		24
Class B Concrete	Cu. Yd.	101.5		101.5
Class B1 Concrete	Cu. Yd.		196.8	196.8
Reinforcing Steel	Lb.	12,580	53,080	65,660
Fabricated Structural Carbon Steel	Lb.		147,370	147,370

Note: Excavation for Structures made above Elev. 767.5 will be paid for as Class 1.

Excavation for Structures made below Elev. 767.5 will be paid for as Class 2.

Class 1 and Class 2 Excavation for Structures will be computed from the original ground line or from the lower limits of channel change excavation, whichever is lower regardless of the sequence of operations and the method of removal.

Weight of bolts (steel to steel) is included in weight of Fabricated Structural Steel on the basis of the following weights per 100 bolts. ⅝" 40#, ¾" 65#, ⅞" 95#, 1" 135#.

No payment for excavation will be allowed at End Bent No. 1 or No. 6.

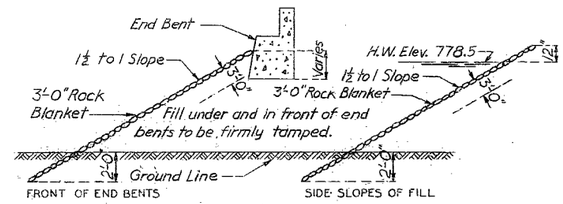

Note: 3'-0" Rock Blanket shall be placed on tills at ends of bridge as shown in sketches. See Road Plans for Quantities.

ROCK BLANKET SKETCHES

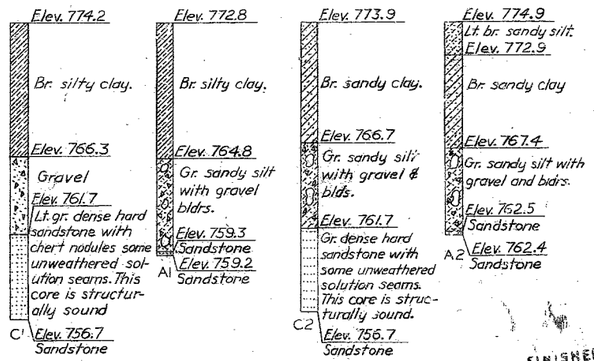

Note: Soundings C1-C2 taken with a Core Drill.
Soundings A1-A2 taken with an Auger.
Location of soundings marked thus ⊕.

LOG OF SOUNDINGS

FINISHED

B.M. #22A, Elev. 774.62, Spike in root 40" Soft Maple Stump 16' Rt. Sta. 293+81 (U.S.G.S. Datum)

BRIDGE OVER DRY FORK CREEK

STATE ROAD FROM ROUTE 28 AT OWENSVILLE SOUTH
ABOUT 6.0 MILES S. OF OWENSVILLE
PROJECT NO. S-1975(1) (SEE) **STA.** 292+03.0

GASCONADE **COUNTY** FINISHED

SUBMITTED BY D. B. Jenkins BRIDGE ENGINEER DATE 3-13-1963
APPROVED BY M. J. Snider CHIEF ENGINEER DATE 3-13-1963

FINISHED

STD. 54.00
R-292

Designed Sept. 1962 by Moffett
Drawn Nov. 1962 by Leslie
Checked Mar. 1963 by Becker

Note: This drawing is not to scale. Follow dimensions.

Sheet No. 1 of 9

SEE FINAL PLANS BROWN-LINES

MISSOURI STATE HIGHWAY DEPARTMENT

FED. ROAD DIST. NO.	STATE	FED. AID PROJ. NO.	FISCAL YEAR	SHEET NO.	TOTAL SHEETS
5	MO.		19	38	

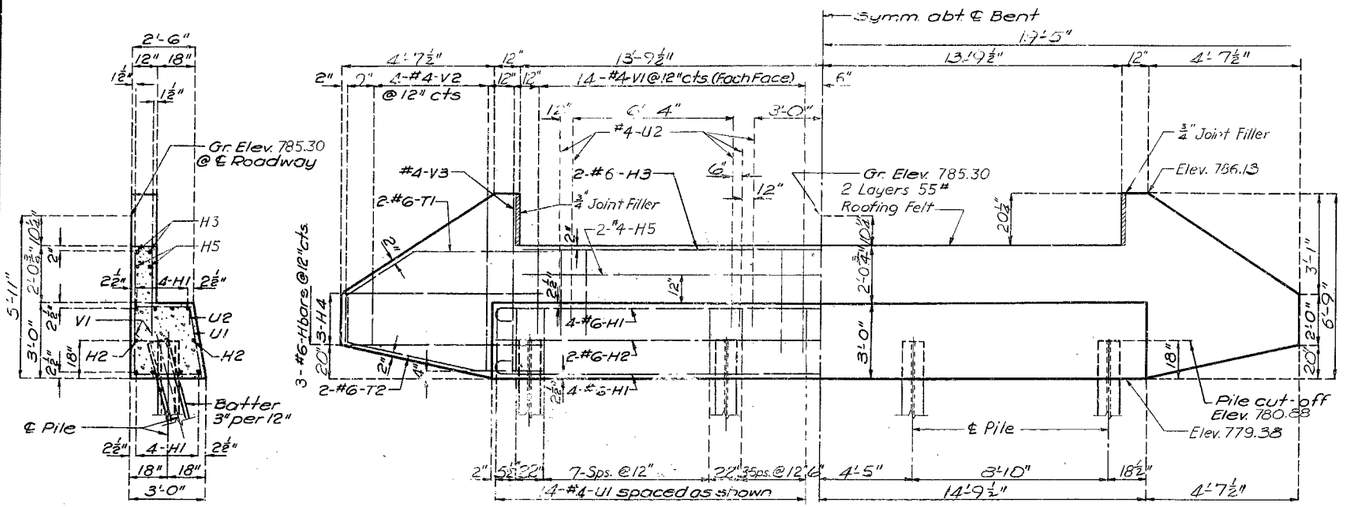

DETAILS OF END BENT NO. 1 & 6

Note: Fill at end bents No. 1 & 6 shall not be carried above bottom of beam and wings until superstructure spans (1-2) & (5-6) are in place.

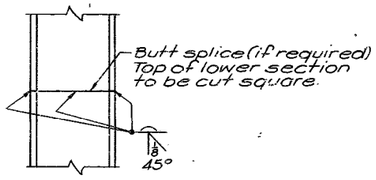

DETAIL OF STEEL PILE SPLICE

Assembled Oct. 1962 by Leslie & Roberds
Checked March 1963 by Becker

Note: This drawing is not to scale. Follow dimensions.

No. 8.2	Revised
JUNE 1961	Mar 15, 1962

96

COMPLETE BILL OF REINFORCING STEEL

NO.	SIZE	LENGTH	MARK	LOCATION
End Bents No. 1 & 6				
16	#6	31'-3"	H1	Beam
4	#6	29'-3"	H2	"
4	#6	27'-6"	H3	Backwall
12	#6	6'-6"	H4	Wing
4	#4	27'-6"	H5	Backwall
56	#4	11'-3"	U1	Beam
20	#4	3'-3"	U2	"
112	#4	3'-6"	V1	Backwall
8	#4	8'-3"	V2	Wing
4	#4	6'-6"	V3	"
8	#6	9'-9"	T1	Wing
8	#6	8'-6"	T2	"
Int. Bents No. 3 & 4				
32	#7	4'-9"	D1	Footing
32	#6	8'-0"	F1	Col. Hch.
16	#8	26'-9"	H7	Beam
4	#6	24'-9"	H8	"
14	#10	24'-9"	H9	"
34	#5	10'-0"	U3	Beam
68	#3	9'-9"	V4	Col.
16	#7	20'-9"	V5	Col. Bt. #3
16	#7	20'-3"	V6	Col. Bt. #4
16	#2	19'-9"	W1	A.B. Well
Int. Bents No. 2 & 5				
32	#7	4'-9"	D1	Footing
32	#6	8'-0"	F1	Col. Hch.
12	#8	26'-9"	H7	Beam
4	#6	24'-9"	H8	"
12	#9	24'-9"	H11	"
4	#4	24'-9"	H10	"
50	#4	10'-0"	U5	Beam
66	#4	3'-6"	U6	"
16	#4	3'-3"	U7	"
62	#3	9'-9"	V4	Col. {32 Bt. #2 30 Bt. #5
16	#7	19'-6"	V7	Col. Bt. #2
16	#7	18'-6"	V8	Col. Bt. #5
16	#2	19'-9"	W1	A.B. Well

BENDING SKETCHES & CUTTING DIAGRAMS

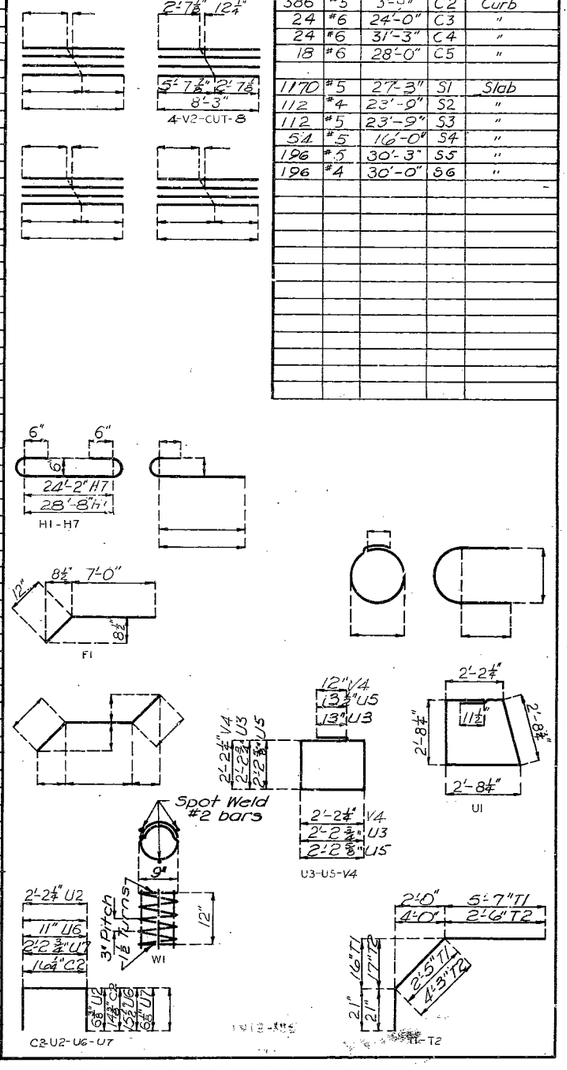

NO.	SIZE	LENGTH	MARK	LOCATION
Superstructure				
386	#5	3'-0"	C2	Curb
24	#6	24'-0"	C3	"
24	#6	31'-3"	C4	"
18	#6	28'-0"	C5	"
1170	#5	27'-3"	S1	Slab
112	#4	23'-9"	S2	"
112	#5	23'-9"	S3	"
54	#5	16'-0"	S4	"
196	#5	30'-3"	S5	"
196	#4	30'-0"	S6	"

BRIDGE OVER DRY FORK CREEK

STATE ROAD FROM ROUTE 28 AT OWENSVILLE SOUTH

ABOUT 6.0 MILES S. OF OWENSVILLE

PROJECT NO. S-1975 (1) (SEE) **STA.** 292+03.0

GASCONADE **COUNTY**

R-292

Sheet No. 2 of 9.

MISSOURI STATE HIGHWAY DEPARTMENT

FED. ROAD DIST. NO.	STATE	FED. AID PROJ. NO.	FISCAL YEAR	SHEET NO.	TOTAL SHEETS
5	MO.		19	39	

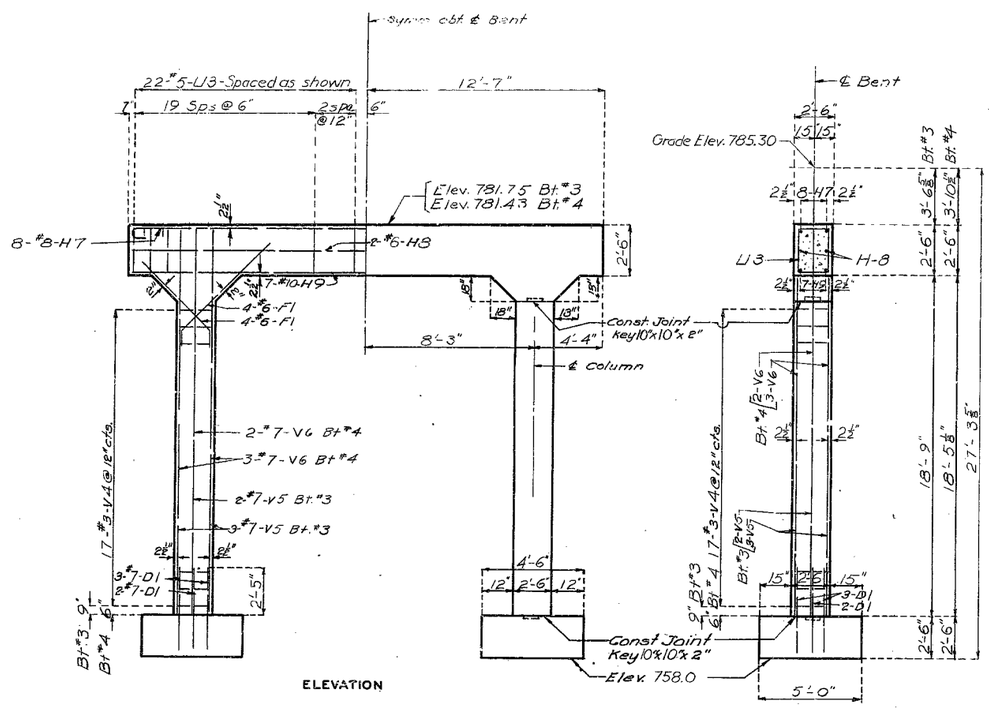

ELEVATION

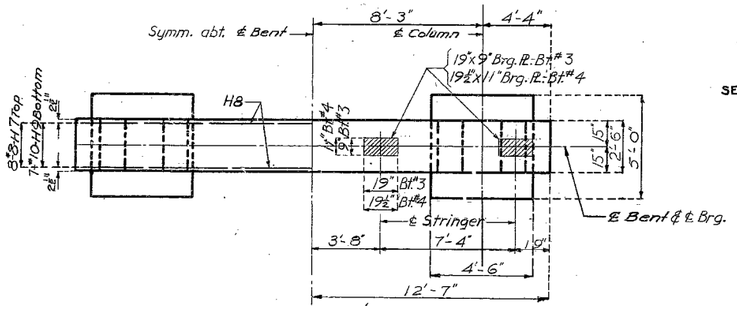

SECTION AT ℄

PLAN

DETAILS OF INTERMEDIATE BENTS NO. 3 & 4

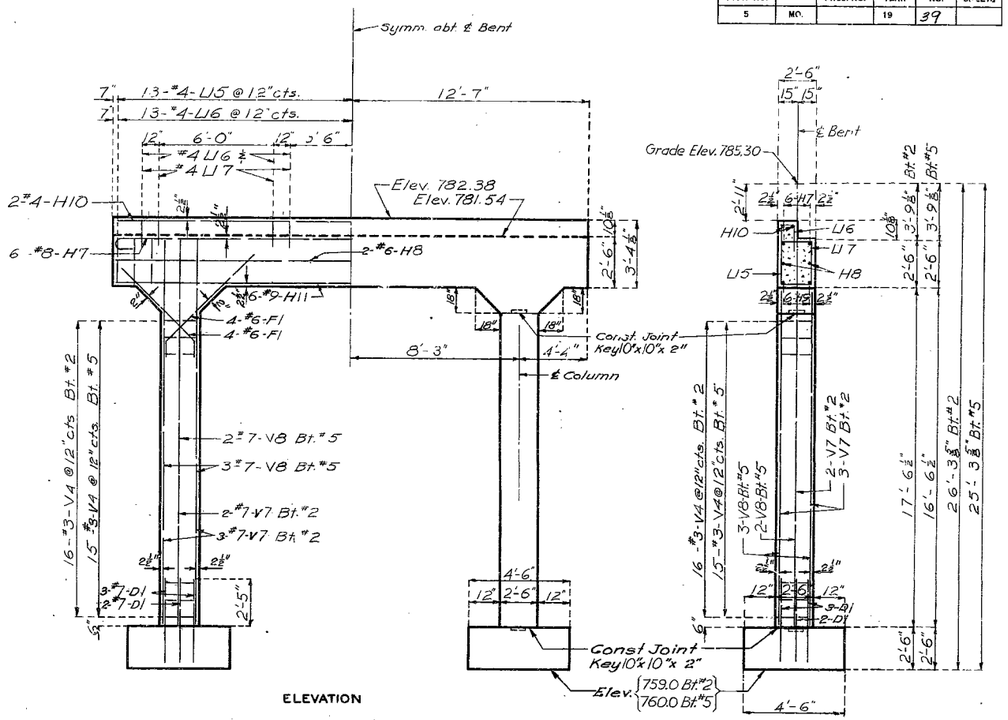

ELEVATION

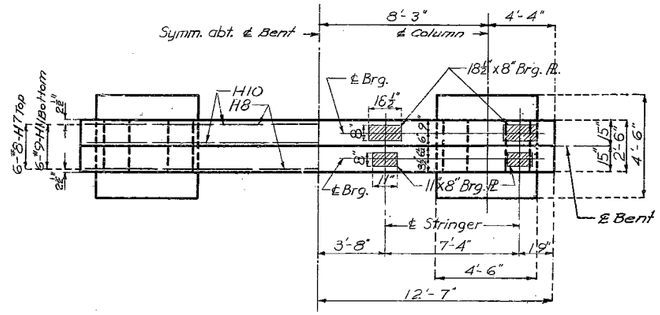

SECTION AT ℄

PLAN

DETAILS OF INTERMEDIATE BENTS NO. 2 & 5

Note: Bent No. 2 shown. Bent No. 5 similar

BRIDGE OVER DRY FORK CREEK

STATE ROAD FROM ROUTE 28 AT OWENSVILLE SOUTH

ABOUT 6.0 MILES S. OF OWENSVILLE

PROJECT NO. S-1975(1) (SEE) **STA.** 292+03.0

GASCONADE **COUNTY**

R-292

97

No.	Revised
18.2	Feb. 1962

Assembled DEC 1962 by WEBSTER
Checked March 1963 by Becker

Note: This drawing is not to scale. Follow dimensions.

Sheet No 3 of 9

MISSOURI STATE HIGHWAY DEPARTMENT

FED. ROAD DIST. NO.	STATE	FED. AID PROJ. NO.	FISCAL YEAR	SHEET NO.	TOTAL SHEETS
5	MO.		19	40	

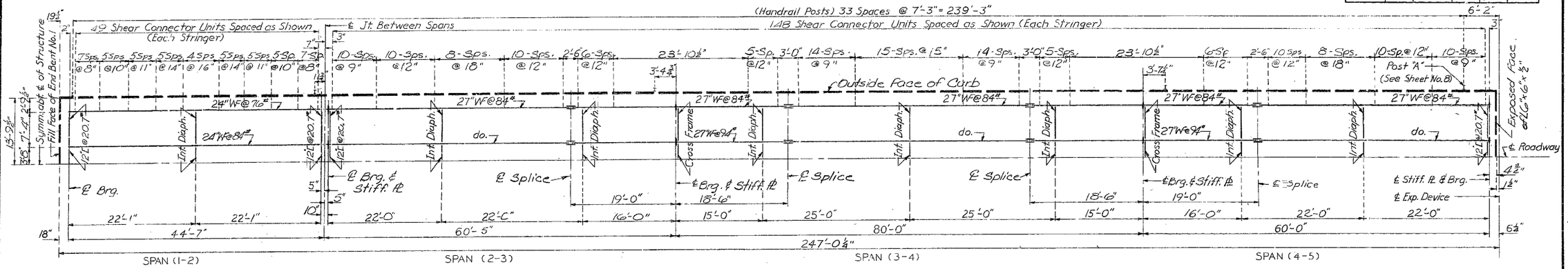

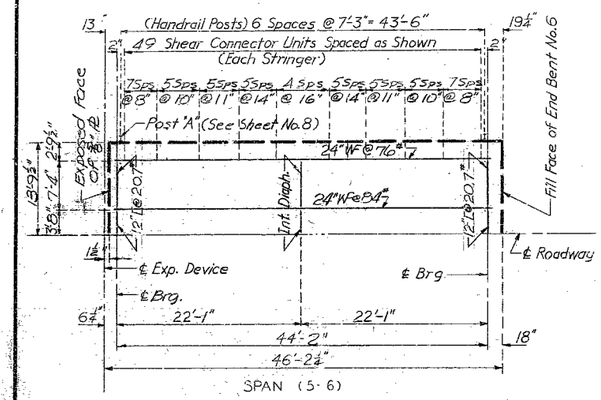

PART PLAN OF STRUCTURAL STEEL

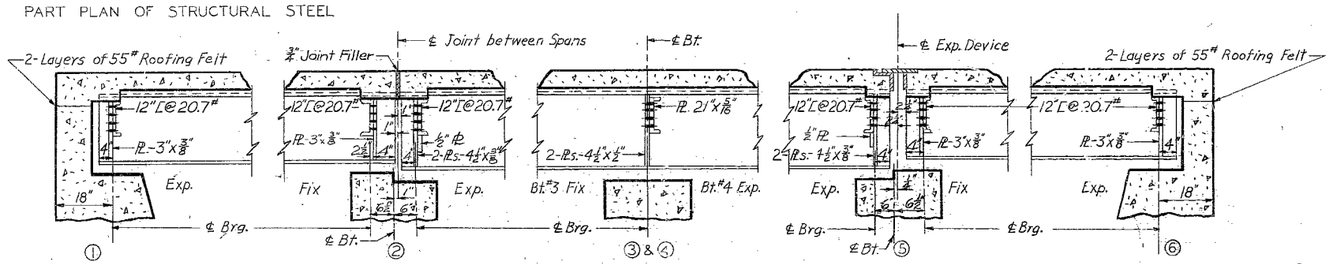

PART LONGITUDINAL SECTION

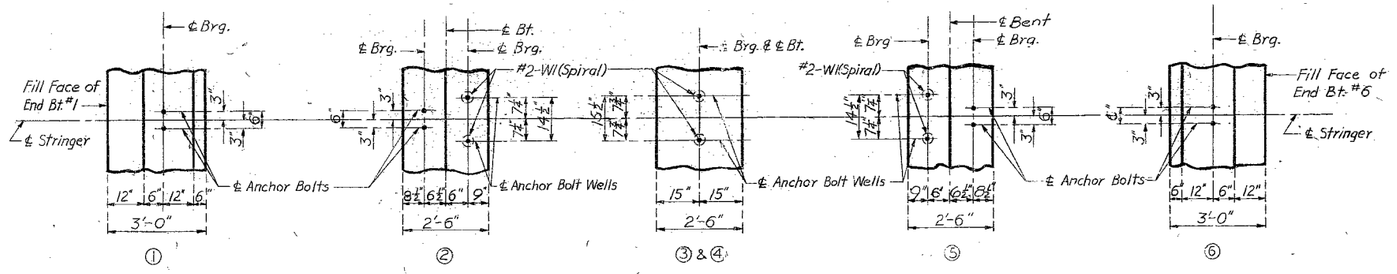

PART ANCHOR BOLT PLAN

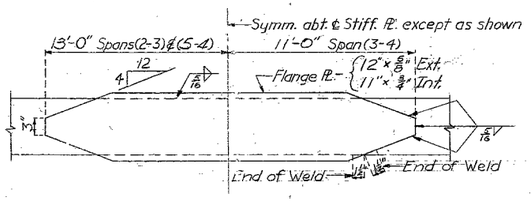

DETAIL OF FLANGE PLATES-TOP & BOTTOM FLANGE INT. BENTS NO. 3 & 4

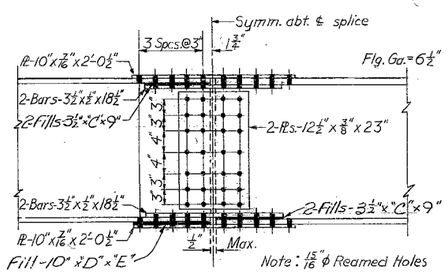

DETAIL OF BEAM SPLICES

	"C"	"D"	"E"
27"WF@84# to 84#	—	—	—
27"WF@84# to 94#	12 Ga.	3/16"	12"

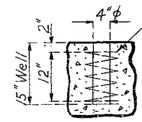

Note: Anchor bolts for Type "D" bearings may be set in wells as shown or in holes drilled into concrete substructure.

DETAIL OF ANCHOR BOLT WELLS

BRIDGE OVER DRY FORK CREEK

STATE ROAD FROM ROUTE 28 AT OWENSVILLE SOUTH

ABOUT 6.0 MILES S. OF OWENSVILLE

PROJECT NO. S-1975(1) (SEE) **STA.** 292+03.0

GASCONADE **COUNTY**

R-292

Drawn Oct. 1962 by Leslie & Roberds

Checked March 1963 by Becker

Note: This drawing is not to scale. Follow dimensions.

Sheet No. 4 of 9

AS CONSTRUCTED CHANGES

MISSOURI STATE HIGHWAY DEPARTMENT

FED. ROAD DIST. NO.	STATE	FED. AID PROJ. NO.	FISCAL YEAR	SHEET NO.	TOTAL SHEETS
5	MO		19	41	

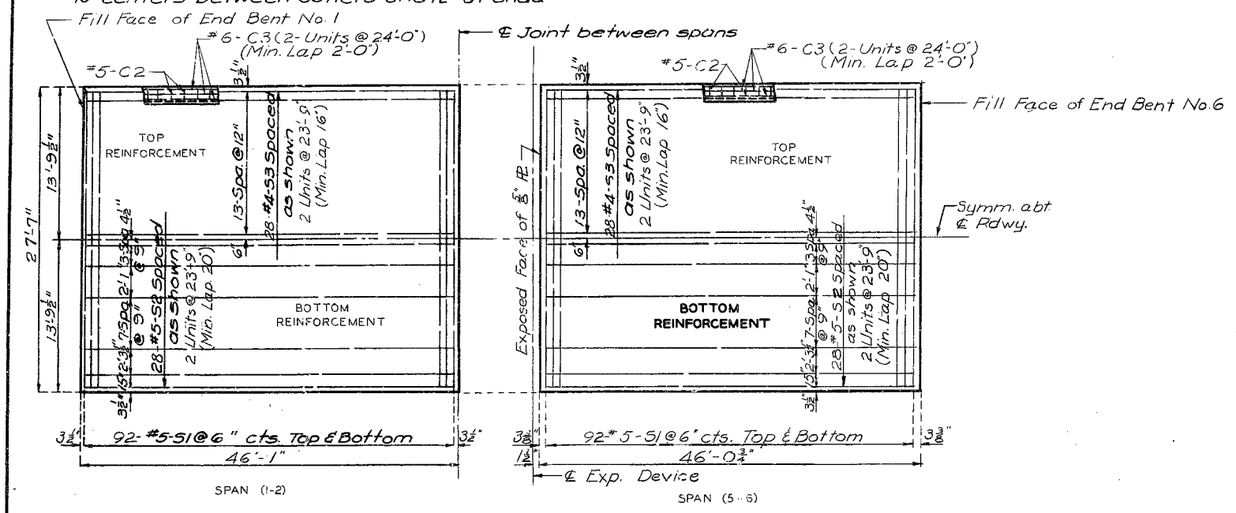

PLAN OF SLAB SHOWING REINFORCEMENT

Note: Longitudinal Reinforcing Steel shall be placed so that ends shall not be more than 1" ± from 5/8" plate at Expansion Device.

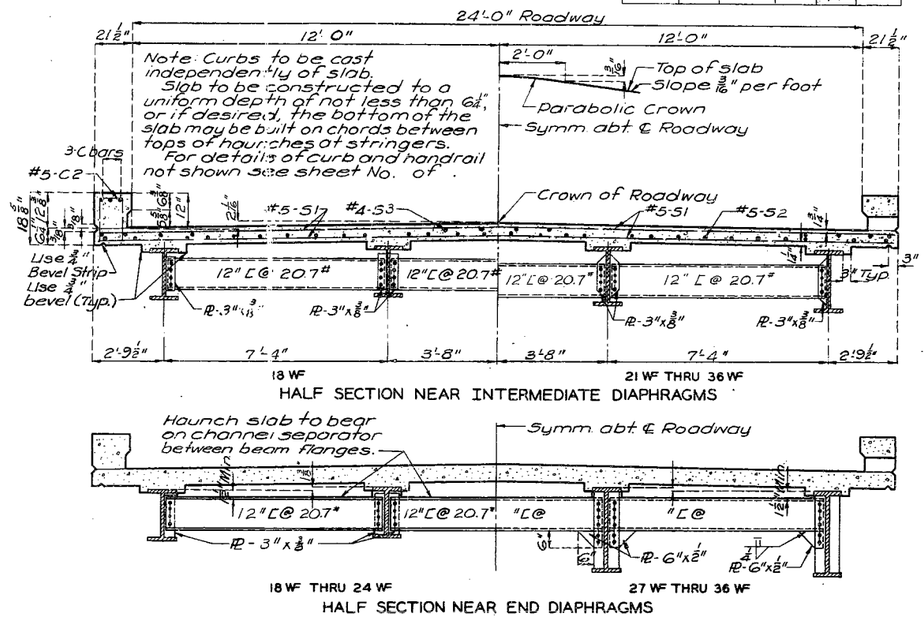

HALF SECTION NEAR INTERMEDIATE DIAPHRAGMS

HALF SECTION NEAR END DIAPHRAGMS

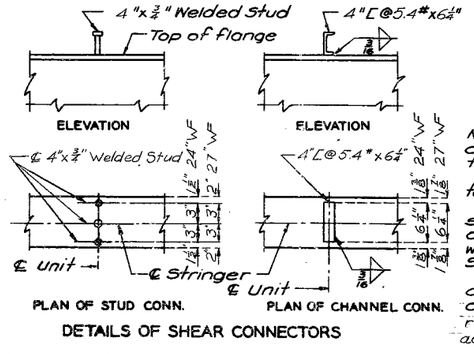

DETAILS OF SHEAR CONNECTORS

Note: Locate channel connectors with backs towards ends of spans See Special Provisi for shear connectors. Weight of 1820# of shear connectors (based on studs) is included in weight of Fabricated Structural Carbon Steel. Payweight for shear connectors will be based on the weight of studs regardless of the type actually furnished

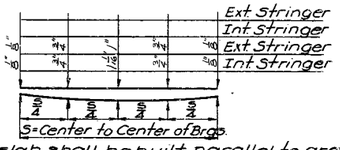

Note: The slab shall be built parallel to grade and to a minimum thickness of 6½". Dead load deflection (12% due to weight of structural steel) and vertical curve (if any) shall be taken care of by haunching to the top of stringer by the dimensions shown. The additional concrete (flange, flange plates, splice plates, etc. excluded) is included in Estimated Quantities.

SLAB HAUNCHING DIAGRAM SPANS (1-2) (5-6)

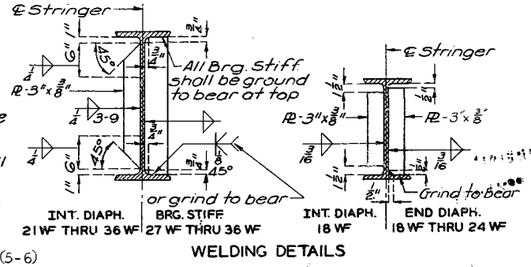

WELDING DETAILS

BRIDGE OVER DRY FORK CREEK

STATE ROAD FROM ROUT 28 AT OWENSVILLE SOUTH

ABOUT 6.0 MILES S. OF OWENSVILLE

PROJECT NO. S-1975 (1) (SEE) **STA.** 292+03.0

GASCONADE **COUNTY**

No.	Date	Revised
40.24.23a	Nov. 1961	Oct. 1962

99

Assembled Dec. 1962 by Webster
Checked March 1963 by Becker

Note: This drawing is not to scale. Follow dimensions.

MISSOURI STATE HIGHWAY DEPARTMENT

FED. ROAD DIST. NO.	STATE	FED. AID PROJ. NO.	FISCAL YEAR	SHEET NO.	TOTAL SHEETS
5	MO		19	42	

Note: Longitudinal Reinforcing Steel shall be placed so that ends shall not be more than 1" ± from 3/8" plate at Expansion Device.

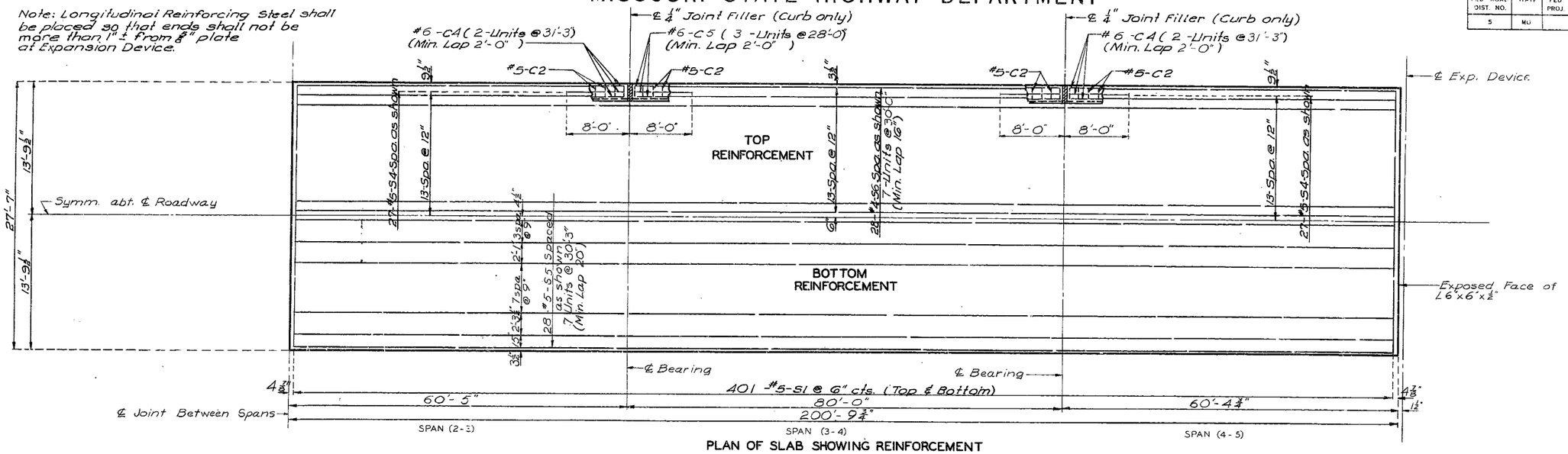

PLAN OF SLAB SHOWING REINFORCEMENT

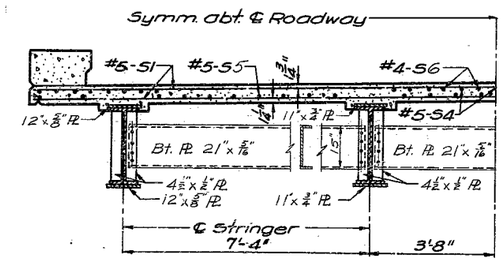

HALF SECTION AT INT. BENTS

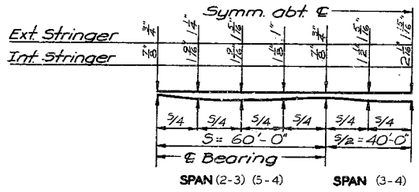

Note: The slab shall be built parallel to grade and to a minimum thickness of 6¼". Dead load deflection (15% due to weight of structural steel) and vertical curve (if any) shall be taken care of by haunching to the top of stringer by the dimensions shown. The additional concrete (flange, flange plates, splice plates, etc. excluded) is included in Estimated Quantities.

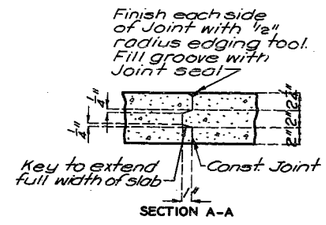

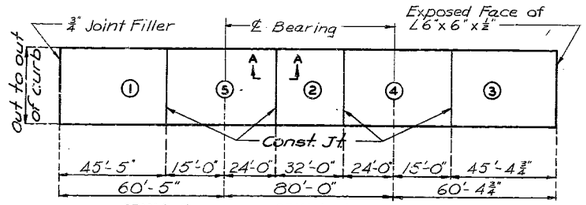

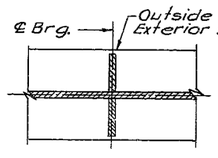

TYPICAL DETAIL LOCATING STIFF. PL.

	Sequence of Pours				
	Direction				
Basic Sequence	1	2	3	4	5
	Either Direction				
Alternate "A" Pours	1		5+2		4+3
	End to 5		1 to 4		2 to End
Alternate "B" Pours	1+5+2			4+3	
	End to 4			2 to End	
Alternate "C" Pours	1+5+2+4+3				
	End to End				

Note: The contractor shall observe the basic pouring sequence unless he can demonstrate to the satisfaction of the engineer that he is equipped to pour and satisfactorily finish the roadway slabs at a rate of not less than 30 cubic yards per hour and can maintain this rate throughout the alternate pour he elects to use.

SLAB POURING SEQUENCE

SLAB HAUNCHING DIAGRAM

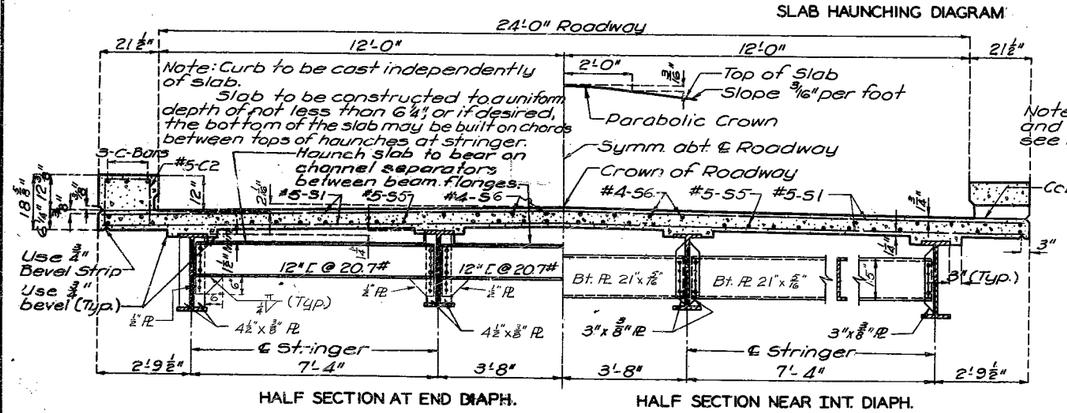

HALF SECTION AT END DIAPH. HALF SECTION NEAR INT. DIAPH.

Note: For details of curb and handrail not shown see sheet No. 8 of 9.

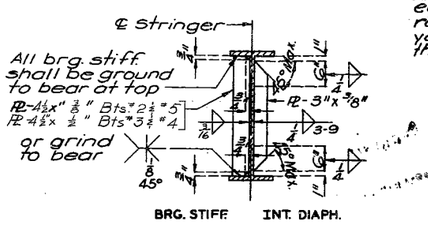

WELDING DETAILS

BRIDGE OVER DRY FORK CREEK

STATE ROAD FROM ROUTE 28 AT OWENSVILLE SOUTH

ABOUT 6.0 MILES S. OF OWENSVILLE

PROJECT NO. S-1975 (1) (SEE) STA. 292+03.0

GASCONADE COUNTY

R-292

No.	Revised
4.	12.
Oct. 1962	

Drawn DEC 1962 by WEBSTER

Checked Mar. 1963 by Baker

Note: This drawing is not to scale. Follow dimensions.

Sheet No. 6 of 9.

MISSOURI STATE HIGHWAY DEPARTMENT

FED. ROAD DIST. NO.	STATE	FED. AID PROJ. NO.	FISCAL YEAR	SHEET NO.	TOTAL SHEETS
5	MO.		19	43	

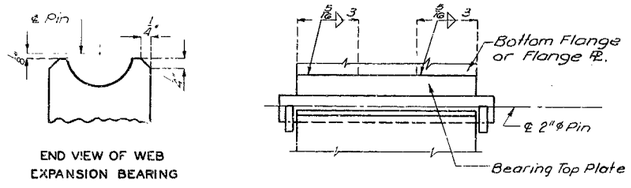

END VIEW OF WEB EXPANSION BEARING

WELDING DETAILS

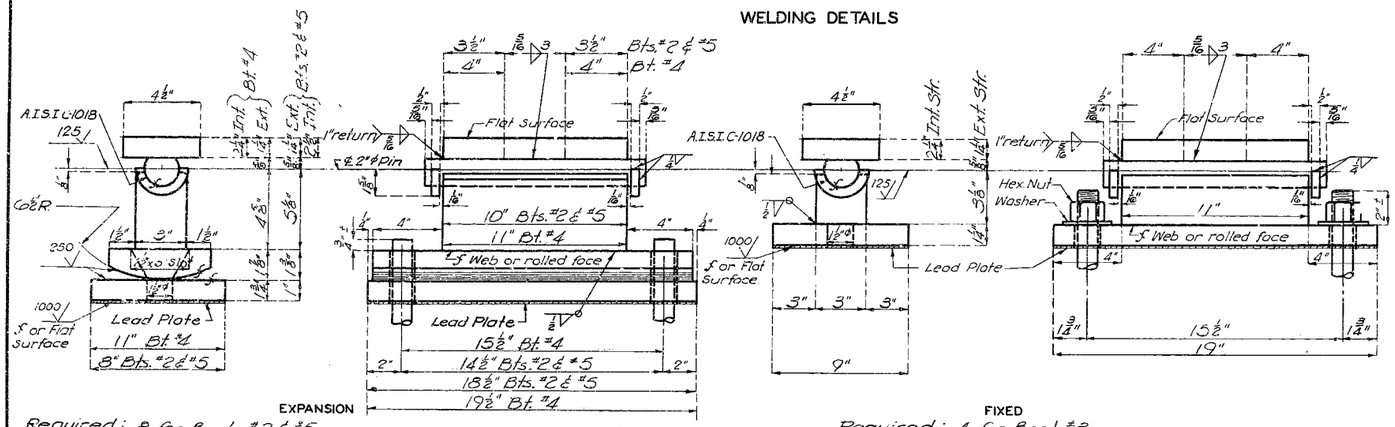

EXPANSION

Required: 8 for Bents #2 ℄ #5
4 for Bent #4

FIXED

Required: 4 for Bent #3

TYPE "D" BEARINGS
(Estimated Weight 2548#)

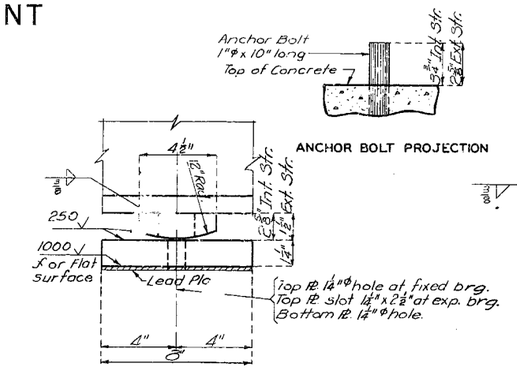

ANCHOR BOLT PROJECTION

END ELEVATION

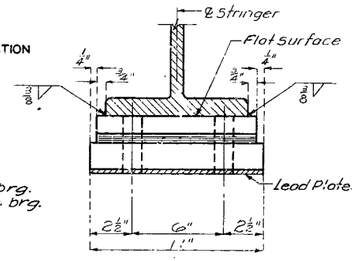

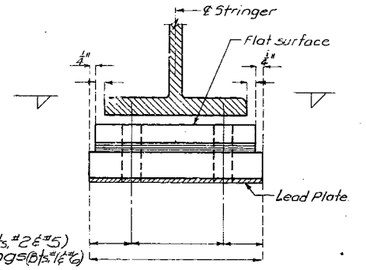

Required: 8 - Fixed Bearings (Bts. #2 ℄ #5)
8 - Expansion Bearings (Bts. #1 ℄ #6)

TYPE "C" BEARINGS
(Estimated Weight 880#)

NOTES: TYPE "C" BEARINGS

Anchor Bolts for Type "C" Bearings shall be 1"ϕ swedged bolts, 10" long with no heads or nuts. Top of Anchor Bolts shall be set approximately ¼" below top of bearing.

NOTES: TYPE "D" BEARINGS

Anchor Bolts for Type "D" Bearings shall be 1¼"ϕ swedged bolts and shall extend 12" into concrete, with hexagon nuts and plain washers for Fixed Bearings, no nuts for Expansion Bearings.

GENERAL NOTES:

Lead plates under bearings shall be approximately ⅛" thickness and weigh 8 #/sq.ft. Cost of lead plates shall be included in price bid for other items.

"Estimated Weight" does not include weight of anchor bolts.

Revised	Dec. 6, 1962
No 41	
Dec 1961	

101

Assembled Dec. 1962 by Roberds & Webster
Checked March 1963 by Becker

Note: This drawing is not to scale. Follow dimensions.

BRIDGE OVER DRY FORK CREEK
STATE ROAD FROM ROUTE 28 AT OWENSVILLE SOUTH
ABOUT 6.0 MILES S. OF OWENSVILLE
PROJECT NO. S-1975 (1) (SEE) **STA.** 292+03.0
GASCONADE **COUNTY**

Sheet No. 7 of 9.

R-292

MISSOURI STATE HIGHWAY DEPARTMENT

FED. ROAD DIST. NO.	STATE	FED. AID PROJ. NO.	FISCAL YEAR	SHEET NO.	TOTAL SHEETS
5	MO.		19	47	

Note: Outlets to be centered between rail posts. For location of outlets if any, see sheet No. 1 of design plans.
C2 bars in curb to be spaced at abt. 12" cts. from end post to end post on bridges having no outlets.

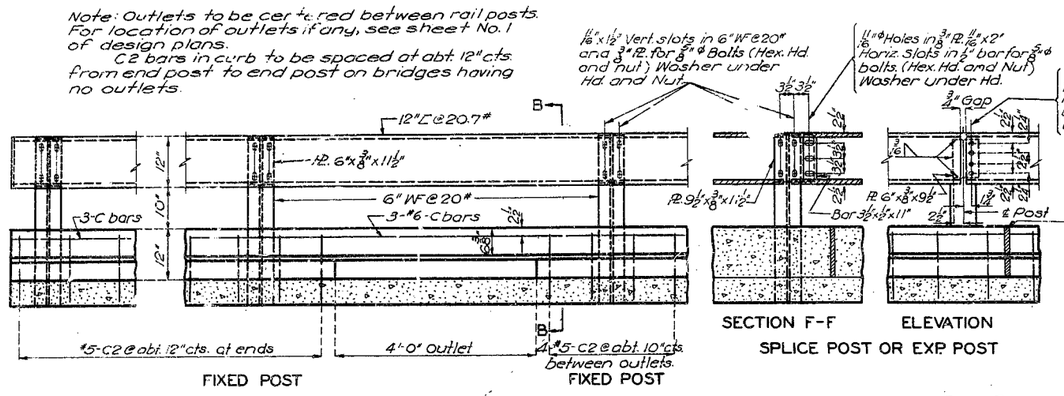

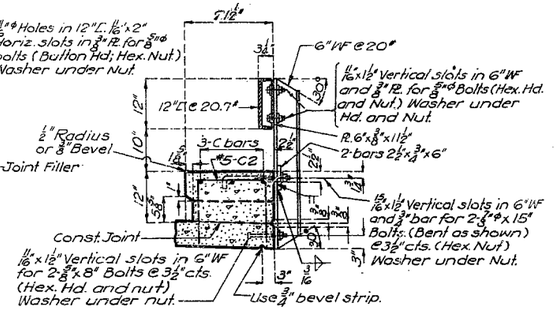

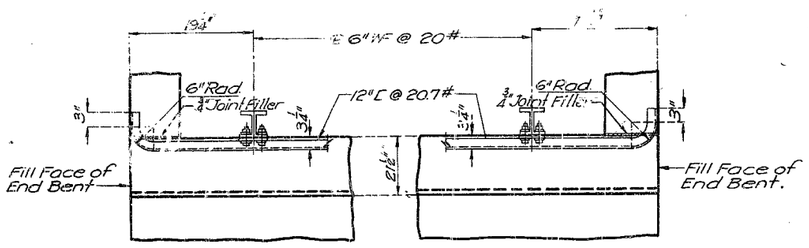

PLAN OF RAIL AT END BENTS

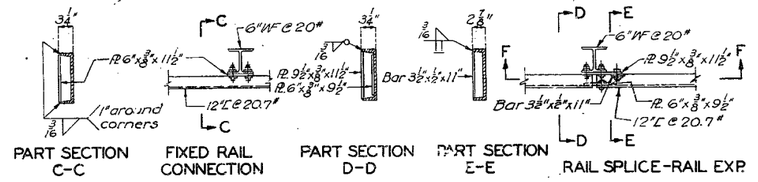

Note: Channel rail to be adjusted for horizontal alignment by use of full size metal shims placed between 6"WF and connection Rt. Shims of ⅛" and ¼" thickness to be furnished with structural steel. Cost of shims to be included in price bid for other items.

GENERAL NOTES:

Top of curbs to be built parallel to grade.
6" WF posts to be set normal to grade.
12"L rails shall be fabricated to conform to horizontal and vertical alignment of curb.

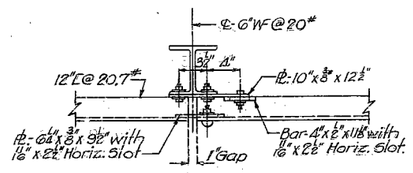

Note: Details not shown similar to Expansion Post. See Sheet No. 4 of 9 for location of Post "A".

TYPICAL DETAILS OF POST "A"

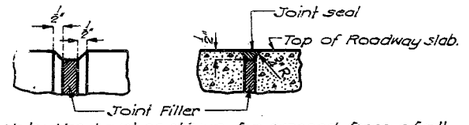

Note: Use bevel as shown for exposed faces of all filled joints except at top surface of roadway slab. Use edging tool with ¾" radius at top surface of roadway slab each side of joint and fill flush with joint seal as shown.

DETAILS OF BEVEL FOR FILLED JOINTS

FINISHED

BRIDGE OVER DRY FORK CREEK

STATE ROAD FROM ROUTE 28 AT OWENSVILLE SOUTH
ABOUT 6.0 MILES S. OF OWENSVILLE
PROJECT NO. S-1975(1) (SEE) STA. 292+03.0

GASCONADE COUNTY

R-292

102

NO. 1.1	Revised
May 1962	

Drawn Dec. 1962 by WEBSIER & KNAUP
Checked Mar. 1963 by Becker

Note: This drawing is not to scale. Follow dimensions.

NO CONSTRUCTION CHANGES

MISSOURI STATE HIGHWAY DEPARTMENT

FED. ROAD DIST. NO.	STATE	FED. AID PROJ. NO.	FISCAL YEAR	SHEET NO.	TOTAL SHEETS
5	MO.		19	47	

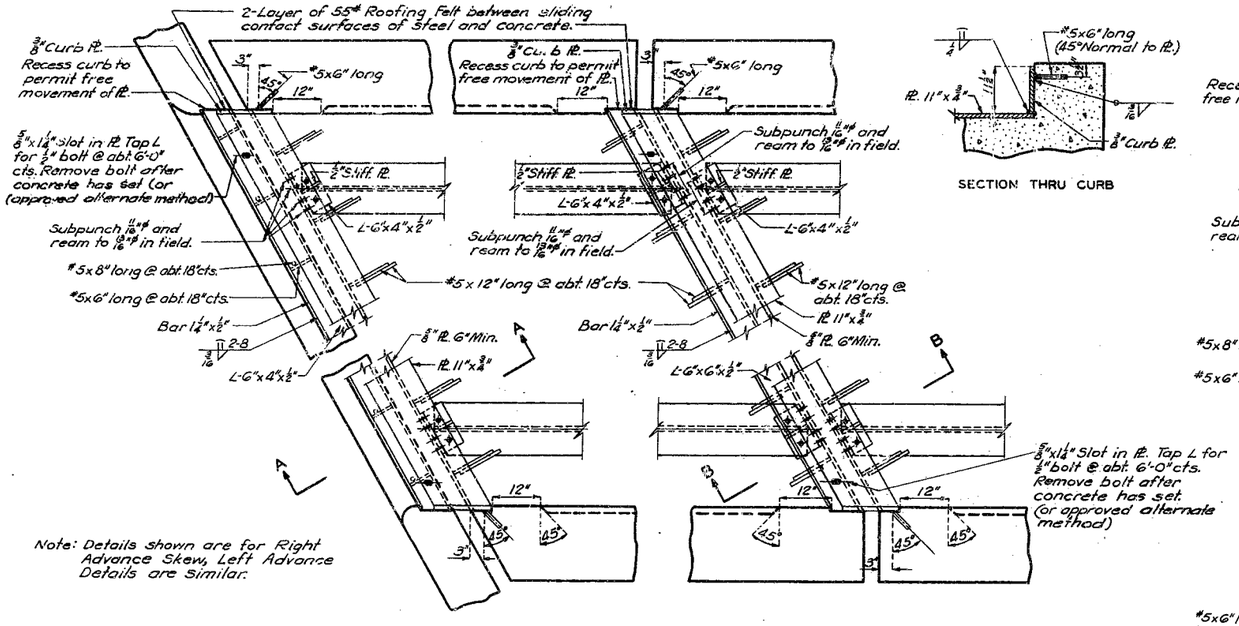

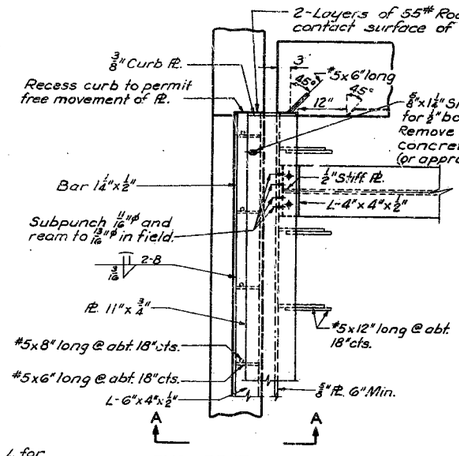

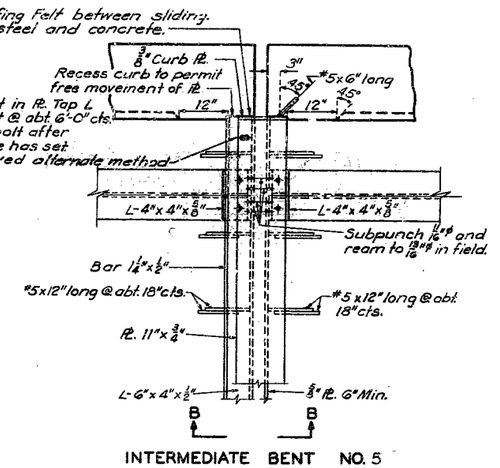

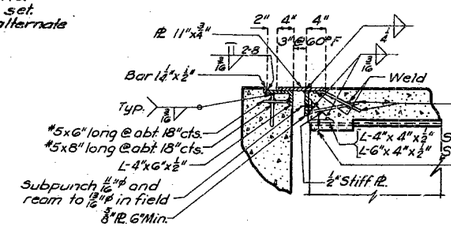

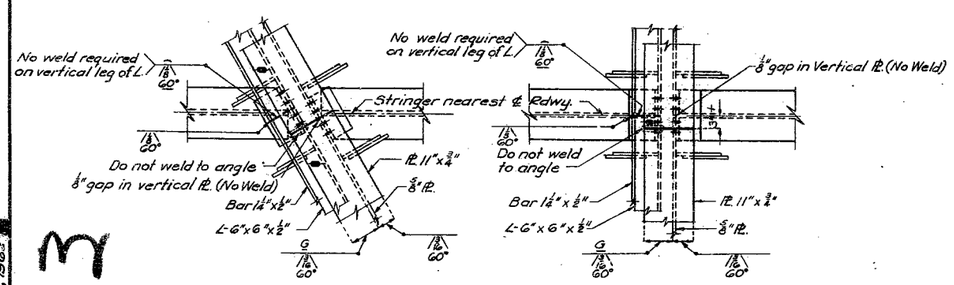

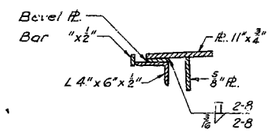

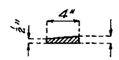

DETAILS OF BEVEL PLATE AT BENT NO.

GENERAL NOTES:

Expansion Device shall be fabricated in one section except that when the length is over 40 foot splicing is permissible. The expansion device shall be bent to conform to crown and grade of roadway.

#5 Bars shall be structural grade. Approved stud welded anchors may be used in lieu of #5 bars shown.

Bevel plates shall be used at end bents when the grade of the slab at the expansion device is 3.0% or more.

FINISHED

BRIDGE OVER DRY FORK CREEK

STATE ROAD FROM ROUTE 28 AT OWENSVILLE SOUTH

ABOUT 6.0 MILES S. OF OWENSVILLE

PROJECT NO. S-1975(1) (SEE) STA. 292+03.0 FINISHED

GASCONADE COUNTY

FINISHED

FINISHED

R-292

Less than 200' of Exp.	
No. 4.4	Revised
Jan. 1962	Mar. 15, 1963

103

Drawn Dec. 1962 by WEBSTER & KNAUP

Check. Mar. 1963 by Becker

DETAILS OF PLATE EXPANSION DEVICE

Note: This drawing is not to scale. Follow dimensions.

Sheet No. 9 of 9.

NO CONSTRUCTION CHANGES

FOR INFORMATION ONLY

FINAL PLANS

MISSOURI STATE HIGHWAY DEPARTMENT

FED. ROAD DIST. NO.	STATE	FED. AID PROJ. NO.	FISCAL YEAR	SHEET NO.	TOTAL SHEETS
5	MO.		19	37	

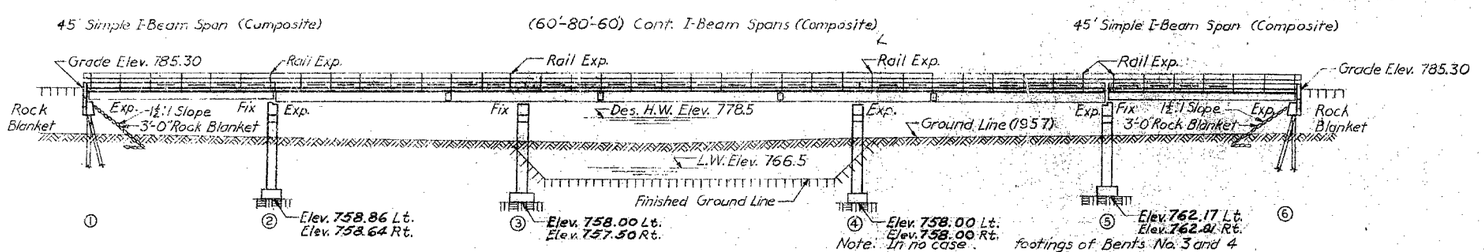

GENERAL ELEVATION

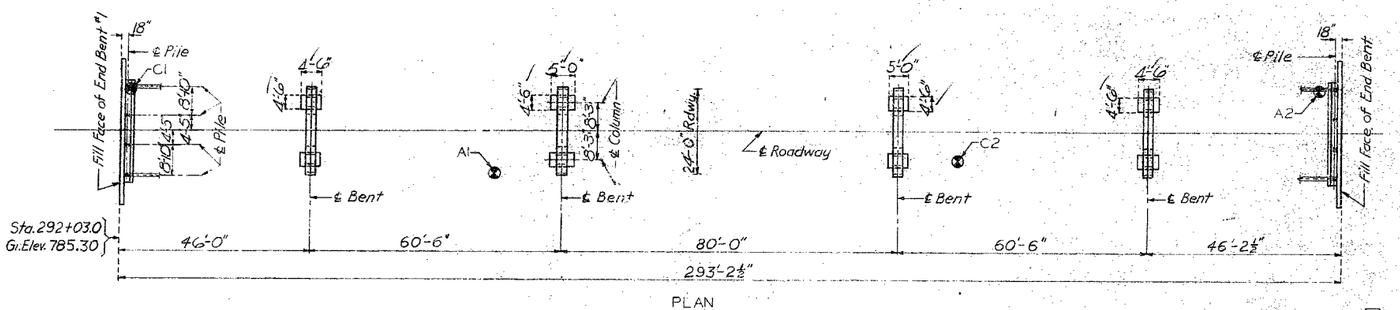

PLAN

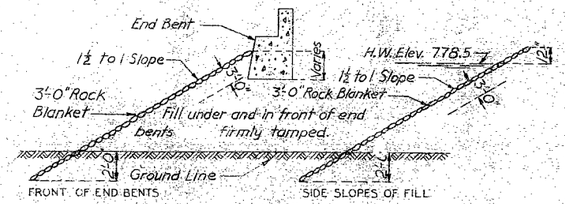

Note: 3'-0" Rock Blanket placed on fills at ends of bridge as shown in sketches. See Road Plans for Quantities.

ROCK BLANKET SKETCHES

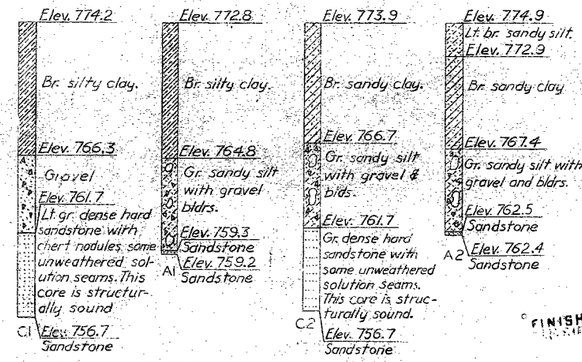

Note: Soundings C1-C2 taken with a Core Drill.
Soundings A1-A2 taken with an Auger.
Location of soundings marked thus ℄.

LOG OF SOUNDINGS

FOOTING AND PILE DATA							
	Bent No.	1	2	3	4	5	6
SPREAD FOOTINGS	Foundation Material		Sandstone		Sandstone		
	Design Bearing Tons / Sq. Ft.		4.4	6.0	6.0	4.4	
	See Standard Specification 50.4.2						
BEARING PILE	Pile Type & Size	10BP42					10BP42
	Number	4					4
	Approximate Length Ft.	23					23
	Plan Bearing Tons	37					37
	Minimum Required Bearing Tons	23					23
	Hammer	Power					Power
	See Standard Specification 52.2.6						

Note: All pile driven to practical refusal on or into solid rock or other point bearing material at not less than the Plan Bearing shown, unless excessive splicing is required to obtain Plan Bearing, in which case the engineer authorize a lesser bearing, but in no case less than the Minimum Required Bearing.

GENERAL NOTES:

Design Specifications A.A.S.H.O.-1961
Loading H15-44 (1-Lane)
Structural Steel Stress (A.S.T.M. A36-62T) 20,000 psi.
Reinforcing Steel Stress 20,000 psi.
Concrete, Class B Stress 1,200 psi.
Concrete, Class B1 Stress 1,500 psi.
Superstructure concrete Class B1.
Substructure concrete Class B or Class B1 except payment on the basis of Class B.
Fabricated Structural Steel . A.S.T.M. A36-62T except as noted. Payment made as Fabricated Structural Carbon Steel.
See Standard Specification 55.3.13 for qualification of welding operators.
Field connections, High Strength Bolts ¾", holes 13/16" except as otherwise noted.

Paint: Shop, none; Field, none by contractor except as noted in Standard Specification 55.4.10.2.
Where joint filler is specified on the plans it conform to Standard Specification 157.2.5.

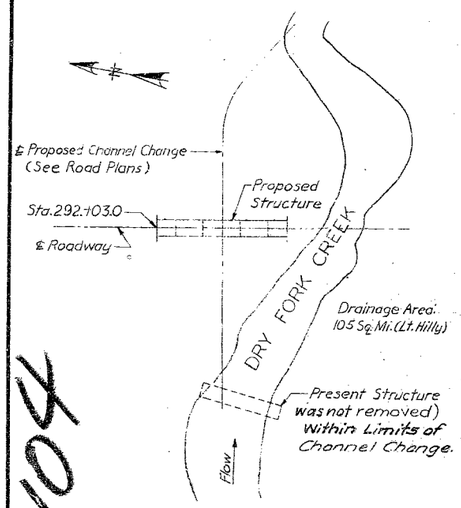

LOCATION SKETCH

QUANTITIES				
Item		Substr.	Superstr.	Total
Class 1 Excavation for Structures	Cu. Yd.	88		88
Class 2 Excavation for Structures	Cu. Yd.	137		137
Steel Piles-in-Place (10")	Lin. Ft.	153		153
Steel Pile Cut-offs (10")	Lin. Ft.	31		31
Class B Concrete	Cu. Yd.	100.8		100.8
Class B1 Concrete	Cu. Yd.		196.8	196.8
Reinforcing Steel	Lb.	13150	53080	66230
Fabricated Structural Carbon Steel	Lb.		147050	147050
Class 2 Excav. for Structures (Below Plan)	Cu. Yd.	1		1
Test Holes (8 @ 4'-0")	Lin. Ft.	32		32

Note: Excavation for Structures made above Elev. 767.5 paid for as Class 1.

Excavation for Structures made below Elev. 767.5 paid for as Class 2.

Class 1 and Class 2 Excavation for Structures computed from the original ground line or from the lower limits of channel change excavation, whichever is lower regardless of the sequence of operations and the method of removal.

Weight of bolts (steel to steel) is included in weight of Fabricated Structural Steel on the basis of the following weights per 100 bolts. ⅝" 40#, ¾" 65#, ⅞" 95#, 1" 135#.

No payment for excavation allowed at End Bent No. 1 or No. 6

FINISHED

B.M. No. 22D, Elev. 786.19, "□" Chiseled on Top of Rt. Conc. Wing of End Bent No. 1 (North Abutment of New Bridge), 14.8' Rt. of ℄ of Surv., Sta. 292+03.0 (Flt Face of Abut.)

℄ BRIDGE OVER DRY FORK CREEK

STATE ROAD FROM ROUTE 28 AT OWENSVILLE SOUTH

ABOUT 6.0 MILES S. OF OWENSVILLE

PROJECT NO. S-1975(1) (SEE) **STA.** 292+03.0

GASCONADE **COUNTY**

FINISHED

SUBMITTED BY D B Jenkins BRIDGE ENGINEER DATE 3-13-1963

APPROVED BY M J Linder CHIEF ENGINEER DATE 3-13-1963

FINISHED FINAL PLANS

STD. 54.00

R-292

Designed Sept 1962 by Moffett
Drawn Nov. 1962 by Leslie
Checked Mar. 1963 by Becker

Note: This drawing is not to scale. Follow dimensions.

Sheet No 1A of 2

FINAL PLANS

MISSOURI STATE HIGHWAY DEPARTMENT

FED. ROAD DIST. NO.	STATE	FED. AID PROJ. NO.	FISCAL YEAR	SHEET NO.	TOTAL SHEETS
5	MO.		19	39	

FINAL PLANS

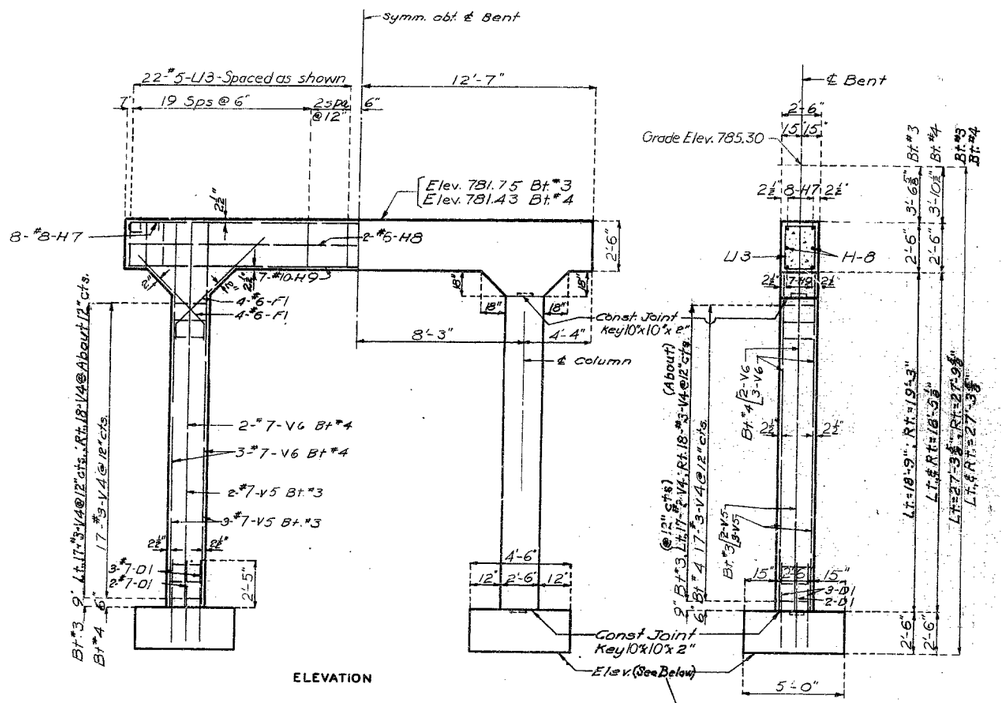

FINAL BOTT. OF FTG. ELEVS		
Bent	Side	Elevation
3	Lt.	758.00
3	Rt.	757.50
4	Lt.	758.00
4	Rt.	758.00

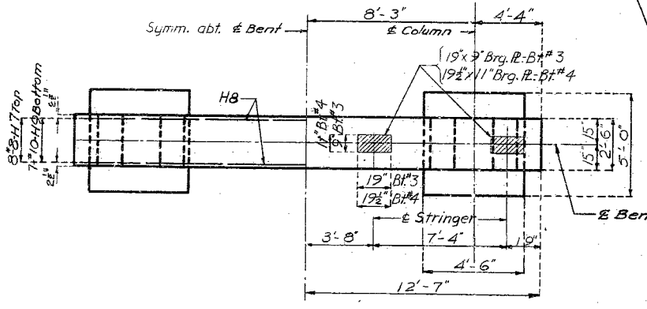

PLAN

DETAILS OF INTERMEDIATE BENTS NO. 3 & 4

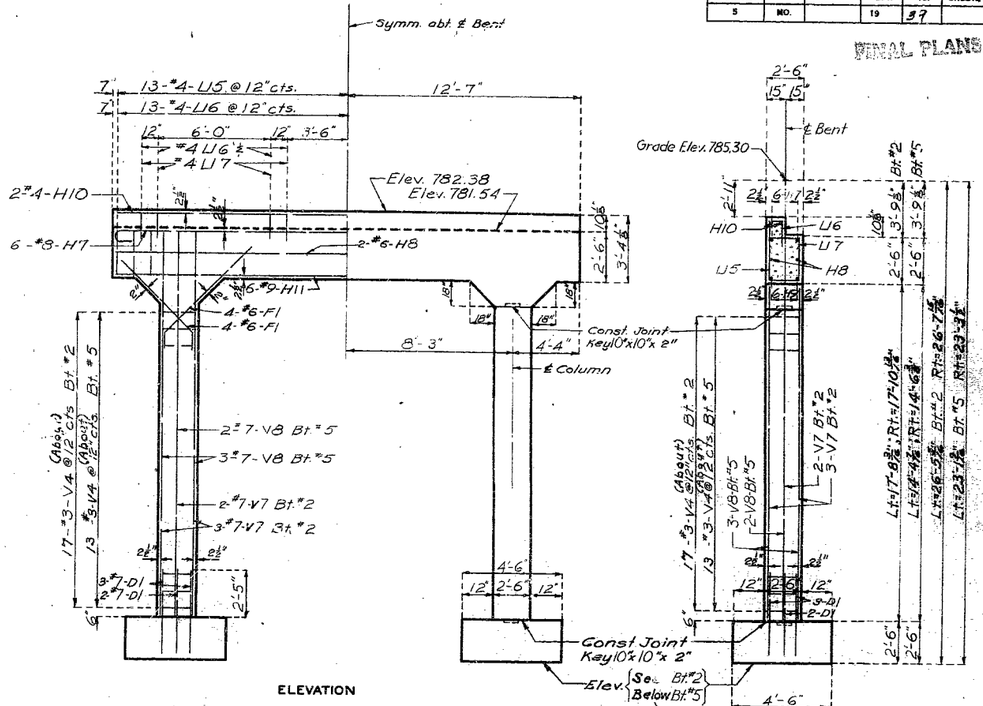

FINAL BOTT. OF FTG. ELEVS		
Bent	Side	Elevation
2	Lt.	758.86
2	Rt.	758.64
5	Lt.	762.17
5	Rt.	762.01

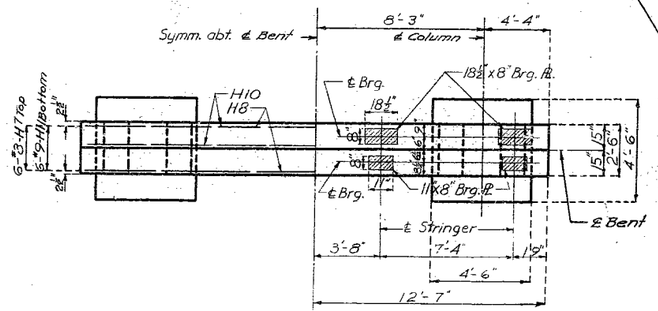

PLAN

DETAILS OF INTERMEDIATE BENTS NO. 2 & 5

Note: Bent No. 2 shown. Bent No. 5 similar

TEST HOLES

1-Test Hole 4'-0" in depth to each Ftg. of Bents No. 2, 3, 4, & 5 = 32 Lin. Ft.

Note: Test Holes were drilled @ the center of each Ftg.

FINISHED

FINISHED

FINISHED

FINISHED

BRIDGE OVER DRY FORK CREEK

STATE ROAD FROM ROUTE 28 AT OWENSVILLE SOUTH

ABOUT 6.0 MILES S. OF OWENSVILLE

PROJECT NO. S-1975(1) (SEE) **STA.** 292+03.0

GASCONADE **COUNTY**

R-292

No. 15.2	Revised
Feb. 1962	

105

Assembled DEC 1962 by WEBSTER

Checked March 1963 by Becker

Note: This drawing is not to scale. Follow dimensions.

Sheet No 3A of 2