MISSOURI HIGHWAYS AND TRANSPORTATION COMMISSION
PLANS FOR PROPOSED
STATE HIGHWAY

NEW MADRID COUNTY

DESIGN DESIGNATION

A.A.D.T. - 2017 = 117
A.A.D.T. - 2037 = 143
D.H.V. = 12%
T = 14%
V = 55 M.P.H.

FUNCTIONAL CLASSIFICATION-RURAL MAJOR COLLECTOR

NO NEW RIGHT OF WAY

CONVENTIONAL SYMBOLS
(USED IN PLANS)

	EXISTING	NEW
BUILDINGS AND STRUCTURES		
GUARD RAIL		
CONCRETE RIGHT-OF-WAY MARKER		
STEEL RIGHT-OF-WAY MARKER		
LOCATION SURVEY MARKER		
UTILITIES		
FIBER OPTICS	—FO—	—FO—
OVERHEAD TELEPHONE		
UNDERGROUND TELEPHONE	—T—	—T—
OVERHEAD POWER		
UNDERGROUND POWER	—P—	—P—
GAS	—G—	—G—
WATER	—W—	—W—
MANHOLE	SAN	
FIRE HYDRANT	HYD	
WATER VALVE	WV	
WATER METER	WM	
DROP INLET	DI	
DITCH BLOCK		
GROUND MOUNTED SIGN	SIGN	
LIGHT POLE		
H-FRAME POWER POLE		
TELEPHONE PEDESTAL	PED	
FENCE		
CHAIN LINK	—V—	
WOVEN WIRE	—X—	
GATE POST		
BENCHMARK	BM	

NOTE: DASHED OR OPEN SYMBOLS INDICATE EXISTING FEATURES

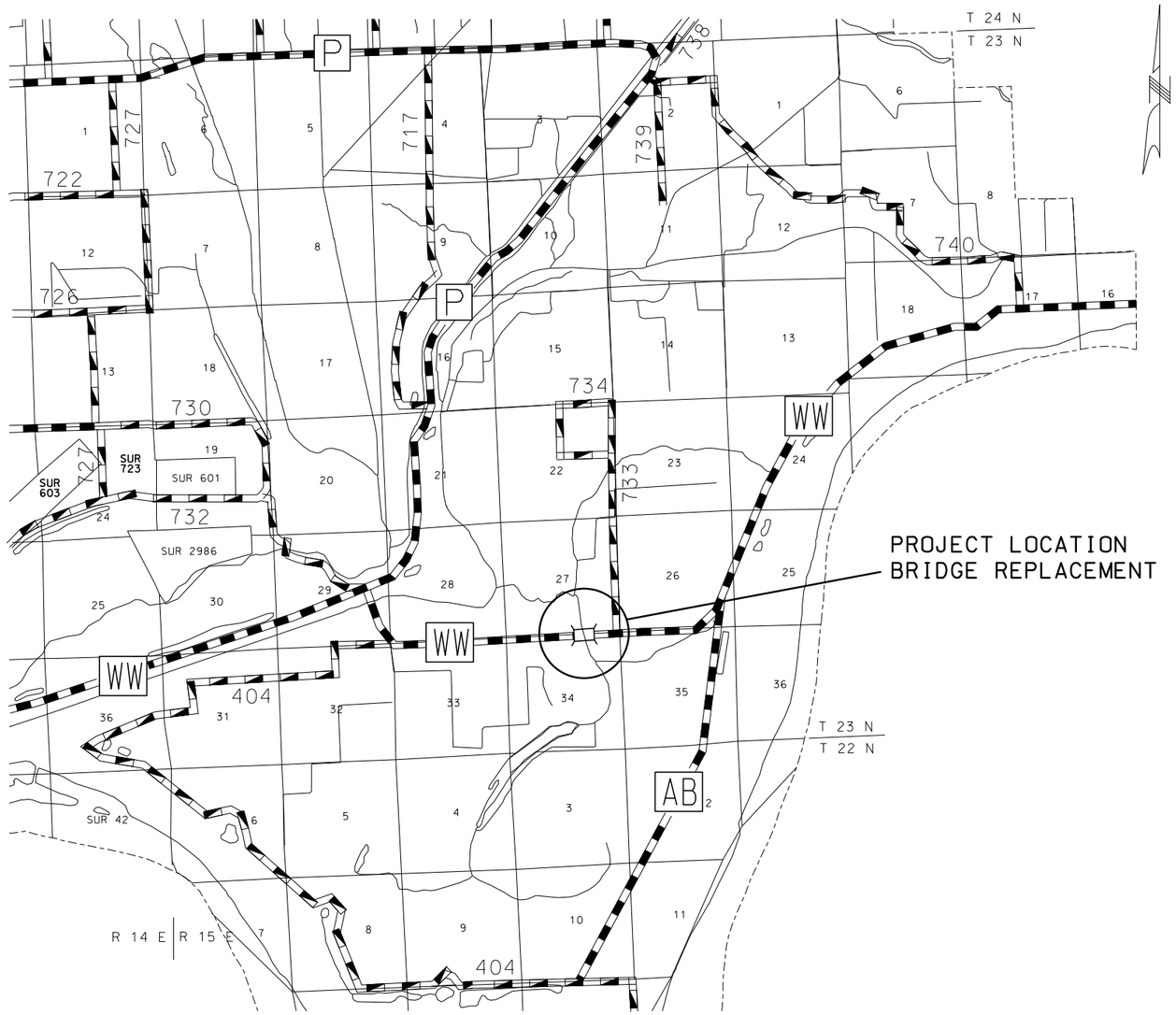

INDEX OF SHEETS

DESCRIPTION	SHEET NUMBER
TITLE SHEET	1
TYPICAL SECTIONS (TS) (1 SHEET)	2
QUANTITIES (QU) (2 SHEETS)	3
PLAN-PROFILE (PP)	4-5
COORDINATE POINTS (CP)	6
SPECIAL SHEETS (SS)	7-8
TRAFFIC CONTROL SHEETS (TC)	9
EROSION CONTROL SHEETS (EC)	10
SIGNING SHEETS (SN)	11
BRIDGE DRAWINGS (B)	
A8472	1-29

LENGTH OF PROJECT

BEGINNING OF PROJECT	STA. 347+32.73	
END OF PROJECT	STA. 349+48.00	
APPARENT LENGTH	215.27	FEET
EQUATIONS AND EXCEPTIONS:		
TOTAL CORRECTIONS	0.00	FEET
NET LENGTH OF PROJECT	215.27	FEET
STATE LENGTH	0.041	MILES

STATE OF MISSOURI
CHRIS E. BERRY
NUMBER PE-2001018707
PROFESSIONAL ENGINEER
THIS SHEET HAS BEEN SIGNED, SEALED AND DATED ELECTRONICALLY.

DATE PREPARED	
10/26/2016	
ROUTE: WW	STATE: MO
DISTRICT: SE	SHEET NO.: 1
COUNTY: NEW MADRID	
JOB NO.: J9S3146	
CONTRACT ID.	
PROJECT NO.	
BRIDGE NO.	

DATE	DESCRIPTION

IF A SEAL IS PRESENT ON THIS SHEET IT HAS BEEN ELECTRONICALLY SEALED AND DATED.

MISSOURI HIGHWAYS AND TRANSPORTATION COMMISSION
105 WEST CAPITOL
JEFFERSON CITY, MO 65102
1-888-ASK-MODOT (1-888-275-6636)

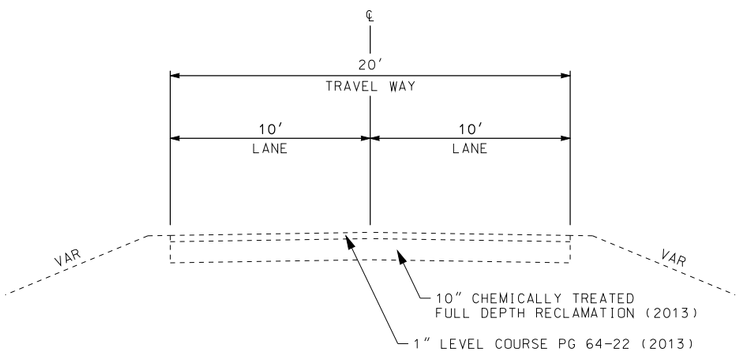

SECTION ON TANGENT
EXISTING TYPICAL SECTION RTE WW
STA 342+89.00 TO STA 353+91.00
BR A2141 - STA 347+89.00

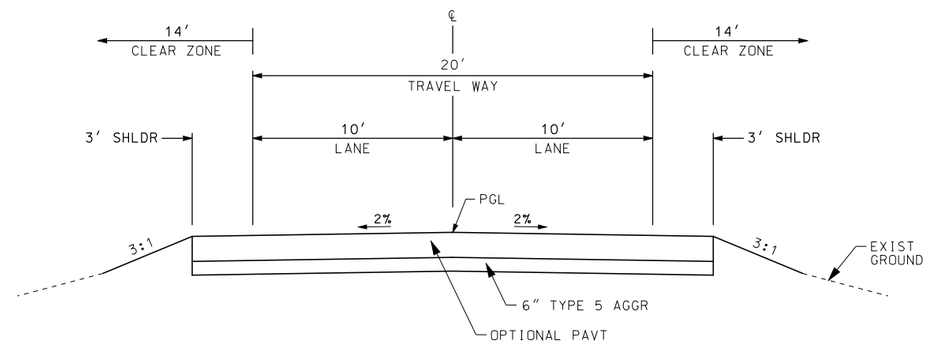

SECTION ON TANGENT
TYPICAL SECTION RTE WW
STA 347+32.73 TO STA 349+48.00

OPTIONAL PAVEMENT

1) 1.75″ BP-1 PG 64-22 OVER 8.25″ PMBB PG 64-22
2) 8.00″ PCCP

DRAWING NOT TO SCALE. FOLLOW DIMENSIONS.

STATE OF MISSOURI
CHRIS E. BERRY
NUMBER
PE-2001018707
PROFESSIONAL ENGINEER

THIS SHEET HAS BEEN SIGNED, SEALED AND DATED ELECTRONICALLY.

DATE PREPARED	9/23/2016
ROUTE	WW
STATE	MO
DISTRICT	SE
SHEET NO.	2
COUNTY	NEW MADRID
JOB NO.	J9S3146
CONTRACT ID.	
PROJECT NO.	
BRIDGE NO.	

DATE	DESCRIPTION

MISSOURI HIGHWAYS AND TRANSPORTATION COMMISSION
105 WEST CAPITOL
JEFFERSON CITY, MO 65102
1-888-ASK-MODOT (1-888-275-6636)

TYPICAL SECTION
SHEET 1 OF 1

IF A SEAL IS PRESENT ON THIS SHEET IT HAS BEEN ELECTRONICALLY SEALED AND DATED.

MISSOURI HIGHWAYS AND TRANSPORTATION COMMISSION

SUMMARY OF QUANTITIES

CLEARING AND GRUBBING

NO DIRECT PAY FOR CLEARING AND GRUBBING

REMOVAL OF IMPROVEMENTS

SHEET	STA	STA	LOC	DESCRIPTION	REMARKS
4	347+82.00	347+89.00	LT/RT	6 - OBJECT MARKERS	
4	348+92.00	348+99.00	LT/RT	6 - OBJECT MARKERS	
LUMP SUM ONE					

POROUS BACKFILL

SHEET	STA	LOC	BACKFILL CY	REMARKS
8	347+93.00	℄	34	BRIDGE END
8	348+88.00	℄	34	BRIDGE END
		TOTAL	68	

LINEAR GRADING CLASS 2

SHEET	STA	STA	LOC	LENGTH FT	LINEAR GRADING CLASS 2 STA	APPROX EARTHWORK CUT CY	APPROX EARTHWORK FILL CY	REMARKS
4	347+32.73	349+48.00	℄	215	2.2	155	48	
			TOTAL		2.2			

FILL MATERIAL SHALL BE SUPPLIED BY THE CONTRACTOR FROM AN OFFSITE SOURCE AS APPROVED BY THE ENGINEER.

OPTIONAL PAVEMENT AND AGGREGATE

SHEET	STA	STA	LOC	LENGTH FT	WIDTH FT	OPTIONAL PAVT SY	6" TYPE 5 AGGR SY	REMARKS
4.8	347+32.73	347+73.00	℄	40.27	26	116	116	
4.8	349+08.00	349+48.00	℄	40.00	26	116	116	
					TOTAL	232	232	

ROCK BLANKET

SHEET	STA	STA	THICK FT	TYPE 2 ROCK BLANKET FURNISH CY	TYPE 2 ROCK BLANKET PLACE CY	GEOTEXTILE FABRIC SY	REMARKS
7	347+85.50	348+13.40	2	151	151	227	WEST END BRIDGE
7	348+72.20	348+95.50	2	127	127	191	EAST END BRIDGE
			TOTAL	278	278	418	

INCLUDES QUANTITIES FOR ROCK DRAINS.

MOBILIZATION

LUMP SUM ONE

PAVEMENT MARKING

SHEET	STA	STA	LOC	WATERBORNE PAINT 4" YELLOW LF	REMARKS
4	347+32.73	349+06.00	℄	43	INTERMITTENT YELLOW
4	347+32.73	349+06.00	℄	173	SOLID YELLOW
4	349+06.00	349+48.00	℄	84	SOLID DOUBLE YELLOW
			TOTAL	301	

CONTRACTOR FURNISHED SURVEYING AND STAKING

LUMP SUM ONE

SEEDING

SHEET	STA	STA	LOC	SEEDING AC	REMARKS
4	347+32.73	347+93.00	LT/RT	0.05	
4	348+88.00	349+48.00	LT/RT	0.05	
			TOTAL	1.0	

TEMPORARY EROSION CONTROL

	SILT FENCE LF	ROCK DITCH CK LF	TYPE C BERM LF	SEDIMENT REMOVAL CY	TEMP SEED & MULCH AC
TOTAL	214	30	180	5	1.0

STATE OF MISSOURI
CHRIS E. BERRY
NUMBER PE-2001018707
PROFESSIONAL ENGINEER

THIS SHEET HAS BEEN SIGNED, SEALED AND DATED ELECTRONICALLY.

DATE PREPARED 9/23/2016

ROUTE	STATE
WW	MO
DISTRICT	SHEET NO.
SE	3

COUNTY: NEW MADRID

JOB NO. J9S3146

CONTRACT ID.

PROJECT NO.

BRIDGE NO.

DESCRIPTION	DATE

IF A SEAL IS PRESENT ON THIS SHEET IT HAS BEEN ELECTRONICALLY SEALED AND DATED.

MISSOURI HIGHWAYS AND TRANSPORTATION COMMISSION

105 WEST CAPITOL
JEFFERSON CITY, MO 65102
1-888-ASK-MODOT (1-888-275-6636)

SUMMARY OF QUANTITIES
SHEET 1 OF 2

EFFECTIVE: 06-08-2016

SIGN	SIZE (IN.)	AREA (SQ. FT.)	QTY	TOTAL AREA	QTY RELOC	TOTAL RELOC AREA	DESCRIPTION
WARNING SIGNS							
W01-1L	48X48	16.00					TURN (SYMBOL LEFT ARROW)
W01-1R	48X48	16.00					TURN (SYMBOL RIGHT ARROW)
W01-2L	48X48	16.00					CURVE (SYMBOL LEFT ARROW)
W01-2R	48X48	16.00					CURVE (SYMBOL RIGHT ARROW)
W01-3L	48X48	16.00					REVERSE TURN (SYMBOL LEFT ARROW)
W01-3R	48X48	16.00					REVERSE TURN (SYMBOL RIGHT ARROW)
W01-4L	48X48	16.00					REVERSE CURVE (SYMBOL LEFT ARROW)
W01-4R	48X48	16.00					REVERSE CURVE (SYMBOL RIGHT ARROW)
W01-4bL	48X48	16.00					DOUBLE ARROW REVERSE CURVE (SYMBOL LEFT ARROWS)
W01-4bR	48X48	16.00					DOUBLE ARROW REVERSE CURVE (SYMBOL RIGHT ARROWS)
W01-4cL	48X48	16.00					TRIPLE ARROW REVERSE CURVE (SYMBOL LEFT ARROWS)
W01-4cR	48X48	16.00					TRIPLE ARROW REVERSE CURVE (SYMBOL RIGHT ARROWS)
W01-6	60X30	12.50					HORIZONTAL ARROW (SYMBOL)
W01-6a	72X36	18.00					HORIZONTAL ARROW (SYMBOL ON PERMANENT BARRICADE)
W01-7	60X30	12.50					DOUBLE HEAD HORIZONTAL ARROW (SYMBOL)
W01-7a	72X36	18.00					DOUBLE HEAD HORIZONTAL ARROW (SYMBOL ON PERMANENT BARRICADE)
W01-8	18X24	3.00					CHEVRON (SYMBOL)
W01-8a	30X36	7.50					CHEVRON (SYMBOL FOR DIVIDED HIGHWAYS)
W03-1	48X48	16.00					STOP AHEAD (SYMBOL)
W03-2	48X48	16.00					YIELD AHEAD (SYMBOL)
W03-3	48X48	16.00					SIGNAL AHEAD (SYMBOL)
W03-4	48X48	16.00					BE PREPARED TO STOP
W03-5	48X48	16.00					SPEED LIMIT AHEAD
W04-1L	48X48	16.00					MERGE (SYMBOL FROM LEFT)
W04-1aL	48X48	16.00					MERGE (LEFT ARROW AT LANE DROP)
W04-1R	48X48	16.00					MERGE (SYMBOL FROM RIGHT)
W04-1aR	48X48	16.00					MERGE (RIGHT ARROW AT LANE DROP)
W05-1	48X48	16.00					ROAD/BRIDGE/RAMP NARROWS
W05-3	48X48	16.00					ONE LANE BRIDGE
W05-5	48X48	16.00					NARROW LANES
W06-1	48X48	16.00					DIVIDED HIGHWAY (SYMBOL)
W06-2	48X48	16.00					DIVIDED HIGHWAY END (SYMBOL)
W06-3	48X48	16.00					TWO WAY TRAFFIC (SYMBOL)
W07-3a	30X24	5.00					NEXT XX MILES (PLAQUE)
W08-1	48X48	16.00					BUMP
W08-2	48X48	16.00					DIP
W08-3	48X48	16.00					PAVEMENT ENDS
W08-4	48X48	16.00					SOFT SHOULDER
W08-5	48X48	16.00					SLIPPERY WHEN WET (SYMBOL)
W08-6	48X48	16.00					TRUCK CROSSING WITH FLAGS
W08-6c	48X48	16.00					TRUCK ENTRANCE
W08-7	36X36	9.00					LOOSE GRAVEL
W08-9	48X48	16.00					LOW SHOULDER
W08-11	48X48	16.00					UNEVEN LANES
W08-12	48X48	16.00					NO CENTER LINE
W10-1	42 RND.	9.62					RAILROAD CROSSING
W012-1	24X24	4.00					DOUBLE DOWN ARROW (SYMBOL)
W012-2	48X48	16.00					LOW CLEARANCE (SYMBOL)
W012-2x	24X18	3.00					LOW CLEARANCE (PLAQUE)
W012-2a	84X24	14.00					OVERHEAD LOW CLEARANCE (FEET AND INCHES)
W08-15	48X48	16.00					GROOVED PAVEMENT
W08-15p	30X24	5.00					MOTORCYCLE (PLAQUE)
W08-17	48X48	16.00					SHOULDER DROP-OFF (SYMBOL)
W08-17p	30X24	5.00					SHOULDER DROP-OFF (PLAQUE)
SPECIAL	120X60	50.00					LOW CLEARANCE XX FT XX IN XX MILES AHEAD
SPECIAL	120X60	50.00					WIDTH RESTRICTION XX FT XX IN XX MILES AHEAD
W013-1	30X30	6.25					ADVISORY SPEED (PLAQUE)
W016-2	30X24	5.00					XXX FEET (PLAQUE)
W016-3	30X24	5.00					X MILE (PLAQUE)
W020-1	48X48	16.00					ROAD/BRIDGE/RAMP WORK AHEAD
W020-2	48X48	16.00					DETOUR AHEAD
W020-3	48X48	16.00	4	64			ROAD CLOSED (AHEAD) - 2 & (500 FT) - 2
W020-4	48X48	16.00					ONE LANE ROAD AHEAD
W020-5	48X48	16.00					RIGHT/CENTER/LEFT LANE CLOSED AHEAD
W020-5a	48X48	16.00					2 RIGHT/CENTER/LEFT LANES CLOSED AHEAD
W020-6a	48X48	16.00					RIGHT/CENTER/LEFT LANE CLOSED
W020-7a	48X48	16.00					FLAGGER (SYMBOL) WITH FLAGS
W021-2	36X36	9.00					FRESH OIL
W021-5	48X48	16.00					SHOULDER WORK AHEAD
W022-1	48X48	16.00					BLASTING ZONE AHEAD
W022-2	42X36	10.50					TURN OFF 2-WAY RADIO AND PHONE
W022-3	42X36	10.50					END BLASTING ZONE
W022-6e	21X15	2.19					WET PAINT (ARROW PIVOTS)
GUIDE SIGNS							
SPECIAL	36X36	9.00					FRESH OIL/LOOSE GRAVEL
E05-1	36X48	12.00					GORE EXIT
E05-2	48X36	12.00					EXIT OPEN
E05-2a	48X36	12.00					EXIT CLOSED
G020-1	60X24	10.00					ROAD WORK NEXT XX MILES
G020-2	48X24	8.00					END ROAD WORK
G020-4	36X18	4.50					PILOT CAR FOLLOW ME
SPECIAL	42X30	8.75					PLEASE WAIT FOR PILOT CAR
G020-5aP	36X24	6.00					WORK ZONE (PLAQUE)
M04-8a	24X18	3.00					END DETOUR
M04-9L	48X36	12.00					DETOUR (LEFT ARROW)
M04-9R	48X36	12.00					DETOUR (RIGHT ARROW)
M04-10L	48X18	6.00					DETOUR (ARROW LEFT)
M04-10R	48X18	6.00					DETOUR (ARROW RIGHT)
REGULATORY SIGNS							
R1-1	48X48	13.25					STOP
R1-2	48 TRI.	6.93					YIELD
R1-2a	36X36	9.00					TO ONCOMING TRAFFIC (PLAQUE)
R1-3	20X9	1.25					X-WAY (PLAQUE)
R2-1	36X48	12.00					SPEED LIMIT XX
R3-1	48X48	16.00					NO RIGHT TURN (SYMBOL)
R3-2	48X48	16.00					NO LEFT TURN (SYMBOL)
R3-3	36X36	9.00					NO TURNS
R3-4	48X48	16.00					NO U-TURN (SYMBOL)
R3-7L	30X30	6.25					LEFT LANE MUST TURN LEFT
R3-7R	30X30	6.25					RIGHT LANE MUST TURN RIGHT
R4-1	36X48	12.00					DO NOT PASS
R4-2	36X48	12.00					PASS WITH CARE
R4-7aL	36X48	12.00					KEEP LEFT (HORIZONTAL ARROW)
R4-7a	36X48	12.00					KEEP RIGHT (HORIZONTAL ARROW)
R5-1	30X30	6.25					DO NOT ENTER
R5-1a	36X24	6.00					WRONG WAY
R6-1L	48X18	6.00					ONE WAY ARROW (LEFT)
R6-1R	48X18	6.00					ONE WAY ARROW (RIGHT)
R6-2L	24X30	5.00					ONE WAY (LEFT)
R6-2R	24X30	5.00					ONE WAY (RIGHT)
R10-6	24X36	6.00					STOP HERE ON RED (45° ARROW)
R11-2	48X30	10.00	2	20			ROAD CLOSED
R11-3a	60X30	12.50					ROAD CLOSED XX MILES AHEAD LOCAL TRAFFIC ONLY
R11-4	60X30	12.50					ROAD CLOSED TO THRU TRAFFIC
S4-4	36X15	3.75					WHEN FLASHING
CONST-3A	60X48	20.00					FINE SIGN
CONST-3X	56X12	4.67					SPEEDING/PASSING (PLATE)
MISCELLANEOUS SIGNS							
SPECIAL	36X48	12.00					POINT OF PRESENCE
SPECIAL	96X48	32.00					POINT OF PRESENCE
CONST-7-48	48X24	8.00					RATE OUR WORK ZONE
CONST-7-72	72X36	18.00					RATE OUR WORK ZONE
SPECIAL	96X48	32.00	3	96			RTE X CLOSED XX MILES AHEAD
616-10.05 CONSTRUCTION SIGNS TOTAL				180			
616-10.10 RELOCATED SIGNS TOTAL							

ITEM NUMBER	TOTAL QTY	DESCRIPTION
6122008		IMPACT ATTENUATOR (8 SAND BARRELS)
6122009		IMPACT ATTENUATOR (9 SAND BARRELS)
6122010		IMPACT ATTENUATOR (10 SAND BARRELS)
6122012		IMPACT ATTENUATOR (12 SAND BARRELS)
6122014		IMPACT ATTENUATOR (14 SAND BARRELS)
6122017		IMPACT ATTENUATOR (17 SAND BARRELS)
6122019		IMPACT ATTENUATOR (19 SAND BARRELS)
6122020		REPLACEMENT SAND BARREL
6122030		IMPACT ATTENUATOR (RELOCATION)
6123000A		TRUCK OR TRAILER MOUNTED ATTENUATOR (TMA)
6161007		SPEED LIMIT AND STROBE LIGHT ASSEMBLY
6161008	4	ADVANCED WARNING RAIL SYSTEM
6161009	2	FLAG ASSEMBLY
6161020		CHANNELIZER (DRUM-LIKE)
6161022		CHANNELIZER (CONES)
6161024		CHANNELIZER (TRIM LINE) WITH LIGHT
6161025		CHANNELIZER (TRIM LINE)
6161026		CHANNELIZER (VERTICAL PANEL)
6161027		CHANNELIZER (VERTICAL PANEL) WITH LIGHT
6161028		CHANNELIZER
6161030	6	TYPE III MOVEABLE BARRICADE
6161031		TYPE III MOVEABLE BARRICADE WITH LIGHT
6161033		DIRECTION INDICATOR BARRICADE
6161034		DIRECTION INDICATOR BARRICADE, WITH LIGHT
6161040		FLASHING ARROW PANEL
6161047		TYPE III OBJECT MARKER
6161051		WARNING LIGHT, TYPE A
6161052	4	WARNING LIGHT, TYPE B
6161053		WARNING LIGHT, TYPE C
6161055		SEQUENTIAL FLASHING WARNING LIGHT
6161070		TUBULAR MARKER
6161095		RADAR SPEED ADVISORY SYSTEM
6161096		CHANGEABLE MESSAGE SIGN, COMMISSION FURNISHED/RETAINED
6161098A	2	CHANGEABLE MESSAGE SIGN WITHOUT COMMUNICATION INTERFACE, CONTRACTOR FURNISHED/RETAINED
6161099		CHANGEABLE MESSAGE SIGN WITH COMMUNICATION INTERFACE, CONTRACTOR FURNISHED/RETAINED
6162000A		WORK ZONE TRAFFIC SIGNAL SYSTEM
6173600D		CONTRACTOR FURNISHED/RETAINED TEMPORARY TRAFFIC BARRIER
6173602B		CONTRACTOR FURNISHED/COMMISSION RETAINED TEMPORARY TRAFFIC BARRIER
6174000A		TEMPORARY TRAFFIC BARRIER HEIGHT TRANSITION
6175010A		RELOCATING TEMPORARY TRAFFIC BARRIER
6176000B		COMMISSION FURNISHED/RETAINED TEMPORARY TRAFFIC BARRIER
6177000B		COMMISSION FURNISHED/RETAINED TEMPORARY TRAFFIC BARRIER HEIGHT TRANSITION
9019400		TEMPORARY LIGHTING
9029400		TEMPORARY TRAFFIC SIGNALS
9029401		TEMPORARY TRAFFIC SIGNALS AND LIGHTING

STATE OF MISSOURI
CHRIS E. BERRY
NUMBER PE-2001018707
PROFESSIONAL ENGINEER

THIS SHEET HAS BEEN SIGNED, SEALED AND DATED ELECTRONICALLY.

DATE PREPARED 9/23/2016

ROUTE	STATE
WW	MO
DISTRICT	SHEET NO.
SE	3

COUNTY: NEW MADRID

JOB NO. J9S3146

CONTRACT ID.

PROJECT NO.

BRIDGE NO.

DATE	DESCRIPTION

IF A SEAL IS PRESENT ON THIS SHEET IT HAS BEEN ELECTRONICALLY SEALED AND DATED.

MISSOURI HIGHWAYS AND TRANSPORTATION COMMISSION

105 WEST CAPITOL
JEFFERSON CITY, MO 65102
1-888-ASK-MODOT (1-888-275-6636)

SUMMARY OF QUANTITIES
SHEET 2 OF 2

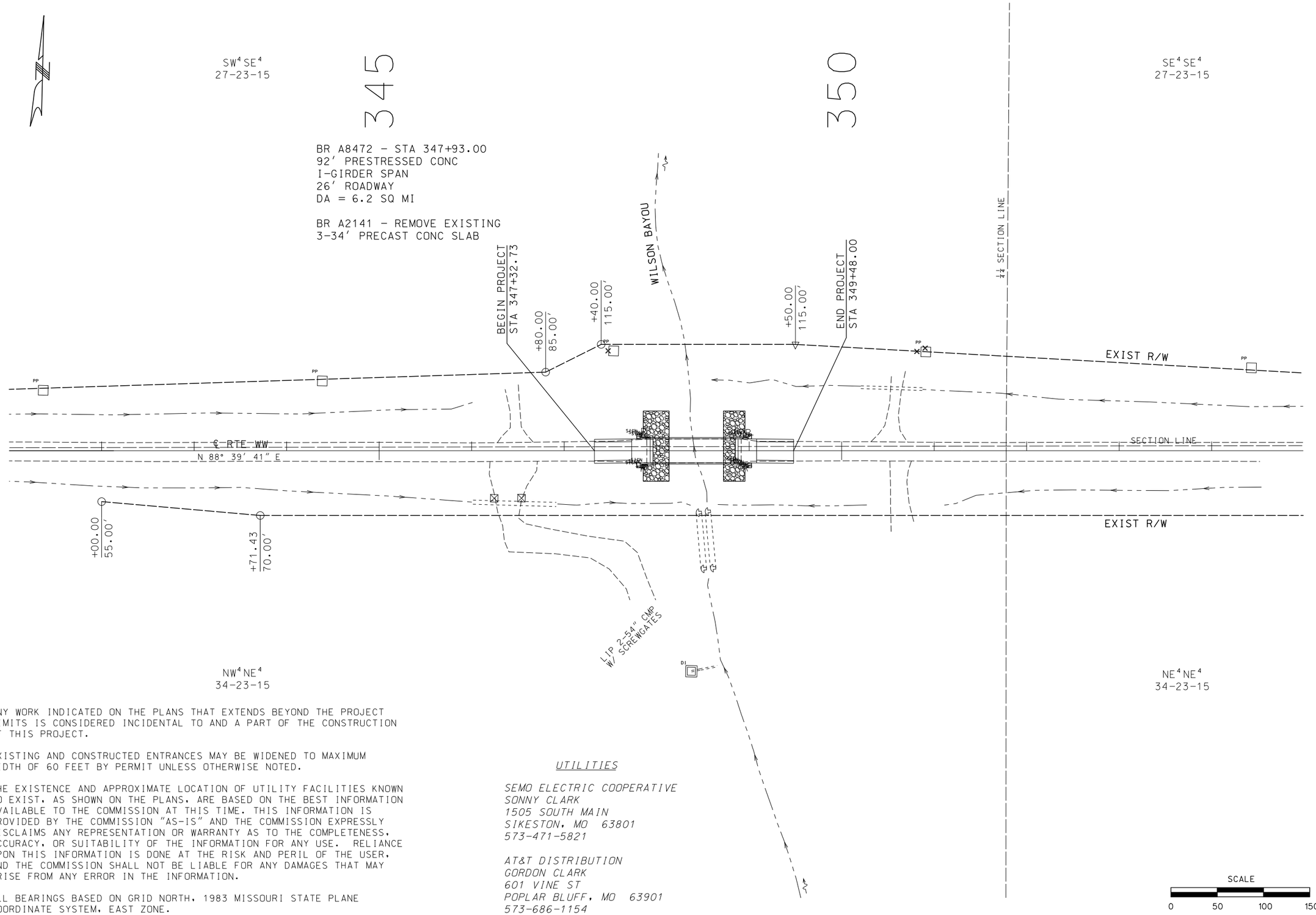

ANY WORK INDICATED ON THE PLANS THAT EXTENDS BEYOND THE PROJECT LIMITS IS CONSIDERED INCIDENTAL TO AND A PART OF THE CONSTRUCTION OF THIS PROJECT.

EXISTING AND CONSTRUCTED ENTRANCES MAY BE WIDENED TO MAXIMUM WIDTH OF 60 FEET BY PERMIT UNLESS OTHERWISE NOTED.

THE EXISTENCE AND APPROXIMATE LOCATION OF UTILITY FACILITIES KNOWN TO EXIST, AS SHOWN ON THE PLANS, ARE BASED ON THE BEST INFORMATION AVAILABLE TO THE COMMISSION AT THIS TIME. THIS INFORMATION IS PROVIDED BY THE COMMISSION "AS-IS" AND THE COMMISSION EXPRESSLY DISCLAIMS ANY REPRESENTATION OR WARRANTY AS TO THE COMPLETENESS, ACCURACY, OR SUITABILITY OF THE INFORMATION FOR ANY USE. RELIANCE UPON THIS INFORMATION IS DONE AT THE RISK AND PERIL OF THE USER, AND THE COMMISSION SHALL NOT BE LIABLE FOR ANY DAMAGES THAT MAY ARISE FROM ANY ERROR IN THE INFORMATION.

ALL BEARINGS BASED ON GRID NORTH, 1983 MISSOURI STATE PLANE COORDINATE SYSTEM, EAST ZONE.

UTILITIES

SEMO ELECTRIC COOPERATIVE
SONNY CLARK
1505 SOUTH MAIN
SIKESTON, MO 63801
573-471-5821

AT&T DISTRIBUTION
GORDON CLARK
601 VINE ST
POPLAR BLUFF, MO 63901
573-686-1154

STATE OF MISSOURI
CHRIS E. BERRY
NUMBER
PE-2001018707
PROFESSIONAL ENGINEER

THIS SHEET HAS BEEN SIGNED, SEALED AND DATED ELECTRONICALLY.

DATE PREPARED	9/23/2016
ROUTE	WW
STATE	MO
DISTRICT	SE
SHEET NO.	4
COUNTY	NEW MADRID
JOB NO.	J9S3146
CONTRACT ID.	
PROJECT NO.	
BRIDGE NO.	

DATE	DESCRIPTION

MISSOURI HIGHWAYS AND TRANSPORTATION COMMISSION
105 WEST CAPITOL
JEFFERSON CITY, MO 65102
1-888-ASK-MODOT (1-888-275-6636)

IF A SEAL IS PRESENT ON THIS SHEET IT HAS BEEN ELECTRONICALLY SEALED AND DATED.

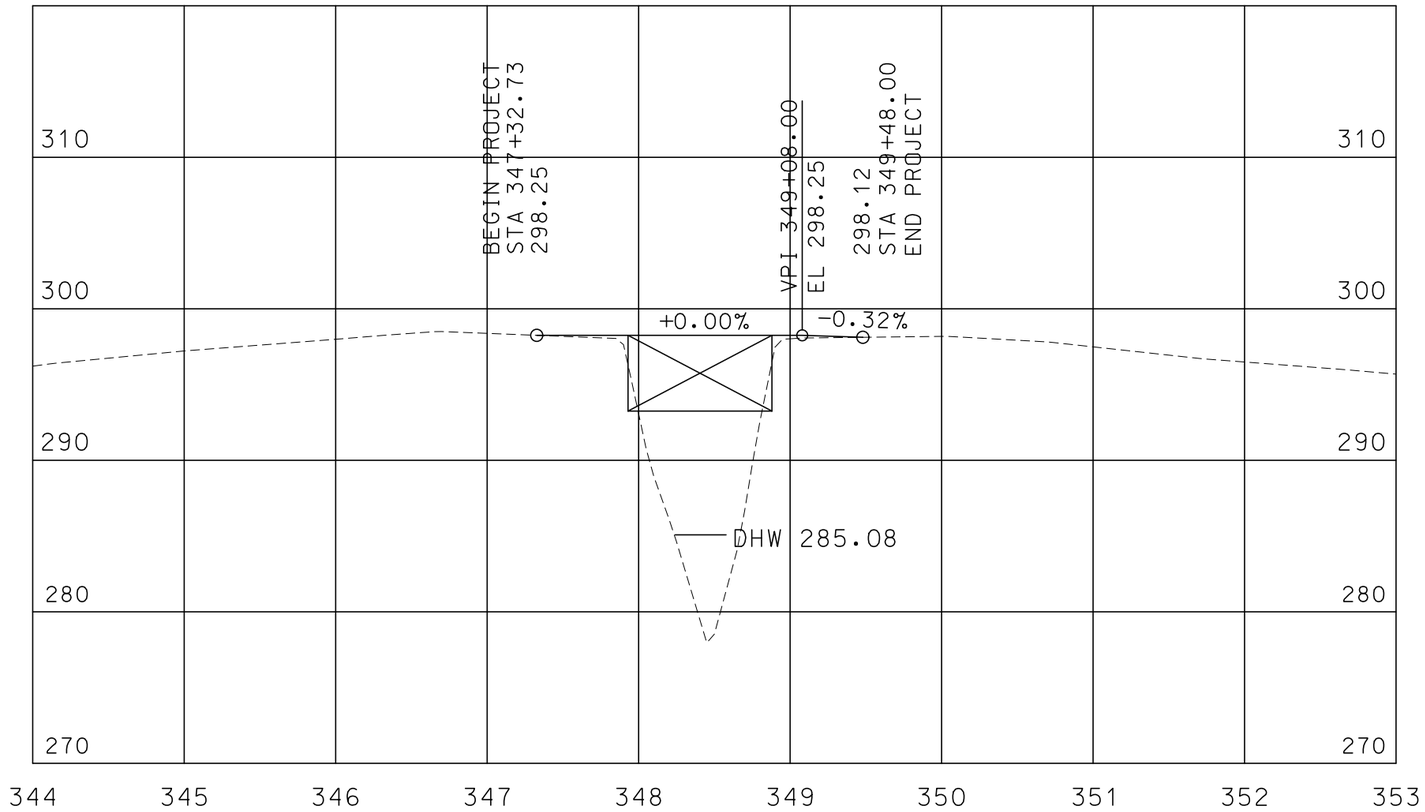

BENCH MARKS - NAVD 88

BM #1 - RR SPIKE SOUTH SIDE POWER POLE
57.99' LT OF ℄ RTE WW STA 338+36.80 ELEV 289.84

BM #2 - □ SW COR SW WINGWALL BR A2141
15.65' RT OF ℄ RTE WW STA 347+89.50 ELEV 298.58

BM #3 - □ NE COR NE WINGWALL BR A2141
15.11' LT OF ℄ RTE WW STA 348+90.70 ELEV 298.52

BM #4 - RR SPIKE SOUTH SIDE POWER POLE
70.54' LT OF ℄ RTE WW STA 358+02.48 ELEV 288.21

STATE OF MISSOURI
CHRIS E. BERRY
NUMBER
PE-2001018707
PROFESSIONAL ENGINEER

THIS SHEET HAS BEEN SIGNED, SEALED AND DATED ELECTRONICALLY.

DATE PREPARED	9/23/2016
ROUTE	WW
STATE	MO
DISTRICT	SE
SHEET NO.	5
COUNTY	NEW MADRID
JOB NO.	J9S3146
CONTRACT ID.	
PROJECT NO.	
BRIDGE NO.	

DATE	DESCRIPTION

MISSOURI HIGHWAYS AND TRANSPORTATION COMMISSION
105 WEST CAPITOL
JEFFERSON CITY, MO 65102
1-888-ASK-MODOT (1-888-275-6636)

IF A SEAL IS PRESENT ON THIS SHEET IT HAS BEEN ELECTRONICALLY SEALED AND DATED.

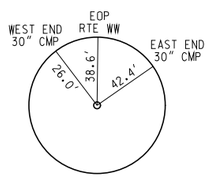

CONTROL PT #100
X = 1137163.7085
Y = 280407.7117
Z = 290.50
STA 338+26.01
OFF 48.29' RT

CP #100 - 5/8" REBAR 4" DEEP W/ AL CAP APPROX 0.35 MI WEST OF INTERSECT RTE WW AND CO RD 733 (SW COR OF SOUTH FIELD ENTRANCE)

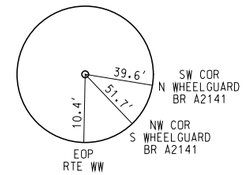

CONTROL PT #101
X = 1138086.8414
Y = 280499.1672
Z = 296.73
STA 347+50.56
OFF 20.85' LT

CP #101 - 5/8" REBAR 4" DEEP W/ AL CAP APPROX 0.30 MI WEST OF INTERSECT RTE WW AND CO RD 733 (NORTH SIDE OF RTE WW)

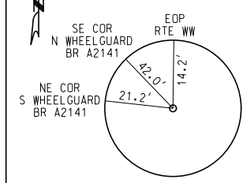

CONTROL PT #102
X = 1138245.7686
Y = 280456.5501
Z = 293.93
STA 349+08.45
OFF 25.47' RT

CP #102 - 5/8" REBAR 4" DEEP W/ PL CAP APPROX 0.25 MI WEST OF INTERSECT RTE WW AND CO RD 733 (SOUTH SIDE OF RTE WW)

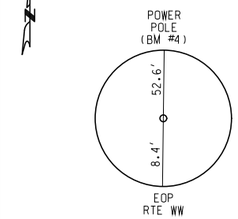

CONTROL PT #103
X = 1139138.1734
Y = 280520.8410
Z = 291.15
STA 358+02.11
OFF 17.96' LT

CP #103 - 5/8" REBAR 4" DEEP W/ AL CAP APPROX 700' WEST OF INTERSECT RTE WW AND CO RD 733 (NORTH SIDE OF RTE WW)

NAD 83 (2011) - EAST ZONE
PROJECTION FACTOR = 1.00000000

COORDINATE POINTS

LOC	STA	X-E	Y-N
℄ EXISTING RTE WW			
POT	339+00.00	1137237.0022	280458.4578
POT	367+00.00	1140036.2381	280523.8649

STATE OF MISSOURI
CHRIS E. BERRY
NUMBER
PE-2001018707
PROFESSIONAL ENGINEER

THIS SHEET HAS BEEN SIGNED, SEALED AND DATED ELECTRONICALLY.

DATE PREPARED
9/23/2016

ROUTE	STATE
WW	MO
DISTRICT	SHEET NO.
SE	6

COUNTY
NEW MADRID

JOB NO.
J9S3146

CONTRACT ID.

PROJECT NO.

BRIDGE NO.

DATE	DESCRIPTION

IF A SEAL IS PRESENT ON THIS SHEET IT HAS BEEN ELECTRONICALLY SEALED AND DATED.

MISSOURI HIGHWAYS AND TRANSPORTATION COMMISSION

105 WEST CAPITOL
JEFFERSON CITY, MO 65102
1-888-ASK-MODOT (1-888-275-6636)

CONTROL POINTS
COORDINATE POINTS
SHEET 1 OF 1

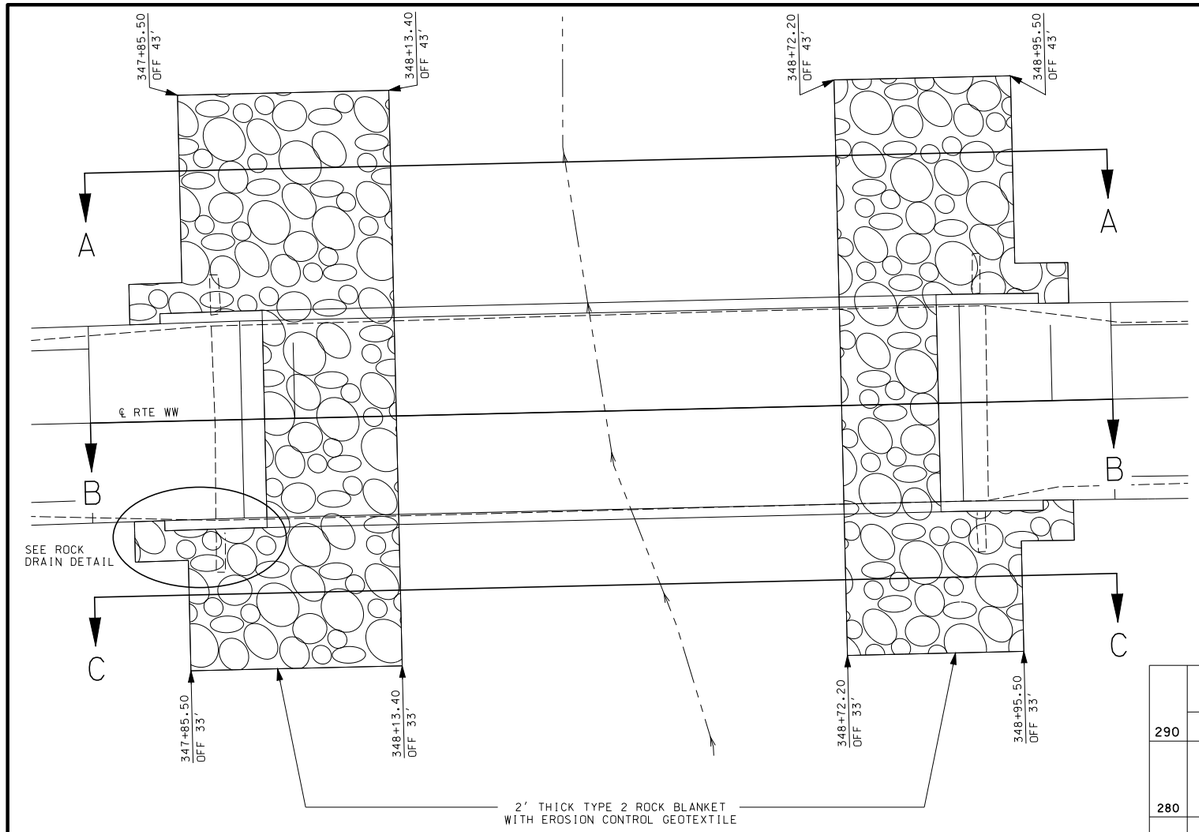

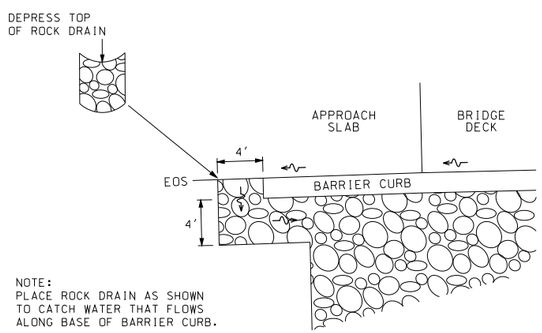

ROCK DRAIN DETAIL

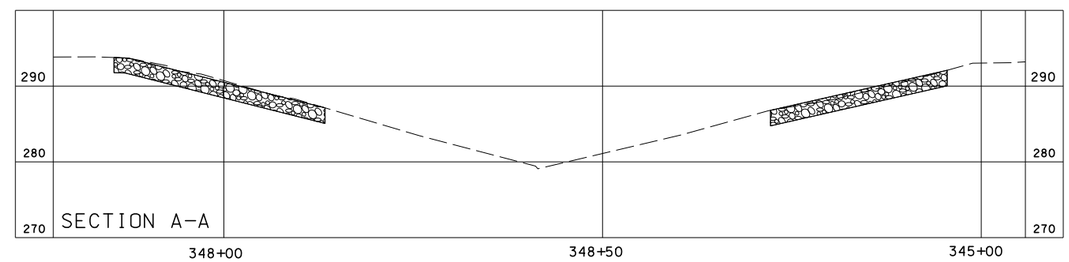

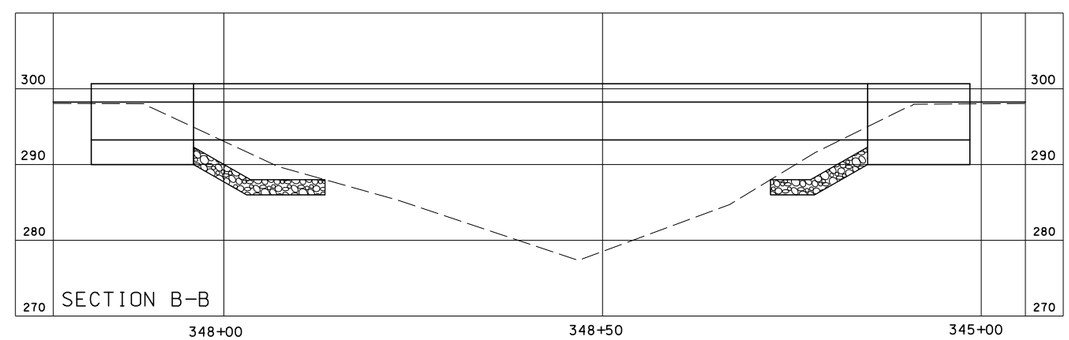

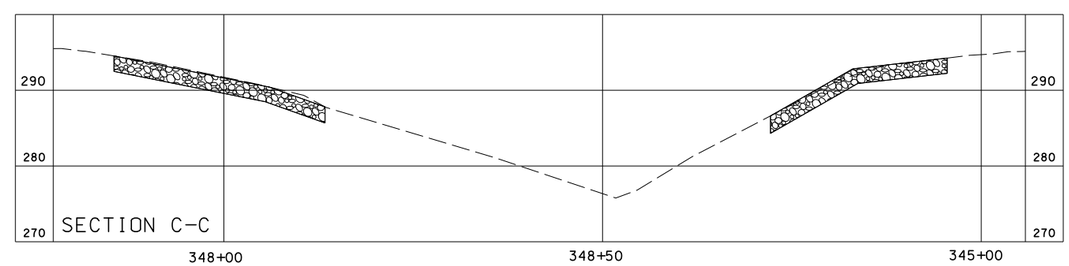

DRAWING NOT TO SCALE. FOLLOW DIMENSIONS.

STATE OF MISSOURI
CHRIS E. BERRY
NUMBER
PE-2001018707
PROFESSIONAL ENGINEER

THIS SHEET HAS BEEN SIGNED, SEALED AND DATED ELECTRONICALLY.

DATE PREPARED	9/23/2016
ROUTE	WW
STATE	MO
DISTRICT	SE
SHEET NO.	7
COUNTY	NEW MADRID
JOB NO.	J9S3146
CONTRACT ID.	
PROJECT NO.	
BRIDGE NO.	

DATE	DESCRIPTION

IF A SEAL IS PRESENT ON THIS SHEET IT HAS BEEN ELECTRONICALLY SEALED AND DATED.

MISSOURI HIGHWAYS AND TRANSPORTATION COMMISSION

105 WEST CAPITOL
JEFFERSON CITY, MO 65102
1-888-ASK-MODOT (1-888-275-6636)

ROCK BLANKET
SPECIAL SHEET 1 OF 2

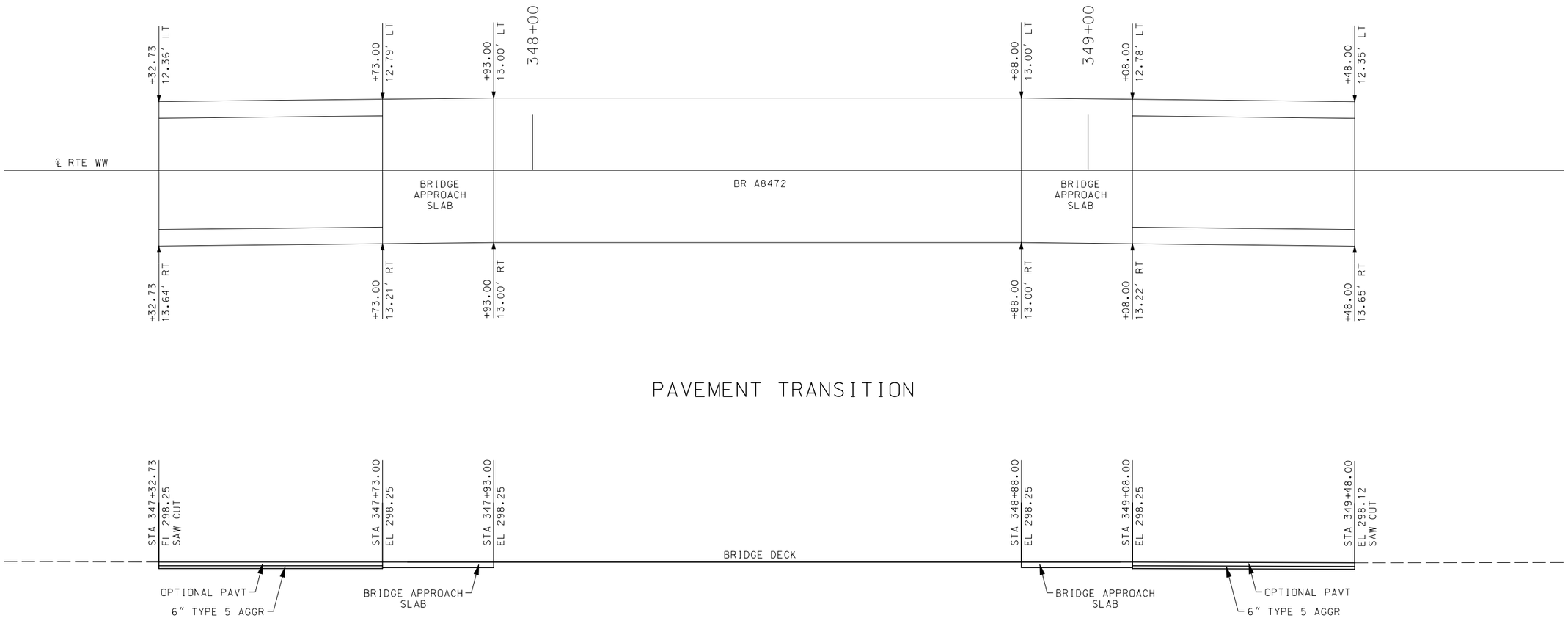

PAVEMENT TRANSITION

NOTE: SAW CUTS AT NO DIRECT PAY.

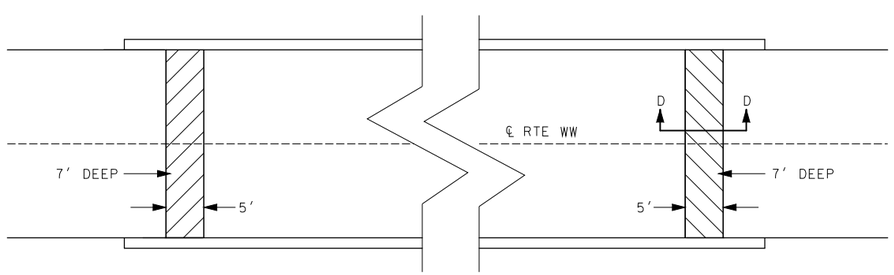

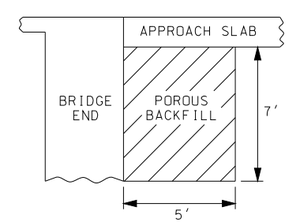

SECTION D-D

POROUS BACKFILL

DRAWING NOT TO SCALE. FOLLOW DIMENSIONS.

STATE OF MISSOURI
CHRIS E. BERRY
NUMBER PE-2001018707
PROFESSIONAL ENGINEER

THIS SHEET HAS BEEN SIGNED, SEALED AND DATED ELECTRONICALLY.

DATE PREPARED	
9/23/2016	
ROUTE: WW	STATE: MO
DISTRICT: SE	SHEET NO.: 8
COUNTY: NEW MADRID	
JOB NO.: J9S3146	
CONTRACT ID.	
PROJECT NO.	
BRIDGE NO.	

DATE	DESCRIPTION

IF A SEAL IS PRESENT ON THIS SHEET IT HAS BEEN ELECTRONICALLY SEALED AND DATED.

MISSOURI HIGHWAYS AND TRANSPORTATION COMMISSION

105 WEST CAPITOL
JEFFERSON CITY, MO 65102
1-888-ASK-MODOT (1-888-275-6636)

PAVEMENT DETAILS
POROUS BACKFILL
SPECIAL SHEET 2 OF 2

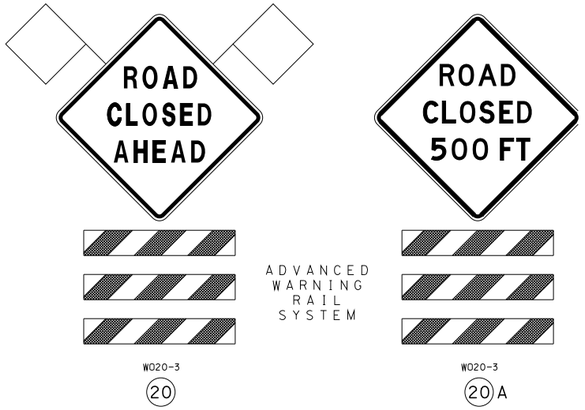

TRAFFIC CONTROL LEGEND

- SIGN
- BARRICADE
- TYPE B WARNING LIGHT

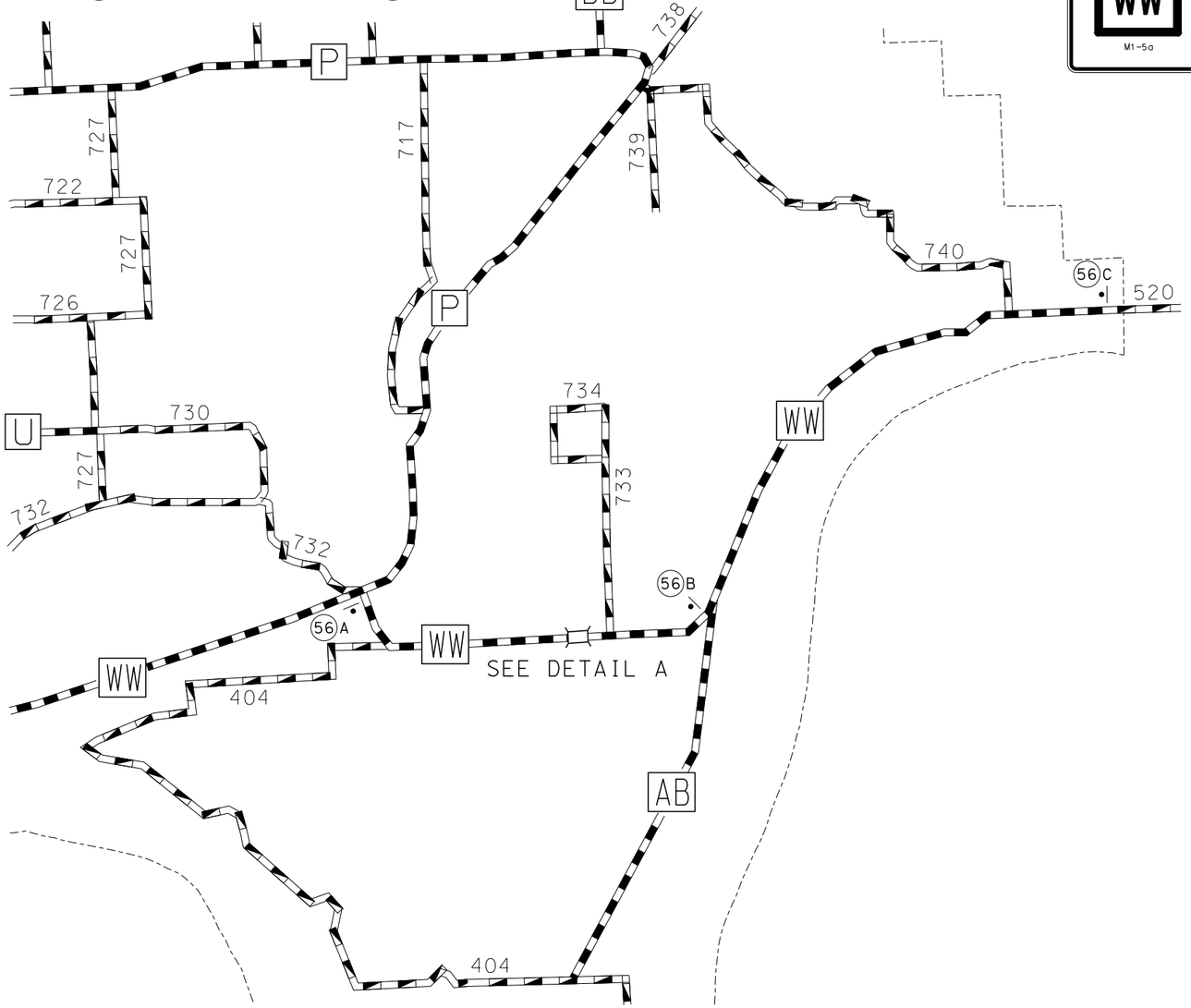

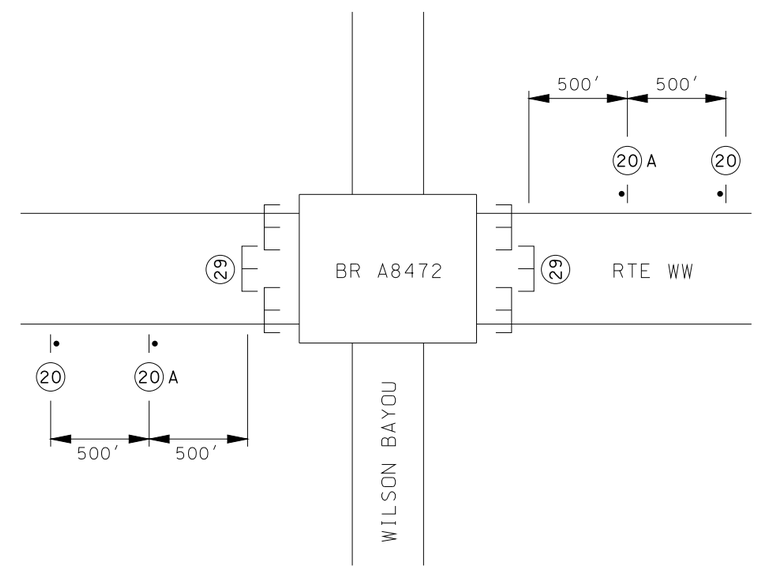

DETAIL A

NOTE:

SIGN SPACING IS 500′. DISTANCE MAY BE ADJUSTED TO FIELD CONDITIONS.

USE IN PLACE ALL SIGNS WHICH DO NOT CONFLICT WITH THIS PLAN. COVER AND/OR REMOVE CONFLICTING SIGNS.

QUANTITY FOR #56 SIGNS ARE FOR A HOMOGENOUS PRODUCT PER SIGN. SUBSTITUTION OF SIGN BLANKS WITH BOLTED PLATES WILL BE ALLOWED FOR NO ADDITIONAL COMPENSATION.

DRAWING NOT TO SCALE. FOLLOW DIMENSIONS.

STATE OF MISSOURI
CHRIS E. BERRY
NUMBER PE-2001018707
PROFESSIONAL ENGINEER
THIS SHEET HAS BEEN SIGNED, SEALED AND DATED ELECTRONICALLY.

DATE PREPARED	9/23/2016
ROUTE	WW
STATE	MO
DISTRICT	SE
SHEET NO.	9
COUNTY	NEW MADRID
JOB NO.	J9S3146
CONTRACT ID.	
PROJECT NO.	
BRIDGE NO.	

DATE	DESCRIPTION

IF A SEAL IS PRESENT ON THIS SHEET IT HAS BEEN ELECTRONICALLY SEALED AND DATED.

MISSOURI HIGHWAYS AND TRANSPORTATION COMMISSION
105 WEST CAPITOL
JEFFERSON CITY, MO 65102
1-888-ASK-MODOT (1-888-275-6636)

TRAFFIC CONTROL
SHEET 1 OF 1

TEMPORARY EROSION CONTROL LEGEND

- ROCK DITCH CHECK
- TEMPORARY BERM TYPE C
- SILT FENCE

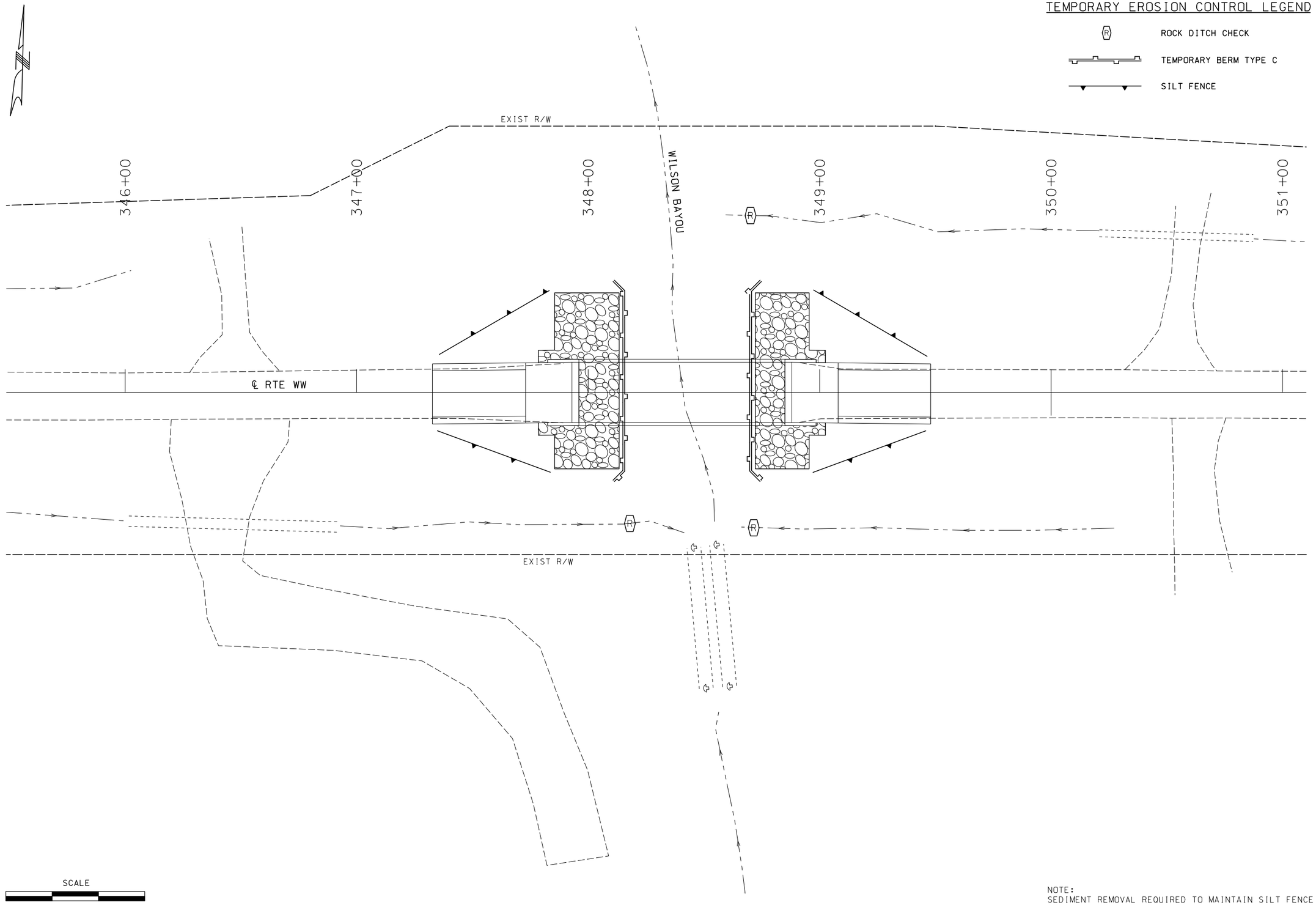

SCALE

0 20 40 60

NOTE:
SEDIMENT REMOVAL REQUIRED TO MAINTAIN SILT FENCE AND DITCH CHECKS IN PROPER WORKING CONDITION SHALL BE PERFORMED AT NO DIRECT PAY.

STATE OF MISSOURI
CHRIS E. BERRY
NUMBER PE-2001018707
PROFESSIONAL ENGINEER

THIS SHEET HAS BEEN SIGNED, SEALED AND DATED ELECTRONICALLY.

DATE PREPARED	9/23/2016
ROUTE	WW
STATE	MO
DISTRICT	SE
SHEET NO.	10
COUNTY	NEW MADRID
JOB NO.	J9S3146
CONTRACT ID.	
PROJECT NO.	
BRIDGE NO.	

DATE	DESCRIPTION

IF A SEAL IS PRESENT ON THIS SHEET IT HAS BEEN ELECTRONICALLY SEALED AND DATED.

MISSOURI HIGHWAYS AND TRANSPORTATION COMMISSION

105 WEST CAPITOL
JEFFERSON CITY, MO 65102
1-888-ASK-MODOT (1-888-275-6636)

EROSION CONTROL
SHEET 1 OF 1

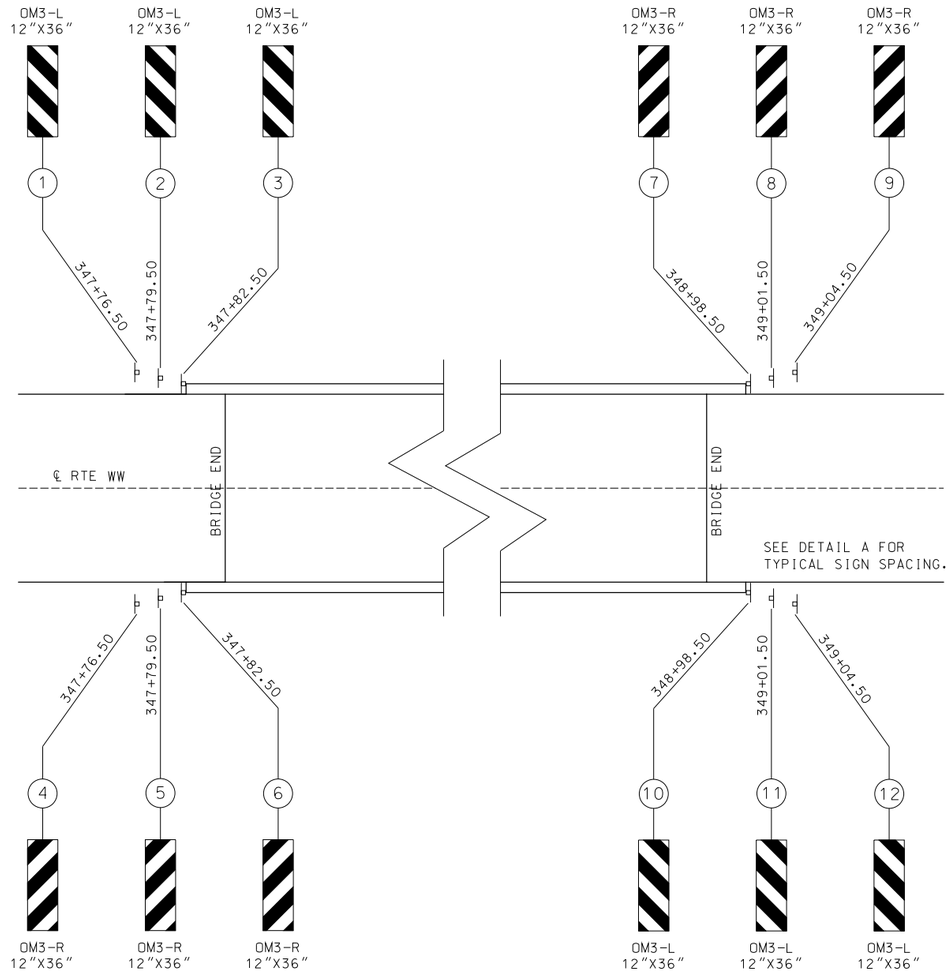

SIGNS					PERFORATED SQUARE STEEL TUBE POST 2 IN		
SIGN NO	SIGN SIZE	STATION	LOCATION	SIGN DETAIL SHEET NO	POST NO 1	TOTAL ITEM NO 9031270A	ANCHOR 12 GA ITEM NO 9031271
					LF	LF	LF
1	12X36	347+76.50	LT ℄ RTE WW	STD	4.25	4.25	3
2	12X36	347+79.50	LT ℄ RTE WW	STD	4.00	4.00	3
3	12X36	347+82.50	LT ℄ RTE WW	STD	3.75	3.75	3
4	12X36	347+76.50	RT ℄ RTE WW	STD	4.50	4.50	3
5	12X36	347+79.50	RT ℄ RTE WW	STD	4.00	4.00	3
6	12X36	347+82.50	RT ℄ RTE WW	STD	3.75	3.75	3
7	12X36	348+98.50	LT ℄ RTE WW	STD	3.75	3.75	3
8	12X36	349+01.50	LT ℄ RTE WW	STD	3.75	3.75	3
9	12X36	349+04.50	LT ℄ RTE WW	STD	4.00	4.00	3
10	12X36	348+98.50	RT ℄ RTE WW	STD	3.75	3.75	3
11	12X36	349+01.50	RT ℄ RTE WW	STD	4.00	4.00	3
12	12X36	349+04.50	RT ℄ RTE WW	STD	4.25	4.25	3
				SUBTOTAL		47.75	36
				TOTAL		48	36

STANDARD SIGN ASSEMBLIES				
SIGN NUMBER	STATION	LOCATION	FLAT SHEET FLUORESCENT SIGN DESCRIPTION, SIZES & NUMBER OF EACH	
			OM3-L (12"X36")	OM3-R (12"X36")
1	347+76.50	LT ℄ RTE WW	1	
2	347+79.50	LT ℄ RTE WW	1	
3	347+82.50	LT ℄ RTE WW	1	
4	347+76.50	RT ℄ RTE WW		1
5	347+79.50	RT ℄ RTE WW		1
6	347+82.50	RT ℄ RTE WW		1
7	348+98.50	LT ℄ RTE WW	1	
8	349+01.50	LT ℄ RTE WW	1	
9	349+04.50	LT ℄ RTE WW	1	
10	348+98.50	RT ℄ RTE WW		1
11	349+01.50	RT ℄ RTE WW		1
12	349+04.50	RT ℄ RTE WW		1
		TOTAL	6	6

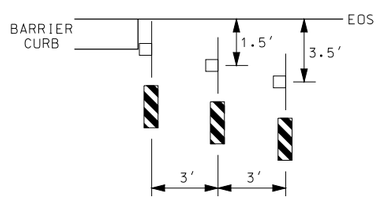

NOTE:
TOP OF OBJECT MARKER SHALL BE INSTALLED AT SAME HEIGHT AS BRIDGE BARRIER CURB.

DETAIL A

SIGN SUMMARY				
STANDARD SIGN	SIGN DETAIL SHEET NO	NO EACH	SIZE, TYPE & SQ FT	
			SIZE	FLAT SHEET FLUORESCENT * ITEM NO 9035069A
OM3-L	STD	6	12"X36"	18
OM3-R	STD	6	12"X36"	18
		TOTAL		36

* ORANGE, YELLOW & YELLOW/GREEN

DRAWING NOT TO SCALE. FOLLOW DIMENSIONS.

STATE OF MISSOURI
CHRIS E. BERRY
NUMBER PE-2001018707
PROFESSIONAL ENGINEER

THIS SHEET HAS BEEN SIGNED, SEALED AND DATED ELECTRONICALLY.

DATE PREPARED 9/23/2016

ROUTE	STATE
WW	MO
DISTRICT	SHEET NO.
SE	11

COUNTY: NEW MADRID
JOB NO. J9S3146
CONTRACT ID.
PROJECT NO.
BRIDGE NO.

DATE	DESCRIPTION

MISSOURI HIGHWAYS AND TRANSPORTATION COMMISSION
105 WEST CAPITOL
JEFFERSON CITY, MO 65102
1-888-ASK-MODOT (1-888-275-6636)

IF A SEAL IS PRESENT ON THIS SHEET IT HAS BEEN ELECTRONICALLY SEALED AND DATED.

TYPE 3 OBJECT MARKERS
SIGNING SHEET 1 OF 1

SEC 27/34 TWP 23N RGE 15E

(92′) PRESTRESSED CONCRETE I-GIRDER SPAN

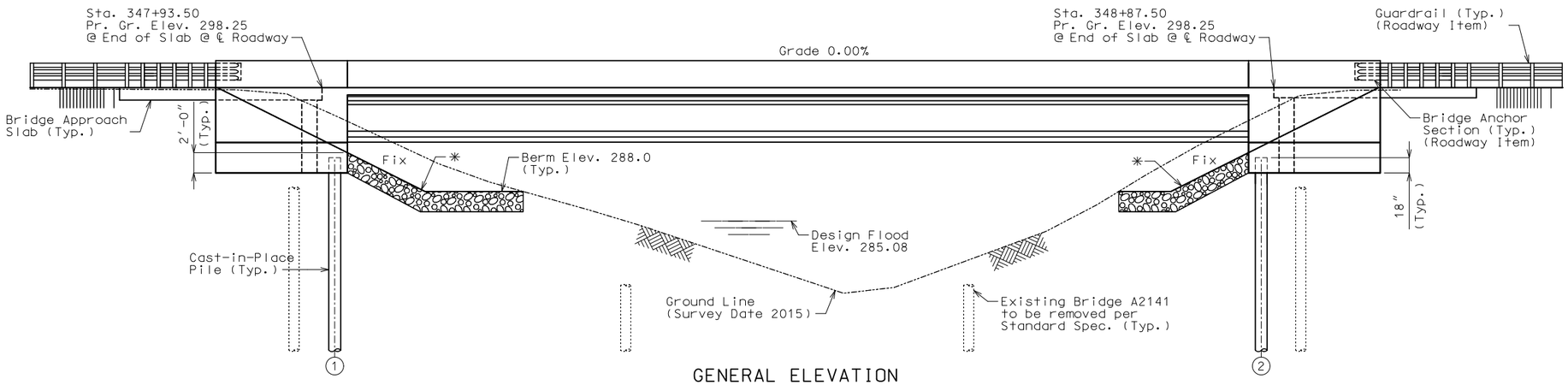

GENERAL ELEVATION

✱2:1 slope (Normal) with 2′-0″ Type 2 Rock Blanket with Permanent Erosion Control Geotextile (Roadway Item) (Typ.)

◯ Indicates existing piles requiring Dynamic Pile Testing and removal. (See job special provisions.)

✱✱ Indicates existing pile requiring Static Load Test (one test pile required). (See Sheet No. 2A and job special provisions.) Note: Adjacent pile on each side of Test Pile is required as Anchor Pile.

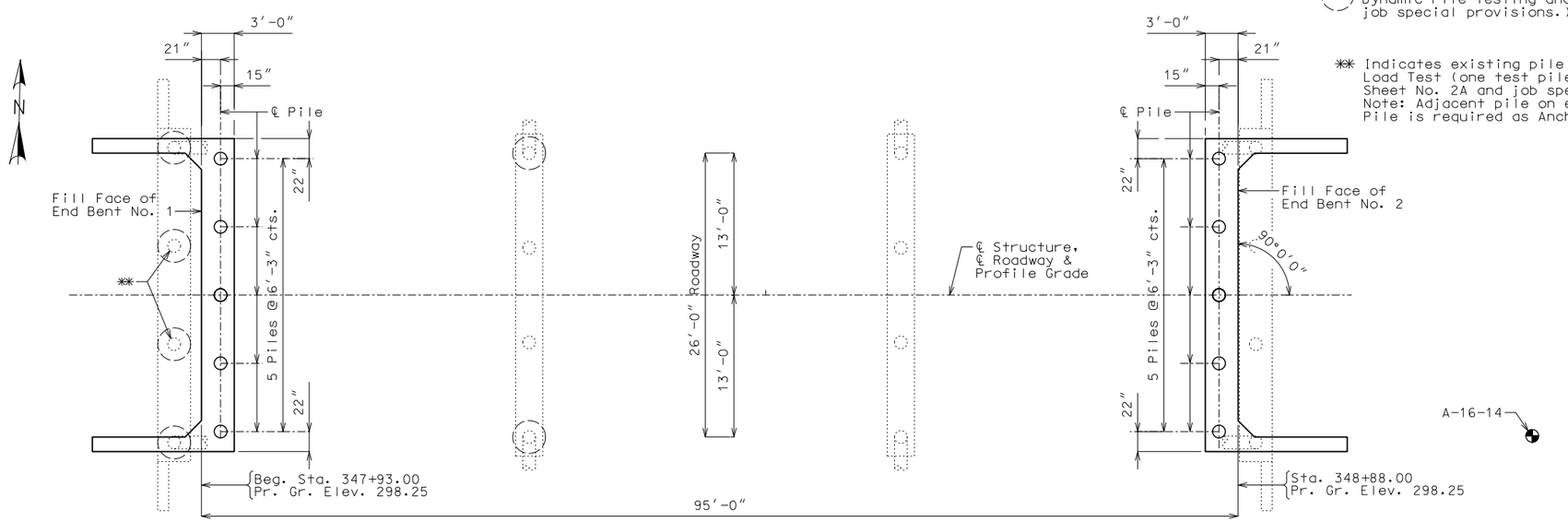

SPAN (1-2)

PLAN

"⊕" Indicates location of borings.

Notice and Disclaimer Regarding Boring Log Data

The locations of all subsurface borings for this structure are shown on the plan sheet(s) for this structure. The boring data for all locations indicated, as well as any other boring logs or other factual records of subsurface data and investigations performed by the department for the design of the project, are shown on Sheet(s) No. 20-23 or will be available from the Project Contact upon written request. No greater significance or weight should be given to the boring data depicted on the plan sheets than is given to the subsurface data available from the district or elsewhere.

The Commission does not represent or warrant that any such boring data accurately depicts the conditions to be encountered in constructing this project. A contractor assumes all risks it may encounter in basing its bid prices, time or schedule of performance on the boring data depicted here or those available from the district, or on any other documentation not expressly warranted, which the contractor may obtain from the Commission.

Notes:

For General Notes, Foundation Data, Estimated Quantities, Estimated Quantities for Slab on Concrete I-Girder, Location Sketch and Hydrologic data, see Sheet No. 2.

Roadway fill shall be completed to the final roadway section and up to the elevation of the bottom of the concrete beam within the limits of the structure and for not less than 25 feet in back of the fill face of the end bents before any piles are driven for any bents falling within the embankment section.

BM #2 - □ SW COR SW WINGWALL BR A2141
15.65′ RT OF ℄ RTE WW STA 347+89.50 ELEV 298.58

BRIDGE: ROUTE WW OVER WILSON BAYOU

ROUTE WW FROM RTE. P TO COUNTY LINE

ABOUT 2.3 MILES WEST OF ROUTE P

STA. 347+93.00

STD. 606.22
STD. 609.00
STD. 617.10
STD. 706.35

Detailed JUN 2016
Checked JUN 2016

Note: This drawing is not to scale. Follow dimensions.

STATE OF MISSOURI
CHRISTOPHER T. WILLIAMS
NUMBER PE-29410
PROFESSIONAL ENGINEER
THIS SHEET HAS BEEN SIGNED, SEALED AND DATED ELECTRONICALLY

DATE PREPARED	11/2/2016
ROUTE	WW
STATE	MO
DISTRICT	BR
SHEET NO.	1
COUNTY	NEW MADRID
JOB NO.	J9S3146
CONTRACT ID.	
PROJECT NO.	
BRIDGE NO.	A8472

DESCRIPTION | DATE

IF A SEAL IS PRESENT ON THIS SHEET IT HAS BEEN ELECTRONICALLY SEALED AND DATED

MISSOURI HIGHWAYS AND TRANSPORTATION COMMISSION
105 WEST CAPITOL
JEFFERSON CITY, MO 65102
1-888-ASK-MODOT (1-888-275-6636)

EFK•Moen, LLC
Civil Engineering Design
13523 Barrett Parkway Dr
Suite 250
St. Louis, MO 63021
Phone 314-394-3100
Missouri Certificate of Authority: 001578

REV.

Estimated Quantities

	Item		Substr.	Superstr.	Total
	Class 1 Excavation	cu. yard	140		140
✱✱	Removal of Bridges (A2141)	lump Sum			1
	Removal of Existing Piles	each			6
	Bridge Approach Slab (Minor Road)	sq. yard		119	119
	Galvanized Cast-in-Place Concrete Piles (14in)	linear foot	715		715
	Dynamic Pile Testing	each	8		8
✱✱✱	Static Load Test	lump sum			1
	Class B Concrete (Substructure)	cu. yard	25.8		25.8
	Slab on Concrete I-Girder	sq. yard		299	299
✱	Safety Barrier Curb	linear foot		230	230
	Type 6 (54in.), Prestressed Concrete I-Girder	linear foot		278	278
	Steel Intermediate Diaphragm for P/S Concrete Girders	each		4	4
	Slab Drains	each		18	18
	Vertical Drain at End Bents	each			2
	Plain Neoprene Bearing Pad	each		6	6

✱ Safety Barrier Curb shall be cast-in-place option or slip-form option.

✱✱ See Job Special Provisions for removal requirements associated with Dynamic Pile Testing and Static Load Test of existing piles.

✱✱✱ See Sheet No. 2A and Job Special Provisions.

All concrete above the construction joint in the end bents is included in the Estimated Quantities for Slab on Concrete I-Girder.

All reinforcement in the end bents is included in the Estimated Quantities for Slab on Concrete I-Girder.

All reinforcement in cast-in-place piling at end bents is included in the superstructure quantities.

Estimated Quantities for Slab on Concrete I-Girder

Item		Total
Class B-2 Concrete	cu. yard	84.7
Reinforcing Steel	pound	7,730
Reinforcing Steel (Epoxy Coated)	pound	14,820

The table of Estimated Quantities for Slab on Concrete I-Girder represents the quantities used by the State in preparing the cost estimate for concrete slabs. The area of the concrete slab will be measured to the nearest square yard longitudinally from end of slab to end of slab and transversely from out to out of bridge slab (or with the horizontal dimensions as shown on the plan of slab). Payment for prestressed panels, conventional forms, all concrete and coated and uncoated reinforcing steel will be considered completely covered by the contract unit price for the slab. Variations may may be encountered in the estimated quantities but the variations cannot be used for an adjustment in the contract unit price.

Method of forming the slab shall be as shown on the plans and in accordance with Sec 703. All hardware for forming the slab to be left in place as a permanent part of the structure shall be coated in accordance with ASTM A123 or ASTM B633 with a thickness class SC 4 and a finish type I, II or III.

Class B-2 Concrete quantity is based on minimum top flange thickness an minimum joint material thickness.

The prestressed panel quantities are not included in the table of Estimated Quantities for Slab on Concrete I-Girder

FOUNDATION DATA

Type	Design Data		Bent Number 1	Bent Number 2
Load Bearing Pile	Pile Type and Size		CIP 14″	CIP 14″
	CIP Type		Foundation	Foundation
	Number	ea	5	5
	Approximate Length per Each	ft	60	83
	Pile Driving Verification Method		DT	DT
	Minimum Nominal Axial Compressive Resistance	kip	329	329
	Minimum Tip Penetration (elev.)	ft	231.40	208.70
	Criteria for Minimum Tip Penetration		Lateral Stability	Lateral Stability
	Hammer Energy Required	ft-lb	9,800	13,600

DT = Dymamic Testing

Minimum Nominal Axial Compressive Resistance = $\frac{\text{Maximum Factored Loads}}{\text{Resistance Factor}}$

Dynamic Pile Testing shall be performed on one new pile at each bent and on the existing piles as shown on Sheet No. 1.

General Notes:

Design Specifications:

2012 AASHTO LRFD Bridge Design Specifications (6th Ed.) and 2013 Interim Revisions
2011 AASHTO Guide Specifications for LRFD Seismic Bridge Design (2nd Ed.) and 2014 Interim Revisions (Seismic Details)
Seismic Design Category = D

Design Loading:

Vehicular = HL-93
Future Wearing Surface = 35lb/sf
Earth = 120 lb/cf
Equivalent Fluid Pressure = 45 lb/cf (minimum)
Superstructure: Non-composite for dead load.
Composite for live load.

Design Unit Stresses:

Class B Concrete (Substructure)	f'c = 3,000 psi
Class B-1 Concrete (Safety Barrier Curb & CIP Piles)	f'c = 4,000 psi
Class B-2 Concrete (Superstructure, except Safety Barrier Curb)	f'c = 4,000 psi
Reinforcing Steel (Grade 60)	fy = 60,000 psi
Steel Pipe Pile (ASTM A252 Grade 3)	fy = 45,000 psi

For precast prestressed panel stresses, see Sheet No. 10

For prestressed girder stresses, see Sheet No. 8

Neoprene Pads:

Plain Neoprene Bearing Pads shall be 60 durometer and shall be in accordance with Sec 716.

Joint Filler:

All joint filler shall be in accordance with Sec 1057 for preformed sponge rubber expansion and partition joint filler, except as noted.

Reinforcing Steel:

Minimum clearance to reinforcing steel shall be 1½″, unless otherwise shown.

Traffic Handling:

Structure to be closed during construction. Traffic to be maintained on other routes. See roadway plans for traffic control.

Miscellaneous:

Outline of old work is indicated by light dashed lines. Heavy lines indicated new work.

MoDOT Construction personnel will indicate the type of joint filler option used under the precast panels for this structure:

☐ Constant Joint Filler

☐ Variable Joint Filler

Hydrologic Data

Drainage Area = 6.2 (sq. mi.)
Design Flood Frequency = 50 (year)
Design Flood Discharge = 500 (cfs)
Design High Water (D.F.) Elev. = 285.08

Base Flood (100-Year)

Base Flood Elevation = 285.20
Base Flood Discharge = 530 (cfs)
Estimated Backwater = 0.20 (ft)
Average Velocity thru Opening = 5.6 (ft/sec)

Freeboard (50-Year)

Freeboard = 7.29 (ft)

Roadway Overtopping

Overtopping Flood Discharge > 590 (cfs)
Overtopping Flood Frequency >500 (year)
Design Elevation = 298.0

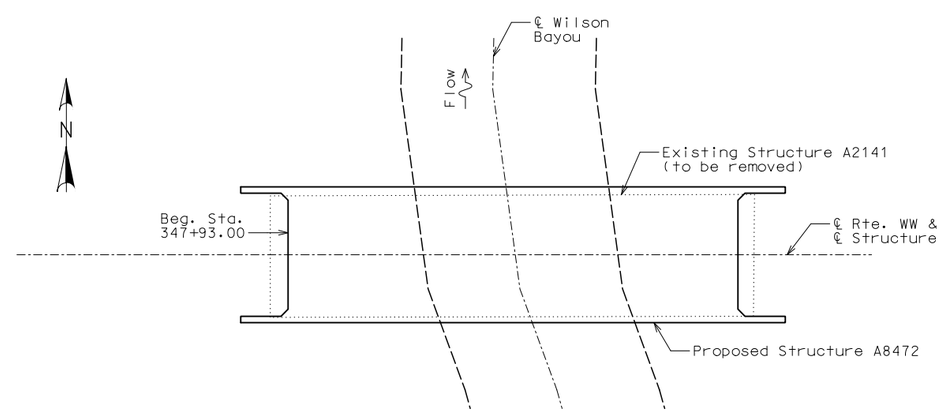

LOCATION SKETCH

STATE OF MISSOURI
CHRISTOPHER T. WILLIAMS
NUMBER PE-29410
PROFESSIONAL ENGINEER
THIS SHEET HAS BEEN SIGNED, SEALED AND DATED ELECTRONICALLY

DATE PREPARED 11/2/2016
ROUTE WW | STATE MO
DISTRICT BR | SHEET NO. 2
COUNTY NEW MADRID
JOB NO. J9S3146
CONTRACT ID.
PROJECT NO.
BRIDGE NO. A8472

DATE	DESCRIPTION

IF A SEAL IS PRESENT ON THIS SHEET IT HAS BEEN ELECTRONICALLY SEALED AND DATED

MISSOURI HIGHWAYS AND TRANSPORTATION COMMISSION
105 WEST CAPITOL
JEFFERSON CITY, MO 65102
1-888-ASK-MODOT (1-888-275-6636)

EFK•Moen, LLC
Civil Engineering Design
13523 Barrett Parkway Dr
Suite 250
St. Louis, MO 63021
Phone 314-394-3100
Missouri Certificate of Authority: 001578

REV.

Detailed JUN 2016
Checked JUN 2016

Note: This drawing is not to scale. Follow dimensions.

Y:\16002 MoDOT New Madrid Bridges\DGN\Bridge\Final\Plotsheets\J9S3146-Rte WW\B_A8472_002_J9S3146_Gen Notes.dgn 3:56:24 PM 11/2/2016

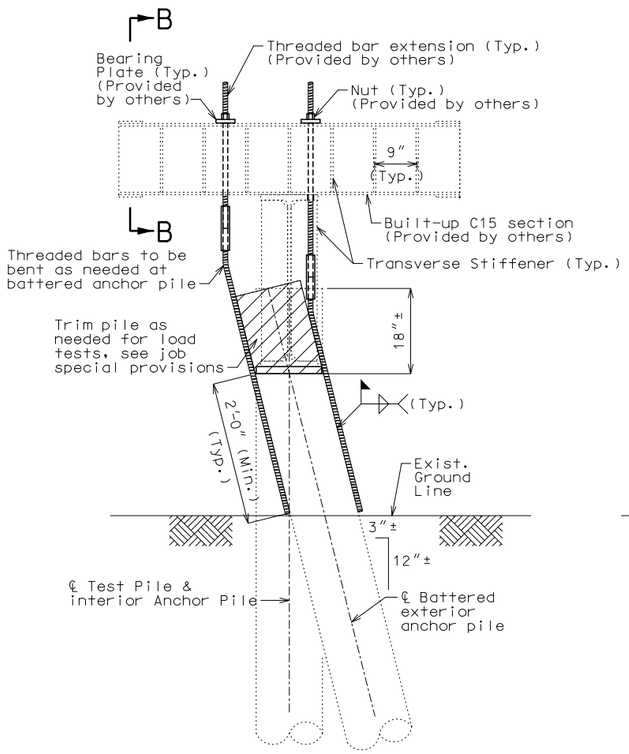

SECTION A-A

Battered Anchor Pile shown, plumb Anchor Pile similiar.

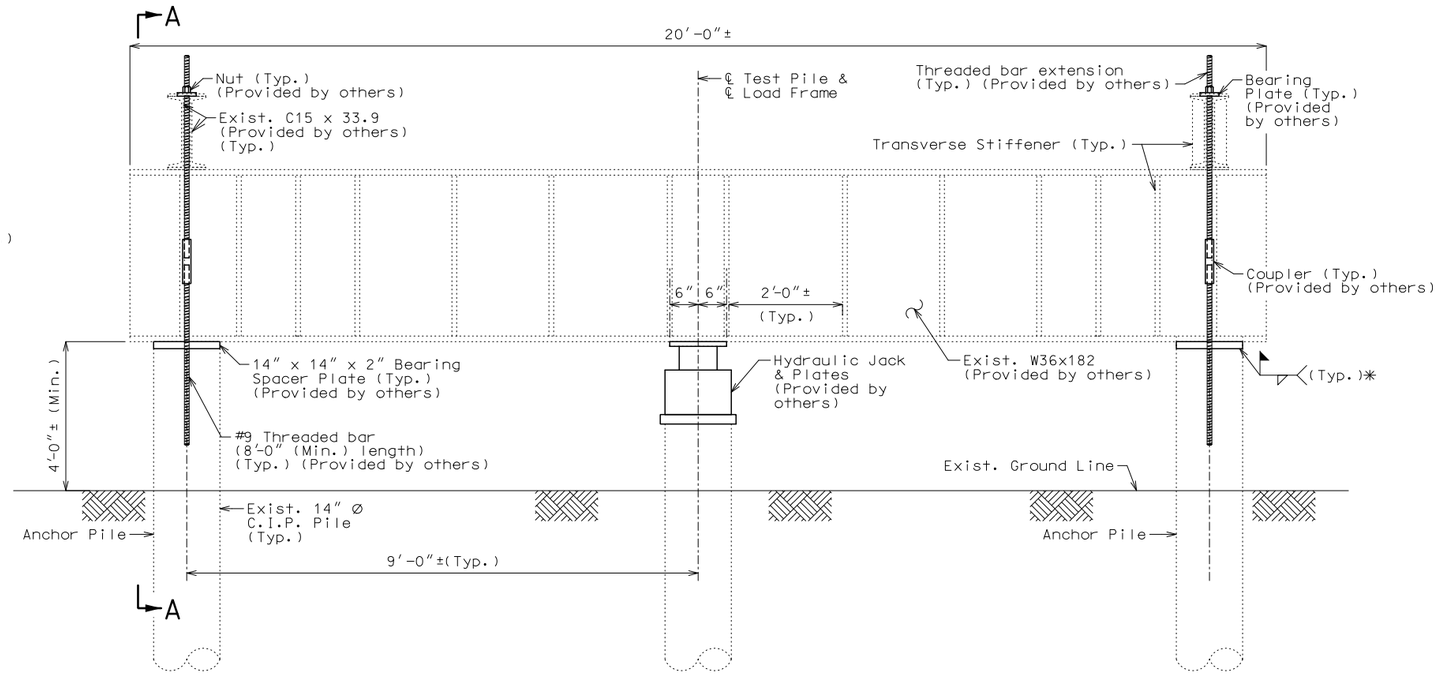

ELEVATION

✳ Spot weld ℄ to existing pile in at least 3 places.

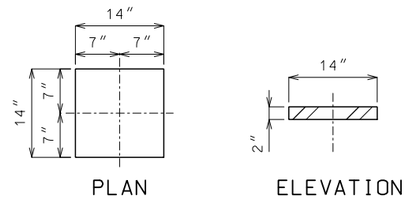

DETAILS OF BEARING SPACER PLATE

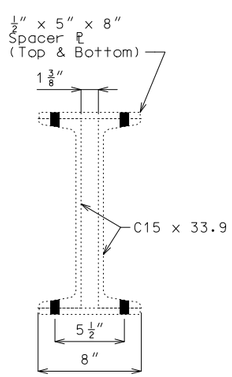

SECTION B-B

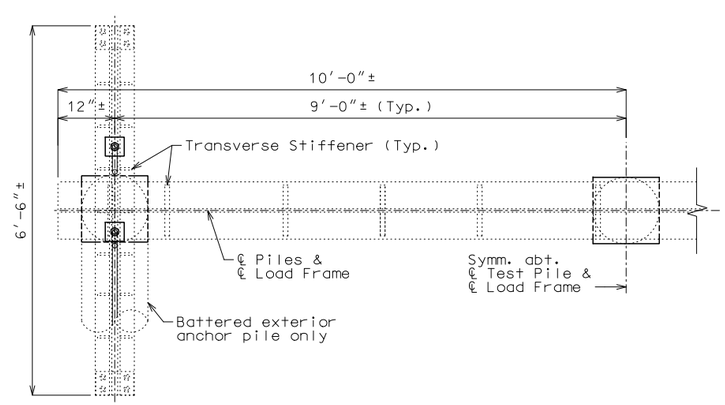

HALF PLAN

Notes:
Fabricated structural steel for load test frame shall be ASTM A709 Grade 50W.

Location of test and anchor piles will be determined in the field. See Sheet No. 1 and Job Special Provisions.

For details of Cast-in-Place piles, see information sheets.

Use ¾" Ø high strength bolts with 13/16" Ø holes.

The contractor may propose alternate means and methods for connection between load frame and anchor piles. Alternate means shall be acceptable to the Engineer and will be considered completely covered by the contract unit price for Static Load Test.

For requirements of Bridge Removal, grade preparation, pile preparation and extraction, Load Frame and material acquisition, assembly, placement and removal associated with Static Load Test, see Job Special Provisions.

DETAILS OF STATIC TEST FRAME

Detailed JUN 2016
Checked JUN 2016

Note: This drawing is not to scale. Follow dimensions.

Sheet No. 2A of 23

STATE OF MISSOURI
CHRISTOPHER T. WILLIAMS
NUMBER PE-29410
PROFESSIONAL ENGINEER
THIS SHEET HAS BEEN SIGNED, SEALED AND DATED ELECTRONICALLY

DATE PREPARED	
11/3/2016	
ROUTE: WW	STATE: MO
DISTRICT: BR	SHEET NO.: 2A
COUNTY: NEW MADRID	
JOB NO.: J9S3146	
CONTRACT ID.	
PROJECT NO.	
BRIDGE NO.: A8472	

DATE	DESCRIPTION

IF A SEAL IS PRESENT ON THIS SHEET IT HAS BEEN ELECTRONICALLY SEALED AND DATED

MISSOURI HIGHWAYS AND TRANSPORTATION COMMISSION
105 WEST CAPITOL
JEFFERSON CITY, MO 65102
1-888-ASK-MODOT (1-888-275-6636)

EFK•Moen, LLC
Civil Engineering Design
13523 Barrett Parkway Dr
Suite 250
St. Louis, MO 63021
Phone 314-394-3100
Missouri Certificate of Authority: 001578

REV.

Y:\16002 MoDOT New Madrid Bridges\DGN\Bridge\Final\Plotsheets\J9S3146-Rte WW\B_A8472_002A_J9S3146_ExPile Load Test.dgn 7:35:51 AM 11/3/2016

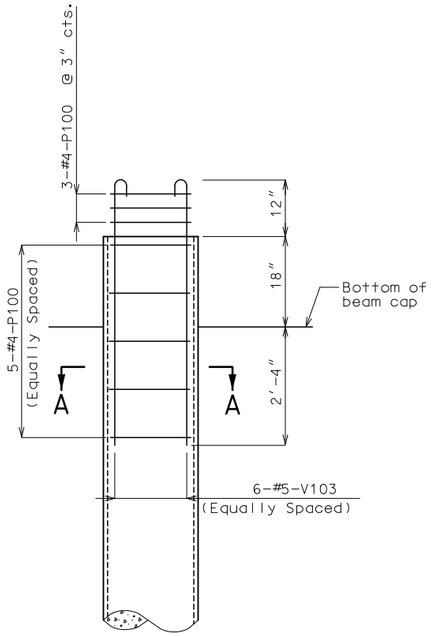

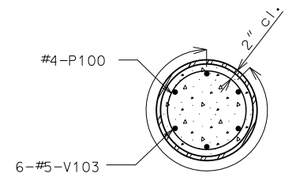

SECTION A-A

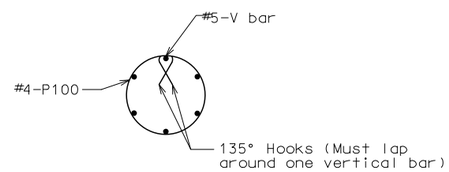

DETAIL OF SEISMIC
STIRRUP BAR

Notes:

All concrete for cast-in-place piles shall be Class B-1.

The minimum wall thickness of any spot or local area of any type shall not be more than 12.5% under the specified nominal wall thickness.

Closure plates shall be required for tips of pipe piles and shall not project beyond the outside diameter of the pipe piles. Satisfactory weldments may be made by beveling tip ends of pipe or by use of inside backing rings. In either case, proper gaps shall be used to obtain weld penetration full thickness of pipe. Payment for furnishing and installing closure plates will be considered completely covered by the contract unit price for Cast-in-Place Concrete Piles.

All splices of shells for cast-in-place concrete piles shall be made watertight and to the full strength of the shell above and below the splice to permit hard driving without damage. All shells damaged during driving shall be replaced without cost to the State. Shell sections used for splicing shall be at least 5'-0" in length. The splice at the tapered section shall be at least 3'-0" below the streambed for intermediate trestle type bents.

At the contractor's option, the hooks of V-Bars embedded in the beam cap may be oriented inward or outward for Seismic Category A. Bending the hook outward, away from the column core, is not allowed for Seismic Category B, C, or D.

All closed end cast in place piles shall be galvanized to the minimum galvanize elevation in accordance with Bridge Special Provisions.

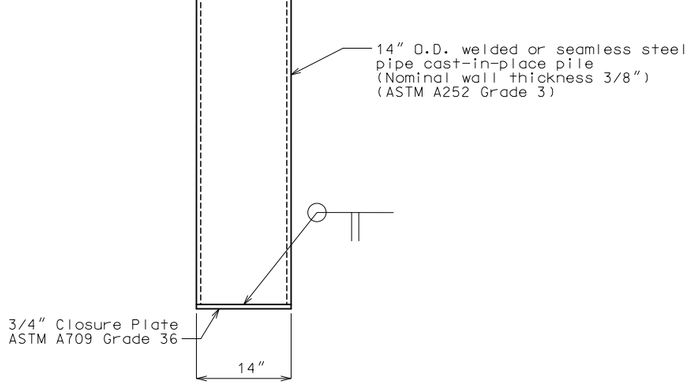

WELDED OR SEAMLESS STEEL PIPE
CAST-IN-PLACE PILE

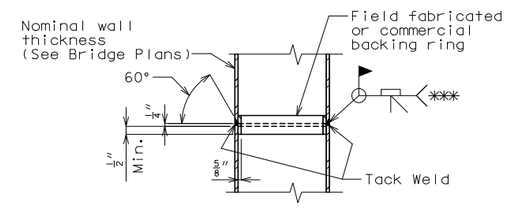

STEEL PIPE PILE SPLICE

*** Galvanization material shall be removed for a minimum of 2" around weld locations. The method used for removing galvanizing material shall be as approved by the Engineer.

Galvanizing shall be repaired by hot-stick zinc alloy method.

DETAILS OF CAST-IN-PLACE PILE

Detailed JUN 2016
Checked JUN 2016

Note: This drawing is not to scale. Follow dimensions.

STATE OF MISSOURI
CHRIS LINNEMAN
NUMBER PE-2002016690
REGISTERED PROFESSIONAL ENGINEER
THIS SHEET HAS BEEN SIGNED, SEALED AND DATED ELECTRONICALLY.

DATE PREPARED	
8/12/2016	
ROUTE: WW	STATE: MO
DISTRICT: BR	SHEET NO.: 3
COUNTY: NEW MADRID	
JOB NO.: J9S3146	
CONTRACT ID.	
PROJECT NO.	
BRIDGE NO.: A8472	

DATE	DESCRIPTION

IF A SEAL IS PRESENT ON THIS SHEET IT HAS BEEN ELECTRONICALLY SEALED AND DATED

MISSOURI HIGHWAYS AND TRANSPORTATION COMMISSION
105 WEST CAPITOL
JEFFERSON CITY, MO 65102
1-888-ASK-MODOT (1-888-275-6636)

EFK·Moen, LLC
Civil Engineering Design
13523 Barrett Parkway Dr
Suite 250
St. Louis, MO 63021 Phone 314-394-3100
Missouri Certificate of Authority: 001578

REV.

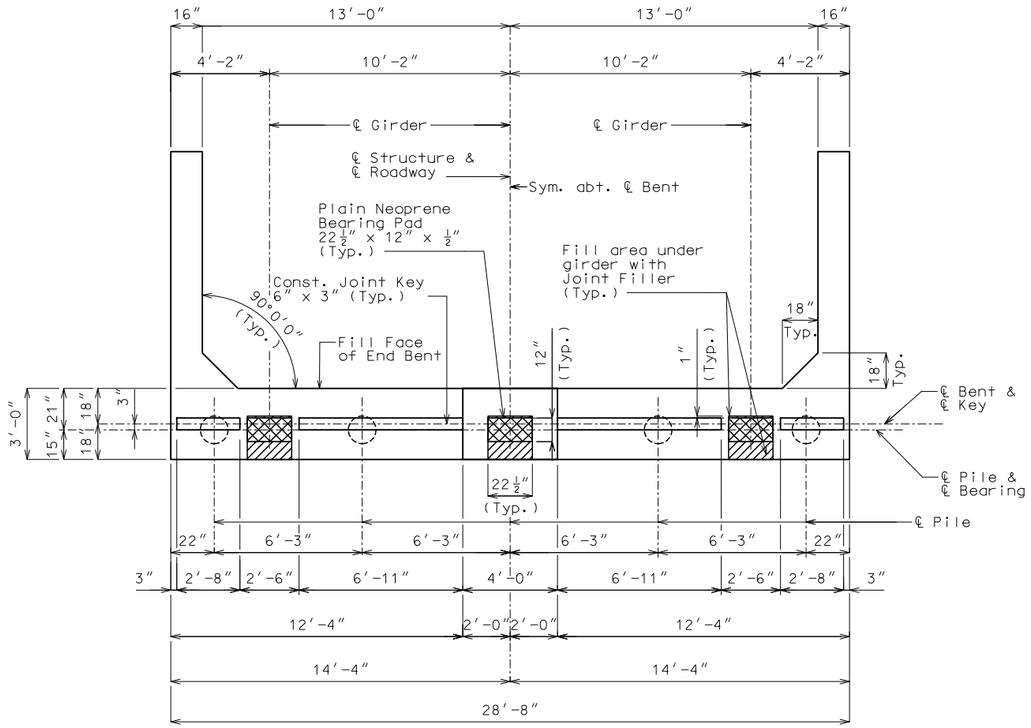

PLAN OF BEAM SHOWING DIMENSIONS

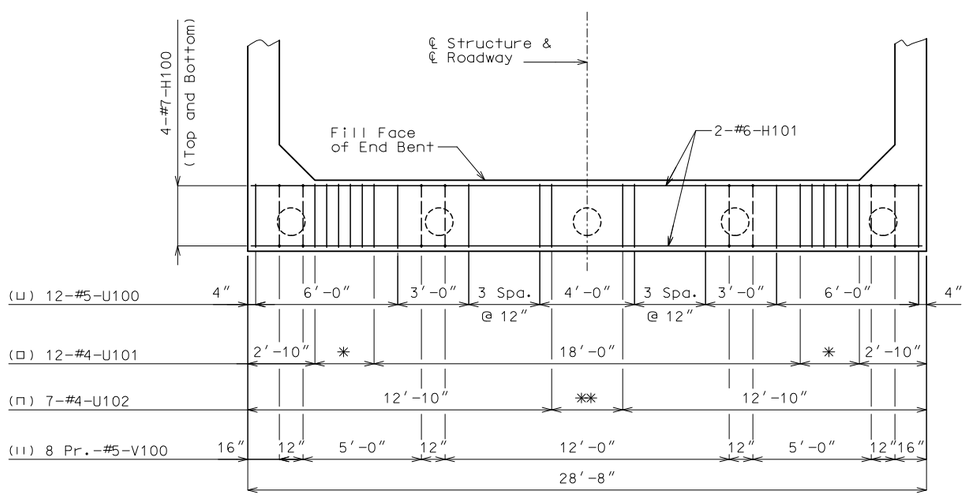

✳ 5 Spaces @ 6″
✳✳ 6 Spaces @ 6″

PLAN OF BEAM SHOWING REINFORCEMENT

End Bent No. 1

End Bent No. 2

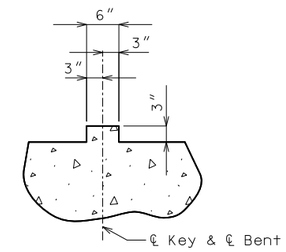

TYPICAL SECTION
THRU KEY

Notes:

For details of End Bent not shown, see Sheets No. 5 & 6.

All U-bars and V-bars in End Bent are to be placed parallel to ℄ Roadway.

For Subtructure Quantity Table for End Bents No. 1 & 2, see Sheet No. 5.

For details of Vertical Drain at End Bent, see Sheet No. 7.

Reinforcing steel shall be shifted to clear piles. U-bars shall clear piles by at least 1½″

Reinforcement in wing in Plan of Beam not shown for clarity.

DETAILS OF END BENTS NO. 1 & 2

Detailed JUN 2016
Checked JUN 2016

Note: This drawing is not to scale. Follow dimensions.

STATE OF MISSOURI
CHRIS LINNEMAN
NUMBER PE-2002016690
REGISTERED PROFESSIONAL ENGINEER
THIS SHEET HAS BEEN SIGNED, SEALED AND DATED ELECTRONICALLY.

DATE PREPARED 8/12/2016	
ROUTE WW	STATE MO
DISTRICT BR	SHEET NO. 4
COUNTY NEW MADRID	
JOB NO. J9S3146	
CONTRACT ID.	
PROJECT NO.	
BRIDGE NO. A8472	

DATE	DESCRIPTION

IF A SEAL IS PRESENT ON THIS SHEET IT HAS BEEN ELECTRONICALLY SEALED AND DATED

MISSOURI HIGHWAYS AND TRANSPORTATION COMMISSION
105 WEST CAPITOL
JEFFERSON CITY, MO 65102
1-888-ASK-MODOT (1-888-275-6636)

EFK•Moen, LLC
Civil Engineering Design
13523 Barrett Parkway Dr
Suite 250
St. Louis, MO 63021
Phone 314-394-3100
Missouri Certificate of Authority: 001578

REV.

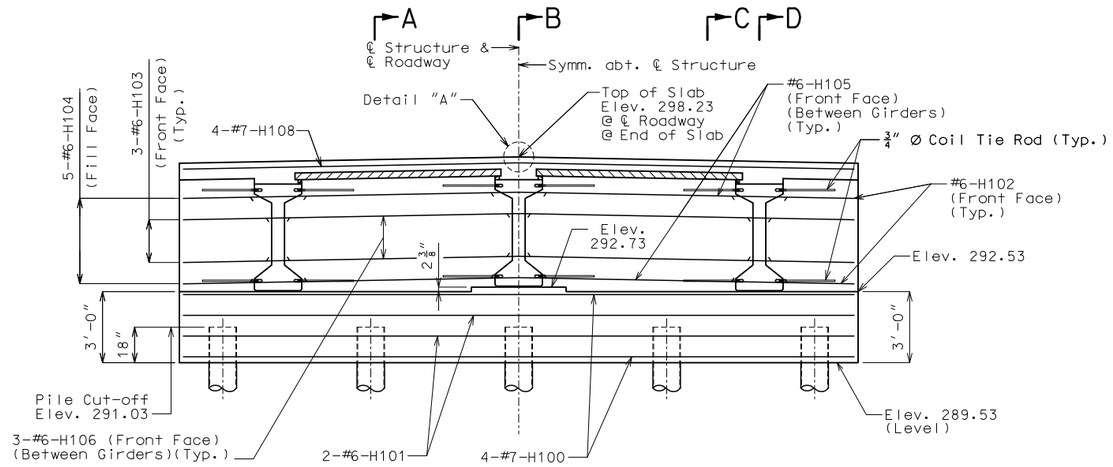

SECTION NEAR END BENT

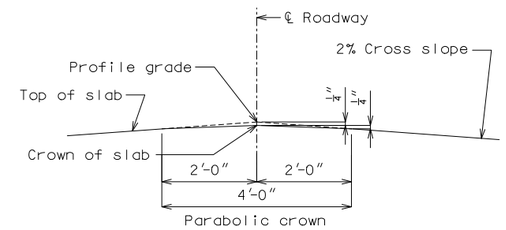

DETAIL "A"

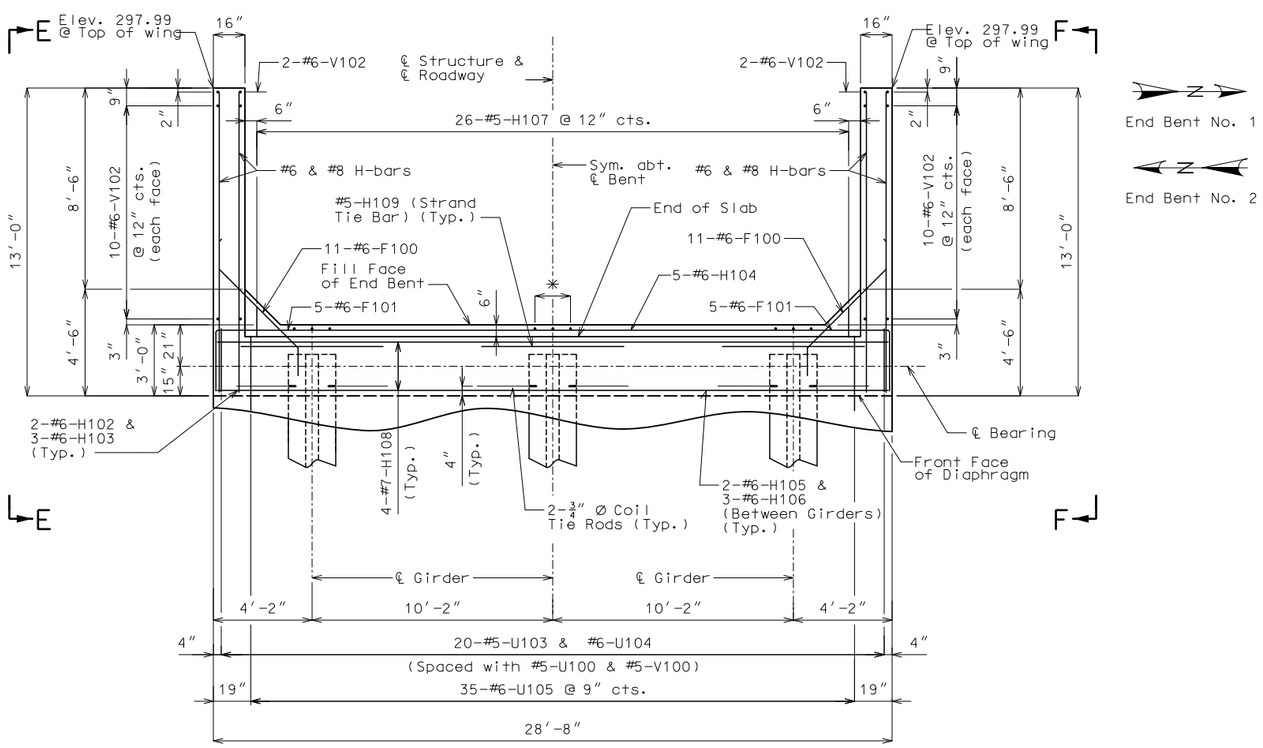

* 3-#6-V101 @ 9" cts. (Typ. at each Girder)

PART PLAN

Substructure Quantity Table for End Bent No. 1

Item		Total
Class 1 Excavation	cu. yard	70
Galvanized Cast-In-Place Concrete Piles (14 in.)	linear foot	300
Dynamic Pile Testing	each	1
Class B Concrete (Substructure)	cu. yard	12.9

Note: These quantities are included in the Estimated Quantities Table on Sheet No. 2.

Substructure Quantity Table for End Bent No. 2

Item		Total
Class 1 Excavation	cu. yard	70
Galvanized Cast-In-Place Concrete Piles (14 in.)	linear foot	415
Dynamic Pile Testing	each	1
Class B Concrete (Substructure)	cu. yard	12.9

Note: These quantities are included in the Estimated Quantities Table on Sheet No. 2.

Notes:

For Elevations E-E & F-F, Sections A-A, B-B, C-C, D-D and Section Thru Wing, see Sheet No. 6.

For details of End Bents not shown, see Sheets No. 4 & 6.

For details of Vertical Drain at End Bent, see Sheet No. 7.

For details and reinforcement of safety barrier curb, see Sheet No. 15.

The #6-F100 Bars shall be bent in the field to clear girders.

All concrete in the end bent above top of beam and below top of slab shall be Class B-2.

Strands at end of the girders shall be field bent or, if necessary, cut in field to maintain 1 1/2" minimum clearance to fill face of end bent.

For locations of Coil Tie Rods and #5-H109 (Strand Tie Bar), see Sheet No. 8.

For details of Approach Slab, see Sheet No. 17.

DETAILS OF END BENTS NO. 1 & 2

Detailed JUN 2016
Checked JUN 2016

Note: This drawing is not to scale. Follow dimensions.

STATE OF MISSOURI
CHRIS LINNEMAN
NUMBER PE-2002016699
REGISTERED PROFESSIONAL ENGINEER
THIS SHEET HAS BEEN SIGNED, SEALED AND DATED ELECTRONICALLY.

DATE PREPARED 8/16/2016
ROUTE WW | STATE MO
DISTRICT BR | SHEET NO. 5
COUNTY NEW MADRID
JOB NO. J9S3146
CONTRACT ID.
PROJECT NO.
BRIDGE NO. A8472

DESCRIPTION | DATE

IF A SEAL IS PRESENT ON THIS SHEET IT HAS BEEN ELECTRONICALLY SEALED AND DATED

MISSOURI HIGHWAYS AND TRANSPORTATION COMMISSION
MoDOT
105 WEST CAPITOL
JEFFERSON CITY, MO 65102
1-888-ASK-MODOT (1-888-275-6636)

EFK·Moen, LLC
Civil Engineering Design
13523 Barrett Parkway Dr
Suite 250
St. Louis, MO 63021
Phone 314-394-3100
Missouri Certificate of Authority: 001578

REV.

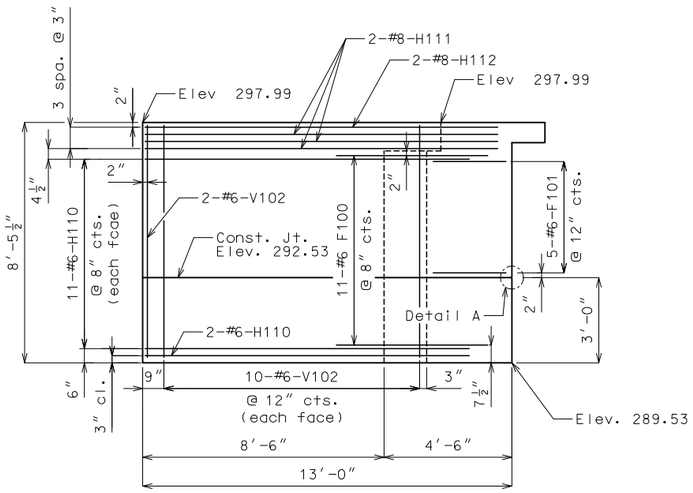

ELEVATION E-E

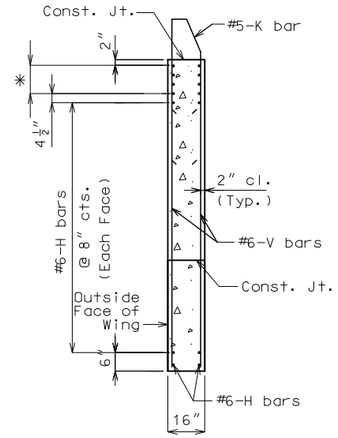

TYPICAL SECTION
THRU WING

* #8-H Bars at 3" cts.
(Each Face)

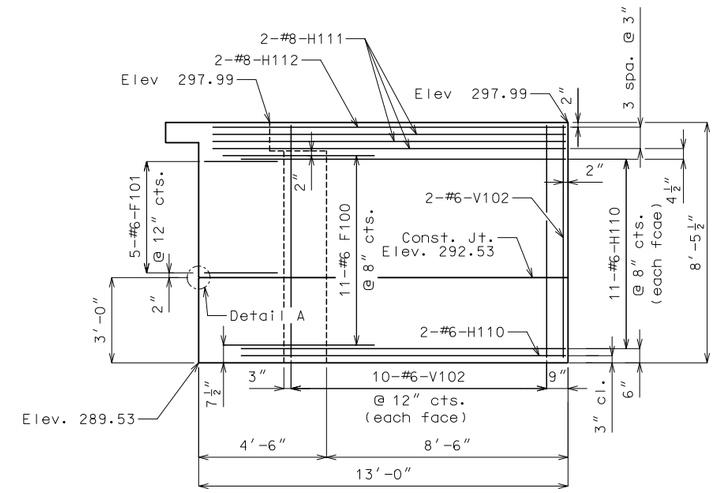

ELEVATION F-F

Notes:

For details of End Bent not shown, see Sheets No. 4 & 5.

For details and reinforcemnet of safety barrier curb not shown, see Sheet No. 15.

For Location of Sections A-A, B-B, C-C, & D-D, and Elevations E-E & F-F, see Sheet No. 5.

For Substructure Quantity Table, see Sheet No. 5

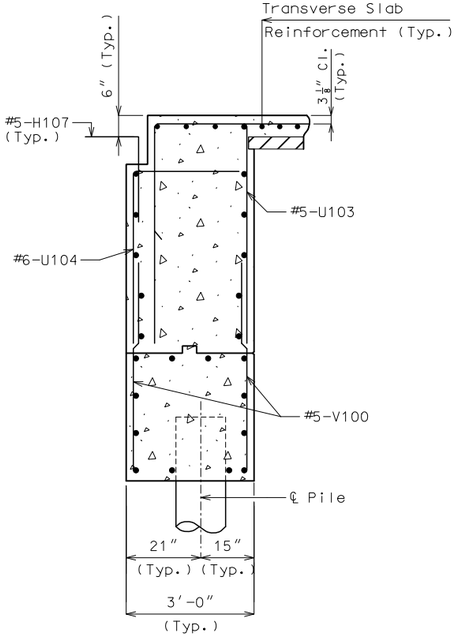

SECTION A-A

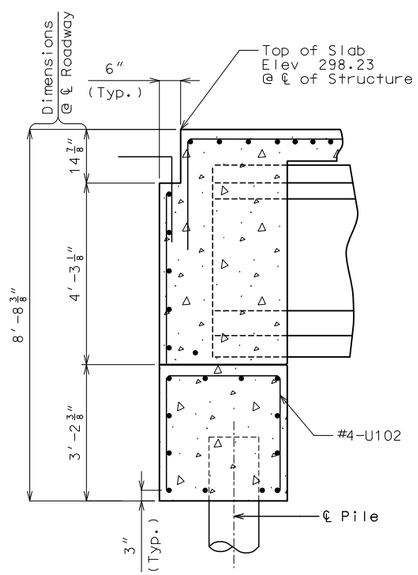

SECTION B-B

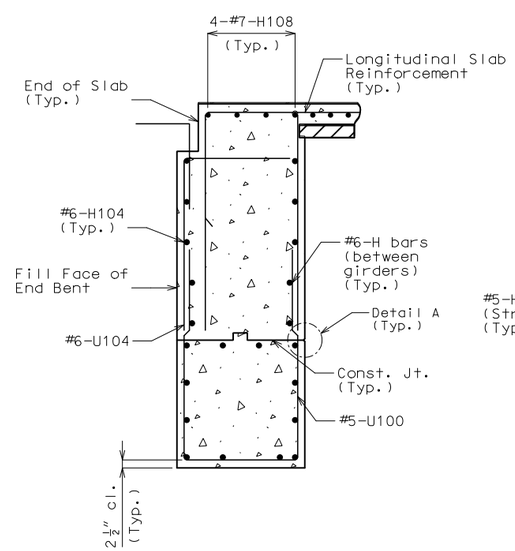

SECTION C-C

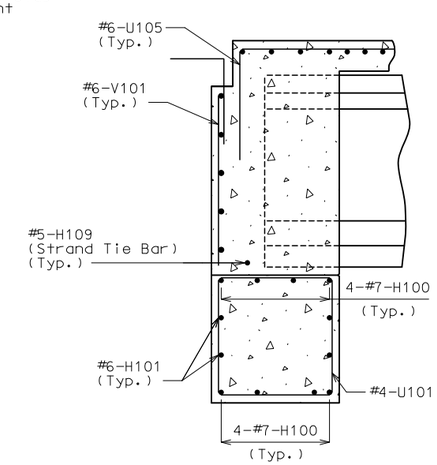

SECTION D-D

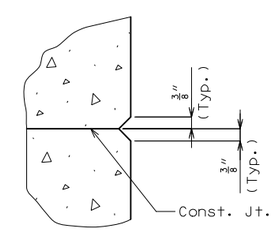

DETAIL A

DETAILS OF END BENTS NO. 1 & 2

Detailed JUN 2016
Checked JUN 2016

Note: This drawing is not to scale. Follow dimensions.

STATE OF MISSOURI
CHRIS LINNEMAN
NUMBER PE-2002016690
REGISTERED PROFESSIONAL ENGINEER
THIS SHEET HAS BEEN SIGNED, SEALED AND DATED ELECTRONICALLY.

DATE PREPARED	
8/12/2016	
ROUTE WW	STATE MO
DISTRICT BR	SHEET NO. 6
COUNTY NEW MADRID	
JOB NO. J9S3146	
CONTRACT ID.	
PROJECT NO.	
BRIDGE NO. A8472	

DATE	DESCRIPTION

IF A SEAL IS PRESENT ON THIS SHEET IT HAS BEEN ELECTRONICALLY SEALED AND DATED

MISSOURI HIGHWAYS AND TRANSPORTATION COMMISSION
105 WEST CAPITOL
JEFFERSON CITY, MO 65102
1-888-ASK-MODOT (1-888-275-6636)

EFK·Moen, LLC
Civil Engineering Design
13523 Barrett Parkway Dr
Suite 250
St. Louis, MO 63021 Phone 314-394-3100
Missouri Certificate of Authority: 001578

REV.

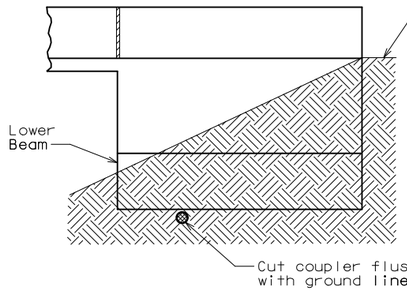

ELEVATION OF WING

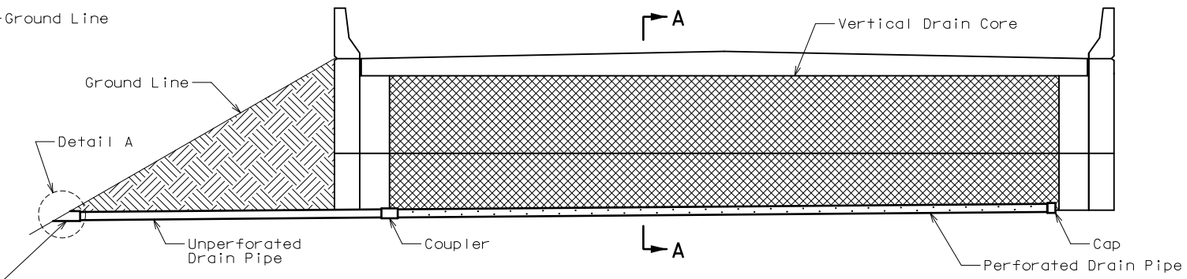

ELEVATION AT END BENT

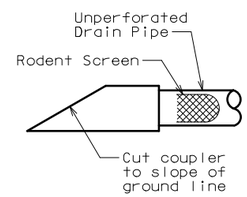

DETAIL A

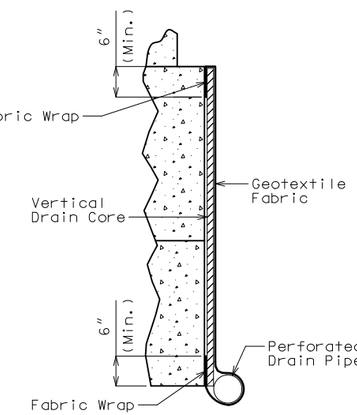

PART SECTION A-A

Note:

Drain pipe may be either 6-inch diameter corrugated metallic-coated steel pipe underdrain, 4-inch diameter corrugated polyvinyl chloride (PVC) drain pipe, or 4-inch diameter corrugated polyethylene (PE) drain pipe.

Place drain pipe at fill face of end bent and slope to lowest grade of ground line, also missing the lower beam of end bent by 1 1/2 inches. (See Elevation at End Bent.)

Perforated pipe shall be placed at fill face side at the bottom of end bent and plain pipe shall be used where the vertical drain ends to the exit at ground line.

VERTICAL DRAIN AT END BENTS

Detailed JUN 2016
Checked JUN 2016

Note: This drawing is not to scale. Follow dimensions.

STATE OF MISSOURI
CHRIS LINNEMAN
NUMBER PE-2002016690
REGISTERED PROFESSIONAL ENGINEER

THIS SHEET HAS BEEN SIGNED, SEALED AND DATED ELECTRONICALLY.

DATE PREPARED 8/12/2016	
ROUTE WW	STATE MO
DISTRICT BR	SHEET NO. 7
COUNTY NEW MADRID	
JOB NO. J9S3146	
CONTRACT ID.	
PROJECT NO.	
BRIDGE NO. A8472	

DESCRIPTION	DATE

MISSOURI HIGHWAYS AND TRANSPORTATION COMMISSION
105 WEST CAPITOL
JEFFERSON CITY, MO 65102
1-888-ASK-MODOT (1-888-275-6636)

EFK•Moen, LLC
Civil Engineering Design
13523 Barrett Parkway Dr
Suite 250
St. Louis, MO 63021 Phone 314-394-3100
Missouri Certificate of Authority: 001578

IF A SEAL IS PRESENT ON THIS SHEET IT HAS BEEN ELECTRONICALLY SEALED AND DATED

REV.

Concrete for prestressed girders shall be Class A-1 with f'c = 8,000 psi and f'ci = 6,500 psi.

(+) indicates prestressing strand.

Use 28 strands with an initial prestress force of 1230 kips.

Prestressing tendons shall be uncoated, seven-wire, low-relaxation strands, 0.6 inch diameter in accordance with AASHTO M 203, Grade 270. Pretensioned members shall be in accordance with Sec 1029.

✳ At contractor's option a 1 1/2" to 1 3/4" smooth finish strip is permitted to facilitate placement of preformed fiber expansion joint material or expanded or extruded polystyrene bedding material for the prestressed panels.

✳✳ At the contractor's option the location for bent-up strands may be varied from that shown for fully bonded strands only. The total number of bent-up strands shall not be changed. One strand tie bar is required for each layer of bent-up strands except at end bents which require one bar on the bottom layer of strands only.

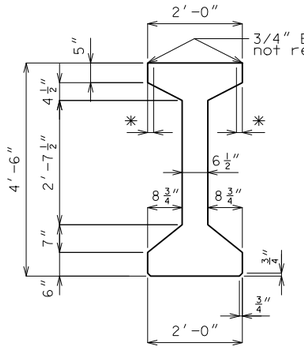

GIRDER DIMENSIONS

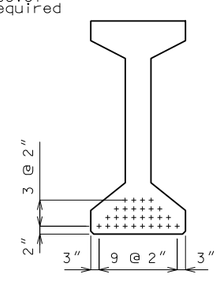

℄ GIRDER

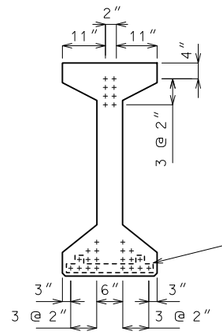

END OF GIRDER

STRAND ARRANGEMENTS

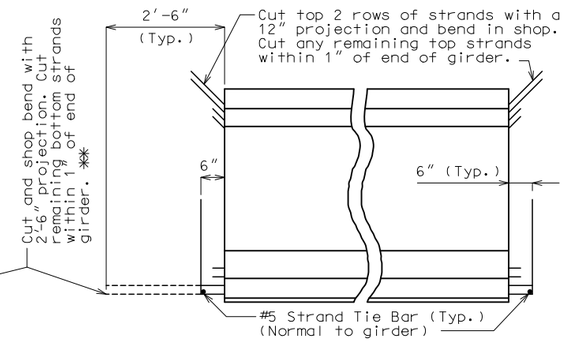

END BENT

STRAND DETAILS AT GIRDER ENDS

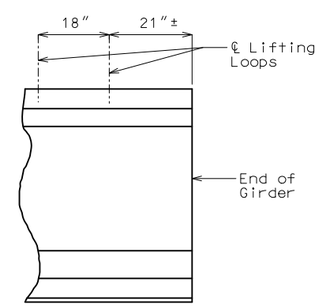

LOCATION OF LIFTING LOOPS

BILL OF REINFORCING STEEL - EACH GIRDER			
NO.	SIZE & MARK	ACTUAL LENGTH	SHAPE
4	6 A1	48'-0"	20
242	4 B1	5'-11"	11
16	6 B2	5'-3"	11
129	4 C1	2'-2"	10
258	4 D1	3'-0"	9

BENDING DIAGRAM

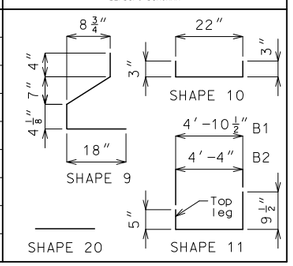

All dimensions are out to out.

Hooks and bends shall be in accordance with the CRSI Manual of Standard Practice for Detailing Reinforced Concrete Structures, Stirrup and Tie Dimensions.

Actual lengths are measured along centerline of bar to the nearest inch.

Minimum clearance to reinforcing shall be 1".

All reinforcement shall be Grade 60.

The two D1 bars may be furnished as one bar at the fabricator's option.

All B1 bars shall be epoxy coated.

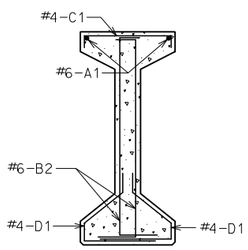

SECTION A-A

Strands not shown for clarity.

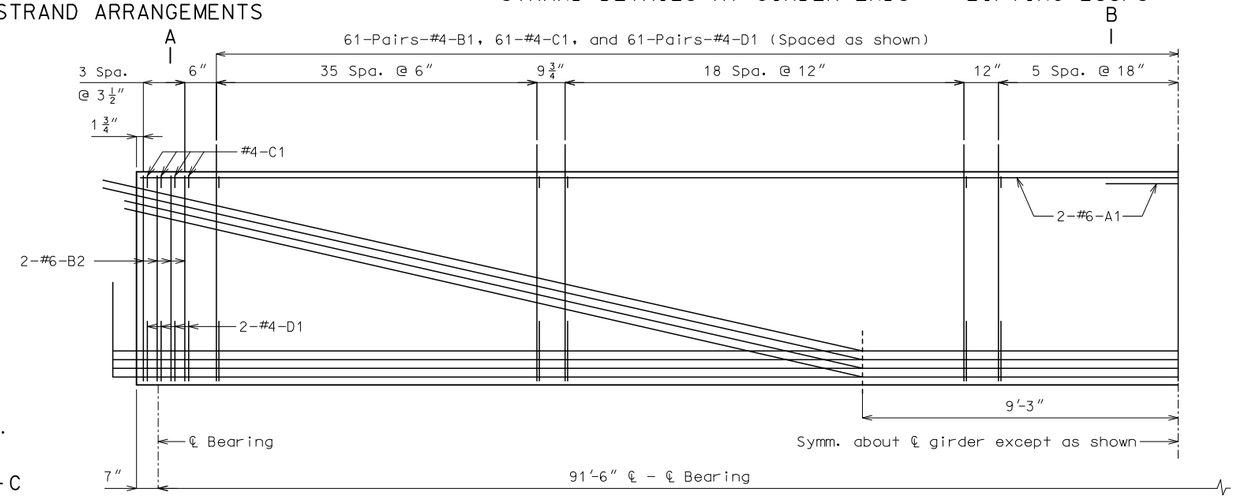

HALF ELEVATION OF GIRDER SPAN (1-2)

Exterior and interior girders are the same, except for inserts for slab drains.

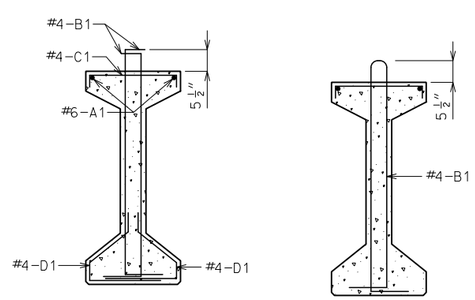

SECTION B-B

Strands not shown for clarity.

B1 BAR PERMISSIBLE ALTERNATE SHAPE

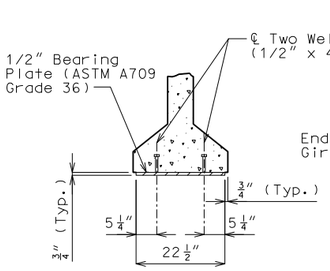

SECTION C-C

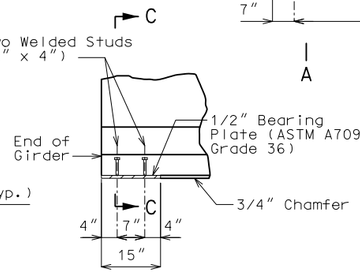

PART ELEVATION AT END OF GIRDER

BEARING PLATE DETAILS

Galvanize the 1/2" bearing plate (ASTM A709 Grade 36) in accordance with ASTM A123.

Cost of furnishing, galvanizing, and installing the 1/2" bearing plate (ASTM A709 Grade 36) and welded studs in the prestressed girder will be considered completely covered by the contract unit price for Prestressed Concrete I-Girder.

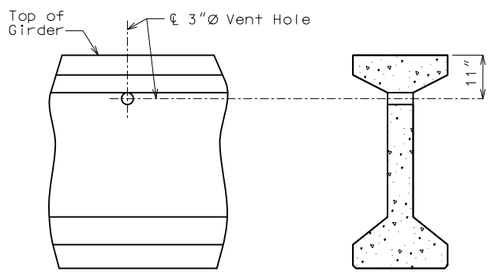

PART ELEVATION OF GIRDER

PART SECTION NEAR VENT HOLE

DETAILS OF VENT HOLE

Place vent holes at or near upgrade 1/3 point of girders and clear reinforcing steel or strands by 1 1/2" minimum and steel intermediate diaphragm bolt connections by 6" minimum.

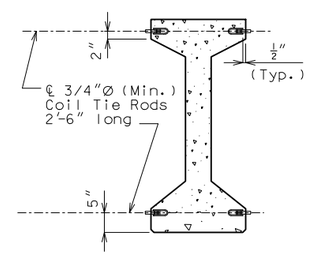

EXTERIOR GIRDERS AT END BENTS
INTERIOR GIRDERS AT ALL BENTS

DETAILS OF COIL TIES

Cost of 3/4"Ø coil tie rods placed in diaphragms will be considered completely covered by the contract unit price for Prestressed Concrete I-Girder.

Coil ties shall be held in place in the forms by slotted wire-setting-studs projecting through forms. Studs are to be left in place or replaced with temporary plugs until girders are erected, then replaced by coil tie rods.

For location of coil inserts at slab drains, see Sheet No. 11.

For location of coil ties, see Sheets No. 5.

The 1 1/2"Ø holes shall be cast in the web for steel intermediate diaphragms. Drilling is not allowed.

For details of steel diaphragms, see Sheet No. 9.

For Girder Camber Diagram, see Sheet No. 12.

Detailed JUN 2016
Checked JUN 2016

Note: This drawing is not to scale. Follow dimensions.

Y:\16002 MoDOT New Madrid Bridges\DGN\Bridge\Final\Plotsheets\J9S3146-Rte WW\B_A8472_008_J9S1346_Girder.dgn 10:56:13 AM 8/12/2016

STATE OF MISSOURI
CHRIS LINNEMAN
NUMBER PE-2002016690
REGISTERED PROFESSIONAL ENGINEER
THIS SHEET HAS BEEN SIGNED, SEALED AND DATED ELECTRONICALLY.

DATE PREPARED 8/12/2016
ROUTE WW | STATE MO
DISTRICT BR | SHEET NO. 8
COUNTY NEW MADRID
JOB NO. J9S3146
CONTRACT ID.
PROJECT NO.
BRIDGE NO. A8472

DATE	DESCRIPTION	REV.

IF A SEAL IS PRESENT ON THIS SHEET IT HAS BEEN ELECTRONICALLY SEALED AND DATED

MISSOURI HIGHWAYS AND TRANSPORTATION COMMISSION
105 WEST CAPITOL
JEFFERSON CITY, MO 65102
1-888-ASK-MODOT (1-888-275-6636)

EFK·Moen, LLC
Civil Engineering Design
13523 Barrett Parkway Dr
Suite 250
St. Louis, MO 63021
Phone 314-394-3100
Missouri Certificate of Authority: 001578

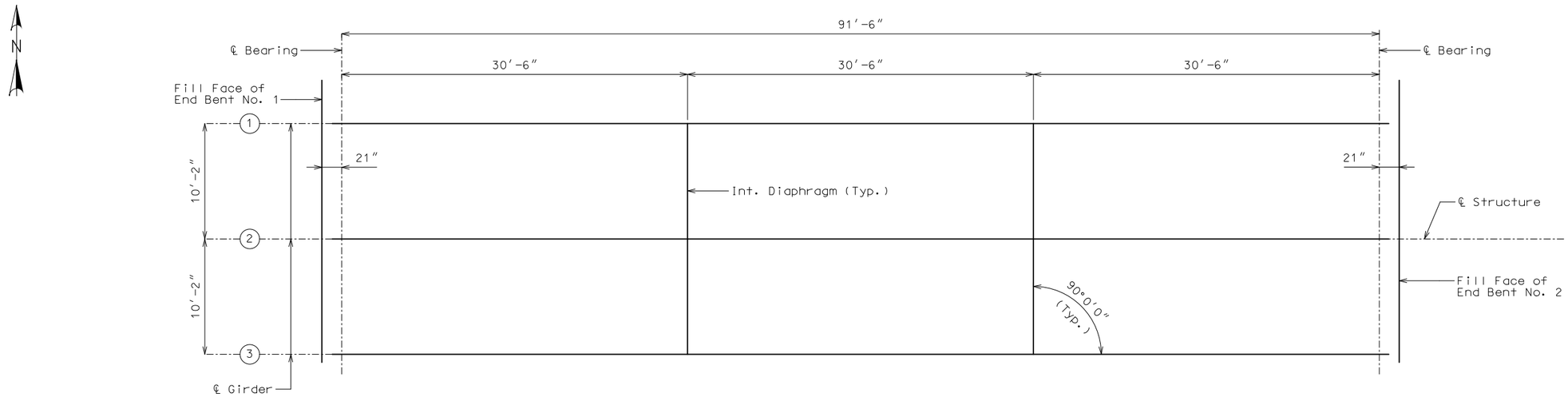

SPAN (1-2)

PLAN SHOWING LOCATION OF STEEL DIAPHRAGMS

Note: Longitudinal diminsions are horizontal.

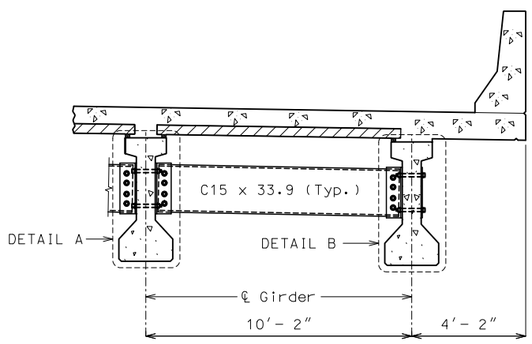

PART SECTION SHOWING INTERMEDIATE DIAPHRAGMS

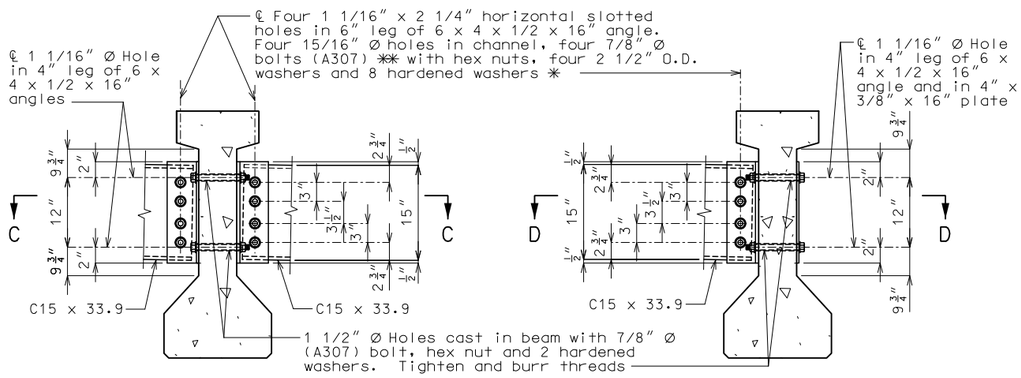

DETAIL A DETAIL B

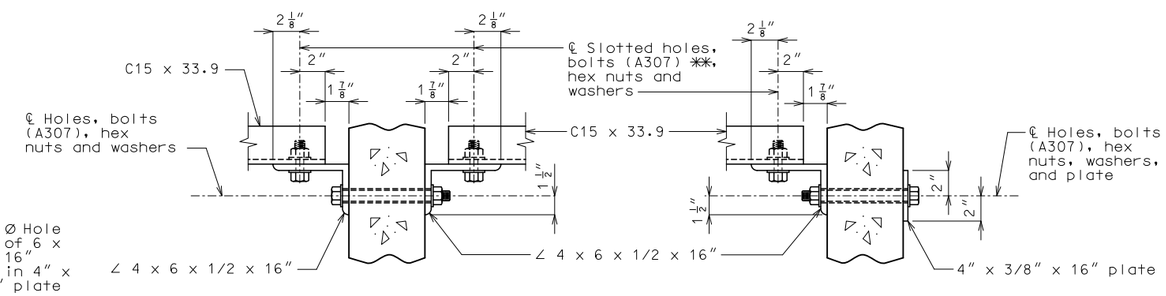

SECTION C-C SECTION D-D

STEEL DIAPHRAGM NOTES:

✱ In lieu of 2 1/2″ outside diameter washers, contractor may substitute a 3/16″ (Min. thickness) plate with four 15/16″ Ø holes and one hardened washer per bolt.

✱✱ Bolts shall be tightened to provide a tension of one-half that specified in Sec 712 for high strength bolt installation. A325 bolts may be substituted for and installed in accordance with the requirements for the specified A307 bolts.

All diaphragm materials including bolts, nuts, and washers shall be galvanized.

Fabricated structural steel shall be ASTM A709 Grade 36 except as noted.

Payment for furnishing and installing steel intermediate diaphragms will be considered completely covered by the contract unit price for Steel Intermediate Diaphragm for P/S Concrete Girders.

Shop drawings will not be required for steel intermediate diaphragms and angle connections.

For location of intermediate diaphragms, see this sheet.

STEEL INTERMEDIATE DIAPHRAGM DETAILS

Detailed JUN 2016
Checked JUN 2016

Note: This drawing is not to scale. Follow dimensions.

STATE OF MISSOURI — CHRIS LINNEMAN — NUMBER PE-2002016690 — REGISTERED PROFESSIONAL ENGINEER

THIS SHEET HAS BEEN SIGNED, SEALED AND DATED ELECTRONICALLY.

DATE PREPARED	8/12/2016
ROUTE	WW
STATE	MO
DISTRICT	BR
SHEET NO.	9
COUNTY	NEW MADRID
JOB NO.	J9S3146
CONTRACT ID.	
PROJECT NO.	
BRIDGE NO.	A8472

DESCRIPTION	DATE

IF A SEAL IS PRESENT ON THIS SHEET IT HAS BEEN ELECTRONICALLY SEALED AND DATED

MISSOURI HIGHWAYS AND TRANSPORTATION COMMISSION
105 WEST CAPITOL
JEFFERSON CITY, MO 65102
1-888-ASK-MODOT (1-888-275-6636)

EFK•Moen, LLC
Civil Engineering Design
13523 Barrett Parkway Dr
Suite 250
St. Louis, MO 63021 Phone 314-394-3100
Missouri Certificate of Authority: 001578

REV.

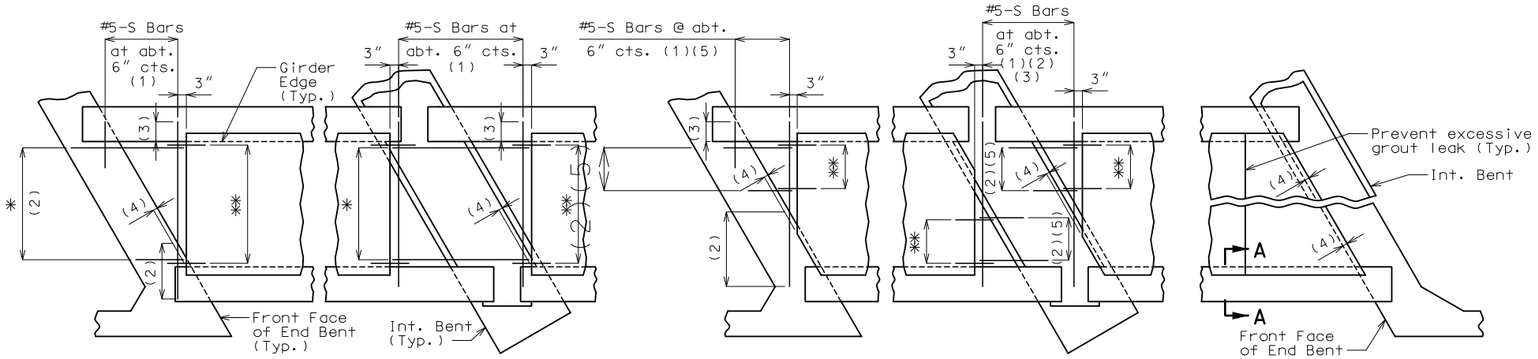

SQUARED END PANELS OR TRUNCATED END PANELS

SKEWED END PANELS

PLAN SHOWING PANELS PLACEMENT

✳ #5-S Bars at abt. 9" cts. (1)
✳✳ #3-P1 at 12" cts. (End panels only)

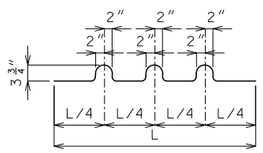

BENDING DIAGRAM FOR U1 BAR

U1 Bars may be oriented at right angles to location and spacing shown. U1 Bars shall be placed between P1 bars.

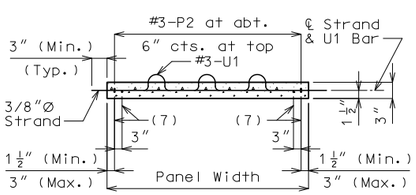

SECTION B-B

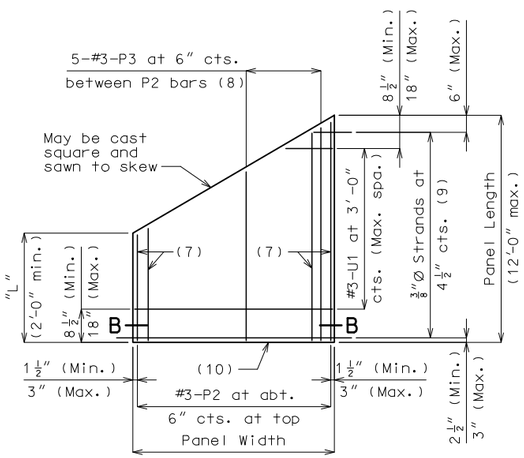

PLAN OF OPTIONAL SKEWED END PANEL

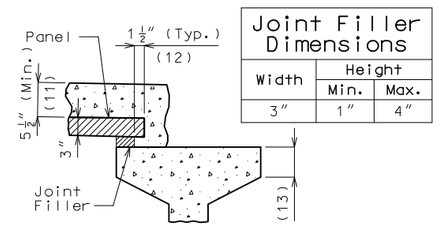

Joint Filler Dimensions		
Width	Height	
	Min.	Max.
3"	1"	4"

SECTION A-A

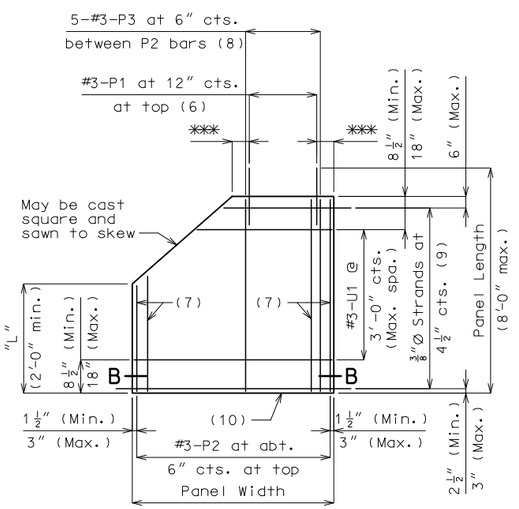

PLAN OF OPTIONAL TRUNCATED END PANEL

✳✳✳ 3" (Min.), 6" (Max.)

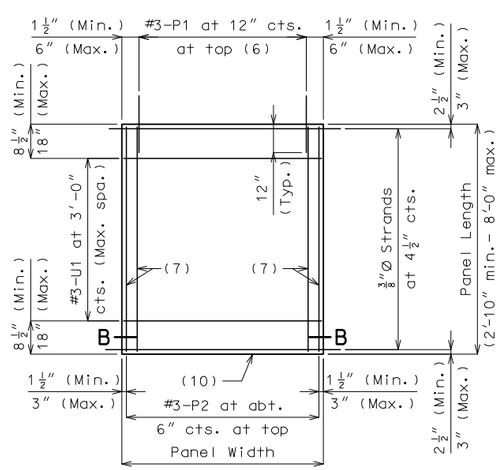

PLAN OF SQUARED PANEL

Reference Notes:

Plan of Panels Placement:

(1) S-bars shown are bottom steel in slab between panels and used with squared and truncated end panels only.

(2) Extend S-bars 18 inches beyond the front face of end bents and int. bents for squared and truncated end panels only.

(3) Extend S-bars 9 inches beyond edge of girder (Typ.).

(4) End panels shall be dimensioned 1/2" min. to 1 1/2" max. from the inside face of diaphragm.

(5) For truncated end panels, use a min. of #5-S bars at 6" crossings in openings, or min. 4x4-W7xW7.

Plans of Panels:

(6) For end panels only, P1 bars shall be 2'-0" in length and embedded 12". P1 bars will not be required for panels at squared integral end bents.

(7) #3-P2 bars near edge of panel at bottom (under strands).

(8) Use #3-P3 bars if panel is skewed 45° or greater.

(9) Any strand 2'-0" or shorter shall have a #4 reinforcing bar on each side of it, centered between strands. Strands 2'-0" or shorter may then be debonded at the fabricator's option.

(10) Optional 1/2" x 45° Chamfer one or both sides at bottom.

Section A-A:

(11) Slab thickness over prestressed panels varies due to girder camber. In order to maintain minimum slab thickness, it may be necessary to raise the grade uniformly throughout the structure. No payment will be made for additional labor or materials required for necessary grade adjustment.

(12) Contractor shall ensure proper consolidation under and between panels.

(13) At the contractor's option, the variation in slab thickness over prestressed panels may be eliminated or reduced by increasing and varying the girder top flange thickness. Dimensions shall be shown on the shop drawings.

DETAILS OF PRESTRESSED PANELS

General Notes:

Prestressed Panels:

Concrete for prestressed panels shall be Class A-1 with f'c = 6,000 psi, f'ci = 4,000 psi.

The top surface of all panels shall receive a scored finish with a depth of scoring of 1/8" perpendicular to the prestressing strands in the panels.

Prestressing tendons shall be high-tensile strength, uncoated, seven-wire, low-relaxation strands for prestressed concrete in accordance with AASHTO M 203 Grade 270, with nominal diameter of strand = 3/8" and nominal area = 0.085 sq.in. and minimum ultimate strength = 22.95 kips (270 ksi). Larger strands may be used with the same spacing and initial tension.

Initial prestressing force = 17.2 kips/strand.

The method and sequence of releasing the strands shall be shown on the shop drawings.

Suitable anchorage devices for lifting panels may be cast in panels, provided the devices are shown on the shop drawings and approved by the engineer. Panel lengths shall be determined by the contractor and shown on the shop drawings.

When squared end panels are used at skewed bents, the skewed portion shall be cast full depth. No separate payment will be made for additional concrete and reinforcing required.

Support from diaphragm forms is required under the optional skewed end until cast-in-place concrete has reached 3,000 psi compressive strength.

Prestressed panels shall be brought to saturated surface-dry (SSD) condition just prior to the deck pour. There shall be no free standing water on the panels or in the area to be cast.

The prestressed panel quantities are not included in the table of estimated quantities for the slab.

Reinforcing Steel:

All dimensions are out to out.

Hooks and bends shall be in accordance with the CRSI Manual of Standard Practice for Detailing Reinforced Concrete Structures, Stirrup and Tie Dimensions.

Minimum clearance to reinforcing steel shall be 1 1/2", unless otherwise shown.

If U1 bars interfere with placement of slab steel, U1 loops may be bent over, as necessary, to clear slab steel.

Deformed welded wire reinforcement (WWR) providing a minimum area of reinforcing perpendicular to strands of 0.22 sq in./ft, with spacing parallel to strands sufficient to ensure proper handling, may be used in lieu of the #3-P2 bars shown. Wire diameter shall not be larger than 0.375 inch. The above alternative reinforcement criteria may be used in lieu of the #3-P3 bars, when required, and placed over a width not less than 2 feet.

The following reinforcing steel shall be tied securely to the strands with the following maximum spacing in each direction:
#3-P2 bars at 16 inches.
WWR at 24 inches.

The #3-U1 bars shall be tied securely to #3-P2 bars, to WWR or to strands (when placed between P1 bars) at about 3-foot centers.

Minimum reinforcement steel length shall be 2'-0".

All reinforcement other than prestressing strands shall be epoxy coated.

Precast panels may be in contact with stirrup reinforcing in diaphragms.

S-bars are not listed in the bill of reinforcing.

Cost of S-bars will be considered completely covered by the contract unit price for the slab.

Joint Filler:

Joint filler shall be preformed fiber expansion joint material in accordance with Sec 1057 or expanded or extruded polystyrene bedding material in accordance with Sec 1073.

Use Slab Haunching Diagram on Sheet No. 12 for determining thickness of joint filler within the limits noted in the table of Joint Filler Dimensions.

Thicker material may be used on one or both sides of the girder to reduce cast-in-place concrete thickness to within tolerances.

The same thickness of preformed fiber expansion joint material shall be used under any one edge of any panel except at locations where top flange thickness may be stepped. The maximum change in thickness between adjacent panels shall be 1/4 inch. The polystyrene bedding material may be cut with a transition to match haunch height above top of flange.

Joint filler shall be glued to the girder. When thickness exceeds 1 1/2 inches, the joint filler shall be glued top and bottom. The glue used shall be the type recommended by the joint filler manufacturer.

Edges of panels shall be uniformly seated on the joint filler before slab reinforcement is placed.

STATE OF MISSOURI
CHRIS LINNEMAN
NUMBER PE-2002016690
REGISTERED PROFESSIONAL ENGINEER
THIS SHEET HAS BEEN SIGNED, SEALED AND DATED ELECTRONICALLY.

DATE PREPARED	
8/12/2016	
ROUTE: WW	STATE: MO
DISTRICT: BR	SHEET NO.: 10
COUNTY: NEW MADRID	
JOB NO.: J9S3146	
CONTRACT ID.	
PROJECT NO.	
BRIDGE NO.: A8472	

DATE	DESCRIPTION

IF A SEAL IS PRESENT ON THIS SHEET IT HAS BEEN ELECTRONICALLY SEALED AND DATED

MISSOURI HIGHWAYS AND TRANSPORTATION COMMISSION
105 WEST CAPITOL
JEFFERSON CITY, MO 65102
1-888-ASK-MODOT (1-888-275-6636)

EFK•Moen, LLC
Civil Engineering Design
13523 Barrett Parkway Dr
Suite 250
St. Louis, MO 63021
Phone 314-394-3100
Missouri Certificate of Authority: 001578

REV.

Detailed JUN 2016
Checked JUN 2016

Note: This drawing is not to scale. Follow dimensions.

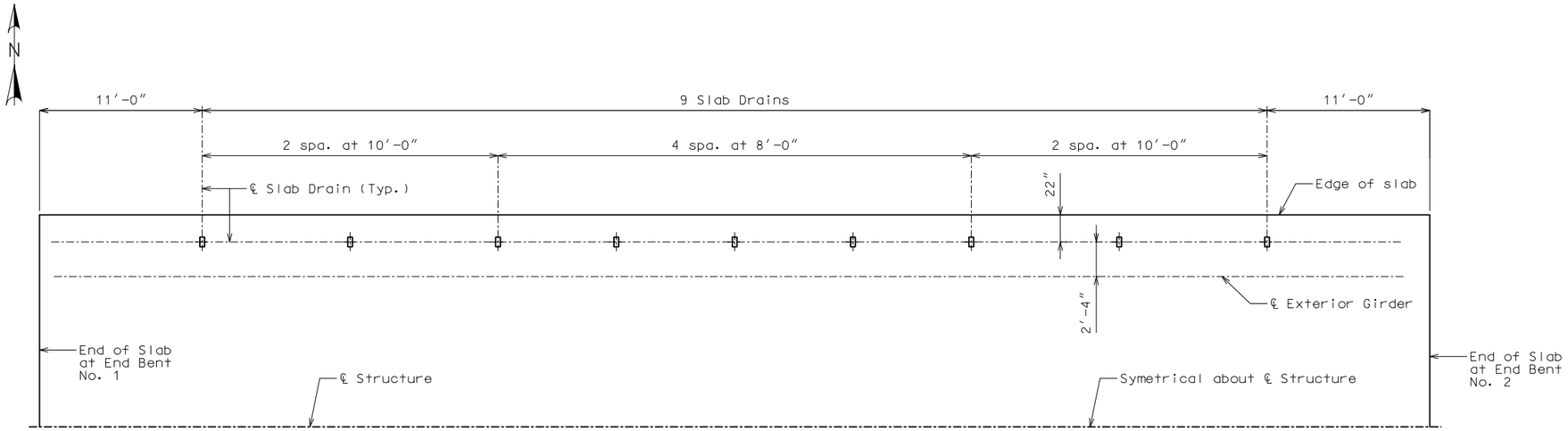

HALF PLAN OF SLAB SHOWING LOCATION OF SLAB DRAINS

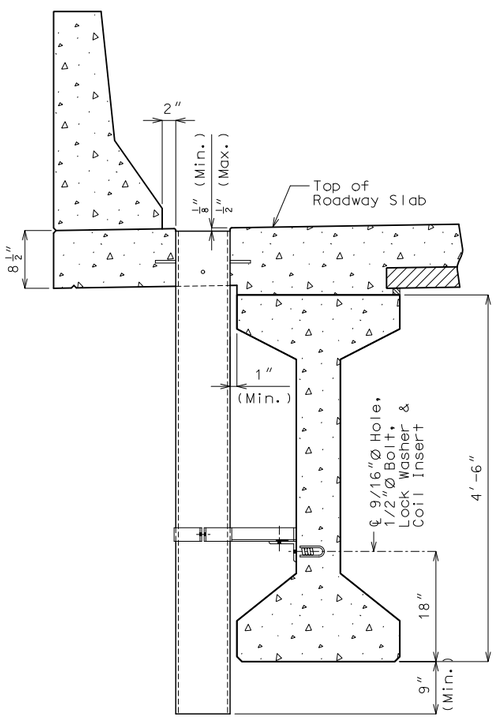

PART SECTION NEAR DRAIN

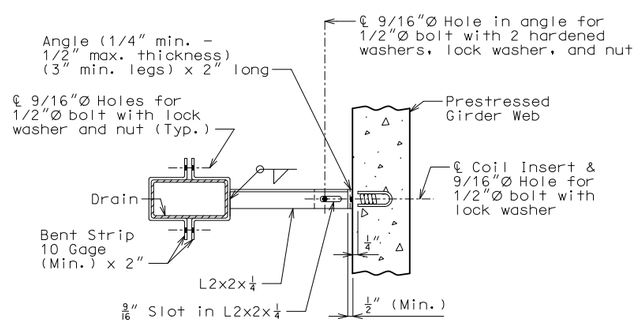

PART SECTION SHOWING BRACKET ASSEMBLY

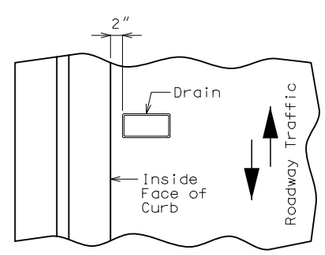

PART PLAN OF SLAB AT DRAIN

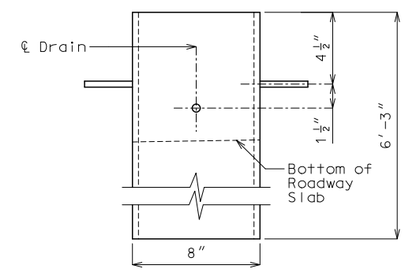

ELEVATION OF DRAIN

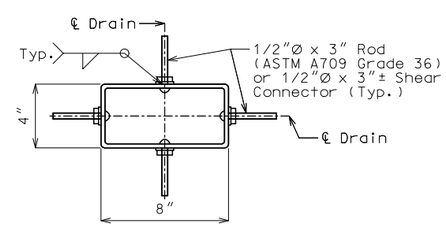

PLAN OF STEEL DRAIN

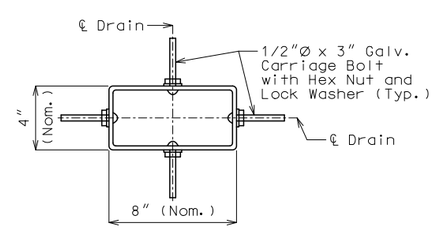

PLAN OF OPTIONAL FRP DRAIN

General Notes:

Contractor shall have the option to construct either steel or FRP slab drains. All drains shall be of same type.

Slab drain bracket assembly shall be ASTM A709 Grade 36 steel.

Locate drains in slab by dimensions shown in Part Section Near Drain.

Reinforcing steel shall be shifted to clear drains.

The coil inserts and bracket assembly shall be galvinized in accordance with ASTM A123.

All bolts, hardened washers, lock washers and nuts shall be galvanized in accordance with ASTM A153.

Shop drawings will not be required for the slab drains.

The coil insert required for the bracket assembly attachment shall be located on the prestressed girder shop drawings.

Coil inserts shall have a concrete pull-out strength (ultimate load) of at least 2,500 pounds in 5,000 psi concrete.

The bolt required to attach the slab drain bracket assembly to the prestressed girder web shall be supplied by the prestressed girder fabricator.

Notes for Steel Drain:

Slab drains may be fabricated of either 1/4" welded sheets of ASTM A709 Grade 36 steel or from 1/4" structural steel tubing ASTM A500 or A501.

Outside dimensions of drains are 8" x 4".

The drains shall be galvanized in accordance with ASTM A123.

Notes for FRP Drain:

Fiberglass reinforced polymer (FRP) slab drains may be substituted for steel slab drains as a contractor's option

Drains shall be machine filament-wound thermosetting resin tubing meeting the requirements of ASTM D2996 with the following exceptions:

Shape of drains shall be rectangular with outside nominal dimensions of 8" x 4".

Minimum reinforced wall thickness shall be 1/4 inch.

The resin used shall be ultraviolet (UV) resistant and/or have UV inhibitors mixed throughout. Drains may have an exterior coating for additional UV resistance.

The color of the slab drain shall be Gray (Federal Standard #26373). The color shall be uniform throughout the resin and any coating used.

The combination of materials used in the manufacture of the drains shall be tested for UV resistance in accordance with ASTM D4329 Cycle A. The representative material shall withstand at least 500 hours of testing with only minor discoloration and without any physical deterioration. The contractor shall furnish the results of the required ultraviolet testing prior to acceptance of the slab drains.

At the contractor's option, drains may be field cut. The method of cutting FRP slab drain shall be as recommended by the manufacturer to ensure a smooth, chip free cut.

No additional payment will be made for this substitution.

SLAB DRAIN DETAILS

Detailed JUN 2016
Checked JUN 2016

Note: This drawing is not to scale. Follow dimensions.

STATE OF MISSOURI
CHRIS LINNEMAN
NUMBER PE-2002016690
REGISTERED PROFESSIONAL ENGINEER
THIS SHEET HAS BEEN SIGNED, SEALED AND DATED ELECTRONICALLY.

DATE PREPARED	
8/12/2016	
ROUTE: WW	STATE: MO
DISTRICT: BR	SHEET NO.: 11
COUNTY: NEW MADRID	
JOB NO.: J9S3146	
CONTRACT ID.	
PROJECT NO.	
BRIDGE NO.: A8472	

DESCRIPTION | DATE

IF A SEAL IS PRESENT ON THIS SHEET IT HAS BEEN ELECTRONICALLY SEALED AND DATED

MISSOURI HIGHWAYS AND TRANSPORTATION COMMISSION
105 WEST CAPITOL
JEFFERSON CITY, MO 65102
1-888-ASK-MODOT (1-888-275-6636)

EFK·Moen, LLC
Civil Engineering Design
13523 Barrett Parkway Dr
Suite 250
St. Louis, MO 63021
Phone 314-394-3100
Missouri Certificate of Authority: 001578

REV.

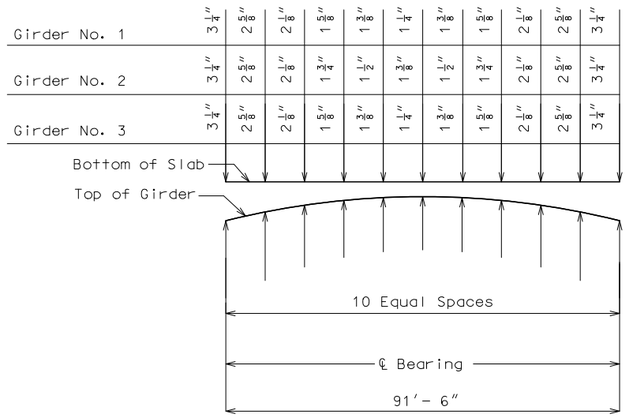

Span (1-2)

THEORETICAL SLAB HAUNCHING DIAGRAM

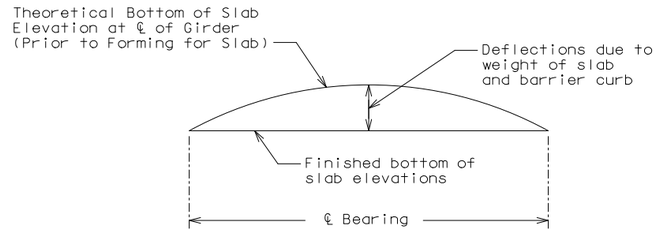

TYPICAL SLAB ELEVATIONS DIAGRAM

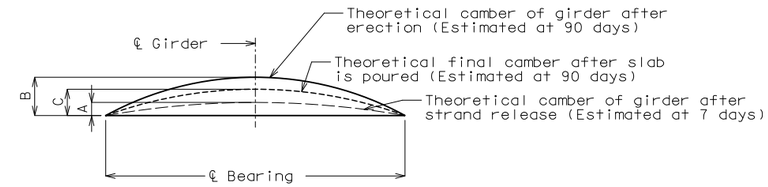

	Span (1-2)		
	A	B	C
Ext. girder	1 1/4"	3 1/4"	2 1/4"
Int. girder	1 3/8"		

GIRDER CAMBER DIAGRAM

If girder camber is different from that shown in the camber diagram, in order to maintain minimum slab thickness adjustment of the slab haunches, an increase in slab thickness or a raise in grade uniformly throughout the structure shall be necessary. no payment will be made for additional labor or materials required for variation in haunching, slab thickness or grade adjustment.

Concrete in the slab haunches is included in the Estimated Quantities for Slab on Concrete I-Girder.

Conversion factors for girder camber (estimated at 90 days)

0.1 pt. = 0.314 x 0.5 pt.
0.2 pt. = 0.593 x 0.5 pt.
0.3 pt. = 0.813 x 0.5 pt.
0.4 pt. = 0.952 x 0.5 pt.

Theoretical Bottom of Slab Elevations at ℄ of Girder (Prior to Forming for Slab) ✳✳											
	Span (1-2) (91'-6" ℄ brg - ℄ brg.)										
	℄ brg.	.10	.20	.30	.40	.50	.60	.70	.80	.90	℄ brg.
Girder No. 1	297.34	297.38	297.41	297.44	297.45	297.46	297.45	297.44	297.41	297.38	297.34
Girder No. 2	297.54	297.58	297.62	297.65	297.67	297.67	297.67	297.65	297.62	297.58	297.54
Girder No. 3	297.34	297.37	297.41	297.44	297.45	297.45	297.45	297.44	297.41	297.37	297.34

✳✳ Elevations are based on a constant slab thickness of 8 1/2" and include allowance for theoretical dead load deflections due to weight of slab (including precast panel) and barrier curb.

✳ Adjust the construction joint to a clearance of 6 inches minimum from the panel joint.

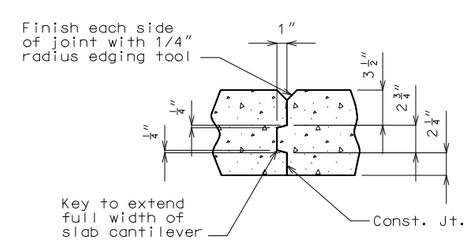

(Slab Cantilever)

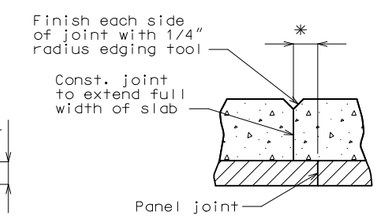

(Slab on Precast Panels)

SLAB CONSTRUCTION JOINT DETAILS

DETAILS OF SLAB

Detailed JUN 2016
Checked JUN 2016

Note: This drawing is not to scale. Follow dimensions.

Y:\16002 MoDOT New Madrid Bridges\DGN\Bridge\Final\Plotsheets\J9S3146-Rte WW\B_A8472_012_J9S3146_Haunch Details.dgn 10:56:20 AM 8/12/2016

REV.

STATE OF MISSOURI
CHRIS LINNEMAN
NUMBER PE-2002016690
REGISTERED PROFESSIONAL ENGINEER
THIS SHEET HAS BEEN SIGNED, SEALED AND DATED ELECTRONICALLY.

DATE PREPARED 8/12/2016
ROUTE WW | STATE MO
DISTRICT BR | SHEET NO. 12
COUNTY NEW MADRID
JOB NO. J9S3146
CONTRACT ID.
PROJECT NO.
BRIDGE NO. A8472

DESCRIPTION	DATE

IF A SEAL IS PRESENT ON THIS SHEET IT HAS BEEN ELECTRONICALLY SEALED AND DATED

MISSOURI HIGHWAYS AND TRANSPORTATION COMMISSION
105 WEST CAPITOL
JEFFERSON CITY, MO 65102
1-888-ASK-MODOT (1-888-275-6636)

EFK•Moen, LLC
Civil Engineering Design
13523 Barrett Parkway Dr
Suite 250
St. Louis, MO 63021
Phone 314-394-3100
Missouri Certificate of Authority: 001578

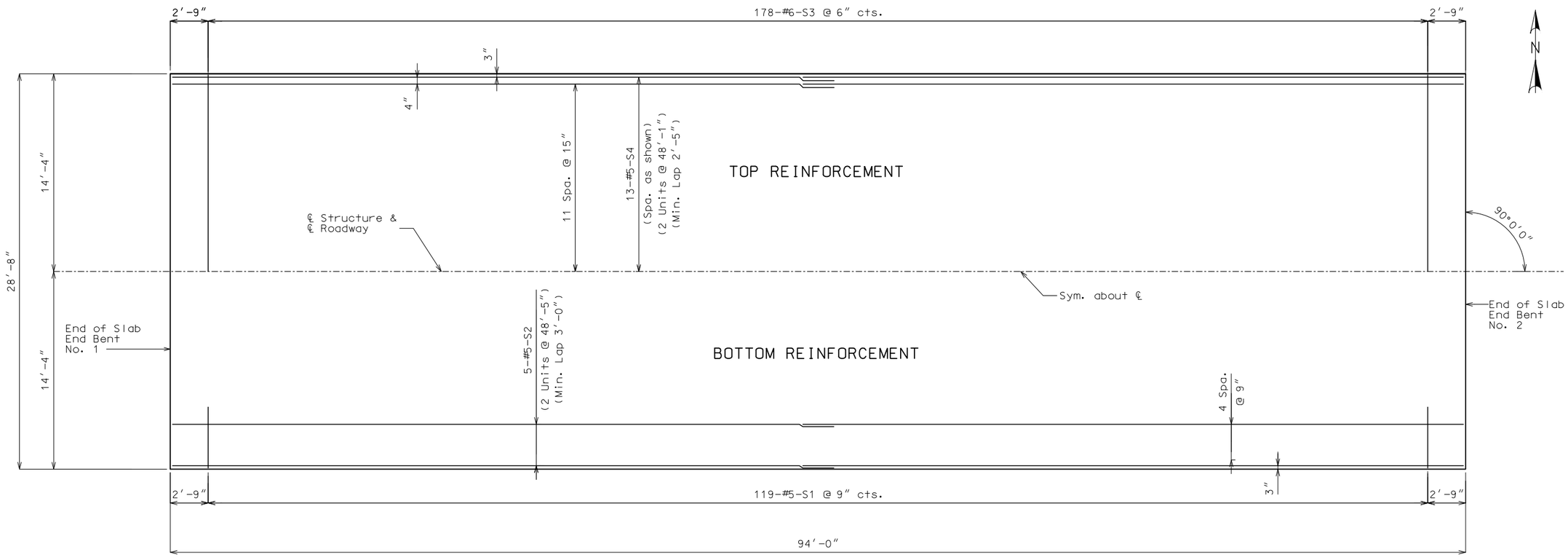

PLAN OF SLAB SHOWING REINFORCEMENT

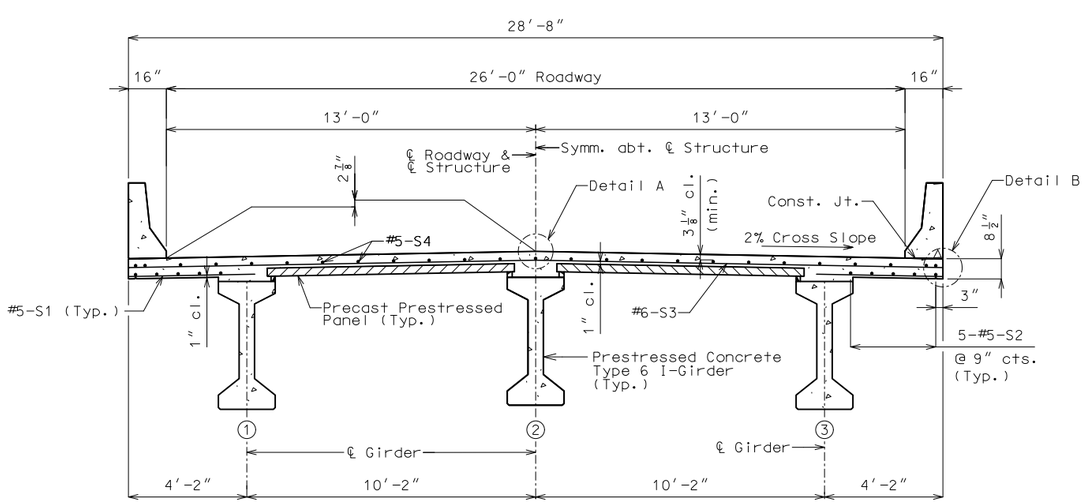

SECTION THRU SLAB

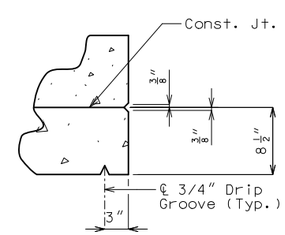

DETAIL B

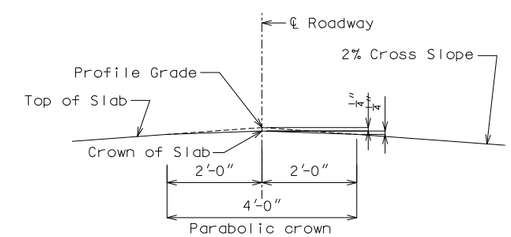

DETAIL "A"

DETAILS OF SLAB

Notes:

Longitudinal dimensions shown are horizontal.

For details and reinforcement of safety barrier curb not shown, see Sheets No. 14, 15 & 16.

For Theoretical Slab Haunching Diagram, Girder Camber Diagram, Theoretical Bottom of Slab Elevations and Slab Construction Joint Details, see Sheet No. 12.

For details of Precast Panels, see Sheet No. 10.

For details and locations of Slab Drains, see Sheet No. 11.

The contractor shall pour and satisfactorily finish the roadway slab at a rate of not less than 25 cubic yards per hour.

The concrete diaphragms at integral end bents shall be poured a minimum of 30 minutes and a maximum of 2 hours before the slab is poured.

Detailed JUN 2016
Checked JUN 2016

Note: This drawing is not to scale. Follow dimensions.

STATE OF MISSOURI
CHRIS LINNEMAN
NUMBER PE-2002016690
REGISTERED PROFESSIONAL ENGINEER
THIS SHEET HAS BEEN SIGNED, SEALED AND DATED ELECTRONICALLY.

DATE PREPARED	8/12/2016
ROUTE	WW
STATE	MO
DISTRICT	BR
SHEET NO.	13
COUNTY	NEW MADRID
JOB NO.	J9S3146
CONTRACT ID.	
PROJECT NO.	
BRIDGE NO.	A8472

DATE	DESCRIPTION

IF A SEAL IS PRESENT ON THIS SHEET IT HAS BEEN ELECTRONICALLY SEALED AND DATED

MISSOURI HIGHWAYS AND TRANSPORTATION COMMISSION
105 WEST CAPITOL
JEFFERSON CITY, MO 65102
1-888-ASK-MODOT (1-888-275-6636)

EFK•Moen, LLC
Civil Engineering Design
13523 Barrett Parkway Dr
Suite 250
St. Louis, MO 63021
Phone 314-394-3100
Missouri Certificate of Authority: 001578

REV.

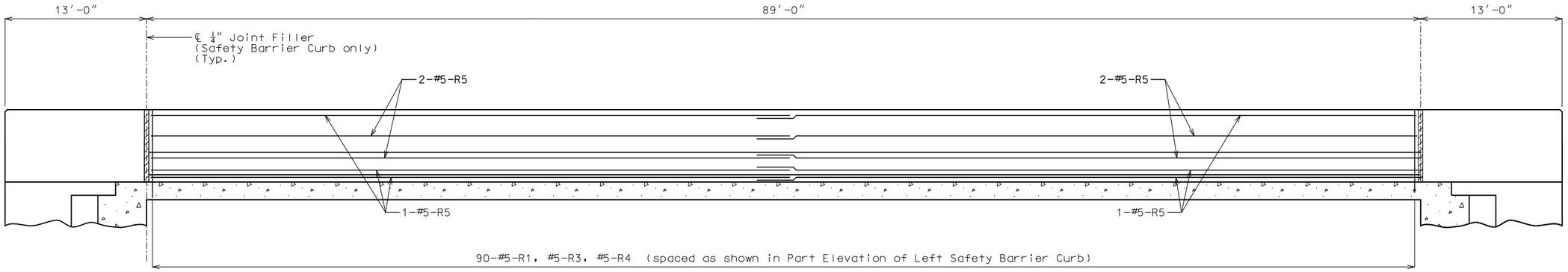

ELEVATION OF SAFETY BARRIER CURB

(Left barrier curb shown, right barrier curb similar)

Longitudinal dimensions are horizontal.

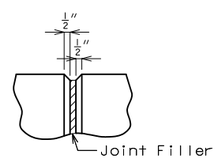

FILLED JOINT DETAIL

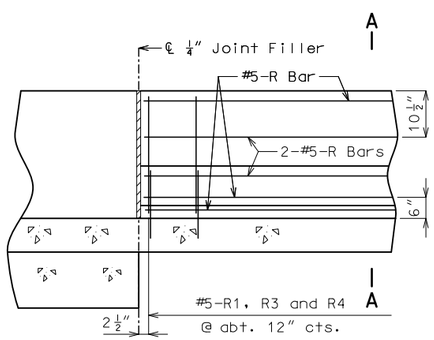

PART ELEVATION OF SAFETY BARRIER CURB (CAST-IN-PLACE CONVENTIONAL FORMING)

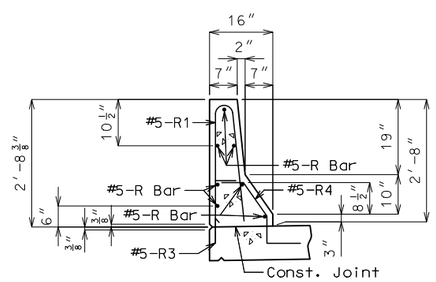

SECTION A-A

Use a minimum lap of 3′-1″ for #5 horizontal safety barrier curb bars.

The cross-sectional area above the slab = 2.27 sq. ft.

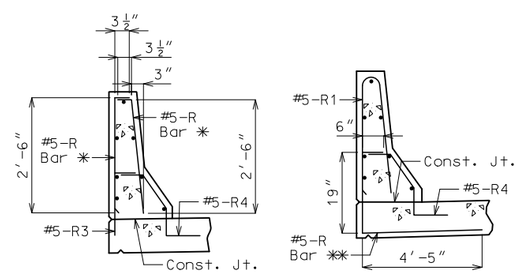

R-BAR PERMISSIBLE ALTERNATE SHAPE

✳ The R1 bar may be separated into two bars as shown, at the contractor's option, only when slip forming is not used. (All dimensions are out to out.)

✳✳ The R3 bar and #5 bottom transverse slab bar in cantilever (P/S panels only) combination may be furnished as one bar as shown, at the contractor's option.

General Notes

Top of safety barrier curb shall be built parallel to grade with barrier curb joints (except at end bents) normal to grade.

All exposed edges of safety barrier curb shall have either a 1/2-inch radius or a 3/8-inch bevel, unless otherwise noted.

Payment for all concrete and reinforcement, complete in place, will be considered completely covered by the contract unit price for Safety Barrier Curb per linear foot.

Concrete in the safety barrier curb shall be Class B-1.

Measurement of safety barrier curb is to the nearest linear foot for each structure, measured along the outside top of slab from end of wing to end of wing.

Concrete traffic barrier delineators shall be placed on top of the safety barrier curb as shown on Missouri Standard Plans 617.10 and in accordance with Sec 617. Delineators on bridges with two-lane, two-way traffic shall have retroreflective sheeting on both sides. Concrete traffic barrier delineators will be considered completely covered by the contract unit price for Safety Barrier Curb.

DETAILS OF SAFETY BARRIER CURB

Detailed JUN 2016
Checked JUN 2016

Note: This drawing is not to scale. Follow dimensions.

STATE OF MISSOURI
CHRIS LINNEMAN
NUMBER PE-2002016690
REGISTERED PROFESSIONAL ENGINEER

THIS SHEET HAS BEEN SIGNED, SEALED AND DATED ELECTRONICALLY.

DATE PREPARED	8/12/2016
ROUTE	WW
STATE	MO
DISTRICT	BR
SHEET NO.	14
COUNTY	NEW MADRID
JOB NO.	J9S3146
CONTRACT ID.	
PROJECT NO.	
BRIDGE NO.	A8472

DATE	DESCRIPTION

IF A SEAL IS PRESENT ON THIS SHEET IT HAS BEEN ELECTRONICALLY SEALED AND DATED

MISSOURI HIGHWAYS AND TRANSPORTATION COMMISSION
105 WEST CAPITOL
JEFFERSON CITY, MO 65102
1-888-ASK-MODOT (1-888-275-6636)

EFK•Moen, LLC
Civil Engineering Design
13523 Barrett Parkway Dr
Suite 250
St. Louis, MO 63021
Phone 314-394-3100
Missouri Certificate of Authority: 001578

REV.

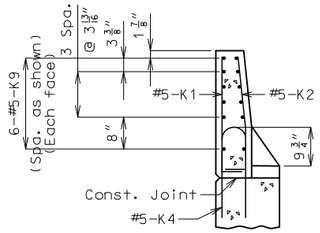

SECTION A-A

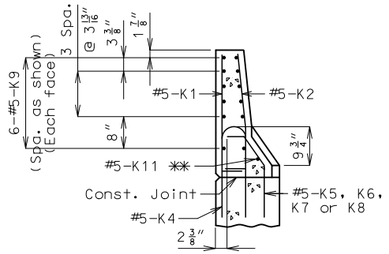

SECTION B-B

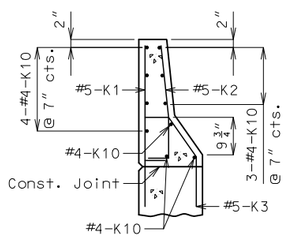

SECTION C-C

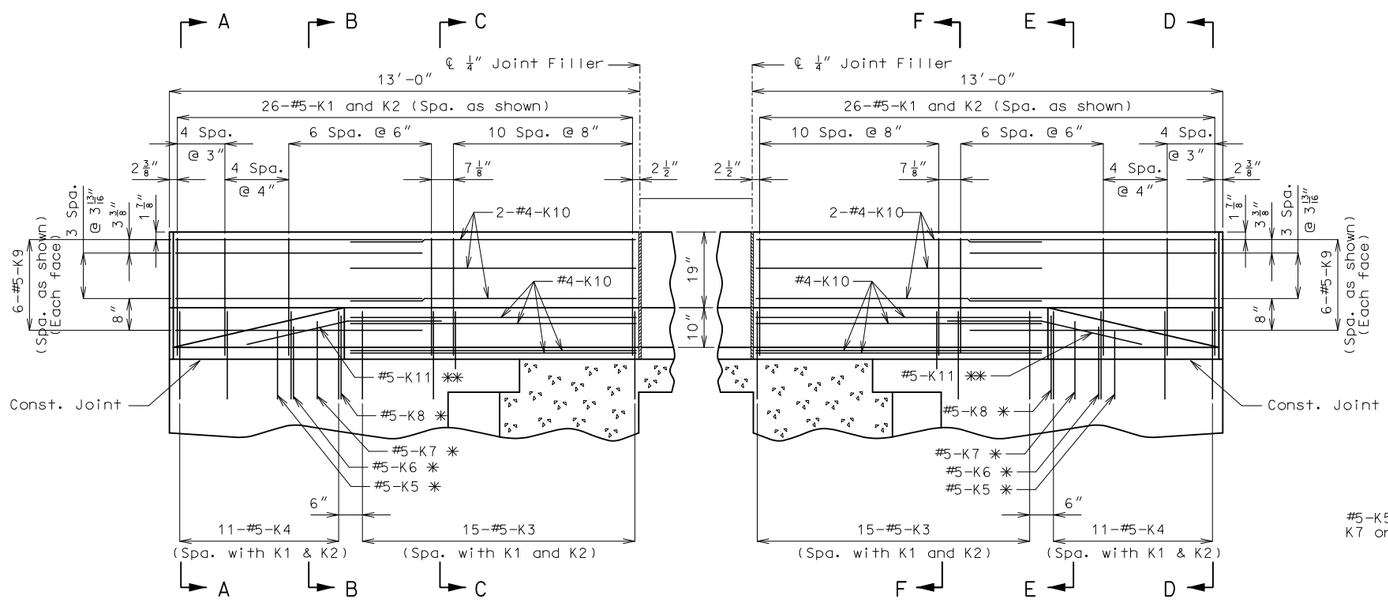

ELEVATION

ELEVATION

✱ Spaced with #5-K4 bars.

✱✱ Fit bar to follow transition face of curb.

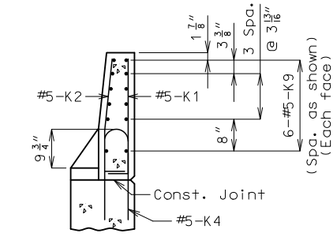

SECTION D-D

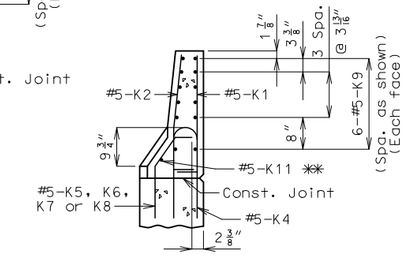

SECTION E-E

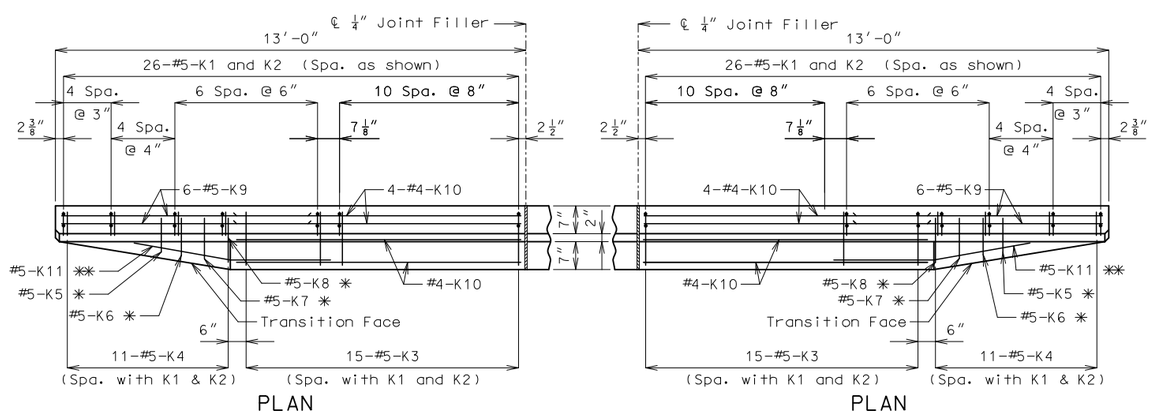

PLAN

PLAN

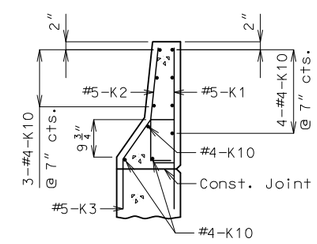

SECTION F-F

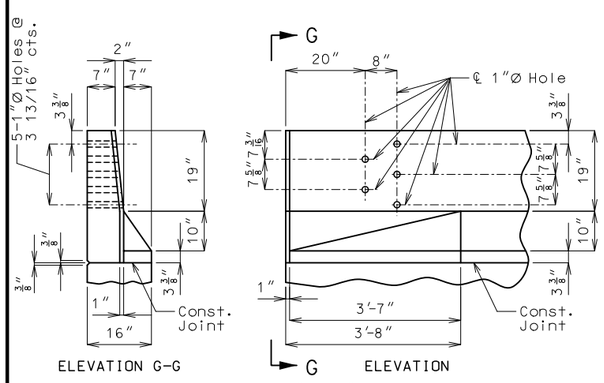

ELEVATION G-G

ELEVATION

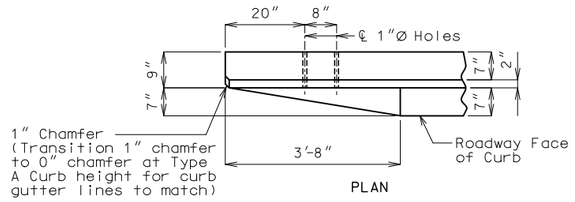

PLAN

DETAILS OF GUARD RAIL ATTACHMENT

Note: Use a minimum lap of 2'-7" between K9 or K10 bars.

Concrete traffic barrier delineators shall be placed on top of the safety barrier curb as shown on Missouri Standard Plans 617.10 and in accordance with Sec 617. Delineators on bridges with two-lane, two way traffic shall have retroreflective sheeting on both sides. Concrete traffic barrier delineators will be considered completely covered by the contract unit price for Safety Barrier Curb.

DETAILS OF SAFETY BARRIER CURB AT END BENTS

(Left barrier curb shown, right barrier curb similar)

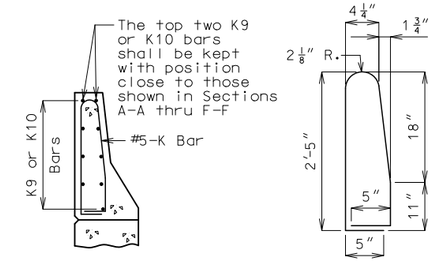

K1-K2 BAR PERMISSIBLE ALTERNATE SHAPE

(K3 or K4 thru K8 bars not shown for clarity)

The K1 and K2 bar combination may be furnished as one bar as shown, at the contractor's option.

Detailed JUN 2016
Checked JUN 2016

Note: This drawing is not to scale. Follow dimensions.

Sheet No. 15 of 23

STATE OF MISSOURI — CHRIS LINNEMAN — NUMBER PE-2002016690 — REGISTERED PROFESSIONAL ENGINEER

THIS SHEET HAS BEEN SIGNED, SEALED AND DATED ELECTRONICALLY.

DATE PREPARED	
8/12/2016	
ROUTE: WW	STATE: MO
DISTRICT: BR	SHEET NO.: 15
COUNTY: NEW MADRID	
JOB NO.: J9S3146	
CONTRACT ID.	
PROJECT NO.	
BRIDGE NO.: A8472	

DATE	DESCRIPTION

MISSOURI HIGHWAYS AND TRANSPORTATION COMMISSION

105 WEST CAPITOL
JEFFERSON CITY, MO 65102
1-888-ASK-MODOT (1-888-275-6636)

EFK·Moen, LLC
Civil Engineering Design
13523 Barrett Parkway Dr
Suite 250
St. Louis, MO 63021
Phone 314-394-3100
Missouri Certificate of Authority: 001578

IF A SEAL IS PRESENT ON THIS SHEET IT HAS BEEN ELECTRONICALLY SEALED AND DATED

REV.

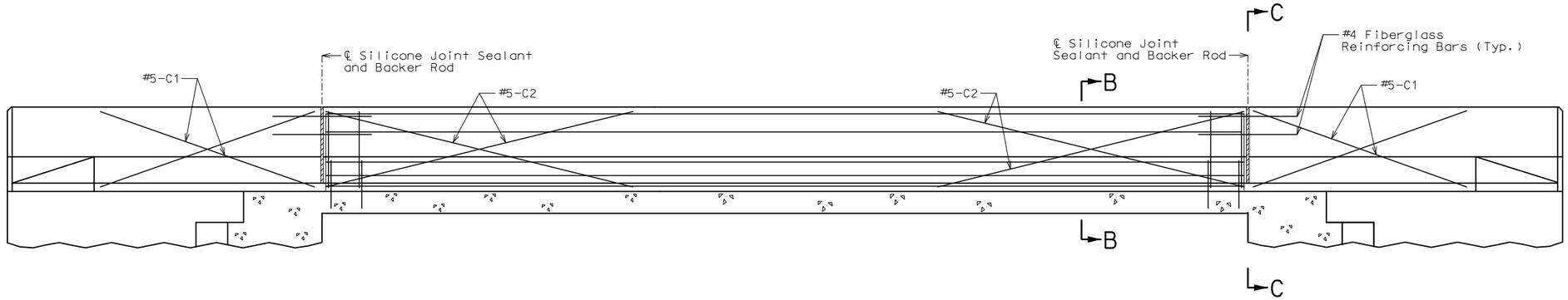

TYPICAL ELEVATION OF BARRIER CURB AT SUPPORT LOCATIONS

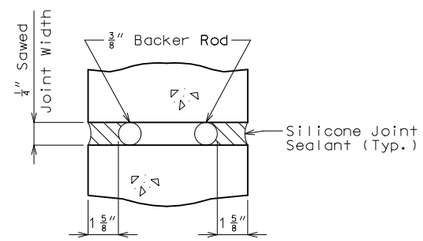

SECTION A-A

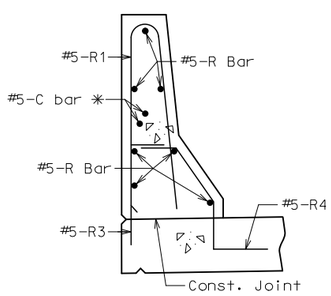

SECTION B-B

✳ Each side of joint location.

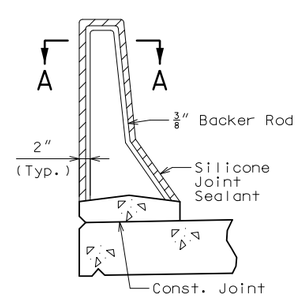

SECTION THRU JOINT

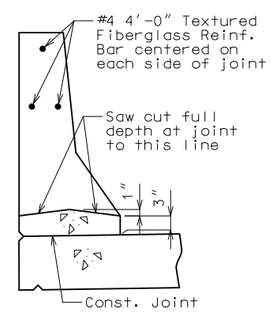

SECTION C-C

General Notes:

Top of safety barrier curb shall be built parallel to grade with barrier curb joints (except at end bents) normal to grade.

All exposed edges of safety barrier curb shall have either a 1/2-inch radius or a 3/8-inch bevel, unless otherwise noted.

Payment for all concrete and reinforcement, complete in place, will be considered completely covered by the contract unit price for Safety Barrier Curb per linear foot.

Concrete in the safety barrier curb shall be Class B-1.

Measurement of safety barrier curb is to the nearest linear foot for each structure, measured along the outside top of slab from end of wing to end of wing.

Concrete traffic barrier delineators shall be placed on top of the safety barrier curb as shown on Missouri Standard Plans 617.10 and in accordance with Sec 617. Delineators on bridges with two-lane, two-way traffic shall have retroreflective sheeting on both sides. Concrete traffic barrier delineators will be considered completely covered by the contract unit price for Safety Barrier Curb.

Joint sealant and backer rods shall be used on all slip-form barrier curbs instead of joint filler and shall be in accordance with Sec 717 for silicone joint sealant for saw cut and formed joints.

For slip-form option, all sides of the safety barrier curb shall have a vertically broomed finish and the curb top shall have a transversely broomed finish.

C bars (slip-form option only) shall be used in addition to cast-in-place conventional forming reinforcement for bridge safety barrier curb.

Cost of silicone joint sealant and backer rod, complete in place, will be considered completely covered by the contract unit price for Safety Barrier Curb.

OPTIONAL SLIP-FORM SAFETY BARRIER CURB

Detailed JUN 2016
Checked JUN 2016

Note: This drawing is not to scale. Follow dimensions.

STATE OF MISSOURI
CHRIS LINNEMAN
NUMBER PE-2002016690
REGISTERED PROFESSIONAL ENGINEER
THIS SHEET HAS BEEN SIGNED, SEALED AND DATED ELECTRONICALLY.

DATE PREPARED	8/12/2016
ROUTE	WW
STATE	MO
DISTRICT	BR
SHEET NO.	16
COUNTY	NEW MADRID
JOB NO.	J9S3146
CONTRACT ID.	
PROJECT NO.	
BRIDGE NO.	A8472

DESCRIPTION

DATE

MISSOURI HIGHWAYS AND TRANSPORTATION COMMISSION
105 WEST CAPITOL
JEFFERSON CITY, MO 65102
1-888-ASK-MODOT (1-888-275-6636)

EFK•Moen, LLC
Civil Engineering Design
13523 Barrett Parkway Dr
Suite 250
St. Louis, MO 63021
Phone 314-394-3100
Missouri Certificate of Authority: 001578

IF A SEAL IS PRESENT ON THIS SHEET IT HAS BEEN ELECTRONICALLY SEALED AND DATED

REV.

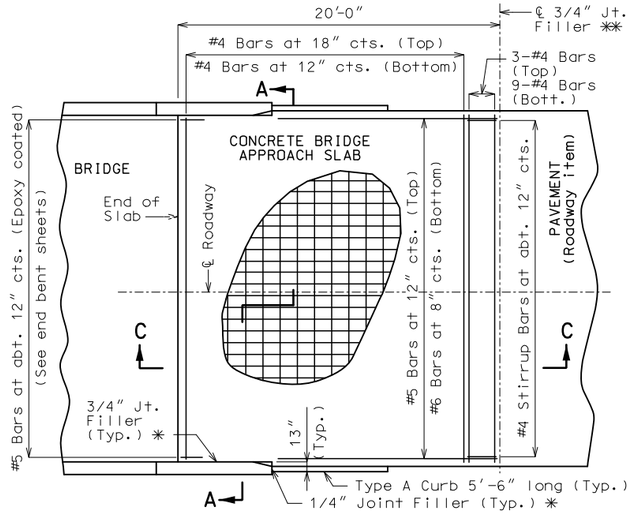

PART PLAN OF SQUARED STRUCTURE

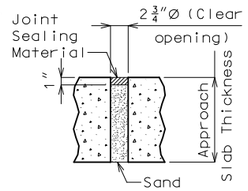

TYPICAL UNDERSEAL ACCESS HOLE DETAIL

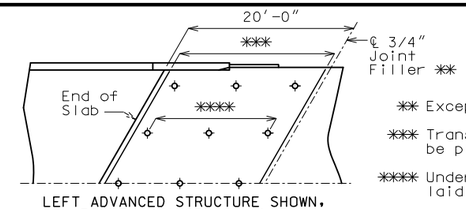

LEFT ADVANCED STRUCTURE SHOWN, RIGHT ADVANCED SIMILAR

PART PLAN OF SKEWED STRUCTURE

✱✱ Except not allowed with asphalt pavement.

✱✱✱ Transverse reinforcing bars shall be placed parallel to end bents.

✱✱✱✱ Underseal access holes shall be laid out parallel to end bents.

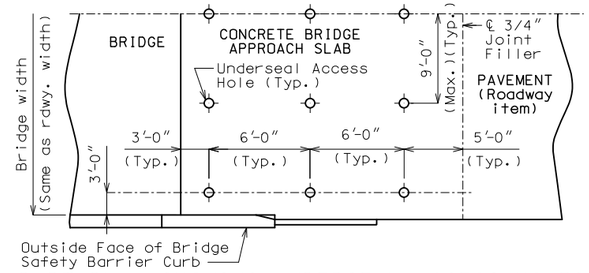

PART PLAN SHOWING UNDERSEAL ACCESS HOLES

(Squared structure shown)

Notes For Concrete Slab Only:

All concrete for the bridge approach slab shall be in accordance with Sec 503 (f'c = 4,000 psi).

The reinforcing steel in the bridge approach slab shall be epoxy coated Grade 60 with fy = 60,000 psi.

Longitudinal construction joints in bridge approach slab shall be aligned with longitudinal construction joints in bridge slab.

Minimum clearance to reinforcing steel shall be 1½", unless otherwise shown.

The reinforcing steel in the bridge approach slab shall be continuous. The transverse reinforcing steel may be made continuous by lap splicing the #4 bars 23".

Mechanical bar splices shall be in accordance with Sec 710.

All joint filler shall be in accordance with Sec 1057 for preformed fiber expansion joint filler except as noted.

Payment for furnishing all materials, labor and excavation necessary to construct the concrete bridge approach slab, including the timber header, underdrain, Type 5 aggregate base, joint filler, and all other appurtenances and incidental work as shown on this sheet, complete in place, will be considered completely covered by the contract unit price for Bridge Approach Slab (Minor Road) per square yard.

See Missouri Standard Plans Drawing 609.00 for details of Type A Curb.

✱ Seal joint between vertical face of bridge approach slab and wing with "Silicone Joint Sealant for Saw Cut and Formed Joints" in accordance with Sec 717.

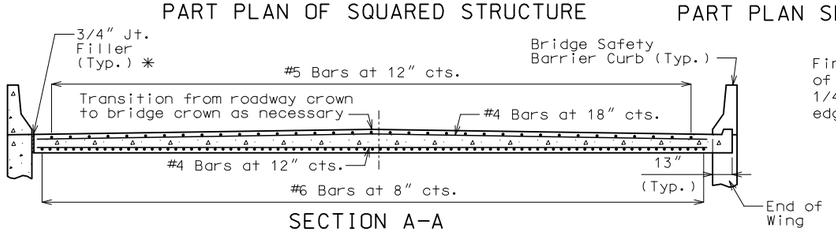

SECTION A-A

With the approval of the engineer, the contractor may crown the bottom of the approach slab to match the crown of the roadway surface.

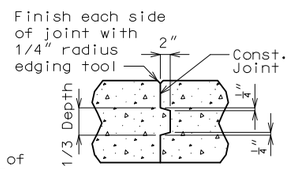

CONCRETE CONST. JOINT DETAIL

(If required)

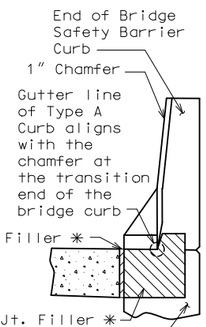

4" TYPE A CURB

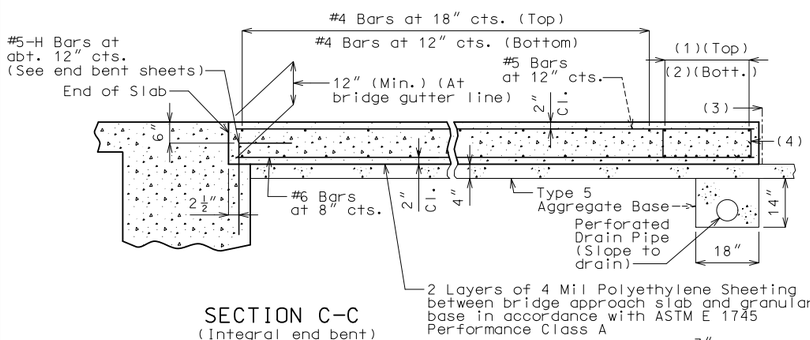

(1) 3-#4 Bars

(2) 9-#4 Bars

(3) ℄ 3/4" Jt. Filler ✱✱

(4) #4 Stirrup Bars at abt. 12" cts.; 2'-0"x 8" (Min.) out to out; Actual length = 5'-10" (Min.); 90° stirrup hook at bottom; Stirrup height (8") and actual length vary due to crown.

SECTION C-C

(Integral end bent)

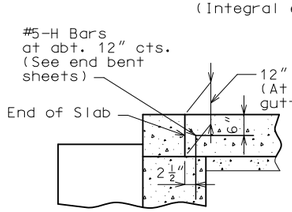

PART SECTION C-C

(Non-integral end bent)

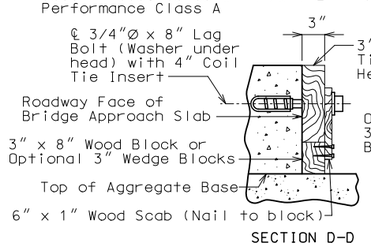

SECTION D-D

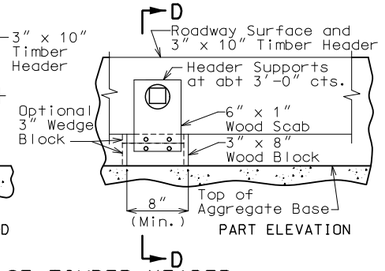

PART ELEVATION

DETAILS OF TIMBER HEADER

Remove timber header when concrete pavement is placed.

OPTIONAL CONCRETE SLAB

General Notes:

Contractor shall have the option to construct either slab except as noted.

The contractor shall pour and satisfactorily finish the bridge slab before placing the bridge approach slab.

Drain pipe may be either 6" diameter corrugated metallic-coated pipe underdrain, 4" diameter corrugated polyvinyl chloride (PVC) drain pipe, or 4" diameter corrugated polyethylene (PE) drain pipe.

MoDOT Construction personnel will indicate the bridge approach slab used for this structure:

☐ Concrete Bridge Approach Slab

☐ Asphalt Bridge Approach Slab

Notes For Asphalt Slab Only:

Payment for furnishing all materials, curb, labor and excavation necessary to construct the asphalt bridge approach slab, including curb, underdrain and Type 5 aggregate base within the pay limits shown, complete in place, will be considered completely covered by the contract unit price for Bridge Approach Slab (Minor Road) per square yard.

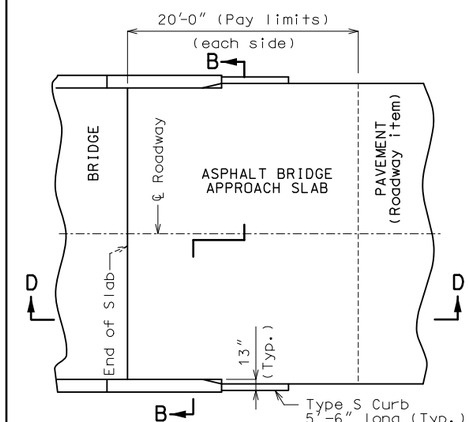

PART PLAN

(Squared structure shown, skewed structure similar)

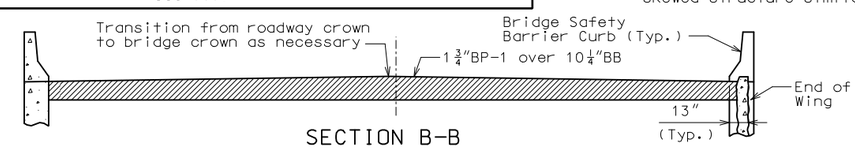

SECTION B-B

With the approval of the engineer, the contractor may crown the bottom of the approach slab to match the crown of the roadway surface.

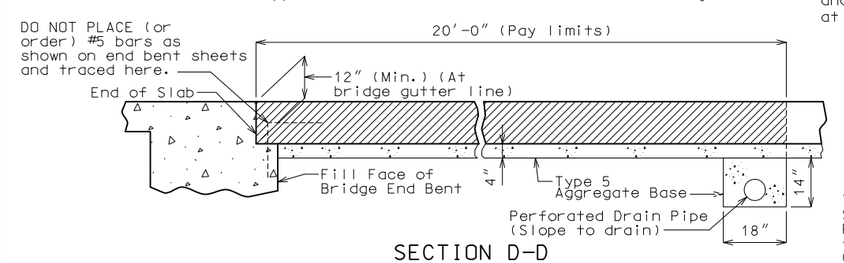

SECTION D-D

(Integral end bent shown, non-integral end bent similar)

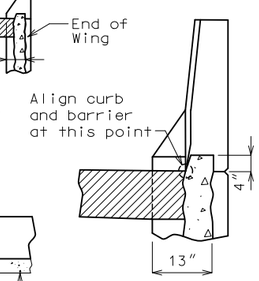

4" TYPE S CURB

See Missouri Standard Plans Drawing 609.00 for details of Type S Curb.

OPTIONAL ASPHALT SLAB (EXCEPT NOT ALLOWED WITH CONCRETE PAVEMENT)

DETAILS OF BRIDGE APPROACH SLAB (MINOR ROAD)

Detailed JUN 2016
Checked JUN 2016

Note: This drawing is not to scale. Follow dimensions.

Sheet No. 17 of 23

STATE OF MISSOURI — CHRIS LINNEMAN — NUMBER PE-2002016690 — REGISTERED PROFESSIONAL ENGINEER

THIS SHEET HAS BEEN SIGNED, SEALED AND DATED ELECTRONICALLY.

DATE PREPARED	
8/12/2016	
ROUTE WW	STATE MO
DISTRICT BR	SHEET NO. 17
COUNTY NEW MADRID	
JOB NO. J9S3146	
CONTRACT ID.	
PROJECT NO.	
BRIDGE NO. A8472	

DATE	DESCRIPTION

IF A SEAL IS PRESENT ON THIS SHEET IT HAS BEEN ELECTRONICALLY SEALED AND DATED

MISSOURI HIGHWAYS AND TRANSPORTATION COMMISSION
105 WEST CAPITOL
JEFFERSON CITY, MO 65102
1-888-ASK-MODOT (1-888-275-6636)

EFK•Moen, LLC
Civil Engineering Design
13523 Barrett Parkway Dr
Suite 250
St. Louis, MO 63021
Phone 314-394-3100
Missouri Certificate of Authority: 001578

REV.

BILL OF REINFORCING STEEL

NO. REQ'D.	MARK NO. (SIZE MARK)	LOCATION	EPOXY (E)	SHAPE NO.	STIRRUP (S)	SUBSTR. (X)	VARIES (V)	NO. EACH	B FT. IN.	C FT. IN.	D FT. IN.	E FT. IN.	F FT. IN.	H FT. IN.	K FT. IN.	NOMINAL LENGTH FT. IN.	ACTUAL LENGTH FT. IN.	WEIGHT LBS.
		END BENTS																
44	6 F100	WING BRACE		23	S				0 14.000	5 0.000	0 14.000	0 9.875	0 9.875	0 9.875	0 9.875	7 4	7 3	479
20	6 F101	WING BRACE		6	S				6 6.000	2 8.000						9 2	9 0	270
16	7 H100	BEAM		20					28 5.000							28 5	28 5	929
8	6 H101	BEAM		20					28 5.000							28 5	28 5	341
8	6 H102	DIAPHRAGM		20					2 10.000							2 10	2 10	34
12	6 H103	DIAPHRAGM		20					3 7.000							3 7	3 7	65
10	6 H104	DIAPHRAGM		20					28 5.000							28 5	28 5	427
8	6 H105	DIAPHRAGM		20					7 10.000							7 10	7 10	94
12	6 H106	DIAPHRAGM		20					9 4.000							9 4	9 4	168
52	5 H107	DIAPHRAGM	E	19					2 0.000	15.000						3 3	3 2	172
8	7 H108	DIAPHRAGM	E	20					28 5.000							28 5	28 5	465
6	5 H109	STRAND TIE		20					6 0.000							6 0	6 0	38
96	6 H110	WINGWALL		20					11 4.000							11 4	11 4	1634
24	8 H111	WINGWALL		20					12 4.000							12 4	12 4	790
8	8 H112	WINGWALL	E	20					12 4.000							12 4	12 4	263
80	4 P100	PILE		34	S				0 10.000							3 6	3 6	187
24	5 U100	BEAM		10	S					5 3.000	2 9.000					13 3	13 1	328
24	4 U101	BEAM		13	S				2 9.000	2 7.500	2 9.000	2 7.500				11 6	11 3	180
14	4 U102	BEAM		10	S					2 7.500	2 9.000					8 0	7 10	73
40	5 U103	DIAPHRAGM	E	10	S					5 1.000	2 3.000					12 5	12 3	511
40	6 U104	DIAPHRAGM	E	19	S				4 0.000	2 9.000						6 9	6 7	396
70	6 U105	DIAPHRAGM	E	19	S				3 4.000	4 6.000						7 10	7 8	806
32	5 V100	BEAM		20					5 3.000							5 3	5 3	175
18	6 V101	DIAPHRAGM		20					4 0.000							4 0	4 0	108
88	6 V102	WINGWALL		20					8 1.000							8 1	8 1	1068
60	5 V103	PILE		17					4 10.000							5 5	5 5	339
		SLAB																
238	5 S1	SLAB	E	20					4 5.000							4 5	4 5	1096
20	5 S2	SLAB	E	20					48 5.000							48 5	48 5	1010
178	6 S3	SLAB	E	20					28 5.000							28 5	28 5	7597
50	5 S4	SLAB	E	20					48 1.000							48 1	48 1	2508
		BARRIER CURB																
104	5 K1		E	19	S				2 5.000	5.125						2 10	2 9	298
104	5 K2		E	14	S				5.125	11.125	18.000			2.000	17.875	2 10	2 9	298
60	5 K3		E	27	S				3 4.125	5.125	12.000	2 6.250		9.875	6.875	7 4	7 2	448
44	5 K4		E	7					3 4.125	6.000						7 0	7 0	321
4	5 K5		E	25	S				2 10.625	6.750	4.375			5.500	4.000	3 10	3 9	16
4	5 K6		E	25	S				2 9.625	7.875	4.375			6.500	4.500	3 9	3 8	15
4	5 K7		E	25	S				2 8.250	9.625	4.375			7.875	5.500	3 10	3 9	16
4	5 K8		E	25	S				2 6.875	11.250	4.375			9.250	6.500	3 11	3 10	16
48	5 K9		E	20					6 2.000							6 2	6 2	309
40	4 K10		E	20					9 2.000							9 2	9 2	245
4	5 K11		E	8					2 2.125					2 2.000	2.375	4 4	4 4	18

BILL OF REINFORCING STEEL

NO. REQ'D.	MARK NO. (SIZE MARK)	LOCATION	EPOXY (E)	SHAPE NO.	STIRRUP (S)	SUBSTR. (X)	VARIES (V)	NO. EACH	B FT. IN.	C FT. IN.	D FT. IN.	E FT. IN.	F FT. IN.	H FT. IN.	K FT. IN.	NOMINAL LENGTH FT. IN.	ACTUAL LENGTH FT. IN.	WEIGHT LBS.
		BARRIER CURB																
180	5 R1	BARRIER CURB	E	26	S				2 6.000	4.250				2 6.000	3.000	5 2	5 2	970
180	5 R3	BARRIER CURB	E	19	S				17.000	6.000						1 11	1 10	344
180	5 R4	BARRIER CURB	E	27	S					6.000	11.250	7.000	12.000	9.250	6.375	3 0	2 10	532
28	5 R5	BARRIER CURB	E	20					45 11.000							45 11	45 11	1341
		SLIP FORM																
8	5 C1	SLIP FORM	E	20					9 3.000							9 3	9 3	77
8	5 C2	SLIP FORM	E	20					12 0.000							12 0	12 0	100
		TOTALS																
		TOTALS																
	4																	440
	4		E															245
	5																	880
	5		E															10416
	6																	4688
	6		E															8799
	7																	929
	7		E															465
	8																	790
	8		E															263
		TOTAL																7727
		TOTAL	E															20188
		SLAB ON																
		GIRDER																
	4																	440
	5																	0
	5		E															880
	6																	4688
	6		E															8799
	7																	929
	7		E															465
	8																	790
	8		E															263
		TOTAL																7727
		TOTAL	E															14824
		SAFETY																
		BARRIER																
		CURB																
	4		E															245
	5		E															4942
		TOTAL	E															5187
		SLIP FORM																
		OPTION																
	5		E															177
		TOTAL	E															177

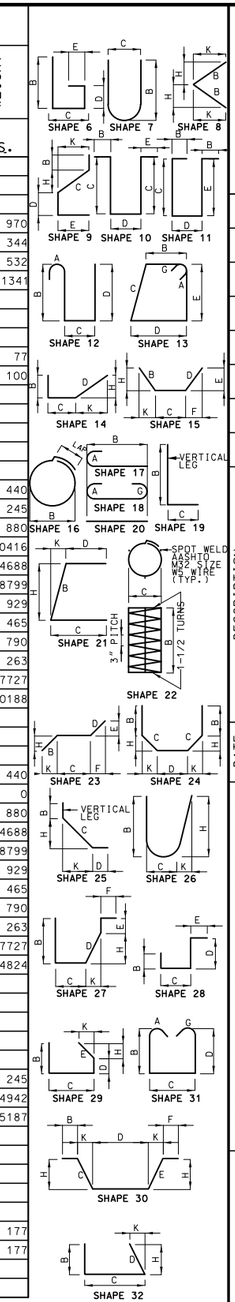

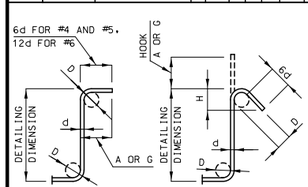

STIRRUP HOOK DIMENSIONS				
GRADES 40 - 50 - 60 KSI				
BAR SIZE	D (IN.)	90° HOOK A OR G	135° HOOK A OR G	135° HOOK APPROX. H
#4	2"	4-1/2"	4-1/2"	3"
#5	2-1/2"	6"	5-1/2"	3-3/4"
#6	4-1/2"	12"	8"	4-1/2"

NOTE: UNLESS OTHERWISE NOTED DIAMETER "D" IS THE SAME FOR ALL BENDS AND HOOKS ON A BAR.

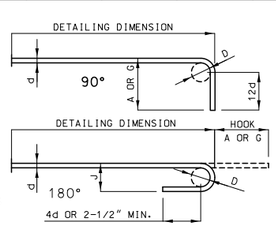

END HOOK DIMENSIONS				
BAR SIZE	D (IN.)	ALL GRADES 180° HOOKS A OR G	ALL GRADES 180° HOOKS J	ALL GRADES 90° HOOKS A OR G
#3	2-1/4"	5"	3"	6"
#4	3"	6"	4"	8"
#5	3-3/4"	7"	5"	10"
#6	4-1/2"	8"	6"	12"
#7	5-1/4"	10"	7"	14"
#8	6"	11"	8"	16"
#9	9-1/2"	15"	11-3/4"	19"
#10	10-3/4"	17"	13-1/4"	22"
#11	12"	19"	14-3/4"	2'-0"
#14	18-1/4"	2'-3"	21-3/4"	2'-7"

NOTE:
ALL STANDARD HOOKS AND BENDS OTHER THAN 180 DEG. TO BE BENT WITH THE SAME PROCEDURE AS FOR 90 DEG. STD. HOOKS.
HOOKS AND BENDS SHALL BE IN ACCORDANCE WITH THE PROCEDURES AS SHOWN ON THIS SHEET.
E = EPOXY COATED REINFORCEMENT.
S = STIRRUP.
X = BAR IS INCLUDED IN SUBSTRUCTURE QUANTITIES.
V = BAR DIMENSIONS VARY IN EQUAL INCREMENTS BETWEEN DIMENSIONS SHOWN ON THIS LINE AND THE FOLLOWING LINE.
NO. EA. = NUMBER OF BARS OF EACH LENGTH.
NOMINAL LENGTHS ARE BASED ON OUT TO OUT DIMENSIONS SHOWN IN BENDING DIAGRAMS AND ARE LISTED FOR FABRICATOR'S USE (NEAREST INCH).
ACTUAL LENGTHS ARE MEASURED ALONG CENTERLINE BAR TO THE NEAREST INCH.
PAYWEIGHTS ARE BASED ON ACTUAL LENGTHS.
FOUR ANGLE OR CHANNEL SPACERS ARE REQUIRED FOR EACH COLUMN SPIRAL. SPACERS ARE TO BE PLACED ON INSIDE OF SPIRALS. LENGTH AND WEIGHT OF COLUMN SPIRALS DO NOT INCLUDE SPLICES OR SPACERS.
REINFORCING STEEL (GRADE 60) FY = 60,000 PSI.

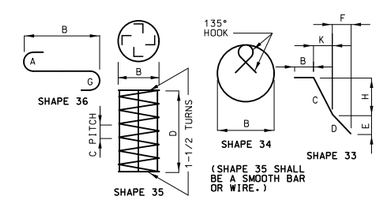

BENDING DIAGRAMS

STATE OF MISSOURI
CHRIS LINNEMAN
NUMBER PE-2002016690
REGISTERED PROFESSIONAL ENGINEER
THIS SHEET HAS BEEN SIGNED, SEALED AND DATED ELECTRONICALLY.

DATE PREPARED 8/12/2016
ROUTE WW | STATE MO
DISTRICT BR | SHEET NO. 18
COUNTY NEW MADRID
JOB NO. J9S3146
CONTRACT ID.
PROJECT NO.
BRIDGE NO. A8472

DESCRIPTION
DATE

IF A SEAL IS PRESENT ON THIS SHEET IT HAS BEEN ELECTRONICALLY SEALED AND DATED

MISSOURI HIGHWAYS AND TRANSPORTATION COMMISSION
105 WEST CAPITOL
JEFFERSON CITY, MO 65102
1-888-ASK-MODOT (1-888-275-6636)

EFK•Moen, LLC
Civil Engineering Design
13523 Barrett Parkway Dr
Suite 250
St. Louis, MO 63021
Phone 314-394-3100
Missouri Certificate of Authority: 001578

REV.

Detailed JUN 2016
Checked JUN 2016

Note: This drawing is not to scale. Follow dimensions.

Y:\16002 MoDOT New Madrid Bridges\DGN\Bridge\Final\Plotsheets\J9S3146-Rte WW\B_A8472_018_J9S3146_Bar Bill.dgn 10:56:30 AM 8/12/2016

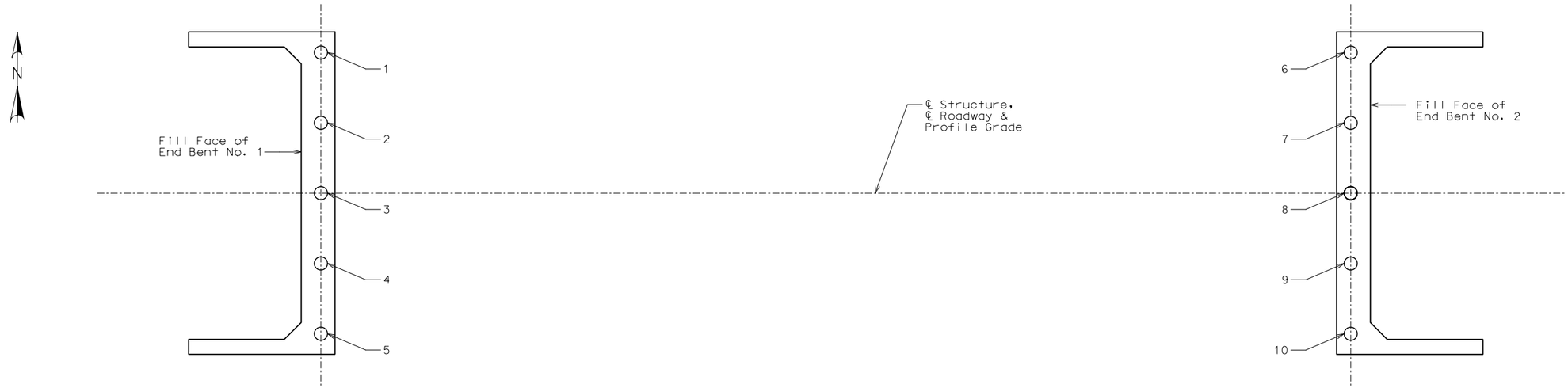

PART PLAN SHOWING PILE NUMBERING FOR RECORDING AS-BUILT PILE DATA

AS-BUILT PILE DATA

Pile No.	Length in Place (ft)	PDA Nom. Axial Compressive Resistance (kips)	PDA End of Drive Blow Count (blows/in.)	Actual End of Drive Blow Count (blows/in.)	Remarks
					END BENT NO. 1
1					
2					
3					
4					
5					
					END BENT NO. 2
6					
7					
8					
9					
10					

Note: indicate in remarks column:
A.) Pile Type and Grade
B.) Batter
C.) Driven to Practical Refusal
D.) PDA test pile
E.) Minimum tip elevation controlled
(Use when actual blow count is less than PDA blow count due to minimum tip elevation requirment. A plus sign (+) shall be placed after the PDA nominal axial compressive resistance value indicating actual value is higher than PDA value.)

Note: This sheet should be completed by MoDOT construction personnel.

Detailed JUN 2016
Checked JUN 2016

Note: This drawing is not to scale. Follow dimensions.

Y:\16002 MoDOT New Madrid Bridges\DGN\Bridge\Final\Plotsheets\J9S3146-Rte WW\B_A8472_019_As-Built Pile Data.dgn 10:56:31 AM 8/12/2016

STATE OF MISSOURI
CHRIS LINNEMAN
NUMBER
PE-2002016690
REGISTERED PROFESSIONAL ENGINEER
THIS SHEET HAS BEEN SIGNED, SEALED AND DATED ELECTRONICALLY.

DATE PREPARED 8/12/2016
ROUTE WW | STATE MO
DISTRICT BR | SHEET NO. 19
COUNTY NEW MADRID
JOB NO. J9S3146
CONTRACT ID.
PROJECT NO.
BRIDGE NO. A8472

DESCRIPTION	DATE

IF A SEAL IS PRESENT ON THIS SHEET IT HAS BEEN ELECTRONICALLY SEALED AND DATED

MISSOURI HIGHWAYS AND TRANSPORTATION COMMISSION
105 WEST CAPITOL
JEFFERSON CITY, MO 65102
1-888-ASK-MODOT (1-888-275-6636)

EFK•Moen, LLC
Civil Engineering Design
13523 Barrett Parkway Dr
Suite 250
St. Louis, MO 63021 Phone 314-394-3100
Missouri Certificate of Authority: 001578

REV.

Missouri Department of Transportation
Construction and Materials

BORING NO. A-16-14
Page 1 of 4

Job No.: J9S3146 **County:** New Madrid **Route:** WW
Design: A8472 **Skew:** **Location:** Rt. WW over Wilson Bayou
Bent: **Logged By:** Sheri Lamberson **Operator:** Kenny Mathews
Station: 349+30.7 **Northing:** 280465.6 **Date of Work:** 02/03/16-02/03/16
Offset: 12.9 R **Easting:** 1138267.6 **Depth to Water:** 14.0
Elevation: 298.0 **Requested Northing:** **Depth Hole Open:**
Requested Station: **Requested Easting:** **Time Change:** Adjacent Stream/Lake
Requested Offset: **Equipment:** Failing 1500 ,Split-Spoon Sampler
Requested Elevation: **Location Note:**
Drill No.: G-7887 **Hammer Efficiency:** 79% **Drilling Method:** Mud Rotary

Depth (ft)	Graphic	Description	Elevation (ft)	Sample Type	REC % (RQD %)	Blow Counts (N_{60})	Shear Data	Field Tests	Index Tests
0		0.0-14.0' Dark gray, FAT CLAY, medium stiff to stiff, moist							
			295						
5					100	2-2-4 (8)		PP = 1.50 tsf	MC = 42.4% γ_{sat} = 111 pcf(1)
			290						
10					100	2-3-3 (8)		PP = 1.75 tsf	MC = 44.4% γ_{sat} = 110 pcf(1)
			285						
15		14.0-24.0' Greenish gray and brown, SILT, soft, wet			100	1-1-2 (4)		PP = 0.50 tsf	MC = 38.8% γ_{sat} = 114 pcf(1)
			280						
20					100	2-1-2 (4)			
			275						
25		24.0-34.0' Dark gray, SAND scattered silt, loose to very loose, wet, fine grained			100	2-2-3 (7)		PP = 0.00 tsf	MC = 34.2% γ_{sat} = 117 pcf(1)
			270						
30					100	2-1-0 (1)		PP = 0.00 tsf	LL = NP MC = 35.7% γ_{sat} = 116 pcf(1)
			265						
35									

N_{60} = (Em/60)Nm N_{60} - Corrected N value for standard 60% SPT efficiency; Em - Measured hammer efficiency in percent; Nm - Observed N-value
(1) = Assumed, (2) = Actual

Coordinate System: U.S. State Plane 1983 **Coordinate Zone:** Missouri East **Coordinate Proj. Factor:**
Coordinate Datum: NAD 83 (CONUS) **Coordinate Units:** U.S. Survey Feet

* Persons using this information are cautioned that the materials shown are determined by the equipment noted and accuracy of the "log of materials" is limited thereby and by judgement of the operator. THIS INFORMATION IS FOR DESIGN PURPOSES ONLY.

LETTER BOREHOLE - MODOT 20150728.GDT - 3/16/16 12:46 - J:\SG\GINT\PROJECT FILES\J9S3146-A8472-A2141.GPJ

Missouri Department of Transportation
Construction and Materials

BORING NO. A-16-14
Page 2 of 4

Job No.: J9S3146 **County:** New Madrid **Route:** WW
Design: A8472 **Skew:** **Location:** Rt. WW over Wilson Bayou
Bent: **Logged By:** Sheri Lamberson **Operator:** Kenny Mathews
Station: 349+30.7 **Northing:** 280465.6 **Date of Work:** 02/03/16-02/03/16
Offset: 12.9 R **Easting:** 1138267.6 **Depth to Water:** 14.0
Elevation: 298.0 **Requested Northing:** **Depth Hole Open:**
Requested Station: **Requested Easting:** **Time Change:** Adjacent Stream/Lake
Requested Offset: **Equipment:** Failing 1500 ,Split-Spoon Sampler
Requested Elevation: **Location Note:**
Drill No.: G-7887 **Hammer Efficiency:** 79% **Drilling Method:** Mud Rotary

Depth (ft)	Graphic	Description	Elevation (ft)	Sample Type	REC % (RQD %)	Blow Counts (N_{60})	Shear Data	Field Tests	Index Tests
35		34.0-44.0' Dark gray, LEAN CLAY to silt, soft to very soft *(continued)*			100	2-1-2 (4)		PP = 0.00 tsf	
			260						
40					100	3-1-1 (3)		PP = 0.25 tsf	
			255						
45		44.0-76.2' Dark gray, FAT CLAY, soft to medium stiff, wet			100	3-3-4 (9)		PP = 0.25 tsf	
			250						
50					100	2-2-2 (5)		PP = 0.25 tsf	
			245						
55					100	2-3-3 (8)		PP = 0.25 tsf	
			240						
60					100	2-3-3 (8)		PP = 0.25 tsf	
			235						
65					100	3-4-5 (12)		PP = 0.25 tsf	
			230						
70									

N_{60} = (Em/60)Nm N_{60} - Corrected N value for standard 60% SPT efficiency; Em - Measured hammer efficiency in percent; Nm - Observed N-value
(1) = Assumed, (2) = Actual

Coordinate System: U.S. State Plane 1983 **Coordinate Zone:** Missouri East **Coordinate Proj. Factor:**
Coordinate Datum: NAD 83 (CONUS) **Coordinate Units:** U.S. Survey Feet

* Persons using this information are cautioned that the materials shown are determined by the equipment noted and accuracy of the "log of materials" is limited thereby and by judgement of the operator. THIS INFORMATION IS FOR DESIGN PURPOSES ONLY.

LETTER BOREHOLE - MODOT 20150728.GDT - 3/16/16 12:46 - J:\SG\GINT\PROJECT FILES\J9S3146-A8472-A2141.GPJ

STATE OF MISSOURI
CHRIS LINNEMAN
NUMBER PE-2002016690
REGISTERED PROFESSIONAL ENGINEER
THIS SHEET HAS BEEN SIGNED, SEALED AND DATED ELECTRONICALLY.

IF A SEAL IS PRESENT ON THIS SHEET IT HAS BEEN ELECTRONICALLY SEALED AND DATED

DATE PREPARED	
8/12/2016	
ROUTE WW	STATE MO
DISTRICT BR	SHEET NO. 20
COUNTY NEW MADRID	
JOB NO. J9S3146	
CONTRACT ID.	
PROJECT NO.	
BRIDGE NO. A8472	

DESCRIPTION | DATE

MISSOURI HIGHWAYS AND TRANSPORTATION COMMISSION
105 WEST CAPITOL
JEFFERSON CITY, MO 65102
1-888-ASK-MODOT (1-888-275-6636)

EFK•Moen, LLC
Civil Engineering Design
13523 Barrett Parkway Dr
Suite 250
St. Louis, MO 63021 Phone 314-394-3100
Missouri Certificate of Authority: 001578

REV.

Note: For locations of boring, see Sheet No. 1.

BORING DATA

Detailed JUN 2016
Checked JUN 2016

Note: This drawing is not to scale. Follow dimensions.

Y:\16002 MoDOT New Madrid Bridges\DGN\Bridge\Final\Plotsheets\J9S3146-Rte WW\B_A8472_020_Boring 1.dgn 10:56:33 AM 8/12/2016

Missouri Department of Transportation
Construction and Materials

BORING NO. A-16-14
Page 3 of 4

Job No.:	J9S3146	**County:**	New Madrid	**Route:**	WW
Design:	A8472	**Skew:**		**Location:**	Rt. WW over Wilson Bayou
Bent:		**Logged By:**	Sheri Lamberson	**Operator:**	Kenny Mathews
Station:	349+30.7	**Northing:**	280465.6	**Date of Work:**	02/03/16-02/03/16
Offset:	12.9 R	**Easting:**	1138267.6	**Depth to Water:**	14.0
Elevation:	298.0	**Requested Northing:**		**Depth Hole Open:**	
Requested Station:		**Requested Easting:**		**Time Change:**	Adjacent Stream/Lake
Requested Offset:		**Equipment:**	Failing 1500 ,Split-Spoon Sampler		
Requested Elevation:		**Location Note:**			
Drill No.:	G-7887	**Hammer Efficiency:**	79%	**Drilling Method:**	Mud Rotary

Depth (ft)	Graphic	Description	Elevation (ft)	Sample Type	REC % (RQD %)	Blow Counts (N_{60})	Shear Data	Field Tests	Index Tests
70		44.0-76.2' Dark gray, FAT CLAY, soft to medium stiff, wet *(continued)*			100	2-4-5 (12)		PP = 0.25 tsf	
			225						
75					67	9-2-6 (11)		PP = 0.25 tsf	
		76.2-106.5' Dark gray, SILTY SAND with clay seams, scattered gravel, dense to very dense, wet, fine to coarse grained, coarser with depth	220						
80					100	10-8-16 (32)			
			215						
85					100	15-17-16 (43)			
			210						
90					100	15-18-15 (43)			
			205						
95					95	30-38/0.5'			
			200						
100					67	18-30-31 (80)			
			195						
105									

N_{60} = (Em/60)Nm N_{60} - Corrected N value for standard 60% SPT efficiency; Em - Measured hammer efficiency in percent; Nm - Observed N-value
(1) = Assumed, (2) = Actual

Coordinate System: U.S. State Plane 1983 **Coordinate Zone:** Missouri East **Coordinate Proj. Factor:**
Coordinate Datum: NAD 83 (CONUS) **Coordinate Units:** U.S. Survey Feet

* Persons using this information are cautioned that the materials shown are determined by the equipment noted and accuracy of the "log of materials" is limited thereby and by judgement of the operator. THIS INFORMATION IS FOR DESIGN PURPOSES ONLY.

LETTER BOREHOLE - MODOT 20150728.GDT - 3/16/16 12:46 - J:\SG\GINT\PROJECT FILES\J9S3146-A8472-A2141.GPJ

Missouri Department of Transportation
Construction and Materials

BORING NO. A-16-14
Page 4 of 4

Job No.:	J9S3146	**County:**	New Madrid	**Route:**	WW
Design:	A8472	**Skew:**		**Location:**	Rt. WW over Wilson Bayou
Bent:		**Logged By:**	Sheri Lamberson	**Operator:**	Kenny Mathews
Station:	349+30.7	**Northing:**	280465.6	**Date of Work:**	02/03/16-02/03/16
Offset:	12.9 R	**Easting:**	1138267.6	**Depth to Water:**	14.0
Elevation:	298.0	**Requested Northing:**		**Depth Hole Open:**	
Requested Station:		**Requested Easting:**		**Time Change:**	Adjacent Stream/Lake
Requested Offset:		**Equipment:**	Failing 1500 ,Split-Spoon Sampler		
Requested Elevation:		**Location Note:**			
Drill No.:	G-7887	**Hammer Efficiency:**	79%	**Drilling Method:**	Mud Rotary

Depth (ft)	Graphic	Description	Elevation (ft)	Sample Type	REC % (RQD %)	Blow Counts (N_{60})	Shear Data	Field Tests	Index Tests
105					100	20-17-20 (49)			
		Bottom of borehole at 106.5 feet.							

N_{60} = (Em/60)Nm N_{60} - Corrected N value for standard 60% SPT efficiency; Em - Measured hammer efficiency in percent; Nm - Observed N-value
(1) = Assumed, (2) = Actual

Coordinate System: U.S. State Plane 1983 **Coordinate Zone:** Missouri East **Coordinate Proj. Factor:**
Coordinate Datum: NAD 83 (CONUS) **Coordinate Units:** U.S. Survey Feet

* Persons using this information are cautioned that the materials shown are determined by the equipment noted and accuracy of the "log of materials" is limited thereby and by judgement of the operator. THIS INFORMATION IS FOR DESIGN PURPOSES ONLY.

LETTER BOREHOLE - MODOT 20150728.GDT - 3/16/16 12:46 - J:\SG\GINT\PROJECT FILES\J9S3146-A8472-A2141.GPJ

Note: For locations of boring, see Sheet No. 1.

BORING DATA

STATE OF MISSOURI
CHRIS LINNEMAN
NUMBER PE-2002016690
REGISTERED PROFESSIONAL ENGINEER
THIS SHEET HAS BEEN SIGNED, SEALED AND DATED ELECTRONICALLY.

IF A SEAL IS PRESENT ON THIS SHEET IT HAS BEEN ELECTRONICALLY SEALED AND DATED

DATE PREPARED	
8/12/2016	
ROUTE: WW	STATE: MO
DISTRICT: BR	SHEET NO.: 21
COUNTY: NEW MADRID	
JOB NO.: J9S3146	
CONTRACT ID.	
PROJECT NO.	
BRIDGE NO.: A8472	

DESCRIPTION	DATE

MISSOURI HIGHWAYS AND TRANSPORTATION COMMISSION
105 WEST CAPITOL
JEFFERSON CITY, MO 65102
1-888-ASK-MODOT (1-888-275-6636)

EFK•Moen, LLC
Civil Engineering Design
13523 Barrett Parkway Dr
Suite 250
St. Louis, MO 63021 Phone 314-394-3100
Missouri Certificate of Authority: 001578

Detailed JUN 2016
Checked JUN 2016

Note: This drawing is not to scale. Follow dimensions.

REV.

IF A SEAL IS PRESENT ON THIS SHEET IT HAS BEEN ELECTRONICALLY SEALED AND DATED
REV.

EFK • Moen, LLC
Civil Engineering Design
15523 Barrett Parkway Dr
Suite 250
St. Louis, MO 63021 Phone 314-394-3100
Missouri Certificate of Authority: 001578

MISSOURI HIGHWAYS AND TRANSPORTATION COMMISSION
MoDOT
105 WEST CAPITOL
JEFFERSON CITY, MO 65102
1-888-ASK-MODOT (1-888-275-6636)

DATE	DESCRIPTION

BRIDGE NO.	PROJECT NO.	CONTRACT ID.	JOB NO.	COUNTY	DISTRICT	ROUTE	STATE	SHEET NO.	DATE PREPARED
A8472			J9S3146	NEW MADRID	BR	WW	MO	22	8/12/2016

STATE OF MISSOURI — CHRIS LINNEMAN NUMBER PE-2002016696 — REGISTERED PROFESSIONAL ENGINEER
THIS SHEET HAS BEEN SIGNED, SEALED AND DATED ELECTRONICALLY.

Missouri Department of Transportation
Construction and Materials

BORING NO. H-16-22

PAGE 2 OF 3

Job No.: J9S3146 **County:** New Madrid **Route:** WW **Logged By:** Ricardo Todd
Design: A8472 **Skew:** **Coordinate Units:** U.S. Survey Feet **Operator:** Mike Donahoe
Bent: **Location:** Rt. WW over Wilson Bayou **Coordinate Proj. Factor:** **Date of Work:** 01/27/16
Station: 347+97.0 **Northing:** 280453.1 **Coordinate System:** U.S. State Plane 1983 **Depth to Water:**
Offset: 23.0 R **Easting:** 1138135.7 **Coordinate Datum:** NAD 83 (CONUS) **Time Change:**
Elevation: 288.9 **Drilling Method:** **Coordinate Zone:** Missouri East **Depth Hole Open:**
Drill No.: G-8929 **Hammer Efficiency:** **Equipment:** Hogentogler CPT ,

Depth (ft)	Graphic	Description	Elevation (ft)	Scour Parameters: Compressible	Downdrag	Scour	Total Unit Weight (pcf)	Effective Unit Weight (pcf)	Undrained Shear Strength Su or c (psf)	Pocket Pen (tsf)	Torvane (tsf)	Blow Counts (N_{60})	Internal Friction Angle ϕ'	Soil/Rock Strain ($\epsilon_{50}/\epsilon_{rm}$)	Lateral Subgrade Modulus K_t (pci)	Young's Modulus E_i (ksi)	Rock Quality Designation (RQD) (%)	Unconfined Compressive Strength Qu (ksf)
		0 - 48.2' Soft clay *(continued)*					114(1)	52(1)	450(1)			4(1)		0.15	50			
			250															
40							111(1)	49(1)	500(1)			5(1)		0.15	65			
				yes	yes	yes												
							114(1)	52(1)	1200(1)			7(1)		0.008	400			
		48.2 - 53.7' Stiff clay with free water	240															
50							114(1)	52(1)	1600(1)			10(1)		0.007	600			
				yes	yes	yes												
		53.7 - 71.9' Sand					127(1)	65(1)				63(1)	44(1)		125			
			230															
60							124(1)	62(1)				42(1)	41(1)		125			
				no	no	yes												
							124(1)	62(1)				43(1)	40(1)		125			
			220															
70																		

(1) = Assumed, (2) = Actual, (3) = Phi' 0 *(Continued Next Page)*

LPILE SUMMARY - MODOT_20150812.GDT - 3/15/16 12:34 - J:\SG\GINTPROJECT FILES\J9S3146-A8472-A2141.GPJ

Missouri Department of Transportation
Construction and Materials

BORING NO. H-16-22

PAGE 1 OF 3

Job No.: J9S3146 **County:** New Madrid **Route:** WW **Logged By:** Ricardo Todd
Design: A8472 **Skew:** **Coordinate Units:** U.S. Survey Feet **Operator:** Mike Donahoe
Bent: **Location:** Rt. WW over Wilson Bayou **Coordinate Proj. Factor:** **Date of Work:** 01/27/16
Station: 347+97.0 **Northing:** 280453.1 **Coordinate System:** U.S. State Plane 1983 **Depth to Water:**
Offset: 23.0 R **Easting:** 1138135.7 **Coordinate Datum:** NAD 83 (CONUS) **Time Change:**
Elevation: 288.9 **Drilling Method:** **Coordinate Zone:** Missouri East **Depth Hole Open:**
Drill No.: G-8929 **Hammer Efficiency:** **Equipment:** Hogentogler CPT ,

Depth (ft)	Graphic	Description	Elevation (ft)	Scour Parameters: Compressible	Downdrag	Scour	Total Unit Weight (pcf)	Effective Unit Weight (pcf)	Undrained Shear Strength Su or c (psf)	Pocket Pen (tsf)	Torvane (tsf)	Blow Counts (N_{60})	Internal Friction Angle ϕ'	Soil/Rock Strain ($\epsilon_{50}/\epsilon_{rm}$)	Lateral Subgrade Modulus K_t (pci)	Young's Modulus E_i (ksi)	Rock Quality Designation (RQD) (%)	Unconfined Compressive Strength Qu (ksf)
0		0 - 48.2' Soft clay																
							111(1)	111(1)	600(1)			5(1)		0.015	75			
			280															
10							111(1)	111(1)	175(1)			2(1)		0.02	30			
		▼(1)																
							111(1)	49(1)	375(1)			3(1)		0.02	30			
				yes	yes	yes												
			270															
20							111(1)	49(1)	400(1)			3(1)		0.02	30			
							111(1)	49(1)	400(1)			3(1)		0.02	30			
			260															
30							114(1)	52(1)	450(1)			4(1)		0.15	50			

(1) = Assumed, (2) = Actual, (3) = Phi' 0 *(Continued Next Page)*

LPILE SUMMARY - MODOT_20150812.GDT - 3/15/16 12:34 - J:\SG\GINTPROJECT FILES\J9S3146-A8472-A2141.GPJ

Note: For locations of boring, see Sheet No. 1.

BORING DATA

Sheet No. 22 of 23

Note: This drawing is not to scale. Follow dimensions.

Y:\16002 MoDOT New Madrid Bridges\DGN\Bridge\Final\Plotsheets\J9S3146-Rte WW\B_A8472_022_Boring 3.dgn 10:59:19 AM 8/12/2016

Detailed JUN 2016
Checked JUN 2016

Missouri Department of Transportation
Construction and Materials

BORING NO. H-16-22

Job No.: J9S3146	**County:** New Madrid	**Route:** WW	**Logged By:** Ricarco Todd
Design: A8472	**Skew:**	**Coordinate Units:** U.S. Survey Feet	**Operator:** Mike Donahoe
Bent:	**Location:** Rt. WW over Wilson Bayou	**Coordinate Proj. Factor:**	**Date of Work:** 01/27/16
Station: 347+97.0	**Northing:** 280453.1	**Coordinate System:** U.S. State Plane 1983	**Depth to Water:**
Offset: 23.0 R	**Easting:** 1138135.7	**Coordinate Datum:** NAD 83 (CONUS)	**Time Change:**
Elevation: 288.9	**Drilling Method:**	**Coordinate Zone:** Missouri East	**Depth Hole Open:**
Drill No.: G-8929	**Hammer Efficiency:**	**Equipment:** Hogentogler CPT ,	

Depth (ft)	Graphic	Description	Elevation (ft)	Scour Parameters: Compressible	Scour Parameters: Downdrag	Scour Parameters: Scour	Total Unit Weight (pcf)	Effective Unit Weight (pcf)	Undrained Shear Strength Su or c (psf)	Pocket Pen (tsf)	Torvane (tsf)	Blow Counts (N_{60})	Internal Friction Angle ϕ'	Soil/Rock Strain (ε_{50}/K_{rm})	Lateral Subgrade Modulus K_r (pci)	Young's Modulus E_i (ksf)	Rock Quality Designation (RQD) (%)	Unconfined Compressive Strength Qu (ksf)
70		53.7 - 71.9' Sand *(continued)*		no	no	yes	124(1)	62(1)				42(1)	40(1)		125			
		Bottom of borehole at 71.9 feet.																

(1) = Assumed, (2) = Actual, (3) = Phi' 0

LPILE SUMMARY - MODOT_20150812.GDT - 3/15/16 12:34 - J:\SG\GINT\PROJECT FILES\J9S3146-A8472-A2141.GPJ

Note: For locations of borings, see Sheet No. 1.

BORING DATA

Detailed JUN 2016
Checked JUN 2016

Note: This drawing is not to scale. Follow dimensions.

STATE OF MISSOURI
CHRIS LINNEMAN
NUMBER PE-2002016690
REGISTERED PROFESSIONAL ENGINEER
THIS SHEET HAS BEEN SIGNED, SEALED AND DATED ELECTRONICALLY.

DATE PREPARED	
8/12/2016	
ROUTE: WW	STATE: MO
DISTRICT: BR	SHEET NO.: 23
COUNTY: NEW MADRID	
JOB NO.: J9S3146	
CONTRACT ID.	
PROJECT NO.	
BRIDGE NO.: A8472	

DATE	DESCRIPTION

IF A SEAL IS PRESENT ON THIS SHEET IT HAS BEEN ELECTRONICALLY SEALED AND DATED

MISSOURI HIGHWAYS AND TRANSPORTATION COMMISSION
105 WEST CAPITOL
JEFFERSON CITY, MO 65102
1-888-ASK-MODOT (1-888-275-6636)

EFK•Moen, LLC
Civil Engineering Design
13523 Barrett Parkway Dr
Suite 250
St. Louis, MO 63021 Phone 314-394-3100
Missouri Certificate of Authority: 001578

REV.

MISSOURI STATE HIGHWAY DEPARTMENT

FED ROAD DIST NO	STATE	FED AID PROJ NO	FISCAL YEAR	SHEET NO	TOTAL SHEETS
5	MO		19		43

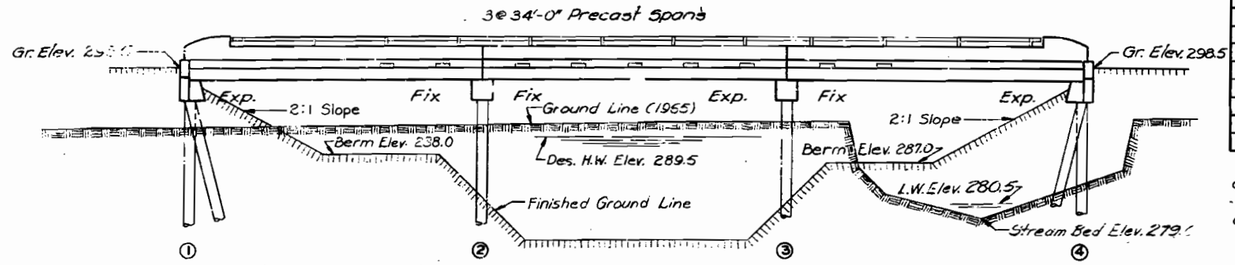

ELEVATION

Note: Compacted roadway fill (full roadway width) shall be placed up to elevation of bottom of concrete beam in front of and not less than 25'-0" in back of End Bents No. 1 and 4 before piles are driven for End Bents No. 1 and 4. Pre-bore holes for piles at End Bents No. 1 and 4.

See Road Plans for surcharged fill at End Bents No. 1 and 4.

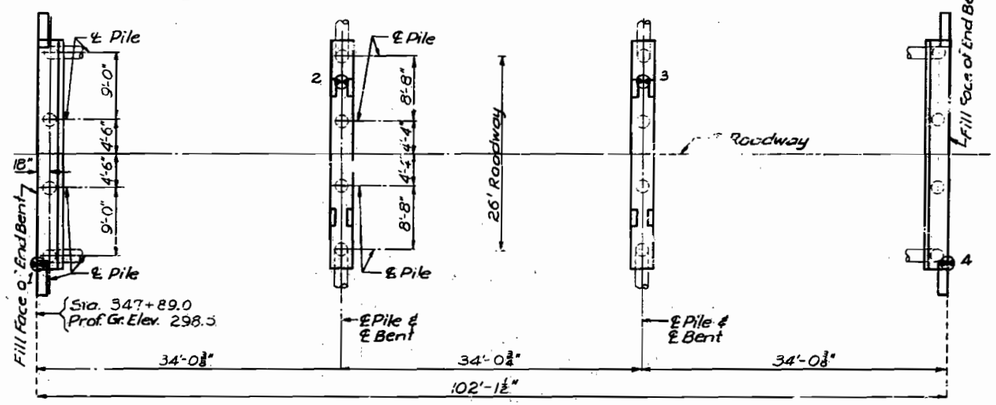

PLAN

PILE DATA					
Bent No.		1	2	3	4
Type		CIP	CIP	CIP	CIP
Kind		Trestle	Trestle	Trestle	Trestle
Number		4	4	4	4
Approximate Length	Ft.	55	60	70	70
Design Bearing	Tons	30	30	30	30
Min. Tip Penetration	Elev.	265.0	260.0	260.0	265.0
Pile Standard		52.02	52.02	52.02	52.02
Hammer Energy Req'd.	Ft. Lbs.	8000	8000	8000	8000

Minimum energy requirement of hammer based on plan length of piles.

All pile shall be driven to the minimum penetrations and to not less than the design bearings noted.

BILL OF REINFORCING STEEL - SUBSTRUCTURE				
No.	Size	Length	Mark	Location
End Bents No. 1 & 4				
16	#6	32'-3"	H1	Beam
4	#6	30'-3"	H2	"
24	#5	5'-9"	H4	Wings
8	#6	12'-3"	T1	Wings
56	#4	12'-3"	U1	Beam
8	#4	8'-9"	V2	Wings
Int. Bents No. 2 & 3				
16	#6	31'-3"	H5	Beam
4	#6	25'-3"	H6	"
56	#4	9'-9"	U2	Beam

Bending Sketches & Cutting Diagrams

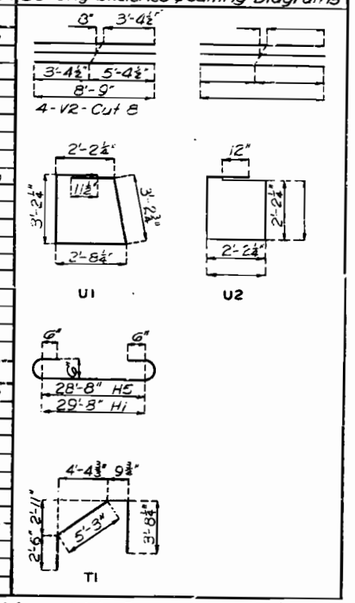

Note: See Sheet No. 3 of 4 for Bill of Reinforcing Steel for superstructure.

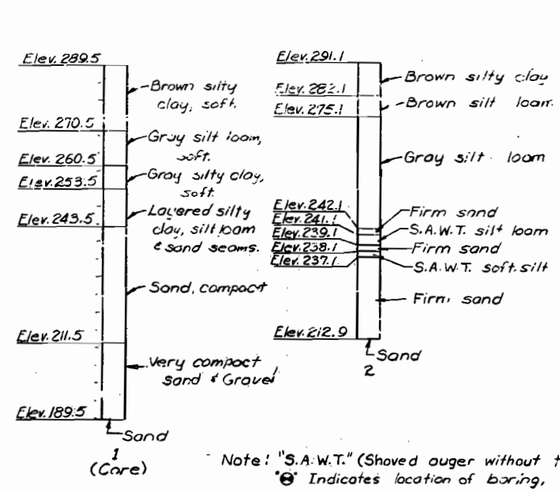

Note: "S.A.W.T." (Shoved auger without turning.)
"⊗" Indicates location of boring.

BORING DATA

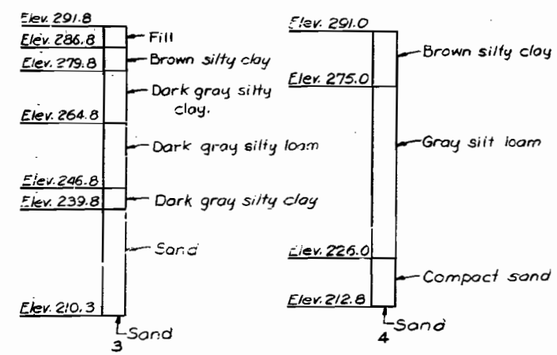

B.M. #35 Elev. 289.24 N.I.W.R. 40" Sycamore 104' Rt. Sta. 348+21

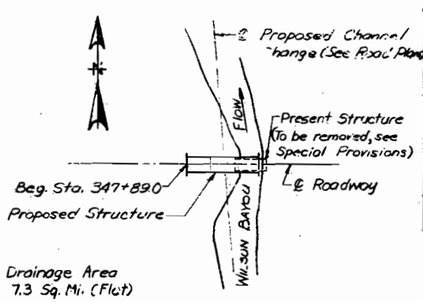

LOCATION SKETCH

ESTIMATED QUANTITIES				
ITEM		SUBSTR.	SUPERSTR.	TOTAL
Bituminous Surface	Sq. Yds.		295	295
Cast-in-Place Concrete Piles	Lin. Ft.	1020		1020
Class A or Class X Concrete	Cu. Yds.		88.5	88.5
Class B Concrete	Cu. Yds.	38.6	15.4	54.0
Reinforcing Steel	Lbs.	3.050	37.240	40.290
Bridge Rail (Single tube type)	Lin. Ft.		183	183

Note: Cost of ⅝" coil ties, 1" ⌀ tie bolts and washers shall be included in price bid for precast units.

Cost of any required excavation for bridge will be included in price bid for other items.

GENERAL NOTES:

Design Specifications: A.A.S.H.O. - 1965

Design Loading:

H15-44

Earth: 120 # Equivalent Fluid Pressure 30 #

Design Unit Stresses:

Class A or Class X Concrete (Precast Units) f_c = 1,500 psi

Class B Concrete (Substructure, superstructure curb, parapet and end posts) f_c = 1,200 psi

Reinforcing Steel f_s = 20,000 psi

Structural Steel (A.S.T.M. A36-66) f_s = 20,000 psi

Painting:

All bolts and washers for holding precast concrete units together shall be cleaned and painted three coats or galvanized.

All exposed surfaces of steel shells for cast-in-place piles shall be painted. Payment to be included in price bid for items painted.

BRIDGE OVER WILSON BAYOU

STATE ROAD FROM NEW MADRID NORTHEASTERLY

ABOUT 6.5 MILES N.E. OF NEW MADRID

PROJECT NO. C072-WW(1) SWW STA. 347+89.0

NEW MADRID COUNTY

SUBMITTED BY D. B. Gerstenberg BRIDGE ENGINEER DATE 12/7/67

APPROVED BY M. G. Snider CHIEF ENGINEER DATE 12/7/67

STD. 52.02

A-2141

DESIGNED MARCH 1967 BY UNDERWOOD

DETAILED MARCH 1967 BY UNDERWOOD

CHECKED MARCH 1967 BY MAGER

Note: This drawing is not to scale. Follow dimensions.

Sheet No. 1 of 4.

No. 51 40.1 June 1965 | Revised Jan. 1965

117

MISSOURI STATE HIGHWAY DEPARTMENT

FED. ROAD DIST. NO.	STATE	FED. AID PROJ. NO.	FISCAL YEAR	SHEET NO.	TOTAL SHEETS
5	MO.		19		44

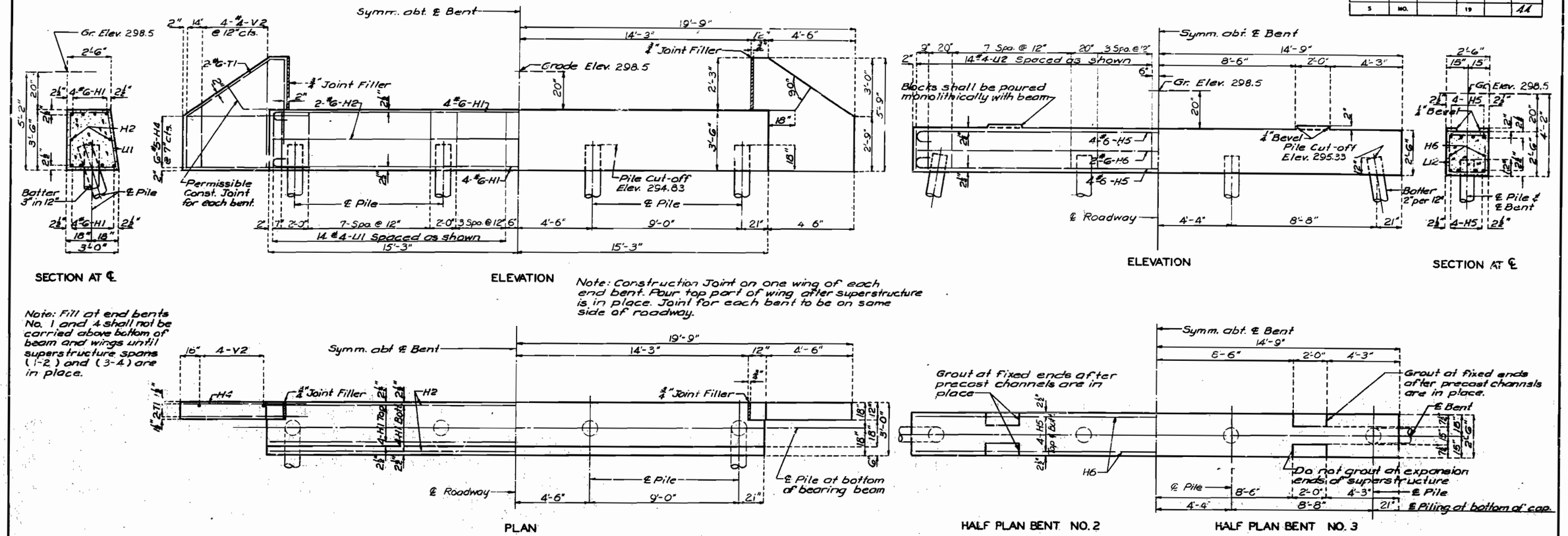

Note: Construction Joint on one wing of each end bent. Pour top part of wing after superstructure is in place. Joint for each bent to be on same side of roadway.

Note: Fill at end bents No. 1 and 4 shall not be carried above bottom of beam and wings until superstructure spans (1-2) and (3-4) are in place.

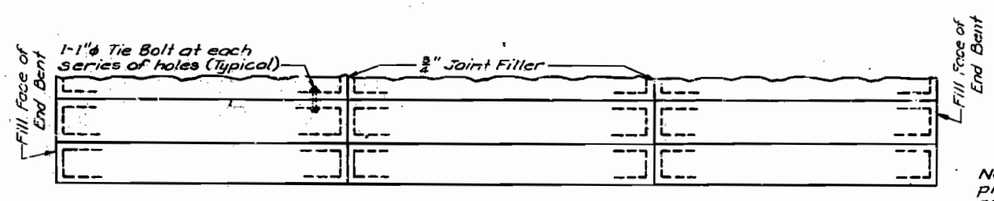

Note: Two layers of 55# roofing felt to be placed between the contact surfaces of precast units and substructure.

BRIDGE OVER WILSON BAYOU

STATE ROAD FROM NEW MADRID NORTHEASTERLY

ABOUT 6.5 MILES N.E. OF NEW MADRID

PROJECT NO. C072-WW(1) SWW **STA.** 347 + 89.0

NEW MADRID COUNTY

A-2141

No. 5111	Revised
Mar. 1963	Jan. 1968

DETAILED MARCH 1967 BY UNDERWOOD
CHECKED MARCH 1967 BY MAGER

Note: This drawing is not to scale. Follow dimensions.

Sheet No. 2 of 4.

118

MISSOURI STATE HIGHWAY DEPARTMENT

FED. ROAD DIST. NO.	STATE	FED. AID PROJ. NO.	FISCAL YEAR	SHEET NO.	TOTAL SHEETS
5	MO.		19		45

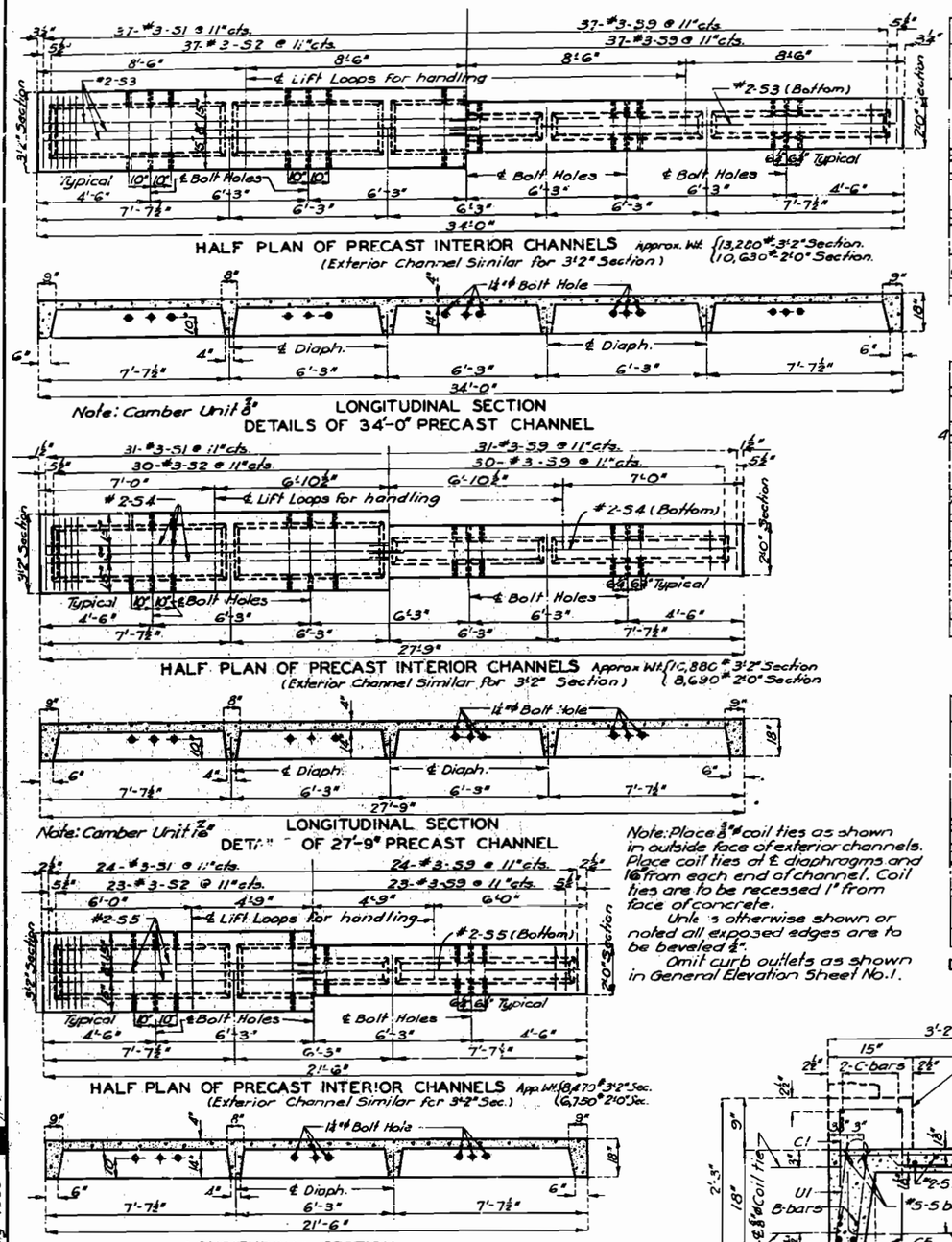

Note: Place ⅜" ϕ coil ties as shown in outside face of exterior channels. Place coil ties at ℄ diaphragms and 16" from each end of channel. Coil ties are to be recessed 1" from face of concrete.
Unless otherwise shown or noted all exposed edges are to be beveled ¾".
Omit curb outlets as shown in General Elevation Sheet No. 1.

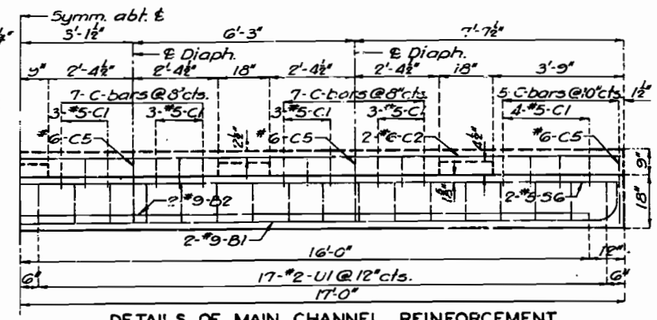

DETAILS OF MAIN CHANNEL REINFORCEMENT
34'-0" SPAN

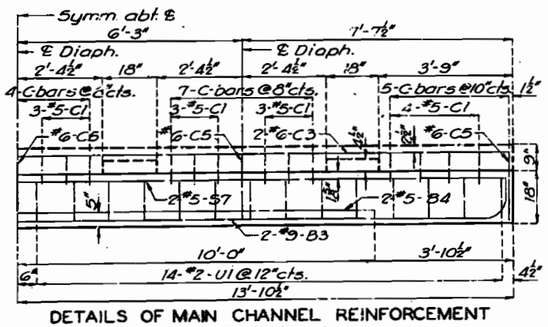

DETAILS OF MAIN CHANNEL REINFORCEMENT
27'-9" SPAN

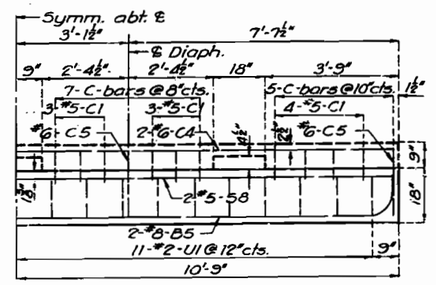

DETAILS OF MAIN CHANNEL REINFORCEMENT
21'-6" SPAN

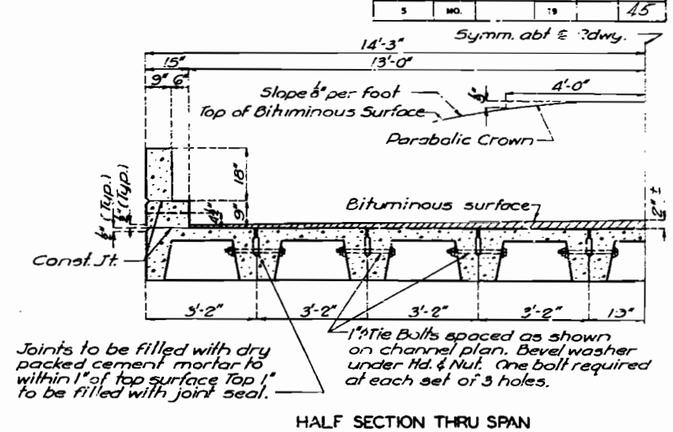

HALF SECTION THRU SPAN

BILL OF REINFORCING STEEL FOR SUPERSTRUCTURE

Total No.	One Span 21'-6" No.	27'-9" No.	34'-0" No.	Size	Length	Mark	Location
108			36	#9	35'-6"	B1	Channel
108			36	#9	32'-0"	B2	"
		36		#9	29'-9"	B3	"
		36		#5	20'-0"	B4	"
	36			#8	25'-0"	B5	"
192	40	52	64	#5	4'-3"	C1	Curb
12			4	#6	33'-9"	C2	"
		4		#6	27'-6"	C3	"
	4			#6	21'-3"	C4	"
36	8	10	12	#6	4'-3"	C5	"
999	216	279	333	#3	3'-0"	S1	Slab
999	207	270	333	#3	3'-0"	S2	"
162			54	#2	17'-3"	S3	"
		54		#2	14'-0"	S4	"
	54			#2	11'-0"	S5	"
108			36	#5	33'-9"	S6	"
		36		#5	27'-6"	S7	"
	36			#5	21'-3"	S8	"
1836	378	504	612	#2	3'-9"	U1	Channel
162	36	45	54	#4	4'-6"	W1	Diaphragm
108	36	36	36	#5	3'-0"	L1	Channel
8	–	–	–	#5	4'-9"	R1	End Post
4	–	–	–	#5	5'-6"	R2	" "
4	–	–	–	#5	6'-0"	R3	" "
4	–	–	–	#5	6'-6"	R4	" "
4	–	–	–	#5	7'-0"	R5	" "
8	–	–	–	#5	7'-0"	R6	" "
208	–	–	–	#5	5'-3"	R7	Parapet
24	–	–	–	#5	33'-9"	R8	"
18				#5	4'-9	R9	"

Bending Sketches

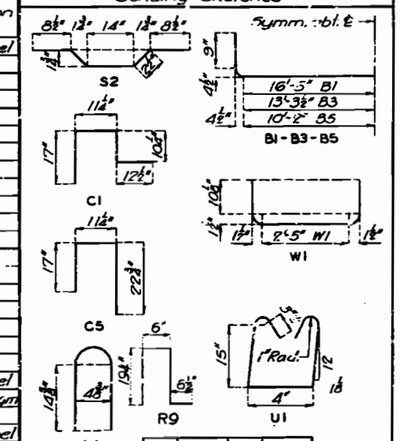

Bar	a	b	c
R2	2'-1½"	6"	22½"
R3	2'-4¾"	6"	2'-1¾"
R4	2'-7¾"	6"	2'-4¾"
R5	2'-10½"	6"	2'-7½"
R6	2'-10½"	6"	2'-7½"
R7	2'-0½"	6"	21½"

R2-R3-R4-R5-R6-R7

Note: #5 Lift loops to be cut off in field after units have been set in final position at bridge site and wells to be filled with grout containing iron oxide (Embeco or an approved equivalent) by contractor, except lift loops under curbs.

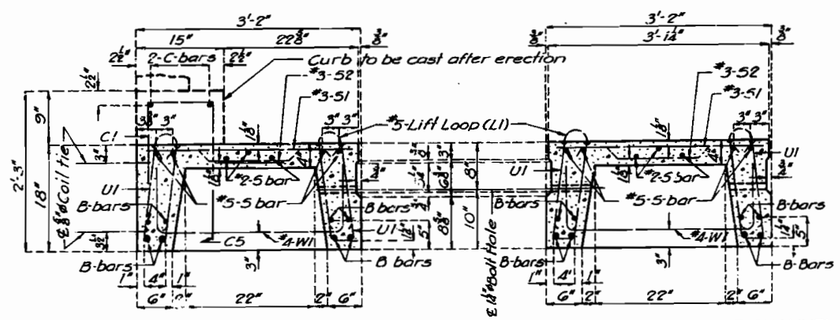

TYPICAL SECTION THRU EXT. CHANNEL

TYPICAL SECTION THRU INT. CHANNEL

BRIDGE OVER WILSON BAYOU

STATE ROAD FROM NEW MADRID NORTHEASTERLY

ABOUT 6.5 MILES N.E. OF NEW MADRID

PROJECT NO. C072-WW(1) SWW STA. 347+89.0

NEW MADRID COUNTY

A-2141

DETAILED MARCH 1967 BY UNDERWOOD

CHECKED MARCH 1967 BY MAGER

Note: This drawing is not to scale. Follow dimensions.

Sheet No. 3 of 4.

No. 51.26 S	Revised
Nov. 1964	July 1965

119

MISSOURI STATE HIGHWAY DEPARTMENT

FED ROAD DIST NO	STATE	FED AID PROJ NO	FISCAL YEAR	SHEET NO	TOTAL SHEETS
5	MO		19		46

GENERAL HANDRAIL NOTES:

All handrail posts shall be set normal to grade.

Aluminum tube handrail shall be bent to conform to vertical and horizontal alignment of parapet.

Aluminum washer shims between top of parapet and post base may be used for adjusting handrail alignment. Maximum thickness of shims to be 1/8". Where more tilting of post is required for proper alignment, concrete bearing areas shall be ground down.

All parts of handrail, except anchor bolts, nuts, washers, and set screws are to be of aluminum material.

The contract unit price per linear foot of "Bridge Rail" shall include furnishing and erecting the handrail complete with anchor bolts, shims and insulating compound.

All fillets 1/4" except as noted.

All drafts 3° except as noted.

Pipe rail to be fabricated in a minimum of 2 panel lengths.

Omit set screw on side adjacent to filled joint in parapet and curb at all expansion posts.

Top of curbs and parapets to be built parallel to grade with curb and parapet joints (except at end posts) normal to grade.

Concrete end posts to be vertical.

All exposed edges of end posts shall have 1/2" bevel. All exposed edges of curbs and parapets shall have 1/2" radius or 3/8" bevel unless otherwise noted.

If the contractor desires, he may use drive fit cast aluminum end caps in lieu of welded aluminum closure plates.

Integrally cast test coupons and a coat of clear lacquer specified in Std. Spec. 56.2.4 and 56.3.5 respectively will not be required for these rail posts.

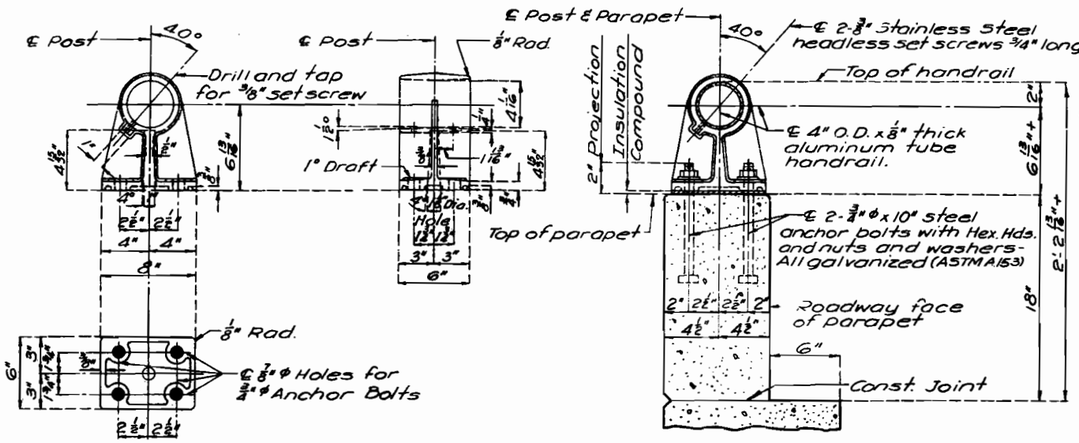

POST DETAILS

SECTION THRU HANDRAIL.

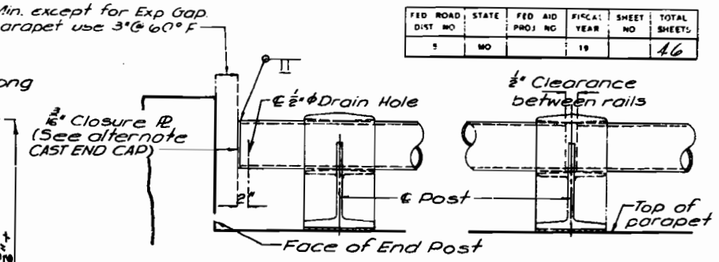

TYPICAL HANDRAIL DETAILS

CAST END CAP
(Drive Fit Type)

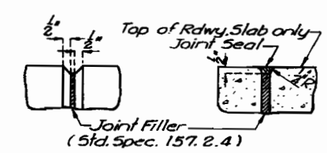

FILLED JOINT DETAILS

SINGLE TUBE ALUMINUM RAILING

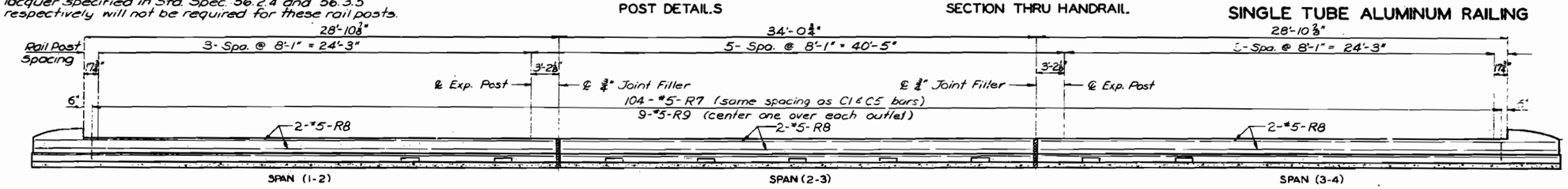

SECTION NEAR LEFT CURB AND PARAPET

Note: See Sheet No. 3 of 4 for dimensioning of curb outlets.

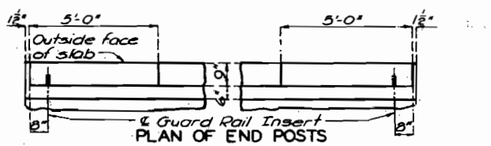

PLAN OF END POSTS

Note: Anchors for attaching guard rail shall be 3/4" threaded (Galv.) inserts having a Min. depth of 3 1/2" and filled with a plastic closing plug. Cost for furnishing & installing the insert & plug will be included in price bid for other items.

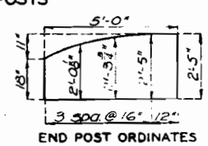

END POST ORDINATES

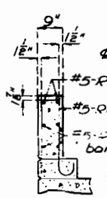

SECTION C-C

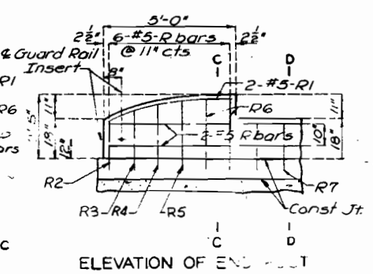

ELEVATION OF END POST

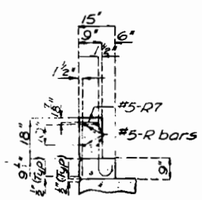

SECTION D-D

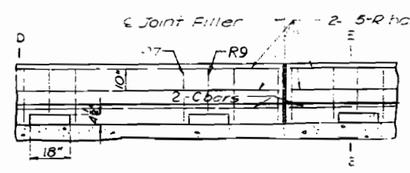

ELEVATION OF CURB & PARAPET

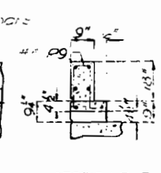

SECTION E-E

Note: For horizontal curb and parapet bars use a minimum lap of 15" for #5 and 18" for #6

Note: This drawing is not to scale. Follow dimensions

Sheet No. 4 of 4

BRIDGE OVER WILSON BAYOU

STATE ROAD FROM NEW MADRID NORTHEASTERLY

ABOUT 6.5 MILES N. E. OF NEW MADRID

PROJECT NO. C072-WW(1) SWW **STA.** 347 + 89.0

NEW MADRID COUNTY

A-2141

STD. 15.2 SQ.	REVISED
MAR. 1964	JAN. 1967

DETAILED MARCH 1967 BY UNDERWOOD

CHECKED MARCH 1967 BY MAGER

120

MISSOURI STATE HIGHWAY DEPARTMENT

FED. ROAD DIST. NO.	STATE	FED. AID PROJ. NO.	FISCAL YEAR	SHEET NO.	TOTAL SHEETS
5	MO.		19		43

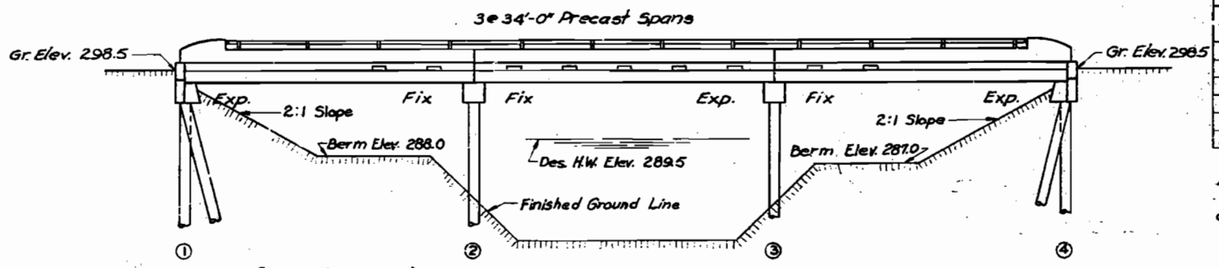

ELEVATION

Note: Compacted roadway fill (full roadway width) placed up to elevation of bottom of concrete beam in front of and not less than 25'-0" in back of End Bents No. 1 and 4 before piles were driven for End Bents No. 1 and 4. Pre-bored holes for piles at End Bents No. 1 and 4.

PILE DATA					
Bent No.		1	2	3	4
Type		CIP	CIP	CIP	CIP
Kind		Trestle	Trestle	Trestle	Trestle
Number		4	4	4	4
Approximate Length	Ft.	55	60	70	70
Design Bearing	Tons	30	30	30	30
Min. Tip Penetration	Elev.	265.0	260.0	260.0	265.0
Pile Standard		52.02	52.02	52.02	52.02
Hammer Energy Req'd.	Ft. Lbs.	8000	8000	8000	8000

Minimum energy requirement of hammer was based on plan length of piles.

All pile were driven to the minimum penetrations and to not less than the design bearings noted.

BILL OF REINFORCING STEEL - SUBSTRUCTURE				
No.	Size	Length	Mark	Location
End Bents No. 1 & 4				
16	#6	32'-3"	H1	Beam
4	#6	30'-3"	H2	"
24	#5	5'-9"	H4	Wings
8	#6	12'-3"	T1	Wings
56	#4	12'-3"	U1	Beam
8	#4	8'-9"	U2	Wings
Int. Bents No. 2 & 3				
16	#6	31'-3"	H5	Beam
4	#6	29'-3"	H5	"
56	#4	9'-9"	U2	Beam

Bending Sketches & Cutting Diagrams

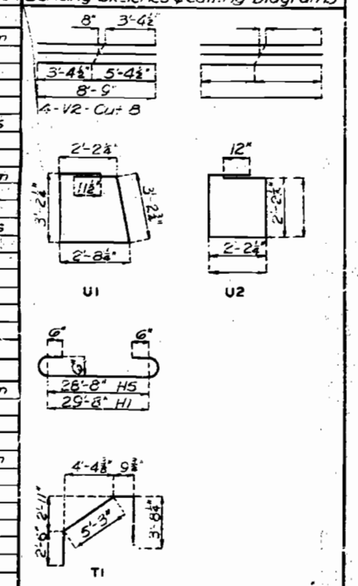

Note: See Sheet No. 3 of 4 for Bill of Reinforcing Steel for superstructure.

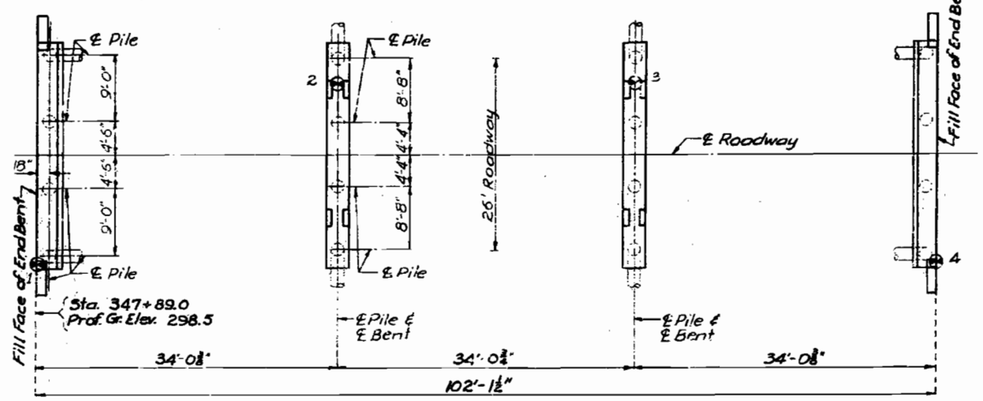

PLAN

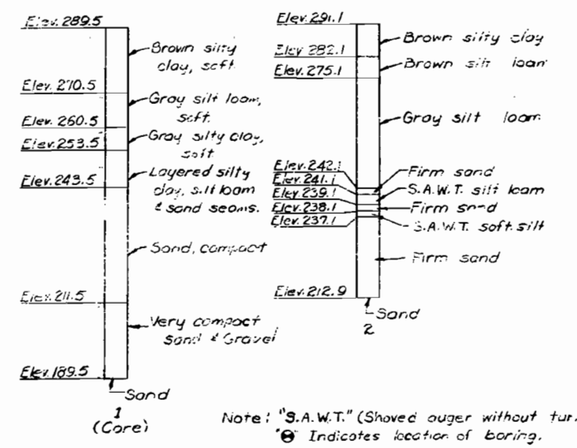

Note: "S.A.W.T." (Shoved auger without turning.)
⊖ Indicates location of boring.

BORING DATA

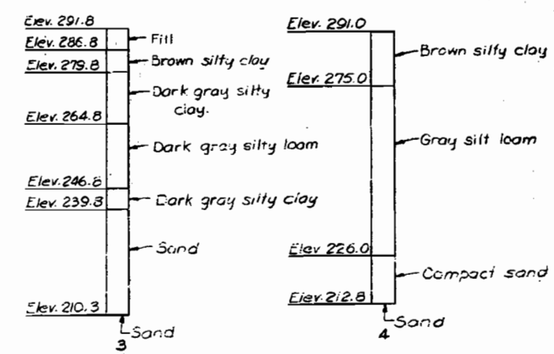

B.M. #35B Elev. 299.02 L on NE wingwall 152' Lt. Sta. 348+91

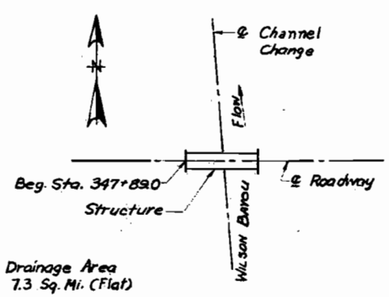

LOCATION SKETCH

QUANTITIES				
ITEM		SUBSTR.	SUPERSTR.	TOTAL
Bituminous Surface	Sq. Yds.		295	295
Cast-in-Place Concrete Piles	Lin. Ft.	1034		1034
Class X Concrete	Cu. Yds.		88.5	88.5
Class B Concrete	Cu. Yds.	38.6	15.4	54.0
Reinforcing Steel	Lbs.	30500	37240	67290
Bridge Rail (Single tube type)	Lin. Ft.		183	183

Note: Cost of ⅝" coil ties, 1" ⌀ tie bolts and washers was included in price bid for precast units.
Cost of any required excavation for bridge was included in price bid for other items.

GENERAL NOTES:

Design Specifications: A.A.S.H.O. - 1965

Design Loading:
H15-44
Earth 120 # Equivalent Fluid Pressure 30 #

Design Unit Stresses:
Class X Concrete (Precast Units) fc = 1,500 psi
Class B Concrete (Substructure, superstructure curb, parapet and end posts) fc = 1,200 psi
Reinforcing Steel fs = 20,000 psi
Structural Steel (A.S.T.M. A36-66) fs = 20,000 psi

Painting:
All bolts and washers for holding precast concrete units together were cleaned and painted three coats
All exposed surfaces of steel shells for cast-in-place piles were painted. Payment was included in price bid for items painted.

BRIDGE OVER WILSON BAYOU

STATE ROAD FROM NEW MADRID NORTHEASTERLY
ABOUT 6.5 MILES N.E. OF NEW MADRID
PROJECT NO. C072-WW(1) SWW STA. 347+89.0

NEW MADRID COUNTY

FINISHED

Submitted by: [illegible] Bridge Engineer Date 12/7/67
Approved by: [illegible] Chief Engineer Date 12/7/67

No.	Revised	Date
5140.1	Revised	Jan. 1969

DESIGNED MARCH 1967 BY UNDERWOOD
DETAILED MARCH 1967 BY UNDERWOOD
CHECKED MARCH 1967 BY MAGER

Note: This drawing is not to scale. Follow dimensions

Sheet No. 1A of 1

FINAL PLANS

STD. 52.02

A-2141

121

MISSOURI STATE HIGHWAY DEPARTMENT

FED. ROAD DIST. NO.	STATE	FED. AID PROJ. NO.	FISCAL YEAR	SHEET NO.	TOTAL SHEETS
5	MO.		19		

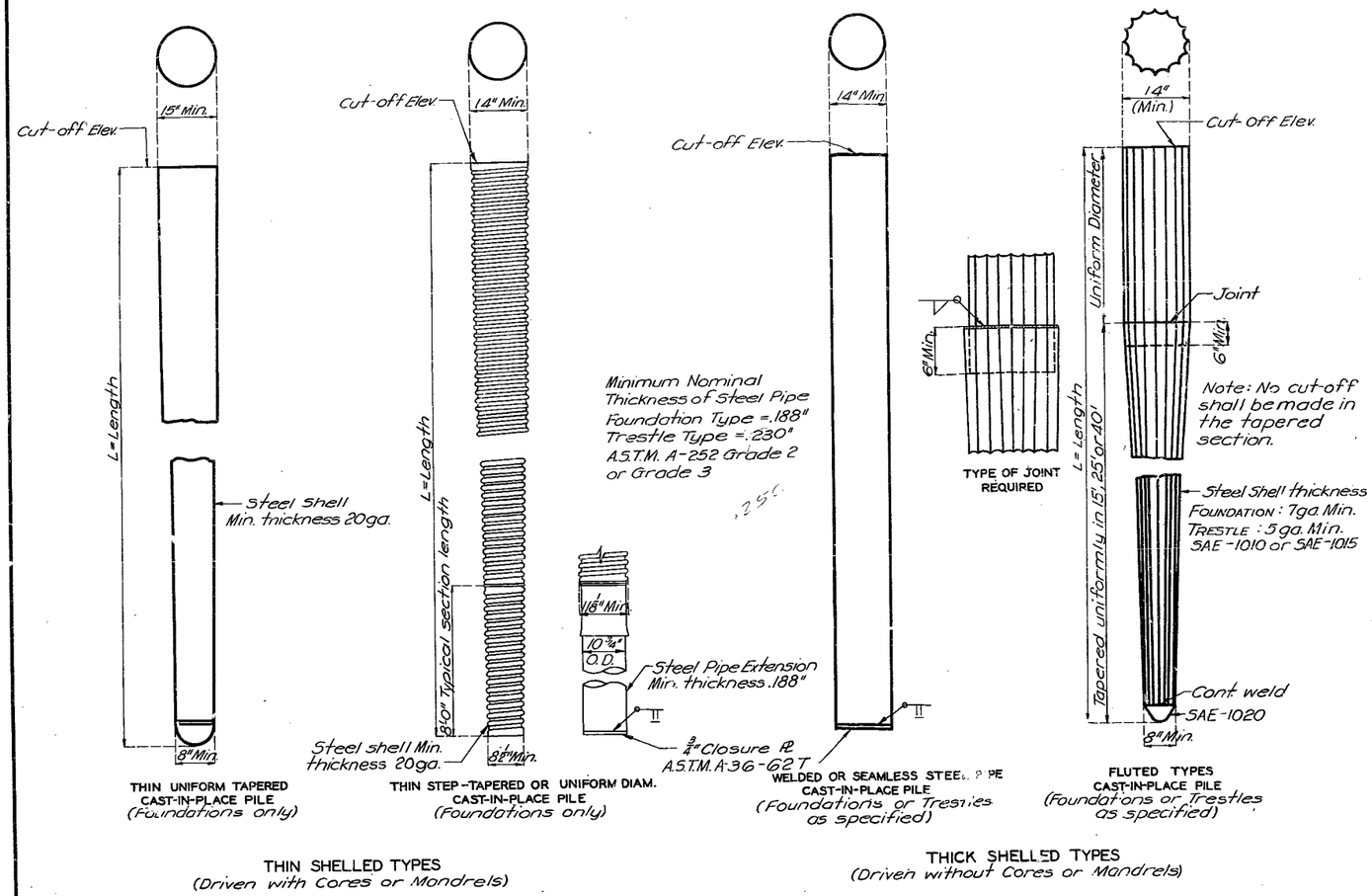

GENERAL NOTES:

All concrete for cast-in-place piles shall be class A.

Thin Shelled Types, driven with cores or mandrels, shall have a minimum nominal average thickness of 20 ga. and shall, in every case, have such additional thickness as may be required to provide sufficient strength to withstand driving without injury and to resist harmful distortion or buckling due to soil pressure after being driven and the mandrel removed.

Thick Shelled Types, driven without cores or mandrels, Welded or Seamless steel pipes, shall meet the requirements of A.S.T.M. Specification A-252, Grade 2 or Grade 3, and the 3/4" closure plates shall meet the requirements of A.S.T.M. Specification A36-62 T. Where Trestle Type Thick Shelled pile are specified, these pipes shall have a nominal average thickness of .23 inches minimum, and where Foundation Type Thick Shelled pile are specified, they shall have a nominal average thickness of .188 inches minimum.

Thick Shelled Types, driven without cores or mandrels, Fluted pipes, shall meet the requirements of Specification SAE-1010 or SAE-1015 and the forged steel tips or noses shall meet the requirements of SAE-1020. Where Trestle Type Thick Shelled pile are specified the fluted pile shall have a nominal thickness of 5 ga. minimum and where Foundation Type Thick Shelled pile are specified, they shall have a nominal thickness of 7ga. minimum.

The minimum wall thickness of any spot or local area of any type shell shall not be more than 12.5% under the specified nominal average thickness.

If practicable, the contractor shall furnish notarized mill test reports in duplicate covering the chemical and physical properties of all steel shells. When shells are fabricated from plate material in stock which cannot be identified as to heat number, the contractor shall furnish in duplicate, a notarized statement from the shell fabricator certifying that the material used was purchased to meet a specification which fully complies with the requirements of our specifications.

Where 3/4" closure plates are required for tips of pipe piles they shall not project beyond the outside diameter of the pipe piles. Satisfactory weldments may be made by beveling tip ends of pipe or by use of inside backing rings. In either case proper gaps shall be used to obtain weld penetration full thickness of pipe.

Splice details for cast-in-place concrete piles shall be in accordance with the manufacturers recommendations, subject to the approval of the engineer. All field splices to be made by qualified welders.

All splices of shells for cast-in-place concrete piles shall be made water tight and to the full strength of the shell above and below the splice to permit hard driving without damage. All shells damaged during driving shall be replaced without cost to the State. Shell sections used for splicing shall be at least 5'-0" in length and not more than two splices per pile will be permitted. The splice at top of tapered section shall be at least 3'-0" below stream bed for intermediate trestle type bents.

APPROVED TYPES OF CAST-IN-PLACE CONCRETE PILES

SUBMITTED BY D. B. Jenkins BRIDGE ENGINEER DATE 5-7-1962

APPROVED BY J. J. Corbett CHIEF ENGINEER DATE 5-7-1962

52.02

Drawn Sept. 1959 by W.G.S.
Checked Sept. 1959 by J.E.L.

Note: This drawing is not to scale. Follow dimensions.

Revised		
6-62	9-62	9-63

Sheet No. 1 of 1

391

MISSOURI HIGHWAYS AND TRANSPORTATION COMMISSION
PLANS FOR PROPOSED
STATE HIGHWAY

NEW MADRID COUNTY

DESIGN DESIGNATION

A.A.D.T. - 2017 = 260
A.A.D.T. - 2037 = 340
D.H.V. = 11%
T = 11%
V = 55 M.P.H.

FUNCTIONAL CLASSIFICATION-RURAL MAJOR COLLECTOR

NO NEW RIGHT OF WAY

CONVENTIONAL SYMBOLS
(USED IN PLANS)

	EXISTING	NEW
BUILDINGS AND STRUCTURES		
GUARD RAIL		
CONCRETE RIGHT-OF-WAY MARKER		
STEEL RIGHT-OF-WAY MARKER		
LOCATION SURVEY MARKER		
UTILITIES		
FIBER OPTICS	—FO—	—FO—
OVERHEAD TELEPHONE	—○—	—●—
UNDERGROUND TELEPHONE	—T—	—T—
OVERHEAD POWER	—□—	—■—
UNDERGROUND POWER	—P—	—P—
GAS	—G—	—G—
WATER	—W—	—W—
MANHOLE	SAN	
FIRE HYDRANT	HYD	
WATER VALVE	WV	
WATER METER	WM	
DROP INLET	DI	
DITCH BLOCK		
GROUND MOUNTED SIGN	SIGN	
LIGHT POLE		
H-FRAME POWER POLE		
TELEPHONE PEDESTAL	PED	
FENCE		
CHAIN LINK	—V—	
WOVEN WIRE	—X—	
GATE POST		
BENCHMARK	BM	

NOTE: DASHED OR OPEN SYMBOLS INDICATE EXISTING FEATURES

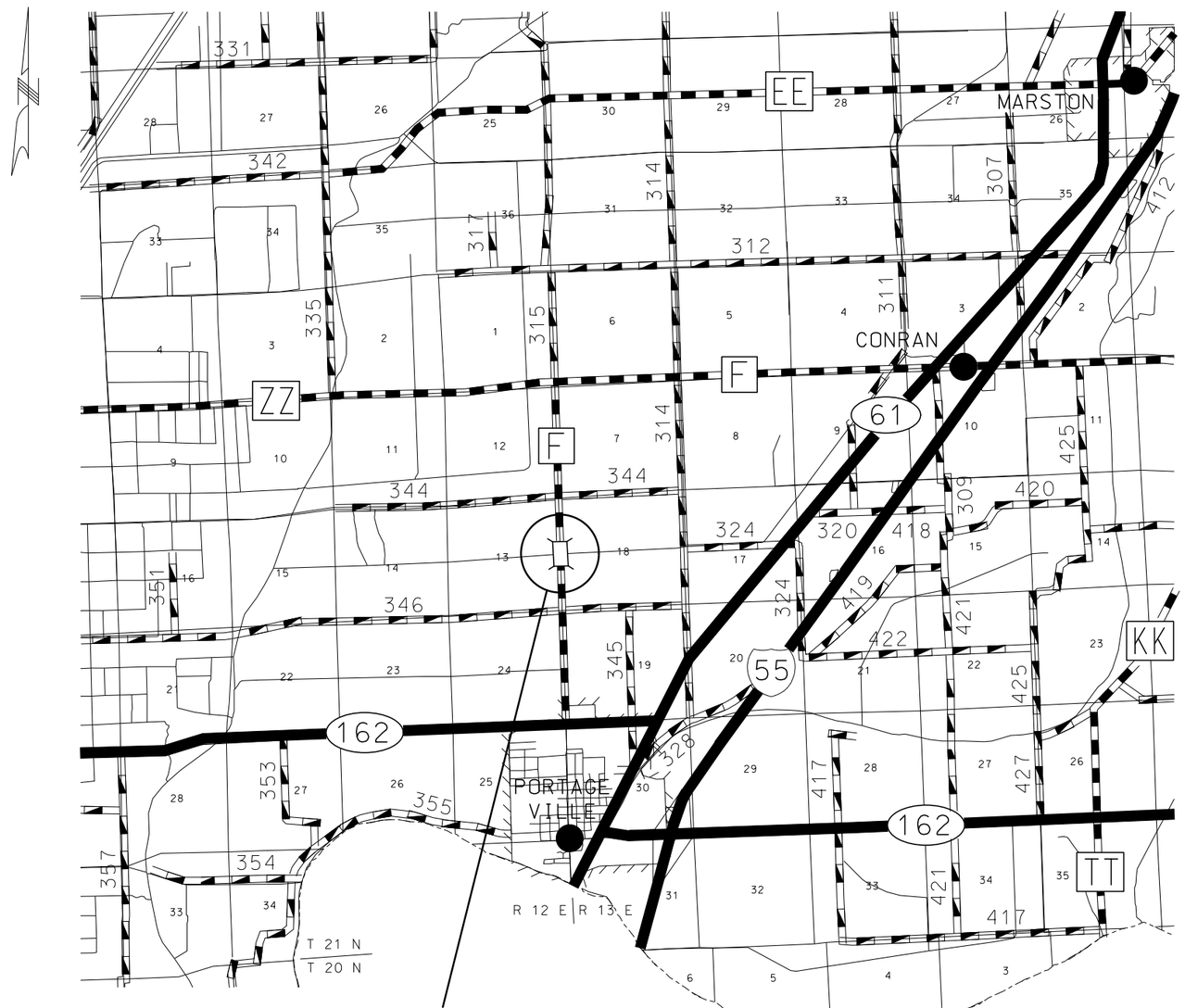

PROJECT LOCATION
BRIDGE REPLACEMENT

INDEX OF SHEETS

DESCRIPTION	SHEET NUMBER
TITLE SHEET	1
TYPICAL SECTIONS (TS) (1 SHEET)	2
QUANTITIES (QU) (2 SHEETS)	3
PLAN-PROFILE (PP)	4-5
COORDINATE POINTS (CP)	6
SPECIAL SHEETS (SS)	7-8
TRAFFIC CONTROL SHEETS (TC)	9
EROSION CONTROL SHEETS (EC)	10
SIGNING SHEETS (SN)	11
BRIDGE DRAWINGS (B)	
A8473	1-24

LENGTH OF PROJECT

BEGINNING OF PROJECT	STA. 906+00.00	
END OF PROJECT	STA. 907+93.00	
APPARENT LENGTH	193.00	FEET
EQUATIONS AND EXCEPTIONS:		
TOTAL CORRECTIONS	0.00	FEET
NET LENGTH OF PROJECT	193.00	FEET
STATE LENGTH	0.037	MILES

STATE OF MISSOURI
CHRIS E. BERRY
NUMBER PE-2001018707
PROFESSIONAL ENGINEER
THIS SHEET HAS BEEN SIGNED, SEALED AND DATED ELECTRONICALLY.

DATE PREPARED	
10/25/2016	
ROUTE: F	STATE: MO
DISTRICT: SE	SHEET NO.: 1
COUNTY: NEW MADRID	
JOB NO.: J9S3147	
CONTRACT ID.	
PROJECT NO.	
BRIDGE NO.	

DATE	DESCRIPTION

IF A SEAL IS PRESENT ON THIS SHEET IT HAS BEEN ELECTRONICALLY SEALED AND DATED.

MISSOURI HIGHWAYS AND TRANSPORTATION COMMISSION
105 WEST CAPITOL
JEFFERSON CITY, MO 65102
1-888-ASK-MODOT (1-888-275-6636)

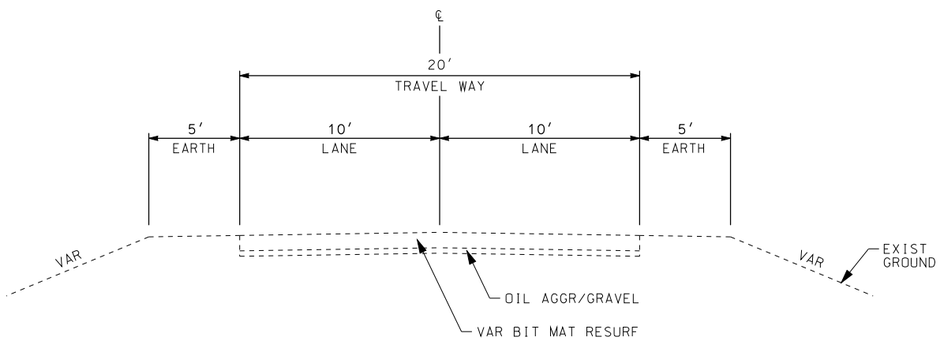

SECTION ON TANGENT
EXISTING TYPICAL SECTION RTE F
STA 901+88.00 TO STA 911+88.00
BR F0270 - STA 906+87.80

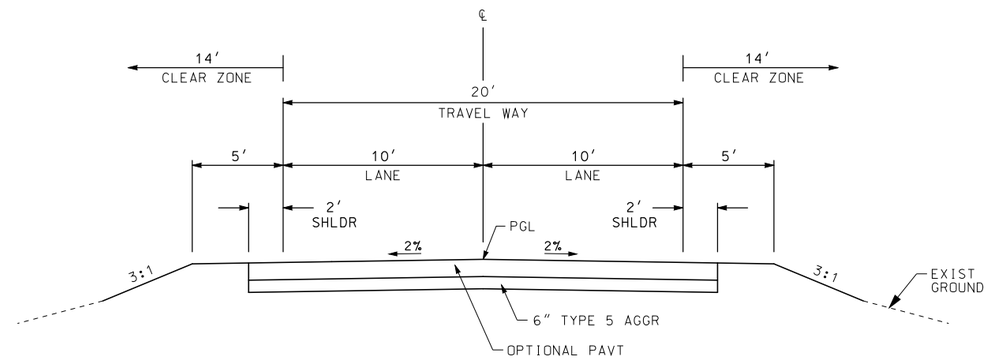

SECTION ON TANGENT
TYPICAL SECTION RTE F
STA 906+00.00 TO STA 907+93.00

OPTIONAL PAVEMENT

1) 1.75″ BP-1 PG 64-22 OVER 8.25″ PMBB PG 64-22
2) 8.00″ PCCP

DRAWING NOT TO SCALE. FOLLOW DIMENSIONS.

STATE OF MISSOURI
CHRIS E. BERRY
NUMBER
PE-2001018707
PROFESSIONAL ENGINEER

THIS SHEET HAS BEEN SIGNED, SEALED AND DATED ELECTRONICALLY.

DATE PREPARED	9/23/2016
ROUTE	F
STATE	MO
DISTRICT	SE
SHEET NO.	2
COUNTY	NEW MADRID
JOB NO.	J9S3147
CONTRACT ID.	
PROJECT NO.	
BRIDGE NO.	

DATE	DESCRIPTION

MISSOURI HIGHWAYS AND TRANSPORTATION COMMISSION
105 WEST CAPITOL
JEFFERSON CITY, MO 65102
1-888-ASK-MODOT (1-888-275-6636)

TYPICAL SECTION
SHEET 1 OF 1

IF A SEAL IS PRESENT ON THIS SHEET IT HAS BEEN ELECTRONICALLY SEALED AND DATED.

MISSOURI HIGHWAYS AND TRANSPORTATION COMMISSION

SUMMARY OF QUANTITIES

CLEARING AND GRUBBING

NO DIRECT PAY FOR CLEARING AND GRUBBING

REMOVAL OF IMPROVEMENTS

SHEET	STA	LOC	DESCRIPTION	REMARKS
		RT	ONE LANE BRIDGE SIGN	APPROX 2500' NORTH OF BRIDGE
		RT	WEIGHT LIMIT SIGN	APPROX 1500' NORTH OF BRIDGE
4	901+87.00	RT	YIELD SIGN	
4	906+86.00	LT/RT	2 - OBJECT MARKERS	
4	907+53.00	LT/RT	2 - OBJECT MARKERS	
4	911+37.00	LT	YIELD SIGN	
		LT	WEIGHT LIMIT SIGN	APPROX 1500' SOUTH OF BRIDGE
		LT	ONE LANE BRIDGE SIGN	APPROX 2500' SOUTH OF BRIDGE

LUMP SUM ONE

POROUS BACKFILL

SHEET	STA	LOC	BACKFILL CY	REMARKS
8	906+82.00	℄	18	BRIDGE END
8	907+58.00	℄	18	BRIDGE END
		TOTAL	36	

LINEAR GRADING CLASS 2

SHEET	STA	STA	LOC	LENGTH FT	LINEAR GRADING CLASS 2 STA	APPROX EARTHWORK CUT CY	APPROX EARTHWORK FILL CY	REMARKS
4	906+00.00	907+93.00	℄	193	1.9	127	6	
			TOTAL		1.9			

FILL MATERIAL SHALL BE SUPPLIED BY THE CONTRACTOR FROM AN OFFSITE SOURCE AS APPROVED BY THE ENGINEER.

GRAVEL A OR CRUSHED STONE B

178 SY

TO BE USED AT DRIVEWAY LOCATIONS AS DIRECTED BY THE ENGINEER.

OPTIONAL PAVEMENT AND AGGREGATE

SHEET	STA	STA	LOC	LENGTH FT	WIDTH FT	OPTIONAL PAVT SY	6" TYPE 5 AGGR SY	REMARKS
4,8	906+00.00	906+62.00	℄	62.00	24	165	165	
4,8	907+78.00	907+93.00	℄	15.00	24	40	40	
					TOTAL	205	205	

DAMAGE TO EXIST PAVT, WHICH CAN BE ATTRIBUTED TO THE CONTRACTOR'S OPERATIONS, SHALL BE REPAIRED WITH LIKE PAVT, TO THE SATISFACTION OF THE ENGINEER - AT NO DIRECT PAY.

ROCK BLANKET

SHEET	STA	STA	ROCK DEPTH FT	TYPE 2 ROCK BLANKET FURNISH CY	TYPE 2 ROCK BLANKET PLACE CY	GEOTEXTILE FABRIC SY	REMARKS
7	906+82.00	907+20.50	2	256	256	385	NORTH END BRIDGE
7	907+30.53	907+64.33	2	224	224	337	SOUTH END BRIDGE
			TOTAL	480	480	722	

INCLUDES QUANTITIES FOR ROCK DRAINS.

MOBILIZATION

LUMP SUM ONE

CONTRACTOR FURNISHED SURVEYING AND STAKING

LUMP SUM ONE

SEEDING

SHEET	STA	STA	LOC	SEEDING AC	REMARKS
4	906+00.00	906+82.00	LT/RT	0.06	
4	907+58.00	907+93.00	LT/RT	0.03	
			TOTAL	1.0	

PAVEMENT MARKING

SHEET	STA	STA	LOC	WATERBORNE PAINT 4" YELLOW LF	PAVT MARKING REMOVAL LF	REMARKS
4	901+88.00	912+54.00	℄	2132		SOLID DOUBLE YELLOW
4	904+87.00	906+00.00	LT/RT		113	EDGELINES
4	907+93.00	910+09.00	LT/RT		216	EDGELINES
			TOTAL	2132	329	

TEMPORARY EROSION CONTROL

	SILT FENCE LF	ROCK DITCH CK LF	TYPE C BERM LF	SEDIMENT REMOVAL CY	TEMP SEED & MULCH AC
TOTAL	190	40	208	6	1.0

STATE OF MISSOURI
CHRIS E. BERRY
NUMBER PE-2001018707
PROFESSIONAL ENGINEER

THIS SHEET HAS BEEN SIGNED, SEALED AND DATED ELECTRONICALLY.

DATE PREPARED 9/23/2016

ROUTE	STATE
F	MO
DISTRICT	SHEET NO.
SE	3

COUNTY: NEW MADRID

JOB NO. J9S3147

CONTRACT ID.

PROJECT NO.

BRIDGE NO.

DESCRIPTION	DATE

IF A SEAL IS PRESENT ON THIS SHEET IT HAS BEEN ELECTRONICALLY SEALED AND DATED.

MISSOURI HIGHWAYS AND TRANSPORTATION COMMISSION

105 WEST CAPITOL
JEFFERSON CITY, MO 65102
1-888-ASK-MODOT (1-888-275-6636)

SUMMARY OF QUANTITIES
SHEET 1 OF 2

EFFECTIVE: 06-08-2016

SIGN	SIZE (IN.)	AREA (SQ. FT.)	QTY	TOTAL AREA	QTY RELOC	TOTAL RELOC AREA	DESCRIPTION
WARNING SIGNS							
W01-1L	48X48	16.00					TURN (SYMBOL LEFT ARROW)
W01-1R	48X48	16.00					TURN (SYMBOL RIGHT ARROW)
W01-2L	48X48	16.00					CURVE (SYMBOL LEFT ARROW)
W01-2R	48X48	16.00					CURVE (SYMBOL RIGHT ARROW)
W01-3L	48X48	16.00					REVERSE TURN (SYMBOL LEFT ARROW)
W01-3R	48X48	16.00					REVERSE TURN (SYMBOL RIGHT ARROW)
W01-4L	48X48	16.00					REVERSE CURVE (SYMBOL LEFT ARROW)
W01-4R	48X48	16.00					REVERSE CURVE (SYMBOL RIGHT ARROW)
W01-4bL	48X48	16.00					DOUBLE ARROW REVERSE CURVE (SYMBOL LEFT ARROWS)
W01-4bR	48X48	16.00					DOUBLE ARROW REVERSE CURVE (SYMBOL RIGHT ARROWS)
W01-4cL	48X48	16.00					TRIPLE ARROW REVERSE CURVE (SYMBOL LEFT ARROWS)
W01-4cR	48X48	16.00					TRIPLE ARROW REVERSE CURVE (SYMBOL RIGHT ARROWS)
W01-6	60X30	12.50					HORIZONTAL ARROW (SYMBOL)
W01-6a	72X36	18.00					HORIZONTAL ARROW (SYMBOL ON PERMANENT BARRICADE)
W01-7	60X30	12.50					DOUBLE HEAD HORIZONTAL ARROW (SYMBOL)
W01-7a	72X36	18.00					DOUBLE HEAD HORIZONTAL ARROW (SYMBOL ON PERMANENT BARRICADE)
W01-8	18X24	3.00					CHEVRON (SYMBOL)
W01-8a	30X36	7.50					CHEVRON (SYMBOL FOR DIVIDED HIGHWAYS)
W03-1	48X48	16.00					STOP AHEAD (SYMBOL)
W03-2	48X48	16.00					YIELD AHEAD (SYMBOL)
W03-3	48X48	16.00					SIGNAL AHEAD (SYMBOL)
W03-4	48X48	16.00					BE PREPARED TO STOP
W03-5	48X48	16.00					SPEED LIMIT AHEAD
W04-1L	48X48	16.00					MERGE (SYMBOL FROM LEFT)
W04-1aL	48X48	16.00					MERGE (LEFT ARROW AT LANE DROP)
W04-1R	48X48	16.00					MERGE (SYMBOL FROM RIGHT)
W04-1aR	48X48	16.00					MERGE (RIGHT ARROW AT LANE DROP)
W05-1	48X48	16.00					ROAD/BRIDGE/RAMP NARROWS
W05-3	48X48	16.00					ONE LANE BRIDGE
W05-5	48X48	16.00					NARROW LANES
W06-1	48X48	16.00					DIVIDED HIGHWAY (SYMBOL)
W06-2	48X48	16.00					DIVIDED HIGHWAY END (SYMBOL)
W06-3	48X48	16.00					TWO WAY TRAFFIC (SYMBOL)
W07-3a	30X24	5.00					NEXT XX MILES (PLAQUE)
W08-1	48X48	16.00					BUMP
W08-2	48X48	16.00					DIP
W08-3	48X48	16.00					PAVEMENT ENDS
W08-4	48X48	16.00					SOFT SHOULDER
W08-5	48X48	16.00					SLIPPERY WHEN WET (SYMBOL)
W08-6	48X48	16.00					TRUCK CROSSING WITH FLAGS
W08-6c	48X48	16.00					TRUCK ENTRANCE
W08-7	36X36	9.00					LOOSE GRAVEL
W08-9	48X48	16.00					LOW SHOULDER
W08-11	48X48	16.00					UNEVEN LANES
W08-12	48X48	16.00					NO CENTER LINE
W10-1	42 RND.	9.62					RAILROAD CROSSING
W012-1	24X24	4.00					DOUBLE DOWN ARROW (SYMBOL)
W012-2	48X48	16.00					LOW CLEARANCE (SYMBOL)
W012-2x	24X18	3.00					LOW CLEARANCE (PLAQUE)
W012-2a	84X24	14.00					OVERHEAD LOW CLEARANCE (FEET AND INCHES)
W08-15	48X48	16.00					GROOVED PAVEMENT
W08-15p	30X24	5.00					MOTORCYCLE (PLAQUE)
W08-17	48X48	16.00					SHOULDER DROP-OFF (SYMBOL)
W08-17p	30X24	5.00					SHOULDER DROP-OFF (PLAQUE)
SPECIAL	120X60	50.00					LOW CLEARANCE XX FT XX IN XX MILES AHEAD
SPECIAL	120X60	50.00					WIDTH RESTRICTION XX FT XX IN XX MILES AHEAD
W013-1	30X30	6.25					ADVISORY SPEED (PLAQUE)
W016-2	30X24	5.00					XXX FEET (PLAQUE)
W016-3	30X24	5.00					X MILE (PLAQUE)
W020-1	48X48	16.00					ROAD/BRIDGE/RAMP WORK AHEAD
W020-2	48X48	16.00					DETOUR AHEAD
W020-3	48X48	16.00	4	64			**ROAD CLOSED (AHEAD) - 2 & (500 FT) - 2**
W020-4	48X48	16.00					ONE LANE ROAD AHEAD
W020-5	48X48	16.00					RIGHT/CENTER/LEFT LANE CLOSED AHEAD
W020-5a	48X48	16.00					2 RIGHT/CENTER/LEFT LANES CLOSED AHEAD
W020-6a	48X48	16.00					RIGHT/CENTER/LEFT LANE CLOSED
W020-7a	48X48	16.00					FLAGGER (SYMBOL) WITH FLAGS
W021-2	36X36	9.00					FRESH OIL
W021-5	48X48	16.00					SHOULDER WORK AHEAD
W022-1	48X48	16.00					BLASTING ZONE AHEAD
W022-2	42X36	10.50					TURN OFF 2-WAY RADIO AND PHONE
W022-3	42X36	10.50					END BLASTING ZONE
W022-6e	21X15	2.19					WET PAINT (ARROW PIVOTS)
GUIDE SIGNS							
SPECIAL	36X36	9.00					FRESH OIL/LOOSE GRAVEL
E05-1	36X48	12.00					GORE EXIT
E05-2	48X36	12.00					EXIT OPEN
E05-2a	48X36	12.00					EXIT CLOSED
G020-1	60X24	10.00					ROAD WORK NEXT XX MILES
G020-2	48X24	8.00					END ROAD WORK
G020-4	36X18	4.50					PILOT CAR FOLLOW ME
SPECIAL	42X30	8.75					PLEASE WAIT FOR PILOT CAR
G020-5aP	36X24	6.00					WORK ZONE (PLAQUE)
M04-8a	24X18	3.00					END DETOUR
M04-9L	48X36	12.00					DETOUR (LEFT ARROW)
M04-9R	48X36	12.00					DETOUR (RIGHT ARROW)
M04-10L	48X18	6.00					DETOUR (ARROW LEFT)
M04-10R	48X18	6.00					DETOUR (ARROW RIGHT)
REGULATORY SIGNS							
R1-1	48X48	13.25					STOP
R1-2	48 TRI.	6.93					YIELD
R1-2a	36X36	9.00					TO ONCOMING TRAFFIC (PLAQUE)
R1-3	20X9	1.25					X-WAY (PLAQUE)
R2-1	36X48	12.00					SPEED LIMIT XX
R3-1	48X48	16.00					NO RIGHT TURN (SYMBOL)
R3-2	48X48	16.00					NO LEFT TURN (SYMBOL)
R3-3	36X36	9.00					NO TURNS
R3-4	48X48	16.00					NO U-TURN (SYMBOL)
R3-7L	30X30	6.25					LEFT LANE MUST TURN LEFT
R3-7R	30X30	6.25					RIGHT LANE MUST TURN RIGHT
R4-1	36X48	12.00					DO NOT PASS
R4-2	36X48	12.00					PASS WITH CARE
R4-7aL	36X48	12.00					KEEP LEFT (HORIZONTAL ARROW)
R4-7a	36X48	12.00					KEEP RIGHT (HORIZONTAL ARROW)
R5-1	30X30	6.25					DO NOT ENTER
R5-1a	36X24	6.00					WRONG WAY
R6-1L	48X18	6.00					ONE WAY ARROW (LEFT)
R6-1R	48X18	6.00					ONE WAY ARROW (RIGHT)
R6-2L	24X30	5.00					ONE WAY (LEFT)
R6-2R	24X30	5.00					ONE WAY (RIGHT)
R10-6	24X36	6.00					STOP HERE ON RED (45° ARROW)
R11-2	48X30	10.00	2	20			**ROAD CLOSED**
R11-3a	60X30	12.50					ROAD CLOSED XX MILES AHEAD LOCAL TRAFFIC ONLY
R11-4	60X30	12.50					ROAD CLOSED TO THRU TRAFFIC
S4-4	36X15	3.75					WHEN FLASHING
CONST-3A	60X48	20.00					FINE SIGN
CONST-3X	56X12	4.67					SPEEDING/PASSING (PLATE)
MISCELLANEOUS SIGNS							
SPECIAL	36X48	12.00					POINT OF PRESENCE
SPECIAL	96X48	32.00					POINT OF PRESENCE
CONST-7-48	48X24	8.00					RATE OUR WORK ZONE
CONST-7-72	72X36	18.00					RATE OUR WORK ZONE
SPECIAL	96X48	32.00	2	64			**RTE X CLOSED XX MILES AHEAD**
616-10.05 CONSTRUCTION SIGNS TOTAL				148			
616-10.10 RELOCATED SIGNS TOTAL							

ITEM NUMBER	TOTAL QTY	DESCRIPTION
6122008		IMPACT ATTENUATOR (8 SAND BARRELS)
6122009		IMPACT ATTENUATOR (9 SAND BARRELS)
6122010		IMPACT ATTENUATOR (10 SAND BARRELS)
6122012		IMPACT ATTENUATOR (12 SAND BARRELS)
6122014		IMPACT ATTENUATOR (14 SAND BARRELS)
6122017		IMPACT ATTENUATOR (17 SAND BARRELS)
6122019		IMPACT ATTENUATOR (19 SAND BARRELS)
6122020		REPLACEMENT SAND BARREL
6122030		IMPACT ATTENUATOR (RELOCATION)
6123000A		TRUCK OR TRAILER MOUNTED ATTENUATOR (TMA)
6161007		SPEED LIMIT AND STROBE LIGHT ASSEMBLY
6161008	4	**ADVANCED WARNING RAIL SYSTEM**
6161009	2	**FLAG ASSEMBLY**
6161020		CHANNELIZER (DRUM-LIKE)
6161022		CHANNELIZER (CONES)
6161024		CHANNELIZER (TRIM LINE) WITH LIGHT
6161025		CHANNELIZER (TRIM LINE)
6161026		CHANNELIZER (VERTICAL PANEL)
6161027		CHANNELIZER (VERTICAL PANEL) WITH LIGHT
6161028		CHANNELIZER
6161030	6	**TYPE III MOVEABLE BARRICADE**
6161031		TYPE III MOVEABLE BARRICADE WITH LIGHT
6161033		DIRECTION INDICATOR BARRICADE
6161034		DIRECTION INDICATOR BARRICADE, WITH LIGHT
6161040		FLASHING ARROW PANEL
6161047		TYPE III OBJECT MARKER
6161051		WARNING LIGHT, TYPE A
6161052	4	**WARNING LIGHT, TYPE B**
6161053		WARNING LIGHT, TYPE C
6161055		SEQUENTIAL FLASHING WARNING LIGHT
6161070		TUBULAR MARKER
6161095		RADAR SPEED ADVISORY SYSTEM
6161096		CHANGEABLE MESSAGE SIGN, COMMISSION FURNISHED/RETAINED
6161098A	2	**CHANGEABLE MESSAGE SIGN WITHOUT COMMUNICATION INTERFACE, CONTRACTOR FURNISHED/RETAINED**
6161099		CHANGEABLE MESSAGE SIGN WITH COMMUNICATION INTERFACE, CONTRACTOR FURNISHED/RETAINED
6162000A		WORK ZONE TRAFFIC SIGNAL SYSTEM
6173600D		CONTRACTOR FURNISHED/RETAINED TEMPORARY TRAFFIC BARRIER
6173602B		CONTRACTOR FURNISHED/COMMISSION RETAINED TEMPORARY TRAFFIC BARRIER
6174000A		TEMPORARY TRAFFIC BARRIER HEIGHT TRANSITION
6175010A		RELOCATING TEMPORARY TRAFFIC BARRIER
6176000B		COMMISSION FURNISHED/RETAINED TEMPORARY TRAFFIC BARRIER
6177000B		COMMISSION FURNISHED/RETAINED TEMPORARY TRAFFIC BARRIER HEIGHT TRANSITION
9019400		TEMPORARY LIGHTING
9029400		TEMPORARY TRAFFIC SIGNALS
9029401		TEMPORARY TRAFFIC SIGNALS AND LIGHTING

STATE OF MISSOURI
CHRIS E. BERRY
NUMBER PE-2001018707
PROFESSIONAL ENGINEER

THIS SHEET HAS BEEN SIGNED, SEALED AND DATED ELECTRONICALLY.

DATE PREPARED: 9/23/2016

ROUTE	STATE
F	MO
DISTRICT	**SHEET NO.**
SE	3

COUNTY: NEW MADRID

JOB NO.: J9S3147

CONTRACT ID.

PROJECT NO.

BRIDGE NO.

DATE	DESCRIPTION

IF A SEAL IS PRESENT ON THIS SHEET IT HAS BEEN ELECTRONICALLY SEALED AND DATED.

MISSOURI HIGHWAYS AND TRANSPORTATION COMMISSION

105 WEST CAPITOL
JEFFERSON CITY, MO 65102
1-888-ASK-MODOT (1-888-275-6636)

SUMMARY OF QUANTITIES
SHEET 2 OF 2

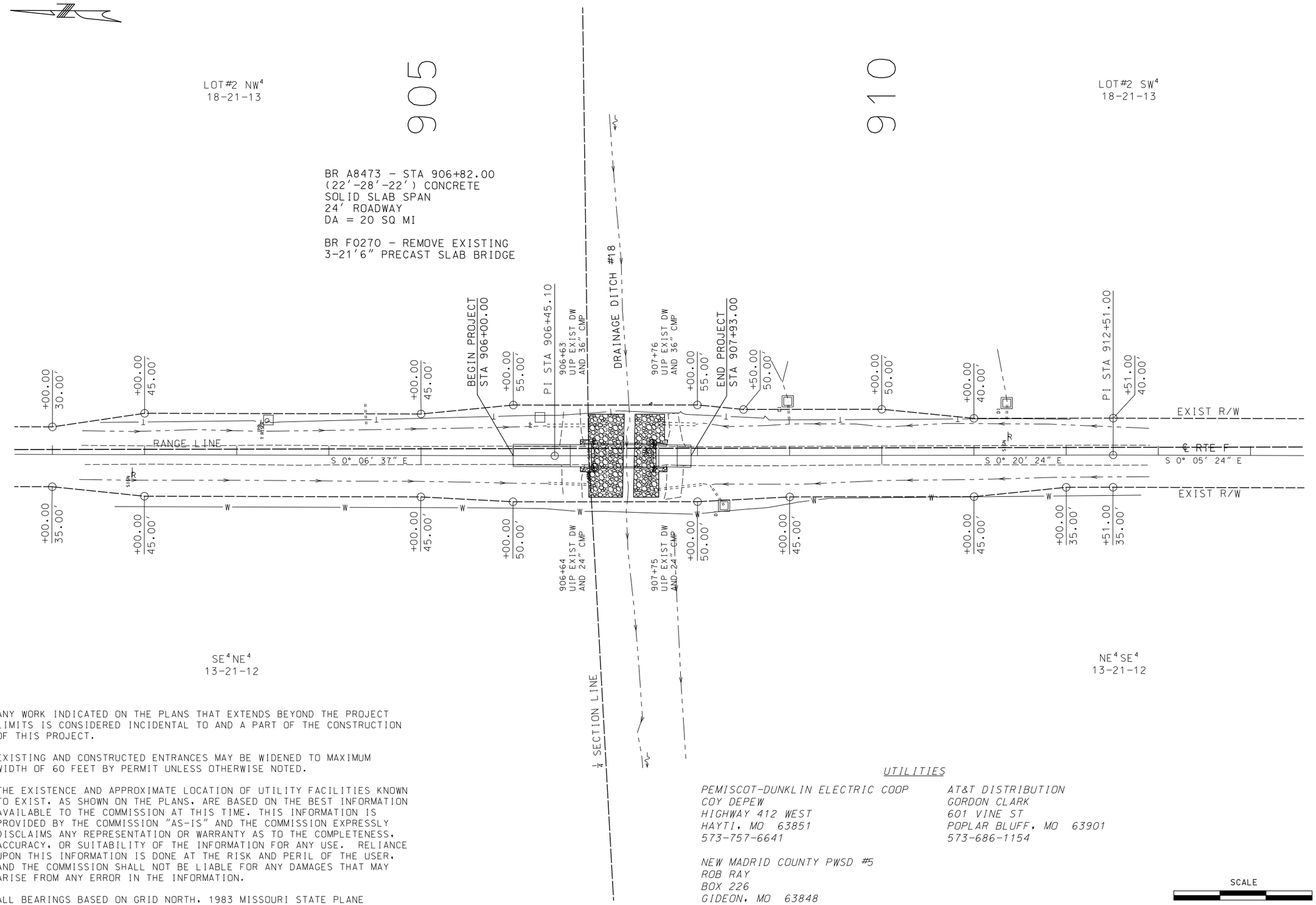

ANY WORK INDICATED ON THE PLANS THAT EXTENDS BEYOND THE PROJECT LIMITS IS CONSIDERED INCIDENTAL TO AND A PART OF THE CONSTRUCTION OF THIS PROJECT.

EXISTING AND CONSTRUCTED ENTRANCES MAY BE WIDENED TO MAXIMUM WIDTH OF 60 FEET BY PERMIT UNLESS OTHERWISE NOTED.

THE EXISTENCE AND APPROXIMATE LOCATION OF UTILITY FACILITIES KNOWN TO EXIST, AS SHOWN ON THE PLANS, ARE BASED ON THE BEST INFORMATION AVAILABLE TO THE COMMISSION AT THIS TIME. THIS INFORMATION IS PROVIDED BY THE COMMISSION "AS-IS" AND THE COMMISSION EXPRESSLY DISCLAIMS ANY REPRESENTATION OR WARRANTY AS TO THE COMPLETENESS, ACCURACY, OR SUITABILITY OF THE INFORMATION FOR ANY USE. RELIANCE UPON THIS INFORMATION IS DONE AT THE RISK AND PERIL OF THE USER, AND THE COMMISSION SHALL NOT BE LIABLE FOR ANY DAMAGES THAT MAY ARISE FROM ANY ERROR IN THE INFORMATION.

ALL BEARINGS BASED ON GRID NORTH, 1983 MISSOURI STATE PLANE COORDINATE SYSTEM, EAST ZONE.

UTILITIES

PEMISCOT-DUNKLIN ELECTRIC COOP
COY DEPEW
HIGHWAY 412 WEST
HAYTI, MO 63851
573-757-6641

AT&T DISTRIBUTION
GORDON CLARK
601 VINE ST
POPLAR BLUFF, MO 63901
573-686-1154

NEW MADRID COUNTY PWSD #5
ROB RAY
BOX 226
GIDEON, MO 63848
573-448-5281

SCALE
0 50 100 150

STATE OF MISSOURI
CHRIS E. BERRY
NUMBER PE-2001018707
PROFESSIONAL ENGINEER

THIS SHEET HAS BEEN SIGNED, SEALED AND DATED ELECTRONICALLY.

DATE PREPARED	
9/23/2016	
ROUTE F	STATE MO
DISTRICT SE	SHEET NO. 4
COUNTY NEW MADRID	
JOB NO. J9S3147	
CONTRACT ID.	
PROJECT NO.	
BRIDGE NO.	

DATE	DESCRIPTION

MISSOURI HIGHWAYS AND TRANSPORTATION COMMISSION
105 WEST CAPITOL
JEFFERSON CITY, MO 65102
1-888-ASK-MODOT (1-888-275-6636)

IF A SEAL IS PRESENT ON THIS SHEET IT HAS BEEN ELECTRONICALLY SEALED AND DATED.

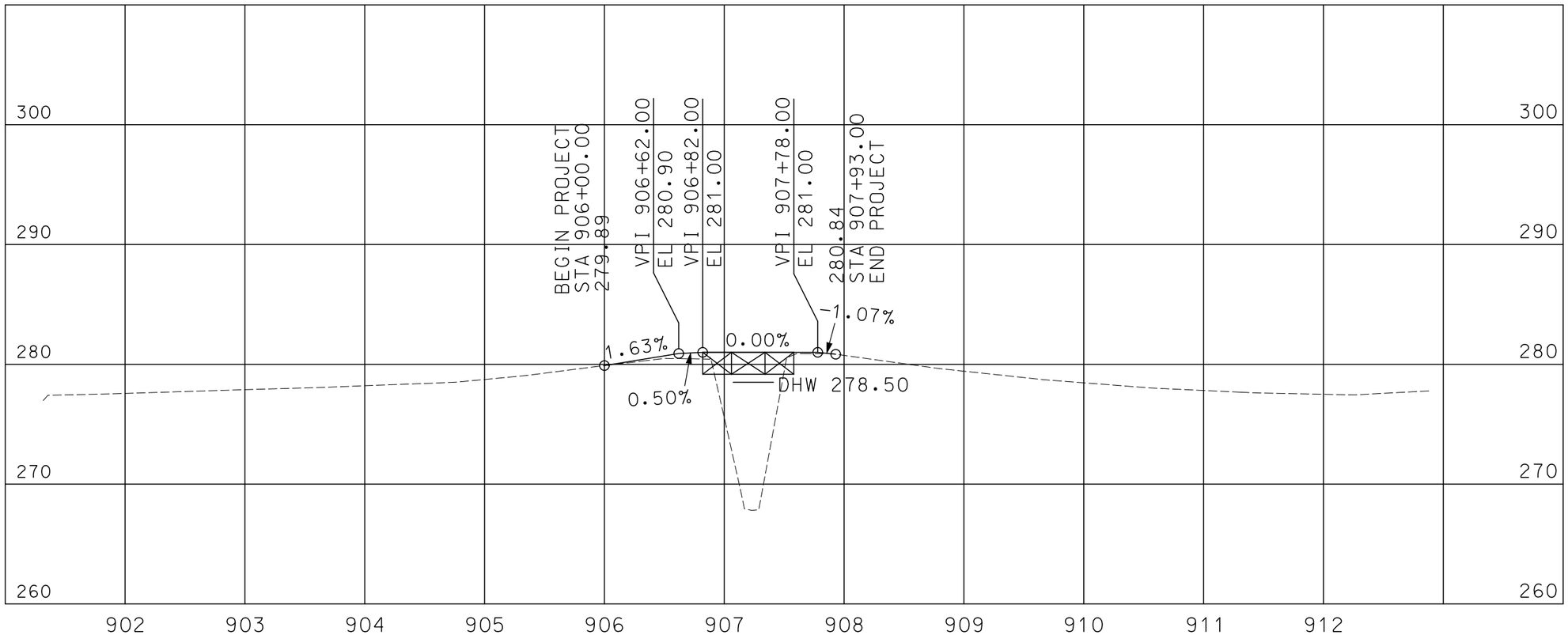

BENCH MARKS - NAVD 88

BM #1 - CPS SOUTH SIDE PP
38.74' LT OF ℄ RTE F STA 900+24.63 ELEV 276.78

BM #2 - □ NORTH END W WHEEL GUARD BR F0270
12.48' RT OF ℄ RTE F STA 906+88.62 ELEV 281.23

BM #3 - □ TOP CENTER SE WINGWALL BR F0270
13.72' LT OF ℄ RTE F STA 907+51.67 ELEV 281.21

STATE OF MISSOURI
CHRIS E. BERRY
NUMBER
PE-2001018707
PROFESSIONAL ENGINEER

THIS SHEET HAS BEEN SIGNED, SEALED AND DATED ELECTRONICALLY.

DATE PREPARED	
9/23/2016	
ROUTE	STATE
F	MO
DISTRICT	SHEET NO.
SE	5
COUNTY	
NEW MADRID	
JOB NO.	
J9S3147	
CONTRACT ID.	
PROJECT NO.	
BRIDGE NO.	

DATE	DESCRIPTION

IF A SEAL IS PRESENT ON THIS SHEET IT HAS BEEN ELECTRONICALLY SEALED AND DATED.

MISSOURI HIGHWAYS AND TRANSPORTATION COMMISSION
105 WEST CAPITOL
JEFFERSON CITY, MO 65102
1-888-ASK-MODOT (1-888-275-6636)

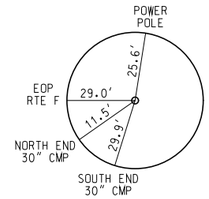

CONTROL PT #100
X = 1054984.0433
Y = 230116.9970
Z = 276.67
STA 900+50.13
OFF 38.33' LT

CP #100 - REBAR W/ AL CAP
APPROX 0.6 MI NORTH OF INTERSECT
RTE F AND CO RD 346

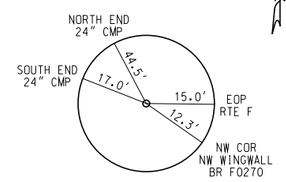

CONTROL PT #101
X = 1054921.9706
Y = 229484.4282
Z = 278.11
STA 906+82.48
OFF 25.11' RT

CP #101 - REBAR W/ PL CAP
APPROX 0.5 MI NORTH OF INTERSECT
RTE F AND CO RD 346, AT BR F0270

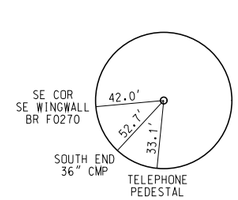

CONTROL PT #102
X = 1055003.5075
Y = 229417.6352
Z = 277.68
STA 907+49.75
OFF 56.03' LT

CP #102 - REBAR W/ PL CAP
APPROX 0.5 MI NORTH OF INTERSECT
RTE F AND CO RD 346, AT BR F0270

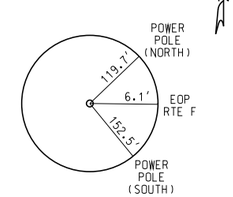

CONTROL PT #103
X = 1054934.6724
Y = 228545.7534
Z = 277.23
STA 916+21.29
OFF 16.36' RT

CP #103 - REBAR W/ PL CAP
APPROX 0.35 MI NORTH OF INTERSECT
RTE F AND CO RD 346

NAD 83 (2011) - EAST ZONE
PROJECTION FACTOR = 1.00000000

COORDINATE POINTS			
LOC	STA	X-E	Y-N
℄ EXISTING RTE F			
POT	892+40.62	1054944.1545	230926.4277
POT	906+45.10	1054946.8589	229521.9531
POT	912+51.00	1054950.4534	228916.0637
POT	915+00.00	1054950.8441	228667.0641

STATE OF MISSOURI
CHRIS E. BERRY
NUMBER PE-2001018707
PROFESSIONAL ENGINEER
THIS SHEET HAS BEEN SIGNED, SEALED AND DATED ELECTRONICALLY.

DATE PREPARED 9/23/2016
ROUTE F | STATE MO
DISTRICT SE | SHEET NO. 6
COUNTY NEW MADRID
JOB NO. J9S3147
CONTRACT ID.
PROJECT NO.
BRIDGE NO.

DATE	DESCRIPTION

IF A SEAL IS PRESENT ON THIS SHEET IT HAS BEEN ELECTRONICALLY SEALED AND DATED.

MISSOURI HIGHWAYS AND TRANSPORTATION COMMISSION
105 WEST CAPITOL
JEFFERSON CITY, MO 65102
1-888-ASK-MODOT (1-888-275-6636)

CONTROL POINTS
COORDINATE POINTS
SHEET 1 OF 1

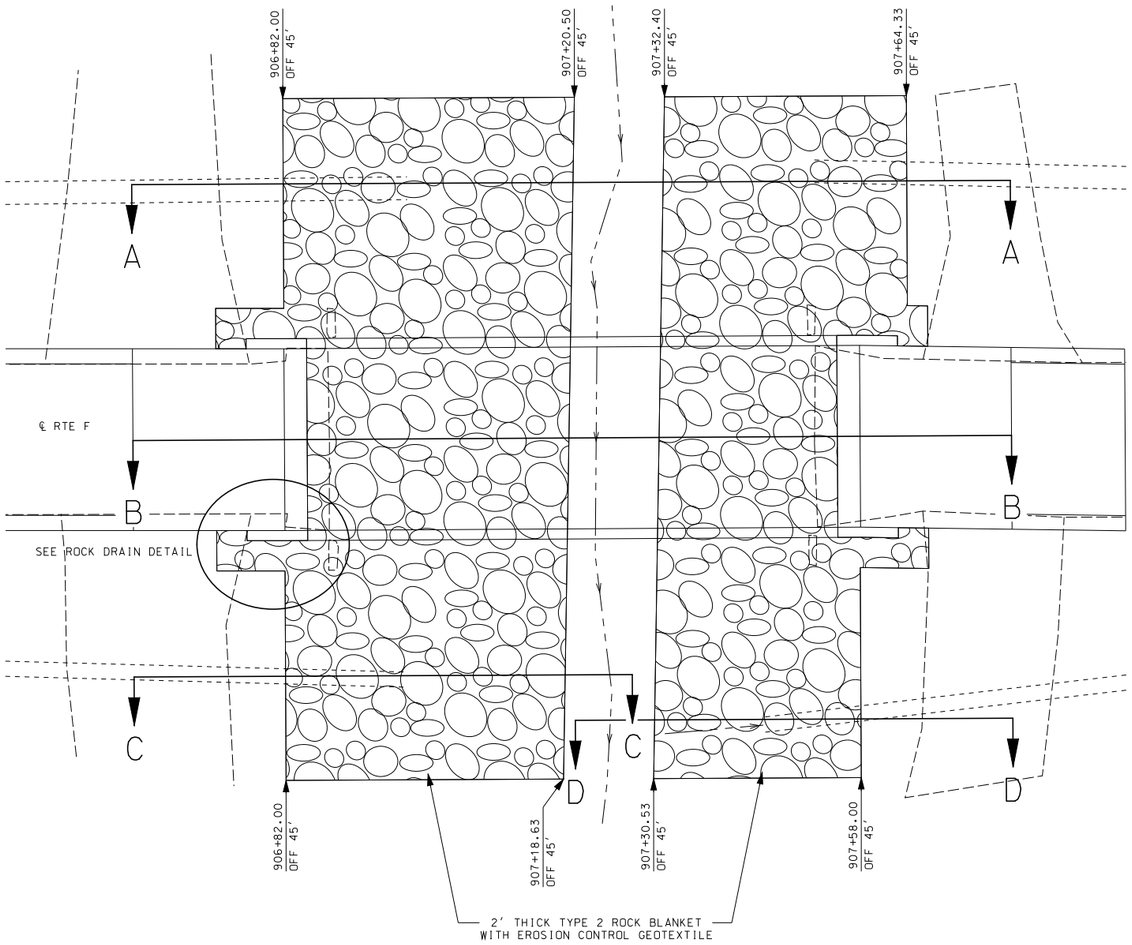

NOTE:
CONTRACTOR WILL BE RESPONSIBLE FOR REPAIRING ANY DAMAGE TO EXISTING PIPES CAUSED BY CONTRACTOR OPERATIONS. AT NO DIRECT PAY.

SECTION A-A

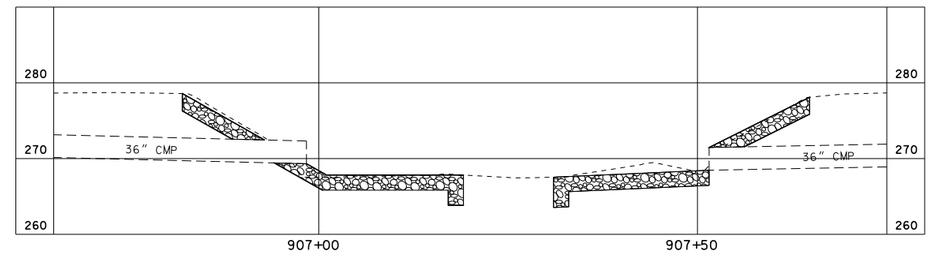

SECTION B-B

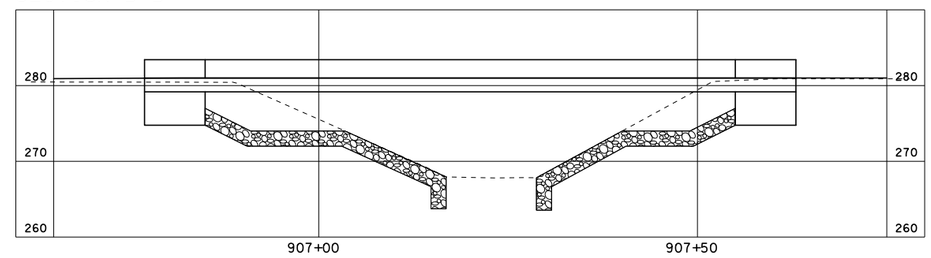

SECTION C-C

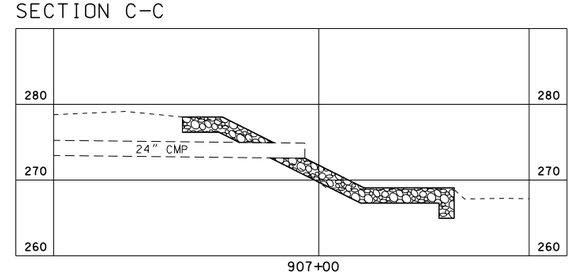

SECTION D-D

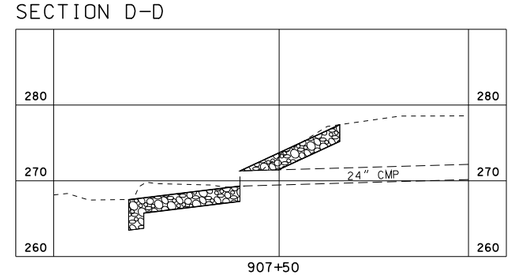

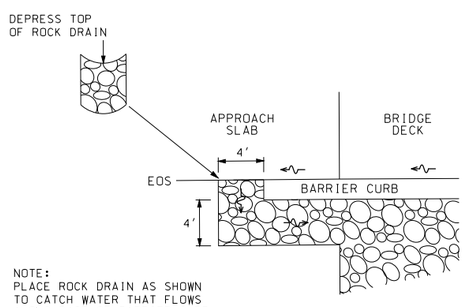

NOTE:
PLACE ROCK DRAIN AS SHOWN TO CATCH WATER THAT FLOWS ALONG BASE OF BARRIER CURB.

ROCK DRAIN DETAIL

DRAWING NOT TO SCALE. FOLLOW DIMENSIONS.

STATE OF MISSOURI
CHRIS E. BERRY
NUMBER
PE-2001018707
PROFESSIONAL ENGINEER

THIS SHEET HAS BEEN SIGNED, SEALED AND DATED ELECTRONICALLY.

DATE PREPARED	9/23/2016
ROUTE	F
STATE	MO
DISTRICT	SE
SHEET NO.	7
COUNTY	NEW MADRID
JOB NO.	J9S3147
CONTRACT ID.	
PROJECT NO.	
BRIDGE NO.	

DATE	DESCRIPTION

IF A SEAL IS PRESENT ON THIS SHEET IT HAS BEEN ELECTRONICALLY SEALED AND DATED.

MISSOURI HIGHWAYS AND TRANSPORTATION COMMISSION

105 WEST CAPITOL
JEFFERSON CITY, MO 65102
1-888-ASK-MODOT (1-888-275-6636)

ROCK BLANKET
SPECIAL SHEET 1 OF 2

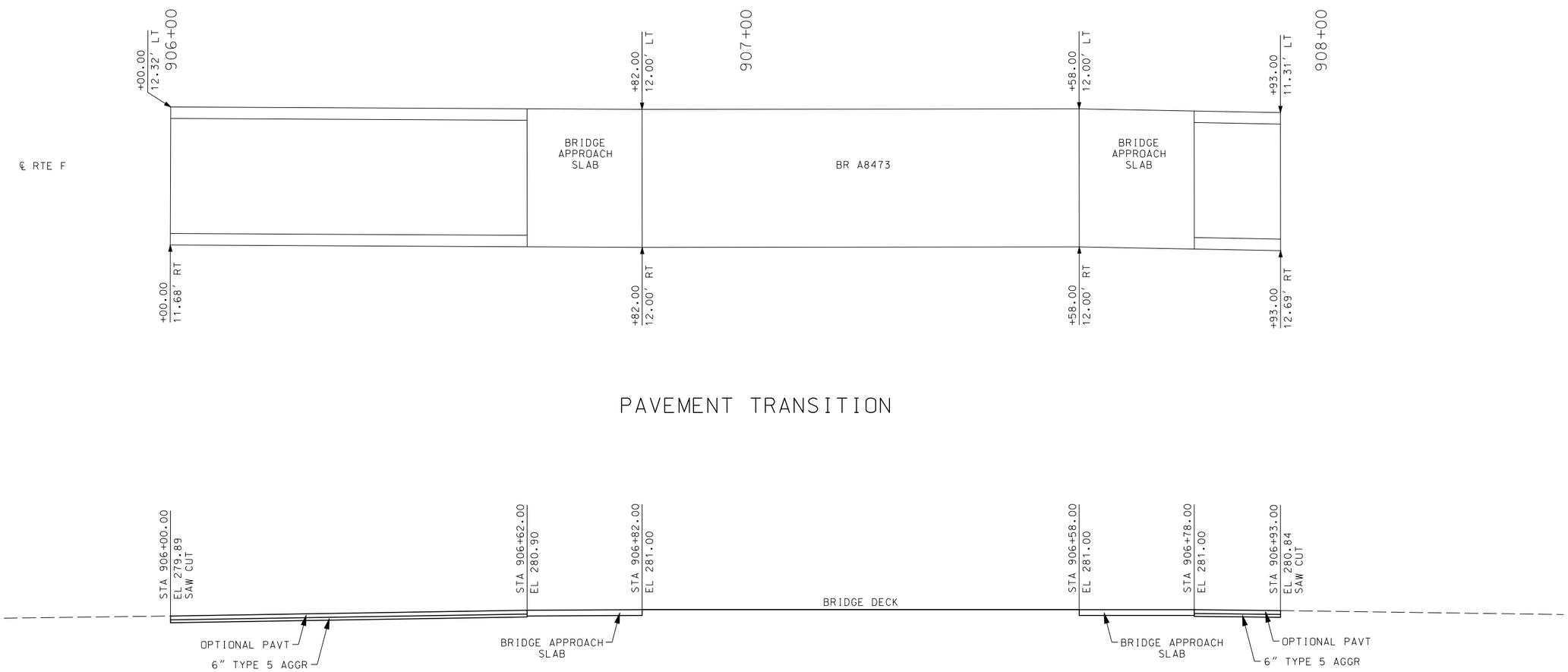

PAVEMENT TRANSITION

NOTE: SAW CUTS AT NO DIRECT PAY.

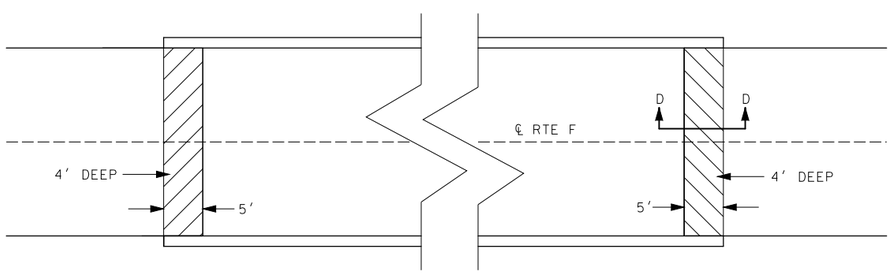

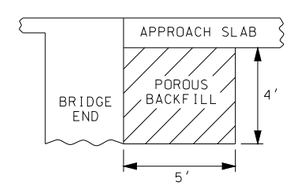

SECTION D-D

POROUS BACKFILL

DRAWING NOT TO SCALE. FOLLOW DIMENSIONS.

STATE OF MISSOURI
CHRIS E. BERRY
NUMBER PE-2001018707
PROFESSIONAL ENGINEER

THIS SHEET HAS BEEN SIGNED, SEALED AND DATED ELECTRONICALLY.

DATE PREPARED	
9/23/2016	
ROUTE F	STATE MO
DISTRICT SE	SHEET NO. 8
COUNTY NEW MADRID	
JOB NO. J9S3147	
CONTRACT ID.	
PROJECT NO.	
BRIDGE NO.	

DATE	DESCRIPTION

IF A SEAL IS PRESENT ON THIS SHEET IT HAS BEEN ELECTRONICALLY SEALED AND DATED.

MISSOURI HIGHWAYS AND TRANSPORTATION COMMISSION

105 WEST CAPITOL
JEFFERSON CITY, MO 65102
1-888-ASK-MODOT (1-888-275-6636)

PAVEMENT DETAILS
POROUS BACKFILL
SPECIAL SHEET 2 OF 2

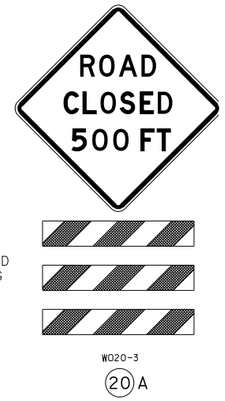

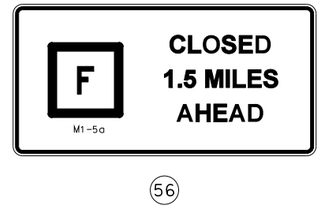

TRAFFIC CONTROL LEGEND

- SIGN
- BARRICADE
- TYPE B WARNING LIGHT

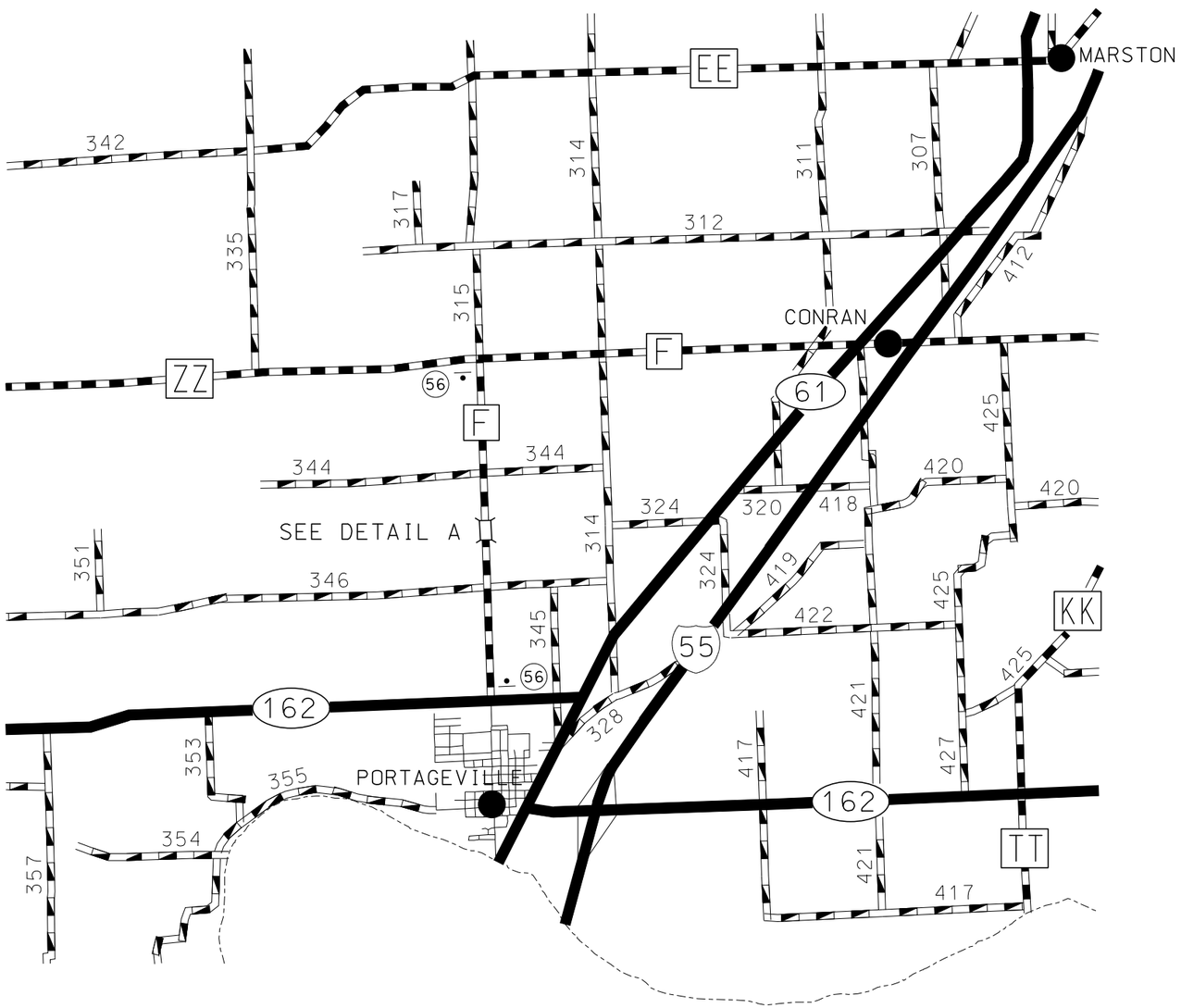

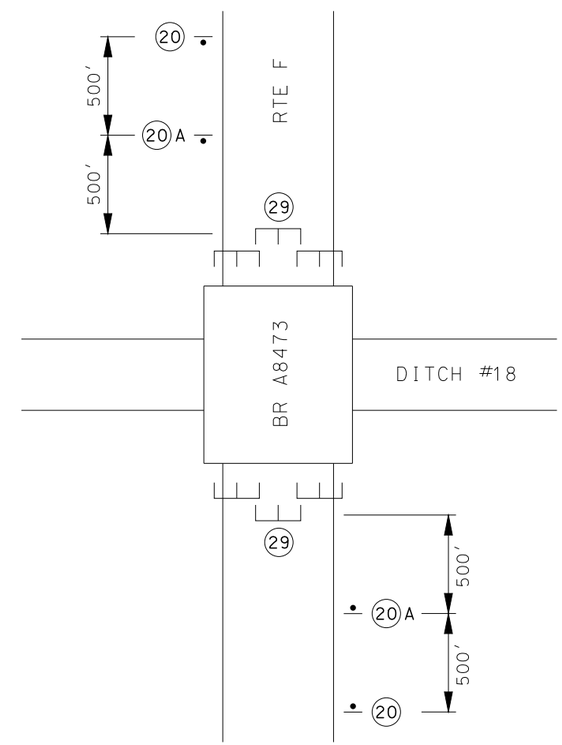

NOTE:

SIGN SPACING IS 500'. DISTANCE MAY BE ADJUSTED TO FIELD CONDITIONS.

USE IN PLACE ALL SIGNS WHICH DO NOT CONFLICT WITH THIS PLAN. COVER AND/OR REMOVE CONFLICTING SIGNS.

QUANTITY FOR #56 SIGNS ARE FOR A HOMOGENOUS PRODUCT PER SIGN. SUBSTITUTION OF SIGN BLANKS WITH BOLTED PLATES WILL BE ALLOWED FOR NO ADDITIONAL COMPENSATION.

DRAWING NOT TO SCALE. FOLLOW DIMENSIONS.

STATE OF MISSOURI
CHRIS E. BERRY
NUMBER PE-2001018707
PROFESSIONAL ENGINEER

THIS SHEET HAS BEEN SIGNED, SEALED AND DATED ELECTRONICALLY.

DATE PREPARED	9/23/2016
ROUTE	F
STATE	MO
DISTRICT	SE
SHEET NO.	9
COUNTY	NEW MADRID
JOB NO.	J9S3147
CONTRACT ID.	
PROJECT NO.	
BRIDGE NO.	

DATE	DESCRIPTION

MISSOURI HIGHWAYS AND TRANSPORTATION COMMISSION
105 WEST CAPITOL
JEFFERSON CITY, MO 65102
1-888-ASK-MODOT (1-888-275-6636)

TRAFFIC CONTROL
SHEET 1 OF 1

IF A SEAL IS PRESENT ON THIS SHEET IT HAS BEEN ELECTRONICALLY SEALED AND DATED.

TEMPORARY EROSION CONTROL LEGEND

- ROCK DITCH CHECK
- TEMPORARY BERM TYPE C
- SILT FENCE

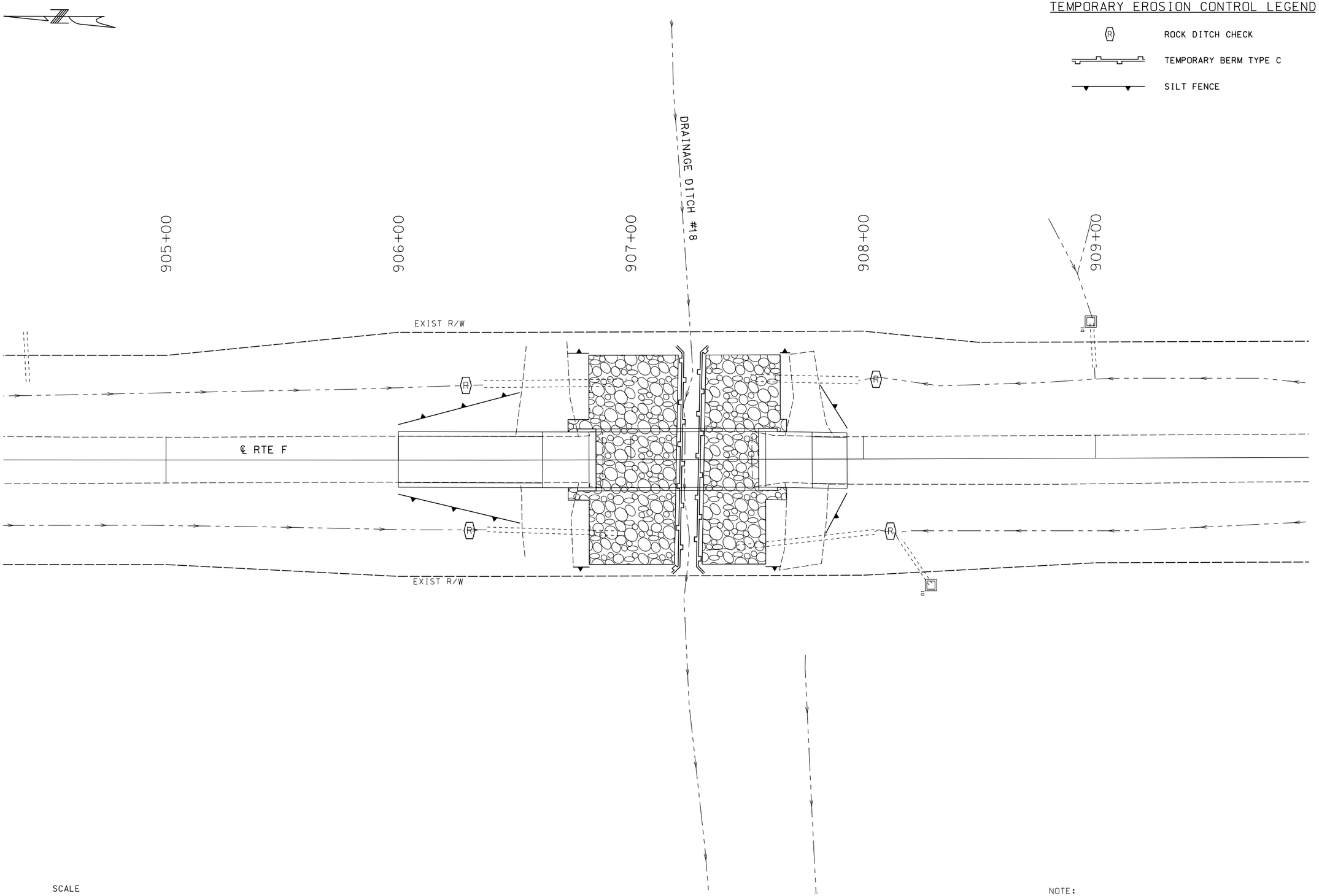

SCALE

0 20 40 60

NOTE:
SEDIMENT REMOVAL REQUIRED TO MAINTAIN SILT FENCE AND DITCH CHECKS IN PROPER WORKING CONDITION SHALL BE PERFORMED AT NO DIRECT PAY.

STATE OF MISSOURI
CHRIS E. BERRY
NUMBER PE-2001018707
PROFESSIONAL ENGINEER

THIS SHEET HAS BEEN SIGNED, SEALED AND DATED ELECTRONICALLY.

DATE PREPARED	9/23/2016
ROUTE	F
STATE	MO
DISTRICT	SE
SHEET NO.	10
COUNTY	NEW MADRID
JOB NO.	J9S3147
CONTRACT ID.	
PROJECT NO.	
BRIDGE NO.	

DATE	DESCRIPTION

MISSOURI HIGHWAYS AND TRANSPORTATION COMMISSION

105 WEST CAPITOL
JEFFERSON CITY, MO 65102
1-888-ASK-MODOT (1-888-275-6636)

EROSION CONTROL
SHEET 1 OF 1

IF A SEAL IS PRESENT ON THIS SHEET IT HAS BEEN ELECTRONICALLY SEALED AND DATED.

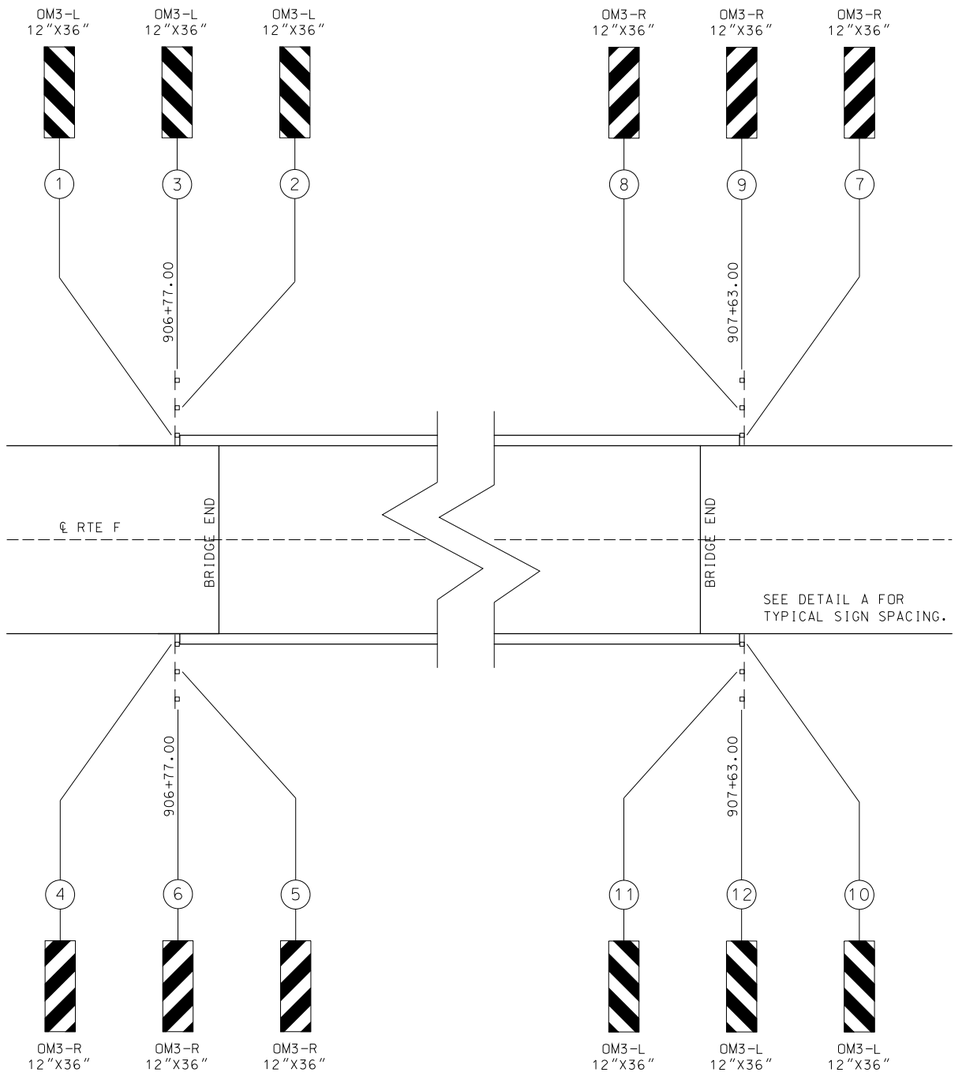

SIGNS					PERFORATED SQUARE STEEL TUBE POST 2 IN		
SIGN NO	SIGN SIZE	STATION	LOCATION	SIGN DETAIL SHEET NO	POST NO 1	TOTAL ITEM NO 9031270A	ANCHOR 12 GA ITEM NO 9031271
					LF	LF	LF
1	12X36	906+77.00	LT ℄ RTE WW	STD	3.50	3.50	3
2	12X36	906+77.00	LT ℄ RTE WW	STD	3.75	3.75	3
3	12X36	906+77.00	LT ℄ RTE WW	STD	4.00	4.00	3
4	12X36	906+77.00	RT ℄ RTE WW	STD	3.50	3.50	3
5	12X36	906+77.00	RT ℄ RTE WW	STD	3.75	3.75	3
6	12X36	906+77.00	RT ℄ RTE WW	STD	4.00	4.00	3
7	12X36	907+63.00	LT ℄ RTE WW	STD	3.50	3.50	3
8	12X36	907+63.00	LT ℄ RTE WW	STD	4.00	4.00	3
9	12X36	907+63.00	LT ℄ RTE WW	STD	4.25	4.25	3
10	12X36	907+63.00	RT ℄ RTE WW	STD	3.50	3.50	3
11	12X36	907+63.00	RT ℄ RTE WW	STD	3.75	3.75	3
12	12X36	907+63.00	RT ℄ RTE WW	STD	4.00	4.00	3
				SUBTOTAL		45.50	36
				TOTAL		46	36

STANDARD SIGN ASSEMBLIES				
SIGN NUMBER	STATION	LOCATION	FLAT SHEET FLUORESCENT SIGN DESCRIPTION, SIZES & NUMBER OF EACH	
			OM3-L (12"X36")	OM3-R (12"X36")
1	906+77.00	LT ℄ RTE WW	1	
2	906+77.00	LT ℄ RTE WW	1	
3	906+77.00	LT ℄ RTE WW	1	
4	906+77.00	RT ℄ RTE WW		1
5	906+77.00	RT ℄ RTE WW		1
6	906+77.00	RT ℄ RTE WW		1
7	907+63.00	LT ℄ RTE WW	1	
8	907+63.00	LT ℄ RTE WW	1	
9	907+63.00	LT ℄ RTE WW	1	
10	907+63.00	RT ℄ RTE WW		1
11	907+63.00	RT ℄ RTE WW		1
12	907+63.00	RT ℄ RTE WW		1
		TOTAL	6	6

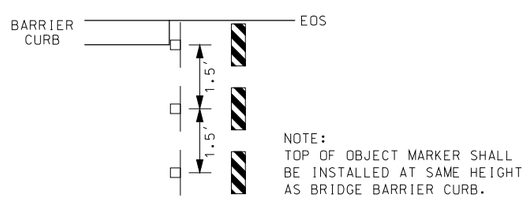

NOTE:
TOP OF OBJECT MARKER SHALL BE INSTALLED AT SAME HEIGHT AS BRIDGE BARRIER CURB.

DETAIL A

SIGN SUMMARY				
STANDARD SIGN	SIGN DETAIL SHEET NO	NO EACH	SIZE, TYPE & SQ FT	
			SIZE	FLAT SHEET FLUORESCENT * ITEM NO 9035069A
OM3-L	STD	6	12"X36"	18
OM3-R	STD	6	12"X36"	18
		TOTAL		36

* ORANGE, YELLOW & YELLOW/GREEN

DRAWING NOT TO SCALE. FOLLOW DIMENSIONS.

STATE OF MISSOURI
CHRIS E. BERRY
NUMBER PE-2001018707
PROFESSIONAL ENGINEER

THIS SHEET HAS BEEN SIGNED, SEALED AND DATED ELECTRONICALLY.

DATE PREPARED 9/23/2016

ROUTE	STATE
F	MO
DISTRICT	SHEET NO.
SE	11

COUNTY: NEW MADRID
JOB NO. J9S3147
CONTRACT ID.
PROJECT NO.
BRIDGE NO.

DESCRIPTION	DATE

IF A SEAL IS PRESENT ON THIS SHEET IT HAS BEEN ELECTRONICALLY SEALED AND DATED.

MISSOURI HIGHWAYS AND TRANSPORTATION COMMISSION
105 WEST CAPITOL
JEFFERSON CITY, MO 65102
1-888-ASK-MODOT (1-888-275-6636)

TYPE 3 OBJECT MARKERS
SIGNING SHEET 1 OF 1

SEC/SUR 13/18 TWP 21N RGE 12E/13E

(22'-28'-22') CONTINUOUS CONCRETE SOLID SLAB SPANS

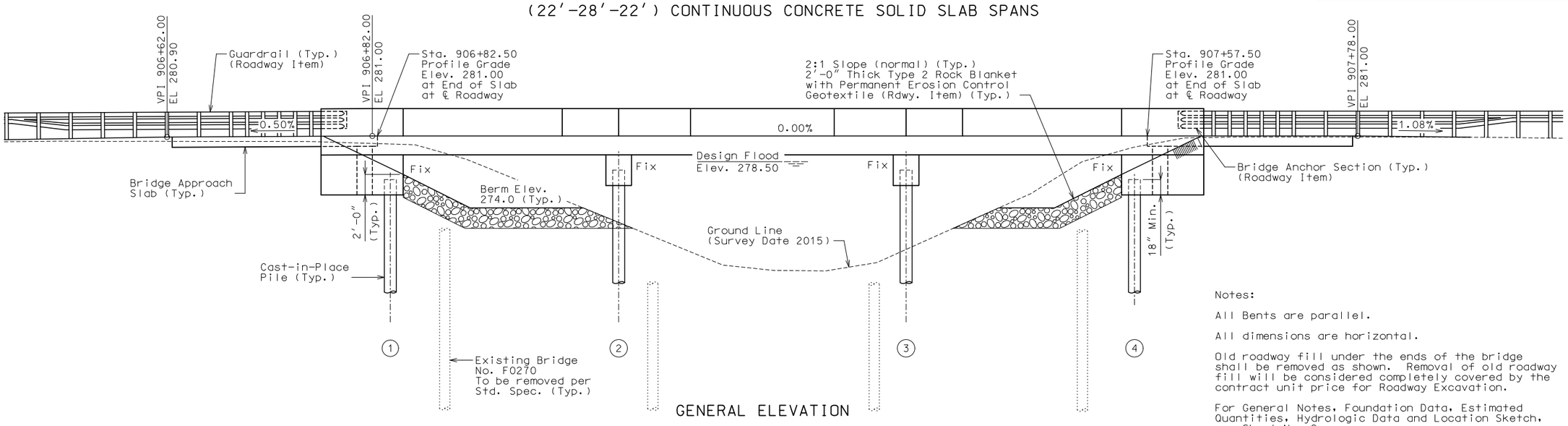

GENERAL ELEVATION

Notes:

All Bents are parallel.

All dimensions are horizontal.

Old roadway fill under the ends of the bridge shall be removed as shown. Removal of old roadway fill will be considered completely covered by the contract unit price for Roadway Excavation.

For General Notes, Foundation Data, Estimated Quantities, Hydrologic Data and Location Sketch, see Sheet No. 2.

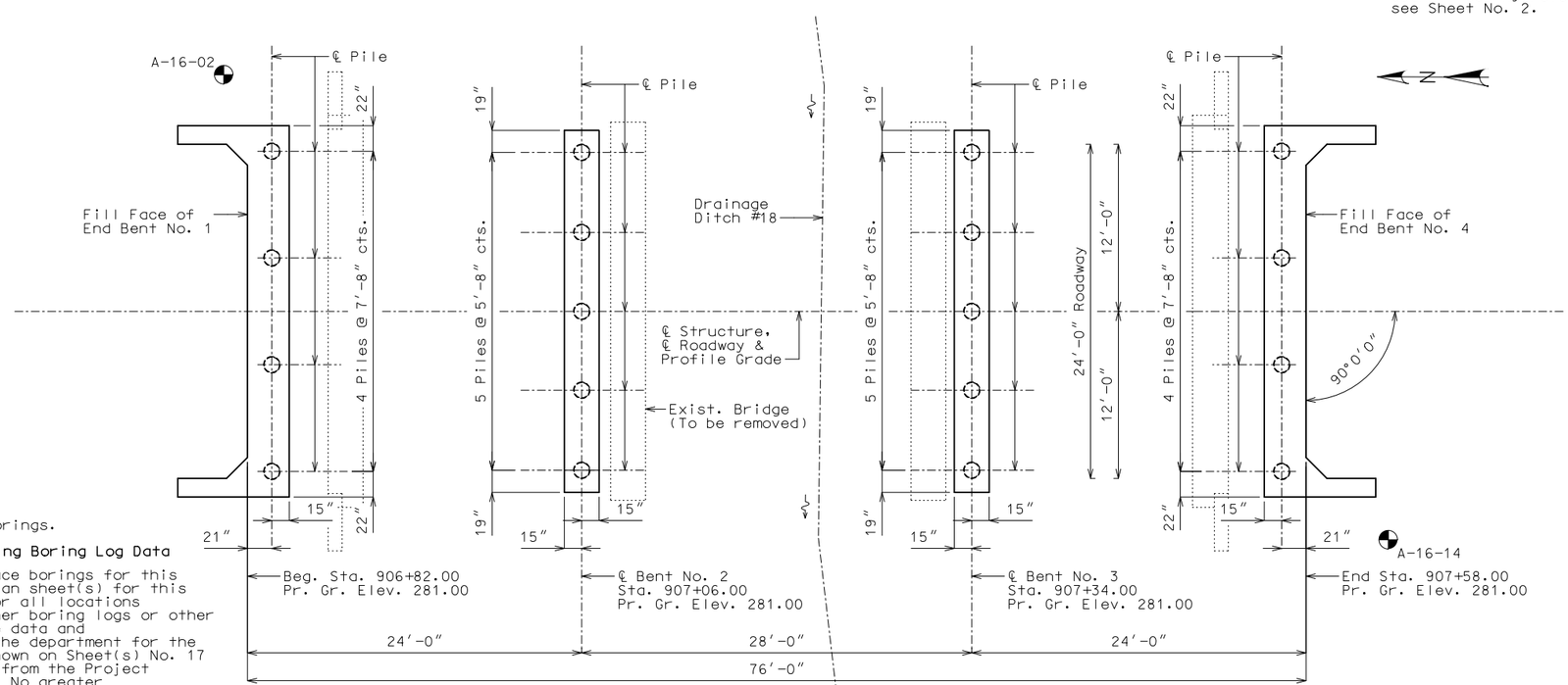

PLAN

"◐" Indicates location of borings.

Notice and Disclaimer Regarding Boring Log Data

The locations of all subsurface borings for this structure are shown on the plan sheet(s) for this structure. The boring data for all locations indicated, as well as any other boring logs or other factual records of subsurface data and investigations performed by the department for the design of the project, are shown on Sheet(s) No. 17 thru 19 or will be available from the Project Contact upon written request. No greater significance or weight should be given to the boring data depicted on the plan sheets than is given to the subsurface data available from the district or elsewhere.

The Commission does not represent or warrant that any such boring data accurately depicts the conditions to be encountered in constructing this project. A contractor assumes all risks it may encounter in basing its bid prices, time or schedule of performance on the boring data depicted here or those available from the district, or on any other documentation not expressly warranted, which the contractor may obtain from the Commission.

Detailed JUN 2016
Checked JUN 2016

Note: This drawing is not to scale. Follow dimensions.

Sheet No. 1 of 19

B.M.: #1 ELEV. 276.78, CPS SOUTH SIDE POWER POLE.
LOCATED 38.7 FT. LEFT OF ℄ RTE. F STA. 900+24.6.

BRIDGE: ROUTE F OVER DRAINAGE DITCH #18

ROUTE F FROM ROUTE 22 TO ROUTE 162

ABOUT 1.5 MILES SOUTH OF ROUTE 22

STA. 906+82.00 (℄ ROUTE F)

STD. 606.22
STD. 609.00
STD. 617.10
STD. 706.35

STATE OF MISSOURI
CHRISTOPHER T. WILLIAMS
NUMBER PE-29410
PROFESSIONAL ENGINEER
THIS SHEET WAS SEALED AND DATED ELECTRONICALLY

DATE PREPARED 9/12/2016	
ROUTE F	STATE MO
DISTRICT BR	SHEET NO. 1
COUNTY NEW MADRID	
JOB NO. J9S3147	
CONTRACT ID.	
PROJECT NO.	
BRIDGE NO. A8473	

DESCRIPTION	DATE

IF A SEAL IS PRESENT ON THIS SHEET IT HAS BEEN ELECTRONICALLY SEALED AND DATED

MISSOURI HIGHWAYS AND TRANSPORTATION COMMISSION
105 WEST CAPITOL
JEFFERSON CITY, MO 65102
1-888-ASK-MODOT (1-888-275-6636)

EFK•Moen, LLC
Civil Engineering Design
13523 Barrett Parkway Dr
Suite 250
St. Louis, MO 63021
Phone 314-394-3100
Missouri Certificate of Authority: 001578

REV.

Y:\16002 MoDOT New Madrid Bridges\DGN\Bridge\Final\Plotsheets\J9S3147-Rte F\B_A8473_001_J9S3147_Plan & Elev.dgn 3:17:35 PM 9/12/2016

General Notes

Design Specifications:

2012 AASHTO LRFD Bridge Design Specifications (6th Ed.) and 2013 Interim Revisions
2011 AASHTO Guide Specifications for LRFD Seismic Bridge
Design (2nd Ed.) and 2014 Interim Revisions (Seismic Details)
Seismic Performance Category = C

Design Loading:

Vehicular = HL-93
Future Wearing Surface = 35 lb/sf
Earth = 120 lb/cf
Equivalent Fluid Pressure = 45 lb/cf

Design Unit Stresses

Class B-1 Concrete (Substructure)	f'c = 4,000 psi
Class B-1 Concrete (Safety Barrier Curb & CIP Piles)	f'c = 4,000 psi
Class B-2 Concrete (Superstructure, except Safety Barrier Curb)	f'c = 4,000 psi
Reinforcing Steel (Grade 60)	fy = 60,000 psi
Steel Pipe Pile (ASTM A252 Grade 3)	fy = 45,000 psi

Joint Filler:

All joint filler shall be in accordance with Sec 1057 for preformed sponge rubber expansion and partition joint filler, except as noted.

Reinforcing Steel:

Minimum clearance to reinforcing steel shall be 1½", unless otherwise shown.

Traffic Handling:

Structure to be closed during construction. See roadway plans for traffic control.

Miscellaneous:

Outline of old work is indicated by light dashed lines. Heavy lines indicate new work.

Estimated Quantities

	Item		Substr.	Superstr.	Total
	Class 1 Excavation	cu. yd.	60		60
	Removal of Bridges (F0270)	lump sum			1
	Bridge Approach Slab (Minor Road)	sq. yd.		109	109
	Galvanized Cast-in-Place Concrete Piles (14 in)	linear foot	724		724
	Dynamic Pile Testing	each	4		4
	Class B-1 Concrete (Substructure)	cu. yd.	26.6		26.6
	Class B-2 Concrete (Superstructure Solid Slab)	cu. yd.		153.9	153.9
*	Safety Barrier Curb	linear foot		172	172
	Reinforcing Steel (Bridges)	pound		6300	6300
	Reinforcing Steel (Epoxy Coated)	pound		16840	16840
	Slab Drains	each		12	12
	Vertical Drain at End Bents	each			2

* Safety barrier curb shall be cast-in-place option or slip-form option.

All concrete above the construction joint in the end bents is included with the Superstructure Quantities.

All reinforcement in the end bents is included with the Superstructure Quantities.

All concrete in the intermediate bent caps is included with the Superstructure Quantities.

All reinforcement in the intermediate bent caps is included with the Superstructure Quantities.

All reinforcement in cast-in-place piling at end bents is included in the Superstructure Quantities.

All reinforcement in cast-in-place piling at intermediate bents in included in the Superstructure Quantities for Intermediate Bents.

FOUNDATION DATA

	Bent No.		1	2	3	4
Load Bearing Pile	Pile Type and Size		CIP 14"	CIP 14"	CIP 14"	CIP 14"
	CIP Type		Foundation	Trestle	Trestle	Foundation
	Number	ea	4	5	5	4
	Approximate Length per Each	ft	38	42	42	38
	Pile Driving Verification Method		DT	DT	DT	DT
	Minimum Nominal Axial Compressive Resistance	kip	229	246	246	229
	Minimum Tip Penetration (Elev.)	ft	250.5	245.1	245.1	250.5
	Criteria for Minimum Tip Penetration		Lateral Stability	Lateral Stability	Lateral Stability	Lateral Stability
	Hammer Energy Required	ft-lb	8000	8000	8000	8000

Piles at all bents to be galvanized. See special provisions.

Load Bearing Pile: Minimum Nominal Axial Compressive Resistance = Maximum Factored Loads/Resistance Factor

DT = Dynamic Testing

Hydrologic Data

Drainage Area = 20.0 mi²
Design Flood Frequency = 50 years
Design Flood Discharge = 1130 cfs
Design Flood (D.F.) Elevation = 278.50
Base Flood (100-year)
Base Flood Elevation = 278.68
Base Flood Discharge = 1210 cfs
Estimated Backwater = 0.99 ft
Average Velocity thru Opening = 2.64 ft/s
Freeboard (50-year)
Freeboard = 0.40 ft
Roadway Overtopping
Overtopping Flood Discharge = > 1370 cfs
Overtopping Flood Frequency = > 500 years
Design Elevation = 280.16

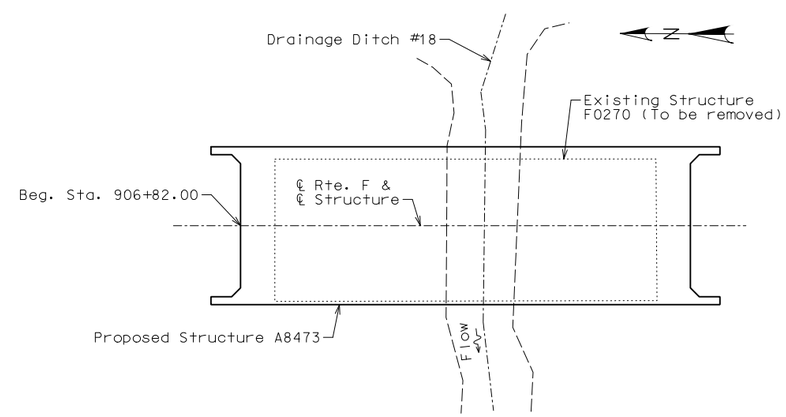

LOCATION SKETCH

STATE OF MISSOURI
CHRISTOPHER T. WILLIAMS
NUMBER PE-29410
PROFESSIONAL ENGINEER
THIS SHEET HAS BEEN SIGNED, SEALED AND DATED ELECTRONICALLY

DATE PREPARED 8/16/2016
ROUTE F | STATE MO
DISTRICT BR | SHEET NO. 2
COUNTY NEW MADRID
JOB NO. J9S3147
CONTRACT ID.
PROJECT NO.
BRIDGE NO. A8473

DESCRIPTION	DATE

IF A SEAL IS PRESENT ON THIS SHEET IT HAS BEEN ELECTRONICALLY SEALED AND DATED

MISSOURI HIGHWAYS AND TRANSPORTATION COMMISSION
105 WEST CAPITOL
JEFFERSON CITY, MO 65102
1-888-ASK-MODOT (1-888-275-6636)

EFK•Moen, LLC
Civil Engineering Design
13523 Barrett Parkway Dr
Suite 250
St. Louis, MO 63021 Phone 314-394-3100
Missouri Certificate of Authority: 001578

REV.

Detailed JUN 2016
Checked JUN 2016

Note: This drawing is not to scale. Follow dimensions.

Y:\16002 MoDOT New Madrid Bridges\DGN\Bridge\Final\Plotsheets\J9S3147-Rte F\B_A8473_002_J9S3147_Gen Notes.dgn 2:20:55 PM 8/16/2016

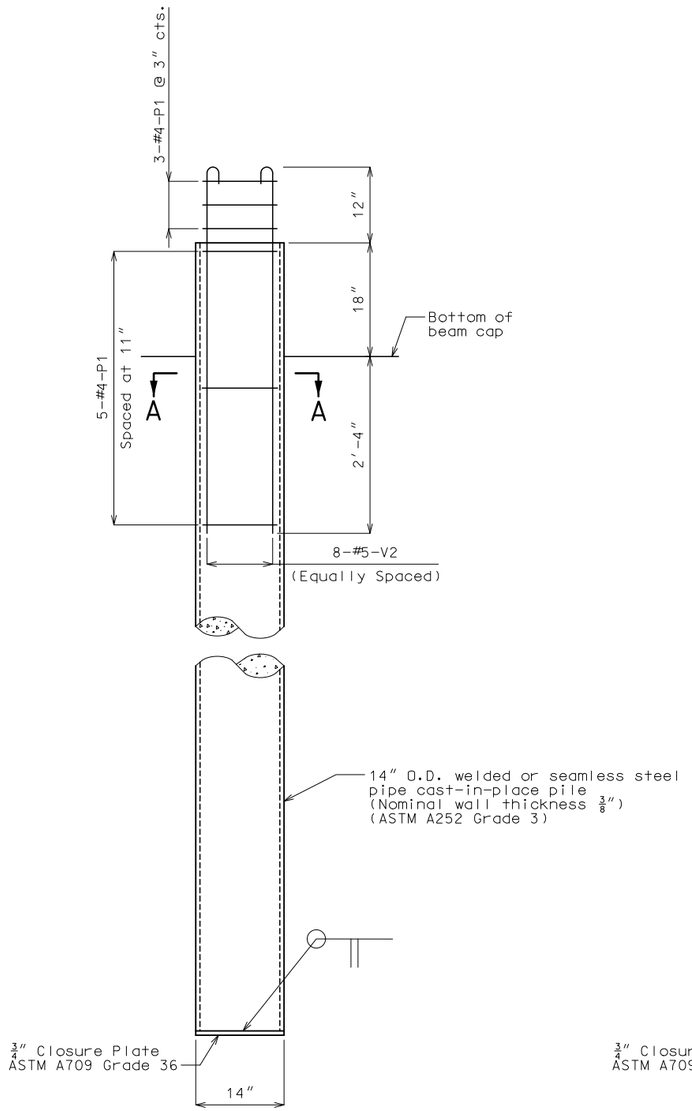

WELDED OR SEAMLESS STEEL PIPE
CAST-IN-PLACE PILE
END BENTS 1 & 4

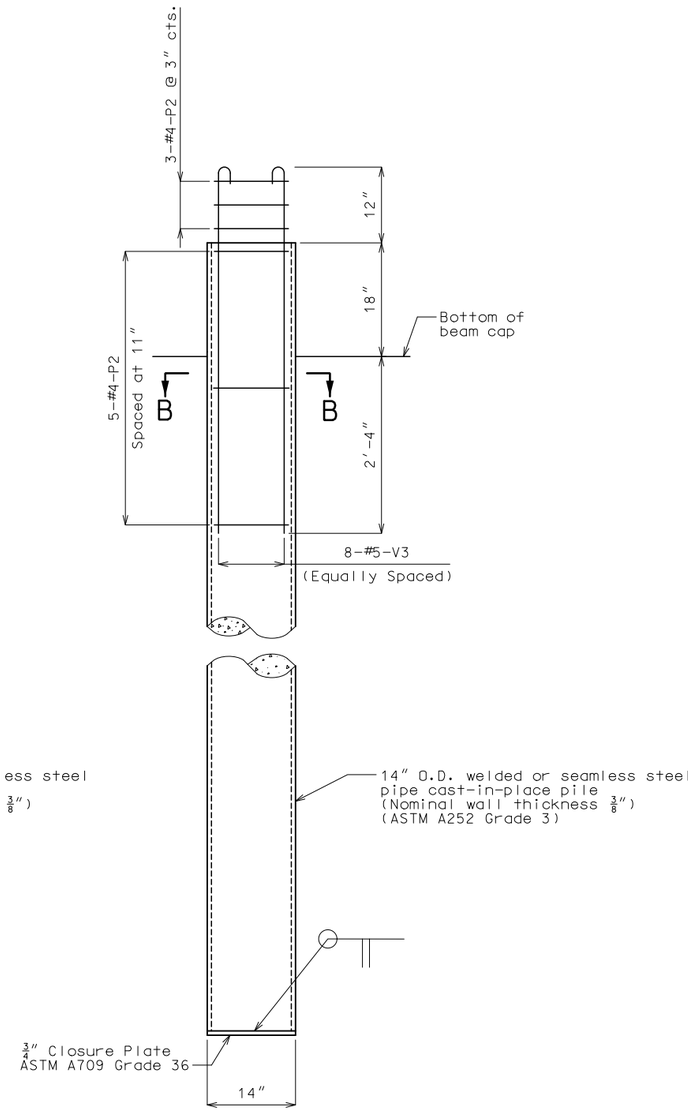

WELDED OR SEAMLESS STEEL PIPE
CAST-IN-PLACE PILE
INT. BENTS 2 & 3

Notes:

All concrete for cast-in-place piles shall be Class B-1.

The minimum wall thickness of any spot or local area of any type shall not be more than 12.5% under the specified nominal wall thickness.

Closure plates shall be required for tips of pipe piles and shall not project beyond the outside diameter of the pipe piles. Satisfactory weldments may be made by beveling tip ends of pipe or by use of inside backing rings. In either case, proper gaps shall be used to obtain weld penetration full thickness of pipe. Payment for furnishing and installing closure plates will be considered completely covered by the contract unit price for Cast-in-Place Concrete Piles.

All splices of shells for cast-in-place concrete piles shall be made watertight and to the full strength of the shell above and below the splice to permit hard driving without damage. All shells damaged during driving shall be replaced without cost to the State. Shell sections used for splicing shall be at least 5'-0" in length. The splice at the tapered section shall be at least 3'-0" below the streambed for intermediate trestle type bents.

At the contractor's option, the hooks of V-Bars embedded in the beam cap may be oriented inward or outward for Seismic Category A. Bending the hook outward, away from the column core, is not allowed for Seismic Category B, C, or D.

All closed end cast in place piles shall be galvanized to the minimum galvanize elevation in accordance with Bridge Special Provisions.

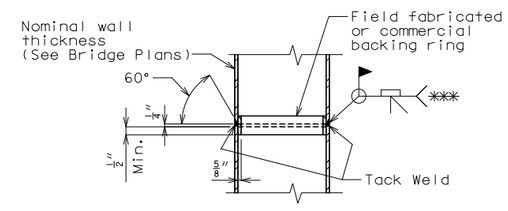

STEEL PIPE PILE SPLICE

*** Galvanization material shall be removed for a minimum of 2" around weld locations. The method used for removing galvanizing material shall be as approved by the Engineer.

Galvanizing shall be repaired by hot-stick zinc alloy method.

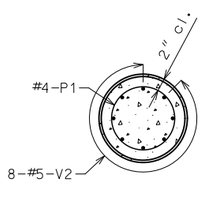

SECTION A-A

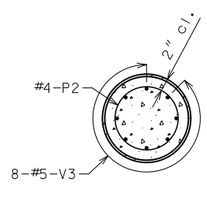

SECTION B-B

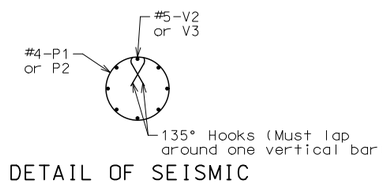

DETAIL OF SEISMIC
STIRRUP BAR

DETAILS OF CAST-IN-PLACE PILE

Detailed JUN 2016
Checked JUN 2016

Note: This drawing is not to scale. Follow dimensions.

STATE OF MISSOURI
CHRISTOPHER T. WILLIAMS
NUMBER PE-29410
PROFESSIONAL ENGINEER
THIS SHEET HAS BEEN SIGNED, SEALED AND DATED ELECTRONICALLY

DATE PREPARED	
8/12/2016	
ROUTE F	STATE MO
DISTRICT BR	SHEET NO. 3
COUNTY NEW MADRID	
JOB NO. J9S3147	
CONTRACT ID.	
PROJECT NO.	
BRIDGE NO. A8473	

DESCRIPTION	DATE

IF A SEAL IS PRESENT ON THIS SHEET IT HAS BEEN ELECTRONICALLY SEALED AND DATED

MISSOURI HIGHWAYS AND TRANSPORTATION COMMISSION
105 WEST CAPITOL
JEFFERSON CITY, MO 65102
1-888-ASK-MODOT (1-888-275-6636)

EFK•Moen, LLC
Civil Engineering Design
13523 Barrett Parkway Dr
Suite 250
St. Louis, MO 63021
Phone 314-394-3100
Missouri Certificate of Authority: 001578

REV.

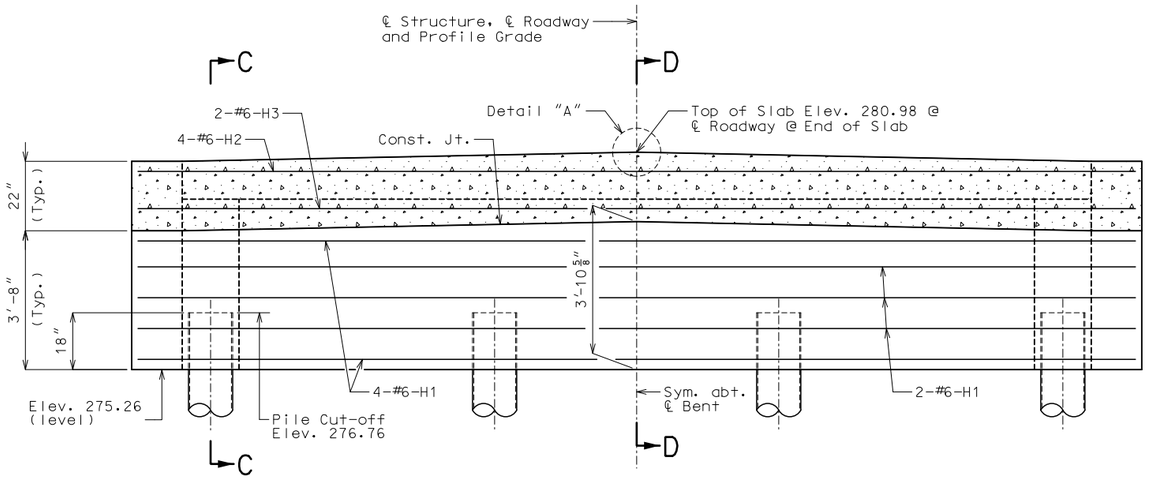

SECTION NEAR END BENT

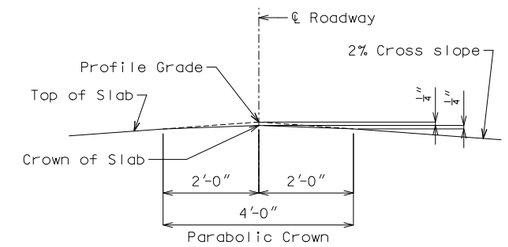

DETAIL "A"

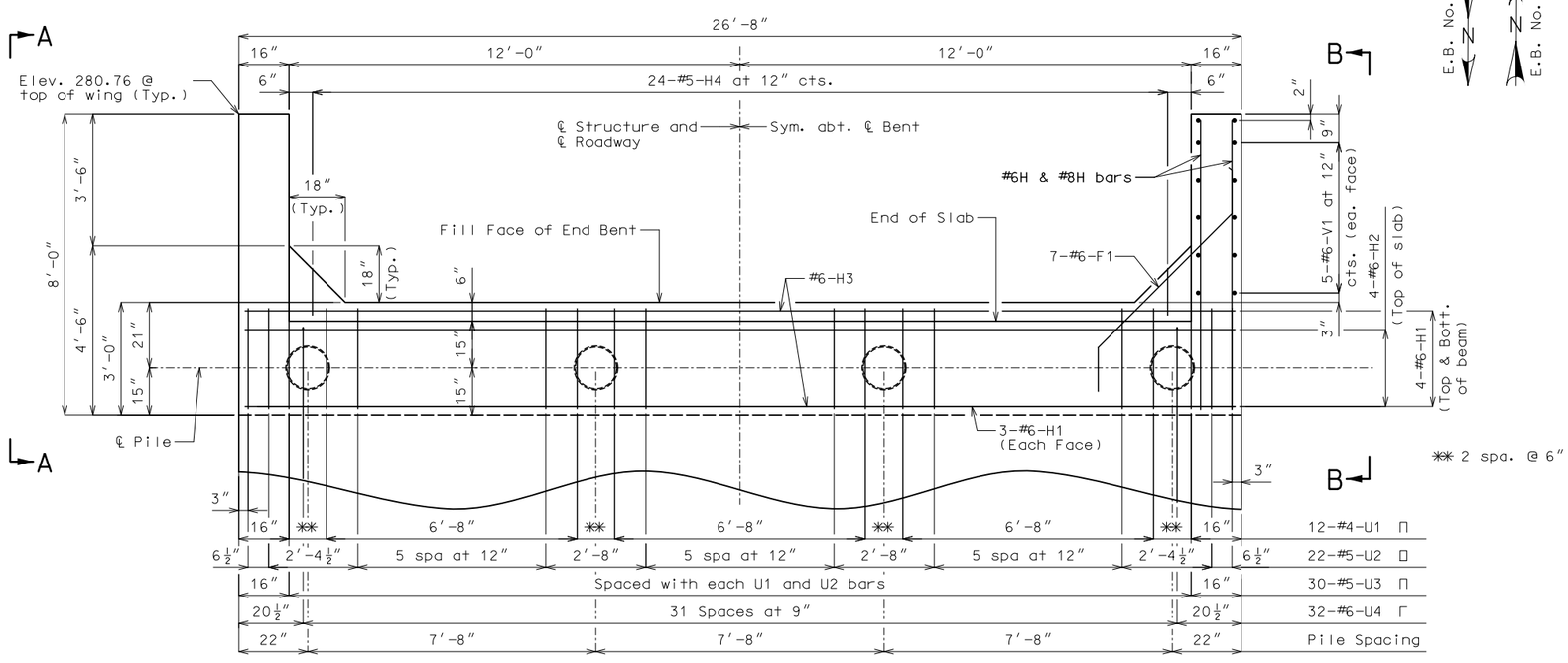

PLAN

Notes:

For details, sections and elevations of end bents not shown, see Sheet No. 5.

For details of vertical drains at end bents see Sheet No. 6.

All concrete in the end bents above the construction joint shall be Class B-2.

Slab reinforcement not shown for clarity. For details of slab and slab reinforcement, see Sheets No. 8 & 9.

For reinforecement of safety barrier curb, see Sheets No. 11 & 12.

For details of approach slab, see Sheet No. 14.

Reinforcing Steel shall be shifted to clear piles. U bars shall clear piles by at least $1\frac{1}{2}$".

Reinforcement in wing in Plan view not shown for clarity.

END BENTS NO. 1 AND NO. 4 PLAN AND ELEVATION

Detailed JUN 2016
Checked JUN 2016

Note: This drawing is not to scale. Follow dimensions.

Y:\16002 MoDOT New Madrid Bridges\DGN\Bridge\Final\Plotsheets\J9S3147-Rte F\B_A8473_004_J9S3147_End Bents.dgn 10:50:29 AM 8/12/2016

STATE OF MISSOURI
CHRISTOPHER T. WILLIAMS
NUMBER PE-29410
PROFESSIONAL ENGINEER
THIS SHEET HAS BEEN SIGNED, SEALED AND DATED ELECTRONICALLY

DATE PREPARED	
8/12/2016	
ROUTE F	STATE MO
DISTRICT BR	SHEET NO. 4
COUNTY NEW MADRID	
JOB NO. J9S3147	
CONTRACT ID.	
PROJECT NO.	
BRIDGE NO. A8473	

DATE	DESCRIPTION

IF A SEAL IS PRESENT ON THIS SHEET IT HAS BEEN ELECTRONICALLY SEALED AND DATED

MISSOURI HIGHWAYS AND TRANSPORTATION COMMISSION
105 WEST CAPITOL
JEFFERSON CITY, MO 65102
1-888-ASK-MODOT (1-888-275-6636)

EFK•Moen, LLC
Civil Engineering Design
13523 Barrett Parkway Dr
Suite 250
St. Louis, MO 63021
Phone 314-394-3100
Missouri Certificate of Authority: 001578

REV.

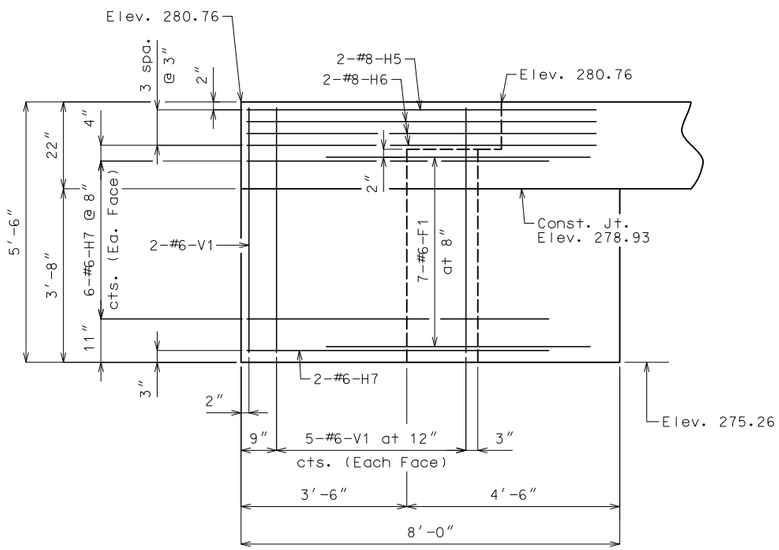

ELEVATION A-A

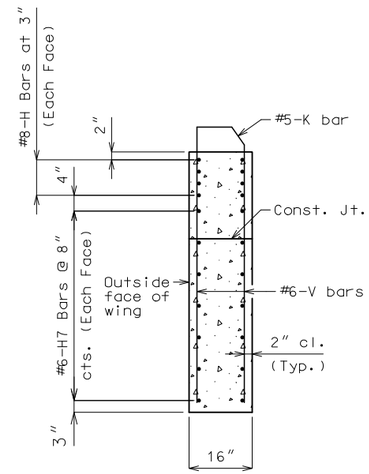

TYPICAL SECTION THRU WING

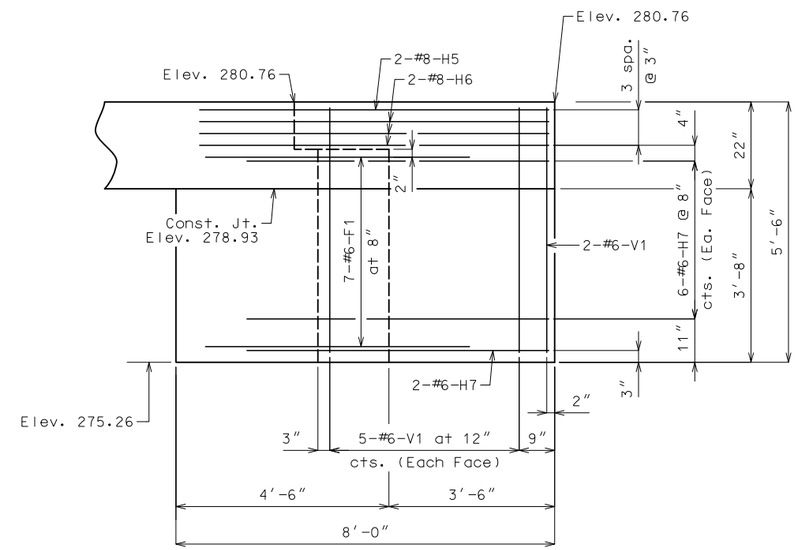

ELEVATION B-B

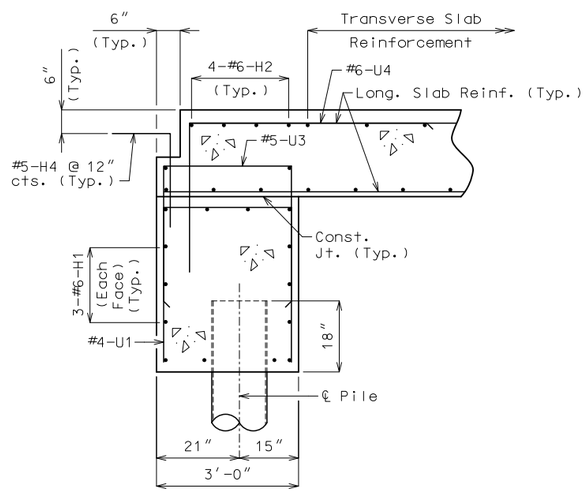

SECTION C-C

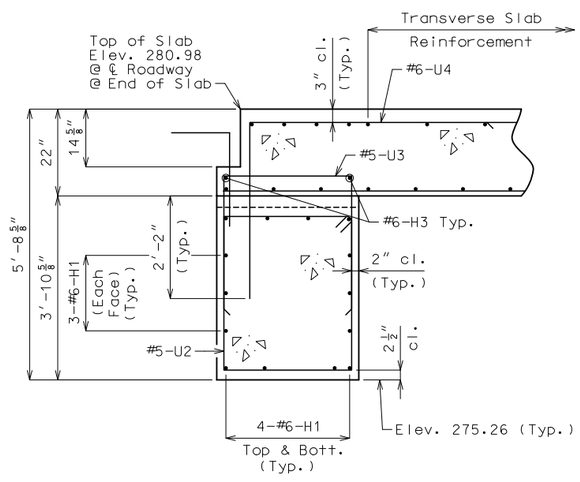

SECTION D-D

Notes:
For locations of Elevations A-A, Elevation B-B, Sections C-C and D-D, see Sheet No. 4.

For reinforcement of the saftey barrier curb not shown, see Sheet No. 12.

Substructure Quantity Table for End Bents			
Item		Quantity	
		No. 1	No. 4
Class 1 Excavation	cu. yard	30	30
Galvanized Cast-In-Place Concrete Piles (14 in.)	linear foot	152	152
Dynamic Pile Testing	each	1	1
Class B-1 Concrete (Substructure)	cu. yard	13.3	13.3

Note: These quantities are included in the Estimated Quantities table on Sheet No. 2.

END BENT DETAILS

Detailed JUN 2016
Checked JUN 2016

Note: This drawing is not to scale. Follow dimensions.

Y:\16002 MoDOT New Madrid Bridges\DGN\Bridge\Final\Plotsheets\J9S3147-Rte F\B_A8473_005_J9S3147_End Bents Details.dgn 2:52:24 PM 8/16/2016

STATE OF MISSOURI
CHRISTOPHER T. WILLIAMS
NUMBER PE-29410
PROFESSIONAL ENGINEER
THIS SHEET HAS BEEN SIGNED, SEALED AND DATED ELECTRONICALLY

DATE PREPARED	8/16/2016
ROUTE	F
STATE	MO
DISTRICT	BR
SHEET NO.	5
COUNTY	NEW MADRID
JOB NO.	J9S3147
CONTRACT ID.	
PROJECT NO.	
BRIDGE NO.	A8473

DATE	DESCRIPTION

IF A SEAL IS PRESENT ON THIS SHEET IT HAS BEEN ELECTRONICALLY SEALED AND DATED

MISSOURI HIGHWAYS AND TRANSPORTATION COMMISSION
105 WEST CAPITOL
JEFFERSON CITY, MO 65102
1-888-ASK-MODOT (1-888-275-6636)

EFK•Moen, LLC
Civil Engineering Design
13523 Barrett Parkway Dr
Suite 250
St. Louis, MO 63021
Phone 314-394-3100
Missouri Certificate of Authority: 001578

REV.

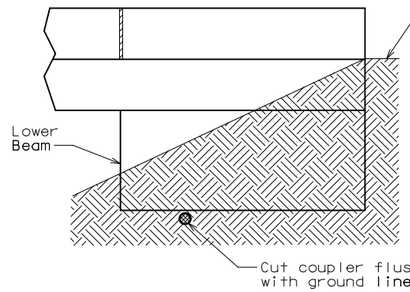

ELEVATION OF WING

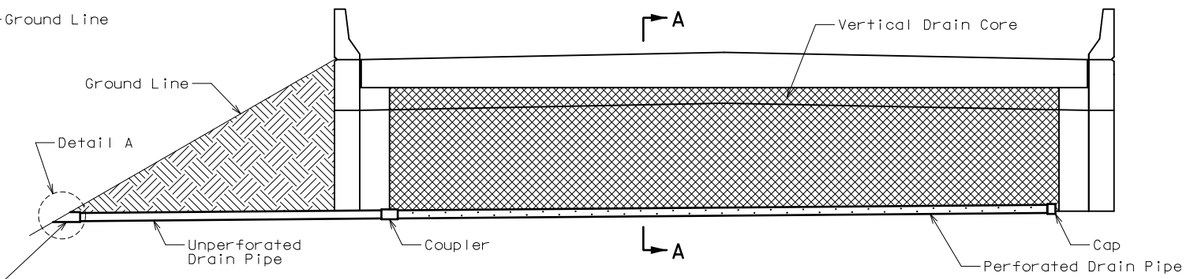

ELEVATION AT END BENT

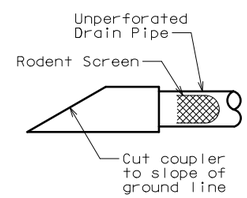

DETAIL A

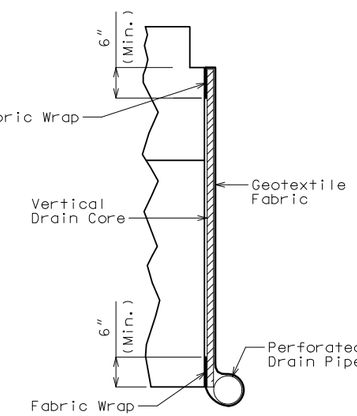

PART SECTION A-A

Note:

Drain pipe may be either 6-inch diameter corrugated metallic-coated steel pipe underdrain, 4-inch diameter corrugated polyvinyl chloride (PVC) drain pipe, or 4-inch diameter corrugated polyethylene (PE) drain pipe.

Place drain pipe at fill face of end bent and slope to lowest grade of ground line, also missing the lower beam of end bent by $1\frac{1}{2}$ inches. (See Elevation at End Bent.)

Perforated pipe shall be placed at fill face side at the bottom of end bent and plain pipe shall be used where the vertical drain ends to the exit at ground line.

VERTICAL DRAIN AT END BENTS

Detailed JUN 2016
Checked JUN 2016

Note: This drawing is not to scale. Follow dimensions.

STATE OF MISSOURI
CHRISTOPHER T. WILLIAMS
NUMBER PE-29410
PROFESSIONAL ENGINEER
THIS SHEET HAS BEEN SIGNED, SEALED AND DATED ELECTRONICALLY

DATE PREPARED	8/12/2016
ROUTE	F
STATE	MO
DISTRICT	BR
SHEET NO.	6
COUNTY	NEW MADRID
JOB NO.	J9S3147
CONTRACT ID.	
PROJECT NO.	
BRIDGE NO.	A8473

DATE	DESCRIPTION

IF A SEAL IS PRESENT ON THIS SHEET IT HAS BEEN ELECTRONICALLY SEALED AND DATED

MISSOURI HIGHWAYS AND TRANSPORTATION COMMISSION
105 WEST CAPITOL
JEFFERSON CITY, MO 65102
1-888-ASK-MODOT (1-888-275-6636)

EFK•Moen, LLC
Civil Engineering Design
13523 Barrett Parkway Dr
Suite 250
St. Louis, MO 63021
Phone 314-394-3100
Missouri Certificate of Authority: 001578

REV.

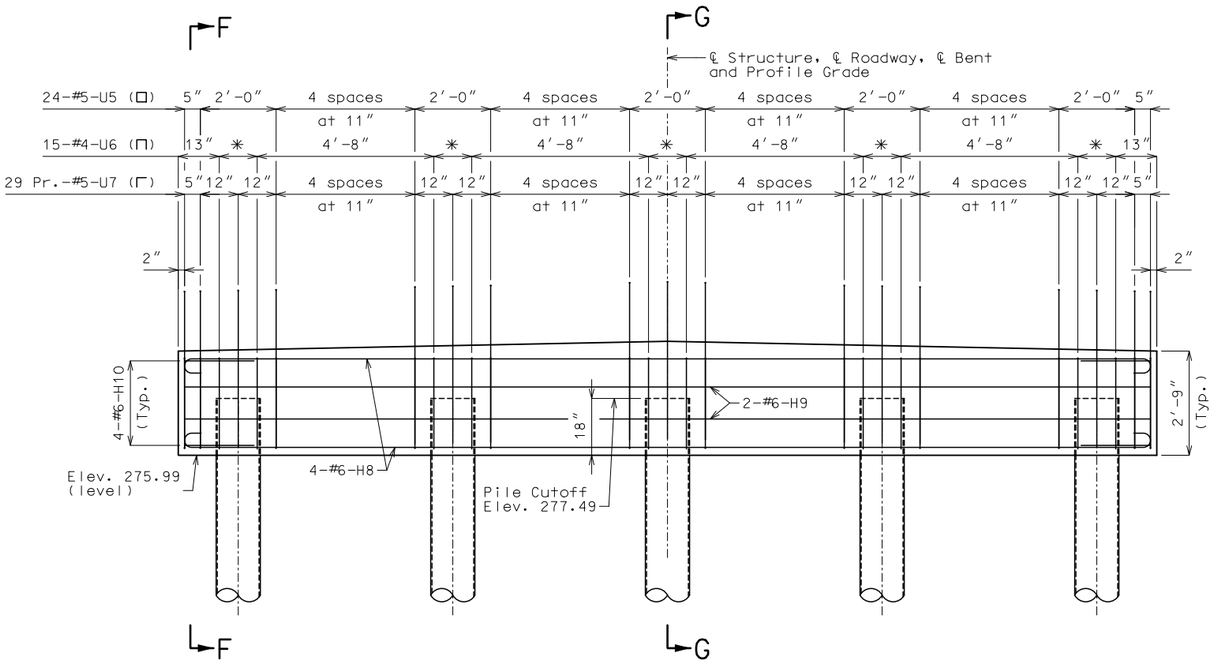

PART ELEVATION

Note: Key not shown for clarity.

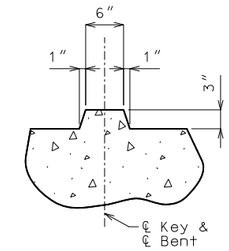

DETAIL OF KEY

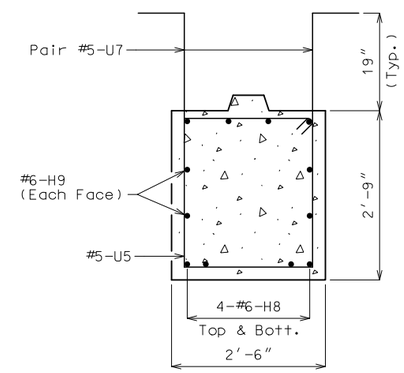

SECTION F-F

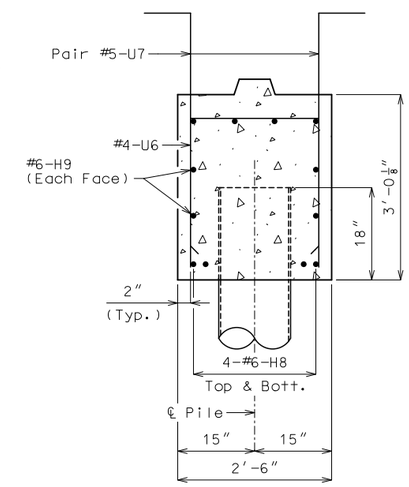

SECTION G-G

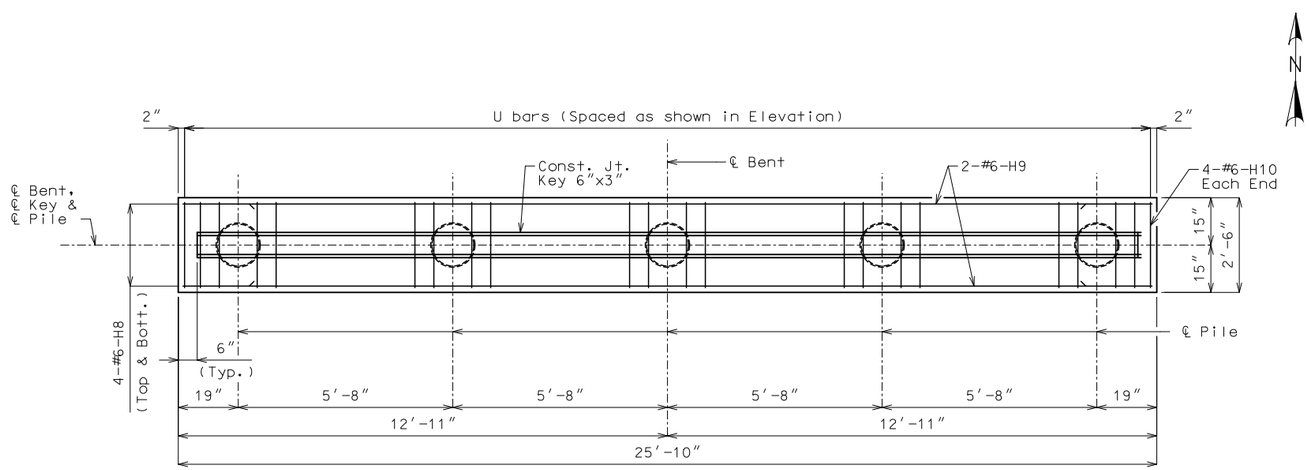

PLAN SHOWING REINFORCEMENT

Notes:

For details of cast-in-place concrete pile not shown, see Sheet No. 3.

Reinforcing steel shall be shifted to clear piles. U bars shall clear piles by at least 1½″.

For details of slab, see Sheet No. 8.

Substructure Quantity Table for Intermediate Bents			
Item		Quantity	
		No. 2	No. 3
Galvanized Cast-In-Place Concrete Piles (14 in.)	linear foot	210	210
Dynamic Pile Testing	each	1	1

Note: These quantities are included in the Estimated Quantities table on Sheet No. 2.

DETAILS OF INTERMEDIATE BENTS NO. 2 & 3

Note: This drawing is not to scale. Follow dimensions.

Sheet No. 7 of 19

Detailed JUN 2016
Checked JUN 2016

STATE OF MISSOURI
CHRISTOPHER T. WILLIAMS
NUMBER PE-29410
PROFESSIONAL ENGINEER
THIS SHEET HAS BEEN SIGNED, SEALED AND DATED ELECTRONICALLY

DATE PREPARED	
8/16/2016	
ROUTE F	STATE MO
DISTRICT BR	SHEET NO. 7
COUNTY NEW MADRID	
JOB NO. J9S3147	
CONTRACT ID.	
PROJECT NO.	
BRIDGE NO. A8473	

DESCRIPTION

DATE

IF A SEAL IS PRESENT ON THIS SHEET IT HAS BEEN ELECTRONICALLY SEALED AND DATED

MISSOURI HIGHWAYS AND TRANSPORTATION COMMISSION
105 WEST CAPITOL
JEFFERSON CITY, MO 65102
1-888-ASK-MODOT (1-888-275-6636)

EFK•Moen, LLC
Civil Engineering Design
13523 Barrett Parkway Dr
Suite 250
St. Louis, MO 63021
Phone 314-394-3100
Missouri Certificate of Authority: 001578

REV.

Y:\16002 MoDOT New Madrid Bridges\DGN\Bridge\Final\Plotsheets\J9S3147-Rte F\B_A8473_007_J9S3147_Intermediate Bents.dgn 2:53:16 PM 8/16/2016

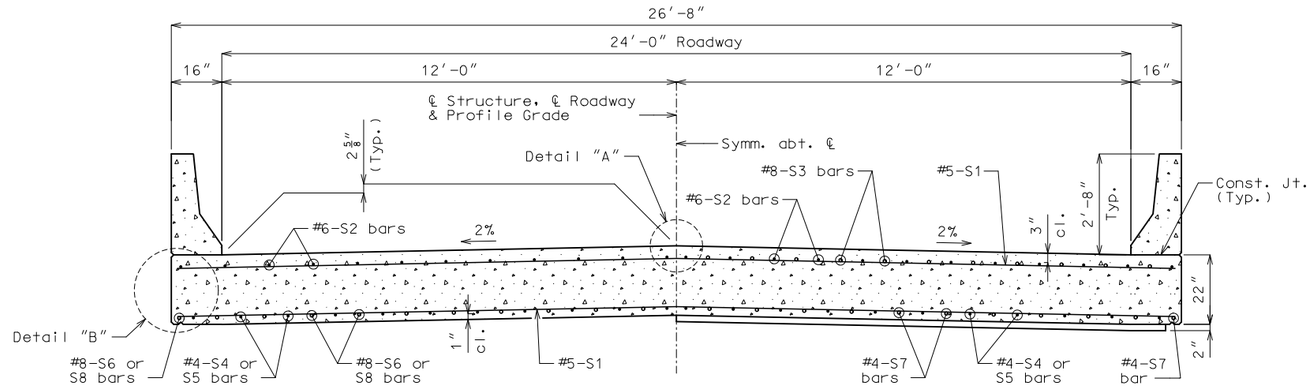

HALF SECTION
NEAR CENTER SPAN

HALF SECTION
NEAR INTERIOR BENT

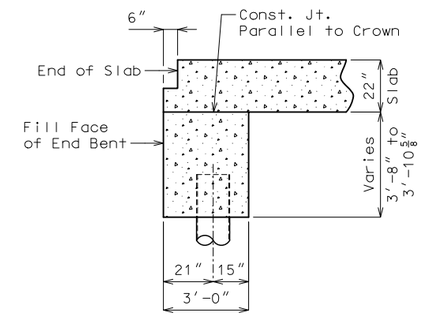

PART SECTION A-A

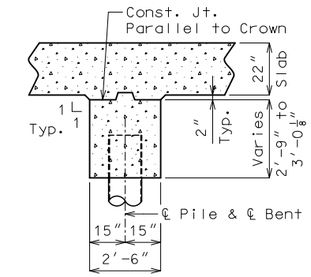

PART SECTION B-B

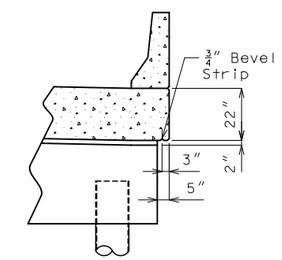

PART SECTION C-C

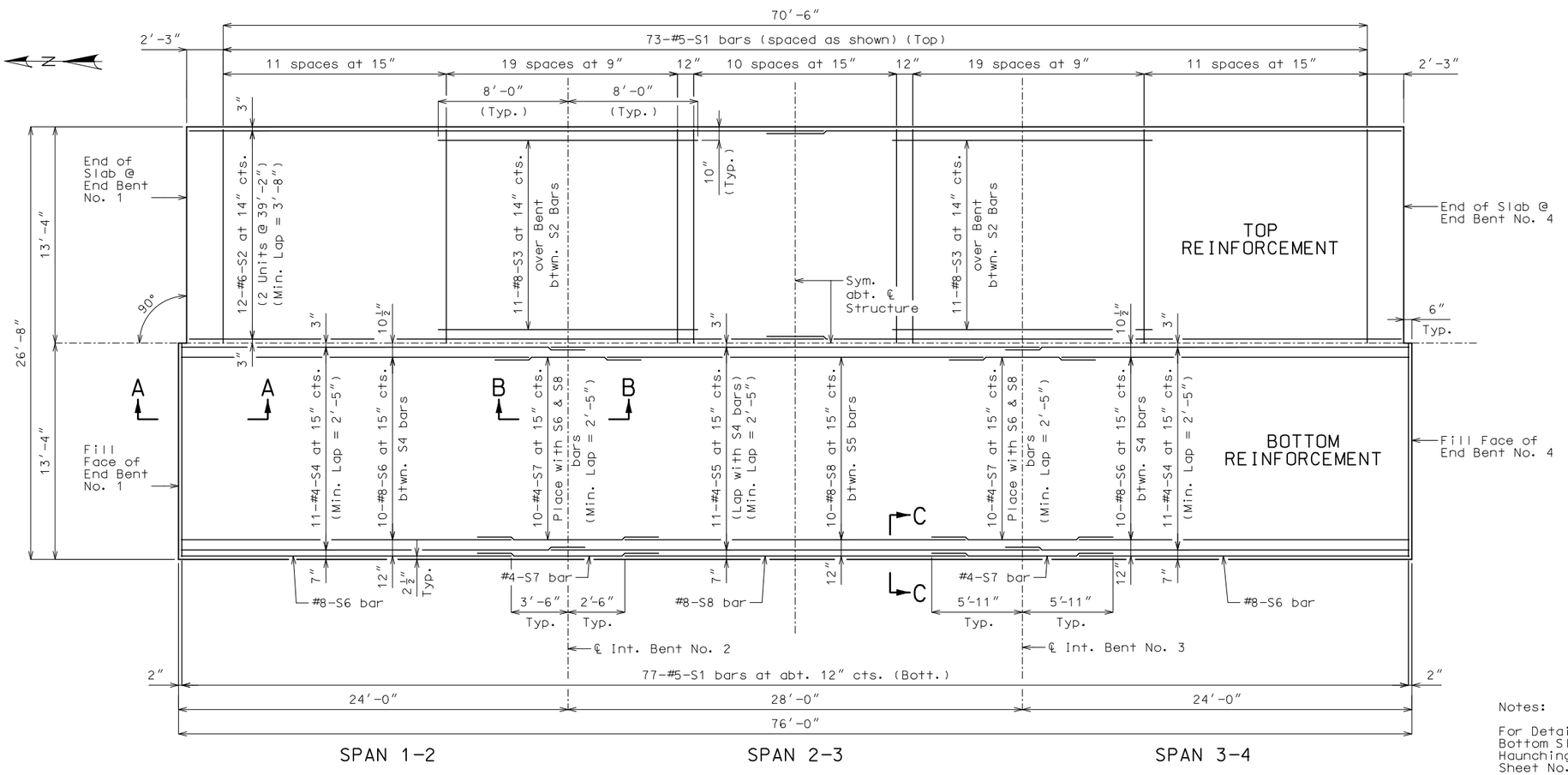

PLAN
All dimensions are horizontal, unless noted otherwise.

Notes:

For Detail "A", Detail "B", Theoretical Bottom Slab Elevations, Theoretical Slab Haunching Diagram and Camber Diagram, see Sheet No. 9.

For details and reinforcement of safety barrier curb, see Sheets No. 11, 12 & 13.

For details of slab drains, see Sheet No. 10.

For Slab Pouring Sequence, see Sheet No. 9.

SLAB PLAN AND SECTION

Detailed JUN 2016
Checked JUN 2016

Note: This drawing is not to scale. Follow dimensions.

STATE OF MISSOURI
CHRISTOPHER T. WILLIAMS
NUMBER PE-29410
PROFESSIONAL ENGINEER
THIS SHEET HAS BEEN SIGNED, SEALED AND DATED ELECTRONICALLY

DATE PREPARED	8/15/2016
ROUTE F	STATE MO
DISTRICT BR	SHEET NO. 8
COUNTY	NEW MADRID
JOB NO.	J9S3147
CONTRACT ID.	
PROJECT NO.	
BRIDGE NO.	A8473

DATE	DESCRIPTION

IF A SEAL IS PRESENT ON THIS SHEET IT HAS BEEN ELECTRONICALLY SEALED AND DATED

MISSOURI HIGHWAYS AND TRANSPORTATION COMMISSION
105 WEST CAPITOL
JEFFERSON CITY, MO 65102
1-888-ASK-MODOT (1-888-275-6636)

EFK•Moen, LLC
Civil Engineering Design
13523 Barrett Parkway Dr
Suite 250
St. Louis, MO 63021
Phone 314-394-3100
Missouri Certificate of Authority: 001578

REV.

Theoretical Bottom of Slab Elevations (Prior to forming for slab) ✱✱													
	Span (1-2) (22'-3" ℄ Brg - ℄ Bent)				Span (2-3) (28'-0" ℄ Bent - ℄ Bent)				Span (3-4) (22'-3" ℄ Bent - ℄ Brg)				
	℄ Brg	.25	.50	.75	℄ Bent	.25	.50	.75	℄ Bent	.25	.50	.75	℄ Brg
Left Gutter	278.93	278.93	278.93	278.93	278.93	278.93	278.93	278.93	278.93	278.93	278.93	278.93	278.93
℄ Roadway	279.17	279.17	279.17	279.17	279.17	279.17	279.17	279.17	279.17	279.17	279.17	279.17	279.17
Right Gutter	278.93	278.93	278.93	278.93	278.93	278.93	278.93	278.93	278.93	278.93	278.93	278.93	278.93

✱✱ Elevations are based on a constant slab thickness of 22" and include allowance for theoretical dead load deflections due to weight of slab and barrier curb.

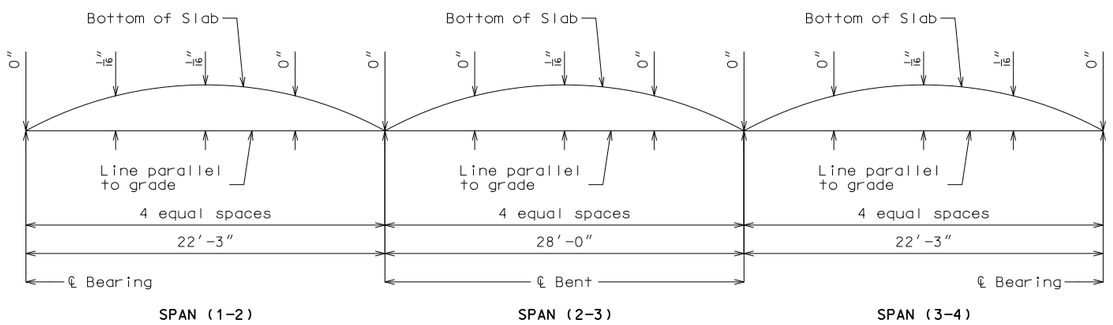

CAMBER DIAGRAM

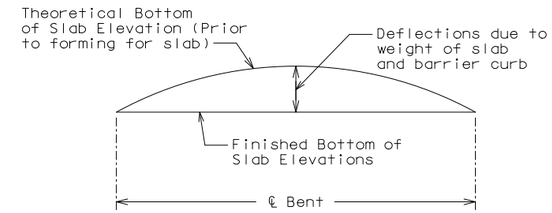

TYPICAL SLAB ELEVATIONS DIAGRAM

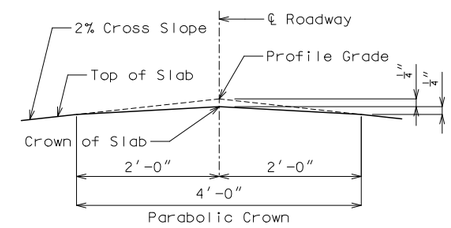

DETAIL "A"

Note: For location of Detail "A", see Sheet No. 8.

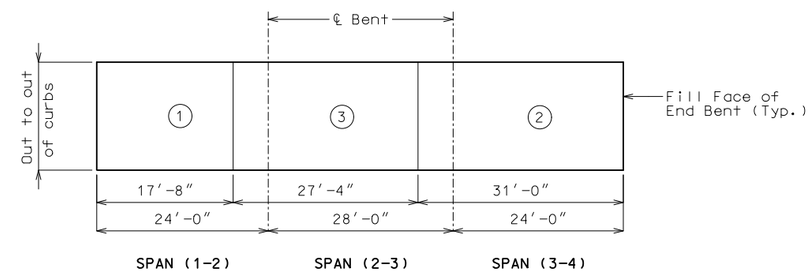

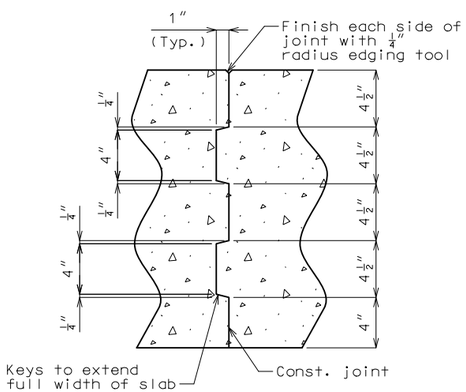

SLAB CONSTRUCTION JOINT DETAILS

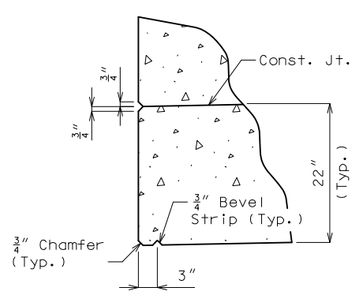

DETAIL "B"

Note: For location of Detail "B", see Sheet No. 8.

	Sequence of Pours			Min. rate of pour cu. yds./hr.
	Direction			With retarder
Basic sequence	1	2	3	25
	End to 2	1 to 3	2 to End	
Alternate pours to the basic sequence are subject to the approval of the engineer in accordance with Sec 703.				
Alternate "A" pours	1 + 2		3	25
	End to 3		2 to End	
Alternate "B" pours	1 + 2 + 3			40
	End to End			

SLAB POURING SEQUENCE

Notes:

The Contractor shall furnish an approved retarder to retard the set of the concrete to 2.5 hours and shall pour and satisfactorily finish the roadway slab at a rate of not less than 25 cubic yards per hour. The Contractor shall observe the transverse construction joint shown on the plans, unless the Contractor is equipped to pour and satisfactorily finish the roadway slab at a rate which permits a continuous pouring through some or all joints as approved by the Engineer.

SLAB DETAILS

Detailed JUN 2016
Checked JUN 2016

Note: This drawing is not to scale. Follow dimensions.

Y:\16002 MoDOT New Madrid Bridges\DGN\Bridge\Final\Plotsheets\J9S3147-Rte F\B_A8473_009_J9S3147_Slab Details.dgn 10:11:22 AM 8/15/2016

STATE OF MISSOURI
CHRISTOPHER T. WILLIAMS
NUMBER PE-29410
PROFESSIONAL ENGINEER
THIS SHEET WAS SIGNED, SEALED AND DATED ELECTRONICALLY

DATE PREPARED 8/15/2016
ROUTE F | STATE MO
DISTRICT BR | SHEET NO. 9
COUNTY NEW MADRID
JOB NO. J9S3147
CONTRACT ID.
PROJECT NO.
BRIDGE NO. A8473

DESCRIPTION	DATE

IF A SEAL IS PRESENT ON THIS SHEET IT HAS BEEN ELECTRONICALLY SEALED AND DATED

MISSOURI HIGHWAYS AND TRANSPORTATION COMMISSION
105 WEST CAPITOL
JEFFERSON CITY, MO 65102
1-888-ASK-MODOT (1-888-275-6636)

EFK•Moen, LLC
Civil Engineering Design
13523 Barrett Parkway Dr
Suite 250
St. Louis, MO 63021
Phone 314-394-3100
Missouri Certificate of Authority: 001578

REV.

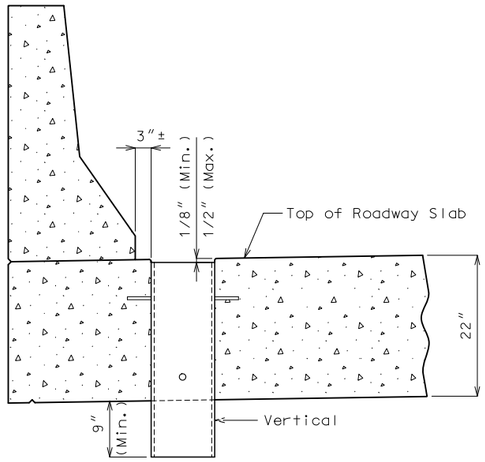

PART SECTION NEAR DRAIN

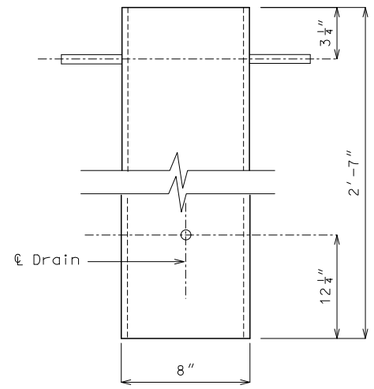

ELEVATION OF DRAIN

General Notes:

Contractor shall have the option to construct either steel or FPS slab drains. All drains shall be of same type. Locate drains in slab by dimensions shown in Part Section Near Drain. Reinforcing steel shall be shifted to clear drains. Shop drawings will not be required for the slab drains.

Notes for Steel Drain:

Slab drains may be fabricated of either 1/4″ welded sheets of ASTM A709 Grade 36 steel or from 1/4″ structural steel tubing ASTM A500 or A501. Outside dimensions of drains are 8″ x 4″. The drains shall be galvanized in accordance with ASTM A123.

Notes for FRP Drain:

Drains shall be machine filament-wound thermosetting resin tubing meeting the requirements of ASTM D2996 with the following exceptions:

Shape of drains shall be rectangular with outside nominal dimensions of 8″ x 4″.

Minimum reinforced wall thickness shall be 1/4 inch.

The resin used shall be ultraviolet (UV) resistant and/or have UV inhibitors mixed throughout. Drains may have an exterior coating for additional UV resistance.

The color of the slab drain shall be Gray (Federal Standard #26373). The color shall be uniform throughout the resin and any coating used.

The combination of materials used in the manufacture of the drains shall be tested for UV resistance in accordance with ASTM D4329 Cycle A. The representative material shall withstand at least 500 hours of testing with only minor discoloration and without any physical deterioration. The contractor shall furnish the results of the required ultraviolet testing prior to acceptance of the slab drains.

At the contractor's option, drains may be field cut. The method of cutting FRP slab drain shall be as recommended by the manufacturer to ensure a smooth, chip free cut.

No additional payment will be made for this substitution.

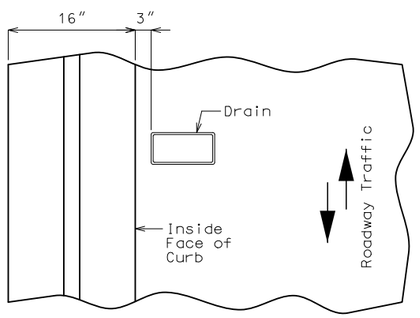

PART PLAN OF SLAB AT DRAIN

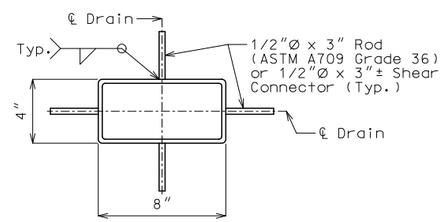

PLAN OF STEEL DRAIN

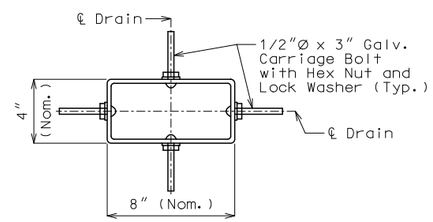

PLAN OF OPTIONAL FRP DRAIN

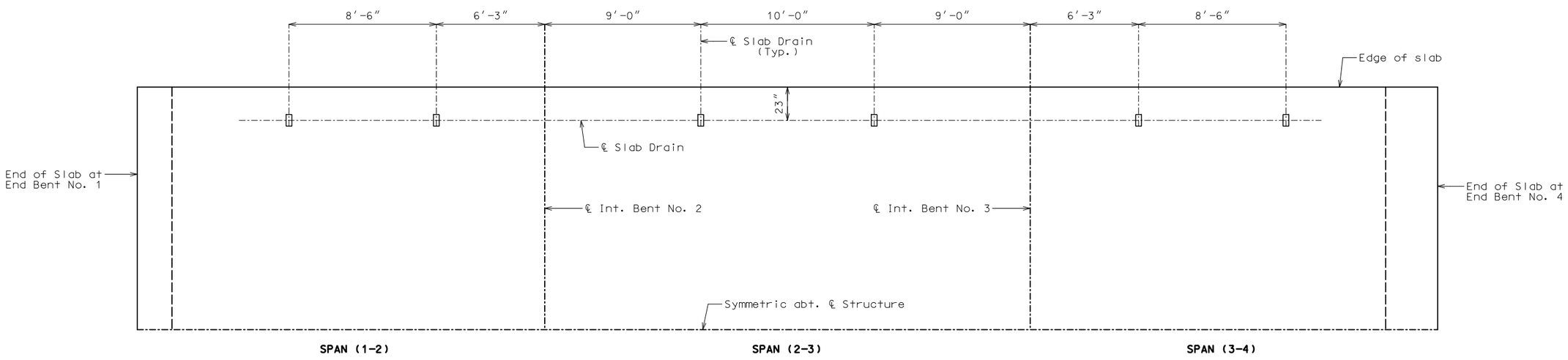

HALF PLAN OF SLAB SHOWING LOCATION OF SLAB DRAINS

SLAB DRAIN DETAILS

Detailed JUN 2016
Checked JUN 2016

Note: This drawing is not to scale. Follow dimensions.

STATE OF MISSOURI — CHRISTOPHER T. WILLIAMS — NUMBER PE-29410 — PROFESSIONAL ENGINEER

THIS SHEET WAS SIGNED, SEALED AND DATED ELECTRONICALLY

DATE PREPARED	8/12/2016
ROUTE	F
STATE	MO
DISTRICT	BR
SHEET NO.	10
COUNTY	NEW MADRID
JOB NO.	J9S3147
CONTRACT ID.	
PROJECT NO.	
BRIDGE NO.	A8473

DATE	DESCRIPTION

IF A SEAL IS PRESENT ON THIS SHEET IT HAS BEEN ELECTRONICALLY SEALED AND DATED

MISSOURI HIGHWAYS AND TRANSPORTATION COMMISSION
105 WEST CAPITOL
JEFFERSON CITY, MO 65102
1-888-ASK-MODOT (1-888-275-6636)

EFK•Moen, LLC
Civil Engineering Design
13523 Barrett Parkway Dr
Suite 250
St. Louis, MO 63021 Phone 314-394-3100
Missouri Certificate of Authority: 001578

REV.

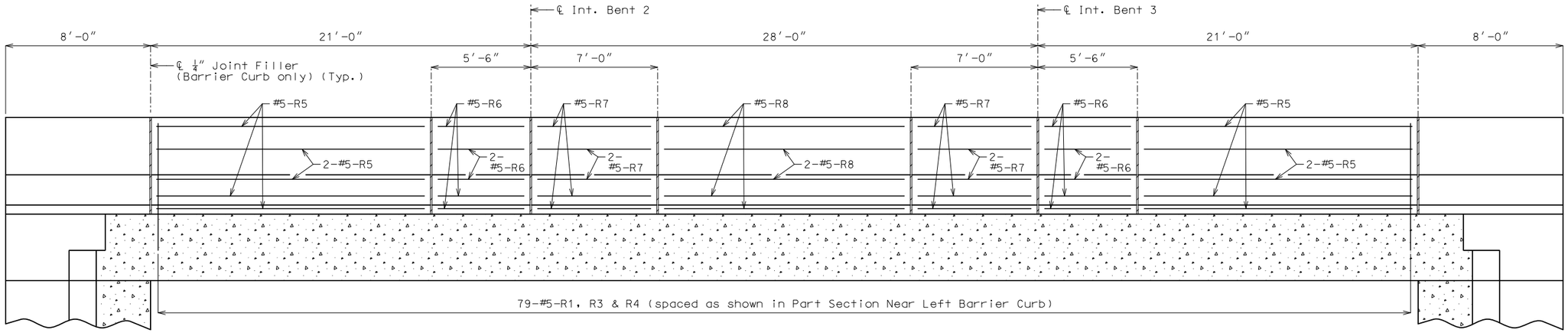

ELEVATION OF SAFETY BARRIER CURB

(Left barrier curb shown, right barrier curb similar)

Longitudinal dimensions are horizontal.

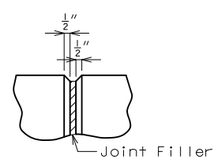

FILLED JOINT DETAIL

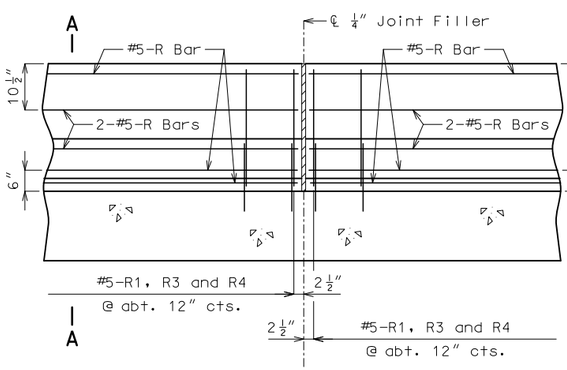

PART ELEVATION OF SAFETY BARRIER CURB (CAST-IN-PLACE CONVENTIONAL FORMING)

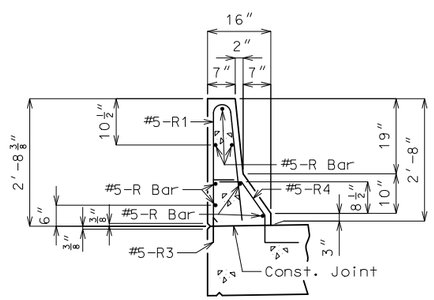

SECTION A-A

Use a minimum lap of 3′-1″ for #5 horizontal safety barrier curb bars.

The cross-sectional area above the slab = 2.27 sq. ft.

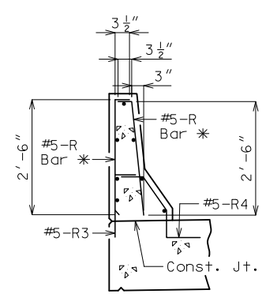

R-BAR PERMISSIBLE ALTERNATE SHAPE

✳ The R1 bar may be separated into two bars as shown, at the contractor's option, only when slip forming is not used. (All dimensions are out to out.)

DETAILS OF BARRIER CURB

General Notes

Top of safety barrier curb shall be built parallel to grade with barrier curb joints (except at end bents) normal to grade.

All exposed edges of safety barrier curb shall have either a ½-inch radius or a ⅜-inch bevel, unless otherwise noted.

Payment for all concrete and reinforcement, complete in place, will be considered completely covered by the contract unit price for Safety Barrier Curb per linear foot.

Concrete in the safety barrier curb shall be Class B-1.

Measurement of safety barrier curb is to the nearest linear foot for each structure, measured along the outside top of slab from end of wing to end of wing.

Concrete traffic barrier delineators shall be placed on top of the safety barrier curb as shown on Missouri Standard Plans 617.10 and in accordance with Sec 617. Delineators on bridges with two-lane, two-way traffic shall have retroreflective sheeting on both sides. Concrete traffic barrier delineators will be considered completely covered by the contract unit price for Safety Barrier Curb.

STATE OF MISSOURI
CHRISTOPHER T. WILLIAMS
NUMBER PE-29410
PROFESSIONAL ENGINEER
THIS SHEET HAS BEEN SIGNED, SEALED AND DATED ELECTRONICALLY

DATE PREPARED 8/12/2016

ROUTE	STATE
F	MO
DISTRICT	SHEET NO.
BR	11

COUNTY: NEW MADRID
JOB NO.: J9S3147
CONTRACT ID.
PROJECT NO.
BRIDGE NO.: A8473

DESCRIPTION	DATE

MISSOURI HIGHWAYS AND TRANSPORTATION COMMISSION
105 WEST CAPITOL
JEFFERSON CITY, MO 65102
1-888-ASK-MODOT (1-888-275-6636)

EFK·Moen, LLC
Civil Engineering Design
13523 Barrett Parkway Dr
Suite 250
St. Louis, MO 63021
Phone 314-394-3100
Missouri Certificate of Authority: 001578

IF A SEAL IS PRESENT ON THIS SHEET IT HAS BEEN ELECTRONICALLY SEALED AND DATED

REV.

Detailed JUN 2016
Checked JUN 2016

Note: This drawing is not to scale. Follow dimensions.

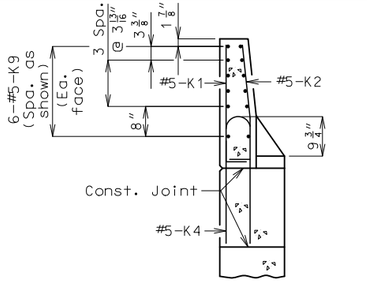

SECTION A-A

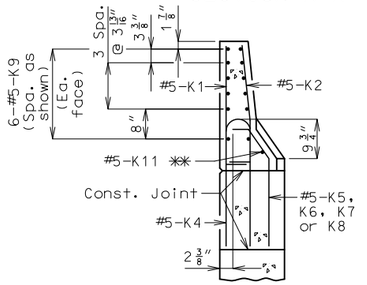

SECTION B-B

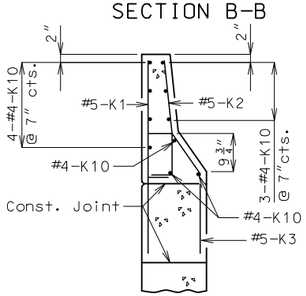

SECTION C-C

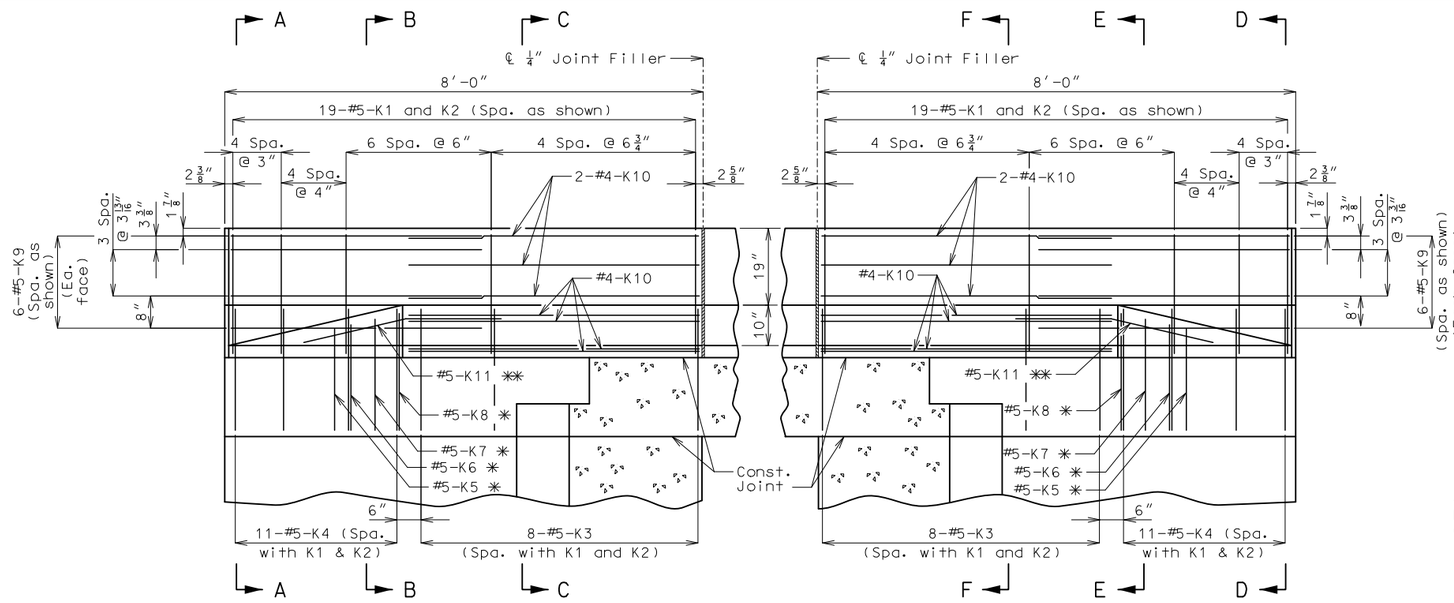

ELEVATION

ELEVATION

✱ Spaced with #5-K4 bars.

✱✱ Fit #5-K11 bar to follow transition face of curb.

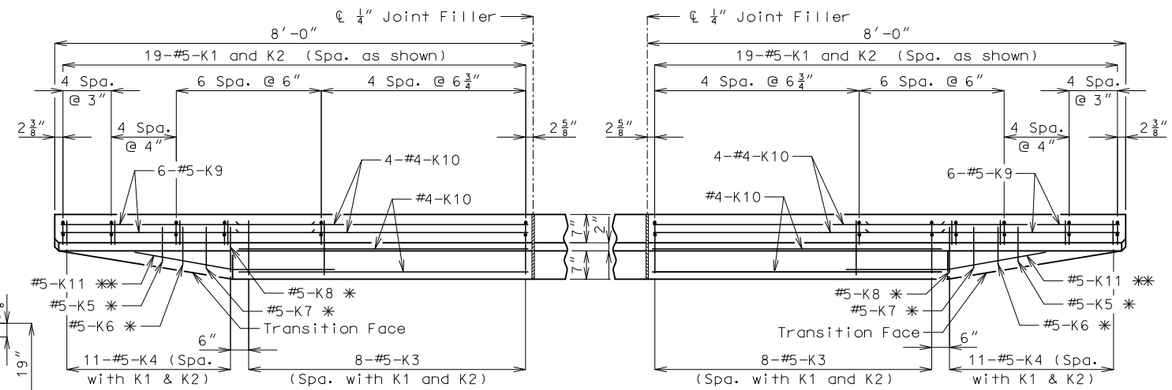

PLAN

PLAN

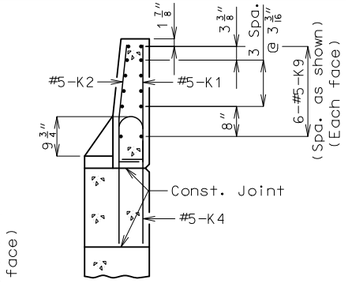

SECTION D-D

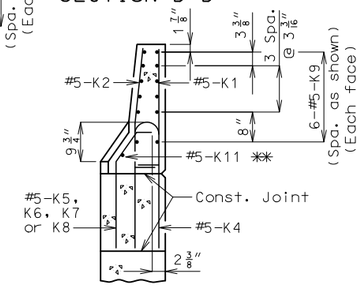

SECTION E-E

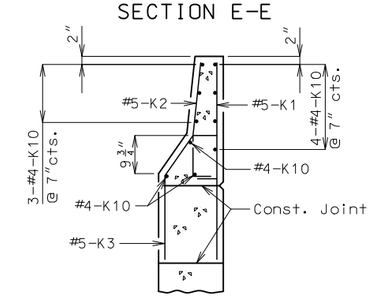

SECTION F-F

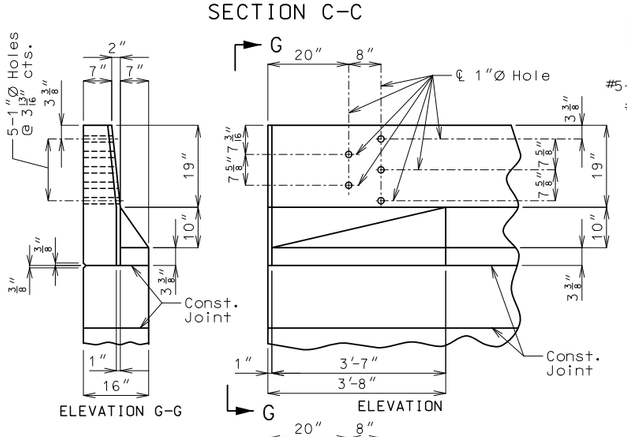

ELEVATION G-G

ELEVATION

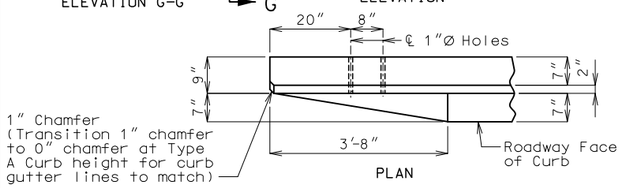

PLAN

DETAILS OF GUARD RAIL ATTACHMENT

Note: Use a minimum lap of 2'-7" between K9 and K10 bars.

Concrete traffic barrier delineators shall be placed on top of the safety barrier curb as shown on Missouri Standard Plans 617.10 and in accordance with Sec 617. Delineators on bridges with two-lane, two-way traffic shall have retroreflective sheeting on both sides. Concrete traffic barrier delineators will be considered completely covered by the contract unit price for Safety Barrier Curb.

DETAILS OF SAFETY BARRIER CURB AT END BENTS

(Left barrier curb shown, right barrier curb similar)

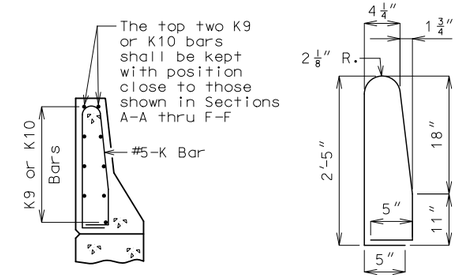

K1-K2 BAR PERMISSIBLE ALTERNATE SHAPE

(K3 or K4 thru K8 bars not shown for clarity)

The K1 and K2 bar combination may be furnished as one bar as shown, at the contractor's option.

Detailed JUN 2016
Checked JUN 2016

Note: This drawing is not to scale. Follow dimensions.

STATE OF MISSOURI
CHRISTOPHER T. WILLIAMS
NUMBER PE-29410
PROFESSIONAL ENGINEER
THIS SHEET HAS BEEN SIGNED, SEALED AND DATED ELECTRONICALLY

DATE PREPARED	
8/12/2016	
ROUTE F	STATE MO
DISTRICT BR	SHEET NO. 12
COUNTY NEW MADRID	
JOB NO. J9S3147	
CONTRACT ID.	
PROJECT NO.	
BRIDGE NO. A8473	

DATE	DESCRIPTION

MISSOURI HIGHWAYS AND TRANSPORTATION COMMISSION
105 WEST CAPITOL
JEFFERSON CITY, MO 65102
1-888-ASK-MODOT (1-888-275-6636)

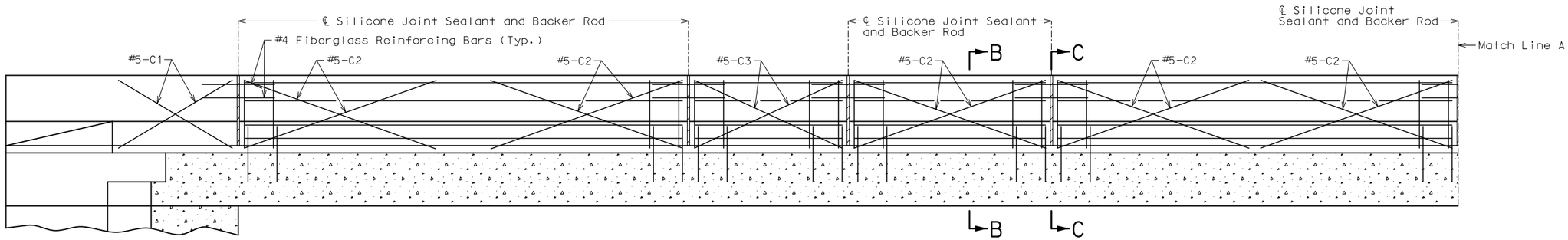

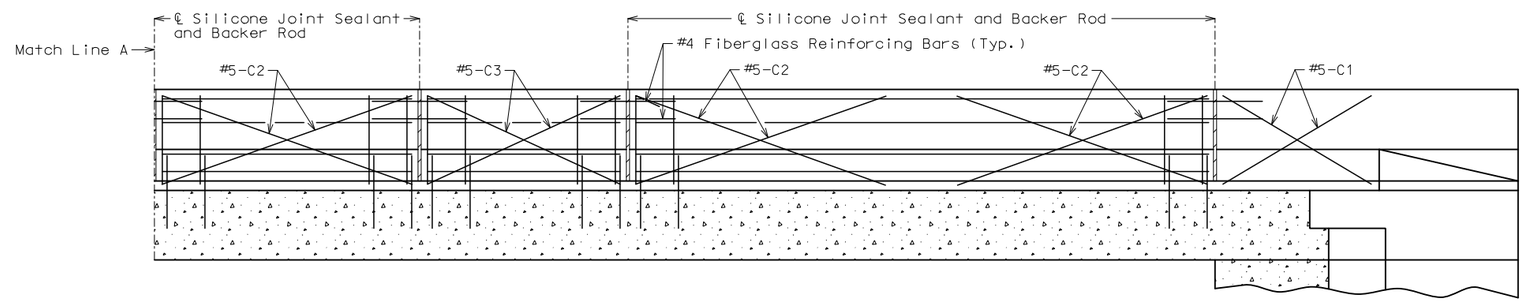

TYPICAL ELEVATION OF BARRIER CURB AT SUPPORT LOCATIONS

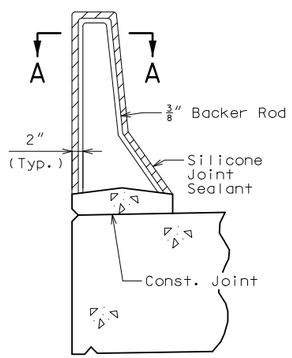

SECTION THRU JOINT

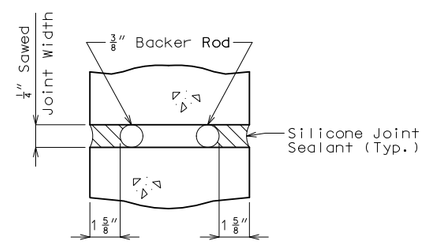

SECTION A-A

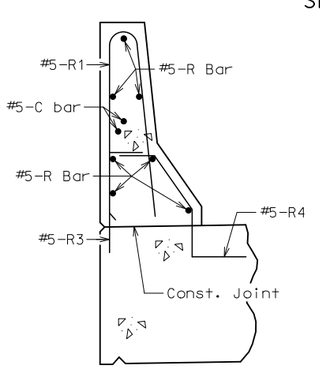

SECTION B-B
✳ Each side of joint location.

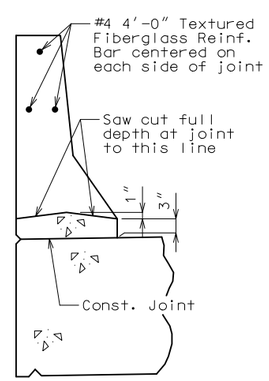

SECTION C-C

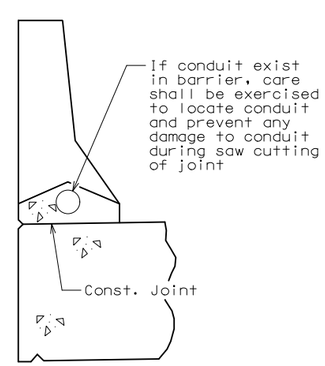

SECTION C-C
(Use when conduit required)

OPTIONAL SLIP-FORM BARRIER CURB

General Notes:

Top of safety barrier curb shall be built parallel to grade with barrier curb joints (except at end bents) normal to grade.

All exposed edges of safety barrier curb shall have either a 1/2 inch radius or a 3/8 inch bevel, unless otherwise noted.

Payment for all concrete and reinforcement, complete in place, will be considered completely covered by the contract unit price for Safety Barrier Curb per linear foot.

Concrete in the safety barrier curb shall be Class B-1.

Measurement of safety barrier curb is to the nearest linear foot for each structure, measured along the outside top of slab from end of wing to end of wing.

Concrete traffic barrier delineators shall be placed on top of the safety barrier curb as shown on Missouri Standard Plans 617.10 and in accordance with Sec 617. Delineators on bridges with two-lane, two-way traffic shall have retroreflective sheeting on both sides. Concrete traffic barrier delineators will be considered completely covered by the contract unit price for Safety Barrier Curb.

Joint sealant and backer rods shall be used on all slip-form barrier curbs instead of joint filler and shall be in accordance with Sec 717 for silicone joint sealant for saw cut and formed joints.

For slip-form option, all sides of the safety barrier curb shall have a vertically broomed finish and the curb top shall have a transversely broomed finish.

C-bars (slip-form option only) shall be used in addition to cast-in-place conventional forming reinforcement for bridge safety barrier curb.

Cost of silicone joint sealant and backer rod, complete in place, will be considered completely covered by the contract unit price for Safety Barrier Curb.

Detailed JUN 2016
Checked JUN 2016

Note: This drawing is not to scale. Follow dimensions.

STATE OF MISSOURI
CHRISTOPHER T. WILLIAMS
NUMBER PE-29410
PROFESSIONAL ENGINEER
THIS SHEET HAS BEEN SIGNED, SEALED AND DATED ELECTRONICALLY

DATE PREPARED	
8/15/2016	
ROUTE F	STATE MO
DISTRICT BR	SHEET NO. 13
COUNTY NEW MADRID	
JOB NO. J9S3147	
CONTRACT ID.	
PROJECT NO.	
BRIDGE NO. A8473	

DATE	DESCRIPTION

IF A SEAL IS PRESENT ON THIS SHEET IT HAS BEEN ELECTRONICALLY SEALED AND DATED

MISSOURI HIGHWAYS AND TRANSPORTATION COMMISSION
105 WEST CAPITOL
JEFFERSON CITY, MO 65102
1-888-ASK-MODOT (1-888-275-6636)

EFK•Moen, LLC
Civil Engineering Design
13523 Barrett Parkway Dr
Suite 250
St. Louis, MO 63021
Phone 314-394-3100
Missouri Certificate of Authority: 001578

REV.

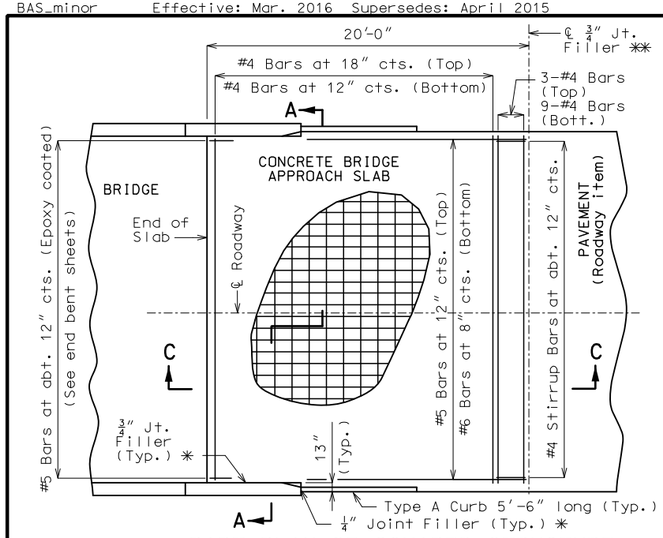

PART PLAN OF SQUARED STRUCTURE

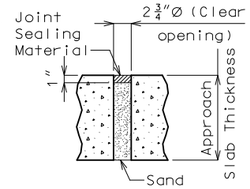

TYPICAL UNDERSEAL ACCESS HOLE DETAIL

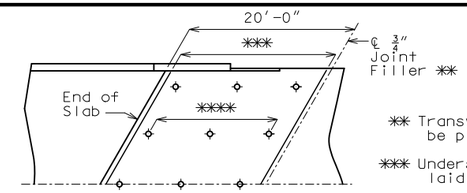

LEFT ADVANCED STRUCTURE SHOWN, RIGHT ADVANCED SIMILAR

PART PLAN OF SKEWED STRUCTURE

✱✱ Transverse reinforcing bars shall be placed parallel to end bents.

✱✱✱ Underseal access holes shall be laid out parallel to end bents.

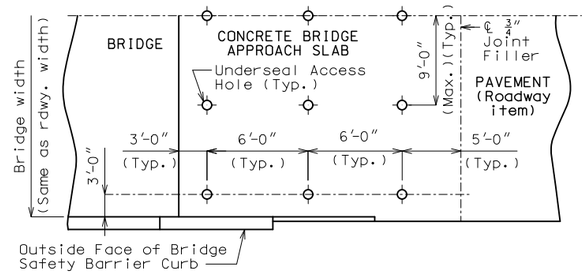

PART PLAN SHOWING UNDERSEAL ACCESS HOLES

(Squared structure shown)

Notes For Concrete Slab Only:

All concrete for the bridge approach slab shall be in accordance with Sec 503 (f'c = 4,000 psi).

The reinforcing steel in the bridge approach slab shall be epoxy coated Grade 60 with fy = 60,000 psi.

Longitudinal construction joints in bridge approach slab shall be aligned with longitudinal construction joints in bridge slab.

Minimum clearance to reinforcing steel shall be 1½", unless otherwise shown.

The reinforcing steel in the bridge approach slab shall be continuous. The transverse reinforcing steel may be made continuous by lap splicing the #4 bars 23".

All joint filler shall be in accordance with Sec 1057 for preformed fiber expansion joint filler except as noted.

Payment for furnishing all materials, labor and excavation necessary to construct the concrete bridge approach slab, including the timber header, underdrain, Type 5 aggregate base, joint filler, and all other appurtenances and incidental work as shown on this sheet, complete in place, will be considered completely covered by the contract unit price for Bridge Approach Slab (Minor Road) per square yard.

See Missouri Standard Plans Drawing 609.00 for details of Type A Curb.

✱ Seal joint between vertical face of bridge approach slab and wing with "Silicone Joint Sealant for Saw Cut and Formed Joints" in accordance with Sec 717.

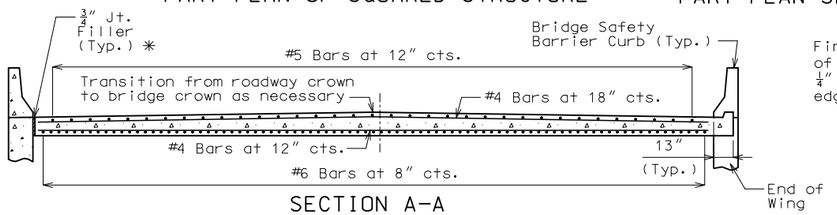

SECTION A-A

With the approval of the engineer, the contractor may crown the bottom of the approach slab to match the crown of the roadway surface.

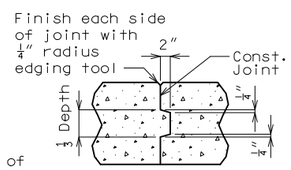

CONCRETE CONST. JOINT DETAIL

(If required)

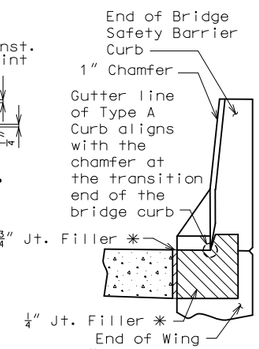

4" TYPE A CURB

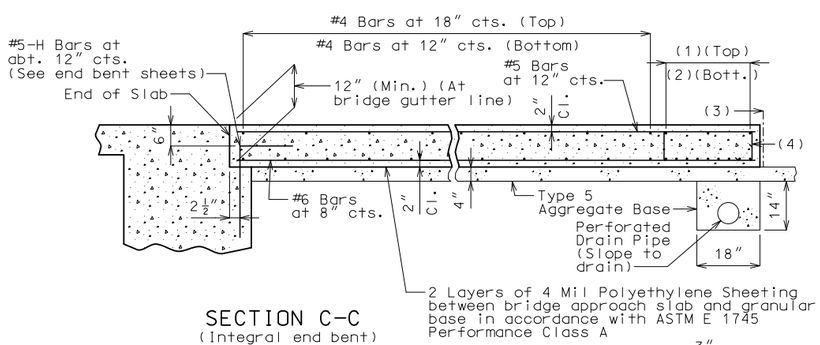

(1) 3-#4 Bars

(2) 9-#4 Bars

(3) ℄ ¾" Jt. Filler ✱✱

(4) #4 Stirrup Bars at abt. 12" cts.; 2'-0"x 8" (Min.) out to out; Actual length = 5'-10" (Min.); 90° stirrup hook at bottom; Stirrup height (8") and actual length vary due to crown.

SECTION C-C

(Integral end bent)

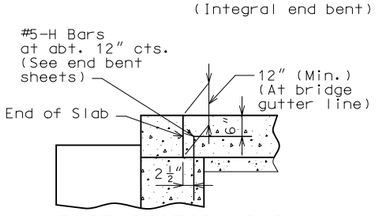

PART SECTION C-C

(Non-integral end bent)

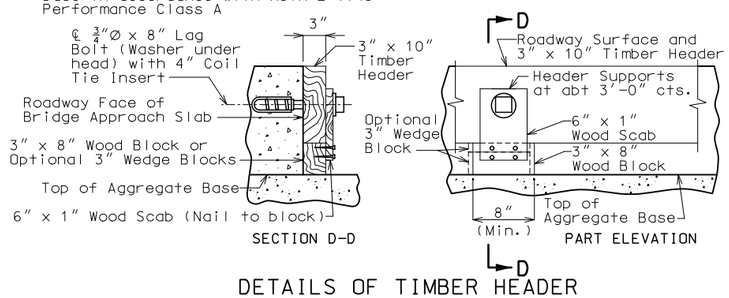

DETAILS OF TIMBER HEADER

Remove timber header when concrete pavement is placed.

OPTIONAL CONCRETE SLAB

General Notes:

The contractor shall pour and satisfactorily finish the bridge slab before placing the bridge approach slab.

Drain pipe may be either 6" diameter corrugated metallic-coated pipe underdrain, 4" diameter corrugated polyvinyl chloride (PVC) drain pipe, or 4" diameter corrugated polyethylene (PE) drain pipe.

MoDOT Construction personnel will indicate the bridge approach slab used for this structure:

☐ Concrete Bridge Approach Slab

☐ Asphalt Bridge Approach Slab

Notes For Asphalt Slab Only:

Payment for furnishing all materials, curb, labor and excavation necessary to construct the asphalt bridge approach slab, including curb, underdrain and Type 5 aggregate base within the pay limits shown, complete in place, will be considered completely covered by the contract unit price for Bridge Approach Slab (Minor Road) per square yard.

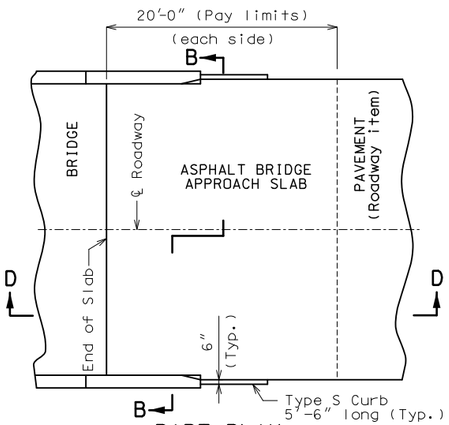

PART PLAN

(Squared structure shown, skewed structure similar)

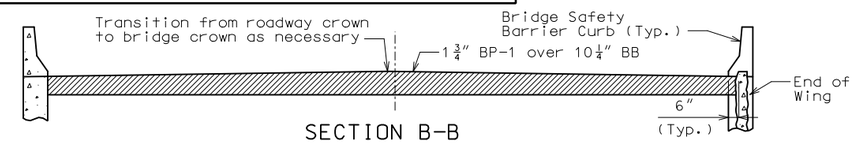

SECTION B-B

With the approval of the engineer, the contractor may crown the bottom of the approach slab to match the crown of the roadway surface.

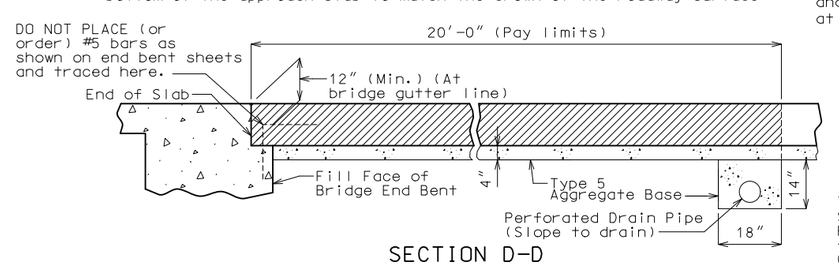

SECTION D-D

(Integral end bent shown, non-integral end bent similar)

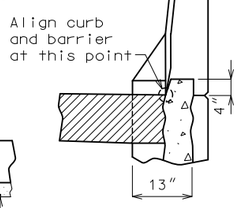

4" TYPE S CURB

See Missouri Standard Plans Drawing 609.00 for details of Type S Curb.

OPTIONAL ASPHALT SLAB (EXCEPT NOT ALLOWED WITH CONCRETE PAVEMENT)

STATE OF MISSOURI — CHRISTOPHER T. WILLIAMS — NUMBER PE-29410 — PROFESSIONAL ENGINEER

THIS SHEET HAS BEEN SIGNED, SEALED AND DATED ELECTRONICALLY

DATE PREPARED	
8/12/2016	
ROUTE F	STATE MO
DISTRICT BR	SHEET NO. 14
COUNTY NEW MADRID	
JOB NO. J9S3147	
CONTRACT ID.	
PROJECT NO.	
BRIDGE NO. A8473	

DESCRIPTION	DATE

IF A SEAL IS PRESENT ON THIS SHEET IT HAS BEEN ELECTRONICALLY SEALED AND DATED

MISSOURI HIGHWAYS AND TRANSPORTATION COMMISSION

105 WEST CAPITOL
JEFFERSON CITY, MO 65102
1-888-ASK-MODOT (1-888-275-6636)

EFK•Moen, LLC
Civil Engineering Design
13523 Barrett Parkway Dr
Suite 250
St. Louis, MO 63021
Phone 314-394-3100
Missouri Certificate of Authority: 001578

REV.

DETAILS OF BRIDGE APPROACH SLAB (MINOR ROAD)

Detailed JUN 2016
Checked JUN 2016

Note: This drawing is not to scale. Follow dimensions.

BILL OF REINFORCING STEEL

NO. REQ'D.	MARK NO. SIZE MARK	LOCATION	EPOXY (E)	SHAPE NO.	STIRRUP (S)	SUBSTR. (X)	VARIES (V)	NO. EACH	B FT. IN.	C FT. IN.	D FT. IN.	E FT. IN.	F FT. IN.	H FT. IN.	K FT. IN.	NOMINAL LENGTH FT. IN.	ACTUAL LENGTH FT. IN.	WEIGHT LBS.
		END BENTS 1 & 4																
28	6 F1	WING BRACE		23					0 14.000	4 7.000	0 14.000	0 9.875	0 9.875	0 9.875	0 9.875	6 11	6 10	287
28	6 H1	BEAM		20					26 5.000							26 5	26 5	1111
8	6 H2	BEAM	E	20					26 5.000							26 5	26 5	317
4	6 H3	SLAB	E	20					26 5.000							26 5	26 5	159
48	5 H4	BEAM	E	19					2 0.000	0 15.000						3 3	3 2	159
8	8 H5	WINGWALL	E	20					7 5.000							7 5	7 5	158
24	8 H6	WINGWALL		20					7 5.000							7 5	7 5	475
56	6 H7	WINGWALL		20					6 5.000							6 5	6 5	540
64	4 P1	PILE		34					0 10.000							3 5	3 5	146
24	4 U1	BEAM		10	S					3 4.000	2 8.000					9 4	9 2	147
44	5 U2	BEAM		13	S				2 8.000	3 4.000	2 8.000	3 4.000				12 11	12 7	577
60	5 U3	BEAM	E	10	S					3 0.000	2 8.000					8 8	8 6	532
64	6 U4	BEAM	E	19	S				3 6.000	5 2.000						8 8	8 6	817
48	6 V1	WINGWALL		20					5 2.000							5 2	5 2	372
64	5 V2	PILE		17					4 10.000							5 3	5 3	350
		INT. BENTS 2 & 3																
16	6 H8	BEAM		18					25 6.000							25 6	25 6	613
8	6 H9	BEAM		20					25 6.000							25 6	25 6	306
16	6 H10	BEAM		10	S					22.000	2 0.750					5 9	5 4	128
80	4 P2	PILE		34					0 10.000							3 5	3 5	183
48	5 U5	BEAM		13	S				2 2.000	2 5.000	2 2.000	2 5.000				10 1	9 9	488
30	4 U6	BEAM		10	S					2 5.000	2 2.000					7 0	6 10	137
116	5 U7	BEAM	E	13	S				4 2.000	10.000						5 0	5 0	605
80	5 V3	PILE		17					4 10.000							5 3	5 3	438
		BARRIERS																
76	5 K1	BARRIER	E	19	S				2 5.000	5.125						2 10	2 9	218
76	5 K2	BARRIER	E	14	S				5.125	11.125	18.000			2.000	17.875	2 10	2 9	218
32	5 K3	BARRIER	E	27	S				2 8.000	5.125	12.000	10.000		9.750	6.875	5 11	5 9	192
44	5 K4	BARRIER	E	7					2 9.000	6.000						5 9	5 8	260
4	5 K5	BARRIER	E	27	S				10.000	22.000	6.750	4.375		4.000	5.500	3 7	3 5	14
4	5 K6	BARRIER	E	27	S				10.000	22.000	8.000	4.375		4.500	6.500	3 8	3 6	15
4	5 K7	BARRIER	E	27	S				10.000	22.000	9.625			5.500	7.875	3 10	3 8	15
4	5 K8	BARRIER	E	27	S				10.000	22.000	11.250	4.375		6.500	9.250	4 0	3 10	16
48	5 K9	BARRIER	E	20					6 2.000							6 2	6 2	309
40	4 K10	BARRIER	E	20					4 2.000							4 2	4 2	111
4	4 K11	BARRIER	E	8					2 2.125					2 2.000	2.375	4 4	4 4	12
158	5 R1	BARRIER	E	26					2 6.000	4.250				2 6.000	3.000	5 3	5 2	851
	R2	NOT USED																
158	5 R3	BARRIER	E	19	S				24.000	6.000						2 6	2 5	398
158	5 R4	BARRIER	E	27	S					6.000	11.250	12.000	12.000	9.250	6.375	3 6	3 4	549
28	5 R5	BARRIER	E	20					15 2.000							15 2	15 2	443
28	5 R6	BARRIER	E	20					5 2.000							5 2	5 2	151
28	5 R7	BARRIER	E	20					6 8.000							6 8	6 8	195
14	5 R8	BARRIER	E	20					13 8.000							13 8	13 8	200

BILL OF REINFORCING STEEL

NO. REQ'D.	MARK NO. SIZE MARK	LOCATION	EPOXY (E)	SHAPE NO.	STIRRUP (S)	SUBSTR. (X)	VARIES (V)	NO. EACH	B FT. IN.	C FT. IN.	D FT. IN.	E FT. IN.	F FT. IN.	H FT. IN.	K FT. IN.	NOMINAL LENGTH FT. IN.	ACTUAL LENGTH FT. IN.	WEIGHT LBS.
		SLAB																
150	5 S1	SLAB	E	20					26 4.000							26 4	26 4	4120
48	6 S2	SLAB	E	20					39 2.000							39 2	39 2	2824
44	8 S3	SLAB	E	20					16 0.000							16 0	16 0	1880
44	4 S4	SLAB	E	20					25 1.000							25 1	25 1	737
22	4 S5	SLAB	E	20					30 5.000							30 5	30 5	447
44	8 S6	SLAB	E	20					20 4.000							20 4	20 4	2389
44	4 S7	SLAB	E	20					11 10.000							11 10	11 10	348
22	8 S8	SLAB	E	20					23 0.000							23 0	23 0	1351
		SLIP FORM																
		OPTION																
8	5 C1	SLIP FORM	E	20					4 9.000							4 9	4 9	40
32	5 C2	SLIP FORM	E	20					7 0.000							7 0	7 0	234
8	5 C3	SLIP FORM	E	20					5 7.000							5 7	5 7	47
		TOTALS																
	4																	613
	4		E															1655
	5																	1853
	5		E															9781
	6																	3357
	6		E															4117
	8																	475
	8		E															5778
		TOTAL							REINFORCING STEEL (BRIDGES)									6298
		TOTAL	E						REINFORCING STEEL (EPOXY COATED)									21331
		CONT. SOLID																
		SLAB																
	4																	613
	4		E															1532
	5																	1853
	5		E															5416
	6																	3357
	6		E															4117
	8																	475
	8		E															5778
		TOTAL																6298
		TOTAL	E															16843
		BARRIER CURB																
	4		E															123
	5		E															4044
		TOTAL																4167
		SLIP FORM																
	5		E															321
		TOTAL																321

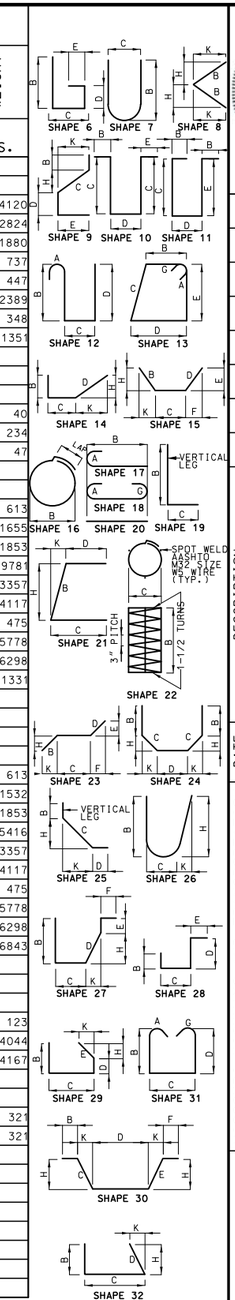

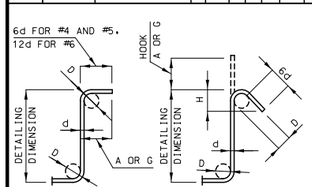

STIRRUP HOOK DIMENSIONS				
GRADES 40 - 50 - 60 KSI				
BAR SIZE	D (IN.)	90° HOOK	135° HOOK	
		HOOK A OR G	HOOK A OR G	APPROX. H
#4	2"	4-1/2"	4-1/2"	3"
#5	2-1/2"	6"	5-1/2"	3-3/4"
#6	4-1/2"	12"	8"	4-1/2"

NOTE: UNLESS OTHERWISE NOTED DIAMETER "D" IS THE SAME FOR ALL BENDS AND HOOKS ON A BAR.

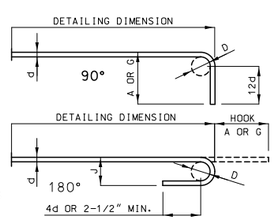

END HOOK DIMENSIONS				
BAR SIZE	D (IN.)	ALL GRADES		
		180° HOOKS		90° HOOKS
		A OR G	J	A OR G
#3	2-1/4"	5"	3"	6"
#4	3"	6"	4"	8"
#5	3-3/4"	7"	5"	10"
#6	4-1/2"	8"	6"	12"
#7	5-1/4"	10"	7"	14"
#8	6"	11"	8"	16"
#9	9-1/2"	15"	11-3/4"	19"
#10	10-3/4"	17"	13-1/4"	22"
#11	12"	19"	14-3/4"	2'-0"
#14	18-1/4"	2'-3"	21-3/4"	2'-7"

NOTE:
ALL STANDARD HOOKS AND BENDS OTHER THAN 180 DEG. TO BE BENT WITH THE SAME PROCEDURE AS FOR 90 DEG. STD. HOOKS.
HOOKS AND BENDS SHALL BE IN ACCORDANCE WITH THE PROCEDURES AS SHOWN ON THIS SHEET.
E = EPOXY COATED REINFORCEMENT.
S = STIRRUP.
X = BAR IS INCLUDED IN SUBSTRUCTURE QUANTITIES.
V = BAR DIMENSIONS VARY IN EQUAL INCREMENTS BETWEEN DIMENSIONS SHOWN ON THIS LINE AND THE FOLLOWING LINE.
NO. EA. = NUMBER OF BARS OF EACH LENGTH.
NOMINAL LENGTHS ARE BASED ON OUT TO OUT DIMENSIONS SHOWN IN BENDING DIAGRAMS AND ARE LISTED FOR FABRICATOR'S USE (NEAREST INCH).
ACTUAL LENGTHS ARE MEASURED ALONG CENTERLINE BAR TO THE NEAREST INCH.
PAYWEIGHTS ARE BASED ON ACTUAL LENGTHS.
FOUR ANGLE OR CHANNEL SPACERS ARE REQUIRED FOR EACH COLUMN SPIRAL. SPACERS ARE TO BE PLACED ON INSIDE OF SPIRALS. LENGTH AND WEIGHT OF COLUMN SPIRALS DO NOT INCLUDE SPLICES OR SPACERS.
REINFORCING STEEL (GRADE 60) FY = 60,000 PSI.

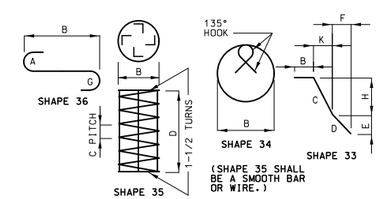

BENDING DIAGRAMS

Detailed JUN 2016
Checked JUN 2016

Note: This drawing is not to scale. Follow dimensions.

Sheet No. 15 of 19

STATE OF MISSOURI
CHRISTOPHER T. WILLIAMS
NUMBER PE-29410
PROFESSIONAL ENGINEER
THIS SHEET WAS SEALED, SIGNED AND DATED ELECTRONICALLY

DATE PREPARED 8/16/2016

ROUTE	STATE
F	MO
DISTRICT	SHEET NO.
BR	15

COUNTY: NEW MADRID
JOB NO.: J9S3147
CONTRACT ID.
PROJECT NO.
BRIDGE NO.: A8473

DATE	DESCRIPTION

IF A SEAL IS PRESENT ON THIS SHEET IT HAS BEEN ELECTRONICALLY SEALED AND DATED

MISSOURI HIGHWAYS AND TRANSPORTATION COMMISSION
105 WEST CAPITOL
JEFFERSON CITY, MO 65102
1-888-ASK-MODOT (1-888-275-6636)

EFK•Moen, LLC
Civil Engineering Design
13523 Barrett Parkway Dr
Suite 250
St. Louis, MO 63021
Phone 314-394-3100
Missouri Certificate of Authority: 001578

REV.

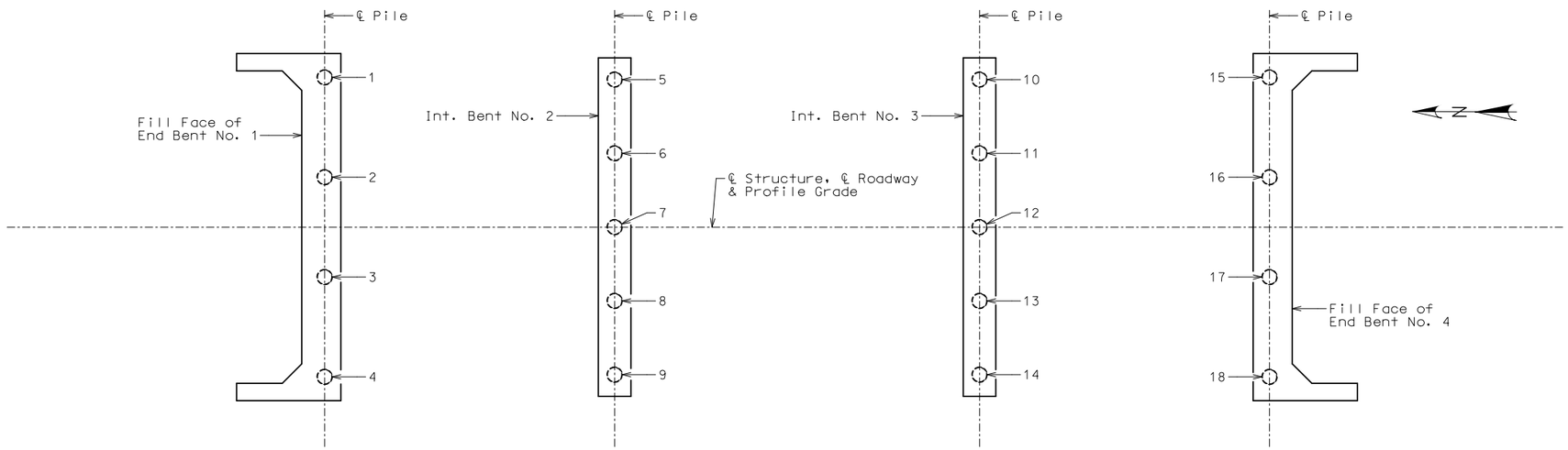

PART PLAN SHOWING PILE NUMBERING FOR RECORDING AS-BUILT PILE DATA

AS-BUILT PILE DATA

Pile No.	Length in Place (ft)	PDA Nom. Axial Compressive Resistance (kips)	PDA End of Drive Blow Count (blows/in.)	Actual End of Drive Blow Count (blows/in.)	Remarks
					END BENT NO. 1
1					
2					
3					
4					
					INT. BENT NO. 2
5					
6					
7					
8					
9					
					INT. BENT NO. 3
10					
11					
12					
13					
14					
					END BENT NO. 4
15					
16					
17					
18					

Note: indicate in remarks column:
A.) Pile Type and grade
B.) Batter
C.) Driven to Practical Refusal
D.) PDA test pile
E.) Minimum tip elevation controlled
(Use when actual blow count is less than PDA blow count due to minimum tip elevation requirment. A plus sign (+) shall be placed after the PDA nominal axial compressive resistance value indicating actual value is higher than PDA value.)

Note: This sheet should be completed by MoDOT construction personnel.

Detailed JUN 2016
Checked JUN 2016

Note: This drawing is not to scale. Follow dimensions.

STATE OF MISSOURI
CHRISTOPHER T. WILLIAMS
NUMBER PE-29410
PROFESSIONAL ENGINEER
THIS SHEET HAS BEEN SIGNED, SEALED AND DATED ELECTRONICALLY

DATE PREPARED 8/12/2016
ROUTE F | STATE MO
DISTRICT BR | SHEET NO. 16
COUNTY NEW MADRID
JOB NO. J9S3147
CONTRACT ID.
PROJECT NO.
BRIDGE NO. A8473

DATE	DESCRIPTION

IF A SEAL IS PRESENT ON THIS SHEET IT HAS BEEN ELECTRONICALLY SEALED AND DATED

MISSOURI HIGHWAYS AND TRANSPORTATION COMMISSION
105 WEST CAPITOL
JEFFERSON CITY, MO 65102
1-888-ASK-MODOT (1-888-275-6636)

EFK•Moen, LLC
Civil Engineering Design
13523 Barrett Parkway Dr
Suite 250
St. Louis, MO 63021
Phone 314-394-3100
Missouri Certificate of Authority: 001578

REV.

Missouri Department of Transportation
Construction and Materials

BORING NO. A-16-02
Page 1 of 2

Job No.: J9S3147 **County:** New Madrid **Route:** F
Design: A8473 **Skew:** **Location:** Route F over Drainage Ditch No. 18
Bent: **Logged By:** George Davis **Operator:** Kenny Mathews
Station: 906+80.3 **Northing:** 229487.2 **Date of Work:** 01/05/16-01/05/16
Offset: 17.0L **Easting:** 1054963.8 **Depth to Water:** 24.8
Elevation: 281.3 **Requested Northing:** **Depth Hole Open:**
Requested Station: **Requested Easting:** **Time Change:** Adjacent Stream/Lake
Requested Offset: **Equipment:** Failing 1500 ,Split-Spoon Sampler
Requested Elevation: **Location Note:**
Drill No.: G-7887 **Hammer Efficiency:** 79% **Drilling Method:** Mud Rotary

Depth (ft)	Graphic	Description	Elevation (ft)	Sample Type	REC % (RQD %)	Blow Counts (N_{60})	Shear Data	Field Tests	Index Tests
0		0.0-9.3' Gray mottled orangish brown, FAT CLAY scattered sand, medium stiff to stiff, moist	280						
5			275		53	2-2-3 (7)		PP = 1.25 tsf	LL = 67 PL = 28 MC = 35.5% γ_{sat} = 116 pcf(1)
10		9.3-15.8' Gray mottled orangish brown, CLAYEY SAND, loose, moist to wet	270		93	2-2-4 (8)		PP = 1.50 tsf	MC = 29.3% γ_{sat} = 121 pcf(1)
15		15.8-52.8' Gray, SAND trace lean clay, dense to very dense, medium to coarse grained	265		100	1-3-4 (9)			LL = 30 PL = 18 MC = 26.5% γ_{sat} = 123 pcf(1)
20			260		100	11-13-18 (41)			
25			255		100	10-9-10 (25)			
30			250		100	12-15-14 (38)			
35									

N_{60} = (Em/60)Nm N_{60} - Corrected N value for standard 60% SPT efficiency; Em - Measured hammer efficiency in percent; Nm - Observed N-value
(1) = Assumed (2) = Actual

Coordinate System: U.S. State Plane 1983 **Coordinate Zone:** Missouri East **Coordinate Proj. Factor:**
Coordinate Datum: NAD 83 (CONUS) **Coordinate Units:** U.S. Survey Feet

* Persons using this information are cautioned that the materials shown are determined by the equipment noted and accuracy of the "log of materials" is limited thereby and by judgement of the operator. THIS INFORMATION IS FOR DESIGN PURPOSES ONLY.

LETTER BOREHOLE - MODOT 20150728.GDT - 2/18/16 10:44 - J:\SG\GINT\PROJECT FILES\J9S3147-A8473.GPJ

Missouri Department of Transportation
Construction and Materials

BORING NO. A-16-02
Page 2 of 2

Job No.: J9S3147 **County:** New Madrid **Route:** F
Design: A8473 **Skew:** **Location:** Route F over Drainage Ditch No. 18
Bent: **Logged By:** George Davis **Operator:** Kenny Mathews
Station: 906+80.3 **Northing:** 229487.2 **Date of Work:** 01/05/16-01/05/16
Offset: 17.0L **Easting:** 1054963.8 **Depth to Water:** 24.8
Elevation: 281.3 **Requested Northing:** **Depth Hole Open:**
Requested Station: **Requested Easting:** **Time Change:** Adjacent Stream/Lake
Requested Offset: **Equipment:** Failing 1500 ,Split-Spoon Sampler
Requested Elevation: **Location Note:**
Drill No.: G-7887 **Hammer Efficiency:** 79% **Drilling Method:** Mud Rotary

Depth (ft)	Graphic	Description	Elevation (ft)	Sample Type	REC % (RQD %)	Blow Counts (N_{60})	Shear Data	Field Tests	Index Tests
35		15.8-52.8' Gray, SAND trace lean clay, dense to very dense, medium to coarse grained *(continued)*	245		100	13-18-20 (50)			
40			240		100	12-19-21 (53)			
45			235		100	18-20-31 (67)			
50			230		100	17-28-28 (74)			
55		52.8-56.5' Gray, SAND scattered fine gravel dense to very dense, coarse grained	225		100	17-18-18 (47)			
		Bottom of borehole at 56.5 feet.							

N_{60} = (Em/60)Nm N_{60} - Corrected N value for standard 60% SPT efficiency; Em - Measured hammer efficiency in percent; Nm - Observed N-value
(1) = Assumed, (2) = Actual

Coordinate System: U.S. State Plane 1983 **Coordinate Zone:** Missouri East **Coordinate Proj. Factor:**
Coordinate Datum: NAD 83 (CONUS) **Coordinate Units:** U.S. Survey Feet

* Persons using this information are cautioned that the materials shown are determined by the equipment noted and accuracy of the "log of materials" is limited thereby and by judgement of the operator. THIS INFORMATION IS FOR DESIGN PURPOSES ONLY.

LETTER BOREHOLE - MODOT 20150728.GDT - 2/10/10 10:44 - J:\SG\GINT\PROJECT FILES\J9S3147-A8473.GPJ

STATE OF MISSOURI
CHRISTOPHER T. WILLIAMS
NUMBER PE-29410
PROFESSIONAL ENGINEER
THIS SHEET WAS SIGNED, SEALED AND DATED ELECTRONICALLY

DATE PREPARED 8/12/2016
ROUTE F | STATE MO
DISTRICT BR | SHEET NO. 17
COUNTY NEW MADRID
JOB NO. J9S3147
CONTRACT ID.
PROJECT NO.
BRIDGE NO. A8473

DESCRIPTION | DATE

IF A SEAL IS PRESENT ON THIS SHEET IT HAS BEEN ELECTRONICALLY SEALED AND DATED

MISSOURI HIGHWAYS AND TRANSPORTATION COMMISSION
105 WEST CAPITOL
JEFFERSON CITY, MO 65102
1-888-ASK-MODOT (1-888-275-6636)

EFK•Moen, LLC
Civil Engineering Design
13523 Barrett Parkway Dr
Suite 250
St. Louis, MO 63021 Phone 314-394-3100
Missouri Certificate of Authority: 001578

BORING DATA

Note: For locations of borings, see Sheet No. 1.

Detailed JUN 2016
Checked JUN 2016

Note: This drawing is not to scale. Follow dimensions.

REV.

MoDOT - Geotechnical Section
1617 Missouri Boulevard
Jefferson City, Missouri 65109

KEY TO SYMBOLS

CLIENT McDOT Bridge Division
PROJECT NUMBER J9S3147
PROJECT NAME A8473
PROJECT LOCATION Route F over Drainage Ditch No. 18

LITHOLOGIC SYMBOLS (Unified Soil Classification System)

- CH: USCS High Plasticity Clay
- SC: USCS Clayey Sand
- SP: USCS Poorly-graded Sand

SAMPLER SYMBOLS

- Split-Spoon Sampler

WELL CONSTRUCTION SYMBOLS

ABBREVIATIONS

LL - LIQUID LIMIT (%)
PI - PLASTIC INDEX (%)
W - MOISTURE CONTENT (%)
DD - DRY DENSITY (PCF)
NP - NON PLASTIC
-200 - PERCENT PASSING NO. 200 SIEVE
PP - POCKET PENETROMETER (TSF)
Qu - UNCONFINED COMPRESSIVE STRENGTH (PSF)

TV - TORVANE
PID - PHOTOIONIZATION DETECTOR
UC - UNCONFINED COMPRESSION
ppm - PARTS PER MILLION

Water Level at Time of Drilling
Water Level at End of Drilling
Water Level after Drilling

KEY TO SYMBOLS - MODOT 20150728.GDT - 2/18/16 10:51 - J:\SG\GINT\PROJECT FILES\J9S3147-A8473.GPJ

BORING NO. H-16-14

PAGE 1 OF 3

Missouri Department of Transportation
Construction and Materials

Job No.: J9S3147
Design: A8473
Bent:
Station: 907+63.9
Offset: 16.4R
Elevation: 279.9
Drill No.: G-8929

Route: F
County: New Madrid
Skew:
Location: Route F over Drainage Ditch No. 18
Northing: 229405.6
Easting: 1054935.9
Drilling Method:
Hammer Efficiency:

Coordinate Units: U.S. Survey Feet
Coordinate Proj. Factor:
Coordinate System: U.S. State Plane 1983
Coordinate Datum: NAD 83 (CONUS)
Coordinate Zone: Missouri East
Equipment: Hogentogler CPT

Logged By: Paul Hilchen
Operator: Mike Donahoe
Date of Work: 01/12/16
Depth to Water: 21
Time Change:
Depth Hole Open:

Depth (ft)	Graphic	Description	Elevation (ft)	Scour Parameters: Compressible	Scour Parameters: Downdrag	Scour Parameters: Scour	Total Unit Weight (pcf)	Effective Unit Weight (pcf)	Undrained Shear Strength Su or c (psf)	Pocket Pen (tsf)	Torvane (tsf)	Blow Counts (N_{60})	Internal Friction Angle Φ'	Soil/Rock Strain (ε_{50}/k_{rm})	Lateral Subgrade Modulus K_f (pci)	Young's Modulus E_s (ksf)	Rock Quality Designation (RQD) (%)	Unconfined Compressive Strength Qu (ksf)
0		0 - 18' Soft clay		yes	no	yes	111(1)	111(1)	960(1)					0.0085	300			
10			270				111(1)	111(1)	680(1)					0.011	150			
20		18 - 73.65' Sand	260				111(1)	111(1)	880(1)					0.005	245			
				no	no	yes	124(1)	124(1)				43(1)	43(1)		225			
30			250				124(1)	62(1)				43(1)	41(1)		125			
							124(1)	62(1)				43(1)	39(1)		125			

(1) = Assumed, (2) = Actual, (3) = Phi' 0

(Continued Next Page)

LPILE SUMMARY - MODOT 20150812.GDT - 2/9/16 16:04 - J:\SG\GINT\PROJECT FILES\J9S3147-A8473.GPJ

STATE OF MISSOURI
CHRISTOPHER T. WILLIAMS
NUMBER PE-29410
PROFESSIONAL ENGINEER
THIS SHEET HAS BEEN SIGNED, SEALED AND DATED ELECTRONICALLY

DATE PREPARED 8/12/2016
ROUTE F | STATE MO
DISTRICT BR | SHEET NO. 18
COUNTY NEW MADRID
JOB NO. J9S3147
CONTRACT ID.
PROJECT NO.
BRIDGE NO. A8473

DATE	DESCRIPTION

IF A SEAL IS PRESENT ON THIS SHEET IT HAS BEEN ELECTRONICALLY SEALED AND DATED

MISSOURI HIGHWAYS AND TRANSPORTATION COMMISSION
105 WEST CAPITOL
JEFFERSON CITY, MO 65102
1-888-ASK-MODOT (1-888-275-6636)

EFK•Moen, LLC
Civil Engineering Design
13523 Barrett Parkway Dr
Suite 250
St. Louis, MO 63021 Phone 314-394-3100
Missouri Certificate of Authority: 001578

REV.

BORING DATA

Note: For locations of borings, see Sheet No. 1.

Detailed JUN 2016
Checked JUN 2016

Note: This drawing is not to scale. Follow dimensions.

Y:\16002 MoDOT New Madrid Bridges\DGN\Bridge\Final\Plotsheets\J9S3147-Rte F\B_A8473_018_J9S3147_Boring 2.dgn 10:52:10 AM 8/12/2016

Detailed JUN 2016
Checked JUN 2016

Missouri Department of Transportation
Construction and Materials

BORING NO. H-16-14

Job No.: J9S3147	**County:** New Madrid	**Route:** F	**Logged By:** Paul Hilchen
Design: A8473	**Skew:**	**Coordinate Units:** U.S. Survey Feet	**Operator:** Mike Donahoe
Bent:	**Location:** Route F over Drainage Ditch No. 18	**Coordinate Proj. Factor:**	**Date of Work:** 01/12/16
Station: 907+63.9	**Northing:** 229405.6	**Coordinate System:** U.S. State Plane 1983	**Depth to Water:** 21
Offset: 16.4R	**Easting:** 1054935.9	**Coordinate Datum:** NAD 83 (CONUS)	**Time Change:**
Elevation: 279.9	**Drilling Method:**	**Coordinate Zone:** Missouri East	**Depth Hole Open:**
Drill No.: G-3929	**Hammer Efficiency:**	**Equipment:** Hogentogler CPT ,	

Depth (ft)	Graphic	Description	Elevation (ft)	Scour Parameters: Compressible	Scour Parameters: Downdrag	Scour Parameters: Scour	Total Unit Weight (pcf)	Effective Unit Weight (pcf)	Undrained Shear Strength Su or c (psf)	Pocket Pen (tsf)	Torvane (tsf)	Blow Counts (N_{60})	Internal Friction Angle ϕ'	Soil/Rock Strain ($\varepsilon_{50}/\varepsilon_{rm}$)	Lateral Subgrade Modulus K_r (pci)	Young's Modulus E (ksi)	Rock Quality Designation (RQD) (%)	Unconfined Compressive Strength Qu (ksf)
		18 - 73.65' Sand *(continued)*					124(1)	62(1)				44(1)	43(1)		125			
40			240				124(1)	62(1)				37(1)	41(1)		125			
							124(1)	62(1)				47(1)	42(1)		125			
50			230				124(1)	62(1)				51(1)	42(1)		125			
				no	no	yes												
							124(1)	62(1)				44(1)	41(1)		125			
60			220				124(1)	62(1)				21(1)	36(1)		125			
							124(1)	62(1)				36(1)	39(1)		125			
70			210															

(1) = Assumed, (2) = Actual, (3) = Phi' 0 *(Continued Next Page)*

LPILE SUMMARY - MODOT_20150812.GDT - 2/8/16 16:04 - J:\SG\GINT\PROJECT FILES\J9S3147-A8473.GPJ

Missouri Department of Transportation
Construction and Materials

BORING NO. H-16-14

Job No.: J9S3147	**County:** New Madrid	**Route:** F	**Logged By:** Paul Hilchen
Design: A8473	**Skew:**	**Coordinate Units:** U.S. Survey Feet	**Operator:** Mike Donahoe
Bent:	**Location:** Route F over Drainage Ditch No. 18	**Coordinate Proj. Factor:**	**Date of Work:** 01/12/16
Station: 907+63.9	**Northing:** 229405.6	**Coordinate System:** U.S. State Plane 1983	**Depth to Water:** 21
Offset: 16.4R	**Easting:** 1054935.9	**Coordinate Datum:** NAD 83 (CONUS)	**Time Change:**
Elevation: 279.9	**Drilling Method:**	**Coordinate Zone:** Missouri East	**Depth Hole Open:**
Drill No.: G-3929	**Hammer Efficiency:**	**Equipment:** Hogentogler CPT ,	

Depth (ft)	Graphic	Description	Elevation (ft)	Scour Parameters: Compressible	Scour Parameters: Downdrag	Scour Parameters: Scour	Total Unit Weight (pcf)	Effective Unit Weight (pcf)	Undrained Shear Strength Su or c (psf)	Pocket Pen (tsf)	Torvane (tsf)	Blow Counts (N_{60})	Internal Friction Angle ϕ'	Soil/Rock Strain ($\varepsilon_{50}/\varepsilon_{rm}$)	Lateral Subgrade Modulus K_r (pci)	Young's Modulus E (ksi)	Rock Quality Designation (RQD) (%)	Unconfined Compressive Strength Qu (ksf)
70		18 - 73.65' Sand *(continued)*		no	no	yes	127(1)	65(1)				56(1)	41(1)		125			
		Bottom of borehole at 73.7 feet.																

(1) = Assumed, (2) = Actual, (3) = Phi' 0

LPILE SUMMARY - MODOT_20150812.GDT - 2/8/16 16:04 - J:\SG\GINT\PROJECT FILES\J9S3147-A8473.GPJ

BORING DATA

Note: This drawing is not to scale. Follow dimensions.

Note: For locations of borings, see Sheet No. 1.

Y:\16002 MoDOT New Madrid Bridges\DGN\Bridge\Final\Plotsheets\J9S3147-Rte F\B_A8473_019_J9S3147_Boring 3.dgn 10:53:12 AM 8/12/2016

EFK•Moen, LLC
Civil Engineering Design
13523 Barrett Parkway Dr
Suite 250
St. Louis, MO 63021 Phone 314-394-3100
Missouri Certificate of Authority: 001578

MISSOURI HIGHWAYS AND TRANSPORTATION COMMISSION
MoDOT
105 WEST CAPITOL
JEFFERSON CITY, MO 65102
1-888-ASK-MODOT (1-888-275-6636)

DATE	DESCRIPTION

BRIDGE NO. A8473
PROJECT NO.
JOB NO. J9S3147
CONTRACT ID.
COUNTY NEW MADRID
DISTRICT BR
ROUTE F
STATE MO
SHEET NO. 19
DATE PREPARED 8/12/2016

STATE OF MISSOURI
CHRISTOPHER T. WILLIAMS
NUMBER PE-29410
PROFESSIONAL ENGINEER

THIS DOCUMENT WAS ORIGINALLY ISSUED AND SEALED ELECTRONICALLY

REV.

IF A SEAL IS PRESENT ON THIS SHEET IT HAS BEEN ELECTRONICALLY SEALED AND DATED

FED. ROAD DIST. NO.	STATE	FED. AID PROJ. NO.	FISCAL YEAR	SHEET NO.	TOTAL SHEETS
5	MO.	40	19		

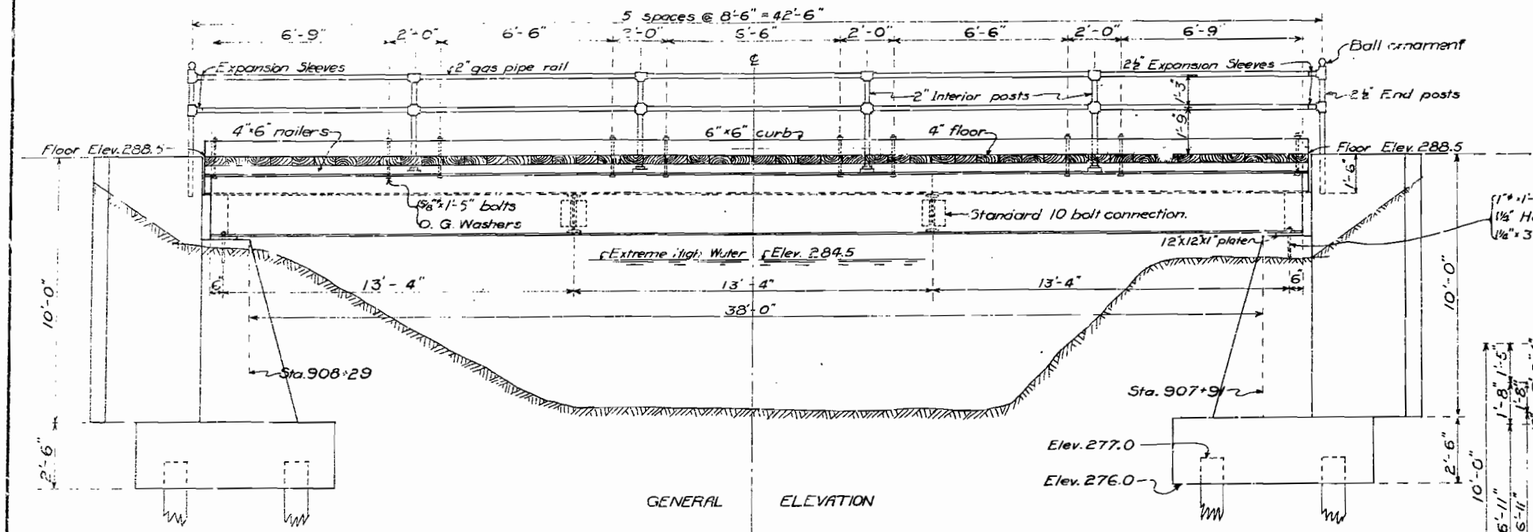

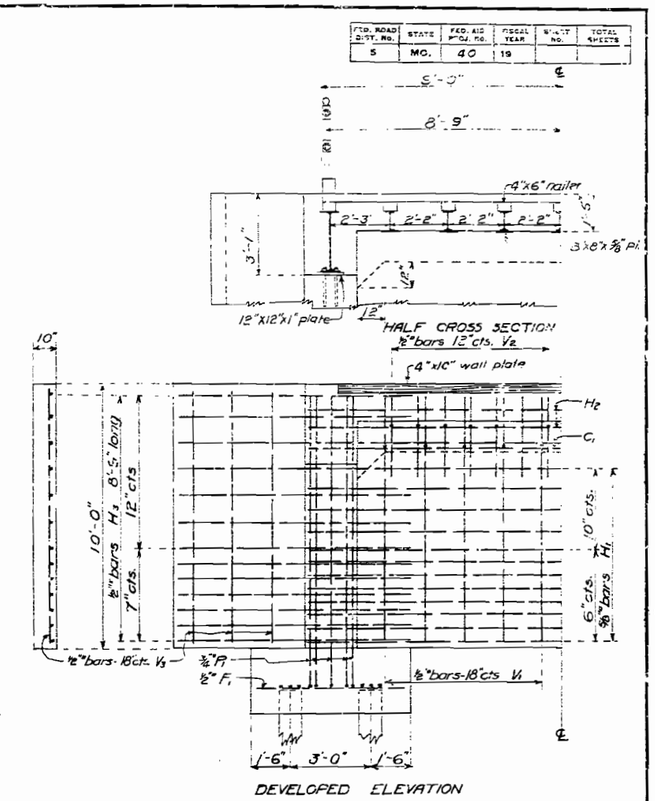

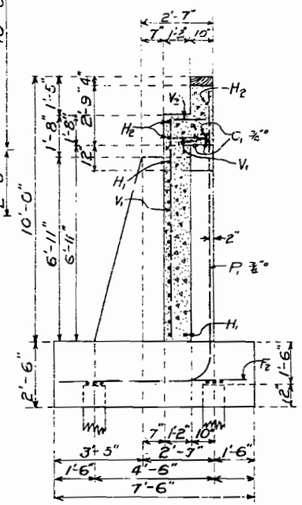

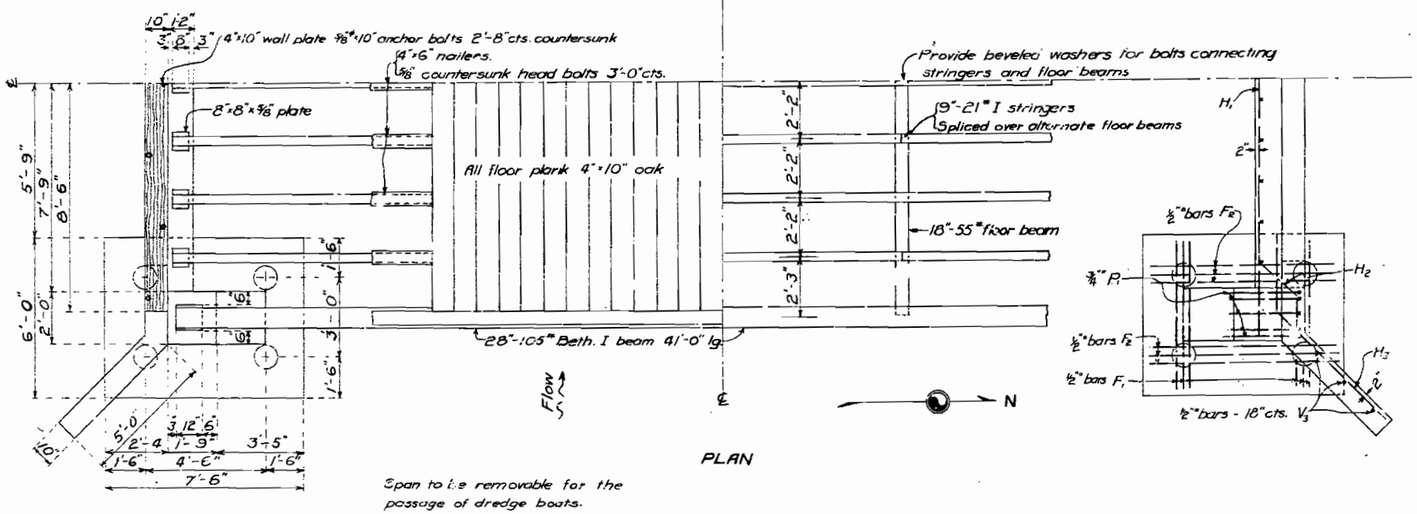

Span to be removable for the passage of dredge boats.

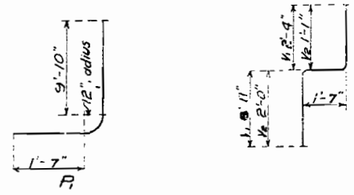

BILL OF REINFORCING STEEL

NUMBER	SIZE	LENGTH	MARKED	REMARKS
20	⅝"	18'-0"	P1	See Sketch
20	½"	10'-10"	V1	" "
28	½"	4'-8"	V2	" "
12	½"	9'-6"	V3	Straight
26	⅝"	18'-2"	H1	"
6	⅝"	19'-6"	H2	Bend in place
52	½"	8'-9"	H3	Bend in place
8	¾"	19'-5"	C1	Straight
24	½"	5'-6"	F1	"
24	½"	7'-0"	F2	"

ESTIMATED QUANTITIES

Structural Steel		17,200	lbs.
Gas pipe for Rails		217	Lin. ft.
Lumber		4,100	F.B.M.
Concrete 1:2:4 mix		44.6	Cu. Yds.
Reinforcing Steel		2650	lbs.
Piles (Creosoted)	16 @ 15'	240	Lin. ft.

GENERAL NOTES:

Concentrated load 15 ton tractor and 10 ton trailer with 20 % impact.
Detail shop drawings shall be submitted to the State Highway Department in quadruplicate and shall receive its approval before steel work is fabricated.
Field holes for floor beam connections to be drilled to a steel templet in shop. Bolts to be turned to a driving fit and threaded so there will be no bearing on the threads; not more than one washer under nut.
Bolts ¾" diameter except as noted. Rivets ⅝" diameter.
All metal to be given one shop coat and two field coats of paint of an approved brand as per specifications.
All lumber of oak of first class quality.
Each plank to be spiked to each nailer with two 7" steel wire spikes.
For comparing bids, piles shall be assumed 15'-0" long. The driving length shall be determined by the contractor as provided in the specifications. Required bearing capacity 20 tons per pile.

All concrete to be 1:2:4 mix.
Reinforcing rods of billet steel, structural grade, deformed type other than twisted squares. Net sectional area not less than that of plain rods of the sizes given.

Replaced by F-270-A

MISSOURI STATE HIGHWAY DEPARTMENT

BRIDGE OVER DRAINAGE DITCH No. 8

STATE ROAD FROM NEW MADRID TO PORTAGEVILLE

ABOUT 2.2 MILES FROM PORTAGEVILLE

PROJECT No. 40 (A) STA. 907+91

NEW MADRID COUNTY

Submitted by Chester D. Mann BRIDGE ENGINEER

Approved by Alexander W. Graham STATE HIGHWAY ENGINEER

F270

Drawn June 21, 1920 by E.C. Furrer

Ck'd June 28, 1920 by J.W.C.

Now Route F

Replaced by

MISSOURI STATE HIGHWAY DEPARTMENT

FED. ROAD DIST. NO.	STATE	FED. PROJ. NO.	FISCAL YEAR	SHEET NO.	TOTAL SHEETS
5	MO.	S-372 (1) (SF)	19	21	

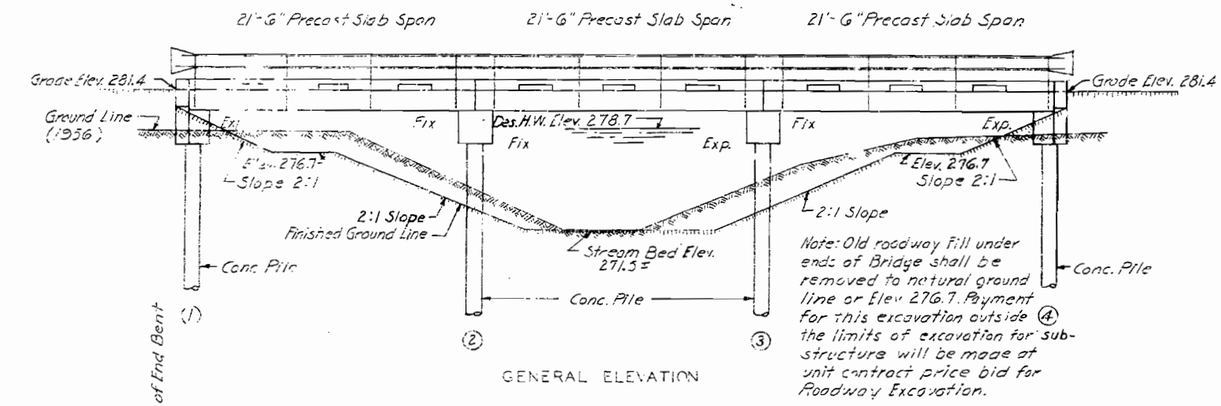

GENERAL ELEVATION

Note: Old roadway fill under ends of Bridge shall be removed to natural ground line or Elev. 276.7. Payment for this excavation outside the limits of excavation for substructure will be made at unit contract price bid for Roadway Excavation.

Note: All piling shall be concrete and shall conform with details and notes on Std. P-3R1. Estimated quantities shown on plans are based on the following lengths: 10@30'-0" and 10@35'-0". The Contractor may proceed to order piles to these indicated lengths without further authorization. No test pile will be required.

All piling shall be driven to sustain a load of at least 28 ton per pile and with tips to at least Elev. 252.0

All piles shall be driven with a steam hammer.

BILL OF REINFORCING STEEL - SUBSTRUCTURE

No.	Size	Length	Mark	Location
End Bents 1 & 4				
4	#6	27'-9"	H1	Beam
16	#6	30'-0"	H2	"
28	#6	5'-0"	H3	Wings
4	#6	3'-6"	H4	"
4	#6	2'-6"	H5	"
8	#6	11'-0"	T1	"
44	#4	9'-9"	U1	Beam
6	#4	7'-9"	V3	Wings
Int. Bents 2 & 3				
16	#6	23'-0"	G1	Beam
4	#6	26'-9"	G2	"
44	#4	9'-9"	U1	"

Bending Sketches & Cutting Diagrams

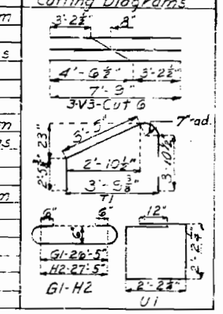

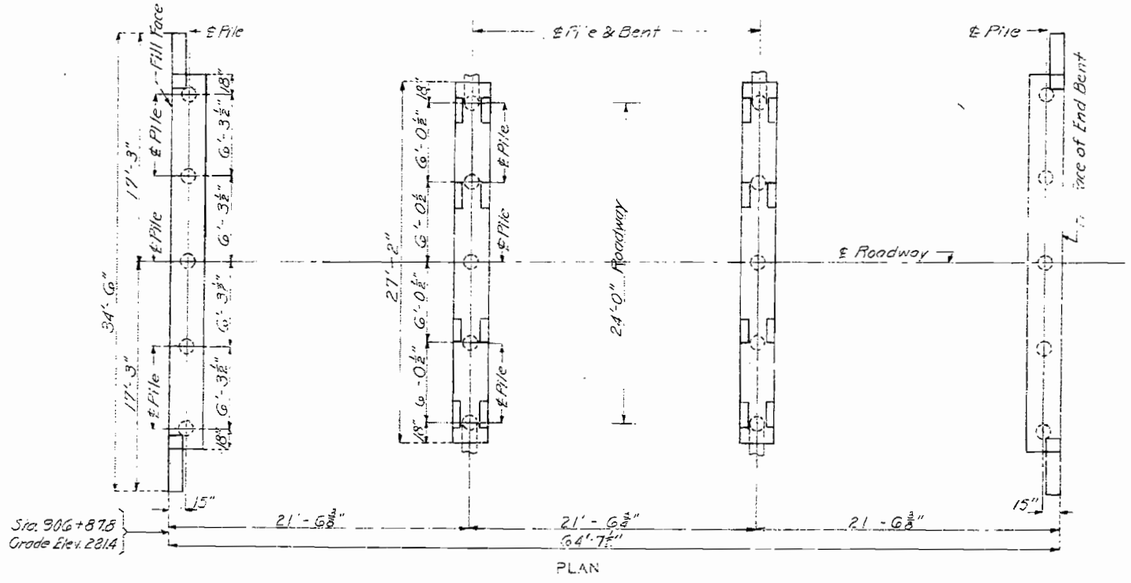

PLAN

GENERAL NOTES:

Design Specifications: A.A.S.H.O. 1953
Loading: H15-44
Reinforcing Steel Stress 18,000 #/□"
Concrete, Class "B" Stress: 1,000 #/□"
Concrete, Class "A" Stress: 1,500 #/□"
All substructure concrete and curbs except Piles to be Class "B"
All precast superstructure units shall be Class "A" or lightweight concrete. See Special Provisions.

Paint: Shop, none; Field, contact surfaces of bolted field connections (steel to steel) one coat of red lead and surfaces of rail posts in contact with concrete, three coats of red lead. No other paint to be applied by the Contractor. Payment for cleaning and painting such surfaces will be included in unit price bid for Fabricated Structural Steel.

Where joint filler is specified on the plans it shall conform with the requirements for Premoulded Material for Filler as given in Section 53-22D of the Standard Specifications.

Cost of cement mortar used in assembling precast units to be included in unit price bid for precast units in place.

Fabricated Structural Steel superstructure includes guard rail posts, bolts fastening these posts to concrete, and bolts and washers fastening precast concrete units together.

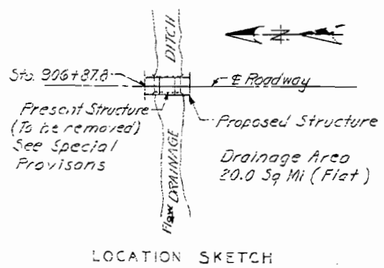

LOCATION SKETCH

ESTIMATED QUANTITIES

	Item		Substr.	Superstr.	Total
	Class I Excavation for Structures	Cu. Yds.	40		40
*	Class "A" or Lightweight Concrete	Cu. Yds.		53.9	53.9
	Class "B" Concrete	Cu. Yds.	28.2	4.2	32.4
	Fabricated Structural Steel	Lbs.		2050	2,050
	Reinforcing Steel	Lbs.	2,720	12,520	15,240
	Concrete Piles in Place	Lin. Ft.	590		590
	Concrete Pile Cut-Offs	Lin. Ft.	60		60
	Asphalt Wearing Surface	Sq. Yds.		172	172
	Bridge Guard Rail	Lin. Ft.		131	131

* See Special Provisions
Note: All excavation to be Class I Excavation

B.M. Elev. 280.83 - 2 on S.E. corner bridge abut. @ 16'L-, Sta. 907+42.

BRIDGE OVER DRAINAGE DITCH

STATE ROAD FROM ROUTE 61 TO ROUTE CC
ABOUT 4.5 MILES S.W. OF CONRAN
PROJECT NO. S-372 (1) (SF) **STA.** 906 + 87.8

NEW MADRID **COUNTY**

SUBMITTED BY J. A. Williams BRIDGE ENGINEER DATE 10-16-1956
APPROVED BY Ralph M. Whitton CHIEF ENGINEER DATE 10-16-1956

STD-P-3R1
STD-27-A17
STD-C110 R4
F-270 R

Drawn SEPT. 1956 by O.J.S.
Checked Sept. 1956 by K.M.B.

Note: This drawing is not to scale. Follow dimensions.

Sheet No. 1 of 3.

MISSOURI STATE HIGHWAY DEPARTMENT

FED. ROAD DIST. NO.	STATE	FED. AID PROJ. NO.	FISCAL YEAR	SHEET NO.	TOTAL SHEETS
5	MO	S-372(1) (SF)	19	22	

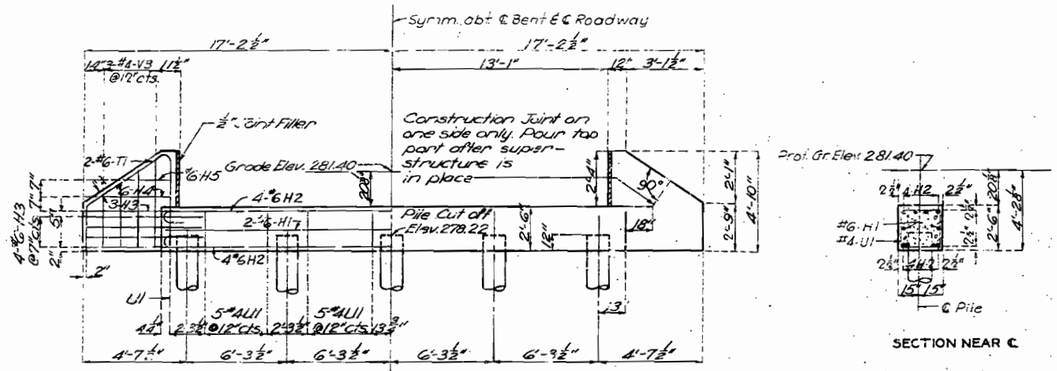

ELEVATION

SECTION NEAR ℄

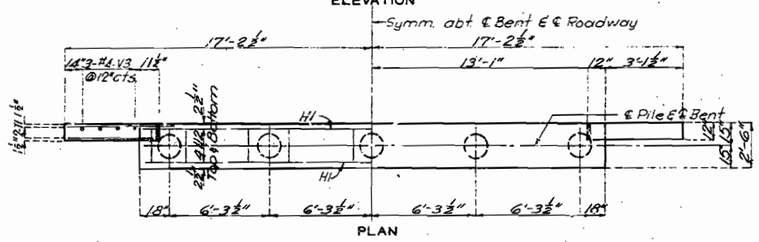

PLAN

DETAILS OF END BENTS NO. 1 & 4

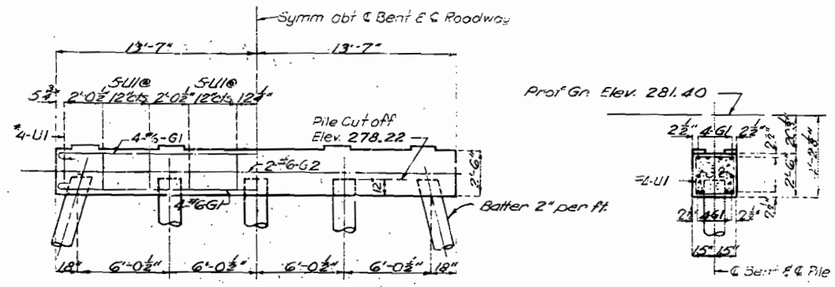

ELEVATION

SECTION AT ℄

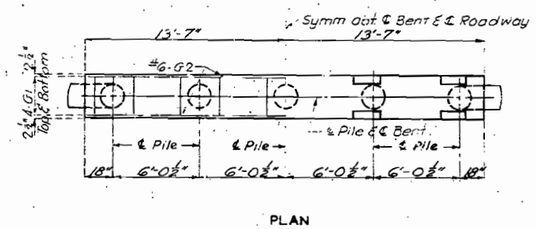

PLAN

DETAILS OF INTERMEDIATE BENTS NO. 2 & 3

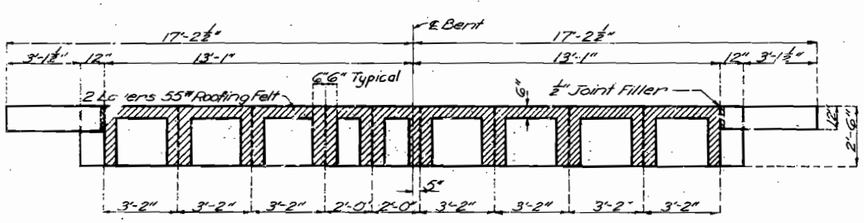

PLAN OF BENT NO. 4 SHOWING ROOFING FELT

Note: Bent No. 1 similar

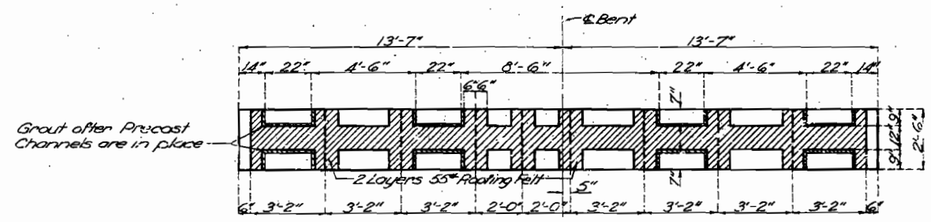

PLAN OF BENT NO. 2 SHOWING ROOFING FELT AND KEYS

Note: Bent No. 3 similar except do not grout on expansion side of bent.

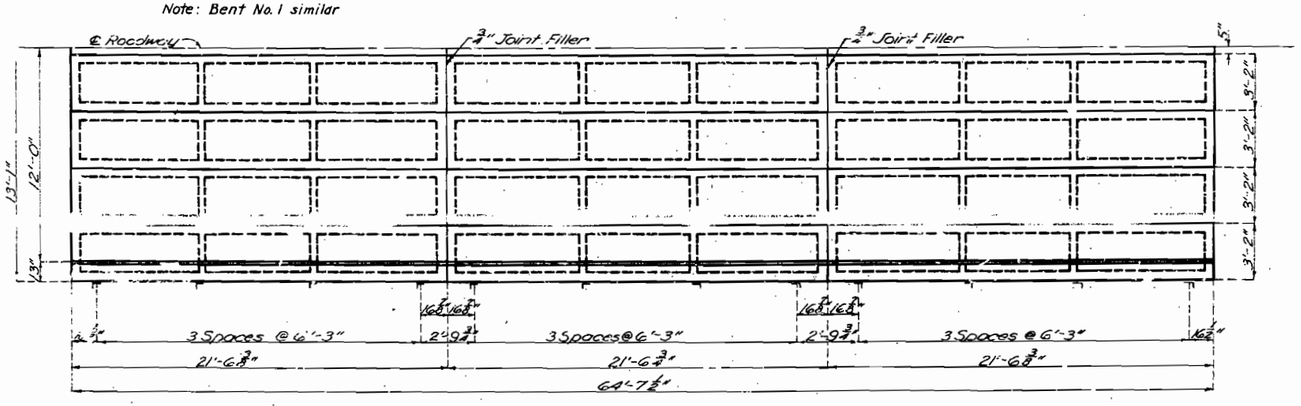

HALF PLAN OF SLAB SHOWING RAIL POST SPACING

BRIDGE OVER DRAINAGE DITCH

STATE ROAD FROM ROUTE 61 TO ROUTE 5C

ABOUT 4.5 MILES S.W. OF CONRAN

PROJECT NO. S-372(1) (SF) STA. 966 + 67.8

NEW MADRID COUNTY

F-270R

Drawn Sept 1956 by W.C.H. & L.G.S.
Checked Sept 1956 by K.M.B.

Note: This drawing is not to scale. Follow Dimensions

Sheet No. 20-3

NO CONSTRUCTION CHANGES

157

MISSOURI STATE HIGHWAY DEPARTMENT

FED. ROAD DIST. NO.	STATE	FED. AID PROJ. NO.	FISCAL YEAR	SHEET NO.	TOTAL SHEETS
9	MO	S-372(1) (SF)	19	23	

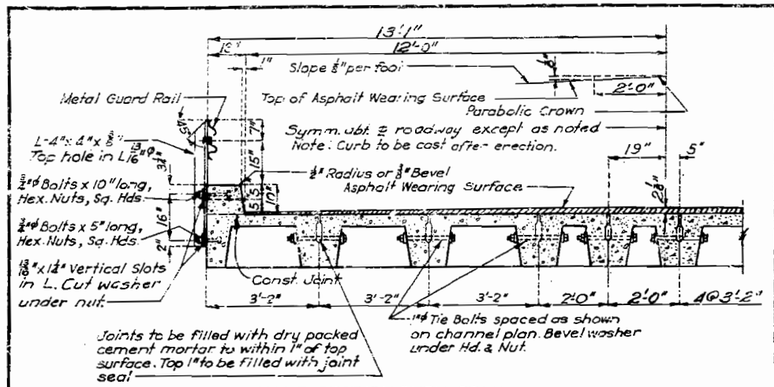

HALF SECTION THRU SPAN

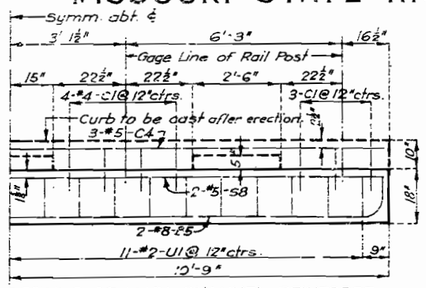

DETAILS OF MAIN CHANNEL REINFORCEMENT FOR 21'-6" SPAN

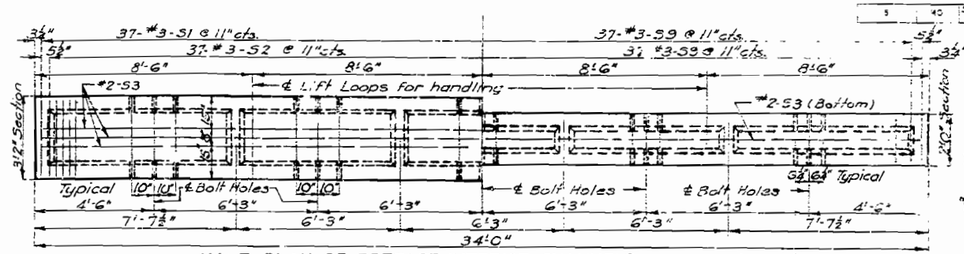

HALF PLAN OF PRECAST INTERIOR CHANNELS Approx. Wt. {13,280# 3'-2" Section. 10,930# 2'-0" Section
(Exterior Channel Similar for 3'-2" Section)

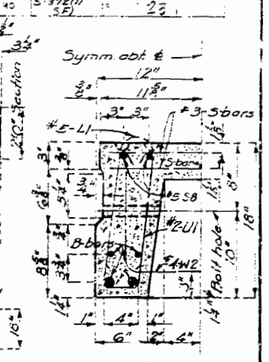

HALF SECTION THRU 2'-0" CHANNEL

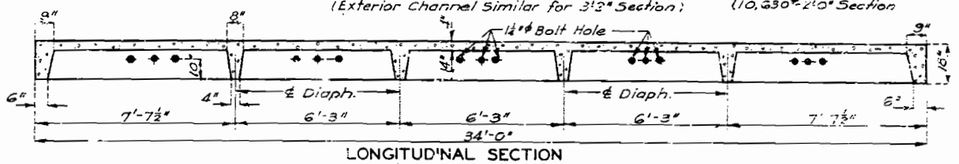

LONGITUDINAL SECTION
DETAILS OF 34'-0" PRECAST CHANNEL

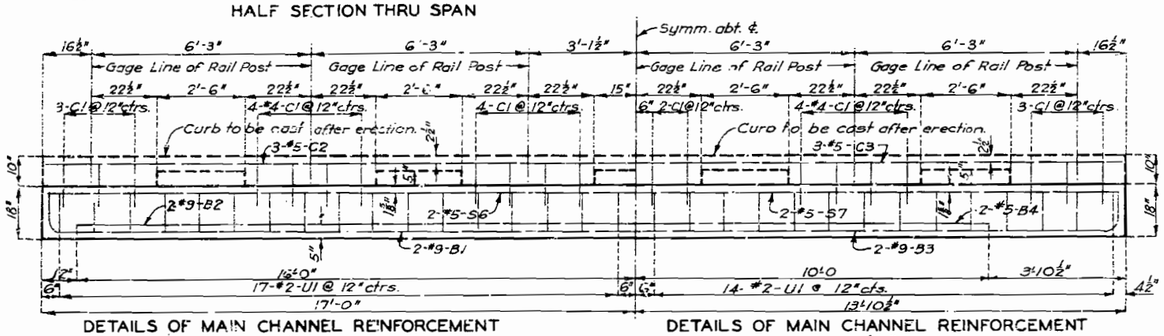

DETAILS OF MAIN CHANNEL REINFORCEMENT FOR 34'-0" SPAN

DETAILS OF MAIN CHANNEL REINFORCEMENT FOR 27'-9" SPAN

Note: #5 Lift Loops to be cut off in field after units have been set in final position at bridge site and wells to be filled with grout containing iron oxide (Embeco or an approved equivalent) by Contractor, except lift loops under curbs.

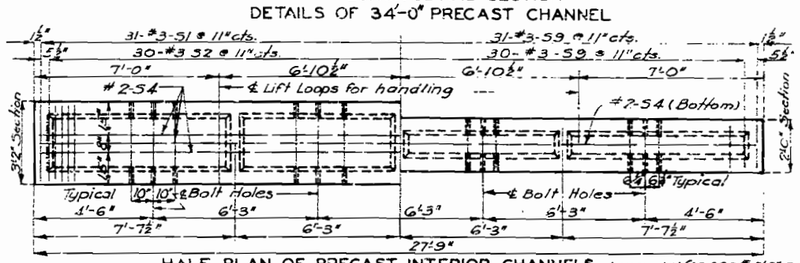

HALF PLAN OF PRECAST INTERIOR CHANNELS Approx. Wt. {10,880# 3'-2" Section. 8,690# 2'-0" Section
(Exterior Channel Similar for 3'-2" Section)

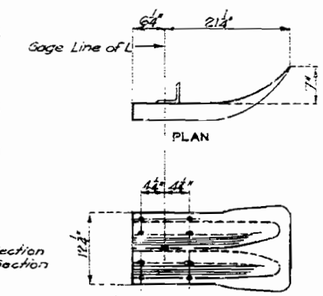

DETAILS OF FLARED ENDS

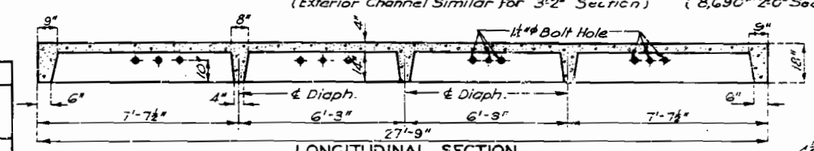

LONGITUDINAL SECTION
DETAILS OF 27'-9" PRECAST CHANNEL

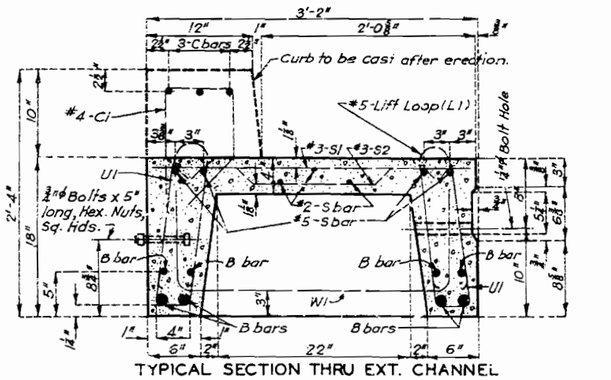

TYPICAL SECTION THRU INT. CHANNEL

TYPICAL SECTION THRU EXT. CHANNEL

BILL OF REINFORCING STEEL FOR SUPERSTRUCTURE

Total No.	One Span 21'-6" No.	27'-9" No.	34'-0" No.	Size	Length	Mark	Location
				#9	35'-6"	B1	Channel
				#5	32'-0"	B2	"
				#9	29'-3"	B3	"
				#5	20'-0"	B4	"
108	36			#8	23'-0"	B5	"
84	28			#4	3'-6"	C1	Curb
				#5	33'-9"	C2	"
				#5	27'-6"	C3	"
18	6			#5	21'-3"	C4	"
504	168	217	259	#3	3'-0"	S1	Slab
483	161	210	259	#3	3'-0"	S2	"
				#2	39'-9"	S3	"
				#2	27'-6"	S4	"
69	23			#2	21'-3"	S5	"
				#5	33'-9"	S6	"
				#5	27'-6"	S7	"
108	36			#5	21'-3"	S8	"
282	94			#3	21"	S9	"
1134	378			#2	3'-9"	U1	Channel
84	28			#4	4'-6"	W1	Diaphragm
24	8			#4	3'-3"	W2	"
108	36			1"ø	3'-0"	L1	Channel

Bending Sketches

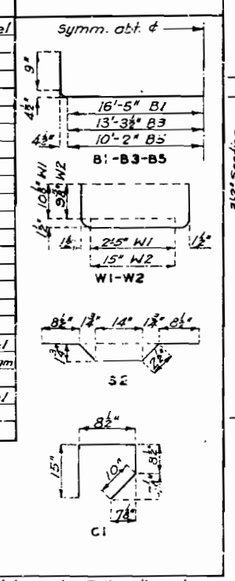

Note: This drawing is not to scale. Follow dimensions.

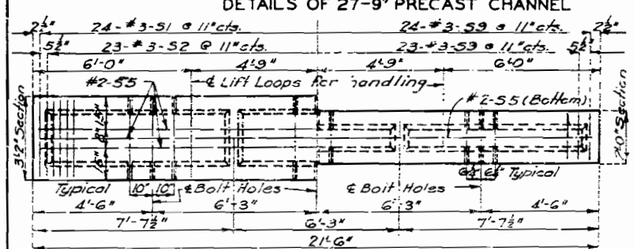

HALF PLAN OF PRECAST INTERIOR CHANNELS App. Wt. {8,470# 3'-2" Sec. 6,750# 2'-0" Sec.
(Exterior Channel Similar for 3'-2" Sec.)

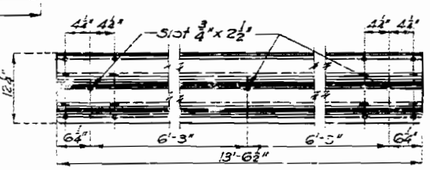

ELEVATION OF AN INTERMEDIATE PANEL
TYPICAL DETAILS OF RAIL

Note: Guard rail to be of 12 gage high carbon steel sheet. Rail to be secured to post by one 5/8"ø heat treated bolt. Sheets to be lapped 12 1/2" and connected by 8-5/8"ø heat treated bolts.
All bolt holes to be 13/16" x 1 1/2" except as noted.
Details of rail sheet and splices shall conform with the details shown on Missouri State Highway Guard Rail Std. 27A-17

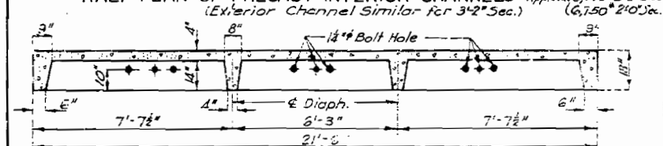

LONGITUDINAL SECTION
DETAILS OF 21'-6" PRECAST CHANNEL

Note: Unless otherwise shown or noted all exposed edges are to be beveled 1/2".

BRIDGE OVER DRAINAGE DITCH

STATE ROAD FROM ROUTE 61 TO ROUTE 5C
ABOUT 4.5 MILES S.W. OF CONRAN
PROJECT NO. S-372(1) (SF) STA. 908 + 87.8

NEW MADRID COUNTY

F-270R

Assembled Sept 1956 By W.C.H.
Checked Sept. 1956 By K.M.B.

Sheet No. 3 of 3

NO CONSTRUCTION CHANGES Precast Std. PC H15 Loading

MISSOURI STATE HIGHWAY DEPARTMENT

FED. ROAD DIST. NO.	STATE	FED. AID PROJ. NO.	FISCAL YEAR	SHEET NO.	TOTAL SHEETS
5	MO.	S-372 (1) (F)	19	21	

FINAL PLANS

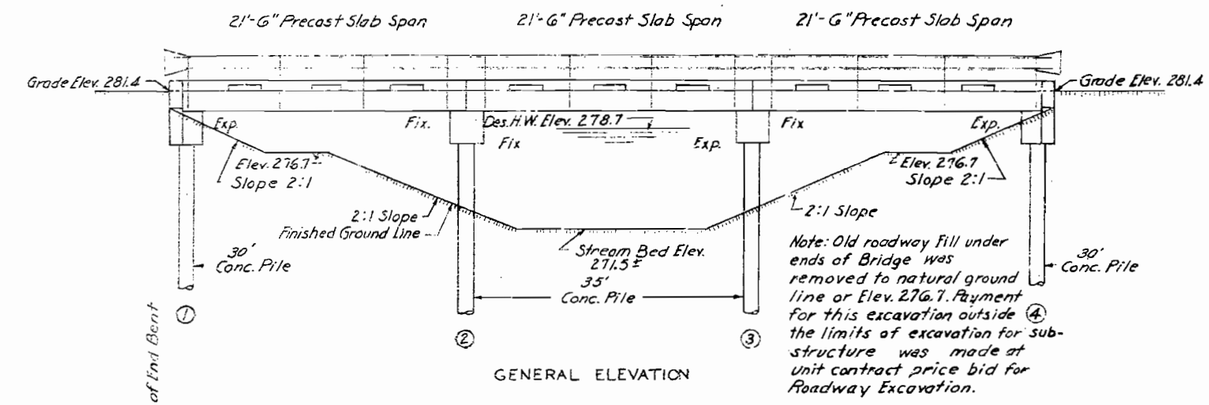

GENERAL ELEVATION

Note: Old roadway Fill under ends of Bridge was removed to natural ground line or Elev. 276.7. Payment for this excavation outside the limits of excavation for substructure was made at unit contract price bid for Roadway Excavation.

Note: All piling are standard octagonal concrete and conform with details and notes on Std. P-3R1. Quantities are based on the following lengths: 10@ 30'-0" and 10@ 35'-0".

No test pile was required.

All piling were driven to sustain a load of at least 28 ton per pile and with tips to at least Elev. 252.0

All piles were driven with a steam hammer, Vulcan #1.

BILL OF REINFORCING STEEL - SUBSTRUCTURE

No.	Size	Length	Mark	Location	Bending Sketches & Cutting Diagrams
		End Bents 1 & 4			
4	#6	27'-3"	H1	Beam	
16	#6	30'-0"	H2	"	
28	#6	5'-0"	H3	Wings	
4	#6	3'-6"	H4	"	
4	#6	2'-6"	H5	"	
8	#6	11'-0"	T1	"	
44	#4	9'-9"	U1	Beam	
6	#4	7'-9"	V3	Wings	
		Int. Bents 2 & 3			
16	#6	29'-0"	G1	Beam	
4	#6	26'-9"	G2	"	
44	#4	9'-3"	U1	"	

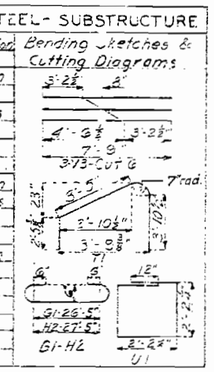

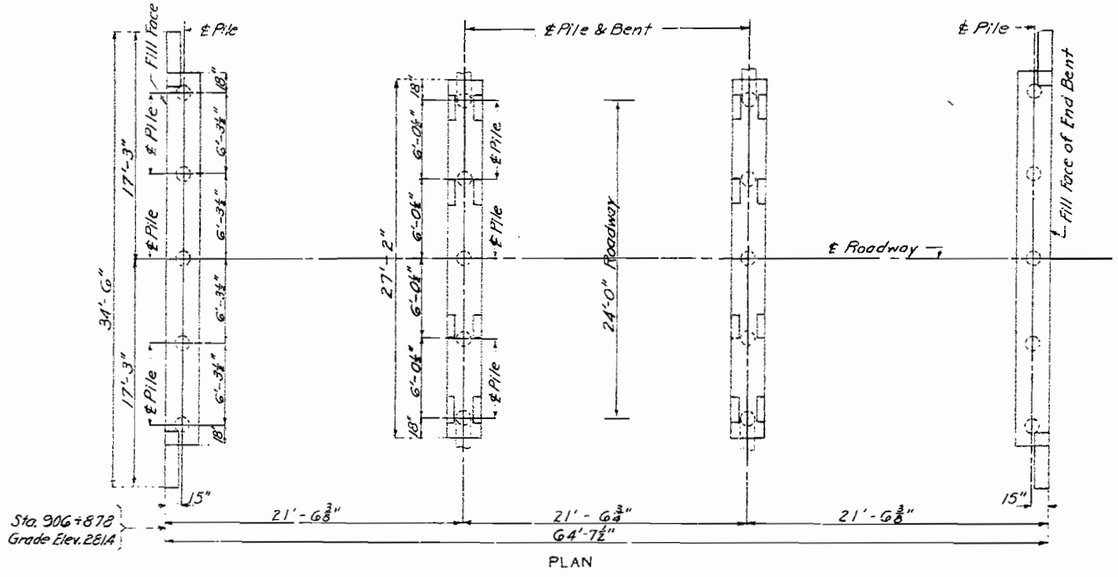

PLAN

GENERAL NOTES:

Design Specifications: A.A.S.H.O. 1953
Loading: H15-44
Reinforcing Steel Stress: 18,000 #/□".
Concrete, Class "B" Stress: 1,000 #/□".
Concrete, Class "A" Stress: 1,500 #/□".
All substructure concrete and curbs except Piles are Class "B".
All precast superstructure units are Class "A".
See Special Provisions.

Paint: Shop, none; Field, contact surfaces of bolted field connections (steel to steel) one coat of red lead and surfaces of rail posts in contact with concrete, three coats of red Lead. No other paint was applied by the Contractor. Payment for cleaning and painting such surfaces was included in unit price bid for Fabricated Structural Steel.

Where joint filler was specified on the plans it conformed with the requirements for Premoulded Material for Filler as given in Section 59-22D of the Standard Specifications.

Cost of cement mortar used in assembling precast units was included in unit price bid for precast units in place.

Fabricated Structural Steel superstructure included guard rail posts, bolts fastening these posts to concrete, and bolts and washers fastening precast concrete units together.

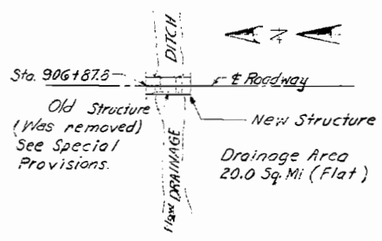

LOCATION SKETCH

FINAL QUANTITIES

Item		Substr.	Superstr.	Total
Class I Excavation for Structures	Cu. Yds.	62.5		62.5
* Class "A"	Cu. Yds.		53.9	53.9
Class "B" Concrete	Cu. Yds.	28.2	4.2	32.4
Fabricated Structural Steel	Lbs.		1330	1330
Reinforcing Steel	Lbs.	2,720	12,520	15,240
Concrete Piles in Place	Lin. Ft.	610		610
Concrete Pile Cut-Offs	Lin. Ft.	40		40
Asphalt Wearing Surface	Sq. Yds.		172	172
Bridge Guard Rail	Lin. Ft.		131	131

* See Special Provisions
Note: All excavation was Class I Excavation

B.M. Elev. 282.07
□ on W. Curb at N.W. Corner of Bridge 12' Rt. Sta. 906+89

BRIDGE OVER DRAINAGE DITCH No. 18

STATE ROAD FROM ROUTE 61 TO ROUTE C (162)
ABOUT 4.5 MILES S.W. OF CONRAN
PROJECT NO. S-372 (1) (F) STA. 906+87.8

NEW MADRID COUNTY

SUBMITTED BY J. A. Williams BRIDGE ENGINEER DATE 10-16-1956
APPROVED BY Rex M. Whitton CHIEF ENGINEER DATE 10-16-1956

STD. 19-3F1
STD. 27-A17
STD. 5-10P2
F-270 R

Drawn 1956 by O.J.S.
Checked 1956 by K.H.B.

Note: This drawing is not to scale. Follow dimensions.

Sheet No. 1A of 1

151