MISSOURI HIGHWAYS AND TRANSPORTATION COMMISSION
PLANS FOR PROPOSED
STATE HIGHWAY

DOUGLAS COUNTY

DESIGN DESIGNATION

A.A.D.T. - 2017 = 4691
A.A.D.T. - 2037 = 5245
D.H.V. = 6%
T = 11%
V = 60 M.P.H.

FUNCTIONAL CLASSIFICATION- MINOR ARTERIAL

No Right of Way required for this Project.

CONVENTIONAL SYMBOLS
(USED IN PLANS)

	EXISTING	NEW
BUILDINGS AND STRUCTURES		
GUARD RAIL		
CONCRETE RIGHT-OF-WAY MARKER		
STEEL RIGHT-OF-WAY MARKER		
LOCATION SURVEY MARKER		
UTILITIES		
FIBER OPTICS	—FO—	—FO—
OVERHEAD TELEPHONE		
UNDERGROUND TELEPHONE	—T—	—T—
OVERHEAD POWER		
UNDERGROUND POWER	—P—	—P—
GAS	—G—	—G—
WATER	—W—	—W—
MANHOLE	SAN	
FIRE HYDRANT	HYD	
WATER VALVE	WV	
WATER METER	WM	
DROP INLET	D	
DITCH BLOCK		
GROUND MOUNTED SIGN	SIGN	
LIGHT POLE		
H-FRAME POWER POLE		
TELEPHONE PEDESTAL	PED	
FENCE		
CHAIN LINK	—V—	
WOVEN WIRE	—X—	
GATE POST		
BENCHMARK	BM	

NOTE: DASHED OR OPEN SYMBOLS INDICATE EXISTING FEATURES

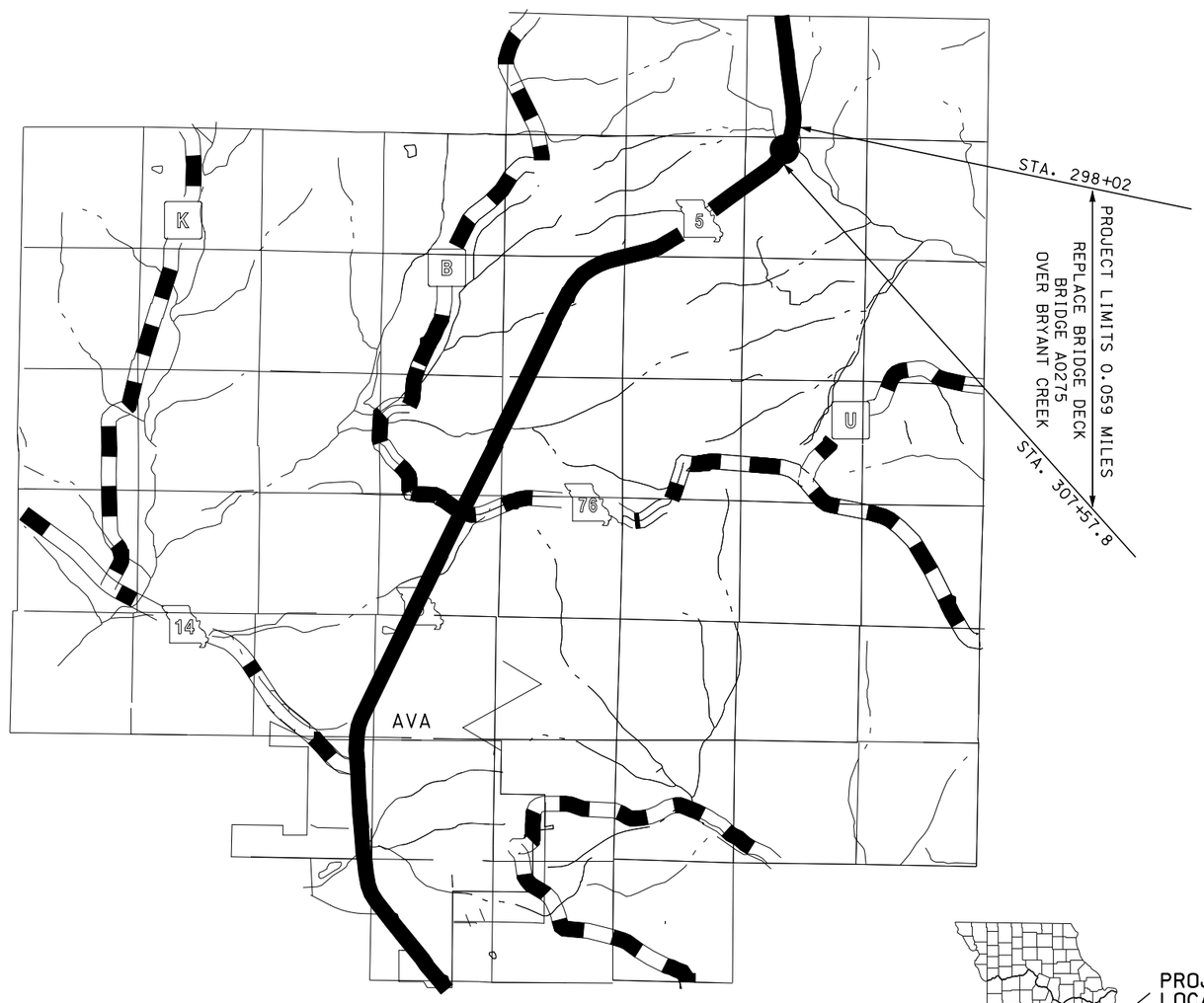

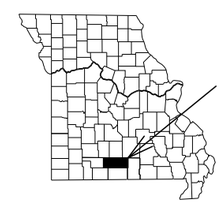

INDEX OF SHEETS

DESCRIPTION	SHEET NUMBER
TITLE SHEET	1
TYPICAL SECTIONS (TS) (1 SHEET)	2
QUANTITIES (QU) (2 SHEETS)	3
PLAN-PROFILE (PP)	4
TRAFFIC CONTROL SHEETS (TC)	5
BRIDGE DRAWINGS (B)	
A0275	1-17

LENGTH OF PROJECT

BEGINNING OF PROJECT	STA. 298+02	
END OF PROJECT	STA. 307+57.8	
APPARENT LENGTH	955.8	FEET
EQUATIONS AND EXCEPTIONS:		
TOTAL CORRECTIONS	0.00	FEET
NET LENGTH OF PROJECT	0.181	MILES
STATE LENGTH	0.181	MILES

STATE OF MISSOURI
CHRIS E. BERRY
NUMBER PE-2001018707
PROFESSIONAL ENGINEER
THIS SHEET HAS BEEN SIGNED, SEALED AND DATED ELECTRONICALLY.

DATE PREPARED	
10/3/2016	
ROUTE 5	STATE MO
DISTRICT SE	SHEET NO. 1
COUNTY DOUGLAS	
JOB NO. J9P3118	
CONTRACT ID.	
PROJECT NO.	
BRIDGE NO.	

DATE	DESCRIPTION

MISSOURI HIGHWAYS AND TRANSPORTATION COMMISSION
105 WEST CAPITOL
JEFFERSON CITY, MO 65102
1-888-ASK-MODOT (1-888-275-6636)

IF A SEAL IS PRESENT ON THIS SHEET IT HAS BEEN ELECTRONICALLY SEALED AND DATED.

(1) MATCH EXISTING TRAVELWAY CROSS SLOPE

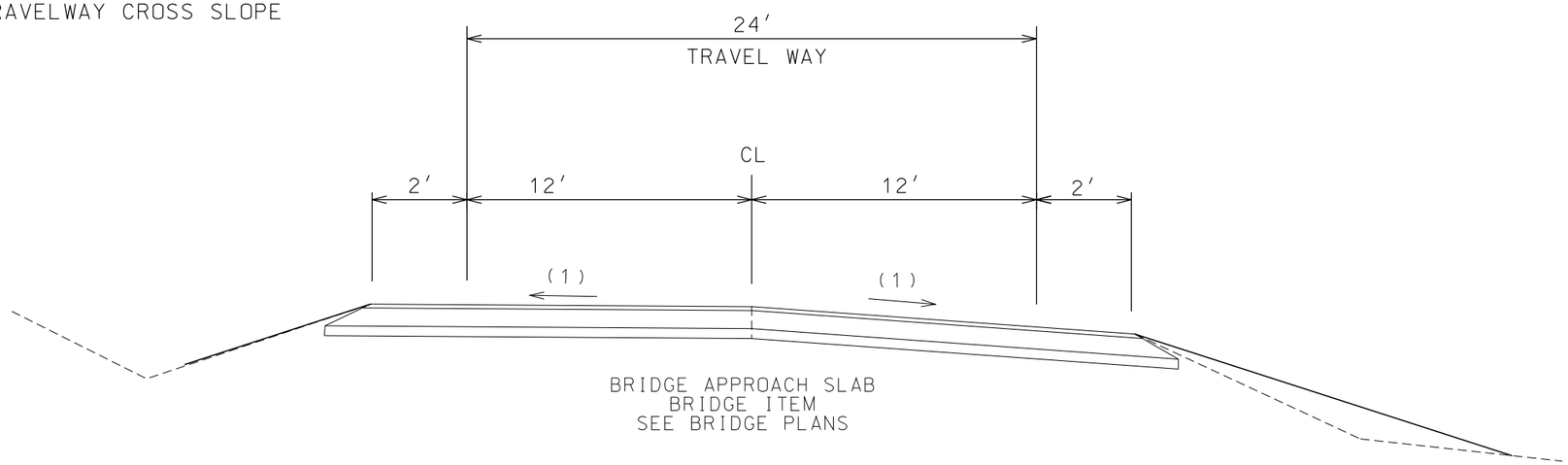

TYPICAL SECTION
ROUTE 5

STA. 301+07.25 TO STA. 301+27.25
STA. 303+32.75 TO STA. 303+52.75

SLOPE PROTECTION

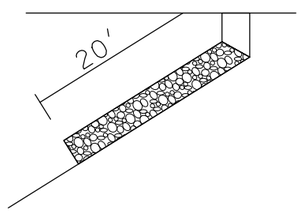

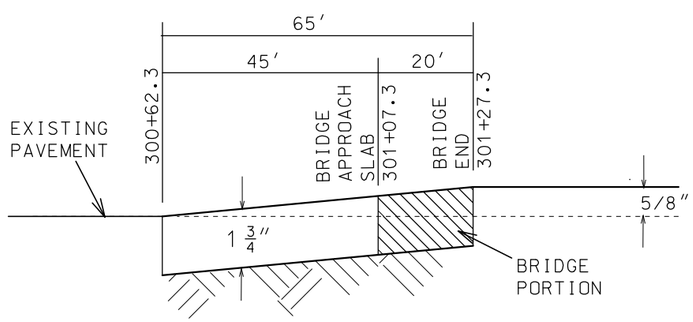

MODIFIED COLDMILLING
(DEPTH TRANSITION)

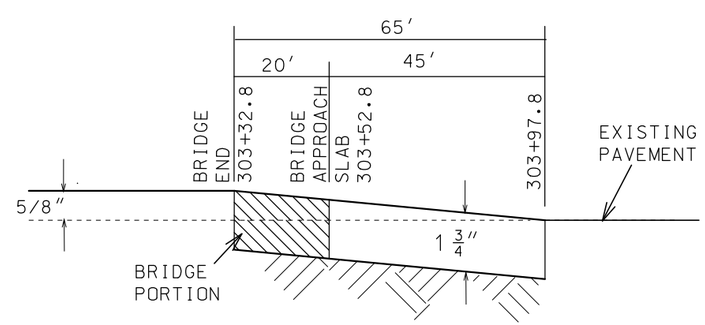

MODIFIED COLDMILLING
(DEPTH TRANSITION)

ESTIMATE FACTORS FOR ASPHALTIC MIXTURES	
BP-1	2.041 TON/CY

TYPICAL SECTIONS
SHEET 1 OF 1

STATE OF MISSOURI
CHRIS E. BERRY
NUMBER PE-2001018707
PROFESSIONAL ENGINEER

THIS SHEET HAS BEEN SIGNED, SEALED AND DATED ELECTRONICALLY.

DATE PREPARED	
10/3/2016	
ROUTE 5	STATE MO
DISTRICT SE	SHEET NO. 2
COUNTY DOUGLAS	
JOB NO. J9P3118	
CONTRACT ID.	
PROJECT NO.	
BRIDGE NO.	

DATE	DESCRIPTION

MISSOURI HIGHWAYS AND TRANSPORTATION COMMISSION
105 WEST CAPITOL
JEFFERSON CITY, MO 65102
1-888-ASK-MODOT (1-888-275-6636)

IF A SEAL IS PRESENT ON THIS SHEET IT HAS BEEN ELECTRONICALLY SEALED AND DATED.

MISSOURI HIGHWAYS AND TRANSPORTATION COMMISSION

SUMMARY OF QUANTITIES

CONTRACTOR FURNISHED SURVEYING AND STAKING
1 LUMP SUM

MOBILIZATION
1 LUMP SUM

GUARDRAIL

STATION	STATION	LOCATION	MGS BRIDGE APPROACH TRANSITION SECTION EACH	MASH CRASHWORTHY END TERMINAL TYPE A EACH	MGS GUARDRAIL 6 FT POSTS FT.	REMARKS
298+02.0	301+27.3	LT	1	1	237.5	NORTHEAST CORNER BRIDGE #A0275
298+02.0	301+27.3	RT	1	1	237.5	NORTHWEST CORNER BRIDGE #A0275
303+32.8	307+57.8	LT	1	1	337.5	SOUTHEAST CORNER BRIDGE #A0275
303+32.8	307+57.8	RT	1	1	337.5	SOUTHWEST CORNER BRIDGE #A0275
		TOTAL	4	4	1150.0	

SEE STD. 606.00 AND 606.30 FOR DETAILS

REMOVAL OF IMPROVEMENTS

STATION	STATION	LOCATION	REMARKS
298+12.0	301+25.0	LT	312.5' GUARDRAIL NORTHEAST CORNER BRIDGE #A0275
298+12.0	301+25.0	RT	312.5' GUARDRAIL NORTHWEST CORNER BRIDGE #A0275
303+32.8	307+50.0	LT	412.5' GUARDRAIL SOUTHEAST CORNER BRIDGE #A0275
303+32.8	307+50.0	RT	412.5' GUARDRAIL SOUTHWEST CORNER BRIDGE #A0275
1 LUMP SUM			

PAVEMENT MARKING REMOVAL

STATION	STATION	PAVEMENT MARKING REMOVAL (L.F.)	REMARKS
296+82		10	REMOVE STOP BAR
307+78		10	REMOVE STOP BAR
296+82	307+78	1096	EXISTING CENTERLINE
299+07	300+07	100	STAGE 1 - RIGHT EDGELINE TAPER
304+53	305+53	100	STAGE 1 - RIGHT EDGELINE TAPER
299+07	305+53	646	STAGE 2 RIGHT EDGELINE
299+07	305+53	646	STAGE 2 LEFT EDGELINE
		2608	

PAVEMENT MARKING

STATION	STATION	LOCATION	ACRYLIC WATERBORNE PAINT 4" WHITE (L.F.)	ACRYLIC WATERBORNE PAINT 4" SOLID YELLOW (L.F.)	PREFORMED REMOVABLE MARKING TAPE 4" SOLID WHITE (L.F.)	PREFORMED REMOVABLE MARKING TAPE 24" SOLID WHITE (L.F.)	REMARKS
296+82.0	307+78.0	ROUTE 5	1992	2000	200.0	20.0	STAGE 1 CONSTRUCTION - SEE TRAFFIC CONTROL SHEET
296+82.0	307+78.0	ROUTE 5			1292.0		STAGE 2 CONSTRUCTION - SEE TRAFFIC CONTROL SHEET
296+82.0	307+78.0	ROUTE 5	2192	2192			DOUBLE YELLOW CENTERLINE WITH EDGELINES
		TOTAL	4184	4192	1492.0	20.0	

TYPE 2 ROCK BLANKET AND GEOTEXTILE FABRIC

LOCATION	WIDTH (AVE) (FT)	FURNISHING TYPE 2 ROCK CY	PLACING TYPE 2 ROCK CY	FABRIC SY	REMARKS
ROUTE 5	60	89	89	133	NORTH END BRIDGE
ROUTE 5	60	89	89	133	SOUTH END BRIDGE
TOTAL		178	178	266	

PAVEMENT

STA	STA	LENGTH (FT)	WIDTH (FT)	BITUMINOUS PAVEMENT MIXTURE PG64-22 (BP-1) (TONS)	REMARKS
300+62.3	301+27.3	45	28	13.9	NORTH END BRIDGE
303+32.8	303+97.8	45	28	13.9	SOUTH END BRIDGE
TOTAL				27.8	

MODIFIED COLD MILLING (DEPTH TRANSITIONS)

STA	STA	LENGTH (FT)	WIDTH (FT)	MODIFIED COLDMILLING (SY)	REMARKS
300+62.3	301+27.3	45	28	140.0	NORTH END BRIDGE
303+32.8	303+97.8	45	28	140.0	SOUTH END BRIDGE
TOTAL				280.0	

SUMMARY SHEET
1 OF 2

STATE OF MISSOURI
CHRIS E. BERRY
NUMBER PE-2001018707
PROFESSIONAL ENGINEER
THIS SHEET HAS BEEN SIGNED, SEALED AND DATED ELECTRONICALLY.

DATE PREPARED 10/17/2016
ROUTE 5 | STATE MO
DISTRICT SE | SHEET NO. 3
COUNTY DOUGLAS
JOB NO. J9P3118
CONTRACT ID.
PROJECT NO.
BRIDGE NO.

DESCRIPTION | DATE

IF A SEAL IS PRESENT ON THIS SHEET IT HAS BEEN ELECTRONICALLY SEALED AND DATED.

MISSOURI HIGHWAYS AND TRANSPORTATION COMMISSION
105 WEST CAPITOL
JEFFERSON CITY, MO 65102
1-888-ASK-MODOT (1-888-275-6636)

REV.

EFFECTIVE: 04-01-2016

SUMMARY SHEET
2 OF 2

SIGN	SIZE (IN.)	AREA (SQ. FT.)	QTY	TOTAL AREA	QTY RELOC	TOTAL RELOC AREA	DESCRIPTION
WARNING SIGNS							
W01-1L	48X48	16.00					TURN (SYMBOL LEFT ARROW)
W01-1R	48X48	16.00					TURN (SYMBOL RIGHT ARROW)
W01-2L	48X48	16.00					CURVE (SYMBOL LEFT ARROW)
W01-2R	48X48	16.00					CURVE (SYMBOL RIGHT ARROW)
W01-3L	48X48	16.00					REVERSE TURN (SYMBOL LEFT ARROW)
W01-3R	48X48	16.00					REVERSE TURN (SYMBOL RIGHT ARROW)
W01-4L	48X48	16.00					REVERSE CURVE (SYMBOL LEFT ARROW)
W01-4R	48X48	16.00					REVERSE CURVE (SYMBOL RIGHT ARROW)
W01-4bL	48X48	16.00					DOUBLE ARROW REVERSE CURVE (SYMBOL LEFT ARROWS)
W01-4bR	48X48	16.00					DOUBLE ARROW REVERSE CURVE (SYMBOL RIGHT ARROWS)
W01-4cL	48X48	16.00					TRIPLE ARROW REVERSE CURVE (SYMBOL LEFT ARROWS)
W01-4cR	48X48	16.00					TRIPLE ARROW REVERSE CURVE (SYMBOL RIGHT ARROWS)
W01-6	60X30	12.50					HORIZONTAL ARROW (SYMBOL)
W01-6a	72X36	18.00					HORIZONTAL ARROW (SYMBOL ON PERMANENT BARRICADE)
W01-7	60X30	12.50					DOUBLE HEAD HORIZONTAL ARROW (SYMBOL)
W01-7a	72X36	18.00					DOUBLE HEAD HORIZONTAL ARROW (SYMBOL ON PERMANENT BARRICADE)
W01-8	18X24	3.00					CHEVRON (SYMBOL)
W01-8a	30X36	7.50					CHEVRON (SYMBOL FOR DIVIDED HIGHWAYS)
W03-1	48X48	16.00					STOP AHEAD (SYMBOL)
W03-2	48X48	16.00					YIELD AHEAD (SYMBOL)
W03-3	48X48	16.00	2	32			SIGNAL AHEAD (SYMBOL)
W03-4	48X48	16.00					BE PREPARED TO STOP
W03-5	48X48	16.00	2	32			SPEED LIMIT AHEAD - 35
W04-1L	48X48	16.00					MERGE (SYMBOL FROM LEFT)
W04-1R	48X48	16.00					MERGE (SYMBOL FROM RIGHT)
W05-1	48X48	16.00					ROAD/BRIDGE/RAMP NARROWS
W05-3	48X48	16.00					ONE LANE BRIDGE
W05-5	48X48	16.00					NARROW LANES
W06-1	48X48	16.00					DIVIDED HIGHWAY (SYMBOL)
W06-2	48X48	16.00					DIVIDED HIGHWAY END (SYMBOL)
W06-3	48X48	16.00					TWO WAY TRAFFIC (SYMBOL)
W07-3a	30X24	5.00					NEXT XX MILES (PLAQUE)
W08-1	48X48	16.00					BUMP
W08-2	48X48	16.00					DIP
W08-3	48X48	16.00					PAVEMENT ENDS
W08-4	48X48	16.00					SOFT SHOULDER
W08-5	48X48	16.00					SLIPPERY WHEN WET (SYMBOL)
W08-6	48X48	16.00					TRUCK CROSSING WITH FLAGS
W08-6c	48X48	16.00					TRUCK ENTRANCE
W08-7	36X36	9.00					LOOSE GRAVEL
W08-9	48X48	16.00					LOW SHOULDER
W08-11	48X48	16.00					UNEVEN LANES
W08-12	48X48	16.00					NO CENTER LINE
W10-1	42 RND.	9.62					RAILROAD CROSSING
W012-1	24X24	4.00					DOUBLE DOWN ARROW (SYMBOL)
W012-2	48X48	16.00					LOW CLEARANCE (SYMBOL)
W012-2x	24X18	3.00					LOW CLEARANCE (PLAQUE)
W012-2a	84X24	14.00					OVERHEAD LOW CLEARANCE (FEET AND INCHES)
W08-15	48X48	16.00					GROOVED PAVEMENT
W08-15p	30X24	5.00					MOTORCYCLE (PLAQUE)
W08-17	48X48	16.00					SHOULDER DROP-OFF (SYMBOL)
W08-17p	30X24	5.00					SHOULDER DROP-OFF (PLAQUE)
SPECIAL	120X60	50.00					LOW CLEARANCE XX FT XX IN XX MILES AHEAD
SPECIAL	120X60	50.00					WIDTH RESTRICTION XX FT XX IN XX MILES AHEAD
W013-1	30X30	6.25					ADVISORY SPEED (PLAQUE)
W016-2	30X24	5.00					XXX FEET (PLAQUE)
W016-3	30X24	5.00					X MILE (PLAQUE)
W020-1	48X48	16.00	2	32			ROAD/BRIDGE/RAMP WORK AHEAD
W020-2	48X48	16.00					DETOUR AHEAD
W020-3	48X48	16.00					ROAD CLOSED AHEAD
W020-4	48X48	16.00	2	32			ONE LANE ROAD AHEAD
W020-5	48X48	16.00					RIGHT/CENTER/LEFT LANE CLOSED AHEAD
W020-5a	48X48	16.00					2 RIGHT/CENTER/LEFT LANES CLOSED AHEAD
W020-6a	48X48	16.00					RIGHT/CENTER/LEFT LANE CLOSED
W020-7a	48X48	16.00					FLAGGER (SYMBOL) WITH FLAGS
W021-2	36X36	9.00					FRESH OIL
W021-5	48X48	16.00					SHOULDER WORK AHEAD
W022-1	48X48	16.00					BLASTING ZONE AHEAD
W022-2	42X36	10.50					TURN OFF 2-WAY RADIO AND PHONE
W022-3	42X36	10.50					END BLASTING ZONE
W022-6e	21X15	2.19					WET PAINT (ARROW PIVOTS)
GUIDE SIGNS							
SPECIAL	36X36	9.00					FRESH OIL/LOOSE GRAVEL
E05-1	36X48	12.00					GORE EXIT
E05-2	48X36	12.00					EXIT OPEN
E05-2a	48X36	12.00					EXIT CLOSED
G020-1	60X24	10.00					ROAD WORK NEXT XX MILES
G020-2	48X24	8.00					END ROAD WORK
G020-4	36X18	4.50					PILOT CAR FOLLOW ME
SPECIAL	42X30	8.75					PLEASE WAIT FOR PILOT CAR
G020-5aP	36X24	6.00					WORK ZONE (PLAQUE)
M04-8a	24X18	3.00					END DETOUR
M04-9L	48X36	12.00					DETOUR (LEFT ARROW)
M04-9R	48X36	12.00					DETOUR (RIGHT ARROW)
M04-10L	48X18	6.00					DETOUR (ARROW LEFT)
M04-10R	48X18	6.00					DETOUR (ARROW RIGHT)
REGULATORY SIGNS							
R1-1	48X48	13.25					STOP
R1-2	48 TRI.	6.93					YIELD
R1-2a	36X36	9.00					TO ONCOMING TRAFFIC (PLAQUE)
R1-3	20X9	1.25					X-WAY (PLAQUE)
R2-1	36X48	12.00	4	48			SPEED LIMIT 2-35, 2-60
R3-1	48X48	16.00					NO RIGHT TURN (SYMBOL)
R3-2	48X48	16.00					NO LEFT TURN (SYMBOL)
R3-3	36X36	9.00					NO TURNS
R3-4	48X48	16.00					NO U-TURN (SYMBOL)
R3-7L	30X30	6.25					LEFT LANE MUST TURN LEFT
R3-7R	30X30	6.25					RIGHT LANE MUST TURN RIGHT
R4-1	36X48	12.00					DO NOT PASS
R4-2	36X48	12.00					PASS WITH CARE
R4-7aL	36X48	12.00					KEEP LEFT (HORIZONTAL ARROW)
R4-7a	36X48	12.00					KEEP RIGHT (HORIZONTAL ARROW)
R5-1	30X30	6.25					DO NOT ENTER
R5-1a	36X24	6.00					WRONG WAY
R6-1L	48X18	6.00					ONE WAY ARROW (LEFT)
R6-1R	48X18	6.00					ONE WAY ARROW (RIGHT)
R6-2L	24X30	5.00					ONE WAY (LEFT)
R6-2R	24X30	5.00					ONE WAY (RIGHT)
R10-6	24X36	6.00	2	12			STOP HERE ON RED (45° ARROW)
R11-2	48X30	10.00					ROAD CLOSED
R11-3a	60X30	12.50					ROAD CLOSED XX MILES AHEAD LOCAL TRAFFIC ONLY
R11-4	60X30	12.50					ROAD CLOSED TO THRU TRAFFIC
S4-4	36X15	3.75					WHEN FLASHING
CONST-3A	60X48	20.00					FINE SIGN
CONST-3X	56X12	4.67					SPEEDING/PASSING (PLATE)
MISCELLANEOUS SIGNS							
SPECIAL	36X48	12.00					POINT OF PRESENCE
SPECIAL	96X48	32.00					POINT OF PRESENCE
CONST-7-48	48X24	8.00					RATE OUR WORK ZONE
CONST-7-72	72X36	18.00					RATE OUR WORK ZONE
616-10.05 CONSTRUCTION SIGNS TOTAL				188			
616-10.10 RELOCATED SIGNS TOTAL							

ITEM NUMBER	TOTAL QTY	DESCRIPTION
6122008		IMPACT ATTENUATOR (8 SAND BARRELS)
6122009		IMPACT ATTENUATOR (9 SAND BARRELS)
6122010		IMPACT ATTENUATOR (10 SAND BARRELS)
6122012		IMPACT ATTENUATOR (12 SAND BARRELS)
6122014	2	IMPACT ATTENUATOR (14 SAND BARRELS)
6122017		IMPACT ATTENUATOR (17 SAND BARRELS)
6122019		IMPACT ATTENUATOR (19 SAND BARRELS)
6122020	10	REPLACEMENT SAND BARREL
6122030	2	IMPACT ATTENUATOR (RELOCATION)
6123000A		TRUCK OR TRAILER MOUNTED ATTENUATOR (TMA)
6161007		SPEED LIMIT AND STROBE LIGHT ASSEMBLY
6161008	2	ADVANCED WARNING RAIL SYSTEM
6161009	2	FLAG ASSEMBLY
6161020		CHANNELIZER (DRUM-LIKE)
6161022		CHANNELIZER (CONES)
6161024		CHANNELIZER (TRIM LINE) WITH LIGHT
6161025	10	CHANNELIZER (TRIM LINE)
6161026		CHANNELIZER (VERTICAL PANEL)
6161027		CHANNELIZER (VERTICAL PANEL) WITH LIGHT
6161028		CHANNELIZER
6161030		TYPE III MOVEABLE BARRICADE
6161031		TYPE III MOVEABLE BARRICADE WITH LIGHT
6161033		DIRECTION INDICATOR BARRICADE
6161034		DIRECTION INDICATOR BARRICADE, WITH LIGHT
6161040		FLASHING ARROW PANEL
6161047		TYPE III OBJECT MARKER
6161051		WARNING LIGHT, TYPE A
6161052		WARNING LIGHT, TYPE B
6161053		WARNING LIGHT, TYPE C
6161055		SEQUENTIAL FLASHING WARNING LIGHT
6161070		TUBULAR MARKER
6161095		RADAR SPEED ADVISORY SYSTEM
6161096		CHANGEABLE MESSAGE SIGN, COMMISSION FURNISHED/RETAINED
6161098A	2	CHANGEABLE MESSAGE SIGN WITHOUT COMMUNICATION INTERFACE, CONTRACTOR FURNISHED/RETAINED
6161099		CHANGEABLE MESSAGE SIGN WITH COMMUNICATION INTERFACE, CONTRACTOR FURNISHED/RETAINED
6162000A	1	WORK ZONE TRAFFIC SIGNAL SYSTEM
6173600D	565	CONTRACTOR FURNISHED/RETAINED TEMPORARY TRAFFIC BARRIER
6173602B		CONTRACTOR FURNISHED/COMMISSION RETAINED TEMPORARY TRAFFIC BARRIER
6174000A		TEMPORARY TRAFFIC BARRIER HEIGHT TRANSITION
6175010A	565	RELOCATING TEMPORARY TRAFFIC BARRIER
6176000B		COMMISSION FURNISHED/RETAINED TEMPORARY TRAFFIC BARRIER
6177000B		COMMISSION FURNISHED/RETAINED TEMPORARY TRAFFIC BARRIER HEIGHT TRANSITION
9019400	1	TEMPORARY LIGHTING (INCLUDES 4 LIGHTS)
9029400		TEMPORARY TRAFFIC SIGNALS
9029401		TEMPORARY TRAFFIC SIGNALS AND LIGHTING

STATE OF MISSOURI
CHRIS E. BERRY
NUMBER PE-2001018707
PROFESSIONAL ENGINEER
THIS SHEET HAS BEEN SIGNED, SEALED AND DATED ELECTRONICALLY.

DATE PREPARED: 10/3/2016

ROUTE	STATE
5	MO
DISTRICT	SHEET NO.
SE	3

COUNTY: DOUGLAS
JOB NO.: J9P3118
CONTRACT ID.:
PROJECT NO.:
BRIDGE NO.:

DATE	DESCRIPTION

MISSOURI HIGHWAYS AND TRANSPORTATION COMMISSION
105 WEST CAPITOL
JEFFERSON CITY, MO 65102
1-888-ASK-MODOT (1-888-275-6636)

IF A SEAL IS PRESENT ON THIS SHEET IT HAS BEEN ELECTRONICALLY SEALED AND DATED.

295

EXIST. R/W

300

BRYANT CREEK

MGS BRIDGE
APPROACH TRANSITION
LT. AND RT.

MASH CRASHWORTHY
END TERMINAL LT./RT.

237.5 FT. MGS GUARDRAIL
LT./ RT.

BRIDGE #A0275

305

MGS BRIDGE
APPROACH TRANSITION
LT. AND RT.

337.5 FT. MGS GUARDRAIL
LT./ RT.

MASH CRASHWORTHY
END TERMINAL LT./RT.

310

EXIST. R/W

CURVE EX51	
PI	301+20.60
PC	284+38.09
PT	314+80.71
Δ	60° 51′ 00.0″ (RT)
D	1° 59′ 59.7″
L	3,042.62′
T	1,682.51′
R	2,864.90′

BR. A0275
REDECK
62′-78′-62′ CONTINUOUS I BEAM BRIDGE
D.A. = 16.5 SQ. MI.
MATCH EXISTING GRADE +/-
STA. 301+27.25 TO STA. 303+32.75

SCALE
0 50 100 150

STATE OF MISSOURI
CHRIS E. BERRY
NUMBER
PE-2001018707
PROFESSIONAL ENGINEER

THIS SHEET HAS BEEN SIGNED, SEALED AND DATED ELECTRONICALLY.

DATE PREPARED	
10/3/2016	
ROUTE 5	STATE MO
DISTRICT SE	SHEET NO. 4
COUNTY DOUGLAS	
JOB NO. J9P3118	
CONTRACT ID.	
PROJECT NO.	
BRIDGE NO.	

DATE	DESCRIPTION

MISSOURI HIGHWAYS AND TRANSPORTATION COMMISSION
105 WEST CAPITOL
JEFFERSON CITY, MO 65102
1-888-ASK-MODOT (1-888-275-6636)

IF A SEAL IS PRESENT ON THIS SHEET IT HAS BEEN ELECTRONICALLY SEALED AND DATED.

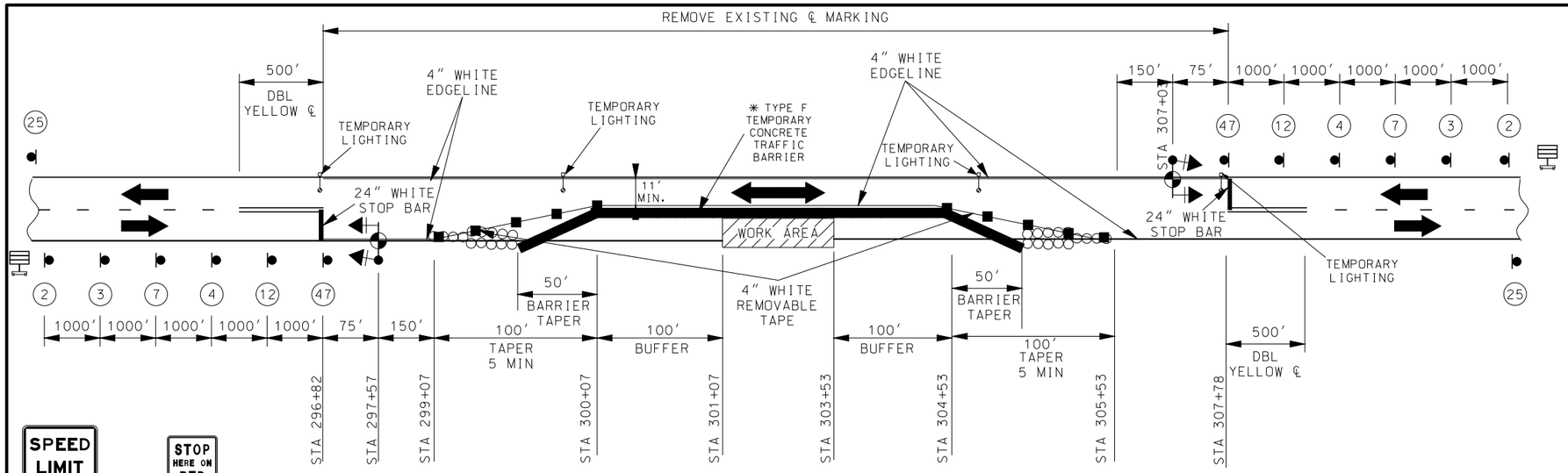

TRAFFIC CONTROL LEGEND

- SIGN (SINGLE SIDED)
- CHANNELIZER
- TEMPORARY SIGNAL WITH LIGHT
- CHANGEABLE MESSAGE BOARD (LOCATION SPECIFIED BY ENGINEER)
- TEMPORARY LIGHTING

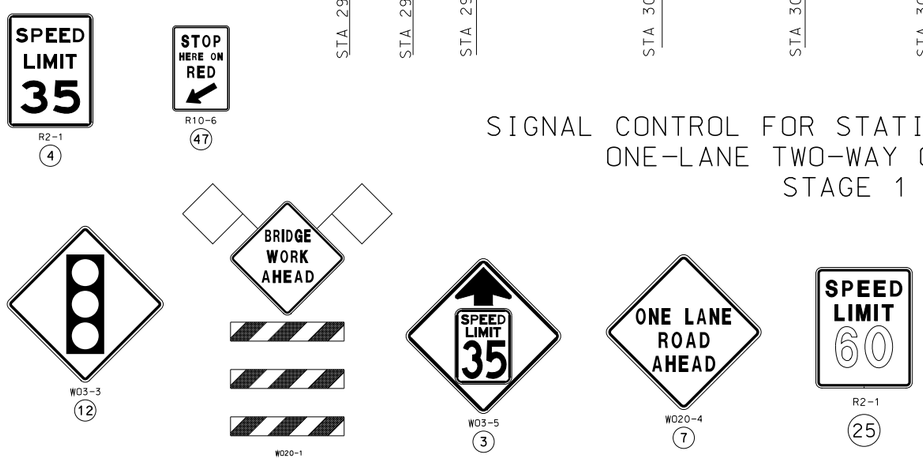

SIGNAL CONTROL FOR STATIONARY OPERATION
ONE-LANE TWO-WAY OPERATION
STAGE 1

NOTES

INSTALLATION OF TEMPORARY TRAFFIC CONTROL ITEMS SHALL BE REQUIRED PRIOR TO ANY DISRUPTION IN TRAFFIC DUE TO CONSTRUCTION OPERATIONS

ALL STATIONS, SPACING, AND DISTANCES OF TRAFFIC CONTROL DEVICES ARE APPROXIMATE AND MAY BE REVISED AS DIRECTED BY THE ENGINEER TO FIT FIELD CONDITIONS

ANY EXISTING SIGNS THAT CONFLICT WITH THIS TRAFFIC CONTROL PLAN SHALL BE COVERED OR REMOVED

#3 SIGN MAY BE OMITTED IF SPEED REDUCTION IS NOT MORE THAN 10MPH LOWER THAN THE POSTED SPEED

TEMPORARY LIGHTING SHALL BE PAID FOR AS 901-94.00

FOR PAY ITEM 616-20.00A CONTRACTOR HAS THE OPTION OF CHOOSING EITHER PORTABLE OR TEMPORARY SIGNAL

TEMPORARY SIGNAL WITH LIGHT (616-20.00A) SHALL CONSIST OF 2-RYG SIGNAL HEADS AND A 150W LUMINAIRE PER DIRECTION EACH SHALL HAVE ACTIVE DETECTION AND BE SYNCHRONIZED TO ONE ANOTHER

NO PAYMENT WILL BE MADE FOR RELOCATION OF CONSTRUCTION SIGNS, TEMPORARY LIGHTING, OR THE TEMPORARY TRAFFIC SIGNAL BETWEEN CONTSTRUCTION STAGES.

THE CONTRACTOR SHALL INSTALL AND MAINTAIN TEMPORARY LIGHTING AT EACH END OF THE PROPOSED BRIDGE IN BOTH STAGES OF BRIDGE CONSTRUCTION.
LOCATED AS APPROVED BY ENGINEER PAID FOR AS LUMP SUM - TEMPORARY LIGHTING

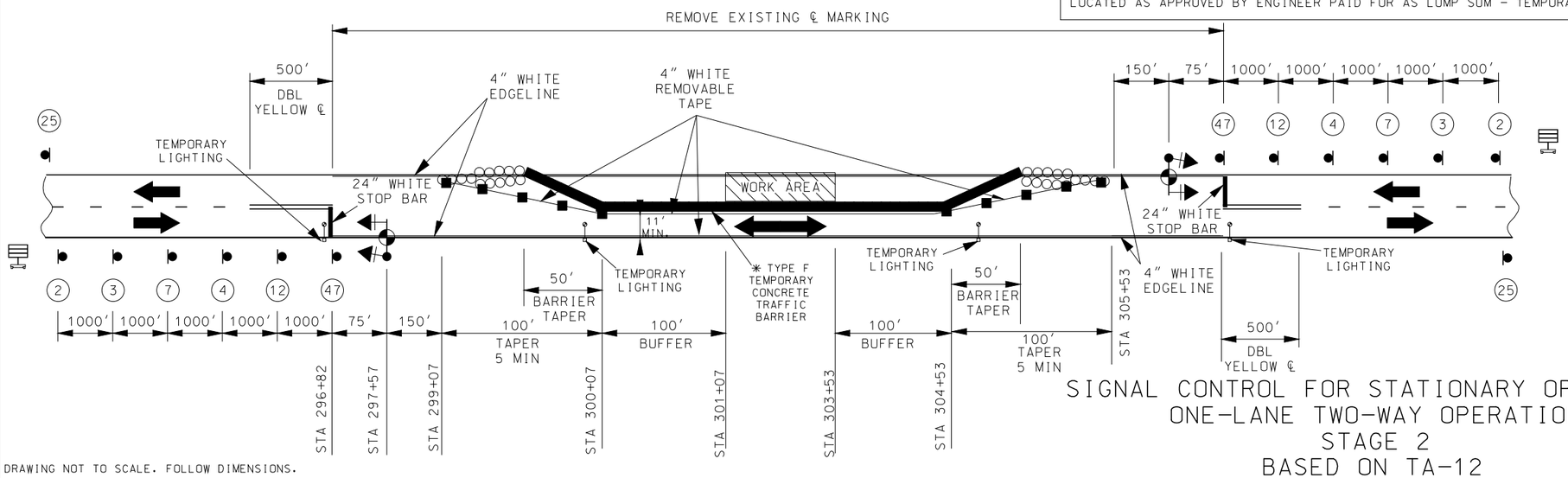

SIGNAL CONTROL FOR STATIONARY OPERATION
ONE-LANE TWO-WAY OPERATION
STAGE 2
BASED ON TA-12

DRAWING NOT TO SCALE. FOLLOW DIMENSIONS.

TRAFFIC CONTROL
SHEET 1 OF 1

STATE OF MISSOURI
CHRIS E. BERRY
NUMBER PE-2001018707
PROFESSIONAL ENGINEER
THIS SHEET HAS BEEN SIGNED, SEALED AND DATED ELECTRONICALLY.

DATE PREPARED	10/3/2016
ROUTE 5	STATE MO
DISTRICT SE	SHEET NO. 5
COUNTY	DOUGLAS
JOB NO.	J9P3118
CONTRACT ID.	
PROJECT NO.	
BRIDGE NO.	

DESCRIPTION | DATE

MISSOURI HIGHWAYS AND TRANSPORTATION COMMISSION
105 WEST CAPITOL
JEFFERSON CITY, MO 65102
1-888-ASK-MODOT (1-888-275-6636)

IF A SEAL IS PRESENT ON THIS SHEET IT HAS BEEN ELECTRONICALLY SEALED AND DATED.

REV.

SEC/SUR 17 TWP 27N RGE 15W

U.I.P., REDECK AND MAKE COMPOSITE EXISTING (62'-78'-62') CONTINUOUS WIDE FLANGE BEAM SPANS

GENERAL NOTES:

Design Specifications:

2002 AASHTO LFD (17th Ed.) Standard Specifications
Seismic Performance Category A

Design Loading:

H20-44 (1953) (Existing)
HS20-44 (New Construction)
35 lb/sf Future Wearing Surface
Fatigue Stress = Case II

Design Unit Stresses:

Class B-1 Concrete (Safety Barrier Curb)	f'c = 4,000 psi
Class B-2 Concrete (End Bents & Superstructure except Safety Barrier Curb)	f'c = 4,000 psi
Reinforcing Steel (Grade 60)	fy = 60,000 psi

Joint Filler:

All joint filler shall be in accordance with Sec 1057 for preformed sponge rubber expansion and partition joint filler, except as noted.

Reinforcing Steel:

Minimum clearance to reinforcing steel shall be 1 1/2", unless otherwise shown.

MBS refers to mechanical bar splices. Mechanical bar splices shall be in accordance with Sec 706 or 710.

Concrete Protective Coatings:

Protective coating for concrete bents and piers (Urethane) shall be applied as shown on the bridge plans and in accordance with Sec 711.

Structural Steel Protective Coatings:

Gray Epoxy-Mastic Primer shall be applied in accordance with Sec 216.50.2.2 to the following areas: bottom half of Stringers No. 1, 3 & 4 within 10 feet from backwall of End Bent No. 1, Stringer No. 3 field splice down station of Intermediate Bent No. 2, the intermediate diaphragm between Stringers No. 3 & 4 nearest End Bent No. 4 and to an estimated 20 feet of bottom flange at various locations to be determined by the engineer. Cost of applying Gray Epoxy-Mastic Primer will be considered completely covered by the contract unit price for Removal of Existing Bridge Decks.

Miscellaneous:

Outline of old work is indicated by light dashed lines. Heavy lines indicate new work.

Contractor shall verify all dimensions in field before ordering new material.

Bars bonded in old concrete not removed shall be cleanly stripped and embedded into new concrete where possible. If length is available, old bars shall extend into new concrete at least 40 diameters for smooth bars and 30 diameters for deformed bars, unless otherwise noted.

The area exposed by the removal of concrete and not covered with new concrete shall be coated with an approved qualified special mortar in accordance with Sec 704.

Roadway surfacing adjacent to bridge ends shall match new bridge approach slab surface (Roadway Item).

High strength bolts, nuts and washers will be sampled for quality assurance as specified in Sec 106.

Traffic Handling:

Traffic to be maintained on structure during construction. See roadway plans for traffic control and see Sheet No. 2 for staged construction details.

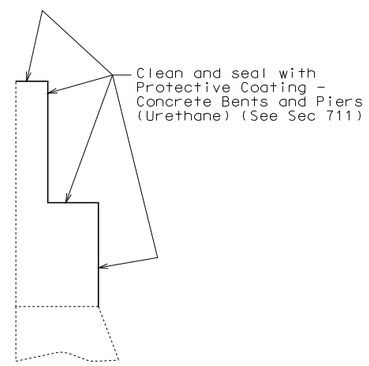

TYPICAL SECTION THRU
END BENTS NO. 1 & 4
SHOWING PROTECTIVE COATING

(End Bent No. 1 shown, End Bent No. 4 similar)

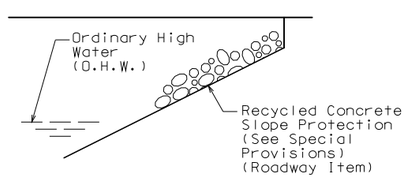

OPTIONAL SLOPE
PROTECTION DETAIL

Estimated Quantities

	Item		Total
	Removal of Existing Bridge Decks	sq. foot	6519
	Bridge Approach Slab (Minor Road)	sq. yard	140
	Slab on Steel	sq. yard	747
*	Safety Barrier Curb	linear foot	412
	Mechanical Bar Splice	each	630
	Protective Coating - Concrete Bent and Piers (Urethane)	lump sum	1
	Shear Connectors	each	1352
	Slab Drain	each	20
	Non-Destructive Testing	linear foot	19

* Safety barrier curb shall be cast-in-place option or slip-form option.

Cost of any required excavation for bridge will be considered completely covered by the contract unit price for other items.

Estimated Quantities for Slab on Steel

Item		Total
Class B-2 Concrete	cu. yard	176.0
Reinforcing Steel (Epoxy Coated)	pound	54,390

The table of Estimated Quantities for Slab on Steel represents the quantities used by the State in preparing the cost estimate for concrete slabs. The area of the concrete slab will be measured to the nearest square yard longitudinally from end of slab to end of slab and transversely from out to out of bridge slab (or with the horizontal dimensions as shown on the plan of slab). Payment for stay-in-place forms, conventional forms, all concrete and coated reinforcing steel except MBS will be considered completely covered by the contract unit price for the slab. Variations may be encountered in the estimated quantities but the variations cannot be used for an adjustment in the contract unit price.

Method of forming the slab shall be as shown on the plans and in accordance with Sec 703. All hardware for forming the slab to be left in place as a permanent part of the structure shall be coated in accordance with ASTM A123 or ASTM B633 with a thickness class SC 4 and a finish type I, II or III.

Slab shall be cast-in-place with conventional forms or stay-in-place corrugated steel forms. Precast prestressed panels will not be permitted.

For Optional Stay-In-Place Form Details, see Sheet No. 3.

REPAIRS TO BRIDGE: ROUTE 5 OVER
BRYANT CREEK

ROUTE 5 FROM WRIGHT COUNTY LINE TO ROUTE 76
ABOUT 2.1 MILES SOUTH OF WRIGHT COUNTY LINE
BEGINNING STATION 301+27.25± (MATCH EXISTING)

STD. 609.00
STD. 617.10
STD. 617.20
STD. 706.35

Designed May 2016
Detailed June 2016
Checked June 2016

Note: This drawing is not to scale. Follow dimensions.

STATE OF MISSOURI
DANIEL M. SMITH
NUMBER PE-28985
PROFESSIONAL ENGINEER
THIS SHEET HAS BEEN SIGNED, SEALED AND DATED ELECTRONICALLY.

DATE PREPARED 9/22/2016
ROUTE 5 STATE MO
DISTRICT BR SHEET NO. 1
COUNTY DOUGLAS
JOB NO. J9P3118
CONTRACT ID.
PROJECT NO.
BRIDGE NO. A02751

DESCRIPTION
DATE

MISSOURI HIGHWAYS AND TRANSPORTATION COMMISSION
105 WEST CAPITOL
JEFFERSON CITY, MO 65102
1-888-ASK-MODOT (1-888-275-6636)

IF A SEAL IS PRESENT ON THIS SHEET IT HAS BEEN ELECTRONICALLY SEALED AND DATED.

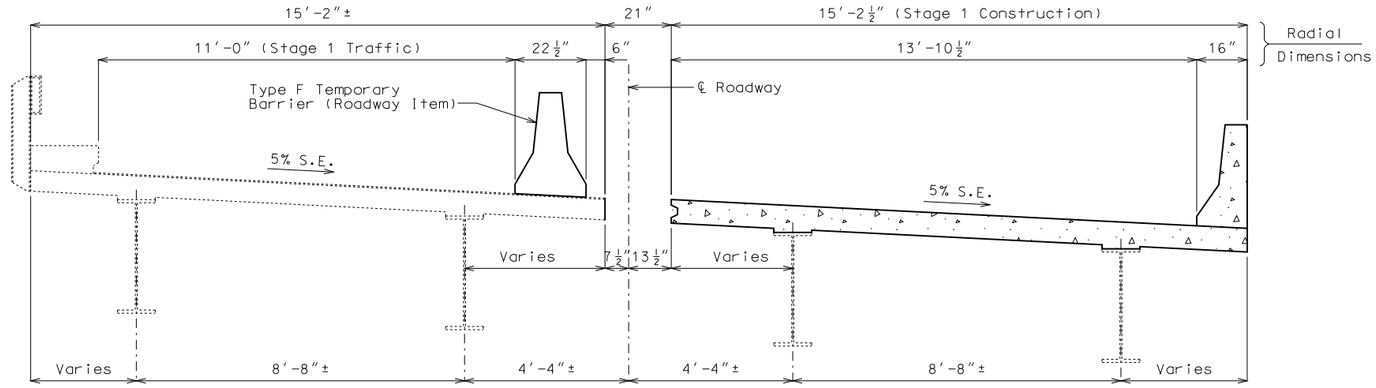

STAGE 1 CONSTRUCTION

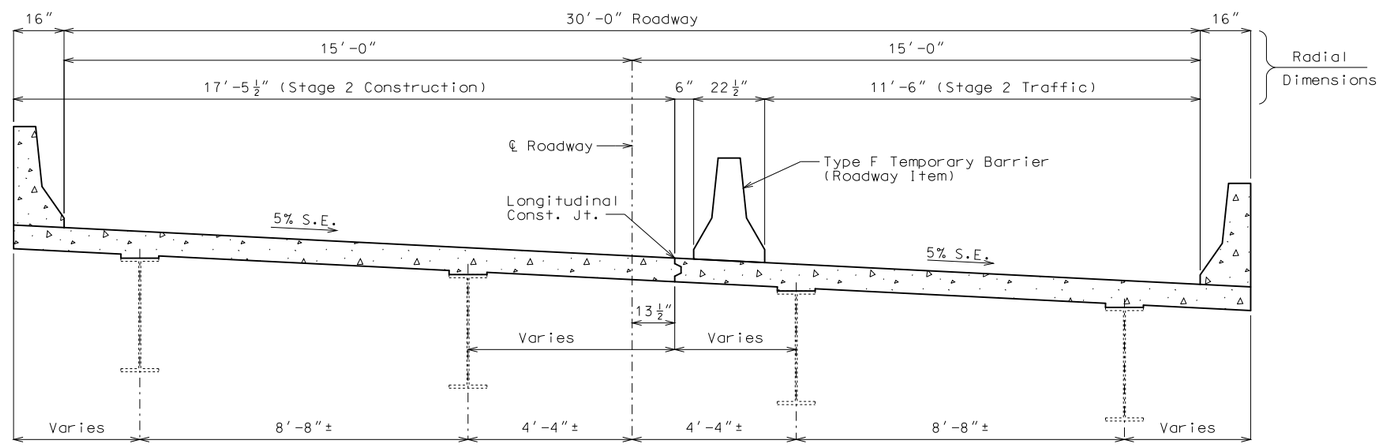

STAGE 2 CONSTRUCTION

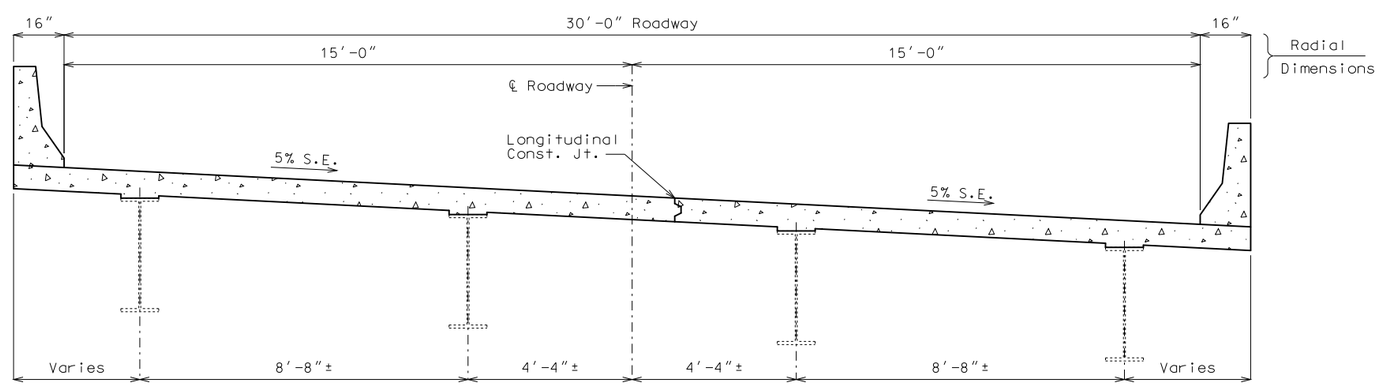

FINAL CONSTRUCTION

Note:

Existing bolts on intermediate diaphragms and cross frames that connect stringers under different construction staged slab pours shall be removed and replaced with new in-kind high strength bolts installed snug tight and in accordance with Sec 712. The high strength bolts shall be tightened after both adjacent slab pours are completed. Cost will be considered incidental to other pay items.

Notes:

Method of attachment for the Type F Temporary Barrier shall be the Tie-Down Strap.

The contractor may use the bolt through the deck method of attaching the Type F Temporary Barrier for Stage 1 only.

DETAILS OF STAGED CONSTRUCTION

Detailed June 2016
Checked June 2016

Note: This drawing is not to scale. Follow dimensions.

STATE OF MISSOURI
DANIEL M. SMITH
NUMBER PE-28985
PROFESSIONAL ENGINEER

THIS SHEET HAS BEEN SIGNED, SEALED AND DATED ELECTRONICALLY.

DATE PREPARED 9/22/2016

ROUTE	STATE
5	MO
DISTRICT	SHEET NO.
BR	2

COUNTY DOUGLAS

JOB NO. J9P3118

CONTRACT ID.

PROJECT NO.

BRIDGE NO. A02751

DATE	DESCRIPTION

MISSOURI HIGHWAYS AND TRANSPORTATION COMMISSION
105 WEST CAPITOL
JEFFERSON CITY, MO 65102
1-888-ASK-MODOT (1-888-275-6636)

IF A SEAL IS PRESENT ON THIS SHEET IT HAS BEEN ELECTRONICALLY SEALED AND DATED.

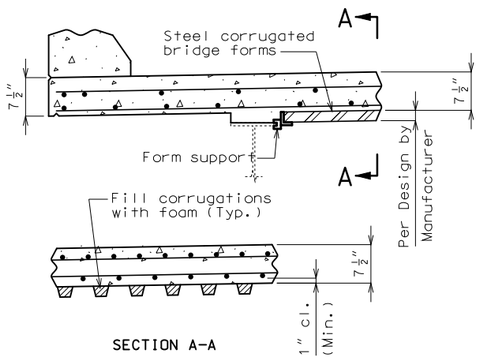

SECTION A-A

OPTIONAL STAY-IN-PLACE FORM DETAILS

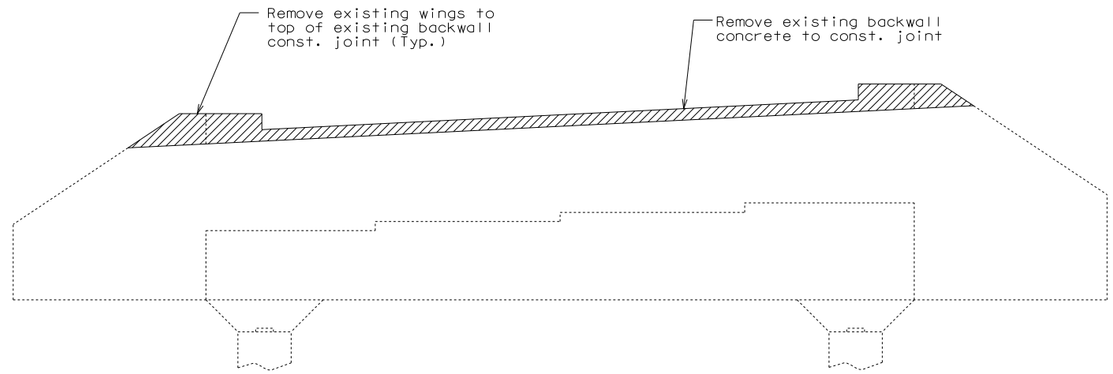

DETAILS OF CONCRETE REMOVAL AT END BENTS

The cost of concrete removal as shown will be considered completely covered by the contract unit price for Removal of Existing Bridge Decks. Vertical backwall and wingwall reinforcement shall be cut off one inch below concrete removal surface and the resulting holes shall be filled with an approved qualified special mortar.

A smooth, level surface shall be provided at End Bents No. 1 & 4 removal lines.

End Bent No. 1 shown, End Bent No. 4 similar by 180° rotation.

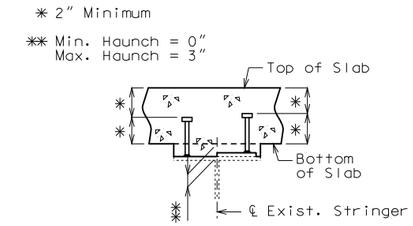

SECTION THRU EXIST. STRINGER SHOWING SHEAR CONNECTORS

General Notes:

Corrugated steel bridge deck forms, supports, closure elements and accessories shall be in accordance with grade requirement and coating designation G165 of ASTM A653. Complete shop drawings of the permanent steel deck forms shall be required in accordance with Sec 1080.

Corrugations of stay-in-place forms shall be filled with an expanded polystyrene material. The polystyrene material shall be placed in the forms with an adhesive in accordance with the manufacturer's recommendations.

Form sheets shall not rest directly on the top of stringer flanges. Sheets shall be securely fastened to form supports with a minimum bearing length of one inch on each end. Form supports shall be placed in direct contact with the flange. Welding on or drilling holes in the flanges of the stringers will not be permitted. All steel fabrication and construction shall be in accordance with Secs 1080 and 712. Certified field welders will not be required for welding of the form supports.

The design of stay in place corrugated steel forms is per manufacturer which shall be in accordance with Sec 703 for false work and forms. Maximum actual weight of corrugated steel forms allowed shall be 4 psf assumed for stringer loading.

The contractor shall provide bracing necessary for lateral and torsional stability of the stringers during construction of the concrete slab and remove the bracing after the slab has attained 75% design strength. The cost for furnishing, installing, and removing bracing will be considered completely covered by the contract unit price for Slab on Steel.

Slab shall be poured from end to end at a minimum rate of 25 cu. yd./ hr.

Alternate pour sequences may be submitted to the engineer for approval. Keyed construction joints shall be provided between pours.

Deflection and Haunching:

The contractor shall determine dead load deflections and haunching based on field measurements and/or existing bridge plans and may be adjusted based on the difference between the new and existing dead load weights.

Slab is to be considered at a uniform depth as shown on the plans. Haunching will vary.

In order to properly form the haunches for the new deck, the contractor shall shoot deck elevations along each stringer line prior to deck removal followed by shooting elevations of the tops of the stringers after deck removal.

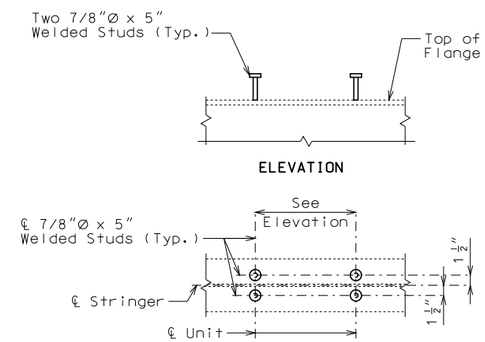

DETAILS OF SHEAR CONNECTORS

The cost of supplying and installing shear connectors will be considered completely covered by the contract unit price for Shear Connectors.

Shear connectors shall be in accordance with Sec 712, 1037 & 1080.

(1) Stringer No. 1 = $20'-8\frac{5}{8}''$
Stringer No. 2 = $20'-4\frac{7}{8}''$
Stringer No. 3 = $20'-1\frac{1}{8}''$
Stringer No. 4 = $19'-9\frac{3}{8}''$

(2) 4 Shear Connector Units @ 6" cts.

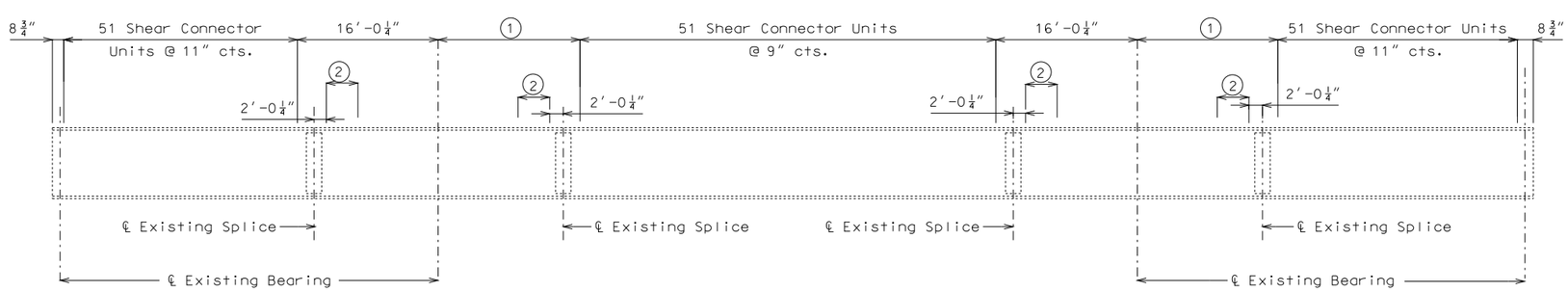

TYPICAL ELEVATION OF STRINGER SHOWING SHEAR CONNECTOR SPACING

Total shear connectors required = 1352

Detailed June 2016
Checked June 2016

Note: This drawing is not to scale. Follow dimensions.

STATE OF MISSOURI
DANIEL M. SMITH
NUMBER PE-28985
PROFESSIONAL ENGINEER

THIS SHEET HAS BEEN SIGNED, SEALED AND DATED ELECTRONICALLY.

DATE PREPARED	
9/22/2016	
ROUTE 5	STATE MO
DISTRICT BR	SHEET NO. 3
COUNTY DOUGLAS	
JOB NO. J9P3118	
CONTRACT ID.	
PROJECT NO.	
BRIDGE NO. A02751	

DATE	DESCRIPTION

MISSOURI HIGHWAYS AND TRANSPORTATION COMMISSION
105 WEST CAPITOL
JEFFERSON CITY, MO 65102
1-888-ASK-MODOT (1-888-275-6636)

IF A SEAL IS PRESENT ON THIS SHEET IT HAS BEEN ELECTRONICALLY SEALED AND DATED.

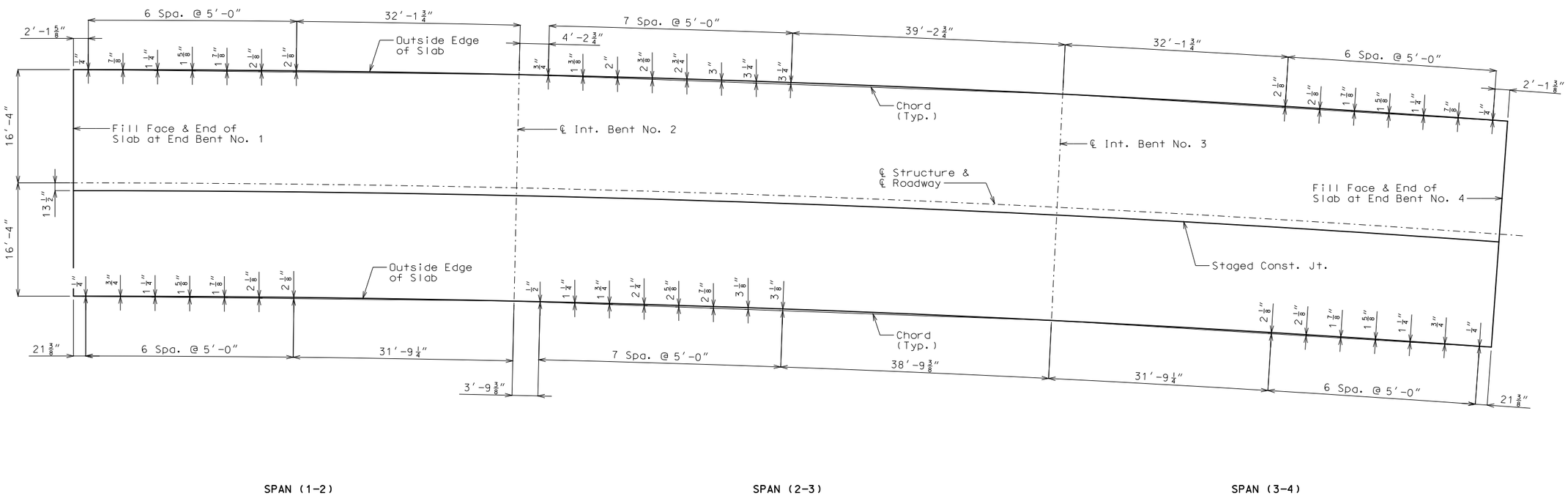

PLAN OF SLAB SHOWING CURVE ORDINATES

Note: All dimensions are horizontal.

All bents are radial.

Detailed June 2016
Checked June 2016

Note: This drawing is not to scale. Follow dimensions.

STATE OF MISSOURI
DANIEL M. SMITH
NUMBER PE-28985
PROFESSIONAL ENGINEER

THIS SHEET HAS BEEN SIGNED, SEALED AND DATED ELECTRONICALLY.

DATE PREPARED	
9/22/2016	
ROUTE 5	STATE MO
DISTRICT BR	SHEET NO. 4
COUNTY DOUGLAS	
JOB NO. J9P3118	
CONTRACT ID.	
PROJECT NO.	
BRIDGE NO. A02751	

DATE	DESCRIPTION

MISSOURI HIGHWAYS AND TRANSPORTATION COMMISSION

105 WEST CAPITOL
JEFFERSON CITY, MO 65102
1-888-ASK-MODOT (1-888-275-6636)

IF A SEAL IS PRESENT ON THIS SHEET IT HAS BEEN ELECTRONICALLY SEALED AND DATED.

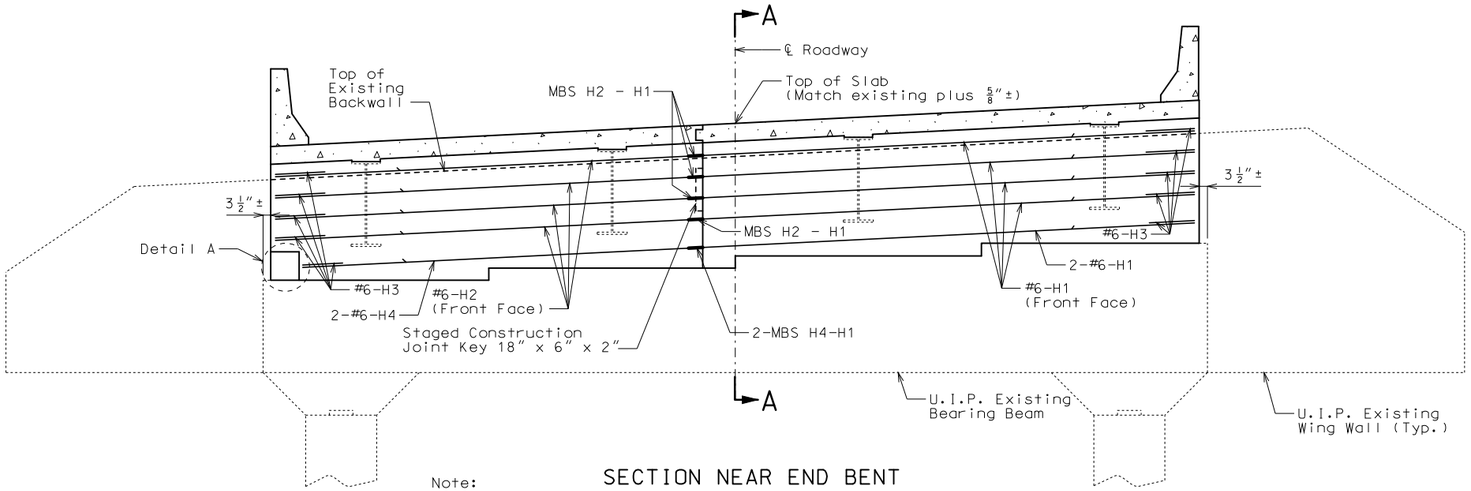

SECTION NEAR END BENT

Note:

Existing steel end diaphragms not shown for clarity (leave in place).

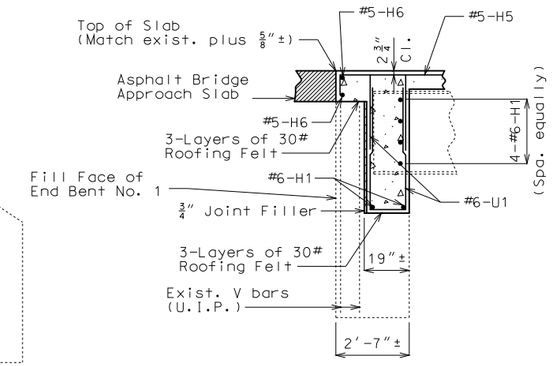

SECTION A-A

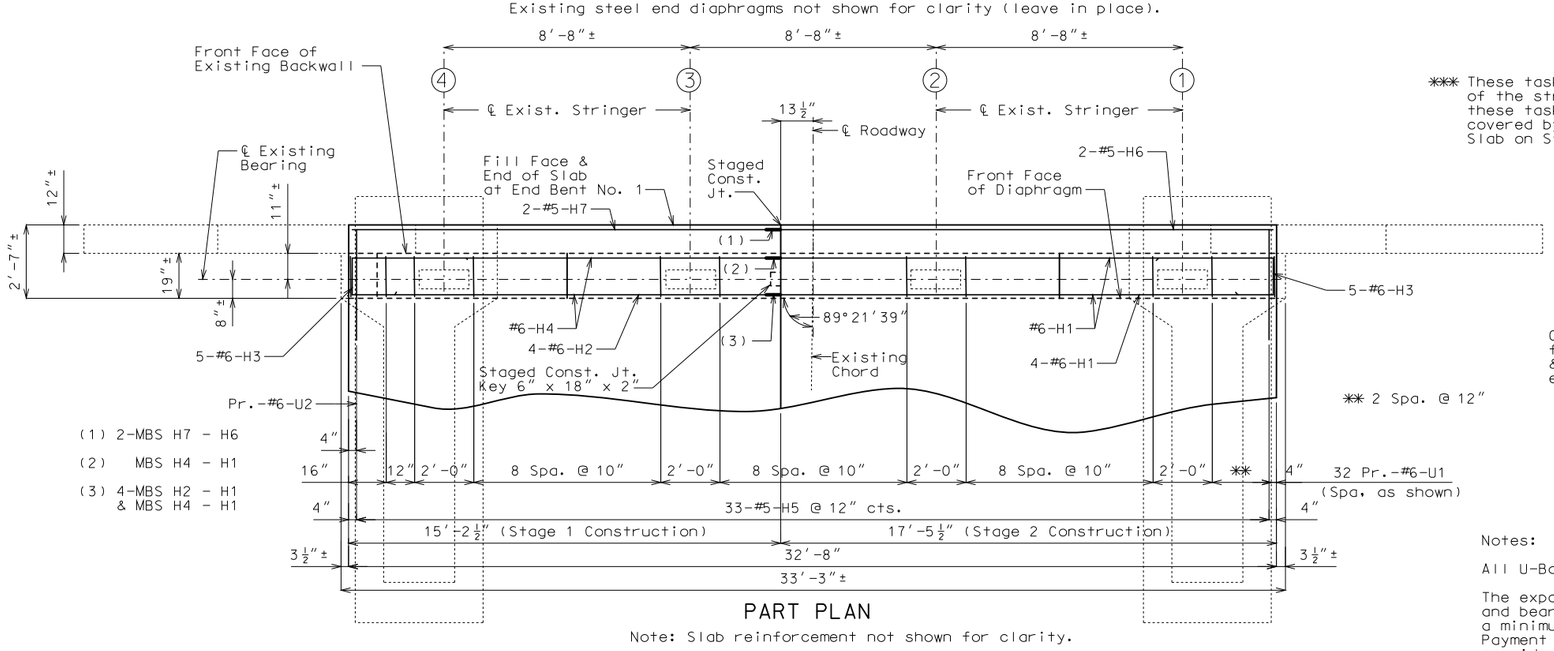

PART PLAN

Note: Slab reinforcement not shown for clarity.

℄ $1\frac{1}{16}$"Ø holes in each stringer. Cost of field drilling holes in existing web will be considered completely covered by the contract unit price for Slab on Steel.

*** These tasks and the temporary support of the stringer ends while completing these tasks will be considered completely covered by the contract unit price for Slab on Steel.

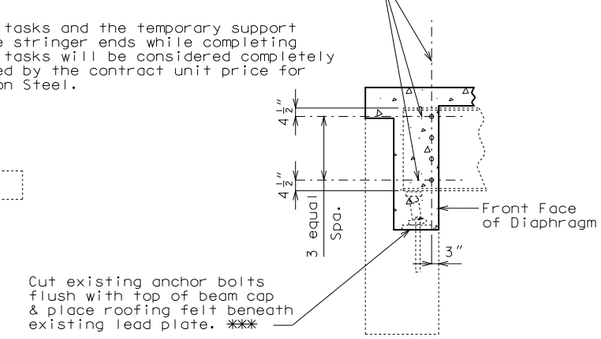

DETAILS OF WEB HOLES AT END BENT

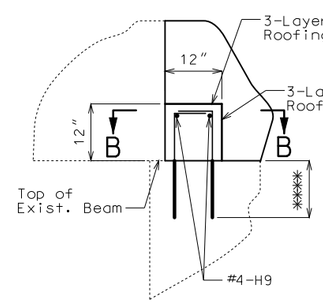

DETAIL A

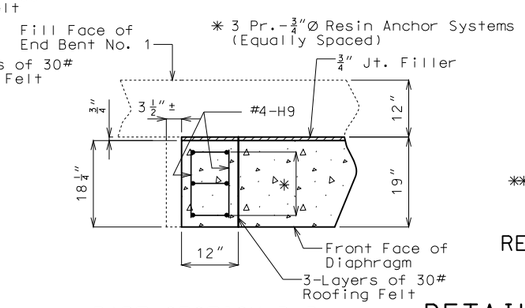

PART SECTION B-B

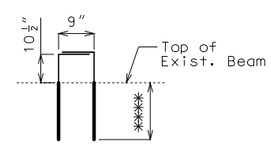

**** Manufacturer's recommended embedment length (5" min.)

DETAIL OF 3/4"Ø RESIN ANCHOR SYSTEMS

(6 req'd.)

DETAILS OF END BENT NO. 1

Note: This drawing is not to scale. Follow dimensions.

Sheet No. 5 of 17

Notes:

All U-Bars in End Bent shall be placed parallel to ℄ Stringer.

The exposed and accessible surfaces of the existing structural steel and bearings that will be encased in concrete shall be cleaned with a minimum of SSPC-SP-2 surface preparation before concrete is poured. Payment for cleaning steel to be encased in concrete will be considered completely covered by the contract unit price for Slab on Steel.

All concrete and reinforcement is included in the table of Estimated Quantities for Slab on Steel and will be considered completely covered by the contract unit price for Slab on Steel.

For details and reinforcement of Safety Barrier Curb, see Sheets No. 11 thru 15.

For Details of Staged Construction, see Sheet No. 2.

The contractor shall use one of the qualified resin anchor systems in accordance with Sec 1039.

Cost of furnishing and installing the resin anchor systems, complete in place, will be considered completely covered by the contract unit price for Slab on Steel.

The minimum embedment depth in concrete with f'c = 4,000 psi for the resin anchor systems shall be that required to meet the minimum ultimate pullout stength in accordance with Sec 1039 but shall not be less than 5".

An epoxy coated #6 Grade 60 reinforcing bar shall be substituted for the 3/4" Ø threaded rod.

Detailed June 2016
Checked June 2016

STATE OF MISSOURI
DANIEL M. SMITH
NUMBER PE-28985
PROFESSIONAL ENGINEER

THIS SHEET HAS BEEN SIGNED, SEALED AND DATED ELECTRONICALLY.

DATE PREPARED	
9/22/2016	
ROUTE 5	STATE MO
DISTRICT BR	SHEET NO. 5
COUNTY DOUGLAS	
JOB NO. J9P3118	
CONTRACT ID.	
PROJECT NO.	
BRIDGE NO. A02751	

DESCRIPTION	DATE

MISSOURI HIGHWAYS AND TRANSPORTATION COMMISSION
105 WEST CAPITOL
JEFFERSON CITY, MO 65102
1-888-ASK-MODOT (1-888-275-6636)

IF A SEAL IS PRESENT ON THIS SHEET IT HAS BEEN ELECTRONICALLY SEALED AND DATED.

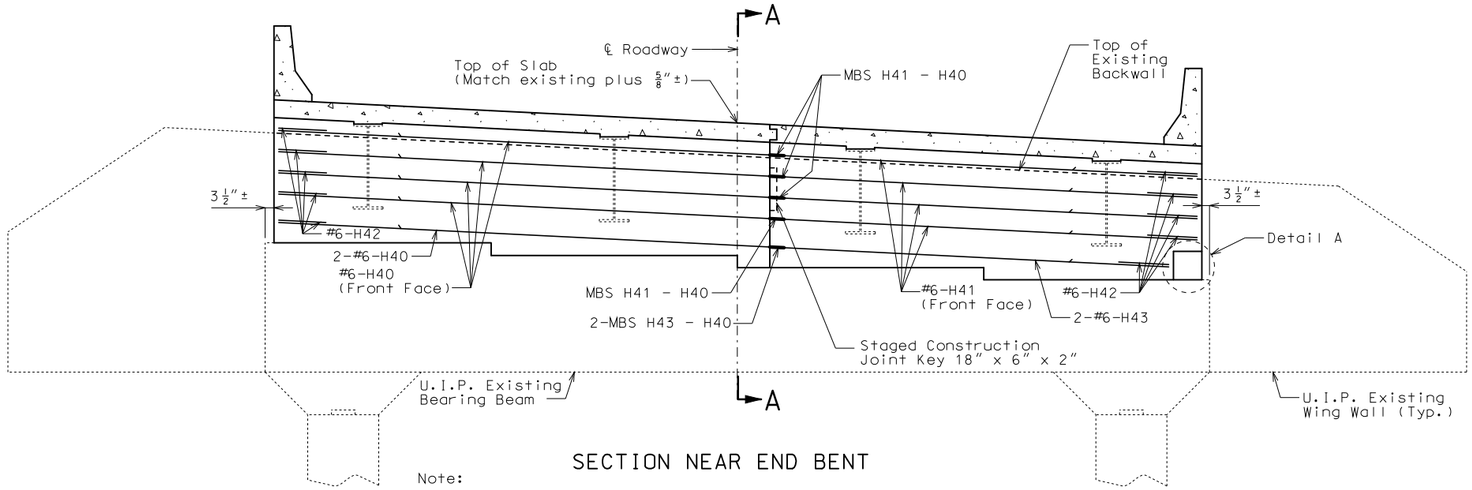

SECTION NEAR END BENT

Note:

Existing steel end diaphragms not shown for clarity (leave in place).

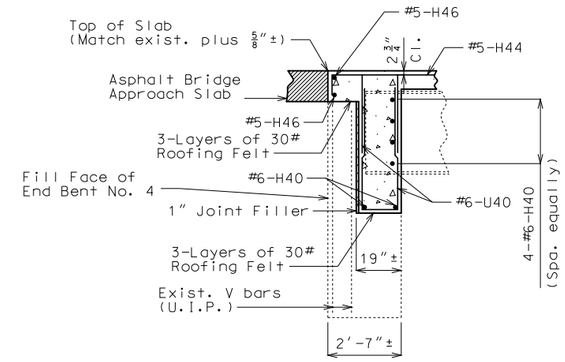

SECTION A-A

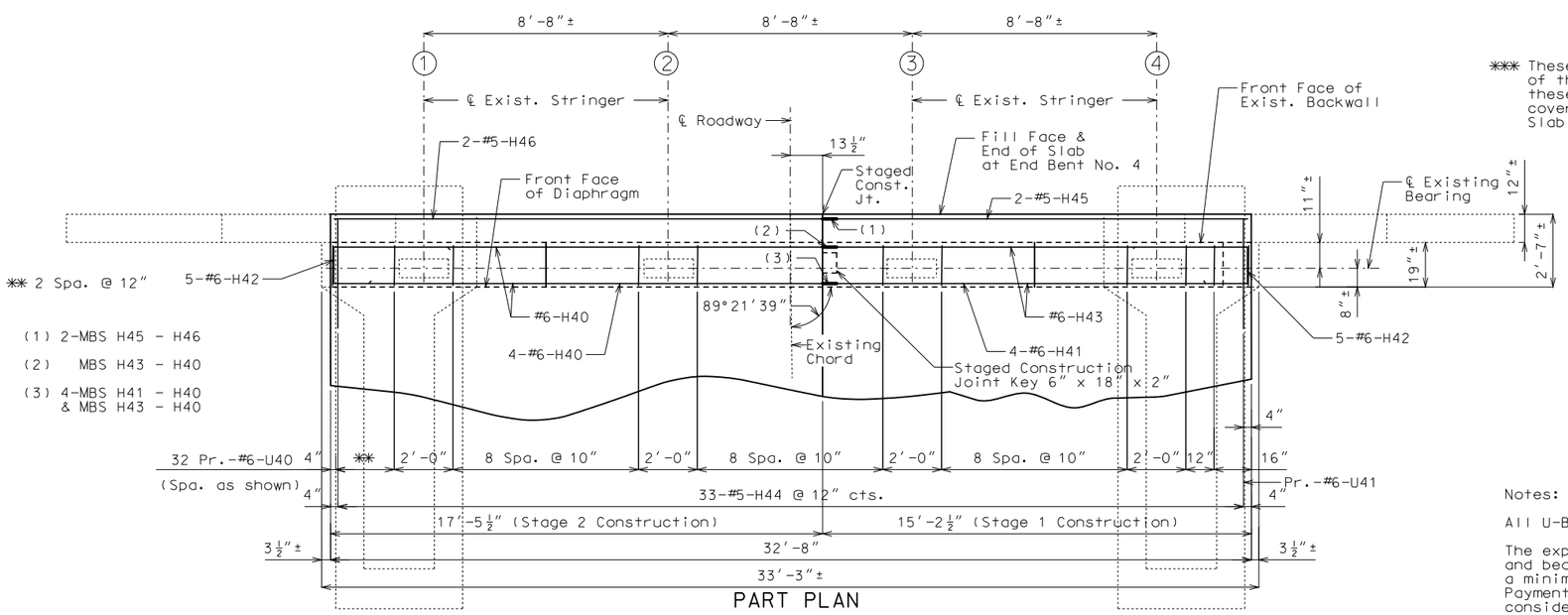

PART PLAN

Note: Slab reinforcement not shown for clarity.

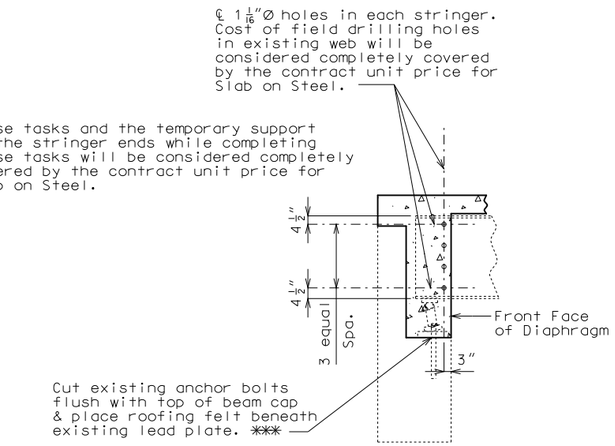

DETAILS OF WEB HOLES AT END BENT

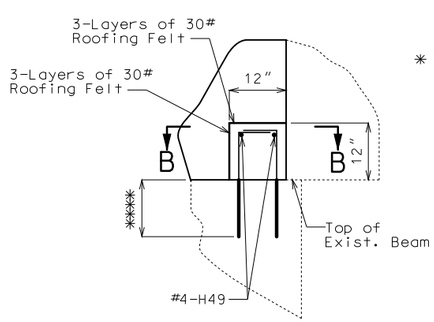

DETAIL A

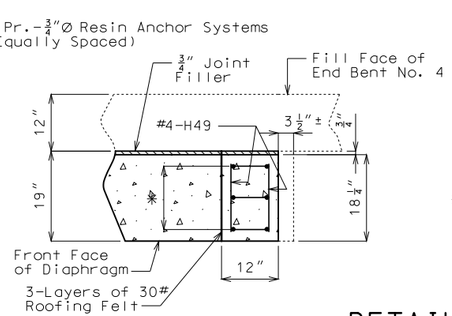

PART SECTION B-B

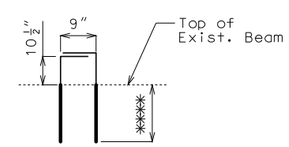

**** Manufacturer's recommended embedment length (5" min.)

DETAIL OF 3/4"Ø RESIN ANCHOR SYSTEMS

(6 req'd.)

DETAILS OF END BENT NO. 4

Note: This drawing is not to scale. Follow dimensions.

Notes:

All U-Bars in End Bent shall be placed parallel to ℄ Stringer.

The exposed and accessible surfaces of the existing structural steel and bearings that will be encased in concrete shall be cleaned with a minimum of SSPC-SP-2 surface preparation before concrete is poured. Payment for cleaning steel to be encased in concrete will be considered completely covered by the contract unit price for Slab on Steel.

All concrete and reinforcement is included in the table of Estimated Quantities for Slab on Steel and will be considered completely covered by the contract unit price for Slab on Steel.

For details and reinforcement of Safety Barrier Curb, see Sheets No. 11 thru 15.

For Details of Staged Construction, see Sheet No. 2.

The contractor shall use one of the qualified resin anchor systems in accordance with Sec 1039.

Cost of furnishing and installing the resin anchor systems, complete in place, will be considered completely covered by the contract unit price for Slab on Steel.

The minimum embedment depth in concrete with f'c = 4,000 psi for the resin anchor systems shall be that required to meet the minimum ultimate pullout stength in accordance with Sec 1039 but shall not be less than 5".

An epoxy coated #6 Grade 60 reinforcing bar shall be substituted for the 3/4" Ø threaded rod.

Detailed June 2016
Checked June 2016

STATE OF MISSOURI
DANIEL M. SMITH
NUMBER PE-28985
PROFESSIONAL ENGINEER

THIS SHEET HAS BEEN SIGNED, SEALED AND DATED ELECTRONICALLY.

DATE PREPARED	
9/22/2016	
ROUTE 5	STATE MO
DISTRICT BR	SHEET NO. 6
COUNTY DOUGLAS	
JOB NO. J9P3118	
CONTRACT ID.	
PROJECT NO.	
BRIDGE NO. A02751	

DATE	DESCRIPTION

MISSOURI HIGHWAYS AND TRANSPORTATION COMMISSION
105 WEST CAPITOL
JEFFERSON CITY, MO 65102
1-888-ASK-MODOT (1-888-275-6636)

IF A SEAL IS PRESENT ON THIS SHEET IT HAS BEEN ELECTRONICALLY SEALED AND DATED.

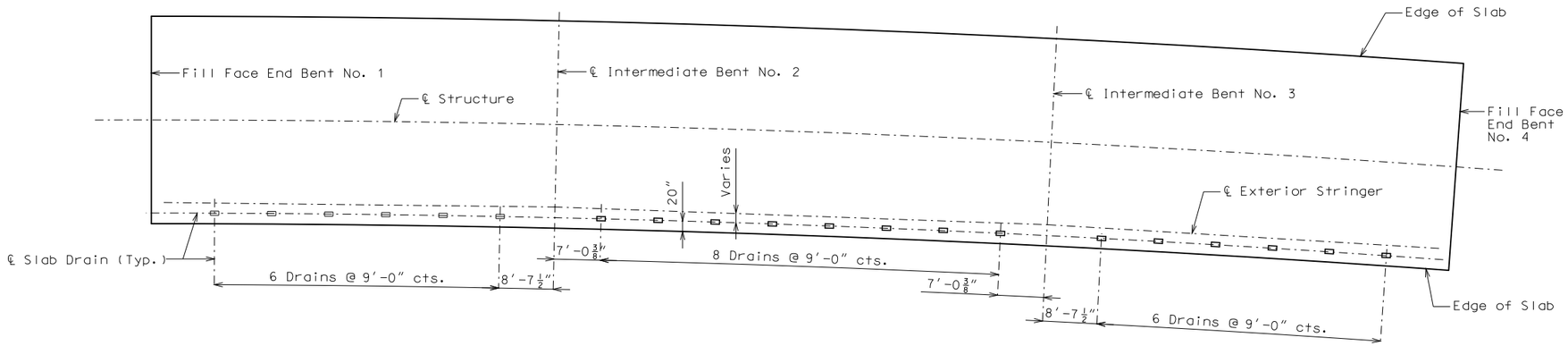

PLAN OF SLAB SHOWING SLAB DRAIN LOCATIONS

Note: Longitudinal dimensions are horizontal and measured parallel to exterior stringer.

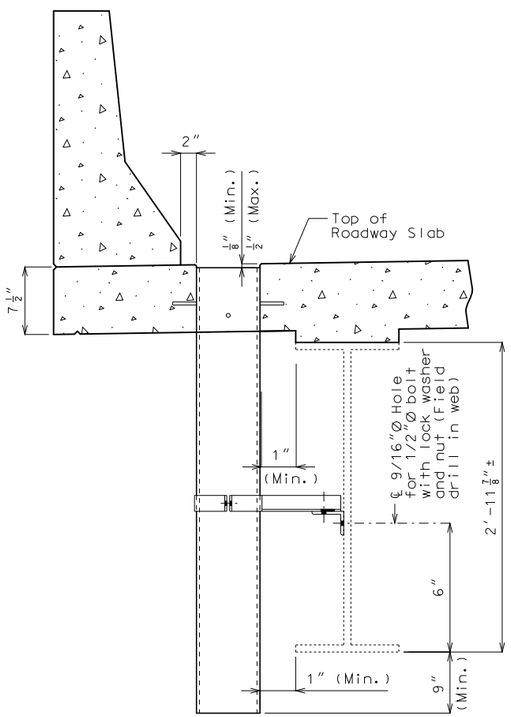

PART SECTION NEAR DRAIN

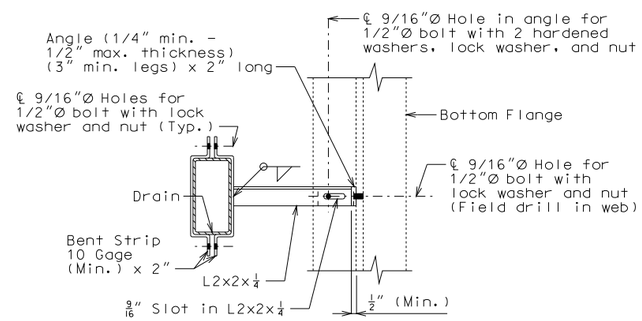

PART SECTION SHOWING BRACKET ASSEMBLY

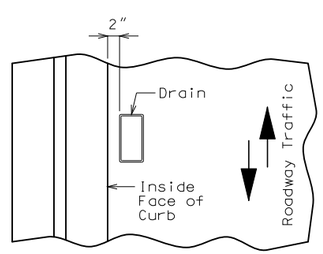

PART PLAN OF SLAB AT DRAIN

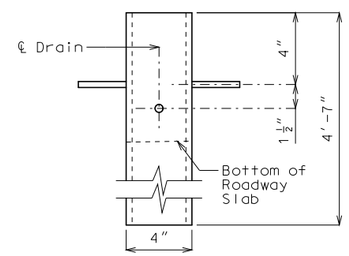

ELEVATION OF DRAIN

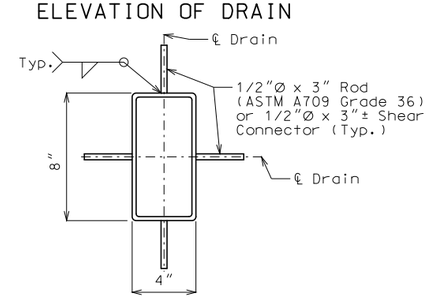

PLAN OF STEEL DRAIN

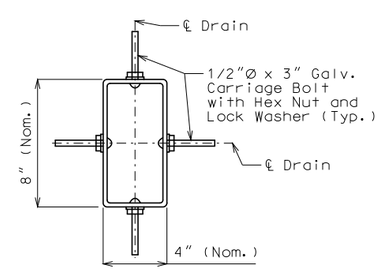

PLAN OF OPTIONAL FRP DRAIN

General Notes:

Slab drain bracket assembly shall be ASTM A709 Grade 36 steel.

Locate drains in slab by dimensions shown in Part Section Near Drain.

Reinforcing steel shall be shifted to clear drains.

The bracket assembly shall be galvanized in accordance with ASTM A123.

All bolts, hardened washers, lock washers and nuts shall be galvanized in accordance with ASTM A153.

Shop drawings will not be required for the slab drains and the bracket assembly.

The bolt hole for the bracket assembly attachment should be shifted to the minimum extent necessary to field drill in the existing web.

Notes (Steel Drain):

Slab drains may be fabricated of either 1/4" welded sheets of ASTM A709 Grade 36 steel or from 1/4" structural steel tubing ASTM A500 or A501.

Outside dimensions of drains are 8" x 4".

The drains shall be galvanized in accordance with ASTM A123.

Notes (Optional FRP Drain):

Fiberglass Reinforced Polymer (FRP) slab drains may be substituted for steel slab drains as a contractor's option.

Drains shall be machine filament-wound thermosetting resin tubing meeting the requirements of ASTM D2996 with the following exceptions:

Shape of drains shall be rectangular with outside nominal dimensions of 8" x 4".

Minimum reinforced wall thickness shall be 1/4 inch.

The resin used shall be ultraviolet (UV) resistant and/or have UV inhibitors mixed throughout. Drains may have an exterior coating for additional UV resistance.

The color of the slab drain shall be Gray (Federal Standard #26373). The color shall be uniform throughout the resin and any coating used.

The combination of materials used in the manufacture of the drains shall be tested for UV resistance in accordance with ASTM D4329 Cycle A. The representative material shall withstand at least 500 hours of testing with only minor discoloration and without any physical deterioration. The contractor shall furnish the results of the required ultraviolet testing prior to acceptance of the slab drains.

At the contractor's option, drains may be field cut. The method of cutting FRP slab drain shall be recommended by the manufacturer to ensure a smooth, chip free cut.

No additional payment will be made for this substitution.

STATE OF MISSOURI
DANIEL M. SMITH
NUMBER PE-28985
PROFESSIONAL ENGINEER
THIS SHEET HAS BEEN SIGNED, SEALED AND DATED ELECTRONICALLY.

DATE PREPARED	
9/22/2016	
ROUTE 5	STATE MO
DISTRICT BR	SHEET NO. 7
COUNTY DOUGLAS	
JOB NO. J9P3118	
CONTRACT ID.	
PROJECT NO.	
BRIDGE NO. A02751	

DATE	DESCRIPTION

MISSOURI HIGHWAYS AND TRANSPORTATION COMMISSION
105 WEST CAPITOL
JEFFERSON CITY, MO 65102
1-888-ASK-MODOT (1-888-275-6636)

IF A SEAL IS PRESENT ON THIS SHEET IT HAS BEEN ELECTRONICALLY SEALED AND DATED.

SLAB DRAIN DETAILS

Detailed June 2016
Checked June 2016

Note: This drawing is not to scale. Follow dimensions.

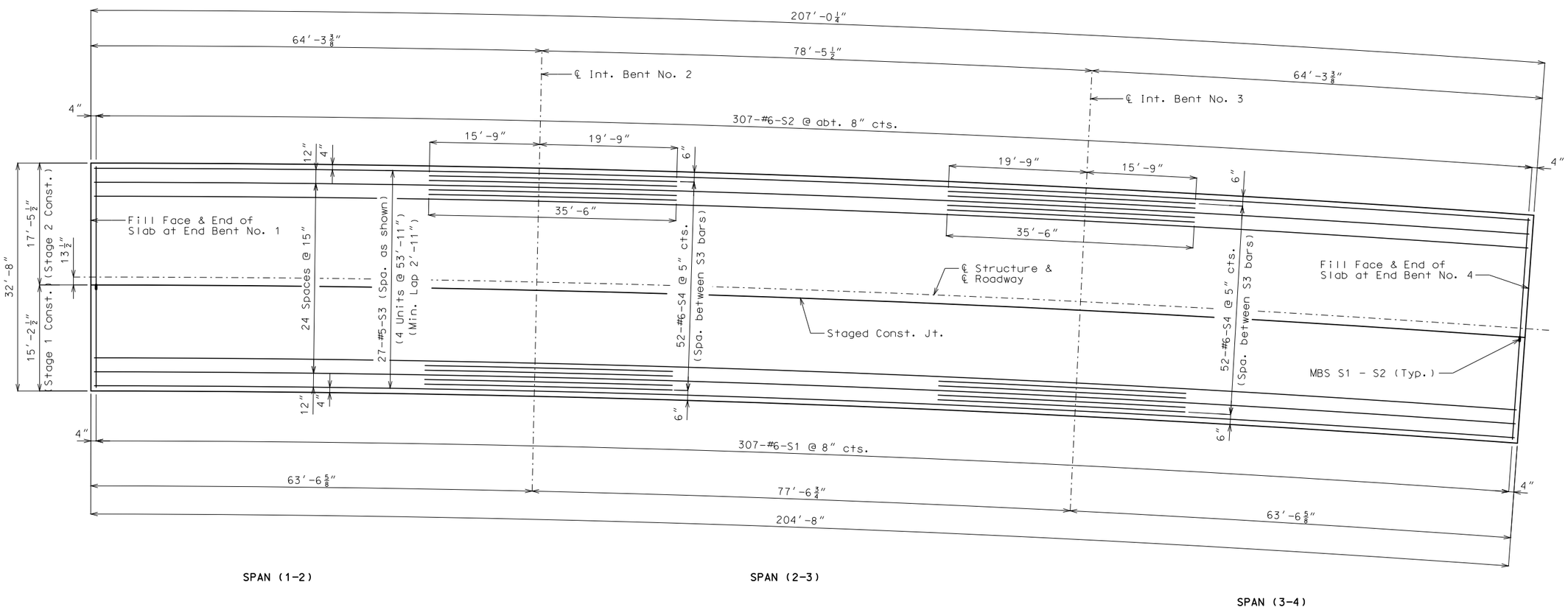

PLAN OF SLAB SHOWING TOP REINFORCEMENT

Notes:

Longitudinal dimensions are horizontal arc dimensions along outside edge of slab and transverse dimensions are radial.

For Plan of Slab Showing Bottom Reinforcement, see Sheet No. 9.

For Section Thru Slab, see Sheet No. 10.

For details and reinforcement of Safety Barrier Curb, see Sheets No. 11 thru 15.

Longitudinal reinforcement shall be spaced radially and placed parallel to centerline of roadway.

Transverse reinforcement shall be placed radially and spaced along the right edge of slab.

Detailed May 2016
Checked June 2016

Note: This drawing is not to scale. Follow dimensions.

STATE OF MISSOURI
DANIEL M. SMITH
NUMBER PE-28985
PROFESSIONAL ENGINEER

THIS SHEET HAS BEEN SIGNED, SEALED AND DATED ELECTRONICALLY.

DATE PREPARED	9/22/2016
ROUTE	5
STATE	MO
DISTRICT	BR
SHEET NO.	8
COUNTY	DOUGLAS
JOB NO.	J9P3118
CONTRACT ID.	
PROJECT NO.	
BRIDGE NO.	A02751

DATE	DESCRIPTION

IF A SEAL IS PRESENT ON THIS SHEET IT HAS BEEN ELECTRONICALLY SEALED AND DATED.

MISSOURI HIGHWAYS AND TRANSPORTATION COMMISSION
105 WEST CAPITOL
JEFFERSON CITY, MO 65102
1-888-ASK-MODOT (1-888-275-6636)

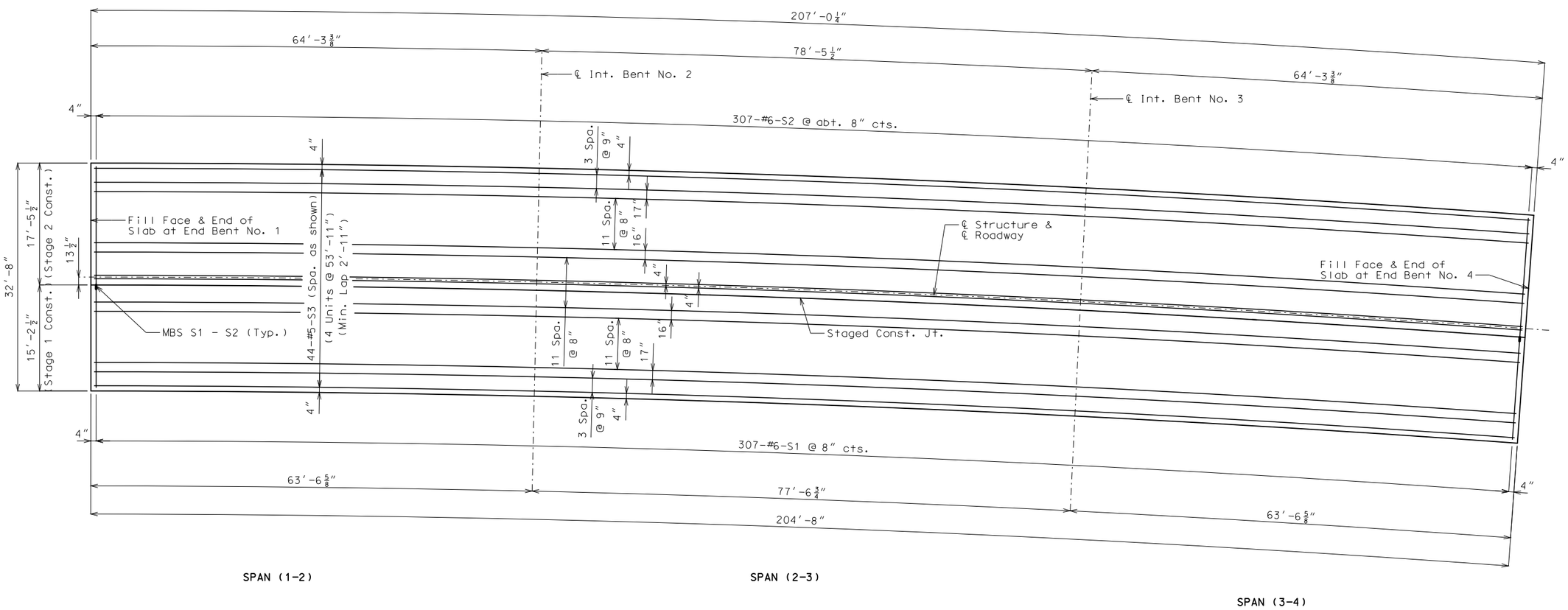

PLAN OF SLAB SHOWING BOTTOM REINFORCEMENT

Notes:

Longitudinal dimensions are horizontal arc dimensions along outside edge of slab and transverse dimensions are radial.

For Plan of Slab Showing Top Reinforcement, see Sheet No. 8.

For Section Thru Slab, see Sheet No. 10.

For details and reinforcement of Safety Barrier Curb, see Sheets No. 11 thru 15.

Longitudinal reinforcement shall be spaced radially and placed parallel to centerline of roadway.

Transverse reinforcement shall be placed radially and spaced along the right edge of slab.

Detailed May 2016
Checked June 2016

Note: This drawing is not to scale. Follow dimensions.

STATE OF MISSOURI
DANIEL M. SMITH
NUMBER PE-28985
PROFESSIONAL ENGINEER

THIS SHEET HAS BEEN SIGNED, SEALED AND DATED ELECTRONICALLY.

DATE PREPARED	9/22/2016
ROUTE	5
STATE	MO
DISTRICT	BR
SHEET NO.	9
COUNTY	DOUGLAS
JOB NO.	J9P3118
CONTRACT ID.	
PROJECT NO.	
BRIDGE NO.	A02751

DESCRIPTION

DATE

MISSOURI HIGHWAYS AND TRANSPORTATION COMMISSION

105 WEST CAPITOL
JEFFERSON CITY, MO 65102
1-888-ASK-MODOT (1-888-275-6636)

IF A SEAL IS PRESENT ON THIS SHEET IT HAS BEEN ELECTRONICALLY SEALED AND DATED.

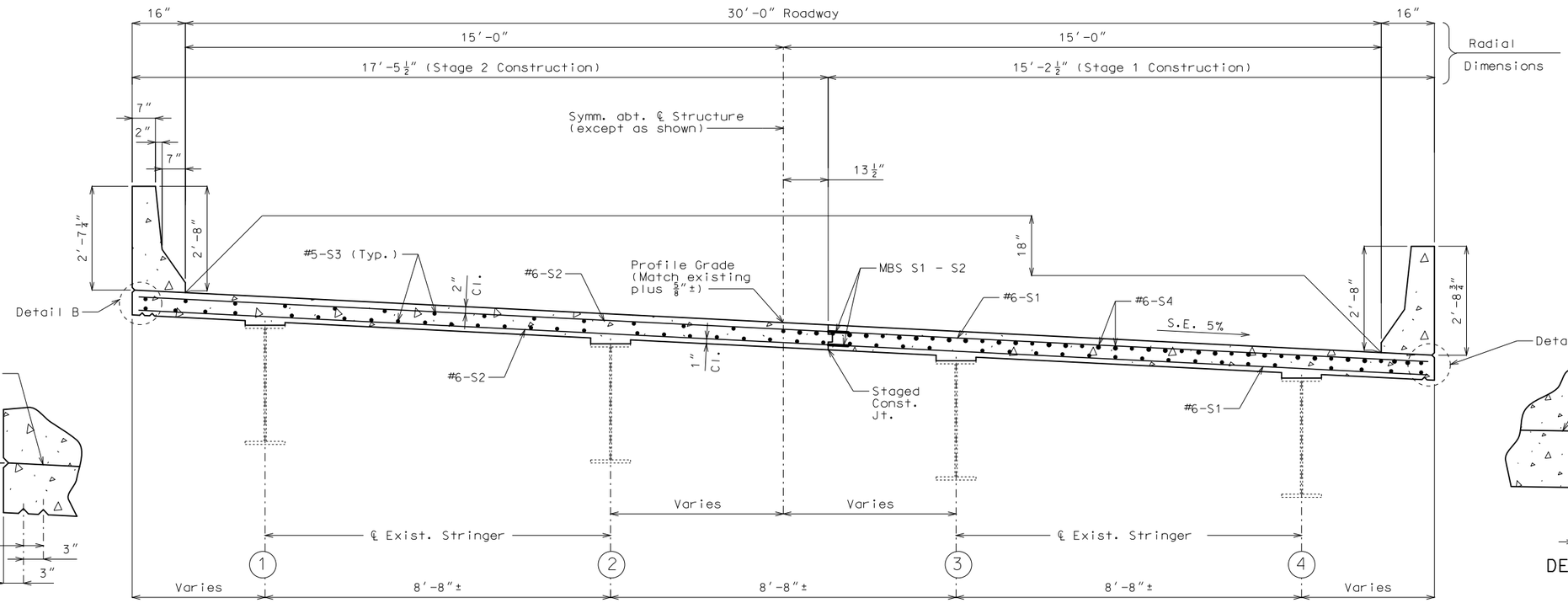

HALF SECTION NEAR MIDSPAN

HALF SECTION NEAR INTERMEDIATE BENT

SECTION THRU SLAB

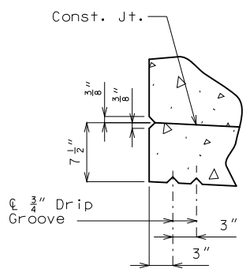

DETAIL B

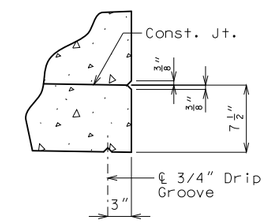

DETAIL A

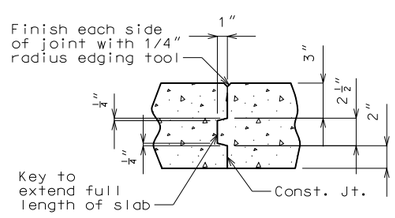

STAGED CONSTRUCTION JOINT

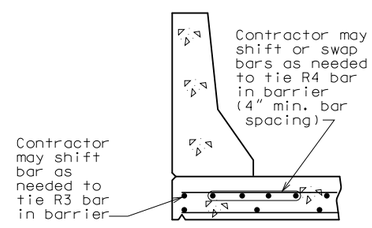

OPTIONAL SHIFTING TOP BARS AT BARRIER

Notes:

For Plan of Slab Showing Top Reinforcement, see Sheet No. 8.

For Plan of Slab Showing Bottom Reinforcement, see Sheet No. 9.

For details and reinforcement of safety barrier curb, see Sheet No. 11 thru 15.

For Optional Stay-In-Place Form Details, see Sheet No. 3.

Detailed May 2016
Checked June 2016

Note: This drawing is not to scale. Follow dimensions.

STATE OF MISSOURI
DANIEL M. SMITH
NUMBER PE-28985
PROFESSIONAL ENGINEER

THIS SHEET HAS BEEN SIGNED, SEALED AND DATED ELECTRONICALLY.

DATE PREPARED	9/22/2016
ROUTE	5
STATE	MO
DISTRICT	BR
SHEET NO.	10
COUNTY	DOUGLAS
JOB NO.	J9P3118
CONTRACT ID.	
PROJECT NO.	
BRIDGE NO.	A02751

DESCRIPTION

DATE

MISSOURI HIGHWAYS AND TRANSPORTATION COMMISSION

105 WEST CAPITOL
JEFFERSON CITY, MO 65102
1-888-ASK-MODOT (1-888-275-6636)

IF A SEAL IS PRESENT ON THIS SHEET IT HAS BEEN ELECTRONICALLY SEALED AND DATED.

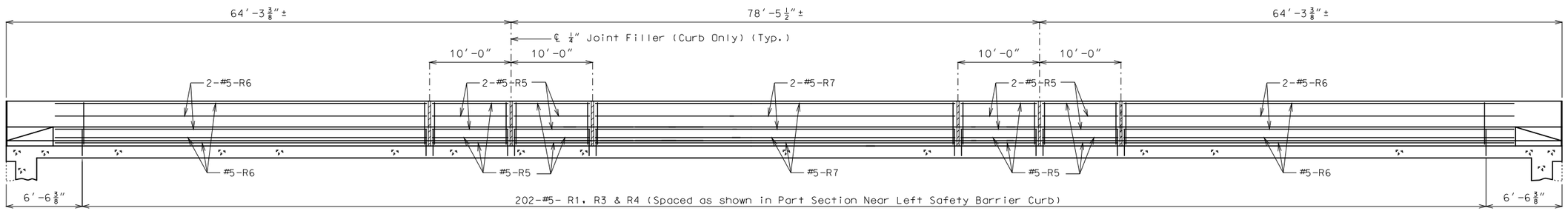

SPAN (1-2) SPAN (2-3) SPAN (3-4)

SECTION NEAR LEFT SAFETY BARRIER CURB

Note: Longitudinal dimensions are horizontal arc dimensions along outside edge of slab.

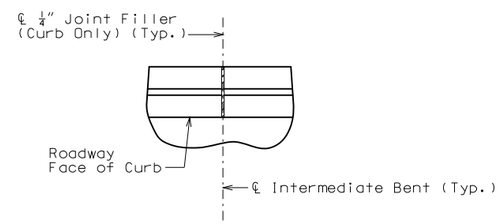

PART PLAN SHOWING SAFETY BARRIER CURB JOINT

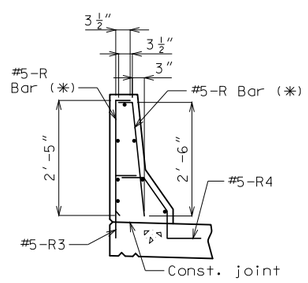

R-BAR PERMISSIBLE ALTERNATE SHAPE

(✳) The R1 bar may be separated into two bars as shown, at the contractor's option, only when slip forming is not used. (All dimensions are out to out.)

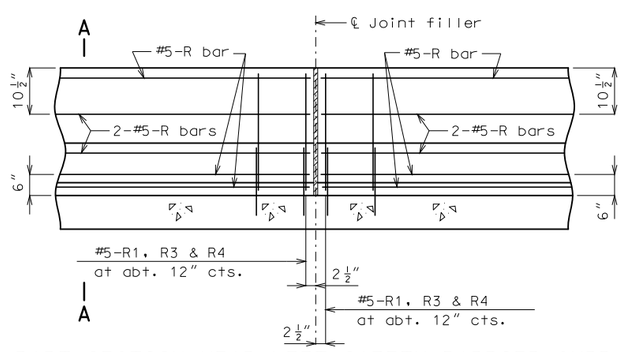

PART SECTION NEAR LEFT SAFETY BARRIER CURB (CAST-IN-PLACE CONVENTIONAL FORMING OPTION)

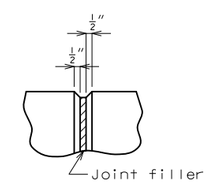

FILLED JOINT DETAIL

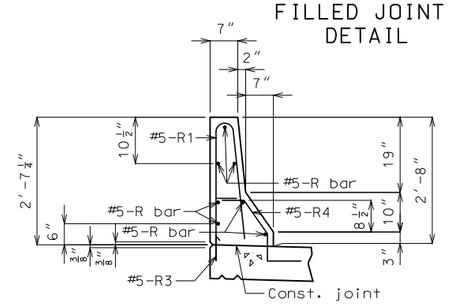

PART SECTION A-A

Notes:

Use a minimum lap of 3′-1″ for #5 horizontal safety barrier curb bars.

The cross-sectional area above the slab = 2.22 sq. ft.

Notes:

Top of safety barrier curb shall be built parallel to grade with barrier curb joints normal to grade.

All exposed edges of safety barrier curb shall have either a 1/2″ radius or a 3/8″ bevel, unless otherwise noted.

Payment for all concrete and reinforcement, complete in place, will be considered completely covered by the contract unit price for Safety Barrier Curb per linear foot.

Concrete in the safety barrier curb shall be Class B-1.

Measurement of safety barrier curb is to the nearest linear foot for each structure, measured along the outside top of slab from end of slab to end of slab.

Concrete traffic barrier delineators shall be placed on top of the safety barrier curb as shown on Missouri Standard Plans 617.10 and in accordance with Sec 617. Delineators on bridges with two-lane, two-way traffic shall have retroreflective sheeting on both sides. Concrete traffic barrier delineators will be considered completely covered by the contract unit price for Safety Barrier Curb.

STATE OF MISSOURI
DANIEL M. SMITH
NUMBER PE-28985
PROFESSIONAL ENGINEER
THIS SHEET HAS BEEN SIGNED, SEALED AND DATED ELECTRONICALLY.

DATE PREPARED	
9/22/2016	
ROUTE 5	STATE MO
DISTRICT BR	SHEET NO. 11
COUNTY DOUGLAS	
JOB NO. J9P3118	
CONTRACT ID.	
PROJECT NO.	
BRIDGE NO. A02751	

DATE	DESCRIPTION

MISSOURI HIGHWAYS AND TRANSPORTATION COMMISSION
105 WEST CAPITOL
JEFFERSON CITY, MO 65102
1-888-ASK-MODOT (1-888-275-6636)

IF A SEAL IS PRESENT ON THIS SHEET IT HAS BEEN ELECTRONICALLY SEALED AND DATED.

Detailed June 2016
Checked June 2016

Note: This drawing is not to scale. Follow dimensions.

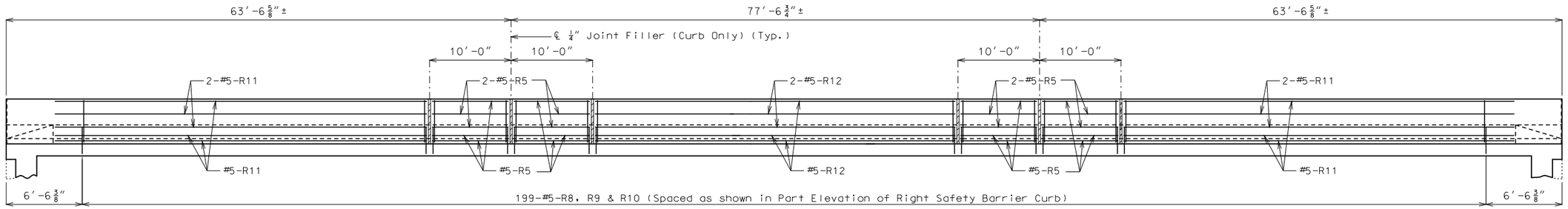

SPAN (1-2) SPAN (2-3) SPAN (3-4)

ELEVATION OF RIGHT SAFETY BARRIER CURB

Note: Longitudinal dimensions are horizontal arc dimensions along outside edge of slab.

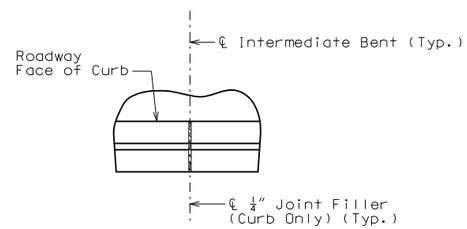

PART PLAN SHOWING SAFETY BARRIER CURB JOINT

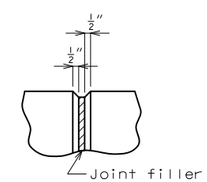

FILLED JOINT DETAIL

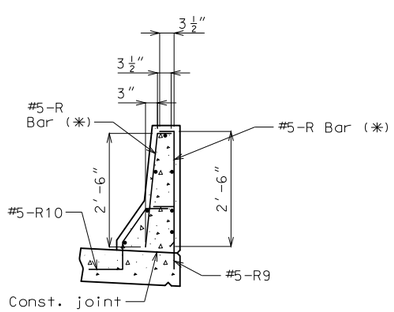

R-BAR PERMISSIBLE ALTERNATE SHAPE

(✱) The R8 bar may be separated into two bars as shown, at the contractor's option, only when slip forming is not used. (All dimensions are out to out.)

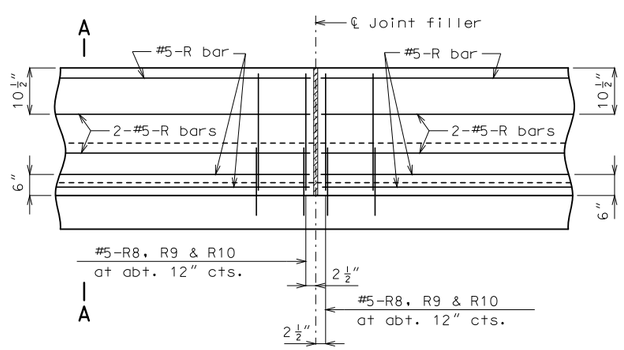

PART ELEVATION OF RIGHT SAFETY BARRIER CURB (CAST-IN-PLACE CONVENTIONAL FORMING OPTION)

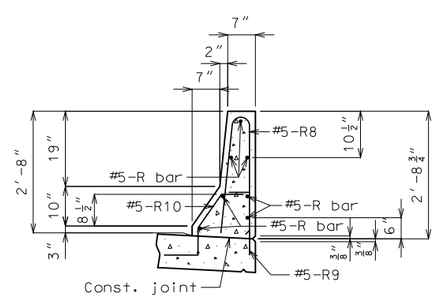

PART SECTION A-A

Notes:

Use a minimum lap of 3′-1″ for #5 horizontal safety barrier curb bars.

The cross-sectional area above the slab = 2.30 sq. ft.

Notes:

Top of safety barrier curb shall be built parallel to grade with barrier curb joints normal to grade.

All exposed edges of safety barrier curb shall have either a 1/2″ radius or a 3/8″ bevel, unless otherwise noted.

Payment for all concrete and reinforcement, complete in place, will be considered completely covered by the contract unit price for Safety Barrier Curb per linear foot.

Concrete in the safety barrier curb shall be Class B-1.

Measurement of safety barrier curb is to the nearest linear foot for each structure, measured along the outside top of slab from end of slab to end of slab.

Concrete traffic barrier delineators shall be placed on top of the safety barrier curb as shown on Missouri Standard Plans 617.10 and in accordance with Sec 617. Delineators on bridges with two-lane, two-way traffic shall have retroreflective sheeting on both sides. Concrete traffic barrier delineators will be considered completely covered by the contract unit price for Safety Barrier Curb.

STATE OF MISSOURI
DANIEL M. SMITH
NUMBER PE-28985
PROFESSIONAL ENGINEER
THIS SHEET HAS BEEN SIGNED, SEALED AND DATED ELECTRONICALLY.

DATE PREPARED	
9/22/2016	
ROUTE 5	STATE MO
DISTRICT BR	SHEET NO. 12
COUNTY DOUGLAS	
JOB NO. J9P3118	
CONTRACT ID.	
PROJECT NO.	
BRIDGE NO. A02751	

DATE	DESCRIPTION

MISSOURI HIGHWAYS AND TRANSPORTATION COMMISSION
105 WEST CAPITOL
JEFFERSON CITY, MO 65102
1-888-ASK-MODOT (1-888-275-6636)

IF A SEAL IS PRESENT ON THIS SHEET IT HAS BEEN ELECTRONICALLY SEALED AND DATED.

Detailed June 2016
Checked June 2016

Note: This drawing is not to scale. Follow dimensions.

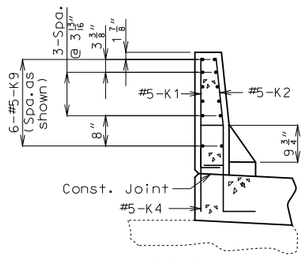

SECTION A-A

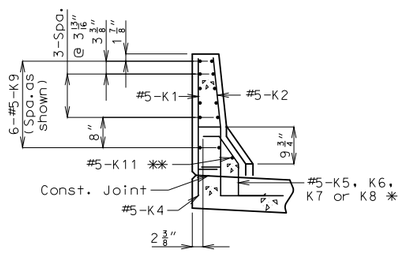

SECTION B-B

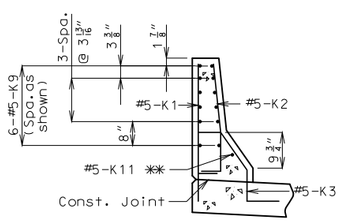

SECTION C-C

(#5-R6 Bars not shown for clarity)

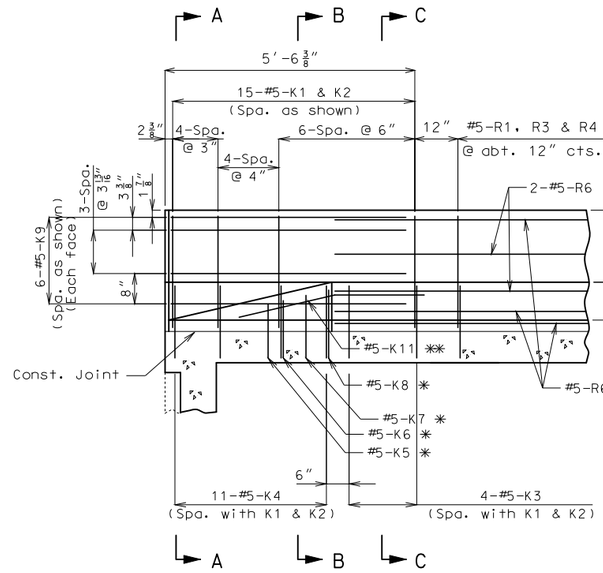

ELEVATION

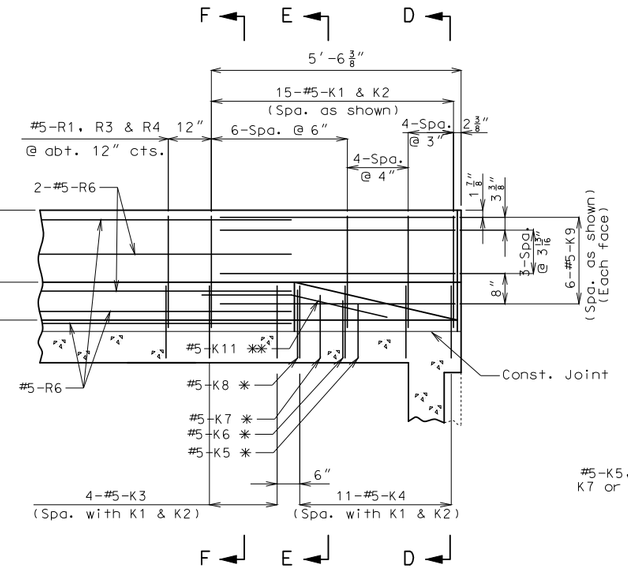

ELEVATION

✱ Spaced with #5-K4 bars with bottom leg at same elevation as the bottom leg of K4 bars.

✱✱ Fit bar to follow transition face of curb.

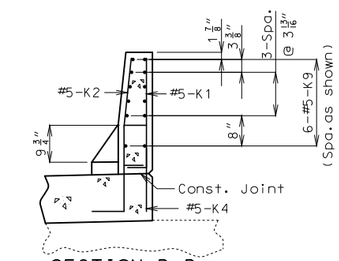

SECTION D-D

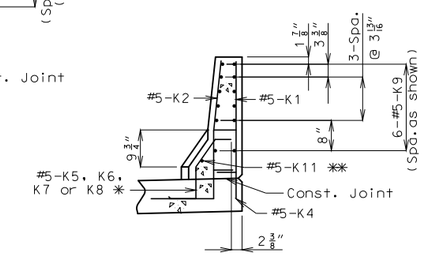

SECTION E-E

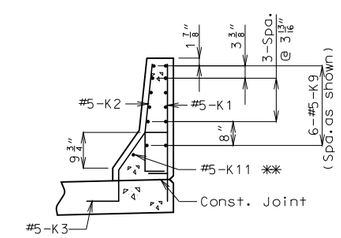

SECTION F-F

(#5-R6 Bars not shown for clarity)

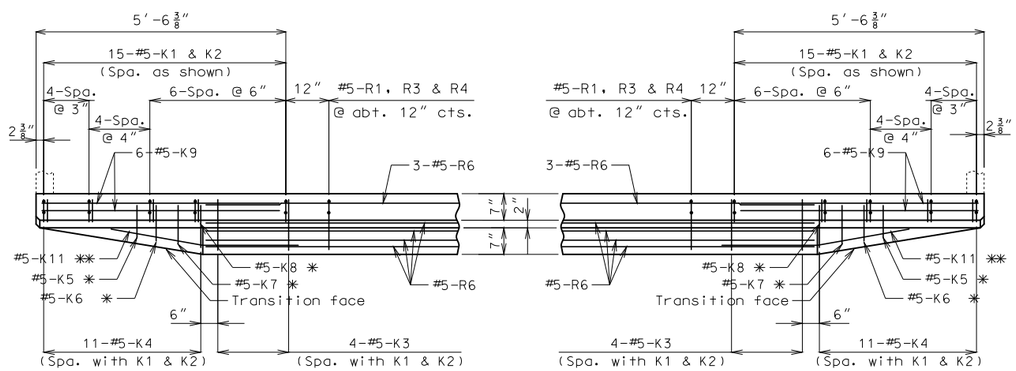

PLAN

PLAN

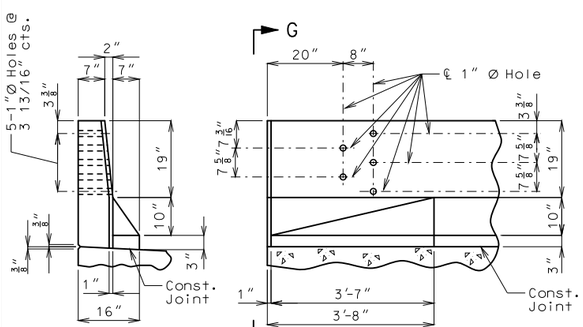

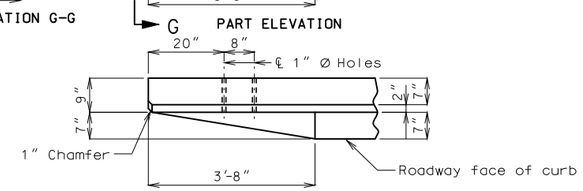

PART PLAN

DETAILS OF GUARD RAIL ATTACHMENT

NOTES: Use a minimum lap of 3'-1" between K9 and R6 bars.

Concrete traffic barrier delineators shall be placed on top of the safety barrier curb as shown on Missouri Standard Plans 617.10 and in accordance with Sec 617. Delineators on bridges with two-lane, two-way traffic shall have retroreflective sheeting on both sides. Concrete traffic barrier delineators will be considered completely covered by the contract unit price for Safety Barrier Curb.

The top two K9 bars shall be kept with position close to those shown in Sections A-A thru F-F

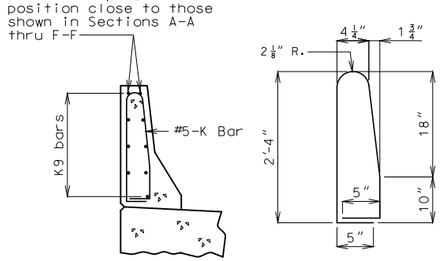

K1-K2 BAR PERMISSIBLE ALTERNATE SHAPE

(K3 or K4 thru K8 bars not shown for clarity)

The K1 and K2 bar combination may be furnished as one bar as shown, at the contractor's option.

DETAILS OF LEFT SAFETY BARRIER CURB AT END BENTS

Detailed June 2016
Checked June 2016

Note: This drawing is not to scale. Follow dimensions.

STATE OF MISSOURI
DANIEL M. SMITH
NUMBER PE-28985
PROFESSIONAL ENGINEER
THIS SHEET HAS BEEN SIGNED, SEALED AND DATED ELECTRONICALLY.

DATE PREPARED	
9/22/2016	
ROUTE 5	STATE MO
DISTRICT BR	SHEET NO. 13
COUNTY DOUGLAS	
JOB NO. J9P3118	
CONTRACT ID.	
PROJECT NO.	
BRIDGE NO. A02751	

DATE	DESCRIPTION

IF A SEAL IS PRESENT ON THIS SHEET IT HAS BEEN ELECTRONICALLY SEALED AND DATED.

MISSOURI HIGHWAYS AND TRANSPORTATION COMMISSION
105 WEST CAPITOL
JEFFERSON CITY, MO 65102
1-888-ASK-MODOT (1-888-275-6636)

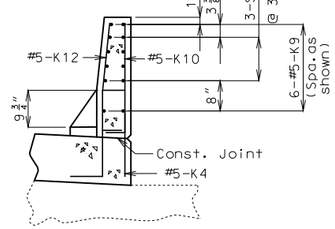

SECTION A-A

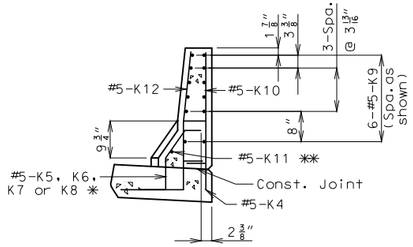

SECTION B-B

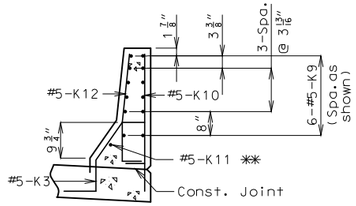

SECTION C-C

(#5-R11 Bars not shown for clarity)

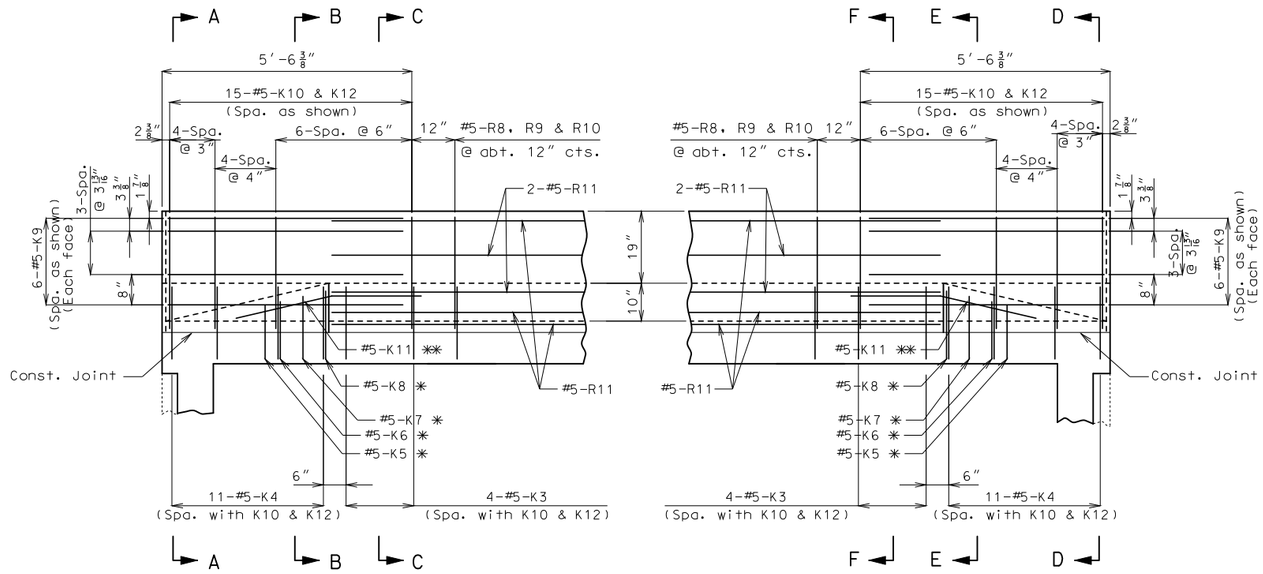

ELEVATION

ELEVATION

* Spaced with #5-K4 bars with bottom leg at same elevation as the bottom leg of K4 bars.

** Fit bar to follow transition face of curb.

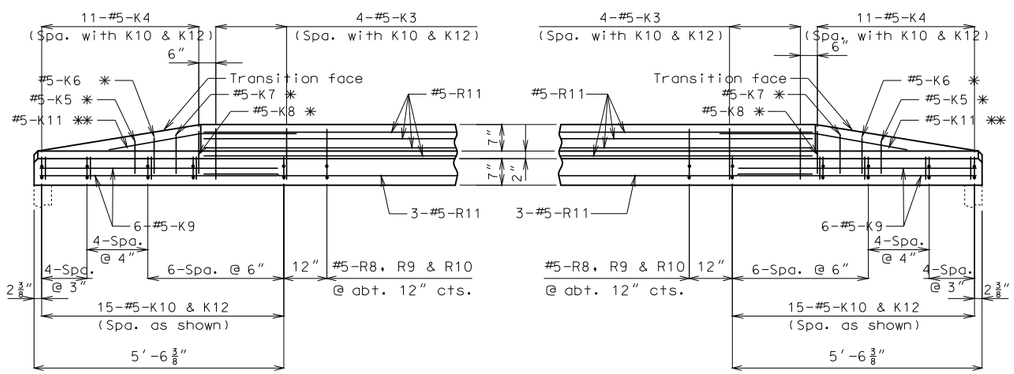

PLAN

PLAN

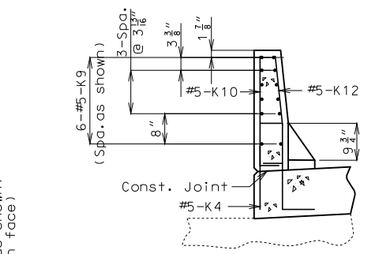

SECTION D-D

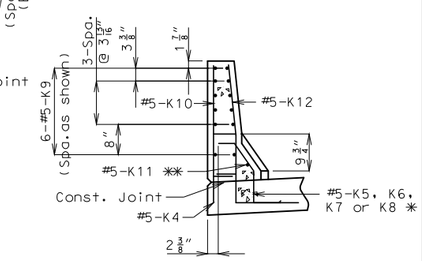

SECTION E-E

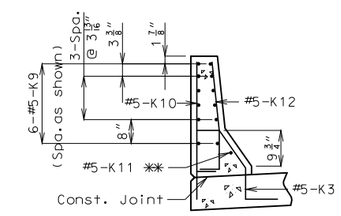

SECTION F-F

(#5-R11 Bars not shown for clarity)

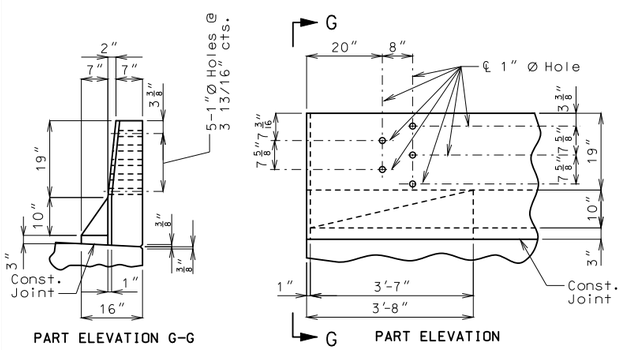

PART ELEVATION G-G

PART ELEVATION

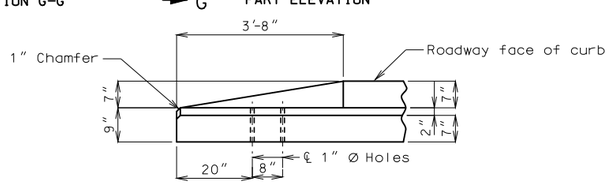

PART PLAN

DETAILS OF GUARD RAIL ATTACHMENT

NOTES: Use a minimum lap of 3'-1" between K9 and R11 bars.

Concrete traffic barrier delineators shall be placed on top of the safety barrier curb as shown on Missouri Standard Plans 617.10 and in accordance with Sec 617. Delineators on bridges with two-lane, two-way traffic shall have retroreflective sheeting on both sides. Concrete traffic barrier delineators will be considered completely covered by the contract unit price for Safety Barrier Curb.

DETAILS OF RIGHT SAFETY BARRIER CURB AT END BENTS

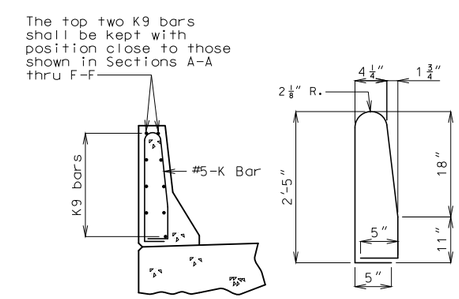

K10-K12 BAR PERMISSIBLE ALTERNATE SHAPE

(K3 or K4 thru K8 bars not shown for clarity)

The K10 and K12 bar combination may be furnished as one bar as shown, at the contractor's option.

STATE OF MISSOURI
DANIEL M. SMITH
NUMBER PE-28985
PROFESSIONAL ENGINEER

THIS SHEET HAS BEEN SIGNED, SEALED AND DATED ELECTRONICALLY.

DATE PREPARED 9/22/2016	
ROUTE 5	STATE MO
DISTRICT BR	SHEET NO. 14
COUNTY DOUGLAS	
JOB NO. J9P3118	
CONTRACT ID.	
PROJECT NO.	
BRIDGE NO. A02751	

DATE | DESCRIPTION

MISSOURI HIGHWAYS AND TRANSPORTATION COMMISSION
105 WEST CAPITOL
JEFFERSON CITY, MO 65102
1-888-ASK-MODOT (1-888-275-6636)

IF A SEAL IS PRESENT ON THIS SHEET IT HAS BEEN ELECTRONICALLY SEALED AND DATED.

Detailed June 2016
Checked June 2016

Note: This drawing is not to scale. Follow dimensions.

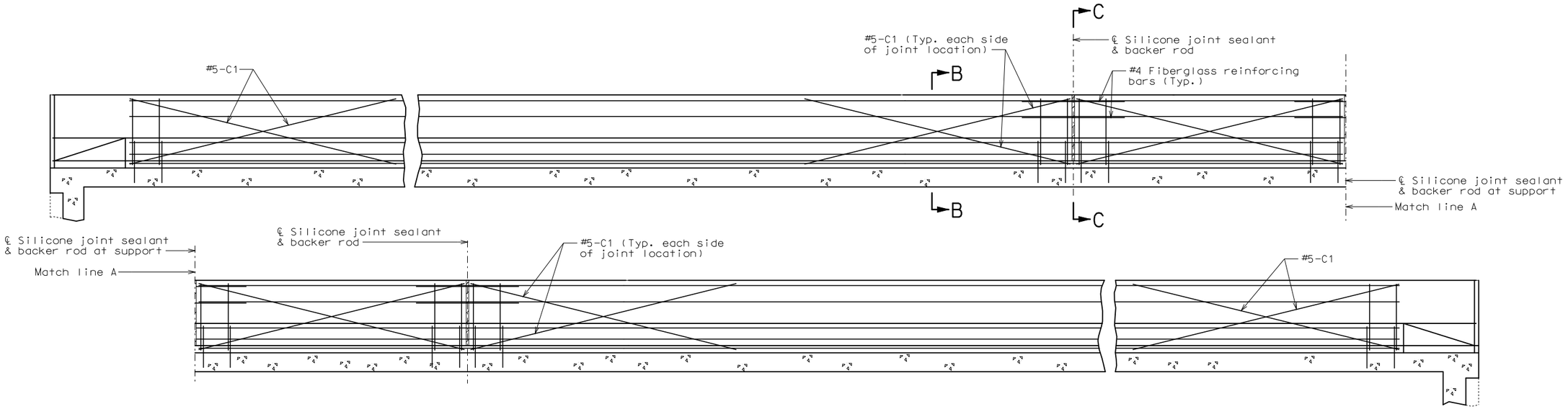

TYPICAL SECTION NEAR LEFT SAFETY BARRIER CURB AT SUPPORT LOCATIONS
(OPTIONAL SLIP-FORM BRIDGE SAFETY BARRIER CURB)

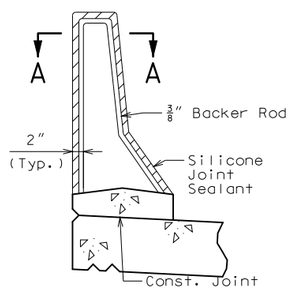

SECTION THRU JOINT

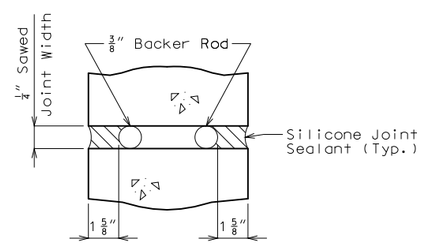

SECTION A-A

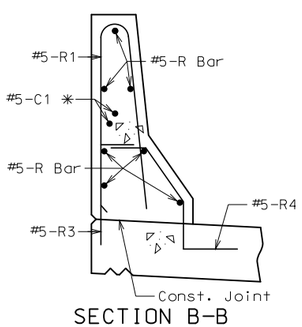

SECTION B-B
✳ Each side of joint location.

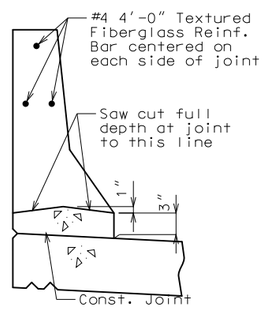

SECTION C-C

General Notes:

Top of safety barrier curb shall be built parallel to grade with barrier curb joints normal to grade.

All exposed edges of safety barrier curb shall have either a 1/2-inch radius or a 3/8-inch bevel, unless otherwise noted.

Payment for all concrete and reinforcement, complete in place, will be considered completely covered by the contract unit price for Safety Barrier Curb per linear foot.

Concrete in the safety barrier curb shall be Class B-1.

Measurement of safety barrier curb is to the nearest linear foot for each structure, measured along the outside top of slab from end of slab to end of slab.

Concrete traffic barrier delineators shall be placed on top of the safety barrier curb as shown on Missouri Standard Plans 617.10 and in accordance with Sec 617. Delineators on bridges with two-lane, two-way traffic shall have retroreflective sheeting on both sides. Concrete traffic barrier delineators will be considered completely covered by the contract unit price for Safety Barrier Curb.

Joint sealant and backer rods shall be used on all slip-form barrier curbs instead of joint filler and shall be in accordance with Sec 717 for silicone joint sealant for saw cut and formed joints.

For slip-form option, all sides of the safety barrier curb shall have a vertically broomed finish and the curb top shall have a transversely broomed finish.

C bars (slip-form option only) shall be used in addition to cast-in-place conventional forming reinforcement for bridge safety barrier curb.

Cost of silicone joint sealant and backer rod, complete in place, will be considered completely covered by the contract unit price for Safety Barrier Curb.

OPTIONAL SLIP-FORM BRIDGE SAFETY BARRIER CURB

(Left barrier curb shown, right barrier curb similar.)

Detailed June 2016
Checked June 2016

Note: This drawing is not to scale. Follow dimensions.

STATE OF MISSOURI
DANIEL M. SMITH
NUMBER PE-28985
PROFESSIONAL ENGINEER
THIS SHEET HAS BEEN SIGNED, SEALED AND DATED ELECTRONICALLY.

DATE PREPARED	
9/22/2016	
ROUTE 5	STATE MO
DISTRICT BR	SHEET NO. 15
COUNTY DOUGLAS	
JOB NO. J9P3118	
CONTRACT ID.	
PROJECT NO.	
BRIDGE NO. A02751	

DESCRIPTION | DATE

MISSOURI HIGHWAYS AND TRANSPORTATION COMMISSION
105 WEST CAPITOL
JEFFERSON CITY, MO 65102
1-888-ASK-MODOT (1-888-275-6636)

IF A SEAL IS PRESENT ON THIS SHEET IT HAS BEEN ELECTRONICALLY SEALED AND DATED.

General Notes:

The contractor shall pour and satisfactorily finish the bridge slab before placing the bridge approach slab.

Drain pipe may be either 6″ diameter corrugated metallic-coated pipe underdrain, 4″ diameter corrugated polyvinyl chloride (PVC) drain pipe, or 4″ diameter corrugated polyethylene (PE) drain pipe.

Payment for furnishing all materials, curb, labor and excavation necessary to construct the asphalt bridge approach slab, including curb, underdrain and Type 5 aggregate base within the pay limits shown, complete in place, will be considered completely covered by the contract unit price for Bridge Approach Slab (Minor Road) per square yard.

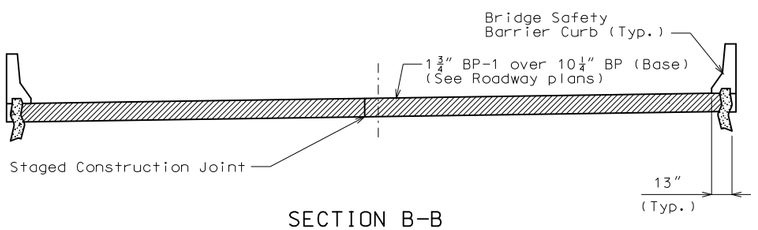

SECTION B-B

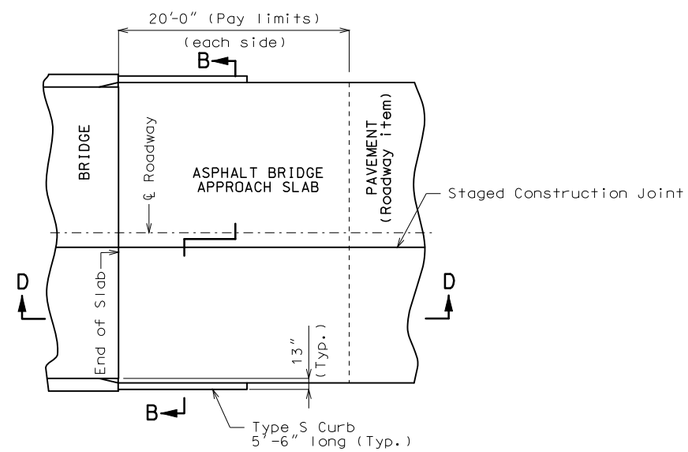

PART PLAN
(Squared structure shown, skewed structure similar)

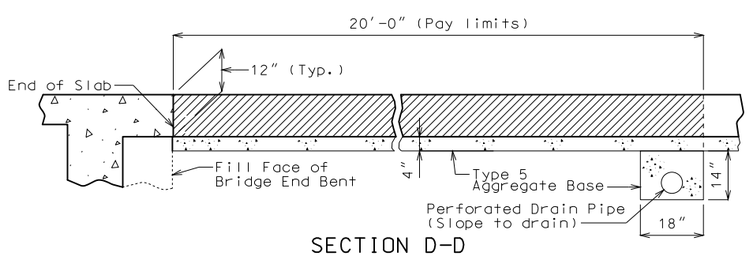

SECTION D-D
(Semi-Integral end bent shown)

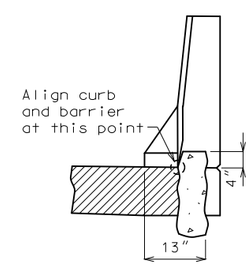

4″ TYPE S CURB
See Missouri Standard Plans Drawing 609.00 for details of Type S Curb.

DETAILS OF BRIDGE APPROACH SLAB (MINOR ROAD)

Detailed June 2016
Checked June 2016

Note: This drawing is not to scale. Follow dimensions.

STATE OF MISSOURI
DANIEL M. SMITH
NUMBER PE-28985
PROFESSIONAL ENGINEER
THIS SHEET HAS BEEN SIGNED, SEALED AND DATED ELECTRONICALLY.

DATE PREPARED	
9/22/2016	
ROUTE 5	STATE MO
DISTRICT BR	SHEET NO. 16
COUNTY DOUGLAS	
JOB NO. J9P3118	
CONTRACT ID.	
PROJECT NO.	
BRIDGE NO. A02751	

DATE	DESCRIPTION

MISSOURI HIGHWAYS AND TRANSPORTATION COMMISSION
105 WEST CAPITOL
JEFFERSON CITY, MO 65102
1-888-ASK-MODOT (1-888-275-6636)

IF A SEAL IS PRESENT ON THIS SHEET IT HAS BEEN ELECTRONICALLY SEALED AND DATED.

BILL OF REINFORCING STEEL

NO. REQ'D.	MARK NO. SIZE	MARK NO. MARK	LOCATION	EPOXY (E)	SHAPE NO.	STIRRUP (S)	SUBSTR. (X)	VARIES (V)	NO. EACH	B FT. IN.	C FT. IN.	D FT. IN.	E FT. IN.	F FT. IN.	H FT. IN.	K FT. IN.	NOMINAL LENGTH FT. IN.	ACTUAL LENGTH FT. IN.	WEIGHT LBS.
			SUPERST																
			END BENT 1																
6	6	H1	DIAPHRAGM	E	20					17 4.000							17 4	17 4	156
4	6	H2	DIAPHRAGM	E	20					15 1.000							15 1	15 1	91
10	6	H3	DIAPHRAGM	E	11	S					4 0.000	16.000	2 0.000				7 4	7 0	105
2	6	H4	DIAPHRAGM	E	20					14 1.000							14 1	14 1	42
33	5	H5	DIAPHRAGM	E	19	S				9.000	4 4.000						5 1	5 0	172
2	5	H6	DIAPHRAGM	E	20					17 4.000							17 4	17 4	36
2	5	H7	DIAPHRAGM	E	20					15 1.000							15 1	15 1	31
2	4	H9	SHEAR BLOCK	E	20					16.000							0 16	0 16	2
64	6	U1	DIAPHRAGM	E	10	S					3 9.750	16.000					9 0	8 8	833
2	6	U2	DIAPHRAGM	E	10	S					3 3.750	16.000					8 0	7 8	23
			END BENT 4																
6	6	H40	DIAPHRAGM	E	20					17 4.000							17 4	17 4	156
4	6	H41	DIAPHRAGM	E	20					15 1.000							15 1	15 1	91
10	6	H42	DIAPHRAGM	E	11	S					4 0.000	16.000	2 0.000				7 4	7 0	105
2	6	H43	DIAPHRAGM	E	20					14 1.000							14 1	14 1	42
33	5	H44	DIAPHRAGM	E	19	S				9.000	4 4.000						5 1	5 0	172
2	5	H45	DIAPHRAGM	E	20					15 1.000							15 1	15 1	31
2	5	H46	DIAPHRAGM	E	20					17 4.000							17 4	17 4	36
2	4	H49	SHEAR BLOCK	E	20					16.000							0 16	0 16	2
64	6	U40	DIAPHRAGM	E	10	S					3 9.750	16.000					9 0	8 8	833
2	6	U41	DIAPHRAGM	E	10	S					3 3.750	16.000					8 0	7 8	23
			SLAB																
614	6	S1	SLAB	E	20					15 1.000							15 1	15 1	13910
614	6	S2	SLAB	E	20					17 4.000							17 4	17 4	15985
284	5	S3	SLAB	E	20					53 11.000							53 11	53 11	15971
104	6	S4	SLAB	E	20					35 6.000							35 6	35 6	5545
			BARRIER CURB																
30	5	K1	BARRIER CURB	E	19	S				2 4.000	5.125						2 9	2 8	83
30	5	K2	BARRIER CURB	E	14	S				5.125	10.125	18.000			2.000	17.875	2 9	2 8	83
16	5	K3	BARRIER CURB	E	27	S				17.625	5.125	12.000	8.125	12.000	9.875	6.875	4 7	4 4	72
44	5	K4	BARRIER CURB	E	10	S				12.000	17.625	6.000					4 5	4 2	191
4	5	K5	BARRIER CURB	E	27	S					4.375	6.750	8.125	12.000	5.500	4.000	2 7	2 5	10
4	5	K6	BARRIER CURB	E	27	S					4.375	7.875	8.125	12.000	6.500	4.500	2 8	2 6	10
4	5	K7	BARRIER CURB	E	27	S					4.375	9.625	8.125	12.000	7.875	5.500	2 10	2 8	11
4	5	K8	BARRIER CURB	E	27	S					4.375	11.250	8.125	12.000	9.250	6.500	3 0	2 10	12
48	5	K9	BARRIER CURB	E	20					6 9.000							6 9	6 9	338
30	5	K10	BARRIER CURB	E	19	S				2 5.000	5.125						2 10	2 9	86
4	5	K11	BARRIER CURB	E	8					2 2.125					2 2.000	2.375	4 4	4 4	18
30	5	K12	BARRIER CURB	E	14	S				5.125	11.125	18.000			2.000	17.875	2 10	2 9	86
202	5	R1	BARRIER CURB	E	26					2 5.000	4.250	2 6.125			2 6.000	3.000	5 1	5 1	1071
202	5	R3	BARRIER CURB	E	19	S				15.250	6.000						0 21	0 20	351
202	5	R4	BARRIER CURB	E	27	S					6.000	11.250	7.500	12.000	9.250	6.375	3 1	2 11	615
56	5	R5	BARRIER CURB	E	20					9 9.000							9 9	9 9	569
14	5	R6	BARRIER CURB	E	20					50 4.000							50 4	50 4	735
7	5	R7	BARRIER CURB	E	20					58 2.000							58 2	58 2	425
199	5	R8	BARRIER CURB	E	26					2 6.000	4.250	2 6.125			2 6.000	3.000	5 2	5 2	1072
199	5	R9	BARRIER CURB	E	19	S				16.750	6.000						0 23	0 22	381

BILL OF REINFORCING STEEL

NO. REQ'D.	MARK NO. SIZE	MARK NO. MARK	LOCATION	EPOXY (E)	SHAPE NO.	STIRRUP (S)	SUBSTR. (X)	VARIES (V)	NO. EACH	B FT. IN.	C FT. IN.	D FT. IN.	E FT. IN.	F FT. IN.	H FT. IN.	K FT. IN.	NOMINAL LENGTH FT. IN.	ACTUAL LENGTH FT. IN.	WEIGHT LBS.
199	5	R10	BARRIER CURB	E	27	S					6.000	11.250	7.500	12.000	9.250	6.375	3 1	2 11	605
14	5	R11	BARRIER CURB	E	20					49 7.000							49 7	49 7	724
7	5	R12	BARRIER CURB	E	20					57 3.000							57 3	57 3	418
			SLIP FORM																
			OPTION																
40	5	C1	SLIP FORM	E	20					10 0.000							10 0	10 0	417
			TOTALS																
	4			E															4
	5			E															24832
	6			E															37940
			TOTAL																0
			TOTAL	E															62776
			Slab on																
			Girder																
	4			E															4
	5			E															16449
	6			E															37940
			TOTAL																54393
			Safety																
			Barrier																
			Curb																
	5			E															7966
			TOTAL																7966
			Slip Form																
			Option																
	5			E															417
			TOTAL																417

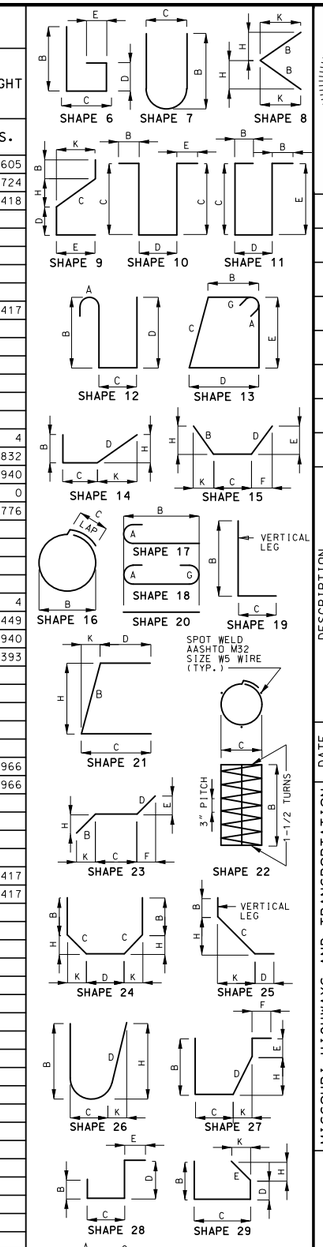

STATE OF MISSOURI
DANIEL M. SMITH
NUMBER PE-28985
PROFESSIONAL ENGINEER

THIS SHEET HAS BEEN SIGNED, SEALED AND DATED ELECTRONICALLY.

DATE PREPARED	
9/22/2016	
ROUTE 5	STATE MO
DISTRICT BR	SHEET NO. 17
COUNTY DOUGLAS	
JOB NO. J9P3118	
CONTRACT ID.	
PROJECT NO.	
BRIDGE NO. A02751	

DESCRIPTION

DATE

IF A SEAL IS PRESENT ON THIS SHEET IT HAS BEEN ELECTRONICALLY SEALED AND DATED.

MISSOURI HIGHWAYS AND TRANSPORTATION COMMISSION

105 WEST CAPITOL
JEFFERSON CITY, MO 65102
1-888-ASK-MODOT (1-888-275-6636)

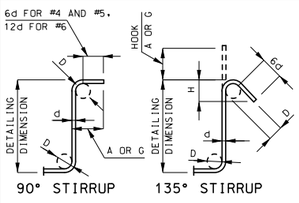

STIRRUP HOOK DIMENSIONS				
GRADES 40 - 50 - 60 KSI				
BAR SIZE	D (IN.)	90° HOOK	135° HOOK	
		HOOK A OR G	HOOK A OR G	APPROX. H
#4	2"	4 1/2"	4 1/2"	3"
#5	2 1/2"	6"	5 1/2"	3 3/4"
#6	4 1/2"	12"	8"	4 1/2"

NOTE: UNLESS OTHERWISE NOTED, DIAMETER "D" IS THE SAME FOR ALL BENDS AND HOOKS ON A BAR.

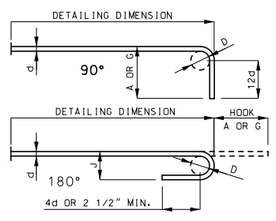

END HOOK DIMENSIONS				
BAR SIZE	D (IN.)	ALL GRADES		
		180° HOOKS		90° HOOKS
		A OR G	J	A OR G
#3	2 1/4"	5"	3"	6"
#4	3"	6"	4"	8"
#5	3 3/4"	7"	5"	10"
#6	4 1/2"	8"	6"	12"
#7	5 1/4"	10"	7"	14"
#8	6"	11"	8"	16"
#9	9 1/2"	15"	11 3/4"	19"
#10	10 3/4"	17"	13 1/4"	22"
#11	12"	19"	14 3/4"	2'-0"
#14	18 1/4"	2'-3"	21 3/4"	2'-7"

NOTE:
ALL STANDARD HOOKS AND BENDS OTHER THAN 180 DEGREE ARE TO BE BENT WITH SAME PROCEDURE AS FOR 90 DEGREE STANDARD HOOKS.
HOOKS AND BENDS SHALL BE IN ACCORDANCE WITH THE PROCEDURES AS SHOWN ON THIS SHEET.
E = EPOXY COATED REINFORCEMENT.
S = STIRRUP.
X = BAR IS INCLUDED IN SUBSTRUCTURE QUANTITIES.
V = BAR DIMENSIONS VARY IN EQUAL INCREMENTS BETWEEN DIMENSIONS SHOWN ON THIS LINE AND THE FOLLOWING LINE.
NO. EA. = NUMBER OF BARS OF EACH LENGTH.
NOMINAL LENGTHS ARE BASED ON OUT TO OUT DIMENSIONS SHOWN IN BENDING DIAGRAMS AND ARE LISTED FOR FABRICATORS USE. (NEAREST INCH)
ACTUAL LENGTHS ARE MEASURED ALONG CENTERLINE BAR TO THE NEAREST INCH.
PAYWEIGHTS ARE BASED ON ACTUAL LENGTHS.
FOUR ANGLE OR CHANNEL SPACERS ARE REQUIRED FOR EACH COLUMN SPIRAL. SPACERS ARE TO BE PLACED ON INSIDE OF SPIRALS. LENGTH AND WEIGHT OF COLUMN SPIRALS DO NOT INCLUDE SPLICES OR SPACERS.
REINFORCING STEEL (GRADE 60) FY = 60,000 PSI.

Detailed June 2016
Checked June 2016

Note: This drawing is not to scale. Follow dimensions.

MISSOURI STATE HIGHWAY DEPARTMENT

FED. ROAD DIST. NO.	STATE	FED. AID PROJ. NO.	FISCAL YEAR	SHEET NO.	TOTAL SHEETS
5	MO.		19	25	

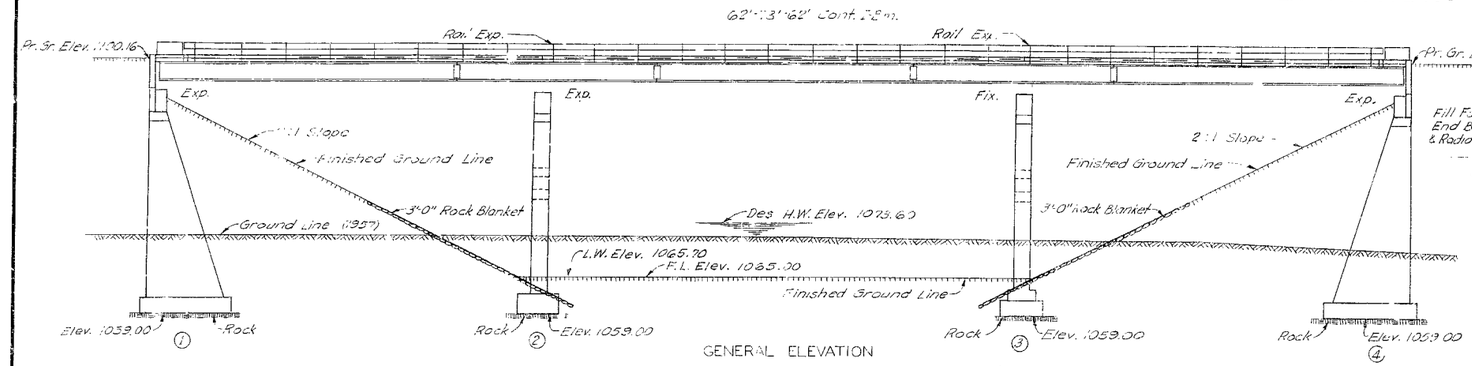

GENERAL ELEVATION

Note: All loose, shelly or disentegrated rock shall be removed and the footings placed on hard, solid, undisturbed rock. If soft rock or shale is encountered, the footings shall be carried at least 16" into and cast against vertical faces of same.

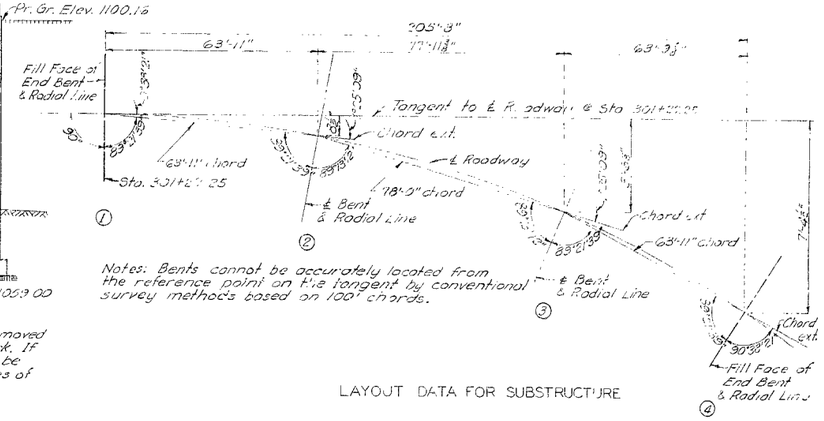

Notes: Bents cannot be accurately located from the reference point on the tangent by conventional survey methods based on 100' chords.

LAYOUT DATA FOR SUBSTRUCTURE

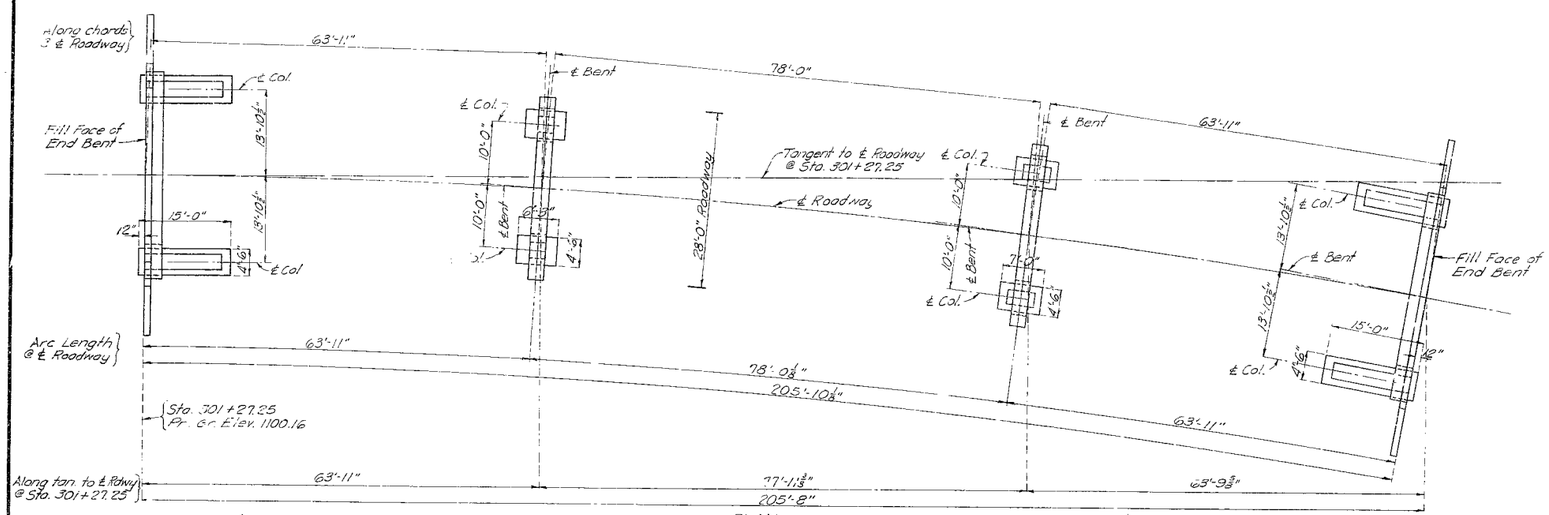

PLAN

GENERAL NOTES:

Design Specifications: A.A.S.H.O. -1953
Loading: H20-44 (15#/□' Future wearing surface.)
Structural Steel Stress: 18,000#/□"
Reinforcing Steel Stress: 20,000#/□"
Concrete Class "B" Stress: 1200#/□"
Concrete, Class "B-1" Stress: 1200#/□"
Concrete for superstructure shall be Class "B-1" air-entrained.

Concrete for substructure shall be Class "B" air-entrained. If the Contractor desires he may use Class "B-1" in lieu of Class "B" for concrete in substructure with payment on the basis of Class "B" concrete.

Rivets ¾"ϕ; holes ⅞"ϕ except as noted.

Field connections shall be riveted except as noted in handrail details, or if the Contractor desires to eliminate all field riveting on this project, he may use High Tensile Steel bolts with carburized washers in place of rivets. If high tensile steel bolts are used, they shall be placed in such a manner that the nuts will always be in the most exposed position.

Qualification of welding operators will be required.

Paint: Shop, none; Field, contact surfaces of bolted field connections, except where high tensile bolts are used, one coat of red lead and surfaces inaccessible after erection three coats of red lead. No other paint to be applied by Contractor. Red lead required shall be furnished by Contractor. Payment for cleaning and painting such surfaces will be included in unit price bid for Fabricated Structural Steel.

Where joint filler is specified on the plans it shall conform with the requirements for Gray Rubber Compound Joints as given in Section 59-22B of the Standard Specifications.

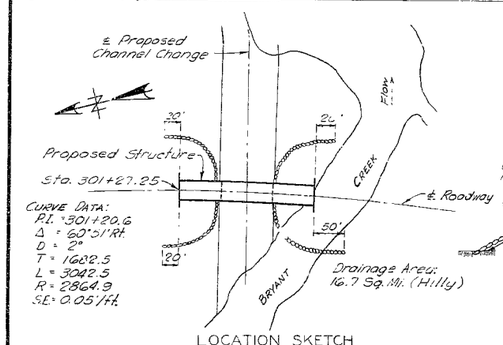

LOCATION SKETCH

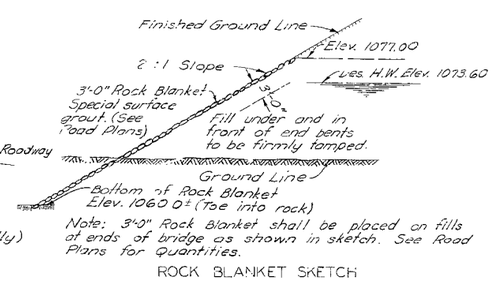

Note: 3'-0" Rock Blanket shall be placed on fills at ends of bridge as shown in sketch. See Road Plans for Quantities.

ROCK BLANKET SKETCH

ESTIMATED QUANTITIES				
Item		Substr.	Superstr.	Total
Class 1 Excavation for Structures	Cu. Yds.	120		120
Class 2 Excavation for Structures	Cu. Yds.	245		245
Class "B-1" Concrete	Cu. Yds.		151.0	151.0
Class "B" Concrete	Cu. Yds.	225.9		225.9
Reinforcing Steel	Lbs.	24,980	45,180	70,160
* Fabricated Structural Steel	Lbs.		170,500	170,500
Steel Castings	Lbs.		5,220	5,220

Note: Excavation for bridge made above Elev. 1067.00 will be paid for as Class 1 Excavation for Structures.

Excavation for bridge made below Elev. 1067.00 will be paid for as Class 2 Excavation for Structures.

* Final pay weight for Fabricated Structural Steel will be based on using field rivets except for bolted connections specified for handrail.

B.M. #33 Elev. 1070.64 Nail in Root 10" Walnut 100' Rt. Sta. 302+60.

BRIDGE OVER BRYANT CREEK

STATE ROAD FROM WRIGHT CO. LINE S.W. TO RTE. 14 WEST OF AVA

ABOUT 5.7 MILES S. OF MANSFIELD

PROJECT NO. DF-384(4)(RTE. 5) **STA.** 301+27.25

DOUGLAS **COUNTY**

SUBMITTED BY J. A. Williams BRIDGE ENGINEER DATE 5-12-1958

APPROVED BY Rodney M. Wharton CHIEF ENGINEER DATE 5-12-1958

Drawn April 1958 by M.H.R.
Checked April 1958 by A.F.K.

Note: This drawing is not to scale. Follow dimensions.

Sheet No. 1 of 8

STD. C-110K5

A-275

418

MISSOURI STATE HIGHWAY DEPARTMENT

FED. ROAD DIST. NO.	STATE	FED. AID PROJ. NO.	FISCAL YEAR	SHEET NO.	TOTAL SHEETS
5	MO.		19	26	

COMPLETE BILL OF REINFORCING STEEL

No	Size	Length	Mark	Location
End Bent No 1				
20	#7	4'-9"	D1	Footing
8	#6	8'-6"	F1	Col. Hch.
8	#6	8'-0"	F2	" "
9	#11	33'-0"	H1	Beam
2	#6	33'-0"	H2	"
5	#6	11'-0"	H3	"
5	#6	11'-0"	H4	"
5	#6	17'-3"	H5	"
5	#4	7'-6"	H6	"
8	#4	17'-3"	H7	"
15	#6	11'-3"	H9	Wing
6	#6	17'-9"	H10	"
58	#3	21'-6"	P1	Col.
2	#6	15'-0"	T1	Wing (Lt)
2	#6	16'-9"	T2	" (Rt)
8	#4	11'-6"	U1	Beam
9	#4	12'-6"	U2	"
9	#4	13'-3"	U3	"
8	#4	14'-3"	U4	"
10	#4	3'-6"	U5	"
1	#4	7'-9"	V14	Wing
56	#5	6'-[illegible]	V1	Bk. Wall
4	#4	8'-3"	V2	Bk. Wall & Wing
3	#4	11'-3"	V3	Wing (Lt.)
4	#4	9'-9"	V4	Wing & Bk. Wall
3	#4	14'-0"	V5	Wing (Rt.)
12	#7	32'-3"	V6	Col.
8	#7	34'-0"	V7	"
20	#4	29'-9"	V8	"
1	#4	9'	V15	Wing
8	#2		W1	Anchor Bolts
Int. Bent No. 2				
16	#7	4'-9"	D1	Footing
16	#6	8'-0"	F3	Col. Hch.
12	#8	9'-0"	F4	Tie Beam
7	#11	29'-0"	G1	Beam
2	#6	29'-0"	G2	"
7	#10	13'-6"	G3	"
3	#6	10'-9"	G4	"
7	#10	13'-0"	G5	"
3	#6	3'-0"	G6	"
6	#8	24'-3"	G7	Tie Beam
54	#3	9'-9"	P2	Col.
16	#4	9'-0"	U6	Tie Beam
9	#5	12'-0"	U7	Beam
9	#5	13'-0"	U8	"
8	#5	13'-9"	U9	"
4	#5	14'-9"	U10	"
10	#5	3'-3"	U11	"
16	#7	22'-6"	V9	Col.
16	#7	11'-9"	V10	"
8	#2	19'-9"	W1	Anchor Bolts

Bending Sketches & Cutting Diagrams

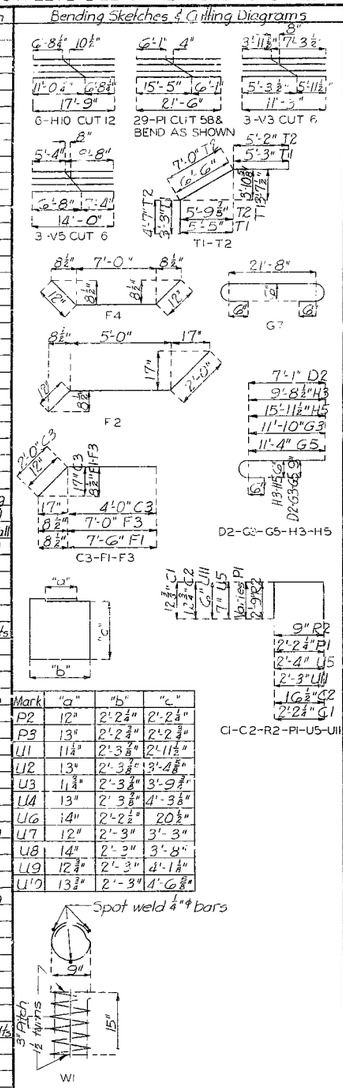

Mark	"a"	"b"	"c"
P2	12"	2'-2¼"	2'-2¼"
P3	13"	2'-2¾"	2'-2¾"
U1	11¼"	2'-3⅞"	2'-11½"
U2	13"	2'-3⅞"	3'-4⅞"
U3	11¾"	2'-3⅞"	3'-9⅞"
U4	13"	2'-3⅞"	4'-3⅞"
U6	14"	2'-2½"	20½"
U7	12"	2'-3"	3'-3"
U8	14"	2'-3"	3'-8"
U9	12¾"	2'-3"	4'-1¼"
U10	13¾"	2'-3"	4'-6⅞"

No	Size	Length	Mark	Location
Int. Bent No. 3				
24	#11	8'-9"	D2	Footing
16	#6	8'-0"	F3	Col. Hch.
12	#8	9'-0"	F4	Tie Beam
7	#11	29'-0"	G1	Beam
2	#6	29'-0"	G2	"
7	#10	13'-6"	G3	"
3	#6	10'-9"	G4	"
7	#10	13'-0"	G5	"
3	#6	3'-0"	G6	"
6	#8	24'-3"	G7	Tie Beam
54	#3	10'-0"	P3	Col.
16	#4	9'-0"	U6	Tie Beam
9	#5	12'-0"	U7	Beam
9	#5	13'-0"	U8	"
8	#5	13'-9"	U9	"
4	#5	14'-9"	U10	"
10	#5	3'-3"	U11	"
24	#11	21'-9"	V11	Col.
16	#7	11'-0"	V12	"
8	#2	19'-9"	W1	Anchor Bolts
End Bent No 4				
20	#7	4'-9"	D1	Footing
8	#6	8'-6"	F1	Col. Hch.
8	#6	8'-0"	F2	" "
	#6	15'-0"	T1	Wing
	#11	33'-0"	H1	Beam
4	#6	33'-0"	H2	"
5	#6	11'-0"	H3	"
5	#6	11'-0"	H4	"
5	#6	17'-3"	H5	"
5	#4	7'-6"	H6	"
8	#4	17'-3"	H7	Bk. Wall
15	#6	11'-3"	H9	Wing
6	#6	17'-9"	H10	"
2	#6	16'-9"	T2	"
58	#3	21'-6"	P1	Col.
8	#4	11'-6"	U1	Beam
9	#4	12'-6"	U2	"
9	#4	13'-3"	U3	"
8	#4	14'-3"	U4	"
10	#4	3'-6"	U5	"
1	#4	8'-3"	V2	Wing
1	#4	9'-9"	V4	"
12	#7	32'-3"	V6	Col.
8	#7	34'-0"	V7	"
20	#4	29'-9"	V8	"
68	#5	5'-6"	V13	Bk. Wall
3	#4	11'-3"	V3	Wing
3	#4	14'-0"	V5	"
1	#4	7'-9"	V14	"
1	#4	9'-3"	V15	"
8	#2	19'-9"	W1	Anchor Bolt
Superstructure				
20	#2	4'-3"	C1	Curb
292	#5	3'-6"	C2	"
4	#5	6'-0"	C3	"
24	#6	33'-0"	C4	"
18	#6	27'-3"	C5	"
24	#4	3'-9"	R1	End Post
20	#5	6'-3"	R2	" "
892	#5	3'-3"	S1	Slab
400	#5	27'-3"	S2	"
80	#5	16'-0"	S3	"
40	#5	2'-6"	S5	"

BRIDGE OVER BRYANT CREEK

STATE ROAD FROM WRIGHT CO. LINE S.W. TO RTE. 14 WEST OF AVA

ABOUT 5.7 MILES S. OF MANSFIELD

PROJECT NO. DF-384(4)(RTE.5) **STA.** 301 + 27.25

DOUGLAS **COUNTY**

A-275

Drawn April 1958 by L.G.S.
Checked April 1958 by [illegible]

Note: This drawing is not to scale. Follow dimensions.

Sheet No. 2 of 8

NO CONSTRUCTION STAGES

419

MISSOURI STATE HIGHWAY DEPARTMENT

FED. ROAD DIST. NO.	STATE	FED. AID PROJ. NO.	FISCAL YR.	SHEET NO.	TOTAL SHEETS
5	MO.		19	27	

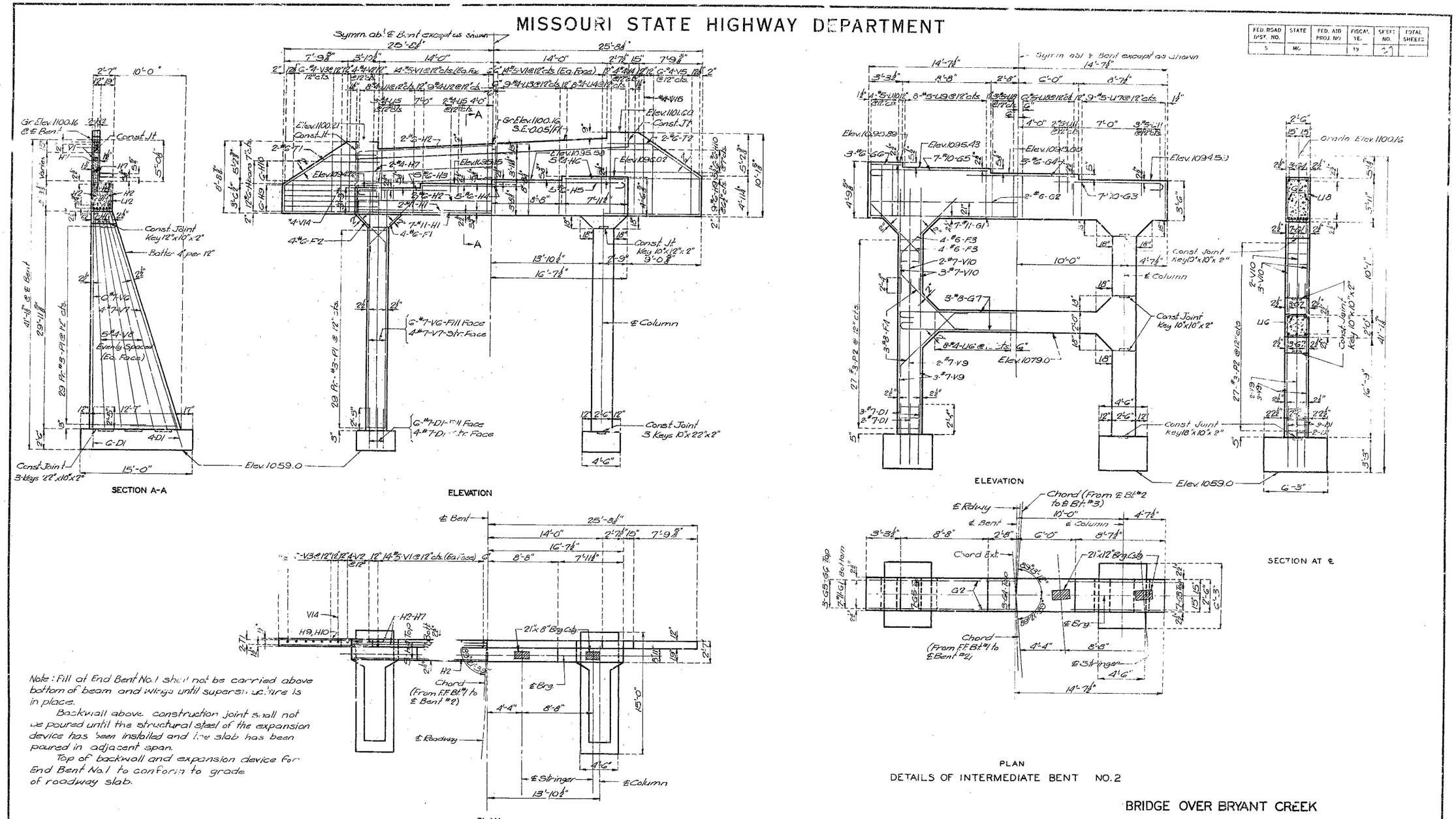

Note: Fill at End Bent No.1 shall not be carried above bottom of beam and wings until superstructure is in place.

Backwall above construction joint shall not be poured until the structural steel of the expansion device has been installed and the slab has been poured in adjacent span.

Top of backwall and expansion device for End Bent No.1 to conform to grade of roadway slab.

BRIDGE OVER BRYANT CREEK

STATE ROAD FROM WRIGHT CO. LINE S.W. TO RTE. 14 WEST OF AVA

ABOUT 5.7 MILES S. OF MANSFIELD

PROJECT NO. DF-384 (4)(RTE. 5) STA. 301 + 27.25

DOUGLAS COUNTY

Assembled March 1958 by A.M.L. & B.J.G.
Checked April 1958 by A.F.K.

Note: This drawing is not to scale. Follow dimensions.

Sheet No. 3 of 8.

A-275

420

SEE FINAL PLANS BROWN LINES

2 or 3 Col. Int. Square or Skewed } All Loadings

MISSOURI STATE HIGHWAY DEPARTMENT

FED. ROAD DIST. NO.	STATE	FED. AID PROJ. NO.	FISCAL YEAR	SHEET NO	TOTAL SHEETS
5	MO		19	21	

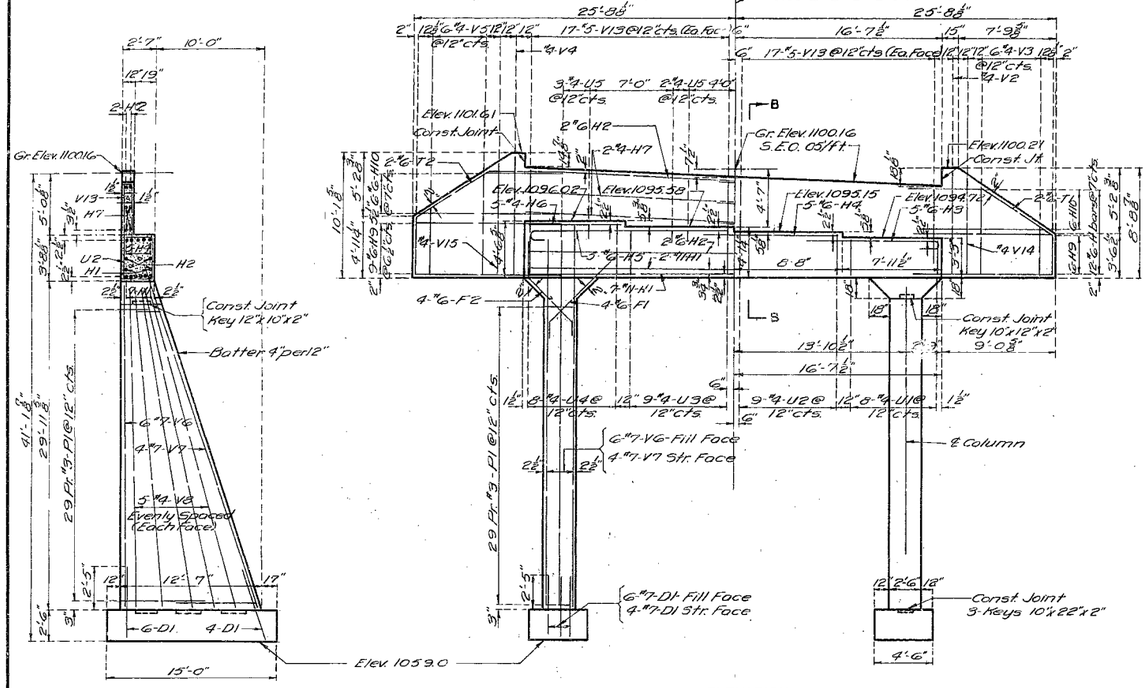

SECTION B-B

ELEVATION

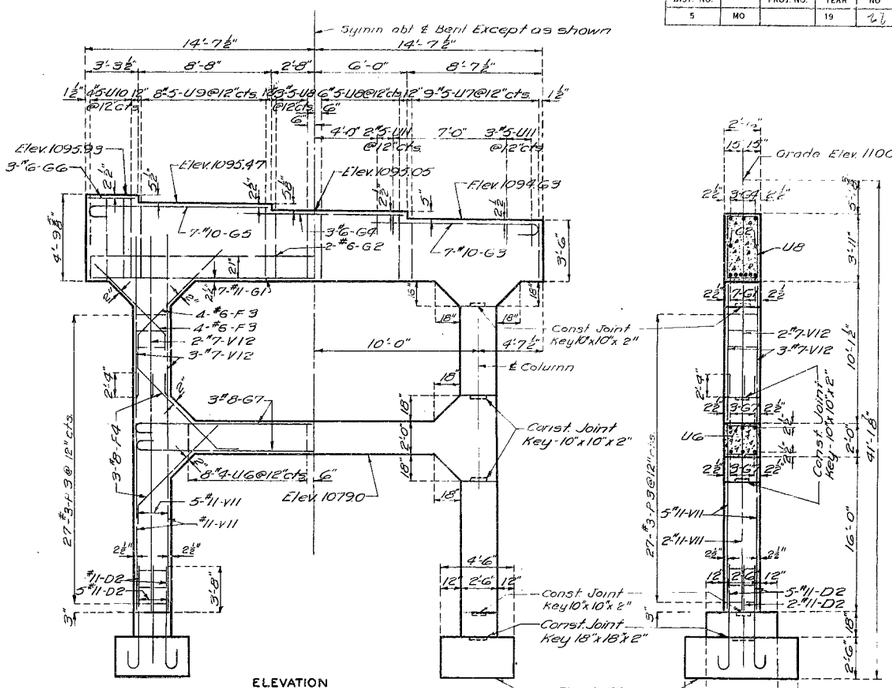

ELEVATION

SECTION AT ℄

Note: Fill at End Bent No. 4 shall not be carried above bottom of beam and wings until superstructure is in place.

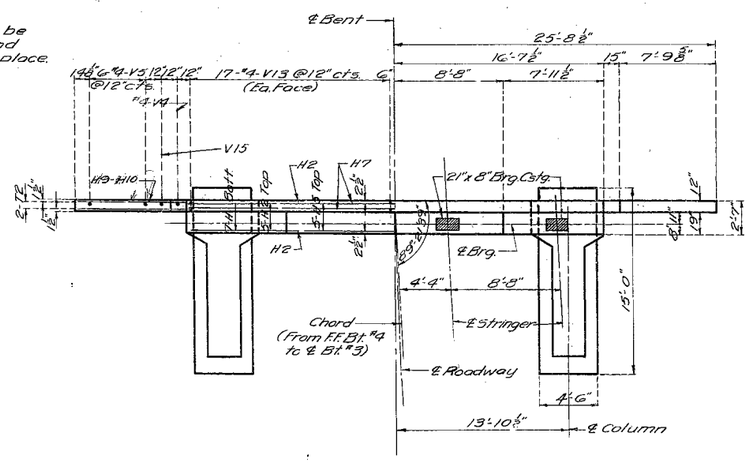

PLAN

DETAILS OF END BENT NO. 4

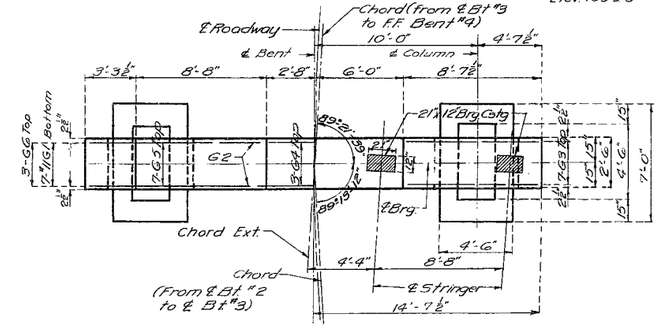

PLAN

DETAILS OF INTERMEDIATE BENT NO. 3

BRIDGE OVER BRYANT CREEK

STATE ROAD FROM WRIGHT CO. LINE S.W. TO RTE. 14 WEST OF AVA

ABOUT 5.7 MILES S. MANSFIELD

PROJECT NO. DF-384(4)(RTE.5) STA. 301 + 27.25

DOUGLAS COUNTY

A-275

Assembled March 1958 by A.M.L.&J.C.F.
Checked April 1958 by R.F.K.

Note: This drawing is not to scale. Follow dimensions.

Sl. set No 4 of 8

SEE FINAL PLANS BROWN-LINES

2 or 3 Col. Int. Square or Skewed } All Loadings

421

MISSOURI STATE HIGHWAY DEPARTMENT

FED. ROAD DIST. NO.	STATE	FED. AID PROJ. NO.	FISCAL YEAR	SHEET NO.	TOTAL SHEETS
5	MO.		19	29	

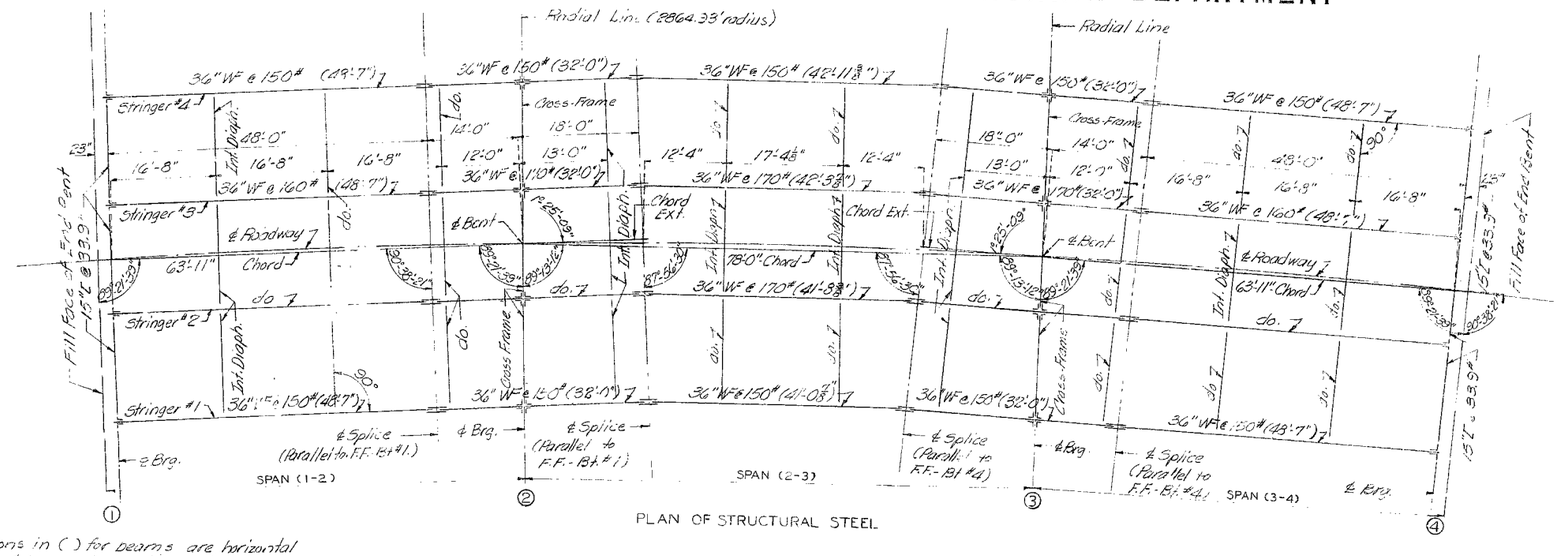

PLAN OF STRUCTURAL STEEL

Note: Dimensions in ( ) for beams are horizontal lengths from ℄ bearing to ℄ splice or from ℄ splice to ℄ splice or from ℄ splice to ℄ bearing.

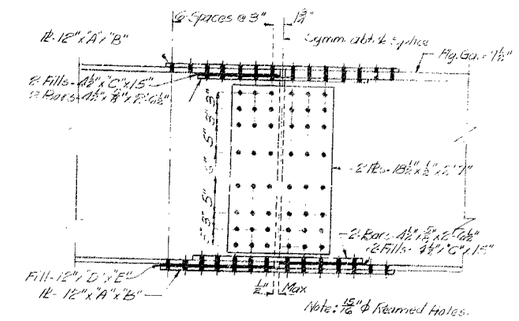

	"A"	"B"	"C"	"D"	"E"
36"WF @ 150# to 150#	5/8"	3'-6 1/2"	—	—	—
36"WF @ 160# to 170#	5/8"	3'-6 1/2"	14 Ga.	8 Ga.	21"
36"WF @ 170# to 170#	5/8"	3'-6 1/2"	—	—	—

DETAILS OF 36"WF BEAM SPLICES

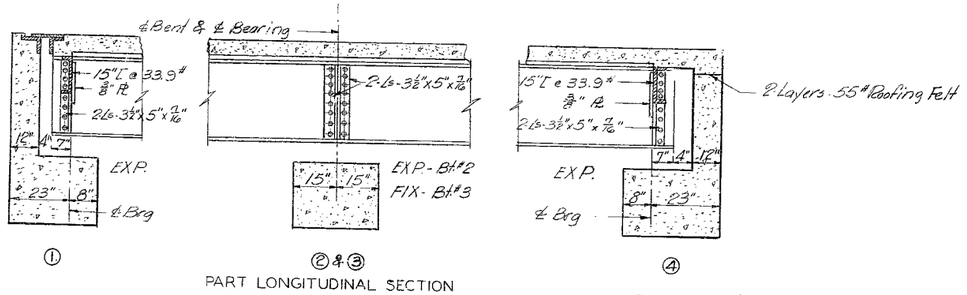

PART LONGITUDINAL SECTION

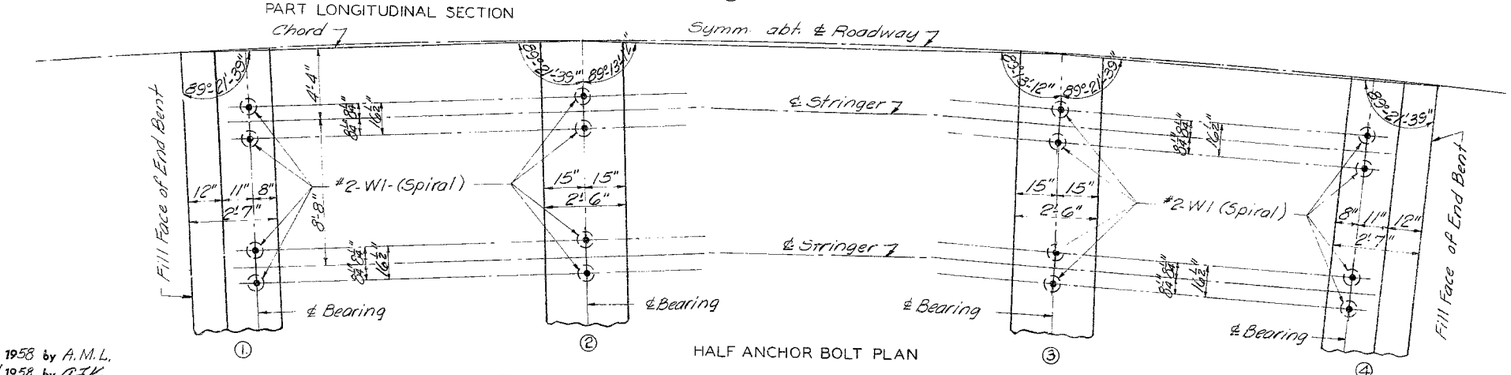

HALF ANCHOR BOLT PLAN

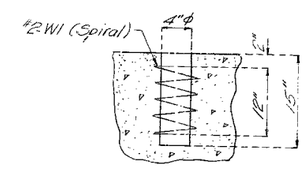

DETAILS OF ANCHOR BOLT WELLS

Note: Holes for all Anchor Bolts shall be formed in substructure by placing and setting with template 4"ϕ wells of depth shown.

Grout for anchor bolts shall contain Iron Oxide (Embeco) or an approved equivalent.

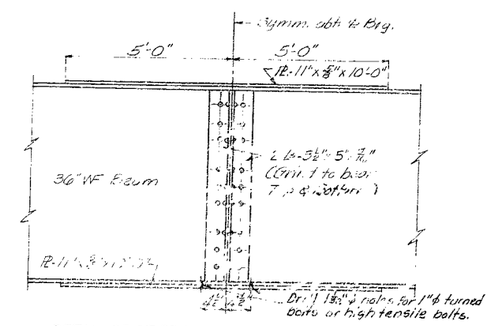

DETAIL OF STIFFENER ANGLES AT BENTS NO. 2 & 3

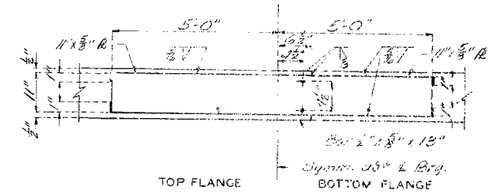

TOP FLANGE BOTTOM FLANGE

DETAIL OF WELDED PLATES AT BENTS NO. 2 & 3

BRIDGE OVER BRYANT CREEK

STATE ROAD FROM WRIGHT CO. LINE S.W. TO RTE. 14 WEST OF AVA

ABOUT 5.7 MILES S. OF MANSFIELD

PROJECT NO. DF-384(4)(RTE.5) **STA.** 301+27.25

DOUGLAS **COUNTY**

Drawn March 1958 by A.M.L.
Checked April 1958 by O.F.K.

Note: This drawing is not to scale. Follow dimensions.

Sheet No. 5 of 8

A-275

422

MISSOURI STATE HIGHWAY DEPARTMENT

FED. ROAD DIST. NO.	STATE	FED. AID PROJ. NO.	FISCAL YEAR	SHEET NO.	TOTAL SHEETS
5	MO.		19	20	

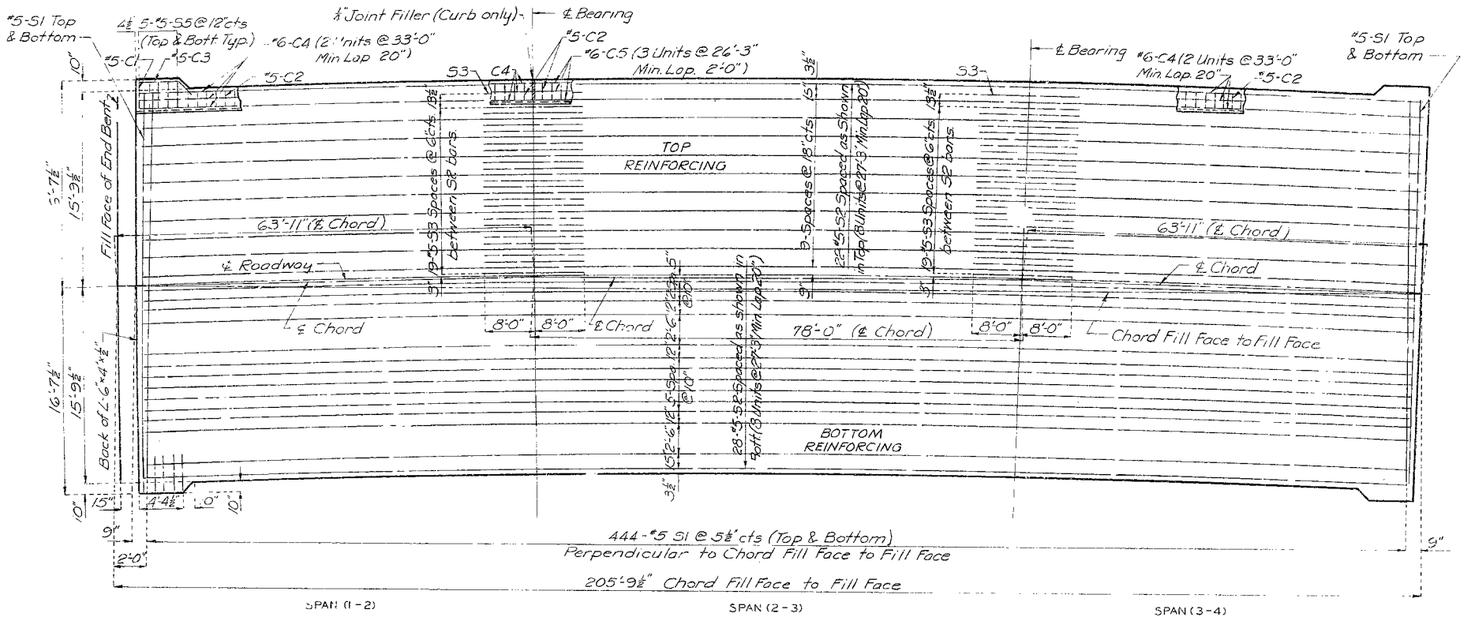

PLAN OF SLAB SHOWING REINFORCEMENT

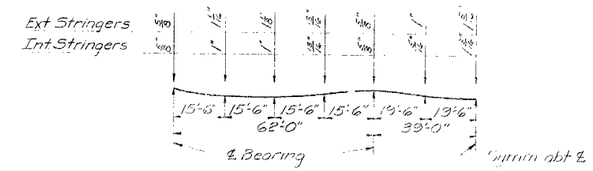

Note: Slab shall be built parallel to grade and to a minimum thickness of 6½". Dead load deflection and any difference in depth of stringers shall be taken care of by haunching to stringers by the amounts shown above. This additional concrete is included in "Estimated Quantities."

SLAB HAUNCHING DIAGRAM

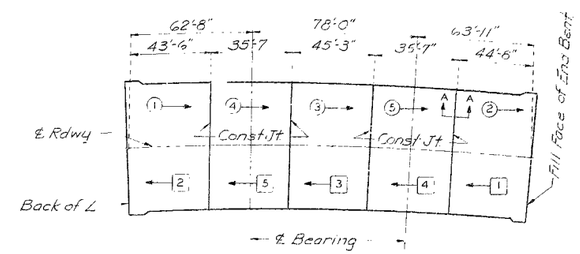

Note The slab shall be poured in sections of the lengths shown above and in the sequence indicated by the numbers ① ② ③ ④ and ⑤ or, as and alternate, by the numbers 1 2 3 4 and 5. The separate pours shall progress in the direction indicated by the arrows. Longitudinal construction joints will not be permitted. See Section 16-3E of Supplemental Specifications.

SLAB POURING SEQUENCE

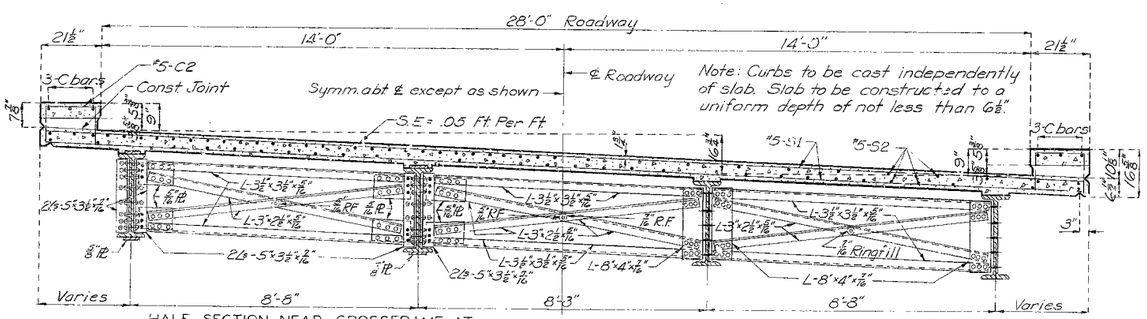

HALF SECTION NEAR CROSSFRAME AT BENTS NO. 2 & 3

HALF SECTION NEAR INT. DIAPH.

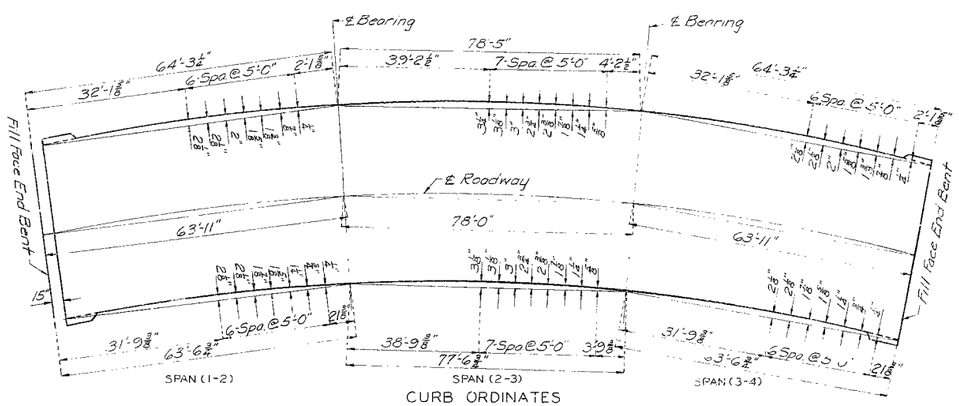

CURB ORDINATES

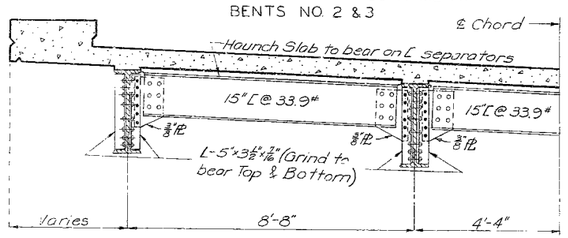

HALF SECTION NEAR END DIAPHRAGMS

Note: Drop top of 15" [s 1½" below top of stringers.

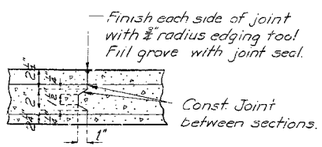

SECTION A-A

BRIDGE OVER BRYANT CREEK

STATE ROAD FROM WRIGHT CO LINE S.W. TO RTE. 14 W. OF AVA

ABOUT 5.7 MILES S. OF MANSFIELD

PROJECT NO. DF-38-4(4) (RTE.5) **STA.** 301 + 27.25

DOUGLAS **COUNTY**

Drawn April 1958 by W.J.K.
Checked April 1958 by A.F.K.

Note: This drawing is not to scale. Follow dimensions.

Sheet No. 6 of 8

423

MISSOURI STATE HIGHWAY DEPARTMENT

FED. ROAD DIST. NO.	STATE	FED. AID PROJ. NO.	FISCAL YEAR	SHEET NO.	TOTAL SHEETS
5	MO		19		

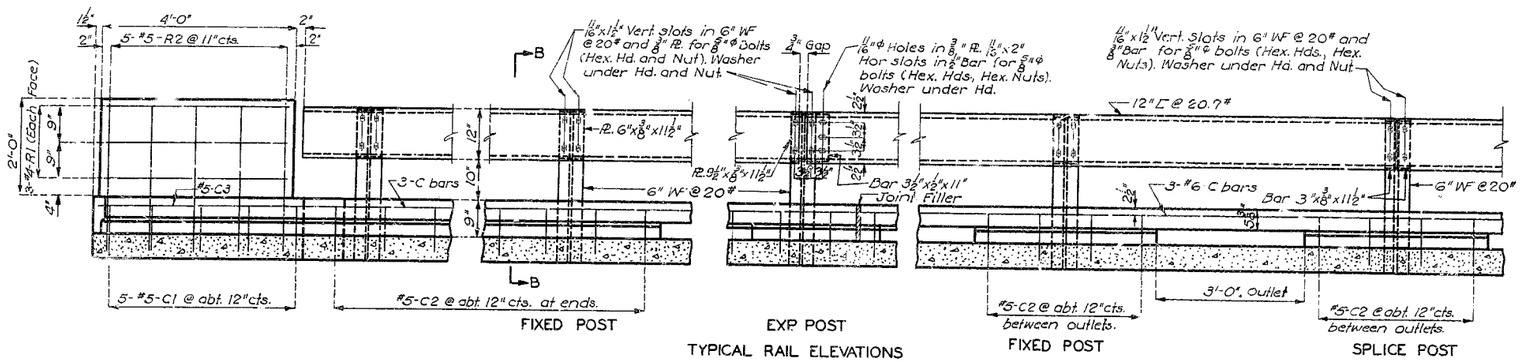

TYPICAL RAIL ELEVATIONS

Note: Outlets to be centered between railpost. For location of outlets if any, see Sheet No. 1 of design plans. C2 bars in curb to be spaced at abt. 12" cts. from end post to end post on bridges having no outlets.

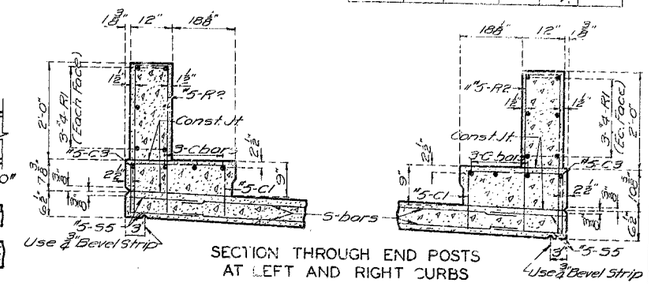

SECTION THROUGH END POSTS AT LEFT AND RIGHT CURBS

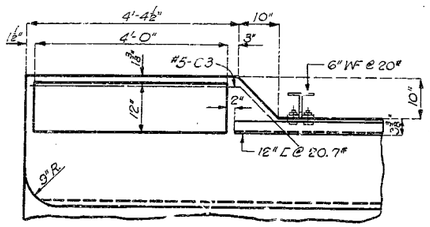

PLAN OF END POST - BENT # 4

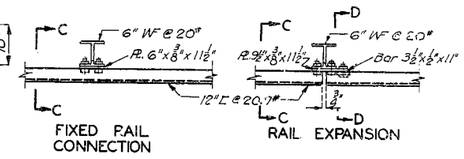

FIXED RAIL CONNECTION

RAIL EXPANSION

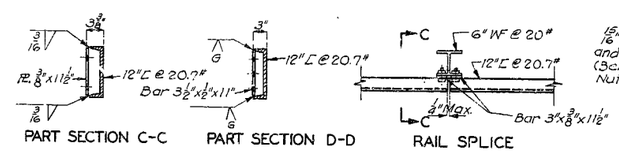

PART SECTION C-C

PART SECTION D-D

RAIL SPLICE

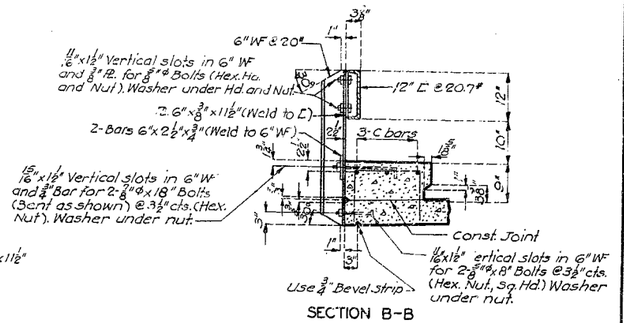

SECTION B-B

Note: Channel rail to be adjusted for horizontal alignment by use of full size metal shims placed between 6" WF and connection. Pl. Shims of 1/16" & 1/8" thickness to be furnished with structural steel. Cost of shims to be included in price bid for other items.

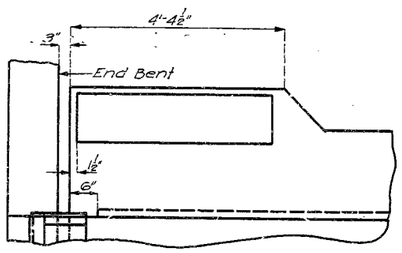

PLAN OF END POST WITH EXPANSION DEVICE AT END BENT # 1

Note: Details not shown same as other end post.

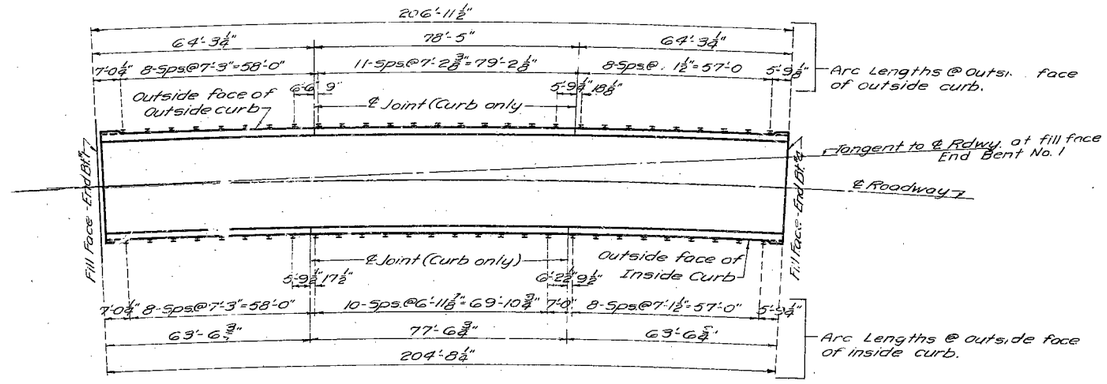

PLAN OF SLAB SHOWING RAILPOST SPACING

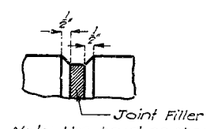

Note: Use bevel as shown for exposed faces of all filled joints.

DETAILS OF BEVEL FOR FILLED JOINTS

GENERAL NOTES:

Top of curb and end posts to be built parallel to grade. Vertical faces of end posts to be vertical. All exposed edges of end posts to be beveled 1/2". 6" WF posts to be set normal to grade.

12" [rails shall be fabricated to conform to horizontal and vertical alignment of curb.

BRIDGE OVER BRYANT CREEK

STATE ROAD FROM WRIGHT CO. LINE S.W. TO RTE. 14 WEST OF AVA

ABOUT 5.7 MILES S. OF MANSFIELD

PROJECT NO. DF-384(4) (RTE.5) STA. 301+27.25

DOUGLAS COUNTY

DRAWN April 1958 by A.M.L. & J.C.F.
TRACED
CHECKED April 1958 by Q.T.K.

Sheet No. 7 of 8

A-275

424

NO CONSTRUCTION CHANGES

MISSOURI STATE HIGHWAY DEPARTMENT

FED. ROAD DIST. NO.	STATE	FED. AID PROJ. NO.	FISCAL YEAR	SHEET NO.	TOTAL SHEETS
5	MO		19	9	

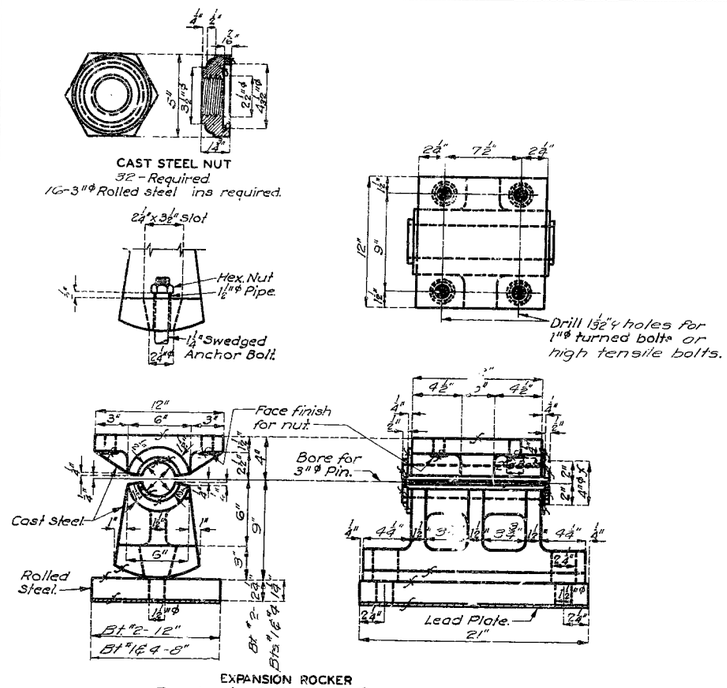

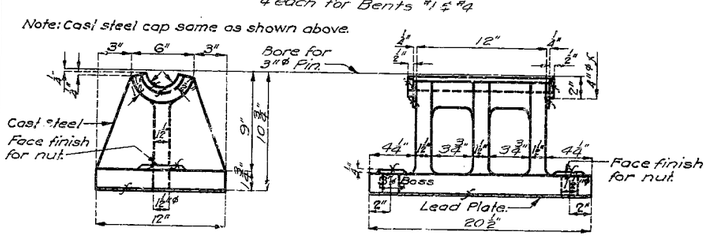

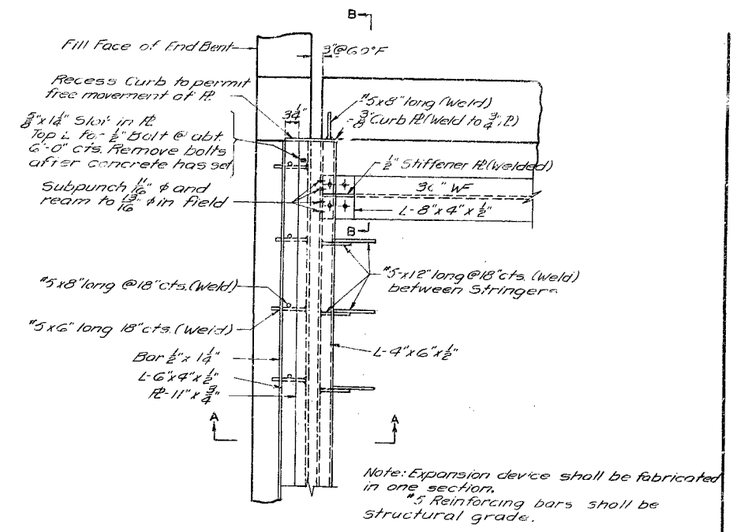

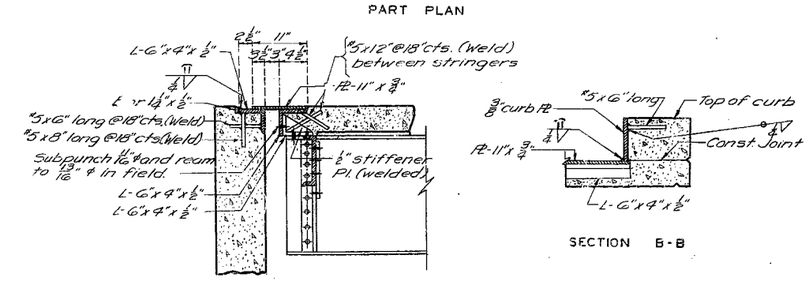

DETAILS OF EXPANSION DEVICE
BENT NO. 1

GENERAL NOTES:

Finish all surfaces marked f

Material for Type "A" castings shall be Cast Steel except as noted.

All pins, bolts, nuts, pipe sleeves, rolled steel and pintles shall be paid for as structural steel.

Anchor bolts for Type "A" castings shall be 1½" φ swedged bolts with hex. nuts and shall extend 12" into concrete.

Lead plates under bearings shall be approximately ⅛" thickness and weigh 8#/sq. ft. Cost of lead plates shall be included in price bid for other items.

DETAILS OF BEARING CASTINGS

BRIDGE OVER BRYANT CREEK

STATE ROAD FROM WRIGHT CO. LINE S.W. TO RTE. 14 WEST OF AVA

ABOUT 5.7 MILES S. OF MANSFIELD

PROJECT NO. DF-384(4) (RTE.5) STA. 301+27.25

DOUGLAS COUNTY

Assembled April 1958 by A.M.L. & J.C.F.
Checked April 1958 by G.T.K.

Note: This drawing is not to scale. Follow dimensions.

Sheet No. 8 of 8

A-275

425

NO CONSTRUCTION AFTER 1965

FINAL PLANS

MISSOURI STATE HIGHWAY DEPARTMENT

FED. ROAD DIST. NO.	STATE	FED. AID PROJ. NO.	FISCAL YEAR	SHEET NO.	TOTAL SHEETS
5	MO.		19	26	

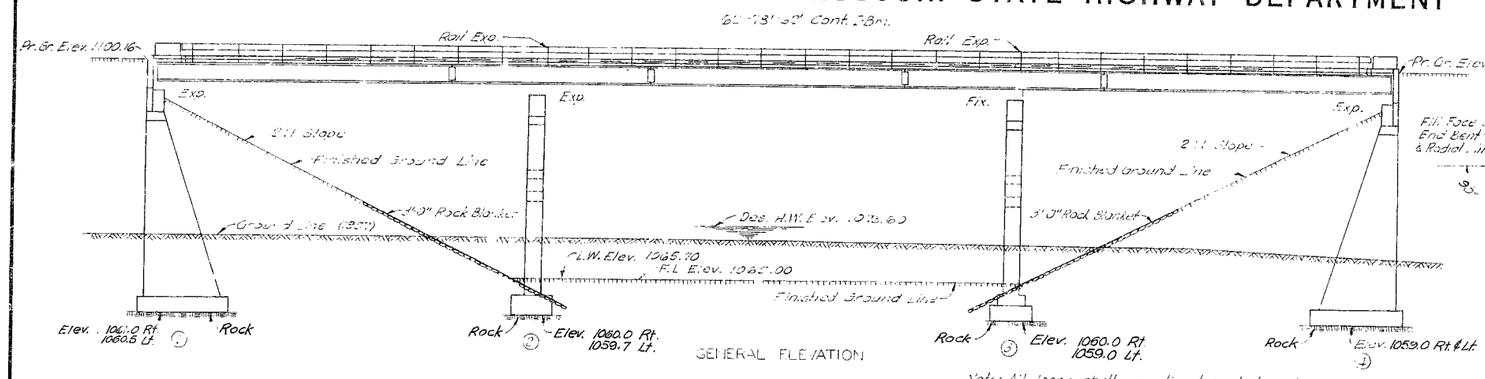

GENERAL ELEVATION

Note: All loose, shelly or disintegrated rock was removed and the footings placed on hard, solid undisturbed rock

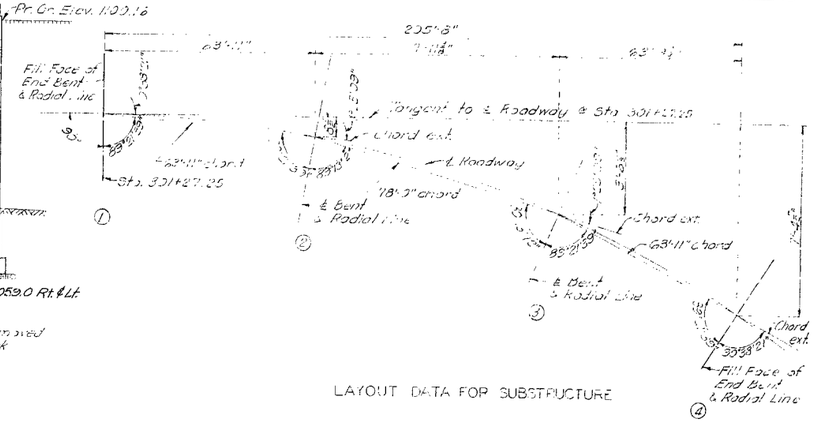

LAYOUT DATA FOR SUBSTRUCTURE

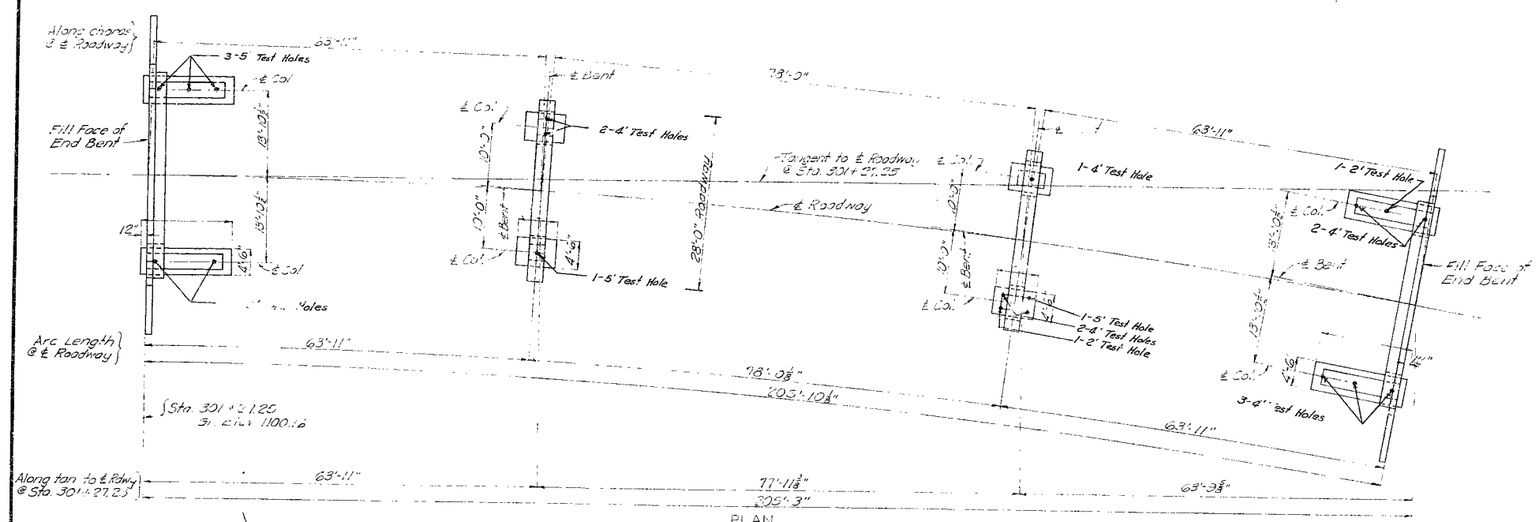

PLAN

GENERAL NOTES:

Design Specifications: A.A.S.H.O. 1953
Loading: H20-44 (15"/6" Future wearing surface.)
Structural Steel Stress: 18,000 #/□"
Reinforcing Steel Stress: 20,000 #/□"
Concrete, Class "A": Stress: 1200 #/□"
Concrete, Class "B": Stress: 900 #/□"
Concrete for superstructure 19 Class "B" air-entrained.

Concrete for substructure 19 Class "B" air-entrained.

Rivets ¾" ø; holes 13/16" except as noted.
Field connections were bolted.

The Contractor desired to eliminate all field riveting on this project, he used High Tensile Steel bolts with cadmium washers in place of rivets. High tensile steel bolts were used, they were placed in such a manner that the nuts will always be in the least exposed position.

Paint: Shop none; field, contact surfaces of bolted field connections except where high tensile bolts are used, one coat of red lead and surfaces inaccessible after erection three coats of red lead. No other paint was applied by contractor. Red lead required furnished by Contractor. Payment for cleaning and painting such surfaces was included in unit price bid for Fabricated Structural Steel.

Where joint filler is specified on the plans it conforms with the requirements for Gray Rubber Compound Joints as given in Section 58-22.8 of the Standard Specifications.

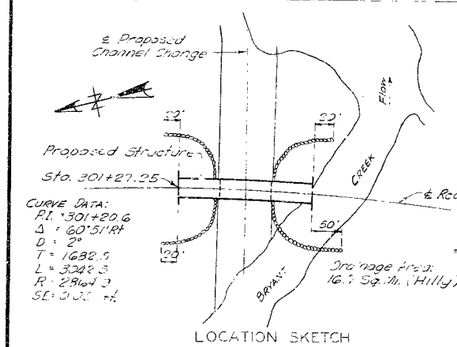

LOCATION SKETCH

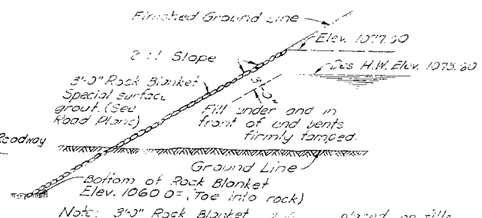

Note: 3'-0" Rock Blanket will be placed on hills at ends of bridge as shown in sketch. See Road Plans for Quantities.

ROCK BLANKET SKETCH

FINAL QUANTITIES				
Item		Substr.	Supersr.	Total
Class 1 Excavation for Structures	Cu. Yds.	132.0		132.0
Class 2 Excavation for Structures	Cu. Yds.	218.5		218.5
Class "B" Concrete	Cu. Yds.		151.0	151.0
Class "A" Concrete	Cu. Yds.	220.8		220.8
Reinforcing Steel	Lbs.	24980	45180	70160
Fabricated Structural Steel	Lbs.		170840	170840
Steel Castings	Lbs.		5150	5150
Test Holes	Lin. Ft.	79		79

Note: Excavation for bridge made above Elev. 1067.00 was paid for as Class 1 Excavation for Structures.
Excavation for bridge made below Elev. 1067.00 was paid for as Class 2 Excavation for Structures.
Final pay weight for Fabricated Structural Steel was based on using field rivets except for bolted connections specified for handrail.

BM #34C Elev 1100.22 ⊠ Top W Wing 14' Rt
Sta 301+27
B.M. #34B Elev 1073.24 NIS 8" Elem 115' Rt.
Sta. 302+20

BRIDGE OVER BRYANT CREEK

STATE ROAD FROM ARIGHT CO. LINE S.W. TO RTE 14 WEST OF AVA

ABOUT 5.7 MILES S. OF MANSFIELD

PROJECT NO. DF-384(4)(RTE. 5) **STA.** 301+27.25

DOUGLAS **COUNTY**

SUBMITTED BY J. A. Williams BRIDGE ENGINEER DATE 5-12-1958
APPROVED BY Steph. M. Whitton CHIEF ENGINEER DATE 5-12-1958

STD. DWG. A-275

Drawn April 1958 by M.H.R.
Checked April 1958 by W.F.A.

Note: This drawing is not to scale. Follow dimensions.

Sheet No. 1A of 3

426

FINAL PLANS

MISSOURI STATE HIGHWAY DEPARTMENT

FED ROAD DIST. NO	STATE	FED AID PROJ NO	FISCAL YEAR	SHEET NO	TOTAL SHEETS
5	MO		19	27	

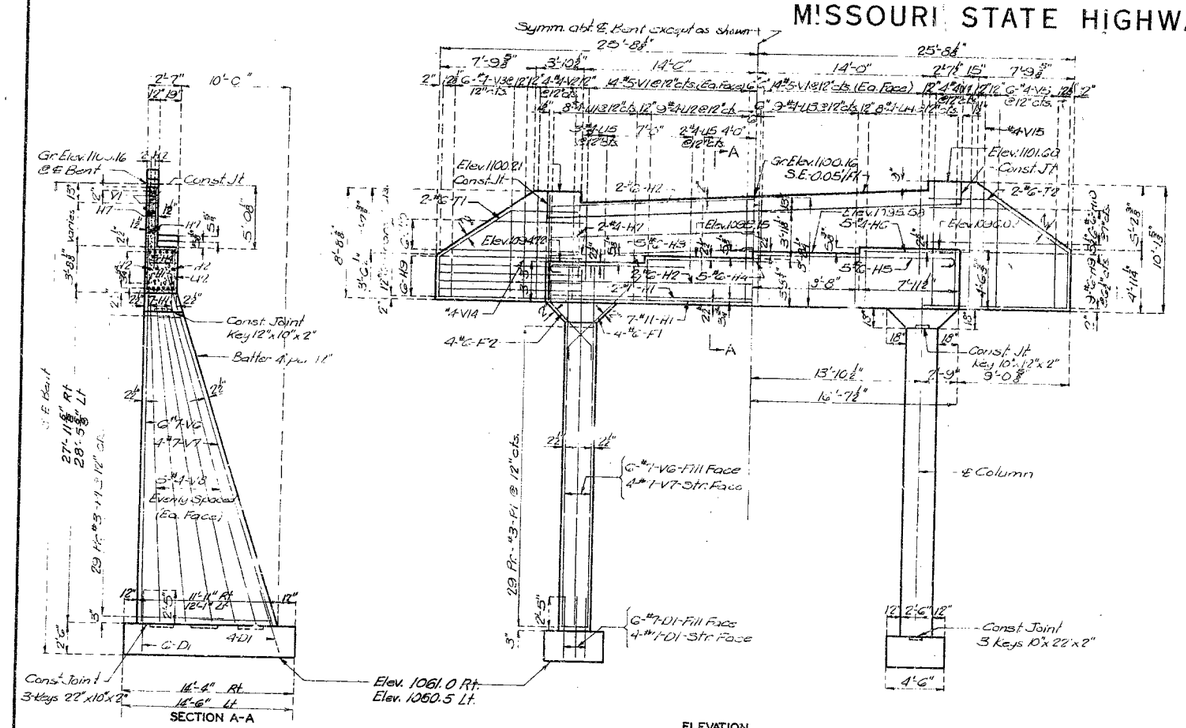

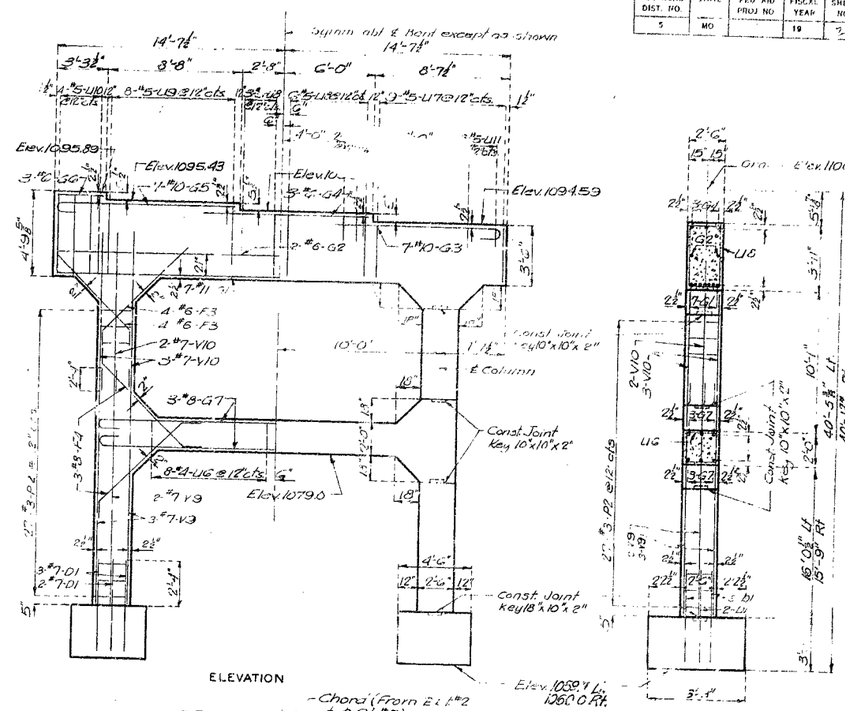

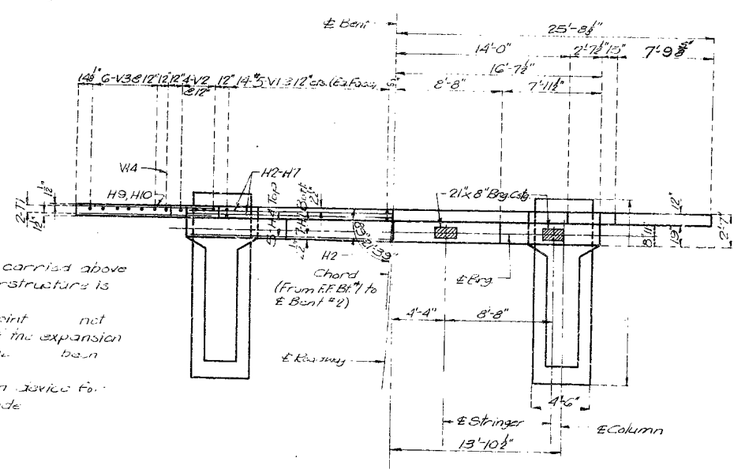

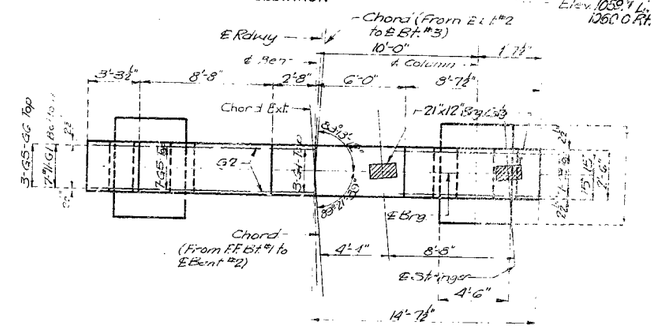

Note: Fill at End Bent No. 1 be carried above bottom of beam and wings until superstructure is in place.

Backwall above construction joint not poured until the structural steel at the expansion device been installed and the slab been poured in adjacent span.

Top of backwall and expansion device for End Bent No. 1 conform to grade of roadway slab.

BRIDGE OVER BRYANT CREEK

STATE ROAD FROM WRIGHT CO. LINE S.W. TO RTE. 14 WEST OF AVA

ABOUT 5.7 MILES S. OF MANSFIELD

PROJECT NO. DF-384 (4)(RTE. 5) STA. 301 + 27.25

DOUGLAS COUNTY

Assembled March 1958 by A.M.L. & B.E.G.
Checked April 1958 by A.F.K.

Note: This drawing is not to scale. Follow dimensions.

Sheet No. 3A of 3

A-275

427

FINAL PLANS

FINAL PLANS

MISSOURI STATE HIGHWAY DEPARTMENT

FED ROAD DIST. NO.	STATE	FED. AID PROJ. NO.	FISCAL YEAR	SHEET NO.	TOTAL SHEETS
5	MO		19		

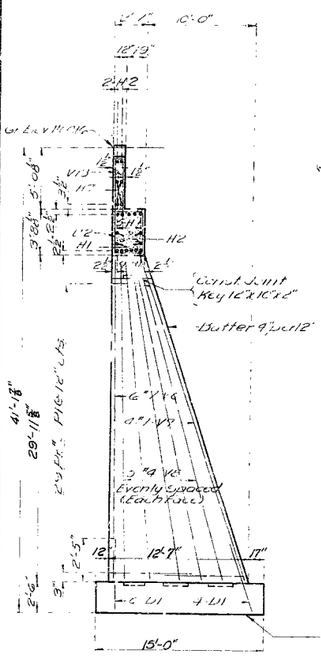

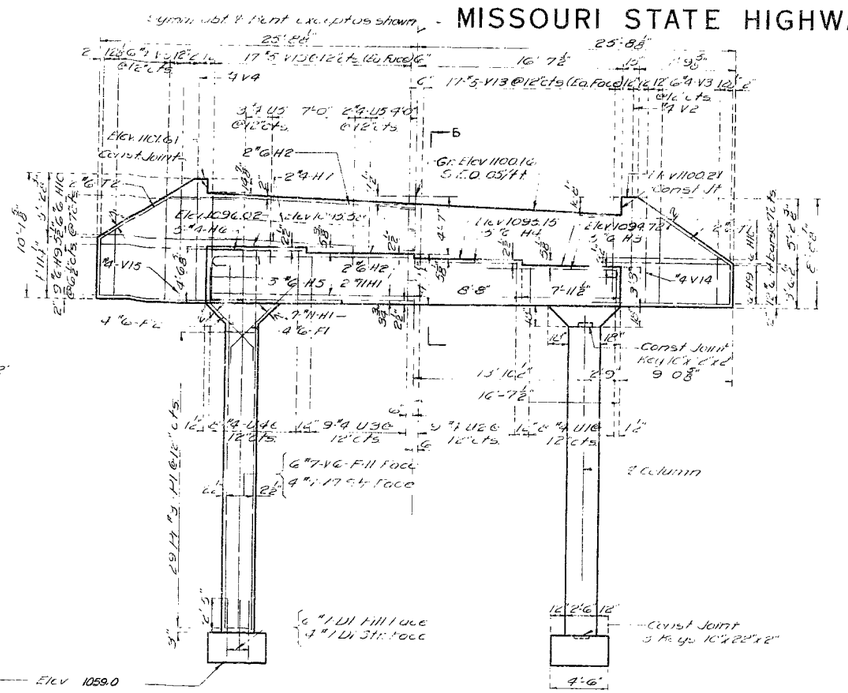

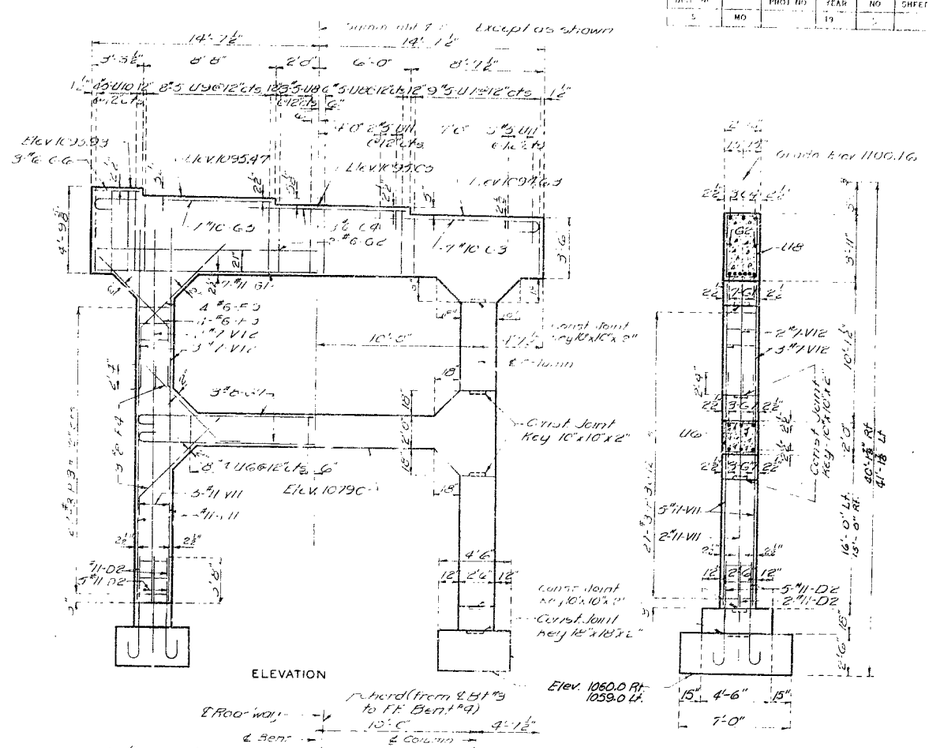

Note: Fill at End Bent No 4 shall not be carried above bottom of beam and wings until superstructure is in place.

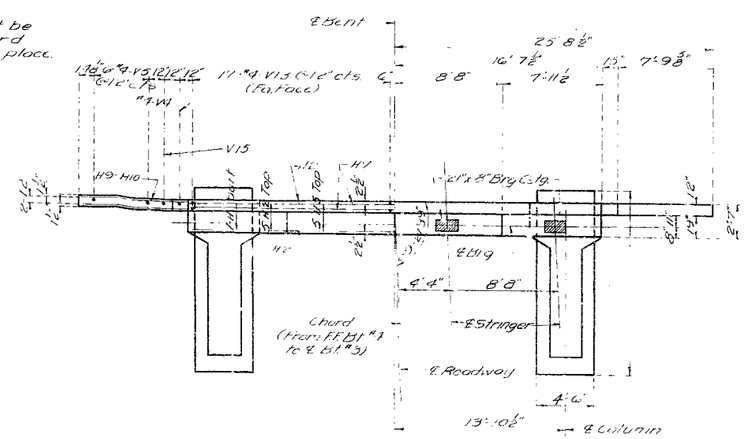

DETAILS OF END BENT NO 4

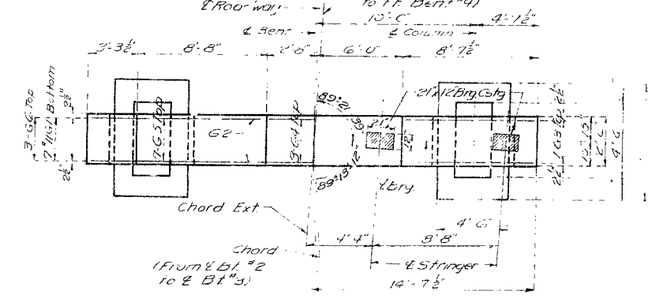

DETAILS OF INTERMEDIATE BENT NO. 3

BRIDGE OVER BRYANT CREEK

STATE ROAD FROM WRIGHT CO. LINE S.W. TO RTE. 14 WEST OF AVA

ABOUT 5.7 MILES S. MANSFIELD

PROJECT NO. DF-384(4)(RTE.5) STA. 201+[illegible]

DOUGLAS COUNTY

Assembled March 1958 by A.M.L./J.C.F.
Checked April 1958 by R.T.K.

Sht. 4 No 4A of 3

A-275

428

FINAL PLANS